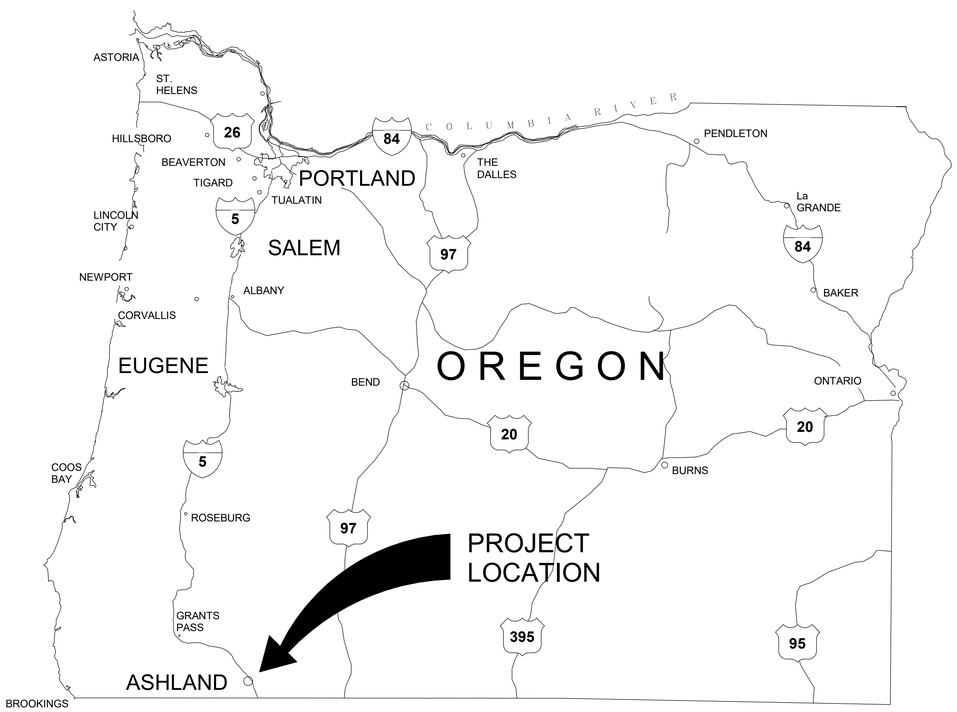

Contract Drawings For

Ashland Creek Water Treatment Plant

Project No. 10193663

1111 Granite Street
Ashland, OR 97520

Date: September 2026

City Project No. 2018-20

INDEX

Sheet No.	Title
General	
000G001	Cover and Location Map
000G002	Drawing Index - 1
000G003	Drawing Index - 2
000G004	General Abbreviations
000G005	General Legend and Symbols
000G006	Process Flow Diagram
000G007	Hydraulic Profile
000G008	Potable Water Profile
000G009	Design Criteria
000S001	General Structural Notes
000S002	Special Inspections 1
000S003	Special Inspections 2 and Standard Details
000S004	Structural Standard Details 1
000S005	Structural Standard Details 2
000S006	Structural Standard Details 3
000S007	Structural Standard Details 4
000S008	Structural Standard Details 5
000S009	Structural Standard Details 6
000A001	Assembly Types
000A002	Enlarged Columns Details - 1st Floor
000A003	Enlarged Columns Details - 2nd Floor
000A004	Architectural Details I
000A005	Architectural Details II
000A006	Architectural Details III
000A007	Architectural Details IV
000A008	Architectural Details V
000A009	Architectural Details VI
000A010	Architectural Details VII
000A011	Architectural Details VIII
000A012	Architectural Details IX
000A013	Architectural Details XI
000A014	Architectural Details XII
000A015	Architectural Details XIII
000A016	Architectural Details XIV
000A017	Door Schedule
000A018	Window, Louver Schedules & Types
000A019	Finish Schedule
000D501	Process Details 1
000D502	Process Details 2
000D503	Process Details 3
000D504	Process Details 4
000D505	Not Used
000M001	Mechanical Legend
000M501	Mechanical Details 1
000M502	Mechanical Details 2
000M503	Mechanical Details 3
000M504	Mechanical Details 4
000M601	Mechanical Schedules 1
000M602	Mechanical Schedules 2
000M603	Mechanical Schedules 3
000M604	Sequence of Operations
000P501	Plumbing Details 1
000P502	Plumbing Details 2
000P503	Plumbing Details 3
000P601	Plumbing Schedules 1
000P602	Plumbing Schedules 2
000E001	Electrical Legend and Symbols
000E002	Electrical Conduit and Cable Schedule - 1
000E003	Electrical Conduit and Cable Schedule - 2
000E004	Electrical Conduit and Cable Schedule - 3
000E005	Electrical Conduit and Cable Schedule - 4
000E501	Lighting Fixture Schedule
000E621	Control Diagrams 1
000E622	Control Diagrams 2
000E623	Control Diagrams 3
000E624	Control Diagrams 4
000E625	Control Diagrams 5
000E626	Control Diagrams 6
000E627	Control Diagrams 7

Sheet No.	Title
000E701	Electrical Details 1
000E702	Electrical Details 2
000E703	Electrical Details 3
000E704	Electrical Details 4
000Y001	Instrumentation Legend
000Y002	SCADA Control System Block Diagram 1
000Y003	SCADA Control System Block Diagram 2
000Y005	IT Equipment Rack SVR-3000
000Y011	PLC Control Panel Typical Power Distribution Schematic
000Y012	PLC Control Panel Typical Control Wiring Schematic
000Y013	Control Panel CP-101
000Y014	Control Panel CP-301
000Y015	Control Panel CP-302
000Y016	Control Panel CP-303
000Y017	Control Panel CP-401
000Y018	Control Panel CP-501
000Y019	Control Panel CP-601
000Y020	Chemical Fill Station Control Panels
000Y021	Instrumentation Details 1
000Y022	Instrumentation Details 2
000Y023	Instrumentation Details 3
000Y024	Instrumentation Details 4
000Y601	Pretreatment P&ID
000Y602	Ozone Sidestream Injection System P&ID
000Y603	Rapid Mix P&ID
000Y604	Ballasted Sedimentation Train 1 P&ID
000Y605	Ballasted Sedimentation Train 2 P&ID
000Y606	Microsand Pump System
000Y607	Filter 1 P&ID
000Y608	Filter 2 P&ID
000Y609	Filter 3 P&ID
000Y610	Filter 4 P&ID
000Y611	Low Pressure Air P&ID
000Y612	Instrument Air P&ID
000Y613	Backwash Waste Basins P&ID
000Y614	LOX Storage and Vaporizers P&ID
000Y615	Ozone Generation System P&ID
000Y616	Ozone Cooling Water System Option 2 - Air Cooled Chiller P&ID
000Y617	Ozone Off-Gas Treatment System P&ID
000Y618	Calcium Thiosulfate 1 System P&ID
000Y619	Calcium Thiosulfate 2 System P&ID
000Y620	Alum System P&ID
000Y621	Caustic System P&ID
000Y622	Settling Aid Polymer System P&ID
000Y623	Filter Aid Polymer System P&ID
000Y624	Sodium Hypochlorite System P&ID
000Y625	Sodium Carbonate (Liquid) System P&ID
000Y626	Intermediate Pumping P&ID
000Y627	Clearwell P&ID
000Y628	Crowson Pump Station P&ID
000Y629	Miscellaneous System Monitoring P&ID
Civil	
000C001	Legend and Symbology
000C002	Overall Site Layout Plan
000C003	Site Layout and Horizontal Control Plan Plan
000C004	Erosion and Sediment Control Cover Sheet
000C005	Erosion and Sediment Control General Notes
000C006	Erosion and Sediment Control Existing Conditions Plan 1
000C007	Erosion and Sediment Control Tree Protection and Removal Plan 2
000C008	Erosion and Sediment Control Demo, Clearing, Grading, Excavation, and Land Development Plan 3
000C009	Erosion and Sediment Control Street and Utilites Plan 4
000C010	Erosion and Sediment Control Vertical Construction Plan 5
000C011	Erosion and Sediment Control Final Landscape and Stabilization Plan 6
000C012	Erosion and Sediment Control Existing Tree Inventory Tables 1
000C013	Erosion and Sediment Control Existing Tree Inventory Tables 2
000C014	Erosion and Sediment Control Details 1
000C015	Erosion and Sediment Control Details 2
000C016	Erosion and Sediment Control Details 3

Sheet No.	Title
001C101	Civil Typical Sections
001C102	Site Access Road Plan and Profile A
001C103	Site Access Road Plan and Profile A
001C104	Clearwell Access Road Plan and Profile A
001C105	Clearwell Access Road Plan and Profile B
001C106	Grading Plan South
001C107	Grading Plan North
001C108	Grading Plan Area 1
001C109	MSE Wall 2 - Plan and Section
001C110	Block Wall - Plan, Section and Details
001C111	Vault Location and Grading Plan
001C112	Fence Coordinate Plan
001C202	Stormwater Plan Main Site
001C203	Stormwater Plan SD1 & SD2 Plan & Profile
001C204	Stormwater Plan SD3 & SD4 Plan & Profile
001C205	Stormwater Plan SD5 Plan & Profile
001C206	Stormwater Plan SD6 & SD7 Plan & Profile
001C207	Stormwater Plan Drainage Channels
001C500	Fence and Gate Details
001C501	Civil Site Details 1
001C502	Civil Site Details 2
001L101	Overall Landscape Plan
001L501	Landscape Details
001L502	Landscape Details
001L601	Landscape Schedule & Notes
002C101	Overall Site Piping Plan
002C102	Enlarged Area Yard Piping Plan Area 1
002C103	Enlarged Area Yard Piping Plan Area 2
002C104	Yard Piping - Enlarged Plans
002C105	Yard Piping - Enlarged Plans and Sections
002C201	Sanitary Plan and Profile 1
002C202	Sanitary Plan and Profile 2
002C301	Yard Piping - Profile 1
002C302	Yard Piping - Profile 2
002C303	Yard Piping - Profile 3
002C304	Yard Piping - Ozone Contact Pipe Iso View
002C501	Pipeline Details 1
002C502	Pipeline Details 2
002C503	Pipeline Details 3
002C504	Pipeline Details 4 Yard Vault Details
002C519	Stormwater Details I
002C520	Stormwater Details II
002C521	Stormwater Details III
002C522	Stormwater Details IV
002C523	Stormwater Details V
004E100	Electrical Overall Site Plan
004E101	Electrical Enlarged Site Plan 1
100 - Pretreatment and Ozone Building	
100G001	Code Analysis
100G101	Ground Floor Life Safety Plan
100S101	Foundation Plan
100S102	Conceptual Roof Framing Plan
100S103	Generator Foundation
100S301	Sections
100S302	Sections
100S303	Sections and Details
100S304	Sections and Details
100S901	3D Views
100A001	Air Barrier
100A101	Ground Floor Plan
100A102	Roof Plan
100A201	Exterior Elevations 1
100A202	Exterior Elevations 2
100A301	Building Sections
100A302	Wall Sections
100D101	Floor Plan
100D301	Sections 1
100D302	Sections 2
100D303	Ozone Sections

Sheet No.	Title
100M101	North HVAC Floor Plan
100M102	South HVAC Floor Plan
100P101	Domestic Water Piping Plan
100P102	North Waste and Vent Piping Plan
100P103	South Waste and Vent Piping Plan
100P601	Plumbing Details
100P901	Domestic Water Piping Diagram (Water Riser)
100P902	Waste and Vent Piping Diagram (Sanitary Riser)
100F101	Ground Floor Fire Protection Plan
100F501	Fire Protection Details
100E101	Power and Control Plan South
100E102	Power and Control Plan North
100E103	Lighting and Receptacles Plan South
100E104	Lihgting and Receptacles Plan North
100E601	PDP-101 One Line Diagram
100E602	CP-101 One Line Diagram 1
100E603	CP-101 One Line Diagram 2
100E604	PDP-101 Elevation and Panelboard Schedules
200 - On Site Chemical	
200S101	Foundation Plan
200S301	Foundation Sections

ISSUE	DATE	DESCRIPTION
A	09/2026	ISSUED FOR BIDS

PROJECT MANAGER	PIERRE KWAN
CIVIL	J. MEGRDITCHIAN
STRUCTURAL	P. LINDBLOM
ARCHITECTURAL	V. YANEZ
PROCESS	P. KWAN
MECHANICAL	K. CHEUNG
ELECTRICAL	R. MCCOMB
INSTRUMENTATION	D. BEST
PROJECT NUMBER	10193663

REGISTERED PROFESSIONAL ENGINEER 85841 DIGITALLY SIGNED OREGON MAY 8, 2018 PIERRE K. KWAN
EXPIRES: 06/30/2027

CITY OF ASHLAND
Ashland, Oregon

City of Ashland

Ashland Creek Water Treatment Plant

2026

GENERAL DRAWING INDEX - 1

0 1" 2"

FILENAME 000G002.dwg
SCALE NTS

SHEET 000G002

INDEX

Sheet No.	Title
300 - Operations Building	
300G001	Code Analysis
300G002	Code Analysis
300G101	Ground Level Life Safety Plan
300G102	Second Level Life Safety Plan
300S101	Wet Well Plans at EL 2264.60 and 2269.10
300S102	Filter Floor Plan At EL 2278.00 and 2285.25
300S103	Ground Floor Plan At EL 2286.00
300S104	Second Floor Plan at EL 2298.00
300S105	Conceptual Roof Framing Plan
300S106	Enlarged Shade Cover
300S301	Building Sections 1
300S302	Building Sections 2
300S303	Building Sections 3
300S304	Enlarged Filters Section 1
300S305	Enlarged Filters Section 2
300S306	Enlarged Filters Section 3
300S307	Enlarged Filters Section 4
300S308	Enlarged Filters Section 5
300S309	Sections and Details
300S310	Sections and Details
300S311	Elevator Shaft Framing Elevations and Pit Sections
300S312	Sections and Details
300S313	Plans, Elevations, and Details
300S314	Plan and Details
300S401	Containment Area Partial Plan and Sections
300S402	Containment Area Sections and Details
300S403	Ballasted Flocculation Tanks 3D Views
300S404	Ballasted Flocculation Tanks Plan @ TOC EL 2284.50
300S405	Ballasted Flocculation Tanks Plan @ TOC EL 2302.25
300S406	Ballasted Flocculation Tanks Grating and Railing Plan
300S407	Ballasted Flocculation Tanks Sections 1
300S408	Ballasted Flocculation Tanks Sections 2
300S901	3D View
300A001	Air Barrier
300A002	Air Barrier
300A100	Pipe Gallery
300A101	Floor Plan 1
300A102	Floor Plan 2
300A103	Roof Plan 1
300A104	Reflected Ceiling Plan 1
300A105	Reflected Ceiling Plan 2
300A106	Enlarged Floor Plans
300A107	Enlarged Stair Plans
300A108	Shade Cover
300A201	Exterior Elevations 1
300A202	Exterior Elevations 2
300A203	Exterior Elevations 3
300A204	Interior Elevations 1
300A205	Interior Elevations 2
300A301	Building Sections 1
300A302	Building Sections 2
300A303	Building Sections 3
300A304	Wall Sections
300A305	Stair Sections 1
300A306	Stair Sections 2
300D101	Overall Plan
300D102	Ballasted Flocculation Plan
300D103	Not Used
300D104	Pipe Gallery FF Filter Plan
300D105	Ground Floor Filter Plan
300D106	Second Floor Filter Plan
300D107	Ground Floor Chemical Room Plan
300D301	Ballasted Flocculation Sections
300D302	Filter Sections
300D303	Filter Sections
300D304	Filter Sections
300D305	Intermediate Pump Sections
300D306	Chemical Room Sections

Sheet No.	Title
300D501	Tank Top Details
300D502	Skid Details
300D503	Process Details
300M101	Ground Floor HVAC Plan
300M102	Second Floor and Pipe Gallery Floor HVAC Plan
300M201	Ground Floor HVAC Piping Plan
300M202	Second Floor and Pipe Gallery HVAC Piping Plan
300M203	Roof Plan
300M301	Sections 1
300M302	Sections 2
300M901	Refrigerant and Condensate Piping Diagram
300P101	Ground Floor Domestic Water Piping Plan
300P102	Second Floor and Pipe Gallery Domestic Water Piping Plan
300P103	Pipe Gallery Storm Drain Piping Plan
300P104	Ground Floor Waste and Vent Piping Plan
300P105	Second Floor Waste and Vent Piping Plan
300P401	Enlarged Ground Floor Domestic Water Piping Plans
300P402	Enlarged Ground Floor Waste and Vent Piping Plan - North
300P403	Enlarged Ground Floor Waste and Vent Piping Plan - South
300P601	Plumbing Details
300P901	Domestic Water Riser Diagram
300P902	Domestic Water Trap Primer Diagram
300P903	Storm Drain Diagram
300P904	Waste and Vent Riser Diagram - North
300P905	Waste and Vent Riser Diagram - South
300F101	Pipe Gallery Fire Protection Plan
300F102	Ground Level Fire Protection Plan
300F103	Second Level Fire Protection Plan
300F501	Fire Protection Details
300E101	Power Plan - Area A Lower Level
300E102	Power Plan - Area B
300E103	Power Plan - Area C Lower Level
300E104	Power Plan - Area D Lower Level
300E105	Power Plan - Area A Upper Level
300E106	Power Plan - Area C Upper Level
300E107	Power Plan - Area D Upper Level
300E108	Lighting & Receptacles Plan - Area A Lower Level
300E109	Lighting & Receptacles Plan - Area B
300E110	Lighting & Receptacles Plan - Area C Lower Level
300E111	Lighting & Receptacles Plan - Area D Lower Level
300E112	Lighting & Receptacles Plan - Area A Upper Level
300E113	Lighting & Receptacles Plan - Area C Upper Level
300E114	Lighting & Receptacles Plan - Roof Level
300E301	Filter Pipe Gallery Section
300E601	SWBD-300 One Line Diagram
300E602	MCC-311 One Line Diagram 1
300E603	MCC-311 One Line Diagram 2
300E604	MCC-312 One Line Diagram 1
300E605	CP-301 One Line Diagram 1
300E606	CP-301 One Line Diagram 2
300E607	CP-302 One Line Diagram
300E608	SWBD-300 Elevation
300E609	MCC-311 and MCC-312 Elevations
300E610	Panelboard Schedules - 1
300E611	Panelboard Schedules - 2

Sheet No.	Title
400 -Backwash Waste Basins	
400S101	Foundation Plan
400S102	Top Plan
400S301	Sections
400S302	Sections
400S901	Area 400 3D Views
400D101	Plan
400D301	Section
400E101	Power Plan
500 -Clearwell	
500S101	Foundation Plan and Baffle Layout Plan
500S102	Baffle Framing Plan and Roof Walkway Plan
500S201	Tank Elevations
500S301	Sections
500S302	Tank Baffle Sections and Details
500S303	Not Used
500S304	Not Used
500S305	Tank Interior Ladder and Roof Hatch
500S306	Tank Gutter and Rain Leader Details
500S901	3D Views
500D101	Upper Plan
500D102	Lower Plan
500D301	Section
500D501	Tank Inlet and Outlet Details
500D502	Tank Overflow and Drain Sections
500E101	Power Plan
600 -Crowson Pump Station	
600G001	Code Analysis
600G101	Life Safety Plan
600S101	Foundation Plan
600S102	Conceptual Roof Framing Plan
600S301	Sections
600S302	Sections
600S303	Sections and Details
600S304	Sections and Details
600S901	3D Views
600A001	Air Barrier
600A101	Ground Floor Plan
600A102	Roof Plan
600A201	Exterior Elevations 1
600A202	Exterior Elevations 2
600A301	Building Sections
600A302	Wall Sections
600D101	Plan
600D301	Sections
600D302	Section
600M101	Floor Plan
600P101	Floor Plan
600P901	Water Piping Diagram
600P902	Waste and Vent Piping Diagram
600F101	Fire Protection Plan
600F501	Fire Protection Details
600E101	Power and Control Plan
600E102	Lighting & Receptacles Plan
600E601	PDP-601 One Line Diagram
600E602	CP-601 One Line Diagram
600E603	PDP-601 Elevation and Panelboard Schedules

Sheet No.	Title
700 -Solar Power System	
700Q001	PV Electrical Notes
700Q101	PV Stie Plan
700Q401	Array Site Plan
700Q501	Electrical Details 1
700Q502	Electrical Details 2
700Q503	Electrical Details 3
700Q504	Electrical Details 4
700Q505	PV Labels and Markings
700Q601	PV Solar and Bess One Line Diagram
700Q701	Schedules
700Q801	Specifications Sheet PV Module
700Q802	Specification Sheet Inverter
700Q803	Specification Sheet Racking
700Q901	Communications Details
800 - Existing WTP	
800C101	Raw Water Bypass Pipline Plan and Profile
800C102	Raw Water Bypass Pipeline Details
800D101	Chemical Building Demolition
800D102	Chemical Building Bypass Pipeline Connection

ISSUE	DATE	DESCRIPTION
A	09/2026	ISSUED FOR BIDS

PROJECT MANAGER	PIERRE KWAN
CIVIL	J. MEGRDITCHIAN
STRUCTURAL	P. LINDBLOM
ARCHITECTURAL	V. YANEZ
PROCESS	P. KWAN
MECHANICAL	K. CHEUNG
ELECTRICAL	R. MCCOMB
INSTRUMENTATION	D. BEST
PROJECT NUMBER	10193663

REGISTERED PROFESSIONAL ENGINEER 85841 DIGITALLY SIGNED OREGON PIERRE K. KWAN EXPIRES: 06/30/2027

CITY OF ASHLAND
Ashland, Oregon

City of Ashland

Ashland Creek Water Treatment Plant

2026

GENERAL DRAWING INDEX - 2

0 1" 2"

FILENAME 000G002.dwg
SCALE NTS

SHEET 000G003

A/C	AIR CONDITIONING
A/E	ARCHITECT/ENGINEER
A	AMPERE
AB	ANCHOR BOLT
ABAN	ABANDON
ABC	AGGREGATE BASE COURSE
ABT	ABOUT
AC	ALTERNATING CURRENT
ACK	ACKNOWLEDGE
ACP	ACOUSTIC CEILING PANEL, ASPHALTIC CONCRETE PAVEMENT
ACST	ACOUSTIC
AD	ADDENDUM, AREA DRAIN
ADDL	ADDITIONAL
ADH	ADHESIVE
ADJ	ADJUSTABLE, ADJACENT
AF	AMP FRAME, AMP FUSE
AFF	ABOVE FINISH FLOOR
AFG	ABOVE FINISH GRADE
AGGR	AGGREGATE
AI	AREA INLET, ANALOG INPUT
AIC	AMPS INTERRUPTING CAPACITY
ALIG	ALIGNMENT
ALT	ALTERNATE, ALTITUDE
ALUM	ALUMINUM
AM	ACOUSTICAL MATERIAL
AMB	AMBIENT
ANC	ANCHOR
AO	ANALOG OUTPUT
AP	ACCESS PANEL
APRX	APPROXIMATE
APVD	APPROVED
ARCH	ARCHITECTURAL
ASSY	ASSEMBLY
AT	ACOUSTICAL TILE, AMP TRIP
ATC	ACOUSTICAL TILE CEILING
ATM	ATMOSPHERE
AUTO	AUTOMATIC
AUX	AUXILIARY
AVE	AVENUE
AVG	AVERAGE
AWG	AMERICAN WIRE GAGE
AWT	ACOUSTICAL WALL TILE
B TO B	BACK TO BACK
BAL	BALANCE
BBD	BULLETIN BOARD
BC	BASE CABINET, BOTTOM CHORD, BOLT CENTER, BOLT CIRCLE
BD	BOARD
BE	BOTH ENDS, BELL END
BESS	BATTERY ENERGY STORAGE SYSTEM
BF	BOTH FACES, BOTTOM FACE, BLIND FLANGE, BOARD FEET
BITUM	BITUMINOUS
BKG	BACKING
BL	BASE LINE
BLDG	BUILDING
BLK	BLOCK
BLKG	BLOCKING
BM	BENCHMARK, BEAM
BOC	BACK OF CURB
BOD	BOTTOM OF DUCT
BOG	BOTTOM OF GRILLE
BOL	BOTTOM OF LOUVER, BOLLARD
BOP	BOTTOM OF PIPE
BOR	BOTTOM OF REGISTER
BOT	BOTTOM
BOU	BOTTOM OF UNIT
BOW	BOTTOM OF WALL
BP	BASE PLATE
BRG	BEARING
BRGP	BEARING PLATE
BRKT	BRACKET
BS	BOTH SIDES
BTU	BRITISH THERMAL UNIT
BTW	BETWEEN
BTWLD	BUTT WELD
BU	BELL UP, BUILT-UP
BUR	BUILT-UP ROOFING
BW	BOTH WAYS
BYP	BYPASS
CTOC	CENTER TO CENTER
C&G	CURB AND GUTTER
C	CHANNEL SHAPE, CENTIGRADE, CONDUIT
CAB	CABINET
CAP	CAPACITY
CAT	CATALOG, CATEGORY
CAV	CAVITY
CB	CATCH BASIN
CCB	CONCRETE BLOCK
CCW	COUNTER CLOCKWISE
CDF	CONTROLLED-DENSITY FILL
CE	CONCRETE EDGE
CER	CERAMIC
CF	CUBIC FEET (FOOT)
CFL	COUNTER FLASHING
CHD	CHORD
CHFR	CHAMFER
CHH	COMMUNICATION HANDHOLE
CI	CURB INLET
CIP	CAST-IN-PLACE
CIPB	CONCRETE INTERLOCKING PAVER BALLAST
CIRC	CIRCULATION, CIRCULAR
CJ	CONSTRUCTION JOINT
CKT	CIRCUIT
CL	CENTERLINE, CLASS, CLOSE

CLG	CEILING
CLKG	CAULKING
CLR	CLEAR
CMH	COMMUNICATION MANHOLE
CMP	CORRUGATED METAL PIPE
CMU	CONCRETE MASONRY UNIT
CO	CLEANOUT, CONCRETE OPENING
COL	COLUMN
COM	COMMON
COMB	COMBINATION
COMM	COMMUNICATION
COMP	COMPOSITION, COMPRESSIBLE, COMPOSITE
CON	CONCENTRIC
CONC	CONCRETE
CONN	CONNECTION
CONST	CONSTRUCTION
CONT	CONTINUOUS
COOR	COORDINATE
CORR	CORROSIVE, CORRUGATED
CP	CHECKER PLATE, CONTROL POINT
CPLG	COUPLING
CRL	CORROSION-RESISTANT LINING
CSC	COMPRESSION SLEEVE COUPLING
CSK	COUNTERSINK
CSS	CLINIC SERVICE SINK
CT	CERAMIC TILE
CTJ	CONTRACTION JOINT
CTR	CENTER
CTRL	CONTROL
CVT	CULVERT
CU	COPPER, CUBIC
CW	COLD WATER (POTABLE)
CY	CUBIC YARD
d	PENNY (NAIL MEASURE)
D	DEEP, DIFFUSER, DRAIN
DB	DUCT BANK, DECIBEL, DRY BULB
DBA	DEFORMED BAR ANCHOR
DBL	DOUBLE
DC	DIRECT CURRENT
DEG	DEGREE
DEG C	DEGREE CENTIGRADE
DEG F	DEGREE FAHRENHEIT
DEMO	DEMOLITION
DEP	DEPRESSED
DEPT	DEPARTMENT
DET	DETAIL
DI	DROP INLET, DUCTILE IRON, DIGITAL INPUT
DIA	DIAMETER
DIAG	DIAGONAL, DIAGRAM
DIFF	DIFFERENTIAL, DIFFERENCE
DIM	DIMENSION
DISCH	DISCHARGE
DIST	DISTANCE, DISTRIBUTION
DIV	DIVISION
DL	DEAD LOAD
DMJ	DOUBLE MECHANICAL JOINT
DMPF	DAMP PROOFING
DN	DOWN
DO	DISSOLVED OXYGEN, DIGITAL OUTPUT, DITTO
DP	DEPTH
DPDT	DOUBLE POLE, DOUBLE THROW
DPST	DOUBLE POLE, SINGLE THROW
DS	DOWN SPOUT
DT	DOUBLE TEE, DRIP TRAP ASSEMBLY
DUP	DUPLICATE
DWG	DRAWING
DWL	DOWEL
DWR	DRAWER
E	EAST
EA	EACH, EXHAUST AIR
EC	ELECTRICAL CONTRACTOR
ECC	ECCENTRIC
ED	EQUIPMENT DRAIN
EDB	ELECTRICAL DUCT BANK
EE	EACH END
EF	EACH FACE
EFF	EFFLUENT, EFFICIENCY
EHH	ELECTRICAL HANDHOLE
EIFS	EXTERIOR INSULATION & FINISH SYSTEM
EJ	EXPANSION JOINT
EL	ELBOW, ELEVATION
ELEC	ELECTRICAL
EMBD	EMBEDDED
EMER	EMERGENCY
EMH	ELECTRICAL MANHOLE
ENCL	ENCLOSURE
ENGR	ENGINEER
ENTR	ENTRANCE
EOP	EDGE OF PAVEMENT
EQ	EQUAL
EQUIP	EQUIPMENT
EQUIV	EQUIVALENT
ES	EACH SIDE, EQUAL SPACE, EMERGENCY SHOWER
ESEW	EMERGENCY SHOWER AND EYE WASH
EST	ESTIMATE
EW	EACH WAY, EMERGENCY, EYE/FACE WASH
EWC	ELECTRIC WATER COOLER
EWEF	EACH WAY, EACH FACE
EWTB	EACH WAY, TOP AND BOTTOM
EXC	EXCAVATION
EXH	EXHAUST
EXP	EXPANSION, EXPOSED
EXST	EXISTING
EXT	EXTERIOR, EXTERNAL, EXTENSION

EXTR	EXTRUDED
F TO F	FACE TO FACE
F&B	FACE AND BYPASS
FAB	FABRICATE
FB	FLOOR BEAM
FBD	FIBERBOARD
FBG	FIBERGLASS
FBM	BOARD FOOT MEASURE
FBO	FURNISHED BY OWNER
FC	FLUSHING CONNECTION
FCA	FLANGED COUPLING ADAPTER
FD	FLOOR DRAIN
FDC	FLEXIBLE DUCT CONNECTION
FDR	FEEDER
FDTN	FOUNDATION
FE	FLANGED END
FEC	FIRE EXTINGUISHER CABINET
FES	FLARED END SECTION
FEXT	FIRE EXTINGUISHER
FF	FAR FACE, FACTORY FINISH, FLAT FACE, FINISHED FLOOR
FG	FINISHED GRADE
FH	FIRE HYDRANT
FIG	FIGURE
FIN	FINISH
FJT	FLUSH JOINT
FL	FLOW, FLOW LINE
FLEX	FLEXIBLE
FLG	FLANGE
FLOR	FLUORESCENT
FLR	FLOOR
FLS	FLASHING, FLUSH
FN	FENCE
FO	FINISHED OPENING
FOB	FLAT ON BOTTOM
FOC	FACE OF CONCRETE, FACE OF CURB
FOF	FACE OF FINISH
FOM	FACE OF MASONRY
FOS	FACE OF STUDS
FOT	FLAT ON TOP
FPT	FEMALE PIPE THREAD
FR	FRAME
FRP	FIBERGLASS REINFORCED PLASTIC
FRTM	FIRE RETARDANT TREATED MATERIAL
FS	FLOOR SINK, FAR SIDE
FT	FEET, FOOT
FTG	FOOTING, FITTING
FUR	FURRED, FURRING
FURN	FURNITURE, FURNISH
FUT	FUTURE
FV	FACE VELOCITY
FW	FIELD WELD, FIRE WALL
FWD	FORWARD
FXTR	FIXTURE
G	GRILLE, GROUND
GA	GAGE (METAL THICKNESS)
GAL	GALLON
GALV	GALVANIZED
GB	GRAB BAR, GRADE BREAK
GC	GROOVED COUPLING
GD	GUARD
GEN	GENERAL
GFCI	GROUND FAULT CIRCUIT INTERRUPTER
GFMU	GROUND FACE MASONRY UNIT
GG	GUTTER GRADE
GJ	GROOVED JOINT
GL	GLASS
GLB	GLASS BLOCK, GLULAM BEAM
GND	GROUND
GP	GUY POLE
GR	GRADE
GRTG	GRATING
GSB	GYPSUM SHEATHING BOARD
GT	GREASE TRAP
GVL	GRAVEL
GW	GUY WIRE
GWB	GYPSUM WALLBOARD
GYP	GYPSUM HARDBOARD
H	HIGH
HB	HOSE BIBB
HBD	HARDBOARD
HC	HANDICAPPED, HOLLOW CORE, HORIZONTAL CURVE, HORIZONTAL CENTERLINE
HD	HEAD, HOT DIP
HDR	HEADER
HDW	HARDWARE
HEX	HEXAGONAL
HGR	HANGER
HH	HANDHOLE
HID	HIGH-INTENSITY DISCHARGE
HM	HOLLOW METAL
HORIZ	HORIZONTAL
HP	HIGH POINT, HORSEPOWER
HPC	HORIZONTAL POINT OF CURVATURE
HPS	HIGH-PRESSURE SODIUM
HPT	HORIZONTAL POINT OF TANGENCY
HR	HOSE REEL, HOUR
HS	HEADED STUD, HIGH STRENGTH
HSS	HOLLOW STRUCTURAL SHAPE
HT	HEIGHT
HTG	HEATING
HV	HIGH VOLTAGE
HVAC	HEATING, VENTILATING AND AIR CONDITIONING
HWD	HARDWOOD
HWL	HIGH WATER LEVEL

HYD	HYDRAULIC
HZ	HERTZ, CYCLES PER SECOND
ID	INSIDE DIAMETER, INTERIOR DIMENSION
IE	INVERT ELEVATION, FOR EXAMPLE
IF	INSIDE FACE
IH	INTAKE HOOD
IMP	IMPACT
IN	INCH
INC	INCLUDE, INCANDESCENT
INF	INFLUENT
INSTR	INSTRUMENTATION
INSUL	INSULATION
INT	INTERIOR, INTERSECTION
INTR	INTERMEDIATE, INTERIOR
INV	INVERT
IPS	IRON PIPE SIZE
IPT	INTERNAL PIPE THREAD
IR	INSIDE RADIUS, IRON ROD
IRR	IRRIGATION
ISO	ISOMETRIC
JB	JUNCTION BOX
JCT	JUNCTION
JF	JOINT FILLER
JST	JOIST
JT	JOINT
K	KIP
KB	KNEE BRACE
KCMIL	THOUSAND CIRCULAR MILS
KD	KNOCK DOWN
KO	KNOCK OUT
KSI	KIPS PER SQUARE INCH
KW	KILOWATT
L	ANGLE, LENGTH, LAVATORY, LINTEL
LAD	LADDER
LAM	LAMINATE
LATL	LATERAL
LB	LAG BOLT, POUND
LCTB	LIQUID CHALK AND TACK BOARD
LDG	LANDING
LDR	LEADER
LE	LIFTING EYE
LF	LINEAR FOOT
LG	LONG
LH	LEFT HAND
LIN	LINEAR
LIQ	LIQUID
LLH	LONG LEG HORIZONTAL
LLV	LONG LEG VERTICAL
LMLU	LIQUID MARKER LECTURE UNIT
LNG	LONGITUDINAL
LOC	LOCATION
LP	LOW POINT
LPS	LOW-PRESSURE SODIUM
LR	LONG RADIUS
LT	LEFT
LTD	LIMITED
LTG	LIGHTING
LTL	LINTEL
LTNG	LIGHTNING
LV	LOW VOLTAGE
LVL	LAMINATED VENEER LUMBER
LVR	LOUVER
LW	LIGHTWEIGHT
LWC	LIGHTWEIGHT CONCRETE
LWL	LOW WATER LEVEL
MA	MIXED AIR
MACH	MACHINED
MAINT	MAINTENANCE
MAN	MANUAL
MATL	MATERIAL
MAX	MAXIMUM
MB	MACHINE BOLT
MBR	MEMBER
MC	MECHANICAL CONTRACTOR, MECHANICAL COUPLING, MOMENT CONNECTION
MCB	METAL CORNER BEAD/ MAIN CIRCUIT BREAKER
MCJ	MASONRY CONTROL JOINT
MDMJ	MODIFIED DOUBLE MECHANICAL JOINT
MECH	MECHANICAL
MED	MEDIUM
MFR	MANUFACTURER
MH	MANHOLE, METAL HALIDE
MIN	MINIMUM
MIR	MIRROR
MISC	MISCELLANEOUS
MJ	MECHANICAL JOINT
ML	MASONRY LINTEL
MLO	MAIN LUGS ONLY
MMB	MEMBRANE
MO	MASONRY OPENING
MOD	MODULAR, MODIFY
MON	MONUMENT
MPT	MALE PIPE THREAD
MRGWB	MOISTURE-RESISTANT GYPSUM WALLBOARD
MS	MOP SINK
MSL	MEAN SEA LEVEL
MT	MOUNT
MU	MASONRY UNIT
MULL	MULLION
MV	MEDIUM VOLTAGE
MW	MONITORING WELL

N	NORTH, NEUTRAL
NA	NOT APPLICABLE
NAT	NATURAL, NATIONAL
NC	NORMALLY CLOSED
NEG	NEGATIVE
NF	NEAR FACE, NON-FUSED
NIC	NOT IN CONTRACT
NO	NORMALLY OPEN, NUMBER
NOM	NOMINAL
NPS	NOMINAL PIPE SIZE
NPT	NATIONAL PIPE THREAD
NS	NEAR SIDE
NTS	NOT TO SCALE
NWL	NORMAL WATER LEVEL
O TO O	OUT TO OUT
OA	OUTSIDE AIR, OVERALL
OC	ON CENTER
OCPD	OVER CURRENT PROTECTION DEVICE
OD	OUTSIDE DIAMETER
OED	OPEN END DUCT
OF	OUTSIDE FACE, OFFICE FURNISHING
OFCI	OWNER FURNISHED CONTRACTOR INSTALLED
OFOI	OWNER FURNISHED OWNER INSTALLED
OG	ORIGINAL GROUND
OH	OVERHEAD
OPNG	OPENING
OPP	OPPOSITE
OPT	OPTIONAL
OR	OUTSIDE RADIUS
ORD	OVERFLOW ROOF DRAIN
ORIG	ORIGINAL
OVFL	OVERFLOW
OVHG	OVERHANG
OZ	OUNCE
P	PAINT
PA	PUBLIC ADDRESS
PAR	PARALLEL, PARAPET
PB	PANIC BAR, PULL BOX
PBD	PARTICLE BOARD
PC	POINT OF CURVE, PIECE, PRECAST
PCC	POINT OF COMPOUND CURVATURE
PCF	POUNDS PER CUBIC FOOT
PCT	PERCENT
PE	PLAIN END
PED	PEDESTAL
PEN	PENETRATION
PERF	PERFORATED
PERM	PERMANENT
PERP	PERPENDICULAR
PF	POWER FACTOR
PFMU	PREFACED MASONRY UNIT
PH	PHASE
PI	POINT OF INTERSECTION
PKG	PACKAGE
PL	PLATE, PROPERTY LINE, PRECAST LINTEL
PLAS	PLASTER
PLAT	PLATFORM
PLBG	PLUMBING
PLF	POUNDS PER LINEAR FOOT
PNEU	PNEUMATIC
POE	POWER OVER ETHERNET
POL	POLISH
POS	POSITIVE, POSITION
PP	POLYPROPYLENE, POWER POLE
PRC	POINT OF REVERSE CURVATURE
PREF	PREFINISHED
PREFAB	PREFABRICATED
PRELIM	PRELIMINARY
PREP	PREPARE
PRES	PRESSURE
PRI	PRIMARY
PROP	PROPERTY, PROPOSED
PROT	PROTECTION
PS	PIPE SUPPORT
PSF	POUNDS PER SQUARE FOOT
PSI	POUNDS PER SQUARE INCH
PSIA	POUNDS PER SQUARE INCH ABSOLUTE
PSIG	POUNDS PER SQUARE INCH GAGE
PST	PRESTRESSED
PT	POINT, POINT OF TANGENCY
PTN	PARTITION
PVC	POLYVINYL CHLORIDE, POINT OF VERTICAL CURVE
PVC-RGS	PVC COATED RGS
PVMT	PAVEMENT
PWD	PLYWOOD
PWJ	PLYWOOD WEB JOIST
PZ	PIEZOMETER
Q	RATE OF FLOW
QT	QUARRY TILE
QTR	QUARTER
QTY	QUANTITY
QUAL	QUALITY

R&R	REMOVE AND REPLACE
R&S	REMOVE AND SALVAGE
R	RADIUS, REGISTER, RISER
RA	RETURN AIR
RB	RESILIENT BASE, ROCK BERM
RCPT	RECEPTACLE
RD	ROOF DRAIN
REC	RECESS
RECD	RECEIVED
RECT	RECTANGULAR
RED	REDUCER
REF	REFERENCE
REINF	REINFORCING
REM	REMOVE
REQD	REQUIRED
RESIL	RESILIENT
RET	RETAINING, RETURN
REV	REVISION, REVERSE
RF	RESILIENT FLOORING
RFG	ROOFING
RFL	REFLECTED, REFLECTOR
RGH	ROUGH
RGS	RIGID GALVANIZED STEEL
RH	RELIEF HOOD, RIGHT HAND, RELATIVE HUMIDITY
RL	REQUIRED LAP
RLFA	RELIEF AIR
RND	ROUND
RNG	RUNNING
RO	ROUGH OPENING
ROW	RIGHT-OF-WAY
RPM	REVOLUTIONS PER MINUTE
RR	RAILROAD
RSP	ROCK SLOPE PROTECTION
RT	RIGHT
RVT	RESILIENT VINYL TILE
RY	READY
S	SOUTH, SINK
SA	SUPPLY AIR
SAMU	SOUND-ABSORBING MASONRY UNIT
SAN	SANITARY
SB	SPLASH BLOCK
SC	SOLID CORE
SCH	SCHEDULE
SCHEM	SCHEMATIC
SCN	SCREEN
SE	STEEL/ALUMINUM EDGE
SEC	SECONDARY, SECONDS
SECT	SECTION
SEP	SEPARATE
SF	SQUARE FOOT, SILT FENCE
SG	SHEET GLASS, SEALANT GROOVE
SH	SHOWER
SHT	SHEET
SHTG	SHEATHING
SIL	SILENCE
SIM	SIMILAR
SJ	SLAB JOINT
SL	SLOPE, STEEL LINTEL
SLTD	SLOTTED
SLV	SLEEVE
SMLS	SEAMLESS
SOG	SLAB ON GRADE
SP	SOUNDPROOF, STANDPIPE
SPA	SPACING
SPEC	SPECIFICATION
SPLY	SUPPLY
SPST	SINGLE POLE SINGLE THROW
SPT	SET POINT
SQ	SQUARE
SR	SHORT RADIUS
SS	SERVICE SINK
SST	STAINLESS STEEL
ST	STREET
STA	STATION
STD	STANDARD
STIF	STIFFENER
STIR	STIRRUP
STL	STEEL
STOR	STORAGE
STR	STRUCTURAL, STRAIGHT
SUB	SUBSTITUTE
SUC	SUCTION
SUSP	SUSPENDED
SY	SQUARE YARD
SYM	SYMBOL
SYMM	SYMMETRICAL
SYN	SYNTHETIC
SYS	SYSTEM
T&B	TOP AND BOTTOM
T&G	TONGUE AND GROOVE
T	TILE, TREAD
TA	TOILET ACCESSORY, TEMPERED AIR
TAN	TANGENT
TBM	TEMPORARY BENCHMARK
TCE	TEMPORARY CONSTRUCTION EASEMENT
TEF	TROWELED EPOXY FLOORING
TEMP	TEMPORARY, TEMPERATURE
THD	THREAD
THK	THICK
THRESH	THRESHOLD
TKBD	TACK BOARD

TOB	TOP OF BOLT, TOP OF BANK, TOP OF BEAM, TOP OF BERM
TOC	TOP OF CURB, TOP OF CONCRETE
TOD	TOP OF DUCT
TOF	TOP OF FOOTING
TOG	TOP OF GRATING
TOL	TOLERANCE, TOP OF LEDGER
TOM	TOP OF MASONRY
TOP	TOP OF PLATE
TOPO	TOPOGRAPHY
TOS	TOP OF SLAB, TOP OF STEEL, TOE OF SLOPE
TOW	TOP OF WALL
TP	TOILET PARTITION, TELEPHONE POLE, TOE PLATE, TRAP PRIMER
TPD	TOILET PAPER DISPENSER
TPG	TOPPING, THROUGH PLATE GIRDER
TR	TRANSOM
TRANS	TRANSITION
TRD	TRENCH DRAIN
TYP	TYPICAL
U	URINAL
UG	UNDERGROUND
ULT	ULTIMATE
UNFN	UNFINISHED
UNO	UNLESS NOTED OTHERWISE
UTIL	UTILITY
V	VENT, VELOCITY, VOLT
VA	VOLT AMPERE
VAC	VACUUM
VAR	VARNISH, VARIABLE, VOLT AMPERES REACTIVE
VB	VAPOR BARRIER, VINYL BASE, VALVE BOX
VC	VERTICAL CURVE
VCP	VITRIFIED CLAY PIPE
VCT	VINYL COMPOSITION TILE, VERTICAL CENTERLINE
VEL	VELOCITY
VENT	VENTILATION
VERT	VERTICAL
VERTS	VERTICAL REINFORCING
VG	VERTICAL GRAIN
VIF	VERIFY IN FIELD
VIN	VINYL
VOL	VOLUME
VPC	VERTICAL POINT OF CURVATURE
VPI	VERTICAL POINT OF INTERSECTION
VPT	VERTICAL POINT OF TANGENCY
VS	VERSUS, VAPOR SEAL
VTR	VENT THROUGH ROOF
VWC	VINYL WALL COVERING
W/	WITH
W/O	WITHOUT
W	WATT, WEST, WIDE, WINDOW, WIRE, WIDE FLANGE BEAM
WB	WOOD BASE
WC	WATER CLOSET, WATER COLUMN
WD	WOOD, WIDTH
WF	WIDE FLANGE, WASH FOUNTAIN
WG	WIRE GLASS, WATER GAGE
WH	WALL HYDRANT, WEEP HOLE
WI	WROUGHT IRON
WL	WATER LEVEL
WLD	WELDED
WM	WIRE MESH
WP	WEATHERPROOF
WS	WATERSTOP, WATER SURFACE
WSCT	WAINSCOT
WT	WEIGHT, WATER TIGHT
WTHP	WATERPROOF, WORKING POINT
WWF	WELDED WIRE FABRIC
XP	EXPLOSION-PROOF
XS	EXTRA STRONG
XSECT	CROSS SECTION
XXS	DOUBLE EXTRA STRONG
YH	YARD HYDRANT
YS	YIELD STRENGTH

GENERAL NOTES:

1. THESE ABBREVIATIONS APPLY TO THE ENTIRE SET OF CONTRACT DRAWINGS.
2. LISTING OF ABBREVIATIONS DOES NOT IMPLY THAT ALL ABBREVIATIONS ARE USED IN THE CONTRACT DRAWINGS.
3. ABBREVIATIONS SHOWN ON THIS SHEET INCLUDE VARIATIONS OF A WORD. FOR EXAMPLE, "MOD" MAY MEAN MODIFY OR MODIFICATION, "INC" MAY MEAN INCLUDED OR INCLUDING, AND "REINF" MAY MEAN REINFORCE OR REINFORCING.
4. SEE INSTRUMENTATION AND GENERAL LEGEND SHEETS FOR PROJECT-SPECIFIC EQUIPMENT AND PIPING SYSTEM ABBREVIATIONS.

ISSUE	DATE	DESCRIPTION
A	09/2026	ISSUED FOR BIDS

PROJECT MANAGER	PIERRE KWAN
CIVIL	J. MEGRDITCHIAN
STRUCTURAL	P. LINDBLOM
ARCHITECTURAL	V. YANEZ
PROCESS	P. KWAN
MECHANICAL	K. CHEUNG
ELECTRICAL	R. MCCOMB
INSTRUMENTATION	D. BEST
PROJECT NUMBER	10193663

REGISTERED PROFESSIONAL ENGINEER 85841 DIGITALLY SIGNED OREGON PIERRE K. KWAN EXPIRES: 06/30/2027

CITY OF ASHLAND
Ashland, Oregon

City of Ashland
Ashland Creek
Water Treatment Plant
2026

GENERAL
ABBREVIATIONS

0 1" 2"

FILENAME ASHLAND G_SHEETS.rte
SCALE

SHEET 000G004

Autodesk Docs://10193663_Ashland_WTP_Final_Design_2024/ASHLAND G_SHEETS.rvt
9/22/2026 10:47:47 PM

MATERIALS IN PLAN/SECTION

- ACOUSTICAL CEILING TILE (SECTION)
- ASPHALT (PLAN OR SMALL-SCALE SECTION)
- ASPHALT (LARGE-SCALE SECTION)
- BATT INSULATION (SECTION)
- BRICK MASONRY (PLAN AND/OR SECTION)
- CHECKERED PLATE (PLAN)
- CONCRETE (PLAN AND/OR SECTION)
- CONCRETE MASONRY (PLAN AND/OR SECTION)
- DEMOLITION (PLAN AND/OR SECTION)
- EARTH (SECTION)
- FILTER POINT MAT (PLAN)
- FINISHED WOOD (SECTION)
- GLULAM LUMBER (SECTION)
- GRANULAR FILL (SECTION)
- GRATING (SECTION)
- GRATING (PLAN)
- GROUT (SECTION)
- GYPSUM BOARD (SECTION)
- METAL (SECTION)
- ORIENTED STRAND BOARD (SECTION)
- PARTICLE BOARD (SECTION)
- PLYWOOD (LARGE-SCALE SECTION)
- PLYWOOD (SMALL-SCALE SECTION)
- PRECAST CONCRETE (PLAN AND/OR SECTION)
- RIGID INSULATION (SECTION)
- RIPRAP (PLAN AND/OR SECTION)
- SAND (SECTION)
- SOD (SECTION)
- WEEP JOINT MORTAR PROTECTION SYSTEM (SECTION)
- WOOD - CONTINUOUS (SECTION)
- WOOD - BLOCKING (SECTION)

GENERAL SYMBOLOGY

ARROW INDICATES DIRECTION OF PLAN NORTH

N

NORTH ARROW

PLAN

1/4" = 1'-0"

PLAN TITLE

ARROW INDICATES DIRECTION OF SECTION CUT

SECTION LETTER

X XXX

SHEET WHERE SECTION IS LOCATED

FULL BUILDING SECTION CUT MARKER

SECTION LETTER

FLAG INDICATES DIRECTION OF SECTION CUT

X XXX

SHEET WHERE SECTION IS LOCATED

SECTION CUT MARKER

SECTION LETTER

X XXX

SECTION

3/8" = 1'-0"

SHEET WHERE SECTION VIEW IS FIRST CUT *

SECTION TITLE

DETAIL NUMBER

XXX

SHEET WHERE DETAIL IS LOCATED *

DETAIL MARKER

FOR REFERENCING DETAILS INCLUDED IN DRAWING SET.

XXXXXX

DETAIL MARKER

FOR REFERENCING DETAILS BOUND IN SPECIFICATIONS OR SEPARATE VOLUME.

DETAIL NUMBER

X XXX

DETAIL

1/4" = 1'-0"

SHEET WHERE DETAIL IS LOCATED *

DETAIL TITLE

* EXCEPTIONS WHERE THE SHEET NUMBER IS REPLACED BY A DASH (-).
1) FOR COMMON DETAILS, SECTIONS, ELEVATIONS OR DETAILS THAT ARE CUT OR CALLED OUT ON MULTIPLE SHEETS.
2) SECTIONS, ELEVATIONS OR DETAILS THAT ARE LOCATED ON THE SAME SHEET THEY ARE CUT OR CALLED OUT ON.

X XXX INTERIOR

X XXX EXTERIOR

ARROW INDICATES POINT OF VIEW

ELEVATION NUMBER

SHEET WHERE ELEVATION IS LOCATED *

SINGLE ELEVATION OR PHOTO MARKER

X X XXX X X X

ELEVATION NUMBER

ARROW INDICATES POINT OF VIEW ELEVATION

INDICATES SHEET WHERE ELEVATION IS LOCATED

MULTIPLE ELEVATION OR PHOTO MARKER

ELEVATION IDENTIFICATION NUMBER

X XXX

ELEVATION

3" = 1'-0"

SHEET WHERE POINT OF VIEW MARKER CAN BE FOUND *

ELEVATION TITLE

TARGET ELEVATION

ARCHITECTURAL

ROOM NAME

XX-XX

ROOM NUMBER

XXX X

DOOR NUMBER

A

COLUMN GRID LINE

X

WALL TYPE

X

WINDOW TYPE

X

LOUVER

X

ACCESSORY, FURNITURE, AND MISCELLANEOUS EQUIPMENT IDENTIFIER

KEY NOTE DESIGNATION

KEY NOTE NUMBER

#

GENERAL LINE SYMBOLOGY

- 4-HOUR FIRE RATED WALL
- 3-HOUR FIRE RATED WALL
- 2-HOUR FIRE RATED WALL
- 1-HOUR FIRE RATED WALL
- COLUMN GRID LINE/CENTERLINE

IDENTIFICATION SYMBOLOGY

PIPING

FIGURE: 36"-PLE

EXAMPLE:
- LINE SIZE — 36"
- SERVICE — PLANT EFFLUENT

EQUIPMENT IDENTIFICATION

FIGURE: MX-XNZZ

EXAMPLE:
- EQUIPMENT ABBREVIATION — INDICATES MIXER
- PROCESS AREA — BALLASTED FLOC TANK
- TRAIN/LOOP NUMBER — TRAIN 1
- EQUIPMENT NUMBER — MIXER 2

GENERAL NOTES:

1. THIS IS A STANDARD SHEET SHOWING COMMON SYMBOLOGY. ALL SYMBOLS ARE NOT NECESSARILY USED ON THIS PROJECT.
2. SCREENING OR SHADING OF WORK IS USED TO INDICATE EXISTING COMPONENTS OR TO DE-EMPHASIZE PROPOSED IMPROVEMENTS TO HIGHLIGHT SELECTED TRADE WORK. REFER TO CONTEXT OF EACH SHEET FOR USAGE.

PIPING ABBREVIATIONS

ALM	ALUM
ALMS	ALUM SIDESTREAM
BWS	BACKWASH SUPPLY
BWW	BACKWASH WASTE
CA	COMPRESSED AIR
CD	CHEMICAL DRAIN
CHV	CHEMICAL VENT
COF	CHEMICAL OVERFLOW
CTH	CALCIUM THIOSULFATE
CW	COLD WATER (POTABLE)
CWR	COOLING WATER RETURN
CWSD	COOLING WATER SUPPLY
D	DRAIN
FAP	FILTER AID POLYMER
FE	FILTER EFFLUENT
FIL	FILTRATE
FSP	FIRE SUPPERSION
FTW	FILTER TO WASTE
FW	FINISHED WATER
GOX	GASEOUS OXYGEN
IA	INSTRUMENT AIR
LPA	LOW PRESSURE AIR
LOX	LIQUID OXYGEN
MSD	MICROSAND
NIS	NITROGEN GAS SUPPLY
NPW	NON-POTABLE WATER
OF	OVERFLOW
OG	OFFGAS (OZONE)
OZS	OZONATED SIDESTREAM
OZW	OZONATED WATER
OZG	OZONE GAS
PD	PROCESS DRAIN
POL	POLYMER
PW	POTABLE WATER
PWC	POTABLE WATER CROWSON
PWG	POTABLE WATER GRANITE
PWH	POTABLE WATER HOT
PWHR	POTABLE WATER HOT RECIRCULATING
PWT	POTABLE WATER TEPID
RW	RAW WATER
SAN	SANITARY SEWER
SCL	SODIUM CARBONATE (LIQUID)
SD	STORM DRAIN
SHC	SODIUM HYPOCHLORITE
SHY	SODIUM HYDROXIDE
SMP	SAMPLE
SPD	SUMP PUMP DISCHARGE
SPC	SETTLING POLYMER
SVW	SERVICE/PROCESS WATER
SW	SETTLED WATER
V	VENT

SHEET NAMING CONVENTION

AREA DESIGNATION

000	GENERAL
001	CIVIL
100	PRETREATMENT AND OZONE BUILDING
200	LIQUID OXYGEN STORAGE
300	OPERATIONS BUILDING
400	BACKWASH WASTE BASINS
500	CLEARWELL
600	CROWSON PUMP STATION
700	SOLAR POWER SYSTEM
800	EXISTING WTP
900	GRANITE RESEVIOR

DISCIPLINE DESIGNATOR & DISCIPLINE ORDER

G	GENERAL
V	SURVEYING/MAPPING
X	DEMOLITION
C	CIVIL
S	STRUCTURAL
A	ARCHITECTURAL
Q	SOLAR
D	PROCESS
M	MECHANICAL (HVAC)
P	PLUMBING
E	ELECTRICAL
Y	INSTRUMENTATION

SHEET TYPE DESIGNATOR

0	GENERAL (SYMBOLS, LEGENDS)
1	PLANS
2	ELEVATIONS
3	SECTIONS
4	LARGE SCALE VIEWS
5	DETAILS
6	SCHEDULES AND DIAGRAMS
8	PROFILES
9	3D REPRESENTATIONS

EXAMPLE

PRETREATMENT AND OZONE ARCHITECTURAL SECTION, DRAWING 01

1	0	0					BUILDING OR AREA 100
BUILDING OR AREA DESIGNATION							
			A				ARCHITECTURAL
DISCIPLINE DESIGNATOR							
				3			SECTIONS
SHEET TYPE DESIGNATOR							
					0	1	SHEET 01
SHEET NUMBER							
1	0	0	A	3	0	1	EXAMPLE

EQUIPMENT ABBREVIATIONS

A	ANALYTICAL INSTRUMENT	FC	FLOW CONTROLLER	PAB	PROCESS AIR BLOWER	UH	UNIT HEATER
AC	AIR COMPRESSOR	FCV	FLOW CONTROL VALVE	PBU	POLYMER BLENDING UNIT	UPS	UNITERRUPTED POWER SOURCE
ACCL	ACCESS LADDER	FG	FLOW GAUGE	PCV	PUMP CONTROL VALVE	UR	URINAL
ACO	AIR COALECER	FH	FIRE HYDRANT	PD	PULSATION DAMPNER	V	VAPORIZER
ACU	AIR CONDITIONING UNIT	FIL	FILTER	PE	PRESSURE ELEMENT	VAF	VARIABLE AREA FLOWMETER
AD	AIR DRYER	FIRE	FIRE PROTECTION SYSTEM	PLC	PROGRAMMABLE LOGIC CONTROLLER	VF	VENT FAN
AE	ANALYTICAL ELEMENT	FM	FLOWMETER	PMP	POLYMER PUMP	VFD	VARIABLE FREQUENCY DRIVE
AHU	AIR HANDLING UNIT	FR	FLASH REACTOR	PRD	PRESSURE RUPTURE DISK	VH	VAPOR HEATER
AIT	ANALYTICAL INSTRUMENT TRANSMITTER	GATE	SECURITY GATE	PRGV	PRESSURE REGULATING VALVE	VI	VENTURI INJECTOR
ALT	ALTITUDE VALVE	GEN	GENERATOR	PRLV	PRESSURE RELIEF VALVE	VRLV	VACUUM RELIEF VALVE
ALP	ALUM PUMP	GLV	GLOBE VALVE	PRV	PRESSURE REDUCING VALVE	VTF	VENTURI TUBE FLOWMETER
AR	AIR RECEIVER	GV	GATE VALVE	PS	PLATE SETTLER	WH	WATER HEATER
ARV	AIR RELIEF VALVE	H	HOIST	PSV	PRESSURE SENSOR VALVE	WIT	WEIGHT INDICATING TRANSMITTER
AS	ANNULAR SEAL	HB	HOSE BIB	PUS	PROXIMITY ULTRASOUND SENSOR	WL	WARNING LIGHT
ASHP	SODA ASH PUMP	HPT	HYDRO-PNUEMATIC TANK	PV	PLUG VALVE	WS	WATER SOFTENER
BCV	BALL CHECK VALVE	HE	HEAT EXCHANGER	PWRC	POWER CENTER	WTR	WATER FOUNTAIN
BFP	BACKFLOW PREVENTOR	HT	HOIST TROLLEY	QA	FAIL ALARM SYSTEM	Y	CONVERTER
BFV	BUTTERFLY VALVE	HV	HAND VALVE	RCP	DOMESTIC HOT WATER RECRICULATION PUMP	YRD	YARD
BKR	BREAKER	HWP	HEATING WATER PUMP	RTM	ROTAMETER	YS	"Y" STRAINER
BLW	BLOWER	I/P	CURRENT TO PNEUMATIC TRANSDUCER	RU	REFRIGERATION UNIT	YV	YARD VAULT
BPV	BACK PRESSURE VALVE	ICP	INSTRUMENTATION CONTROL PANEL	SCB	SECONDARY CONTAINMENT BASIN		
BRC	BRIDGE CRANE	IH	IMMERSION HEATER	SCL	SCALE		
BS	BAR SCREEN	IQ	INJECTION QUILL	SEP	SEPARATOR		
BT	BULK TOTE	IS	IRRIGATION SYSTEM	SFRV	SAFETY RELEASE VALVE		
BV	BALL VALVE	ISW	INTERRUPTING SWITCH	SG	SLIDE GATE		
CC	CALIBRATION COLUMN	JC	JIB CRANE	SGL	SIGHT GLASS		
CCCC	CLOSED CIRCUIT CAMERA CONTROL	LCV	LEVEL (FLOAT) CONTROL VALVE	SHW	SHOWER		
CCTV	CLOSED CIRCUIT TV	LOXT	LIQUID OXYGEN TANK	SHYP	SODIUM HYPOCHLORITE PUMP		
CHU	CHILLING UNIT	LS	LIMIT SWITCH	SKID	SKID		
CHL	CHILLER	LT	LIQUID TRAP	SLG	SLUICE GATE		
CR	CONTROL ROOM	METER	CONSUMPTION METER	SM	STATIC MIXER		
CTHP	CALCIUM THIOSULFATE PUMP	MOS	MOTOR STARTER	SNK	SINK		
CSV	CORPORATION STOP VALVE	MS	MOISTURE SEPARATOR	SP	STANDPIPE		
CU	CONDENSER UNIT	MU	MUFFLER	SRV	SURGE RELIEF VALVE		
CV	CHECK VALVE / SPRING LOADED CHECK VALVE	MX	MIXER	SS	SELECTOR SWITCH		
CW	CLEARWELL	MV	MUD VALVE	STR	STRAINER		
DPI	DIFFERENTIAL PRESSURE INDICATOR	MVO	MEDIUM VOLTAGE	SV	SOLENOID VALVE		
DC	DAVIT CRANE	NBS	NITROGEN BOOST SYSTEM	SWE	SWING ELBOW		
DH	DESTRUCT HEATHER	NV	NEEDLE VALVE	SWS	SAFETY WASH STATION		
DR	CHEMICAL DRUM	OD	OVERHEAD DOOR	T	TANK		
DS	DIAPHRAGM SEAL	OZD	OZONE DESTRUCT	TMX	TANK MIXER		
DV	DIAPHRAGM VALVE	OZG	OZONE GENERATOR	TMF	THERMAL MASS FLOWMETER		
ED	EDUCTOR	P	PUMP	TP	TRANSFER PUMP		
EX	EXHAUST	P/I	PNEUMATIC TO CURRENT TRANSDUCER	UA	MULTIVARIABLE ALARM		

ISSUE	DATE	DESCRIPTION
A	09/2026	ISSUED FOR BIDS

PROJECT MANAGER	PIERRE KWAN
CIVIL	J. MEGRDITCHIAN
STRUCTURAL	P. LINDBLOM
ARCHITECTURAL	V. YANEZ
PROCESS	P. KWAN
MECHANICAL	K. CHEUNG
ELECTRICAL	R. MCCOMB
INSTRUMENTATION	D. BEST
PROJECT NUMBER	10193663

REGISTERED PROFESSIONAL ENGINEER 85841 OREGON MAY 8, 2018 PIERRE K. KWAN

DIGITALLY SIGNED

EXPIRES: 06/30/2027

CITY OF ASHLAND

Ashland, Oregon

City of Ashland

Ashland Creek Water Treatment Plant

2026

GENERAL

LEGEND AND SYMBOLS

0 1" 2"

FILENAME	ASHLAND G_SHEETS.rte
SCALE	12" = 1'-0"
SHEET	000G005

Autodesk Docs://10193663_Ashland_WTP_Final_Design_2024/ASHLAND G_SHEETS.rvt
9/22/2026 10:47:47 PM

9/25/2026

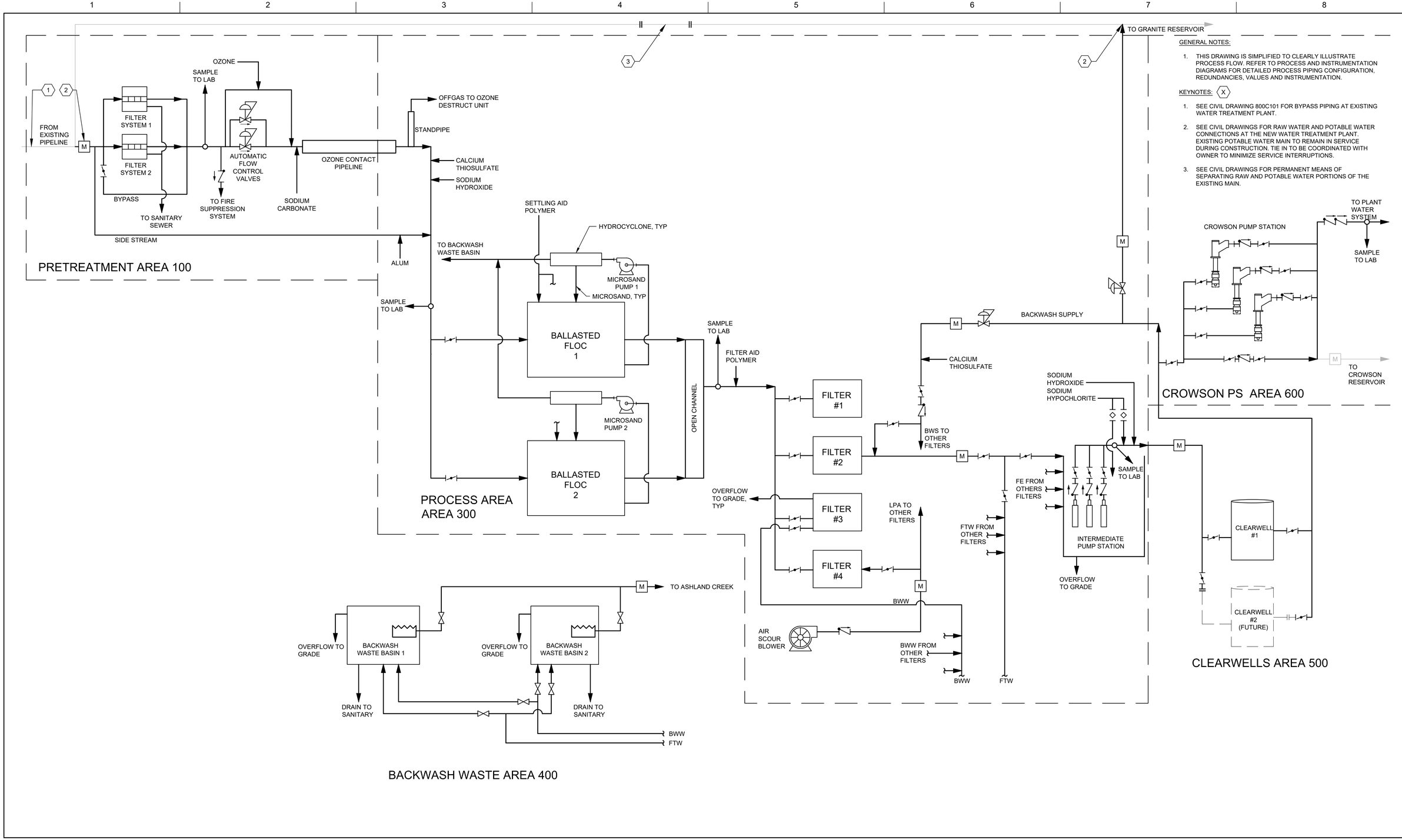

GENERAL NOTES:

1. THIS DRAWING IS SIMPLIFIED TO CLEARLY ILLUSTRATE PROCESS FLOW. REFER TO PROCESS AND INSTRUMENTATION DIAGRAMS FOR DETAILED PROCESS PIPING CONFIGURATION, REDUNDANCIES, VALUES AND INSTRUMENTATION.

KEYNOTES: (X)

1. SEE CIVIL DRAWING 800C101 FOR BYPASS PIPING AT EXISTING WATER TREATMENT PLANT.
2. SEE CIVIL DRAWINGS FOR RAW WATER AND POTABLE WATER CONNECTIONS AT THE NEW WATER TREATMENT PLANT. EXISTING POTABLE WATER MAIN TO REMAIN IN SERVICE DURING CONSTRUCTION. TIE IN TO BE COORDINATED WITH OWNER TO MINIMIZE SERVICE INTERRUPTIONS.
3. SEE CIVIL DRAWINGS FOR PERMANENT MEANS OF SEPARATING RAW AND POTABLE WATER PORTIONS OF THE EXISTING MAIN.

ISSUE	DATE	DESCRIPTION
A	09/2026	ISSUED FOR BIDS

PROJECT MANAGER	PIERRE KWAN
CIVIL	J. MEGRDITCHIAN
STRUCTURAL	P. LINDBLOM
ARCHITECTURAL	V. YANEZ
PROCESS	P. KWAN
MECHANICAL	K. CHEUNG
ELECTRICAL	R. MCCOMB
INSTRUMENTATION	D. BEST
PROJECT NUMBER	10193663

REGISTERED PROFESSIONAL ENGINEER 85841 OREGON PIERRE K. KWAN
DIGITALLY SIGNED
EXPIRES: 06/30/2027

CITY OF ASHLAND
Ashland, Oregon

City of Ashland

Ashland Creek Water Treatment Plant

2026

GENERAL

PROCESS FLOW DIAGRAM

0 1" 2"

FILENAME 000G006.dwg
SCALE NTS

SHEET **000G006**

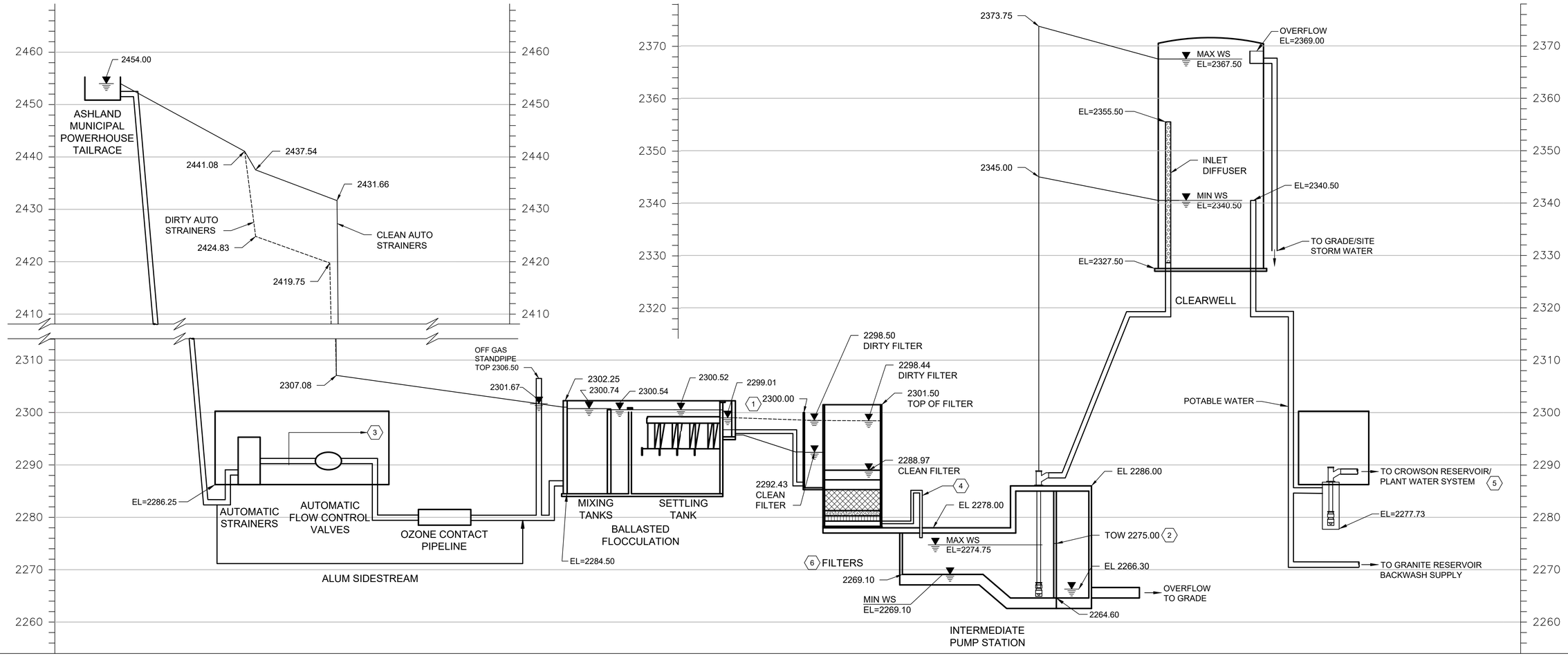

KEYNOTES: (X)

1. FILTER OVERFLOW TO GRADE.
2. INTERMEDIATE PUMP STATION WET WELL OVERFLOW TO GRADE. BROADCREST WEIR, MINIMUM LENGTH OF 10 FT. WET WELL WSE OF 2275.74 UNDER 10 MGD OVERFLOW SCENARIO.
3. TO FIRE WATER SYSTEM.
4. EACH HORIZONTAL 12" - FE PIPE CL AT 2284.75' TO BE CONTINUOUSLY AND PASSIVELY VENTED TO CORRESPONDING FILTERS.
5. SEE 000G008 FOR POTABLE WATER PROFILE.
6. UNDERDRAIN HEAD LOSS = 0.25 FT
   CLEAN MEDIA HEAD LOSS = 1.63 TO 2.40 FT (INITIAL/FUTURE)
   OPERATING HEAD LOSS = 6.25 TO 5.50 FT (INITIAL/FUTURE)

HYDRAULIC LINE SYMBOLOGY

——————————— CLEAN AUTO STRAINERS

- DIRTY AUTO STRAINERS

ISSUE	DATE	DESCRIPTION
A	09/2026	ISSUED FOR BIDS

PROJECT MANAGER	PIERRE KWAN
CIVIL	J. MEGRDITCHIAN
STRUCTURAL	P. LINDBLOM
ARCHITECTURAL	V. YANEZ
PROCESS	P. KWAN
MECHANICAL	K. CHEUNG
ELECTRICAL	R. MCCOMB
INSTRUMENTATION	D. BEST
PROJECT NUMBER	10193663

REGISTERED PROFESSIONAL ENGINEER 85841 DIGITALLY SIGNED OREGON MAY 8, 2026 PIERRE K. KWAN
EXPIRES: 06/30/2027

CITY OF ASHLAND
Ashland, Oregon

City of Ashland

Ashland Creek Water Treatment Plant

2026

GENERAL

HYDRAULIC PROFILE

0 1" 2"

FILENAME 000G007.dwg
SCALE 1" = 10' VERT.

SHEET **000G007**

9/25/2026

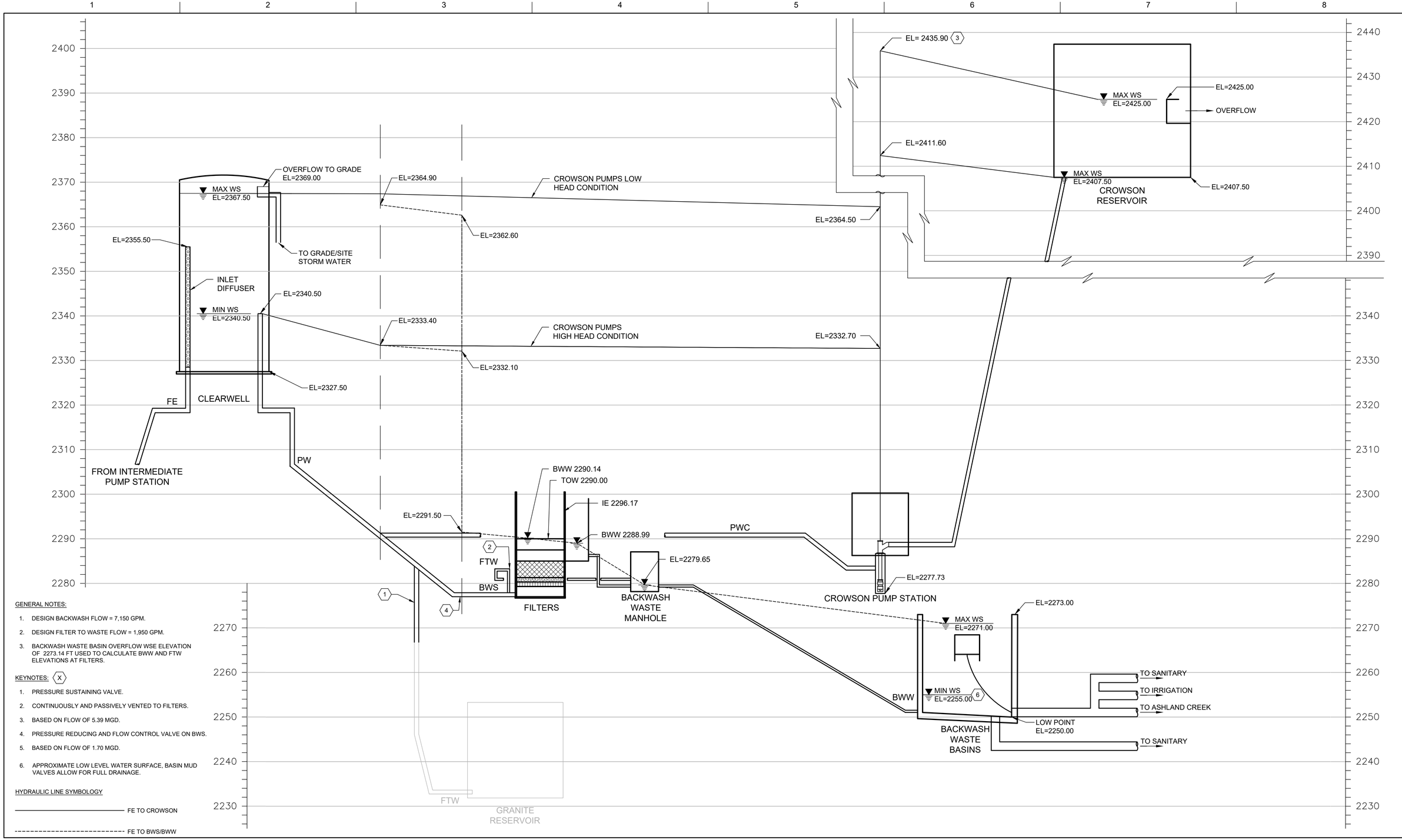

GENERAL NOTES:

1. DESIGN BACKWASH FLOW = 7,150 GPM.
2. DESIGN FILTER TO WASTE FLOW = 1,950 GPM.
3. BACKWASH WASTE BASIN OVERFLOW WSE ELEVATION OF 2273.14 FT USED TO CALCULATE BWW AND FTW ELEVATIONS AT FILTERS.

KEYNOTES: (X)

1. PRESSURE SUSTAINING VALVE.
2. CONTINUOUSLY AND PASSIVELY VENTED TO FILTERS.
3. BASED ON FLOW OF 5.39 MGD.
4. PRESSURE REDUCING AND FLOW CONTROL VALVE ON BWS.
5. BASED ON FLOW OF 1.70 MGD.
6. APPROXIMATE LOW LEVEL WATER SURFACE, BASIN MUD VALVES ALLOW FOR FULL DRAINAGE.

HYDRAULIC LINE SYMBOLOGY

——————————— FE TO CROWSON

- FE TO BWS/BWW

ISSUE	DATE	DESCRIPTION
A	09/2026	ISSUED FOR BIDS

PROJECT MANAGER	PIERRE KWAN
CIVIL	J. MEGRDITCHIAN
STRUCTURAL	P. LINDBLOM
ARCHITECTURAL	V. YANEZ
PROCESS	P. KWAN
MECHANICAL	K. CHEUNG
ELECTRICAL	R. MCCOMB
INSTRUMENTATION	D. BEST
PROJECT NUMBER	10193663

REGISTERED PROFESSIONAL ENGINEER 85841 DIGITALLY SIGNED OREGON PIERRE K. KWAN EXPIRES: 06/30/2027

CITY OF ASHLAND
Ashland, Oregon

City of Ashland

Ashland Creek Water Treatment Plant

2026

POTABLE WATER PROFILE

0 1" 2"

FILENAME 000G008.dwg
SCALE 1" = 10' VERT.

SHEET **000G008**

DESCRIPTION	UNITS	INITIAL VALUE	ULTIMATE VALUE
PLANT CAPACITY			
PLANT NOMINAL, FIRM CAPACITY	MGD	7.0	9
ANNUAL AVERAGE	MGD	3.3	4.24
DAILY MINIMUM	MGD	1.7	2.19
PRETREATMENT			
FILTER SYSTEM		IN—LINE	IN—LINE
MESH SIZE	MICRON	200	200
QUANTITY	—	2	2
FLOW RATE, EACH	GPM	2639	2865
OZONATION			
OZONE PIPELINE CONTACTOR			
NUMBER OF TRAINS	—	1	1
CONTACTOR VOLUME	GAL	35000	35000
CONTACTOR DIAMETER	INCHES	48	48
TOTAL DESIGN CAPACITY	MGD	9	9
CONTACT TIME @ DESIGN CAPACITY	MIN	5	5
OZONE DOSING SYSTEM			
OZONE DOSE	MG/L	2.5	2.5
OZONE USAGE			
AVERAGE	LB/DAY	72	93
MAX.	LB/DAY	154 [1]	198
OZONE GENERATION SYSTEM			
OZONE CONCENTRATION	%	10-13	10-13
OXYGEN USAGE			
AVERAGE	SCFM	6	7
MAX.	SCFM	12	15
OXYGEN STORAGE			
NUMBER OF TANKS	—	1	1
TANK VOLUME, EACH	GAL	6000	6000
DAYS OF LOX STORAGE @ AAD FLOW AND AVG DOSE	DAYS	127	99
OZONE DISSOLUTION SYSTEM (SIDE STREAM)			
GAS FEED			
INJECTION TYPE		TBD	TBD
NO. OF INJECTORS		TBD	TBD
OZONE TRANSFER EFFICIENCY	%	95	95
WATER SUPPLY	—	STRAINED RAW WATER	STRAINED RAW WATER
OZONE INJECTION SYSTEM			
MAIN PIPELINE CONTACTOR MIXER TYPE		FLASH REACTOR / MOTIONLESS MIXER	FLASH REACTOR / MOTIONLESS MIXER
SEDIMENTATION			
FLASH MIX		STATIC MIXER	STATIC MIXER
TYPE	—	IN—LINE	IN—LINE
QUANTITY	—	1	1
MIXING VALUE, "G"	1/SEC	694	4223
BALLASTED FLOCCULATION			
NUMBER OF TRAINS		2	2
CAPACITY PER TRAIN	MGD	7.2	9.2
TOTAL DESIGN CAPACITY	MGD	14.4	18.4
SETTLER LOADING RATE, DESIGN	GPM/SF	29	29
MICROSAND SIZE	MICROMETER	100 - 120	100 - 120
MICROSAND DENSITY	g/cm3	3	3
GARNETT/SAND RECOVERY RATIO	—		
MICROSAND UNIFORMITY COEFFICIENT	—	≤ 1.77	≤ 1.77
FILTRATION			
FILTER BEDS			
NUMBER OF FILTERS	—	4	4
WIDTH OF EACH FILTER	FT	13	13
LENGTH OF EACH FILTER	FT	25	25
AREA PER FILTER	SF	325	325
TOTAL AREA	SF	1300	1300
TOTAL AREA, ONE FILTER OUT OF SERVICE	SF	975	975
NUMBER OF WASHWATER TROUGHS	—	2	2
FILTER HYDRAULICS			
TOTAL LOADING RATE	MGD	7.17	9.17
FILTRATION RATE, MAXIMUM	GPM/SF	5.11	6.53
EBCT	MIN	7.31	6.87

NOTE:
1. DURING PEAK FLOW OF 7.0 MGD, DOSE MUST BE REDUCED 2.47 MG/L DUE TO VENDOR EQUIPMENT LIMITATIONS.

DESCRIPTION	UNITS	INITIAL VALUE	ULTIMATE VALUE
FILTER MEDIA			
SILICA SAND			
DEPTH	IN	12	12
UNIFORMITY COEFFICIENT	—	1.3	1.3
EFFECTIVE SIZE	MM	0.45-0.55	0.45-0.55
GRANULAR ACTIVATED CARBON			
DEPTH	IN	48	60
UNIFORMITY COEFFICIENT	—	1.3	1.3
EFFECTIVE SIZE	MM	1.5	1.5
FINISHED WATER STORAGE (CLEARWELL)			
NUMBER OF CLEARWELLS	—	1	2
CAPACITY, EACH	MG	0.85 (TANK 1)	0.85 (TANK 1) + 0.85 (TANK 2)
DIAMETER	FT	60 (TANK 1)	60 (TANK 1), 60 (TANK 2)
OVERFLOW HEIGHT	FT	42.5	42.5
MATERIAL OF CONSTRUCTION	—	STEEL	STEEL
PUMP STATIONS			
INTERMEDIATE PUMP STATION			
TYPE		VERTICAL TURBINE	VERTICAL TURBINE
NUMBER OF PUMPS	—	3 (2 DUTY + 1 STANDBY)	3 (2 DUTY + 1 STANDBY)
CAPACITY, EACH	GPM	2490	3184
TOTAL DYNAMIC HEAD	FT	104	85
POWER, EACH	HP	100 each	100 each
STORAGE DETENTION TIME	MIN	27	20
CROWSON PUMPS			
TYPE		VERTICAL TURBINE	VERTICAL TURBINE
NUMBER OF PUMPS	—	3 (2 DUTY + 1 STANDBY)	3 (2 DUTY + 1 STANDBY)
CAPACITY, EACH	GPM	1874	2380
TOTAL DYNAMIC HEAD	FT	120	135
POWER, EACH	HP	75	75
FILTER BACKWASH SYSTEM			
HYDRAULIC BACKWASH SYSTEM			
CRITERIA		1 FILTER AT A TIME	1 FILTER AT A TIME
FILTER BACKWASH RATE	GPM/SF	5 TO 22	5 TO 22
AIR SCOUR SYSTEM			
AIR FLOW RATE	CFM/SF	4	4
AIR SCOUR DURATION	MIN	5	5
NUMBER OF BLOWERS	—	1 (1 DUTY)	2 (1 DUTY + 1 STANDBY)
BLOWER TYPE	—	MULTISTAGE CENTRIFUGAL	MULTISTAGE CENTRIFUGAL
BLOWER CAPACITY, EACH	CFM	1300 at 6 PSIG	1300 at 6 PSIG
POWER, EACH	HP	125	125
BASINS			
NUMBER OF BASINS		2	2
CAPACITY, EACH	MG	0.17	0.17
FLOATING DECANTER			
NUMBER OF DECANTERS	—	2 (1 DUTY/BASIN)	2 (1 DUTY/BASIN)
CAPACITY, EACH	GPM	1000	1000
FLANGE CONNECTION	IN	8	8
ALUM SYSTEM			
NUMBER OF STORAGE TANKS	—	2	2
STORAGE TANK CAPACITY, EACH	GAL	6100	6100
DELIVERED CONCENTRATION	(% BY MASS)	49	49
AVERAGE DOSE AT AVERAGE FLOW	GAL/HR	2.4	2.9
MAX DOSE AT AVERAGE FLOW	GAL/HR	4.7	5.9
METERING PUMPS			
TYPE	—	PERISTALTIC	PERISTALTIC
NUMBER OF PUMPS	—	2	2
CAPACITY, EACH @ AVERAGE FLOW	GAL/HR	2.4	2.9
DISCHARGE PRESSURE	PSI	75	75
POWER, EACH	HP	0.5	0.5
SODIUM HYPOCHLORITE SYSTEM			
NUMBER OF STORAGE TANKS	—	1	1
STORAGE TANK CAPACITY	GAL	6100	6100
DELIVERED CONCENTRATION	(% BY MASS)	12.5	12.5
AVERAGE DOSE AT AVERAGE FLOW	GAL/HR	2.3	2.8
MAX DOSE AT AVERAGE FLOW	GAL/HR	2.8	3.6
METERING PUMPS			
TYPE	—	PERISTALTIC	PERISTALTIC
NUMBER OF PUMPS	—	3	3
CAPACITY, EACH @ AVERAGE FLOW	GAL/HR	2.3	2.8
DISCHARGE PRESSURE	PSI	45	45
POWER, EACH	HP	0.5	0.5

DESCRIPTION	UNITS	INITIAL VALUE	ULTIMATE VALUE
CAUSTIC SYSTEM			
NUMBER OF STORAGE TANKS	—	1	1
STORAGE TANK CAPACITY	GAL	1100	1100
DELIVERED CONCENTRATION	(% BY MASS)	25.0	25.0
AVERAGE DOSE AT AVERAGE FLOW	GAL/HR	0.80	1.10
MAX DOSE AT AVERAGE FLOW	GAL/HR	1.80	2.30
METERING PUMPS			
TYPE	—	PERISTALTIC	PERISTALTIC
NUMBER OF PUMPS	—	3	3
CAPACITY, EACH @ AVERAGE FLOW	GAL/HR	0.80	1.10
DISCHARGE PRESSURE	PSI	75	75
POWER, EACH	HP	0.5	0.5
SETTLING AID - POLYMERS SYSTEM			
NUMBER OF STORAGE TANKS	—	1	1
STORAGE CAPACITY, EACH	GAL	370	370
DELIVERED CONCENTRATION	(% BY MASS)	40.0	40.0
AVERAGE DOSE AT AVERAGE FLOW	GAL/HR	0.2	0.2
MAX DOSE AT AVERAGE FLOW	GAL/HR	0.4	0.5
METERING PUMPS			
TYPE	—	PERISTALTIC	PERISTALTIC
NUMBER OF PUMPS	—	1	1
CAPACITY, EACH @ AVERAGE FLOW	GAL/HR	0.2	0.2
DISCHARGE PRESSURE	PSI	45	45
POWER, EACH	HP	0.25	0.25
FILTER AID - POLYMER SYSTEM			
NUMBER OF STORAGE TANKS	—	1	1
STORAGE CAPACITY	GAL	100	100
DELIVERED CONCENTRATION	(% BY MASS)	30.0	30.0
AVERAGE DOSE AT AVERAGE FLOW	GAL/HR	0.01	0.01
MAX DOSE AT AVERAGE FLOW	GAL/HR	0.02	0.03
METERING PUMPS			
TYPE	—	PERISTALTIC	PERISTALTIC
NUMBER OF PUMPS	—	1	1
CAPACITY, EACH @ AVERAGE FLOW	GAL/HR	0.01	0.01
DISCHARGE PRESSURE	PSI	45	45
POWER, EACH	HP	0.25	0.25
CALCIUM THIOSULFATE SYSTEM			
NUMBER OF DRUMS	—	1	1
STORAGE CAPACITY	GAL	55	55
DELIVERED CONCENTRATION	(% BY MASS)	24.0	24.0
AVERAGE DOSE AT AVERAGE FLOW	LB/HR	0.093	0.12
MAX DOSE AT AVERAGE FLOW	LB/HR	0.17	0.22
METERING PUMPS - BWS			
TYPE	—	PERISTALTIC	PERISTALTIC
NUMBER OF PUMPS	—	2	2
CAPACITY, EACH @ AVERAGE FLOW	GAL/HR	0.011	0.015
DISCHARGE PRESSURE	PSI	45	45
POWER, EACH	HP	0.5	0.5
METERING PUMPS - OZONE			
TYPE	—	PERISTALTIC	PERISTALTIC
NUMBER OF PUMPS	—	2	2
CAPACITY, EACH @ AVERAGE FLOW	GAL/HR	0.026	0.033
DISCHARGE PRESSURE	PSI	75	75
POWER, EACH	HP	0.5	0.5
SODIUM CARBONATE LIQUID SYSTEM			
NUMBER OF STORAGE TANKS	—	1	1
STORAGE CAPACITY	GAL	100	100
DELIVERED CONCENTRATION	(% BY MASS)	99.0	99.0
AVERAGE DOSE AT AVERAGE FLOW	GAL/HR	6.90	8.60
MAX DOSE AT AVERAGE FLOW	GAL/HR	7.90	9.90
METERING PUMPS			
TYPE	—	PERISTALTIC	PERISTALTIC
NUMBER OF PUMPS	—	2	2
CAPACITY, EACH @ AVERAGE FLOW	GAL/HR	6.9	8.6
DISCHARGE PRESSURE	PSI	45	45
POWER, EACH	HP	0.5	0.5

ISSUE	DATE	DESCRIPTION
A	09/2026	ISSUED FOR BIDS

PROJECT MANAGER	PIERRE KWAN
CIVIL	J. MEGRDITCHIAN
STRUCTURAL	P. LINDBLOM
ARCHITECTURAL	V. YANEZ
PROCESS	P. KWAN
MECHANICAL	K. CHEUNG
ELECTRICAL	R. MCCOMB
INSTRUMENTATION	D. BEST
PROJECT NUMBER	10193663

REGISTERED PROFESSIONAL ENGINEER 85841 DIGITALLY SIGNED OREGON MAY 8, 2012 PIERRE K. KWAN
EXPIRES: 06/30/2027

CITY OF ASHLAND
Ashland, Oregon

City of Ashland

Ashland Creek Water Treatment Plant

2026

GENERAL DESIGN CRITERIA

0 1" 2"

FILENAME 000G009.dwg
SCALE NTS

SHEET **000G009**

GENERAL

G1. SCOPE
THE NOTES ON THIS SHEET AND THE STANDARD STRUCTURAL DETAILS ARE GENERAL AND APPLY TO THE ENTIRE PROJECT WHETHER SPECIFICALLY CALLED OUT OR NOT, EXCEPT WHERE THERE ARE SPECIFIC INDICATIONS TO THE CONTRARY ON STRUCTURAL SHEETS. IF THERE ARE QUESTIONS, THEY SHALL BE SUBMITTED TO THE STRUCTURAL ENGINEER AND ANSWERED IN WRITING PRIOR TO CONSTRUCTION.

G2. APPLICABLE SPECIFICATIONS AND CODES
A. 2019 OREGON STRUCTURAL SPECIALTY CODE. (OSSC)
B. LOCAL JURISDICTION AMENDMENTS
C. ASCE 7-16, MINIMUM DESIGN LOADS AND ASSOCIATED CRITERIA FOR BUILDINGS AND OTHER STRUCTURES.
D. AWWA D100-2011, STANDARD FOR WELDED CARBON STEEL TANKS FOR WATER STORAGE
E. ACI 350-2006, CODE REQUIREMENTS FOR ENVIRONMENTAL ENGINEERING CONCRETE STRUCTURES AND COMMENTARY.
F. ACI 318-14, BUILDING CODE REQUIREMENTS FOR STRUCTURAL CONCRETE AND COMMENTARY.
G. AISC 360-16, STEEL CONSTRUCTION MANUAL, 15TH ED.
H. AISC 341-16 SEISMIC PROVISIONS FOR STRUCTURAL STEEL BUILDINGS.

G3. DESIGN CRITERIA
1. APPLIES TO ALL STRUCTURES (UNO), DATA FOR SPECIFIC STRUCTURES CAN BE FOUND IN STRUCTURAL SHEETS.
A. DEAD LOAD:
1. ACTUAL TRIBUTARY STRUCTURE WEIGHT
B. LIVE LOAD:
1. SLAB ON GRADE 125 PSF
C. WIND: (STRENGTH DESIGN)
1. ULTIMATE DESIGN WIND SPEED: 106 MPH
2. NOMINAL DESIGN WIND SPEED: 82 MPH
3. EXPOSURE: C
4. ALL STRUCTURES ARE ENCLOSED.
5. INTERNAL PRESSURE COEFFICIENT, GCp: 0.18
D. SEISMIC: (STRENGTH DESIGN)
1. ALL STRUCTURES:
a. RISK CATEGORY: IV
b. IMPORTANCE FACTOR, Ie: 1.5
c. SPECTRAL RESPONSE ACCELERATION, Ss: 0.597
d. SPECTRAL RESPONSE ACCELERATION, S1: 0.339
e. SITE CLASS: C
f. SEISMIC DESIGN CATEGORY: D
g. SPECTRAL RESPONSE COEFFICIENT, SDS: 0.502
h. SPECTRAL RESPONSE COEFFICIENT, SD1: 0.339
2. SEISMIC CRITERIA FOR INDIVIDUAL STRUCTURES ARE NOTED IN FACILITY STRUCTURAL NOTES
E. SNOW LOAD:
1. GROUND SNOW LOAD, Pg: 37 PSF
2. FLAT ROOF SNOW LOAD, Pf: 34 PSF
3. EXPOSURE FACTOR, Ce: 0.9
4. IMPORTANCE FACTOR, Is: 1.2
5. THERMAL FACTOR, Ct: 1.2

G4. THE FOLLOWING GEOTECHNICAL REPORT WAS DEVELOPED FOR THIS PROJECT AND IS THE BASIS OF THIS STRUCTURAL DESIGN:
GEOTECHNICAL FIRM NAME: SHANNON & WILSON, INC.
ADDRESS: 3990 COLLINS WAY, SUITE 100, LAKE OSWEGO, OR 97035
REPORT NUMBER: 100329-001
REPORT DATE: 8/22/2019
ALLOWABLE SOIL BEARING = 4,000 PSF FOR STATIC LOADING
ALLOWABLE BEARING PRESSURE CAN BE INCREASED BY 33% FOR SEISMIC LOADING

G5. SAFETY
SAFETY AND STRUCTURE STABILITY DURING CONSTRUCTION ARE THE SOLE RESPONSIBILITY OF THE CONTRACTOR. STRUCTURES HAVE BEEN DESIGNED TO RESIST THE DESIGN LIVE LOADS ONLY AS A COMPLETED STRUCTURE.

G6. OPENINGS
OPENINGS FOR PIPES, DUCTS, CONDUITS, ETC. ARE NOT ALL SHOWN ON THE STRUCTURAL DRAWINGS. COORDINATE AND PROVIDE OPENINGS AS REQUIRED TO ACCOMMODATE ALL WORK SHOWN OR SPECIFIED IN THE CONTRACT DOCUMENTS AND OTHERWISE REQUIRED FOR THE FURNISHING OF A FUNCTIONALLY COMPLETE PROJECT. REINFORCE AROUND OPENINGS PER STANDARD STRUCTURAL DETAILS UNLESS OTHERWISE SHOWN.

G7. SPECIAL INSPECTIONS
SPECIAL INSPECTIONS ARE REQUIRED IN ACCORDANCE WITH CHAPTER 1 AND CHAPTER 17 OF THE OSSC. PAYMENT FOR THESE INSPECTIONS IS NOT THE RESPONSIBILITY OF THE CONTRACTOR. THE CONTRACTOR SHALL PROVIDE FOR FULL ACCESS TO THE WORK BY THE SPECIAL INSPECTOR AND SHALL PROVIDE FOR THESE INSPECTIONS IN HIS CONSTRUCTION SCHEDULE IN ACCORDANCE WITH THE SPECIFICATIONS. THE SPECIAL INSPECTION PROGRAM AND STATEMENT OF SPECIAL INSPECTIONS SHALL BE IN ACCORDANCE WITH SPECIFICATIONS.

G8. STANDARD DETAILS
THE STANDARD DETAILS DEPICT TYPICAL DETAILING TO BE USED ON THIS PROJECT. IF CONDITIONS ARE NOT EXPLICITLY SHOWN ON THE DRAWINGS THEY SHALL BE MADE SIMILAR TO THE STANDARD DETAILS. OBTAIN APPROVAL OF ENGINEER IN WRITING FOR SIMILAR CONDITIONS PRIOR TO CONSTRUCTION.

G9. THE CONTRACTOR SHALL FIELD VERIFY ALL DIMENSIONS AND ELEVATIONS OF EXISTING CONSTRUCTION AS REQUIRED TO COORDINATE NEW CONSTRUCTION. SUBMIT REQUIRED CHANGES FOR APPROVAL.

G10. CONTRACTOR TO SUBMIT FOR REVIEW ALL EQUIPMENT SIZES, OPERATING WEIGHTS, VIBRATION FORCES, SUPPORT LOCATIONS, ALONG WITH ANY FLOOR OPENINGS, NOTCHES, AND RECESSES REQUIRED BY SUCH EQUIPMENT. CONCRETE SUPPORT PADS AND/OR FRAMING REQUIRED TO SUPPORT SAID EQUIPMENT SHALL NOT BE FABRICATED AND PLACED UNTIL THE CONCRETE SUPPORT PADS AND/OR FRAMING IS APPROVED TO SUPPORT THE EQUIPMENT.

CONCRETE

C1. DESIGN STRENGTHS:
ALL CAST-IN-PLACE STRUCTURES:
F'c = 4,500 PSI
Fy = 60,000 PSI

C2. CONCRETE COVER
UNLESS OTHERWISE NOTED, PROVIDE CONCRETE COVER FOR REINFORCING AS FOLLOWS:
CONCRETE DEPOSITED AGAINST EARTH: 3"
ALL OTHER: 2"
SEE DRAWINGS FOR EXCEPTIONS

C3. SEE SPECIFICATIONS FOR REINFORCING PLACEMENT REQUIREMENTS.

C4. REFER TO OTHER DISCIPLINE DRAWINGS PRIOR TO CONSTRUCTION FOR EMBEDDED ITEMS AND PENETRATIONS NOT SHOWN ON STRUCTURAL DRAWINGS AS REQUIRED TO ACCOMMODATE ALL WORK SHOWN OR SPECIFIED IN THE CONTRACT DOCUMENTS AND OTHERWISE REQUIRED FOR THE FURNISHING OF A FUNCTIONALLY COMPLETE PROJECT. REINFORCE AROUND OPENINGS PER STANDARD STRUCTURAL DETAILS UNLESS OTHERWISE SHOWN.

C5. PROVIDE 3/4" CHAMFERS AT ALL EXPOSED EDGES AND 1/2" CHAMFERS AT JOINTS AS SHOWN. NOT ALL CHAMFERS MAY BE SHOWN ON DRAWINGS.

C6. FIELD ADJUST REINFORCING AT OPENINGS AND EMBEDDED ITEMS AS INDICATED.

C7. ANCHOR BOLTS NOT SPECIFIED BY ENGINEER SHALL BE DESIGNED AND CERTIFIED BY A REGISTERED PROFESSIONAL ENGINEER, RETAINED BY THE CONTRACTOR, IN ACCORDANCE WITH APPLICABLE PROJECT AND CODE REQUIREMENTS. SUBMIT AS A SHOP DRAWING FOR REVIEW AND APPROVAL BY THE ENGINEER. COORDINATE LOCATION, SIZE AND EMBEDMENT PRIOR TO CASTING CONCRETE.

C8. CONTINUOUS WATERSTOP SHALL BE INSTALLED IN JOINTS SUBJECT TO STATIC WATER PRESSURE.

C9. ABSOLUTELY NO WELDING OF REINFORCING BARS OR TORCHING TO BEND REINFORCING BARS SHALL BE ALLOWED WITHOUT SPECIFIC APPROVAL FROM THE STRUCTURAL ENGINEER.

C10. CONTRACTOR SHALL SUBMIT A CONCRETE PLACEMENT PLAN IDENTIFYING JOINT TYPES, JOINT LOCATIONS AND CONCRETE PLACEMENT SEQUENCE.

C11. ALL CAST IN PLACE AND POST-INSTALLED ANCHORS INDICATED IN THE STRUCTURAL DOCUMENTS SHALL COMPLY WITH CHAPTER 17 OF ACI 318 AND CHAPTER 19 OF THE OSSC. ALL EXPANSION AND ADHESIVE ANCHORS SHALL HAVE THE ICC REPORT SHOWING EQUIVALENT LOAD CAPACITY. SUBMIT AND INSTALL PER THE ICC EVALUATION REPORT.

STEEL

S1. DESIGN STRENGTHS:
WIDE FLANGE AND TEES: Fy=50 KSI
PIPES: Fy=35 KSI
STAINLESS STEEL Fy=33 KSI
HSS SECTIONS Fy=50 KSI
ALL OTHER PLATES AND SHAPES: Fy=36 KSI

S2. DIMENSIONS:
TO CENTERLINES OF COLUMNS AND BEAMS, TOP SURFACES OF BEAMS AND TUBES AND BACKS OF CHANNELS AND ANGLES UNO.

S3. ELEVATIONS:
TOP OF STEEL REFERS TO TOP SURFACE OF MEMBER OR FLANGE UNO.

S4. WHEN FILLET WELD SIZE IS NOT INDICATED, PROVIDE MAXIMUM WELD SIZE BASED ON MATERIAL THICKNESS IN ACCORDANCE WITH AISC SPECIFICATIONS.

S5. ALL BOLTED STRUCTURAL CONNECTIONS ARE BEARING TYPE CONNECTIONS UNLESS OTHERWISE SPECIFIED TO BE SLIP-CRITICAL. PROVIDE LOAD INDICATING WASHERS AT SLIP-CRITICAL CONNECTIONS.

S6. CONFORM TO AISC 360, STEEL CONSTRUCTION MANUAL AND AISC 341, SEISMIC DESIGN MANUAL.

S7. THE SEISMIC LOAD RESISTING SYSTEM (SLRS) IS DENOTED ON THE FRAMING PLANS AND FRAME ELEVATIONS. THE SLRS DESIGNATION INCLUDES THE MEMBER AND CONNECTIONS AT EACH END.

THE SEISMIC LOAD RESISTING SYSTEM (SLRS) IS DENOTED ON THE FRAMING PLANS AND FRAME ELEVATIONS. THE SLRS DESIGNATION INCLUDES THE MEMBER AND CONNECTIONS AT EACH END. FRAMES ARE DENOTED AS FOLLOWS:

A. MOMENT FRAME: (SLRS)
B. BRACED FRAME: (SLRS)

FOR SLRS SYSTEMS OR PARTS OF SYSTEMS THAT ARE NOT INCLUDED IN FRAMES, (SLRS) IS PLACED NEXT TO THE BEAM SIZE ON THE FRAMING PLAN (eg: ON A COLLECTOR ELEMENT (DRAG STRUT): MEMBER DESIGNATION (SLRS)

S8. ALL STEEL BEAMS SHALL RECEIVE STANDARD CAMBER PER THE SPECIFICATIONS UNLESS NOTED OTHERWISE ON THE PLANS. BEAMS REQUIRING SPECIAL CAMBER ARE DENOTED ON THE BEAMS SHOWN ON THE FRAMING PLANS. EXAMPLE: (+1/2") INDICATES ½".

DEFERRED SUBMITTALS:
(UNLESS NOTED OTHERWISE)

DS1. DEFERRED SUBMITTALS ARE THOSE PORTIONS OF THE DESIGN WHICH ARE NOT SUBMITTED AT THE TIME OF PERMIT APPLICATION AND WHICH ARE TO BE SUBMITTED TO THE PERMITTING AGENCY FOR ACCEPTANCE PRIOR TO INSTALLATION OF THAT PORTION OF THE WORK.

DS2. THE FOLLOWING IS A LIST OF DEFERRED SUBMITTALS THAT ARE EXPECTED TO CONTAIN STRUCTURAL CALCULATIONS OR SAFETY RELATED SYSTEM INFORMATION FOR REVIEW TO MEET BUILDING PERMITTING REQUIREMENTS FOR DESIGNED SYSTEMS, PRIOR TO INSTALLATION OF THE INDICATED STRUCTURAL ELEMENT, EQUIPMENT, DISTRIBUTION SYSTEM, OR COMPONENT OR ITS ANCHORAGE, THE CONTRACTOR SHALL SUBMIT THE REQUIRED CALCULATIONS AND SUPPORTING DATA AND DRAWINGS FOR REVIEW AND ACCEPTANCE BY THE ENGINEER. ADDITIONALLY, ACCEPTANCE INDICATED ON THE ENGINEERS COMMENT FORM, ALONG WITH THE COMPLETED, FINAL SUBMITTAL SHALL THEN BE FILED BY THE CONTRACTOR AND ACKNOWLEDGED AS ACCEPTED BY THE PERMITTING AGENCY PRIOR TO INSTALLATION OF THESE ITEMS. CONNECTIONS TO SUPPORTING STRUCTURE ARE TO BE INCLUDED IN DELEGATED DESIGN.
1. METAL FABRICATIONS
2. CLEARWELL STEEL TANK
3. PRE-ENGINEERED METAL BUILDINGS
4. PRECAST MANHOLES
5. CLEARWELL FABRIC BAFFLE WALLS
6. PIPING AND CONDUIT SUPPORTS
7. MONORAIL
8. TANKS AND VESSELS
9. GUARDRAILS / HANDRAILS
10. PRECAST VAULTS
11. ELEVATORS
12. STAIRS
13. PLATFORMS
14. LADDERS
15. FILTER SHADE STRUCTURE

PRE-ENGINEERED METAL BUILDING NOTES:

P1. DESIGN THE BUILDING SYSTEM(S) IN ACCORDANCE WITH THE BUILDING CODE SPECIFIED.

P2. DESIGN THE BUILDING SYSTEM FOR THE LIVE LOADS OR SNOW LOADS (WHICHEVER IS GREATER) INDICATED AND COLLATERAL LIVE LOAD PER SPECIFICATIONS IN ADDITION TO THE BUIDLING DEAD LOADS. WIND LOADS AND SEISMIC LOADS. PARAMETERS FOR THE DEVELOPMENT OF THE SNOW, WIND LOADS ARE LISTED IN THE GENERAL NOTES. INCLUDE THE EFFECTS OF UNBALANCED SNOW LOAD, SNOWDRIFT, SLIDING SNOW, RAIN ON SNOW AND WINDWARD AND LEEWARD WIND PRESSURE AND SUCTION LOADS. ROOF PURLINS SHALL BE DESIGNED FOR AN ADDITIONAL CONCENTRATED LIVE LOAD OF 200 POUNDS LOCATED ANYWHERE ALONG THE LENGTH OF THE PURLIN IN ADDITION TO MECHANICAL EQUIPMENT LOADS SHOWN. USE SPREADER BEAMS WHERE CONCENTRATED LOADS EXCEED PURLIN CAPACITY.

P3. LOAD COMBINATIONS SHALL BE IN ACCORDANCE WITH CURRENT BUILDING CODE UNLESS MBMA METAL BUILDING SYSTEMS MANUAL (2018) LOAD COMBINATIONS ARE MORE STRINGENT.

P4. DESIGN THE BUILDING SYSTEM WITH HINGED COLUMN BASES, FIXED BASE COLUMNS ARE NOT ALLOWED.

P5. BUILDING LATERAL DEFLECTIONS AND RACKING LIMITS SHALL BE IN ACCORDANCE WITH "SERVICEABILITY CONSIDERATIONS" SUMMARY TABLES CONTAINED IN AISC STEEL DESIGN GUIDE SERIES 3 "SERVICEABILITY DESIGN CONSIDERATIONS FOR LOW RISE BUILDINGS" 200X. DEFLECTIONS SHALL BE LIMITED TO ENSURE THAT BUILDING COMPONENTS DO NOT CONTACT INTERIOR WALLS. DEFLECTION LIMITS SHALL NOT EXCEED DEFLECTION TOLERANCES OF EQUIPMENT SUPPORTED BY THE BUILDING, SEE SPECIFICATION 13 34 19.

P6. PIER AND FOOTING SIZES AND LOCATIONS SHOWN ARE BASED UPON ASSUMPTIONS OF THE BUILDING SYSTEMS COMPONENTS, CONFIGURATIONS AND LOADS, COORDINATE ALL FINAL DETAILS AND DIMENSIONS TO ENSURE THAT THE FOUNDATION SYSTEM IS COMPATIBLE WITH THE BUILDING SYSTEM USED.

P7. DESIGN AND PROVIDE STRUCTURAL MEMBERS FOR THE SUPPORT OF HVAC UNITS, DUCTS, FANS, PIPING, ELECTRICAL COMPONENTS, SUPPORTED PARTITIONS, ETC.

P8. DESIGN OF THE ANCHOR BOLT GRADE AND DIAMETER IS THE RESPONSIBILITY OF THE METAL BUILDING MANUFACTURER, DETAILS WILL BE PROVIDED BY ENGINEER AFTER SHOP DRAWING APPROVAL, SEE SPECIFICATION 13 34 19.

Autodesk Docs://10193663_Ashland_WTP_Final_Design_2024/10193663-AWTP-300_S.rvt
9/23/2026 12:06:51 PM

ISSUE	DATE	DESCRIPTION
A	09/2026	ISSUED FOR BIDS

PROJECT MANAGER	PIERRE KWAN
CIVIL	J. MEGRDITCHIAN
STRUCTURAL	P. LINDBLOM
ARCHITECTURAL	V. YANEZ
PROCESS	P. KWAN
MECHANICAL	K. CHEUNG
ELECTRICAL	R. MCCOMB
INSTRUMENTATION	D. BEST
PROJECT NUMBER	10193663

REGISTERED PROFESSIONAL ENGINEER 93585PE DIGITALLY SIGNED OREGON MAY 8, 2018 ANDREW JACK FORTNER
EXPIRES: 12-31-2027

REGISTERED PROFESSIONAL ENGINEER 108753PE DIGITALLY SIGNED OREGON JAN 13, 2026 PATRICK DANIEL LINDBLOM
EXPIRES: 12/31/2028

CITY OF ASHLAND
Ashland, Oregon

City of Ashland
Ashland Creek Water Treatment Plant
2019

GENERAL STRUCTURAL GENERAL STRUCTURAL NOTES

0 1" 2"

FILENAME	10193663-AWTP-300_S.rte
SCALE	12" = 1'-0"
SHEET	000S001

STATEMENT OF SPECIAL INSPECTIONS (OSSC)

UNLESS NOTED OTHERWISE:

S1. SPECIAL INSPECTIONS AND STRUCTURAL OBSERVATIONS ARE REQUIRED IN ACCORDANCE WITH 2019 OREGON STRUCTURAL BUILDING CODE (OSSC). PAYMENT FOR THESE INSPECTIONS AND OBSERVATIONS ARE THE RESPONSIBILITY OF CITY OF ASHLAND AND NOT THE CONTRACTOR. THE CONTRACTOR SHALL PROVIDE FOR FULL ACCESS TO THE WORK BY THE SPECIAL INSPECTOR AND SHALL PROVIDE FOR THESE INSPECTIONS IN HIS CONSTRUCTION SCHEDULE IN ACCORDANCE WITH THE SPECIFICATIONS.

S2. SHOP FABRICATED ITEMS BY APPROVED FABRICATOR IS EXEMPT FROM SPECIAL INSPECTION. UPON COMPLETION, APPROVED FABRICATOR SHALL SUBMIT A CERTIFICATE OF COMPLIANCE STATING WORK WAS PERFORMED IN ACCORDANCE WITH APPROVED CONSTRUCTION DOCUMENTS.

S3. SEISMIC REQUIREMENTS:
SPECIAL INSPECTIONS ARE REQUIRED FOR SEISMIC FORCE RESISTING SYSTEMS INCLUDING STEEL ORDINARY CONCENTRICALLY BRACED FRAMES, STEEL ORDINARY MOMENT FRAMES, STEEL SPECIAL CONCENTRICALLY BRACED FRAMES, AND STEEL INTERMEDIATE MOMENT FRAMES PER AISC 341, ARCHITECTURAL, MECHANICAL, AND ELECTRICAL COMPONENTS IN THE FOLLOWING TABLE.

S4. SEISMIC CERTIFICATION OF NON STRUCTURAL COMPONENTS:
A. THE MANUFACTURE OF THE FOLLOWING SYSTEMS SHALL SUBMIT A CERTIFICATION OF COMPLIANCE TO THE REGISTERED DESIGN PROFESSIONAL AND BUILDING OFFICIAL.
1. MECHANICAL AND ELECTRICAL EQUIPMENT INTENDED TO REMAIN IN SERVICE FOLLOWING DESIGN EARTHQUAKE SHALL BE CERTIFIED AS OPERABLE BY MANUFACTURER PER ASCE 7-16.
2. COMPONENTS CONTAINING HAZARDOUS MATERIALS SHALL BE CERTIFIED AS MAINTAINING CONTAINMENT BY MANUFACTURER PER ASCE 7-16 13.2
B. CERTIFICATION SHALL BE BASED ON ANALYSIS PER ASCE 7-16 CHAPTER 13. TESTING PER ASCE 7-16 13.2.5, OR EXPERIENCED DATA PER ASCE 7-16 13.6

S5. CONTRACTOR SHALL SUBMIT A WRITTEN STATEMENT OF RESPONSIBILITY PRIOR TO CONSTRUCTION, INCLUDING:
A. ACKNOWLEDGEMENT OF SPECIAL INSPECTION REQUIREMENTS.
B. ACKNOWLEDGEMENT THAT CONTROL WILL BE EXCERCISED TO CONFORM WITH APPROVED CONSTRUCTION DOCUMENTS.
C. PROCEDURES FOR EXCERCISING CONTROL, INCLUDING METHOD AND FREQUENCY OF REPORTING, AND DISTRIBUTION OF REPORTS.
D. IDENTIFICATION AND QUALIFICATIONS OF PERSON(S) EXCERCISING SUCH CONTROL.

S6. TESTING AND INSPECTIONS REPORTS SHALL BE PREPARED FOR EACH INSPECTION ITEM ON A DAILY BASIS WHENEVER WORK IS PERFORMED ON THAT ITEM. REPORTS SHALL BE DISTRIBUTED TO THE OWNER, CONTRACTOR, BUILDING OFFICIAL (IF REQUESTED), AND THE REGISTERED DESIGN PROFESSIONAL FOR THEIR REVIEW, COMMENT, AND ACTION, AS NEEDED.

S7. THE FOLLOWING SCHEDULE CONTAINS A LIST OF SPECIAL INSPECTION ACTIVITIES RELATED TO THE QUALITY ASSURANCE PLAN REQUIRED BY OREGON STRUCTURAL SPECIALTY CODE (OSSC) FOR THE FABRICATION, ERECTION AND CONSTRUCTION OF THE STRUCTURAL SYSTEM AS SHOWN ON THE CONTRACT DOCUMENTS FOR THE PROJECT. ALL INSPECTORS SHALL BE QUALIFIED BY TRAINING AND EXPERIENCE FOR THE REQUIRED INSPECTIONS AND TEST PROCEDURES. REFER TO IBC CHAPTER 17 "STRUCTURAL TESTS AND SPECIAL INSPECTIONS" FOR SPECIFIC TEST PROCEDURES.

SCHEDULE OF SPECIAL INSPECTION SERVICES

INSPECTION ITEM REQUIRED	INSPECTION ITEM REQUIRED		CODE REFERENCE	REMARKS
	CONTINUOUS	PERIODIC		
GENERAL STRUCTURAL OBSERVATIONS				
CONDUCT VISUAL OBSERVATION OF THE STRUCTURAL SYSTEMS FOR GENERAL CONFORMANCE TO THE CONSTRUCTION DOCUMENTS. PREPARE REPORT OF OBSERVATIONS DESCRIBING WORK PROGRESS AND NON-CONFORMING ITEMS.	–	X	OSSC 1704.6	
SOIL AND EARTHWORK				
VERIFY MATERIALS BELOW SHALLOW FOUNDATIONS ARE ADEQUATE TO ACHIEVE THE DESIGN BEARING CAPACITY	–	X	OSSC 1705.6	
VERIFY EXCAVATIONS ARE EXTENDED TO PROPER DEPTH AND HAVE REACHED PROPER MATERIAL.	–	X	OSSC 1705.6	
PERFORM CLASSIFICATION AND TESTING OF COMPACTED FILL MATERIALS	–	X	OSSC 1705.6	
VERIFY USE OF PROPER MATERIALS, DENSITIES, AND LIFT THICKNESS DURING PLACEMENT AND COMPACTION OF COMPACTED FILL	X	–	OSSC 1705.6	
PRIOR TO PLACEMENT OF COMPACTED FILL, OBSERVE SUBGRADE AND VERIFY THAT SITE HAS BEEN PREPARED PROPERLY	–	X	OSSC 1705.6	

CONCRETE AND REINFORCING STEEL			TABLE 1705.3	
TYPE	CONTINUOUS SPECIAL INSPECTION	PERIODIC SPECIAL INSPECTION	REFERENCED STANDARD	OSSC REFERENCE
INSPECT REINFORCEMENT, INCLUDING PRESTRESSING TENDONS, AND VERIFY PLACEMENT.	–	X	ACI 318 CH. 20, 25.2, 25.3, 26.6.1-26.6.3	1908.4
REINFORCING BAR WELDING:	–		AWS D1.4 ACI 318; 26.6.4	–
a. VERIFY WELDABILITY OF REINFORCING BARS OTHER THAN ASTM A 706:		X		
b. INSPECT SINGLE-PASS FILLET WELDS, MAXIMUM 5/16"; AND		X		
c. INSPECT ALL OTHER WELDS.	X			
INSPECT ANCHORS CAST IN CONCRETE	–	X	ACI 318; 17.8.2	–
INSPECT ANCHORS POST-INSTALLED IN HARDENED CONCRETE MEMBERS.				
a. ADHESIVE ANCHORS INSTALLED IN HORIZONTALLY OR UPWARDLY INCLINED ORIENTATIONS TO RESIST SUSTAINED TENSION LOADS.	X		ACI 318; 17.8.2.4	–
b. MECHANICAL ANCHORS AND ADHESIVE ANCHORS NOT DEFINED IN a. (ABOVE PARAGRAPH)		X	ACI 318; 17.8.2	
VERIFY USE OF REQUIRED DESIGN MIX.	–	X	ACI 318: CH 19, 26.4.3, 26.4.4	1904.1, 1904.2, 1908.2, 1908.3
PRIOR TO CONCRETE PLACEMENT, FABRICATE SPECIMENS FOR STRENGTH TESTS, PERFORM SLUMP AND AIR CONTENT TESTS, AND DETERMINE THE TEMPERATURE OF CONCRETE.	X	–	ASTM C 172 ASTM C 31 ACI 318: 26.5, 26.12	1908.10
INSPECT CONCRETE AND SHOTCRETE PLACEMENT FOR PROPER APPLICATION TECHNIQUES.	X	–	ACI 318; 26.5	1908.6, 1908.7, 1908.8
VERIFY MAINTENANCE OF SPECIFIED CURING TEMPERATURE AND TECHNIQUES.	–	X	ACI 318: 26.5.3-26.5.5	1908.9
VERIFY IN-SITU CONCRETE STRENGTH, PRIOR TO STRESSING OF TENDONS IN POST-TENSIONED CONCRETE AND PRIOR TO REMOVAL OF SHORES AND FORMS FROM BEAMS AND STRUCTURAL SLABS.	–	X	ACI 318: 26.11.2	–
INSPECT FORMWORK FOR SHAPE, LOCATION AND DIMENSIONS OF CONCRETE MEMBER BEING FORMED.	–	X	ACI 318; 26.11.1.2 (b)	–
DESIGNATED SEISMIC SYSTEMS				
EXAMINE DESIGNATED SEISMIC SYSTEMS REQUIRING SEISMIC QUALIFICATION AND VERIFY THAT THE LABEL, ANCHORAGE OR MOUNTING CONFORMS TO THE CERTIFICATE OF COMPLIANCE.	X	–		
ARCHITECTURAL COMPONENTS				
INSPECT ERECTION AND FASTENING OF EXTERIOR CLADDING, INTERIOR AND EXTERIOR NONBEARING WALLS AND INTERIOR AND EXTERIOR VENEER.	–	X		
MECHANICAL AND ELECTRICAL COMPONENTS				
INSPECT ANCHORAGE OF ELECTRICAL EQUIPMENT	–	X		
INSPECT INSTALLATION AND ANCHORAGE OF PIPING SYSTEMS, DUCTWORK AND THEIR ASSOCIATED MECHANICAL UNITS DESIGNED TO CARRY HAZARDOUS MATERIALS.	–	X		
INSPECT INSTALLATION AND ANCHORAGE OF VIBRATION ISOLATION SYSTEMS WHERE THE CONSTRUCTION DOCUMENTS REQUIRE A NOMINAL CLEARANCE OF 1/4 INCH OR LESS BETWEEN THE EQUIPMENT SUPPORT FRAME AND RESTRAINT.	–	X		
STORAGE RACKS				
INSPECT ANCHORAGE OF STORAGE RACKS 8 FT OR GREATER IN HEIGHT.	–	X		

STATEMENT OF SPECIAL INSPECTIONS CONTINUED (OSSC)

SCHEDULE OF SPECIAL INSPECTION SERVICES (CONTINUED)			
INSPECTION ITEM REQUIRED	INSPECTION ITEM REQUIRED		CODE REFERENCE
	CONTINUOUS	PERIODIC	
STRUCTURAL STEEL			OSSC 1705.2.1
VERIFY FABRICATOR CERTIFICATION	–	X	
MATERIAL VERIFICATION OF HIGH-STRENGTH BOLTS, NUTS, AND WASHERS: IDENTIFICATION MARKINGS TO CONFIRM TO ASTM STANDARDS SPECIFIED IN THE APPROVED CONSTRUCTION DOCUMENTS.	–	X	AISC 360:A3.3, AND APPLICABLE ASTM MATERIAL STANDARDS
MATERIAL VERIFICATION OF HIGH-STRENGTH BOLTS, NUTS, AND WASHERS: MANUFACTURERS CERTIFICATE OF COMPLIANCE.	–	X	
INSPECTION OF HIGH-STRENGTH BOLTING: SNUG-TIGHT JOINTS.	–	X	AISC 360: M2.5
INSPECTION OF HIGH-STRENGTH BOLTING: PRETENSIONED AND SLIP-CRITICAL JOINTS USING TURN-OF-NUT WITH MATCHMARKING, TWIST-OFF BOLT OR DIRECT TENSION INDICATOR METHODS OF INSTALLATION	–	X	
OBSERVE AND TEST ALL FIELD APPLIED HEADED STUDS.	X	–	
MATERIAL VERIFICATION OF STRUCTURAL STEEL: IDENTIFICATION MARKINGS CONFORM TO AISC 360	–	X	AISC 360: N2.1
MATERIAL VERIFICATION OF OTHER STEEL: IDENTIFICATION MARKINGS CONFORM TO ASTM STANDARDS	–	X	APPLICABLE ASTM STANDARDS
MANUFACTURERS CERTIFIED TEST REPORTS	–	X	–
MATERIAL VERIFICATION OF WELD FILLER MATERIALS: IDENTIFICATION MARKINGS TO CONFIRM TO AWS SPECIFICATION IN THE APPROVED CONSTRUCTION DOCUMENTS	–	X	AISC 360; A3.5 AWS A5
MATERIAL VERIFICATION OF WELD FILLER MATERIALS: MANUFACTURER'S CERTIFICATE OF COMPLIANCE REQUIRED.	–	X	
VERIFY CONTRACTORS RECIEPT OF WELDER CERTIFICATIONS.	–	X	AWS D1.1
VISUALLY INSPECT ALL WELDS.	–	X	AWS D1.1
INSPECTION OF WELDING FOR STRUCTURAL STEEL AND COLD-FORMED DECKING: COMPLETE AND PARTIAL JOINT PENETRATION GROOVE WELDS.	X	–	
INSPECTION OF WELDING FOR STRUCTURAL STEEL AND COLD-FORMED DECKING: MULTIPASS FILLET WELDS.	X	–	
INSPECTION OF WELDING FOR STRUCTURAL STEEL AND COLD-FORMED DECKING: SINGLE-PASS FILLET WELDS > 5/16"	X	–	
INSPECTION OF WELDING FOR STRUCTURAL STEEL AND COLD-FORMED DECKING: PLUG AND SLOT WELDS.	X	–	
INSPECTION OF WELDING FOR STRUCTURAL STEEL AND COLD - FORMED DECKING: SINGLE-PASS FILLET WELDS <= 5/16"	–	X	
INSPECTION OF WELDING FOR STRUCTURAL STEEL AND COLD - FORMED DECKING: FLOOR AND ROOF DECK WELDS	–	X	AWS D1.3
INSPECTION OF STEEL FRAME JOINT DETAILS FOR COMPLIANCE: DETAILS SUCH AS BRACING AND STIFFENING	–	X	–
INSPECTION OF STEEL FRAME JOINT DETAILS FOR COMPLIANCE: MEMBER LOCATION	–	X	–
INSPECTION OF STEEL FRAME JOINT DETAILS FOR COMPLIANCE: APPLICATION OF JOINT DETAILS AT EACH CONNECTION	–	X	–

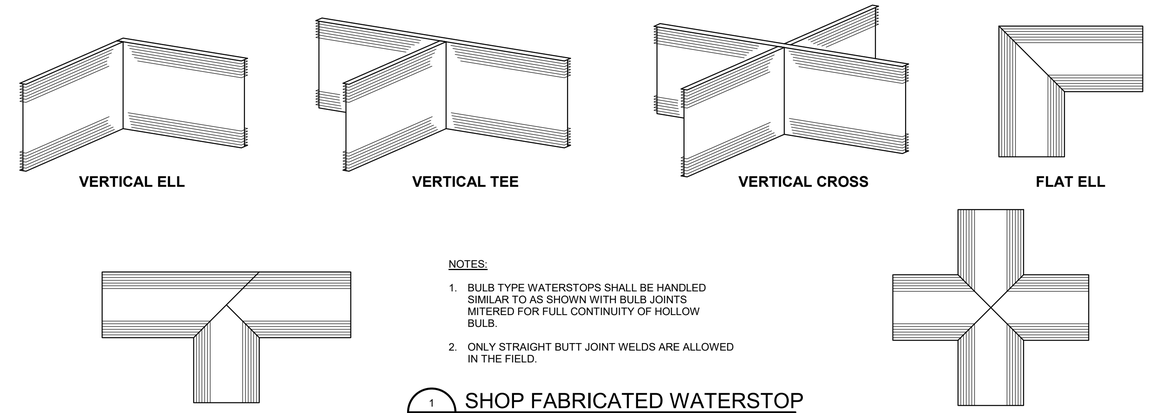

NOTES:

1. BULB TYPE WATERSTOPS SHALL BE HANDLED SIMILAR TO AS SHOWN WITH BULB JOINTS MITERED FOR FULL CONTINUITY OF HOLLOW BULB.
2. ONLY STRAIGHT BUTT JOINT WELDS ARE ALLOWED IN THE FIELD.

1 SHOP FABRICATED WATERSTOP
12" = 1'-0"

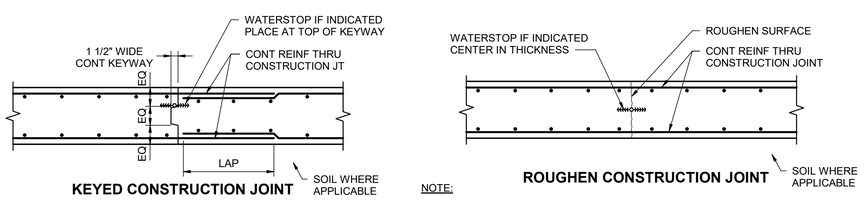

NOTE:

1. SEE SPECIFICATION FOR REQUIREMENT TO TIE WATERSTOPS IN PLACE TO PREVENT MOVEMENT OR FOLDING OVER.

2 CONSTRUCTION JOINT
3/4" = 1'-0"

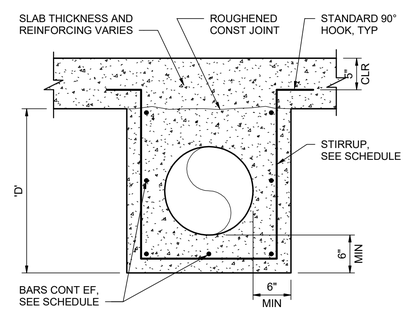

PIPE ENCASEMENT REINFORCING TABLE		
'D'	STIRRUPS	BARS CONT EF
<8'-0"	#5@12"	#5@12"
8'-0" TO 14'-0"	#6@12"	#5@12"

NOTES:

1. THIS DETAIL APPLIES FOR ALL UNDERSLAB PIPE ENCASEMENT WHEN ENCASEMENT IS NOT SUPPORTED BY PILING.
2. UNLESS NOTED OTHERWISE, ALL UNDERSLAB PIPING SHALL HAVE ENCASEMENT ATTACHED TO THE FOUNDATION SLAB BY REINFORCING.
3. AT CONTRACTORS OPTION, MULTIPLE PIPES MAY BE ENCASED IN A SINGLE ENCASEMENT WITH REINFORCING AS SHOWN IN THIS DETAIL.

3 ATTACHED UNDERSLAB PIPE ENCASEMENT
1" = 1'-0"

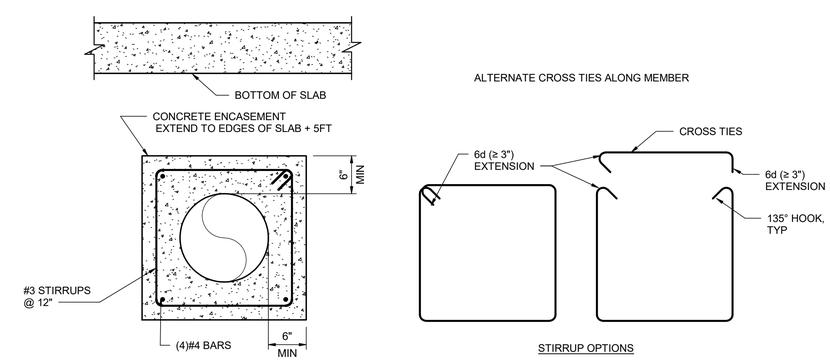

NOTES:

1. PROVIDE ENCASEMENT WHERE SPECIFICALLY CALLED OUT
2. EXTEND LONGITUDINAL REBARS AND HOOK IN EQUIPMENT PAD, TYP

4 DETACHED UNDERSLAB PIPE ENCASEMENT
1" = 1'-0"

ISSUE	DATE	DESCRIPTION
A	09/2026	ISSUED FOR BIDS

PROJECT MANAGER	PIERRE KWAN
CIVIL	J. MEGRDITCHIAN
STRUCTURAL	P. LINDBLOM
ARCHITECTURAL	V. YANEZ
PROCESS	P. KWAN
MECHANICAL	K. CHEUNG
ELECTRICAL	R. MCCOMB
INSTRUMENTATION	D. BEST
PROJECT NUMBER	10193663

REGISTERED PROFESSIONAL ENGINEER 93585PE DIGITALLY SIGNED OREGON MAY 8, 2019 ANDREW JACK FORTNER
EXPIRES: 12-31-2027

REGISTERED PROFESSIONAL ENGINEER 108753PE DIGITALLY SIGNED OREGON JAN 13, 2026 PATRICK DANIEL LINDBLOM
EXPIRES: 12/31/2028

CITY OF ASHLAND
Ashland, Oregon

City of Ashland

Ashland Creek Water Treatment Plant

2019

GENERAL STRUCTURAL SPECIAL INSPECTIONS 2 AND STANDARD DETAILS

0 1" 2"

FILENAME 10193663-AWTP-300_S.rte
SCALE As indicated
SHEET 000S003

Autodesk Docs://10193663_Ashland_WTP_Final_Design_2024/10193663-AWTP-300_S.rvt
9/23/2026 12:06:52 PM

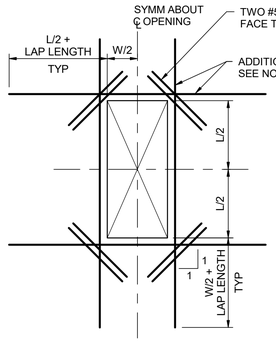

RECTANGULAR OPENING DETAIL

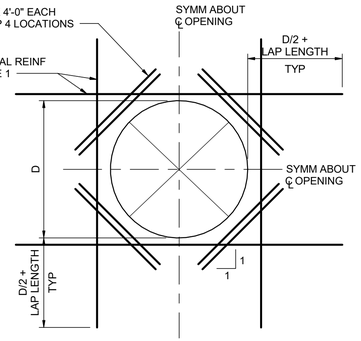

CIRCULAR OPENING DETAIL

NOTES:

1. PROVIDE ADDITIONAL REINFORCING THE SAME SIZE AS DISCONTINUOUS REINFORCEMENT AT OPENING. QUANTITY OF REINFORCING IN EACH DIRECTION SHALL BE EQUAL TO OR ONE GREATER THAN THE NUMBER OF DISCONTINUOUS BARS. PLACE 1/2 OF ADDITIONAL REINFORCING BARS EACH SIDE OF OPENING, PLACE ADDITIONAL REINFORCEMENT AT 3" OC (TYPICAL BOTH DIRECTIONS AND ALL LAYERS OF REINFORCEMENT). START FIRST BAR 2" CLEAR TO OPENING.
2. EXTEND ADDITIONAL REINFORCING BEYOND EDGE OF OPENING AS SHOWN ABOVE. ADDITIONAL BARS MAY TERMINATE AT THE END OF THE WALL WITH A STANDARD HOOK WHERE THE LENGTH OF THE WALL WILL NOT PERMIT BARS TO EXTEND AS SHOWN ABOVE.
3. TYPICAL WALL OR SLAB REINFORCING NOT SHOWN FOR CLARITY. TERMINATE TYPICAL REINFORCING 2" CLEAR TO OPENING.
4. OPENINGS 12" OR LESS IN SLABS AND WALLS, NO EXTRA REBARS ARE REQUIRED UNLESS SHOWN OTHERWISE. TYPICAL REINFORCING SHALL BE RESPACED (NOT CUT) TO ALLOW FOR OPENINGS TO BE MADE.
5. PROVIDE EXTRA REINFORCING WHERE OPENINGS ARE LARGER THAN SPACING OF REBAR.
6. UNLESS SHOWN OTHERWISE ON DRAWINGS, PROVIDE EXTRA REINFORCING AROUND OPENINGS AS SHOWN AND INDICATED ABOVE.
7. PROVIDE ADDITIONAL DOWELS PER NOTE 1 ABOVE FOR ALL OPENINGS NEAR THE FLOOR SLAB, BASE SLAB, OR CORNERS.

1 EXTRA REINFORCING AROUND OPENINGS

300S103 NOT TO SCALE

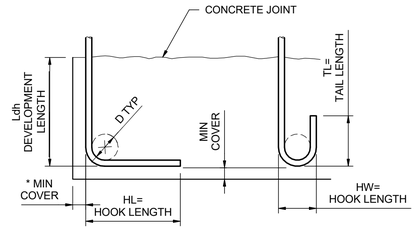

90 DEG STD HOOK **180 DEG STD HOOK**

BAR SIZE GRADE 60	HL	HW	TL	D	f'c=4.0 OR 4.5 KSI
					Ldh *
#3	6"	3"	3"	2 1/4"	6"
#4	8"	4"	4 1/2"	3"	7"
#5	10"	5"	5"	3 3/4"	10"
#6	1'-0"	6"	6"	4 1/2"	13"
#7	1'-2"	7"	7"	5 1/4"	16"
#8	1'-4"	8"	8"	6"	19"
#9	1'-7"	11 3/4"	10 1/2"	9 1/2"	23"
#10	1'-10"	1'-1 1/4"	11 1/2"	10 3/4"	27"
#11	2'-0"	1'-2 3/4"	1'-1"	12"	32"

* COMPLYING WITH MINIMUM COVER REQUIREMENTS OF ACI 318, 12.5.3. OTHERWISE Ldh MUST BE RE-CALCULATED.

2 REINFORCING HOOK SCHEDULE

NOT TO SCALE

LAP SPLICE AND EMDEDMENT LENGTHS f'c =4.0 ksi fy = 60 ksi f'c =4.5 ksi		
BAR	BARS SPACED GREATER THAN 4"	BARS SPACED LESS THAN OR EQUAL TO 4"
#3	23"	34"
#4	30"	45"
#5	38"	57"
#6	45"	68"
#7	66"	99"
#8	76"	113"
#9	85"	128"
#10	94"	142"
#11	104"	156"

NOTES:

1. PROVIDE MINIMUM LAP SPLICE LENGTHS AND EMBEDMENTS PER TABLE UNLESS NOTED OTHERWISE. EMBEDMENT LENGTH EQUALS THE LAP SPLICE LENGTH UNLESS OTHERWISE NOTED.
2. BAR SPACING AT LAP SPLICE IS THE MINIMUM CLEAR DISTANCE BETWEEN LAPPED BARS PLUS ONE BAR DIAMETER.
3. ALL SPLICES TO BE CONTACT SPLICES AND WIRED TOGETHER UNLESS OTHERWISE APPROVED BY THE ENGINEER.
4. TABLE ASSUMES UNCOATED OR GALVANIZED BARS IN NORMAL WEIGHT CONCRETE WITH 12" OR MORE FRESH CONCRETE PLACED BELOW HORIZONTAL REINFORCING.

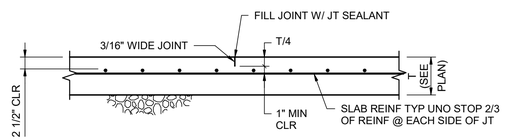

SAWED CONTROL JOINT (SJ)

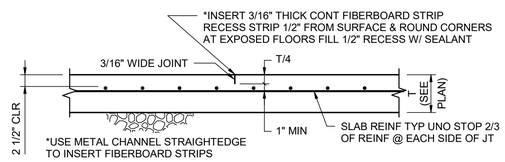

FORMED CONTROL JOINT (SJ)

3 CONCRETE REINFORCING LAP AND EMBEDMENT SCHEDULE

NOT TO SCALE

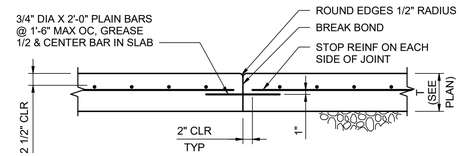

DOWELLED CONSTRUCTION JOINT (DSJ)

NOTE:

1. ANY ONE OF THE DETAILS ABOVE MAY BE USED AT LOCATIONS INDICATED ON DRAWINGS AS "SJ," AT CONTRACTOR'S OPTION.
2. WHERE "DSJ" IS INDICATED ON PLAN, THE "DSJ" SHALL BE USED.

4 SLAB-ON-GRADE JOINT (SJ OR DSJ)

NOT TO SCALE

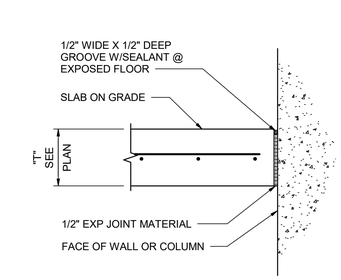

NOTES:

1. AT SLAB-ON-GRADE.

5 TYPICAL ISOLATION JOINT (IJ)

NOT TO SCALE

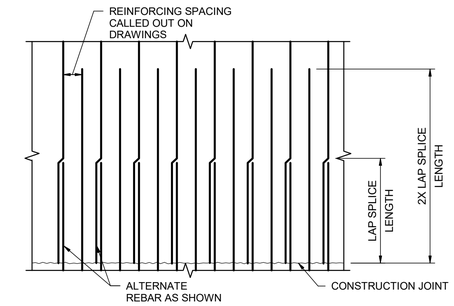

6 WALL VERTICAL REINFORCING AT CONSTRUCTION JOINT

NOT TO SCALE

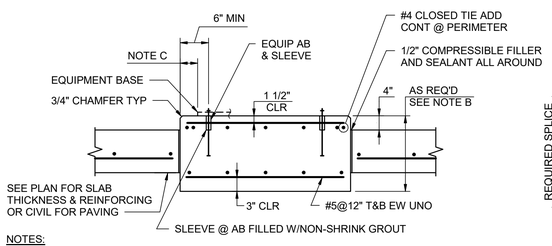

NOTES:

A. PROVIDE ABOVE PAD UNDER ALL ELECTRICAL AND MECHANICAL EQUIPMENT SUPPORTED ON GRADE WEIGHING MORE THAN 5000 POUNDS OR WHERE SPECIFICALLY NOTED ON PLANS.

B. PAD THICKNESS SHALL BE THE LARGER OF SLAB THICKNESS PLUS 4" OR AS REQ'D TO MAINTAIN 3" COVER ON ANCHOR BOLTS, 20" MIN AT INTERIOR PAD LOCATIONS AND 24" MIN @ EXTERIOR LOCATIONS.

C. 6" MIN AT INTERIOR PADS 18" MIN AT EXTERIOR PADS, TYP ALL AROUND.

7 TYPICAL EQUIPMENT SUPPORT PAD DETAIL

NOT TO SCALE

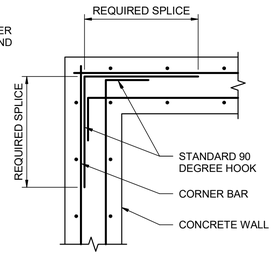

DOUBLE LAYER

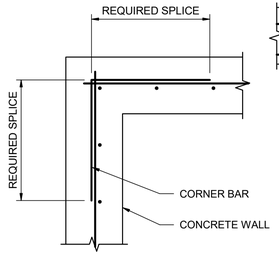

SINGLE LAYER

NOTE:

1. CORNER BARS TO BE SAME SIZE AND SPACING AS HORIZONTAL BARS.

8 WALL REINFORCING @ CORNER

NOT TO SCALE

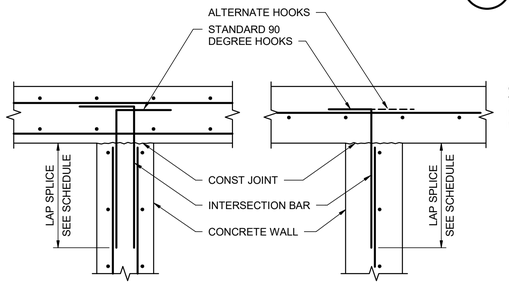

DOUBLE LAYER **SINGLE LAYER**

NOTE:

1. INTERSECTION BARS TO BE SAME SPACING AS HORIZONTAL BARS.

9 WALL REINFORCING @ INTERSECTION FOR NON WATER BEARING STRUCTURES

NOT TO SCALE

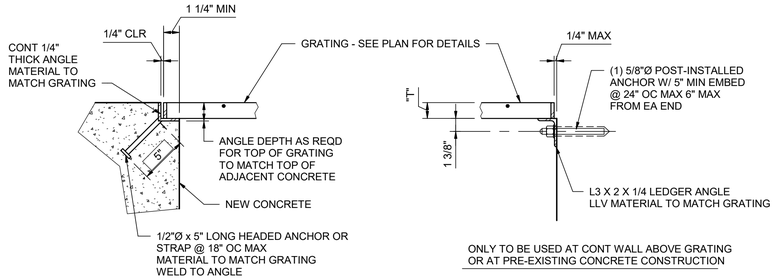

NOTES:

1. GRATING SIZE PER CONTRACT DOCUMENTS.
2. ALL ENDS AND OPENINGS SHALL BE BANDED, SEE SPECIFICATION.
3. ATTACH GRATING TO ALL SUPPORT ANGLES WITH BOLTED CLIPS, SPACED AT 2'-0" MAX CENTERS.
4. PROVIDE DISSIMILAR MATERIAL PROTECTION FOR ALUMINUM IN CONTACT WITH CONCRETE PER SPECIFICATION.

10 GRATING AND SUPPORT DETAIL

NOT TO SCALE

ISSUE	DATE	DESCRIPTION
A	09/2026	ISSUED FOR BIDS

PROJECT MANAGER	PIERRE KWAN
CIVIL	J. MEGRDITCHIAN
STRUCTURAL	P. LINDBLOM
ARCHITECTURAL	V. YANEZ
PROCESS	P. KWAN
MECHANICAL	K. CHEUNG
ELECTRICAL	R. MCCOMB
INSTRUMENTATION	D. BEST
PROJECT NUMBER	10193663

REGISTERED PROFESSIONAL ENGINEER 93585PE DIGITALLY SIGNED OREGON MAY 8, 2018 ANDREW JACK FORTNER EXPIRES: 12-31-2027

REGISTERED PROFESSIONAL ENGINEER 108753PE DIGITALLY SIGNED OREGON JAN 13, 2026 PATRICK DANIEL LINDBLOM EXPIRES: 12/31/2028

CITY OF ASHLAND
Ashland, Oregon

City of Ashland

Ashland Creek Water Treatment Plant

2019

GENERAL STRUCTURAL STANDARD DETAILS 1

0 1" 2"

FILENAME 10193663-AWTP-300_S.rte

SCALE As indicated

SHEET **000S004**

Autodesk Docs://10193663_Ashland_WTP_Final_Design_2024/10193663-AWTP-300_S.rvt
9/23/2026 12:06:53 PM

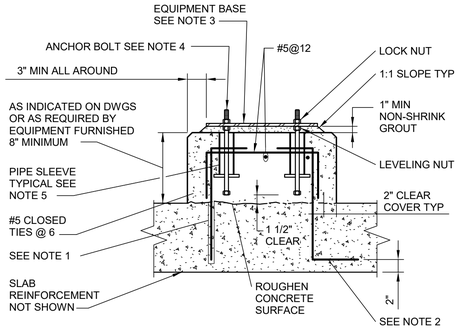

NOTES:

1. FOR NEW EQUIPMENT BASES ON EXISTING SLABS, DRILL INTO EXISTING SLAB TO DEVELOPMENT DEPTH AT 12" CENTERS AROUND PERIMETER OF EQUIPMENT BASE AND SET #5 HOOKED DOWELS IN EPOXY GROUT.
2. FOR EQUIPMENT BASES ON NEW SLABS, PROVIDE #5 DOWELS HAVING TWO HOOKED ENDS AT 12" CENTERS AROUND PERIMETER OF EQUIPMENT BASE.
3. EQUIPMENT BASE DIMENSIONS SHALL BE AS REQUIRED BY THE APPROVED SHOP DRAWINGS.
4. ANCHOR BOLTS AS RECOMMENDED BY THE EQUIPMENT MANUFACTURER. BOLTS SHALL BE HELD IN POSITION WITH A TEMPLATE WHILE EQUIPMENT BASE IS BEING CAST.
5. PIPE SLEEVES SHALL BE USED TO PROVIDE THE ANCHOR BOLT A MINIMUM MOVEMENT OF 1/2" IN ALL DIRECTIONS. MINIMUM SLEEVE LENGTH SHALL BE 8 TIMES THE BOLT DIAMETER. SLEEVES SHALL BE FILLED WITH NON-SHRINK GROUT. PIPE SLEEVES SHALL HAVE A MINIMUM INTERNAL DIAMETER 1" GREATER THAN BOLT DIAMETER AND A MAXIMUM INTERNAL DIAMETER OF 3" GREATER THAN BOLT DIAMETER.
6. EQUIPMENT BASES SHALL BE INSTALLED LEVEL. TOLERANCE IS 1/16"

1 EQUIPMENT SUPPORT PAD
12" = 1'-0"

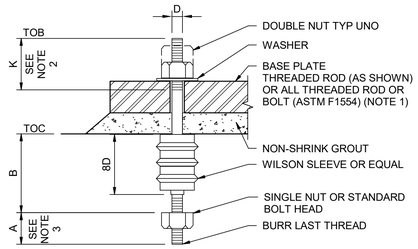

SCHEDULE-ANCHOR BOLT				
D	A	B	K	REMARKS
3/8"	1"	6"	2 3/4"	
1/2"	1 1/4"	8"	3"	
5/8"	1 1/2"	10"	3 1/4"	
3/4"	1 3/4"	12"	3 1/2"	
7/8"	2"	14"	3 3/4"	
1"	2 1/4"	16"	4"	
1 1/8"	2 1/2"	18"	4 1/4"	
1 1/4"	2 3/4"	20"	4 1/2"	
1 3/8"	3"	22"	4 3/4"	
1 1/2"	3 1/4"	24"	5"	
1 3/4"	3 3/4"	28"	5 1/2"	
2"	4 1/4"	32"	6"	
2 1/2"	5 1/2"	48"	7"	
3"	6 1/4"	66"	8"	

NOTE:

1. PROVIDE SST ANCHOR BOLTS WHERE INDICATED IN SECTIONS AND DETAILS.
2. STANDARD BOLT THREAD LENGTH MAY BE USED WHERE APPLICABLE.
3. DIMENSION IN SCHEDULE OR STANDARD BOLT HEAD.
4. IF EMBEDMENT IS NOT EXPLICITLY CALLED OUT. EMBEDMENT DEPTH 'B' CAN BE USED UNLESS ANCHORS ARE WITHIN 1.5B OF CONCRETE EDGE OR SPACED LESS THAN 3B.

   FOR ANCHORS WITHIN 1.5B OF CONCRETE EDGE OR SPACED LESS THAN 3B OR AT CONTRACTORS OPTION, CONTRACTOR SHALL DESIGN ANCHORAGE PER SPECIFICATIONS.

2 ANCHOR BOLT DETAIL
NOT TO SCALE

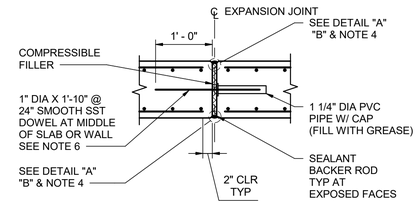

NON-WATER BEARING SLAB OR WALL

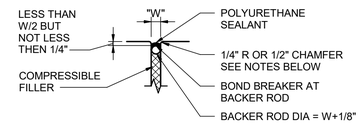

DETAIL "A" EXPOSED FACE

NOTES:

1. FOR WALLS, FORM ALL JOINT EDGES AT 1/2" CHAMFER.
2. FOR UNDER SIDE OF EXPOSED SLABS, FORM JOINT EDGES AT 1/2" CHAMFER.
3. FOR SLABS, PROVIDE 1/4" RADIUS TOOLED EDGES AT TOP SURFACE.
4. USE DETAIL "B" AT UNDERSIDE OF SLABS ON GRADE ONLY. USE DETAIL "A" AT ALL OTHER LOCATIONS.
5. "W" = 1" WIDE UNLESS OTHERWISE INDICATED ON THE DRAWINGS.
6. SMOOTH DOWEL AND PVC ASSEMBLY AT EXPANSION JOINTS SHALL USE GREENSTREAK "SPEED DOWEL" NO. PSD12/#7TX (BASE CODE PSD/#7BX). INSTALL PER MANUFACTURER INSTRUCTIONS.

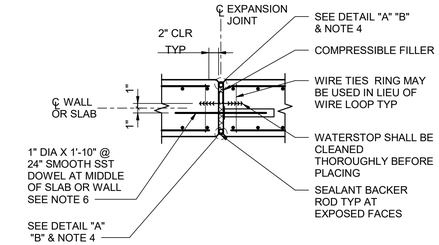

WATER BEARING SLAB OR WALL

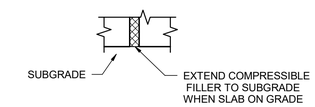

DETAIL "B" SOIL SIDE

3 EXPANSION JOINTS WITH SEALANT (EJ)
NOT TO SCALE

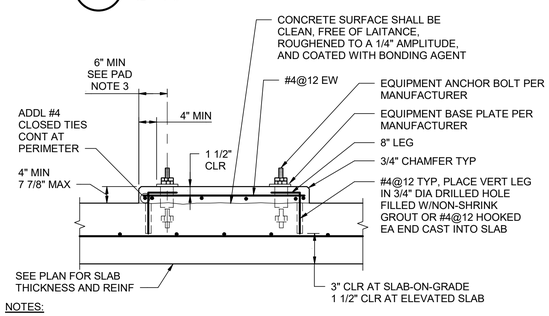

NOTES:

1. PROVIDE RAISED PAD UNDER ALL ELECTRICAL AND MECHANICAL EQUIPMENT SUPPORTED ON STRUCTURAL SLABS. ALSO PROVIDE FOR EQUIPMENT WEIGHING LESS THAN 5000 POUNDS WHICH ARE SUPPORTED ON GRADE, OR WHERE SPECIFICALLY NOTED ON PLANS PER DETAIL 7/000S004. FOR PAD HEIGHT GREATER THAN 8", SEE DETAIL 1 THIS SHEET.
2. PAD THICKNESS SHALL BE A MINIMUM OF 4". CONTRACTOR SHALL VERIFY THE PAD DIMENSIONS.
3. PROVIDE EMBEDDED CHANNELS FOR ANCHORING ELECTRICAL EQUIPMENT WHERE REQUIRED.

PAD NOTES:

1. EQUIPMENT PAD DETAILS ON THIS SHEET APPLY FOR SUPPORT OF ALL EQUIPMENT UNLESS INDICATED OTHERWISE ON THE DRAWINGS.
2. BEFORE EQUIPMENT SUPPORT PADS ARE CAST, THE PAD SIZES AND REINFORCING SHALL BE APPROVED BY THE ENGINEER AS BEING CAPABLE OF SUPPORTING EQUIPMENT TO BE PLACED THEREON. EQUIPMENT BASE DIMENSIONS SHALL BE THE LARGER OF AS DETERMINED BY THE EQUIPMENT MANUFACTURER OR AS INDICATED ON THE DRAWINGS. SUBMIT ALL EQUIPMENT DIMENSIONS AND LOADS TO ENGINEER.
3. 6" MINIMUM PAD EDGE DIMENSION TO EQUIPMENT ANCHOR BOLT APPLIES FOR ALL NON-ELECTRICAL EQUIPMENT SUPPORT PADS. AT ELECTRICAL EQUIPMENT, PROVIDE 1" MIN. FROM EDGE OF EQUIPMENT TO EDGE OF PAD.
4. THE SIZE, NUMBER, TYPE, LOCATION AND THREAD PROJECTION OF THE ANCHOR BOLTS SHALL BE AS DETERMINED BY THE EQUIPMENT MANUFACTURER AND SHALL BE AS APPROVED BY THE ENGINEER. ANCHOR BOLTS SHALL BE HELD IN POSITION WITH A TEMPLATE WHILE EQUIPMENT BASE IS BEING CAST, SEE DETAIL 2/000S005.
5. EQUIPMENT BASES SHALL BE INSTALLED LEVEL UNLESS SPECIFIED OTHERWISE, TOLERANCE IS 1/8" ACROSS PLAN DIAGONALS.

4 SHALLOW EQUIPMENT PAD
NOT TO SCALE

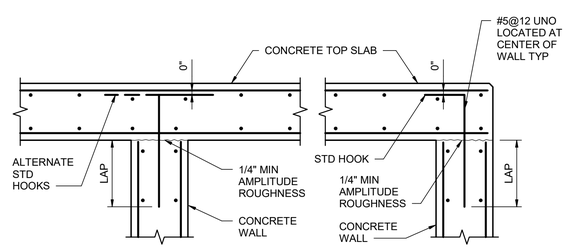

NOTE:

1. ALL HOOKS SHALL BE STD 90 DEGREE HOOKS.

5 HINGED TOP SLAB
3/4" = 1'-0"

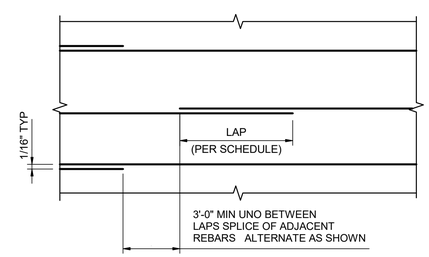

NOTE:

1. APPLIES TO SLABS AND WALLS (BOTH HORIZONTAL AND VERTICAL).

6 REINFORCING SPLICE - NOT AT CONSTRUCTION JOINT
12" = 1'-0"

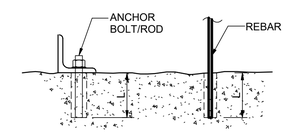

VERTICAL APPLICATION

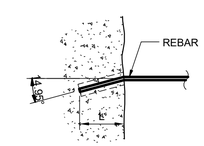

HORIZONTAL APPLICATION

ADHESIVE ANCHOR SCHEDULE	
ANCHOR BOLTS/RODS	
DIA (IN)	EMBED LENGTH (L)
3/8"	5"
1/2"	8"
5/8"	9"
3/4"	11"
7/8"	14"
1"	16"

NOTES:

1. EPOXY SHALL BE PER SPECIFICATIONS.
2. EMBEDMENT LENGTHS SHOWN ARE MINIMUM. FOLLOW MANUFACTURER'S RECOMMENDATIONS FOR INSTALLATION.
3. DO NOT USE ADHESIVE ANCHORS FOR UPWARDLY INCLINED APPLICATIONS.
4. EMBED LENGTHS SHOWN REFLECT CRACKED CONCRETE, SEISMIC LOADING CONDITION USING HIT-HY 200 V3 ADHESIVE. FOR ADHESIVE WITH A LOWER BOND STRENGTH CONSULT ENGINEER FOR ALTERNATE EMBEDMENT.
5. ANCHOR EMBEDMENT SHALL BE AS EXPLICITLY CALLED OUT ON PLANS OR DETAILS.

   IF EMBEDMENT IS NOT EXPLICITLY CALLED OUT, EMBEDMENT DEPTH 'L' CAN BE USED UNLESS ANCHORS ARE WITHIN 1.5L OF CONCRETE EDGE OR SPACED LESS THAN 3L.

   FOR ANCHORS WITHIN 1.5L OF CONCRETE EDGE OR SPACED LESS THAN 3L OR AT CONTRACTORS OPTION, CONTRACTOR SHALL DESIGN ANCHORAGE PER SPECIFICATIONS.
6. REINFORCING EMBEDMENT LENGTH DOES NOT PROVIDE FULL DEVELOPMENT OF THE REINFORCING.

7 ADHESIVE ANCHOR DETAILS AND SCHEDULE
12" = 1'-0"

ISSUE	DATE	DESCRIPTION
A	09/2026	ISSUED FOR BIDS

PROJECT MANAGER	PIERRE KWAN
CIVIL	J. MEGRDITCHIAN
STRUCTURAL	P. LINDBLOM
ARCHITECTURAL	V. YANEZ
PROCESS	P. KWAN
MECHANICAL	K. CHEUNG
ELECTRICAL	R. MCCOMB
INSTRUMENTATION	D. BEST
PROJECT NUMBER	10193663

REGISTERED PROFESSIONAL ENGINEER 93585PE OREGON MAY 8, 2018 ANDREW JACK FORTNER
DIGITALLY SIGNED
EXPIRES: 12-31-2027

REGISTERED PROFESSIONAL ENGINEER 108753PE OREGON JAN 13, 2026 PATRICK DANIEL LINDBLOM
DIGITALLY SIGNED
EXPIRES: 12/31/2028

CITY OF ASHLAND
Ashland, Oregon

City of Ashland

Ashland Creek Water Treatment Plant

2019

GENERAL STRUCTURAL STANDARD DETAILS 2

0 1" 2"

FILENAME	10193663-AWTP-300_S.rte
SCALE	As indicated
SHEET	000S005

Autodesk Docs://10193663_Ashland_WTP_Final_Design_2024/10193663-AWTP-300_S.rvt
9/23/2026 12:06:54 PM

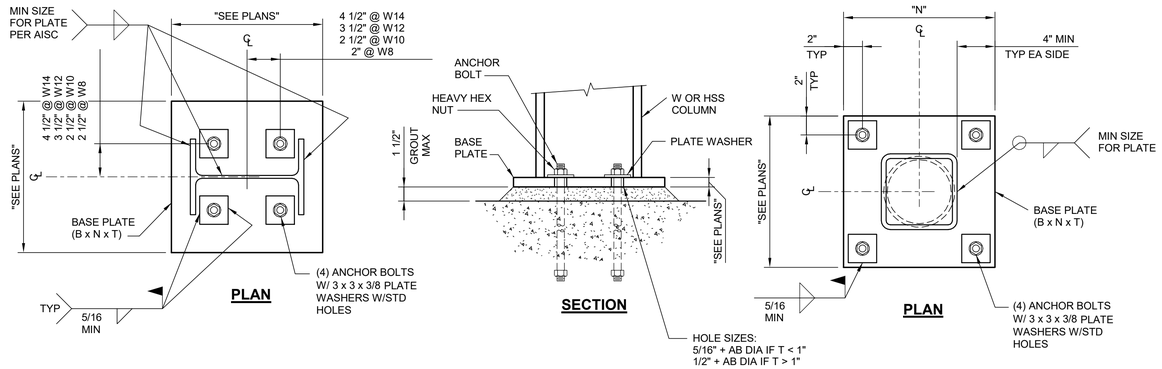

1 / 000S008 COLUMN BASE PLATE
12" = 1'-0"

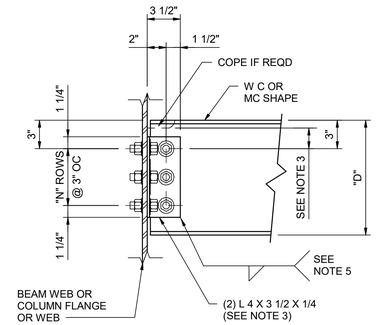

STANDARD BOLTED CONNECTION SCHEDULE		
NOMINAL BEAM SIZE "D"	NUMBER OF BOLT ROWS "N"	WELD SIZE
W8	2	3/16
W10	2	3/16
W12	3	3/16
W14	3	3/16
W16	3	1/4
W18	4	1/4
W21	4	1/4
W24	4	1/4
W27	5	1/4
W30	5	5/16
W33	6	5/16
W36	6	5/16

NOTES:

1. ALL BOLTS SHALL BE 3/4" DIA A325-N UNLESS NOTED OTHERWISE.
2. PROVIDE MINIMUM NUMBER OF BOLT ROWS "N" SHOWN AS THE TYPICAL CONN. INCREASE NUMBER OF ROWS AND / OR BOLT DIA. IF INDICATED ON PLANS.
3. MINIMUM DISTANCE FROM ℄ OF TOP BOLT TO A COPE SHALL BE 1 1/2". WHERE DEEP COPES ARE REQD, INCREASE DISTANCE FROM TOP OF BEAM TO ℄ OF TOP BOLT.
4. USE STANDARD OR SHORT HORIZONTAL SLOTTED HOLES AS REQUIRED.
5. WELD DOUBLE ANGLES TO BEAM WEB IN LIEU OF BOLTING AT CONTRACTORS OPTION.

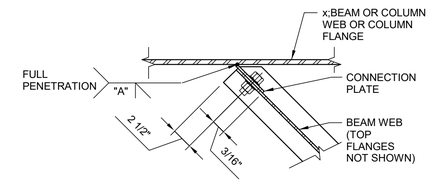

SKEWED CONNECTION
(IF APPLICABLE)

2 / - TYPICAL BEAM CONNECTION
1 1/2" = 1'-0"

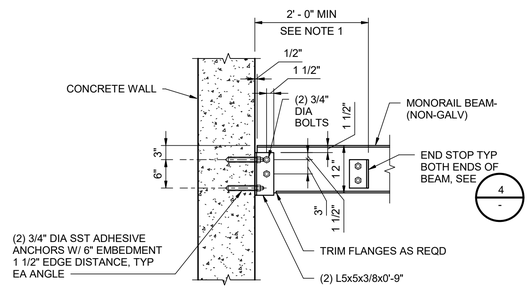

NOTES:

1. PLACE END STOP SO THAT THE HOIST TROLLEY WILL NOT CONTACT CONCRETE WALL.
2. COORDINATE END STOP LOCATION AND CONFIGURATION W/HOIST TROLLEY FURNISHED.

3 / - MONORAIL CONNECTION AT CONCRETE WALL
3/4" = 1'-0"

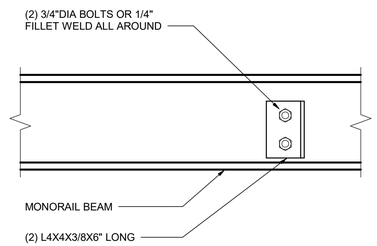

4 / - MONORAIL STOP
1 1/2" = 1'-0"

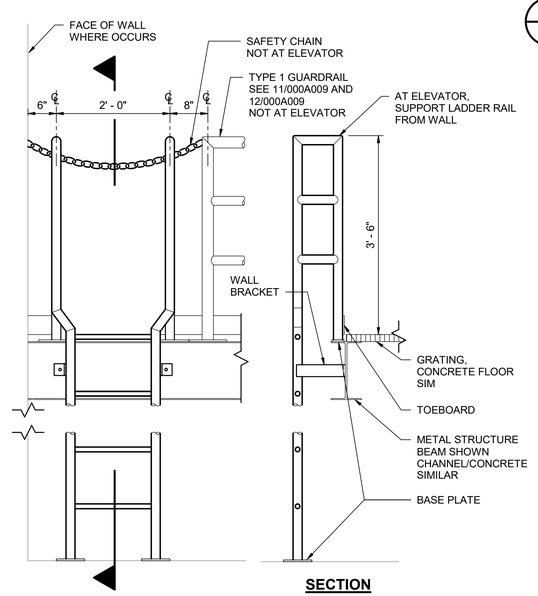

B / - LADDER DETAIL
3/4" = 1'-0"

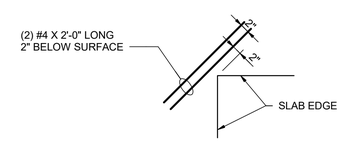

INTERNAL CORNER

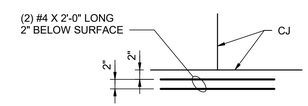

DISCONTINUOUS JOINT INTERSECTION

A / - TYPICAL SLAB ON GRADE REINFORCING DETAILS
NOT TO SCALE

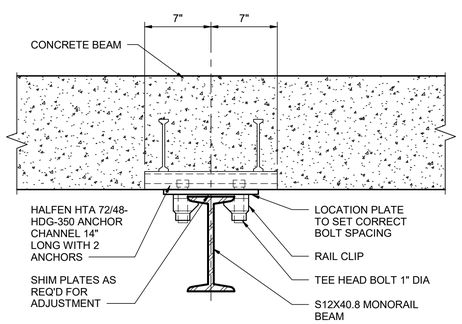

5 / 300S307 MONORAIL CONNECTION AT BEAM
1 1/2" = 1'-0"

ISSUE	DATE	DESCRIPTION
A	09/2026	ISSUED FOR BIDS

PROJECT MANAGER	PIERRE KWAN
CIVIL	J. MEGRDITCHIAN
STRUCTURAL	P. LINDBLOM
ARCHITECTURAL	V. YANEZ
PROCESS	P. KWAN
MECHANICAL	K. CHEUNG
ELECTRICAL	R. MCCOMB
INSTRUMENTATION	D. BEST
PROJECT NUMBER	10193663

REGISTERED PROFESSIONAL ENGINEER 93585PE DIGITALLY SIGNED OREGON MAY 8, 2019 ANDREW JACK FORTNER
EXPIRES: 12-31-2027

REGISTERED PROFESSIONAL ENGINEER 108753PE DIGITALLY SIGNED OREGON JAN 13, 2026 PATRICK DANIEL LINDBLOM
EXPIRES: 12/31/2028

CITY OF ASHLAND
Ashland, Oregon

City of Ashland

Ashland Creek Water Treatment Plant

2019

GENERAL STRUCTURAL STANDARD DETAILS 3

0 1" 2"

FILENAME 10193663-AWTP-300_S.rte
SCALE As indicated
SHEET **000S006**

Autodesk Docs://10193663_Ashland_WTP_Final_Design_2024/10193663-AWTP-300_S.rvt
9/23/2026 12:06:55 PM

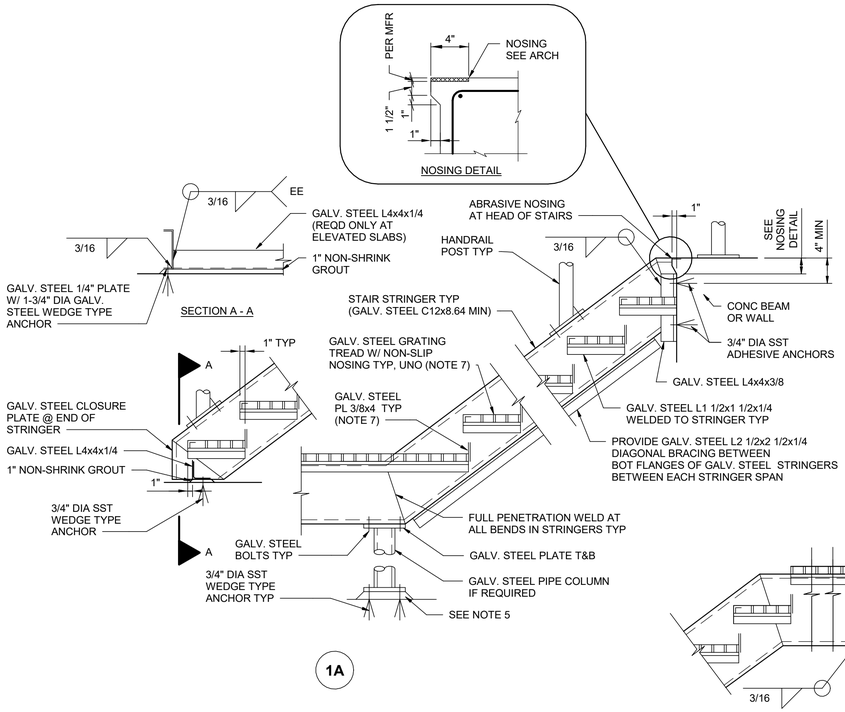

GALVANIZED STEEL STAIR NOTES:

1. DETAILS SHOWN FOR GALVANIZED STEEL TREADS. FRP CHECKERED PL AND GALVANIZED STEEL CHECKERED PL TREADS ARE SIMILAR. SEE ARCH STAIR SCHEDULE FOR TREAD MATERIALS.
2. STAIRS AND LANDINGS SHALL BE DESIGNED BY FABRICATOR SUBJECT TO APPROVAL OF ENGINEER. DESIGN LIVE LOAD SHALL BE AS STATED BELOW.
3. ANCHOR GALVANIZED STEEL TO CONCRETE WITH 3/4" DIA STAINLESS STEEL ANCHOR BOLTS, NUTS, AND WASHERS AS SHOWN IN DETAIL.
4. ALL STAIRS, LANDINGS, THEIR CONNECTIONS AND SUPPORTS SHALL BE DESIGNED FOR A LIVE LOAD OF 100 PSF UNIFORM LOAD OR A CONCENTRATED LIVE LOAD OF 1000 LB, WHICHEVER PRODUCES THE GREATER STRESSES AND REACTIONS. THE 1000 LB LOAD SHALL BE ABLE TO BE PLACED ANYWHERE ON THE STAIR SYSTEM. STAIR DEFLECTION DUE TO LIVE LOAD SHALL NOT EXCEED SPAN/480. SEE SPECIFICATION SECTION 05 50 00 FOR ADDITIONAL STAIR DESIGN REQUIREMENTS.
5. BASE PLATES FOR GALVANIZED STEEL COLUMNS SHALL REST ON 1" NON-SHRINK GROUT.
6. SEE ARCH DETAILS FOR STAIR DETAILS NOT SHOWN.
7. PROVIDE CHECKERED PLATE TREAD CLOSED RISERS WHERE INDICATED ON ARCH DRAWINGS.

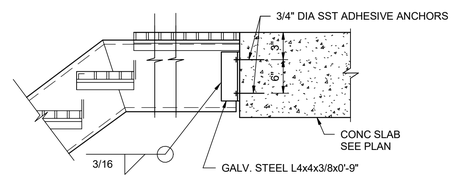

NOTE:

FOR ADDL INFORMATION, SEE 1A

1B

1 GALVANIZED STEEL GRATING STAIR
12" = 1'-0"

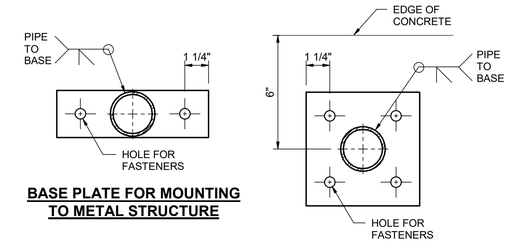

NOTE:
1. TOEBOARD NOT SHOWN.

2 METAL VERTICAL POST BASE
3" = 1'-0"

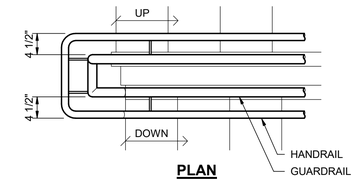

3 2 RAIL 180 DEGREE TURN ON METAL STAIRS
3/4" = 1'-0"

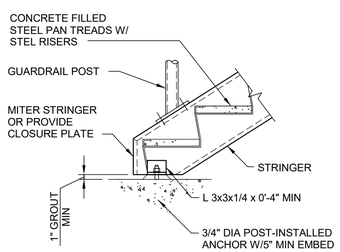

NOTES:

1. STAIRS AND APPURTENANT ITEMS SHOWN ON DRAWINGS SHALL BE PAINTED STEEL, UNLESS OTHERWISE NOTED ON DRAWINGS. ALL ANCHORS SHALL BE STAINLESS STEEL.

4 PAN STAIR BOTTOM CONNECTION
12" = 1'-0"

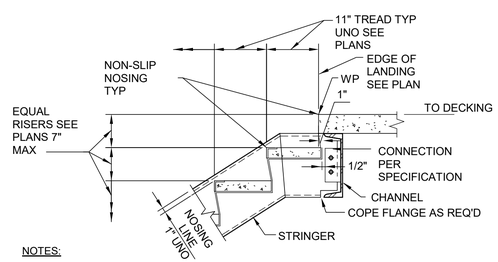

NOTES:

1. FASTENER MATERIAL SHALL MATCH STAIR MATERIAL TYPE.

5 PAN STAIR TOP CONNECTION AT BEAM
12" = 1'-0"

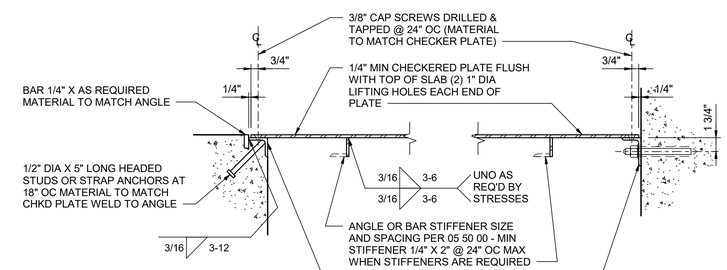

NOTES:

1. CHECKERED PLATE SIZE TO BE DETERMINED BY CONTRACT DOCUMENTS.
2. FIELD DRILL HOLES FOR SCREWS AT CONTRACTOR'S OPTION.
3. PROVIDE DISSIMILAR MATERIAL PROTECTION FOR ALUMINUM IN CONTACT WITH CONCRETE PER SPECIFICATION.
4. ONLY TO BE USED AT CONTINUOUS WALL ABOVE CHECKERED PLATE OR AT PRE-EXISTING CONCRETE CONSTRUCTION.

6 CHECKERED PLATE SUPPORT
12" = 1'-0"

ISSUE	DATE	DESCRIPTION
A	09/2026	ISSUED FOR BIDS

PROJECT MANAGER	PIERRE KWAN
CIVIL	J. MEGRDITCHIAN
STRUCTURAL	P. LINDBLOM
ARCHITECTURAL	V. YANEZ
PROCESS	P. KWAN
MECHANICAL	K. CHEUNG
ELECTRICAL	R. MCCOMB
INSTRUMENTATION	D. BEST
PROJECT NUMBER	10193663

REGISTERED PROFESSIONAL ENGINEER 93585PE DIGITALLY SIGNED OREGON MAY 8, 2019 ANDREW JACK FORTNER
EXPIRES: 12-31-2027

REGISTERED PROFESSIONAL ENGINEER 108753PE DIGITALLY SIGNED OREGON JAN 13, 2026 PATRICK DANIEL LINDBLOM
EXPIRES: 12/31/2028

CITY OF ASHLAND
Ashland, Oregon

City of Ashland

Ashland Creek Water Treatment Plant

2019

GENERAL STRUCTURAL STANDARD DETAILS 4

0 1" 2"

FILENAME 10193663-AWTP-300_S.rte
SCALE As indicated
SHEET 000S007

Autodesk Docs://10193663_Ashland_WTP_Final_Design_2024/10193663-AWTP-300_S.rvt
9/23/2026 12:06:56 PM

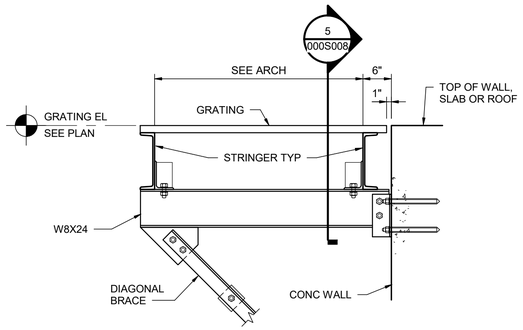

NOTE:

1. FOR ADDITIONAL INFORMATION, SEE STAIR SUPPORT DETAIL 2/000S008

1 STAIR LANDING SUPPORT
NOT TO SCALE

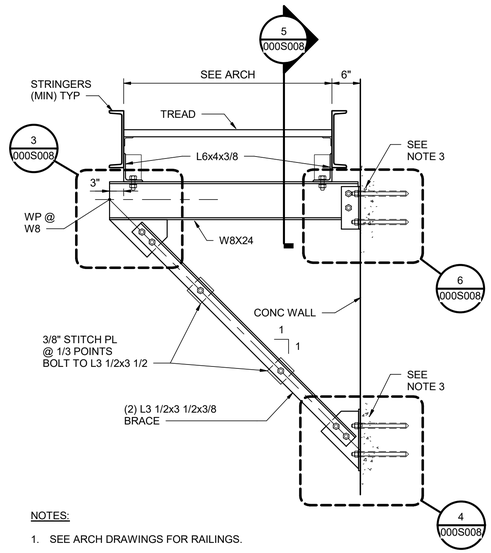

NOTES:

1. SEE ARCH DRAWINGS FOR RAILINGS.

2 STAIR SUPPORT
NOT TO SCALE

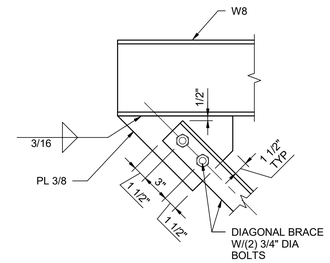

3 BRACE CONNECTION
NOT TO SCALE

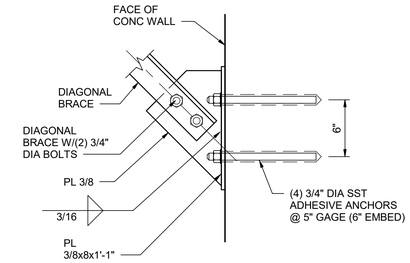

4 BRACE TO WALL CONNECTION
NOT TO SCALE

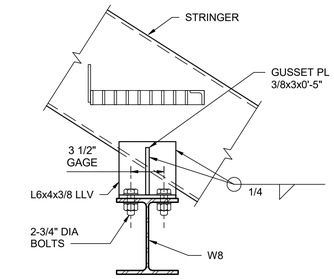

5 STRINGER CONNECTION
NOT TO SCALE

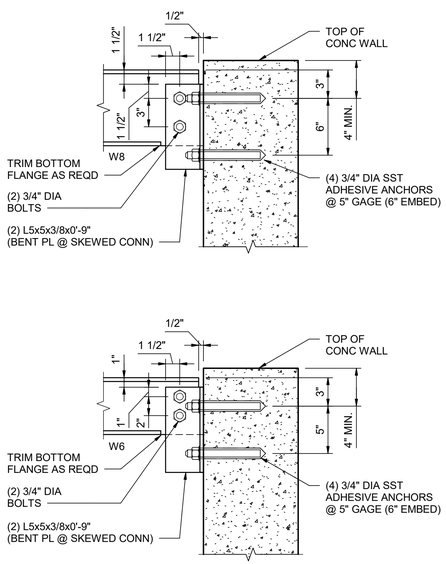

6 BEAM TO WALL CONNECTION
NOT TO SCALE

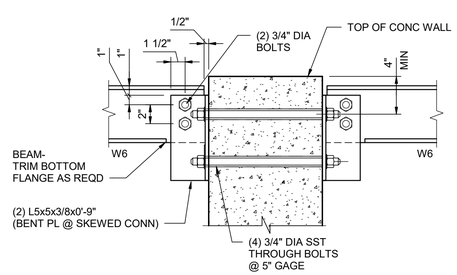

DIMENSIONS AND MATERIALS TYPICAL BOTH SIDES OF WALL

7 BEAM TO WALL CONNECTION II
NOT TO SCALE

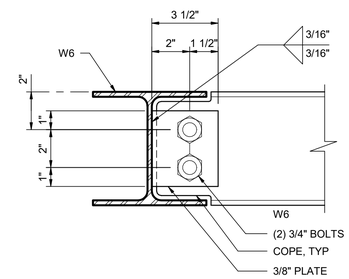

8 BEAM TO BEAM CONNECTION
NOT TO SCALE

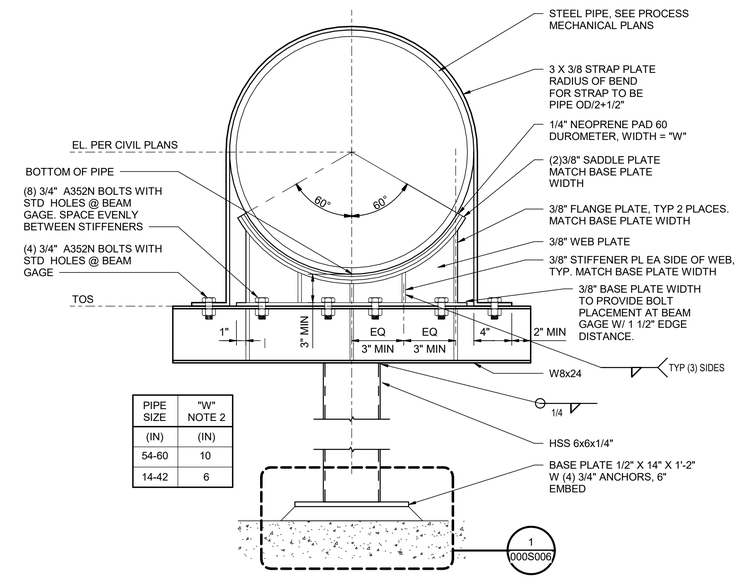

PIPE SIZE	"W" NOTE 2
(IN)	(IN)
54-60	10
14-42	6

9 PIPE SUPPORT TYPE 1
NOT TO SCALE

ISSUE	DATE	DESCRIPTION
A	09/2026	ISSUED FOR BIDS

PROJECT MANAGER	PIERRE KWAN
CIVIL	J. MEGRDITCHIAN
STRUCTURAL	P. LINDBLOM
ARCHITECTURAL	V. YANEZ
PROCESS	P. KWAN
MECHANICAL	K. CHEUNG
ELECTRICAL	R. MCCOMB
INSTRUMENTATION	D. BEST
PROJECT NUMBER	10193663

REGISTERED PROFESSIONAL ENGINEER 93585PE DIGITALLY SIGNED OREGON MAY 8, 2018 ANDREW JACK FORTNER
EXPIRES: 12-31-2027

REGISTERED PROFESSIONAL ENGINEER 108753PE DIGITALLY SIGNED OREGON JAN 13, 2026 PATRICK DANIEL LINDBLOM
EXPIRES: 12/31/2028

CITY OF ASHLAND
Ashland, Oregon

City of Ashland

Ashland Creek Water Treatment Plant

2019

STRUCTURAL STANDARD DETAILS 5

0 1" 2"

FILENAME 10193663-AWTP-300_S.rte
SCALE As indicated

SHEET **000S008**

Autodesk Docs://10193663_Ashland_WTP_Final_Design_2024/10193663-AWTP-300_S.rvt
9/23/2026 12:06:57 PM

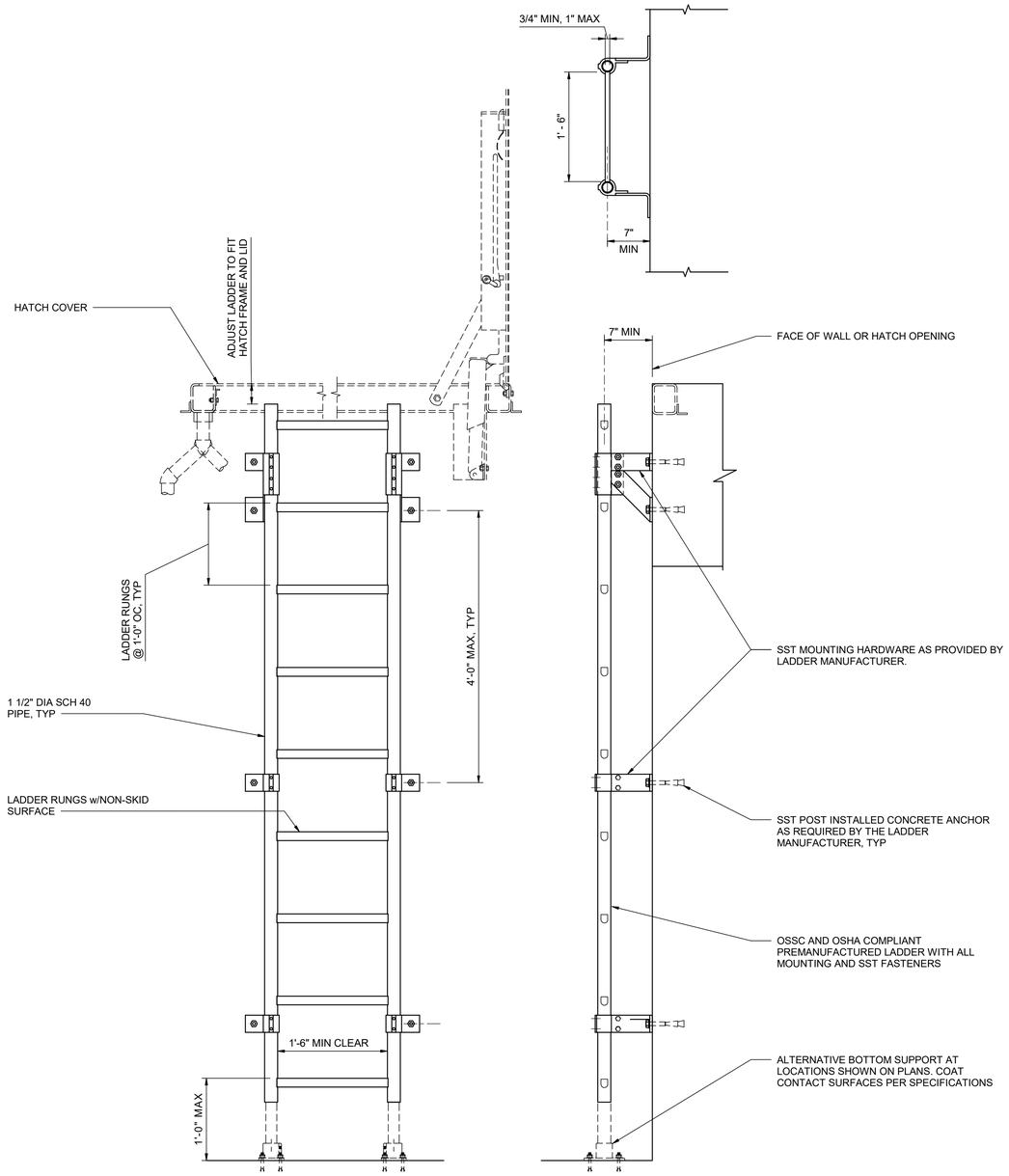

1 - TYPICAL PIPE LADDER
NOT TO SCALE

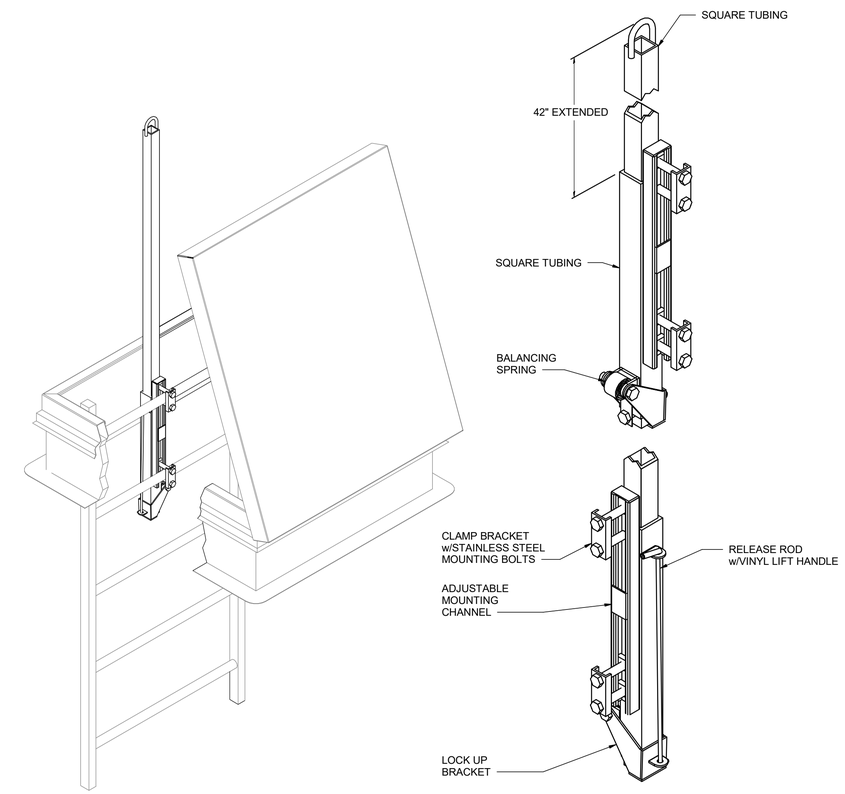

2 - LADDER SAFETY EXTENSION POST
NOT TO SCALE

ISSUE	DATE	DESCRIPTION
A	09/2026	ISSUED FOR BIDS

PROJECT MANAGER	PIERRE KWAN
CIVIL	J. MEGRDITCHIAN
STRUCTURAL	P. LINDBLOM
ARCHITECTURAL	V. YANEZ
PROCESS	P. KWAN
MECHANICAL	K. CHEUNG
ELECTRICAL	R. MCCOMB
INSTRUMENTATION	D. BEST
PROJECT NUMBER	10193663

REGISTERED PROFESSIONAL ENGINEER 93585PE DIGITALLY SIGNED OREGON MAY 8, 2018 ANDREW JACK FORTNER
EXPIRES: 12-31-2027

REGISTERED PROFESSIONAL ENGINEER 108753PE DIGITALLY SIGNED OREGON JAN 13, 2026 PATRICK DANIEL LINDBLOM
EXPIRES: 12/31/2028

CITY OF ASHLAND
Ashland, Oregon

City of Ashland

Ashland Creek Water Treatment Plant

2019

GENERAL STRUCTURAL STANDARD DETAILS 6

0 1" 2"

FILENAME	10193663-AWTP-300_S.rte
SCALE	As indicated

SHEET **000S009**

Autodesk Docs://10193663_Ashland_WTP_Final_Design_2024/10193663-AWTP-300_S.rvt
9/23/2026 12:06:58 PM

GENERAL NOTES:

1. ALL PLAN DIMENSIONS ARE MEASURED TO:
   - EXTERIOR WALL: FACE OF SHEATING
   - INTERIOR WALL: FACE OF SHEATHING IF REQUIRED OR FACE OF STUD
   - CONCRETE WALL: FACE OF CONCRETE
   - GRIDLINES, CENTERLINES
   - OPENING: CENTRE OF OPENINGS
   - OR AS OTHERWISE NOTED. CONTACT ARCHITECT FOR VERIFICATION IF REQUIRED.
2. REFER TO ROOM FINISH SCHEDULE, INTERIOR DRAWINGS AND SPECIFICATIONS FOR INTERIOR FINISHES AND COLOR SELECTIONS.
3. SEAL PERIMETER AND ALL PENETRATIONS THROUGH ALL FIRE RATED PARTITIONS WITH FIRE-RATED SEALANT. ALL SERVICE PENETRATIONS TO BE FIRE STOPPED WITH ACCEPTABLE UL-APPROVED FIRESTOP SYSTEMS. REFER TO SPECIFICATIONS FOR EACH DISCIPLINE
4. EXTEND STUDS IN ALL INTERIOR PARTITIONS VERTICALLY FROM FLOOR TO UNDERSIDE OF STRUCTURE ABOVE UNLESS NOTED OTHERWISE. EXTEND GYPSUM BOARD A MINIMUM OF 6" ABOVE FINISHED CEILING IN NON - FIRE RATED & NON-ACOUSTICALLY RATED PARTITIONS. PTHT SUFFIX IN WALL TAG INDICATES "PARTIAL HEIGHT WALL".
5. ALL CLOSURES IN FIRE RATED PARTITIONS TO HAVE UL-APPROVED LABELED DOORS AND FRAMES.
6. REFER TO STRUCTURAL DRAWINGS FOR CONCRETE WALLS.
7. SEAL PERIMETER AND ALL PENETRATIONS THROUGH ALL NON RATED FIRE SEPARATIONS (SMOKE WALLS) WITH SMOKE-RATED SEALANT TO PREVENT THE PASSAGE OF SMOKE.
8. SEAL ALL PENETRATIONS THROUGH ACOUSTIC PARTITIONS WITH ACOUSTIC SEALANT TO ACHIEVE STC RATING REQUIRED. APPLY ACOUSTIC SEALANT WHERE WALL MEETS THE CEILING, FLOOR AND ADJOINING WALLS, TO THE PERIMETER OF ALL CUT-OUTS INCLUDING THOSE FOR OUTLET BOXES, PIPES, CONDUIT, VENTS, ETC. AND TO THE JOINTS BETWEEN PANELS. ALL STC RATED WALLS SHALL HAVE CONTINUOUS FOAM TAPE AT TOP AND BOTTOM OF TRACK; AND WHERE VERTICAL STUDS ABUT STRUCTURAL ELEMENTS LIKE COLUMNS. STC SUFFIX IN WALL INDICATES ACOUSTIC WALL. SEAL PERIMETER AND ALL PENETRATIONS THROUGH ALL PARTITIONS WITH STC 45 OR GREATER WITH ACOUSTIC NON-HARDENING SEALANT. ALL ACOUSTIC PARTITIONS SHALL HAVE CONTINUOUS 1/4" THICK FOAM TAPE AT TOP AND BOTTOM OF TRACK.
9. CONSTRUCT PARTITIONS IN COMPLIANCE WITH THE 2019 OREGON STRUCTURAL SPECIALTY CODE (OSSC) AND AS PER STRUCTURAL DRAWINGS.
10. ALL PARTITIONS IN WASHROOMS, HOUSEKEEPING ROOMS, JANITOR SINKS AND HAND SINKS SHALL HAVE WATER & MOLD RESISTANT GYPSUM BOARD.
11. ALL STEEL STUDS TO BE 25 GAUGE UNLESS NOTED OTHERWISE.
12. CONTRACTOR TO CONFIRM ALL INTERIOR STUD SIZES SHOWN IN THE DRAWINGS INCLUDING BUT NOT LIMITED TO SPACING, GAUGE AND ATTACHMENT METHOD.
13. PROVIDE 2" AIR SPACE BETWEEN FACE OF CONCRETE AND INSIDE FACE OF WOOD FURRING AT ALL LOCATIONS INCLUDING BUT NOT LIMITED TO CONCRETE FOUNDATION WALLS, CONCRETE SHEAR WALLS, CONCRETE WALLS AND CONCRETE COLUMNS TO ALLOW FOR UNEVEN CONCRETE UNLESS NOTED OTHERWISE. HEIGHT OF STEEL FURRING TO BE 6" ABOVE FINISHED CEILING UNLESS NOTED OTHERWISE.
14. REFERENCES TO BUILDING CODE FOR FIRE RATED PARTITIONS ARE PROVIDED TO GIVE AN INDICATION OF SOUND TRANSMISSION CLASS (STC) RATING ONLY. REFER TO UL DESIGN NUMBER PROVIDED FOR FIRE RATING REQUIREMENTS.
15. ALL DOOR FRAMES TO BE LOCATED 4" AWAY FROM NEAREST ADJACENT PERPENDICULAR PARTITION UNLESS NOTED OTHERWISE.
16. PROVIDE CONTINUOUS BACKER ASSEMBLIES BETWEEN STUDS AT LOCATIONS INCLUDING BUT NOT LIMITED TO HANDRAILS, BUMPER RAILS, WALL MOUNTED MILLWORK, ETC. REFER TO PLANS AND INTERIOR ELEVATIONS FOR EXTENT AND LOCATIONS.
17. AT FIRE RATED AND ACOUSTIC PARTITIONS, RECESSED ELECTRICAL AND DATA OUTLET BOXES THAT PENETRATE OPPOSITE SIDES OF A PARTITION TO BE.
18. PROVIDE LATERAL BRACING AT TOP OF FRAMED PARTITIONS PER THE REQUIREMENTS OF THE 2019 OREGON STRUCTURAL SPECIALTY CODE (OSSC). REFER TO STRUCTURAL DRAWINGS
19. PROVIDE REINFORCEMENT OF FRAMED PARTITIONS PER THE REQUIREMENTS OF THE 2019 OREGON STRUCTURAL SPECIALTY CODE (OSSC).
20. REFER TO FIRE AND LIFE SAFETY PLANS FOR LOCATION OF REQUIRED FIRE SEPARATIONS.
21. AT RECESSED PANEL LOCATIONS (EG. ELECTRICAL PANELS) WITHIN FIRE RATED PARTITIONS, PROVIDE CONTINUITY OF THE REQUIRED RATING BEHIND AND AROUND THE PANEL.
22. PROVIDE CONTROL JOINTS IN GYPSUM BOARD ASSEMBLIES AS FOLLOWS OR UNLESS NOTED OTHERWISE.
    INTERIOR PARTITIONS –30' MAX. SPACING IN EITHER DIRECTION
    INTERIOR CEILINGS – 15' MAX. SPACING IN EITHER DIRECTION (WITH PERIMETER RELIEF); 30' MAX. SPACING IN EITHER DIRECTION (WITHOUT PERIMETER RELIEF)
    CONTRACTOR TO CONFIRM LOCATIONS WITH ARCHITECT PRIOR TO INSTALLATION. AT CONTROL JOINTS LOCATED IN FIRE RATED PARTITIONS, PROVIDE APPROVED FIRE TESTED ASSEMBLY WITHIN PARTITION.
23. REFER TO INTERIOR ELEVATIONS FOR LOCATION OF DECORATIVE REVEALS. PROVIDE DOUBLE LAYER OF GYPSUM BOARD IF REVEAL IS LOCATED WITHIN A FIRE RATED PARTITION.
24. FIRE RATED HORIZONTAL SHAFT WALL ASSEMBLIES TO BE CONSTRUCTED AND INSTALLED PER OBMEC AUTHORIZATION #89-1-118 OR UNLESS NOTED OTHERWISE.
25. CONTRACTOR TO PROVIDE ASSEMBLY AT TOP OF INTERIOR PARTITIONS (SLOTTED TOP TRACK IN STEEL STUD ASSEMBLIES) TO ALLOW FOR VERTICAL DEFLECTION OF STRUCTURE ABOVE. ENSURE SEPARATION IS MAINTAINED AT FIRE RATED ASEMBLIES.
26. ALL COMMUNICATIONS & ELECTRICAL ROOMS TO HAVE FIRE-TREATED PLYWOOD ON INSIDE OF THE ROOM FROM BASE OF WALL TO 8'-0" ABOVE FINISHED FLOOR FOR THE MOUNTING OF COMMUNICATIONS & ELECTRICAL PANELS.
27. REFER TO MINIMUM DIMENSIONS INDICATED FOR COMPLIANCE WITH THE REQUIREMENTS OF THE AMERICANS WITH DISABILITIES ACT (ADA).

METAL FINISHES

A1	CLEAR ANODIZED ALUMINUM
A2	BRONZE ANODIZED ALUMINUM
GM	HOT DIPPED GALVANIZED
MP1	PREFINISHED METAL - TUNDRA
MP1B	PREFINISHED METAL - AEGEAN BLUE
MFP1	FIELD PAINTED METAL- TUNDRA
MP2	PREFINISHED METAL - NATURAL PATINA (GREEN)
MFP2	FIELD PAINTED METAL- NATURAL PATINA
MP3	PREFINISHED METAL - WEATHERED COPPER
MFP3	FIELD PAINTED METAL- WEATHERED COPPER
MC4	FIELD PAINTED WHITE (INTERIOR USE ONLY)

R- VALUE PER PANEL THICKNESS (h*ft2*F/BTU) AT 35 DEGREES
3" - R-26.9
4" - R-35.9

WALL ASSEMBLIES

EXTERIOR WALLS

EW1a
EW1b

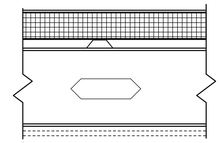

EXTERIOR WALL - STRIATED INSULATED METAL

- 3" STRIATED INSULATED METAL PANEL RUN HORIZONTAL
  COLOR; MP1 80%; 20% MP1B, RANDOMIZED
- 7/8", 25 GA METAL FURRING ALL PANEL JOINTS TO HAVE SEALANT TO PROVIDE CONTINOUS AIR BARRIER
- 8" METAL GIRTS BY PEMB MFR, FIELD PAINTED MC4 IN EW1b
- 5/8" GYPSUM WALL BOARD over 25 GA 7/8" FURRING ON GIRTS @ EW1a

EW2

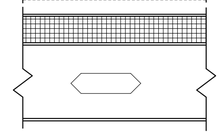

EXTERIOR WALL - STRIATED INSULATED METAL

- 4" STRIATED INSULATED METAL PANEL RUN VERTICAL
  COLOR: MP2 ALL PANEL JOINTS TO HAVE SEALANT TO PROVIDE CONTINOUS AIR BARRIER

- 8" METAL GIRTS BY PEMB MFR, FIELD PAINTED MC4

EW3

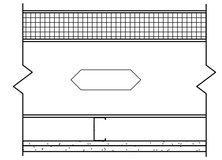

EXTERIOR WALL - STRIATED INSULATED METAL

- 4" STRIATED INSULATED METAL PANEL RUN VERTICAL
  COLOR: MP2 ALL PANEL JOINTS TO HAVE SEALANT TO PROVIDE CONTINOUS AIR BARRIER
- 8" METAL GIRTS BY PEMB MFR
- 2-1/2" 22 GA METAL STUDS
- 1/2" SOUND ISOLATION BOARD
- 5/8" GYPSUM WALL BOARD

EW4a
EW4b
EW4c
EW4d

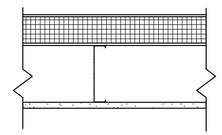

EXTERIOR WALL - STRIATED INSULATED METAL

- 4" STRIATED INSULATED METAL PANEL RUN VERTICAL @ EW4a & EW4d
  COLOR: MP2 ALL PANEL JOINTS TO HAVE SEALANT TO PROVIDE CONTINOUS AIR BARRIER
- 3" STRIATED INSULATED METAL PANEL RUN HORIZONTAL @ EW4b & EW4c
  COLOR: MP1 80%; 20% MP1B, RANDOMIZED
- 6" 22 GA METAL STUDS BY PEMB MFR
- 5/8" GYPSUM WALL BOARD
- NO GYPSUM WALL BOARD @ EW4c & EW4d, W/ FIELD PAINTED FRAMING, MC4

EW5

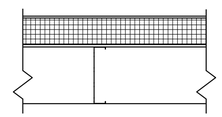

EXTERIOR WALL - STRIATED INSULATED METAL

- 4" STRIATED INSULATED METAL PANEL RUN VERTICAL
  COLOR MP2 ALL PANEL JOINTS TO HAVE SEALANT TO PROVIDE CONTINOUS AIR BARRIER
- 6" 22 GA METAL STUDS BY PEMB MFR, FIELD PAINTED MC4

EW6

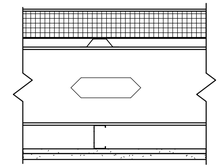

EXTERIOR WALL - STRIATED INSULATED METAL

- 3" STRIATED INSULATED METAL PANEL RUN HORIZONTAL
  COLOR: MP1 80%; 20% MP1B, RANDOMIZED ALL PANEL JOINTS TO HAVE SEALANT TO PROVIDE CONTINOUS AIR BARRIER
- 25 GA, 7/8" METAL FURRING
- 8" METAL GIRTS BY PEMB MFR
- 2-1/2" 22 GA METAL STUDS
- 1/2" SOUND ISOLATION BOARD
- 5/8" GYPSUM WALL BOARD

INTERIOR PARTITIONS

IP1
IP1a

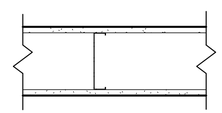

INTERIOR PARTITION

- 25 GA, 5/8" GYPSUM WALL BOARD
- 6" METAL STUDS C/W/ MINERAL WOOL INSULATION
- 5/8" GYPSUM WALL BOARD

- IP1a EXTENDS WALL TO UNDERSIDE OF STRUCTURE - BLOCK AS REQUIRED

IP2

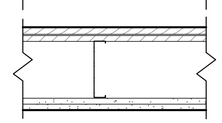

INTERIOR PARTITION - RATED (1 HOUR)

- 3/4" WOOD SIDING
- 5/8" DENSGLASS
- 25 GA, 6" METAL STUDS C/W OR WITHOUT MINERAL WOOL INSULATION
- 2 LAYERS 5/8" TYPE X GYPSUM WALL BOARD

IP3

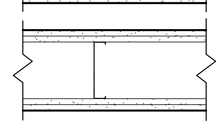

INTERIOR PARTITION - RATED (2 HOUR) UL 263

- 2 LAYERS 5/8" TYPE X GYPSUM WALL BOARD
- 6" METAL STUDS C/W OR WITHOUT MINERAL WOOL INSULATION
- 2 LAYERS 5/8" TYPE X GYPSUM WALL BOARD

INTERIOR FURRING WALLS

IFW1

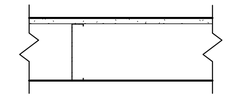

INTERIOR FURRING WALL - GYPSUM

- 6" METAL STUDS C/W/ MINERAL WOOL INSULATION
- 5/8" GYPSUM WALL BOARD

IFW2
IFW2a

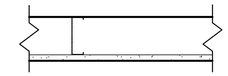

INTERIOR FURRING WALL - GYPSUM

- 4" METAL STUDS
- 5/8" GYPSUM WALL BOARD

IFW2a - ADD R20 RIGID INSULATION TO STUD CAVITY

IFW3

INTERIOR FURRING WALL - GYPSUM

- 1 5/8" METAL STUDS
- 5/8" GYPSUM WALL BOARD

IFW4

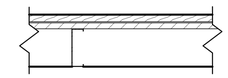

INTERIOR FURRING WALL - WOOD SIDING

- 3/4" WOOD SIDING
- 5/8" DENSGLASS
- 4" METAL STUDS

ROOF ASSEMBLIES

ROOFS

R1

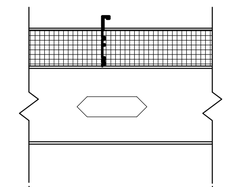

INSULATED METAL ROOF PANELS

- 4" FACTORY INSULATED METAL ROOF PANELS W/ 1.5" MECHANICALLY SEALED STANDING SEAMS; COLOR: MP2 ALL PANEL JOINTS TO HAVE SEALANT TO PROVIDE CONTINOUS AIR BARRIER
- 8" METAL GIRT BY PEMB MFR
- 1/2" MFR ATTACHMENT CLIPS W/ THERMAL BREAK/BARRIER

R2

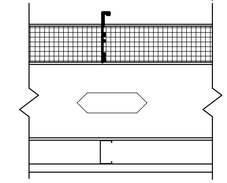

INSULATED METAL ROOF PANELS OVERHANGS

- 4" VERTICAL STANDING SEAM METAL ROOFING; COLOR MP2 ALL PANEL JOINTS TO HAVE SEALANT TO PROVIDE CONTINOUS AIR BARRIER
- 8" METAL GIRT BY PEMB MFR
- 2 1/2" 22 GA METAL STUDS
- 26 GA, 7/8" PERFORATED METAL SOFFIT PANEL; COLOR MP2

CEILING & SOFFIT ASSEMBLIES

C1

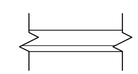

2'x4' ACT CEILING

- CEILING TILES
- METAL TRACK SUSPENDED FROM STRUCTURE ABOVE

C2

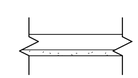

GYPSUM BOARD CEILING

- GYPSUM BOARD
- METAL TRACK SUSPENDED FROM STRUCTURE ABOVE

C3

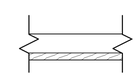

WOOD FINISH CEILING

- 2" METAL STUD
- 3/4" VERTICAL WOOD SIDING

C4

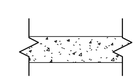

EXPOSED CONCRETE

ISSUE	DATE	DESCRIPTION
A	09/2026	ISSUED FOR BIDS

PROJECT MANAGER	PIERRE KWAN
CIVIL	J. MEGRDITCHIAN
STRUCTURAL	P. LINDBLOM
ARCHITECTURAL	V. YANEZ
PROCESS	P. KWAN
MECHANICAL	K. CHEUNG
ELECTRICAL	R. MCCOMB
INSTRUMENTATION	D. BEST
PROJECT NUMBER	10193663

REGISTERED ARCHITECT
VICTOR H. YANEZ
DIGITALLY SIGNED
FOLSOM, CA
ARI-15755
STATE OF OREGON

CITY OF ASHLAND
Ashland, Oregon

City of Ashland

Ashland Creek Water Treatment Plant

2019

ARCHITECTURAL ASSEMBLY TYPES

0 1" 2"

FILENAME 10193663-AWTP-300_S.rte
SCALE 1 1/2" = 1'-0"

SHEET **000A001**

Autodesk Docs://10193663_Ashland_WTP_Final_Design_2024/10193663-AWTP-300_S.rvt
9/22/2026 10:22:49 PM

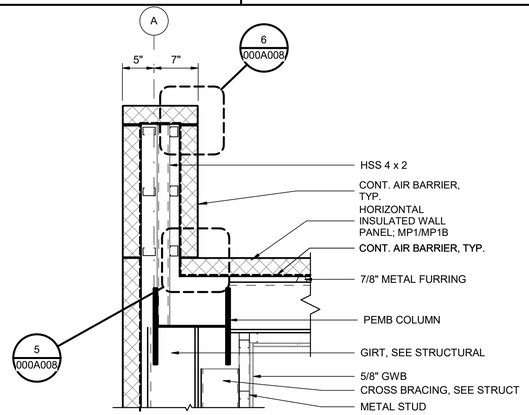

1 1ST FLOOR COLUMN @ GRIDLINE 'A' & '1'
1" = 1'-0"

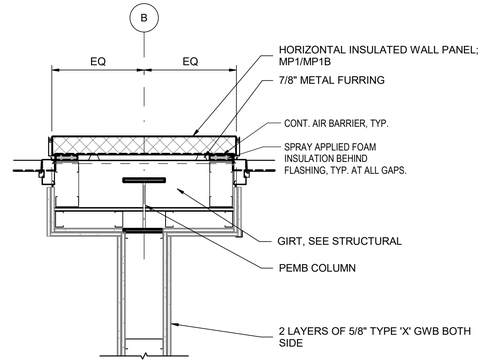

4 1ST FLOOR COLUMN @ GRIDLINE 'B' & '1'
1" = 1'-0"

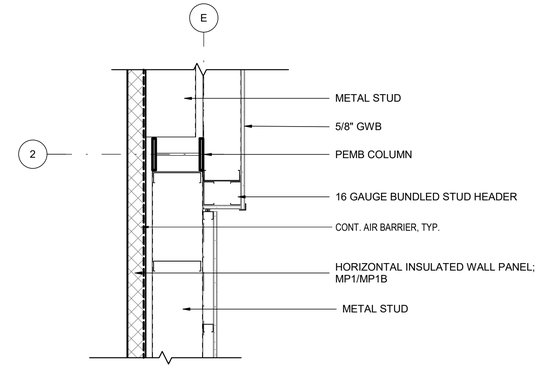

7 1ST FLOOR COLUMN @ GRIDLINE 'E' & '2'
1" = 1'-0"

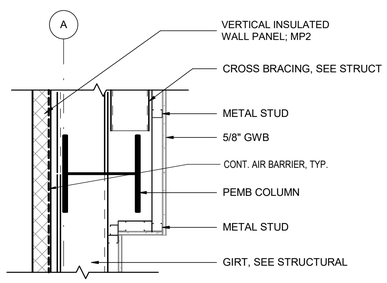

2 1ST FLOOR COLUMN @ GRIDLINE 'A' & '2'
1" = 1'-0"

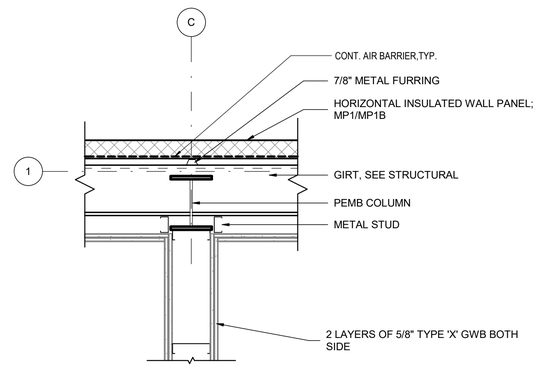

5 1ST FLOOR COLUMN @ GRIDLINE 'C' & '1'
1" = 1'-0"

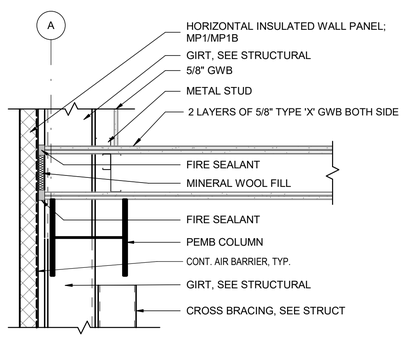

3 1ST FLOOR COLUMN @ GRIDLINE 'A' & '4'
1" = 1'-0"

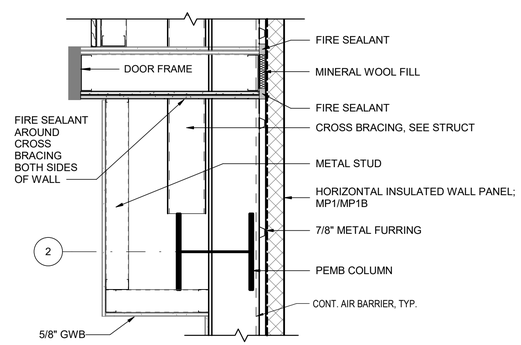

6 1ST FLOOR COLUMN @ GRIDLINE 'D' & '2'
1" = 1'-0"

Autodesk Docs://10193663_Ashland_WTP_Final_Design_2024/10193663-Details.rvt
9/22/2026 10:45:09 PM

ISSUE	DATE	DESCRIPTION
A	09/2026	ISSUED FOR BIDS

PROJECT MANAGER	PIERRE KWAN
CIVIL	J. MEGRDITCHIAN
STRUCTURAL	P. LINDBLOM
ARCHITECTURAL	V. YANEZ
PROCESS	P. KWAN
MECHANICAL	K. CHEUNG
ELECTRICAL	R. MCCOMB
INSTRUMENTATION	D. BEST
PROJECT NUMBER	10193663

REGISTERED ARCHITECT
VICTOR H. YANEZ
DIGITALLY SIGNED
FOLSOM, CA
ARI-15755
STATE OF OREGON

CITY OF ASHLAND
Ashland, Oregon

City of Ashland

Ashland Creek
Water Treatment Plant

2026

OPERATIONS BUILDING
ARCHITECTURAL
ENLARGED COLUMNS DETAILS - 1ST FLOOR

0 1" 2"

FILENAME 10193663-Details.rvt
SCALE 1" = 1'-0"

SHEET
000A002

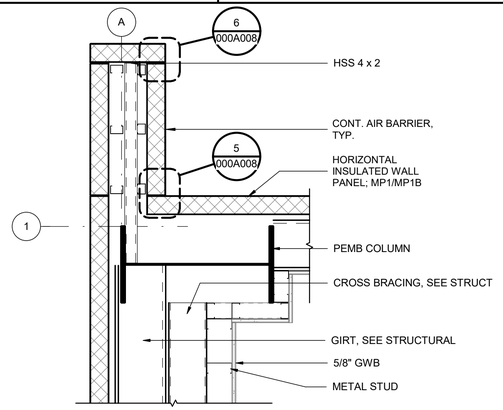

1 2ND FLOOR COLUMN @ GRIDLINE 'A' & '1'
1" = 1'-0"

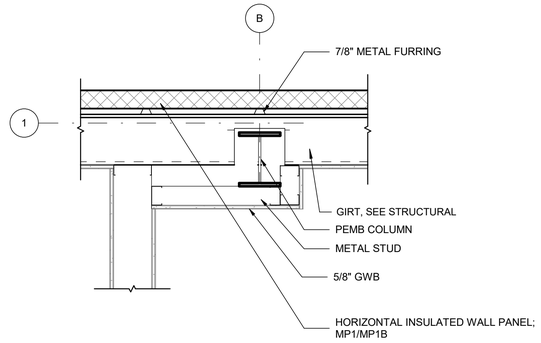

4 2ND FLOOR COLUMN @ GRIDLINE 'B' & '1'
1" = 1'-0"

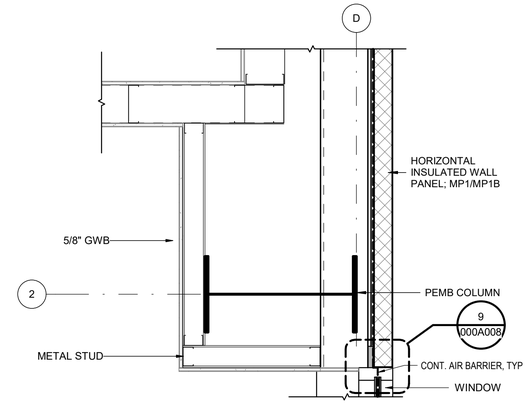

7 2ND FLOOR COLUMN @ GRIDLINE 'D' & '2'
1" = 1'-0"

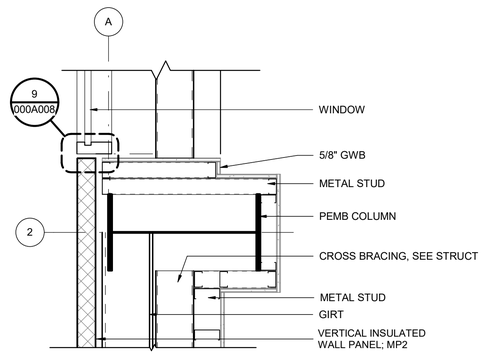

2 2ND FLOOR COLUMN @ GRIDLINE 'A' & '2'
1" = 1'-0"

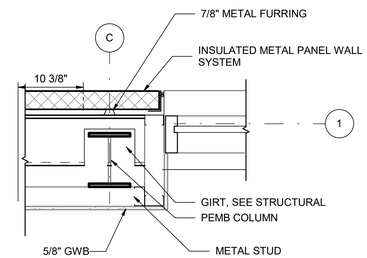

5 2ND FLOOR COLUMN @ GRIDLINE 'C' & '1'
1" = 1'-0"

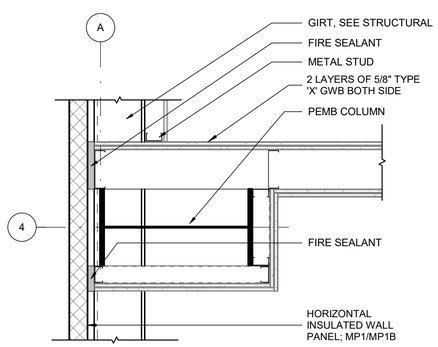

3 2ND FLOOR COLUMN @ GRIDLINE 'A' & '4'
1" = 1'-0"

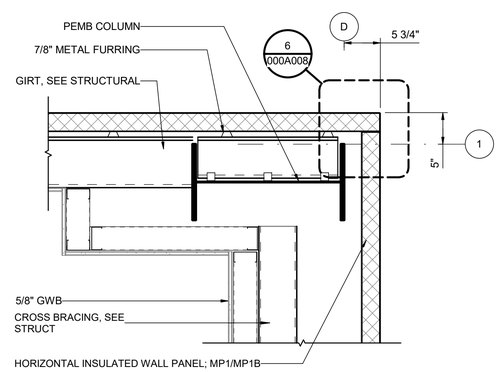

6 2ND FLOOR COLUMN @ GRIDLINE 'D' & '1'
1" = 1'-0"

ISSUE	DATE	DESCRIPTION
A	09/2026	ISSUED FOR BIDS

PROJECT MANAGER	PIERRE KWAN
CIVIL	J. MEGRDITCHIAN
STRUCTURAL	P. LINDBLOM
ARCHITECTURAL	V. YANEZ
PROCESS	P. KWAN
MECHANICAL	K. CHEUNG
ELECTRICAL	R. MCCOMB
INSTRUMENTATION	D. BEST
PROJECT NUMBER	10193663

REGISTERED ARCHITECT
VICTOR H. YANEZ
DIGITALLY SIGNED
FOLSOM, CA
ARI-15755
STATE OF OREGON

CITY OF ASHLAND
Ashland, Oregon

City of Ashland

Ashland Creek Water Treatment Plant

2026

OPERATIONS BUILDING
ARCHITECTURAL
ENLARGED COLUMNS DETAILS - 2ND FLOOR

0 1" 2"

FILENAME 10193663-Details.rvt
SCALE 1" = 1'-0"

SHEET **000A003**

Autodesk Docs://10193663_Ashland_WTP_Final_Design_2024/10193663-Details.rvt
9/22/2026 10:45:11 PM

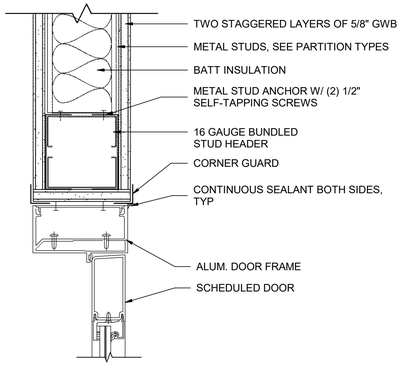

1 DOOR HEAD - INTERIOR
3" = 1'-0"

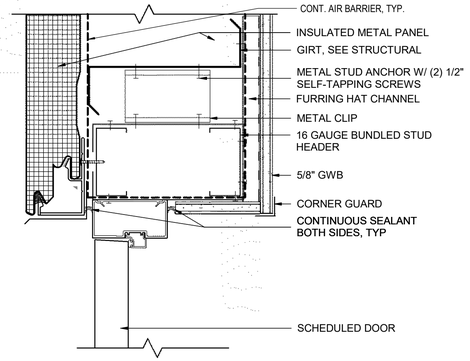

4 DOOR HEAD - EXTERIOR
3" = 1'-0"

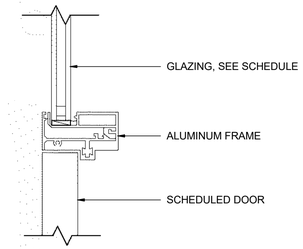

7 DOOR HEAD @ TRANSOM
3" = 1'-0"

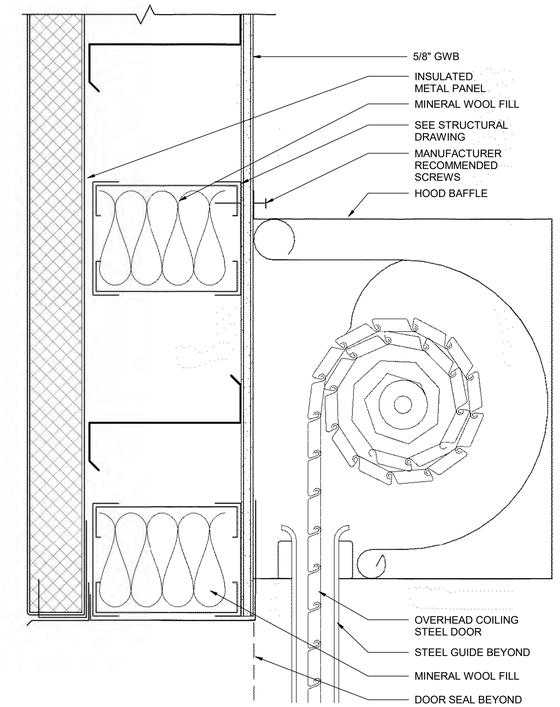

8 OVERHEAD COILING DOOR HEAD
3" = 1'-0"

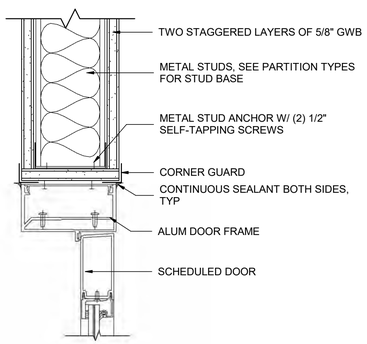

2 DOOR JAMB - INTERIOR
3" = 1'-0"

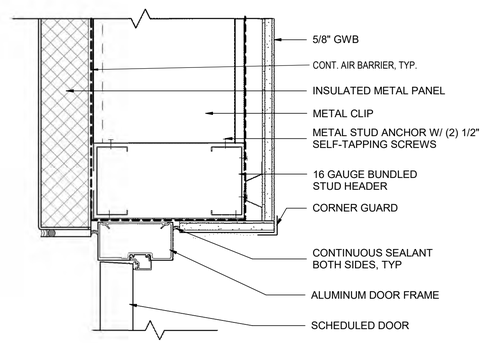

5 DOOR JAMB - EXTERIOR
3" = 1'-0"

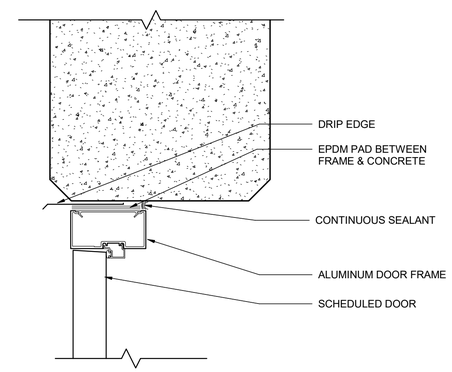

10 DOOR HEAD - EXTERIOR CONCRETE
3" = 1'-0"

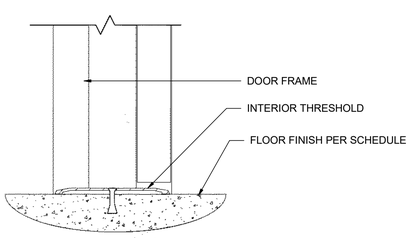

3 THRESHOLD - INTERIOR
3" = 1'-0"

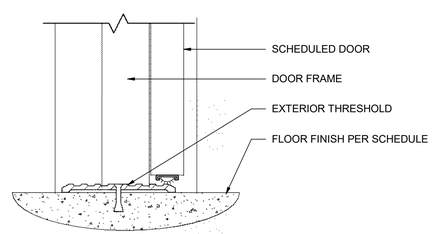

6 THRESHOLD - EXTERIOR
3" = 1'-0"

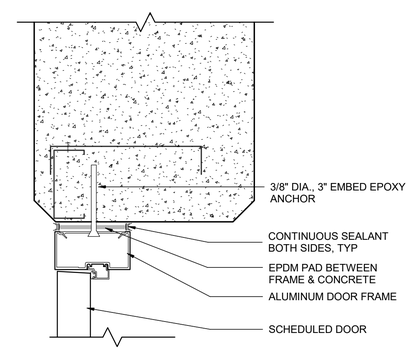

11 DOOR JAMB - EXTERIOR CONCRETE
3" = 1'-0"

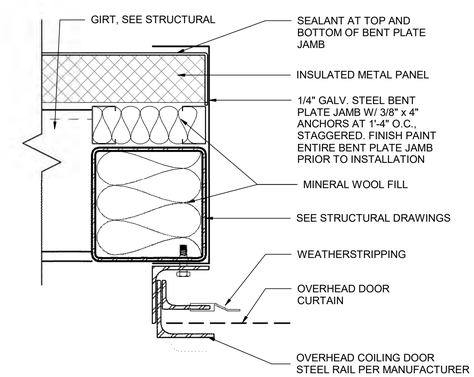

9 OVERHEAD COILING DOOR JAMB
3" = 1'-0"

ISSUE	DATE	DESCRIPTION
A	09/2026	ISSUED FOR BIDS

PROJECT MANAGER	PIERRE KWAN
CIVIL	J. MEGRDITCHIAN
STRUCTURAL	P. LINDBLOM
ARCHITECTURAL	V. YANEZ
PROCESS	P. KWAN
MECHANICAL	K. CHEUNG
ELECTRICAL	R. MCCOMB
INSTRUMENTATION	D. BEST
PROJECT NUMBER	10193663

REGISTERED ARCHITECT
VICTOR H. YANEZ
DIGITALLY SIGNED
FOLSOM, CA
ARI-15755
STATE OF OREGON

CITY OF ASHLAND
Ashland, Oregon

City of Ashland

Ashland Creek Water Treatment Plant

2026

ARCHITECTURAL
ARCHITECTURAL DETAILS I

0 1" 2"

FILENAME 10193663-Details.rvt
SCALE 3" = 1'-0"

SHEET **000A004**

Autodesk Docs://10193663_Ashland_WTP_Final_Design_2024/10193663-Details.rvt
9/22/2026 10:45:24 PM

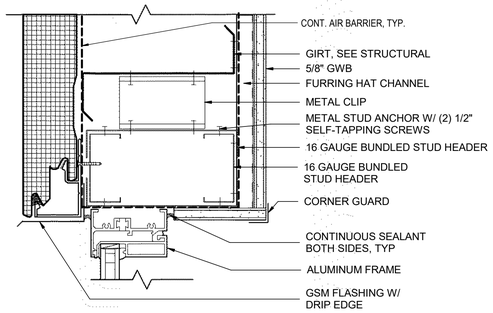

1 000A018 WINDOW HEAD - EXTERIOR
3" = 1'-0"

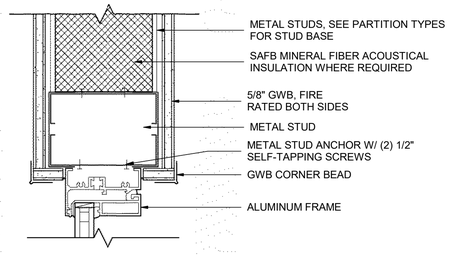

4 WINDOW HEAD - INTERIOR
3" = 1'-0"

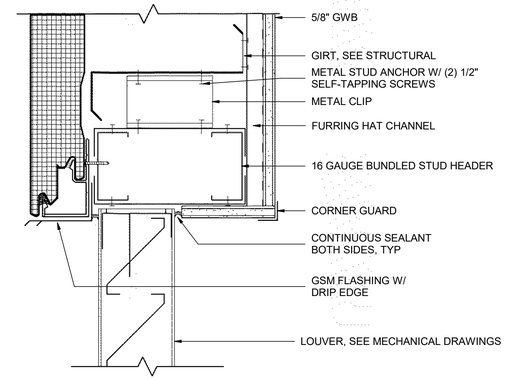

7 LOUVER HEAD @ INSULATED PANEL
3" = 1'-0"

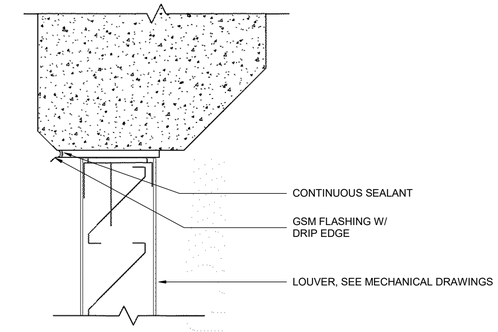

10 LOUVER HEAD @ CONCRETE WALL
3" = 1'-0"

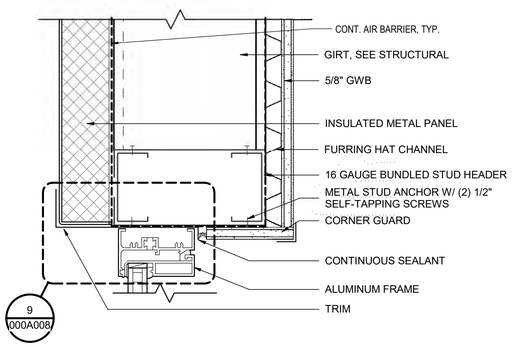

2 000A018 WINDOW JAMB - EXTERIOR
3" = 1'-0"

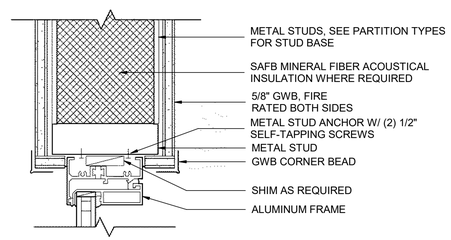

5 WINDOW JAMB - INTERIOR
3" = 1'-0"

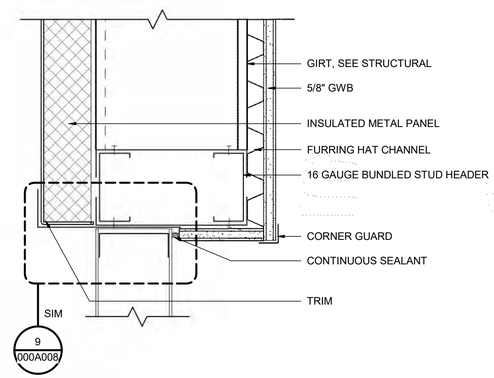

8 LOUVER JAMB @ INSULATED PANEL
3" = 1'-0"

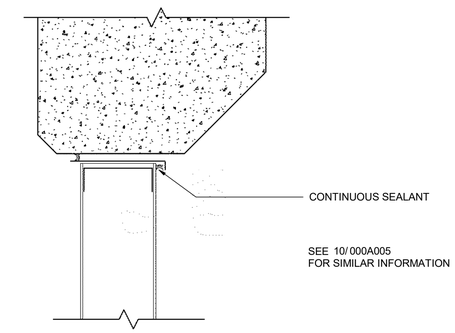

11 LOUVER JAMB @ CONCRETE WALL
3" = 1'-0"

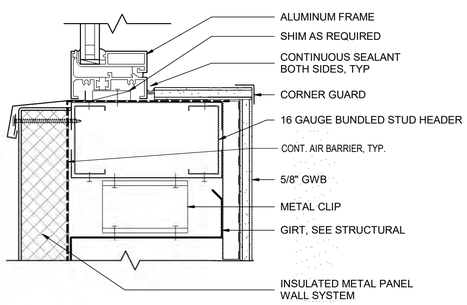

3 000A018 WINDOW SILL - EXTERIOR
3" = 1'-0"

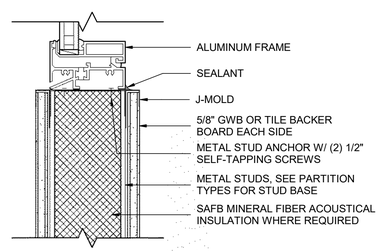

6 WINDOW SILL - INTERIOR
3" = 1'-0"

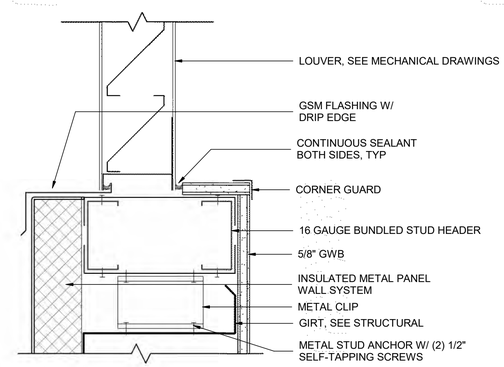

9 LOUVER SILL @ INSULATED PANEL
3" = 1'-0"

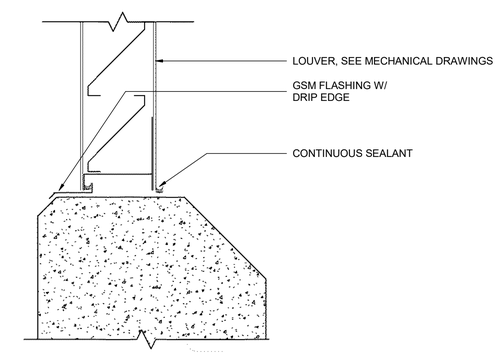

12 LOUVER SILL @ CONCRETE WALL
3" = 1'-0"

ISSUE	DATE	DESCRIPTION
A	09/2026	ISSUED FOR BIDS

PROJECT MANAGER	PIERRE KWAN
CIVIL	J. MEGRDITCHIAN
STRUCTURAL	P. LINDBLOM
ARCHITECTURAL	V. YANEZ
PROCESS	P. KWAN
MECHANICAL	K. CHEUNG
ELECTRICAL	R. MCCOMB
INSTRUMENTATION	D. BEST
PROJECT NUMBER	10193663

REGISTERED ARCHITECT
VICTOR H. YANEZ
DIGITALLY SIGNED
FOLSOM, CA
ARI-15755
STATE OF OREGON

CITY OF ASHLAND
Ashland, Oregon

City of Ashland

Ashland Creek Water Treatment Plant

2026

ARCHITECTURAL
ARCHITECTURAL DETAILS II

0 1" 2"

FILENAME 10193663-Details.rvt
SCALE 3" = 1'-0"

SHEET **000A005**

Autodesk Docs://10193663_Ashland_WTP_Final_Design_2024/10193663-Details.rvt
9/22/2026 10:45:36 PM

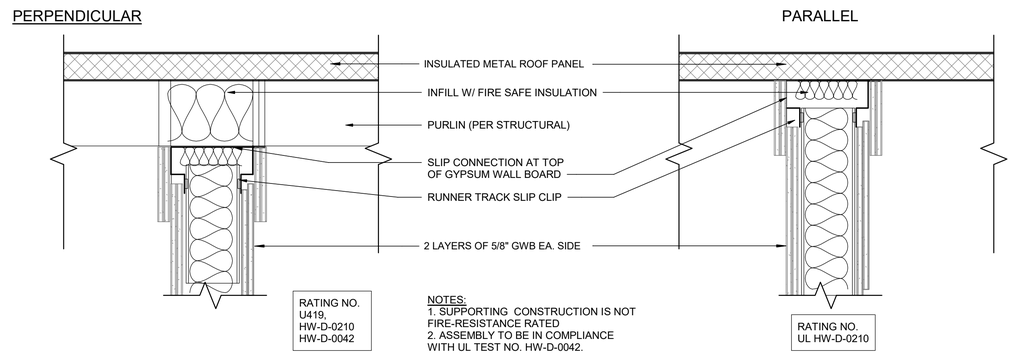

1 TOP OF WALL - RATED
1 1/2" = 1'-0"

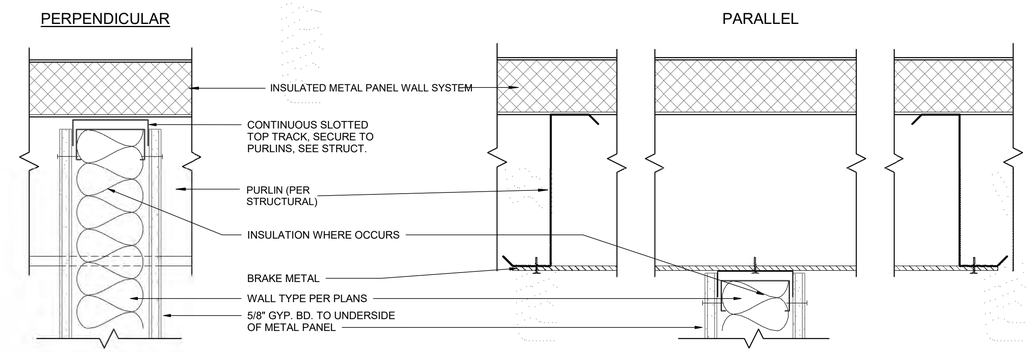

6 TOP OF WALL
3" = 1'-0"

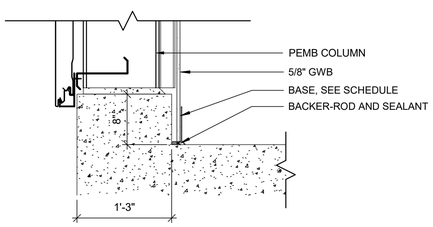

2 WALL DETAIL @ PEMB COLUMN
1" = 1'-0"

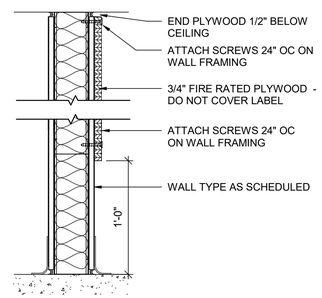

4 PLYWOOD BACKER
1 1/2" = 1'-0"

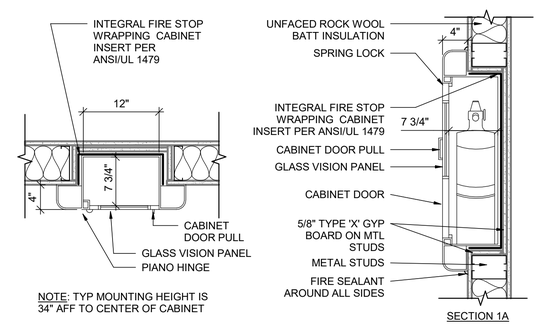

7 FIRE EXTINGUISHER CABINET (STUD WALL)
1" = 1'-0"

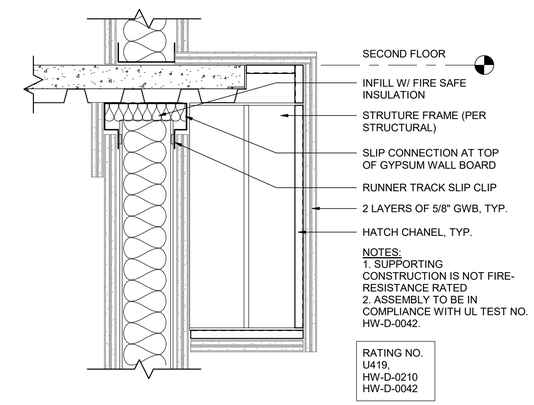

9 RATED WALL AT MOMENT FRAME
1 1/2" = 1'-0"

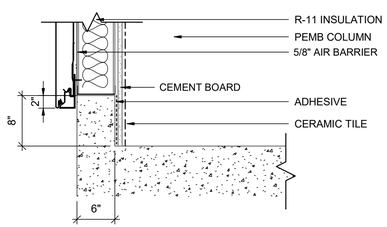

3 WALL DETAIL @ RESTROOM
1" = 1'-0"

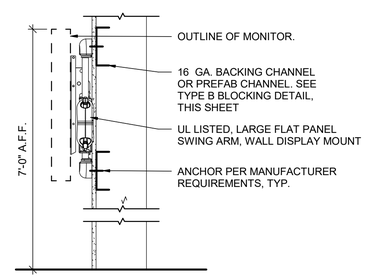

5 MONITOR MOUNTING DETAIL
1" = 1'-0"

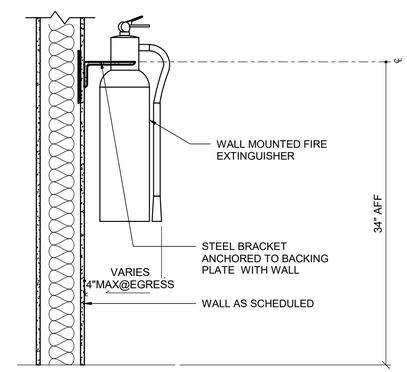

8 WALL MOUNTED FIRE EXTINGUISHER
1" = 1'-0"

ISSUE	DATE	DESCRIPTION
A	09/2026	ISSUED FOR BIDS

PROJECT MANAGER	PIERRE KWAN
CIVIL	J. MEGRDITCHIAN
STRUCTURAL	P. LINDBLOM
ARCHITECTURAL	V. YANEZ
PROCESS	P. KWAN
MECHANICAL	K. CHEUNG
ELECTRICAL	R. MCCOMB
INSTRUMENTATION	D. BEST
PROJECT NUMBER	10193663

REGISTERED ARCHITECT
VICTOR H. YANEZ
DIGITALLY SIGNED
FOLSOM, CA
ARI-15755
STATE OF OREGON

CITY OF ASHLAND
Ashland, Oregon

City of Ashland

Ashland Creek Water Treatment Plant

2026

ARCHITECTURAL
ARCHITECTURAL DETAILS III

0 1" 2"

FILENAME 10193663-Details.rvt
SCALE As indicated

SHEET **000A006**

Autodesk Docs://10193663_Ashland_WTP_Final_Design_2024/10193663-Details.rvt
9/22/2026 10:45:40 PM

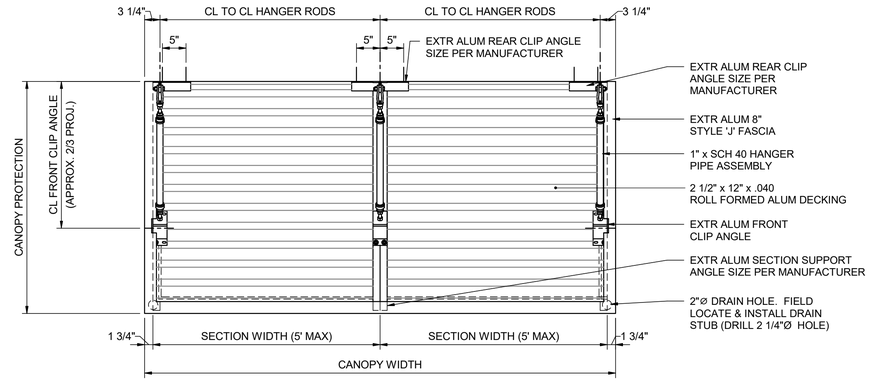

1 CANOPY @ DOOR - PLAN
3/4" = 1'-0"

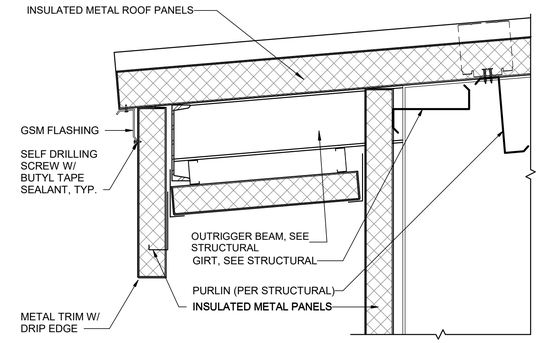

6 LOWER EAVE DETAIL
1 1/2" = 1'-0"

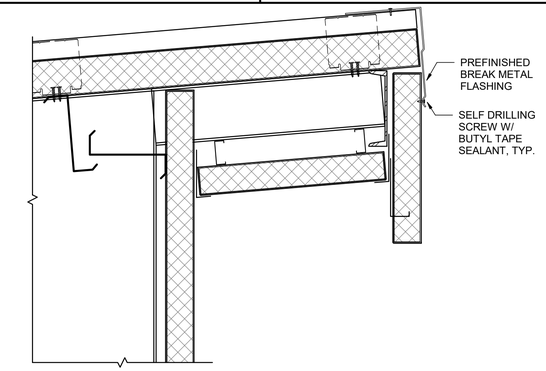

8 HIGHER EAVE DETAIL
1 1/2" = 1'-0"

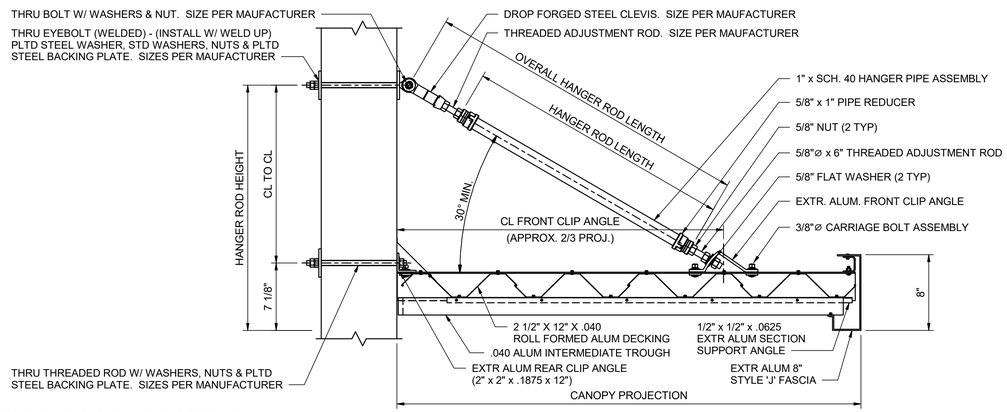

2 CANOPY @ DOOR - SECTION
1 1/2" = 1'-0"

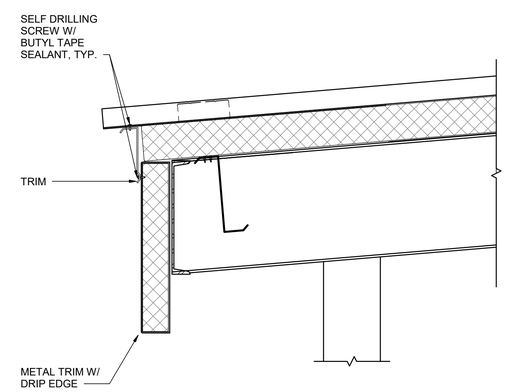

7 LOWER EAVE DETAIL @ CANOPY
1 1/2" = 1'-0"

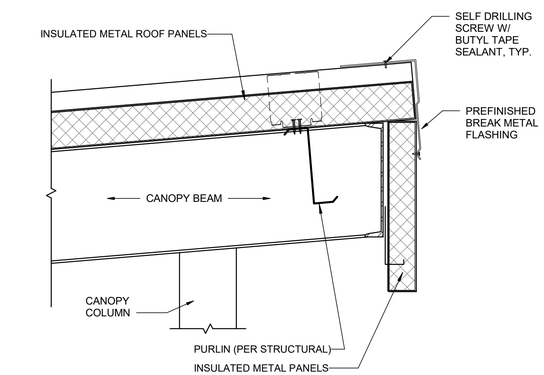

9 HIGHER EAVE DETAIL @ CANOPY
1 1/2" = 1'-0"

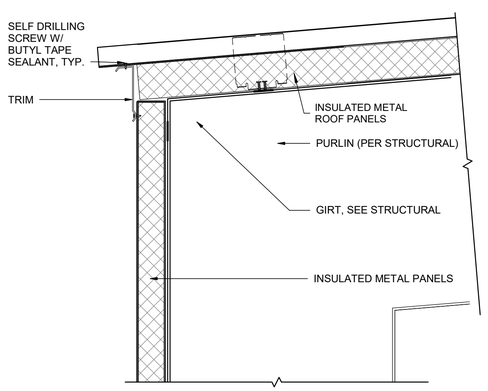

3 ROOF TO WALL TRANSITION 01
1 1/2" = 1'-0"

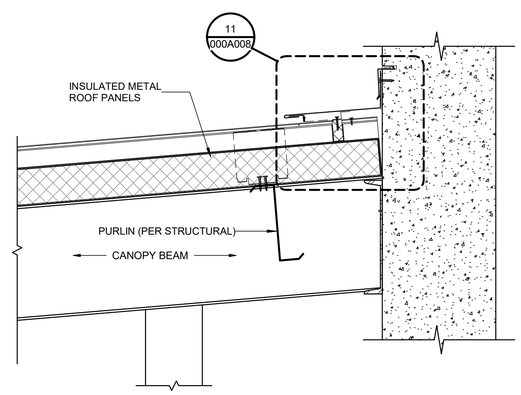

4 ROOF TO WALL TRANSITION 02
1 1/2" = 1'-0"

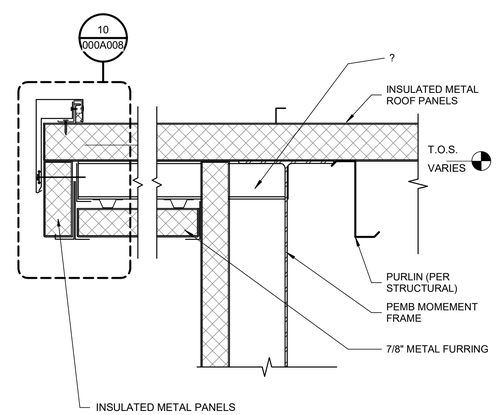

5 RAKE DETAIL
1 1/2" = 1'-0"

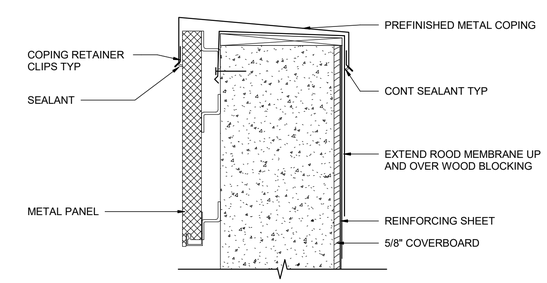

10 COPING @ PARAPET DETAIL
1 1/2" = 1'-0"

ISSUE	DATE	DESCRIPTION
A	09/2026	ISSUED FOR BIDS

PROJECT MANAGER	PIERRE KWAN
CIVIL	J. MEGRDITCHIAN
STRUCTURAL	P. LINDBLOM
ARCHITECTURAL	V. YANEZ
PROCESS	P. KWAN
MECHANICAL	K. CHEUNG
ELECTRICAL	R. MCCOMB
INSTRUMENTATION	D. BEST
PROJECT NUMBER	10193663

REGISTERED ARCHITECT
VICTOR H. YANEZ
DIGITALLY SIGNED
FOLSOM, CA
ARI-15755
STATE OF OREGON

CITY OF ASHLAND
Ashland, Oregon

City of Ashland

Ashland Creek Water Treatment Plant

2026

ARCHITECTURAL
ARCHITECTURAL DETAILS IV

0 1" 2"

FILENAME 10193663-Details.rvt
SCALE As indicated

SHEET **000A007**

Autodesk Docs://10193663_Ashland_WTP_Final_Design_2024/10193663-Details.rvt
9/22/2026 10:45:42 PM

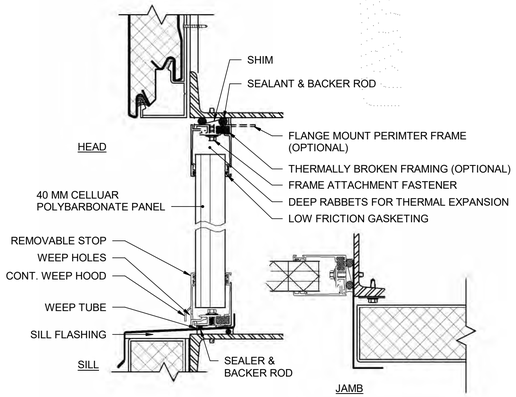

1 000A018 TRANSLUCENT PANEL MOUNT FRAMING
3" = 1'-0"

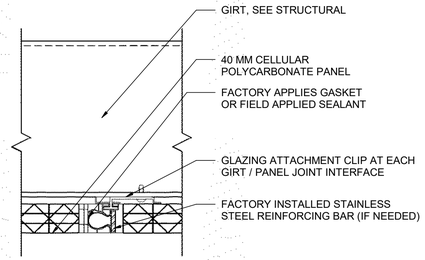

4 000A018 TRANSLUCENT PANEL JOINT
3" = 1'-0"

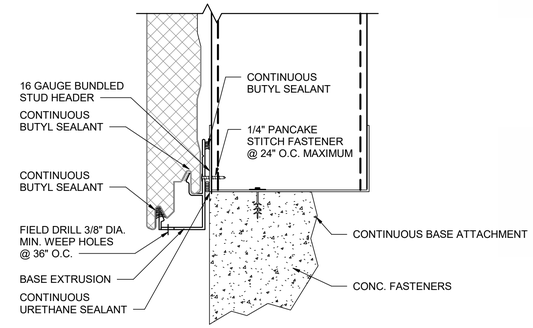

7 000A018 BASE AT CONCRETE CURB
3" = 1'-0"

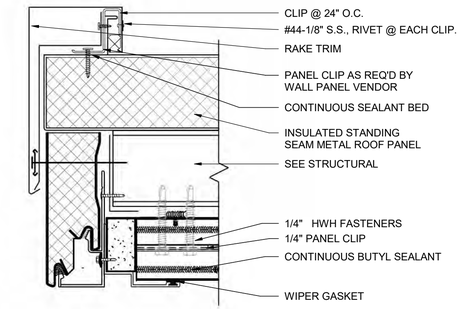

10 000A006 FASCIA AT RAKE
3" = 1'-0"

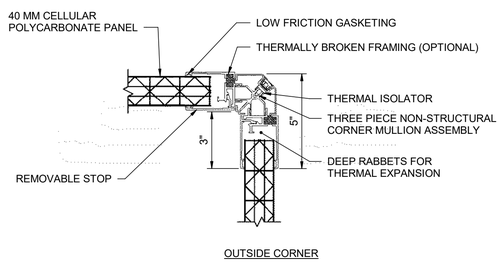

2 000A018 TRANSLUCENT PANEL CORNER OPTION 1
3" = 1'-0"

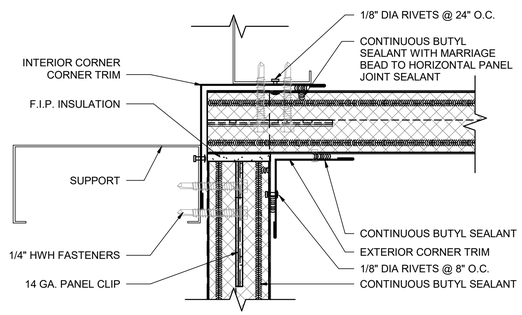

5 000A002 INSIDE CORNER - W/TRIM
3" = 1'-0"

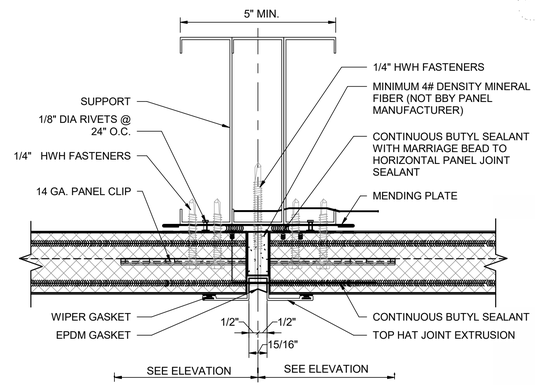

8 000A003 VERTICAL JOINT W/EXTRUSION
3" = 1'-0"

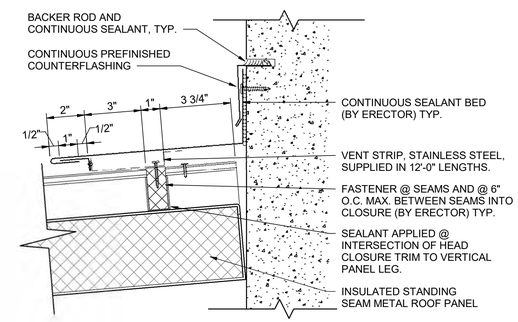

11 000A006 ROOF TO WALL FLASHING
3" = 1'-0"

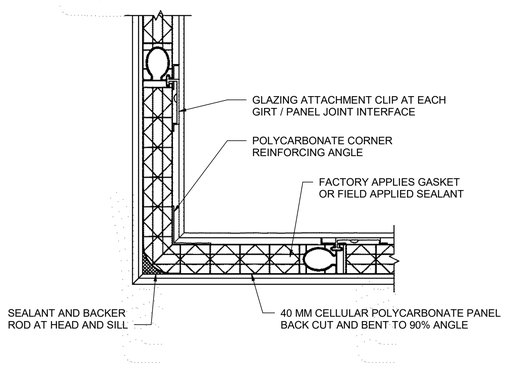

3 TRANSLUCENT PANEL CORNER OPTION 2
3" = 1'-0"

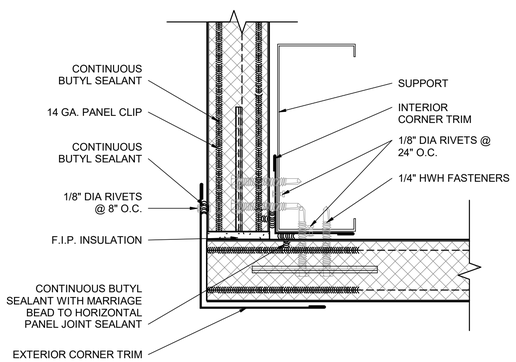

6 000A002 OUTSIDE CORNER - W/TRIM
3" = 1'-0"

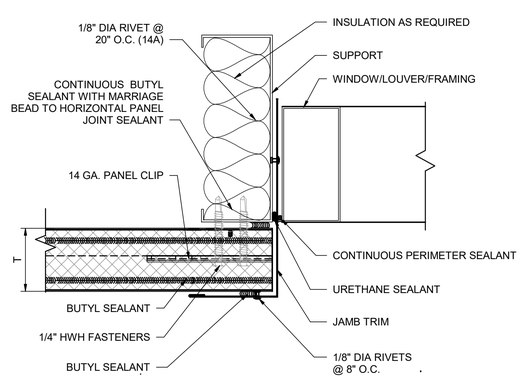

9 000A003 FRAMED OPENING JAMB W/ONE PIECE TRIM
3" = 1'-0"

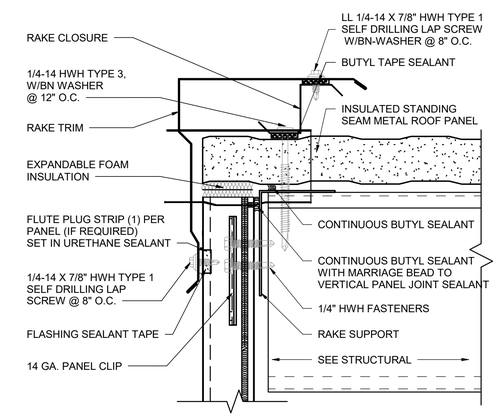

12 RAKE WITH HIGH PROFILE TRIM
3" = 1'-0"

Autodesk Docs://10193663_Ashland_WTP_Final_Design_2024/10193663-Details.rvt
9/22/2026 10:45:51 PM

HDR

ISSUE	DATE	DESCRIPTION
A	09/2026	ISSUED FOR BIDS

PROJECT MANAGER	PIERRE KWAN
CIVIL	J. MEGRDITCHIAN
STRUCTURAL	P. LINDBLOM
ARCHITECTURAL	V. YANEZ
PROCESS	P. KWAN
MECHANICAL	K. CHEUNG
ELECTRICAL	R. MCCOMB
INSTRUMENTATION	D. BEST
PROJECT NUMBER	10193663

REGISTERED ARCHITECT
VICTOR H. YANEZ
DIGITALLY SIGNED
FOLSOM, CA
ARI-15755
STATE OF OREGON

CITY OF ASHLAND
Ashland, Oregon

City of Ashland

Ashland Creek Water Treatment Plant

2026

ARCHITECTURAL
ARCHITECTURAL DETAILS V

0 1" 2"

FILENAME 10193663-Details.rvt
SCALE 3" = 1'-0"

SHEET **000A008**

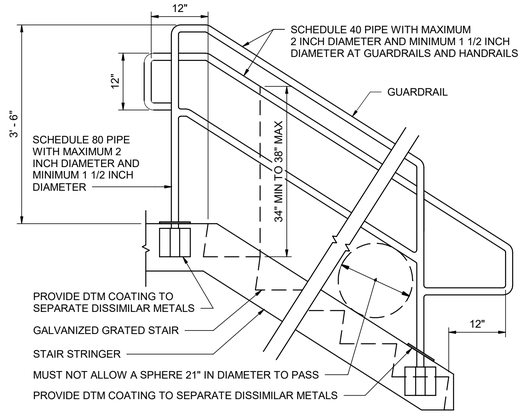

1 GUARDRAIL/HANDRAIL EXTENSIONS
3/4" = 1'-0"

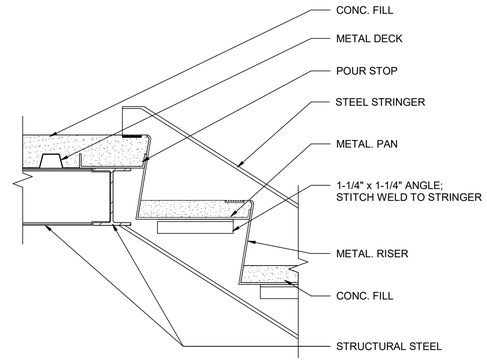

4 STAIR AT LANDING
1 1/2" = 1'-0"

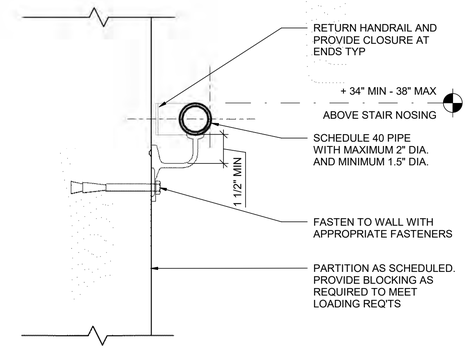

7 HANDRAIL - WALL MOUNTED
3" = 1'-0"

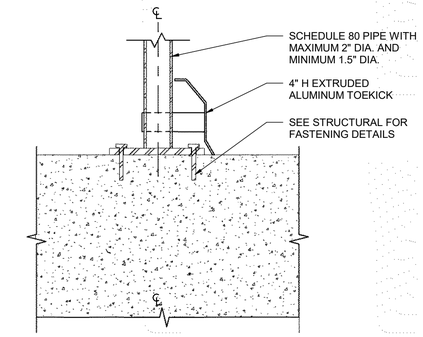

10 000A009 GUARDRAIL POST - SURFACE MOUNTED
3" = 1'-0"

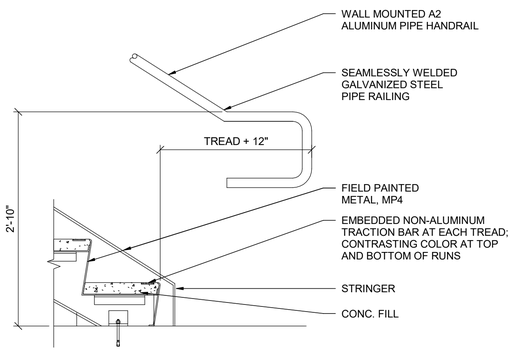

2 HANDRAIL AT BOTTOM STEP
1" = 1'-0"

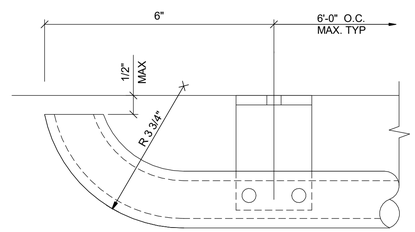

PLAN

5 STAIR - HAND RAIL MOUNTING DETAIL - PLAN
6" = 1'-0"

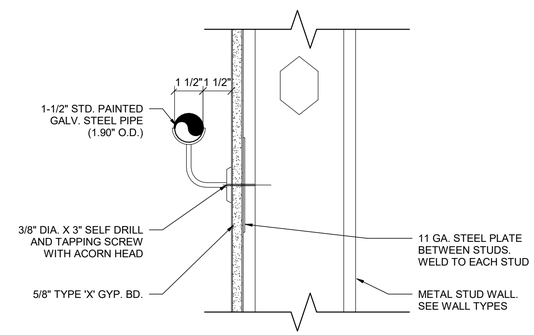

8 STAIR - HAND RAIL AT METAL STUD WALL
3" = 1'-0"

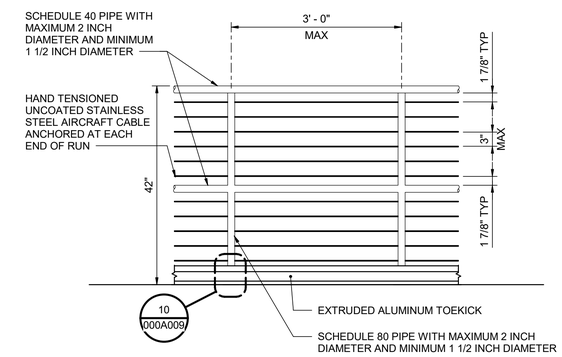

11 GUARDRAIL ELEVATION W/ CABLES
3/4" = 1'-0"

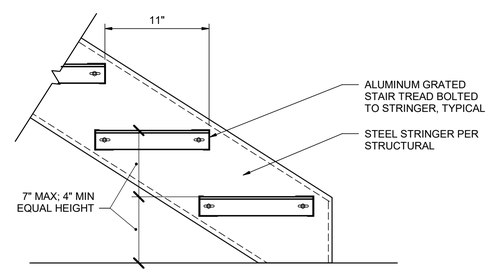

3 METAL STAIR TREADS AND RISERS
1 1/2" = 1'-0"

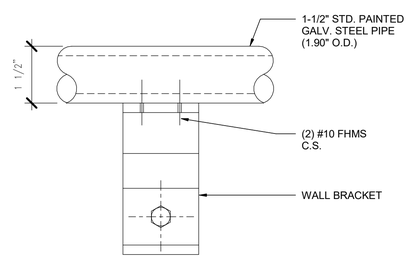

ELEVATION

6 STAIR - HAND RAIL MOUNTING DETAIL ELEVATION
6" = 1'-0"

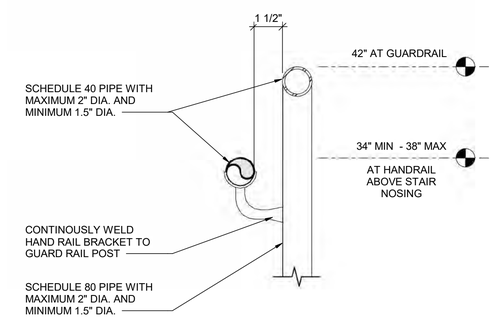

9 HANDRAIL ON GUARDRAIL
3" = 1'-0"

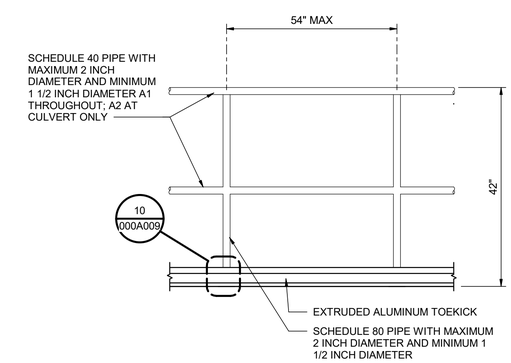

12 GUARDRAIL ELEVATION
3/4" = 1'-0"

ISSUE	DATE	DESCRIPTION
A	09/2026	ISSUED FOR BIDS

PROJECT MANAGER	PIERRE KWAN
CIVIL	J. MEGRDITCHIAN
STRUCTURAL	P. LINDBLOM
ARCHITECTURAL	V. YANEZ
PROCESS	P. KWAN
MECHANICAL	K. CHEUNG
ELECTRICAL	R. MCCOMB
INSTRUMENTATION	D. BEST
PROJECT NUMBER	10193663

REGISTERED ARCHITECT
VICTOR H. YANEZ
DIGITALLY SIGNED
FOLSOM, CA
ARI-15755
STATE OF OREGON

CITY OF ASHLAND
Ashland, Oregon

City of Ashland

Ashland Creek Water Treatment Plant

2026

ARCHITECTURAL
ARCHITECTURAL DETAILS VI

0 1" 2"

FILENAME 10193663-Details.rvt
SCALE As indicated

SHEET **000A009**

Autodesk Docs://10193663_Ashland_WTP_Final_Design_2024/10193663-Details.rvt
9/22/2026 10:45:57 PM

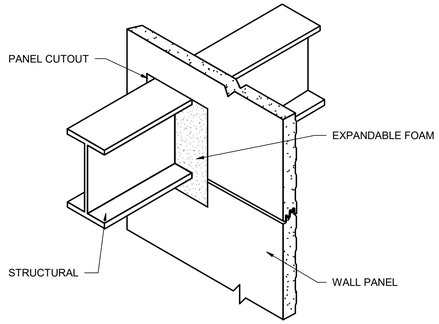

FILLER INSULATION

1 BEAM PENETRATION
NOT TO SCALE

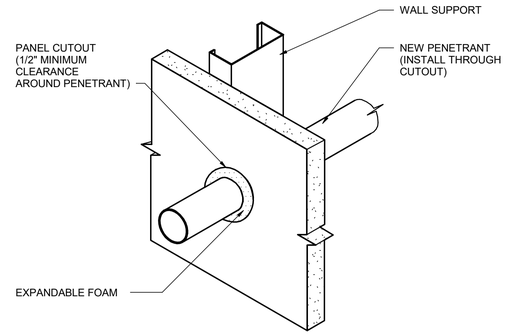

PIPE PENETRATION
AFTER WALL IS INSTALLED

4 PIPE PENETRATION FIELD OF PANEL
NOT TO SCALE

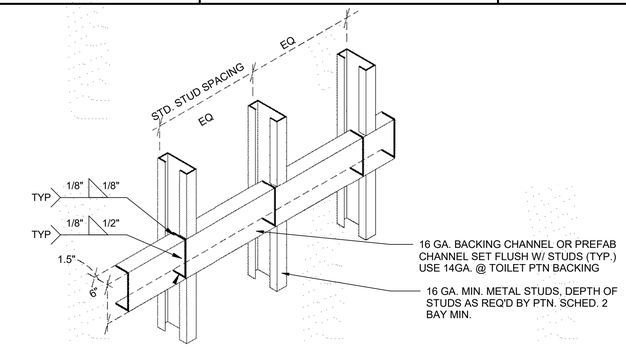

TYPE B:
CABINETS AND COUNTERS UNLESS OTHERWISE NOTED

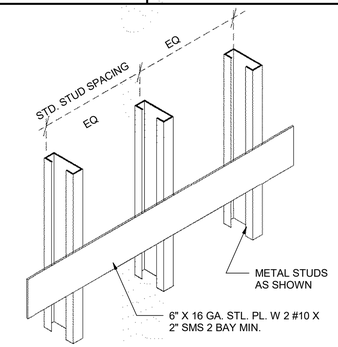

TYPE A:
TOILET ACCESSORIES AND ALL ITEMS NOT OTHERWISE NOTED

7 DOOR DETAILS
NOT TO SCALE

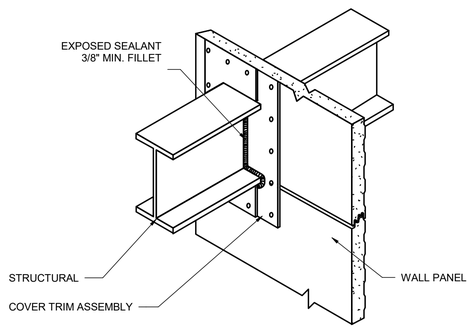

PENETRATION PERIMETER SEAL

2 BEAM PENETRATION - FLASHING
NOT TO SCALE

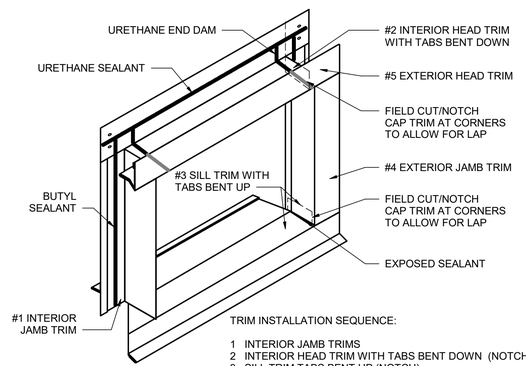

NOTE:
WINDOW MUST BE RECESSED

TRIM INSTALLATION SEQUENCE:

1 INTERIOR JAMB TRIMS
2 INTERIOR HEAD TRIM WITH TABS BENT DOWN (NOTCH)
3 SILL TRIM TABS BENT UP (NOTCH)
4 EXTERIOR JAMB TRIMS
5 EXTERIOR HEAD TRIM

5 TRIM ASSEMBLY FRAMED OPENING
NOT TO SCALE

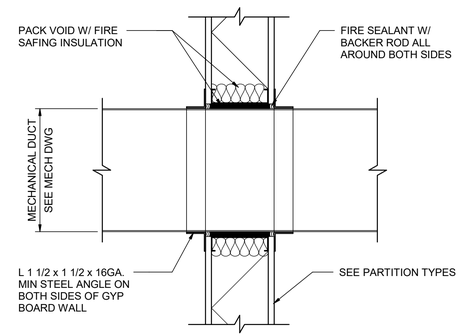

EQUAL TO UL SYSTEM NUMBER W-L-7040 OR W-L-7042 TYPICAL
MECHANICAL DUCT PENETRATING GYP. BOARD WALL

8 FR - TYP. DUCT PENETRATION
1 1/2" = 1'-0"

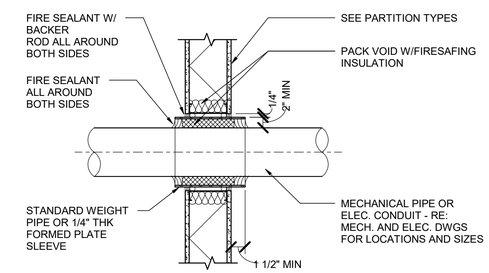

EQUAL TO UL SYSTEM NUMBER W-L-1003
TYP. PIPE OR CONDUIT PENETRATING
GYP. BOARD WALL WITH SLEEVE

10 TYP. FIRE SEALANT CONDUIT PENETRATION
1" = 1'-0"

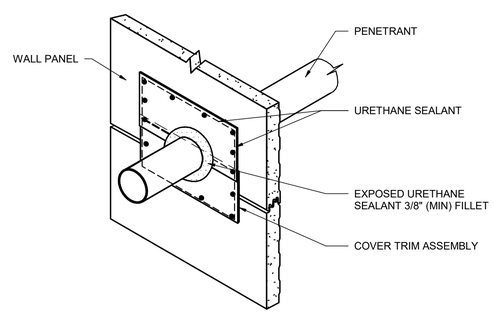

PENETRATION PERIMETER SEAL

3 PIPE PENETRATION - FLASHING
NOT TO SCALE

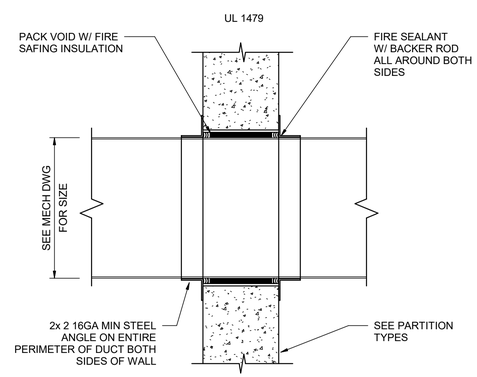

6 FR - MECH DUCT THRU CONCRETE WALL
1" = 1'-0"

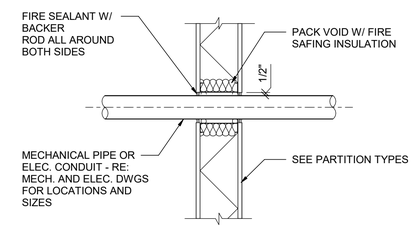

EQUAL TO UL SYSTEM NUMBER W-L-1001
TYP. PIPE OR CONDUIT PENETRATING
GYP. BOARD WALL WITHOUT SLEEVE

9 TYP. PIPE PENETRATION
1" = 1'-0"

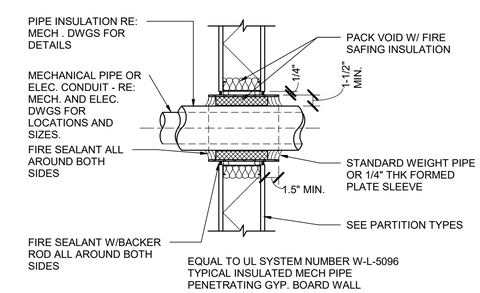

EQUAL TO UL SYSTEM NUMBER W-L-5096
TYPICAL INSULATED MECH PIPE
PENETRATING GYP. BOARD WALL

11 TYP. INSULATED PIPE OR CONDUIT PENETRATION
1" = 1'-0"

ISSUE	DATE	DESCRIPTION
A	09/2026	ISSUED FOR BIDS

PROJECT MANAGER	PIERRE KWAN
CIVIL	J. MEGRDITCHIAN
STRUCTURAL	P. LINDBLOM
ARCHITECTURAL	V. YANEZ
PROCESS	P. KWAN
MECHANICAL	K. CHEUNG
ELECTRICAL	R. MCCOMB
INSTRUMENTATION	D. BEST
PROJECT NUMBER	10193663

REGISTERED ARCHITECT
VICTOR H. YANEZ
DIGITALLY SIGNED
FOLSOM, CA
ARI-15755
STATE OF OREGON

CITY OF ASHLAND
Ashland, Oregon

City of Ashland

Ashland Creek Water Treatment Plant

2026

ARCHITECTURAL
ARCHITECTURAL DETAILS VII

0 1" 2"

FILENAME 10193663-Details.rvt
SCALE As indicated

SHEET **000A010**

Autodesk Docs://10193663_Ashland_WTP_Final_Design_2024/10193663-Details.rvt
9/22/2026 10:46:01 PM

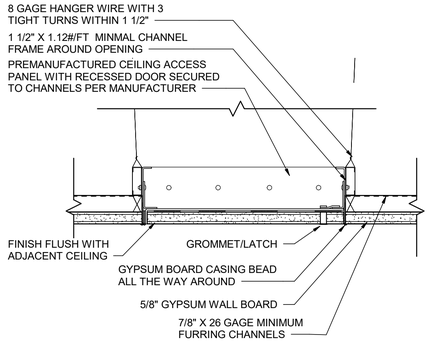

1 CEILING MOUNTED ACCESS PANEL
3" = 1'-0"

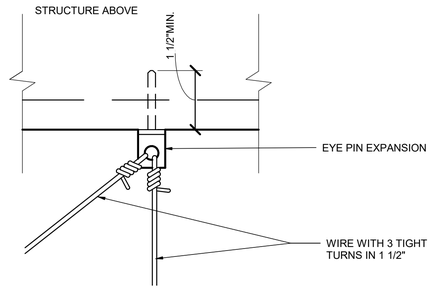

4 CLG -3- TYP. SUSPENSION WIRE @ STRUCTURE
1/8" = 1'-0"

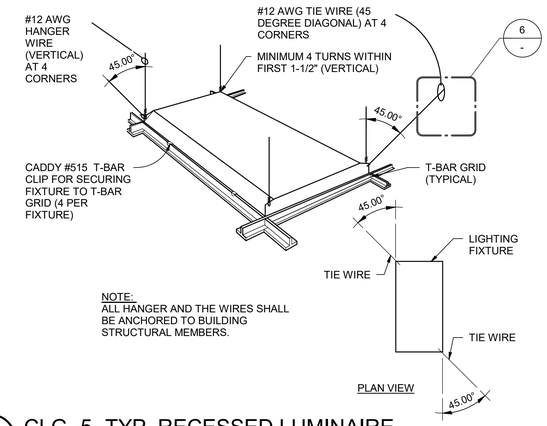

6 CLG -5- TYP. RECESSED LUMINAIRE
1/8" = 1'-0"

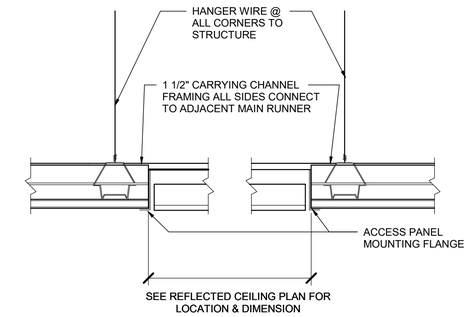

9 CLG -8- ACCESS PANEL
12" = 1'-0"

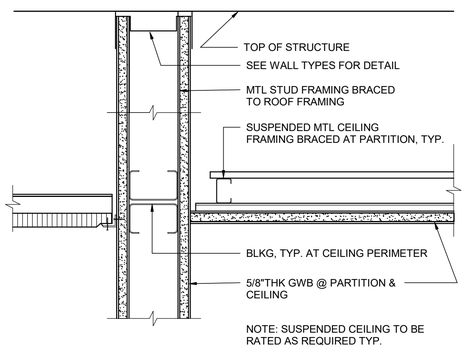

2 CLG -1- TYP. GYP.BD. SUPPORT
1/8" = 1'-0"

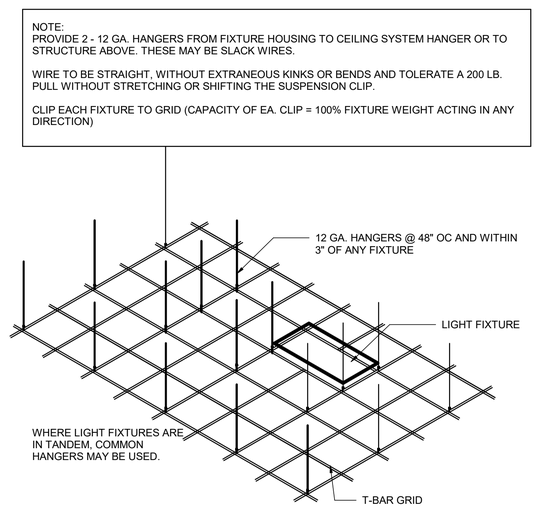

5 CLG -4- TYP. SUSPENDED GRID
1/8" = 1'-0"

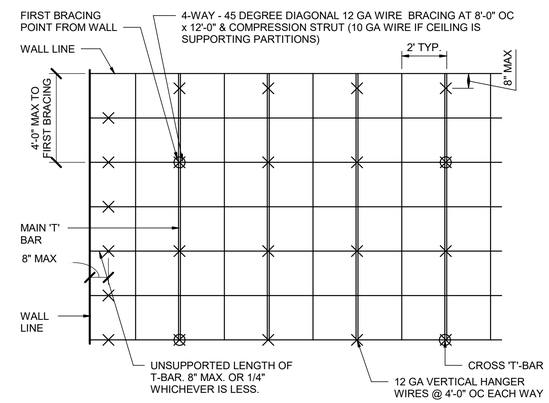

7 CLG -6- SUSPENDED 2X2 GRID
1/8" = 1'-0"

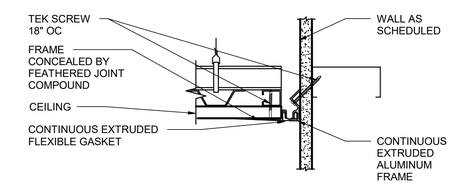

10 CLG - SUSPENDED/ ISOLATED GWBD
3" = 1'-0"

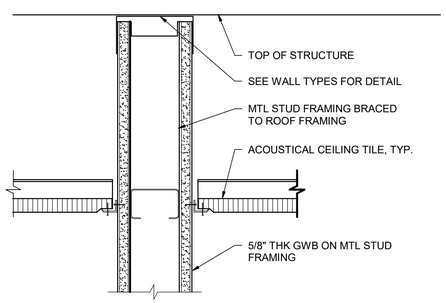

3 CLG -2- TYP ACT TRIM
1/8" = 1'-0"

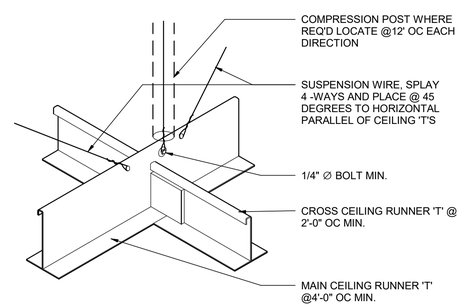

5 CLG -4- TYP. SUSPENDED GRID
1/8" = 1'-0"

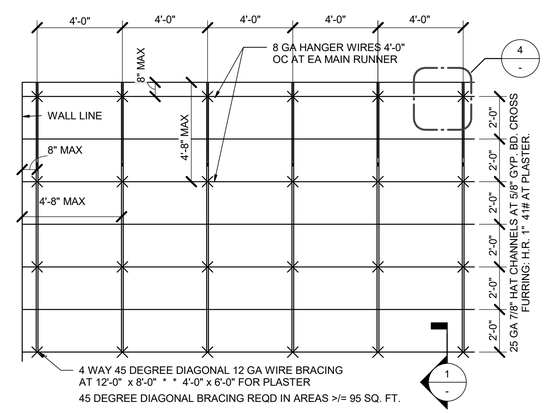

8 CLG -7- SUSPENDED 2X4 GRID
1/8" = 1'-0"

Autodesk Docs://10193663_Ashland_WTP_Final_Design_2024/10193663-Details.rvt
9/22/2026 10:46:02 PM

HDR

ISSUE	DATE	DESCRIPTION
A	09/2026	ISSUED FOR BIDS

PROJECT MANAGER	PIERRE KWAN
CIVIL	J. MEGRDITCHIAN
STRUCTURAL	P. LINDBLOM
ARCHITECTURAL	V. YANEZ
PROCESS	P. KWAN
MECHANICAL	K. CHEUNG
ELECTRICAL	R. MCCOMB
INSTRUMENTATION	D. BEST
PROJECT NUMBER	10193663

REGISTERED ARCHITECT
VICTOR H. YANEZ
DIGITALLY SIGNED
FOLSOM, CA
ARI-15755
STATE OF OREGON

CITY OF ASHLAND
Ashland, Oregon

City of Ashland

Ashland Creek Water Treatment Plant

2026

ARCHITECTURAL
ARCHITECTURAL DETAILS VIII

0 1" 2"

FILENAME 10193663-Details.rvt
SCALE As indicated

SHEET **000A011**

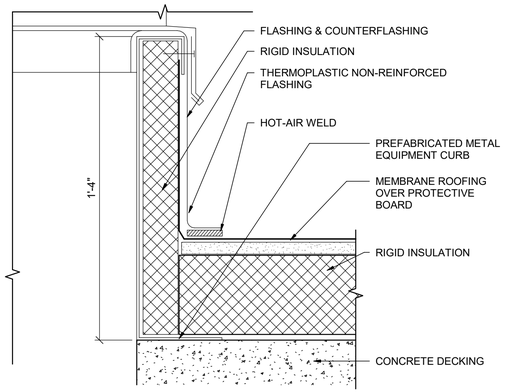

1 FLASHING AT PREFAB CURB
3" = 1'-0"

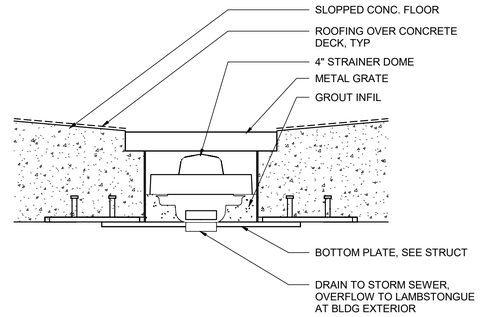

4 ROOF DRAIN AND OVERFLOW - SECTION
NOT TO SCALE

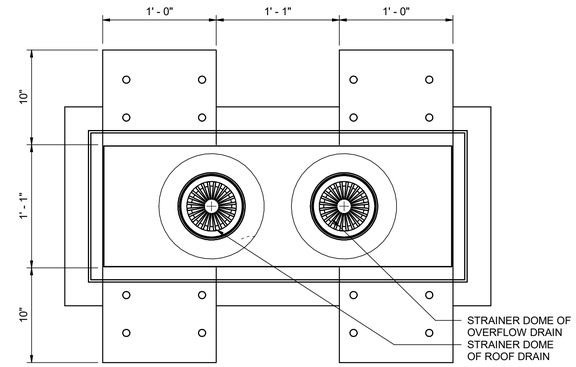

NOTE: SEE STRUCT METAL PLATE INFORMATION

7 ROOF DRAIN AND OVERFLOW - PLAN
1 1/2" = 1'-0"

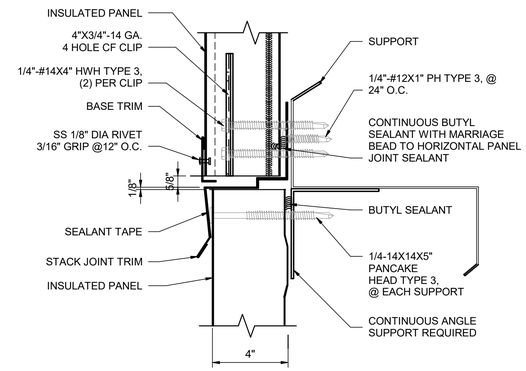

10 STACK JOINT TRANSITION
3" = 1'-0"

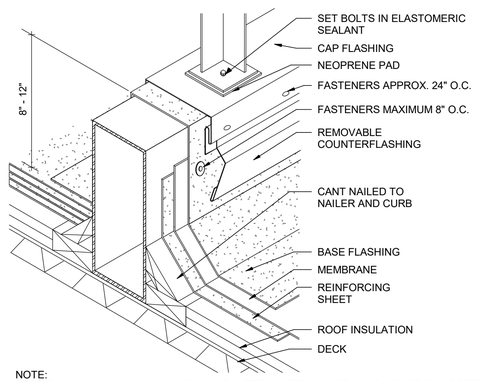

NOTE:
BASE FLASHING ON ALL 15 & 20 YR. GUARANTEE SYSTEMS MUST HAVE A BASE PLY. REFER TO FLASHING MEMBRANE APPLICATION AND FLASHING SPECIFICATION PLATE SYSTEMS.

2 ROOF - EQUIPMENT OR SIGN SUPPORT DETAIL
NOT TO SCALE

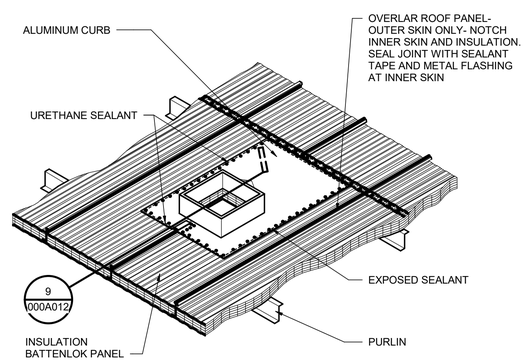

5 ROOF PANEL AT OPENING
NOT TO SCALE

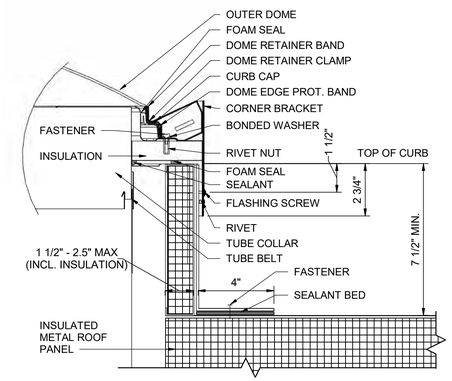

8 SOLATUBE CURB
3" = 1'-0"

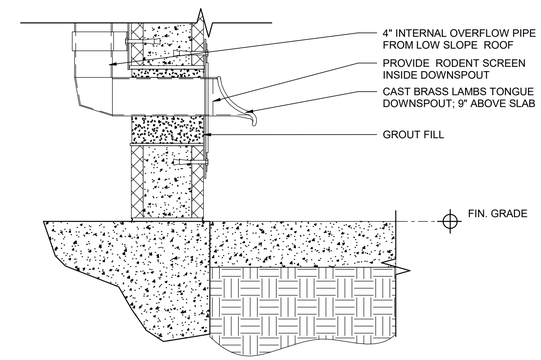

11 ROOF - LAMBTONGUE DRAINAGE DETAIL
1 1/2" = 1'-0"

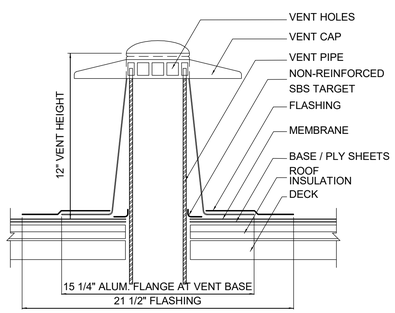

NOTE:

1.) NOT FOR USE OVER ACTIVE PIPES THAT EMIT STEAM OR EXCESSIVE MOISTURE VAPOR; CONDENSATION MAY OCCUR. NOT FOR USE OVER BOILER OR HEATER/FURNACE PIPES.

3 ROOF - VENT FLASHING
1" = 1'-0"

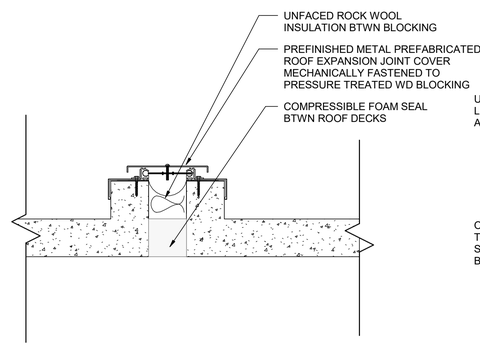

6 ROOF MOVEMENT JOINT
1 1/2" = 1'-0"

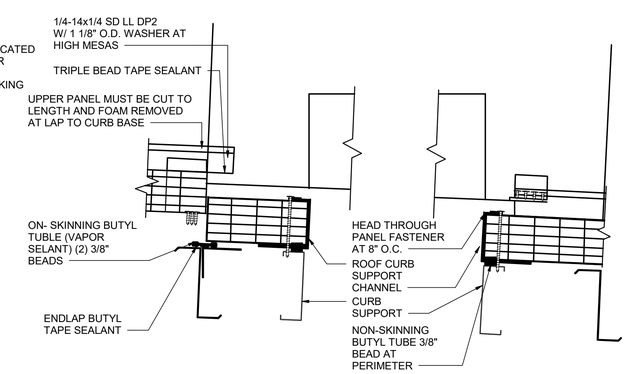

9 ROOF PANEL AT OPENING SECTION
000A012 3" = 1'-0"

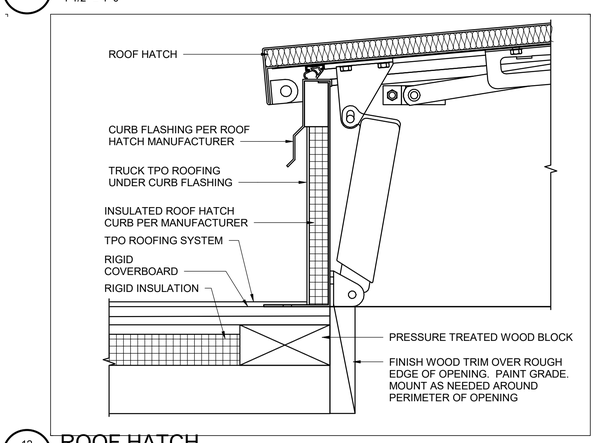

12 ROOF HATCH
3" = 1'-0"

Autodesk Docs://10193663_Ashland_WTP_Final_Design_2024/10193663-Details.rvt
9/22/2026 10:46:06 PM

ISSUE	DATE	DESCRIPTION
A	09/2026	ISSUED FOR BIDS

PROJECT MANAGER	PIERRE KWAN
CIVIL	J. MEGRDITCHIAN
STRUCTURAL	P. LINDBLOM
ARCHITECTURAL	V. YANEZ
PROCESS	P. KWAN
MECHANICAL	K. CHEUNG
ELECTRICAL	R. MCCOMB
INSTRUMENTATION	D. BEST
PROJECT NUMBER	10193663

REGISTERED ARCHITECT
VICTOR H. YANEZ
DIGITALLY SIGNED
FOLSOM, CA
ARI-15755
STATE OF OREGON

CITY OF ASHLAND
Ashland, Oregon

City of Ashland

Ashland Creek Water Treatment Plant

2026

ARCHITECTURAL
ARCHITECTURAL DETAILS IX

0 1" 2"

FILENAME 10193663-Details.rvt
SCALE As indicated

SHEET **000A012**

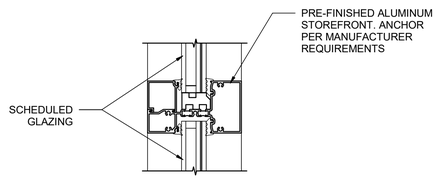

1 STOREFRONT HORIZ. MULLION DETAIL
3" = 1'-0"

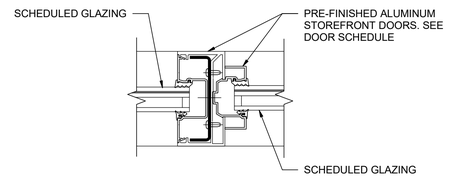

4 STOREFRONT DOOR JAMB AT TRANSOM DETAIL
3" = 1'-0"

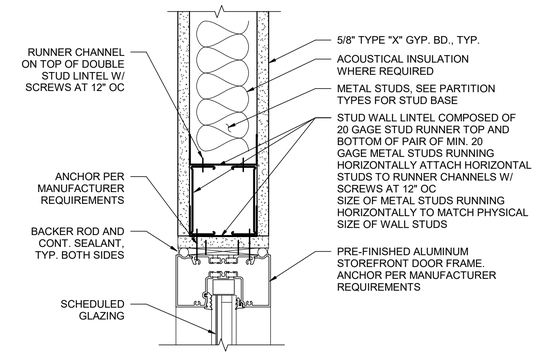

7 STOREFRONT HEAD AT GYP. BD.
3" = 1'-0"

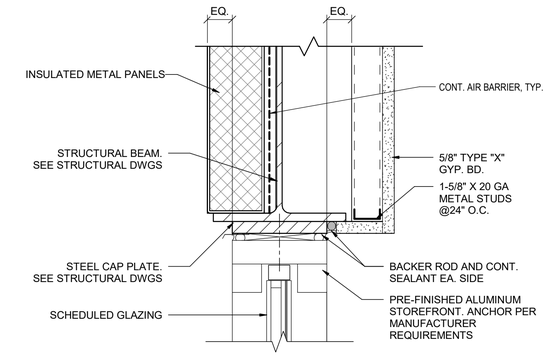

9 STOREFRONT HEAD DETAIL
3" = 1'-0"

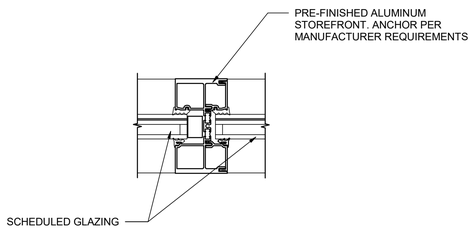

2 STOREFRONT VERT. MULLION DETAIL
3" = 1'-0"

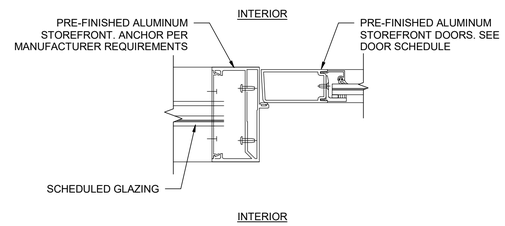

5 STOREFRONT DOOR JAMB DETAIL
3" = 1'-0"

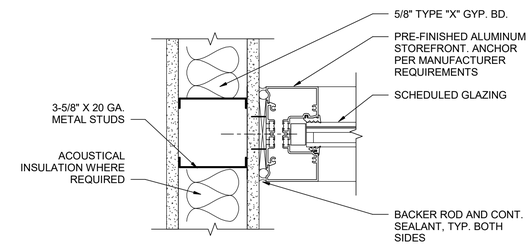

8 STOREFRONT AT GYP. BD. JAMB DETAIL
3" = 1'-0"

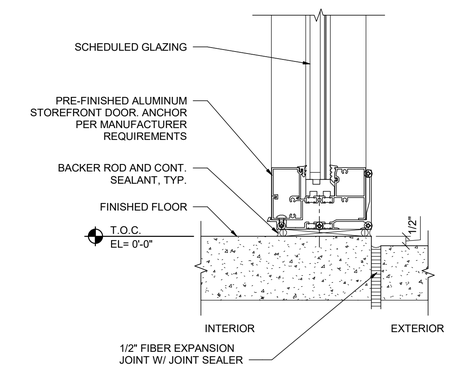

11 STOREFRONT EXTERIOR SILL DETAIL
3" = 1'-0"

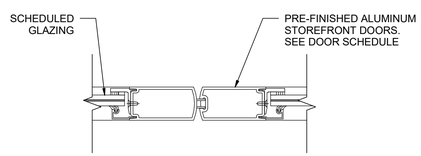

3 STOREFRONT STILES DETAIL
3" = 1'-0"

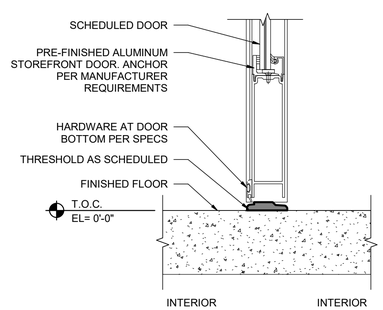

6 STOREFRONT DOOR INTERIOR SILL DETAIL
3" = 1'-0"

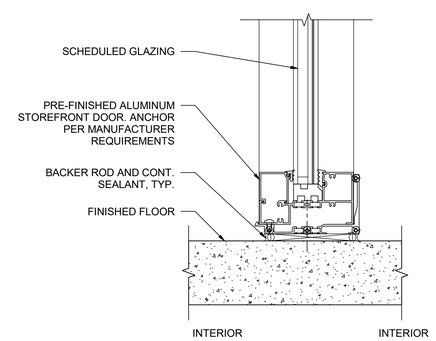

10 STOREFRONT INTERIOR SILL DETAIL
3" = 1'-0"

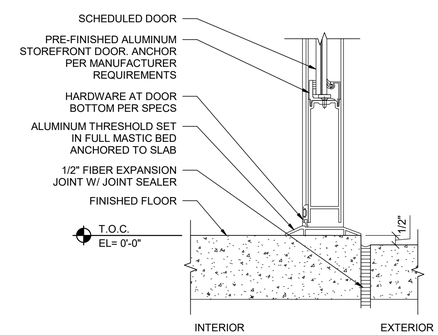

12 STOREFRONT DOOR EXTERIOR SILL DETAIL
3" = 1'-0"

ISSUE	DATE	DESCRIPTION
A	09/2026	ISSUED FOR BIDS

PROJECT MANAGER	PIERRE KWAN
CIVIL	J. MEGRDITCHIAN
STRUCTURAL	P. LINDBLOM
ARCHITECTURAL	V. YANEZ
PROCESS	P. KWAN
MECHANICAL	K. CHEUNG
ELECTRICAL	R. MCCOMB
INSTRUMENTATION	D. BEST
PROJECT NUMBER	10193663

REGISTERED ARCHITECT
VICTOR H. YANEZ
DIGITALLY SIGNED
FOLSOM, CA
ARI-15755
STATE OF OREGON

CITY OF ASHLAND
Ashland, Oregon

City of Ashland

Ashland Creek Water Treatment Plant

2026

ARCHITECTURAL
ARCHITECTURAL DETAILS XI

0 1" 2"

FILENAME 10193663-Details.rvt
SCALE 3" = 1'-0"

SHEET **000A013**

Autodesk Docs://10193663_Ashland_WTP_Final_Design_2024/10193663-Details.rvt
9/22/2026 10:46:09 PM

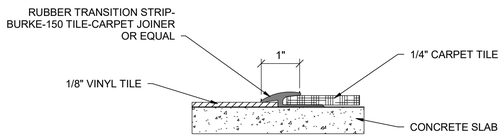

1 T1 - FLOOR TRANSITION CPT TO VT
6" = 1'-0"

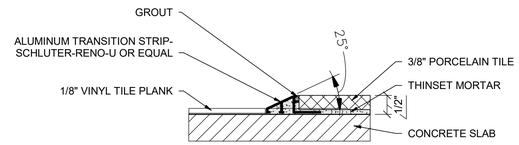

4 T4 - FLOOR TRANSITION PT TO VT
6" = 1'-0"

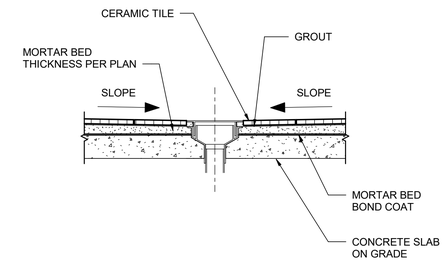

7 FLOOR DRAIN
3" = 1'-0"

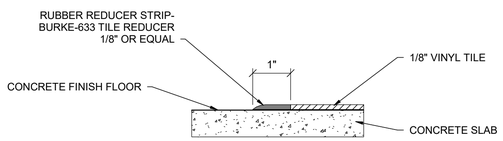

2 T2 - FLOOR TRANSITION VT TO SC
6" = 1'-0"

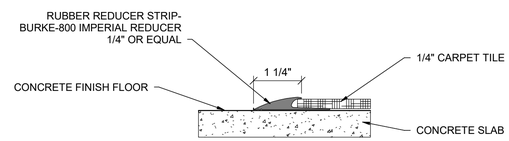

5 T5 - FLOOR TRANSITION CPT TO SC
6" = 1'-0"

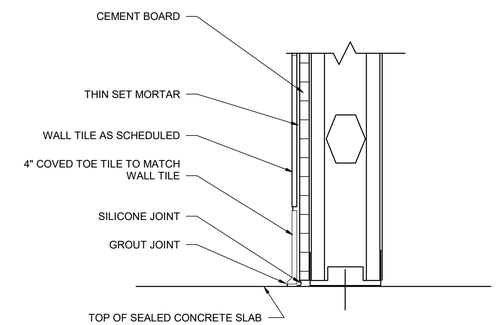

8 WALL -TILE TO FLOOR
3" = 1'-0"

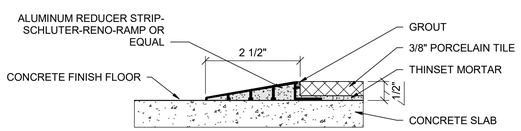

3 T3 - FLOOR TRANSITION PT TO SC
6" = 1'-0"

ISSUE	DATE	DESCRIPTION
A	09/2026	ISSUED FOR BIDS

PROJECT MANAGER	PIERRE KWAN
CIVIL	J. MEGRDITCHIAN
STRUCTURAL	P. LINDBLOM
ARCHITECTURAL	V. YANEZ
PROCESS	P. KWAN
MECHANICAL	K. CHEUNG
ELECTRICAL	R. MCCOMB
INSTRUMENTATION	D. BEST
PROJECT NUMBER	10193663

REGISTERED ARCHITECT
VICTOR H. YANEZ
DIGITALLY SIGNED
FOLSOM, CA
AR-15755
STATE OF OREGON

CITY OF ASHLAND
Ashland, Oregon

City of Ashland

Ashland Creek Water Treatment Plant

2026

ARCHITECTURAL DETAILS XII

0 1" 2"

FILENAME 10193663-Details.rvt
SCALE As indicated

SHEET **000A014**

Autodesk Docs://10193663_Ashland_WTP_Final_Design_2024/10193663-Details.rvt
9/22/2026 10:46:09 PM

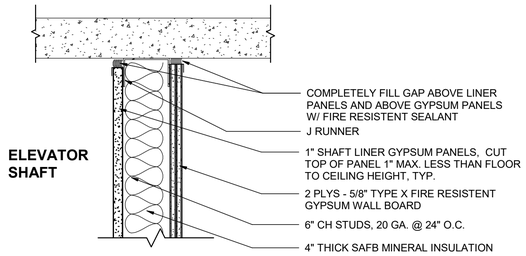

REFERENCE CURRENT UL JOINT SYSTEMS DIRECTORY FOR ALL GENERAL INFORMATION, MATERIAL DESIGNATIONS, THICKNESS AND FIRE RATINGS.

1 SHAFT WALL HEAD - UL BW-D-0016

1 1/2" = 1'-0"

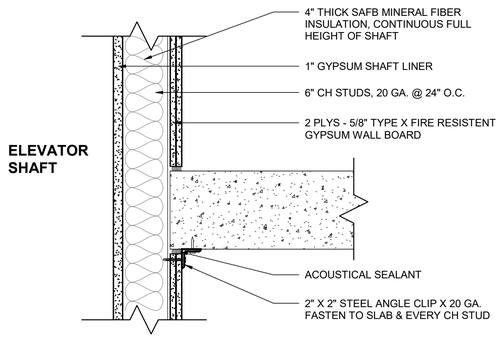

2 SHAFT WALL AT INTERMEDIATE

1 1/2" = 1'-0"

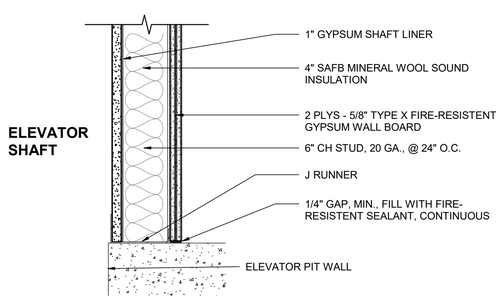

UL DESIGN U415, 2-HOUR RATING / STC 50

3 SHAFT WALL BASE - UL BW-S-0016

1 1/2" = 1'-0"

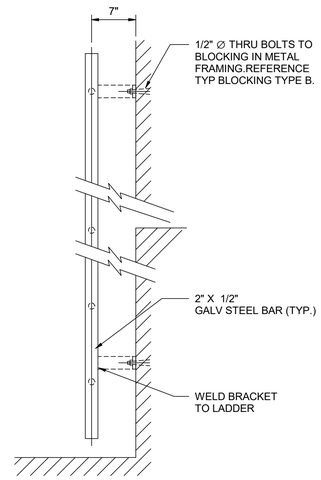

SECTION VIEW

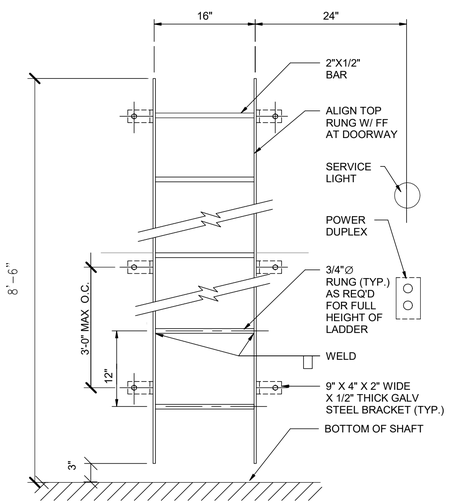

ELEVATION VIEW

4 ELEVATOR PIT ACCESS LADDER

NOT TO SCALE

NOTE:
THE AUTOMATIC DOOR REOPENING DEVICE IS ACTIVATED IF AN OBJECT PASSES THROUGH EITHER LINE A OR LINE B. LINE A AND LINE B REPRESENT THE VERTICAL LOCATION OF THE DOOR REOPENING DEVICE NOT REQUIRING CONTACT.

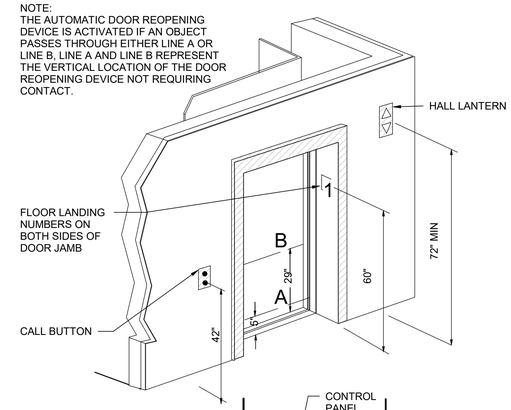

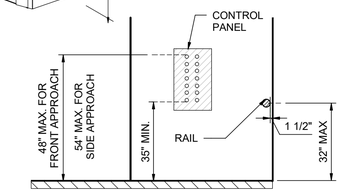

MAXIMUM INSTALLATION HEIGHTS ABOVE CAB FLOOR

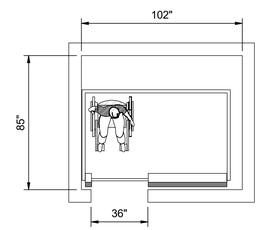

ALTERNATE LOCATION OF PANEL WITH CENTER-OPENING DOOR

5 ELEVATOR ENTRANCE

NOT TO SCALE

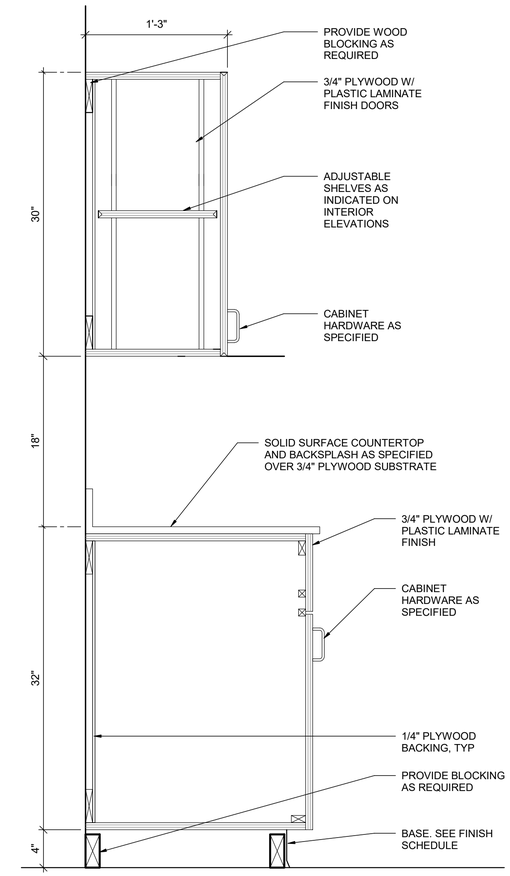

7 CASEWORK - LOWER AND UPPER CABINET

NOT TO SCALE

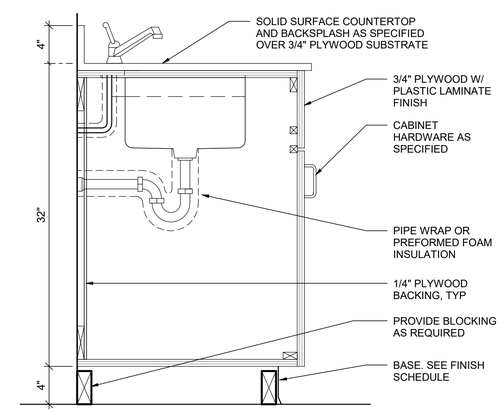

64 CASEWORK - CABINET WITH SINK

NOT TO SCALE

ISSUE	DATE	DESCRIPTION
A	09/2026	ISSUED FOR BIDS

PROJECT MANAGER	PIERRE KWAN
CIVIL	J. MEGRDITCHIAN
STRUCTURAL	P. LINDBLOM
ARCHITECTURAL	V. YANEZ
PROCESS	P. KWAN
MECHANICAL	K. CHEUNG
ELECTRICAL	R. MCCOMB
INSTRUMENTATION	D. BEST
PROJECT NUMBER	10193663

REGISTERED ARCHITECT
VICTOR H. YANEZ
DIGITALLY SIGNED
FOLSOM, CA
ARI-15755
STATE OF OREGON

CITY OF ASHLAND
Ashland, Oregon

City of Ashland

Ashland Creek Water Treatment Plant

2026

ARCHITECTURAL DETAILS XIII

0 1" 2"

FILENAME	10193663-Details.rvt
SCALE	As indicated

SHEET **000A015**

Autodesk Docs://10193663_Ashland_WTP_Final_Design_2024/10193663-Details.rvt
9/22/2026 10:46:10 PM

TYPICAL ACCESSIBLE SHOWER LAYOUT

SCALE: 1/4" = 1' - 0"

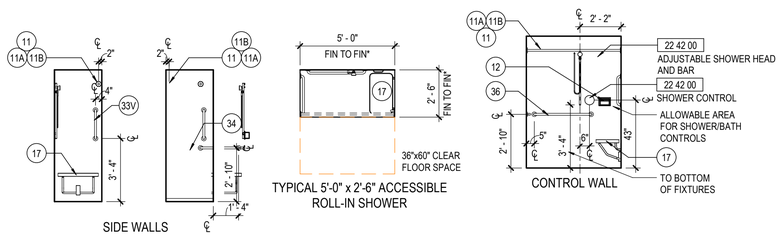

NOTE: SEE TOILET ACCESSORY MOUNTING DIAGRAM ADDITIONAL INFORMATION

LAVATORY CLEARANCES

SCALE 3/4" = 1' - 0"

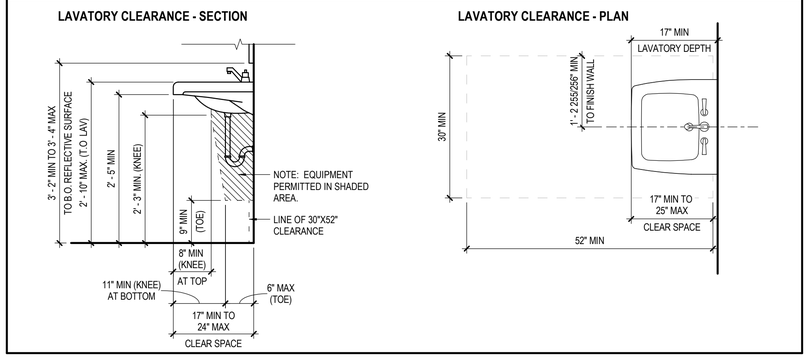

ACCESSIBLE COUNTER LAVATORY

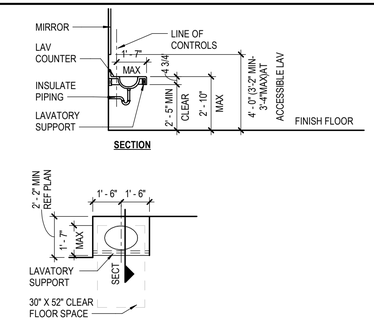

TOILET ACCESSORY MOUNTING DIAGRAM

SCALE: 1/4" = 1'-0"

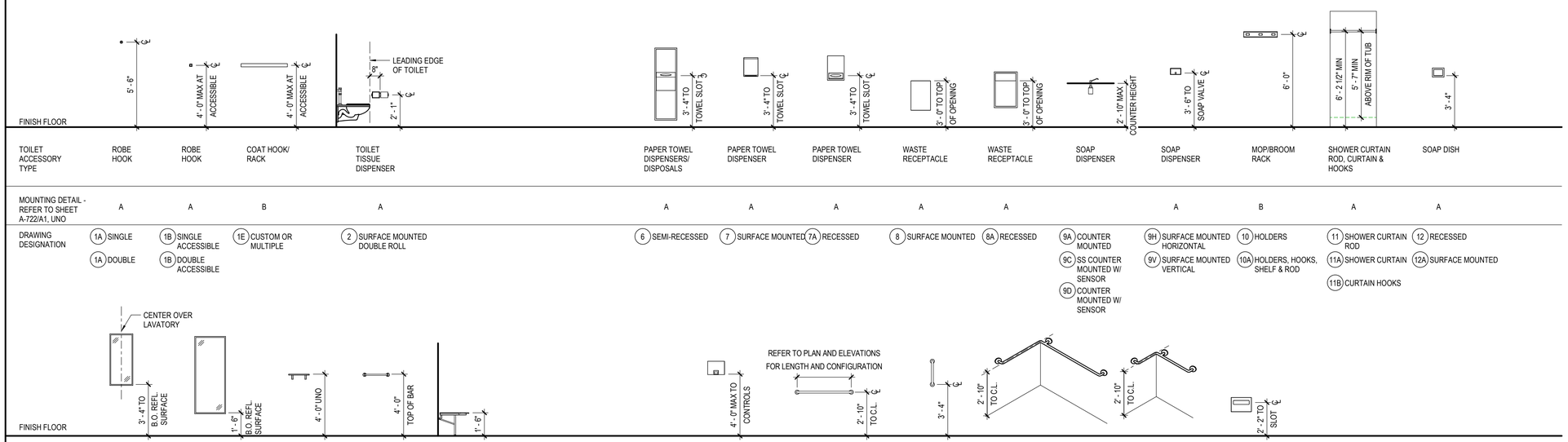

TOILET ACCESSORY TYPE	ROBE HOOK	ROBE HOOK	COAT HOOK/ RACK	TOILET TISSUE DISPENSER	PAPER TOWEL DISPENSERS/ DISPOSALS	PAPER TOWEL DISPENSER	PAPER TOWEL DISPENSER	WASTE RECEPTACLE	WASTE RECEPTACLE	SOAP DISPENSER	SOAP DISPENSER	MOP/BROOM RACK	SHOWER CURTAIN ROD, CURTAIN & HOOKS	SOAP DISH
MOUNTING DETAIL - REFER TO SHEET A-722/A1, UNO	A	A	B	A	A	A	A	A	A		A	B	A	A
DRAWING DESIGNATION	1A SINGLE 1A DOUBLE	1B SINGLE ACCESSIBLE 1B DOUBLE ACCESSIBLE	1E CUSTOM OR MULTIPLE	2 SURFACE MOUNTED DOUBLE ROLL	6 SEMI-RECESSED	7 SURFACE MOUNTED	7A RECESSED	8 SURFACE MOUNTED	8A RECESSED	9A COUNTER MOUNTED 9C SS COUNTER MOUNTED W/ SENSOR 9D COUNTER MOUNTED W/ SENSOR	9H SURFACE MOUNTED HORIZONTAL 9V SURFACE MOUNTED VERTICAL	10 HOLDERS 10A HOLDERS, HOOKS, SHELF & ROD	11 SHOWER CURTAIN ROD 11A SHOWER CURTAIN 11B CURTAIN HOOKS	12 RECESSED 12A SURFACE MOUNTED

TOILET ACCESSORY TYPE	STAINLESS STEEL FRAMED MIRROR	STAINLESS STEEL FRAMED MIRROR	STAINLESS STEEL SHELF	TOWEL BAR	SHOWER SEAT	HAND DRYER	GRAB BAR HORIZONTAL	GRAB BAR VERTICAL	ACCESSIBLE TOILET OR SHOWER L-SHAPED HORIZONTAL GRAB BAR	ACCESSIBLE TRANSFER SHOWER L-SHAPED HORIZONTAL GRAB BAR	TOILET SEAT COVER DISPENSER
MOUNTING DETAIL - REFER TO SHEET A-722/A1, UNO	B	B	B	B	C	A	C	C	C	C	A
DRAWING DESIGNATION	13 18" W X 36" H SURFACE MOUNTED 14 18" W X 36" H SURFACE MOUNTED W/ SHELF	13T 24" W X 60" H SURFACE MOUNTED	15 16" W X 6" W	16 18" LONG	17 WALL MOUNTED 17A WALL MOUNTED W/ SWING LEGS 17C CUSTOM	25 SURFACE MOUNTED	33 18" 34 24" 36 36" 37 42" 38 48"	33V 18"	54 54x42 - NON-SLIP FINISH	56 30x18 - NON-SLIP FINISH	20 30x18 - NON-SLIP FINISH

TOILET ACCESSORY NOTES:

1. ACCESSORIES LISTED MAY HAVE GAPS IN ALPHA-NUMERIC LISTING.
2. ACCESSORIES CAN APPEAR ON FLOOR PLANS OR INTERIOR ELEVATIONS.
3. SOME ACCESSORIES SHOWN ON THIS SHEET MAY NOT BE USED IN THE PROJECT. REFER TO SPECIFICATION SECTION 10 28 13.
4. NOT ALL ACCESSORIES ARE CFCI. REFER TO SPECIFICATION SECTION 10 28 13 FOR TOILET AND BATH ACCESSORIES TO BE PROVIDED BY CONTRACTOR.
5. LOCATIONS OF ACCESSORIES NOT INCLUDED IN 10 28 13 BUT SHOWN ON FLOOR PLANS AND INTERIOR ELEVATIONS ARE RECOMMNEDED LOCATIONS FOR OFCI OR OFOI ITEMS.

ISSUE	DATE	DESCRIPTION
A	09/2026	ISSUED FOR BIDS

PROJECT MANAGER	PIERRE KWAN
CIVIL	J. MEGRDITCHIAN
STRUCTURAL	P. LINDBLOM
ARCHITECTURAL	V. YANEZ
PROCESS	P. KWAN
MECHANICAL	K. CHEUNG
ELECTRICAL	R. MCCOMB
INSTRUMENTATION	D. BEST
PROJECT NUMBER	10193663

REGISTERED ARCHITECT
VICTOR H. YANEZ
DIGITALLY SIGNED
FOLSOM, CA
ARI-15755
STATE OF OREGON

CITY OF ASHLAND
Ashland, Oregon

City of Ashland

Ashland Creek Water Treatment Plant

2026

ARCHITECTURAL
ARCHITECTURAL DETAILS XIV

0 1" 2"

FILENAME 10193663-Details.rvt
SCALE As indicated

SHEET **000A016**

Autodesk Docs://10193663_Ashland_WTP_Final_Design_2024/10193663-Details.rvt
9/22/2026 10:46:12 PM

DOOR AND FRAME SCHEDULE

ROOM NUMBER	ROOM NAME	DOOR NO.	DOOR TYPE	DOOR SIZE WIDTH	DOOR SIZE HEIGHT	DOOR SIZE THICKNESS	DOOR RATING FIRE	DOOR RATING SOUND	DOOR MATERIAL	DOOR FINISH	FRAME TYPE	FRAME MATERIAL	FRAME FINISH	FRAME DETAILS HEAD	FRAME DETAILS JAMB	FRAME DETAILS SILL	HARDWARE	NOTES & REMARKS
100-101	OZONE	100-101B	A	3' - 0"	7' - 2"	1 3/4"	-	-	ALUM	C.I.	F5	ALUM	C.I.	4/000A004	5/000A004	6/000A004	HW-112	DOOR WITH GLAZING
100-102	THIO	100-102A	A	3' - 0"	7' - 2"	1 3/4"	-	-	ALUM	C.I.	F5	ALUM	C.I.	1/000A004	2/000A004	3/000A004	HW-112	DOOR WITH GLAZING
100-103	PRETREATMENT	100-103A	C	10' - 0"	13' - 6"	3"	-	-	STLS	MNF		ALUM	MNF	8/000A004	9/000A004	-	HW-101	ROLL-UP DOOR
100-103	PRETREATMENT	100-103B	A	3' - 0"	7' - 2"	1 3/4"	-	-	ALUM	C.I.	F5	ALUM	C.I.	4/000A004	5/000A004	6/000A004	HW-112	DOOR WITH GLAZING
300-100	LOBBY	300-100A	A	6' - 0"	7' - 2"	1 3/4"	-	-	ALUM	C.I.	F1	ALUM	C.I.	4/000A004	5/000A004	6/000A004	HW-114	
300-101	ELEVATOR LOBBY	300-100B	C	3' - 0"	7' - 2"	1 3/4"		-	ALUM	C.I.	F2	ALUM	C.I.	4/000A004	5/000A004	6/000A004	HW-112	
300-102	CORR. 1	300-102A	D	3' - 0"	7' - 2"	1 3/4"	-	-	ALUM	C.I.	F5	ALUM	C.I.	1/000A004	2/000A004	3/000A004	HW-116	
300-102	CORR. 1	300-102B	D	3' - 0"	7' - 2"	1 3/4"								1/000A004	2/000A004	3/000A004	HW-116	
300-106	CORR. 2	300-103A	D	3' - 0"	7' - 2"	1 3/4"	1 -1/2	-	ALUM	C.I.	F5	ALUM	C.I.	4/000A004	5/000A004	6/000A004	HW-218	
300-103	BALLASTED FLOC	300-103B	D	3' - 0"	7' - 2"	1 3/4"	-	-	ALUM	C.I.	F5	ALUM	C.I.	4/000A004	5/000A004	6/000A004	HW-112	
300-103	BALLASTED FLOC	300-103C	D	3' - 0"	7' - 2"	1 3/4"	-	-	ALUM	C.I.	F5	ALUM	C.I.	4/000A004	5/000A004	6/000A004	HW-112	
300-103	BALLASTED FLOC	300-103D		3' - 0"	7' - 2"	1 3/4"								4/000A004	5/000A004	6/000A004	HW-112	
300-104	CHEMICAL	300-104A	D	3' - 0"	7' - 2"	1 3/4"			ALUM	C.I.	F5	ALUM	C.I.	8/000A004	5/000A004	-	HW-112	
300-104	CHEMICAL	300-104B	F	10' - 0"	7' - 6"	3"	-	-	ALUM	C.I.		STLS	MNF	8/000A004	9/000A004	-	HW-101	ROLL-UP DOOR
300-104	CHEMICAL	300-104C	B	6' - 0"	7' - 2"	1 3/4"	1	-	ALUM	C.I.	F4	ALUM	C.I.	1/000A004	2/000A004	3/000A004	HW-223	
300-105	CHEMICAL	300-105A	F	10' - 0"	7' - 6"	3"	-	-	ALUM	C.I.		STLS	MNF	4/000A004	-/---	6/000A004	HW-101	ROLL-UP DOOR
300-105	CHEMICAL	300-105B	D	3' - 0"	7' - 2"	1 3/4"			ALUM	C.I.	F5	ALUM	C.I.	4/000A004	-/---	-	HW-112	
300-105	CHEMICAL	300-105C	B	6' - 0"	7' - 2"	1 3/4"	1	-	ALUM	C.I.	F4	ALUM	C.I.	1/000A004	2/000A004	3/000A004	HW-223	
300-106	CORR. 2	300-106A	C	3' - 0"	7' - 2"	1 3/4"	1	-	ALUM	C.I.	F3	ALUM	C.I.	7/000A004	-/---	6/000A004	HW-112	
300-106	CORR. 2	300-106B	C	3' - 0"	7' - 2"	1 3/4"	-	-	ALUM	C.I.	F3	ALUM	C.I.	7/000A004	-/---	6/000A004	HW-112	
300-107	VESTIBULE	300-107A	E	3' - 0"	7' - 2"	1 3/4"	-	-	ALUM	C.I.	F5	ALUM	C.I.	1/000A004	2/000A004	3/000A004	HW-210	
300-107	VESTIBULE	300-108A	E	3' - 0"	7' - 2"	1 3/4"	-	-	ALUM	C.I.	F5	ALUM	C.I.	1/000A004	2/000A004	3/000A004	HW-202	
300-108	LOCKERS	300-109A	E	3' - 0"	7' - 2"	1 3/4"	-	-	ALUM	C.I.	F5	ALUM	C.I.	1/000A004	2/000A004	3/000A004	HW-204	
300-111	STORAGE AREA	300-110A	E	3' - 0"	7' - 2"	1 3/4"	-	-	ALUM	C.I.	F5	ALUM	C.I.	8/000A004	9/000A004	-	HW-210	
300-111	STORAGE AREA	300-111A	F	7' - 0"	8' - 0"	3/4"	-	-	ALUM	C.I.		SS	MNF	8/000A004	9/000A004	-	HW-101	ROLL-UP DOOR
300-112	ELECTRICAL	300-112A	F	7' - 0"	8' - 0"	3/4"	-	-	ALUM	C.I.		SS	MNF	8/000A004	9/000A004	-	HW-101	ROLL-UP DOOR
300-112	ELECTRICAL	300-112B	D	3' - 0"	7' - 2"	1 3/4"	-	-	ALUM	C.I.	F5	ALUM	C.I.	4/000A004	4/000A004	6/000A004	HW-112	
300-111	STORAGE AREA	300-112C	E	3' - 0"	7' - 2"	1 3/4"	1 -1/2	-	ALUM	C.I.	F5	ALUM	C.I.	1/000A004	2/000A004	3/000A004	HW-116	
300-113	PUMP	300-113A	B	6' - 0"	7' - 2"	1 3/4"	-	-	ALUM	C.I.	F4	ALUM	C.I.	10/000A004	11/000A004	6/000A004	HW-114	
300-113	PUMP	300-113B	D	3' - 0"	7' - 2"	1 3/4"	-	-	ALUM	C.I.	F5	ALUM	C.I.	10/000A004	11/000A004	6/000A004	HW-112	
300-200	LOBBY	300-200A	D	3' - 0"	7' - 2"	1 3/4"	-	-	ALUM	C.I.	F5	ALUM	C.I.	1/000A004	2/000A004	3/000A004	HW-202	
300-200	LOBBY	300-200B	D	3' - 0"	7' - 2"	1 3/4"	1	-	ALUM	C.I.	F5	ALUM	C.I.	1/000A004	1/000A004	6/000A004	HW-116	
300-201	CORR. 3	300-201A	E	3' - 0"	7' - 2"	1 3/4"	1	-	ALUM	C.I.	F5	ALUM	C.I.	1/000A004	2/000A004	3/000A004	HW-116	
300-202	UNISEX	300-202A	E	3' - 0"	7' - 2"	1 3/4"	-	-	ALUM	C.I.	F5	ALUM	C.I.	1/000A004	2/000A004	3/000A004	HW-204	
300-203	JANITOR	300-203A	E	3' - 0"	7' - 2"	1 3/4"	-	-	ALUM	C.I.	F5	ALUM	C.I.	1/000A004	2/000A004	3/000A004	HW-207	
300-206	OFFICE	300-206A	E	3' - 0"	7' - 2"	1 3/4"	-	-	ALUM	C.I.	F5	ALUM	C.I.	1/000A004	2/000A004	3/000A004	HW-207	
300-207	I.T. CLOSET	300-207A	E	3' - 0"	7' - 2"	1 3/4"	-	-	ALUM	C.I.	F5	ALUM	C.I.	1/000A004	2/000A004	3/000A004	HW-207	
300-208	MEETING	300-208A	E	3' - 0"	7' - 2"	1 3/4"	-	-	ALUM	C.I.	F5	ALUM	C.I.	1/000A004	2/000A004	3/000A004	HW-207	
300-209	OBSERVATION DECK 1	300-209A	E	3' - 0"	7' - 2"	1 3/4"	-	-	ALUM	C.I.	F5	ALUM	C.I.	-	-	-	HW-112	
600-100	PUMP ROOM	600-100A	B	6' - 0"	7' - 2"	1 3/4"	-	-	ALUM	C.I.	F4	ALUM	C.I.	4/000A004	5/000A004	6/000A004	HW-114	

NOTE: SUPPLEMENT ALL EXTERIOR SWING DOORS W/ HW SET HWE-213 IN ADDITION TO NOTED HW

HATCH SCHEDULE

NO.	DOOR WIDTH	DOOR LENGTH	DOOR MATERIAL	DOOR FINISH	FRAME MATERIAL	FRAME FINISH	FRAME DETAIL	HARDWARE	NOTES & REMARKS
300-H100	4' - 6"	4' - 6"	ALUM	C.I.	ALUM	C.I.			HATCH
300-H101	4' - 6"	4' - 6"	ALUM	C.I.	ALUM	C.I.			HATCH
300-H200	4' - 6"	4' - 6"	ALUM	C.I.	ALUM	C.I.			HATCH
300-H201	4' - 6"	4' - 6"	ALUM	C.I.	ALUM	C.I.			HATCH
300-H202	4' - 6"	4' - 6"	ALUM	C.I.	ALUM	C.I.			HATCH
600-H100	4' - 0"	4' - 0"	ALUM	C.I.	ALUM	C.I.			HATCH
600-H101	4' - 0"	4' - 0"	ALUM	C.I.	ALUM	C.I.			HATCH
600-H102	4' - 0"	4' - 0"	ALUM	C.I.	ALUM	C.I.			HATCH

SCHEDULE LEGEND:

ALUM	ALUMINUM
C.I./A1	CLEAR ANODIZED
MNF	MANUFACTURE
STL	STEEL
STLS	STAINLESS STEEL

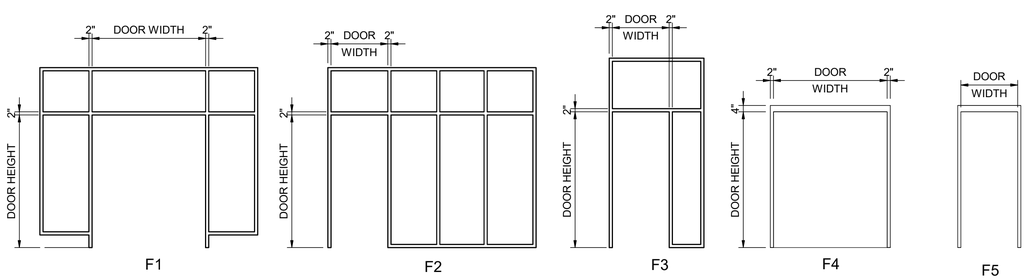

FRAME TYPES
1/4" = 1'-0"

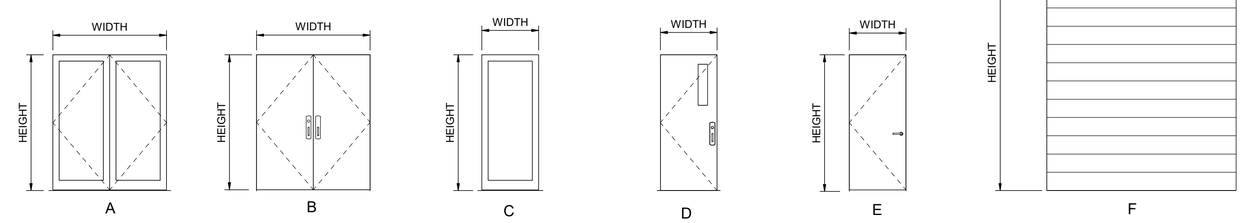

DOOR TYPES
1/4" = 1'-0"

ISSUE	DATE	DESCRIPTION
A	09/2026	ISSUED FOR BIDS

PROJECT MANAGER	PIERRE KWAN
CIVIL	J. MEGRDITCHIAN
STRUCTURAL	P. LINDBLOM
ARCHITECTURAL	V. YANEZ
PROCESS	P. KWAN
MECHANICAL	K. CHEUNG
ELECTRICAL	R. MCCOMB
INSTRUMENTATION	D. BEST
PROJECT NUMBER	10193663

REGISTERED ARCHITECT
VICTOR H. YANEZ
DIGITALLY SIGNED
FOLSOM, CA
ARI-15755
STATE OF OREGON

CITY OF ASHLAND
Ashland, Oregon

City of Ashland

Ashland Creek Water Treatment Plant

2026

ARCHITECTURAL DOOR SCHEDULE

0 1" 2"

FILENAME 10193663-Details.rvt
SCALE As indicated

SHEET **000A017**

Autodesk Docs://10193663_Ashland_WTP_Final_Design_2024/10193663-Details.rvt
9/22/2026 10:46:18 PM

SCHEDULE LEGEND:

ALUM	ALUMINUM
C.I./A1	CLEAR ANODIZED
MNF	MANUFACTURE
STL	STEEL
STLS	STAINLESS STEEL

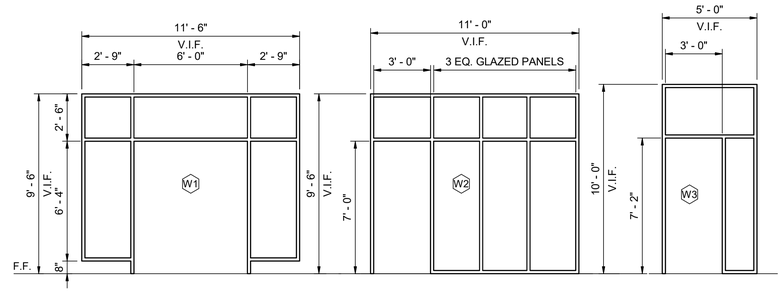

WINDOW TYPES - FIRST FLOOR

1/4" = 1'-0"

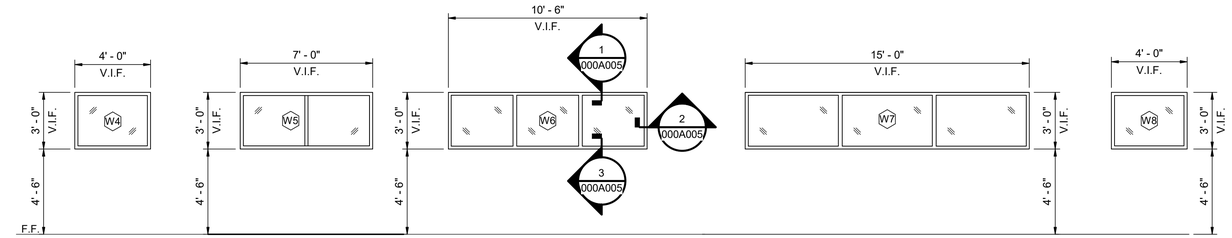

WINDOW TYPES - SECOND FLOOR

1/4" = 1'-0"

WINDOW SCHEDULE							
#	TYPES	WIDTH	HEIGHT	HEAD	JAMB	SILL	COMMENTS
1	W1	11' - 6"	9' - 6"	1/000A005	2/000A005	3/000A005	ALUM, C.I.
1	W2	11' - 0"	9' - 6"	4/000A005	5/000A005	6/000A005	ALUM, C.I.
2	W3	5' - 0"	10' - 0"	1/000A005	2/000A005	2/000A005	ALUM, C.I.
2	W4	4' - 0"	3' - 0"	1/000A005	2/000A005	3/000A005	ALUM, C.I.
1	W5	7' - 0"	3' - 0"	1/000A005	2/000A005	3/000A005	ALUM, C.I.
2	W6	10' - 6"	3' - 0"	1/000A005	2/000A005	3/000A005	ALUM, C.I.
1	W7	15' - 0"	3' - 0"	1/000A005	2/000A005	3/000A005	ALUM, C.I.
1	W8	4' - 0"	3' - 0"	4/000A005	5/000A005	6/000A005	STL FRAME - 90 MINUTES RATED, MP4

TRANSLUCENT WINDOW SCHEDULE					
#	TYPES	HEAD	JAMB	SILL	COMMENTS
2	T1	1/000A008	1/000A008	1/000A008	ALUM, C.I. - SEE TRANSLUCENT WINDOW TYPE
1	T2	1/000A008	1/000A008	1/000A008	ALUM, C.I. - SEE TRANSLUCENT WINDOW TYPE
1	T3	1/000A008	1/000A008	1/000A008	ALUM, C.I. - SEE TRANSLUCENT WINDOW TYPE
1	T4	1/000A005	2/000A005	3/000A005	ALUM, C.I. - SEE TRANSLUCENT WINDOW TYPE

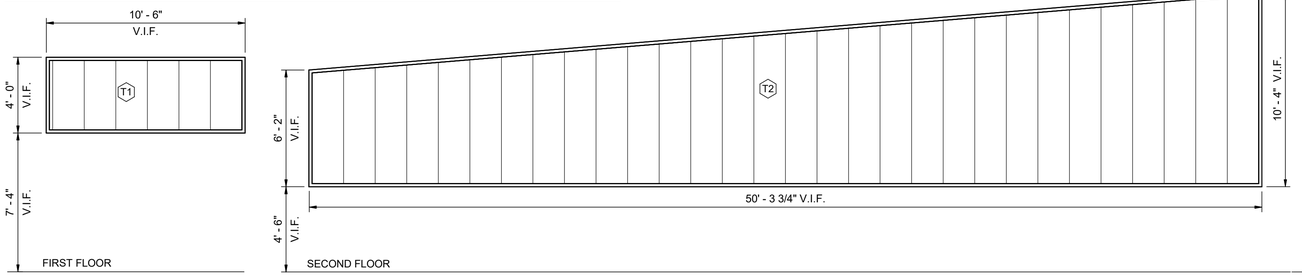

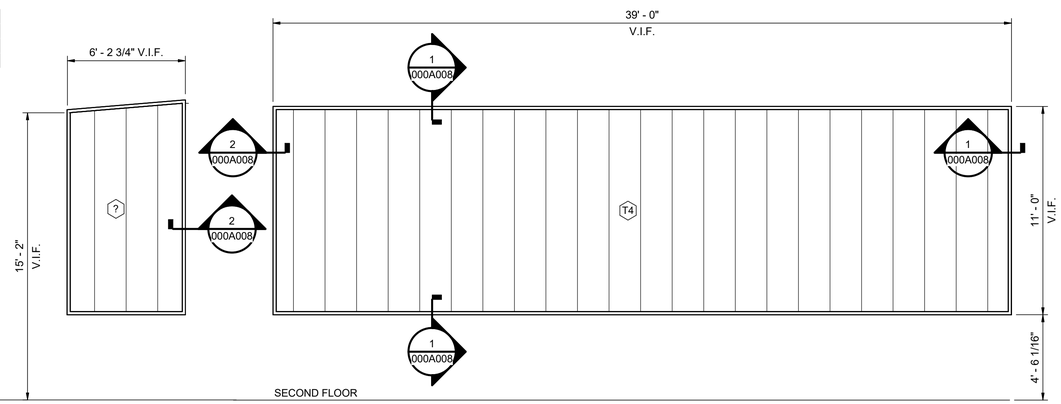

TRANSLUCENT WALL PANELS

1/4" = 1'-0"

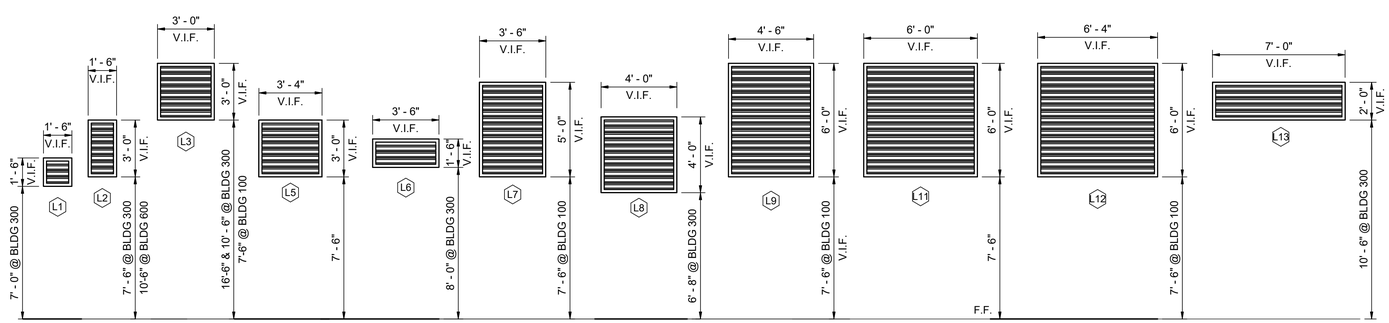

LOUVER TYPES - FIRST FLOOR

1/4" = 1'-0"

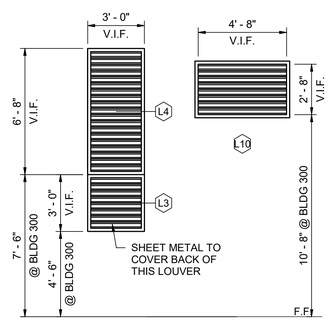

LOUVER TYPES - SECOND FLOOR

1/4" = 1'-0"

LOUVER SCHEDULE							
AMOUNT	TYPE	SIZE		DETAIL			COMMENTS
		WIDTH	HEIGHT	HEAD	JAMB	SILL	
1	L1	1' - 6"	1' - 6"	7/000A005	8/000A005	9/000A005	
4	L2	1' - 6"	3' - 0"	7/000A005	8/000A005	9/000A005	
3	L3	3' - 0"	3' - 0"	7/000A005	8/000A005	9/000A005	
1	L4	3' - 0"	6' - 8"	7/000A005	8/000A005	9/000A005	
2	L5	3' - 4"	3' - 0"	7/000A005	8/000A005	9/000A005	
2	L6	3' - 6"	1' - 6"	7/000A005	8/000A005	9/000A005	
1	L7	3' - 6"	5' - 0"	7/000A005	8/000A005	9/000A005	
1	L8	4' - 0"	4' - 0"	7/000A005	8/000A005	9/000A005	
1	L9	4' - 6"	6' - 0"	7/000A005	8/000A005	9/000A005	
1	L10	5' - 0"	3' - 0"	7/000A005	8/000A005	9/000A005	
1	L11	6' - 0"	6' - 0"	7/000A005	8/000A005	9/000A005	
1	L12	6' - 4"	6' - 0"	7/000A005	8/000A005	9/000A005	
2	L13	7' - 0"	2' - 0"	7/000A005	8/000A005	9/000A005	

ISSUE	DATE	DESCRIPTION
A	09/2026	ISSUED FOR BIDS

PROJECT MANAGER	PIERRE KWAN
CIVIL	J. MEGRDITCHIAN
STRUCTURAL	P. LINDBLOM
ARCHITECTURAL	V. YANEZ
PROCESS	P. KWAN
MECHANICAL	K. CHEUNG
ELECTRICAL	R. MCCOMB
INSTRUMENTATION	D. BEST
PROJECT NUMBER	10193663

REGISTERED ARCHITECT
VICTOR H. YANEZ
DIGITALLY SIGNED
FOLSOM, CA
ARI-15755
STATE OF OREGON

CITY OF ASHLAND
Ashland, Oregon

City of Ashland

Ashland Creek Water Treatment Plant

2026

ARCHITECTURAL
WINDOW, LOUVER SCHEDULES & TYPES

0 1" 2"

FILENAME 10193663-Details.rvt
SCALE As indicated

SHEET **000A018**

Autodesk Docs://10193663_Ashland_WTP_Final_Design_2024/10193663-Details.rvt
9/22/2026 10:46:23 PM

ROOM FINISH SCHEDULE

ROOM NO.	NAME	BASE	FLOOR MATERIAL	FLOOR FINISH	NORTH WALL MATERIAL	NORTH WALL FINISH	SOUTH WALL MATERIAL	SOUTH WALL FINISH	EAST WALL MATERIAL	EAST WALL FINISH	WEST WALL MATERIAL	WEST WALL FINISH	CEILING MATERIAL	CEILING FINISH	COMMENTS
100-101	OZONE	NB	SLD	SLD	-	-	-	-	-	-	-	-	-	-	
100-102	THIO	VB	SLD	SLD	GWB	PT	GWB	PT	GWB	PT	GWB	PT	GWB	PT	
100-103	PRETREATMENT	NB	SLD	SLD	-	-	-	-	-	-	-	-	-	-	
300-001	PIPE GALLERY	NB	SLD	-	CONC	-	CONC	-	CONC	-	CONC	-	NC		
300-001	ELEVATOR														
300-100	LOBBY	VB	SLD	SLD	GWB	PTD	GWB/WD	-	GWB	PTD	GWB	PTD	GWB	PTD	Wood feature on North wall. Entry mat for Lobby entrance door.
300-101	ELEVATOR LOBBY	VB	LVT	MAT	GWB	PTD	GWB	PTD	GWB	PTD	GWB	PTD	GWB	PTD	
300-102	CORR. 1	VB	LVT	MAT	GWB	PTD	GWB	PTD	GWB	PTD	GWB	PTD	GWB	PTD	
300-103	BALLASTED FLOC	NB	SLD	SLD	-	-	-	-	-	-	-	-	NC		
300-104	CHEMICAL	NB	SLD	HPIC	GWB	PTD	GWB	PTD	GWB	PTD	GWB	PTD	NC		
300-105	CHEMICAL	NB	SLD	HPIC	GWB	PTD	GWB	GWB	PTD	GWB	GWB	PTD	NC		
300-106	CORR. 2	VB	LVT	PTD	GWB	PTD	GWB	PTD	GWB	PTD	GWB	PTD	ACT		
300-107	VESTIBULE	VB	SLD	PTD	GWB	PTD	GWB	PTD	GWB	PTD	GWB	PTD	ACT		
300-108	LOCKERS	VB	CT	PTD	GWB	PTD	GWB	PTD	GWB	PTD	GWB	PTD	GWB	PTD	
300-109	SHOWER	CT	CT	PTD	CWB/POR	PTD	CWB/POR	PTD	CWB/POR	PTD	CWB/POR	PTD	GWB	PTD	
300-110	MECH	VB	SLD	PTD	GWB	PTD	GWB	PTD	GWB	PTD	GWB	PTD	NC		
300-111	STORAGE AREA	VB	SLD	PTD	-	-	GWB	PTD	CONC	PTD	GWB	PTD	NC		
300-112	ELECTRICAL	VB	SLD	-	-	-	-	-	CONC	PTD	GWB	PTD	NC		
300-113	PUMP	NB	SLD	-	CONC	-	CONC	-	CONC	-	CONC	-	NC		
300-114	FILTER 01	NB	CONC	-	CONC	-	CONC	-	CONC	-	CONC	-	-		
300-115	FILTER 02	NB	CONC	-	CONC	-	CONC	-	CONC	-	CONC	-	-		
300-116	FILTER 03	NB	CONC	-	CONC	-	CONC	-	CONC	-	CONC	-	-		
300-117	FILTER 04	NB	CONC	-	CONC	-	CONC	-	CONC	-	CONC	-	-		
300-118	CONTAINMENT 01	NB	HPIC	-	HPIC	-	HPIC	-	HPIC	-	HPIC	-	-		
300-119	CONTAINMENT 02	NB	HPIC	-	HPIC	-	HPIC	-	HPIC	-	HPIC	-	-		
300-120	CONTAINMENT 03	NB	HPIC	-	HPIC	-	HPIC	-	HPIC	-	HPIC	-	-		
300-200	LOBBY	VB	LVT	PTD	GWB	PTD	GWB	PTD	GWB	PTD	GWB	PTD	ACT		
300-201	CORR. 3	VB	LVT	PTD	GWB	PTD	GWB	PTD	GWB	PTD	GWB	PTD	ACT		
300-202	UNISEX	VB	CT	PTD	CWB/POR	PTD	CWB/POR	PTD	CWB/POR	PTD	CWB/POR	PTD	GWB	PTD	
300-203	JANITOR	VB	SLD	PTD	CWB/POR	PTD	CWB/POR	PTD	CWB/POR	PTD	CWB/POR	PTD	GWB	PTD	
300-204	WATER QUALITY TESTING AREA	VB	LVT	PTD	GWB	PTD	GWB	PTD	GWB	PTD	GWB	PTD	ACT		
300-205	COMMAND	VB	LVT	PTD	GWB	PTD	GWB	PTD	GWB	PTD	GWB	PTD	ACT		Roller shades
300-206	OFFICE	VB	LVT	PTD	GWB	PTD	GWB	PTD	GWB	PTD	GWB	PTD	ACT		Roller shades
300-207	I.T. CLOSET	VB	SLD	PTD	GWB	PTD	GWB	PTD	GWB	PTD	GWB	PTD	GWB	PTD	Roller shades
300-208	MEETING	VB	LVT	PTD	GWB	PTD	GWB	PTD	GWB	PTD	GWB	PTD	ACT		Roller shades
300-209	OBSERVATION DECK 1	NB	CONC	SLD	-	-	-	-	-	-	-	-	-		
300-210	PIPE GALLERY														
600-100	PUMP ROOM	NB	CONC	-	-	-	-	-	-	-	-	-			

LEGEND:

ACT	ACOUSTIC LAY IN TILE
CAR	CARPET
CONC	CONCRETE
CWB	CONCRETE WALL BOARD
GWB	GYPSUM WALL BOARD
HPIC	HIGH PERFORMANCE INTERNAL CURING CONCRETE
LVT	LUXURY VINYL TILE
MAT	MATTE FINISH
NB	NO BASE
NC	NO CEILING
POR	PORCELAIN TILE
PRE	PRE-FINISHED
PTD	PAINTED
SLD	SEALED
SV	SHEET VINYL
VB	VINYL BASE
WB	WOOD BASE
WD	WOOD

EXTERIOR FINISH SCHEDULE

MARK	MATERIAL	COLOR	MNF	NOTE
MFP2	FIELD PAINTED METAL	NATURAL PATINA	METL-SPAN	-
MP1	PREFINISHED METAL	TUNDRA	METL-SPAN	CF ARCHITECTURAL WALL PANEL
MP1B	PREFINISHED METAL	AEGEAN BLUE	METL-SPAN	CF ARCHITECTURAL WALL PANEL
MP2	PREFINISHED METAL	NATURAL PATINA(GREEN)	METL-SPAN	CF ARCHITECTURAL WALL PANEL

ISSUE	DATE	DESCRIPTION
A	09/2026	ISSUED FOR BIDS
	06/2026	100% DESIGN

PROJECT MANAGER	PIERRE KWAN
CIVIL	J. MEGRDITCHIAN
STRUCTURAL	P. LINDBLOM
ARCHITECTURAL	V. YANEZ
PROCESS	P. KWAN
MECHANICAL	K. CHEUNG
ELECTRICAL	R. MCCOMB
INSTRUMENTATION	D. BEST
PROJECT NUMBER	10193663

REGISTERED ARCHITECT
VICTOR H. YANEZ
DIGITALLY SIGNED
FOLSOM, CA
ARI-15755
STATE OF OREGON

CITY OF ASHLAND
Ashland, Oregon

City of Ashland

Ashland Creek Water Treatment Plant

2026

ARCHITECTURAL FINISH SCHEDULE

0 1" 2"

FILENAME 10193663-Details.rvt
SCALE 1" = 1'-0"

SHEET **000A019**

Autodesk Docs://10193663_Ashland_WTP_Final_Design_2024/10193663-Details.rvt
9/22/2026 10:46:25 PM

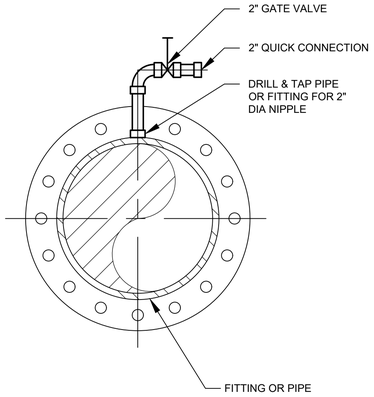

NOTES:

1. USE TAPPING SADDLE OR WELDED BOSS FOR PIPE LESS THAN 6" DIAMETER OR WHEN REQUIRED BY PIPE WALL THICKNESS. USE TAPPING SADDLE ON ALL NON-METALLIC PIPE.
2. FLUSHING SUPPLY PIPE GALVANIZED STEEL, SCHEDULE 40.

1 / - FLUSHING CONNECTION FC-1

NTS

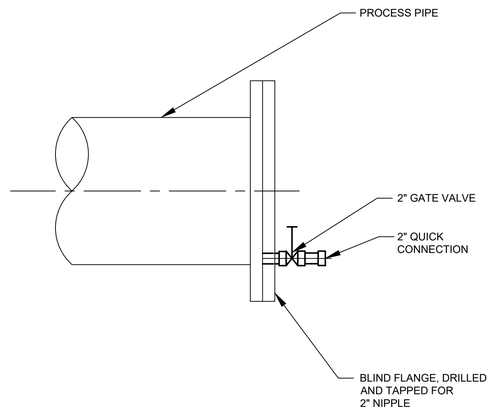

NOTES:

1. USE TAPPING SADDLE OR WELDED BOSS FOR PIPE LESS THAN 6" DIAMETER OR WHEN REQUIRED BY PIPE WALL THICKNESS. USE TAPPING SADDLE ON ALL NON-METALLIC PIPE.
2. FLUSHING SUPPLY PIPE GALVANIZED STEEL, SCHEDULE 40.

2 / - FLUSHING CONNECTION FC-2

NTS

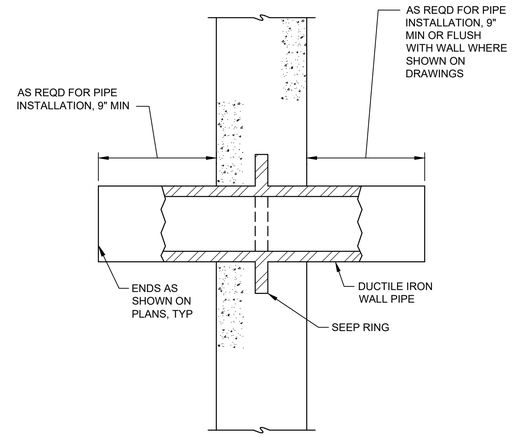

NOTE:
COAT & LINE PIPE w/ SPECIFIED PAINT AND/OR CEMENT SYSTEMS PRIOR TO CONC PLACEMENT. DO NOT ALLOW PIPE OR SEEP RING TO CONTACT WALL REINFORCING STEEL.

3 / - DUCTILE IRON WALL PIPE

NTS

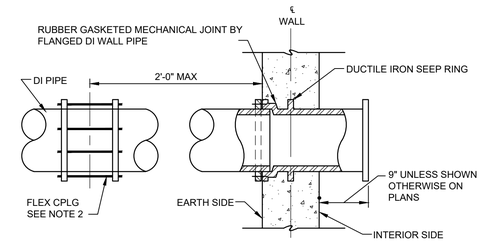

NOTES:
1. COAT & LINE WALL PIPE w/ SPECIFIED PAINT AND/OR CEMENT SYSTEMS PRIOR TO CONC PLACEMENT.

2. PROVIDE TWO FLEX CPLGS WHERE SHOWN, SECOND CPLG TO BE 2'-0" FROM FIRST CPLG.

4 / - WALL PIPE

NTS

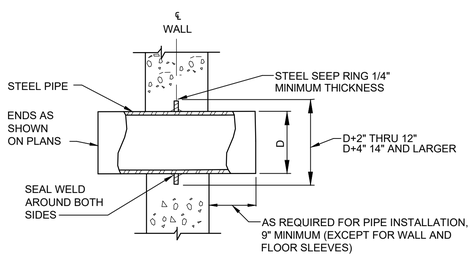

NOTE:
HOT DIP GALV AFTER FABRICATION WHERE NOTED. LINE AND COAT WALL PIPE w/ SPECIFIED PAINT SYSTEM PRIOR TO CONCRETE PLACEMENT.

5 / - STEEL WALL PIPE

NTS

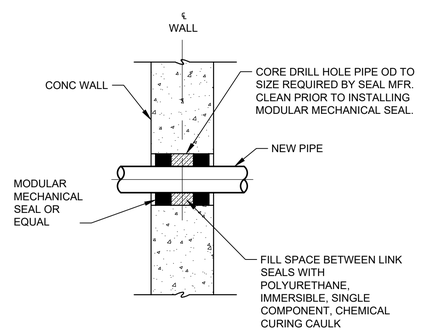

6 / - WALL PENETRATION SEAL

NTS

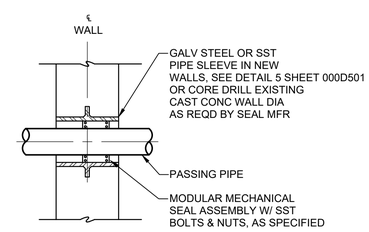

7 / - TYPE 'A' WALL PENETRATION SEAL

NTS

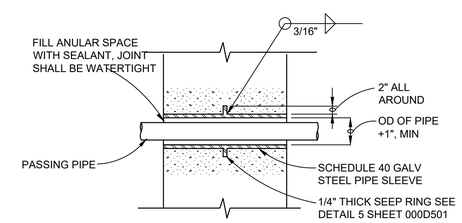

NOTE:
DO NOT USE WHERE SUBJECT TO HYDROSTATIC PRESSURE. COAT & LINE SLEEVE & SEEP RING AS SPECIFIED.

8 / - TYPE 'B' PIPE SLEEVE

NTS

ISSUE	DATE	DESCRIPTION
A	09/2026	ISSUED FOR BIDS

PROJECT MANAGER	PIERRE KWAN
CIVIL	J. MEGRDITCHIAN
STRUCTURAL	P. LINDBLOM
ARCHITECTURAL	V. YANEZ
PROCESS	P. KWAN
MECHANICAL	K. CHEUNG
ELECTRICAL	R. MCCOMB
INSTRUMENTATION	D. BEST
PROJECT NUMBER	10193663

REGISTERED PROFESSIONAL ENGINEER 85841 OREGON MAY 8, 2012 PIERRE K. KWAN
DIGITAL SIGNATURE
EXPIRES: 06/30/2027

CITY OF ASHLAND
Ashland, Oregon

City of Ashland

Ashland Creek Water Treatment Plant

2026

PROCESS DETAILS 1

0 1" 2"

FILENAME	000D501.dwg
SCALE	NTS

SHEET **000D501**

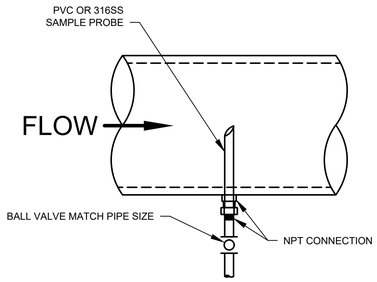

NOTES:

1. FOR SAMPLING FROM PIPES SMALLER THAN 4-INCH DIAMETER, INCREASE PROJECTION INTO PIPE TO DIA/2.

2. UTILIZE PVC SADDLE TAP FOR PIPE WHEN THREAD-O-LET IS NOT AVAILABLE DUE TO MATERIALS OF CONSTRUCTION.

3. SAMPLE PROBE SHALL BE SUPPLIED WITHOUT A INTEGRAL CHECK VALVE.

1 SAMPLE TAP
NTS

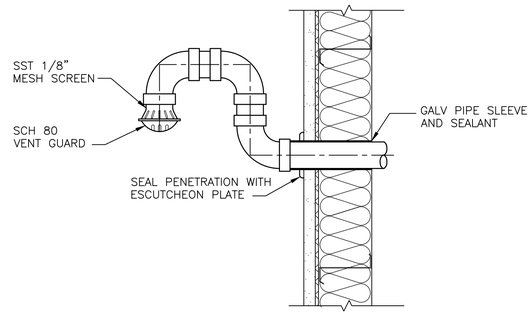

2 VENT PIPE THRU WALL
NTS

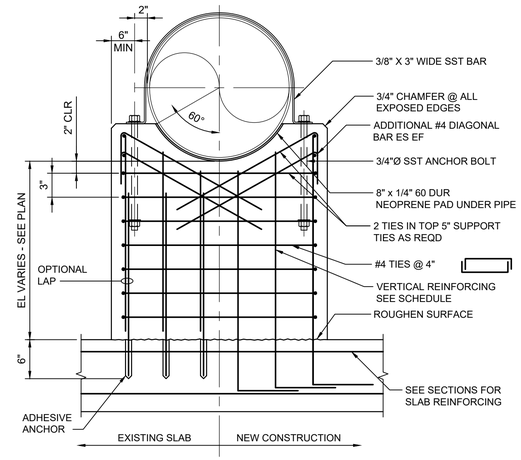

PIPE SIZE DIAMETER	PEDESTAL THICKNESS	VERTICAL REINFORCING @ EF	
		QUANTITY	BAR SIZE
6-12"	12"	3	#7
14-24"	16"	4	#7
30-48"	24"	6	#7

NOTES:

1. CONTRACTOR SHALL TEMPORARILY SUPPORT PIPE AT SPECIFIED ELEVATION AND POUR SUPPORT AROUND PIPE. DO NOT POUR PIPE SUPPORT WITHOUT PIPE IN PLACE.

3 CONCRETE PEDESTAL SUPPORT
NTS

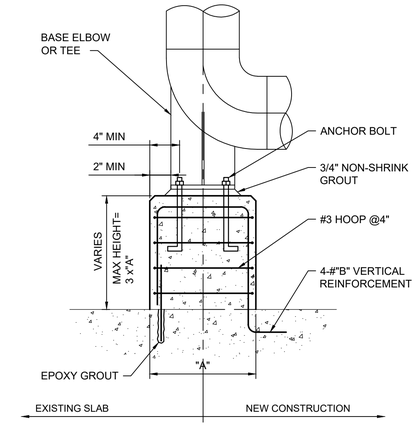

PIPE SIZE, DIA	ANCHOR BOLTS, DIA	PEDESTAL DIMENSION "A"	"B" VERTICAL REINFORCEMENT
TO 6"	1/2"	12"	#5
TO 16"	3/4"	16"	#7
TO 30"	3/4"	20"	#8
36"	7/8"	36"	6-#8

NOTE:

1. USE FOR DUCTILE IRON OR CAST IRON ONLY.

4 BASE ELBOW PEDESTAL
NTS

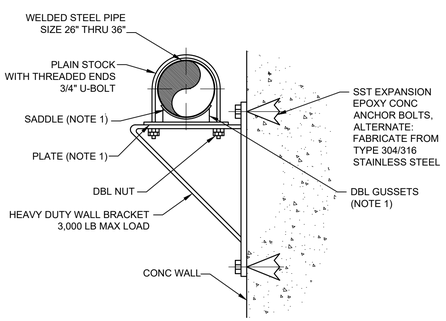

NOTE:

1. FABRICATE FROM STL, 3/8" MIN THICKNESS.
2. HOT DIP GALVANIZE AFTER FABRICATION, U-BOLT & NUTS, PIPE SADDLE ASSEMBLY & WALL BRACKET.
3. HOT DIP GALVANIZE AFTER FABRICATION OR USE PAINT SYSTEM NO. 31 FOR SUBMERGED APPLICATIONS, PER SECTION 09905.

5 HEAVY DUTY PIPE SUPPORT
NTS

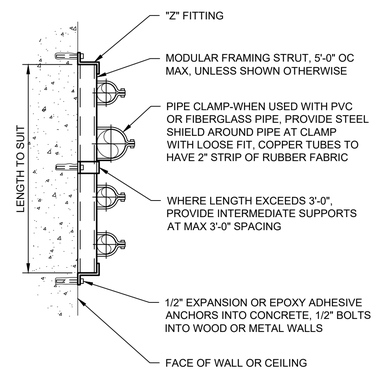

NOTES:

1. UP TO 8" DIAMETER PIPES ONLY.

2. MAXIMUM OF 3-6" PIPES.

3. MATERIAL FOR ALL COMPONENTS SHALL BE HOT DIPPED GALVANIZED AFTER FABRICATION UNLESS NOTED OTHERWISE, REFERENCE SPECIFICATION SECTION 40 05 07.

6 SURFACE MOUNT MODULAR STRUT
NTS

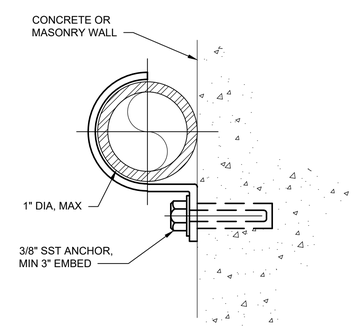

NOTES:
MATERIAL FOR ALL COMPONENTS SHALL BE HOT DIPPED GALVANIZED AFTER FABRICATION UNLESS NOTED OTHERWISE, REFERENCE SPECIFICATION SECTION 40 05 07.

7 ONE HOLE CLAMP
NTS

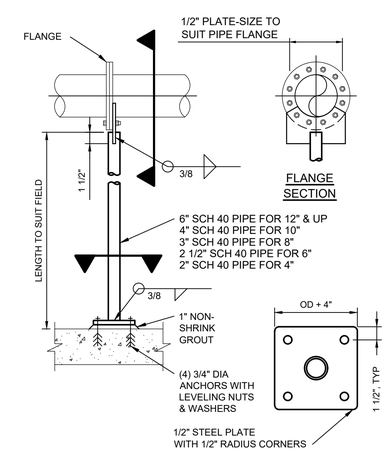

NOTE:

1. NOT INTENDED FOR THRUST RESTRAINT.

8 FLANGED PIPE SUPPORT
NTS

ISSUE	DATE	DESCRIPTION
A	09/2026	ISSUED FOR BIDS

PROJECT MANAGER	PIERRE KWAN
CIVIL	J. MEGRDITCHIAN
STRUCTURAL	P. LINDBLOM
ARCHITECTURAL	V. YANEZ
PROCESS	P. KWAN
MECHANICAL	K. CHEUNG
ELECTRICAL	R. MCCOMB
INSTRUMENTATION	D. BEST
PROJECT NUMBER	10193663

REGISTERED PROFESSIONAL ENGINEER 85841 OREGON PIERRE K. KWAN
DIGITAL SIGNATURE
EXPIRES: 06/30/2027

CITY OF ASHLAND
Ashland, Oregon

City of Ashland

Ashland Creek Water Treatment Plant

2026

PROCESS DETAILS 2

0 1" 2"

FILENAME 000D502.dwg
SCALE NTS

SHEET **000D502**

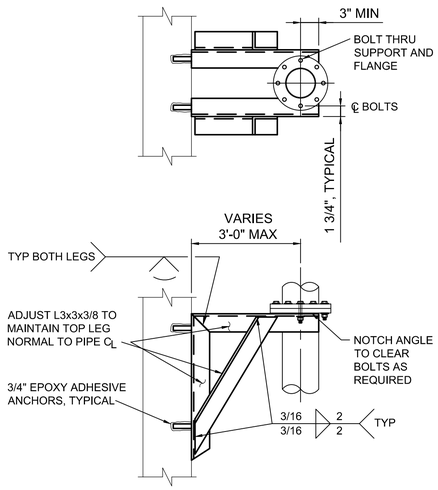

1 RISER PIPE SUPPORT
NTS

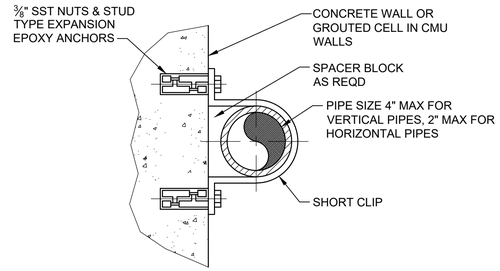

NOTE:

USE SST HARDWARE UNLESS OTHERWISE NOTED ON DRAWINGS.

2 PIPE SUPPORT DETAIL
NTS

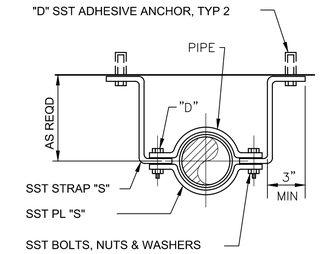

PIPE SIZE	"D"	"S"
≤ 2-1/2"	3/8"	1/4"x1"
3"-4"	5/8"	1/4"x1-1/2"
6"-8"	3/4"	3/8"x2"
10"-14"	7/8"	5/8"x2"

3 OFFSET PIPE SUPPORT
NTS

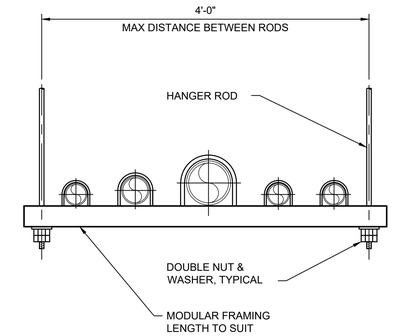

4 MODULAR TRAPEZE HANGER
NTS

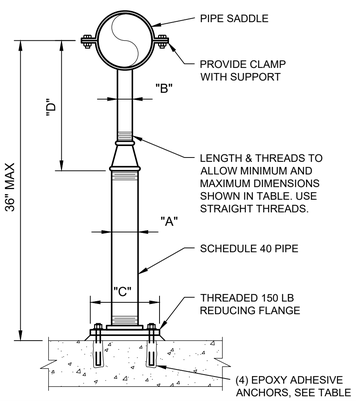

FLOOR PIPE SUPPORT SCHEDULE
DIMENSIONS IN INCHES

PIPE SIZE	"A"	"B"	"C"	"D"		ANCHORS	
				MINIMUM	MAXIMUM	DIA	EMBED
≤ 2 1/2	2 1/2	1 1/2	9	8	13	5/8	5
3	2 1/2	1 1/2	9	8 1/2	13 1/2	5/8	5
3 1/2	2 1/2	1 1/2	9	8 1/2	13 1/2	5/8	5
4	3	2 1/2	9	9 1/2	14	5/8	5
6	3	2 1/2	9	10 1/2	15 1/2	5/8	5
8	3	2 1/2	9	11 1/2	16 1/2	5/8	5
10	3	2 1/2	9	13 1/2	18 1/2	5/8	5
12	3	2 1/2	9	15	19 1/2	5/8	5
14	4	3	11	16 1/2	20 1/2	3/4	6 5/8
16	4	3	11	17 1/2	22 1/2	3/4	6 5/8
18	6	3 1/2	13 1/2	19 1/2	24	3/4	6 5/8
20	6	3 1/2	13 1/2	21	25 1/2	3/4	6 5/8
24	6	4	13 1/2	23 1/2	28 1/2	3/4	6 5/8
30	6	4	13 1/2	27	31 1/2	3/4	6 5/8
32	6	4	13 1/2	28 1/2	32 1/2	3/4	6 5/8
36	6	4	13 1/2	30 1/2	34 1/2	3/4	6 5/8

5 FLOOR PIPE SUPPORT
NTS

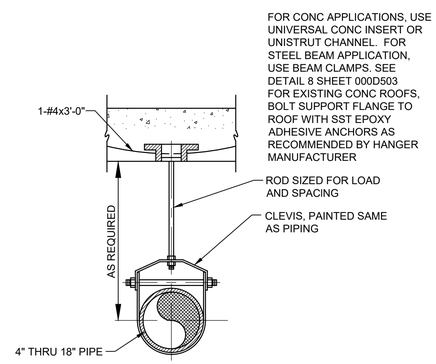

NOTE:

1. FOR INSULATED PIPES, USE GRINNELL FIG 167 OR ELCEN FIG 219 INSULATION PROTECTION SHIELD.
2. TOTAL LOADING ON EACH CONC. INSERT OR OTHER TYPE HANGER ROD ANCHOR SHALL NOT EXCEED MFR'S RECOMMENDED LOADINGS.

6 PIPE HANGER DETAIL
NTS

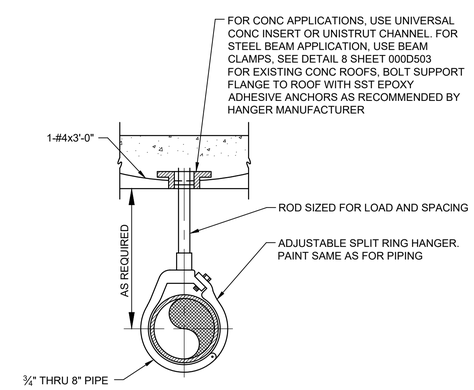

NOTE:

1. TOTAL LOADING ON EACH CONC. INSERT OR OTHER TYPE HANGER ROD ANCHOR SHALL NOT EXCEED MFR'S RECOMMENDED LOADINGS.

7 PIPE HANGER DETAIL
NTS

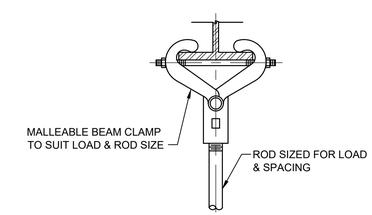

NOTE:

TOTAL LOADING OF EACH BEAM CLAMP SHALL NOT EXCEED MFR RECOMMENDED LOADINGS.

8 BEAM CLAMP
NTS

ISSUE	DATE	DESCRIPTION
A	09/2026	ISSUED FOR BIDS

PROJECT MANAGER	PIERRE KWAN
CIVIL	J. MEGRDITCHIAN
STRUCTURAL	P. LINDBLOM
ARCHITECTURAL	V. YANEZ
PROCESS	P. KWAN
MECHANICAL	K. CHEUNG
ELECTRICAL	R. MCCOMB
INSTRUMENTATION	D. BEST
PROJECT NUMBER	10193663

REGISTERED PROFESSIONAL ENGINEER 85841 DIGITAL SIGNATURE OREGON MAY 8, 2018 PIERRE K. KWAN
EXPIRES: 06/30/2027

CITY OF ASHLAND
Ashland, Oregon

City of Ashland

Ashland Creek Water Treatment Plant

2026

PROCESS DETAILS 3

0 1" 2"

FILENAME 000D503.dwg
SCALE NTS

SHEET 000D503

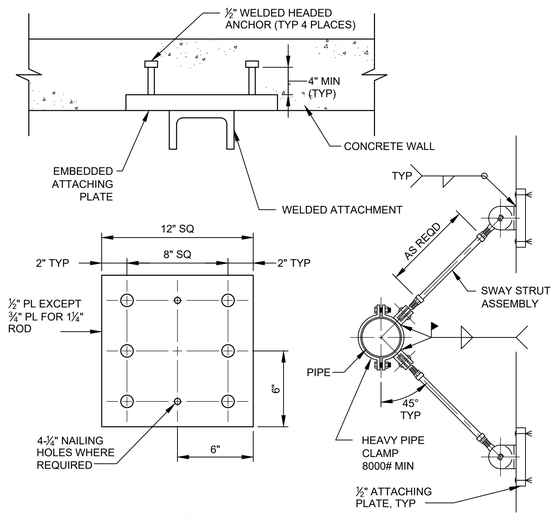

NOTE:
USE ALL SST MATERIALS IN WET OR SUBMERGED SERVICES, UNLESS OTHERWISE NOTED ON THE DRAWINGS.

1 – TYPE 'A' SWAY BRACE ASSEMBLY
NTS

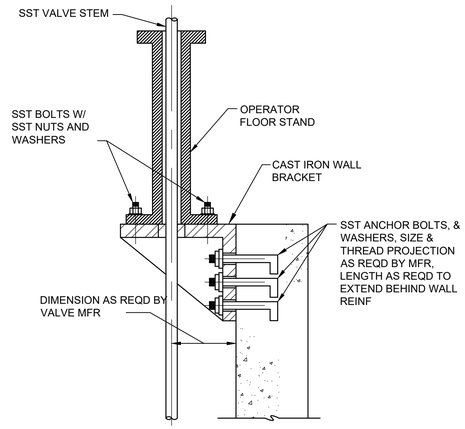

NOTE:
FLOOR STAND IS REPRESENTATIVE ONLY.

2 – FLOOR STAND INSTALLATION
NTS

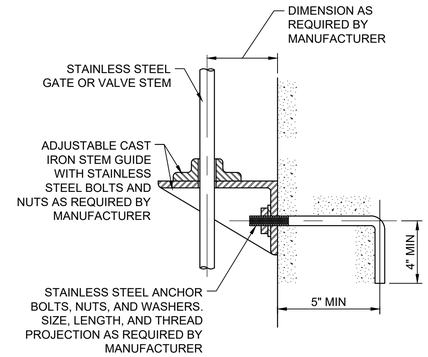

3 – STEM GUIDE INSTALLATION
NTS

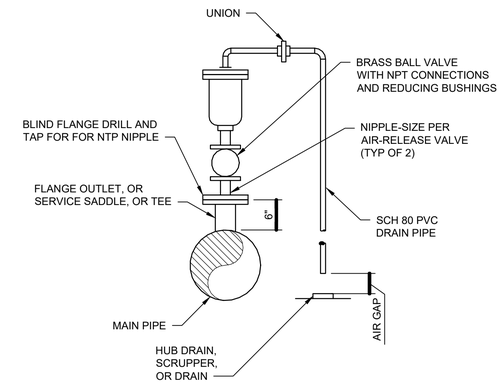

NOTE:
1. COMPONENTS TO MATCH OR EXCEED PRESSURE RATING OF MAIN PIPE.

NTS

4 – AIR-RELEASES-VALVE

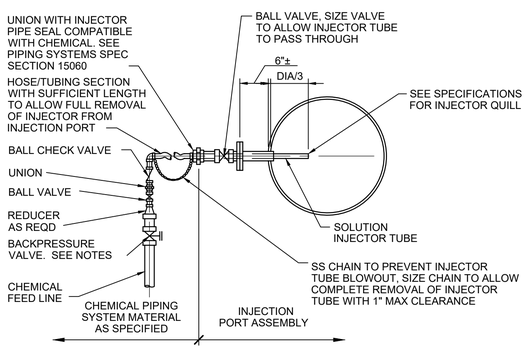

NOTE:
1. ORIENTATION OF INJECTION PORT ASSEMBLY AND CHEMICAL PIPING TO ALLOW FOR REMOVAL OF INJECTOR QUILL.

5 – CHEMICAL INJECTOR QUILL
NTS

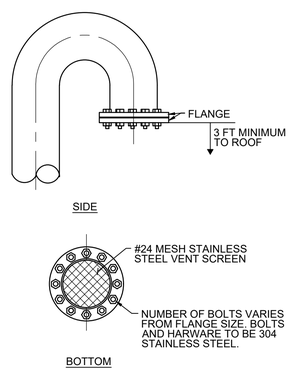

6 – GOOSENECK VENT
NTS

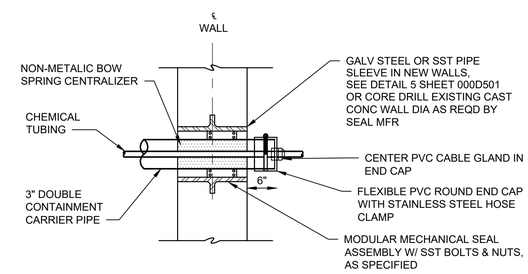

NOTE: APPLICATION TO BOTH WALL AND FLOOR PENETRATIONS.

7 – CHEMICAL PIPE PENETRATION DETAIL
NTS

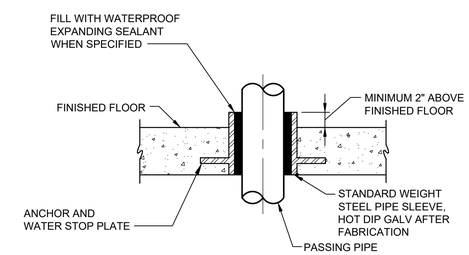

8 – FLOOR PIPE PENTRATION DETAIL
NTS

ISSUE	DATE	DESCRIPTION
A	09/2026	ISSUED FOR BIDS

PROJECT MANAGER	PIERRE KWAN
CIVIL	J. MEGRDITCHIAN
STRUCTURAL	P. LINDBLOM
ARCHITECTURAL	V. YANEZ
PROCESS	P. KWAN
MECHANICAL	K. CHEUNG
ELECTRICAL	R. MCCOMB
INSTRUMENTATION	D. BEST
PROJECT NUMBER	10193663

REGISTERED PROFESSIONAL ENGINEER 85841 DIGITAL SIGNATURE OREGON MAY 8, 2012 PIERRE K. KWAN
EXPIRES: 06/30/2027

CITY OF ASHLAND
Ashland, Oregon

City of Ashland

Ashland Creek Water Treatment Plant

2026

PROCESS DETAILS 4

0 1" 2"

FILENAME 000D504.dwg
SCALE NTS

SHEET **000D504**

PLUMBING PIPING

- POTABLE DOMESTIC COLD WATER (CW)
- POTABLE DOMESTIC HOT WATER (DHW)
- POTABLE DOMESTIC WATER RECIRCULATING (DHWR)
- NON POTABLE WATER (NPW)
- SANITARY SEWER BELOW GRADE (SAN)
- SANITARY SEWER ABOVE GRADE (SAN)
- SANITARY VENT (V)
- STORM DRAIN ABOVE GRADE (SD)
- STORM DRAIN BELOW GRADE (SD)
- OVERFLOW STORM DRAIN ABOVE GRADE (OD)
- OVERFLOW STORM DRAIN BELOW GRADE (OD)
- PRESSURE DRAINAGE (PDP)
- COMPRESSED AIR (A)
- NATURAL GAS (G)

HYDRONIC PIPING

- CHILLED WATER SUPPLY (CWS)
- CHILLED WATER RETURN (CWR)
- HEATING WATER SUPPLY (HWS)
- HEATING WATER RETURN (HWR)
- CONDENSER WATER SUPPLY (CS)
- CONDENSER WATER RETURN (CR)
- CONDENSATE DRAIN (CD)
- LOW PRESSURE STEAM SUPPLY (LPS)
- LOW PRESSURE STEAM RETURN (LPR)
- MEDIUM PRESSURE STEAM SUPPLY (MPS)
- MEDIUM PRESSURE STEAM RETURN (MPR)
- HIGH PRESSURE STEAM SUPPLY (HPS)
- HIGH PRESSURE STEAM RETURN (HPR)
- CONDENSATE PUMP DISCHARGE (CPD)
- BOILER BLOW DOWN (BBD)
- BOILER FEED (BF)
- STEAM VENT (SV)

PIPING SPECIALTIES

- PA — PIPE ANCHOR
- PG — PIPE GUIDE
- EXPANSION JOINT
- VENTURI
- PT — PRESSURE/TEMPERATURE PORT
- THERMOMETER
- THERMOWELL
- PRESSURE GAGE
- T — TEMPERATURE GAGE
- FLEXIBLE PIPE CONNECTION
- STRAINER
- BLIND FLANGE
- MANUAL AIR VENT
- A — AUTOMATIC AIR VENT
- HB-X — HOSE BIBB
- WH-X — WALL HYDRANT
- M — WATER OR GAS METER
- CO — CLEAN OUT
- GCO — DOUBLE GRADE CLEANOUT
- POINT OF CONNECTION (POC)

PIPING FITTINGS

- CONCENTRIC REDUCER
- ECCENTRIC REDUCER
- ELBOW, 90° TURN DOWN
- ELBOW, 90° TURN UP
- TEE, OUTLET UP
- TEE, OUTLET DOWN
- TEE, OUTLET UP W/ 90° TURN
- TEE, OUTLET DOWN W/ 90° TURN
- PIPE BREAK
- CAP
- BLIND FLANGE
- UNION
- FLOW ARROW

PIPING VALVES

- ISOLATION VALVE (SEE SPECIFICATIONS FOR TYPE)
- GLOBE VALVE
- CIRCUIT SETTER
- HOSE VALVE WITH CAP
- BUTTERFLY VALVE
- CHECK VALVE
- BALANCING VALVE
- CALIBRATED BALANCING VALVE
- M — PLUG VALVE
- S — SOLENOID VALVE
- SAFETY OR PRESSURE RELIEF, ANGLE VALVE
- SAFETY OR PRESSURE RELIEF, STRAIGHT THROUGH VALVE
- PRESSURE REDUCING VALVE (PRV)
- AUTOMATIC CONTROL VALVE, 2-WAY
- AUTOMATIC CONTROL VALVE, 3-WAY
- DOUBLE CHECK VALVE BACKFLOW PREVENTER
- BALL VALVE (PLUMBING)

SCHEMATIC SYMBOLS

- M — MOTOR ACTUATOR
- F — FLOW SWITCH
- P — PRESSURE SENSOR
- ΔP — DIFFERENTIAL PRESSURE SENSOR
- CT — CURRENT TRANSMITTER
- T — TEMPERATURE TRANSMITTER
- TS — TEMPERATURE SWITCH
- TC — TEMPERATURE CONTROLLER
- FM — FLOW METER
- FLOW LIMITER
- FLOW MEASURING & BALANCING VALVE W/ 100% SHUT OFF

HVAC SYMBOLOGY

- 24x18 — SUPPLY AIR OR OUTSIDE AIR DUCT UP (SECTION CUT, FIRST DIMENSION DUCT WIDTH)
- SUPPLY AIR OR OUTSIDE AIR DUCT DOWN (NO SECTION CUT)
- RETURN AIR DUCT UP (SECTION CUT)
- RETURN AIR DUCT DOWN (NO SECTION CUT)
- EXHAUST AIR DUCT UP (NO SECTION CUT)
- EXHAUST AIR DUCT DOWN (NO SECTION CUT)
- ROUND ELBOW UP
- ROUND ELBOW DOWN
- TRANSITION - DOUBLE SIDED
- TRANSITION - ONE SIDED
- TRANSITION - RECTANGULAR TO ROUND DUCT
- STANDARD BRANCH - FOR SUPPLY AIR W/ EXTRACTOR AND RETURN AIR W/O EXTRACTOR
- ELBOW - W/TURNING VANE (RECTANGULAR)
- ELBOW - W/TURNING VANES (RECTANGULAR), SMOOTH RADIUS
- 18x24 — RECTANGULAR DUCT OR OPENING SIZE FIRST NUMBER INDICATES SIZE OF SIDE SHOWN
- 18"ø — ROUND DUCT SIZE
- R OR D — RECTANGULAR DUCT INCLINE - RISE OR DROP IN RESPECT TO THE AIR FLOW
- R OR D — ROUND DUCT INCLINE - RISE OR DROP IN RESPECT TO THE AIR FLOW
- 18x24 — HIDDEN DUCT
- T 9'-10" B 9'-0" / 18x10 — DUCT ELEVATION TAG ABOVE FINISH FLOOR
- PRESSURE/TEMPERATURE TEST PLUG (PETE PLUG OR EQUAL)
- SD — SPLITTER DAMPER
- VD — VD = VOLUME DAMPER
- M — MOTOR OPERATED DAMPER
- FIRE DAMPER
- S — SMOKE DAMPER
- S — SMOKE AND FIRE DAMPER
- ZD = ZONE DAMPER

- FLEXIBLE CONNECTION
- FLEXIBLE DUCT - TWO LINE
- FLEXIBLE DUCT - ONE LINE
- ACOUSTICAL LINING - DUCT DIMENSIONS FOR NET FREE AREA
- SIZE CFM — SUPPLY AIR REGISTER OR GRILLE - W/ DUCT-MOUNTED EXTRACTOR
- SIZE CFM — EXHAUST AIR OR RETURN AIR REGISTER OR GRILLE
- SIZE CFM — EXHAUST AIR OR RETURN AIR REGISTER OR GRILLE
- SIZE CFM — SUPPLY AIR ASSEMBLY SQUARE DIFFUSER
- SIZE CFM — SUPPLY AIR ASSEMBLY ROUND DIFFUSER
- WALL LOUVER
- AD PLAN / AD SECTION — ACCESS DOOR
- UC 3/4" — UNDERCUT DOOR 3/4"
- AD — ACCESS DOOR OR ACCESS PANEL IN DUCTWORK

AIR FLOW SCHEMATIC AND TEMPERATURE CONTROL DIAGRAM SYMBOLOGY

- C/C — CHILLED WATER COOLING COIL
- H/C — HOT WATER HEATING COIL
- EP/R — DIRECT EVAPORATIVE COOLER
- D/X — DIRECT EXPANSION COOLING COIL
- EH/C — ELECTRIC HEATING COIL
- FB/C — FACE & BYPASS COIL
- GAS-FIRED DUCT FURNACE
- VFD — VFD (VARIABLE FREQUENCY DRIVE)
- CAV H/C — CONSTANT AIR VOLUME BOX WITH REHEAT COIL
- VAV H/C — VARIABLE AIR VOLUME BOX WITH REHEAT COIL
- EF — EXHAUST FAN
- SF — SUPPLY FAN
- GAS — GAS
- ELECT — ELECTRIC
- AI — ANALOG INPUT
- AO — ANALOG OUTPUT
- DI — DIGITAL INPUT
- DO — DIGITAL OUTPUT
- COMM — COMMUNICATION
- CT — CURRENT TRANSMITTER
- MOTOR STARTER
- VFD — VARIABLE FREQUENCY DRIVE
- HP — DIRECT EXPANSION HEAT PUMP
- DX — DIRECT EXPANSION
- M — MOTOR
- T — THERMOSTAT
- H — HUMIDISTAT
- CO — CARBON MONOXIDE SENSOR
- NO2 — NITROGEN DIOXIDE SENSOR
- S — SMOKE DETECTOR
- NG — NATURAL GAS DETECTOR
- S — SMOKE/DUCT DETECTOR
- T — TEMPERATURE SENSOR
- FRZ — FREEZE STAT
- ΔP — FILTER SENSOR
- M — MOTORIZED OPPOSED BLADE DAMPER
- GRAVITY DAMPER
- CO2 — CO2 SENSOR
- LOUVER

GENERAL NOTES

1. THIS IS A STANDARD PROCESS, MECHANICAL AND PLUMBING SYMBOLOGY SHEET. ALL SYMBOLS ARE NOT NECESSARILY USED IN THIS PROJECT.
2. SCREENING OR SHADING OF WORK IS USED TO INDICATE EXISTING COMPONENTS OR TO DE-EMPHASIZE PROPOSED IMPROVEMENTS TO HIGHLIGHT SELECTED TRADE WORK. REFER TO THE CONTEXT OF EACH SHEET FOR USAGE.
3. SEE INSTRUMENTATION LEGEND AND GENERAL SHEETS FOR PROJECT-SPECIFIC EQUIPMENT SYMBOLS, EQUIPMENT ABBREVIATIONS, AND PIPING SYSTEM ABBREVIATIONS.
4. THE CONTRACTOR SHALL BE AWARE THAT SOME HVAC EQUIPMENT MAY NEED TO BE INSTALLED BEFORE BUILDING ROOFS ARE PLACED. CONTRACTOR SHALL SCHEDULE SUBMITTALS AND CONSTRUCTION ACCORDINGLY.
5. PROVIDE VOLUME DAMPER AT ALL BRANCH DUCTWORK. PROVIDE FLEXIBLE CONNECTIONS IN ALL DUCTWORK AND PIPING SYSTEMS CONNECTED TO FANS, PUMPS, AND OTHER EQUIPMENT THAT REQUIRE VIBRATION ISOLATION. PROVIDE TRANSITIONAL FITTINGS AS REQUIRED FOR CONNECTION TO EQUIPMENT OPENING.
6. PLANS ARE DIAGRAMMATIC. THE CONTRACTOR SHALL FURNISH AND INSTALL ALL EQUIPMENT, MATERIALS, AND LABOR AS SHOWN AND NECESSARY FOR A COMPLETE, WORKABLE SYSTEM.
7. CONTRACTOR IS RESPONSIBLE FOR PROVIDING AND INSTALLING ALL NECESSARY SUPPORTS FOR THE EQUIPMENT, DUCTWORK, PIPING, ETC., AS REQUIRED BY THE SPECIFICATIONS, THE MANUFACTURER, AND ALL APPLICABLE CODES. PROVIDE SEISMIC BRACING AS REQUIRED BY CODE.
8. PROVIDE ACCESS PANELS FOR INSTALLATION IN DUCTWORK, WALLS, AND CEILINGS TO SERVICE CONTROL DEVICES, DAMPERS, VALVES, SMOKE DETECTORS, AND OTHER CONCEALED MECHANICAL EQUIPMENT. ACCESS PANEL INSTALLATION SHALL BE COORDINATED WITH ARCHITECTURAL WORK TO MATCH MATERIALS AND FINISHES.
9. ALL CONTROL WIRES AND CONDUITS SHALL COMPLY WITH THE INTERNATIONAL ELECTRICAL CODE AND NFPA 70.
10. PROVIDE AND INSTALL EQUIPMENT WITH ACCESS CLEARANCE AS RECOMMENDED BY THE EQUIPMENT MANUFACTURER.
11. THE CONTRACTOR IS TO PROVIDE FULL COORDINATION WITH ALL TRADES BEFORE WORK STARTS AND THE ORDERING OF EQUIPMENT.
12. PROVIDE TURNING VANES ON ALL MITERED DUCT ELBOWS.
13. THE CONTRACTOR SHALL MAKE PROVISIONS TO ROUTE DUCTWORK AND PIPING UP, DOWN, AND HORIZONTALLY TO AVOID CONFLICTS WITH PIPING, DUCTWORK, EQUIPMENT, CONDUITS, STRUCTURE, ETC.
14. DUCTWORK SHALL BE FABRICATED AND INSTALLED PER THE LATEST SMACNA STANDARDS.
15. CONTRACT DOCUMENT DRAWINGS FOR MECHANICAL WORK (HVAC) ARE DIAGRAMMATIC AND ARE INTENDED TO CONVEY SCOPE AND GENERAL ARRANGEMENT ONLY. PLANS SHOULD BE SCALED.
16. INSTALL ALL MECHANICAL EQUIPMENT AND APPURTENANCES IN ACCORDANCE WITH MANUFACTURER'S INSTALLATION INSTRUCTIONS.

ISSUE	DATE	DESCRIPTION
A	09/2026	ISSUED FOR BIDS

PROJECT MANAGER	PIERRE KWAN
CIVIL	J. MEGRDITCHIAN
STRUCTURAL	P. LINDBLOM
ARCHITECTURAL	V. YANEZ
PROCESS	P. KWAN
MECHANICAL	K. CHEUNG
ELECTRICAL	R. MCCOMB
INSTRUMENTATION	D. BEST
PROJECT NUMBER	10193663

REGISTERED PROFESSIONAL ENGINEER 67096PE OREGON JULY 11, 1986 KARL M. SUTTON
DIGITALLY SIGNED
EXPIRES 6/30/2028

CITY OF ASHLAND
Ashland, Oregon

City of Ashland

Ashland Creek Water Treatment Plant

2026

GENERAL MECHANICAL LEGEND

0 1" 2"

FILENAME	10193663-AWTP-000_M.rte
SCALE	NONE
SHEET	000M001

Autodesk Docs://10193663_Ashland_WTP_Final_Design_2024/10193663-AWTP-000_M.rvt
9/22/2026 4:33:12 PM

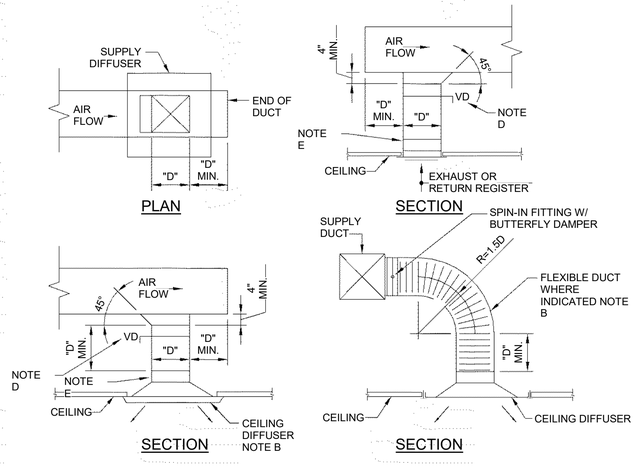

NOTES:

A. "D" IS THROAT DIA. OR SIDE DIM. OF SQUARE CONN.

B. MIN. THE LENGTH OF THE STRAIGHT DUCT ABOVE THE CD IS "D."

C. THE ABOVE DETAILS ARE REPRESENTATIVE OF STANDARD DUCT CONNECTIONS ONLY. THESE DETAILS ARE NOT INTENDED TO SHOW ALL POSSIBLE DUCT CONNECTIONS.

D. BALANCING DAMPERS SHALL BE PROVIDED AT ALL TAKE-OFFS FOR BALANCING. DO NOT BALANCE AIR AT DIFFUSERS AND GRILLES.

E. ATTACH DUCT TO DIFFUSER NECK W/SHEET METAL SCREWS (4 MIN.) AND SEAL WITH CAULKING.

F. REFER TO SMACNA FOR ADDITIONAL REQUIREMENTS.

1 - TYPICAL DUCT CONNECTIONS DETAIL
NOT TO SCALE

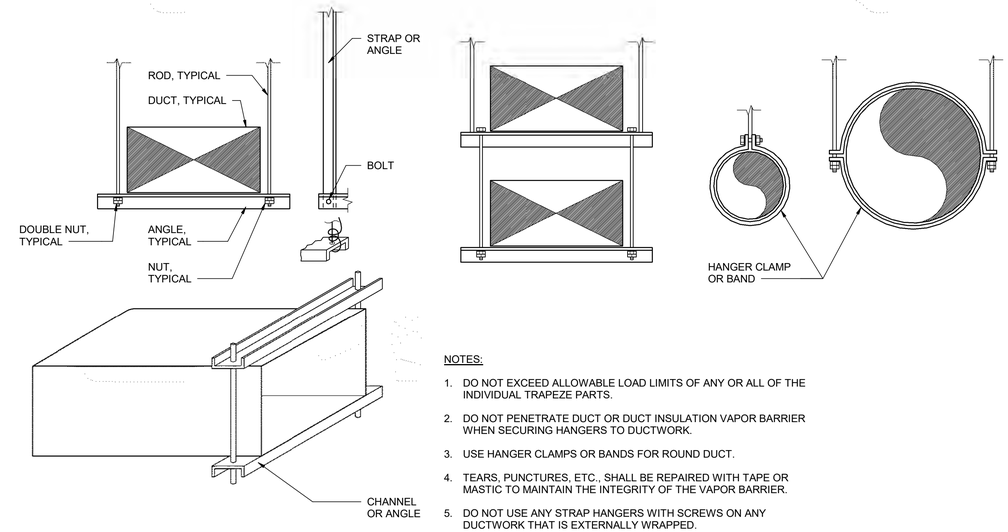

NOTES:

1. DO NOT EXCEED ALLOWABLE LOAD LIMITS OF ANY OR ALL OF THE INDIVIDUAL TRAPEZE PARTS.
2. DO NOT PENETRATE DUCT OR DUCT INSULATION VAPOR BARRIER WHEN SECURING HANGERS TO DUCTWORK.
3. USE HANGER CLAMPS OR BANDS FOR ROUND DUCT.
4. TEARS, PUNCTURES, ETC., SHALL BE REPAIRED WITH TAPE OR MASTIC TO MAINTAIN THE INTEGRITY OF THE VAPOR BARRIER.
5. DO NOT USE ANY STRAP HANGERS WITH SCREWS ON ANY DUCTWORK THAT IS EXTERNALLY WRAPPED.
6. DETAIL IS DIAGRAMMATIC. THE CONTRACTOR SHALL PROVIDE SEISMIC BRACING IN COMPLIANCE WITH SMACNA AND APPLICABLE BUILDING CODE REQUIREMENTS.

2 - DUCT HANGING DETAIL
NOT TO SCALE

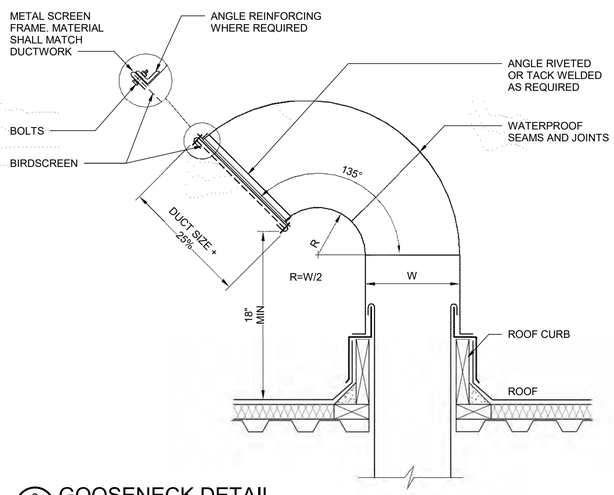

3 - GOOSENECK DETAIL
NOT TO SCALE

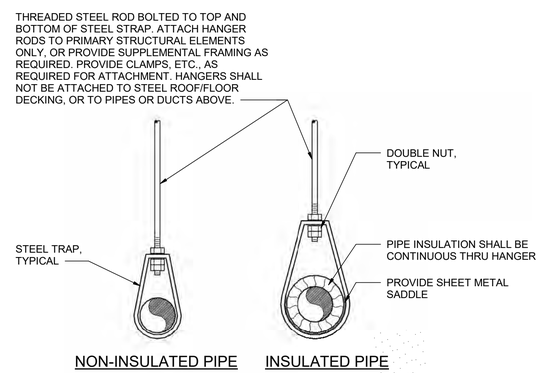

NOTES:

1. DETAIL IS DIAGRAMMATIC. THE CONTRACTOR SHALL PROVIDE SEISMIC BRACING IN COMPLIANCE WITH SMACNA AND APPLICABLE BUILDING CODE REQUIREMENTS.

4 - INDIVIDUAL PIPE HANGER DETAIL
NOT TO SCALE

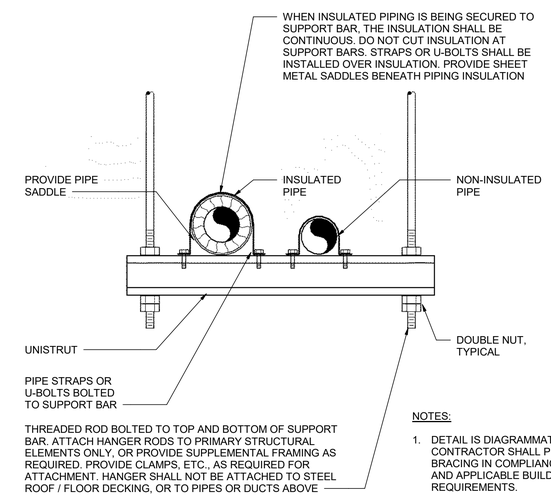

NOTES:

1. DETAIL IS DIAGRAMMATIC. THE CONTRACTOR SHALL PROVIDE SEISMIC BRACING IN COMPLIANCE WITH SMACNA AND APPLICABLE BUILDING CODE REQUIREMENTS.

5 - TRAPEZE TYPE PIPE HANGER DETAIL
NOT TO SCALE

ISSUE	DATE	DESCRIPTION
A	09/2026	ISSUED FOR BIDS

PROJECT MANAGER	PIERRE KWAN
CIVIL	J. MEGRDITCHIAN
STRUCTURAL	P. LINDBLOM
ARCHITECTURAL	V. YANEZ
PROCESS	P. KWAN
MECHANICAL	K. CHEUNG
ELECTRICAL	R. MCCOMB
INSTRUMENTATION	D. BEST
PROJECT NUMBER	10193663

REGISTERED PROFESSIONAL ENGINEER 67096PE DIGITALLY SIGNED OREGON JULY 11, 2024 KARL M. SUTTON
EXPIRES 6/30/2028

CITY OF ASHLAND
Ashland, Oregon

City of Ashland

Ashland Creek Water Treatment Plant

2026

GENERAL MECHANICAL DETAILS 1

0 1" 2"

FILENAME 10193663-AWTP-000_M.rte
SCALE 12" = 1'-0"
SHEET **000M501**

Autodesk Docs://10193663_Ashland_WTP_Final_Design_2024/10193663-AWTP-000_M.rvt
9/22/2026 4:33:13 PM

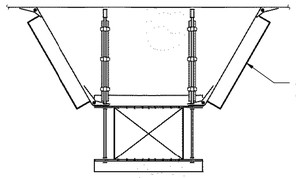

TRANSVERSE SOLID BRACE

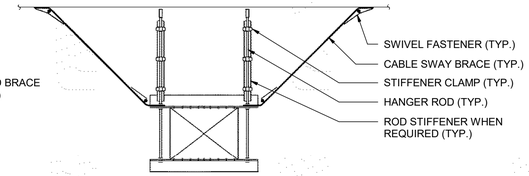

TRANSVERSE CABLE BRACE

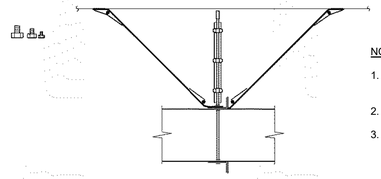

LONGITUDINAL BRACE

NOTES:

1. GENERAL REQUIREMENTS FOR SEISMIC RESTRAINT OF DUCTWORK ARE SHOWN.
2. ALL HANGERS SHALL BE ATTACHED TO STRUCTURAL STEEL ONLY.
3. DETAIL IS DIAGRAMMATIC. THE CONTRACTOR SHALL PROVIDE SEISMIC BRACING IN COMPLIANCE WITH SMACNA AND APPLICABLE BUILDING CODE REQUIREMENTS.

1 SEISMIC BRACING OF SUSPENDED DUCTWORK DETAIL

NOT TO SCALE

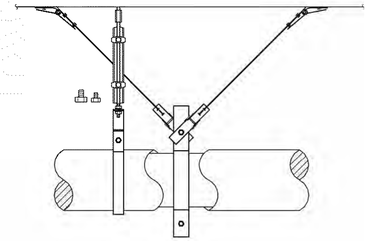

LONGITUDINAL BRACE

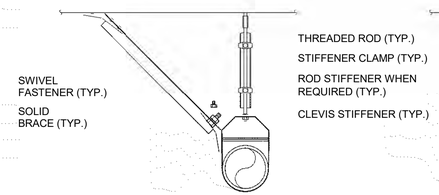

TRANSVERSE SOLID BRACE

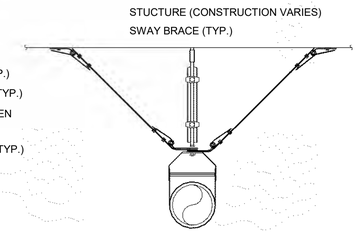

TRANSVERSE CABLE BRACE

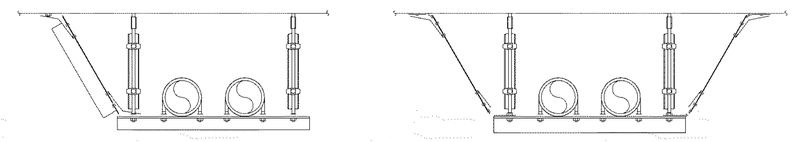

TRANSVERSE SOLID BRACE

TRANSVERSE CABLE BRACE

NOTES:

1. GENERAL REQUIREMENTS FOR TRANSVERSE AND LONGITUDINAL BRACING OF PIPES ARE SHOWN.
2. ALL HANGERS SHALL BE ATTACHED TO STRUCTURAL STEEL ONLY.
3. DETAIL IS DIAGRAMMATIC. THE CONTRACTOR SHALL PROVIDE SEISMIC BRACING IN COMPLIANCE WITH SMACNA AND APPLICABLE BUILDING CODE REQUIREMENTS.

2 SEISMIC BRACING OF SUSPENDED PIPING DETAIL

NOT TO SCALE

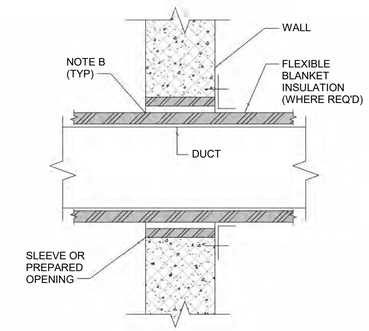

NOTES:

A. THIS DETAIL IS FOR NON-FIRE-RATED CONSTRUCTION. DUCT PENETRATIONS IN FIRE-RATED CONSTRUCTION SHALL BE FIRESTOPPED WITH A UL-CLASSIFIED SYSTEM.

B. AT PENETRATIONS THROUGH INSULATED WALLS, PROVIDE PACKING AND SEALANT.

3 TYPICAL DUCT PENETRATION THRU WALLS DETAIL

NOT TO SCALE

ISSUE	DATE	DESCRIPTION
A	09/2026	ISSUED FOR BIDS

PROJECT MANAGER	PIERRE KWAN
CIVIL	J. MEGRDITCHIAN
STRUCTURAL	P. LINDBLOM
ARCHITECTURAL	V. YANEZ
PROCESS	P. KWAN
MECHANICAL	K. CHEUNG
ELECTRICAL	R. MCCOMB
INSTRUMENTATION	D. BEST
PROJECT NUMBER	10193663

REGISTERED PROFESSIONAL ENGINEER
67096PE
DIGITALLY SIGNED
OREGON
JULY 11, 2025
KARL M. SUTTON
EXPIRES 6/30/2028

CITY OF ASHLAND
Ashland, Oregon

City of Ashland

Ashland Creek Water Treatment Plant

2026

GENERAL MECHANICAL DETAILS 2

0 1" 2"

FILENAME	10193663-AWTP-000_M.rte
SCALE	12" = 1'-0"

SHEET **000M502**

Autodesk Docs://10193663_Ashland_WTP_Final_Design_2024/10193663-AWTP-000_M.rvt
9/22/2026 4:33:14 PM

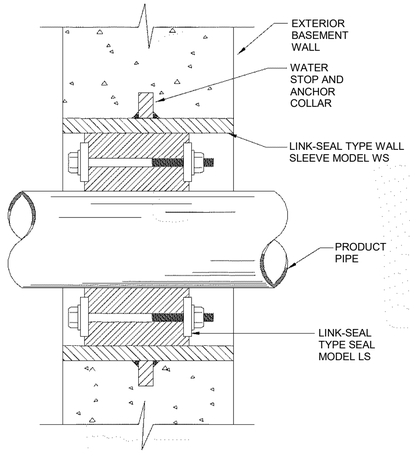

1 - EXTERIOR PIPE PENETRATION DETAIL
NOT TO SCALE

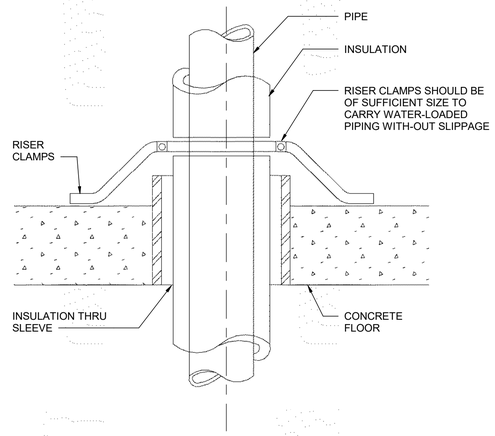

2 - VERTICAL PIPE SUPPORT DETAIL
NOT TO SCALE

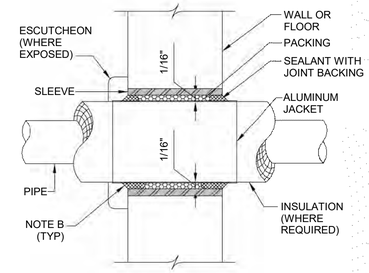

NOTES:

A. THIS DETAIL IS FOR NON FIRE-RATED CONSTRUCTION. PIPE PENETRATIONS IN FIRE-RATED CONSTRUCTION SHALL BE FIRESTOPPED WITH A UL-CLASSIFIED
B. AT INSULATED WALLS PROVIDE PACKING AND SEALANT AT ANNULAR SPACE.

3 - PIPE PENETRATION THRU WALLS & FLOORS DETAIL
NOT TO SCALE

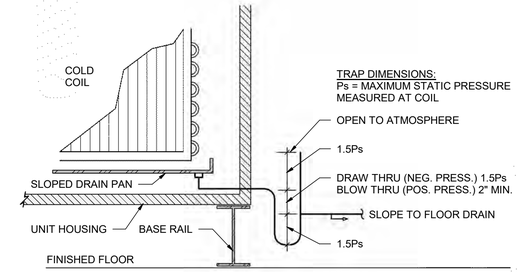

NOTES:

1. TRAP AND DRAIN PIPING SIZE TO BE LARGER OF THE DRAIN PAN OUTLET SIZE OR THE FOLLOWING:

COOLING CAPACITY (MBH)	NOMINAL PIPE SIZE
UP TO 200	3/4"
201 TO 450	1"
451 TO 1,000	1-1/4"
1,001 TO 1,500	1-1/2"
1,501 TO 3,000	2"

2. INSULATE TRAP AND DRAIN PIPING PER SPECIFICATION REQUIREMENTS.

4 - COIL CONDENSATE DRAIN PIPING DETAIL
NOT TO SCALE

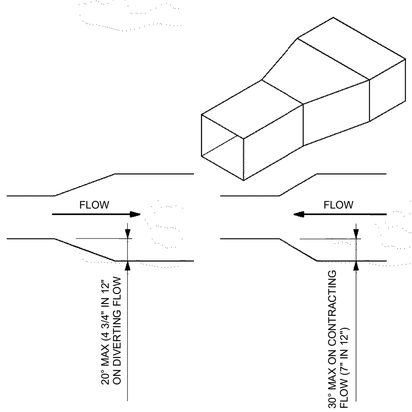

NOTES:
1. LARGEST DIMENSION GOVERNS CONSTRUCTION.
2. REFER TO SMACNA FOR SPECIFIC REQUIREMENTS.

5 - DUCT TRANSITION DETAIL
NOT TO SCALE

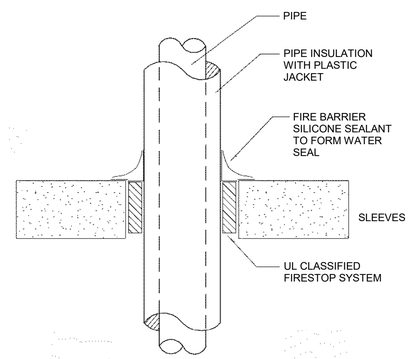

6 - INSULATED PIPE FLOOR PENETRATION DETAIL
NOT TO SCALE

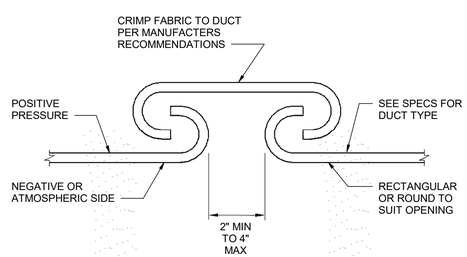

NOTE:
1. REFER TO SMACNA FOR SPECIFIC REQUIREMENTS.

7 - FLEXIBLE DUCT CONNECTION DETAIL
NOT TO SCALE

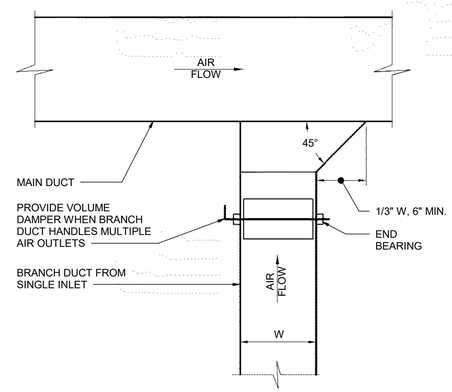

8 - RECTANGULAR RETURN OR EXHAUST DUCT TAP DETAIL
NOT TO SCALE

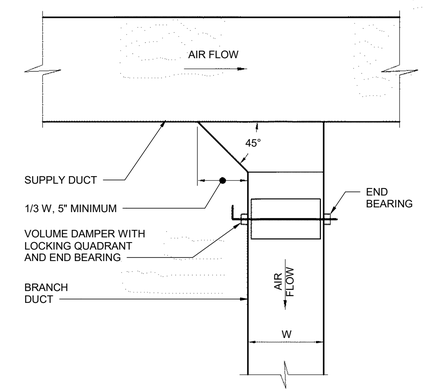

NOTES:

1. ROUND DUCT TAKEOFFS ARE SIMILAR EXCEPT HAVE SPIN-IN COLLAR WITH INTEGRAL SCOOP.
2. NOT PERMITTED AT END OF DUCT. SINGLE OR DOUBLE ELBOWS REQUIRED.

9 - RECTANGULAR SUPPLY DUCT TO AIR OUTLET DETAIL
NOT TO SCALE

ISSUE	DATE	DESCRIPTION
A	09/2026	ISSUED FOR BIDS

PROJECT MANAGER	PIERRE KWAN
CIVIL	J. MEGRDITCHIAN
STRUCTURAL	P. LINDBLOM
ARCHITECTURAL	V. YANEZ
PROCESS	P. KWAN
MECHANICAL	K. CHEUNG
ELECTRICAL	R. MCCOMB
INSTRUMENTATION	D. BEST
PROJECT NUMBER	10193663

REGISTERED PROFESSIONAL ENGINEER 67096PE OREGON JULY 11, 1986 KARL M. SUTTON
DIGITALLY SIGNED
EXPIRES 6/30/2028

CITY OF ASHLAND
Ashland, Oregon

City of Ashland
Ashland Creek
Water Treatment Plant
2026

GENERAL MECHANICAL DETAILS 3

0 1" 2"

FILENAME 10193663-AWTP-000_M.rte
SCALE 12" = 1'-0"
SHEET 000M503

Autodesk Docs://10193663_Ashland_WTP_Final_Design_2024/10193663-AWTP-000_M.rvt
9/22/2026 4:33:15 PM

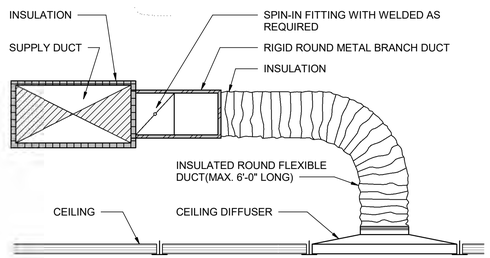

NOTE: SLOT DIFFUSER RUNOUT TO BE SIMILAR.

1 CEILING DIFFUSER RUNOUT DETAIL
NOT TO SCALE

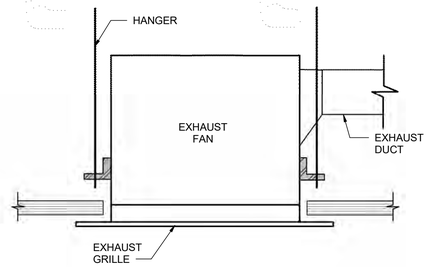

2 CABINET MOUNTED EXHAUST FAN DETAIL
NOT TO SCALE

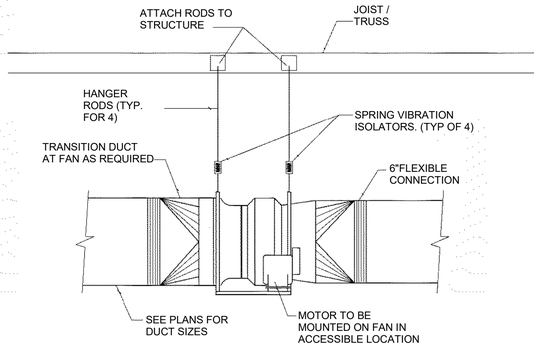

NOTES:

1. PROVIDE ACCESS DOORS TO MEASURE WHEEL RPM.

3 INLINE FAN DETAIL
NOT TO SCALE

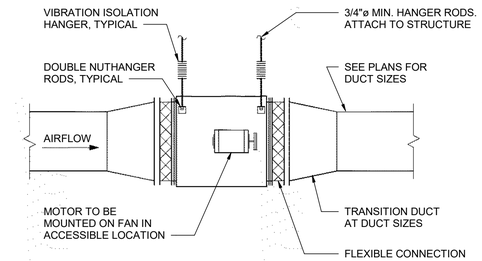

NOTES:

1. SEE DRAWINGS FOR SUCTION AND DISCHARGE DUCT SIZES.
2. MOTOR SHOWN ON SIDE. SEE DRAWINGS FOR MOTOR LOCATION. INSTALL FAN SO THAT MOTOR IS ACCESSIBLE.
3. SEE SCHEDULES AND SPECIFICATIONS FOR FAN REQUIREMENTS.
4. TRANSITIONS SHOWN ARE CONCENTRIC. TRANSITIONS MAY ALSO BE FLAT ON TOP OR FLAT ON BOTTOM. SEE DRAWINGS FOR TRANSITION TYPE.
5. ALL HANGERS SHALL BE ATTACHED TO STRUCTURAL STEEL ONLY.

4 HORIZONTAL INLINE FAN DETAIL
NOT TO SCALE

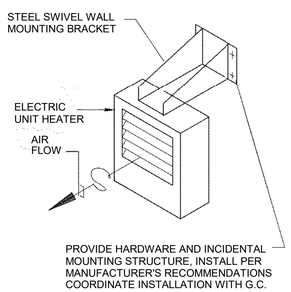

5 ELECTRIC UNIT HEATER DETAIL
NOT TO SCALE

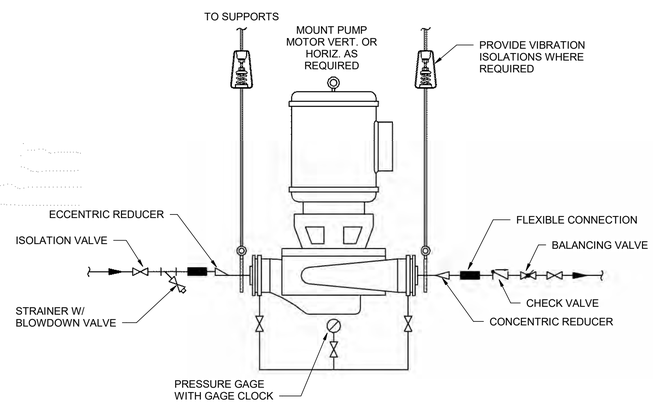

6 INLINE PUMP PIPING DETAIL
NOT TO SCALE

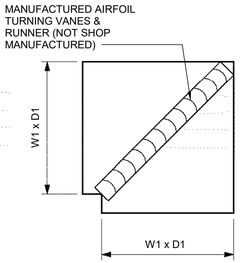

7 90 DEG ELBOW WHEN DUCT SIZE EQUAL DETAIL
NOT TO SCALE

ISSUE	DATE	DESCRIPTION

PROJECT MANAGER	PIERRE KWAN
CIVIL	J. MEGRDITCHIAN
STRUCTURAL	P. LINDBLOM
ARCHITECTURAL	V. YANEZ
PROCESS	P. KWAN
MECHANICAL	K. CHEUNG
ELECTRICAL	R. MCCOMB
INSTRUMENTATION	D. BEST
PROJECT NUMBER	10193663

REGISTERED PROFESSIONAL ENGINEER 67096PE DIGITALLY SIGNED OREGON JULY 11, 2025 KARL M. SUTTON
EXPIRES 6/30/2028

CITY OF ASHLAND
Ashland, Oregon

City of Ashland

Ashland Creek Water Treatment Plant

2026

GENERAL MECHANICAL DETAILS 4

0 1" 2"

FILENAME	10193663-AWTP-000_M.rte
SCALE	12" = 1'-0"
SHEET	000M504

Autodesk Docs://10193663_Ashland_WTP_Final_Design_2024/10193663-AWTP-000_M.rvt
9/22/2026 4:33:17 PM

DOAS UNIT SCHEDULE

MARK	BUILDING	OUTSIDE AIR (CFM)	EXHAUST AIR (CFM)	ENERGY RECOVERY						HEATING MODE			COOLING MODE				HEATING ELECTRIC HEATER			SUPPLY FAN		EXHAUST FAN DATA		ELECTRICAL DATA					BASIS OF DESIGN	NOTES
				WINTER HEAT RECOVERY			SUMMER HEAT RECOVERY			DX COIL			DX COIL																	
				O.A. E.A.T. DB (DEG. F.)	R.A. E.A.T. DB/WB (DEG. F.)	L.A.T. DB/WB (DEG. F.)	O.A. E.A.T. DB/WB (DEG. F.)	R.A. E.A.T. DB/WB (DEG. F.)	L.A.T. DB/WB (DEG. F.)	E.A.T. DB (DEG. F.)	L.A.T. DB (DEG. F.)	SENSIBLE (MBH)	E.A.T. DB/WB (DEG. F.)	L.A.T. DB/WB (DEG. F.)	TOTAL CAPACITY (MBH)	SENSIBLE CAPACITY (MBH)	E.A.T. DB (DEG. F.)	L.A.T. DB (DEG. F.)	CAPACITY (KW)	AIR FLOW (CFM)	E.S.P. (IN. W.G.)	AIR FLOW (CFM)	E.S.P. (IN W.G.)	MCA	MOP	V	PH	HZ		
DOAS-3001	300	700	700	26.1	70 / 52.9	54.5 / 43.8	95.5 / 65.8	75 / 63	82.3 / 63.3	54.5	72.0	13.3	82.3 / 63.3	55.2 / 52.2	23.0	20.8	54.5	72.0	3.9	700	1.30	700	1.30	30.3	35	208	1	60	OXYGEN 8 A16IN	1 THRU 7

NOTES:

1. MATCHING OUTDOOR UNIT: HP-3009. PROVIDE UNIT WITH DIRECT DRIVE PLENUM ECM FANS AND WATER WASHABLE ENERGY/HEAT RECOVERY CORE WITH NO MOVING PARTS. HORIZONTAL CONFIGURATION. R-32 REFRIGERANT CHARGE: 0.9 LBS.
2. PREMIUM EFFICIENCY MOTOR, DISCONNECT, MOTORIZED OA AND EA ISOLATION DAMPERS WITH ELECTRIC ACTUATORS, NEOPRENE ISOLATORS, MERV 13 FILTER ON SUPPLY AND MERV 8 ON RETURN. PROVIDE FILTER MONITORING AND FACTORY LEAK DETECTION SYSTEM.
3. EQUIPMENT WEIGHT: APPROXIMATELY 400 LBS. PROVIDE THERMOSTAT AND 12 HOUR TIME CLOCK TO ALLOW THE FAN TO REMAIN ON DURING OCCUPIED HOURS.
4. FAN RPM SHALL NOT EXCEED 110% OF SCHEDULED VALUE WITH THE SCHEDULED WHEEL TYPE. UNIT CASING SHALL BE PAINTED WITH EPOXY COATING.
5. PROVIDE ELECTRIC HEATER WITH SCR CONTROL. FACTORY MOUNTED DX COILS WITH FACTORY MOUNTED AND BRAZED EXPANSION VALVE KITS APPROVED BY THE FACTORY UTILIZED FOR TEMPERATURE CONTROL.
6. PROVIDE SINGLE CIRCUIT POWER CONNECTION WITH UNIT AND ELECTRIC HEATER. THE MAIN POWER WILL GO TO THE ELECTRIC HEATER. PROVIDE ALL REQUIRED FACTORY UNIT CONTROLLERS, SENSORS, ETC. FOR STANDALONE UNIT OPERATION AS DESCRIBED IN THE SEQUENCE OF OPERATION.
7. NO EQUIPMENT SHALL BE SELECTED ABOVE 90% OF MOTOR NAME PLATE RATING. PROVIDE DUCT TEMPERATURE SENSOR TO MAINTAIN UNIT LEAVING AIR TEMPERATURE.

ENERGY RECOVERY UNIT SCHEDULE

MARK	BUILDING	LOCATION	MIN. O.A. (CFM)	ENERGY RECOVERY			ELECTRIC HEAT			SUPPLY FAN DATA			EXHAUST FAN DATA			ELECTRICAL DATA					BASIS OF DESIGN	NOTES:
				WINTER HEAT RECOVERY																		
				O.A. E.A.T DB (°F)	R.A. E.A.T DB (°F)	L.A.T. DB (°F)	E.A.T. DB/WB (°F)	L.A.T. DB (°F)	TOTAL CAP. (KW)	CFM	EXT. S.P. (IN. WG)	HP BHP	CFM	EXT. S.P. (IN. WG)	HP BHP	MCA	MOCP	VOLT	PH	HZ		
ERU-3001	300	BALLASTED FLOC 300-103	4,000	23.1	60.0	45.9	45.9	64.9	24.0	4,000	1.00	1.5 X 2 1.12 X 2	4,000	1.00	1.5 X 2 1.08 X 2	48.1	50	460	3	60	INNOVENT ERU-OU-PL-4000-EH-460	1 THRU 9

NOTES:

1. TEFC MOTOR. UNIT TO PROVIDE WITH 2 SUPPLY FANS AND 2 EXHAUST FANS WITH ALL SENSORS, CONTROLLERS, AND CONTROLS FOR STAND-ALONE OPERATION. ELECTRIC HEATER: SCR CONTROL.
2. PROVIDE MERV 8 OUTSIDE AND RETURN AIR FILTER WITH MAGNEHELIC GAUGES. PROVIDE BLOWER AND MOTOR ISOLATION BASE WITH 1" SPRING ISOLATORS. ELEVATION: 1,960 FEET. UNIT SHALL BE SUITABLE FOR INDOOR INSTALLATION.
3. UNIT WEIGHT: 4,000 LBS (APPROX.). SINGLE POINT POWER CONNECTION. PROVIDE SMOKE DETECTOR SHIPPED LOOSE FOR REMOTE DUCT MOUNT. LCD INTERFACE CAPABLE OF MONITORING AND CHANGING SETPOINTS THRU INTEGRAL KEYPAD.
4. PROVIDE UNIT WITH DISCONNECT, OUTDOOR AND EXHAUST AIR DAMPER WITH ACTUATORS. FACTORY TO PROVIDE SUPPLY AND EXHAUST FAN VFD MOUNTED EXTERNALLY ON UNIT PANELS FOR INDOOR USE.
5. PROVIDE 7 DAY PROGRAMMABLE TIMER (REMOTE WALL MOUNT). PROVIDE FANS WITH SEISMIC RATED SPRING ISOLATORS. UNIT TO BE PROVIDED WITH CROSS FLOW AIR TO AIR FLAT PLATE HEAT EXCHANGER.
6. PROVIDE ALL TEMPERATURE (SUPPLY, OUTSIDE, RETURN, EXHAUST) SENSORS FOR MONITORING AND STAND ALONE OPERATION. PROVIDE FACE AND BYPASS DAMPERS FOR DEFROST CONTROL.
7. OVERALL MAXIMUM DIMENSIONS: 197 INCHES (L) X 92 INCHES (W) X 77 INCHES (H). UNIT TO BE AMCA CERTIFIED. ELECTRIC HEATER WIRED BACK TO MAIN DISCONNECT FOR A SINGLE POINT POWER CONNECTION.
8. PROVIDE AIRFLOW MONITORING FOR SA AND EA FANS, EXHAUST FAN CONTROL TO TRACK SUPPLY FAN CFM AND SUPPLY DISCHARGE TEMPERATURE CONTROL WITH RETURN RESET.
9. PROVIDE HIGH SUPPLY DUCT AND LOW RETURN DUCT STATIC SWITCH AND SUPPLY DUCT STATIC PRESSURE SENSOR. PROVIDE DIRTY FILTER SWITCHES. ALUMINUM CONSTRUCTION.

PACKAGED HEAT PUMP UNIT SCHEDULE

MARK	BUILDING	TOTAL AIRFLOW (CFM)	OUTSIDE AIRFLOW (CFM)	EXT. S.P.		COOLING DATA									HEATING DATA						ELECTRICAL DATA			BASIS OF DESIGN	NOTES
				ALTITUDE (FT)	(IN. WG)	TOTAL CAP. MBH	SENS. CAP. MBH	E.A.T DB (°F)	E.A.T WB (°F)	COIL L.A.T DB (°F)	COIL L.A.T WB (°F)	UNIT L.A.T DB (MAX. REHEAT) (°F)	UNIT L.A.T WB (MAX. REHEAT) (°F)	MIN. EER	HEAT PUMP TOTAL CAP. MBH	E.A.T DB (°F)	HEAT PUMP L.A.T DB (°F)	ELECTRIC HEAT L.A.T DB (°F)	ELECTRIC HEATER KW CAPACITY	MIN. COP	VOLT	MCP	MFS		
PHP-1001	100	1,400	1,400	2,000	0.50	59.9	59.9	99.2	66.9	54.8	51.2	66.7	56.0	12.3	45.7	23.0	53.2	71.3	20.0	5.00	460/3/60	54.875	60.0	TEMPMASTER DROH060B1	1 THRU 5

NOTES:

1. SUPPLY FAN MOTOR: 0.55 BHP AND 1 MOTOR HP. HORIZONTAL SUPPLY WITH NO RETURN. OUTDOOR RATED. 100% OUTSIDE AIR.
2. REFRIGERANT CONTROLS: HOT GAS REHEAT, MODULATING (SINGLE CIRCUIT). EVAPORATOR MOTOR TYPE: HIGH EFFICIENCY ODP WITH VFD. REFRIGERANT TYPE: 454B. REFRIGERANT CHARGE 31LBS.
3. PROVIDE MERV 8 PLEATED FILTER, DISCONNECT, AND MOTORIZED 2 POSITION OA DAMPER WITH 2 POSITION ACTUATOR. PROVIDE SUPPLY BLOWER WITH RUBBER ISOLATION.
4. ELECTRIC HEATER CONTROL: SCR. PROVIDE OUTSIDE AIR HOOD WITH BIRD SCREEN, REMOTE CONTROL CONSOLE EQT2 DISPLAY FOR USER INTERFACE FROM THE SPACE, STANDARD ZONE SENSORS AND CONTROLLERS FOR STANDALONE OPERATION.
5. UNIT WEIGHT: APPROXIMATELY 1,900 LBS. PROVIDE UNIT WITH FACTORY INSTALLED REFRIGERANT LEAK DETECTORS, ZONE AIR TEMP AND SUPPLY AIR TEMP RESET.

SPLIT SYSTEM CONDENSING UNIT SCHEDULE

MARK	BUILDING	SERVES	NET COOLING TOTAL / SENSIBLE (MBH)	HEATING OUTPUT (MBH)	CONDENSER DATA			COMPRESSOR STAGES	ELECTRICAL DATA			BASIS OF DESIGN	NOTES
					REFRIG TYPE	FAN NO.	FAN HP		AMB. TEMP SUMMER / WINTER (°F)	MCA / MOCP	V/PH		
HP-3008	300	ELECTRICAL ROOM 300-111	76.8 / 62.7	53.0	R454B	1	-	2	99 / 23	15.5 / 20	460/3	TEMPMASTER WE090C00A4ALB1	1,4,5
HP-3009	300	ADMIN AREAS	34.8	34.4	R32	1	-	2	99 / 23	20.8 / 35	208/1	DAIKIN DH7TCA3610	2,3

NOTES:

1. IEER: 16. EER: 11. COP: 3.4 (47F) / 2.3 (17F). UNIT WEIGHT: APPROX. 500 LBS. MATCHING INDOOR UNIT: BCU-3001.
2. SEER2: 17.2. EER2: 12.5. HEATING HSPF: 8.1. UNIT WEIGHT: APPROXIMATELY 300 LBS. MATCHING INDOOR UNIT: DOAS-3001.
3. 500 HOUR SALT SPRAY TESTED. FACTORY INSTALLED FILTER DRIER, SUCTION LINE ACCUMULATOR, CRANKCASE HEATER, HIGH CAPACITY MUFFLER, AND COIL AND AMBIENT TEMPERATURE SENSORS.
4. POWDER PAINTED STEEL. CERTIFIED TO 750 HOURS SALT SPRAY TEST. SCROLL COMPRESSOR WITH CRANKCASE HEATER. LOW AMBIENT CONTROL.
5. PROVIDE STANDARD UNIT CONTROLLER: ANTI SHORT CYCLE PROTECTION, LEAD-LAG, LOW VOLTAGE PROTECTION, SAFETY MONITORING, ON BOARD DIAGNOSTIC AND FAULT CODE DISPLAY.

ISSUE	DATE	DESCRIPTION
A	09/2026	ISSUED FOR BIDS

PROJECT MANAGER	PIERRE KWAN
CIVIL	J. MEGRDITCHIAN
STRUCTURAL	P. LINDBLOM
ARCHITECTURAL	V. YANEZ
PROCESS	P. KWAN
MECHANICAL	K. CHEUNG
ELECTRICAL	R. MCCOMB
INSTRUMENTATION	D. BEST
PROJECT NUMBER	10193663

REGISTERED PROFESSIONAL ENGINEER 67096PE DIGITALLY SIGNED OREGON JULY 11, 2025 KARL M. SUTTON
EXPIRES 6/30/2028

CITY OF ASHLAND
Ashland, Oregon

City of Ashland
Ashland Creek Water Treatment Plant
2026

GENERAL MECHANICAL SCHEDULES 1

0 1" 2"

FILENAME 10193663-AWTP-000_M.rte
SCALE NONE
SHEET 000M601

Autodesk Docs://10193663_Ashland_WTP_Final_Design_2024/10193663-AWTP-000_M.rvt
9/22/2026 4:33:18 PM

DUCTLESS SPLIT SYSTEM UNIT SCHEDULE

INDOOR DATA									OUTDOOR DATA											
MARK	BUILDING	LOCATION	CFM (HIGH)	HEATING MAX. CAP (BTUH) @ 47 F	COOLING COIL DATA AIRSIDE DATA E.A.T. (°F) DB	WB	MAX. CAP. (BTUH)	MIN. CAP. (BTUH)	MARK	COP (17F)	EFFICIENCY SEER/EER	AMB. TEMP DB (°F)	REFRIG. CHARGE (LBS)	OPERATING RANGE (°F) (COOLING)	ELECTRICAL VOLT	HZ	PH	BASIS OF DESIGN	NOTES
FC-1001	100	PRETREATMENT ROOM	775	28,000	80	67	24,000	10,000	HP-1001	2.80	21.1/12	95	7.72	0°F-115°F	208	60	1	MITSUBISHI PKA-AK24NL/PUZ-AH24NL	4,8
FC-3001	300	MEETING 300-208	810	29,000	80	67	24,000	10,300	HP-3001	3.00	22.6/13.2	95	7.72	0°F-115°F	208	60	1	MITSUBISHI PLA-AE24NL/PUZ-AH24NL	1,2,8
FC-3002	300	LOBBY 300-100	600	23,000	80	67	18,000	5,000	HP-3002	2.60	24.7/13.7	95	4.41	0°F-115°F	208	60	1	MITSUBISHI PLA-AE18NL/PUZ-AK18NL	2,5,8
FC-3003	300	OFFICE 300-206	530	20,000	80	67	12,000	4,900	HP-3003	2.80	24.8/17.1	95	4.41	0°F-115°F	208	60	1	MITSUBISHI PLA-AE12NL/PUZ-AK12NL	2,3,8
FC-3004	300	IT CLOSET 300-207	742	28,000	80	67	21,200	9,900	HP-3004	2.60	19.6/12	95	7.72	0°F-115°F	208	60	1	MITSUBISHI PEAD-AA24NL/PUZ-AH24NL	8,9
FC-3005	300	COMMAND ROOM 300-205	810	29,000	80	67	24,000	10,300	HP-3005	3.00	22.6/13.2	95	7.72	0°F-115°F	208	60	1	MITSUBISHI PLA-AE24NL/PUZ-AH24NL	1,2,8
FC-3006	300	WATER QUALITY TESTING AREA	530	20,000	80	67	12,000	4,900	HP-3006	2.80	24.8/17.1	95	4.41	0°F-115°F	208	60	1	MITSUBISHI PLA-AE12NL/PUZ-AK12NL	2,3,8
FC-3007	300	ELEVATOR LOBBY 300-101	375	18,000	80	67	12,000	4,300	HP-3007	2.80	21.1/14.8	95	4.41	0°F-115°F	208	60	1	MITSUBISHI PKA-AL12NL/PUZ-AK12NL	6,8
FC-6001	600	CROWSON PUMP STATION	920	40,000	80	67	36,000	13,200	HP-6001	2.80	20.3/12	95	9.92	0°F-115°F	208	60	1	MITSUBISHI PKA-AK36NL/PUZ-AK36NL	7,8

NOTES:

1. INDOOR UNIT: 120 WATTS. OUTDOOR UNIT: 22 MCA AND 37 MOCP
2. WASHABLE FILTER. BUILT IN CONDENSATE LIFT MECHANISM. FILTER INDICATOR SIGNAL. VARIABLE SPEED INVERTER DRIVEN COMPRESSOR.
3. INDOOR UNIT: 50 WATTS. OUTDOOR UNIT: 16 MCA AND 27 MOCP
4. INDOOR UNIT: 69 WATTS. OUTDOOR UNIT: 22 MCA AND 37 MOCP
5. INDOOR UNIT: 50 WATTS. OUTDOOR UNIT: 16 MCA AND 27 MOCP
6. INDOOR UNIT: 30 WATTS. OUTDOOR UNIT: 16 MCA AND 27 MOCP
7. INDOOR UNIT: 69 WATTS. OUTDOOR UNIT: 34 MCA AND 56 MOCP
8. PROVIDE PROGRAMMABLE WALL MOUNTED THERMOSTAT AND ALL REQUIRED MOUNTING HARWARE. REFRIGERANT TYPE: R454B
9. INDOOR UNIT: 2.25 MCA. OUTDOOR UNIT: 22 MCA AND 37 MOCP. PROVIDE FACTORY INSTALLED REFRIGERANT LEAK DETECTION SYSTEM IN ACCORDANCE WITH ASHRAE 15/34 REQUIREMENTS.

ELECTRIC UNIT HEATER SCHEDULE

MARK	BUILDING	SERVES	ELECTRICAL KW	VOLT	PH	HZ	HP	AIR DELIVERY DATA CFM	RECOM'D MOUNTING HEIGHT	BASIS OF DESIGN	NOTES
EUH-1001	100	OZONE THIO ROOM	5	480	3	60	1/15	405	7	CHROMALOX HD3D	2
EUH-3001	300	MECHANCIAL 300-110	1.5	208	1	60	-	300	7	REZNOR EGW	1
EUH-3002	300	STORAGE AREA 300-111	5	480	3	60	1/15	405	7	CHROMALOX HD3D	2
EUH-3003	300	PIPE GALLERY 300-001	7.5	480	3	60	1/15	590	7	CHROMALOX HD3D	2
EUH-3004	300	PIPE GALLERY 300-001	7.5	480	3	60	1/15	590	7	CHROMALOX HD3D	2
EUH-3005	300	PIPE GALLERY 300-001	7.5	480	3	60	1/15	590	7	CHROMALOX HD3D	2
EUH-3006	300	PIPE GALLERY 300-001	7.5	480	3	60	1/15	590	7	CHROMALOX HD3D	2
EUH-6001	600	CROWSON PUMP STATION	5	480	3	60	1/15	405	7	CHROMALOX HD3D	2

NOTES:

1. BUILT IN THERMOSTAT. STANDARD EPOXY POWDER PAINT. PROVIE MOUNTING BRACKETS FOR WALL INSTALLATION AND DISCONNECT.
2. PROVIDE INTEGRAL THERMOSTAT (40F TO 90F), DISCONNECT, UNIVERAL SWIVEL WALL BRACKETS.

FAN SCHEDULE

MARK	BUILDING	SERVES	OPERATING AIRFLOW (CFM)	S.P. (IN. WG)	FAN TYPE	BLADE TYPE	FAN RPM	MOTOR DATA HP OR WATTS	V/PH	DRIVE TYPE	WEIGHT (LBS)	BASIS OF DESIGN	NOTES
EF-1001	100	PRETREATMENT BUILDING	200	0.25	INLINE	BACKWARD INCLINED	1,451	0.167 HP	120/1	BELT	100	LOREN COOK 70SQN-B	1,4
EF-1002	100	PRETREATMENT BUILDING	12,000	0.40	INLINE	BACKWARD INCLINED	582	3 HP	460/3	BELT	500	LOREN COOK 330SQN-B	1,4
EF-1003	100	PRETREATMENT BUILDING	140	0.25	INLINE	BACKWARD INCLINED	1,226	0.167 HP	120/1	BELT	100	LOREN COOK 70SQN-B	1,4
EF-1004	100	PRETREATMENT BUILDING	7,700	0.40	INLINE	BACKWARD INCLINED	1,119	3 HP	460/3	BELT	300	LOREN COOK 225SQN-B	3,4
EF-3001	300	STORAGE AREA 300-110	90	0.25	INLINE	BACKWARD INCLINED	1,078	0.167 HP	120/1	BELT	100	LOREN COOK 70SQN-B	1,4
EF-3002	300	SHOWER 300-109	150	0.25	CEILING	FORWARD CURVED	1,099	50.4 WATTS	120/1	DIRECT	100	LOREN COOK GC-168	2,4,5
EF-3003	300	CHEMICAL 300-105	680	1.00	INLINE	BACKWARD INCLINED	1,394	0.334 HP	120/1	BELT	100	LOREN COOK 150SQN-HP	3,4
EF-3004	300	PUMP 300-114	4,700	0.40	INLINE	BACKWARD INCLINED	1,096	1.5 HP	460/3	BELT	200	LOREN COOK 195SQN-B	1,4
EF-3005	300	PUMP 300-114	200	0.30	INLINE	BACKWARD INCLINED	1,504	0.167 HP	120/1	BELT	100	LOREN COOK 70SQN-B	1,4
EF-3006	300	CHEMICAL 300-104	710	1.00	INLINE	BACKWARD INCLINED	1,394	0.334 HP	120/1	BELT	100	LOREN COOK 150SQN-HP	3,4
EF-6001	600	CROWSON PUMP STATION	90	0.25	INLINE	BACKWARD INCLINED	1,078	0.167 HP	120/1	BELT	100	LOREN COOK 70SQN-B	1,4

NOTES:

1. TEFC MOTOR. PROVIDE DISCONNECT, FLEXIBLE DUCT CONNECTOR, BELT GUARD, INLET SAFETY SCREEN, ALUMINUM CONSTRUCTION, EPOXY COATING, SPRING VIBRATION ISOLATORS,
2. PROVIDE FAN SPEED CONTROLLER, WALL CAP, DELUXE ALUMINUM GRILLE, HANGING KIT, DISCONNECT.
3. PROVIDE EXPLOSION PROOF MOTOR, XPROOF DISCONNECT, FLEXIBLE DUCT CONNECTOR, BELT GUARD, ALUMINUM CONSTRUCTION, EPOXY COATING, SPRING VIBRATION ISOLATORS.
4. NO EQUIPMENT SHALL BE SELECTED ABOVE 90% OF MOTOR NAME PLATE RATING.
5. PROVIDE FAN WITH WALL MOTION SENSOR.

ELECTRIC MAKE-UP AIR UNIT PERFORMANCE DATA

MARK	SERVES	CFM	CAP. KW	WINTER ENTERING AIR TEMP (°F)	TEMP RISE (°F)	STEPS OF CONTROL	MOUNTING	EXTERNAL STATIC PRESS. (IN. WG)	MOTOR DATA HP	VOLT	PH	BASIS OF DESIGN	NOTES
MAU-3001	CHEMICAL 300-105	680	14.0	23.1	65.1	MODULATING	INDOOR HORIZONTAL	0.60	1.1	460	3	AAON H3-ARB-3	1 THRU 4
MAU-3002	CHEMICAL 300-104	710	14.0	23.1	62.1	MODULATING	INDOOR HORIZONTAL	0.60	1.1	460	3	AAON H3-ARB-3	1 THRU 4

NOTES:

1. UNIT FLA: 18A. MCA: 23A. MAXIMUM OVERCURRENT: 25A. TEFC MOTOR.
2. APPROXIMATE UNIT WEIGHT: 400 LBS. 100% OA WITH NO RETURN. NO MECHANICAL COOLING.
3. PROVIDE UNIT WITH MODULATING SCR ELECTRIC HEATER. HORIZONTAL CONFIGURATION. HIGH EFFICIENCY EC MOTOR.
4. MERV 8 FILTER. PROVIDE FACTORY MOUNTED UNIT CONTROLLER FOR STANDALONE UNIT CONTROL AND OPERATION.

HEAT PUMP BLOWER COIL UNIT SCHEDULE

MARK	BUILDING	SERVES	TOTAL (CFM)	OUTSIDE AIR (CFM)	EXT. S.P. (IN. WG)	COOLING DATA DB E.A.T. (°F)	WB E.A.T. (°F)	TOTAL NET CAP. (MBH)	SENS. NET CAP. (MBH)	HEATING DATA TOTAL GROSS CAP. (MBH)	DB. E.A.T. (°F)	TEMP. RISE (°F)	MOTOR DATA HP/BHP	VOLT	PH	FILTER TYPE	BASIS OF DESIGN	NOTES
BCU-3001	300	ELECTRICAL ROOM 300-111	2,600	0	0.50	76.6	61.0	76.8	62.7	53.0	55.0	20.3	1.5 / 0.94	460	3	MERV 8	TEMPMASTER GL090C00B4BAA1	1,2,3,4,5

NOTES:

1. HORIZONTAL CONFIGURATION. TOTAL WEIGHT: 600 LBS. UNIT COOLING LAT DB/WB: 52/50F. SUMMER/WINTER AMBIENT: 99.2F / 23.1F. ELEVATION: 1,950 FT. REFRIGERANT TYPE: R454B.
2. PROVIDE WALL MOUNTED PROGRAMMABLE T-STAT. LOW AMBIENT CONTROL (0 DEG. F), ECONOMIZER MIXING BOX WITH RETURN & OUTDOOR AIR DAMPER WITH ACTUATOR. PROVIDE FACTORY INSTALLED REFRIGERANT DETECTION SYSTEM.
3. MCA: 5.8A. MOCP: 15A. PROVIDE FACTORY MOUNTED UNIT CONTROLLER FOR STANDLONE UNIT CONTROL AND OPERATION INCLUDING ECONOMIZER CYCLE, DEFROST CYCLE.
4. INTELLISPEED VFD W/O BYPASS. SINGLE CIRCUIT REFRIGERANT. POWDER PAINTED STEEL, CERTIFIED AT 750 HOURS SALT SPRAY TEST. REFRIGERANT CHARGE: 21LBS.
5. ECONOMIZER MIXING BOX SHALL BE PROVENT (OR EQUAL), MODULATING CONTROLS. APPROX. 125 LBS.

ISSUE	DATE	DESCRIPTION
A	09/2026	ISSUED FOR BIDS

PROJECT MANAGER	PIERRE KWAN
CIVIL	J. MEGRDITCHIAN
STRUCTURAL	P. LINDBLOM
ARCHITECTURAL	V. YANEZ
PROCESS	P. KWAN
MECHANICAL	K. CHEUNG
ELECTRICAL	R. MCCOMB
INSTRUMENTATION	D. BEST
PROJECT NUMBER	10193663

REGISTERED PROFESSIONAL ENGINEER 67096PE DIGITALLY SIGNED OREGON JULY 11, 2024 KARL M. SUTTON EXPIRES 6/30/2028

CITY OF ASHLAND
Ashland, Oregon

City of Ashland

Ashland Creek Water Treatment Plant

2026

GENERAL MECHANICAL SCHEDULES 2

0 1" 2"

FILENAME 10193663-AWTP-000_M.rte
SCALE NONE
SHEET **000M602**

Autodesk Docs://10193663_Ashland_WTP_Final_Design_2024/10193663-AWTP-000_M.rvt
9/22/2026 4:33:21 PM

LOUVER SCHEDULE

MARK	BUILDING	LOUVER TYPE	NOM. AIRFLOW (CFM)	MAX VEL. @ FREE AREA (FPM)	MAX P.D. (IN. WG)	LOUVER FREE AREA (MINIMUM)	SCREEN TYPE	SIZE W x H (IN.)	BASIS OF DESIGN	NOTES
LVR-1001	100	INTAKE	200	93	0.01	2.13	INSECT SCREEN	18x36	RUSKIN ELF375DX	1
LVR-1002	100	INTAKE	12,000	600	0.07	19.98	INSECT SCREEN	72x72	RUSKIN ELF375DX	1
LVR-1003	100	EXHAUST	200	83	0.01	2.43	INSECT SCREEN	42x18	RUSKIN ELF375DX	1
LVR-1004	100	EXHAUST	12,000	808	0.14	14.84	INSECT SCREEN	54x72	RUSKIN ELF375DX	1
LVR-1005	100	INTAKE	140	65	0.01	2.13	INSECT SCREEN	18x36	RUSKIN ELF375DX	1
LVR-1006	100	INTAKE	7,700	366	0.03	21	INSECT SCREEN	76x72	RUSKIN ELF375DX	1
LVR-1007	100	EXHAUST	140	30	0.01	4.52	INSECT SCREEN	36x36	RUSKIN ELF375DX	1
LVR-1008	100	EXHAUST	7,700	801	0.14	9.61	INSECT SCREEN	42x60	RUSKIN ELF375DX	1
LVR-1009	100	EXHAUST	1,400	309	0.02	4.52	INSECT SCREEN	36x36	RUSKIN ELF375DX	1
LVR-3001	300	EXHAUST	4,000	376	0.03	10.62	INSECT SCREEN	36x80	RUSKIN ELF375DX	1
LVR-3002	300	EXHAUST	90	14	0.01	6.65	INSECT SCREEN	80x24	RUSKIN ELF375DX	1
LVR-3003	300	EXHAUST	2,600	575	0.06	4.52	INSECT SCREEN	36x36	RUSKIN ELBD375E	1,2
LVR-3004	300	INTAKE	2,600	390	0.03	6.65	INSECT SCREEN	80x24	RUSKIN ELF375DX	1
LVR-3005	300	INTAKE	680	330	0.04	2.06	INSECT SCREEN	36x18	RUSKIN ELF375DX	1
LVR-3006	300	EXHAUST	4,700	548	0.06	8.58	INSECT SCREEN	48x48	RUSKIN ELF375DX	1
LVR-3007	300	EXHAUST	200	206	0.03	0.97	INSECT SCREEN	18x18	RUSKIN ELF375DX	1
LVR-3008	300	INTAKE	4,000	519	0.06	7.70	INSECT SCREEN	60x36	RUSKIN ELF375DX	1
LVR-3009	300	INTAKE	710	175	0.02	3.89	INSECT SCREEN	36x32	RUSKIN ELF375DX	1
LVR-3010	300	-	-	-	-	-	INSECT SCREEN	36x36	RUSKIN ELF375DX	1,3
LVR-6001	600	INTAKE	90	42	0.01	2.13	INSECT SCREEN	18x36	RUSKIN ELF375DX	1
LVR-6002	600	EXHAUST	90	42	0.01	2.13	INSECT SCREEN	18x36	RUSKIN ELF375DX	1

NOTES:
1. EPOXY COATED. COLOR TO MATCH BUILDING. COORDINATE FINAL SIZE WITH ARCHITECTURE AND STRUCTURAL.
2. LOUVER WITH INTEGRAL GRAVITY OPERATED BACKDRAFT DAMPER. BLADES SHALL BEGIN TO OPEN AT APPROX. 0.03" W.G. PRESSURE.
3. COVER LOUVER OPENING WITH SHEET METAL PANEL.

ROOF HOOD SCHEDULE

MARK	BUILDING	AIRFLOW (CFM)	MAX AIR P.D. (IN. WG)	HOOD SIZE L x W x H (IN.)	THROAT SIZE L x W (IN.)	SCREEN TYPE	CURB HEIGHT (IN.)	BASIS OF DESIGN	NOTES
IH-3001	300	700	0.03	28x36x11	12x18	INSECT	9	LOREN COOK GI	1
IH-3002	300	90	0.03	28x24x11	12x12	INSECT	9	LOREN COOK GI	1
RH-3001	300	700	0.03	28x36x11	12x18	INSECT	9	LOREN COOK GR	1

NOTES:
1. EPOXY COATED.

DAMPER SCHEDULE

MARK	BUILDING	SERVES	SERVICE TYPE	DAMPER CONFIGURATION	NOM. SIZE L x W (IN.)	ACTUATOR TYPE	BASIS OF DESIGN	NOTES
MOD-1001	100	LVR-1002	INTAKE	PARALLEL	72x72	ELECTRIC, 120V	RUSKIN TED50	1
MOD-1002	100	LVR-1004	EXHAUST	PARALLEL	54x72	ELECTRIC, 120V	RUSKIN TED50	1
MOD-1003	100	LVR-1006	INTAKE	PARALLEL	72x72	ELECTRIC, 120V	RUSKIN TED50	1,2
MOD-1004	100	LVR-1008	EXHAUST	PARALLEL	48x48	ELECTRIC, 120V	RUSKIN TED50	1,2
MOD-3001	300	LVR-3006	EXHAUST	PARALLEL	48x48	ELECTRIC, 120V	RUSKIN TED50	1

NOTES:
1. EXTRUDED ALUMINUM INSULATED DAMPER WITH ACTUATOR. AMCA CLASS 1A LEAKAGED RATED. TWIN SEALS ISOLATE BLADE THERMAL BREAK. R VALUE OF 2.16.
2. EXPLOSION PROOF ACTUATOR.

DIFFUSER, REGISTER, AND GRILLE SCHEDULE

MARK	MAX AIRFLOW (CFM)	FACE SIZE W x H (IN.)	CONNECTION SIZE (W x H OR DIA) (IN.)	MAX S.P.D. (IN. WG)	MAX N.C.	MOUNTING LOCATION	FRAME TYPE	MATERIAL	FINISH	BASIS OF DESIGN	NOTES
D1	140	24X24	6 DIA	0.10	30	CEILING	LAY-IN	ALUMINUM	WHITE	TITUS TMS-AA (ADJUSTABLE)	1
	250	24X24	8 DIA	0.10	30	CEILING	LAY-IN	ALUMINUM	WHITE	TITUS TMS-AA (ADJUSTABLE)	1
	380	24X24	10 DIA	0.10	30	CEILING	LAY-IN	ALUMINUM	WHITE	TITUS TMS-AA (ADJUSTABLE)	1
	550	24X24	12 DIA	0.10	30	CEILING	LAY-IN	ALUMINUM	WHITE	TITUS TMS-AA (ADJUSTABLE)	1
	750	24X24	14 DIA	0.10	30	CEILING	LAY-IN	ALUMINUM	WHITE	TITUS TMS-AA (ADJUSTABLE)	1
	860	24X24	15 DIA	0.10	30	CEILING	LAY-IN	ALUMINUM	WHITE	TITUS TMS-AA (ADJUSTABLE)	1
D2	140	12X12	6 DIA	0.10	30	CEILING	LAY-IN	ALUMINUM	WHITE	TITUS TMS-AA (ADJUSTABLE)	1
	200	12X12	8 DIA	0.10	30	CEILING	LAY-IN	ALUMINUM	WHITE	TITUS TMS-AA (ADJUSTABLE)	1
WS1	140	6X6	6X6	0.10	30	SIDEWALL	SURFACE	ALUMINUM	WHITE	TITUS 300FS	2
	240	10X6	10X6	0.10	30	SIDEWALL	SURFACE	ALUMINUM	WHITE	TITUS 300FS	2
	400	12X8	12X8	0.10	30	SIDEWALL	SURFACE	ALUMINUM	WHITE	TITUS 300FS	2
	500	12X10	12X10	0.10	30	SIDEWALL	SURFACE	ALUMINUM	WHITE	TITUS 300FS	2
	610	12X12	12X12	0.10	30	SIDEWALL	SURFACE	ALUMINUM	WHITE	TITUS 300FS	2
	950	18x12	18x12	0.10	30	SIDEWALL	SURFACE	ALUMINUM	WHITE	TITUS 300FS	2
	1270	24X12	24X12	0.10	30	SIDEWALL	SURFACE	ALUMINUM	WHITE	TITUS 300FS	2
	1600	30x12	30X12	0.10	30	SIDEWALL	SURFACE	ALUMINUM	WHITE	TITUS 300FS	2
	1850	36X12	36X12	0.10	30	SIDEWALL	SURFACE	ALUMINUM	WHITE	TITUS 300FS	2
R1, E1	100	24X24	6 DIA	0.10	30	CEILING	LAY-IN	ALUMINUM	WHITE	TITUS PAR-AA	3
	180	24X24	8 DIA	0.10	30	CEILING	LAY-IN	ALUMINUM	WHITE	TITUS PAR-AA	3
	280	24X24	10 DIA	0.10	30	CEILING	LAY-IN	ALUMINUM	WHITE	TITUS PAR-AA	3
	400	24X24	12 DIA	0.10	30	CEILING	LAY-IN	ALUMINUM	WHITE	TITUS PAR-AA	3
	540	24X24	14 DIA	0.10	30	CEILING	LAY-IN	ALUMINUM	WHITE	TITUS PAR-AA	3
	700	24X24	16 DIA	0.10	30	CEILING	LAY-IN	ALUMINUM	WHITE	TITUS PAR-AA	3
	1700	24X24	22X22	0.10	30	CEILING	LAY-IN	ALUMINUM	WHITE	TITUS PAR-AA	3
R2, E2	100	12X12	6 DIA	0.10	30	CEILING	LAY-IN	ALUMINUM	WHITE	TITUS PAR-AA	3
	180	12X12	8 DIA	0.10	30	CEILING	LAY-IN	ALUMINUM	WHITE	TITUS PAR-AA	3
	350	12X12	10X10	0.10	30	CEILING	LAY-IN	ALUMINUM	WHITE	TITUS PAR-AA	3
WR1, WE1	140	6X6	6X6	0.10	30	SIDEWALL	SURFACE	ALUMINUM	WHITE	TITUS 350ZFL	4
	240	10X6	10X6	0.10	30	SIDEWALL	SURFACE	ALUMINUM	WHITE	TITUS 350ZFL	4
	400	12X8	12X8	0.10	30	SIDEWALL	SURFACE	ALUMINUM	WHITE	TITUS 350ZFL	4
	500	12x10	12x10	0.10	30	SIDEWALL	SURFACE	ALUMINUM	WHITE	TITUS 350ZFL	4
	610	12x12	12x12	0.10	30	SIDEWALL	SURFACE	ALUMINUM	WHITE	TITUS 350ZFL	4
	800	18x12	18x12	0.10	30	SIDEWALL	SURFACE	ALUMINUM	WHITE	TITUS 350ZFL	4
	900	24x12	24x12	0.10	30	SIDEWALL	SURFACE	ALUMINUM	WHITE	TITUS 350ZFL	4
	1200	24x18	24x18	0.10	30	SIDEWALL	SURFACE	ALUMINUM	WHITE	TITUS 350ZFL	4
	1400	24x24	24x24	0.10	30	SIDEWALL	SURFACE	ALUMINUM	WHITE	TITUS 350ZFL	4
	1700	24x36	24x36	0.10	30	SIDEWALL	SURFACE	ALUMINUM	WHITE	TITUS 350ZFL	4

NOTES:
TYP. WHERE A SIZE IS LISTED ON THE PLANS USE THAT SIZE AS THE CONNECTION SIZE OTHERWISE USE THE NEXT LARGER SIZE FROM THE TABLE BASED ON AIRFLOW.
1. SQUARE CELING DIFFUSER.
2. DOUBLE DEFLECTION, 3/4" BLADE SPACING, 0 DEGREE DEFLECTION.
3. PERFORATED FACE
4. 3/4" BLADE SPACING, 0 DEGREE DEFLECTION.

Autodesk Docs://10193663_Ashland_WTP_Final_Design_2024/10193663-AWTP-000_M.rvt
9/22/2026 4:33:23 PM

ISSUE	DATE	DESCRIPTION
A	09/2026	ISSUED FOR BIDS

PROJECT MANAGER	PIERRE KWAN
CIVIL	J. MEGRDITCHIAN
STRUCTURAL	P. LINDBLOM
ARCHITECTURAL	V. YANEZ
PROCESS	P. KWAN
MECHANICAL	K. CHEUNG
ELECTRICAL	R. MCCOMB
INSTRUMENTATION	D. BEST
PROJECT NUMBER	10193663

REGISTERED PROFESSIONAL ENGINEER 67096PE DIGITALLY SIGNED OREGON JULY 11, 2025 KARL M. SUTTON
EXPIRES 6/30/2028

CITY OF ASHLAND
Ashland, Oregon

City of Ashland

Ashland Creek Water Treatment Plant

2026

GENERAL MECHANICAL SCHEDULES 3

0 1" 2"

FILENAME 10193663-AWTP-000_M.rte
SCALE NONE

SHEET **000M603**

ELECTRIC UNIT HEATER (EUH-1001, EUH-3001 THRU 3006, 6001)

RUN CONDITIONS:

UNIT SHALL MAINTAIN A HEATING SETPOINT OF 45°F (ADJ).

WHEN THE ZONE TEMPERATURE DROPS BELOW THE HEATING SETPOINT, THE UNIT HEATER SHALL INITIATE TO MAINTAIN ITS HEATING SETPOINT.

DEADBAND: 5°F (ADJ.)

UPON A RISE IN ZONE TEMPERATURE ABOVE SETPOINT PLUS DEADBAND, THE ELECTRIC UNIT HEATER SHALL BE OFF.

EXHAUST FAN (EF-1001, 1003, 3001, 3003, 3005, 3006, 6001)

RUN CONDITIONS:

EXHAUST FANS SHALL RUN CONTINUOUSLY TO PROVIDE MINIMUM VENTILATION IN SPACE.

EXHAUST FAN (EF-1002 AND 1004)

EXHAUST FAN SHALL BE INTERLOCKED WITH ITS ASSOCIATED DAMPERS BEHIND THE WALL LOUVERS. WHEN THE EXHAUST FAN IS ENABLED, DAMPERS BEHIND WALL LOUVERS SHALL BE IN THE OPEN POSITION. WHEN THE EXHAUST FAN IS DISABLED, DAMPERS BEHIND WALL LOUVERS SHALL BE IN THE CLOSED POSITION. A SIGNAL FOR HIGH AMBIENT OXYGEN (O2) AND OZONE (O3) CONCENTRATION IN THE ROOM SHALL INITIATE FAN TO PROVIDE EMERGENCY VENTILATION AIR IN SPACE. REFER TO PROCESS SHEETS FOR THE LOCATION OF SENSORS IN THE ROOM.

EF-1002: INTERLOCK WITH MOD-1001 AND MOD-1002.
EF-1004: INTERLOCK WITH MOD-1003 AND MOD-1004.

EXHAUST FAN (EF-3004)

RUN CONDITIONS:

EXHAUST FAN SHALL BE INTERLOCKED WITH THE DAMPER (MOD-3001) BEHIND THE WALL LOUVER. WHEN SPACE TEMPERATURE REACHES 104°F (ADJ.) AND ABOVE, THE DAMPER (MOD-3001) BEHIND THE WALL LOUVER SHALL BE IN THE OPEN POSITION, AND THE EXHAUST FAN SHALL INITIATE TO MAINTAIN A SPACE TEMPERATURE SETPOINT OF 104°F (ADJ) AND BELOW. WHEN THE EXHAUST FAN IS OFF, THE DAMPER (MOD-3001) BEHIND THE WALL LOUVER SHALL BE IN THE CLOSED POSITION.

SPLIT SYSTEM HEAT PUMP UNIT (FC-3001 THRU 3007, HP-3001 THRU 3007):

RUN CONDITIONS:

UNIT SHALL MAINTAIN A 75°F (ADJ) COOLING SETPOINT AND 68°F (ADJ) HEATING SETPOINT UNLESS SHUTDOWN ON SAFETIES.

COOLING SHALL BE ENABLED WHENEVER:

1. ZONE TEMPERATURE IS ABOVE COOLING SETPOINT.

HEATING SHALL BE ENABLED WHENEVER:

1. ZONE TEMPERATURE IS BELOW HEATING SETPOINT.
2. COOLING IS NOT ACTIVE.

SPLIT SYSTEM HEAT PUMP UNIT (FC-1001, FC-6001 AND HP-1001, HP-6001):

RUN CONDITIONS:

UNIT SHALL MAINTAIN A 90°F (ADJ) COOLING SETPOINT AND 45°F (ADJ.) HEATING SETPOINT UNLESS SHUT DOWN ON SAFETIES.

COOLING SHALL BE ENABLED WHENEVER:

1. ZONE TEMPERATURE IS ABOVE COOLING SETPOINT.

HEATING SHALL BE ENABLED WHENEVER:

1. ZONE TEMPERATURE IS BELOW HEATING SETPOINT.
2. COOLING IS NOT ACTIVE.

SPLIT SYSTEM HEAT PUMP UNIT (BCU-3001 AND HP-3008):

RUN CONDITIONS:

UNIT SHALL MAINTAIN A 86°F (ADJ) COOLING SETPOINT AND 55°F (ADJ) HEATING SETPOINT IN THE ROOM UNLESS SHUTDOWN ON SAFETIES.

COOLING SHALL BE ENABLED WHENEVER:

1. ZONE TEMPERATURE IS ABOVE COOLING SETPOINT.

HEATING SHALL BE ENABLED WHENEVER:

1. ZONE TEMPERATURE IS BELOW HEATING SETPOINT.
2. COOLING IS NOT ACTIVE.

ECONOMIZER SHALL BE ENABLED WHENEVER:

1. OUTSIDE AIR TEMPERATURE IS LESS THAN 68°F (ADJ)
2. OUTSIDE AIR TEMPERATURE IS LESS THAN RETURN AIR TEMPERATURE
3. SUPPLY FAN STATUS IS ON.

WHEN THE ECONOMIZER CONTROL IS ACTIVE, THE OUTSIDE AIR DAMPER AND THE RETURN AIR DAMPER SHALL MODULATE AS REQUIRED TO MAINTAIN THE SPACE TEMPERATURE COOLING SETPOINT. WHEN THE ECONOMIZER CONTROL IS INACTIVE OR WHEN THE UNIT IS OFF, THE OUTSIDE AIR DAMPER SHALL BE AT ITS CLOSED POSITION. REFER TO THE EQUIPMENT MANUFACTURER'S INSTALLATION MANUAL FOR THE EXACT ECONOMIZER CONTROL SEQUENCE.

THE SPECIFIED UNIT IS EQUIPPED WITH FACTORY INSTALLED LEAK DETECTION SYSTEM TO DETECT A RELEASE OF A2L REFRIGERANTS AND SHALL BE CAPABLE OF AUTOMATICALLY SHUTTING DOWN THE SYSTEM IN THE EVENT OF A LEAK, IN ACCORDANCE WITH ASHRAE 15/34 REQUIREMENTS. REFER TO THE EQUIPMENT MANUFACTURER'S INSTALLATION MANUAL FOR THE EXACT SHUTDOWN SEQUENCE.

MAKE UP AIR UNIT (MAU-3001 & 3002)

RUN CONDITIONS - INTERLOCKED:

THE MAKE-UP AIR UNIT SHALL RUN CONTINUOUSLY AND SHALL BE INTERLOCKED WITH THE EXHAUST FAN IN THE ROOM UNLESS SHUT DOWN ON SAFETIES. ACTIVATION OF THE EMERGENCY SHUT-OFF SWITCH OUTSIDE CHEM 300-105 SHALL SHUT DOWN MAU-3001/EF-3003. ACTIVATION OF THE EMERGENCY SHUT-OFF SWITCH OUTSIDE CHEM 300-104 SHALL SHUT DOWN MAU-3002/EF-3006.

UNIT SHALL RUN CONTINUOUSLY TO MAINTAIN THE REQUIRED VENTILATION AIR IN THE ROOM. WHEN SPACE TEMPERATURE DROPS BELOW 55°F (ADJUSTABLE), THE UNIT SHALL INITIATE AND MODULATE ITS ELECTRIC HEATING TO MAINTAIN A ROOM TEMPERATURE SETPOINT OF 55°F (ADJUSTABLE) AND ABOVE. WHEN SPACE TEMPERATURE RISES TO 58°F (ADJ) AND ABOVE, UNIT ELECTRIC HEATING SHALL BE DISABLED. AN EMERGENCY SHUT-OFF SWITCH OUTSIDE THE ROOM SHALL BE ABLE TO SHUT OFF THE MAKE-UP AIR UNIT AND ITS EXHAUST FAN IN THE ROOM.

ENERGY RECOVERY UNIT (ERU-3001)

UNIT SHALL RUN CONTINUOUSLY UNLESS SHUT DOWN ON SAFETIES.

UNIT SHALL RUN CONTINUOUSLY TO MAINTAIN THE REQUIRED VENTILATION AIR IN THE ROOM. THE ELECTRIC HEATER IS CONTROLLED AND TURNED ON AS REQUIRED TO MAINTAIN THE SUPPLY AIR TEMPERATURE SET POINT OF 65°F (ADJ.). THE ELECTRIC HEATER WILL BE LOCKED OUT WHEN THE OUTSIDE AIR IS MORE THAN 75°F (ADJ.). THE UNIT CONTROLLER WILL RESET THE SUPPLY TEMPERATURE SETPOINT TO MAINTAIN THE RETURN TEMPERATURE SETPOINT OF 55°F (ADJ.). THE ECONOMIZER IS CONTROLLED TO MAINTAIN THE SUPPLY TEMPERATURE SETPOINT, AND IT WILL BE USED AS THE FIRST COOLING STAGE.

THE UNIT CONTROLLER PROVIDES CONTROL OF TEMPERATURE AND VENTILATION, AS WELL AS UNIT STATUS, COMPONENT SAFETIES, ALARM, FROST CONTROL, AND DIAGNOSTIC INFORMATION. THE UNIT CONTROLLER SHALL MAINTAIN A CONSTANT SUPPLY TEMPERATURE SETPOINT. THE OUTSIDE AIR HEAT EXCHANGER FACE AND BYPASS DAMPERS SHALL MODULATE TO MAINTAIN ITS LEAVING EXHAUST AIR TEMPERATURE ABOVE THE DEFROST SETPOINT OF 36°F (ADJUSTABLE). REFER TO THE MANUFACTURER'S INSTALLATION MANUAL FOR THE EXACT UNIT VENTILATION AIR, TEMPERATURE, AND FROST CONTROL SEQUENCE.

UPON DETECTION OF SMOKE BY THE DUCT SMOKE DETECTOR, THE SMOKE DETECTOR SHALL SEND A SIGNAL TO THE UNIT CONTROLLER TO IMMEDIATELY SHUT DOWN THE UNIT.

IF THE SUPPLY DUCT STATIC PRESSURE RISES ABOVE THE SWITCH SETPOINT (2" W.C. ADJUSTABLE), THE DIFFERENTIAL PRESSURE SWITCH SHALL SIGNAL THE UNIT CONTROLLER TO SHUT DOWN THE UNIT IMMEDIATELY.

UNIT DAMPERS SHALL CLOSE WHEN THE UNIT IS DISABLED.

DEDICATED OUTSIDE AIR UNIT (DOAS-3001)

RUN CONDITIONS:

UNIT SHALL RUN CONTINUOUSLY DURING OCCUPIED HOURS TO MAINTAIN THE REQUIRED VENTILATION AIR IN THE ROOM UNLESS SHUT DOWN ON SAFETIES.

UNIT MECHANICAL COOLING AND HEAT PUMP SHALL ACTIVATE AND MODULATE AS REQUIRED DURING OCCUPIED HOURS TO MAINTAIN A 72F (ADJ.) LEAVING AIR TEMPERATURE DURING WINTER WHEN THE SPACE IS CALLING FOR HEATING, AND A 55F (ADJ.) LEAVING AIR TEMPERATURE DURING SUMMER WHEN THE SPACE IS CALLING FOR COOLING. UNIT DAMPERS SHALL CLOSE WHEN THE UNIT IS DISABLED.

HEAT PUMP HEATING SHALL BE ENABLED WHENEVER THE SPACE IS CALLING FOR THE HEATING AND COOLING IS NOT ACTIVE. ELECTRIC HEATING SHALL BE ENABLED WHENEVER THE HEAT PUMP ENTERS DEFROST MODE OR WHEN THE SUPPLY AIR TEMPERATURE IS 70F (ADJ.) OR BELOW.

REFER TO MANUFACTURER'S INSTALLATION MANUAL FOR COOLING AND HEATING, OCCUPIED AND UNOCCUPIED MODE, AND REFRIGERANT LEAK DETECTION CONTROL SEQUENCE.

PACKAGED HEAT PUMP UNIT (PHP-1001):

RUN CONDITIONS:

UNIT SHALL RUN CONTINUOUSLY AND SHALL MAINTAIN A 90°F (ADJ) COOLING SETPOINT AND 50°F (ADJ) HEATING SETPOINT IN THE ROOM UNLESS SHUT DOWN ON SAFETIES. WHEN MECHANICAL COOLING OR HEATING IS DISABLED, FAN SHALL CONTINUE TO RUN TO MAINTAIN A MINIMUM 6 ACH IN THE SPACE.

COOLING SHALL BE ENABLED WHENEVER:

1. ZONE TEMPERATURE IS ABOVE COOLING SETPOINT.

HEAT PUMP HEATING SHALL BE ENABLED WHENEVER:

1. ZONE TEMPERATURE IS BELOW HEATING SETPOINT.
2. COOLING IS NOT ACTIVE.

ELECTRIC HEATING SHALL BE ENABLED WHENEVER THE HEAT PUMP GOES INTO DEFROST OR WHEN THE SUPPLY AIR TEMPERATURE IS 50°F (ADJ) AND BELOW.

WHEN THE INCOMING OUTSIDE AIR TEMPERATURE TO THE UNIT IS 65°F (ADJ.) OR LOWER, MECHANICAL COOLING SHALL BE DISABLED TO ALLOW THE UNIT TO PROVIDE FREE COOLING TO SPACE. WHEN INCOMING OUTSIDE AIR TEMPERATURE IS 70°F (ADJ.) AND ABOVE OR WHEN THE SPACE TEMPERATURE CONTINUES TO RISE ABOVE THE SPACE TEMPERATURE SETPOINT, UNIT SHALL PROVIDE MECHANICAL COOLING TO MAINTAIN THE COOLING SETPOINT IN SPACE. WHEN THE UNIT IS OFF OR INACTIVE, THE OUTSIDE AIR DAMPER SHALL BE AT ITS CLOSED POSITION. AN ALARM SIGNAL SHALL BE SENT TO SCADA INDICATING THAT THE UNIT IS OFF OR INACTIVE. REFER TO THE EQUIPMENT MANUFACTURER'S INSTALLATION MANUAL FOR THE EXACT FREE COOLING AND SPACE TEMPERATURE CONTROL SEQUENCE.

THE SPECIFIED UNIT IS EQUIPPED WITH LEAK DETECTION SENSORS TO DETECT A RELEASE OF A2L REFRIGERANTS AND SHALL BE CAPABLE OF AUTOMATICALLY SHUTTING DOWN THE SYSTEM IN THE EVENT OF A LEAK, IN ACCORDANCE WITH ASHRAE 15/34 REQUIREMENTS. REFER TO THE EQUIPMENT MANUFACTURER'S INSTALLATION MANUAL FOR THE EXACT SHUTDOWN SEQUENCE.

GENERAL NOTES:

THE CONTRACTOR IS RESPONSIBLE FOR PROVIDING ALL REQUIRED RELAYS, SENSORS, CONTROLLERS, CONTROL COMPONENTS, AND ANY OTHER NECESSARY DEVICES TO ENSURE PROPER OPERATION OF THE EQUIPMENT AS DESCRIBED IN THE SEQUENCE OF OPERATION, REGARDLESS OF WHETHER ALL CONTROL COMPINENTS OR SENSORS ARE SHOWN OR DESCRIBED ON THE PLANS.

ISSUE	DATE	DESCRIPTION
A	09/2026	ISSUED FOR BIDS

PROJECT MANAGER	PIERRE KWAN
CIVIL	J. MEGRDITCHIAN
STRUCTURAL	P. LINDBLOM
ARCHITECTURAL	V. YANEZ
PROCESS	P. KWAN
MECHANICAL	K. CHEUNG
ELECTRICAL	R. MCCOMB
INSTRUMENTATION	D. BEST
PROJECT NUMBER	10193663

REGISTERED PROFESSIONAL ENGINEER 67096PE DIGITALLY SIGNED OREGON JULY 11, 2025 KARL M. SUTTON
EXPIRES 6/30/2028

CITY OF ASHLAND
Ashland, Oregon

City of Ashland

Ashland Creek
Water Treatment Plant

2026

OPERATIONS BUILDING
MECHANICAL
SEQUENCE OF OPERATIONS

0 1" 2"

FILENAME 10193663-AWTP-000_M.rte
SCALE 12" = 1'-0"

SHEET
000M604

Autodesk Docs://10193663_Ashland_WTP_Final_Design_2024/10193663-AWTP-000_M.rvt
9/22/2026 4:33:24 PM

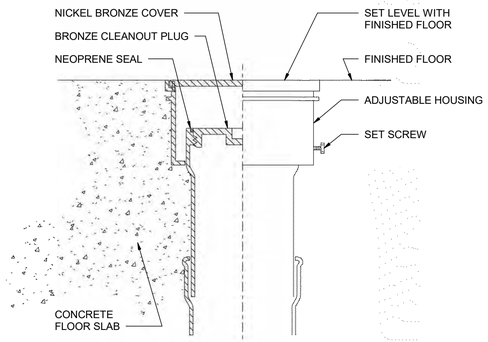

1 FLOOR CLEANOUT DETAIL
NOT TO SCALE

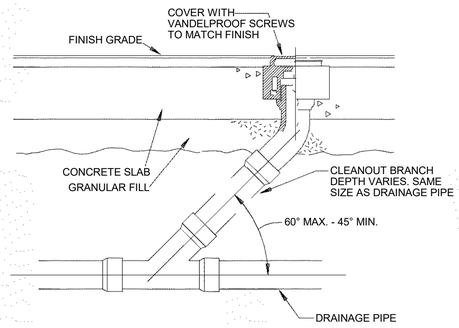

2 BELOW FLOOR CLEANOUT DETAIL
NOT TO SCALE

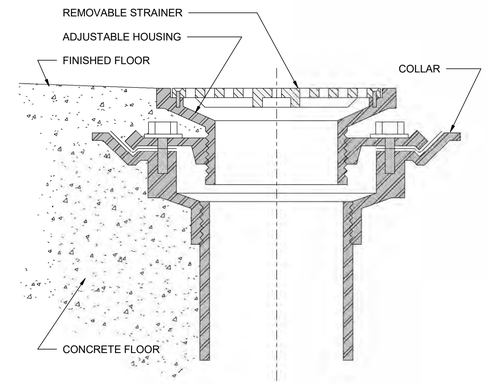

3 FLOOR DRAIN DETAIL
NOT TO SCALE

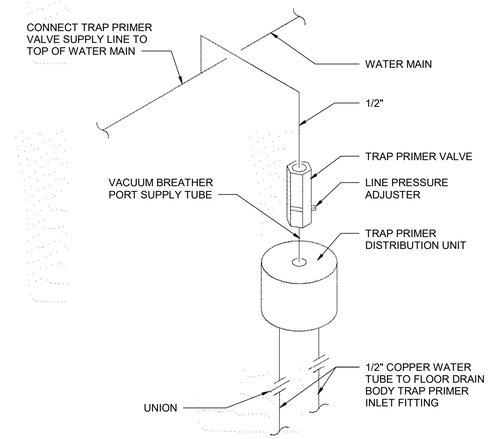

NOTES:
1. INSTALL TRAP PRIMER BEHIND WALL ACCESS PANEL.
2. SUPPORT PIPE AS REQUIRED ON WALL.

4 TRAP PRIMER PIPING DETAIL
NOT TO SCALE

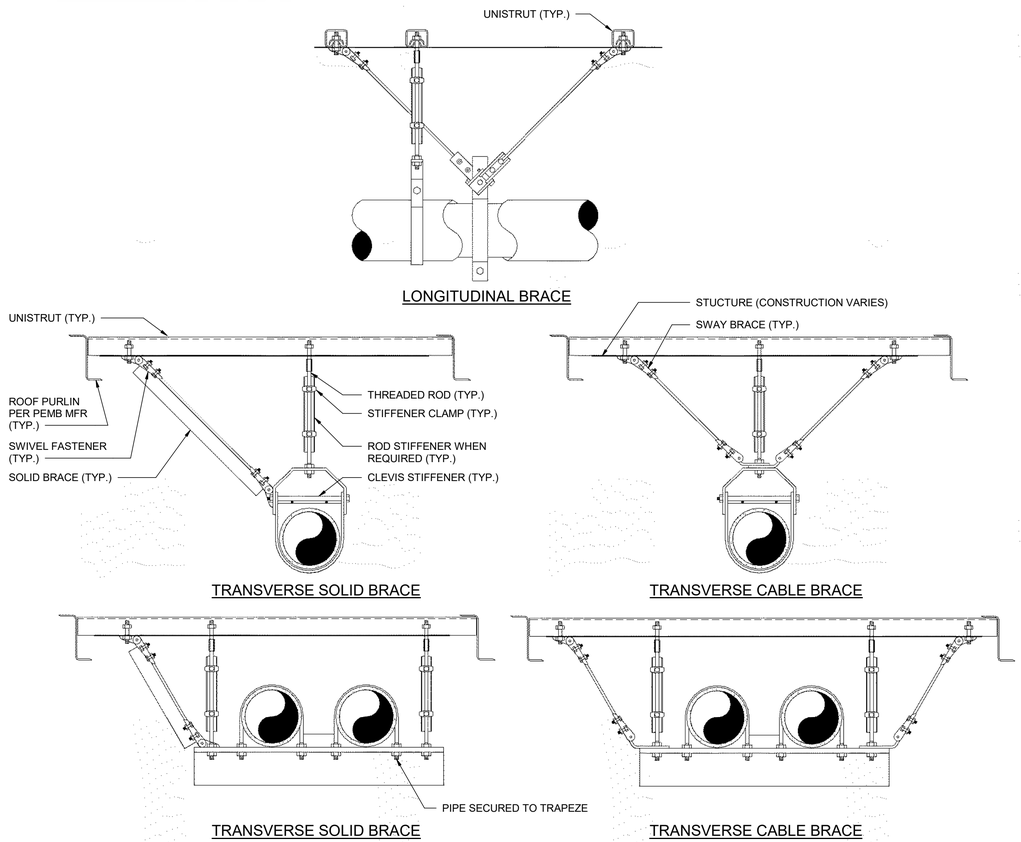

NOTES:
1. GENERAL REQUIREMENTS FOR TRANSVERSE AND LONGITUDINAL BRACING OF PIPES ARE SHOWN.
2. DETAIL IS DIAGRAMMATIC. THE CONTRACTOR SHALL PROVIDE SEISMIC BRACING IN COMPLIANCE WITH SMACNA AND APPLICABLE BUILDING CODE REQUIREMENTS.

5 SEISMIC BRACING OF SUSPENDED PLUMBING PIPING DETAIL
NOT TO SCALE

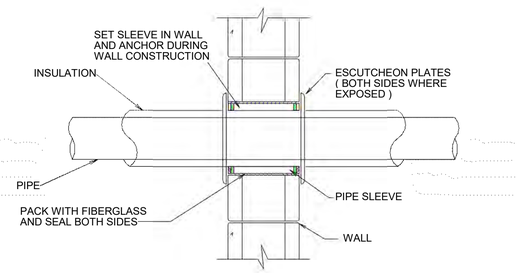

6 PIPE SLEEVE THROUGH EXTERIOR WALL DETAIL
NOT TO SCALE

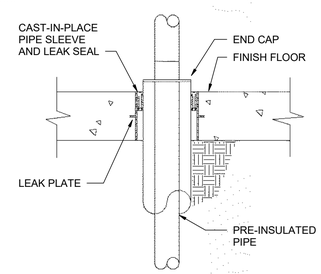

NOTE:
FLOOR PENETRATION BY A PRE-INSULATED PIPE SHOWN; PENETRATIONS BY NON-PRE-INSULATED PIPES, SIMILAR.

7 PIPE THROUGH FLOOR DETAIL
NOT TO SCALE

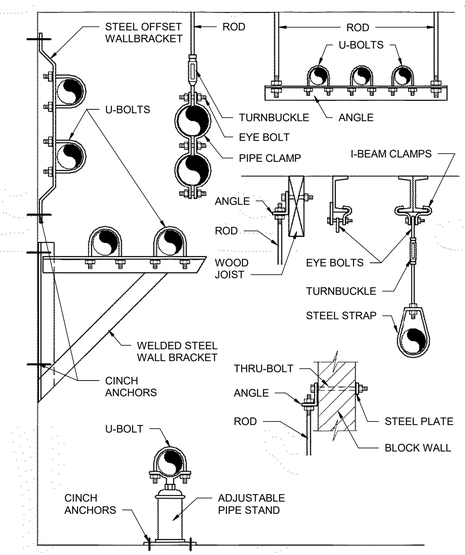

8 TYPICAL PIPE SUPPORTS DETAIL
NOT TO SCALE

Autodesk Docs://10193663_Ashland_WTP_Final_Design_2024/10193663-AWTP-000_M.rvt
9/22/2026 4:33:27 PM

ISSUE	DATE	DESCRIPTION
A	09/2026	ISSUED FOR BIDS

PROJECT MANAGER	PIERRE KWAN
CIVIL	J. MEGRDITCHIAN
STRUCTURAL	P. LINDBLOM
ARCHITECTURAL	V. YANEZ
PROCESS	P. KWAN
MECHANICAL	K. CHEUNG
ELECTRICAL	R. MCCOMB
INSTRUMENTATION	D. BEST
PROJECT NUMBER	10193663

REGISTERED PROFESSIONAL ENGINEER 67096PE DIGITALLY SIGNED OREGON JULY 11, 2024 KARL M. SUTTON
EXPIRES 6/30/2028

CITY OF ASHLAND
Ashland, Oregon

City of Ashland

Ashland Creek Water Treatment Plant

2026

GENERAL PLUMBING DETAILS 1

0 1" 2"

FILENAME 10193663-AWTP-000_M.rte
SCALE As indicated
SHEET **000P501**

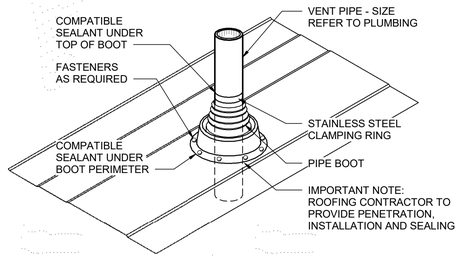

1 VENT THROUGH ROOF DETAIL
NOT TO SCALE

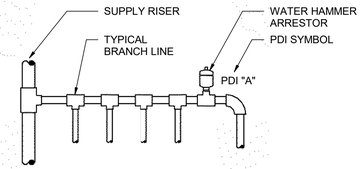

NOTES:

1. PREFERRED INSTALL WATER HAMMER ARRESTORS AT THE END OF BRANCH LINE BETWEEN THE LAST TWO FIXTURES SERVED.
2. ONE WATER HAMMER ARRESTOR PER 20-FT LINE, AND ANOTHER FOR BRANCHES OVER 20-FT IN LENGTH.
3. THE SUM OF FIXTURE UNIT RATING OF UNITS OVER 20-FT IN LENGTH SHALL BE EQUAL TO OR GREATER THAN THE DEMAND OF THE BRANCHES.
4. REFER TO MANUFACTURER'S INSTALLATION INSTRUCTIONS FOR SPECIFIC REQUIREMENTS.
5. WATER HAMMER ARRESTOR LOCATIONS AND QUANTITIES SHOWN ARE APPROXIMATE. FINAL PLACEMENT SHALL BE IN ACCORDANCE WITH THE MANUFACTURER'S INSTALLATION REQUIREMENTS. LOCATE WATER ARRESTOR AT A MAXIMUM 7'-0" ABOVE FLOOR.

WATER HAMMER ARRESTOR SCHEDULE

PDI SYMBOL	A	B	C	D	E	F
FIXTURE UNIT RATING	1-11	12-32	33-60	61-113	114-154	155-330

2 WATER HAMMER ARRESTOR INSTALLATION DETAIL
NOT TO SCALE

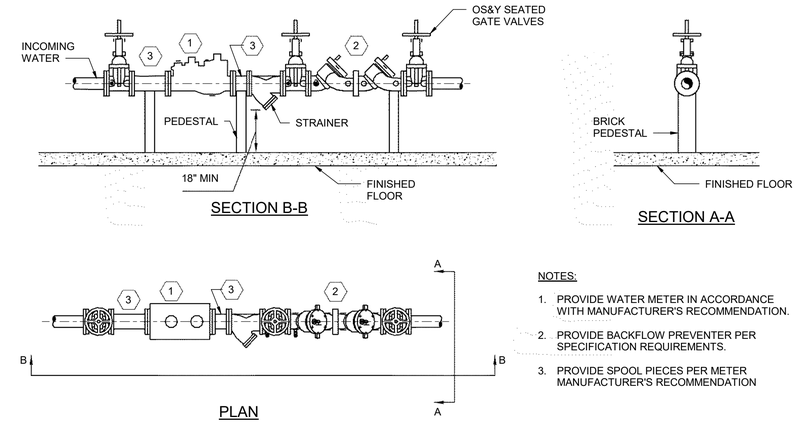

NOTES:

1. PROVIDE WATER METER IN ACCORDANCE WITH MANUFACTURER'S RECOMMENDATION.
2. PROVIDE BACKFLOW PREVENTER PER SPECIFICATION REQUIREMENTS.
3. PROVIDE SPOOL PIECES PER METER MANUFACTURER'S RECOMMENDATION

3 WATER METER AND BACKFLOW PREVENTER DETAIL
NOT TO SCALE

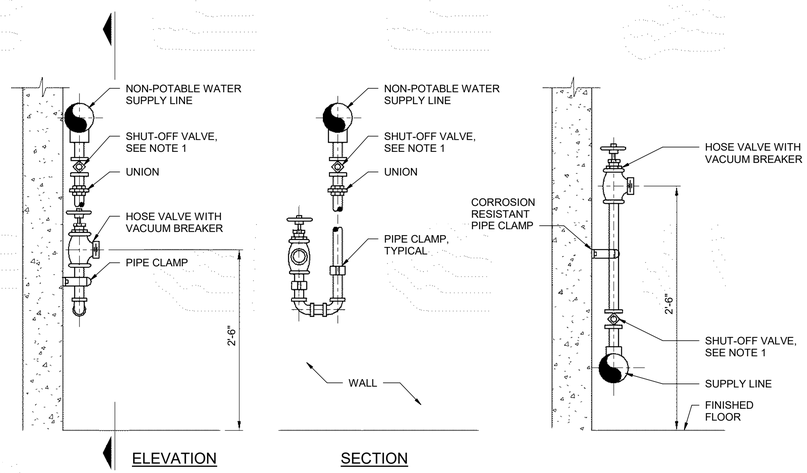

NOTES:

1. ALL HOSE VALVES AND HOSE BIBBS TO BE CONTROLLED BY INDIVIDUAL SHUT-OFF BALL VALVES EXCEPT WHERE INDIVIDUALLY CONTROLLED BY BRANCH MAIN SERVES HOSE BIBBS ONLY.
2. FOR LOCATION SEE DRAWINGS.
3. PROVIDE WARNING SIGN, WHEN USED FOR NON-POTABLE WATER.
4. PROVIDE ADDITIONAL PIPE CLAMPS AS REQUIRED TO SECURE PIPING TO WALL / RAILING.

4 HOSE VALVE INSTALLATION DETAIL
NOT TO SCALE

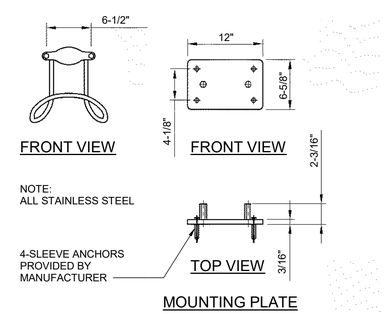

5 WALL-MOUNTED HOSE RACK DETAIL
NOT TO SCALE

ISSUE	DATE	DESCRIPTION
A	09/2026	ISSUED FOR BIDS

PROJECT MANAGER	PIERRE KWAN
CIVIL	J. MEGRDITCHIAN
STRUCTURAL	P. LINDBLOM
ARCHITECTURAL	V. YANEZ
PROCESS	P. KWAN
MECHANICAL	K. CHEUNG
ELECTRICAL	R. MCCOMB
INSTRUMENTATION	D. BEST
PROJECT NUMBER	10193663

REGISTERED PROFESSIONAL ENGINEER 67096PE DIGITALLY SIGNED OREGON JULY 11, 2025 KARL M. SUTTON
EXPIRES 6/30/2028

CITY OF ASHLAND
Ashland, Oregon

City of Ashland

Ashland Creek Water Treatment Plant

2026

GENERAL PLUMBING DETAILS 2

0 1" 2"

FILENAME 10193663-AWTP-000_M.rte
SCALE 12" = 1'-0"
SHEET **000P502**

Autodesk Docs://10193663_Ashland_WTP_Final_Design_2024/10193663-AWTP-000_M.rvt
9/22/2026 4:33:28 PM

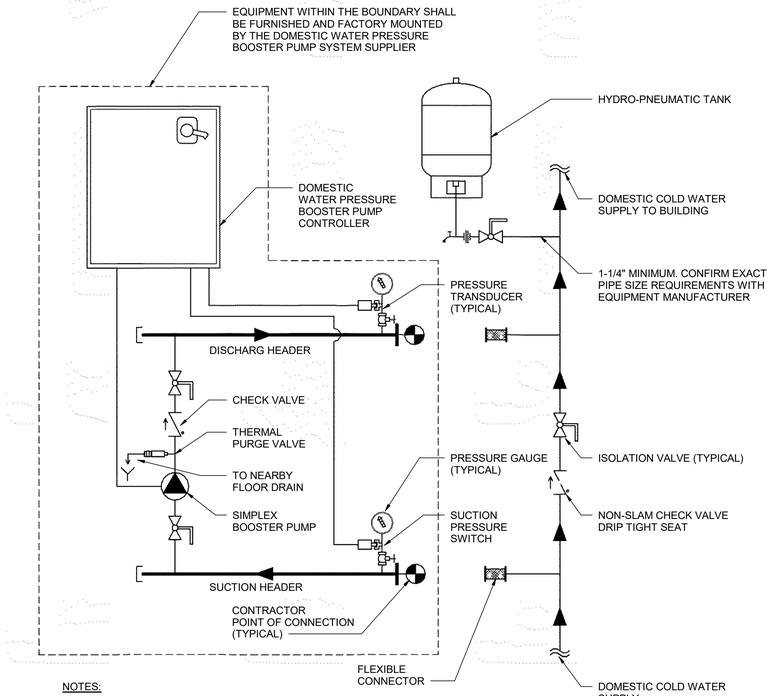

NOTES:

1. DRAWING IS DIAGRAMMATIC. INSTALL DOMESTIC WATER PRESSURE BOOSTER AND PIPING SYSTEM PER MANUFACTURER'S INSTALLATION INSTRUCTIONS.

1 - DOMESTIC WATER BOOSTER PUMPING SYSTEM PIPING DIAGRAM
NOT TO SCALE

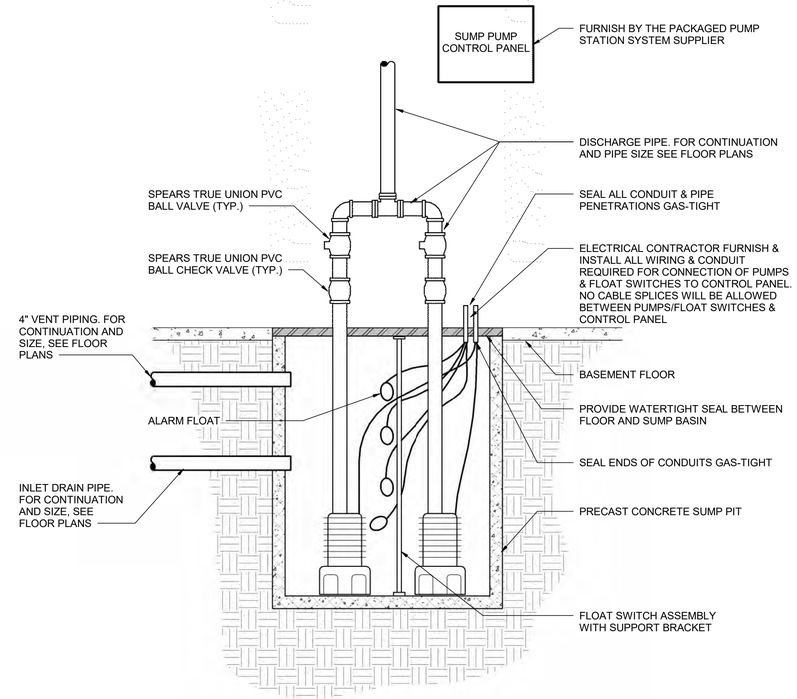

NOTES:

1. DRAWING IS DIAGRAMMATIC. CONTRACTOR TO INSTALL ALL WIRING, RAIL REMOVAL SYSTEM, FLOAT SWITCH ASSEMBLY, ETC. PER MANUFACTURER'S INSTALLATION INSTRUCTIONS.
2. INLET DRAIN PIPE INVERT TO BOTTOM OF SUMP PIT SHALL BE MINIMUM 4'-0". VERIFY REQUIREMENTS WITH EQUIPMENT MANUFACTURER.
3. SUMP PUMP SWITCHING ELEVATIONS (VERIFY FINAL ELEVATION REQUIREMENTS WITH EQUIPMENT MANUFACTURER):
   - HIGH LEVEL ALARM (FLOAT SWITCH 4): SET AT 6" (ADJ.) BELOW BOTTOM OF INLET DRAIN PIPE.
   - LAG START (FLOAT SWITCH 3): SET AT 1'-0" (ADJ.) ABOVE FLOAT SWITCH 2.
   - LEAD START (FLOAT SWITCH 2): SET AT 3'-0" (ADJ.) ABOVE FLOAT SWITCH 1.
   - STOP (FLOAT SWITCH 1): STOP LEAD AND LAG PUMPS. SET AT MINIMUM REQUIRED PUMP SUBMERGENCE DEPTH.
4. PROVIDE GAS TIGHT STEEL COVER.
5. THIS DETAIL SHOWS GENERAL PIPING ARRANGEMENT. REFER TO MANUFACTURER'S INSTALLATION INSTRUCTIONS FOR SPECIFIC REQUIREMENTS.
6. COORDINATE ROUTING OF DISCHARGE PIPING TO ALLOW FOR REMOVAL OF PUMPS. POWER CABLES AND ANY REQUIRED SENSOR CABLES SHALL BE LONG ENOUGH TO ALLOW FOR REMOVAL OF PUMPS FOR INSPECTION.
7. PENETRATIONS THROUGH SUMP COVER AS REQUIRED MUST BE SEALED FOR AIR TIGHTNESS.

2 - SUMP PUMP DETAIL
NOT TO SCALE

ISSUE	DATE	DESCRIPTION
A	09/2026	ISSUED FOR BIDS

PROJECT MANAGER	PIERRE KWAN
CIVIL	J. MEGRDITCHIAN
STRUCTURAL	P. LINDBLOM
ARCHITECTURAL	V. YANEZ
PROCESS	P. KWAN
MECHANICAL	K. CHEUNG
ELECTRICAL	R. MCCOMB
INSTRUMENTATION	D. BEST
PROJECT NUMBER	10193663

REGISTERED PROFESSIONAL ENGINEER 67096PE DIGITALLY SIGNED OREGON JULY 11, 2025 KARL M. SUTTON
EXPIRES 6/30/2028

CITY OF ASHLAND
Ashland, Oregon

City of Ashland
Ashland Creek Water Treatment Plant
2026

GENERAL PLUMBING DETAILS 3

0 1" 2"

FILENAME 10193663-AWTP-000_M.rte
SCALE 12" = 1'-0"
SHEET 000P503

Autodesk Docs://10193663_Ashland_WTP_Final_Design_2024/10193663-AWTP-000_M.rvt
9/22/2026 4:33:30 PM

WC-1 WATER CLOSET	FIXTURE: ADA COMPLIANT, FLOOR SET, VITREOUS CHINA, SIPHON JET WATER CLOSET WITH ELONGATED BOWL, 1-1/2" TOP SPUD, 2-1/8" TRAPWAY, AND BOLT CAPS. COLOR: WHITE. 1.6 GALLONS PER FLUSH. FLUSH VALVE: EXPOSED, DIAPHRAGM TYPE, CHROME PLATED WITH DUAL FILTERED BY-PASS, SPUD COUPLING AND FLANGE FOR 1-1/2" TOP SPUD, ADA COMPLIANT METAL OSCILLATING HANDLE, ADJUSTABLE TAILPIECE, VACUUM BREAKER FLUSH CONNECTION, AND 1" IPS SCREWDRIVER BAK-CHEK ANGLE STOP. 1.28 GALLONS PER FLUSH. SEAT: MOLDED PLASTIC, ELONGATED, SELF SUSTAINING CHECK HINGES, OPEN FRONT WITHOUT COVER. COLOR: WHITE.	FIXTURE: AMERICAN STANDARD "MADERA" 3043.001 FLUSH VALVE: SLOAN "ROYAL" MODEL #111 SEAT: CHURCH 295SSCT	WASTE: 4"	VENT: 2"	CW: 1"	HW: -	
L-1 LAVATORY	FIXTURE: OVAL COUNTERTOP, VITREOUS CHINA LAVATORY WITH FRONT OVERFLOW, SELF-RIMMING, AND FAUCET LEDGE. OVERALL DIMENSIONS: 20-3/8"x17-3/8"x5-5/8" FAUCET: SINGLE LEVER, DECK MOUNTED WITH 4" FIXED CENTERS, CHROME PLATED. RIGID CAST BRASS SPOUT, 4-5/8" CENTER-TO-CENTER. 0.5 GPM VANDAL- PROOF, PRESSURE COMPENSATING, NON-AERATING, LAMINAR SPRAY OUTLET. CERAMIC MIXING CARTRIDGE - INCLUDES THERMOSTATIC SCALD PROTECTION; CARTRIDGE INCLUDES INTEGRAL INLET CHECK VALVES.	FIXTURE: AMERICAN STANDARD "AQUALYN" 0476.028C FAUCET: CHICAGO FAUCET 420-T41E2805ABCP	WASTE: 2"	VENT: 2"	CW: 1/2"	HW: 1/2"	
L-2 LAVATORY	FIXTURE: WALL MOUNT, VITREOUS CHINA WITH HANGER AND OVERFLOW, ADA, P-TRAP. FAUCET: POLISHED CHROME PLATED FAUCET WITH INTEGRAL SPOUT, CERAMIC DISC CARTRIDGE AND TEMPERATURE LIMIT STOP, 0.5 GPM AERATOR, ADA. LEAD COMPLIANT.	FIXTURE: KOHLER K-2005 FAUCET: ZURN Z7443-XL	WASTE: 2"	VENT: 2"	CW: 1/2"	HW: 1/2"	
SH-1 SHOWER	FIXTURE: ADA COMPLIANT TRANSFER SHOWER, MOLDED, FOUR PIECE GELCOAT/FIBERGLASS SHOWER MODULE WITH SMOOTH WALL FINISH, INTEGRAL FULL WOOD BACKING. COLOR: WHITE OVERALL DIMENSIONS: 63" X 32-1/2" X 81-1/4" TALL. INCLUDE GRAB BAR, FOLDING SEAT, SHOWER MIXING VALVE, PRESSURE BALANCED, LEVER HANDLE, PRE-PLUMBED TO SUPPLY ELBOW, SOAP DISH, AND WEIGHTED CURTAIN AND ROD. MAXIMUM FLOW RATE: 1.8 GPM	FIXTURE: BEST BATH 4LSS631A75B	WASTE: 2"	VENT: 2"	CW: 1/2"	HW: 1/2"	
S-1 SINK	FIXTURE: DOUBLE BOWL, SELF RIMMING, COUNTER MOUNTED, 18 GAUGE TYPE 304 (18-8) STAINLESS STEEL WITH FAUCET LEDGE, SOUND DEADENING UNDERCOATING, PUNCHED TO MATCH FAUCET. DRAIN: CRUMB CUP STRAINERS, ADA COMPLIANT. OVERALL DIMENSION 33"x19-1/2"x5-1/2" DEEP. FAUCET: BELOW DECK MOUNTED SINK FAUCET WITH 8" FIXED CENTERS, CHROME PLATED FINISH. RESTRICTED SWING GOOSENECK SPOUT, 8" CENTER-TO-CENTER. 4" BLADE HANDLES WITH COLOR INDEX BUTTONS. CERAMIC 1/4 TURN CARTRIDGE, 1/2 SUPPLY INLETS AND COUPLING NUT. 1.5 GPM AERATOR.	FIXTURE: ELKAY LRAD331955 FAUCET: CHICAGO FAUCET 786-GR8E35V317XKAB	WASTE: 2"	VENT: 2"	CW: 1/2"	HW: 1/2"	
S-2 SINK	FIXTURE: SEAMLESS DIE-DRAWN CONSTRUCTION OF TYPE 304 STAINLESS STEEL SINGLE COMPARTMENT SINK. FULLY COATED UNDERSIDE INSULATED FOR SOUND AND REDUCES CONDENSATION. OVERALL DIMENSIONS: 33"x21"x7" FAUCET: LABORATORY MIXING FAUCET, DECK MOUNTED, 6" SWING GOOSENECK WITH REMOVABLE TEN SERRATION HOSE END, 3/4" GOOSENECK, FORGED BRASS FOUR ARM HANDLE, FORGED BRASS VALVE BODY	FIXTURE: JUST S-2133-B-GR FAUCET: WATERSAVER L412	WASTE: 2"	VENT: 2"	CW: 1/2"	HW: 1/2"	
MS-1 MOP SINK	ONE PIECE PRECAST TERRAZZO MOP SERVICE BASIN WITH FACTORY INSTALLED DRAIN WITH COMBINATION DOME STRAINER AND LINT BASKET FOR 3" CAULK JOINT. STAINLESS STEEL CAPS ON CURBS. CAULK ALL EDGES WHERE BASIN MEETS WALL WITH COLOR MATCHED SILICONE SEALANT. SIZE: 24"X24"X12". FAUCET: EXPOSED WALL MOUNT-MOUNT UTILITY FAUCET WITH CAST BRASS BODY AND INTEGRAL SUPPLY STOPS. CAST BRASS SPOUT WITH BUCKET HOOK, TOP BRACE, VANDAL RESISTANT METAL LEVER HANDLES, VACUUM BREAKER, AND 1/4 TURN WASHERLESS CERAMIC DISC VALVE CARTRIDGES. CHROME PLATED FINISH. MAXIMUM FLOW: 2.5 GPM.	FIXTURE: FIAT TSB-1000 FAUCET: AMERICAN STANDARD 8344.012 MOP HANGER BRACKET: FIAT #889-CC HOSE/BRACKET COMBO: FIAT #832-AA WALL GUARDS: FIAT #MSG 2424	WASTE: 3"	VENT: 2"	CW: 3/4"	HW: 3/4"	
BF-1 BOTTLE FILLER	RECESSED MOUNTED HYDRATION BOTTLE FILLER. ELECTRIC SENSOR FOR TOUCH FREE HYGIENIC OPERATION, 0.5 GPM FLOW RATE, 110V, 60 HZ, AND 0.1 AMP DRAW.	FIXTURE: HAWS 2000S	WASTE: 1-1/4"	VENT: -	CW: 1/2"	HW: -	

IB-1 OUTLET BOX	FIXTURE: OUTLET BOX FOR ICE MAKER. BOX MATERIAL: WHITE POWDER COATED ON COLLED ROLLED STEEL FINISH. VALVE AND DRAIN: LEAD FREE QUARTER-TURN ARRESTER VALVE KIT; INCLUDES VALVE, LOCKNUTS, AND O-RINGS.	FIXTURE: GUY GRAY MDWB1AB	WASTE: -	VENT: -	CW: 1/2"	HW: -	
ESEW-1 EMERGENCY SHOWER/ EYE FACE WASH	SAFETY STATION WITH EYE/FACE WASH AND PLASTIC SHOWER HEAD. SHOWER HEAD: 10" DIAMETER ORANGE ABS PLASTIC WITH 20 GPM FLOW CONTROL. SHOWER VALVE: 1" IPS CHROME PLATED BRASS STAY-OPEN BALL VALVE WITH STAINLESS STEEL ACTUATING ARM AND 47-1/2" STAINLESS STEEL PULL ROD. SPRAY HEAD ASSEMBLY: FOUR SPRAY HEADS; EACH WITH FLIP TOP DUST COVER, INTERNAL FLOW CONTROL AND FILTER. EYE/FACE WASH BOWL: 11-1/2" STAINLESS STEEL. EYE/FACE WASH VALVE: 1/2" IPS CHROME PLATED STAY-OPEN BALL VALVE WITH FLAG HANDLE. SUPPLY: 1-1/4" NPT FEMALE TOP AND SIDE INLET. WASTE: 1-1/4" NPT FEMALE OUTLET. ANSI COMPLIANT IDENTIFICATION SIGN. THERMOSTATIC MIXING VALVE AS REQUIRED BY ANSI Z358.1. PROVIDE FLOW SWITCH EMERGENCY ALARM SYSTEM, 120 VAC. CONNECT TO SCADA SYSTEM FOR ALARM MONITORING.	FIXTURE: GUARDIAN G1909 MIXING VALVE (MV-2): GUARDIAN G3800LF FLOW SWITCH: GUARDIAN AP275-705C1D2	WASTE: -	VENT: -	CW: -	HW: -	
ESEW-2 EMERGENCY SHOWER/ EYE FACE WASH	FREEZE RESISTANT EMERGENCY SHOWER FOR HORIZONTAL MOUNTING. VALVE AND SUPPLY LINE ARE LOCATED BEHIND WALL IN HEATED SPACE. 10" DIAMETER ABS PLASTIC SHOWER HEAD; 1" IPS CHROME PLATED BRASS STAY-OPEN BALL VALVE. VALVE HANDLE IS MOUNTED ON EXTENSION ROD THAT PROJECTS THROUGH WALL. FREEZE RESISTANT EYE/FACE WASH FOR WALL MOUNTING. VALVE AND SUPPLY LINE ARE LOCATED BEHIND WALL IN HEATED SPACE. SELF-DRAINING VALVE. 11-1/8" DIAMETER STAINLESS STEEL BOWL; FOUR SPRAY HEADS WITH FLIP TOP DUST COVERS. 1/8" IPS CHROME PLATED BRASS THREE-WAY SELF DRAINING STAY-OPEN BALL VALVE. VALVE HANDLE IS MOUNTED ON EXTENSION ROD THAT PROJECTS THROUGH WALL. PROVIDE FLOW SWITCH EMERGENCY ALARM SYSTEM, 120 VAC. CONNECT TO SCADA SYSTEM FOR ALARM MONITORING. ANSI COMPLIANT IDENTIFICATION SIGN.	EM SHOWER: GUARDIAN GFR1205 EM EYE/FACE WASH: GUARDIAN GFR1724 MIXING VALVE (MV-3): GUARDIAN G6040 FLOW SWITCH: GUARDIAN AP275-705C1D2	WASTE: -	VENT: -	CW: -	HW: -	
ESEW-3 EMERGENCY SHOWER/ EYE FACE WASH	FREEZE PROTECTED 120 VAC CABLE HEATED COMBINATION SHOWER AND EYE/FACE WASH, ABS PLASTIC SHOWERHEAD AND 20 GPM FLOW CONTROL, 4 GPM FLOW CONTROL EYWASH BALL VALVES, AND AUTOMATIC THERMAL ACTUATOR FREEZE PROTECTION BLEED VALVE. SUPPLY: 1-1/4" NPT. THERMOSTATIC MIXING VALVE AS REQUIRED BY ANSI Z358.1 MIXING VALVE SHALL HAVE A MAXIMUM 5 PSI PRESSURE DROP AT 32 GPM. PROVIDE DOUBLE POLE, DOUBLE THROW FLOW SWITCH EMERGENCY ALARM SYSTEM, 120 VAC. CONNECT TO SCADA SYSTEM FOR ALARM MONITORING.	FIXTURE: HAWS 8317 CTFP MIXING VALVE (MV-4): HAWS 9202E FLOW SWITCH: HAWS 9001	WASTE: -	VENT: -	CW: -	HW: -	
RLU-1 RECESSED LABORATORY UNIT	RECESSED BARRIER FREE EYE/FACE WASH AND SHOWER SAFETY STATION WITH CEILING MOUNTED EXPOSED SHOWER HEAD AND DRAIN PAN. THERMOSTATIC MIXING VALVE TO BLEND HOT AND COLD WATER TO DELIVER TEPID WATER. VALVE SHALL HAVE A MAXIMUM OF 10 PSI DROP AT 28 GPM FLOW RATE. ANSI Z358.1-2014 COMPLIANCE. PROVIDE ELECTRIC LIGHT AND ALARM HORN. CONNECT TO SCADA SYSTEM FOR ALARM MONITORING.	FIXTURE: WATERSAVER: SSBF2150 MIXING VALVE (MV-5): WATERSAVER TM6040	WASTE: -	VENT: -	CW: -	HW: -	
FD-1 FLOOR DRAIN	DRAIN: CAST IRON FLOOR DRAIN BODY WITH ANCHOR FLANGE, REVERSIBLE CLAMPING COLLAR, SEEPAGE OPENINGS, 1/2" PRIMER TAP WITH PLUG, AND ADJUSTABLE 5" ROUND SATIN FINISH NICKEL BRONZE TOP.	FIXTURE: WADE 1100-1-A5	WASTE: -	VENT: -	CW: -	HW: -	
FD-2 FLOOR DRAIN	DRAIN: CAST IRON FLOOR DRAIN BODY WITH ANCHOR FLANGE, INTEGRAL CLAMPING COLLAR, SEEPAGE OPENINGS, 1/2" PRIMER TAP WITH PLUG, GRATE SUPPORTED BUCKET, AND 12" ROUND DUCTILE IRON HEAVY DUTY GRATE.	FIXTURE: WADE 1200-12-TD	WASTE: -	VENT: -	CW: -	HW: -	
FD-3 FLOOR DRAIN	DRAIN: SQUARE TOP DRAIN. DURA COATED CAST IRON BODY WITH BOTTOM OUTLET, SEEPAGE PAN AND COMBINATION MEMBRANE FLASHING CLAMP AND FRAME FOR HEAVY DUTY CAST IRON LOOSE SLOTTED DURESIST GRATE WITH SUSPENDED CAST IRON SEDIMENT BUCKET.	FIXTURE: ZURN Z610	WASTE: 4"	VENT: -	CW: -	HW: -	

RD-1 ROOF DRAIN AND OVERFLOW DRAIN	ROOF DRAIN AND OVERFLOW DRAIN UNIT WITH A 32" X 16" DECK TOP MOUNTING PLATE. 4-1/2" POLYETHYLENE DOMES.	FIXTURE: JAY R. SMITH 1830	WASTE: 3"	VENT: -	CW: -	HW: -	
DN-1 DOWNSPOUT NOZZLE	CAST BRONZE DOWNSPOUT NOZZLE.	FIXTURE: WADE W-3940	WASTE: 4"	VENT: -	CW: -	HW: -	
HB-1 HOSE BIBB	ANTI-SIPHON, VACUUM BREAKER PROTECTED HOSE BIBB.	FIXTURE: WOODFORD 24	WASTE: -	VENT: -	CW: 3/4"	HW: -	
WH-1 WALL HYDRANT	AUTOMATIC DRAINING, FREEZELESS WALL HYDRANT WITH HOSE CONNECTION ANTI-SIPHON VACUUM BREAKER.	FIXTURE: WOODFORD 65	WASTE: -	VENT: -	CW: 3/4"	HW: -	
MV-1 MIXING VALVE	MIXING VALVE SHALL BE OF THE THERMOSTATIC TYPE, BRONZE BODY CONSTRUCTION, LEAD FREE CERTIFIED AND ASSE 1017 APPROVED. PRESSURE DROP SHALL BE MAXIMUM 5 PSI AT 33 GPM. MIXING VALVE SHALL BE ABLE TO CONTROL TEMPERATURE AT 0.5 GPM WHEN PROPERLY INSTALLED IN A RE-CIRCULATION SYSTEM. 110 F SETPOINT.	FIXTURE: LEONARD TM-920B-LF-DT	WASTE: -	VENT: -	CW: -	HW: -	
RH-1 ROOF HYDRANT	FREEZELESS ROOF HYDRANT WITH HEAVY DUTY CAST IRON HEAD AND LOCKABLE LEVER HANDLE, SELF DRAINING WITH 1/8" NPT DRAINAGE PORT AND BACKFLOW PREVENTER.	FIXTURE: PRIER P-RH2	WASTE: -	VENT: -	CW: 3/4"	HW: -	
U-1 URINAL	URINAL & FLUSHOMETER COMBO. WHITE VITREOUS CHINA, INTEGRAL FLUSHING RIM, 3/4" IPS TOP SPUD INLET, 2" NPT OUTLET FLANGE, VANDAL RESISTANT STRAINER ASSEMBLY INCLUDED. 0.125 GPF, ADA COMPLIANT. PROVIDE ALL MOUNTING HARDWARE.	FIXTURE: SLOAN WEUS-1000.1001	WASTE: 2"	VENT: 1-1/2"	CW: 3/4"	HW: -	

REFER TO THE GENERAL NOTES ON SHEET 000P602 FOR ADDITIONAL REQUIREMENTS.

ISSUE	DATE	DESCRIPTION
A	09/2026	ISSUED FOR BIDS
	04/2020	60% DESIGN REVIEW

PROJECT MANAGER	PIERRE KWAN
CIVIL	J. MEGRDITCHIAN
STRUCTURAL	P. LINDBLOM
ARCHITECTURAL	V. YANEZ
PROCESS	P. KWAN
MECHANICAL	K. CHEUNG
ELECTRICAL	R. MCCOMB
INSTRUMENTATION	D. BEST
PROJECT NUMBER	10193663

REGISTERED PROFESSIONAL ENGINEER 67096PE DIGITALLY SIGNED OREGON JULY 11, 2024 KARL M. SUTTON EXPIRES 6/30/2028

CITY OF ASHLAND
Ashland, Oregon

City of Ashland

Ashland Creek Water Treatment Plant

2026

GENERAL PLUMBING SCHEDULES 1

0 1" 2"

FILENAME 10193663-AWTP-000_M.rte
SCALE NONE
SHEET **000P601**

Autodesk Docs://10193663_Ashland_WTP_Final_Design_2024/10193663-AWTP-000_M.rvt
9/23/2026 1:44:55 PM

SEWAGE SUMP PUMP SCHEDULE

MARK	BUILDING	GPM	FEET HEAD (FT)	HP	VOLTAGE	RPM	BASIS MODEL NUMBER	NOTES
SSP-3001	300	35	25	1/2	460/3	1,750	WEIL 1607	1,2,3,4,5

NOTES:

1. DUPLEX SUMP PUMP SYSTEM, 5.63" IMPELLER, WEIL 8167-T-016 CONTROL PANEL, DOUBLE DEAD FRONT DOOR, ALARM HORN AND LIGHT, ALARM REMOTE CONTACT.
2. PROVIDE ALARM TEST SWITCH, PUMP TEST SWITCH, NEMA 4, ON/OFF DISCONNECT SWITCH. PROVIDE WEIL 8230 FLOAT SWITCHES (QTY. 4) AND WEIL 2613 RAIL REMOVAL SYSTEM.
3. COORDINATE AND PROVIDE THE REQUIRED POWER CABLE LENGTH AND LIFTING CALBE LENGTH FOR THE REMOVAL SYSTEM.
4. MAX PANEL AMPS: 4.2A. MOTOR PROTECTOR AMPS: 1.6 X 2 + 1 AMP FOR THE CONTROL CIRCUIT.
5. CONTROL PANEL SHALL INCLUDE ISOLATED CONTACTS TO MONITOR PUMP RUN AND HIGH WATER / FLOAT CONDITIONS via SCADA. FLA FOR EACH PUMP: 1.4

DOMESTIC WATER PRESSURE BOOSTER PUMP SCHEDULE

MARK	BUILDING	GPM	REQUIRED PRESSURE BOOST (PSI)	VOLTAGE	HP	FLA	RPM	BASIS MODEL NUMBER	NOTES
DWPBP-3001	300	65	50	460	5	6	3,500	FLOWTHERM QFMV1-3	1,2

NOTES:

1. MULTISTAGE VARIABLE SPEED SIMPLEX PRESSURE BOOSTER PUMP WITH CONTROL PANEL. INDOOR INSTALLATION. TEFC ENCLOSURE. GOULDS 10eSV-5 PUMP
2. PROVIDE WESSELS FXA-300 HYDRO-PNEUMATIC PRESSURE BOOSTER EXPANSION TANK. 79 GALLONS TANK VOLUME.

WATER HEATER SCHEDULE

MARK	BUILDING	CAP. TEMP. RISE (°F)	CAP. RECOVERY (GPH)	CAP. L.W.T. (°F)	HEATING MEDIA DATA ELECTRIC KW	HEATING MEDIA DATA ELECTRIC V/PH	HEATING MEDIA DATA ELECTRIC ELEMENTS	STORAGE TANK CAP. (GAL)	BASIS OF DESIGN	NOTES
EWH-1001	100	100.0	111	140.0	27.0	480/3	6	119	AO SMITH DRE-120	1
EWH-3001	300	100.0	111	140.0	27.0	480/3	6	119	AO SMITH DRE-120	1

NOTES:

1. 32.5A FULL LOAD CURRENT. PROVIDE EXPANSION TANK, AMTROL ST-30V-C (OR EQUAL), 14 GALLONS TANK VOLUME, 9 GALLONS ACCEPTANCE VOLUME.

ELEVATOR SUMP PUMP SCHEDULE

MARK	BUILDING	GPM	FEET HEAD (FT) AT 50 GPM	HP	VOLTAGE	RPM	BASIS MODEL NUMBER	NOTES
ESP-3001	300	50	20	3/4	460/3	1,750	WEIL 2445	1,2,3

NOTES:

1. PROVIDE SIMPLEX PUMP CONTROL PANEL W-8177-T-025 WITH OIL SMART SYSTEM (PUMP SWITCH AND LIQUID SENSING SWITCH). TYPE 4X ENCLOSURE.
2. INCLUDES INDICATOR LIGHTS FOR POWER ON AND PUMP RUN AND ALARM INDICATOR LIGHTS FOR HIGH LIQUID, OIL, WATER, AND PUMP FAULT.
3. HAND OFF AUTO SWITCH WITH 85 DECIBEL AUDIBLE ALARM. MOTOR PROTECTOR AMP RANGE: 1.6-2.5

RECIRCULATION PUMP SCHEDULE

MARK	BUILDING	GPM	FEET HEAD (FT) AT 4 GPM	WATTS	FLA	VOLTAGE	RPM	BASIS MODEL NUMBER	NOTES
RCP-3001	300	4	22	270	2.3	120/1	3,300	BELL & GOSSETT NBF-45	1,2
RCP-3002	300	3	17	125	1.1	120/1	2,950	BELL & GOSSETT NBF-25	1,2
RCP-1001	100	2	17	125	1.1	120/1	2,950	BELL & GOSSETT NBF-25	1,2

NOTES:

1. 3 SPEED CIRCULATOR. LEAD FREE BRONZE BODY.
2. PROVIDE BELL & GOSSETT TC-1 (OR EQUAL) AUTOMATIC TIMER KIT AND AQS (OR EQUAL) AQUASTAT, 120/1/60.

GENERAL NOTES FOR PLUMBING FIXTURE SCHEDULES

PLUMBING FIXTURES SHALL BE OF ONE OF THE MANUFACTURERS INDICATED AND IN ACCORDANCE WITH THE INFORMATION AND MANUFACTURERS CATALOG NUMBERS INDICATED. IF MANUFACTURERS' CATALOG NUMBERS HAVE BEEN UPDATED OR DELETED, FIXTURES SHALL BE ONE OF SIMILAR CONFIGURATION AND OF SIMILAR OR BETTER QUALITY THAN WHAT IS SPECIFIED.

VERIFY THE MOUNTING HEIGHT OF THE PLUMBING FIXTURES BEFORE ORDERING THE FIXTURES. MOUNTING HEIGHTS SHALL BE AS INDICATED ON ARCHITECTURAL DRAWINGS/PLUMBING FIXTURE SCHEDULES AND COMPLY WITH ADA REQUIREMENTS.

VERIFY THE COLOR OF FIXTURES WITH THE ARCHITECT PRIOR TO ORDERING.

COUNTERTOP SINKS: THE CONTRACTOR SHALL COORDINATE THE SIZE OF CABINET(S) AND SINK(S) BEFORE ORDERING FIXTURE(S).

ALL FIXTURE STOPS SHALL BE LOOSE KEY. INSTALL PLUMBING VENTS NO CLOSER THAN 10 FEET FROM ANY OUTSIDE AIR INTAKES.

ADA WATER CLOSETS: FLUSH CONTROLS SHALL BE MOUNTED ON THE WIDE SIDE OF THE WATER CLOSET STALL AND AT A HEIGHT THAT COMPLIES WITH ADA GUIDELINES. PLUMBING VENTS SHOULD BE NO CLOSER THAN 10 FEET FROM ANY OUTSIDE AIR INTAKES.

PROVIDE DIELECTRIC UNIONS AT ALL CONNECTIONS OF DISSIMILAR METALS (SUCH AS COPPER TO GALVANIZED STEEL).

CLEANOUTS, VALVES, GAUGES, ETC. SHALL BE LOCATED TO MAINTAIN ACCESSIBILITY. WALL CLEANOUTS SHALL BE AT APPROXIMATELY 18" AFF, AND FLOOR CLEANOUTS NO LESS THAN 12" FROM THE WALL. REFER TO THE PLUMBING CODE FOR ADDITIONAL REQUIREMENTS.

PLANS ARE DIAGRAMMATIC. THE CONTRACTOR SHALL FURNISH AND INSTALL ALL EQUIPMENT, MATERIALS, AND LABOR AS SHOWN AND NECESSARY FOR A COMPLETE, WORKABLE SYSTEM.

THE CONTRACTOR SHALL MAKE PROVISIONS TO ROUTE PIPING UP, DOWN, AND HORIZONTALLY TO AVOID CONFLICTS WITH PIPING, DUCTWORK, EQUIPMENT, CONDUITS, STRUCTURE, ETC.

THE CONTRACTOR IS RESPONSIBLE FOR PROVIDING AND INSTALLING ALL NECESSARY SUPPORTS AND SEISMIC BRACING FOR THE EQUIPMENT, PIPING, ETC., AS REQUIRED BY THE SPECIFICATIONS, THE MANUFACTURER, AND ALL LOCAL CODES.

THE CONTRACTOR IS TO PROVIDE CHAINWHEELS ON ALL PLUMBING SHUTOFF VALVES THAT ARE INSTALLED HIGHER THAN 8 FEET ABOVE THE FINISHED FLOOR.

THE CONTRACTOR IS TO PROVIDE CLEANOUTS ON PLUMBING DRAINAGE PIPING AS REQUIRED BY THE PLUMBING CODE REGARDLESS OF WHETHER ALL CLEANOUTS ARE SHOWN ON PLANS.

CONTRACTOR TO ROUTE CONDENSATE DRAIN PIPING WITH MINIMUM 1% SLOPE TOWARD THE POINT OF DISPOSAL AND SHALL PROVIDE PIPE CLEANOUT AT EVERY CHANGE IN DIRECTION.

THE CONTRACTOR SHALL PROVIDE FULL COORDINATION WITH ALL TRADES BEFORE THE START OF WORK.

PROVIDE ACCESS PANELS FOR INSTALLATION IN WALLS AND CEILINGS TO SERVICE CONTROL DEVICES, VALVES, AND OTHER CONCEALED PLUMBING EQUIPMENT. ACCESS PANEL INSTALLATION SHALL BE COORDINATED WITH ARCHITECTURAL WORK TO MATCH MATERIALS AND FINISHES. REFER TO SPECIFICATIONS FOR ADDITIONAL REQUIREMENTS.

LOCATIONS AND NUMBER OF WATER HAMMER ARRESTORS SHOWN ARE APPROXIMATE. THE CONTRACTOR IS TO PROVIDE AND INSTALL THE WATER HAMMER ARRESTOR PER THE MANUFACTURER'S INSTALLATION INSTRUCTIONS. LOCATE WATER ARRESTOR AT A MAXIMUM 7'-0" ABOVE FINISHED FLOOR.

PLANS ARE DIAGRAMMATIC; THE CONTRACTOR SHALL ROUTE AND INSTALL ALL PLUMBING PIPING IN ACCORDANCE WITH THE APPLICABLE PLUMBING CODE.

REMARKS

1. SHALL COMPLY WITH ADA REQUIREMENTS.

ELECTRONIC TRAP PRIMING ASSEMBLY SCHEDULE

MARK	BUILDING	# OF DRAIN CONNECTIONS	VOLTAGE	MOUNT	BASIS MODEL NUMBER	NOTES
ETPA-1001	100	8	120/1	SURFACE	PRECISION PLUMBING PRODUCTS PTS-8	1,2
ETPA-1002	100	4	120/1	SURFACE	PRECISION PLUMBING PRODUCTS PTS-4	1,2
ETPA-1003	100	4	120/1	SURFACE	PRECISION PLUMBING PRODUCTS PTS-4	1,2
ETPA-3001	300	6	120/1	SURFACE	PRECISION PLUMBING PRODUCTS PTS-6	1,2
ETPA-3002	300	10	120/1	SURFACE	PRECISION PLUMBING PRODUCTS PTS-10	1,2
ETPA-3003	300	4	120/1	SURFACE	PRECISION PLUMBING PRODUCTS PTS-4	1,2
ETPA-3004	300	6	120/1	SURFACE	PRECISION PLUMBING PRODUCTS PTS-6	1,2
ETPA-6001	600	8	120/1	SURFACE	PRECISION PLUMBING PRODUCTS PTS-8	1,2

NOTES:

1. NEMA 1 METAL CABINET. UNIT SHALL BE EQUIPPED WITH ATMOSPHERIC VACUUM BREAKER, PRE-SET 24 HOUR ADJUSTABLE TIMER, MANUAL OVERRIDE SWITCH/TEST BUTTON.
2. 120V SOLENOID VALVE, SINGLE POINT CONNECTION. 6 WATTS.

Autodesk Docs://10193663_Ashland_WTP_Final_Design_2024/10193663-AWTP-000_M.rvt
9/22/2026 4:33:36 PM

ISSUE	DATE	DESCRIPTION
A	09/2026	ISSUED FOR BIDS

PROJECT MANAGER	PIERRE KWAN
CIVIL	J. MEGRDITCHIAN
STRUCTURAL	P. LINDBLOM
ARCHITECTURAL	V. YANEZ
PROCESS	P. KWAN
MECHANICAL	K. CHEUNG
ELECTRICAL	R. MCCOMB
INSTRUMENTATION	D. BEST
PROJECT NUMBER	10193663

REGISTERED PROFESSIONAL ENGINEER 67096PE DIGITALLY SIGNED OREGON JULY 11, 2025 KARL M. SUTTON
EXPIRES 6/30/2028

CITY OF ASHLAND
Ashland, Oregon

City of Ashland
Ashland Creek
Water Treatment Plant
2026

GENERAL PLUMBING SCHEDULES 2

0 1" 2"

FILENAME 10193663-AWTP-000_M.rte
SCALE 12" = 1'-0"
SHEET 000P602

1 2 3 4 5 6 7 8

X 20A 3P OR x 100AF 80AT 3P — LOW - VOLTAGE CIRCUIT BREAKER (CB). RATINGS AND NO. OF POLES AS SHOWN. WHEN SPECIFIC TYPE IS REQUIRED, X INDICATES TYPE.

TYPES:
MCCB - MOLDED CASE
ICCB - INSULATED CASE
LVP - LOW - VOLTAGE POWER
MCP - MOTOR CIRCUIT PROTECTOR
(RATING PER CONNECTED LOAD)

CB — SEPARATELY MOUNTED CIRCUIT BREAKER; SEE ELECTRICAL ONE - LINE DIAGRAM OR SCHEDULE FOR DESCRIPTION

GFP — GROUND FAULT PROTECTION

52 — MEDIUM - VOLTAGE CIRCUIT BREAKER

FUSE, SIZE, AND NUMBER OF FUSES AS NOTED

FUSED CUTOUT, CURRENT RATING, FUSE SIZE, AND NUMBER OF POLES AS NOTED

FUSIBLE SWITCH, CURRENT RATING, FUSE SIZE, AND QUANTITY AS NOTED

NON-FUSED SWITCH, CURRENT RATING, AND NUMBER OF POLES AS NOTED

DISCONNECT OR DRAWOUT CONNECTION

MOTOR CONTROLLER

FUSED DISCONNECT

THERMAL OVERLOAD ELEMENT

OL — THERMAL OVERLOAD RELAY CONTACT

DISCONNECT OR SAFETY SWITCH, 30A, 3P, NON-FUSED UNLESS OTHERWISE NOTED

DISCONNECT NOTE: FOR ALL EQUIPMENT WITH DISCONNECT SWITCHES, PROVIDE THE SAME CONDUIT SIZE AND CONDUCTORS FROM THE THE DISCONNECT SWITCH TO THE EQUIPMENT AS SHOWN TO THE DISCONNECT SWITCH. MOUNT THE DISCONNECT SWITCHES NEAR ASSOCIATED EQUIPMENT.

7 1/2 OR HP — MOTOR WITH DESIGN HORSEPOWER (WHEN INDICATED)

G — GENERATOR

ATS — TRANSFER SWITCH, CURRENT RATING, AND NUMBER OF POLES AS NOTED

ATS - AUTOMATIC
MTS - MANUAL

TRANSFORMER

△ 3-PHASE, 3-WIRE DELTA CONNECTION

Y 3-PHASE, 4-WIRE GROUNDED WYE CONNECTION

LP100 208/120V 3Ø, 4W — SWITCHBOARD OR PANELBOARD; NAME, VOLTAGE, PHASE, NUMBER OF WIRES WHEN INDICATED

N — COMBINATION MOTOR STARTER. N = NEMA SIZE STARTER

100 KVA — NON-MOTOR LOAD WITH DESIGN KVA, KW, OR AMP

CPT — CONTROL POWER TRANSFORMER (CPT)

VOLTAGE TRANSFORMER (VT OR PT)

CURRENT TRANSFORMER (CT)

POWER QUALITY METER (PQM)

RTM — RUN TIME METER

GROUND

LIGHTNING ARRESTER

SPD — LOW VOLTAGE SURGE PROTECTIVE DEVICE

ELECTRICAL CONNECTION

OR OR — NO ELECTRICAL CONNECTION

SV OR — SOLENOID VALVE

X Y — CONTROL/RELAY COIL; X INDICATES TYPE, Y INDICATES LOOP NO. WHEN USED

TYPES:
CR - CONTROL RELAY
DP - DEFINITE PURPOSE RELAY
LC - LIGHTING CONTACTOR
M - MOTOR STARTER
PC - PHOTO CELL
TC - TIME CLOCK
TD - TIME DELAY RELAY
TR - TIMING RELAY

NORMALLY OPEN TIME DELAY RELAY CONTACT WITH TIME DELAY ON CLOSING AFTER COIL IS ENERGIZED

NORMALLY CLOSED TIME DELAY RELAY CONTACT WITH TIME DELAY ON OPENING AFTER COIL IS ENERGIZED

NORMALLY OPEN TIME DELAY RELAY CONTACT WITH TIME DELAY ON OPENING AFTER COIL IS DE-ENERGIZED

NORMALLY CLOSED TIME DELAY RELAY CONTACT WITH TIME DELAY ON CLOSING AFTER COIL IS DE-ENERGIZED

NORMALLY OPEN TEMPERATURE SWITCH; CLOSE ON RISING TEMPERATURE

NORMALLY CLOSED TEMPERATURE SWITCH; OPEN ON RISING TEMPERATURE

NORMALLY OPEN FLOW SWITCH; CLOSE ON INCREASING FLOW

NORMALLY CLOSED FLOW SWITCH; OPEN ON INCREASING FLOW

NORMALLY OPEN LEVEL SWITCH, CLOSE ON RISING LEVEL

NORMALLY CLOSED LEVEL SWITCH, OPEN ON RISING LEVEL

NORMALLY OPEN PRESSURE SWITCH, CLOSE ON INCREASING PRESSURE

NORMALLY CLOSED PRESSURE SWITCH, OPEN ON INCREASING PRESSURE

NORMALLY OPEN LIMIT SWITCH, CLOSE ON REACHING LIMIT

NORMALLY CLOSED LIMIT SWITCH, OPEN ON REACHING LIMIT

NORMALLY OPEN CONTACT (N.O.)

NORMALLY CLOSED CONTACT (N.C.)

FIELD WIRING EXTERNAL TO CONTROL PANEL

X — INTERLOCK; X INDICATES TYPE

TYPES:
E - ELECTRICAL
M - MECHANICAL
K - KEY

OFF HAND AUTO XOO OOX — 3 POSITION SELECTOR SWITCH, MAINTAINED CONTACTS; UNLESS OTHERWISE NOTED, 2-POSITION SIMILAR

NORMALLY OPEN PUSHBUTTON, MOMENTARY CONTACT UNLESS OTHERWISE NOTED

NORMALLY CLOSED PUSHBUTTON, MOMENTARY CONTACT UNLESS OTHERWISE NOTED

X — INDICATING LIGHT, X INDICATES LENS COLOR

X — PUSH TO TEST INDICATING LIGHT, X INDICATES LENS COLOR

LENS COLORS:

R - RED	Y - YELLOW
G - GREEN	W - WHITE
B - BLUE	A - AMBER

Z — ELECTRICAL MONITORING DEVICE

TYPES:
WHM - UTILITY WATT-HOUR METER PER UTILITY REQUIREMENTS
AS - CURRENT SENSOR
AM - AMP METER
WM - WATT METER
VS - VOLT SENSOR
VM - VOLT METER

CONTROL PANEL INTEGRAL OR PROVIDED WITH ASSOCIATED EQUIPMENT

CONTROL PANEL WITH DISCONNECT SWITCH INTEGRAL OR PROVIDED WITH ASSOCIATED EQUIPMENT

J — JUNCTION OR PULL BOX

PANELBOARD (250V TO 600V)

PANELBOARD (LESS THAN 250V)

ELECTRICAL EQUIPMENT ENCLOSURE: SWITCHBOARD, MOTOR CONTROL CENTER, CONTROL PANEL, OR OTHER EQUIPMENT AS INDICATED

X Y — CEILING/PENDANT-MOUNTED LED LUMINAIRE

X Y — WALL-MOUNTED LED LUMINAIRE

X Y — CEILING/PENDANT-MOUNTED LED FIXTURE

X Y — WALL-MOUNTED LED FIXTURE

X Y — CEILING/PENDANT-MOUNTED LED FIXTURE NORMAL/EMERGENCY

X Y — WALL-MOUNTED LED FIXTURE NORMAL/EMERGENCY

X Y X Y — DOUBLE-FACED CEILING OR WALL-MOUNTED EXIT LIGHT; DIRECTIONAL ARROWS (IF REQUIRED) AS INDICATED ON PLANS

X Y X Y — SINGLE-FACED CEILING OR WALL-MOUNTED EXIT LIGHT; DIRECTIONAL ARROWS (IF REQUIRED) AS INDICATED ON PLANS

X Y — AREA OR ROADWAY LIGHT - POLE-MOUNTED

LIGHTING FIXTURE SUBSCRIPTS:
X - INDICATES FIXTURE TYPE PER LIGHTING FIXTURE SCHEDULE
Y - INDICATES CIRCUIT NUMBER FROM PANELBOARD
z - INDICATES CONTROLLING SWITCH (IF REQUIRED)

X Y — EMERGENCY LIGHT FIXTURE, 2 ATTACHED HEADS AS SHOWN

X Y — EMERGENCY LIGHT, REMOTE MOUNTED HEAD

PC — PHOTOCELL

S Y X — TOGGLE SWITCH

SUBSCRIPTS:
X - INDICATES TYPE
NONE - SINGLE POLE
3 - THREE-WAY
4 - FOUR-WAY
HP - TOGGLE SWITCH, HORSEPOWER RATED
K - KEY SWITCH
TE - MANUAL MOTOR STARTER W/ THERMAL ELEMENT
P - PILOT LIGHT
L - LIGHTED HANDLE
Y - INDICATES CONTROLLING SWITCH (IF REQUIRED)

T — TRANSFORMER

CS — CONTROL STATION

HS — HAND SWITCH

SS — SELECTOR SWITCH

PB — PUSHBUTTON

IC — INSTRUMENTATION/CONTROL DEVICE

S — NETWORK SWITCH

SD — NETWORK SWITCH/DIMMER

SO — NETWORK SWITCH/OCCUPANCY SENSOR

O — CEILING MOUNTED NETWORK OCCUPANCY SENSOR

D — CEILING MOUNTED NETWORK DIMMING PHOTOCELL

SPECIAL-PURPOSE RECEPTACLE AS DEFINED ON PLANS

PLUG-IN RECEPTACLE STRIP, QUANTITY AND SPACING OF RECEPTACLES AS NOTED OR SPECIFIED

ETHERNET WALL PLATE 3-PORT; ALL-PORTS TO ENTERPRISE NETWORK SWITCH

RECESSED FLOOR DATA JACKS WITH 4-PORTS; ALL-PORTS TO ENTERPRISE NETWORK SWITCH

ACC — ABOVE COUNTER TOP

X Y — QUAD-DUPLEX RECEPTACLE, TWO NEMA 5-20R UNDER COMMON COVER PLATE

X Y — DUPLEX RECEPTACLE, NEMA 5-20R

X Y — FLOOR MOUNTED DUPLEX RECEPTACLE, NEMA 5-20R

X Y — SIMPLEX RECEPTACLE, NEMA 5-20R

SUBSCRIPTS:
X - INDICATES TYPE
GFCI - GROUND FAULT CIRCUIT INTERRUPTER
Y - INDICATES CIRCUIT NUMBER FROM PANELBOARD

PEDESTAL

CONDUIT TURNING UP

CONDUIT TURNING DOWN

HOME RUN TO PANEL, 2#12, 1#12G IN 3/4"C UNLESS NOTED OTHERWISE

CIRCUIT RUN BETWEEN DEVICES EXPOSED IN NON-ARCHITECTURALLY FINISHED AREAS; CONCEALED IN ARCHITECTURALLY FINISHED AREAS. CONDUIT AND CONDUCTOR SIZES SHALL BE THE SAME AS THE HOMERUN FOR THE CIRCUIT

CONDUIT RUN BETWEEN DEVICES CONCEALED IN NON-ARCHITECTURALLY FINISHED AREAS OR UNDER FLOOR SLAB. CONDUIT AND CONDUCTOR SIZES SHALL BE THE SAME AS THE HOMERUN FOR THE CIRCUIT, OR DIRECT BURIED, UON

DB — UNDERGROUND DUCTBANK, NON-REINFORCED CONCRETE ENCASED, UNLESS NOTED OTHERWISE

UGE — UNDERGROUND UTILITY DUCTBANK. INSTALL PER ASHLAND ELECTRIC UTILITY STANDARDS, A MIN OF 4' DEEP

J 1/2HP — MOTOR OPERATOR, SIZE SHOWN. DISCONNECT SWITCH 30A STANDARD, UNLESS NOTED OTHERWISE

CIRCUIT CONTINUATION

CONDUIT STUBBED OUT AND CAPPED

PPMP100A — CONDUIT TAG OR CIRCUIT NUMBER - WIRE AND CONDUIT SIZE AS SPECIFIED ON ONE LINE DIAGRAMS AND THE CONDUIT AND CABLE SCHEDULE

G — GROUND CABLE

DIRECT BURIED CONDUITS, OR CONCEALED CONDUITS

GROUND ROD

GROUND ROD TEST WELL

GROUND CONNECTION BOLTED (ACCESSIBLE)

GROUND CONNECTION EXOTHERMIC (NON-ACCESSIBLE)

GROUND CONNECTION TO REBAR IN CONCRETE (UFER GROUND) CONNECTION IN TWO PLACES MINIMUM

T — THERMOSTAT

FACP — FIRE ALARM CONTROL PANEL

F — FIRE ALARM MANUAL PULL STATION

CR — FIRE ALARM CONTROL RELAY

FS — FIRE ALARM CONTACT, FLOW SWITCH

TS — FIRE ALARM CONTACT, TAMPER SWITCH

PS — FIRE ALARM CONTACT, PRESSURE SWITCH

X AND X — SMOKE AND DUCT DETECTOR

SUBSCRIPT:
I - IONIZATION TYPE
P - PHOTOELECTRIC TYPE

X — HEAT DETECTOR

SUBSCRIPT:
R/C - RATE COMPENSATION
R/F - COMBINATION RATE OF RISE AND FIXED TEMP
R - RATE OF RISE
F - FIXED

EXAMPLES: CABLE AND RACEWAY IDENTIFICATION

HH100
PPBD101A — A
CPMP101A — B
SFIT101B — C
FSVR100 — F

'PPMP101A' UNIQUE CIRCUIT IDENTIFIER (CABLE AND RACEWAY), LETTER PREFIX INDICATES TYPE:

P	POWER, 120V OR HIGHER
PC	POWER AND CONTROL
C	CONTROL, 120V
S	SIGNAL, LESS THAN 120V
D	DATA, COMMUNICATIONS
F	FIBER OPTIC
X	SPARE
H	HIGH VOLTAGE, OVER 600V

A. POWER CONDUIT
B. CONTROL CONDUIT
C. SIGNAL CONDUIT
D. FIBER OPTIC CONDUIT

CONDUIT TAGS REFER TO CABLE AND RACEWAY SCHEDULE

HH100 — HANDHOLE, CONDUITS INSTALLED INTO HANDHOLE HH100

GENERAL NOTES:

1. THIS IS A STANDARD ELECTRICAL SYMBOLS SHEET. ALL SYMBOLS MAY NOT BE USED ON THIS PROJECT.
2. IN GENERAL CONDUIT ROUTING IS NOT SHOWN ON THE PLANS. THE CONTRACTOR SHALL BE RESPONSIBLE FOR ROUTING ALL CONDUITS INCLUDING THOSE SHOWN ON ONE LINES AND HOME RUNS. SEE SPECIFICATIONS FOR CONDUIT INSTALLATION REQUIREMENTS. CONDUIT ROUTINGS AND STUB-UP LOCATIONS THAT ARE SHOWN ARE APPROXIMATE, EXACT ROUTINGS SHALL BE AS REQUIRED FOR EQUIPMENT FURNISHED, FREE OF ANY INTERFERENCES.
3. WHEN BRANCH CIRCUITS ARE NOT SHOWN ON THE PLANS THE CONTRACTOR SHALL FURNISH AND INSTALL ALL CONDUITS AND CONDUCTORS REQUIRED. CONDUIT AND CONDUCTOR SIZES SHALL BE THE SAME AS THE HOMERUN FOR THE BRANCH CIRCUIT.
4. SCREENING OR SHADING OF WORK IS USED TO INDICATE EXISTING COMPONENTS OR TO DE-EMPHASIZE PROPOSED IMPROVEMENTS TO HIGHLIGHT SELECTED TRADE WORK. REFER TO CONTEXT OF EACH DRAWING FOR USAGE.
5. SEE PROJECT EQUIPMENT AND PIPING SYSTEMS DRAWING FOR SYMBOLS AND ABBREVIATIONS SPECIFIC TO THE PROJECT.

ISSUE	DATE	DESCRIPTION
A	09/2026	ISSUED FOR BIDS

PROJECT MANAGER	PIERRE KWAN
CIVIL	J. MEGRDITCHIAN
STRUCTURAL	P. LINDBLOM
ARCHITECTURAL	V. YANEZ
PROCESS	P. KWAN
MECHANICAL	K. CHEUNG
ELECTRICAL	R. MCCOMB
INSTRUMENTATION	D. BEST
PROJECT NUMBER	10193663

REGISTERED PROFESSIONAL ENGINEER 88023PE OREGON MAY 14, 2013 ROBB J. MCCOMB
DIGITALLY SIGNED
EXPIRES: 12/31/2026

CITY OF ASHLAND
Ashland, Oregon

City of Ashland

Ashland Creek Water Treatment Plant

2026

ELECTRICAL

LEGEND AND SYMBOLS

0 1" 2"

FILENAME 000E003
SCALE NONE

SHEET 000E001

RACEWAY AND CONDUCTOR SCHEDULE

RACEWAY TAG	SIZE	CABLES	TYPE	RACEWAY FROM	RACEWAY TO	COMMENTS
CFACU101	1	4#14, 1#14G	XHHW-2	CP-101	FACU-101	
FCP101	2	FIBER OPTIC	12-STRAND	CP-301	CP-101	VIA HHS-101, MULTIMODE TYPE FIBER
FFACU101	1	FIBER OPTIC	12-STRAND	CP-101	FACU-101	MULTIMODE TYPE FIBER
PFACU101	1	2#12, 1#12G	XHHW-2	PBD-101	FACU-101	
PPBD101	2	4#3/0, 1#6G	XHHW-2	XFMR-101	PBD-101	
PPDP101A	2	3#4/0, 1#3G	XHHW-2	SWBD-300	PDP-101	VIA HHP-101
PPDP101B	2	3#4/0, 1#3G	XHHW-2	SWBD-300	PDP-101	VIA HHP-101
PXFMR101	1-1/4	3#4, 1#8G	XHHW-2	PDP-101	XFMR-101	
SDOOR101	1	PULL CORD		DOOR-101	CP-101	
XFCP101	2	PULL CORD		CP-301	CP-101	VIA HHS-101
XPPDP101	2	PULL CORD	SPARE	SWBD-300	PDP-101	VIA HHP-101
SDOOR102	1	PULL CORD		DOOR-101	CP-101	
SDOOR103	1	PULL CORD		DOOR-101	CP-101	
CGEN300A	1	14#14, #14G	XHHW-2	CP-301	GEN-300 CTRL PNL	
CGEN300B	1	6#14, #14G	XHHW-2	MGC-300	GEN-300 CTRL PNL	GENERATOR RUN SIGNAL
DGEN300	1	ETHERNET	CAT6	MGC-300	GEN-300 CTRL PNL	
DBESS300A	2	PULL CORD	CAT6	MGC-300	BESS	BESS PAD LOCATION
DBESS300B	2	PULL CORD	CAT6	MGC-300	BESS	BESS PAD LOCATION
DGEN300	1-1/2	ETHERNET	CAT6	GEN-300	CP-101	GENERATOR CONTROL PANEL
DMGC300	1-1/2	ETHERNET	2xCAT6	MGC-300	CP-101	
DPQM300	1	ETHERNET	CAT6	PQM-300	CP-301	
DSOL300	2	PULL CORD	SPARE	MGC-300	PV EQUIPMENT	
HXFMR300A	3	BY UTILITY	MV	EXISTING VAULT @ ROADWAY	XFMR-300	
HXFMR300B	3	PULL CORD		EXISTING VAULT @ ROADWAY	XFMR-300	
HXFMR300C	3	PULL CORD		EXISTING VAULT @ ROADWAY	XFMR-300	
HXFMR300D	3	PULL CORD		EXISTING VAULT @ ROADWAY	XFMR-300	
PBESS300A	3	4#4/0, 1#6G	XHHW-2	SWBD-300	BESS	CONTRACTOR TO COORDINATE WITH BESS...
PBESS300B	4	PULL CORD	SPARE	SWBD-300	BESS	BESS PAD LOCATION
PBESS300C	2	PULL CORD	SPARE	PBD-301	BESS	BESS PAD LOCATION
PGEN300A	4	4-600kCMIL, 1#4/0G	XHHW-2	SWBD-300	GEN-300	VIA HHP-101
PGEN300B	4	4-600kCMIL, 1#4/0G	XHHW-2	SWBD-300	GEN-300	VIA HHP-101
PGEN300C	4	4-600kCMIL, 1#4/0G	XHHW-2	SWBD-300	GEN-300	VIA HHP-101
PGEN300D	4	4-600kCMIL, 1#4/0G	XHHW-2	SWBD-300	GEN-300	VIA HHP-101
PGEN300E	2	4#3, #8G	XHHW-2	PBD-101	LC-300	GEN LOAD CENTER
PSOL300A	3	3-500kCMIL, 1#3G	XHHW-2	SWBD-300	PV EQUIPMENT	
PSOL300B	3	PULL CORD	SPARE	SWBD-300	PV EQUIPMENT	STUB UP 6" AND CAP
PSWBD300A	4	BY UTILITY	XHHW-2	XFMR-300	SWBD-300	
PSWBD300B	4	BY UTILITY	XHHW-2	XFMR-300	SWBD-300	
PSWBD300C	4	BY UTILITY	XHHW-2	XFMR-300	SWBD-300	
PSWBD300D	4	BY UTILITY	XHHW-2	XFMR-300	SWBD-300	
PSWBD300E	4	BY UTILITY	XHHW-2	XFMR-300	SWBD-300	
PSWBD300F	4	PULL CORD	SPARE	XFMR-300	SWBD-300	SPARE
XDSWBD300	2	PULL CORD	SPARE	SWBD-300	CP-301	
DSWBD300	2	PULL CORD	SPARE	SWBD-300	JB	PROVIDE 8"x8"x6"D - 316SS ON OUTSIDE OF BLDG
XPGEN301	4	PULL CORD	SPARE	SWBD-301	GEN-300	VIA HHP-101
DCAM301	3/4	ETHERNET	CAT6	CAM-301	SAP-301	NW CAMERA
DEAP301	3/4	ETHERNET	CAT6	EAP-301	CP-301	
DFACU301	1	ETHERNET	CAT6	FACU-301	SVR-3000	
FFACU301	3/4	FIBER OPTIC	CAT6	FACU-301	CP-301	MULTIMODE TYPE FIBER
FSAP301	3/4	FIBER OPTIC	CAT6	SAP-301	CP-301	MULTIMODE TYPE FIBER
PCHGR301A	2	3#4/0, 1#6G	XHHW-2	SWBD-300	CHGR-301/302	
PEAP301	3/4	2#12, 1#12G	XHHW-2	EAP-301	PBD-301	
PFACU301	3/4	2#12, 1#12G	XHHW-2	FACU-301	PBD-301	
PPBD301	2	4#3/0, 1#6G	XHHW-2	XFMR-301	PBD-301	
PSAP301	3/4	2#12, 1#12G	XHHW-2	SAP-301	PBD-301	
PXFMR301	1-1/4	3#4, 1#8G	XHHW-2	MCC-311	XFMR-301	
SDOOR301	1	PULL CORD		DOOR-301	SAP-301	
DCAM302	3/4	ETHERNET	CAT6	CAM-302	SAP-301	SW CAMERA
DCP302	1	ETHERNET	2xCAT6	CP-301	CP-302	
PCP302	3/4	4#12, 1#12G	XHHW-2	PBD-302	CP-302	
PPBD302	1-1/2	3#3, 1#8G	XHHW-2	PBD-303	PBD-302	SUB PANEL AT CHEMICAL ROOM
SDOOR302	1	PULL CORD		DOOR-302	SAP-301	
DCAM303	3/4	ETHERNET	CAT6	CAM-303	SAP-301	CHEMICAL AREA CAMERA
DCP303	1	ETHERNET	CAT6	CP-302	CP-303	
PCHGR303A	2	3#4/0, 1#6G	XHHW-2	SWBD-300	CHGR-303/304	
PPBD303	2	4#4/0, 1#6G	XHHW-2	XFMR-303	PBD-303	
PXFMR303	1-1/2	3#1, 1#6G	XHHW-2	MCC-312	XFMR-303	
SDOOR303	1	PULL CORD		DOOR-303	SAP-301	
DCAM304	3/4	ETHERNET	CAT6	CAM-304	SAP-301	SE CAMERA
SDOOR304	1	PULL CORD		DOOR-304	SAP-301	
DCAM305	3/4	ETHERNET	CAT6	CAM-305	SAP-301	NE CAMERA
PPBD305	1-1/2	3#3, 1#8G	XHHW-2	PBD-301	PBD-305	SUB PANEL AT SERVER ROOM
SDOOR305	1	PULL CORD		DOOR-305	SAP-301	
DCAM306	3/4	ETHERNET	CAT6	CAM-306	SAP-301	FILTER TANKS CAMERA
SDOOR306	1	PULL CORD		DOOR-306	SAP-301	
SDOOR307	1	PULL CORD		DOOR-307	SAP-301	
SDOOR308	1	PULL CORD		DOOR-308	SAP-301	
SDOOR309	1	PULL CORD		DOOR-309	SAP-301	
PMCC311A	3	3-350kCMIL, 1#1G	XHHW-2	SWBD-300	MCC-311	
SDOOR310	1	PULL CORD		DOOR-310	SAP-301	
DMCC311	1	ETHERNET	CAT6	MCC-311	VFD-5013	
PMCC311B	3	3-350kCMIL, 1#1G	XHHW-2	SWBD-300	MCC-311	
SDOOR311	1	PULL CORD		DOOR-311	SAP-301	
PMCC312A	3	3-350kCMIL, 1#1G	XHHW-2	SWBD-300	MCC-312	
PMCC312B	3	3-350kCMIL, 1#1G	XHHW-2	SWBD-300	MCC-312	
SDOOR312	1	PULL CORD		DOOR-312	SAP-301	
CGATE401	1	8#14, 1#14G	XHHW-2	GATE CONTROL PANEL	CP-401	CONTROLS FOR GATE
DCAM401	1	ETHERNET, 1PR#18TSP	CAT6, 4-20mA	CAM-401, CARD READ	CP-401	FRONT GATE CAMERA AND CARD READER AT GATE
FCP401	1	FIBER OPTIC	12-STRAND	CP-301	CP-401	MULTIMODE TYPE FIBER
PCP401	3/4	4#12, 1#12G	XHHW-2	MPC-401	CP-401	
PGATE401	1	3#12, 1#12G	XHHW-2	GATE CONTROL PANEL	MPC-401	POWER FOR GATE

RACEWAY TAG	SIZE	CABLES	TYPE	RACEWAY FROM	RACEWAY TO	COMMENTS
PMPC401	1	2#12, 1#12G	XHHW-2	PDP-401	MPC-401	
PPDP401	1	3#8, 1#10G	XHHW-2	MCC-311	PDP-401	
SGATE401	1	2#18TSP		GATE CONTROL PANEL	KEYPAD	
DCAM501	3/4	ETHERNET	CAT6	CAM-501	CP-501	CLEARWELL TANK
DCP501	1	COAX	RADIO	CP-501	ANTENNA	ROUTE TO ANTENNA MOUNT
FCP501	2	FIBER OPTIC	12-STRAND	CP-301	CP-501	VIA HHS-101, MULTIMODE TYPE FIBER
PCP501	2	2#10, 1#10G	XHHW-2	PBD-101	CP-501	VIA HHP-101
XPCP501	2	PULL CORD		PBD-101	CP-501	VIA HHP-101
XSCP501	2	PULL CORD		CP-301	CP-501	VIA HHS-101
DCAM502	3/4	ETHERNET	CAT6	CAM-502	CP-501	CLEARWELL TANK, AIMED NORTH FOR TRAIL
CFACU601	1	4#14, 1#14G	XHHW-2	CP-601	FACU-601	
FCP601	1	FIBER OPTIC	12-STRAND	CP-601	CP-301	MULTIMODE TYPE FIBER
PCP601	1	4#12, 1#12G	XHHW-2	PBD-601	CP-601	
FFACU601	1	FIBER OPTIC	12-STRAND	FACU-601	CP-601	MULTIMODE TYPE FIBER
PFACU601	1	2#12, 1#12G	XHHW-2	PBD-601	FACU-601	
PPBD601	1	4#6, 1#10G	XHHW-2	XFMR-601	PBD-601	
PPDP601A	3	3#350, 1#1G	XHHW-2	SWBD-300	PDP-601	
PPDP601B	3	3#350, 1#1G	XHHW-2	SWBD-300	PDP-601	
PXFMR601	1	3#10, 1#10G	XHHW-2	PDP-601	XFMR-601	
XPPDP601	3	PULL CORD	SPARE	SWBD-300	PDP-601	
CMOD1001	3/4	2#14, 1#14G	XHHW-2	MS-1002	MOD-1001	MOD OPENS WHEN EF-1002 STARTS
PEF1001	3/4	2#12, 1#12G	XHHW-2	PBD-101	EF-1001	
PETPA1001	3/4	2#12, 1#12G	XHHW-2	PBD-101	ETPA-1001	PROVIDE 120V DISCONNECT SWITCH
PEUH1001A	1	3#12, 1#12G	XHHW-2	PDP-101	DS-1001A	
PEUH1001B	1	3#12, 1#12G	XHHW-2	DS-1001A	EUH-1001	
PEWH1001A	1	3#8, 1#10G	XHHW-2	PDP-101	DS-1001B	
PEWH1001B	1	3#8, 1#10G	XHHW-2	DS-1001B	EWH-1001	
PFIT1001	3/4	2#12, 1#12G	XHHW-2	PBD-101	FIT-1001	
PMOD1001	3/4	2#12, 1#12G	XHHW-2	PBD-101	MOD-1001	
PPHP1001A	1	3#6, 1#10G	XHHW-2	PDP-101	DS-1001C	
PPHP1001B	1	3#6, 1#10G	XHHW-2	DS-1001C	PHP-1001	
PRCP1001	3/4	2#12, 1#12G	XHHW-2	PBD-101	RCP-1001	PROVIDE 120V DISCONNECT SWITCH
SFIT1001	1	1PR#18TSP	INSTRUMENTATION	CP-101	FIT-1001	
CEF1002	3/4	4#14, 1#14G	XHHW-2	CP-101	EF-1002	PLC DO TO CALL RUN WHEN O2 OR O3 SENSOR...
CMOD1002	3/4	2#14, 1#14G	XHHW-2	MS-1002	MOD-1002	MOD OPENS WHEN EF-1002 STARTS
PEF1002A	3/4	3#12, 1#12G	XHHW-2	PDP-101	MS-1002	
PEF1002B	3/4	3#12, 1#12G	XHHW-2	MS-1002	EF-1002	
PETPA1002	3/4	2#12, 1#12G	XHHW-2	PBD-101	ETPA-1002	PROVIDE 120V DISCONNECT SWITCH
PEUH1002A	1	3#12, 1#12G	XHHW-2	PDP-101	DS-1002A	
PEUH1002B	1	3#12, 1#12G	XHHW-2	DS-1002A	EUH-1002	
PMOD1002	3/4	2#12, 1#12G	XHHW-2	PBD-101	MOD-1002	
CMOD1003	3/4	2#14, 1#14G	XHHW-2	EF-1004	MOD-1003	MOD OPENS WHEN EF-1004 STARTS
PEF1003	3/4	2#12, 1#12G	XHHW-2	PBD-101	EF-1003	
PETPA1003	3/4	2#12, 1#12G	XHHW-2	PBD-101	ETPA-1003	PROVIDE 120V DISCONNECT SWITCH
PEUH1003A	1	3#12, 1#12G	XHHW-2	PDP-101	DS-1003A	
PEUH1003B	1	3#12, 1#12G	XHHW-2	DS-1003A	EUH-1003	
PMOD1003	3/4	2#12, 1#12G	XHHW-2	PBD-101	MOD-1003	
CEF1004	3/4	4#14, 1#14G	XHHW-2	CP-101	EF-1004	PLC DO TO CALL RUN WHEN O2 OR O3 SENSOR...
CMOD1004	3/4	2#14, 1#14G	XHHW-2	EF-1004	MOD-1004	MOD OPENS WHEN EF-1004 STARTS
PEF1004A	3/4	3#12, 1#12G	XHHW-2	PDP-101	MS-1004	
PEF1004B	3/4	3#12, 1#12G	XHHW-2	MS-1004	EF-1004	
PMOD1004	3/4	2#12, 1#12G	XHHW-2	PBD-101	MOD-1004	
CCP1201	1	10#14, 1#14G	XHHW-2	CP-101	CP-1201	
CSTR1201	3/4	10#14, 1#14G	XHHW-2	CP-1201	STR-1201	
PCP1201	1	3#12, 1#12G	XHHW-2	PDP-101	CP-1201	
PSTR1201	3/4	3#12, 1#12G	XHHW-2	CP-1201	STR-1201	
CSTR1202	3/4	10#14, 1#14G	XHHW-2	CP-1201	STR-1202	
PSTR1202	3/4	3#12, 1#12G	XHHW-2	CP-1201	STR-1202	
SPIT1500	1	1PR#18TSP	INSTRUMENTATION	CP-101	PIT-1500	
CFCV1501	3/4	6#14, 1#14G	XHHW-2	CP-101	FCV-1501	
SFCV1501	1	2PR#18TSP	INSTRUMENTATION	CP-101	FCV-1501	
CFCV1502	3/4	6#14, 1#14G	XHHW-2	CP-101	FCV-1502	
SFCV1502	1	2PR#18TSP	INSTRUMENTATION	CP-101	FCV-1502	
PAIT1511	3/4	2#12, 1#12G	XHHW-2	PBD-101	AIT-1511	
SAIT1511	1	1PR#18TSP	INSTRUMENTATION	CP-101	AIT-1511	
PAIT1512	3/4	2#12, 1#12G	XHHW-2	PBD-101	AIT-1512	
SAIT1512	1	2PR#18TSP	INSTRUMENTATION	CP-101	AIT-1512	
SPIT1513	1	1PR#18TSP	INSTRUMENTATION	CP-101	PIT-1513	
DMOCP2000	1	ETHERNET	CAT6	CP-101	MOCP-2000	
PMOCP2000	1	2#12, #12G	XHHW-2	PBD-101	MOCP-2000	
SAIT2000	1	1PR#18TSP	INSTRUMENTATION	CP-2001	AIT-2000	
CJBC2001A	2	SEE NOTES	XHHW-2	CP-2001	JBC-2001A	COORDINATE WITH MANUFACTURER FOR CONTROL CONDUCTORS REQUIRED
CJBC2001B	2	SEE NOTES	XHHW-2	CP-2001	JBC-2001B	COORDINATE WITH MANUFACTURER FOR CONTROL CONDUCTORS REQUIRED
DCP2001	1	ETHERNET	CAT6	MOCP-2000	CP-2001	
PCP2001	3/4	2#12, #12G	XHHW-2	PBD-101	CP-2001	
PJBP2001	2	SEE NOTES	XHHW-2	CP-2001	JBP-2001	COORDINATE WITH MANUFACTURER FOR POWER CONDUCTORS REQUIRED
SJBS2001	2	SEE NOTES	INSTRUMENTATION	CP-2001	JBS-2001	COORDINATE WITH MANUFACTURER FOR SIGNAL CONDUCTORS REQUIRED
DCP2100	1	ETHERNET	CAT6	CP-101	CP-2100	
PCP2100	3/4	3#12, 1#12G	XHHW-2	PDP-101	CP-2100	
CLS2101	3/4	3#14, 1#14G	XHHW-2	CP-2100	LS-2101	
SLIT2101	1	1PR#18TSP	INSTRUMENTATION	CP-2100	LIT-2101	
SPIT2101	1	1PR#18TSP	INSTRUMENTATION	CP-2100	PIT-2101	
CBV2111	1	10#14, 1#14G	XHHW-2	CP-2100	BV-2111	
CTSL2111	3/4	2#14, 1#14G	XHHW-2	CP-2100	TSL-2111	
CBV2121	1	10#14, 1#14G	XHHW-2	CP-2100	BV-2121	
CTSL2121	3/4	2#14, 1#14G	XHHW-2	CP-2100	TSL-2121	
CBV2201	1	10#14, 1#14G	XHHW-2	MOCP-2000	BV-2201	
SPIT2201	1	1PR#18TSP	INSTRUMENTATION	MOCP-2000	PIT-2201	

ISSUE	DATE	DESCRIPTION
A	09/2026	ISSUED FOR BIDS

PROJECT MANAGER	PIERRE KWAN
CIVIL	J. MEGRDITCHIAN
STRUCTURAL	P. LINDBLOM
ARCHITECTURAL	V. YANEZ
PROCESS	P. KWAN
MECHANICAL	K. CHEUNG
ELECTRICAL	R. MCCOMB
INSTRUMENTATION	D. BEST
PROJECT NUMBER	10193663

REGISTERED PROFESSIONAL ENGINEER 88023PE DIGITALLY SIGNED OREGON MAY 14, 2013 ROBB J. MCCOMB

EXPIRES: 12/31/2026

CITY OF ASHLAND

Ashland, Oregon

City of Ashland

Ashland Creek Water Treatment Plant

2026

ELECTRICAL
CONDUIT AND CABLE SCHEDULE - 1

0 1" 2"

FILENAME 10193663-AWTP-100_E.rvt

SCALE

SHEET **000E002**

Autodesk Docs://10193663_Ashland_WTP_Final_Design_2024/10193663-AWTP-100_E.rvt
9/22/2026 9:47:29 PM

RACEWAY TAG	SIZE	CABLES	TYPE	RACEWAY FROM	RACEWAY TO	COMMENTS
STIT2201	1	1PR#18TSP	INSTRUMENTATION	MOCP-2000	TIT-2201	
PAIT2203	3/4	2#12, 1#12G	XHHW-2	PBD-101	AIT-2203	
SAIT2203	1	1PR#18TSP	INSTRUMENTATION	MOCP-2000	AIT-2203	
SPIT2203	1	1PR#18TSP	INSTRUMENTATION	MOCP-2000	PIT-2203	
CNBS2301	1	PULL CORD	XHHW-2	MOCP-2000	NBS-2301	
CPB2401	3/4	2#14, 1#14G	XHHW-2	MOCP-2000	PB-2401	
SAIT2401	1	1PR#18TSP	INSTRUMENTATION	MOCP-2000	AIT-2401	
CPB2402	3/4	2#14, 1#14G	XHHW-2	MOCP-2000	PB-2402	
SAIT2402	1	1PR#18TSP	INSTRUMENTATION	MOCP-2000	AIT-2402	
DCP2410	1	ETHERNET	CAT6	MOCP-2000	CP-2410	
PCP2410	1	3#6, 1#10G	XHHW-2	XFMR-2410	CP-2410	
PGEN2410	1	3#6, 1#10G	XHHW-2	CP-2410	GEN-2410	
PXFMR2410	1	3#6, 1#10G	XHHW-2	PDP-101	XFMR-2410	
CBV2411	1	6#14, 1#14G	XHHW-2	MOCP-2000	BV-2411	
CBV2413	1	6#14, 1#14G	XHHW-2	MOCP-2000	BV-2413	
CGV2416	1	6#14, 1#14G	XHHW-2	MOCP-2000	GV-2416	
CBV2417	1	6#14, 1#14G	XHHW-2	MOCP-2000	BV-2417	
CBV2418	1	6#14, 1#14G	XHHW-2	MOCP-2000	BV-2418	
DCP2420	1	ETHERNET	CAT6	MOCP-2000	CP-2420	
PCP2420	1	3#6, 1#10G	XHHW-2	XFMR-2420	CP-2420	
PGEN2420	1	3#6, 1#10G	XHHW-2	CP-2420	GEN-2420	
PXFMR2420	1	3#6, 1#10G	XHHW-2	PDP-101	XFMR-2420	
CBV2421	1	6#14, 1#14G	XHHW-2	MOCP-2000	BV-2421	
CBV2423	1	6#14, 1#14G	XHHW-2	MOCP-2000	BV-2423	
CGV2426	1	6#14, 1#14G	XHHW-2	MOCP-2000	GV-2426	
CBV2427	1	6#14, 1#14G	XHHW-2	MOCP-2000	BV-2427	
CBV2428	1	6#14, 1#14G	XHHW-2	MOCP-2000	BV-2428	
CBV2510	1	6#14, 1#14G	XHHW-2	MOCP-2000	BV-2510	
DCP2510	1	ETHERNET	CAT6	MOCP-2000	CP-2510	
PCHL2510	1	3#8, 1#10G	XHHW-2	CP-2510	CHL-2510	
PCP2510	1	3#8, 1#10G	XHHW-2	PDP-101	CP-2510	
PTSL2510	3/4	2#12, 1#12G	XHHW-2	PBD-101	TSL-2510	HEAT TRACE
DCP2511	1	ETHERNET	CAT6	MOCP-2000	CP-2511	
PCHL2511	1	3#8, 1#10G	XHHW-2	CP-2520	CHL-2511	
PCP2511	1	3#8, 1#10G	XHHW-2	PDP-101	CP-2511	
CBV2520	1	10#14, 1#14G	XHHW-2	MOCP-2000	BV-2520	
DCP2520	1	ETHERNET	CAT6	MOCP-2000	CP-2520	
PAIT2600	3/4	2#12, 1#12G	XHHW-2	MOCP-2000	AIT-2600	
PTIT2600	3/4	2#12, 1#12G	XHHW-2	MOCP-2000	TIT-2600	
SAIT2600	1	1PR#18TSP	INSTRUMENTATION	MOCP-2000	AIT-2600	
SPIT2600	1	1PR#18TSP	INSTRUMENTATION	MOCP-2000	PIT-2600	
STIT2600	1	1PR#18TSP	INSTRUMENTATION	MOCP-2000	TIT-2600	
PAIT2601	3/4	2#12, 1#12G	XHHW-2	MOCP-2000	AIT-2601	
SAIT2601	1	1PR#18TSP	INSTRUMENTATION	MOCP-2000	AIT-2601	
SPIT2601	1	1PR#18TSP	INSTRUMENTATION	MOCP-2000	PIT-2601	
DCP2610	1	ETHERNET	CAT6	MOCP-2000	CP-2610	
PCP2610	1	3#12, 1#12G	XHHW-2	XFMR-2610	CP-2610	
POZD2610	1	3#12, 1#12G	XHHW-2	CP-2610	OZD-2610	
PXFMR2610	1	3#12, 1#12G	XHHW-2	PDP-101	XFMR-2610	
CBV2611	1	10#14, 1#14G	XHHW-2	MOCP-2000	BV-2611	
DCP2620	1	ETHERNET	CAT6	MOCP-2000	CP-2620	
PCP2620	1	3#12, 1#12G	XHHW-2	XFMR-2620	CP-2620	
POZD2620	1	3#12, 1#12G		CP-2620	OZD-2420	
PXFMR2620	1	3#12, 1#12G	XHHW-2	PDP-101	XFMR-2620	
FSVR3000	1	ETHERNET	2-CAT6	CP-301	SERVER RACK	
PSVR3000	1	2#12, #12G	XHHW-2	PBD-305	SERVER RACK	
CMOD3001	3/4	2#14, 1#14G	XHHW-2	EF-3004	MOD-3001	MOD OPENS WHEN EF-3004 STARTS
PBCU3001A	1	3#12, 1#12G	XHHW-2	MCC-311	DSBCU-3001	
PBCU3001B	1	3#12, 1#12G	XHHW-2	DSBCU-3001	BCU-3001	
PDOAS3001A	1	2#10, 1#10G	XHHW-2	PBD-303	DSDOAS-3001	
PDOAS3001B	1	2#10, 1#10G	XHHW-2	DSDOAS-3001	DOAS-3001	
PDWPBP3001A	3/4	3#12, 1#12G	XHHW-2	MCC-311	DSWP-3001	
PDWPBP3001B	3/4	3#12, 1#12G	XHHW-2	DSWP-3001	DWPBP-3001	
PEDH3001A	3/4	2#12, 1#12G	XHHW-2	PBD-303	DSEDH-3001	
PEDH3001B	3/4	2#12, 1#12G	XHHW-2	DSEDH-3001	EDH-3001	
PEF3001A	3/4	2#12, 1#12G	XHHW-2	PBD-301	DSEF-3001	
PEF3001B	3/4	2#12, 1#12G	XHHW-2	DSEF-3001	EF-3001	
PELVR3001A	1	3#12, 1#12G	XHHW-2	MCC-311	DS-3001D	PROVIDE FUSED DS. ELEVATOR
PELVR3001B	1	3#12, 1#12G	XHHW-2	DS-3001D	ELVR-3001	
PERU3001A	1	3#6, 1#10G	XHHW-2	MCC-312	DSERU-3001	
PERU3001B	1	3#6, 1#10G	XHHW-2	DSERU-3001	ERU-3001	
PESP3001A	3/4	3#12, 1#12G	XHHW-2	MCC-311	LCP-3001	SUMP PUMP CONTROL PANEL
PESP3001B	3/4	3#12, 1#12G	XHHW-2	LCP-3001	ESP-3001	
PETPA3001	3/4	2#12, 1#12G	XHHW-2	PBD-303	ETPA-3001	PROVIDE 120V DISCONNECT SWITCH
PEUH3001A	1	3#12, 1#12G	XHHW-2	MCC-312	DSEUH-3001	
PEUH3001B	1	3#12, 1#12G	XHHW-2	DSEUH-3001	EUH-3001	
PEWH3001A	1	3#8, 1#10G	XHHW-2	MCC-311	DSEWH-3001	
PEWH3001B	1	3#8, 1#10G	XHHW-2	DSEWH-3001B	EWH-3001	
PFC3001	3/4	2#12, 1#12G	XHHW-2	HP-3001	FC-3001	
PHP3001A	3/4	2#10, 1#10G	XHHW-2	PBD-305	DSHP-3001	
PHP3001B	3/4	2#10, 1#10G	XHHW-2	DSHP-3001	HP-3001	
PMAU3001A	1	3#8, 1#10G	XHHW-2	MCC-312	DSMAU-3001	
PMAU3001B	1	3#8, 1#10G	XHHW-2	DSMAU-3001	MAU-3001	
PMOD3001	3/4	2#12, 1#12G	XHHW-2	PBD-301	MOD-3001	
PRCP3001A	3/4	2#12, 1#12G	XHHW-2	PBD-301	DSRCP-3001	
PRCP3001B	3/4	2#12, 1#12G	XHHW-2	DSRCP-3001	RCP-3001	
PSSP3001A	3/4	3#12, 1#12G	XHHW-2	MCC-312	LCPSSP-3001	
PSSP3001B	1	3#12, 1#12G	XHHW-2	LCPSSP-3001	SSP-3001	
SPIT3001	1	1PR#18TSP	INSTRUMENTATION	MOCP-2000	PIT-3001	
PAIT3002	3/4	2#12, 1#12G	XHHW-2	PBD-101	AIT-3002	
PEF3002A	3/4	2#12, 1#12G	XHHW-2	PBD-301	DS-3002	TIMER SWITCH
PEF3002B	3/4	2#12, 1#12G	XHHW-2	DS-3002	EF-3002	
PETPA3002	3/4	2#12, 1#12G	XHHW-2	PBD-303	ETPA-3002	PROVIDE 120V DISCONNECT SWITCH
PEUH3002A	1	3#12, 1#12G	XHHW-2	MCC-312	DSEUH-3002	
PEUH3002B	1	3#12, 1#12G	XHHW-2	DSEUH-3002	EUH-3002	

RACEWAY TAG	SIZE	CABLES	TYPE	RACEWAY FROM	RACEWAY TO	COMMENTS
PFC3002	3/4	2#12, 1#12G	XHHW-2	HP-3002	FC-3002	
PHP3002A	3/4	2#10, 1#10G	XHHW-2	PBD-303	DSHP-3002	
PHP3002B	3/4	2#10, 1#10G	XHHW-2	DSHP-3002	HP-3002	
PMAU3002A	1	3#8, 1#10G	XHHW-2	MCC-312	DSMAU-3002	
PMAU3002B	1	3#8, 1#10G	XHHW-2	DSMAU-3002	MAU-3002	
PRCP3002A	3/4	2#12, 1#12G	XHHW-2	PBD-301	DSRCP-3002	
PRCP3002B	3/4	2#12, 1#12G	XHHW-2	DSRCP-3002	RCP-3002	
SAIT3002	1	1PR#18TSP	INSTRUMENTATION	MOCP-2000	AIT-3002	
PAIT3003	3/4	2#12, 1#12G	XHHW-2	PBD-303	AIT-3003	
PEF3003A	3/4	2#12, 1#12G	XHHW-2	PBD-303	DSEF-3003	
PEF3003B	3/4	2#12, 1#12G	XHHW-2	DSEF-3003	EF-3003	
PETPA3003	3/4	2#12, 1#12G	XHHW-2	PBD-301	ETPA-3003	PROVIDE 120V DISCONNECT SWITCH
PEUH3003A	1	3#12, 1#12G	XHHW-2	MCC-312	DSEUH-3003	
PEUH3003B	1	3#12, 1#12G	XHHW-2	DSEUH-3003	EUH-3003	
PFC3003	3/4	2#12, 1#12G	XHHW-2	HP-3003	FC-3003	
PHP3003A	3/4	2#10, 1#10G	XHHW-2	PBD-303	DSHP-3003	
PHP3003B	3/4	2#10, 1#10G	XHHW-2	DSHP-3003	HP-3003	
SAIT3003	1	1PR#18TSP	INSTRUMENTATION	CP-302	AIT-3003	
PAIT3004	3/4	2#12, 1#12G	XHHW-2	PBD-303	AIT-3004	
PEF3004A	3/4	3#12, 1#12G	XHHW-2	MCC-312	DSEF-3004	
PEF3004B	3/4	3#12, 1#12G	XHHW-2	DSEF-3004	EF-3004	
PETPA3004	3/4	2#12, 1#12G	XHHW-2	PBD-301	ETPA-3004	PROVIDE 120V DISCONNECT SWITCH
PEUH3004A	1	3#12, 1#12G	XHHW-2	MCC-312	DSEUH-3004	
PEUH3004B	1	3#12, 1#12G	XHHW-2	DSEUH-3004	EUH-3004	
PFC3004	3/4	2#12, 1#12G	XHHW-2	HP-3004	FC-3004	
PHP3004A	3/4	2#10, 1#10G	XHHW-2	PBD-303	DSHP-3004	
PHP3004B	3/4	2#10, 1#10G	XHHW-2	DSHP-3004	HP-3004	
SAIT3004	1	1PR#18TSP	INSTRUMENTATION	CP-302	AIT-3004	
PAIT3005	3/4	2#12, 1#12G	XHHW-2	PBD-303	AIT-3005	
PEF3005A	3/4	2#12, 1#12G	XHHW-2	PBD-301	DSEF-3005	
PEF3005B	3/4	2#12, 1#12G	XHHW-2	DSEF-3005	EF-3005	
PEUH3005A	1	3#12, 1#12G	XHHW-2	MCC-312	DSEUH-3005	
PEUH3005B	1	3#12, 1#12G	XHHW-2	DSEUH-3005	EUH-3005	
PFC3005	3/4	2#12, 1#12G	XHHW-2	HP-3005	FC-3005	
PHP3005A	3/4	2#10, 1#10G	XHHW-2	PBD-305	DSHP-3005	
PHP3005B	3/4	2#10, 1#10G	XHHW-2	DSHP-3005	HP-3005	
SAIT3005	1	1PR#18TSP	INSTRUMENTATION	CP-302	AIT-3005	
PEF3006A	3/4	2#12, 1#12G	XHHW-2	PBD-303	DSEF-3006	
PEF3006B	3/4	2#12, 1#12G	XHHW-2	DSEF-3006	EF-3006	
PEUH3006A	1	3#12, 1#12G	XHHW-2	MCC-312	DSEUH-3006	
PEUH3006B	1	3#12, 1#12G	XHHW-2	DSEUH-3006	EUH-3006	
PFC3006	3/4	2#12, 1#12G	XHHW-2	HP-3006	FC-3006	
PHP3006A	3/4	2#10, 1#10G	XHHW-2	PBD-305	DSHP-3006	
PHP3006B	3/4	2#10, 1#10G	XHHW-2	DSHP-3006	HP-3006	
PFC3007	3/4	2#12, 1#12G	XHHW-2	HP-3007	FC-3007	
PHP3007A	3/4	2#10, 1#10G	XHHW-2	PBD-303	DSHP-3007	
PHP3007B	3/4	2#10, 1#10G	XHHW-2	DSHP-3007	HP-3007	
PHP3008A	3/4	3#10, 1#10G	XHHW-2	MCC-312	DSHP-3008	
PHP3008B	3/4	3#10, 1#10G	XHHW-2	DSHP-3008	HP-3008	
PHP3009A	3/4	2#10, 1#10G	XHHW-2	PBD-303	DSHP-3009	
PHP3009B	3/4	2#10, 1#10G	XHHW-2	DSHP-3009	HP-3009	
PP3011	3/4	2#10, 1#10G	XHHW-2	P-3011	PBD-303	
CLSH3111	3/4	2#14, 1#14G	XHHW-2	LSH-3111	CP-303	
DCP3200	1	ETHERNET	CAT6	CP-3200	CP-301	
CCP3211	2	40#14, 1#14G	XHHW-2	CP-3211	CP-3200	
PCP3211	1	3#8, 1#10G	XHHW-2	MCC-311	CP-3211	
SCP3211	1-1/2	1PR#18TSP, CAT6	INSTRUMENTATION	CP-3211	CP-3200	
PMX3212	1	3#12, 1#12G	XHHW-2	CP-3211	MX-3212	
PMX3213	1	3#12, 1#12G	XHHW-2	CP-3211	MX-3213	
PMX3214	1	3#12, 1#12G	XHHW-2	CP-3211	MX-3214	
CPV3216	3/4	10#14, 1#14G	XHHW-2	PV-3216	CP-3200	
PPV3216	1	3#12, 1#12G	XHHW-2	CP-3211	PV-3216	
CCP3221	2	40#14, 1#14G	XHHW-2	CP-3221	CP-3200	
PCP3221	1	3#8, 1#10G	XHHW-2	MCC-312	CP-3221	
SCP3221	1-1/2	1PR#18TSP, CAT6	INSTRUMENTATION	CP-3221	CP-3200	
PMX3222	1	3#12, 1#12G	XHHW-2	CP-3221	MX-3222	
PMX3223	1	3#12, 1#12G	XHHW-2	CP-3221	MX-3223	
PMX3224	1	3#12, 1#12G	XHHW-2	CP-3221	MX-3224	
CPV3226	3/4	10#14, 1#14G	XHHW-2	PV-3226	CP-3200	
PPV3226	1	3#12, 1#12G	XHHW-2	CP-3221	PV-3226	
PP3231	3/4	2#10, 1#10G	XHHW-2	P-3231	PBD-303	
CHS3311	3/4	2#14, 1#14G	XHHW-2	CP-3211	HS-3311	
PFIT3311	3/4	2#12, 1#12G	XHHW-2	CP-3211	FIT-3311	
PPMP3311	1	3#12, 1#12G	XHHW-2	CP-3211	PMP-3311	
SFIT3311	1	1PR#18TSP	INSTRUMENTATION	CP-3200	FIT-3311	
SPIT3311	1	1PR#18TSP	INSTRUMENTATION	CP-3200	PIT-3311	
CHS3321	3/4	2#14, 1#14G	XHHW-2	CP-3221	HS-3321	
PFIT3321	3/4	2#12, 1#12G	XHHW-2	CP-3221	FIT-3321	
PPMP3321	1	3#12, 1#12G	XHHW-2	CP-3221	PMP-3321	
SFIT3321	1	1PR#18TSP	INSTRUMENTATION	CP-3200	FIT-3321	
SPIT3321	1	1PR#18TSP	INSTRUMENTATION	CP-3200	PIT-3321	
CBFV4011	1	8#14, 1#14G	XHHW-2	CP-303	BFV-4011	
CBFV4021	1	8#14, 1#14G	XHHW-2	CP-303	BFV-4021	
CBFV4031	1	8#14, 1#14G	XHHW-2	CP-303	BFV-4031	
CBFV4041	1	8#14, 1#14G	XHHW-2	CP-303	BFV-4041	
CBFV4111A	1	8#14, 1#14G	XHHW-2	CP-303	BFV-4111	
CLSH4111	3/4	2#14, 1#14G	XHHW-2	CP-303	LSH-4111	
CSV4111	3/4	4#14, 1#14G	XHHW-2	CP-303	SV-4111	
PAIT4111	3/4	2#12, 1#12G	XHHW-2	PBD-301	AIT-4111	
PFIT4111	3/4	2#12, 1#12G	XHHW-2	PBD-301	FIT-4111	
SAIT4111	1	1PR#18TSP	INSTRUMENTATION	CP-303	AIT-4111	
SDPIT4111	1	1PR#18TSP	INSTRUMENTATION	CP-303	DPIT-4111	
SFIT4111	1	1PR#18TSP	INSTRUMENTATION	CP-303	FIT-4111	
SLIT4111	1	1PR#18TSP	INSTRUMENTATION	CP-303	LIT-4111	
CBFV4121A	1	8#14, 1#14G	XHHW-2	CP-303	BFV-4121	

ISSUE	DATE	DESCRIPTION
A	09/2026	ISSUED FOR BIDS

PROJECT MANAGER	PIERRE KWAN
CIVIL	J. MEGRDITCHIAN
STRUCTURAL	P. LINDBLOM
ARCHITECTURAL	V. YANEZ
PROCESS	P. KWAN
MECHANICAL	K. CHEUNG
ELECTRICAL	R. MCCOMB
INSTRUMENTATION	D. BEST
PROJECT NUMBER	10193663

REGISTERED PROFESSIONAL ENGINEER 88023PE DIGITALLY SIGNED OREGON MAY 14, 2013 ROBB J. MCCOMB
EXPIRES: 12/31/2026

CITY OF ASHLAND
Ashland, Oregon

City of Ashland

Ashland Creek Water Treatment Plant

2026

ELECTRICAL CONDUIT AND CABLE SCHEDULE - 2

0 1" 2"

FILENAME 10193663-AWTP-100_E.rvt

SCALE

SHEET **000E003**

Autodesk Docs://10193663_Ashland_WTP_Final_Design_2024/10193663-AWTP-100_E.rvt
9/22/2026 9:47:29 PM

RACEWAY TAG	SIZE	CABLES	TYPE	RACEWAY FROM	RACEWAY TO	COMMENTS
CLSH4121	3/4	2#14, 1#14G	XHHW-2	CP-303	LSH-4121	
CSV4121	3/4	4#14, 1#14G	XHHW-2	CP-303	SV-4121	
PAIT4121	3/4	2#12, 1#12G	XHHW-2	PBD-301	AIT-4121	
PFIT4121	3/4	2#12, 1#12G	XHHW-2	PBD-301	FIT-4121	
SAIT4121	1	1PR#18TSP	INSTRUMENTATION	CP-303	AIT-4121	
SDPIT4121	1	1PR#18TSP	INSTRUMENTATION	CP-303	DPIT-4121	
SFIT4121	1	1PR#18TSP	INSTRUMENTATION	CP-303	FIT-4121	
SLIT4121	1	1PR#18TSP	INSTRUMENTATION	CP-303	LIT-4121	
CBFV4131A	1	8#14, 1#14G	XHHW-2	CP-303	BFV-4131	
CLSH4131	3/4	2#14, 1#14G	XHHW-2	CP-303	LSH-4131	
CSV4131	3/4	4#14, 1#14G	XHHW-2	CP-303	SV-4131	
PAIT4131	3/4	2#12, 1#12G	XHHW-2	PBD-301	AIT-4131	
PFIT4131	3/4	2#12, 1#12G	XHHW-2	PBD-301	FIT-4131	
SAIT4131	1	1PR#18TSP	INSTRUMENTATION	CP-303	AIT-4131	
SDPIT4131	1	1PR#18TSP	INSTRUMENTATION	CP-303	DPIT-4131	
SFIT4131	1	1PR#18TSP	INSTRUMENTATION	CP-303	FIT-4131	
SLIT4131	1	1PR#18TSP	INSTRUMENTATION	CP-303	LIT-4131	
CBFV4141A	1	8#14, 1#14G	XHHW-2	CP-303	BFV-4141	
CLSH4141	3/4	2#14, 1#14G	XHHW-2	CP-303	LSH-4141	
CSV4141	3/4	4#14, 1#14G	XHHW-2	CP-303	SV-4141	
PAIT4141	3/4	2#12, 1#12G	XHHW-2	PBD-301	AIT-4141	
PFIT4141	3/4	2#12, 1#12G	XHHW-2	PBD-301	FIT-4141	
SAIT4141	1	1PR#18TSP	INSTRUMENTATION	CP-303	AIT-4141	
SDPIT4141	1	1PR#18TSP	INSTRUMENTATION	CP-303	DPIT-4141	
SFIT4141	1	1PR#18TSP	INSTRUMENTATION	CP-303	FIT-4141	
SLIT4141	1	1PR#18TSP	INSTRUMENTATION	CP-303	LIT-4141	
PAIT4200	3/4	2#12, 1#12G	XHHW-2	PBD-301	AIT-4200	
SAIT4200	1	1PR#18TSP	INSTRUMENTATION	CP-303	AIT-4200	
CBFV4211	1	6#14, 1#14G	XHHW-2	CP-303	BFV-4211	
SBFV4211	1	1PR#18TSP	INSTRUMENTATION	CP-303	BFV-4211	
CBFV4212	1	10#14, 1#14G	XHHW-2	CP-303	BFV-4212	
CBFV4221	1	6#14, 1#14G	XHHW-2	CP-303	BFV-4221	
SBFV4221	1	1PR#18TSP	INSTRUMENTATION	CP-303	BFV-4221	
CBFV4222	1	10#14, 1#14G	XHHW-2	CP-303	BFV-4222	
CBFV4231	1	6#14, 1#14G	XHHW-2	CP-303	BFV-4231	
SBFV4231	1	1PR#18TSP	INSTRUMENTATION	CP-303	BFV-4231	
CBFV4232	1	10#14, 1#14G	XHHW-2	CP-303	BFV-4232	
CBFV4241	1	6#14, 1#14G	XHHW-2	CP-303	BFV-4241	
SBFV4241	1	1PR#18TSP	INSTRUMENTATION	CP-303	BFV-4241	
CBFV4242	1	10#14, 1#14G	XHHW-2	CP-303	BFV-4242	
CBFV4311	1	8#14, 1#14G	XHHW-2	CP-303	BFV-4311	
CBFV4321	1	8#14, 1#14G	XHHW-2	CP-303	BFV-4321	
CBFV4331	1	8#14, 1#14G	XHHW-2	CP-303	BFV-4331	
CBFV4341	1	8#14, 1#14G	XHHW-2	CP-303	BFV-4341	
CBFV4411	1	8#14, 1#14G	XHHW-2	CP-303	BFV-4411	
CBFV4421	1	8#14, 1#14G	XHHW-2	CP-303	BFV-4421	
CBFV4431	1	8#14, 1#14G	XHHW-2	CP-303	BFV-4431	
CBFV4441	1	8#14, 1#14G	XHHW-2	CP-303	BFV-4441	
CHS4501	3/4	2#14, 1#14G	XHHW-2	JB-4501	HS-4501	
CJB4501	1	10#14, 1#14G	XHHW-2	VFD-4501	JB-4501	
CPSH4501	3/4	2#14, 1#14G	XHHW-2	JB-4501	PSH-4501	
CTSH4501	3/4	2#14, 1#14G	XHHW-2	JB-4501	TSH-4501	
CVFD4501	3/4	6#14, 1#14G	XHHW-2	VFD-4501	CP-303	
DVFD4501	1	ETHERNET	CAT6	VFD-4501	CP-303	
PBLW4501	2	3#4/0, 1#6G	VFD	VFD-4501	BLW-4501	
PVFD4501	2	3#4/0, 1#6G	XHHW-2	MCC-311	VFD-4501	
SVFD4501	1	1PR#18TSP	INSTRUMENTATION	VFD-4501	CP-303	
CJB4502	1	PULL CORD	XHHW-2	VFD-4502	JB-4502	STUB UP 6" AND CAP
CVFD4502	3/4	PULL CORD	XHHW-2	VFD-4502	CP-303	STUB UP 6" AND CAP
DVFD4502	1	PULL CORD	CAT6	VFD-4502	CP-303	STUB UP 6" AND CAP
PBLW4502	2	PULL CORD	VFD	VFD-4502	BLW-4502	STUB UP 6" AND CAP
PVFD4502	2	PULL CORD	XHHW-2	MCC-312	VFD-4502	STUB UP 6" AND CAP
SVFD4502	1	PULL CORD	INSTRUMENTATION	VFD-4502	CP-303	STUB UP 6" AND CAP
CBFV4511	1	10#14, 1#14G	XHHW-2	CP-303	BFV-4511	
PFIT4511	3/4	2#12, 1#12G	XHHW-2	PBD-301	FIT-4511	
PTIT4511	3/4	2#12, 1#12G	XHHW-2	PBD-301	TIT-4511	
SFE4511	1	VENDOR CABLE	INSTRUMENTATION	FIT-4511	FE-4511	
SFIT4511	1	1PR#18TSP	INSTRUMENTATION	CP-303	FIT-4511	
SPIT4511	1	1PR#18TSP	INSTRUMENTATION	CP-303	PIT-4511	
STIT4511	1	1PR#18TSP	INSTRUMENTATION	CP-303	TIT-4511	
CBFV4611	1	8#14, 1#14G	XHHW-2	CP-303	BFV-4611	
CBFV4621	1	8#14, 1#14G	XHHW-2	CP-303	BFV-4621	
CBFV4631	1	8#14, 1#14G	XHHW-2	CP-303	BFV-4631	
CBFV4641	1	8#14, 1#14G	XHHW-2	CP-303	BFV-4641	
DMV4701	1	ETHERNET	CAT6	MV-4701	CP-401	
DPV4701	1	ETHERNET	CAT6	PV-4701	CP-401	
PLIT4701	3/4	2#12, 1#12G	XHHW-2	MPC-401	LIT-4701	
PMV4701A	3/4	3#12, 1#12G	XHHW-2	PDP-401	MV-4701	PROVIDE DS AT ACTUATOR
PPV4701A	3/4	3#12, 1#12G	XHHW-2	PDP-401	PV-4701	PROVIDE DS AT ACTUATOR
SLE4701	1	VENDOR CABLE	INSTRUMENTATION	LIT-4701	LE-4701	
SLIT4701	1	1PR#18TSP	INSTRUMENTATION	CP-401	LIT-4701	
DMV4702	1	ETHERNET	CAT6	MV-4702	CP-401	
DPV4702	1	ETHERNET	CAT6	PV-4702	CP-401	
PLIT4702	3/4	2#12, 1#12G	XHHW-2	MPC-401	LIT-4702	
PMV4702A	3/4	3#12, 1#12G	XHHW-2	PDP-401	MV-4702	PROVIDE DS AT ACTUATOR
PPV4702A	3/4	3#12, 1#12G	XHHW-2	PDP-401	PV-4702	PROVIDE DS AT ACTUATOR
SLE4702	1	VENDOR CABLE	INSTRUMENTATION	LIT-4702	LE-4702	
SLIT4702	1	1PR#18TSP	INSTRUMENTATION	CP-401	LIT-4702	
PFIT4703	3/4	2#12, 1#12G	XHHW-2	MPC-401	FIT-4703	
SFIT4703	1	1PR#18TSP	INSTRUMENTATION	CP-401	FIT-4703	
CLCP4810	1	10#14, 1#14G	XHHW-2	LCP-4810	CP-301	
PLCP4810A	1	3#8, 1#10G	XHHW-2	MCC-311	DS-4810	
PLCP4810B	1	3#8, 1#10G	XHHW-2	DS-4810	LCP-4810	
CLSLL5001	3/4	2#14, 1#14G	XHHW-2	CP-301	LSLL-5001	

RACEWAY TAG	SIZE	CABLES	TYPE	RACEWAY FROM	RACEWAY TO	COMMENTS
CSWS5001	3/4	2#14, 1#14G	XHHW-2	CP-301	SWS-5001	
PFIT5001	3/4	2#12, 1#12G	XHHW-2	PBD-301	FIT-5001	
PLIT5001	3/4	2#12, 1#12G	XHHW-2	PBD-301	LIT-5001	
PSWS5001	3/4	2#12, 1#12G	XHHW-2	PBD-301	SWS-5001	
SFIT5001	3/4	1PR#18TSP	INSTRUMENTATION	CP-301	FIT-5001	
SLE5001	3/4	VENDOR CABLE	INSTRUMENTATION	LIT-5001	LE-5001	
SLIT5001	3/4	1PR#18TSP	INSTRUMENTATION	CP-301	LIT-5001	
CHS5011	3/4	2#14, 1#14G	XHHW-2	JB-5011	HS-5011	
CJB5011	1	8#14, 1#14G	XHHW-2	VFD-5011	JB-5011	
CTSH5011	3/4	2#14, 1#14G	XHHW-2	JB-5011	TSH-5011	
CVFD5011	3/4	4#14, 1#14G	XHHW-2	VFD-5011	CP-301	
DVFD5011	1	ETHERNET	CAT6	VFD-5011	CP-301	
PP5011	2	3#4/0, 1#6G	VFD	VFD-5011	P-5011	
PVFD5011	2	3#4/0, 1#6G	XHHW-2	MCC-311	VFD-5011	
CHS5012	3/4	2#14, 1#14G	XHHW-2	JB-5012	HS-5012	
CJB5012	1	8#14, 1#14G	XHHW-2	VFD-5012	JB-5012	
CTSH5012	3/4	2#14, 1#14G	XHHW-2	JB-5012	TSH-5012	
CVFD5012	3/4	4#14, 1#14G	XHHW-2	VFD-5012	CP-301	
DVFD5012	1	ETHERNET	CAT6	VFD-5012	VFD-5011	
PP5012	2	3#4/0, 1#6G	VFD	VFD-5012	P-5012	
PVFD5012	2	3#4/0, 1#6G	XHHW-2	MCC-312	VFD-5012	
CHS5013	3/4	2#14, 1#14G	XHHW-2	JB-5013	HS-5013	
CJB5013	1	8#14, 1#14G	XHHW-2	VFD-5013	JB-5013	
CTSH5013	3/4	2#14, 1#14G	XHHW-2	JB-5013	TSH-5013	
CVFD5013	3/4	4#14, 1#14G	XHHW-2	VFD-5013	CP-301	
DVFD5013	1	ETHERNET	CAT6	VFD-5013	VFD-5012	
PP5013	2	3#4/0, 1#6G	VFD	VFD-5013	P-5013	
PVFD5013	2	3#4/0, 1#6G	XHHW-2	MCC-311	VFD-5013	
CLSH5201	3/4	2#14, 1#14G	XHHW-2	CP-501	LSH-5201	
CZSC5201	3/4	2#14, 1#14G	XHHW-2	CP-501	ZSC-5201	HATCH
PAIT5201	3/4	2#12, 1#12G	XHHW-2	PBD-601	FIT-5201	
SAIT5201	1	1PR#18TSP	INSTRUMENTATION	CP-601	FIT-5201	
SLE5201	1	VENDOR	INSTRUMENTATION	LIT-5201	LE-5201	
PFIT5411	3/4	2#12, 1#12G	XHHW-2	PBD-301	FIT-5411	
SBFV5411	1	2PR#18TSP	INSTRUMENTATION	CP-303	BFV-5411	
SFIT5411	1	1PR#18TSP	INSTRUMENTATION	CP-303	FIT-5411	
CHS6001	3/4	2#14, 1#14G	XHHW-2	JB-6001	HS-6001	
CJB6001	1	8#14, 1#14G	XHHW-2	VFD-6001	JB-6001	
CPSH6001	3/4	2#14, 1#14G	XHHW-2	JB-6001	PSH-6001	
CTSH6001	3/4	2#14, 1#14G	XHHW-2	JB-6001	TSH-6001	
DVFD6001	1	ETHERNET	CAT6	VFD-6001	CP-601	
PEF6001A	3/4	2#12, 1#12G	XHHW-2	PBD-601	DSEF-6001	
PEF6001B	3/4	2#12, 1#12G	XHHW-2	DSEF-6001	EF-6001	
PETPA6001	3/4	2#12, 1#12G	XHHW-2	PBD-601	ETPA-6001	PROVIDE 120V DISCONNECT SWITCH
PEUH6001A	3/4	3#12, 1#12G	XHHW-2	PDP-601	DSEHU-6001	
PEUH6001B	3/4	3#12, 1#12G	XHHW-2	DSEHU-6001	EHU-6001	
PFC6001	3/4	2#12, 1#12G	XHHW-2	HP-6001	FC-6001	
PHP6001A	3/4	2#8, 1#10G	XHHW-2	PBD-601	DSHP-6001	
PHP6001B	3/4	2#8, 1#10G	XHHW-2	DSHP-6001	HP-6001	
PP6001	2	3#4/0, 1#6G	VFD	VFD-6001	P-6001	
PVFD6001	2	3#4/0, 1#6G	XHHW-2	PDP-601	VFD-6001	
CHS6002	3/4	2#14, 1#14G	XHHW-2	JB-6002	HS-6002	
CJB6002	1	8#14, 1#14G	XHHW-2	VFD-6002	JB-6002	
CPSH6002	3/4	2#14, 1#14G	XHHW-2	JB-6002	PSH-6002	
CTSH6002	3/4	2#14, 1#14G	XHHW-2	JB-6002	TSH-6002	
DVFD6002	1	ETHERNET	CAT6	VFD-6002	CP-601	
PP6002	2	3#4/0, 1#6G	VFD	VFD-6002	P-6002	
PVFD6002	2	3#4/0, 1#6G	XHHW-2	PDP-601	VFD-6002	
CHS6003	3/4	2#14, 1#14G	XHHW-2	JB-6003	HS-6003	
CJB6003	1	8#14, 1#14G	XHHW-2	VFD-6003	JB-6003	
CPSH6003	3/4	2#14, 1#14G	XHHW-2	JB-6003	PSH-6003	
CTSH6003	3/4	2#14, 1#14G	XHHW-2	JB-6003	TSH-6003	
DVFD6003	1	ETHERNET	CAT6	VFD-6003	CP-601	
PP6003	2	3#4/0, 1#6G	VFD	VFD-6003	P-6003	
PVFD6003	2	3#4/0, 1#6G	XHHW-2	PDP-601	VFD-6003	
CLCP7101	3/4	4#14, 1#14G	XHHW-2	CP-302	LCP-7101	
PLCP7101	3/4	2#12, 1#12G	XHHW-2	PBD-302	LCP-7101	ALUM TANK FILL STATION
PTSL7101	3/4	2#12, 1#12G	XHHW-2	PBD-303	TSL-7101	HEAT TRACE
SLCP7101	1	1PR#18TSP	INSTRUMENTATION	CP-302	LCP-7101	
SLE7101	1	VENDOR	INSTRUMENTATION	LIT-7101	LE-7101	
SLT7101	1	1PR#18TSP	INSTRUMENTATION	LCP-7101	LT-7101	
CSWS7102	3/4	2#14, 1#14G	XHHW-2	CP-302	SWS-7102	
PSWS7102	3/4	2#12, 1#12G	XHHW-2	PBD-303	SWS-7102	
PTSL7102A	3/4	2#12, 1#12G	XHHW-2	PBD-303	TSL-7102A	HEAT TRACE
PTSL7102B	3/4	2#12, 1#12G	XHHW-2	PBD-303	TSL-7102B	HEAT TRACE
SLT7102	1	1PR#18TSP	INSTRUMENTATION	LCP-7101	LT-7102	
CP7111	1	10#14, 1#14G	XHHW-2	CP-302	P-7111	
PP7111	3/4	2#12, 1#12G	XHHW-2	PBD-302	P-7111	PROVIDE DS
SP7111	1	2PR#18TSP	INSTRUMENTATION	CP-302	P-7111	
CP7121	1	10#14, 1#14G	XHHW-2	CP-302	P-7121	
PP7121	3/4	2#12, 1#12G	XHHW-2	PBD-302	P-7121	PROVIDE DS
SP7121	1	2PR#18TSP	INSTRUMENTATION	CP-302	P-7121	
CLSH7141	3/4	2#14, 1#14G	XHHW-2	CP-302	LSH-7141	
CLSH7200	3/4	2#14, 1#14G	XHHW-2	CP-302	LSH-7200	
CLCP7201	1	8#14, 1#14G	XHHW-2	CP-302	LCP-7201	
PLCP7201	1	3#12, 1#12G	XHHW-2	MCC-311	LCP-7201	
PMX7201	1	VENDOR	XHHW-2	LCP-7201	MX-7201	
SLT7201	1	1PR#18TSP	INSTRUMENTATION	LT-7201	LCP-7202	
CLCP7202	3/4	4#14, 1#14G	XHHW-2	CP-302	LCP-7202	
PLCP7202	3/4	2#12, 1#12G	XHHW-2	PBD-302	LCP-7202	SETTLING AND POLYMER TANK FILL STATION
SLCP7202	1	1PR#18TSP	INSTRUMENTATION	CP-302	LCP-7202	
CSWS7203	3/4	4#14, 1#14G	XHHW-2	CP-302	SWS-7203	
PSWS7203	3/4	2#12, 1#12G	XHHW-2	PBD-302	SWS-7203	
CLCP7211	1	10#14, 1#14G	XHHW-2	CP-302	LCP-7211	

ISSUE	DATE	DESCRIPTION
A	09/2026	ISSUED FOR BIDS

PROJECT MANAGER	PIERRE KWAN
CIVIL	J. MEGRDITCHIAN
STRUCTURAL	P. LINDBLOM
ARCHITECTURAL	V. YANEZ
PROCESS	P. KWAN
MECHANICAL	K. CHEUNG
ELECTRICAL	R. MCCOMB
INSTRUMENTATION	D. BEST
PROJECT NUMBER	10193663

REGISTERED PROFESSIONAL ENGINEER 88023PE DIGITALLY SIGNED OREGON May 14, 2013 ROBB J. MCCOMB EXPIRES: 12/31/2026

CITY OF ASHLAND
Ashland, Oregon

City of Ashland

Ashland Creek Water Treatment Plant

2026

ELECTRICAL
CONDUIT AND CABLE SCHEDULE - 3

0 1" 2"

FILENAME 10193663-AWTP-100_E.rvt

SCALE

SHEET **000E004**

Autodesk Docs://10193663_Ashland_WTP_Final_Design_2024/10193663-AWTP-100_E.rvt
9/22/2026 9:47:30 PM

RACEWAY TAG	SIZE	CABLES	TYPE	RACEWAY FROM	RACEWAY TO	COMMENTS
PLCP7211	1	3#10, 1#10G	XHHW-2	MCC-311	LCP-7211	
PPBU7211	1	3#10, 1#10G	XHHW-2	LCP-7211	PBU-7211	
SLCP7211	1	1PR#18TSP	INSTRUMENTATION	CP-302	LCP-7211	
CLCP7301	1	8#14, 1#14G	XHHW-2	CP-302	LCP-7301	
PLCP7301	1	3#12, 1#12G	XHHW-2	MCC-311	LCP-7301	
PLIT7301	3/4	2#12, 1#12G	XHHW-2	PBD-302	LIT-7301	
PMX7301	1	VENDOR	XHHW-2	LCP-7301	MX-7301	
SLIT7301	1	1PR#18TSP	INSTRUMENTATION	CP-302	LIT-7301	
SLT7301	1	1PR#18TSP	INSTRUMENTATION	LT-7301	LCP-7302	
CLCP7302	3/4	4#14, 1#14G	XHHW-2	CP-302	LCP-7302	
PLCP7302	3/4	2#12, 1#12G	XHHW-2	PBD-302	LCP-7302	FILTER AND POLYMER TANK FILL STATION
SLCP7302	1	1PR#18TSP	INSTRUMENTATION	CP-302	LCP-7302	
CLCP7311	1	10#14, 1#14G	XHHW-2	CP-302	LCP-7311	
PLCP7311	1	3#10, 1#10G	XHHW-2	MCC-311	LCP-7311	
PPBU7311	1	3#10, 1#10G	XHHW-2	LCP-7311	PBU-7311	
SLCP7311	1	1PR#18TSP	INSTRUMENTATION	CP-302	LCP-7311	
CLCP7401	3/4	4#14, 1#14G	XHHW-2	CP-302	LCP-7401	
PLCP7401	3/4	2#12, 1#12G	XHHW-2	PBD-302	LCP-7401	SCH TANK FILL STATION
PTSL7401	3/4	2#12, 1#12G	XHHW-2	PBD-302	TSL-7401	HEAT TRACE
SLCP7401	1	1PR#18TSP	INSTRUMENTATION	CP-302	LCP-7401	
SLT7401	1	VENDOR	INSTRUMENTATION	LCP-7401	LT-7401	
CSWS7402	3/4	2#14, 1#14G	XHHW-2	CP-302	SWS-7402	
PSWS7402	3/4	2#12, 1#12G	XHHW-2	PBD-302	SWS-7402	
PTSL7402	3/4	2#12, 1#12G	XHHW-2	PBD-302	TSL-7402	HEAT TRACE
CSWS7403	3/4	2#14, 1#14G	XHHW-2	CP-302	SWS-7403	
PSWS7403	3/4	2#12, 1#12G	XHHW-2	PBD-302	SWS-7403	
CP7411	1	10#14, 1#14G	XHHW-2	CP-302	P-7411	
PP7411	3/4	2#12, 1#12G	XHHW-2	PBD-302	P-7411	PROVIDE DS
SP7411	1	2PR#18TSP	INSTRUMENTATION	CP-302	P-7411	
CP7412	1	10#14, 1#14G	XHHW-2	CP-302	P-7412	
PP7412	3/4	2#12, 1#12G	XHHW-2	PBD-302	P-7412	PROVIDE DS
SP7412	1	2PR#18TSP	INSTRUMENTATION	CP-302	P-7412	
CP7413	1	10#14, 1#14G	XHHW-2	CP-302	P-7413	
PP7413	3/4	2#12, 1#12G	XHHW-2	PBD-302	P-7413	PROVIDE DS
SP7413	1	2PR#18TSP	INSTRUMENTATION	CP-302	P-7413	
CLSH7431	3/4	2#14, 1#14G	XHHW-2	CP-302	LSH-7431	SUMP LEVEL
CLCP7501	3/4	4#14, 1#14G	XHHW-2	CP-302	LCP-7501	
PLCP7501	3/4	2#12, 1#12G	XHHW-2	PBD-302	LCP-7501	CAUSTIC TANK FILL STATION
SLCP7501	1	1PR#18TSP	INSTRUMENTATION	CP-302	LCP-7501	
SLT7501	1	VENDOR	INSTRUMENTATION	LCP-7501	LT-7501	
CSWS7502	3/4	2#14, 1#14G	XHHW-2	CP-302	SWS-7502	
CSWS7502	3/4	2#14, 1#14G	XHHW-2	CP-302	SWS-7502	
PSWS7502	3/4	2#12, 1#12G	XHHW-2	PBD-302	SWS-7502	
PSWS7502	3/4	2#12, 1#12G	XHHW-2	PBD-302	SWS-7502	
PTSL7502	3/4	2#12, 1#12G	XHHW-2	PBD-302	TSL-7502	HEAT TRACE
CSWS7503	3/4	2#14, 1#14G	XHHW-2	CP-302	SWS-7502	
PSWS7503	3/4	2#12, 1#12G	XHHW-2	PBD-302	SWS-7502	
CP7511	1	10#14, 1#14G	XHHW-2	CP-302	P-7511	
PP7511	3/4	2#12, 1#12G	XHHW-2	PBD-302	P-7511	PROVIDE DS
SP7511	1	2PR#18TSP	INSTRUMENTATION	CP-302	P-7511	
CP7512	1	10#14, 1#14G	XHHW-2	CP-302	P-7512	
PP7512	3/4	2#12, 1#12G	XHHW-2	PBD-302	P-7512	PROVIDE DS
SP7512	1	2PR#18TSP	INSTRUMENTATION	CP-302	P-7512	
CP7513	1	10#14, 1#14G	XHHW-2	CP-302	P-7513	
PP7513	3/4	2#12, 1#12G	XHHW-2	PBD-302	P-7513	PROVIDE DS
SP7513	1	2PR#18TSP	INSTRUMENTATION	CP-302	P-7513	
CLSH7531	3/4	2#14, 1#14G	XHHW-2	CP-302	LSH-7531	
PWIT7601	1	2#12, 1#12G	XHHW-2	PBD-101	WIT-7601	
SWE7601	1	VENDOR	INSTRUMENTATION	WIT-7601	WE-7601	
SWIT7601	1	1PR#18TSP	INSTRUMENTATION	CP-101	WIT-7601	
CSWS7602	3/4	2#14, 1#14G	XHHW-2	CP-101	SWS-7602	
PSWS7602	3/4	2#12, 1#12G	XHHW-2	PBD-101	SWS-7602	
PTSL7602	3/4	2#12, 1#12G	XHHW-2	PBD-101	TSL-7602	HEAT TRACE
CSWS7603	3/4	2#14, 1#14G	XHHW-2	CP-101	SWS-7603	
PSWS7603	3/4	2#12, 1#12G	XHHW-2	PBD-101	SWS-7603	
CSWS7604	3/4	2#14, 1#14G	XHHW-2	CP-101	SWS-7604	
PSWS7604	3/4	2#12, 1#12G	XHHW-2	PBD-101	SWS-7604	
CP7611	1	10#14, 1#14G	XHHW-2	CP-101	P-7611	
PP7611	3/4	2#12, 1#12G	XHHW-2	PBD-101	P-7611	PROVIDE DS
SP7611	1	2PR#18TSP	INSTRUMENTATION	CP-101	P-7611	
CP7612	1	10#14, 1#14G	XHHW-2	CP-101	P-7612	
PP7612	3/4	2#12, 1#12G	XHHW-2	PBD-101	P-7612	PROVIDE DS
SP7612	1	2PR#18TSP	INSTRUMENTATION	CP-101	P-7612	
CP7621	1	10#14, 1#14G	XHHW-2	CP-101	P-7621	
PP7621	3/4	2#12, 1#12G	XHHW-2	PBD-101	P-7621	PROVIDE DS
SP7621	1	2PR#18TSP	INSTRUMENTATION	CP-101	P-7621	
CP7622	1	10#14, 1#14G	XHHW-2	CP-101	P-7622	
PP7622	3/4	2#12, 1#12G	XHHW-2	PBD-101	P-7622	PROVIDE DS
SP7622	1	2PR#18TSP	INSTRUMENTATION	CP-101	P-7622	
PMX7701	3/4	2#12, 1#12G	XHHW-2	PBD-302	MX-7701	
PTSL7701	3/4	2#12, 1#12G	XHHW-2	PBD-302	TSL-7701	HEAT TRACE
SLCP7701	1	1PR#18TSP	INSTRUMENTATION	CP-302	LCP-7701	
SLT7701	1	VENDOR	INSTRUMENTATION	LCP-7701	LT-7701	
CP7711	1	10#14, 1#14G	XHHW-2	CP-302	P-7711	
PP7711	3/4	2#12, 1#12G	XHHW-2	PBD-302	P-7711	PROVIDE DS
SP7711	1	2PR#18TSP	INSTRUMENTATION	CP-302	P-7711	
CP7712	1	10#14, 1#14G	XHHW-2	CP-302	P-7712	
PP7712	3/4	2#12, 1#12G	XHHW-2	PBD-302	P-7712	PROVIDE DS
SP7712	1	2PR#18TSP	INSTRUMENTATION	CP-302	P-7712	
CLSH7741	3/4	2#14, 1#14G	XHHW-2	CP-302	LSH-7741	SUMP LEVEL
PFIT8074	3/4	2#12, 1#12G	XHHW-2	PBD-302	FIT-8074	
SFIT8074	1	1PR#18TSP	INSTRUMENTATION	CP-302	FIT-8074	

ISSUE	DATE	DESCRIPTION
A	09/2026	ISSUED FOR BIDS

PROJECT MANAGER	PIERRE KWAN
CIVIL	J. MEGRDITCHIAN
STRUCTURAL	P. LINDBLOM
ARCHITECTURAL	V. YANEZ
PROCESS	P. KWAN
MECHANICAL	K. CHEUNG
ELECTRICAL	R. MCCOMB
INSTRUMENTATION	D. BEST
PROJECT NUMBER	10193663

REGISTERED PROFESSIONAL ENGINEER
98023PE
DIGITALLY SIGNED
OREGON
MAY 14, 2013
ROBB J. MCCOMB
EXPIRES: 12/31/2026

CITY OF ASHLAND
Ashland, Oregon

City of Ashland

Ashland Creek Water Treatment Plant

2026

ELECTRICAL
CONDUIT AND CABLE SCHEDULE - 4

0 1" 2"

FILENAME 10193663-AWTP-100_E.rvt

SCALE

SHEET **000E005**

Autodesk Docs://10193663_Ashland_WTP_Final_Design_2024/10193663-AWTP-100_E.rvt
9/22/2026 9:47:30 PM

LIGHTING FIXTURE SCHEDULE							
TYPE	FIXTURE DESCRIPTION	MANUFACTURER AND CATALOG NUMBER	WATTS	LUMENS	FIXTURE VOLTS	MOUNTING TYPE	NOTES
A	2X4 LED TROFFER, SPECIFICATION GRADE	METALUX 24CZ2-50-UNV-L835-CD1-U	39.6	5049	120	RECESSED	PROVIDE FIXTURE WITH EMERGENCY BATTERY PACK, OCCUPANCY SENSOR, AND DAY LIGHT SENSOR OPTIONS. SEE NOTES 1 & 2.
		ILP VOLA24-53L-U-XX	38	5121	120		
		OR EQUAL					
B	1X4 LED STRIP LIGHT	METALUX 4LBLED-LD4-6-SYMW-UNV-L840-CD1/PC3	44	6726	120	SURFACE	PROVIDE FIXTURE WITH EMERGENCY BATTERY PACK, OCCUPANCY SENSOR, AND DAY LIGHT SENSOR OPTIONS. SEE NOTES & 2.
		ILP FZ4-40-U-40-FRN-EM10/BP30PC	40	5858	120		
		OR EQUAL					
B1	1X4 LED STRIP LIGHT	METALUX 4LBLED-LD4-8-SYMW-UNV-L840-CD1/PC3	56	8802	120	SURFACE	PROVIDE FIXTURE WITH EMERGENCY BATTERY PACK, OCCUPANCY SENSOR, AND DAY LIGHT SENSOR OPTIONS. SEE NOTES 1 & 2.
		ILP FZ4-55-U-40-FRN-EM10/BP30PC	54	8626	120		
		OR EQUAL					
C	4' LED WRAPAROUND	METALUX 4NWS3C3-UNV	31	4498	120	SURFACE	PROVIDE FIXTURE WITH EMERGENCY BATTERY PACK, OCCUPANCY SENSOR, AND DAY LIGHT SENSOR OPTIONS. SEE NOTES & 2.
		ILP SQ4-4L-U-40	29	4174	120		
		OR EQUAL					
D	2X4 LED FLAT PANEL	METALUX 24FPSL2SCT3/FPXSURF24	40.2	4550	120	RECESSED	PROVIDE FIXTURE WITH EMERGENCY BATTERY PACK, OCCUPANCY SENSOR, AND DAY LIGHT SENSOR OPTIONS. SEE NOTES 1 & 2.
		TRACE-LITE LPX-24-40/LPX-24-SMK	40	4400	120		
		OR EQUAL					
F	LED UNDER CANOPY LIGHT FIXURE	LUMARK CLCS17S	56	7956	120	UNDER CANOPY	PROVIDE FIXTURE WITH OCCUPANCY SENSOR AND DIMMABLE DRIVER OPTIONS. SEE NOTES 1 & 2.
		RAYON T730LED8-60-UNV-40-WH	60	8000	120		
		OR EQUAL					
G	LED SUSPENDED FIXTURE	NULITE TVS-54-08L35-1C-U-D-1-1-W-T1-W/48-12	68.4	9372	120	SUSPENDED	PROVIDE FIXTURE WITH EMERGENCY BATTERY PACK, OCCUPANCY SENSOR, AND DAY LIGHT SENSOR OPTIONS. SEE NOTES 1 & 2.
		CORELITE J3-CL-40L835-1D-UNV-STD-ILB12-W-AC48-T1-12	78	11592	120		
		OR EQUAL					
H	LED WALL PACK	MIMIK 50 M T3	53	5990	120	WALL MOUNTED	PROVIDE FIXTURE WITH OCCUPANCY SENSOR AND DIMMABLE DRIVER OPTIONS.
		WE-EF QLS420 LED	42	6044	120		
		OR EQUAL					
I	LED ELECTROLIER	LUMARK PRV-P-PA1C-740-U-5WQ-BZ	72.3	9478	208	POLE MOUNTED	PROVIDE FIXTURE WITH OCCUPANCY SENSOR AND DIMMABLE DRIVER OPTIONS. MOUNT FIXTURE AT 10'
		ILP SAS-9L-U-T5S-UMB/R-BRZ-FSP-311/L12	70	9000	208		
		OR EQUAL					
	10', 4" SQUARE, STRAIGHT, STEEL POLE	AV POLE AND LIGHTING SSS-104-11					ALUMINUM POLES ACCEPTABLE, CONFIRM WIND AND LOAD REQUIREMENTS ARE MET.
		OR EQUAL					
J	LED WALL PACK	LUMARK PRV-P-PA1B-740-U-T3-WM-BZ-MS/DIM-L20	53	7261	120	WALL MOUNTED	PROVIDE FIXTURE WITH OCCUPANCY SENSOR AND DIMMABLE DRIVER OPTIONS.
		RAYON T639LED-84-UNV-40-T3-BZ-MSI	70	9000	120		
		OR EQUAL					
K	LED WALL MOUNTED	METALUX 4-SWLED-40SL-UNV	37.9	4015	120	WALL MOUNTED	PROVIDE FIXTURE WITH OCCUPANCY SENSOR AND BATTERY PACK. SEE NOTES 1 & 2.
		ILP CVL4-4L-U-40-FRAL	27	4109	120		
		OR EQUAL					
X1	LED EXIT SIGN	ISOLITE TLREM2-G-1-BA-MB			120	WALL MOUNTED	
		EXITRONIX 402EX-WB-BA-G2			120		
		OR EQUAL					
X2	LED EXIT SIGN/LIGHT COMBO	ISOLITE DCL-R-2-BA-BA-MTEBP			120	WALL MOUNTED	
		EXITRONIX 400C-1-BA			120		
		OR EQUAL					

NOTES:
1. PROVIDE EMERGENCY BATTERY PACK AND DAY LIGHT SENSOR ONLY WHERE INDICATED ON THE PLANS.
2. DO NOT PROVIDE OCCUPANCY SENSORS IN EQUIPMENT, MAINTENANCE OR MECHANICAL ROOMS OR AREAS. LIGHTS TO REMAIN ON WHERE ANY MAINTENANCE WORK IS REQUIRED.

Autodesk Docs://10193663_Ashland_WTP_Final_Design_2024/10193663-AWTP-100_E.rvt
9/23/2026 1:16:30 PM

ISSUE	DATE	DESCRIPTION
A	09/2026	ISSUED FOR BIDS

PROJECT MANAGER	PIERRE KWAN
CIVIL	J. MEGRDITCHIAN
STRUCTURAL	P. LINDBLOM
ARCHITECTURAL	V. YANEZ
PROCESS	P. KWAN
MECHANICAL	K. CHEUNG
ELECTRICAL	R. MCCOMB
INSTRUMENTATION	D. BEST
PROJECT NUMBER	10193663

REGISTERED PROFESSIONAL ENGINEER 88023PE DIGITALLY SIGNED OREGON MAY 14, 2013 ROBB J. MCCOMB
EXPIRES: 12/31/2026

CITY OF ASHLAND
Ashland, Oregon

City of Ashland

Ashland Creek Water Treatment Plant

2026

ELECTRICAL
LIGHTING FIXTURE SCHEDULE

0 1" 2"

FILENAME 10193663-AWTP-100_E.rvt

SCALE

SHEET **000E501**

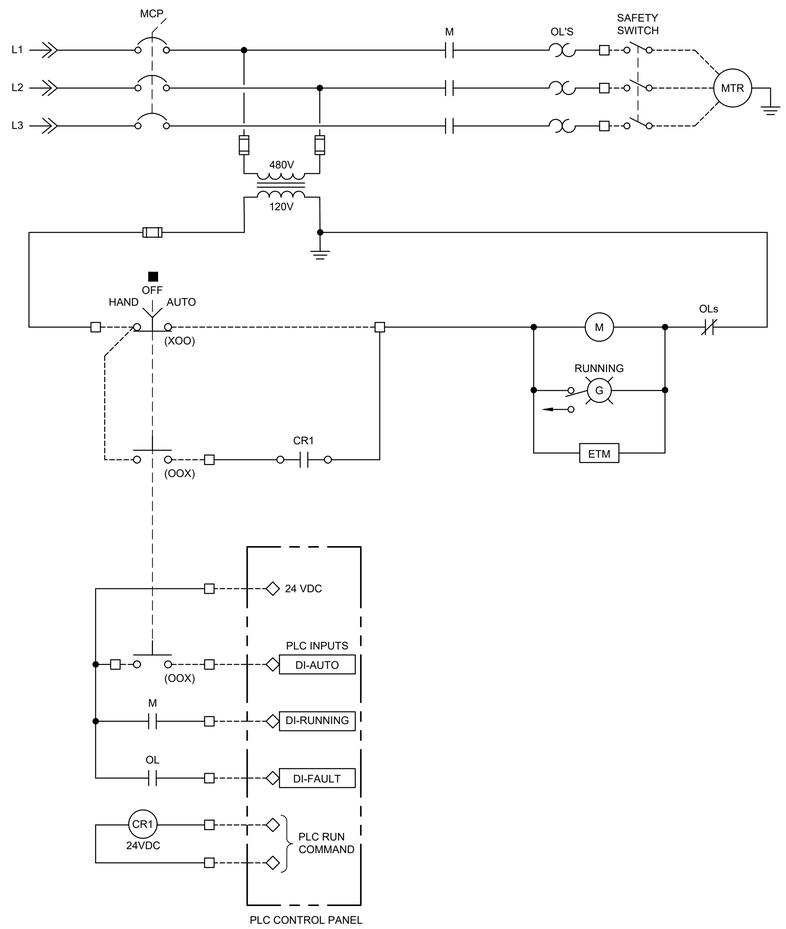

TYPICAL PROCESS MOTORS

CONTROL DIAGRAM 1001

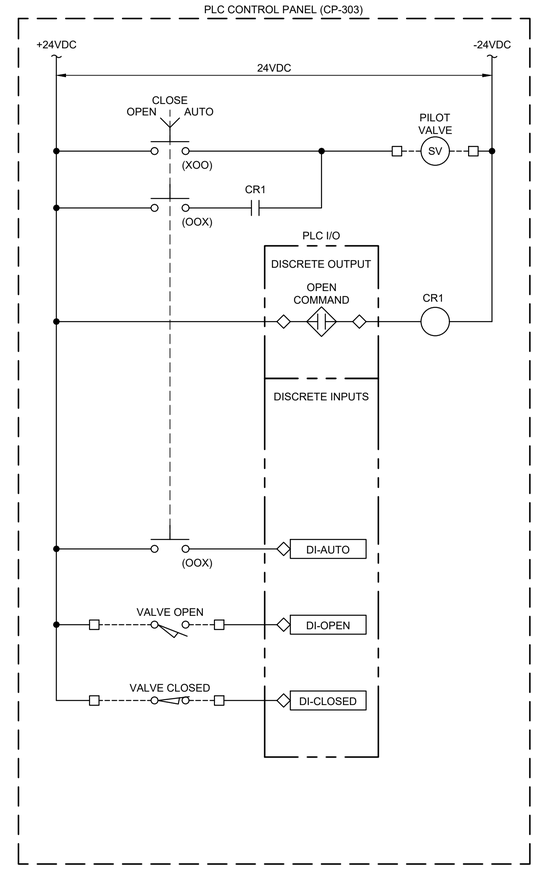

FILTER AIR OPERATED VALVES
WITH OPEN/CLOSE CONTROLS

CONTROL DIAGRAM 1002

DEVICE LOCATION LEGEND:

- ▲ FIELD AT MOTOR
- ■ FIELD AT CONTROL STATION
- □ MCC TERMINAL
- ◇ PLC TERMINAL

ISSUE	DATE	DESCRIPTION
A	09/2026	ISSUED FOR BIDS

PROJECT MANAGER	PIERRE KWAN
CIVIL	J. MEGRDITCHIAN
STRUCTURAL	P. LINDBLOM
ARCHITECTURAL	V. YANEZ
PROCESS	P. KWAN
MECHANICAL	K. CHEUNG
ELECTRICAL	R. MCCOMB
INSTRUMENTATION	D. BEST
PROJECT NUMBER	10193663

REGISTERED PROFESSIONAL ENGINEER
88023PE
DIGITALLY SIGNED
OREGON
MAY 14, 2013
ROBB J. MCCOMB
EXPIRES: 12/31/2026

CITY OF ASHLAND
Ashland, Oregon

City of Ashland

Ashland Creek
Water Treatment Plant

2026

ELECTRICAL
CONTROL DIAGRAMS 1

0 1" 2"

FILENAME 000E621.dwg
SCALE NONE

SHEET
000E621

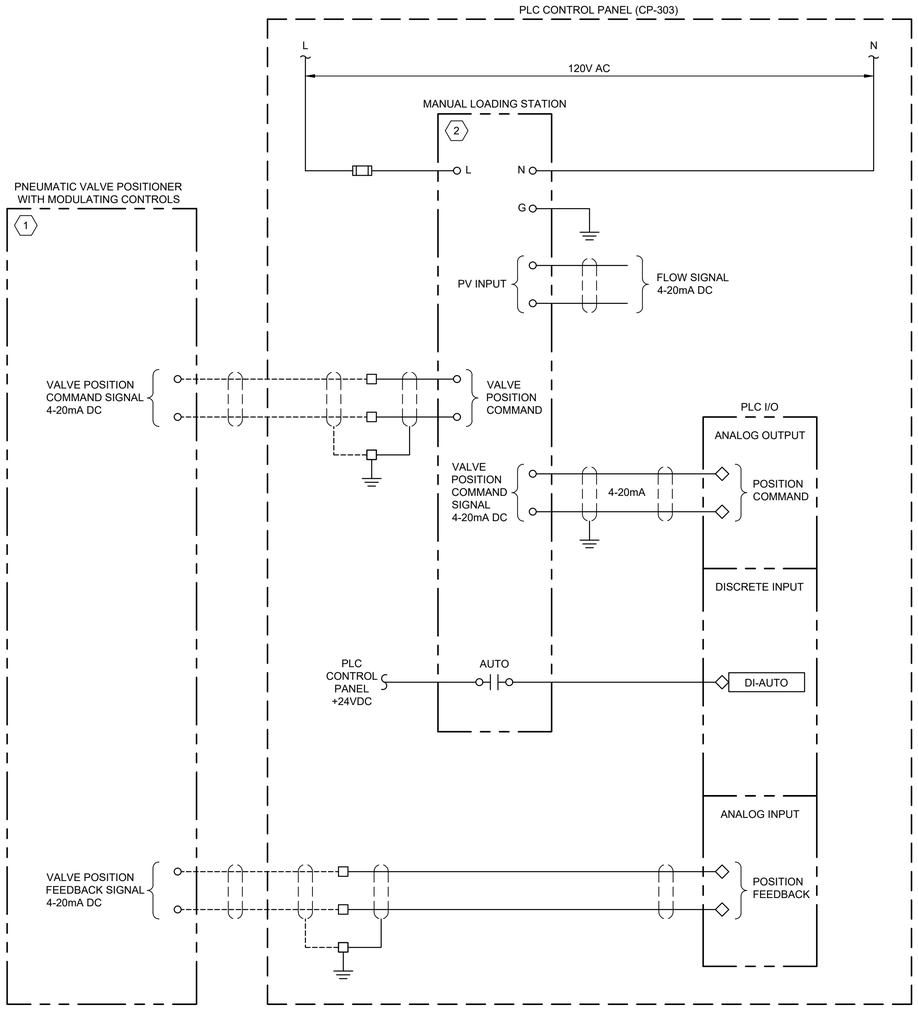

KEY NOTES: (#)

1. VALVE CALLED TO CLOSE UPON POWER FAILURE.
2. REFERENCE SPECIFICATION 40 97 00.

DEVICE LOCATION LEGEND:

- ▲ FIELD AT MOTOR
- ■ FIELD AT CONTROL STATION
- □ MCC TERMINAL
- ◇ PLC TERMINAL

FILTER EFFLUENT VALVES

CONTROL DIAGRAM 1003

ISSUE	DATE	DESCRIPTION
A	09/2026	ISSUED FOR BIDS

PROJECT MANAGER	PIERRE KWAN
CIVIL	J. MEGRDITCHIAN
STRUCTURAL	P. LINDBLOM
ARCHITECTURAL	V. YANEZ
PROCESS	P. KWAN
MECHANICAL	K. CHEUNG
ELECTRICAL	R. MCCOMB
INSTRUMENTATION	D. BEST
PROJECT NUMBER	10193663

REGISTERED PROFESSIONAL ENGINEER
88023PE
DIGITALLY SIGNED
OREGON
MAY 14, 2013
ROBB J. MCCOMB
EXPIRES: 12/31/2026

CITY OF ASHLAND
Ashland, Oregon

City of Ashland

Ashland Creek Water Treatment Plant

2026

ELECTRICAL CONTROL DIAGRAMS 2

0 1" 2"

FILENAME	000E622.dwg
SCALE	NONE

SHEET **000E622**

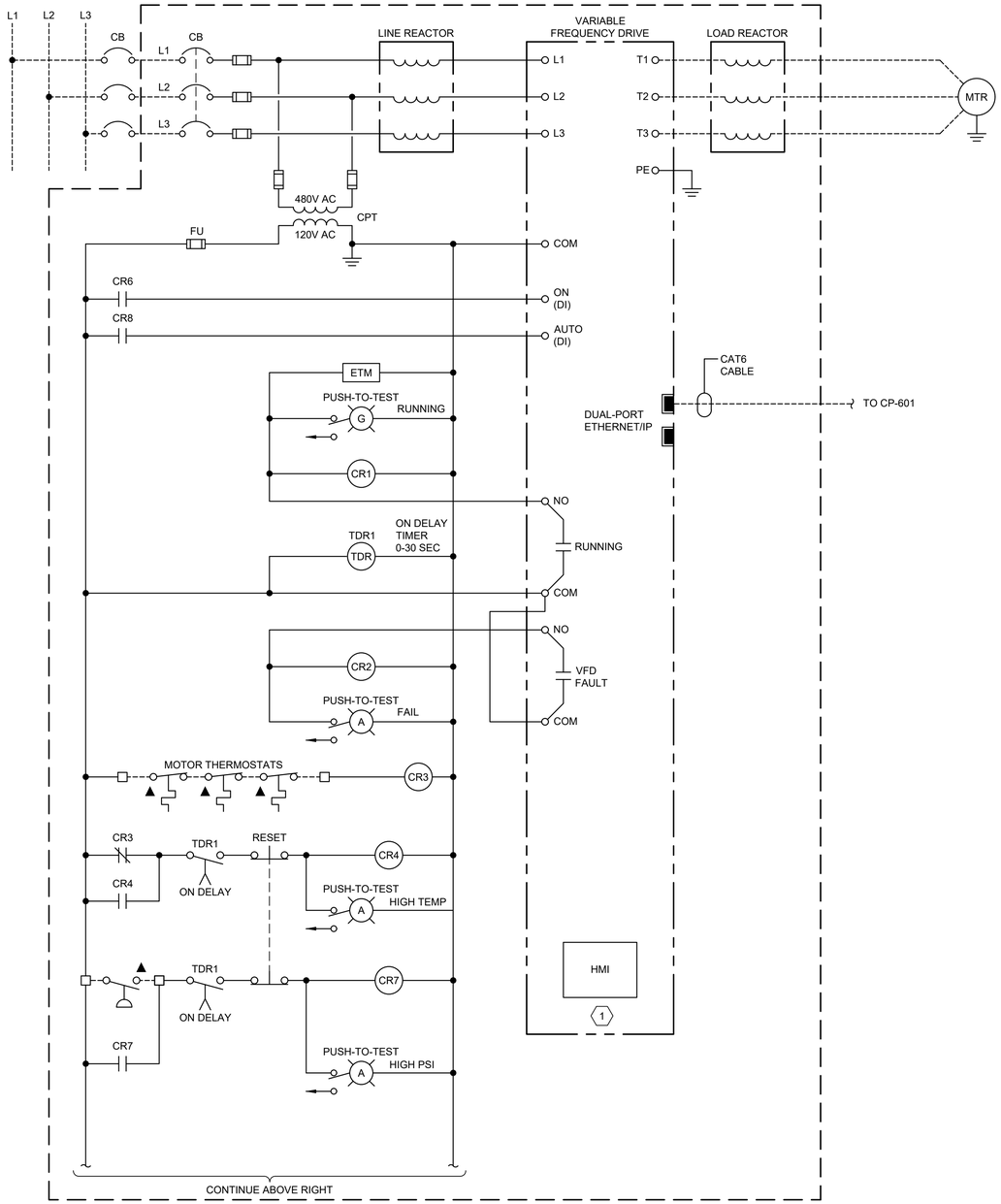

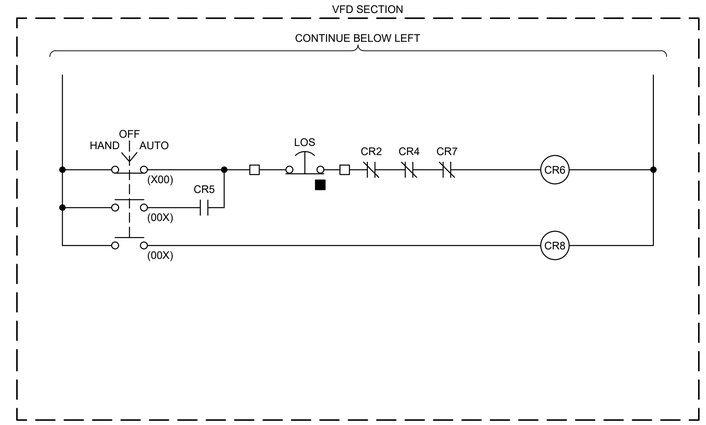

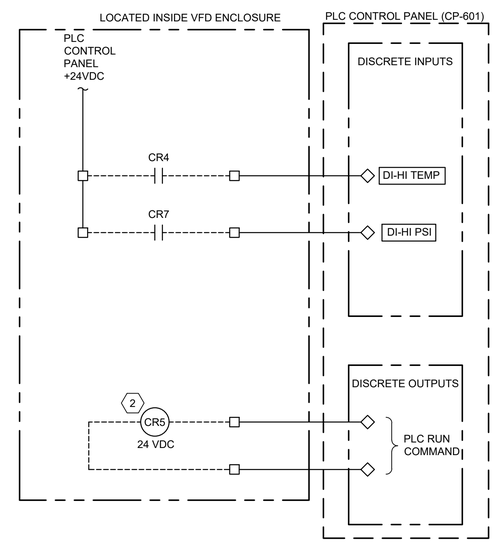

GENERAL NOTES:

1. VFD WIRING DETAILS ARE TYPICAL AND SHALL BE REVISED AS REQUIRED PER MANUFACTURER INSTALLATION INSTRUCTIONS.
3. SEE SCADA BLOCK DIAGRAM; SHEET 000Y003.

KEY NOTES: (#)

1. THE VFD HMI (HUMAN MACHINE INTERFACE) SHALL BE MOUNTED TO THE EXTERIOR OF THE VFD ENCLOSURE.
2. PROVIDE INTERPOSING CONTROL RELAY IN PLC CONTROL PANEL FOR PLC DISCRETE OUTPUT POINT.

DEVICE LOCATION LEGEND:

- ▲ FIELD AT MOTOR
- ■ FIELD AT CONTROL STATION
- □ MCC TERMINAL
- ◇ PLC TERMINAL

CROWSON PUMPS
P-6001 CROWSON PUMP 1
P-6002 CROWSON PUMP 2
P-6003 CROWSON PUMP 3

CONTROL DIAGRAM 1005

ISSUE	DATE	DESCRIPTION
A	09/2026	ISSUED FOR BIDS

PROJECT MANAGER	PIERRE KWAN
CIVIL	J. MEGRDITCHIAN
STRUCTURAL	P. LINDBLOM
ARCHITECTURAL	V. YANEZ
PROCESS	P. KWAN
MECHANICAL	K. CHEUNG
ELECTRICAL	R. MCCOMB
INSTRUMENTATION	D. BEST
PROJECT NUMBER	10193663

REGISTERED PROFESSIONAL ENGINEER 88023PE DIGITALLY SIGNED OREGON MAY 14, 2013 ROBB J. MCCOMB
EXPIRES: 12/31/2026

CITY OF ASHLAND
Ashland, Oregon

City of Ashland

Ashland Creek Water Treatment Plant

2026

ELECTRICAL CONTROL DIAGRAMS 3

0 1" 2"

FILENAME 000E623.dwg
SCALE NONE

SHEET 000E623

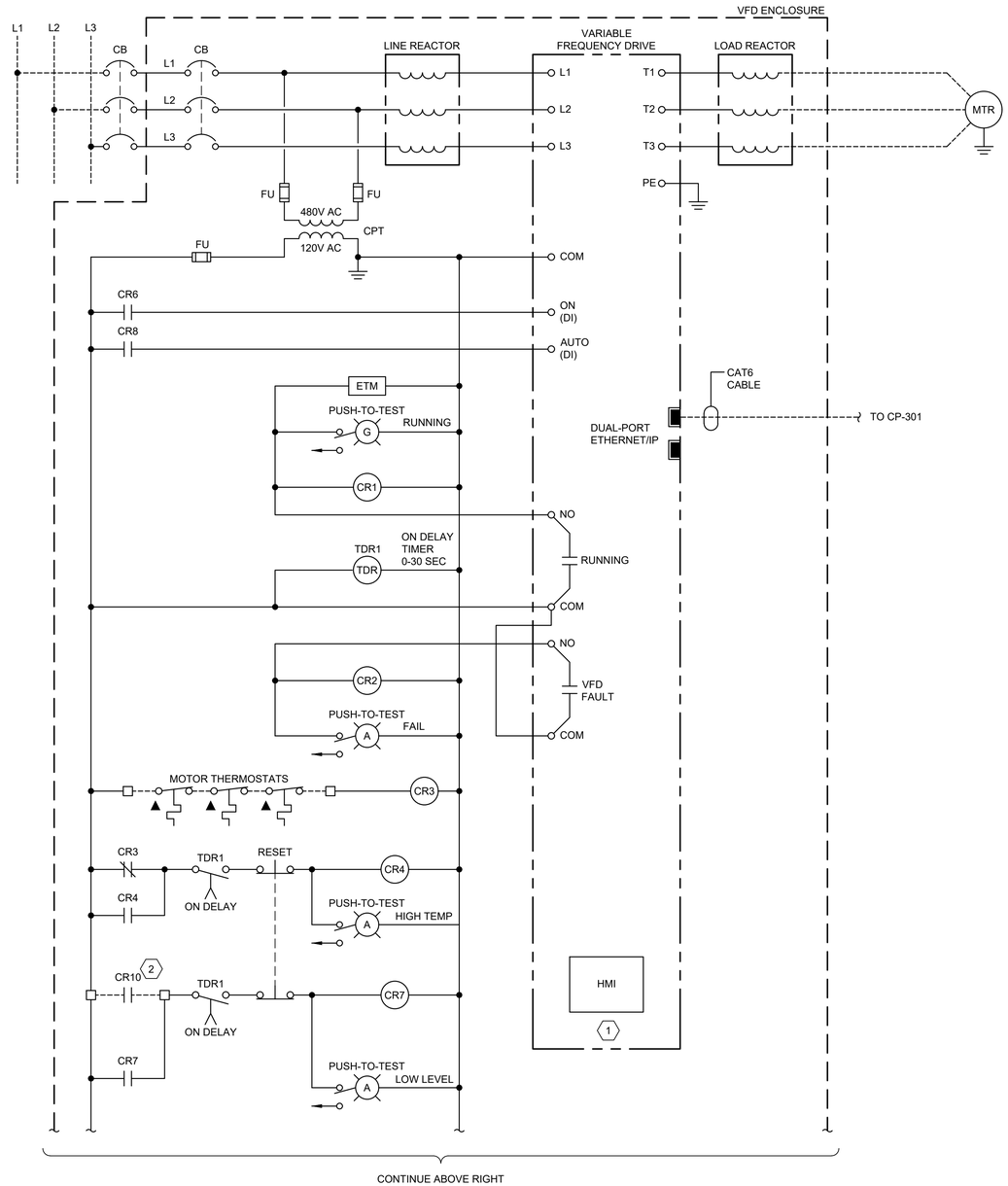

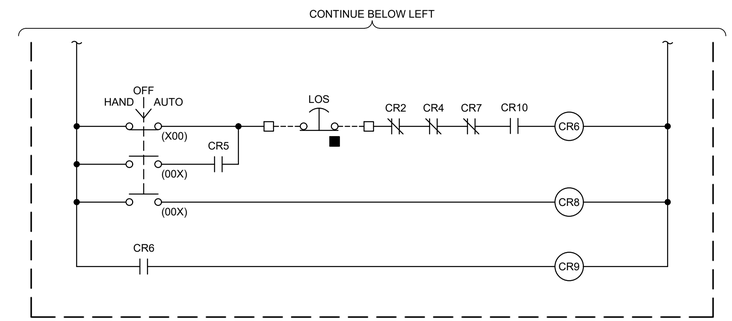

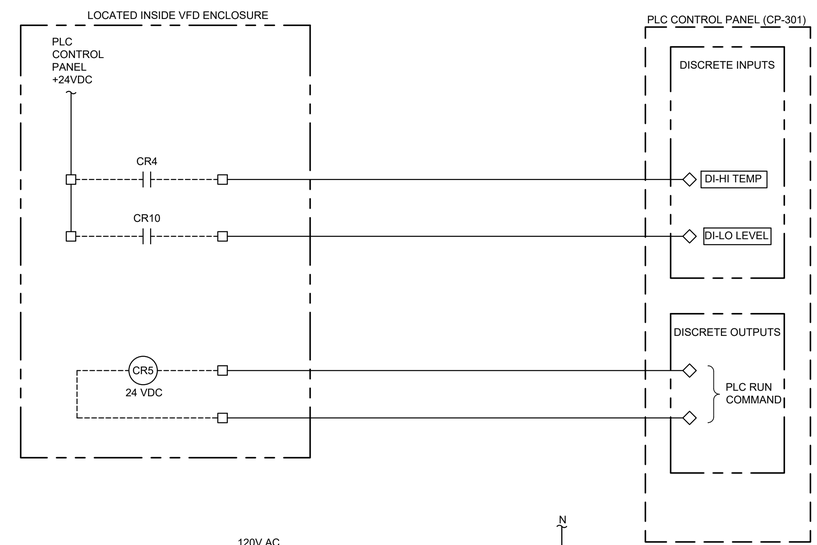

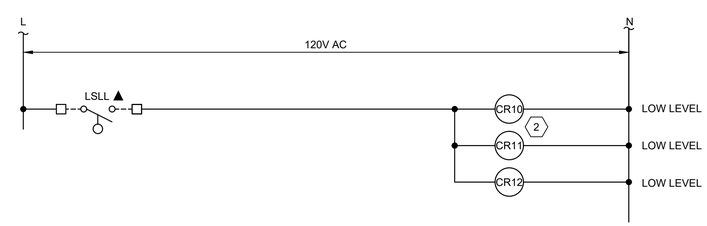

GENERAL NOTES:

1. VFD WIRING DETAILS ARE TYPICAL AND SHALL BE REVISED AS REQUIRED PER MANUFACTURER INSTALLATION INSTRUCTIONS.
2. SEE SCADA BLOCK DIAGRAM; SHEET 000Y003.

KEY NOTES: (#)

1. THE VFD HMI SHALL BE MOUNTED TO THE EXTERIOR OF THE VFD ENCLOSURE.
2. PROVIDE CONTROL RELAY FOR COMMON LOW LEVEL ALARM FOR EACH PUMP.

DEVICE LOCATION LEGEND:

- ▲ FIELD AT MOTOR
- ■ FIELD AT CONTROL STATION
- □ MCC TERMINAL
- ◇ PLC TERMINAL

INTERMEDIATE PUMPS
P-5011 INTERMEDIATE PUMP 1
P-5012 INTERMEDIATE PUMP 2
P-5013 INTERMEDIATE PUMP 3

CONTROL DIAGRAM 1006

ISSUE	DATE	DESCRIPTION
A	09/2026	ISSUED FOR BIDS

PROJECT MANAGER	PIERRE KWAN
CIVIL	J. MEGRDITCHIAN
STRUCTURAL	P. LINDBLOM
ARCHITECTURAL	V. YANEZ
PROCESS	P. KWAN
MECHANICAL	K. CHEUNG
ELECTRICAL	R. MCCOMB
INSTRUMENTATION	D. BEST
PROJECT NUMBER	10193663

REGISTERED PROFESSIONAL ENGINEER 88023PE DIGITALLY SIGNED OREGON MAY 14, 2013 ROBB J. MCCOMB
EXPIRES: 12/31/2026

CITY OF ASHLAND
Ashland, Oregon

City of Ashland

Ashland Creek Water Treatment Plant

2026

ELECTRICAL CONTROL DIAGRAMS 4

0 1" 2"

FILENAME 000E624.dwg
SCALE NONE

SHEET 000E624

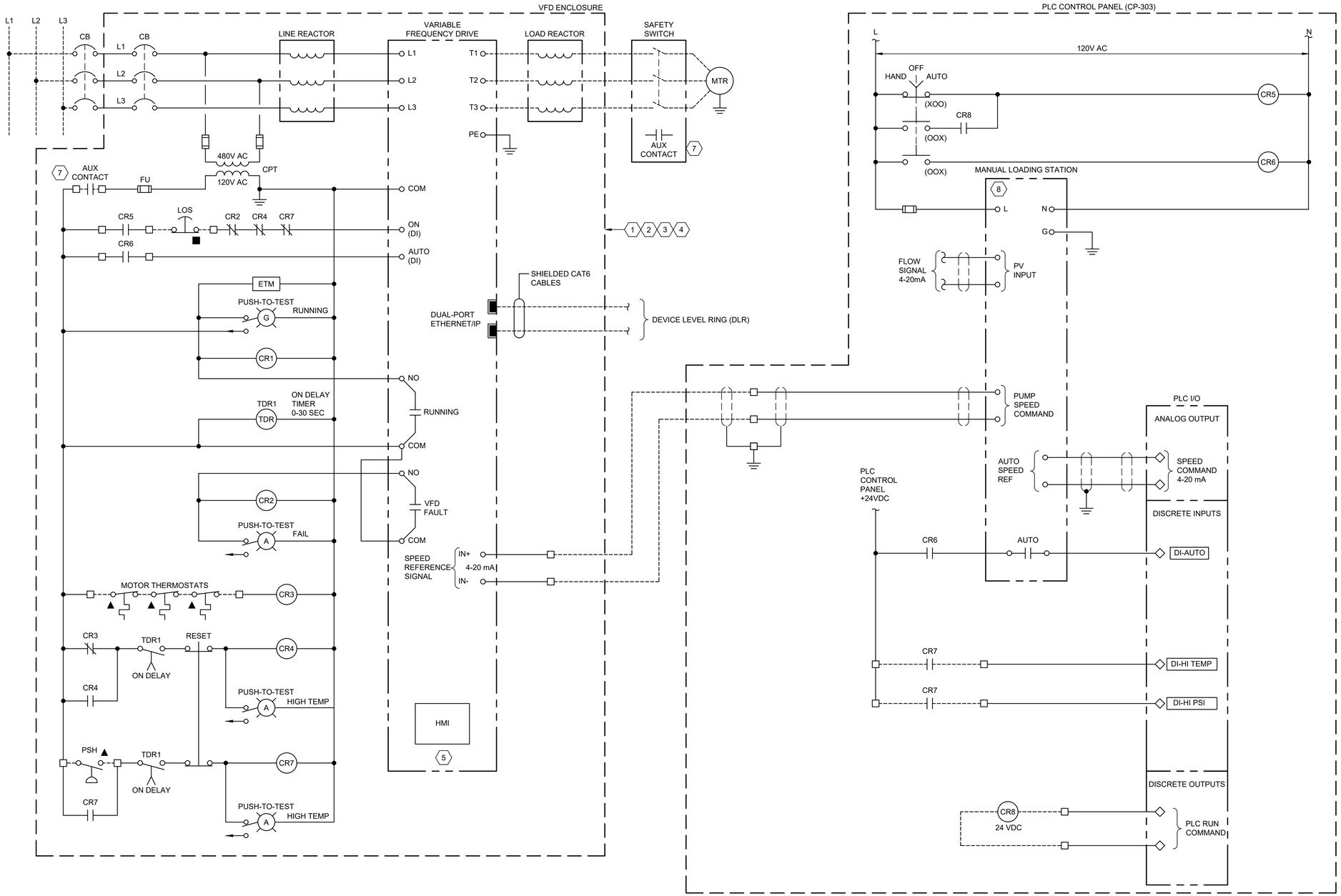

GENERAL NOTES:

1. VFD WIRING DETAILS ARE TYPICAL AND SHALL BE REVISED AS REQUIRED PER MANUFACTURER INSTALLATION INSTRUCTIONS.
2. SEE SCADA BLOCK DIAGRAM; SHEET 000Y003.

KEY NOTES: (#)

1. CUSTOM ENGINEERED VFD, SEE SPECIFICATION 261913.
2. VFD FAULTS ARE RESET AT THE VFD HMI MODULE (NOT AT THE EXTERNAL FAULT RESET).
3. FIELD RUN PERMISSIVES PREVENT THE DRIVE FROM RUNNING IN EITHER HAND OR AUTO MODE.
4. WHEN IN HAND, THE MOTOR SHALL RUN AND THE OPERATING SPEED SHALL BE AS SET AT THE VFD HMI MODULE.
5. THE VFD HMI SHALL BE MOUNTED TO THE EXTERIOR OF THE VFD ENCLOSURE.
6. PROVIDE INTERPOSING CONTROL RELAY IN PLC CONTROL PANEL FOR PLC DISCRETE OUTPUT POINT.
7. SAFETY SWITCH AUXILIARY CONTACT IS OPEN WHEN THE SAFETY SWITCH IS IN THE OPEN POSITION.
8. REFERENCE SPECIFICATION 40 97 00.

DEVICE LOCATION LEGEND:

- ▲ FIELD AT MOTOR
- ■ FIELD AT CONTROL STATION
- □ MCC TERMINAL
- ◇ PLC TERMINAL

AIR SCOUR BLOWER

BLW-4501 FILTER AIR SCOUR BLOWER 1

CONTROL DIAGRAM 1007

ISSUE	DATE	DESCRIPTION
A	09/2026	ISSUED FOR BIDS

PROJECT MANAGER	PIERRE KWAN
CIVIL	J. MEGRDITCHIAN
STRUCTURAL	P. LINDBLOM
ARCHITECTURAL	V. YANEZ
PROCESS	P. KWAN
MECHANICAL	K. CHEUNG
ELECTRICAL	R. MCCOMB
INSTRUMENTATION	D. BEST
PROJECT NUMBER	10193663

REGISTERED PROFESSIONAL ENGINEER 88023PE DIGITALLY SIGNED OREGON MAY 14, 2013 ROBB J. MCCOMB

EXPIRES: 12/31/2026

CITY OF ASHLAND

Ashland, Oregon

City of Ashland

Ashland Creek Water Treatment Plant

2026

ELECTRICAL CONTROL DIAGRAMS 5

0 1" 2"

FILENAME 000E625.dwg

SCALE NONE

SHEET **000E625**

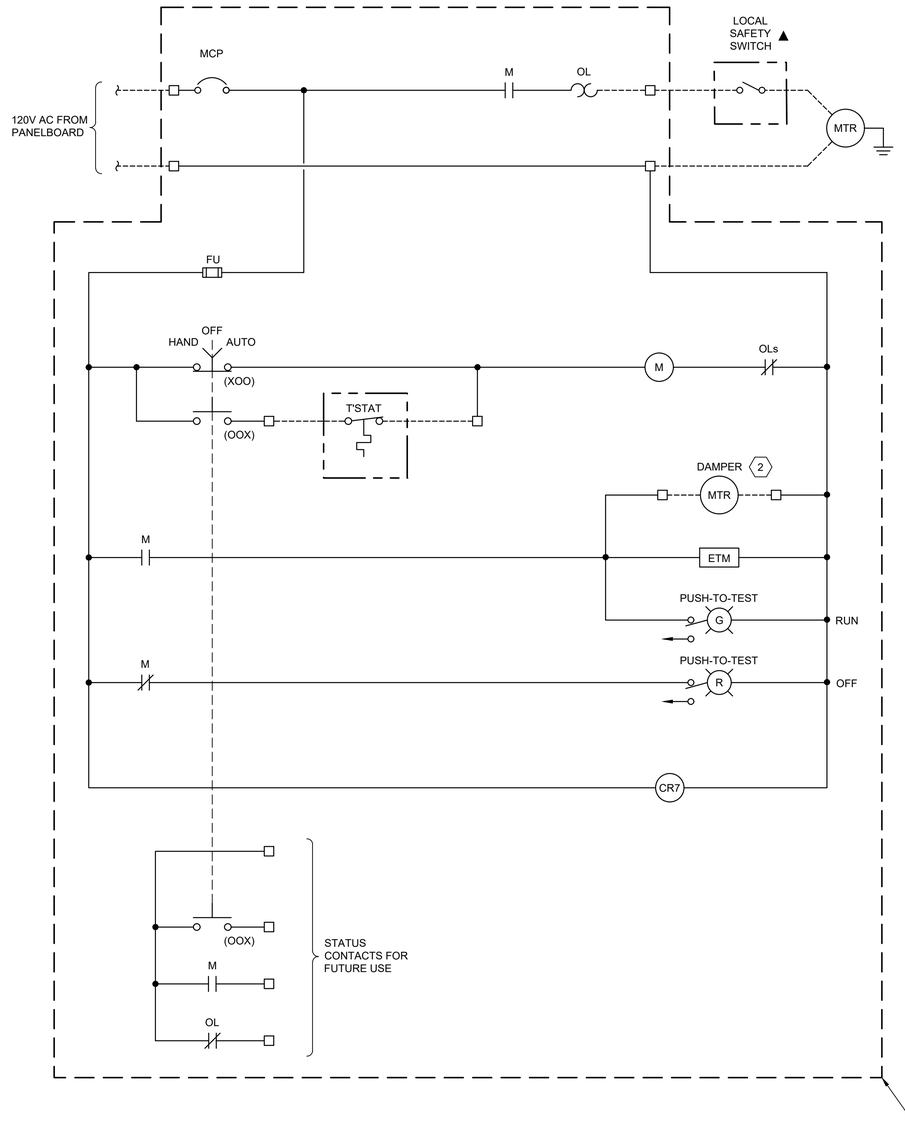

EXHAUST FAN, SINGLE-PHASE MOTOR

CONTROL DIAGRAM 1008

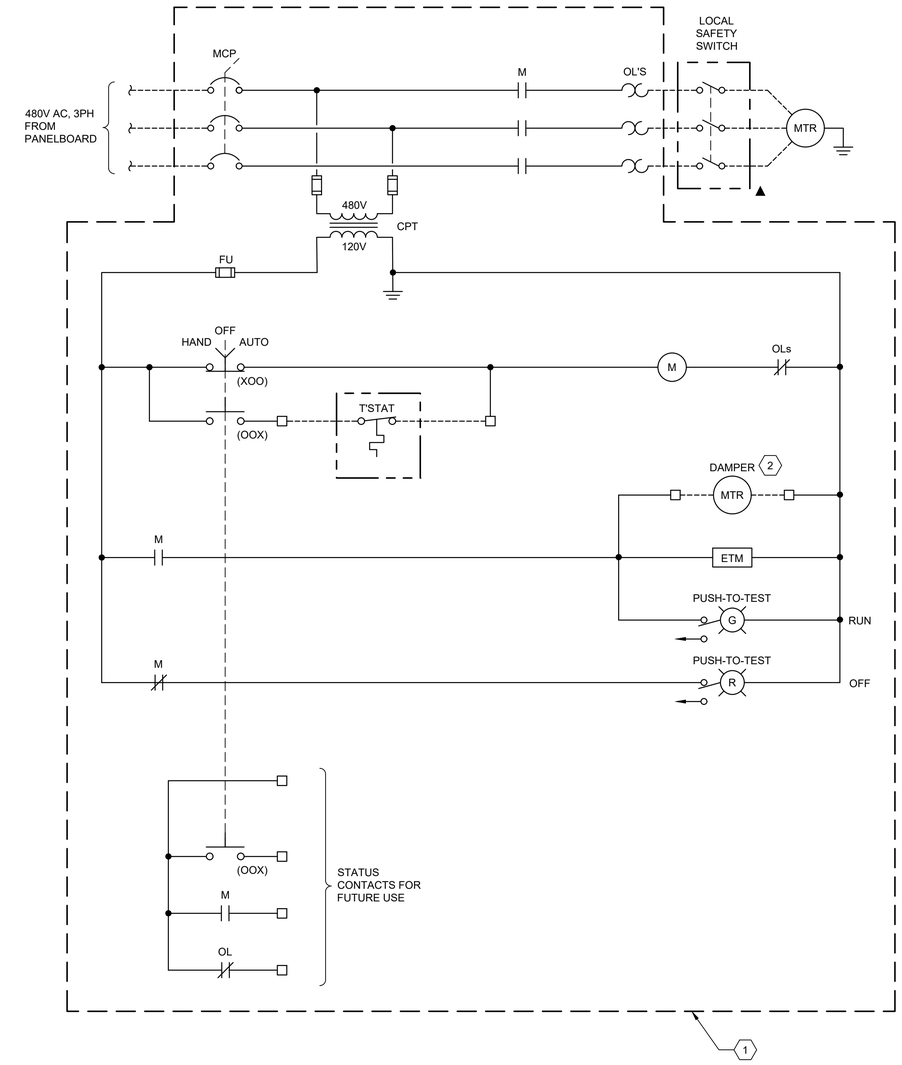

EXHAUST FAN, THREE-PHASE MOTOR

CONTROL DIAGRAM 1009

KEY NOTES: (#)

1. MOTOR STARTER CONTROL PANEL WITH NEMA 4X RATED, 316 STAINLESS STEEL ENCLOSURE OR INSTALLED IN MCC BUCKET.
2. DAMPER WHERE REQUIRED.

DEVICE LOCATION LEGEND:

- ▲ FIELD AT MOTOR
- ■ FIELD AT CONTROL STATION
- □ MCC TERMINAL
- ◇ PLC TERMINAL

ISSUE	DATE	DESCRIPTION
A	09/2026	ISSUED FOR BIDS

PROJECT MANAGER	PIERRE KWAN
CIVIL	J. MEGRDITCHIAN
STRUCTURAL	P. LINDBLOM
ARCHITECTURAL	V. YANEZ
PROCESS	P. KWAN
MECHANICAL	K. CHEUNG
ELECTRICAL	R. MCCOMB
INSTRUMENTATION	D. BEST
PROJECT NUMBER	10193663

REGISTERED PROFESSIONAL ENGINEER 88023PE OREGON MAY 14, 2013 ROBB J. MCCOMB
DIGITALLY SIGNED
EXPIRES: 12/31/2026

CITY OF ASHLAND
Ashland, Oregon

City of Ashland

Ashland Creek Water Treatment Plant

2026

ELECTRICAL CONTROL DIAGRAMS 6

0 1" 2"

FILENAME	000E626.dwg
SCALE	NONE

SHEET **000E626**

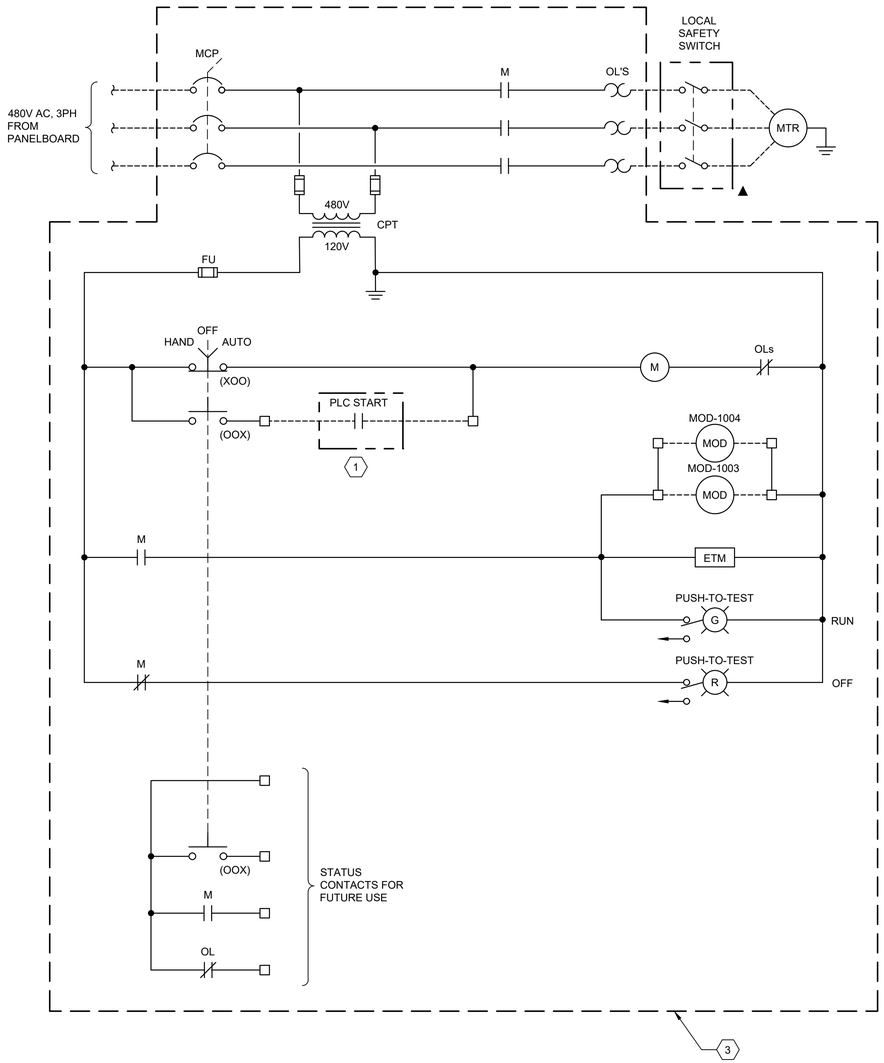

EXHAUST FAN, THREE-PHASE MOTOR

OZONE EXHAUST FAN EF-1004

CONTROL DIAGRAM 1010

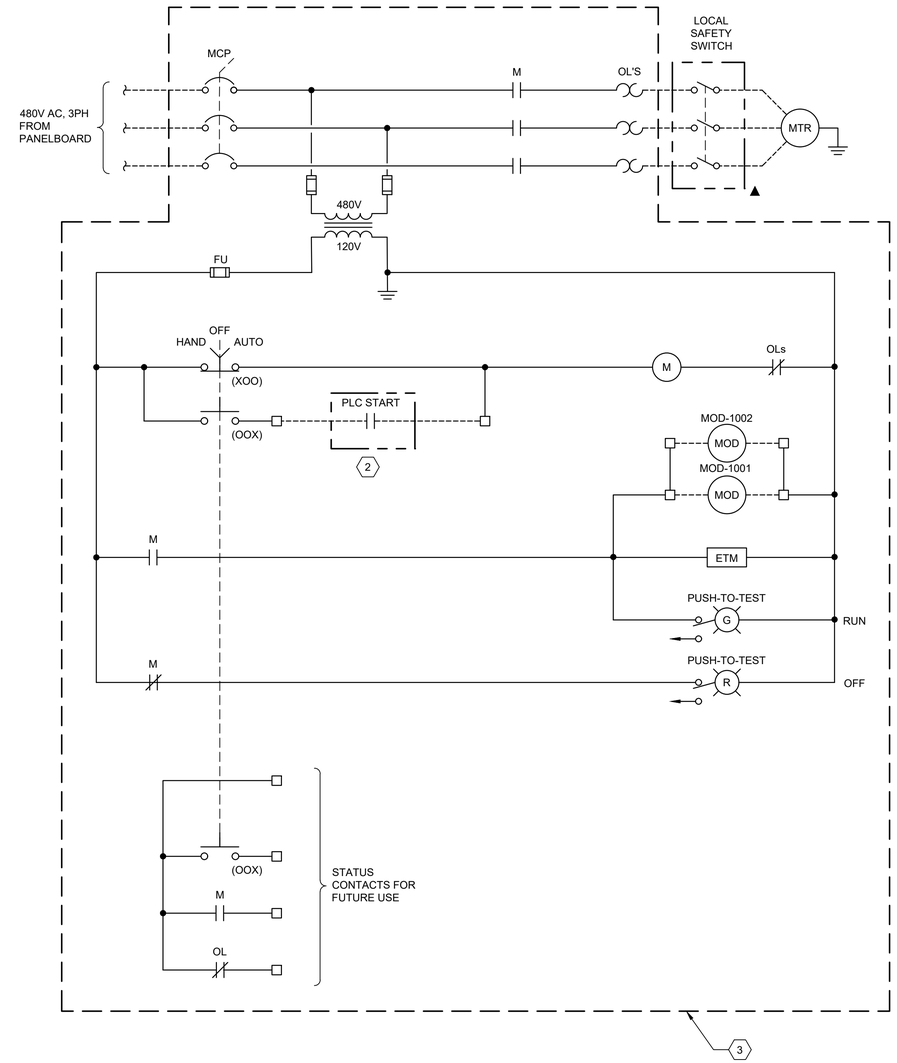

EXHAUST FAN, THREE-PHASE MOTOR

PRE-TREATMENT EXHAUST FAN EF-1002

CONTROL DIAGRAM 1011

KEY NOTES: (#)

1. FAN TO START ON HIGH LEVELS OF OZONE. PLC TO SEND SIGNAL TO START. SIGNAL SHALL BE FOR HIGH AMBIENT O2 AND HIGH AMBIENT O3 CONCENTRATION WITHIN THE OZONE GENERATOR ROOM. START SIGNAL SHALL OPEN MOTORIZED DAMPERS MOD-1003 AND MOD-1004.
2. FAN TO START ON HIGH LEVELS OF OZONE. PLC TO SEND SIGNAL TO START. SIGNAL SHALL BE FOR HIGH AMBIENT O3 CONCENTRATION WITHIN THE PRETREATMENT ROOM. START SIGNAL SHALL OPEN MOTORIZED DAMPERS MOD-1001 AND MOD-1002.
3. MOTOR STARTER CONTROL PANEL WITH NEMA 4X RATED, 316 STAINLESS STEEL ENCLOSURE.

DEVICE LOCATION LEGEND:

- ▲ FIELD AT MOTOR
- ■ FIELD AT CONTROL STATION
- □ MCC TERMINAL
- ◇ PLC TERMINAL

ISSUE	DATE	DESCRIPTION
A	09/2026	ISSUED FOR BIDS

PROJECT MANAGER	PIERRE KWAN
CIVIL	J. MEGRDITCHIAN
STRUCTURAL	P. LINDBLOM
ARCHITECTURAL	V. YANEZ
PROCESS	P. KWAN
MECHANICAL	K. CHEUNG
ELECTRICAL	R. MCCOMB
INSTRUMENTATION	D. BEST
PROJECT NUMBER	10193663

REGISTERED PROFESSIONAL ENGINEER 88023PE DIGITALLY SIGNED OREGON MAY 14, 2013 ROBB J. MCCOMB

EXPIRES: 12/31/2026

CITY OF ASHLAND

Ashland, Oregon

City of Ashland

Ashland Creek Water Treatment Plant

2026

ELECTRICAL CONTROL DIAGRAMS 7

0 1" 2"

FILENAME 000E627.dwg

SCALE NONE

SHEET **000E627**

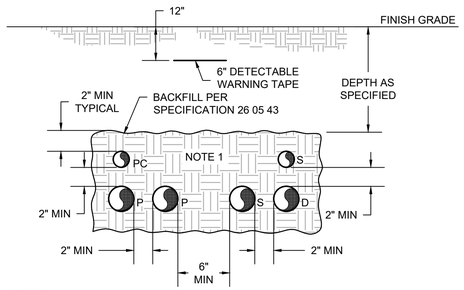

NOTES:

1. NUMBER OF CONDUITS AS REQUIRED FOR THE APPLICATION.
2. P SUBSCRIPT ELECTRICAL POWER CONDUIT.
3. C SUBSCRIPT CONTROL CONDUIT.
4. S SUBSCRIPT SIGNAL CONDUIT.
5. D SUBSCRIPT DATA CONDUIT.
6. COORDINATE INSTALLATION WITH DETAIL 3 DWG 000E704, FOR ADDITIONAL CITY OF ASHLAND STANDARDS.

1 / – DIRECT BURIED CONDUIT(S) DETAIL

SCALE: NONE

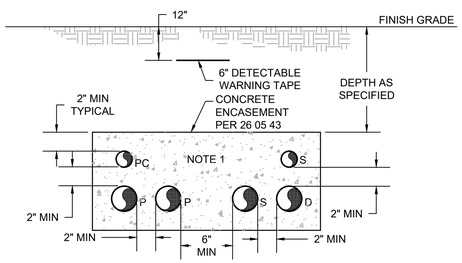

NOTES:

1. NUMBER OF CONDUITS AS REQUIRED FOR THE APPLICATION.
2. P SUBSCRIPT ELECTRICAL POWER CONDUIT.
3. C SUBSCRIPT CONTROL CONDUIT.
4. S SUBSCRIPT SIGNAL CONDUIT.
5. D SUBSCRIPT DATA CONDUIT.
6. COORDINATE INSTALLATION WITH DETAIL 3 DWG 000E704, FOR ADDITIONAL CITY OF ASHLAND STANDARDS.

2 / – CONCRETE ENCASED CONDUIT(S) DETAIL

SCALE: NONE

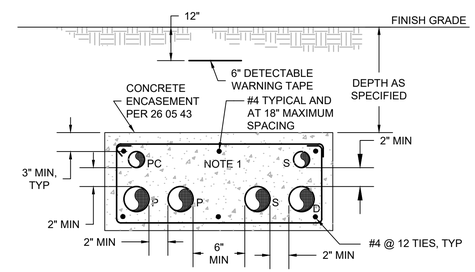

NOTES:

1. NUMBER OF CONDUITS AS REQUIRED FOR THE APPLICATION.
2. P AND C SUBSCRIPT ELECTRICAL POWER OR CONTROL CONDUIT.
3. S SUBSCRIPT SIGNAL CONDUIT.
4. D SUBSCRIPT DATA CONDUIT.
5. REINFORCED CONDUIT ENCASED DUCTBANK PER SECTION 26 05 43.
6. COORDINATE INSTALLATION WITH DETAIL 3 DWG 000E704, FOR ADDITIONAL CITY OF ASHLAND STANDARDS.

3 / – REINFORCED CONCRETE ENCASED CONDUIT(S) DETAIL

SCALE: NONE

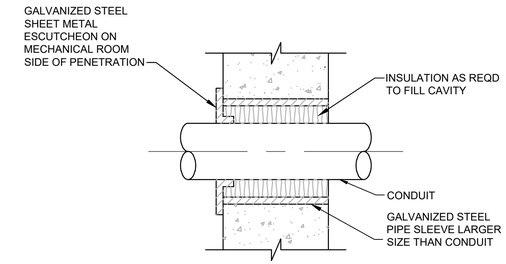

4 / – CONDUIT ENTRY THROUGH WALL AND FLOOR

SCALE: NONE

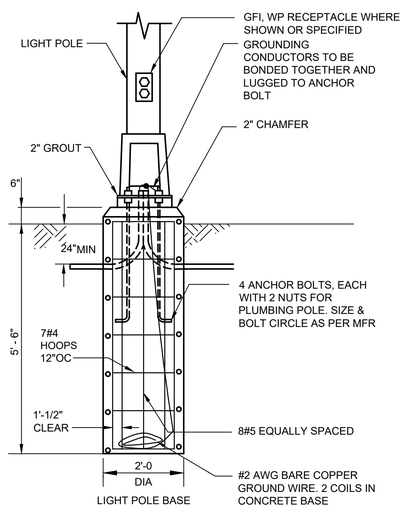

NOTES:

1. FOUNDATION TO BEAR AGAINST ORIGINAL SOIL OR 90% COMPACTED BACKFILL OF APPROVED TYPE.

5 / – LIGHT/CAMERA POLE FOUNDATION

SCALE: NONE

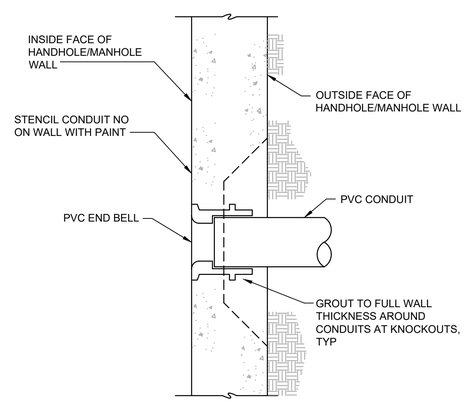

6 / – CONDUIT HANDHOLE / MANHOLE ENTRANCE DETAIL

SCALE: NONE

ISSUE	DATE	DESCRIPTION
A	09/2026	ISSUED FOR BIDS

PROJECT MANAGER	PIERRE KWAN
CIVIL	J. MEGRDITCHIAN
STRUCTURAL	P. LINDBLOM
ARCHITECTURAL	V. YANEZ
PROCESS	P. KWAN
MECHANICAL	K. CHEUNG
ELECTRICAL	R. MCCOMB
INSTRUMENTATION	D. BEST
PROJECT NUMBER	10193663

REGISTERED PROFESSIONAL ENGINEER 88023PE DIGITALLY SIGNED OREGON MAY 14, 2013 ROBB J. MCCOMB EXPIRES: 12/31/2026

CITY OF ASHLAND
Ashland, Oregon

City of Ashland

Ashland Creek Water Treatment Plant

2026

ELECTRICAL DETAILS 1

0 1" 2"

FILENAME 000E701
SCALE NONE

SHEET **000E701**

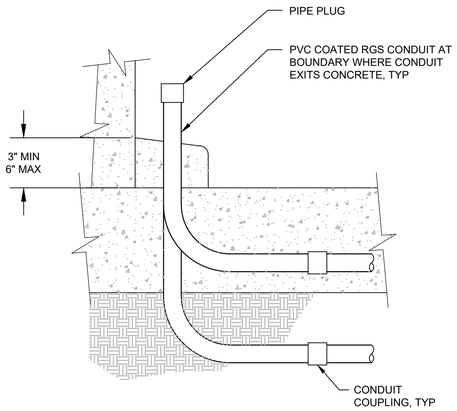

1 CONDUIT EMERGENCE ADJACENT TO WALL DETAIL

SCALE: NONE

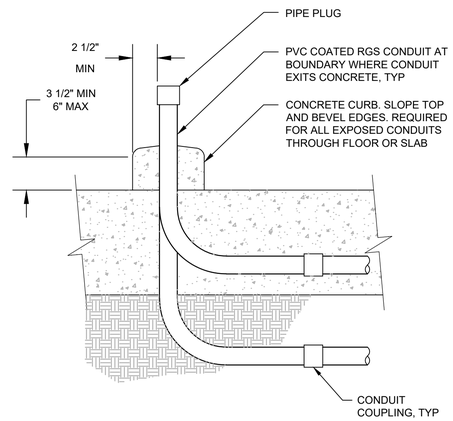

2 CONDUIT EMERGENCE NOT ADJACENT TO WALL DETAIL

SCALE: NONE

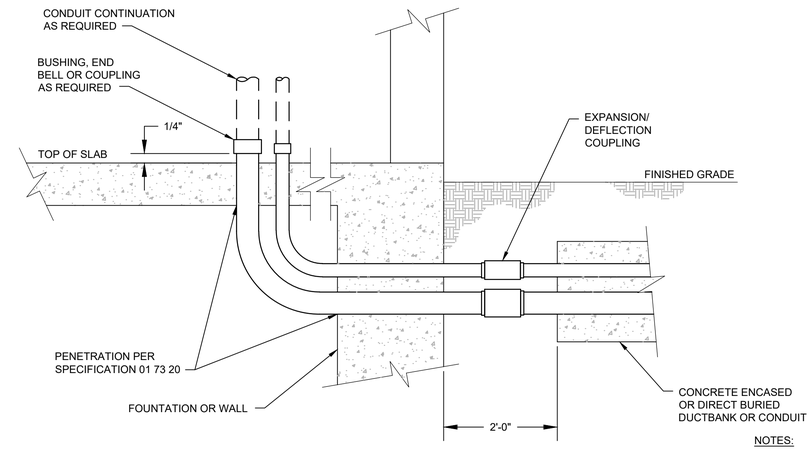

3 CONDUIT TRANSITION TO ABOVE GRADE (EXTERIOR TO INTERIOR) DETAIL

SCALE: NONE

NOTES:

1. SEE DUCTBANK DETAIL FOR ADDITIONAL REQUIREMENTS.
2. CONDUITS INSTALLED THROUGH STEM WALL, PROVIDE LINK SEALS WHERE WATER TIGHT SEAL IS REQUIRED. COORDINATE WITH STRUCTURAL FOR CONDUIT INSTALLATION REQUIREMENTS.
3. PROVIDE BLOCK OUT WHERE STRUCTURAL ALLOWS AND WATER TIGHT INSTALL IS NOT REQUIRED. COORDINATE ALL CONDUITS THROUGH STEM WALLS WITH THE STRUCTURAL ENGINEER.

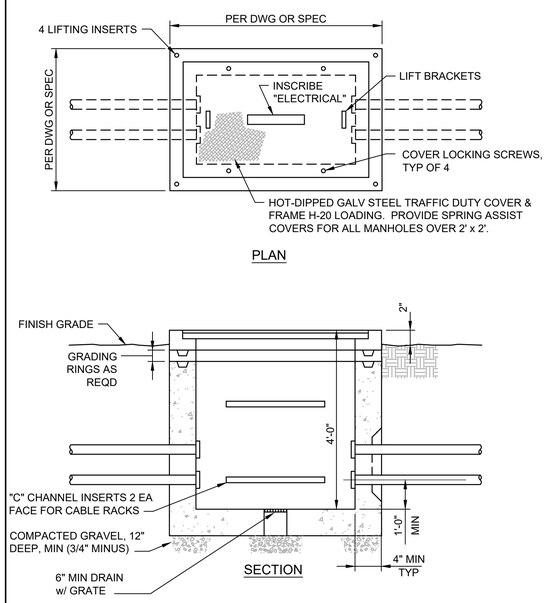

4 TYPICAL MANHOLE

SCALE: NONE

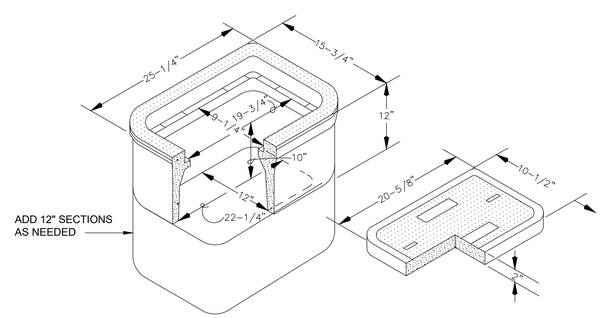

NOTE: DIMENSIONS MAY VARY DEPENDING ON SIZE OF PULLBOX

5 TYPICAL PULLBOX

SCALE: NONE

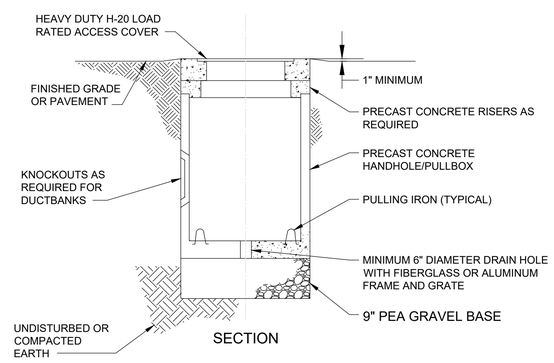

NOTES:

1. HANDHOLE/PULLBOX DEPTH, SIZE AND LOCATION PER DRAWINGS.
2. MINIMUM INTERIOR DIMENSIONS SHALL BE 3' x 3' x 30"D UON.
3. HANDHOLE INTERIOR SPACE: CLASSIFIED AS CORROSIVE AREA PER SPECIFICATION DIVISION 16.

6 TYPICAL HANDHOLE

SCALE: NONE

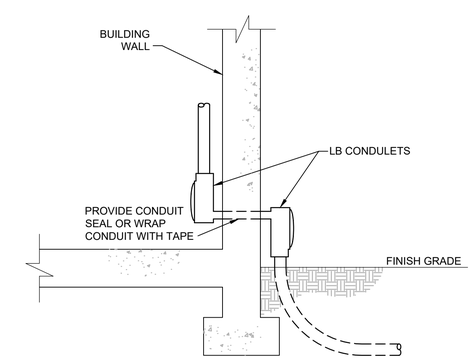

7 CONDUIT ENTRANCE DETAIL

SCALE: NONE

ISSUE	DATE	DESCRIPTION
A	09/2026	ISSUED FOR BIDS

PROJECT MANAGER	PIERRE KWAN
CIVIL	J. MEGRDITCHIAN
STRUCTURAL	P. LINDBLOM
ARCHITECTURAL	V. YANEZ
PROCESS	P. KWAN
MECHANICAL	K. CHEUNG
ELECTRICAL	R. MCCOMB
INSTRUMENTATION	D. BEST
PROJECT NUMBER	10193663

REGISTERED PROFESSIONAL ENGINEER 88023PE OREGON MAY 14, 2013 ROBB J. MCCOMB
DIGITALLY SIGNED
EXPIRES: 12/31/2026

CITY OF ASHLAND
Ashland, Oregon

City of Ashland

Ashland Creek Water Treatment Plant

2026

ELECTRICAL DETAILS 2

0 1" 2"

FILENAME	000E702
SCALE	NONE

SHEET **000E702**

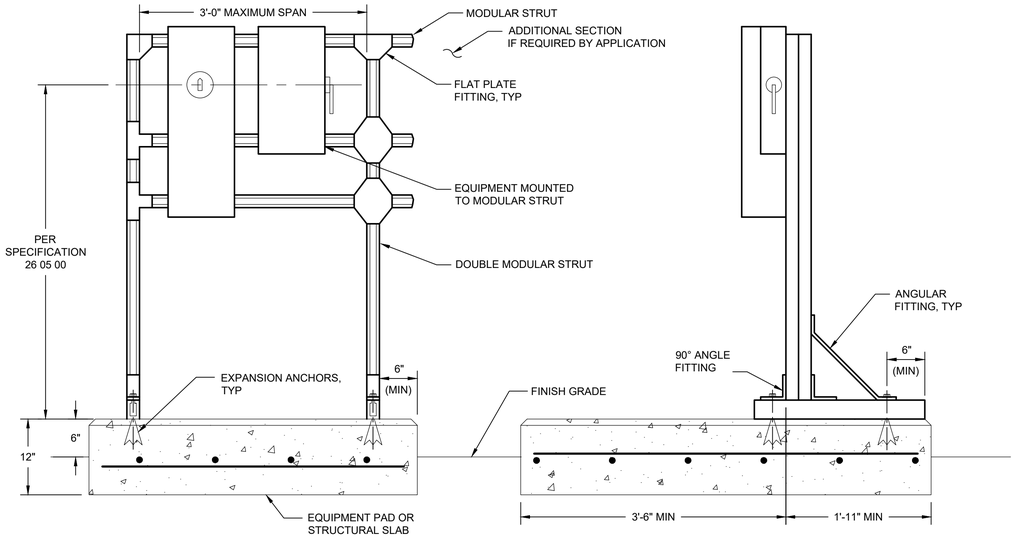

1 MODULAR EQUIPMENT RACK DETAIL

SCALE: NONE

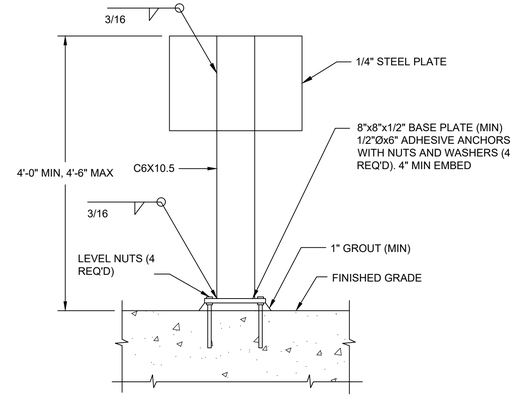

NOTES:

1. STAINLESS STEEL MOUNTING STAND, BASEPLATE AND 1/4" PLATE.
2. PANELS, CONTROL STATIONS, BOXES AND OTHER MISCELLANEOUS ELECTRICAL STATIONS TO BE MOUNTED UTILIZING THIS DETAIL.
3. FOR SINGLE DEVICE, REFER TO DETAIL 5 THIS PAGE.

2 MOUNTING STAND DETAIL

SCALE: NONE

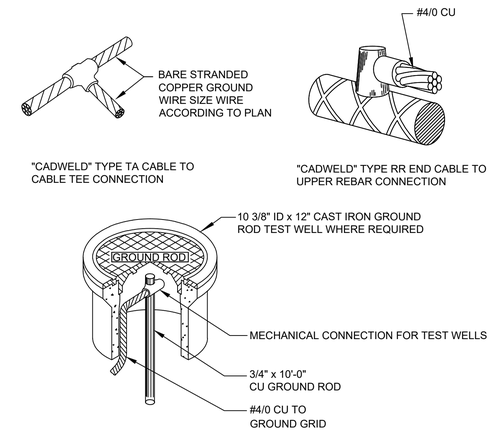

3 TYPICAL CABLE TO CABLE AND REBAR CONNECTION AND GROUND ROD DETAIL

SCALE: NONE

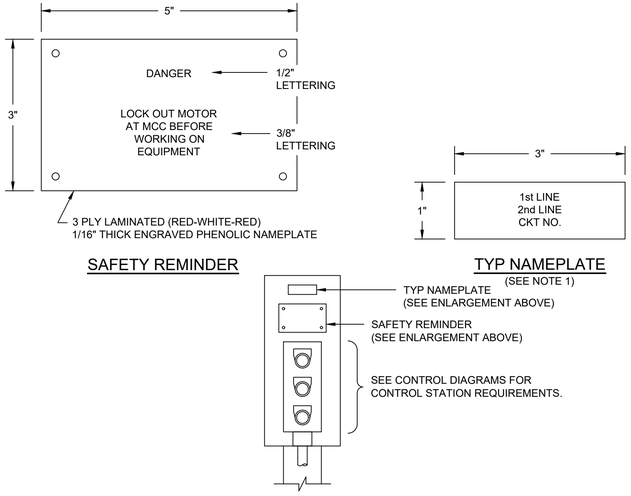

NOTES:

1. ALL FIELD CONTROL STATIONS SHALL BE IDENTIFIED WITH AN ENGRAVED, PHENOLIC NAMEPLATE. SEE SPECIFICATIONS FOR NAMEPLATE REQUIREMENTS.

4 CONTROL STATION NAMEPLATE AND SAFETY REMINDER DETAIL

SCALE: NONE

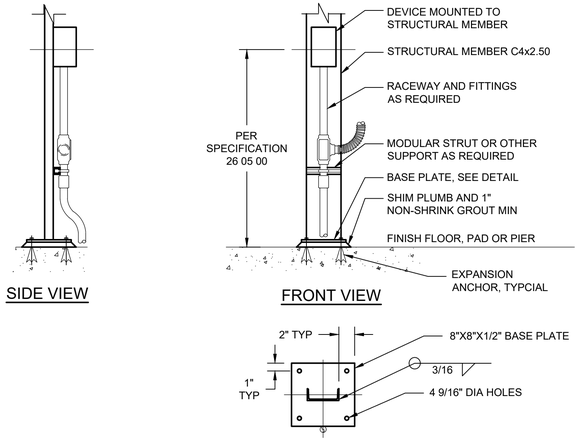

NOTES:

1. EQUIPMENT LOAD SHALL NOT EXCEED 50 LBS.
2. PEDESTAL ASSEMBLY MATERIAL: ALUMINUM PER SPECIFICATION 05505.
3. ANCHORS: STAINLESS STEEL, 1/2" DIAMETER, 3 1/2" EMBEDMENT, PER SPECIFICATION 05505.
4. ATTACH MODULAR STRUT TO STRUCTURAL MEMBER WITH A MIN OF TWO 3/8" DIAMETER STAINLESS STEEL ROUND HEAD MACHINE SCREWS WITH LOCK WASHER AND NUT.
5. PROTECT SURFACES WITH DISSIMILAR MATERIALS IN ACCORDANCE WITH SPECIFICATION 09905.

5 TYPICAL SINGLE DEVICE PEDESTAL DETAIL

SCALE: NONE

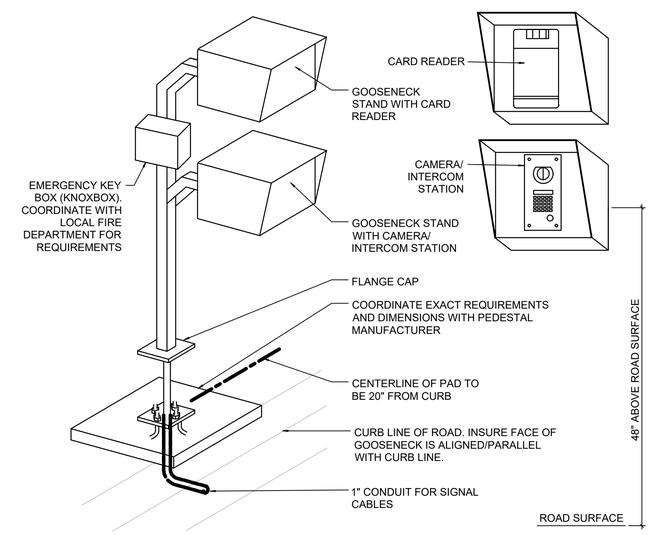

NOTES:

1. PROTECT WITH 4" CONCRETE FILLED STATIONARY BOLLARDS ON EITHER SIDE.

6 TYPICAL CARD READER AND VIDEO INTERCOM STANCHION

SCALE: NONE

HDR

ISSUE	DATE	DESCRIPTION
A	09/2026	ISSUED FOR BIDS

PROJECT MANAGER	PIERRE KWAN
CIVIL	J. MEGRDITCHIAN
STRUCTURAL	P. LINDBLOM
ARCHITECTURAL	V. YANEZ
PROCESS	P. KWAN
MECHANICAL	K. CHEUNG
ELECTRICAL	R. MCCOMB
INSTRUMENTATION	D. BEST
PROJECT NUMBER	10193663

REGISTERED PROFESSIONAL ENGINEER 88023PE DIGITALLY SIGNED OREGON MAY 14, 2013 ROBB J. MCCOMB

EXPIRES: 12/31/2026

CITY OF ASHLAND

Ashland, Oregon

City of Ashland

Ashland Creek Water Treatment Plant

2026

ELECTRICAL DETAILS 3

0 1" 2"

FILENAME	000E703
SCALE	NONE

SHEET **000E703**

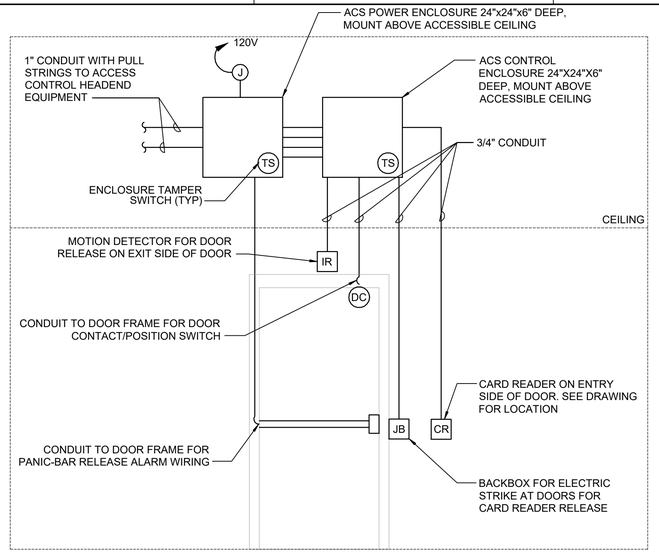

NOTES THIS DIAGRAM:

1. THIS DIAGRAM IS TYPICAL OF ITEMS REQUIRED AT SECURE DOORS THROUGHOUT THE FACILITY. SEE DRAWINGS FOR ANY ADDITIONAL REQUIREMENTS.
2. CONTRACTOR SHALL PROVIDE ALL JUNCTION BOXES AND CONDUIT TO PROVIDE COMPLETE RACEWAY SYSTEM FOR SECURITY INSTALLATION.
3. PROVIDE JUNCTION BOX ABOVE SECURITY PULL BOX WITH A 120V CIRCUIT AND A 3/4" NIPPLE BETWEEN THE TWO BOXES.
4. PROVIDE PROTECTIVE SHIELDING BEHIND AND AROUND CARD READER JUNCTION BOXES TO PREVENT BLEED THRU CARD READINGS FROM OPPOSITE SIDE OF WALL.

1 – TYPICAL DOOR ACCESS CONTROL

SCALE: NONE

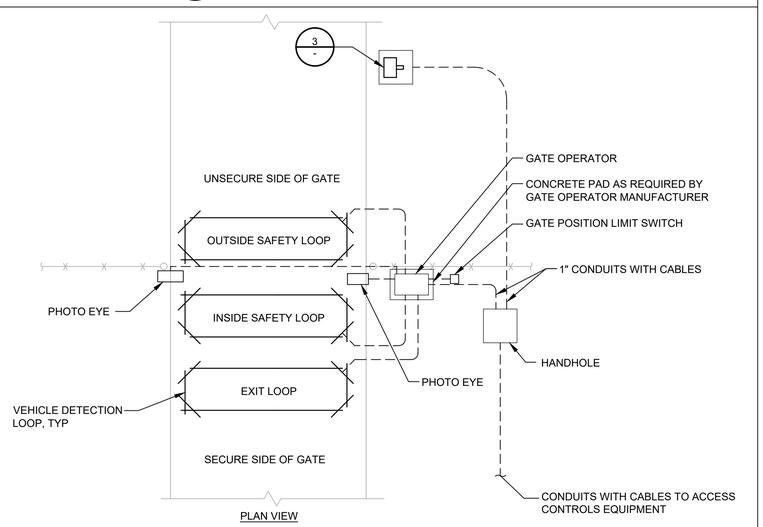

2 – TYPICAL GATED VEHICLE ENTRANCE WITH ACCESS CONTROL

SCALE: NONE

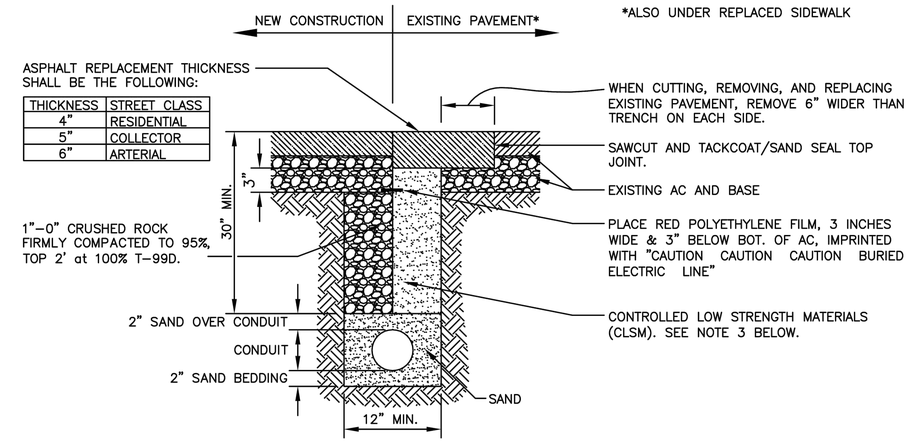

TRENCH DETAIL UNDER ROADWAY

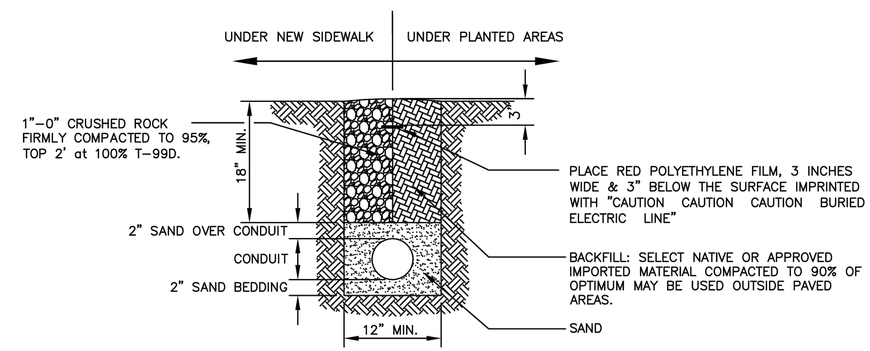

TRENCH DETAIL OUTSIDE ROADWAY

NOTES:

1. COLD MIX AC MAY BE USED AS TEMPORARY PATCH ONLY.
2. ALL STEEL TRAFFIC PLATES IN TRAVELED AREAS MUST BE "RAMPED" WITH COLD MIX AC TO ALLOW SMOOTHER TRANSITION. TRANSITION.
   a) MINIMUM 12" LAP OF STEEL PLATES ONTO EXISTING PAVEMENT.
   b) MINIMUM 3/4" STEEL PLATE THICKNESS.
3. CONTROLLED LOW–STRENGTH MATERIAL IS HIGHLY FLOWABLE LEAN CONCRETE MIX; A MIXTURE OF FLY ASH, CEMENT, FINE AGGREGATES, WATER AND ADMIXTURES, IF NECESSARY. CLSM SHALL ATTAIN A 28–DAY COMPRESSIVE STRENGTH OF 150 TO 250 psi AND SHALL COMPLY WITH 2002 OREGON APWA/ODOT SECTION 00442.

ELECTRICAL CONDUIT TRENCH DETAIL

ISSUED: LB CRZ	DATE: 9/27/05 7/28/05	PUBLIC WORKS ENGINEERING *Ashland – Medford – Rogue Valley Sewer Services*	DRAWING NO. CD980
REVISED:	DATE:		

3 – TYPICAL CONDUIT TRENCH DETAIL

SCALE: NONE

ISSUE	DATE	DESCRIPTION
A	09/2026	ISSUED FOR BIDS

PROJECT MANAGER	PIERRE KWAN
CIVIL	J. MEGRDITCHIAN
STRUCTURAL	P. LINDBLOM
ARCHITECTURAL	V. YANEZ
PROCESS	P. KWAN
MECHANICAL	K. CHEUNG
ELECTRICAL	R. MCCOMB
INSTRUMENTATION	D. BEST
PROJECT NUMBER	10193663

REGISTERED PROFESSIONAL ENGINEER 88023PE DIGITALLY SIGNED OREGON MAY 14, 2013 ROBB J. MCCOMB EXPIRES: 12/31/2026

CITY OF ASHLAND
Ashland, Oregon

City of Ashland

Ashland Creek Water Treatment Plant

2026

0 1" 2"

ELECTRICAL DETAILS 4

FILENAME 000E704
SCALE NONE

SHEET 000E704

PRIMARY ELEMENT SYMBOLOGY

- THERMOWELL
- THERMAL DISPERSION ELEMENT
- MAGNETIC FLOWMETER
- SONIC OR ULTRASONIC FLOWMETER
- ROTAMETER
- DIAPHRAGM OPERATOR
- PRESSURE GUAGE
- FLOAT SWITCH
- ULTRASONIC LEVEL SENSOR
- RADAR LEVEL SENSOR

MISC INSTRUMENT SYMBOLOGY

PLC OR REMOTE I/O LEVEL

FIELD LEVEL

DIGITAL (DISCREET) INPUT

ANALOG INPUT

DIGITAL (DISCREET) OUTPUT

ANALOG OUTPUT

LINE TYPES

- PRIMARY PROCESS LINE
- SECONDARY PROCESS LINE
- AUXILIARY PROCESS LINE
- FUTURE PROCESS LINE
- EXISTING PROCESS LINE
- PROCESS OPEN CHANNEL
- ELECTRIC SIGNAL
- ELECTRIC POWER
- SOFTWARE OR DATA LINK
- SIGNAL CONNECTION
- CROSSOVER - NO CONNECTION
- CAPILLARY TUBE
- TELEMETRY LINE
- PACKAGED EQUIPMENT
- CAT6 — CATEGORY 6 ETHERNET CABLE
- FO — FIBER OPTIC PATCH CABLE
- FT/6 — FIBER OPTIC TRUNK CABLE, 6-STRANDS
- FT/12 — FIBER OPTIC TRUNK CABLE, 12-STRANDS
- HW — HARD-WIRED CONTROL SIGNALS
- TEL — TELEPHONE CABLE
- DOUBLE CONTAINED PIPE

INSTRUMENT SYMBOLOGY

- FIELD MOUNTED
- MOUNTED ON PANEL FACE
- MOUNTED BEHIND PANEL
- MOUNTED ON AUXILIARY PANEL
- MOUNTED BEHIND AUXILIARY PANEL
- INDICATOR LIGHT
- INTERLOCK, SEE CONTROL DIAGRAMS OR SPECIFICATIONS
- SHARED DISPLAY, SHARED CONTROL, PRIMARY LOCATION - NORMALLY ACCESSIBLE TO OPERATOR

PUMP AND EQUIPMENT SYMBOLS

- CENTRIFUGAL BLOWER OR FAN
- CENTRIFUGAL PUMP
- HYDROCYCLONE
- ROTARY LOBE BLOWER
- ROTARY LOBE PUMP
- MOTOR
- PERISTALTIC PUMP
- PROGRESSIVE CAVITY PUMP
- SUBMERSIBLE PUMP
- VAPORIZER
- VERTICAL TURBINE OR PROPELLER PUMP

GATE SYMBOLS

- BUTTERFLY
- FLAP
- SHEAR
- SLIDE GATE
- SLUICE
- STOP PLATE
- WEIR GATE

MISCELLANEOUS SYMBOLS

- REDUCER
- STRAINER
- CALIBRATION COLUMN
- FLEXIBLE HOSE
- ACCUMULATOR
- RUPTURE DISK
- HEAT EXCHANGER
- HEAT TRACE
- BUBBLER LEVEL TUBE
- CHEMICAL INJECTOR
- MIXER
- STATIC MIXER/ PIPELINE FLASH REACTOR
- FLOW STRAIGHTENER
- BACKFLOW PREVENTER
- MUD VALVE
- DRAIN
- SUPPRESSOR
- FLUSHING CONNECTION
- PULSATION DAMPER
- SAMPLE PORT
- COARSE BUBBLE DIFFUSER
- EMERGENCY EYE WASH/SHOWER
- FILTER
- DIAPHRAGM SEAL
- ANNULAR SEAL
- OFFGAS DEMISTER
- SAMPLE PROBE
- INJECTION QUILL WITH INTEGRAL CHECK VALVE
- SPRAY NOZZLE

VALVES

- BALL VALVE
- BUTTERFLY VALVE
- CONE VALVE
- CHECK VALVE
- DOUBLE-DISK CHECK VALVE
- BALL CHECK VALVE
- DIAPHRAGM VALVE
- GATE VALVE
- GLOBE VALVE
- KNIFE GATE VALVE
- NEEDLE VALVE
- PINCH VALVE
- PLUG VALVE
- THREE-WAY BALL VALVE
- THREE-WAY PLUG VALVE
- EXPANSION JOINT
- SOLENOID VALVE
- PRESSURE-REDUCING VALVE
- BACK PRESSURE VALVE, SELF-CONTAINED
- PRESSURE-REGULATING VALVE
- THREE-WAY CONTROL VALVE
- PRESSURE-RELIEF VALVE
- AIR-RELEASE VACUUM VALVE A = AIR RELEASE VAC = VACUUM
- SURGE VALVE

VALVE & EQUIPMENT TAG NUMBERS

AAA-XXNZ

AAA: EQUIPMENT OR INSTRUMENT TYPE

XX: PROCESS AREA DESIGNATION

N: LOOP OR TRAIN NUMBER

Z: EQUIPMENT OR INSTRUMENT NUMBER

VALVE TAG

OPTIONAL VALVE DESIGNATION:
NC = NORMALLY CLOSED
NO = NORMALLY OPEN

NC

OR

SOLID FILL

NORMALLY CLOSED

NORMALLY OPEN

CONTROL SWITCH NOTATION ABBREVIATIONS

ACK	ACKNOWLEDGE
ESTOP	EMERGENCY STOP
FAIL	FAILURE
FOR	FORWARD-OFF-REVERSE
FR	FORWARD-REVERSE
FS	FAST-SLOW
HA	HAND-AUTO
HOA	HAND-OFF-AUTO
HOR	HAND-OFF-REMOTE
LOR	LOCAL-OFF-REMOTE
LR	LOCAL-REMOTE
LS	LEAD-STANDBY
MA	MANUAL-AUTO
OAC	OPEN-AUTO-CLOSE
OC	OPEN-CLOSE
OSC	OPEN-STOP-CLOSE
SIL	SILENCE
SS	START-STOP
TSN	TEST-NORMAL-SILENCE

TYPES OF POWER SUPPLY

A	PLANT COMPRESSED AIR
IA	INSTRUMENTATION AIR
ES	ELECTRIC SUPPLY
NG	NATURAL GAS
HYD	HYDRAULIC

ACTUATOR SYMBOLS

OPERATOR ABBREVIATIONS:
M = MOTOR
P = PNEUMATIC (SGL OR DBL)
S = SOLENOID
H = HYDRAULIC

XX: FO = FAIL TO OPEN
FC = FAIL TO CLOSE
FLP = FAIL TO LAST POSITION
MOD = MODULATING TYPE

- FLOAT OPERATOR
- SPRING-OPPOSED SINGLE-ACTING PNEUMATIC CYLINDER
- DOUBLE-ACTING PNEUMATIC CYLINDER
- PNEUMATIC DIAPHRAGM
- PNEUMATIC DIAPHRAGM WITH POSITIONER

CROSS REFERENCE SYMBOLOGY

PI A 30Y602 FROM HEADWORKS

- PROCESS STREAM
- CONNECTION NUMBER
- CONTINUATION DRAWING NUMBER
- PROCESS FROM:
- PROCESS ORIGIN

PE A 30Y604 TO SECONDARY PUMP STATION

- PROCESS STREAM
- CONNECTION NUMBER
- CONTINUATION DRAWING NUMBER
- PROCESS TO:
- PROCESS DESTINATION

INSTRUMENT IDENTIFICATION LETTERS

	FIRST LETTER		SUCCEEDING LETTERS		
	MEASURED OR INITIATING VARIABLE	MODIFIER	READOUT OR PASSIVE FUNCTION	OUTPUT FUNCTION	MODIFIER
A	ANALYSIS		ALARM		
B	BURNER, COMBUSTION		USER'S CHOICE	USER'S CHOICE	USER'S CHOICE
C	USERS CHOICE			CONTROL	CLOSED
D	USERS CHOICE	DIFFERENTIAL			
E	VOLTAGE		SENSOR (PRIMARY ELEMENT)		
F	FLOW RATE	RATIO (FRACTION)			
G	USER'S CHOICE		GLASS, VIEWING DEVICE		
H	HAND				HIGH
I	CURRENT (ELECTRICAL)		INDICATE		
J	POWER	SCAN			
K	TIME, TIME SCHEDULE	TIME; RATE OF CHANGE		CONTROL STATION	
L	LEVEL		LIGHT		LOW
M	USER'S CHOICE	MOMENTARY			MIDDLE, INTERMEDIATE
N	USER'S CHOICE		USER'S CHOICE	USER'S CHOICE	USER'S CHOICE
O	USER'S CHOICE		ORIFICE, RESTRICTION		OPEN
P	PRESSURE, VACUUM		POINT (TEST) CONNECTION		
Q	QUANTITY	INTEGRATE, TOTALIZE			
R	RADIATION		RECORD		
S	SPEED, FREQUENCY	SAFETY		SWITCH	
T	TEMPERATURE			TRANSMIT	
U	MULTIVARIABLE		MULTIFUNCTION	MULTIFUNCTION	MULTIFUNCTION
V	VIBRATION, MECH. ANALYSIS			VALVE, DAMPER, LOUVER	
W	WEIGHT, FORCE		WELL		
X	UNCLASSIFIED	X AXIS	UNCLASSIFIED	UNCLASSIFIED	UNCLASSIFIED
Y	EVENT, STATE OR PRESENCE	Y AXIS		RELAY, COMPUTE, CONVERT	
Z	POSITION, DIMENSION	Z AXIS		DRIVER, ACTUATOR, UNCLASSIFIED FINAL CONTROL ELEMENT	

MISCELLANEOUS INSTRUMENTATION ABBREVIATIONS

AI	ANALOG INPUT	O2	OXYGEN (ANALYZER MODIFIER)
AO	ANALOG OUTPUT	P&ID	PROCESS AND INSTRUMENTATION DIAGRAM
CL2	CHLORINE (ANALYZER MODIFIER)	RST	ROTARY SCREEN THICKENER
CO	CARBON MONOXIDE (ANALYZER MODIFIER)	SS	SUSPENDED SOLIDS (ANALYZER MODIFIER)
CO2	CARBON DIOXIDE (ANALYZER MODIFIER)	TSS	TOTAL SUSPENDED SOLIDS
COMB	COMBUSTIBLES (ANALYZER MODIFIER)	TURB	TURBIDITY (ANALYZER MODIFIER)
COND	CONDUCTIVITY (ANALYZER MODIFIER)	UVT	ULTRA VIOLET TRANSMITTANCE
DEN	DENSITY (ANALYZER MODIFIER)	UVSC	UV SYSTEM CONTROLLER
DI	DIGITAL INPUT	WAN	WIDE AREA NETWORK
DO	DIGITAL OUTPUT		
DO	DISSOLVED OXYGEN (ANALYZER MODIFIER)		
E/P	VOLTAGE TO PNEUMATIC		
H2S	HYDROGEN SULFIDE (ANALYZER MODIFIER)		
HCL	HYDROGEN CHLORIDE (ANALYZER MODIFIER)		
I/O	INPUT/OUTPUT		
I/P	CURRENT TO PNEUMATIC		
LEL	LOWER EXPLOSION LIMIT		
NOX	NITROGEN OXIDE (ANALYZER MODIFIER)		
PDC	POWER DISTRIBUTION CENTER		
PO4	PHOSPHATE		
OI	OPERATOR INTERFACE		

GENERAL NOTES:

1. THIS IS A STANDARD INSTRUMENTATION SYMBOLOGY AND ABBREVIATIONS SHEET. LISTING OF SYMBOLS AND ABBREVIATIONS DOES NOT IMPLY ALL SYMBOLS AND ABBREVIATIONS HAVE BEEN USED ON THIS PROJECT.
2. SEE PROCESS, MECHANICAL AND PLUMBING LEGEND SHEET FOR MISCELLANEOUS PIPING SYMBOLS. SEE PIPING AND EQUIPMENT IDENTIFICATION SYMBOLOGY ON SHEET 000G005.
3. SCREENING OR SHADING OF WORK IS USED TO INDICATE EXISTING COMPONENTS OR TO DE-EMPHASIZE PROPOSED IMPROVEMENTS TO HIGHLIGHT SELECTED TRADE WORK. REFER TO CONTEXT OF EACH SHEET FOR USAGE.
4. VALVE SYMBOLS SHOWN HERE ARE APPLICABLE ONLY TO INSTRUMENTATION DIAGRAMS. SEE PROCESS, MECHANICAL AND PLUMBING LEGEND SHEET FOR VALVE SYMBOLS USED ELSEWHERE ON THE SHEETS.

ISSUE	DATE	DESCRIPTION
A	09/2026	ISSUED FOR BIDS

PROJECT MANAGER	PIERRE KWAN
CIVIL	J. MEGRDITCHIAN
STRUCTURAL	P. LINDBLOM
ARCHITECTURAL	V. YANEZ
PROCESS	P. KWAN
MECHANICAL	K. CHEUNG
ELECTRICAL	R. MCCOMB
INSTRUMENTATION	D. BEST
PROJECT NUMBER	10193663

REGISTERED PROFESSIONAL ENGINEER 57142PE DIGITALLY SIGNED OREGON JULY 11, 2006 DONALD E. BEST

EXPIRES: 12/31/2027

CITY OF ASHLAND

Ashland, Oregon

City of Ashland

Ashland Creek Water Treatment Plant

2026

INSTRUMENTATION LEGEND

0 1" 2"

FILENAME 000Y001.dwg

SCALE NTS

SHEET **000Y001**

GENERAL NOTES:

1. PROVIDE LATEST RELEASE OF MICROSOFT SERVER THAT IS VERIFIED TO BE COMPATIBLE WITH INSTALLED SOFTWARE.
2. REFERENCE SPECIFICATION 40 62 16 - COMPUTER NETWORK AND HUMAN MACHINE INTERFACE (HMI) HARDWARE.

KEY NOTES:

1. SEE IT EQUIPMENT RACK ON SHEET 00Y005.
2. NOT ALL REQUIRED NETWORK CABLES/CONNECTIONS ARE SHOWN.
3. ENTERPRISE NETWORK SWITCH PROVIDED BY AND CONFIGURED BY ASHLAND FIBER.
4. POINT OF DEMARCATION IS AT THE FIBER PATCH PANEL LOCATED IN THE IT EQUIPMENT RACK.
5. REFERENCE SHEETS 000Y003 AND 300E102.

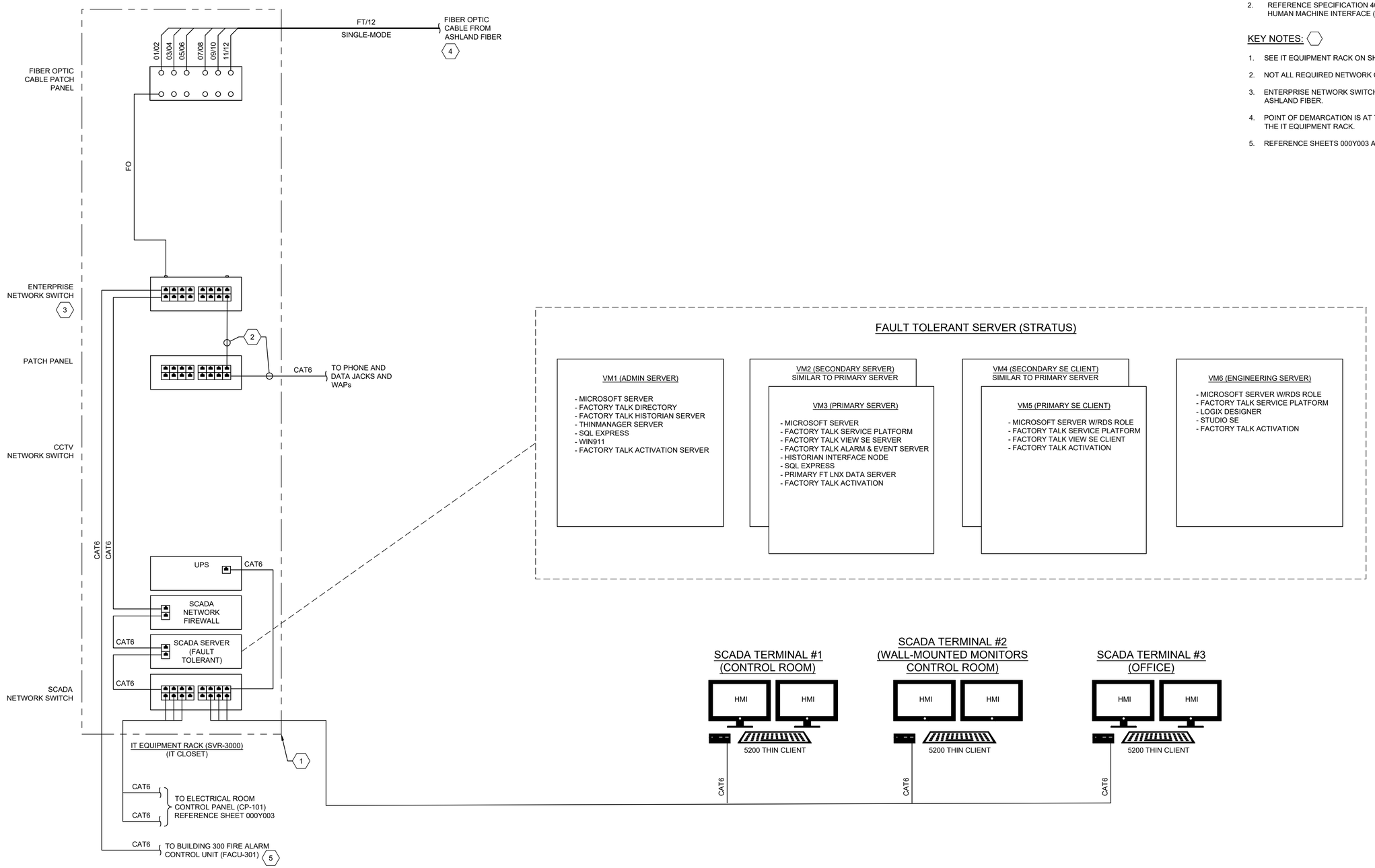

ISSUE	DATE	DESCRIPTION
A	09/2026	ISSUED FOR BIDS

PROJECT MANAGER	PIERRE KWAN
CIVIL	J. MEGRDITCHIAN
STRUCTURAL	P. LINDBLOM
ARCHITECTURAL	V. YANEZ
PROCESS	P. KWAN
MECHANICAL	K. CHEUNG
ELECTRICAL	R. MCCOMB
INSTRUMENTATION	D. BEST
PROJECT NUMBER	10193663

REGISTERED PROFESSIONAL ENGINEER 57142PE DIGITALLY SIGNED OREGON JULY 11, 2006 DONALD E. BEST
EXPIRES: 12/31/2027

CITY OF ASHLAND
Ashland, Oregon

City of Ashland

Ashland Creek Water Treatment Plant

2026

INSTRUMENTATION SCADA CONTROL SYSTEM BLOCK DIAGRAM 1

0 1" 2"

FILENAME 000Y002
SCALE -

SHEET **000Y002**

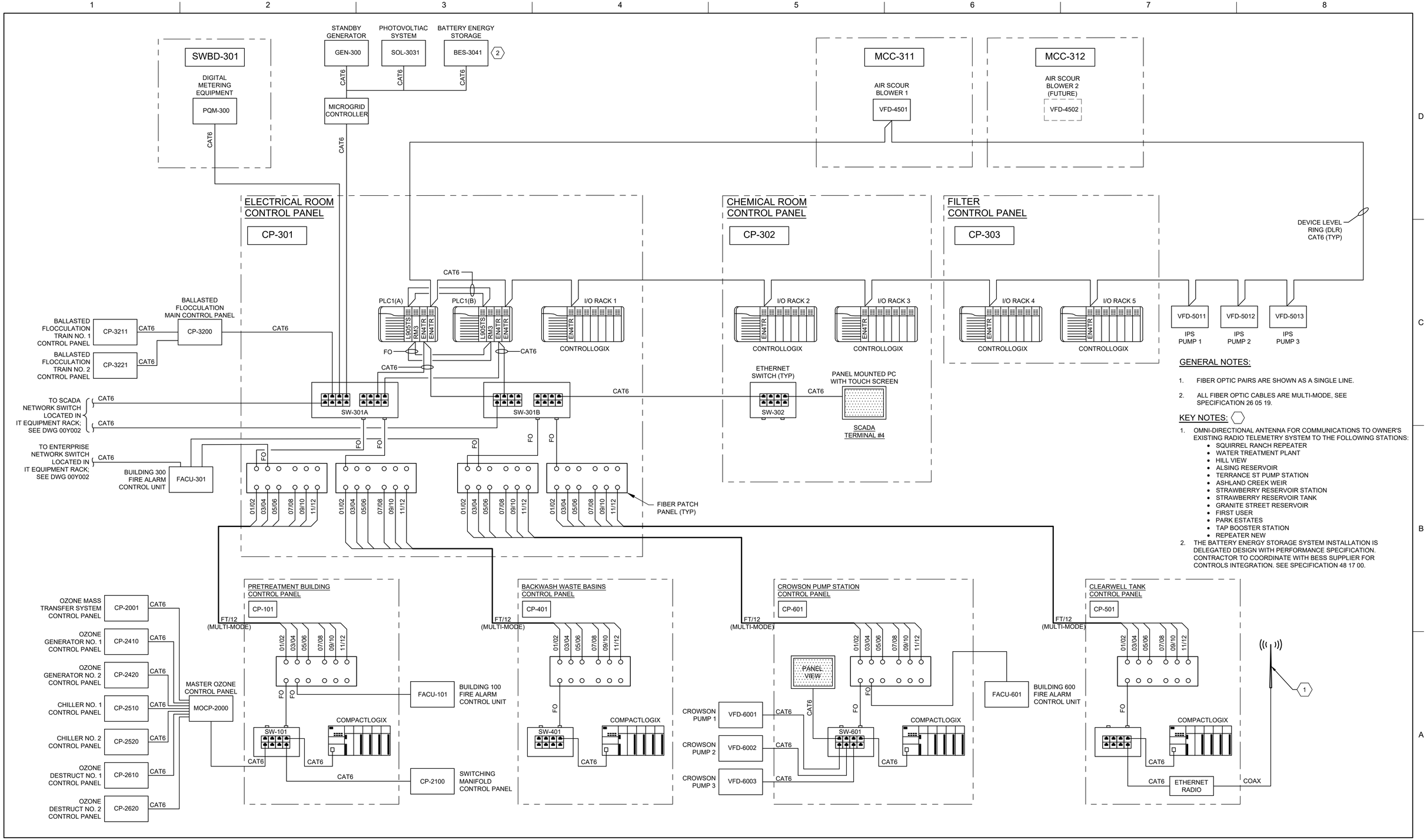

GENERAL NOTES:

1. FIBER OPTIC PAIRS ARE SHOWN AS A SINGLE LINE.
2. ALL FIBER OPTIC CABLES ARE MULTI-MODE, SEE SPECIFICATION 26 05 19.

KEY NOTES:

1. OMNI-DIRECTIONAL ANTENNA FOR COMMUNICATIONS TO OWNER'S EXISTING RADIO TELEMETRY SYSTEM TO THE FOLLOWING STATIONS:
   - SQUIRREL RANCH REPEATER
   - WATER TREATMENT PLANT
   - HILL VIEW
   - ALSING RESERVOIR
   - TERRANCE ST PUMP STATION
   - ASHLAND CREEK WEIR
   - STRAWBERRY RESERVOIR STATION
   - STRAWBERRY RESERVOIR TANK
   - GRANITE STREET RESERVOIR
   - FIRST USER
   - PARK ESTATES
   - TAP BOOSTER STATION
   - REPEATER NEW
2. THE BATTERY ENERGY STORAGE SYSTEM INSTALLATION IS DELEGATED DESIGN WITH PERFORMANCE SPECIFICATION. CONTRACTOR TO COORDINATE WITH BESS SUPPLIER FOR CONTROLS INTEGRATION. SEE SPECIFICATION 48 17 00.

ISSUE	DATE	DESCRIPTION
A	09/2026	ISSUED FOR BIDS

PROJECT MANAGER	PIERRE KWAN
CIVIL	J. MEGRDITCHIAN
STRUCTURAL	P. LINDBLOM
ARCHITECTURAL	V. YANEZ
PROCESS	P. KWAN
MECHANICAL	K. CHEUNG
ELECTRICAL	R. MCCOMB
INSTRUMENTATION	D. BEST
PROJECT NUMBER	10193663

REGISTERED PROFESSIONAL ENGINEER 57142PE DIGITALLY SIGNED OREGON JULY 11, 2000 DONALD E. BEST

EXPIRES: 12/31/2027

CITY OF ASHLAND

Ashland, Oregon

City of Ashland

Ashland Creek Water Treatment Plant

2026

INSTRUMENTATION SCADA CONTROL SYSTEM BLOCK DIAGRAM 2

0 1" 2"

FILENAME 000Y003.dwg

SCALE -

SHEET **000Y003**

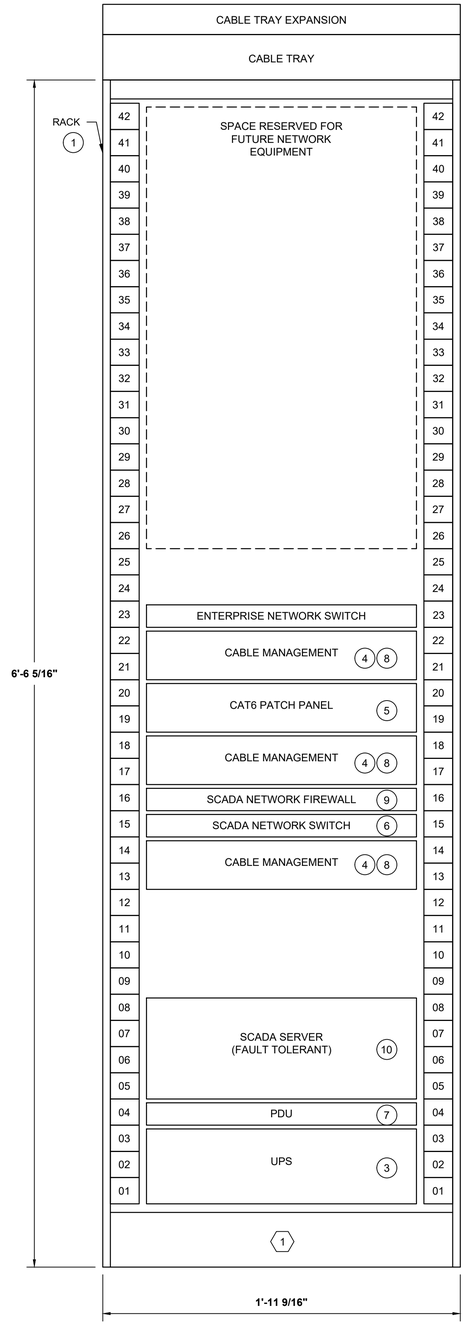

RACK - BILL OF MATERIALS

ITEM NO.	QTY REQ'D	VENDOR/MFR	PART NUMBER	DESCRIPTION
1	2	TRIPP LITE, OR EQUAL	SR42UBZ4	42U SEISMIC-CERTIFIED STANDARD-DEPTH RACK ENCLOSURE WITH DOORS AND SIDE PANELS
	2	TRIPP LITE, OR EQUAL	SRCABLETRAY	ROOF-MOUNTED CABLE MANAGEMENT TRAY
	2	TRIPP LITE, OR EQUAL	SRCABLETRAYEXP	ROOF-MOUNTED CABLE MANAGEMENT TRAY EXPANSION
2		(NOT USED)	(NOT USED)	(NOT USED)
3	1	APC, OR EQUAL	SMTL1500RM3UC	RACK-MOUNT UPS, 1500 VA RATING, LITHIUM ION BATTERIES
4	3	ICC, OR EQUAL	ICCMSCMA32	HORIZONTAL CABLE MANAGEMENT PANEL, 2 RMS
5	1	ICC, OR EQUAL	ICMPP04860	CAT6 PATCH PANEL, 48 PORTS, 2 RMS
	1	ICC, OR EQUAL	ICMPP25CMB	CABLE MANAGEMENT BAR
	48	ICC, OR EQUAL	--	RETENTION CAPS FOR PUNCH DOWN BLOCKS
6	1	CISCO	C9300-48T	48-PORT MANAGED SWITCH
	1	CISCO	C9300-NM-4M	9300 SERIES 4 X MULTIGIGABIT NETWORK MODULE
	1	CISCO	GLC-LH-SMD	1000BASE-LX/LH LONG-WAVELENGTH WITH DOM TRANSCEIVER MODULE
	1	CISCO	PWR-C1-350WAC	POWER SUPPLY
7	2	LEVITON, OR EQUAL	5500-190	RACK MOUNT POWER DISTRIBUTION UNIT (PDU) WITH SURGE PROTECTION
8	AS REQ'D	ICC, OR EQUAL	ICPCSK	CAT6 MOLDED BOOT PATCH CORDS, LENGTHS AS REQUIRED
9	1	TBD	TBD	FIREWALL
10	1	STRATUS	TBD	SCADA SERVER (FAULT TOLERANT)

GENERAL NOTES:

1. FASTEN RACK TO CONCRETE FLOOR PER MANUFACTURER INSTRUCTIONS AND PROVIDE SEISMIC BRACING OF RACK.
2. RACKS SHALL CONFORM TO EIA-310-E FOR 19" RACK CABINETS.
3. ONE (1) RACK MOUNT SPACE IS 1.75 INCH HIGH.
4. BOND EQUIPMENT RACKS TO GROUND BAR.

KEY NOTES:

1. PROVIDE 42U, SEISMIC-CERTIFIED STANDARD-DEPTH RACK ENCLOSURE CABINET WITH DOORS AND SIDE PANELS. TESTED TO NEBS SEISMIC ZONE 4 REQUIREMENTS. STATIONARY WEIGHT CAPACITY OF 3000 LBS.
2. ENTERPRISE NETWORK SWITCH PROVIDED BY AND CONFIGURED BY ASHLAND FIBER.

ISSUE	DATE	DESCRIPTION
A	09/2026	ISSUED FOR BIDS

PROJECT MANAGER	PIERRE KWAN
CIVIL	J. MEGRDITCHIAN
STRUCTURAL	P. LINDBLOM
ARCHITECTURAL	V. YANEZ
PROCESS	P. KWAN
MECHANICAL	K. CHEUNG
ELECTRICAL	R. MCCOMB
INSTRUMENTATION	D. BEST
PROJECT NUMBER	10193663

REGISTERED PROFESSIONAL ENGINEER 57142PE OREGON JULY 11, 2000 DONALD E. BEST
DIGITALLY SIGNED
EXPIRES: 12/31/2027

CITY OF ASHLAND
Ashland, Oregon

City of Ashland

Ashland Creek Water Treatment Plant

2026

INSTRUMENTATION
IT EQUIPMENT RACK
SVR-3000

0 1" 2"

FILENAME 000Y005.dwg
SCALE -

SHEET 000Y005

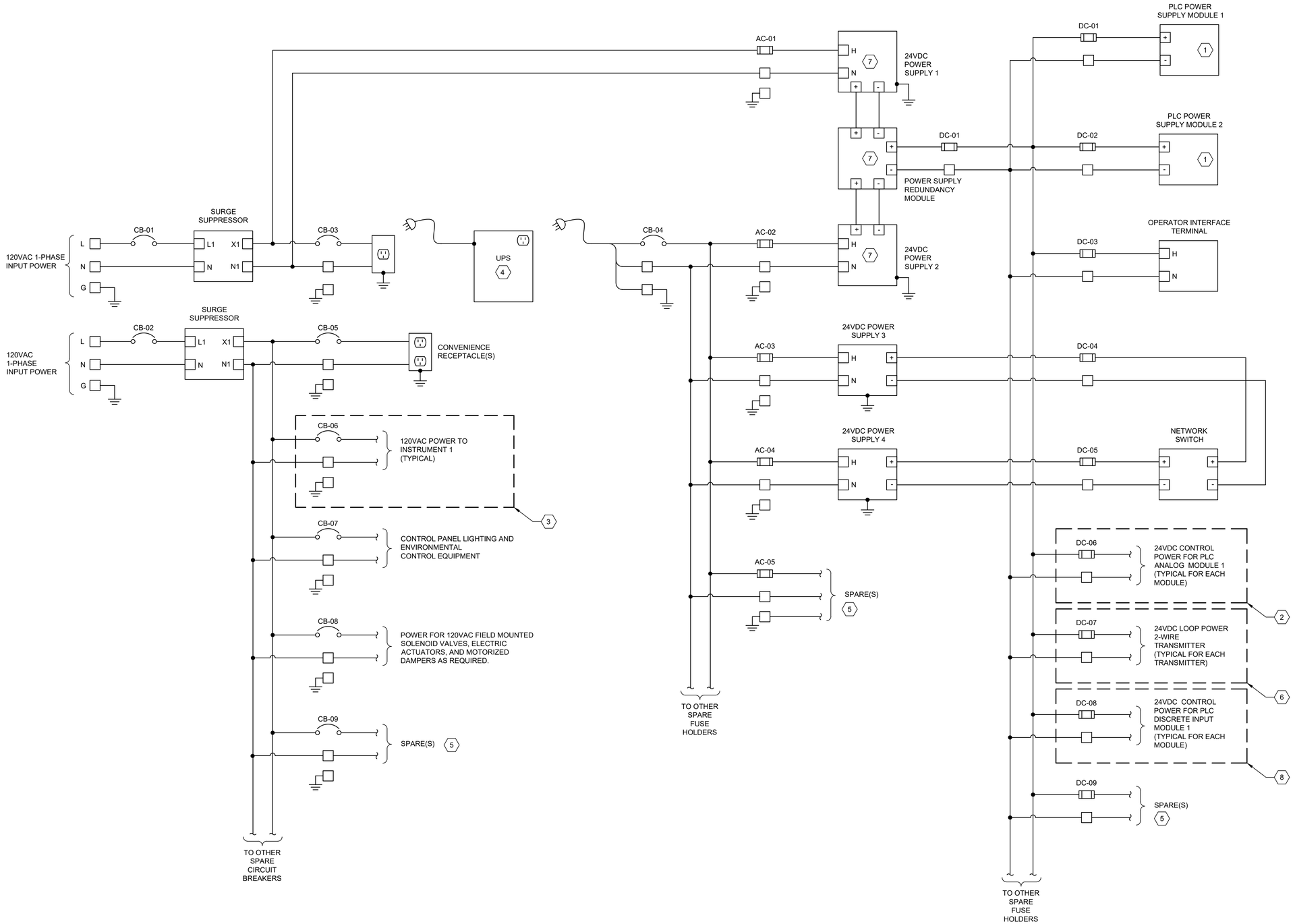

GENERAL NOTES:

1. THIS POWER DISTRIBUTION SCHEMATIC IS TYPICAL AND APPLIES TO THE PLANT PLC CONTROL PANELS INCLUDED IN SPECIFICATION 406700.
2. CONTROL AUXILIARIES PER SPECIFICATION 409700.
3. PROVIDE ADDITIONAL GROUND CONNECTIONS AS REQUIRED.
4. BOND ALL TERMINAL BLOCK RAILS TO PANEL GROUND BUS.
5. CIRCUIT BREAKERS AND FUSES SHALL BE RATED AS REQUIRED FOR PANEL LOADS AND EQUIPMENT REQUIREMENTS.
6. REFERENCE DIV40 SPECIFICATIONS. FOR FIELD INSTRUMENT POWER SUPPLY REQUIREMENTS. FIELD INSTRUMENTS SHALL RECEIVE INPUT POWER FROM ASSOCIATED PLC PANEL AS REQUIRED AND AS SHOWN ON THE ELECTRICAL DRAWINGS.
7. PROVIDE PLC MONITORING OF CONTROL POWER, UPS, DC POWER SUPPLIES AND SURGE SUPPRESSOR. REFER TO PLC INPUT/OUTPUT USAGE TABLE (SPECIFICATION 406343, ATTACHMENT B) FOR SPECIFIC PLC I/O POINTS.
8. FIELD INSTRUMENTS SHALL RECEIVE INPUT POWER FROM ASSOCIATED PLC PANEL AS REQUIRED AND AS SHOWN ON THE ELECTRICAL DRAWINGS. REFERENCE SPECIFICATIONS IN DIV 40 FOR FIELD INSTRUMENT POWER SUPPLY REQUIREMENTS.

KEY NOTES:

1. TYPICAL FOR EACH PLC POWER SUPPLY MODULE. EACH PLC POWER SUPPLY MODULE SHALL BE INDIVIDUALLY FUSED.
2. TYPICAL FOR EACH PLC ANALOG OUTPUT MODULE. POWER FOR EACH PLC ANALOG OUTPUT MODULE SHALL BE INDIVIDUALLY FUSED.
3. TYPICAL FOR EACH 4-WIRE FLOW, PRESSURE, AND LEVEL FIELD INSTRUMENT. EACH 4-WIRE FIELD INSTRUMENT SHALL BE INDIVIDUALLY PROTECTED WITH CIRCUIT BREAKER.
4. UNINTERRUPTIBLE POWER SUPPLY. SEE SPECIFICATION 40 97 00.
5. PROVIDE AND INSTALL SPARE CIRCUIT BREAKERS, FUSES AND TERMINAL BLOCKS; 20% SPARES (MINIMUM) OR QUANTITY OF 4 FOR EACH USE, WHICHEVER IS GREATER.
6. TYPICAL FOR EACH 2-WIRE FIELD INSTRUMENT. EACH 2-WIRE FIELD INSTRUMENT SHALL BE INDIVIDUALLY FUSED.
7. HIGH AVAILABILITY POWER SUPPLY SYSTEM WITH 1+1 REDUNDANCY AND REDUNDANCY MODULE.
8. TYPICAL FOR EACH PLC DISCRETE INPUT MODULE. CONTROL POWER FOR EACH PLC DISCRETE INPUT MODULE SHALL BE INDIVIDUALLY FUSED.

ISSUE	DATE	DESCRIPTION
A	09/2026	ISSUED FOR BIDS

PROJECT MANAGER	PIERRE KWAN
CIVIL	J. MEGRDITCHIAN
STRUCTURAL	P. LINDBLOM
ARCHITECTURAL	V. YANEZ
PROCESS	P. KWAN
MECHANICAL	K. CHEUNG
ELECTRICAL	R. MCCOMB
INSTRUMENTATION	D. BEST
PROJECT NUMBER	10193663

REGISTERED PROFESSIONAL ENGINEER 57142PE DIGITALLY SIGNED OREGON JULY 11, 2000 DONALD E. BEST
EXPIRES: 12/31/2027

CITY OF ASHLAND
Ashland, Oregon

City of Ashland

Ashland Creek Water Treatment Plant

2026

INSTRUMENTATION PLC ONTROL PANEL TYPICAL POWER DISTRIBUTION SCHEMATIC

0 1" 2"

FILENAME

SCALE NONE

SHEET **000Y011**

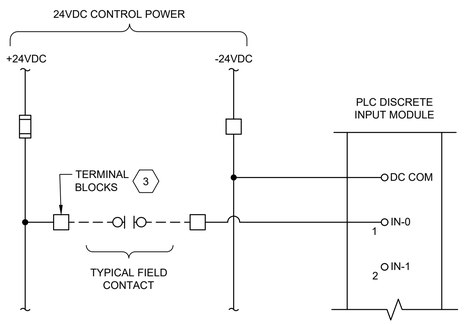

TYPICAL PLC DISCRETE INPUT
NO SCALE

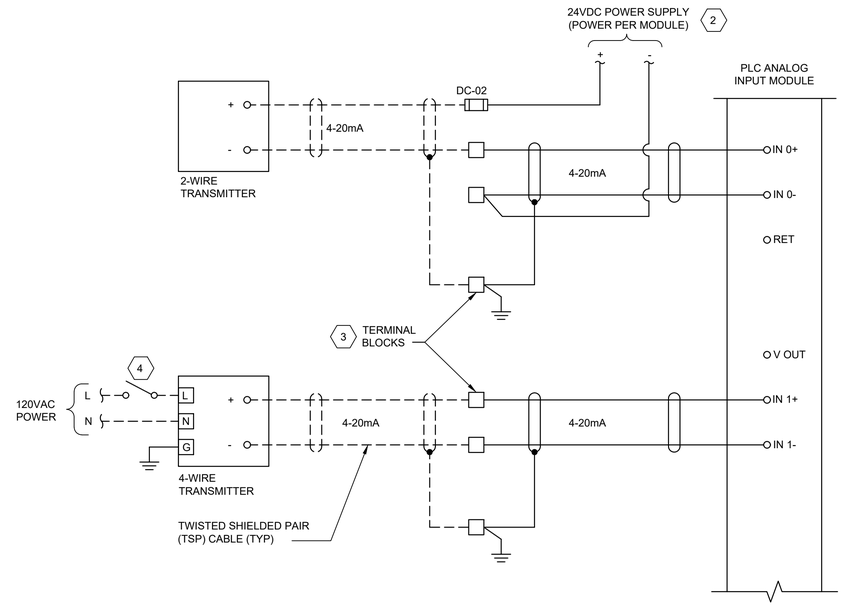

MODULE:
RACK:
SLOT:

TYPICAL PLC ANALOG INPUTS
NO SCALE

GENERAL NOTES:

1. PROVIDE PLC CONTROL PANEL WIRING PER SPECIFICATION 40 67 00.
2. REFER TO PLC INPUT/OUTPUT USAGE TABLE (SPECIFICATION 40 63 43 -ATTACHMENT B) FOR SPECIFIC PLC I/O POINTS.
3. PROVIDE INTRINSIC SAFETY RELAYS OR BARRIERS SHALL BE USED AS REQUIRED FOR FIELD INSTRUMENTS OR DEVICES LOCATED IN AREAS CLASSIFIED AS AN EXPLOSION HAZARD. INTRINSIC SAFETY DEVICES SHALL BE INSTALLED PER MANUFACTURER INSTRUCTIONS. CORRESPONDING FIELD INSTRUMENTS OR DEVICES SHALL BE INTRINSIC SAFETY RATED WITH ENTITY PARAMETERS MATCHING THE INTRINSIC SAFETY BARRIERS OR RELAYS TO CREATE AN INSTRINSICALLY SAFE CIRCUIT.INTRINSICALLY SAFE CIRCUITS SHALL BE INSTALLED AND PHYSICALLY SEPARATED PER THE NEC.
4. PROVIDE SURGE PROTECTION DEVICES (SPD) FOR INSTRUMENTATION AND CONTROL EQUIPMENT FOR SPECIFICATION 40 61 43.

KEY NOTES:

1. PROVIDE POWER FOR SOLENOID VALVES, ALARM HORNS, AND BEACONS FROM THE PLC CONTROL PANEL.
2. PROVIDE 24VDC POWER SUPPLY IN PANEL. REFER TO SHEET 000Y011.
3. PROVIDE CONTROL PANEL TERMINAL BLOCKS.
4. PROVIDE SINGLE-PHASE, MANUAL SWITCH; SEE DETAIL SHEET 000Y022/DETAIL 3.
5. PROVIDE INTERPOSING CONTROL RELAY FOR EACH PLC DISCRETE OUTPUT, INCLUDING SPARES.

LINE DESIGNATIONS:

- - - - - - FIELD WIRING
——————— CONTROL PANEL WIRING

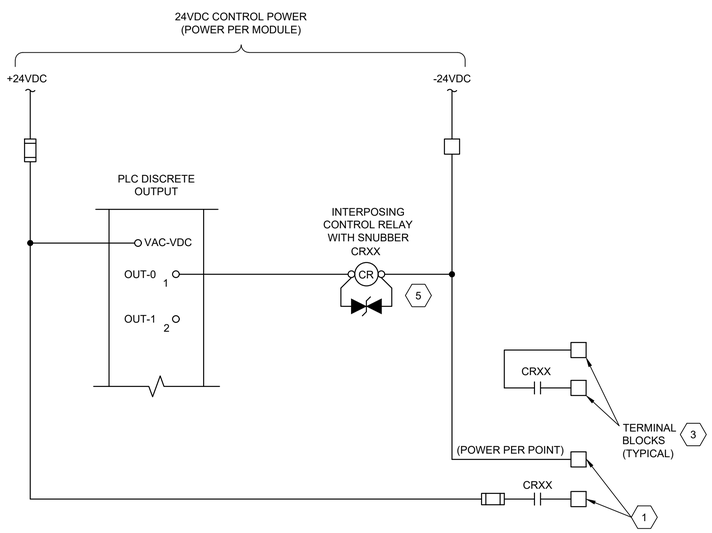

TYPICAL PLC DISCRETE OUTPUT
NO SCALE

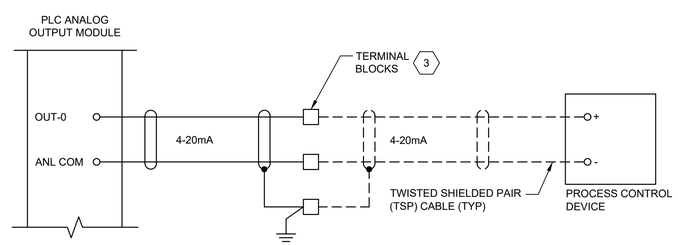

TYPICAL PLC ANALOG OUTPUT
NO SCALE

ISSUE	DATE	DESCRIPTION
A	09/2026	ISSUED FOR BIDS

PROJECT MANAGER	PIERRE KWAN
CIVIL	J. MEGRDITCHIAN
STRUCTURAL	P. LINDBLOM
ARCHITECTURAL	V. YANEZ
PROCESS	P. KWAN
MECHANICAL	K. CHEUNG
ELECTRICAL	R. MCCOMB
INSTRUMENTATION	D. BEST
PROJECT NUMBER	10193663

REGISTERED PROFESSIONAL ENGINEER 57142PE DIGITALLY SIGNED OREGON JULY 11, 2000 DONALD E. BEST
EXPIRES: 12/31/2027

CITY OF ASHLAND
Ashland, Oregon

City of Ashland

Ashland Creek Water Treatment Plant

2026

INSTRUMENTATION
PLC CONTROL PANEL
TYPICAL POWER WIRING SCHEMATIC

0 1" 2"

FILENAME
SCALE NONE

SHEET
000Y012

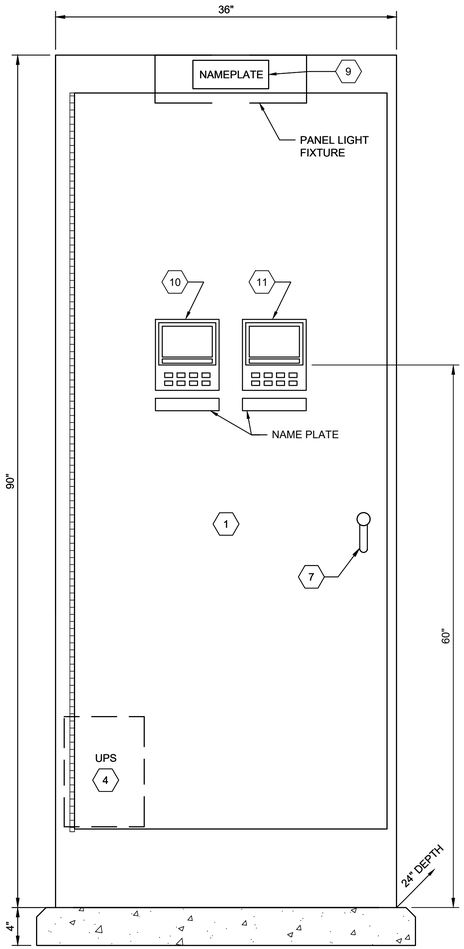

PANEL FRONT

NO SCALE

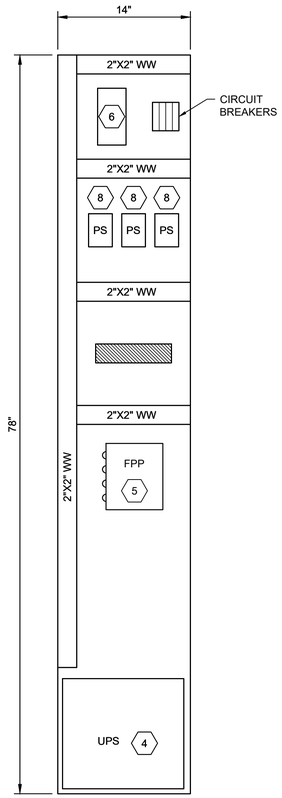

INTERIOR LEFT SIDE PANEL

NO SCALE

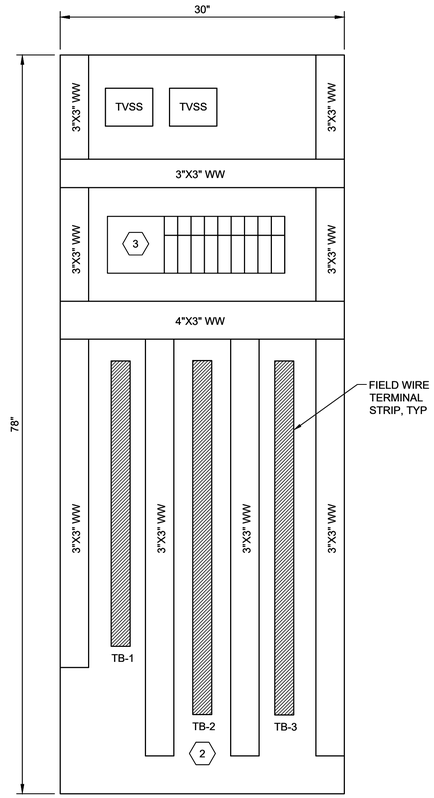

INTERIOR BACK PANEL

NO SCALE

GENERAL NOTES:

1. CONTROL PANEL FABRICATED ACCORDING TO SPEC 40 67 00.
2. CONTROL AUXILIARIES PER SPEC 40 97 00. NOT ALL REQUIRED COMPONENTS ARE SHOWN ON THIS DRAWING.
3. PANEL POWER DISTRIBUTION REQUIREMENTS AS SHOWN ON THE TYPICAL SCHEMATIC ON SHEET 000Y011.
4. PANEL CONTROL WIRING REQUIREMENTS AS SHOWN ON THE TYPICAL SCHEMATICS ON SHEET 000Y012.
5. SECURE ENCLOSURE TO CONCRETE WITH CONCRETE ANCHORS.
6. PROVIDE CONTROL PANEL WITH DOOR ACTIVATED, LED TYPE LIGHT FIXTURE(S).

KEY NOTES:

1. SINGLE-DOOR, FREE-STANDING, PAINTED STEEL ENCLOSURE, NEMA 12 ENCLOSURE RATING: HOFFMAN BULLETIN A30, OR APPROVED EQUAL.
2. PAINTED STEEL MOUNTING PANEL.
3. PLC HARDWARE PER SPEC 40 63 43.
4. SHELF-MOUNTED UNINTERRUPTIBLE POWER SUPPLY. SEE SPECIFICATION 40 97 00. SEE SHEET 000Y024/DETAIL 2.
5. FIBER OPTIC CABLE PATCH PANEL.
6. ETHERNET SWITCHES PER SPECIFICATION 40 97 00.
7. DOOR HANDLE WITH 3-POINT LATCH.
8. DUAL REDUNDANT 24VDC POWER SUPPLIES CONNECTED IN PARALLEL USING REDUNDANCY MODULE. POWER SUPPLIES SIZED FOR 1+1 REDUNDANCY. POWER SUPPLIES SHALL BE PULS, SERIES Q TYPE.
9. NAMEPLATE SHALL BE INSCRIBED WITH PANEL TAG NUMBER AND LOCATION.
10. RAW WATER VALVE CONTROLLER 1; PER SPECIFICATION 40 05 52.
11. RAW WATER VALVE CONTROLLER 2; PER SPECIFICATION 40 05 52.

PLC CONTROL PANELS

TAG NO.	LOCATION	OIT REQUIRED
CP-101	PRETREATMENT BUILDING	NO

ISSUE	DATE	DESCRIPTION
A	09/2026	ISSUED FOR BIDS

PROJECT MANAGER	PIERRE KWAN
CIVIL	J. MEGRDITCHIAN
STRUCTURAL	P. LINDBLOM
ARCHITECTURAL	V. YANEZ
PROCESS	P. KWAN
MECHANICAL	K. CHEUNG
ELECTRICAL	R. MCCOMB
INSTRUMENTATION	D. BEST
PROJECT NUMBER	10193663

REGISTERED PROFESSIONAL ENGINEER 57142PE DIGITALLY SIGNED OREGON JULY 11, 2000 DONALD E. BEST

EXPIRES: 12/31/2027

CITY OF ASHLAND

Ashland, Oregon

City of Ashland

Ashland Creek Water Treatment Plant

2026

INSTRUMENTATION CONTROL PANEL CP-101

0 1" 2"

FILENAME	000Y015.dwg
SCALE	NONE

SHEET **000Y013**

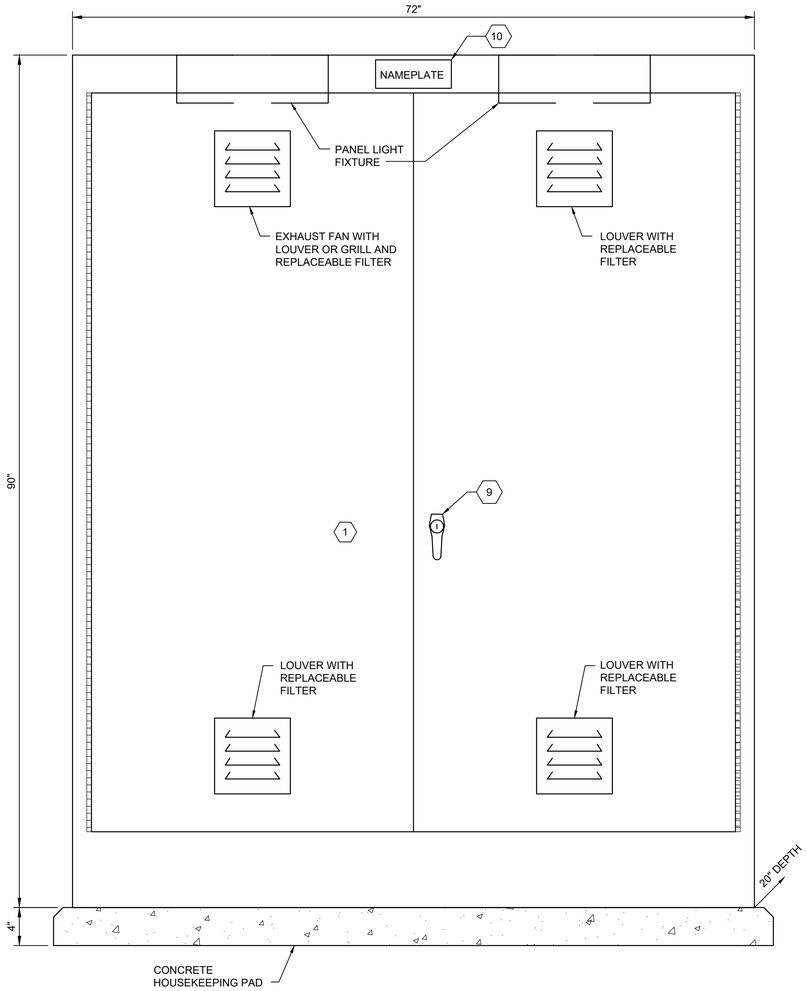

PANEL FRONT

NO SCALE

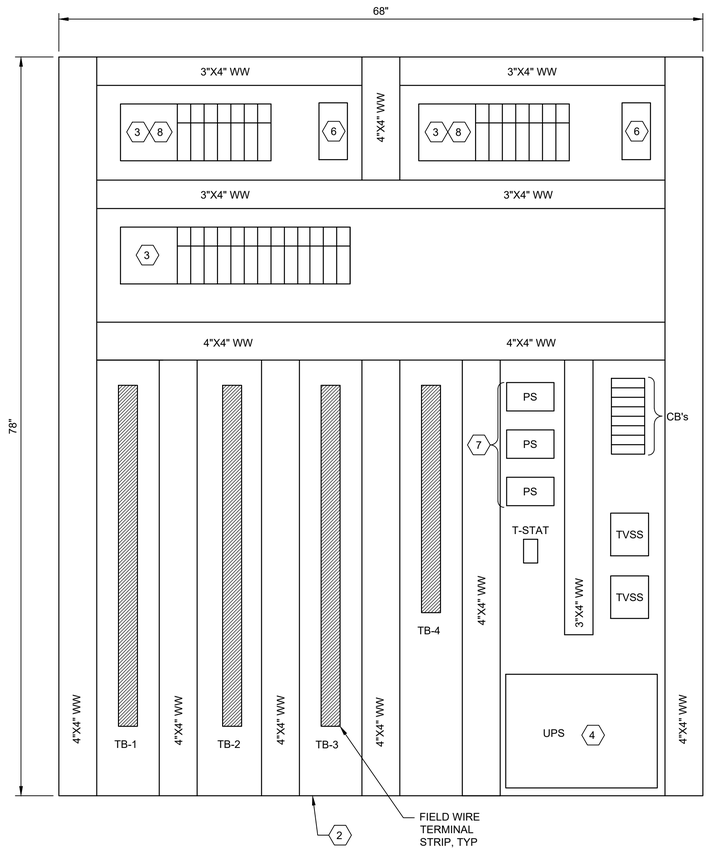

INTERIOR BACK PANEL

NO SCALE

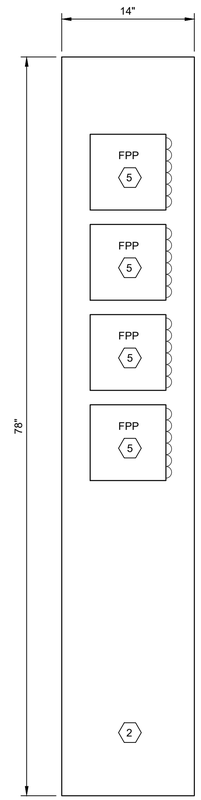

INTERIOR RIGHT SIDE PANEL

NO SCALE

GENERAL NOTES:

1. CONTROL PANEL FABRICATED ACCORDING TO SPEC 40 67 00.
2. CONTROL AUXILIARIES PER SPEC 40 97 00. NOT ALL REQUIRED COMPONENTS ARE SHOWN ON THIS DRAWING.
3. PANEL POWER DISTRIBUTION REQUIREMENTS AS SHOWN ON THE TYPICAL SCHEMATIC ON SHEET 00Y011.
4. PANEL CONTROL WIRING REQUIREMENTS AS SHOWN ON THE TYPICAL SCHEMATICS ON SHEET 00Y102.
5. SECURE ENCLOSURE TO CONCRETE WITH CONCRETE ANCHORS.
6. PROVIDE CONTROL PANEL WITH DOOR ACTIVATED, LED TYPE LIGHT FIXTURE(S).

KEY NOTES: ⬡

1. TWO-DOOR, FREE-STANDING, PAINTED STEEL ENCLOSURE WITH NEMA 12 RATING. HOFFMAN BULLETIN A30, OR APPROVED EQUAL.
2. PAINTED STEEL MOUNTING PANEL.
3. PLC HARDWARE PER SPEC 40 63 43.
4. SHELF MOUNTED UNINTERRUPTIBLE POWER SUPPLY. SEE SPECIFICATION 40 97 00. SEE SHEET 000Y024/DETAIL 2.
5. FIBER OPTIC CABLE PATCH PANEL.
6. ETHERNET SWITCHES PER SPECIFICATION 40 97 00.
7. DUAL REDUNDANT 24VDC POWER SUPPLIES CONNECTED IN PARALLEL USING REDUNDANCY MODULE. POWER SUPPLIES SIZED FOR 1+1 REDUNDANCY.
8. CONTROLLOGIX ENHANCED REDUNDANCY PLC HARDWARE AS SHOWN ON SHEET 000Y003.
9. DOOR HANDLE WITH 3-POINT LATCH.
10. NAMEPLATE SHALL BE INSCRIBED WITH PANEL TAG NUMBER AND LOCATION.

PLC CONTROL PANELS

TAG NO.	LOCATION	SCADA TERMINAL REQUIRED
CP-301	ELECTRICAL ROOM	NO

ISSUE	DATE	DESCRIPTION
A	09/2026	ISSUED FOR BIDS

PROJECT MANAGER	PIERRE KWAN
CIVIL	J. MEGRDITCHIAN
STRUCTURAL	P. LINDBLOM
ARCHITECTURAL	V. YANEZ
PROCESS	P. KWAN
MECHANICAL	K. CHEUNG
ELECTRICAL	R. MCCOMB
INSTRUMENTATION	D. BEST
PROJECT NUMBER	10193663

REGISTERED PROFESSIONAL ENGINEER 57142PE DIGITALLY SIGNED OREGON JULY 11, 2000 DONALD E. BEST

EXPIRES: 12/31/2027

CITY OF ASHLAND

Ashland, Oregon

City of Ashland

Ashland Creek Water Treatment Plant

2026

INSTRUMENTATION CONTROL PANEL CP-301

0 1" 2"

FILENAME	000Y015.dwg
SCALE	NONE

SHEET **000Y014**

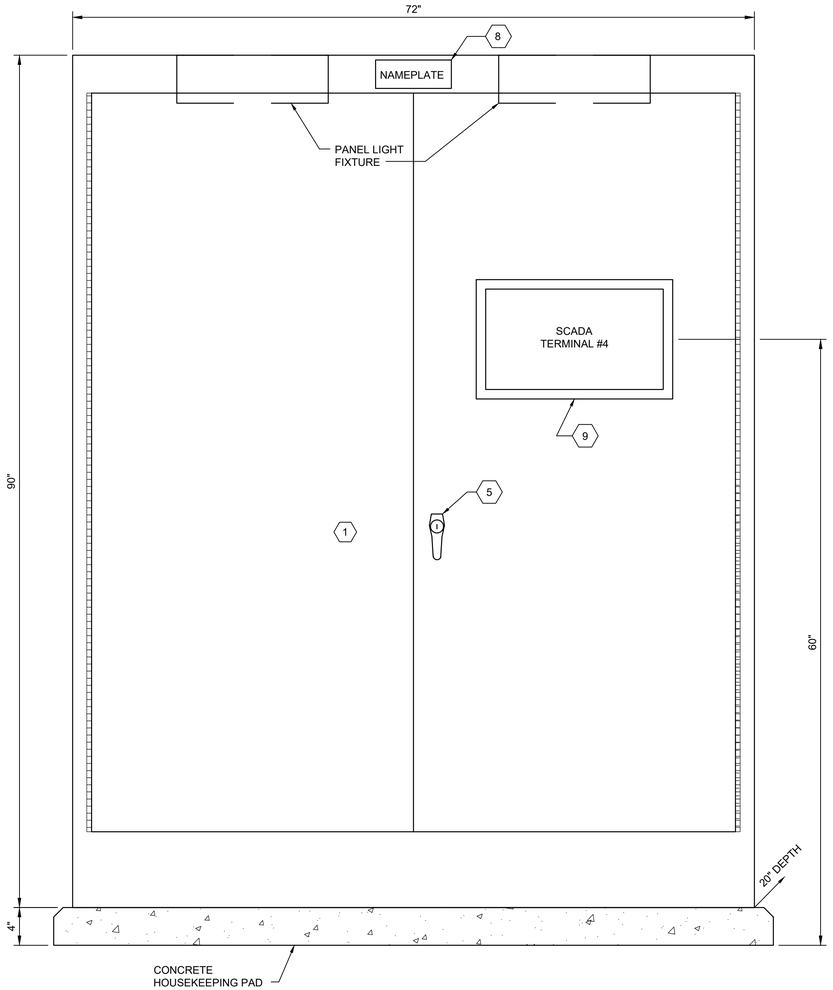

PANEL FRONT

NO SCALE

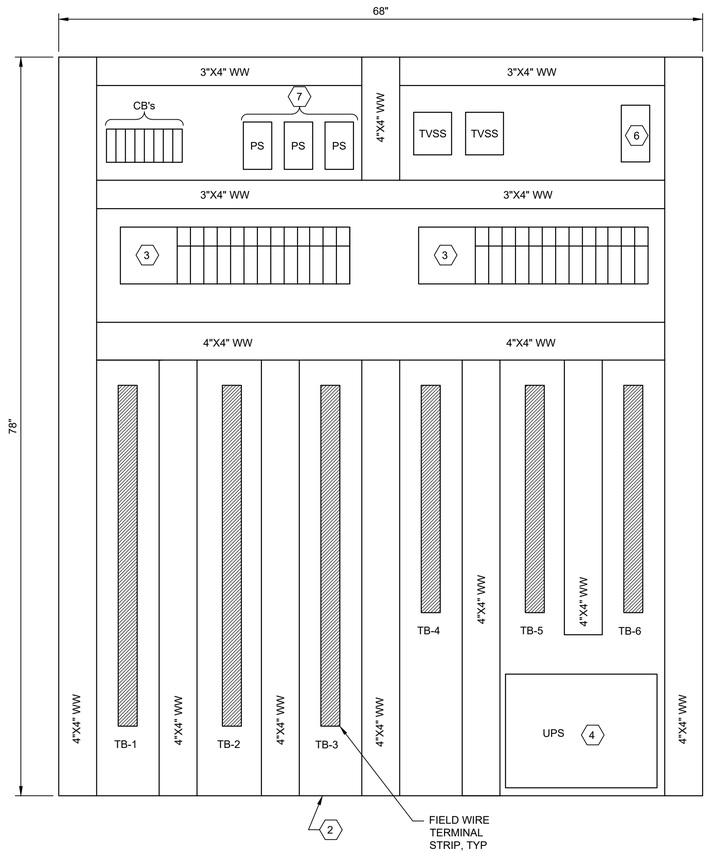

INTERIOR BACK PANEL

NO SCALE

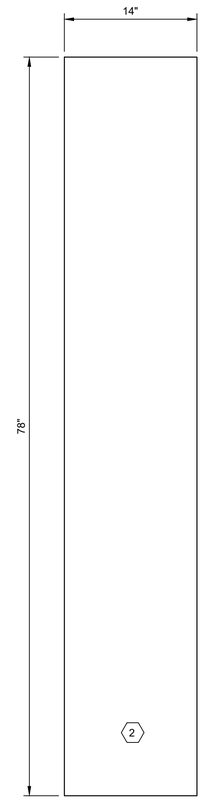

INTERIOR RIGHT SIDE PANEL

NO SCALE

GENERAL NOTES:

1. CONTROL PANEL FABRICATED ACCORDING TO SPEC 40 67 00.
2. CONTROL AUXILIARIES PER SPEC 40 97 00. NOT ALL REQUIRED COMPONENTS ARE SHOWN ON THIS DRAWING.
3. PANEL POWER DISTRIBUTION REQUIREMENTS AS SHOWN ON THE TYPICAL SCHEMATIC ON SHEET 000Y011.
4. PANEL CONTROL WIRING REQUIREMENTS AS SHOWN ON THE TYPICAL SCHEMATICS ON SHEET 000Y011.
5. SECURE ENCLOSURE TO CONCRETE WITH CONCRETE ANCHORS.
6. PROVIDE CONTROL PANEL WITH DOOR ACTIVATED, LED TYPE LIGHT FIXTURE(S).

KEY NOTES:

1. TWO-DOOR, FREE-STANDING, PAINTED STEEL ENCLOSURE WITH NEMA 4X RATING. HOFFMAN BULLETIN A30S4, OR APPROVED EQUAL.
2. PAINTED STEEL MOUNTING PANEL.
3. PLC HARDWARE PER SPEC 40 63 43.
4. SHELF MOUNTED UNINTERRUPTIBLE POWER SUPPLY. SEE SPECIFICATION 40 97 00. SEE SHEET 000Y024/DETAIL 2.
5. DOOR HANDLE WITH 3-POINT LATCH.
6. ETHERNET SWITCHES PER SPECIFICATION 40 97 00.
7. DUAL REDUNDANT 24VDC POWER SUPPLIES CONNECTED IN PARALLEL USING REDUNDANCY MODULE. POWER SUPPLIES SIZED FOR 1+1 REDUNDANCY.
8. NAMEPLATE SHALL BE INSCRIBED WITH PANEL TAG NUMBER AND LOCATION.
9. PANEL MOUNTED PC PER SPEC 40 62 16. REQUIRED FOR CONTROL PANELS AS SHOWN IN THE TABLE BELOW.

PLC CONTROL PANELS

TAG NO.	LOCATION	PANEL MOUNTED PC REQUIRED
CP-302	CHEMICAL ROOM	YES

ISSUE	DATE	DESCRIPTION
A	09/2026	ISSUED FOR BIDS

PROJECT MANAGER	PIERRE KWAN
CIVIL	J. MEGRDITCHIAN
STRUCTURAL	P. LINDBLOM
ARCHITECTURAL	V. YANEZ
PROCESS	P. KWAN
MECHANICAL	K. CHEUNG
ELECTRICAL	R. MCCOMB
INSTRUMENTATION	D. BEST
PROJECT NUMBER	10193663

REGISTERED PROFESSIONAL ENGINEER 57142PE DIGITALLY SIGNED OREGON JULY 11, 2000 DONALD E. BEST

EXPIRES: 12/31/2027

CITY OF ASHLAND

Ashland, Oregon

City of Ashland

Ashland Creek Water Treatment Plant

2026

INSTRUMENTATION CONTROL PANEL CP-302

0 1" 2"

FILENAME	000Y015.dwg
SCALE	NONE

SHEET **000Y015**

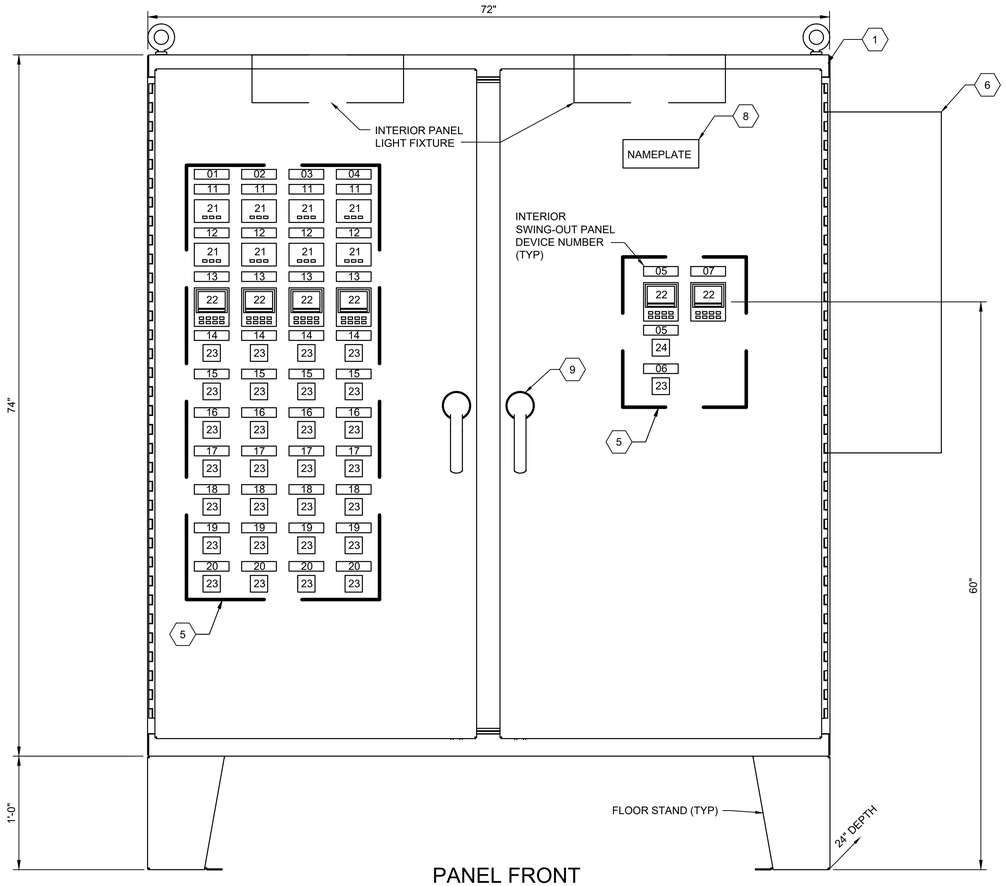

PANEL FRONT

NO SCALE

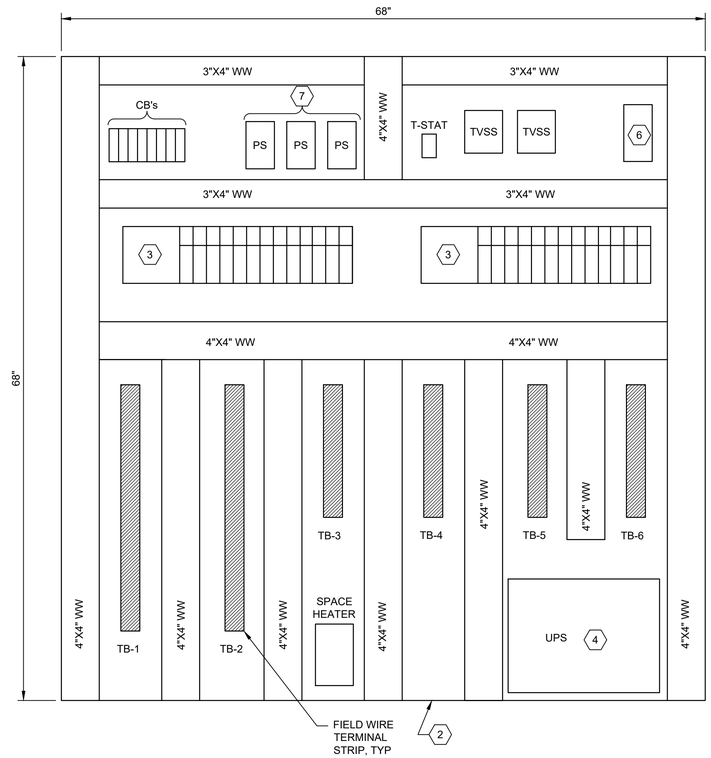

INTERIOR BACK PANEL

NO SCALE

PLC CONTROL PANELS

TAG NO.	LOCATION	OIT REQUIRED
CP-303	FILTERS	NO

GENERAL NOTES:

1. CONTROL PANEL FABRICATED ACCORDING TO SPEC 40 67 00.
2. CONTROL AUXILIARIES PER SPEC 40 97 00. NOT ALL REQUIRED COMPONENTS ARE SHOWN ON THIS DRAWING.
3. PANEL POWER DISTRIBUTION REQUIREMENTS AS SHOWN ON THE TYPICAL SCHEMATIC ON SHEET 00Y011.
4. PANEL CONTROL WIRING REQUIREMENTS AS SHOWN ON THE TYPICAL SCHEMATICS ON SHEET 00Y012.
5. SECURE ENCLOSURE TO CONCRETE WITH CONCRETE ANCHORS.
6. PROVIDE CONTROL PANEL WITH DOOR ACTIVATED, LED TYPE LIGHT FIXTURE(S).

KEY NOTES: ⬡

1. TWO-DOOR, FREE-STANDING, PAINTED STEEL ENCLOSURE WITH NEMA 4 RATING. DOOR HANDLES WITH THREE-POINT LATCHES AND PAD LOCKABLE HASPS.
2. PAINTED STEEL MOUNTING PANEL.
3. PLC HARDWARE PER SPEC 40 63 43.
4. SHELF MOUNTED UNINTERRUPTIBLE POWER SUPPLY. SEE SPECIFICATION 40 97 00. SEE SHEET 000Y024/DETAIL 2.
5. DEVICES ARE MOUNTED ON AN INTERIOR SWING-OUT PANELS AND MOUNTED BEHIND THE EXTERIOR DOORS. INTERIOR SWING OUT PANELS CONSTRUCTED FROM 12 GAUGE MILD STEEL, WHITE POLYESTER POWDER PAINT. PANELS WITH TWO CONTINUOUS HINGES TO PERMIT THE PANELS TO SWING COMPLETELY OUT OF THE ENCLOSURE.
6. AIR CONDITIONER.
7. DUAL REDUNDANT 24VDC POWER SUPPLIES CONNECTED IN PARALLEL USING REDUNDANCY MODULE. POWER SUPPLIES SIZED FOR 1+1 REDUNDANCY. POWER SUPPLIES SHALL BE PULS, SERIES Q TYPE.
8. NAMEPLATE SHALL BE INSCRIBED WITH PANEL TAG NUMBER AND LOCATION.
9. DOOR HANDLE WITH 3-POINT LATCH.

INTERIOR SWING-OUT PANEL DEVICE SCHEDULE

ITEM	DESCRIPTION (LEGEND)
01	NAMEPLATE (FILTER 1)
02	NAMEPLATE (FILTER 2)
03	NAMEPLATE (FILTER 3)
04	NAMEPLATE (FILTER 4)
05	NAMEPLATE (AIR SCOUR BLOWER 1)
06	NAMEPLATE (AIR VENT VALVE)
07	NAMEPLATE (BACKWASH SUPPLY VALVE)
11	NAMEPLATE (FILTER EFFLUENT TURBIDITY)
12	NAMEPLATE (FILTER HEAD LOSS)
13	NAMEPLATE (FILTER FLOW CONTROL VALVE)
14	NAMEPLATE (FILTER INLET VALVE)
15	NAMEPLATE (FILTER BACKWASH WASTE VALVE)
16	NAMEPLATE (FILTER AIR SCOUR VALVE)
17	NAMEPLATE (FILTER BACKWASH SUPPLY VALVE)
18	NAMEPLATE (FILTER TO WASTE VALVE)
19	NAMEPLATE (FILTER EFFLUENT VALVE)
20	NAMEPLATE (FLUME AIR VENT VALVE)
21	DIGITAL PROCESS DISPLAY
22	AUTO/MANUAL STATION
23	THREE-POSITION SELECTOR SWITCH (OPEN-CLOSE-AUTO)
24	THREE-POSITION SELECTOR SWITCH (HAND-OFF-AUTO)

ISSUE	DATE	DESCRIPTION
A	09/2026	ISSUED FOR BIDS

PROJECT MANAGER	PIERRE KWAN
CIVIL	J. MEGRDITCHIAN
STRUCTURAL	P. LINDBLOM
ARCHITECTURAL	V. YANEZ
PROCESS	P. KWAN
MECHANICAL	K. CHEUNG
ELECTRICAL	R. MCCOMB
INSTRUMENTATION	D. BEST
PROJECT NUMBER	10193663

REGISTERED PROFESSIONAL ENGINEER 57142PE DIGITALLY SIGNED OREGON JULY 11, 2006 DONALD E. BEST
EXPIRES: 12/31/2027

CITY OF ASHLAND
Ashland, Oregon

City of Ashland

Ashland Creek Water Treatment Plant

2026

INSTRUMENTATION CONTROL PANEL CP-303

0 1" 2"

FILENAME 000Y015.dwg
SCALE NONE

SHEET **000Y016**

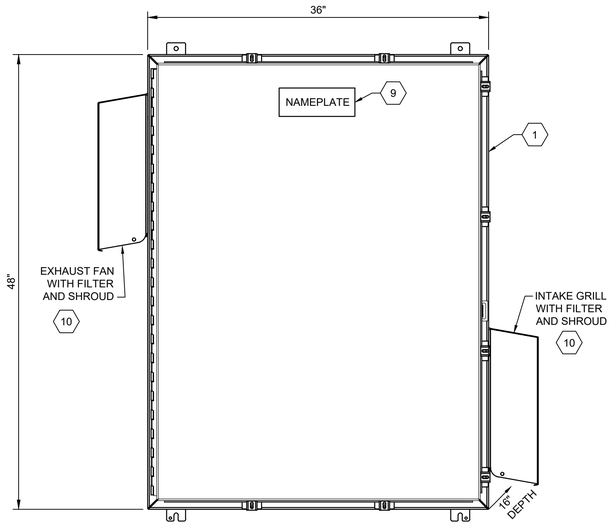

PANEL FRONT
NO SCALE

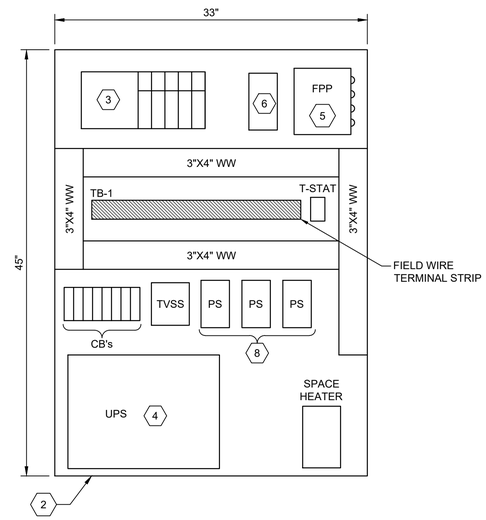

INTERIOR BACK PANEL
NO SCALE

GENERAL NOTES:

1. CONTROL PANEL FABRICATED ACCORDING TO SPEC 40 67 00.
2. CONTROL AUXILIARIES PER SPEC 40 97 00. NOT ALL REQUIRED COMPONENTS ARE SHOWN ON THIS DRAWING.
3. PANEL POWER DISTRIBUTION REQUIREMENTS AS SHOWN ON THE TYPICAL SCHEMATIC ON SHEET 000Y011.
4. PANEL CONTROL WIRING REQUIREMENTS AS SHOWN ON THE TYPICAL SCHEMATICS ON SHEET 000Y012.
5. SECURE ENCLOSURE TO CONCRETE WITH CONCRETE ANCHORS.
6. PROVIDE CONTROL PANEL WITH DOOR ACTIVATED, LED TYPE LIGHT FIXTURE(S).

KEY NOTES:

1. SINGLE-DOOR, WALL-MOUNTED, PAINTED STEEL ENCLOSURE, NEMA 4 ENCLOSURE RATING: HOFFMAN BULLETIN A4, OR APPROVED EQUAL.
2. PAINTED STEEL MOUNTING PANEL.
3. PLC HARDWARE PER SPEC 40 63 43.
4. SHELF-MOUNTED UNINTERRUPTIBLE POWER SUPPLY. SEE SPECIFICATION 40 97 00. SEE SHEET 00Y024/DETAIL 2.
5. FIBER OPTIC CABLE PATCH PANEL.
6. ETHERNET SWITCH PER SPECIFICATION 40 97 00.
7. DOOR HANDLE WITH 3-POINT LATCH.
8. DUAL REDUNDANT 24VDC POWER SUPPLIES CONNECTED IN PARALLEL USING REDUNDANCY MODULE. POWER SUPPLIES SIZED FOR 1+1 REDUNDANCY.
9. NAMEPLATE SHALL BE INSCRIBED WITH PANEL TAG NUMBER AND LOCATION.
10. TYPE 4 FILTER FAN SHROUD.

PLC CONTROL PANELS

TAG NO.	LOCATION	OIT REQUIRED
CP-401	BACKWASH WASTE BASIN	NO

ISSUE	DATE	DESCRIPTION
A	09/2026	ISSUED FOR BIDS

PROJECT MANAGER	PIERRE KWAN
CIVIL	J. MEGRDITCHIAN
STRUCTURAL	P. LINDBLOM
ARCHITECTURAL	V. YANEZ
PROCESS	P. KWAN
MECHANICAL	K. CHEUNG
ELECTRICAL	R. MCCOMB
INSTRUMENTATION	D. BEST
PROJECT NUMBER	10193663

REGISTERED PROFESSIONAL ENGINEER
57142PE
DIGITALLY SIGNED
OREGON
JULY 11, 2000
DONALD E. BEST
EXPIRES: 12/31/2027

CITY OF ASHLAND
Ashland, Oregon

City of Ashland

Ashland Creek Water Treatment Plant

2026

INSTRUMENTATION CONTROL PANEL CP-401

0 1" 2"

FILENAME 000Y015.dwg
SCALE NONE

SHEET 000Y017

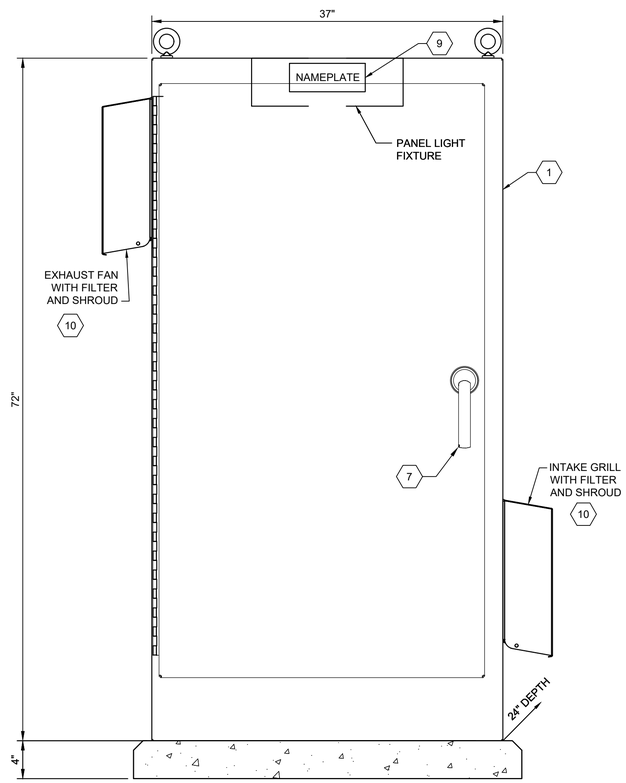

PANEL FRONT

NO SCALE

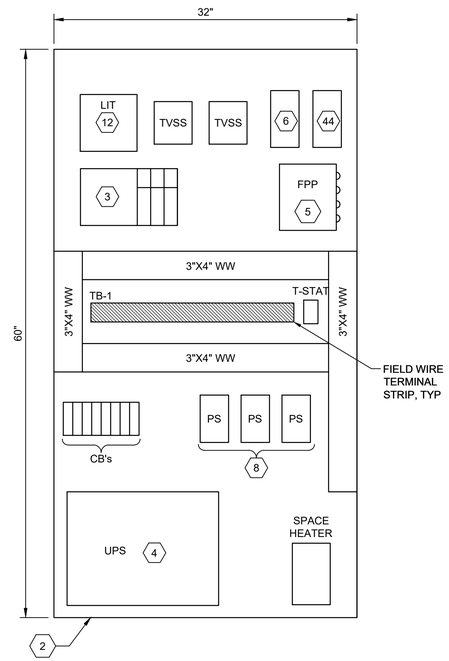

INTERIOR BACK PANEL

NO SCALE

GENERAL NOTES:

1. CONTROL PANEL FABRICATED ACCORDING TO SPEC 40 67 00.
2. CONTROL AUXILIARIES PER SPEC 40 97 00. NOT ALL REQUIRED COMPONENTS ARE SHOWN ON THIS DRAWING.
3. PANEL POWER DISTRIBUTION REQUIREMENTS AS SHOWN ON THE TYPICAL SCHEMATIC ON SHEET 000Y011.
4. PANEL CONTROL WIRING REQUIREMENTS AS SHOWN ON THE TYPICAL SCHEMATICS ON SHEET 000Y012.
5. SECURE ENCLOSURE TO CONCRETE WITH CONCRETE ANCHORS.
6. PROVIDE CONTROL PANEL WITH DOOR ACTIVATED, LED TYPE LIGHT FIXTURE(S).

KEY NOTES:

1. SINGLE-DOOR, FREE-STANDING, PAINTED STEEL ENCLOSURE, NEMA 4 ENCLOSURE RATING: HOFFMAN BULLETIN A4L3, OR APPROVED EQUAL.
2. PAINTED STEEL MOUNTING PANEL.
3. PLC HARDWARE PER SPEC 40 63 43.
4. SHELF-MOUNTED UNINTERRUPTIBLE POWER SUPPLY. SEE SPECIFICATION 40 97 00. SEE SHEET 00Y024/DETAIL 2.
5. FIBER OPTIC CABLE PATCH PANEL.
6. ETHERNET SWITCH PER SPECIFICATION 40 97 00.
7. DOOR HANDLE WITH 3-POINT LATCH.
8. DUAL REDUNDANT 24VDC POWER SUPPLIES CONNECTED IN PARALLEL USING REDUNDANCY MODULE. POWER SUPPLIES SIZED FOR 1+1 REDUNDANCY.
9. NAMEPLATE SHALL BE INSCRIBED WITH PANEL TAG NUMBER AND LOCATION.
10. TYPE 4 FILTER FAN SHROUD.
11. ETHERNET RADIO. SEE SPECIFICATION 27 21.00.
12. CLEARWELL LEVEL TRANSMITTER, SEE SPECIFICATION 40 72 00.

PLC CONTROL PANELS

TAG NO.	LOCATION	OIT REQUIRED
CP-501	CLEARWELL	NO

ISSUE	DATE	DESCRIPTION
A	09/2026	ISSUED FOR BIDS

PROJECT MANAGER	PIERRE KWAN
CIVIL	J. MEGRDITCHIAN
STRUCTURAL	P. LINDBLOM
ARCHITECTURAL	V. YANEZ
PROCESS	P. KWAN
MECHANICAL	K. CHEUNG
ELECTRICAL	R. MCCOMB
INSTRUMENTATION	D. BEST
PROJECT NUMBER	10193663

REGISTERED PROFESSIONAL ENGINEER 57142PE DIGITALLY SIGNED OREGON JULY 11, 2000 DONALD E. BEST

EXPIRES: 12/31/2027

CITY OF ASHLAND

Ashland, Oregon

City of Ashland

Ashland Creek Water Treatment Plant

2026

INSTRUMENTATION CONTROL PANEL CP-501

0 1" 2"

FILENAME 000Y015.dwg

SCALE NONE

SHEET **000Y018**

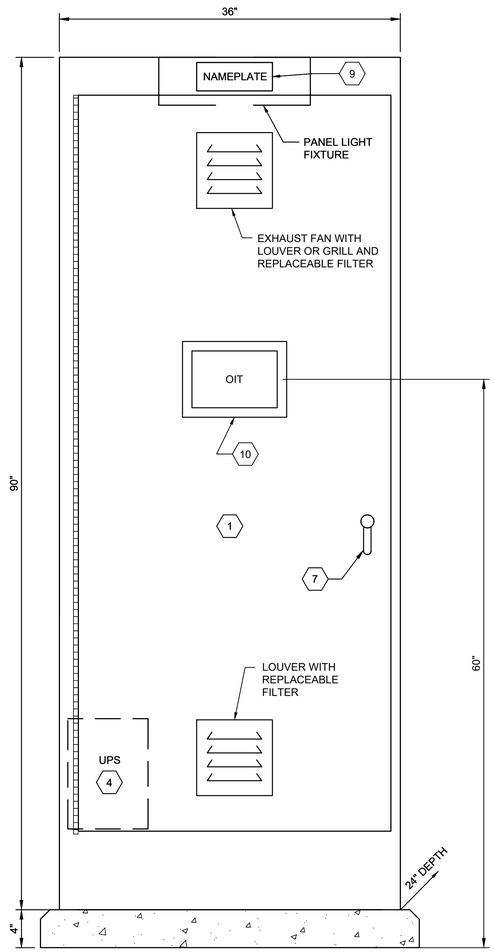

PANEL FRONT

NO SCALE

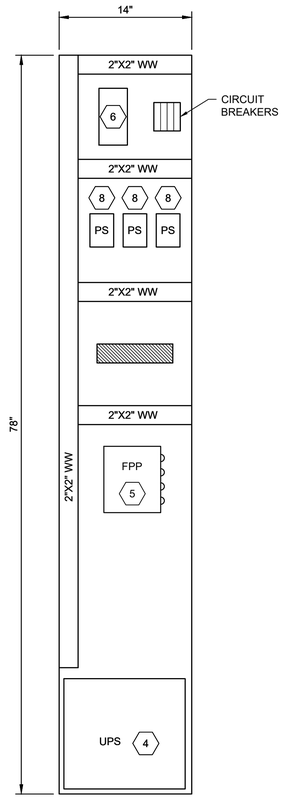

INTERIOR LEFT SIDE PANEL

NO SCALE

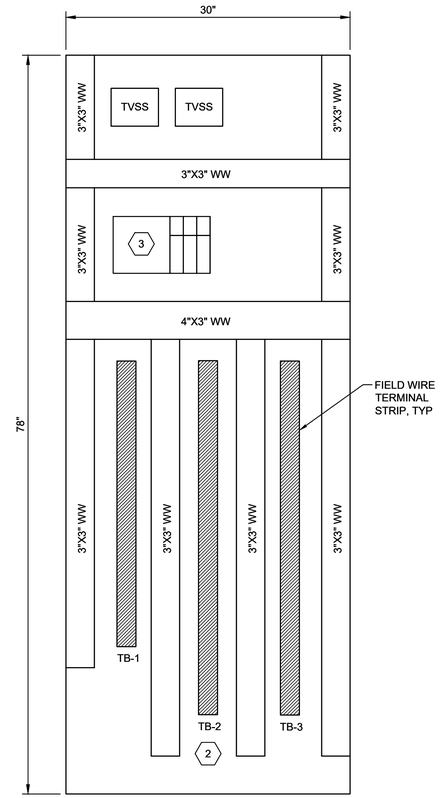

INTERIOR BACK PANEL

NO SCALE

GENERAL NOTES:

1. CONTROL PANEL FABRICATED ACCORDING TO SPEC 40 67 00.
2. CONTROL AUXILIARIES PER SPEC 40 97 00. NOT ALL REQUIRED COMPONENTS ARE SHOWN ON THIS DRAWING.
3. PANEL POWER DISTRIBUTION REQUIREMENTS AS SHOWN ON THE TYPICAL SCHEMATIC ON SHEET 000Y011.
4. PANEL CONTROL WIRING REQUIREMENTS AS SHOWN ON THE TYPICAL SCHEMATICS ON SHEET 000Y012.
5. SECURE ENCLOSURE TO CONCRETE WITH CONCRETE ANCHORS.
6. PROVIDE CONTROL PANEL WITH DOOR ACTIVATED, LED TYPE LIGHT FIXTURE(S).

KEY NOTES:

1. SINGLE-DOOR, FREE-STANDING, PAINTED STEEL ENCLOSURE, NEMA 12 ENCLOSURE RATING: HOFFMAN BULLETIN A30, OR APPROVED EQUAL.
2. PAINTED STEEL MOUNTING PANEL.
3. PLC HARDWARE PER SPEC 40 63 43.
4. SHELF-MOUNTED UNINTERRUPTIBLE POWER SUPPLY. SEE SPECIFICATION 40 97 00. SEE SHEET 00Y024/DETAIL 2.
5. FIBER OPTIC CABLE PATCH PANEL.
6. ETHERNET SWITCH PER SPECIFICATION 40 97 00.
7. DOOR HANDLE WITH 3-POINT LATCH.
8. DUAL REDUNDANT 24VDC POWER SUPPLIES CONNECTED IN PARALLEL USING REDUNDANCY MODULE. POWER SUPPLIES SIZED FOR 1+1 REDUNDANCY.
9. NAMEPLATE SHALL BE INSCRIBED WITH PANEL TAG NUMBER AND LOCATION.
10. OPERATOR INTERFACE TERMINAL PER SPEC 40 62 16 OIT REQUIRED FOR CONTROL PANEL AS SHOWN IN THE TABLE BELOW.

PLC CONTROL PANELS

TAG NO.	LOCATION	OIT REQUIRED
CP-601	CROWSON PUMP STATION	YES

ISSUE	DATE	DESCRIPTION
A	09/2026	ISSUED FOR BIDS

PROJECT MANAGER	PIERRE KWAN
CIVIL	J. MEGRDITCHIAN
STRUCTURAL	P. LINDBLOM
ARCHITECTURAL	V. YANEZ
PROCESS	P. KWAN
MECHANICAL	K. CHEUNG
ELECTRICAL	R. MCCOMB
INSTRUMENTATION	D. BEST
PROJECT NUMBER	10193663

REGISTERED PROFESSIONAL ENGINEER 57142PE DIGITALLY SIGNED OREGON JULY 11, 2000 DONALD E. BEST

EXPIRES: 12/31/2027

CITY OF ASHLAND

Ashland, Oregon

City of Ashland

Ashland Creek Water Treatment Plant

2026

INSTRUMENTATION CONTROL PANEL CP-601

0 1" 2"

FILENAME	000Y015.dwg
SCALE	NONE

SHEET **000Y019**

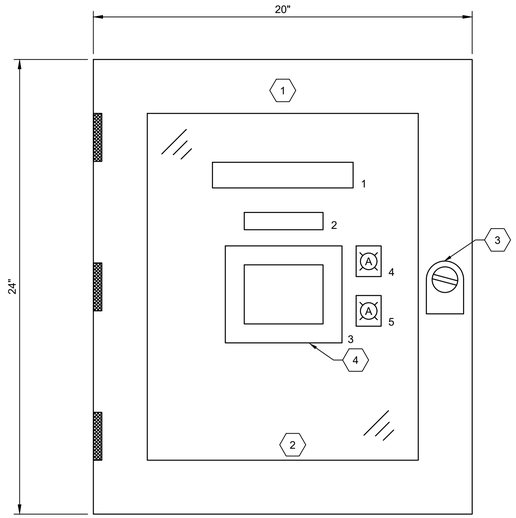

PANEL FRONT (LCP-7202, LCP-7302, LCP-7401, AND LCP-7501)

NO SCALE

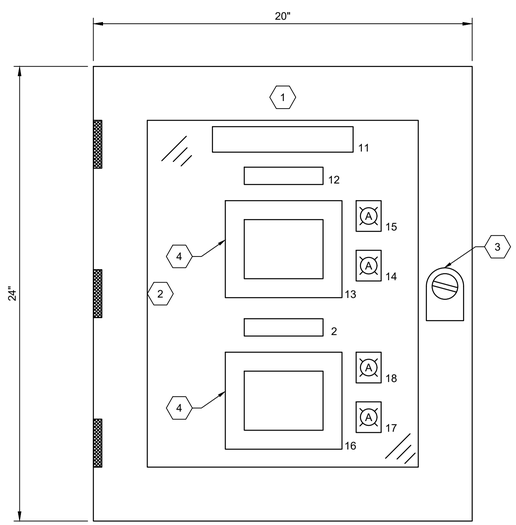

PANEL FRONT (LCP-7101)

NO SCALE

ITEM		DESCRIPTION (LEGEND)
LCP-7101	11	NAMEPLATE (ALUM / FILL STATION)
	12	NAMEPLATE (STORAGE TANK / T-7101)
	13	GRAPHICAL PANEL METER
	14	AMBER PILOT LIGHT (TANK 1 LEVEL / LOW ALARM)
	15	AMBER PILOT LIGHT (TANK 1 LEVEL / HIGH ALARM)
	16	GRAPHICAL PANEL METER
	17	AMBER PILOT LIGHT (TANK 2 LEVEL / LOW ALARM)
	18	AMBER PILOT LIGHT (TANK 2 LEVEL / HIGH ALARM)
ITEM		**DESCRIPTION (LEGEND)**
LCP-7202	1	NAMEPLATE (SETTLING AID POLYMER / FILL STATION)
	2	NAMEPLATE (STORAGE TANK / T-7201)
	3	GRAPHICAL PANEL METER
	4	AMBER PILOT LIGHT (TANK LEVEL / LOW ALARM)
	5	AMBER PILOT LIGHT (TANK LEVEL / HIGH ALARM)
ITEM		**DESCRIPTION (LEGEND)**
LCP-7302	1	NAMEPLATE (FILTER AID POLYMER / FILL STATION)
	2	NAMEPLATE (STORAGE TANK / T-7301)
		GRAPHICAL PANEL METER
	4	AMBER PILOT LIGHT (TANK LEVEL / LOW ALARM)
	5	AMBER PILOT LIGHT (TANK LEVEL / HIGH ALARM)
ITEM		**DESCRIPTION (LEGEND)**
LCP-7501	1	NAMEPLATE (CAUSTIC / FILL STATION)
	2	NAMEPLATE (STORAGE TANK / T-7501)
	3	GRAPHICAL PANEL METER
	4	AMBER PILOT LIGHT (TANK LEVEL / LOW ALARM)
	5	AMBER PILOT LIGHT (TANK LEVEL / HIGH ALARM)
ITEM		**DESCRIPTION (LEGEND)**
LCP-7401	1	NAMEPLATE (SODIUM HYPOCHLORITE / FILL STATION)
	2	NAMEPLATE (STORAGE TANK / T-7401)
	3	GRAPHICAL PANEL METER
	4	AMBER PILOT LIGHT (TANK LEVEL / LOW ALARM)
	5	AMBER PILOT LIGHT (TANK LEVEL / HIGH ALARM)

CONTROL PANELS

TAG NO.	LOCATION	NUMBER OF GRAPHICAL PANEL METERS
LCP-7101	ALUM FILL STATION	TWO
LCP-7202	SETTLING AID POLYMER FILL STATION	ONE
LCP-7302	FILTER AID POLYMER FILL STATION	ONE
LCP-7501	CAUSTIC FILL STATION	ONE
LCP-7401	SODIUM HYPOCHLORITE FILL STATION	ONE

GENERAL NOTES:

1. CONTROL PANEL FABRICATED ACCORDING TO SPEC 40 67 00.
2. CONTROL AUXILIARIES PER SPEC 40 97 00. NOT ALL REQUIRED COMPONENTS ARE SHOWN ON THIS DRAWING.
3. EACH CONTROL PANEL SHALL BE PROVIDED WITH SPACE HEATER.
4. EACH CONTROL PANEL SHALL BE PROVIDED WITH A SUN/RAIN HOOD; SEE SHEET 000Y021/DETAIL 5.

KEY NOTES:

1. TYPE 4X FIBERGLASS ENCLOSURE WITH WINDOW TYPE DOOR, HOFFMAN ULTRX. PROVIDE AND INSTALL PANEL HEATER AS REQUIRED TO PROVIDED FREEZE AND CONDENSATION PROTECTION FROM OUTDOOR WEATHER CONDITION
2. PILOT DEVICES, INDICATORS, AND NAMEPLATES INSTALLED BEHIND WINDOW DOOR ON INTERIOR SWING-OUT PANEL. INSTALL TERMINAL BLOCKS AND OTHER CONTROL AUXILIARIES ON SUB-PANEL LOCATED BEHIND SWING OUT PANEL.
3. QUARTER TURN, 316 STAINLESS STEEL PADLOCKABLE LATCH (ULTRX PADLOCK KIT).
4. GRAPHICAL PANEL METER. SEE SPEC 40 97 00. PANEL METER SHALL PROVIDE 24VDC EXCITATION POWER TO THE LEVEL INSTRUMENT. PANEL METER SHALL DISPLAY TANK LEVEL IN GALLONS IN GRAPHICAL (CIRCULAR BARCHART) AND NUMERIC READOUT.
   - 4.1. RELAY OUTPUT 1: SHALL BE PROGRAMMED TO INDICATE LOW TANK LEVEL WHEN THE TANK VOLUME IS BELOW 25% CAPACITY. SHALL ENERGIZE THE ALARM LIGHT AND INTERPOSING CONTROL RELAY FOR MONITORING BY THE PLANT CONTROL SYSTEM.
   - 4.2. RELAY OUTPUT 2: SHALL BE PROGRAMMED TO INDICATE HIGH TANK LEVEL WHEN THE LIQUID LEVEL IS WITHIN 12 INCHES FROM THE OVERFLOW NOZZLE. SHALL ENERGIZE THE ALARM LIGHT AND INTERPOSING CONTROL RELAY FOR MONITORING BY THE PLANT CONTROL SYSTEM.

ISSUE	DATE	DESCRIPTION
A	09/2026	ISSUED FOR BIDS

PROJECT MANAGER	PIERRE KWAN
CIVIL	J. MEGRDITCHIAN
STRUCTURAL	P. LINDBLOM
ARCHITECTURAL	V. YANEZ
PROCESS	P. KWAN
MECHANICAL	K. CHEUNG
ELECTRICAL	R. MCCOMB
INSTRUMENTATION	D. BEST
PROJECT NUMBER	10193663

REGISTERED PROFESSIONAL ENGINEER 57142PE DIGITALLY SIGNED OREGON JULY 11, 2006 DONALD E. BEST

EXPIRES: 12/31/2027

CITY OF ASHLAND

Ashland, Oregon

City of Ashland

Ashland Creek Water Treatment Plant

2026

INSTRUMENTATION CHEMICAL FILL STATION CONTROL PANELS

0 1" 2"

FILENAME 000Y015.dwg

SCALE NONE

SHEET **000Y020**

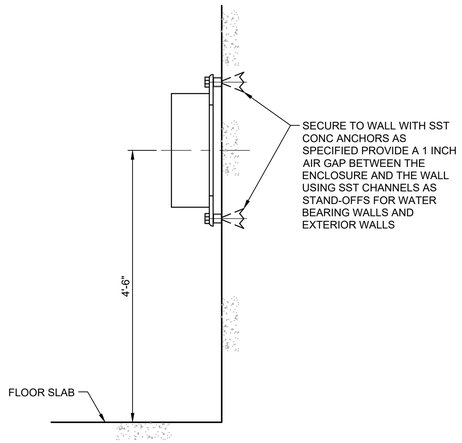

1 WALL MOUNTED INSTRUMENT AND CONTROL PANEL INSTALLATION

NTS

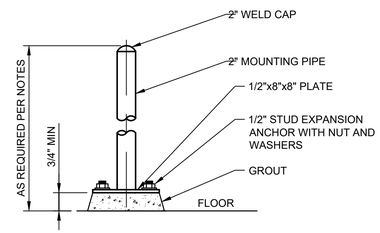

NOTES:

1. MOUNT BLIND INSTRUMENTS 52" ABOVE FLOOR.
2. MOUNT INDICATING INSTRUMENTS SO THAT CENTER LINE OF INDICATOR IS 60" ABOVE FLOOR.

2 FLOOR MOUNTED PIPE STAND FOR ONE INSTRUMENT

NTS

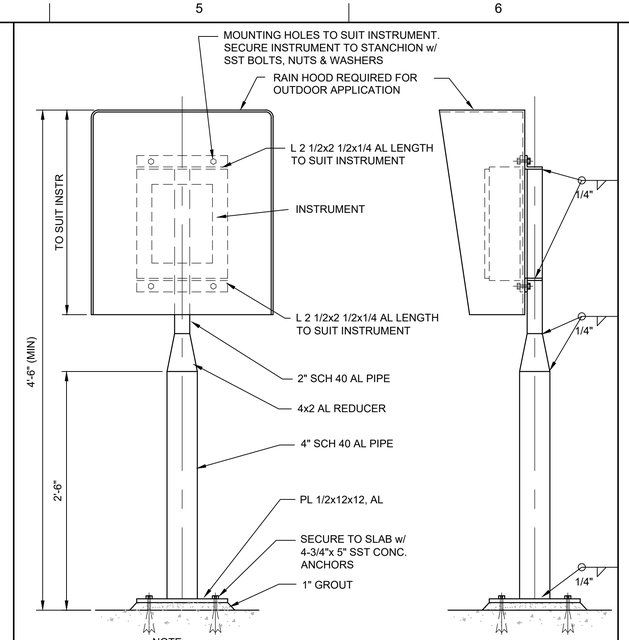

NOTE:

1. ROUND OFF ALL EXPOSED EDGES AND CORNERS.
2. PAINT ALUMINUM IN CONTACT WITH CONCRETE ACCORDING TO SPECIFICATIONS FOR PAINTING.

3 STANCHION SUPPORT FOR CASE MOUNTED INSTRUMENTS

NTS

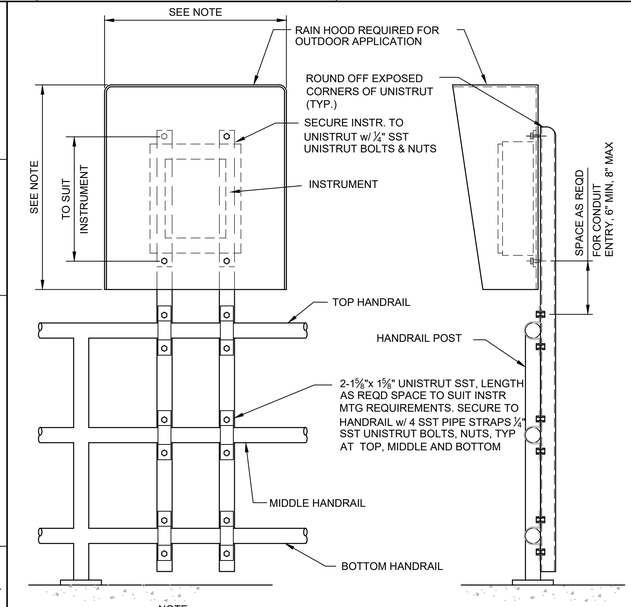

NOTE:

RAINHOOD AND INSTRUMENTS SHALL ONLY BE MOUNTED TO HANDRAIL IF THE RAINHOOD DIMENSIONS DO NOT EXCEED 1'-6" BY 1'-6". FOR LARGER INSTALLATIONS, SEE DETAIL 5 ON THIS SHEET.

4 TYP HANDRAIL MOUNTING FOR CASE MOUNTED INSTRUMENTS

NTS

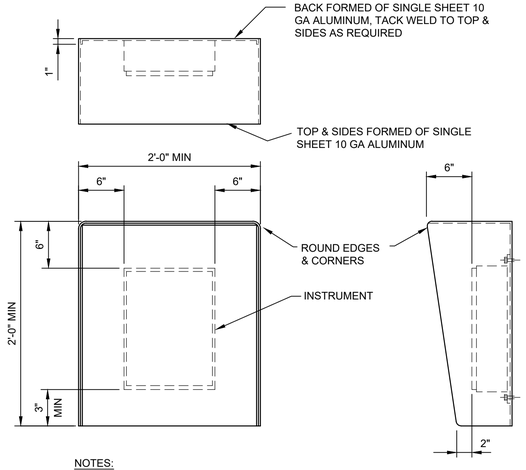

NOTES:

1. ALL EXPOSED EDGES TO BE GROUND SMOOTH AND BURR FREE.
2. MOUNT SUN/RAIN HOOD BETWEEN INSTRUMENT AND MOUNTING BRACKET. DRILL HOLES IN RAIN HOOD AS PER MOUNTING HOLES FOR INSTRUMENT, SEE DETAIL 3 AND 4 ON THIS SHEET EXCEPT AS NOTED.

5 SUN/RAIN HOOD INSTALLATION

NTS

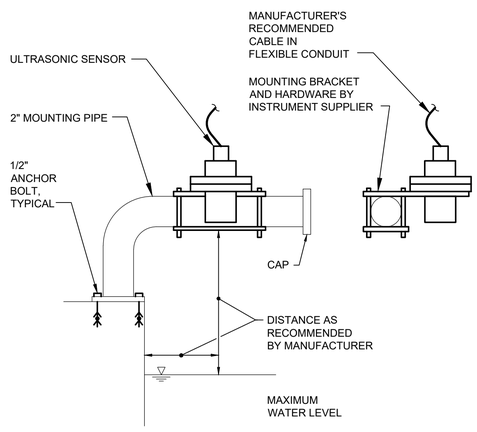

6 ULTRASONIC SENSOR INSTALLATION

NTS

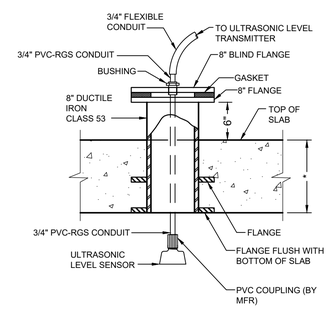

7 ULTRASONIC LEVEL SENSOR INSTALLATION THROUGH CONCRETE SLAB

NTS

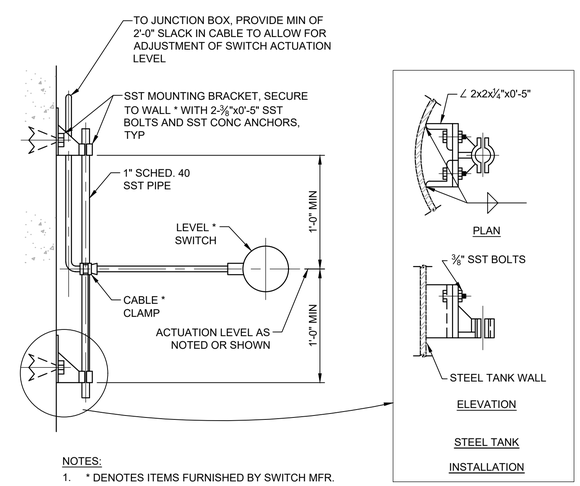

NOTES:

1. * DENOTES ITEMS FURNISHED BY SWITCH MFR.
2. THIS IS A STANDARD DETAIL, THEREFORE BOTH INSTALLATIONS MAY NOT BE USED.

8 TYPICAL FLOAT TYPE LEVEL SWITCH INSTALLATION

NTS

ISSUE	DATE	DESCRIPTION
A	09/2026	ISSUED FOR BIDS

PROJECT MANAGER	PIERRE KWAN
CIVIL	J. MEGRDITCHIAN
STRUCTURAL	P. LINDBLOM
ARCHITECTURAL	V. YANEZ
PROCESS	P. KWAN
MECHANICAL	K. CHEUNG
ELECTRICAL	R. MCCOMB
INSTRUMENTATION	D. BEST
PROJECT NUMBER	10193663

REGISTERED PROFESSIONAL ENGINEER 57142PE DIGITALLY SIGNED OREGON JULY 11, 2000 DONALD E. BEST

EXPIRES: 12/31/2027

CITY OF ASHLAND

Ashland, Oregon

City of Ashland

Ashland Creek Water Treatment Plant

2026

INSTRUMENTATION DETAILS 1

0 1" 2"

FILENAME 000Y021

SCALE -

SHEET **000Y021**

1 | 2 | 3 | 4 | 5 | 6 | 7 | 8

1 – NOT USED

NTS

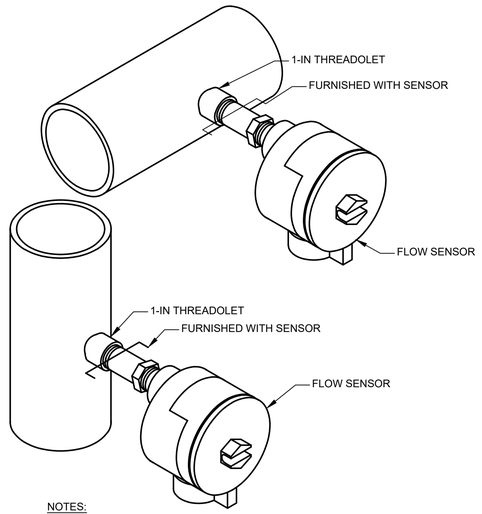

NOTES:
1. THREADOLET TO BE MOUNTED ON THE HORIZONTAL CENTERLINE OF THE PIPE
2. SWITCH "FLAT-UP AND LEVEL" INDICATOR SHALL BE ADHERED TO.
3. ALL CONDUIT RUNS MUST BE SUPPORTED AT LEAST EVERY 10 FEET AND WITHIN 2 FEET OF EACH END. ALL MOUNTING BRACKETS ARE TO BE ANCHORED SECURELY TO AN I-BEAM, WALL , OR STAND.

2 – THERMAL MASS FLOW SENSOR

NTS

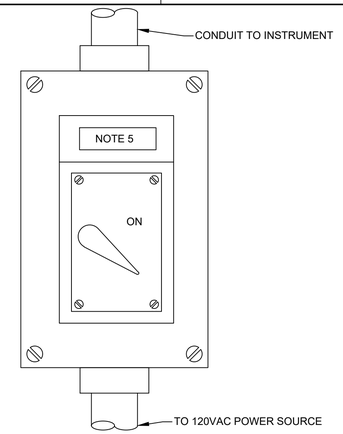

NOTES:
1. SINGLE-PHASE, MANUAL SWITCH REQUIRED FOR EACH AC POWERED FIELD INSTRUMENT
2. OPERATING HANDLE PAD-LOCKABLE IN OFF POSITION
3. CAST ALUMINUM NEMA 4, WATERPROOF ENCLOSURE
4. CUTLER-HAMMER TYPE MS, OR EQUAL
5. NAME PLATE ATTACHED SECURELY. ENGRAVED WITH INSTRUMENT TAG NUMBER AND DESCRIPTION
6. ENCLOSURES AND COMPONENTS TO BE NEMA 7, NEMA 9 RATED WHERE INSTALLED IN HAZARDOUS RATED LOCATIONS. REFERENCE ELECTRICAL PLAN SHEETS FOR AREA RATINGS.

3 – SINGLE PHASE CONTROL DISCONNECT

NTS

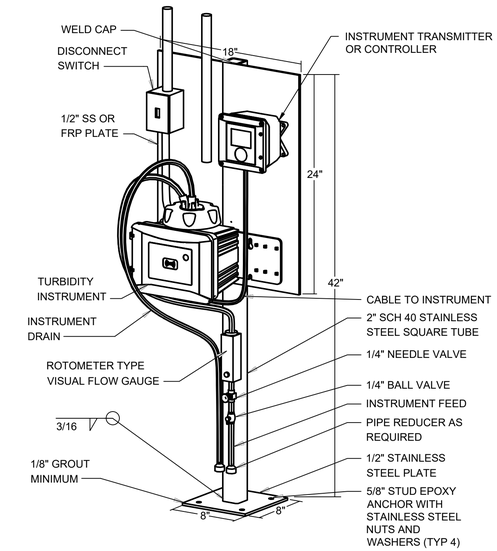

4 – TURBIDIMETER

NTS

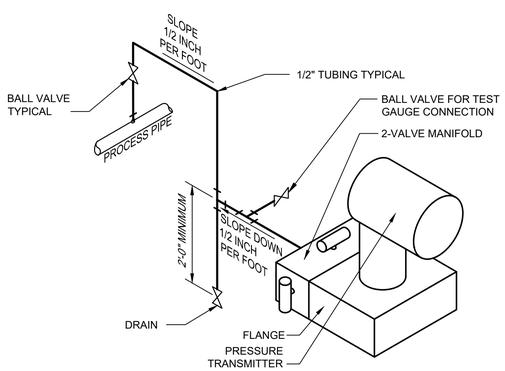

5 – PRESSURE TRANSMITTER - AIR OR GAS APPLICATIONS

NTS

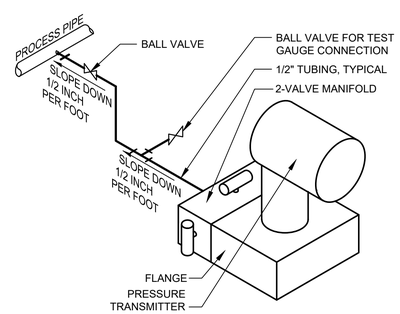

6 – PRESSURE TRANSMITTER - LIQUID APPLICATIONS

NTS

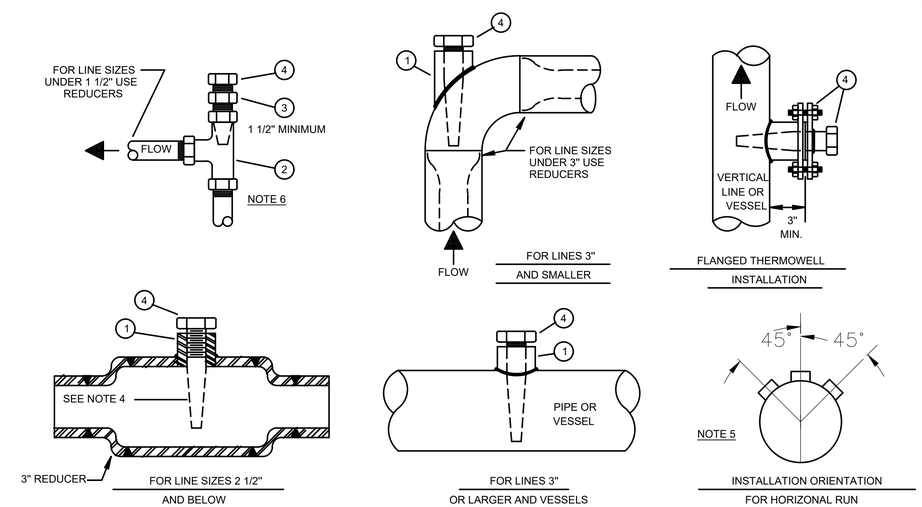

MATERIAL LIST		
ITEM	DESCRIPTION	SPEC
1	1" HALF COUPLING	
2	1 1/2" PIPE TEE	
3	1 1/2" x 1" BUSHING	
4	THERMOWELL (SEE NOTE 1)	

NOTES:
1. FOR THERMOWELL SIZE AND TYPE SEE APPLICABLE INSTRUMENT DATA SHEET.
2. TYPE COUPLINGS ARE PER PIPING SPECIFICATION
3. INSTALLATION OF THERMOWELLS FOR THERMOMETERS, TEST WELLS, RTD & THERMOCOUPLES.
4. MINIMUM "U" LENGTH 2 1/2".
5. ALL THERMOWELLS TO HAVE A MINIMUM CLEARANCE OF 1/2" AT BOTTOM.
6. TW NOT TO EXTEND PAST THE CENTER-LINE OF THE TEE.

7 – PIPING FOR THERMOWELLS

NOT TO SCALE

D | C | B | A

HDR

ISSUE	DATE	DESCRIPTION
A	09/2026	ISSUED FOR BIDS

PROJECT MANAGER	PIERRE KWAN
CIVIL	J. MEGRDITCHIAN
STRUCTURAL	P. LINDBLOM
ARCHITECTURAL	V. YANEZ
PROCESS	P. KWAN
MECHANICAL	K. CHEUNG
ELECTRICAL	R. MCCOMB
INSTRUMENTATION	D. BEST
PROJECT NUMBER	10193663

REGISTERED PROFESSIONAL ENGINEER 57142PE OREGON JULY 11, 2000 DONALD E. BEST
DIGITALLY SIGNED
EXPIRES: 12/31/2027

CITY OF ASHLAND
Ashland, Oregon

City of Ashland

Ashland Creek Water Treatment Plant

2026

INSTRUMENTATION DETAILS 2

0 1" 2"

FILENAME 000Y022
SCALE -

SHEET **000Y022**

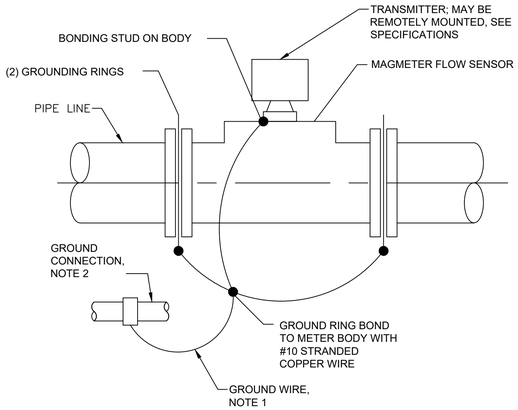

NOTES:
1. NO. 10 AWG INSULTATED IF LENGTH IS LESS THAN 6'. IF MORE THAN 6', INSTALL CONDUCTOR IN ¾" CONDUIT.
2. BOND MAGMETER TO ONE OF THE FOLLOWING ACCEPTABLE GROUNDS:
   A. POWER CIRCUIT GROUND CONDUCTOR AT TRANSMITTER.
   B. NEAREST AVAILABLE EQUIPMENT GROUND CONNECTION POINT.
   C. SEPARATE TAIL FROM EMBEDDED GROUND MAT.

1 – MAGNETIC FLOW METER GROUNDING RING BONDING
NTS

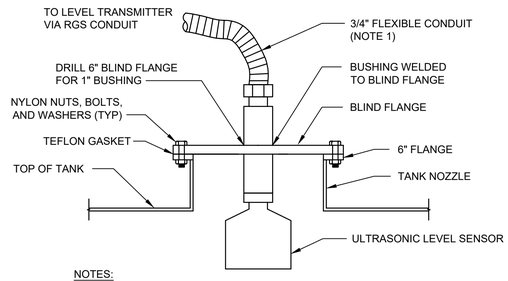

NOTES:
1. FLEX CONDUIT LENGTH TO BE SUFFICIENT TO ALLOW REMOVAL OF SENSOR.
2. USE CONDUIT EXTENSION BETWEEN BUSHING AND SENSOR IF REQUIRED TO ENSURE BOTTOM OF SENSOR IS AT LEAST 1" BELOW TANK TOP.

2 – ULTRASONIC LEVEL SENSOR TANK MOUNTED
NTS

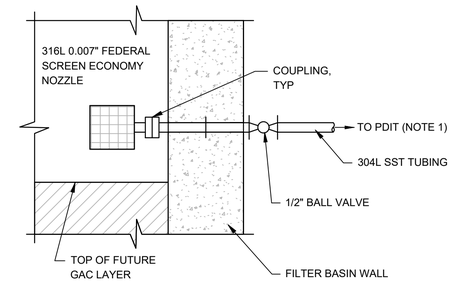

NOTE:
1. CONNECT OTHER END OF PDIT TO FE PIPE PER DETAIL 7, SHEET 000Y023.

3 – LOSS OF HEAD TRANSMITTER - LOW PORT SIDE
NTS

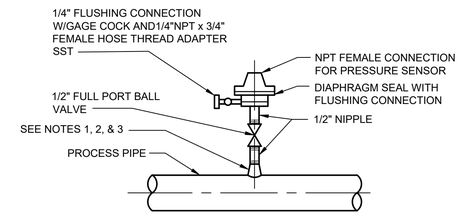

NOTES:
1. FOR STL, GSP, AND PVC 2 1/2" AND SMALLER, USE A BUSHING IN A TEE.
2. FOR DI AND FRP ALL SIZES, USE PIPE SADDLE W/ BUSHING.
3. FOR STL, AND SST PIPES 3" AND LARGER, AND PRESSURE VESSELS, USE THREAD-O-LET, OR EQUAL AS SHOWN.
4. DIAPHRAGM SEAL AND PRESSURE INSTRUMENT SHALL BE FACTORY ASSEMBLED.

4 – DIAPHRAGM SEAL
NTS

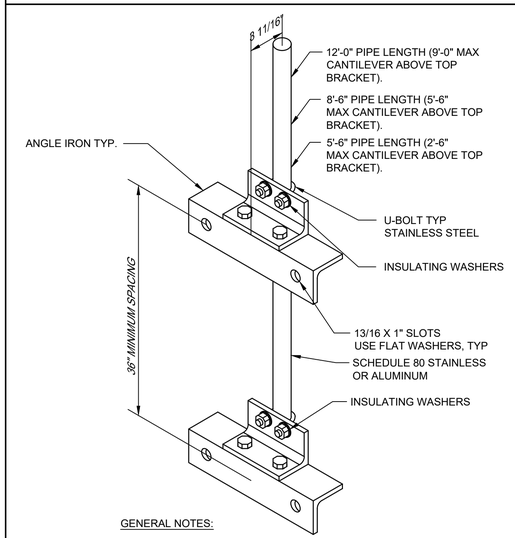

GENERAL NOTES:
1. PROVIDE GROUNDING AND ATTACHMENT OF ANTENNAS AND CABLING IN ACCORDANCE WITH ANTENNA DETAILS.

5 – WALL MOUNTED ANTENNA BRACKET DETAIL
NTS

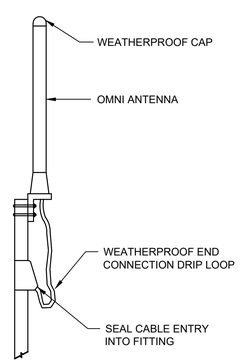

6 – WALL MOUNTED ANTENNA BRACKET DETAIL
NTS

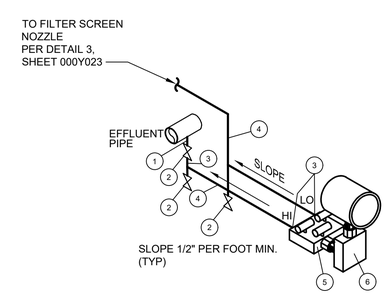

ITEM #	DESCRIPTION
1	1/2" X 6" LONG PIPE NIPPLE SCH. 80 THREADED BOTH ENDS.
2	1/2" ISOLATION VALVE
3	1/2" TUBE X 1/2" MALE NPT CONNECTOR
4	1/2" O.D. TUBING
5	3 VALVE MANIFOLD
6	TRANSMITTER

7 – LOSS OF HEAD TRANSMITTER
NTS

NOTES:
1. INSTALLATION DETAIL SHOWN IS GENERIC. ACTUAL INSTALLATIONS MAY VARY.
2. SEE SPECIFICATION 40 97 00.

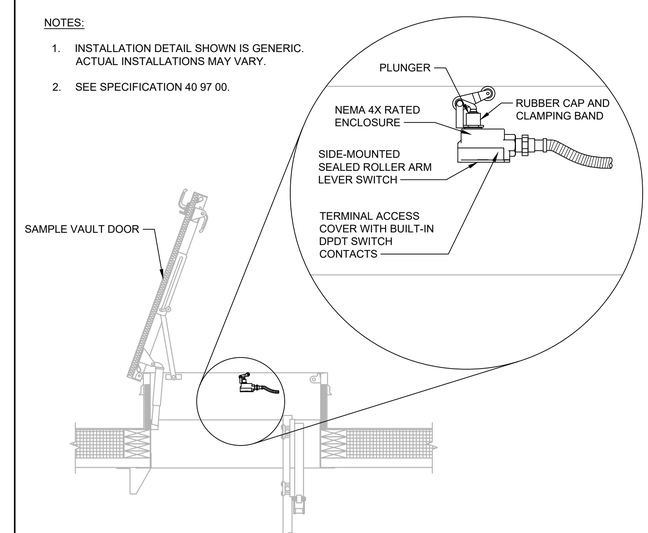

8 – TYPICAL HATCH DOOR SWITCH INSTALLATION
NTS

ISSUE	DATE	DESCRIPTION
A	09/2026	ISSUED FOR BIDS

PROJECT MANAGER	PIERRE KWAN
CIVIL	J. MEGRDITCHIAN
STRUCTURAL	P. LINDBLOM
ARCHITECTURAL	V. YANEZ
PROCESS	P. KWAN
MECHANICAL	K. CHEUNG
ELECTRICAL	R. MCCOMB
INSTRUMENTATION	D. BEST
PROJECT NUMBER	10193663

REGISTERED PROFESSIONAL ENGINEER 57142PE DIGITALLY SIGNED OREGON JULY 11, 2006 DONALD E. BEST
EXPIRES: 12/31/2027

CITY OF ASHLAND
Ashland, Oregon

City of Ashland

Ashland Creek Water Treatment Plant

2026

INSTRUMENTATION DETAILS 3

0 1" 2"

FILENAME 000Y023
SCALE -

SHEET **000Y023**

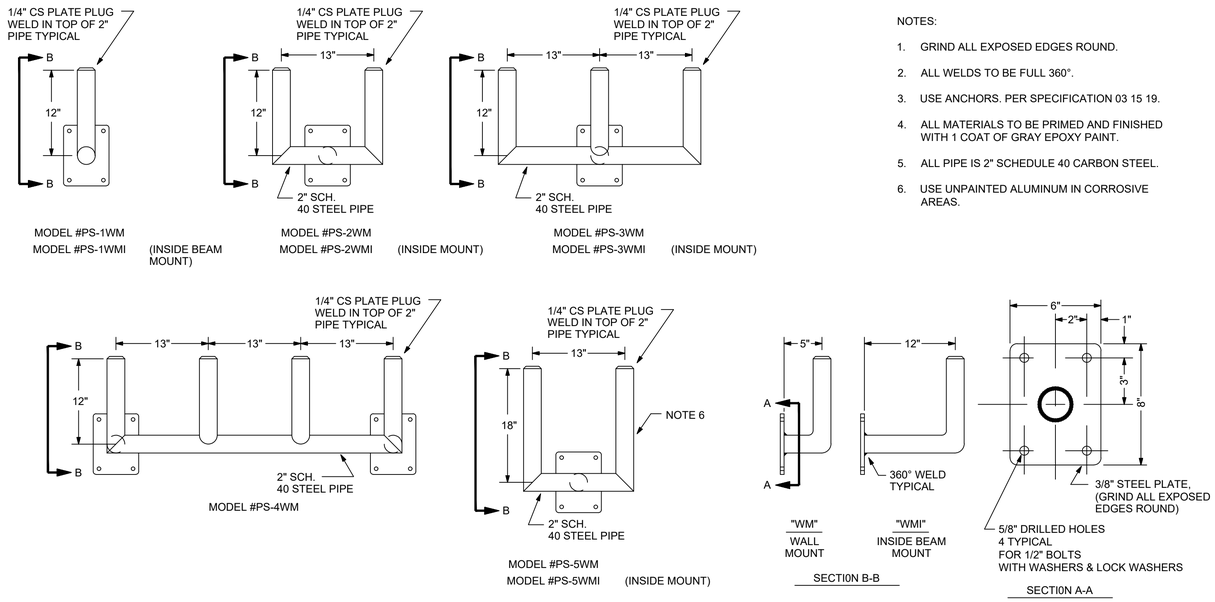

NOTES:

1. GRIND ALL EXPOSED EDGES ROUND.
2. ALL WELDS TO BE FULL 360°.
3. USE ANCHORS. PER SPECIFICATION 03 15 19.
4. ALL MATERIALS TO BE PRIMED AND FINISHED WITH 1 COAT OF GRAY EPOXY PAINT.
5. ALL PIPE IS 2" SCHEDULE 40 CARBON STEEL.
6. USE UNPAINTED ALUMINUM IN CORROSIVE AREAS.

1 BULLHORN MOUNTING STANDS FOR FIELD INSTRUMENTS

NOT TO SCALE

2 UPS MOUNTING BRACKET

NTS

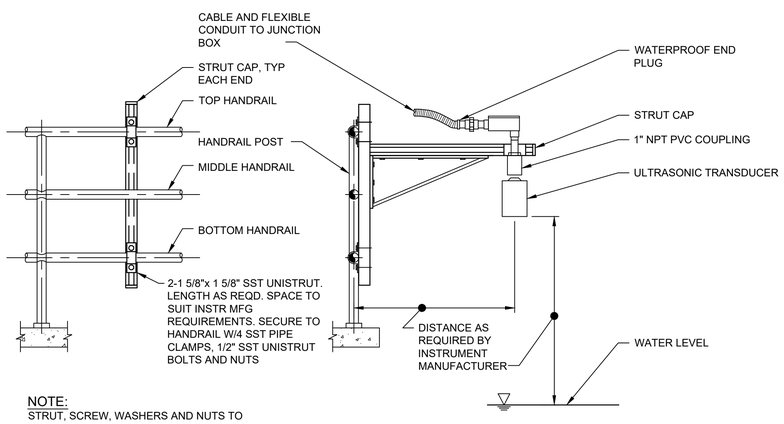

NOTE:
STRUT, SCREW, WASHERS AND NUTS TO BE TYPE 316 STAINLESS STEEL

3 ULTRASONIC LEVEL ELEMENT INSTALLATION TO HANDRAIL

NOT TO SCALE

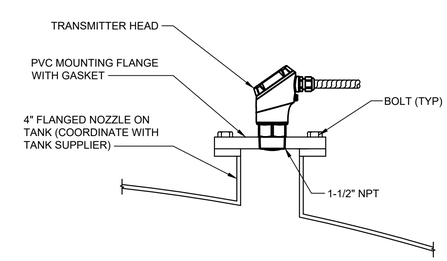

NOTES:

1. FLEX CONDUIT LENGTH TO BE SUFFICIENT TO ALLOW REMOVAL OF SENSOR.

4 RADAR LEVEL SENSOR TANK MOUNTED

NOT TO SCALE

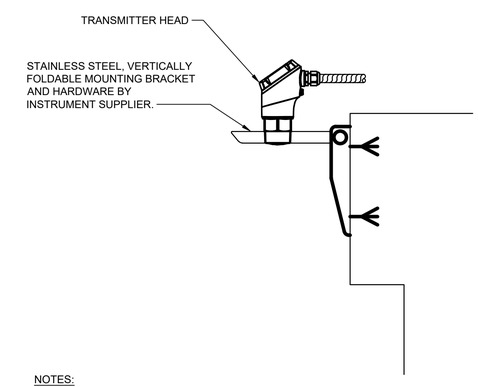

NOTES:

1. FLEX CONDUIT LENGTH TO BE SUFFICIENT TO ALLOW REMOVAL OF SENSOR.

5 RADAR LEVEL SENSOR BRACKET MOUNTED

NOT TO SCALE

ISSUE	DATE	DESCRIPTION
A	09/2026	ISSUED FOR BIDS

PROJECT MANAGER	PIERRE KWAN
CIVIL	J. MEGRDITCHIAN
STRUCTURAL	P. LINDBLOM
ARCHITECTURAL	V. YANEZ
PROCESS	P. KWAN
MECHANICAL	K. CHEUNG
ELECTRICAL	R. MCCOMB
INSTRUMENTATION	D. BEST
PROJECT NUMBER	10193663

REGISTERED PROFESSIONAL ENGINEER 57142PE DIGITALLY SIGNED OREGON JULY 11, 2000 DONALD E. BEST
EXPIRES: 12/31/2027

CITY OF ASHLAND
Ashland, Oregon

City of Ashland

Ashland Creek Water Treatment Plant

2026

INSTRUMENTATION DETAILS 4

0 1" 2"

FILENAME 000Y024
SCALE -

SHEET **000Y024**

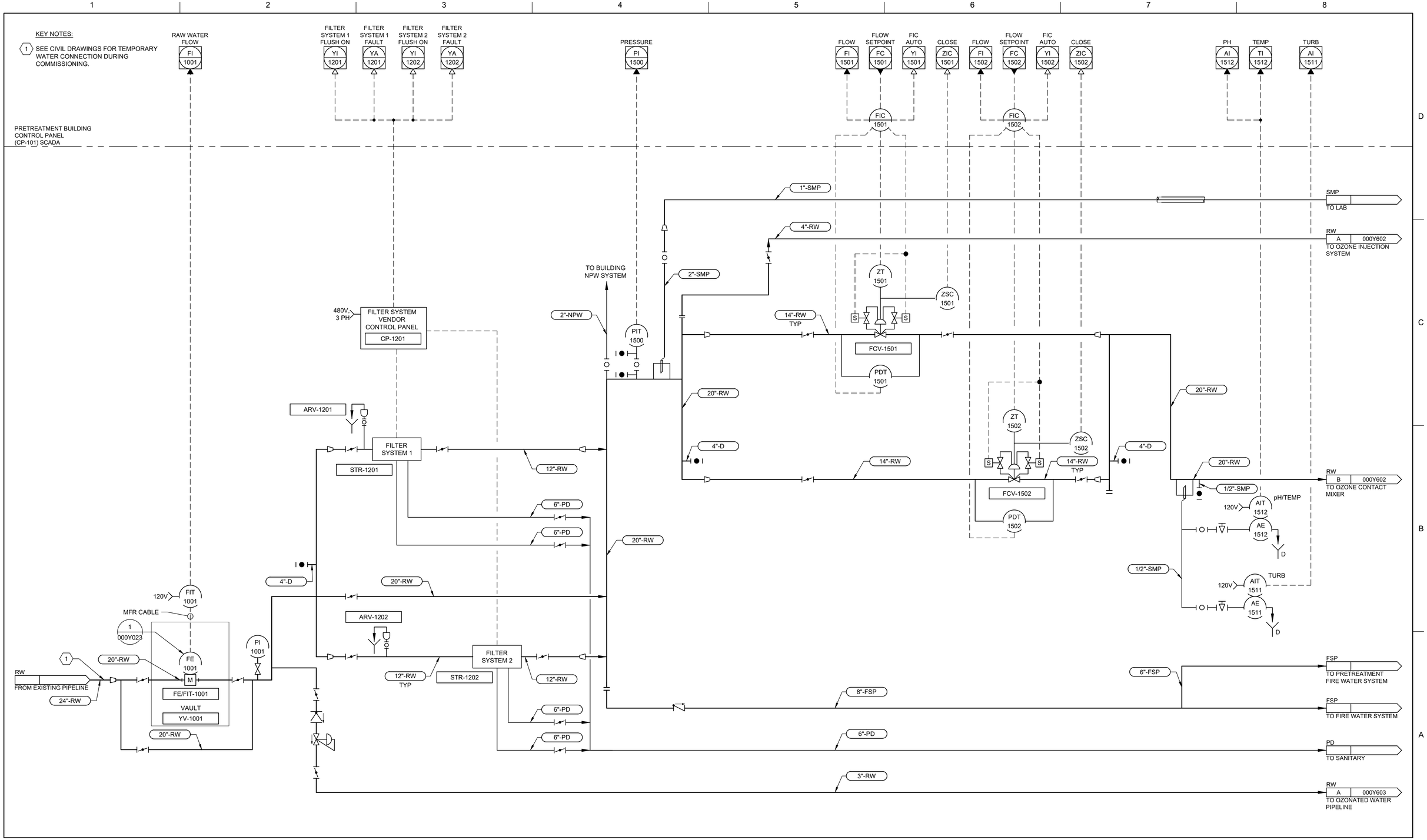

ISSUE	DATE	DESCRIPTION
A	09/2026	ISSUED FOR BIDS

PROJECT MANAGER	PIERRE KWAN
CIVIL	J. MEGRDITCHIAN
STRUCTURAL	P. LINDBLOM
ARCHITECTURAL	V. YANEZ
PROCESS	P. KWAN
MECHANICAL	K. CHEUNG
ELECTRICAL	R. MCCOMB
INSTRUMENTATION	D. BEST
PROJECT NUMBER	10193663

REGISTERED PROFESSIONAL ENGINEER 57142PE DIGITALLY SIGNED OREGON JULY 11, 2006 DONALD E. BEST
EXPIRES: 12/31/2027

CITY OF ASHLAND
Ashland, Oregon

City of Ashland

Ashland Creek Water Treatment Plant

2026

INSTRUMENTATION

PRETREATMENT P&ID

0 1" 2"

FILENAME	000Y601.dwg
SCALE	NTS

SHEET **000Y601**

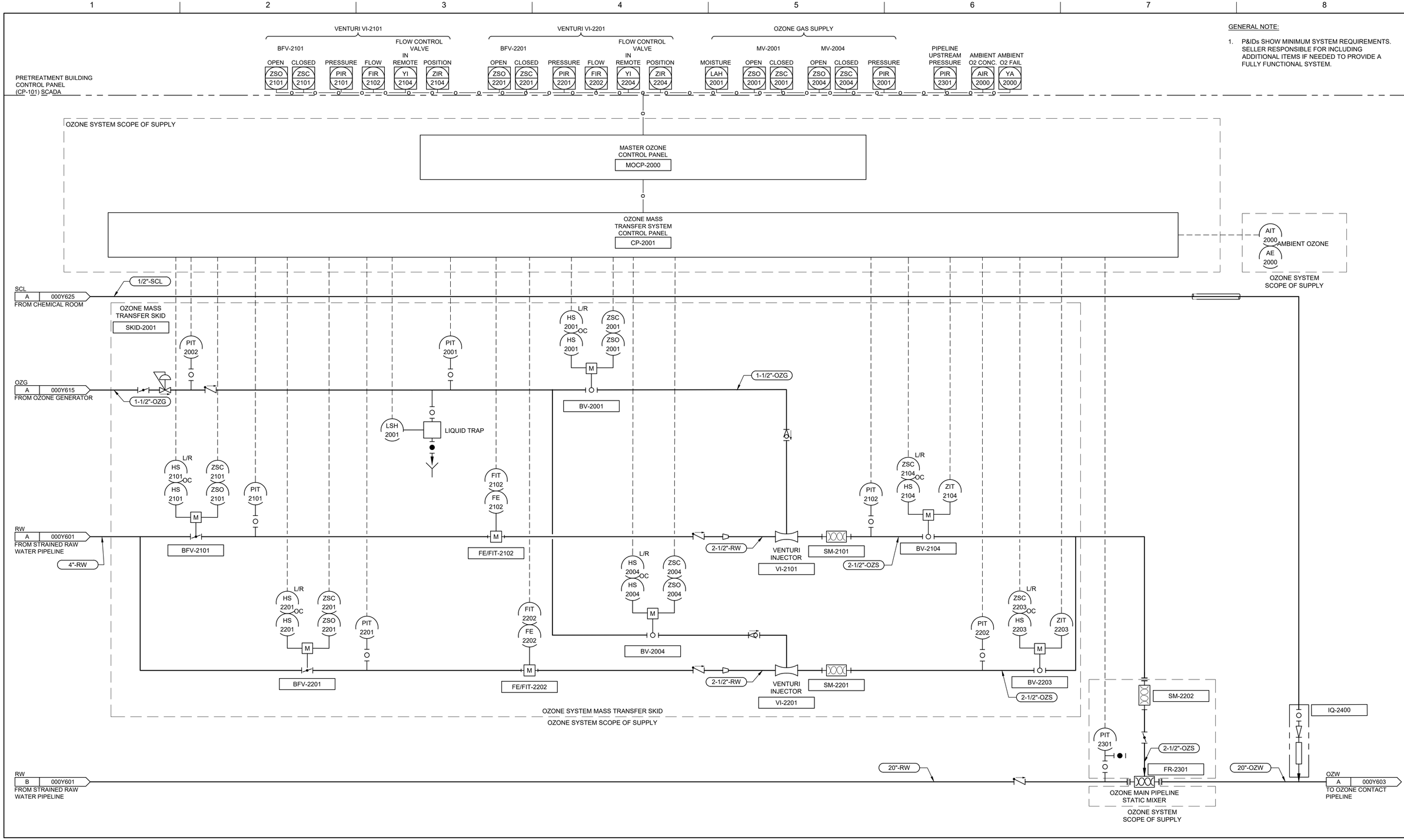

GENERAL NOTE:

1. P&IDs SHOW MINIMUM SYSTEM REQUIREMENTS. SELLER RESPONSIBLE FOR INCLUDING ADDITIONAL ITEMS IF NEEDED TO PROVIDE A FULLY FUNCTIONAL SYSTEM.

ISSUE	DATE	DESCRIPTION
A	09/2026	ISSUED FOR BIDS

PROJECT MANAGER	PIERRE KWAN
CIVIL	J. MEGRDITCHIAN
STRUCTURAL	P. LINDBLOM
ARCHITECTURAL	V. YANEZ
PROCESS	P. KWAN
MECHANICAL	K. CHEUNG
ELECTRICAL	R. MCCOMB
INSTRUMENTATION	D. BEST
PROJECT NUMBER	10193663

REGISTERED PROFESSIONAL ENGINEER 57142PE DIGITALLY SIGNED OREGON JULY 11, 2006 DONALD E. BEST

EXPIRES: 12/31/2027

CITY OF ASHLAND
Ashland, Oregon

City of Ashland

Ashland Creek Water Treatment Plant

2026

INSTRUMENTATION

OZONE SIDESTREAM INJECTION SYSTEM P&ID

0 1" 2"

FILENAME 000Y602.dwg

SCALE NTS

SHEET **000Y602**

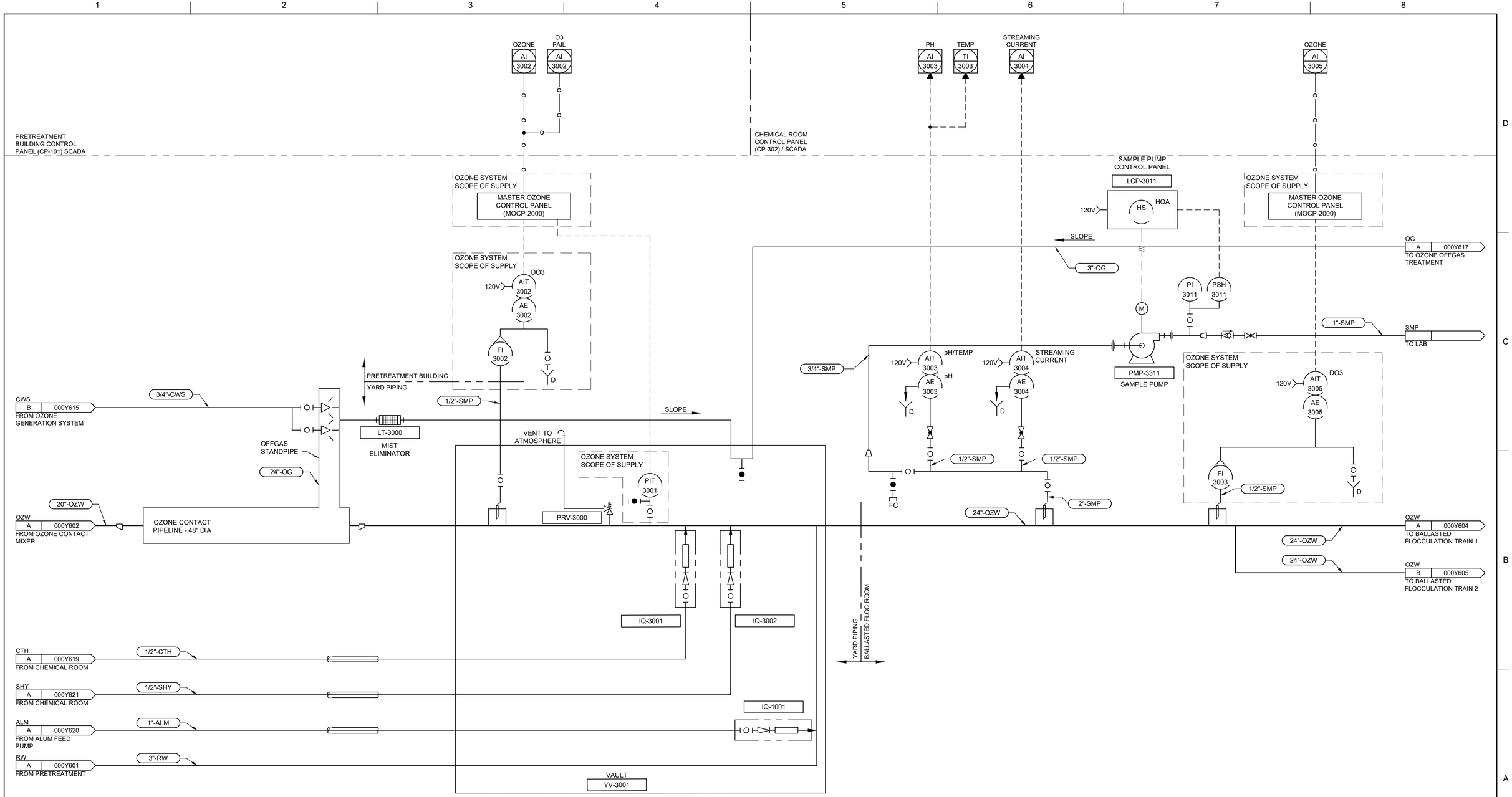

ISSUE	DATE	DESCRIPTION
A	09/2026	ISSUED FOR BIDS

PROJECT MANAGER	PIERRE KWAN
CIVIL	J. MEGRDITCHIAN
STRUCTURAL	P. LINDBLOM
ARCHITECTURAL	V. YANEZ
PROCESS	P. KWAN
MECHANICAL	K. CHEUNG
ELECTRICAL	R. MCCOMB
INSTRUMENTATION	D. BEST
PROJECT NUMBER	10193663

REGISTERED PROFESSIONAL ENGINEER 57142PE
DIGITALLY SIGNED
OREGON
JULY 11, 2000
DONALD E. BEST
EXPIRES: 12/31/2027

CITY OF ASHLAND
Ashland, Oregon

City of Ashland

Ashland Creek Water Treatment Plant

2026

INSTRUMENTATION

RAPID MIX P&ID

0 1" 2"

FILENAME	000Y603.dwg
SCALE	NTS

SHEET **000Y603**

GENERAL NOTE:

1. P&IDs SHOW MINIMUM SYSTEM REQUIREMENTS. SELLER RESPONSIBLE FOR INCLUDING ADDITIONAL ITEMS IF NEEDED TO PROVIDE A FULLY FUNCTIONAL SYSTEM.

KEY NOTES:

1. FREE DISCHARGE FROM HYDROCYCLONES TO BALLASTED FLOCCULATION TANK, I.E. NO PIPING.

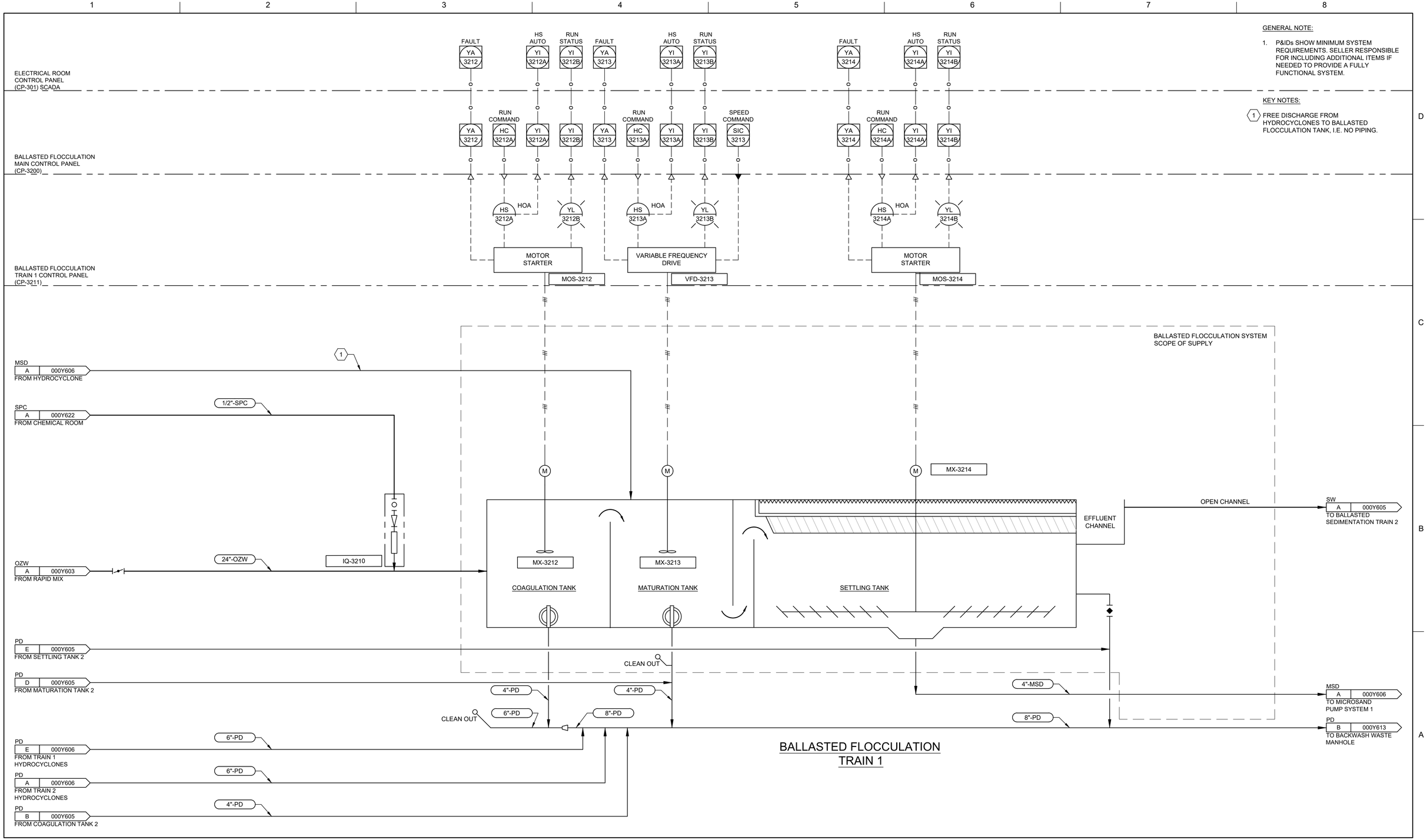

ISSUE	DATE	DESCRIPTION
A	09/2026	ISSUED FOR BIDS

PROJECT MANAGER	PIERRE KWAN
CIVIL	J. MEGRDITCHIAN
STRUCTURAL	P. LINDBLOM
ARCHITECTURAL	V. YANEZ
PROCESS	P. KWAN
MECHANICAL	K. CHEUNG
ELECTRICAL	R. MCCOMB
INSTRUMENTATION	D. BEST
PROJECT NUMBER	10193663

REGISTERED PROFESSIONAL ENGINEER 57142PE DIGITALLY SIGNED OREGON JULY 11, 2000 DONALD E. BEST
EXPIRES: 12/31/2027

CITY OF ASHLAND
Ashland, Oregon

City of Ashland

Ashland Creek Water Treatment Plant

2026

INSTRUMENTATION

BALLASTED SEDIMENTATION TRAIN 1 P&ID

0 1" 2"

FILENAME 000Y604.dwg
SCALE NTS

SHEET **000Y604**

GENERAL NOTE:

1. P&IDs SHOW MINIMUM SYSTEM REQUIREMENTS. SELLER RESPONSIBLE FOR INCLUDING ADDITIONAL ITEMS IF NEEDED TO PROVIDE A FULLY FUNCTIONAL SYSTEM.

KEY NOTES:

1. FREE DISCHARGE FROM HYDROCYCLONES TO BALLASTED FLOCCULATION TANK, I.E. NO PIPING.

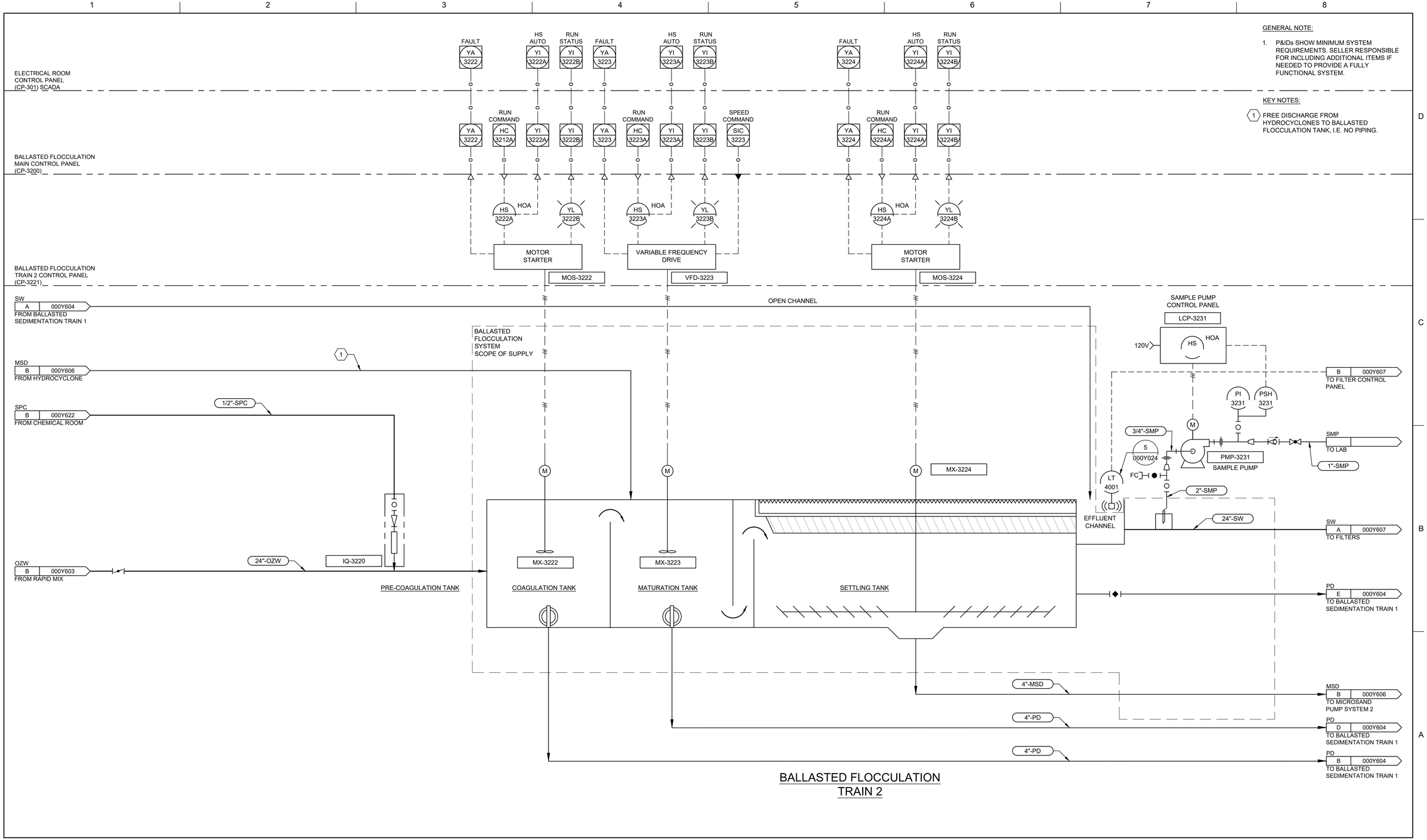

BALLASTED FLOCCULATION TRAIN 2

ISSUE	DATE	DESCRIPTION
A	09/2026	ISSUED FOR BIDS

PROJECT MANAGER	PIERRE KWAN
CIVIL	J. MEGRDITCHIAN
STRUCTURAL	P. LINDBLOM
ARCHITECTURAL	V. YANEZ
PROCESS	P. KWAN
MECHANICAL	K. CHEUNG
ELECTRICAL	R. MCCOMB
INSTRUMENTATION	D. BEST
PROJECT NUMBER	10193663

REGISTERED PROFESSIONAL ENGINEER 57142PE DIGITALLY SIGNED OREGON JULY 11, 2006 DONALD E. BEST

EXPIRES: 12/31/2027

CITY OF ASHLAND

Ashland, Oregon

City of Ashland

Ashland Creek Water Treatment Plant

2026

INSTRUMENTATION

BALLASTED SEDIMENTATION TRAIN 2 P&ID

0 1" 2"

FILENAME 000Y605.dwg

SCALE NTS

SHEET **000Y605**

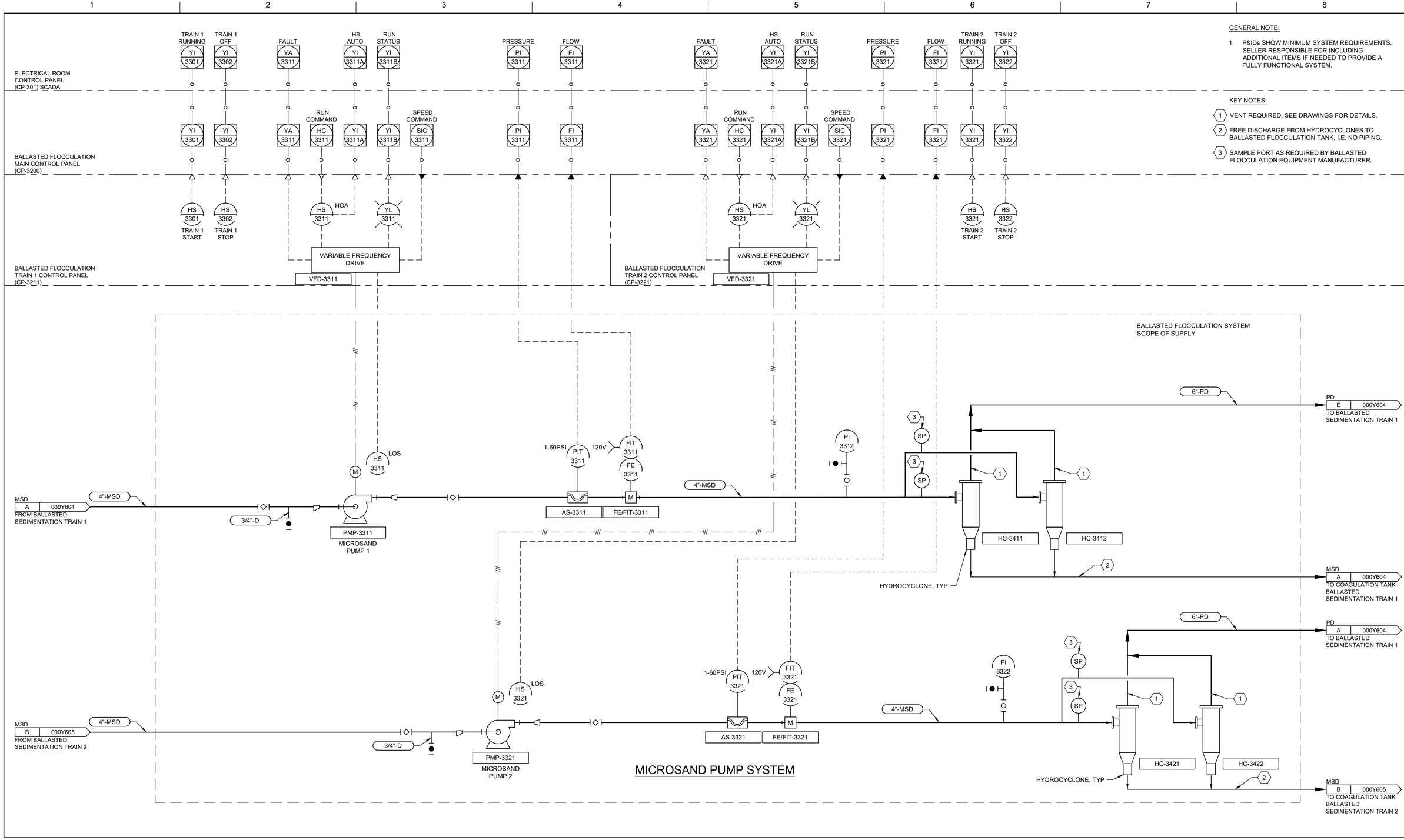

GENERAL NOTE:

1. P&IDs SHOW MINIMUM SYSTEM REQUIREMENTS. SELLER RESPONSIBLE FOR INCLUDING ADDITIONAL ITEMS IF NEEDED TO PROVIDE A FULLY FUNCTIONAL SYSTEM.

KEY NOTES:

1. VENT REQUIRED, SEE DRAWINGS FOR DETAILS.
2. FREE DISCHARGE FROM HYDROCYCLONES TO BALLASTED FLOCCULATION TANK, I.E. NO PIPING.
3. SAMPLE PORT AS REQUIRED BY BALLASTED FLOCCULATION EQUIPMENT MANUFACTURER.

ISSUE	DATE	DESCRIPTION
A	09/2026	ISSUED FOR BIDS

PROJECT MANAGER	PIERRE KWAN
CIVIL	J. MEGRDITCHIAN
STRUCTURAL	P. LINDBLOM
ARCHITECTURAL	V. YANEZ
PROCESS	P. KWAN
MECHANICAL	K. CHEUNG
ELECTRICAL	R. MCCOMB
INSTRUMENTATION	D. BEST
PROJECT NUMBER	10193663

REGISTERED PROFESSIONAL ENGINEER 57142PE DIGITALLY SIGNED OREGON JULY 11, 2000 DONALD E. BEST
EXPIRES: 12/31/2027

CITY OF ASHLAND
Ashland, Oregon

City of Ashland

Ashland Creek Water Treatment Plant

2026

INSTRUMENTATION

MICROSAND PUMP SYSTEM P&ID

0 1" 2"

FILENAME 000Y606.dwg
SCALE NTS

SHEET **000Y606**

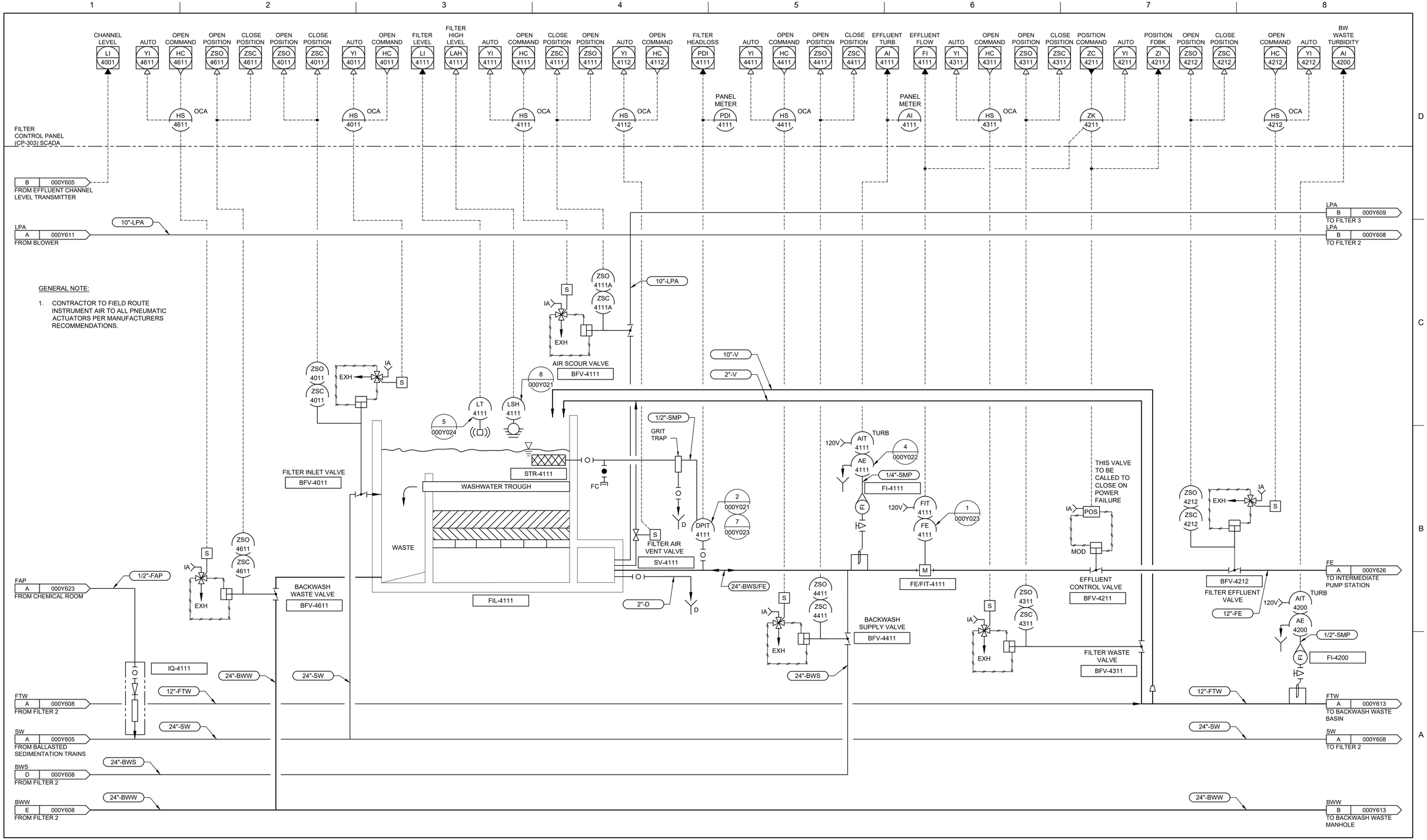

ISSUE	DATE	DESCRIPTION
A	09/2026	ISSUED FOR BIDS

PROJECT MANAGER	PIERRE KWAN
CIVIL	J. MEGRDITCHIAN
STRUCTURAL	P. LINDBLOM
ARCHITECTURAL	V. YANEZ
PROCESS	P. KWAN
MECHANICAL	K. CHEUNG
ELECTRICAL	R. MCCOMB
INSTRUMENTATION	D. BEST
PROJECT NUMBER	10193663

REGISTERED PROFESSIONAL ENGINEER 57142PE DIGITALLY SIGNED OREGON JULY 11, 2000 DONALD E. BEST
EXPIRES: 12/31/2027

CITY OF ASHLAND
Ashland, Oregon

City of Ashland

Ashland Creek Water Treatment Plant

2026

INSTRUMENTATION

FILTER 1 P&ID

0 1" 2"

FILENAME 000Y607.dwg
SCALE NTS

SHEET **000Y607**

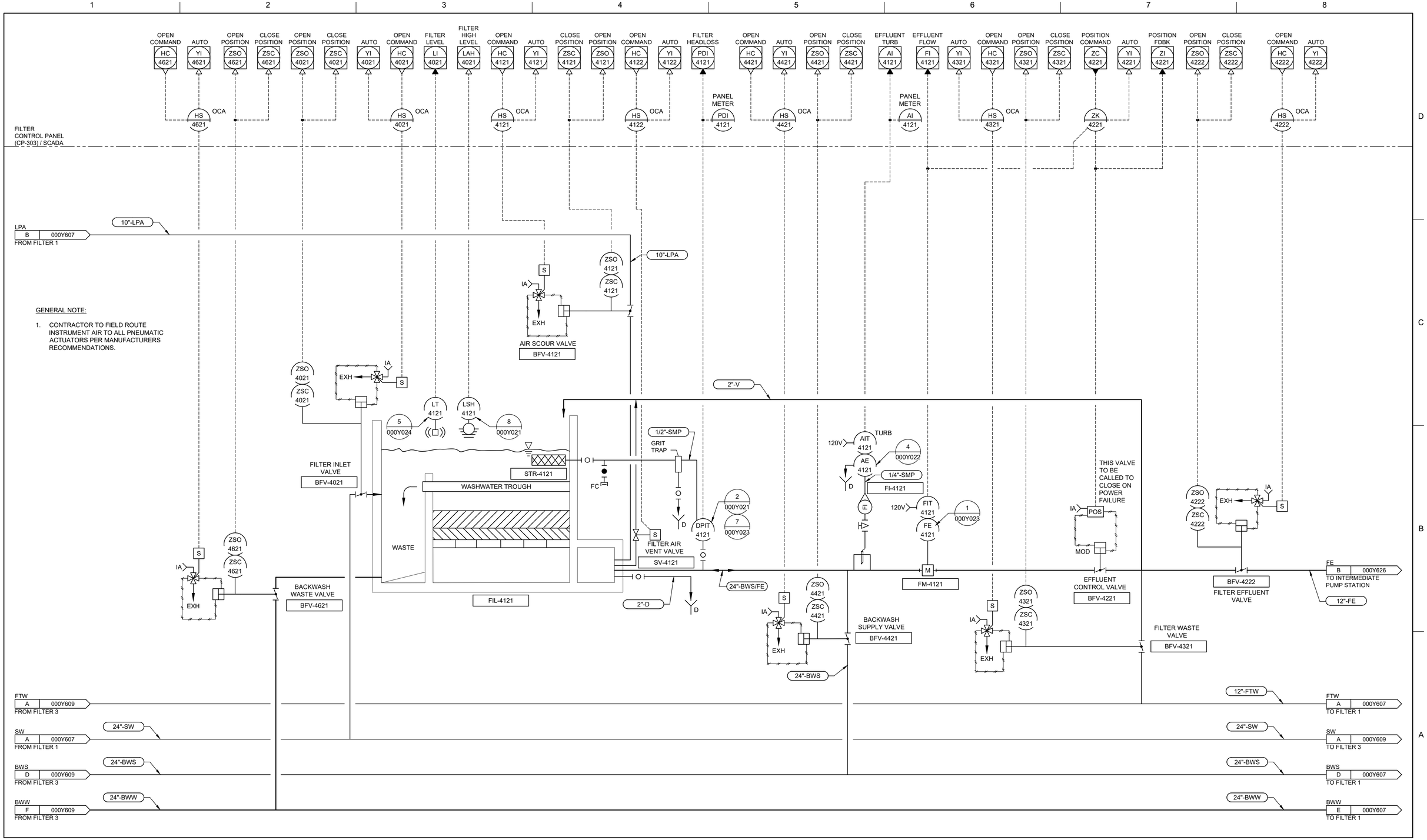

ISSUE	DATE	DESCRIPTION
A	09/2026	ISSUED FOR BIDS

PROJECT MANAGER	PIERRE KWAN
CIVIL	J. MEGRDITCHIAN
STRUCTURAL	P. LINDBLOM
ARCHITECTURAL	V. YANEZ
PROCESS	P. KWAN
MECHANICAL	K. CHEUNG
ELECTRICAL	R. MCCOMB
INSTRUMENTATION	D. BEST
PROJECT NUMBER	10193663

REGISTERED PROFESSIONAL ENGINEER 57142PE DIGITALLY SIGNED OREGON JULY 11, 2000 DONALD E. BEST
EXPIRES: 12/31/2027

CITY OF ASHLAND
Ashland, Oregon

City of Ashland

Ashland Creek Water Treatment Plant

2026

INSTRUMENTATION

FILTER 2 P&ID

0 1" 2"

FILENAME 000Y608.dwg
SCALE NTS

SHEET **000Y608**

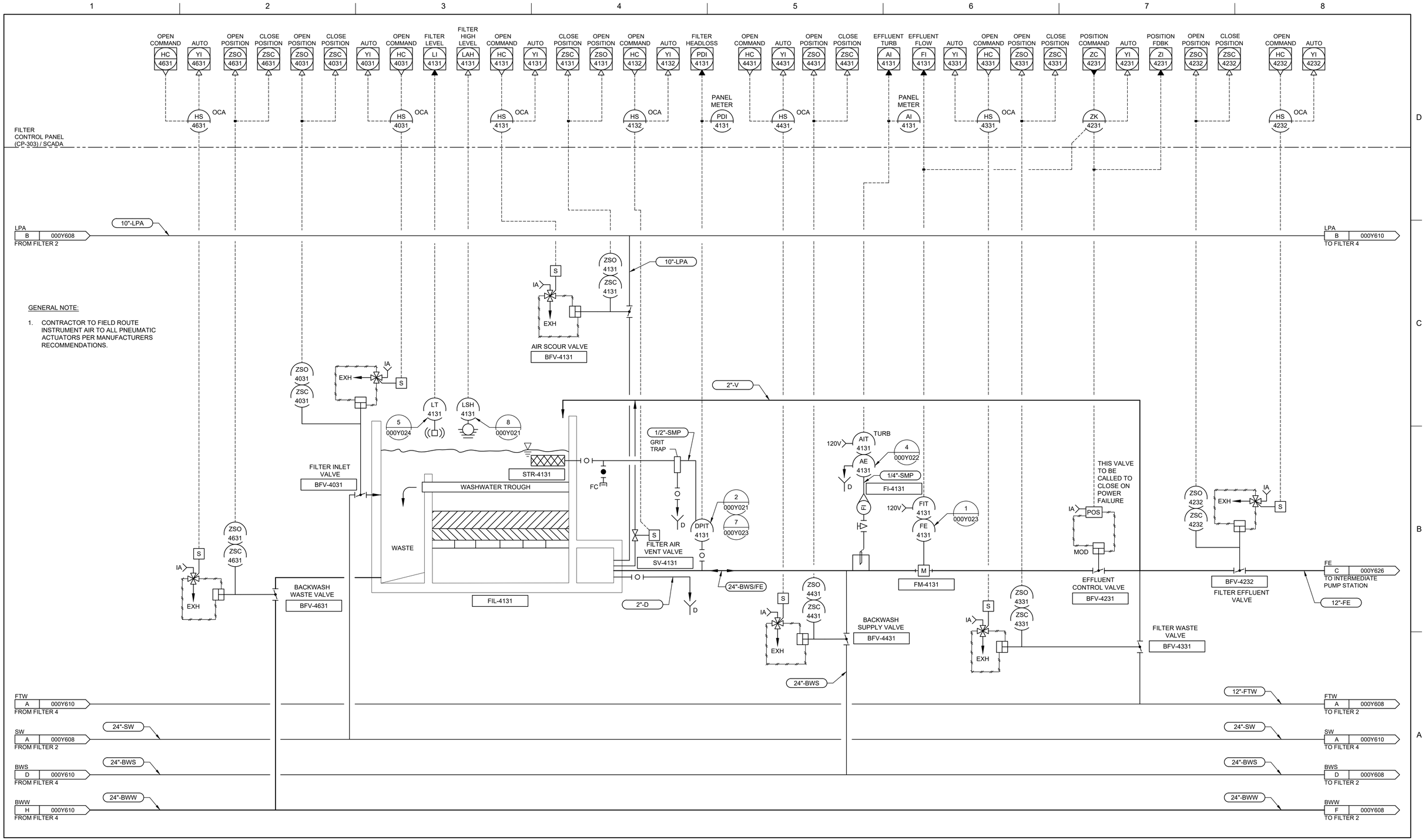

ISSUE	DATE	DESCRIPTION
A	09/2026	ISSUED FOR BIDS

PROJECT MANAGER	PIERRE KWAN
CIVIL	J. MEGRDITCHIAN
STRUCTURAL	P. LINDBLOM
ARCHITECTURAL	V. YANEZ
PROCESS	P. KWAN
MECHANICAL	K. CHEUNG
ELECTRICAL	R. MCCOMB
INSTRUMENTATION	D. BEST
PROJECT NUMBER	10193663

REGISTERED PROFESSIONAL ENGINEER 57142PE DIGITALLY SIGNED OREGON JULY 11, 2006 DONALD E. BEST
EXPIRES: 12/31/2027

CITY OF ASHLAND
Ashland, Oregon

City of Ashland

Ashland Creek Water Treatment Plant

2026

INSTRUMENTATION

FILTER 3 P&ID

0 1" 2"

FILENAME	000Y609.dwg
SCALE	NTS

SHEET **000Y609**

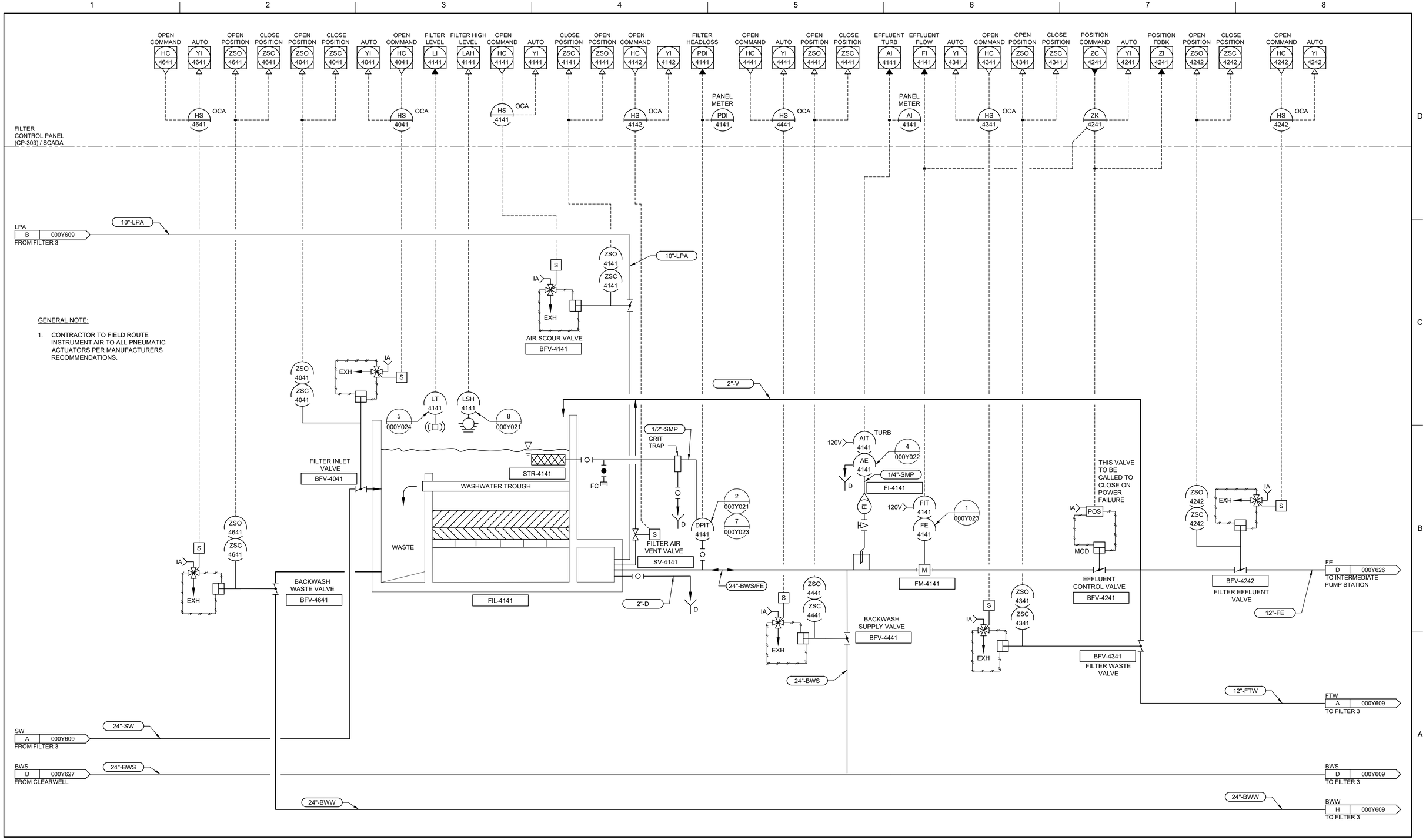

ISSUE	DATE	DESCRIPTION
A	09/2026	ISSUED FOR BIDS

PROJECT MANAGER	PIERRE KWAN
CIVIL	J. MEGRDITCHIAN
STRUCTURAL	P. LINDBLOM
ARCHITECTURAL	V. YANEZ
PROCESS	P. KWAN
MECHANICAL	K. CHEUNG
ELECTRICAL	R. MCCOMB
INSTRUMENTATION	D. BEST
PROJECT NUMBER	10193663

REGISTERED PROFESSIONAL ENGINEER 57142PE DIGITALLY SIGNED OREGON JULY 11, 2000 DONALD E. BEST
EXPIRES: 12/31/2027

CITY OF ASHLAND
Ashland, Oregon

City of Ashland

Ashland Creek Water Treatment Plant

2026

INSTRUMENTATION

FILTER 4 P&ID

0 1" 2"

FILENAME	000Y610.dwg
SCALE	NTS

SHEET **000Y610**

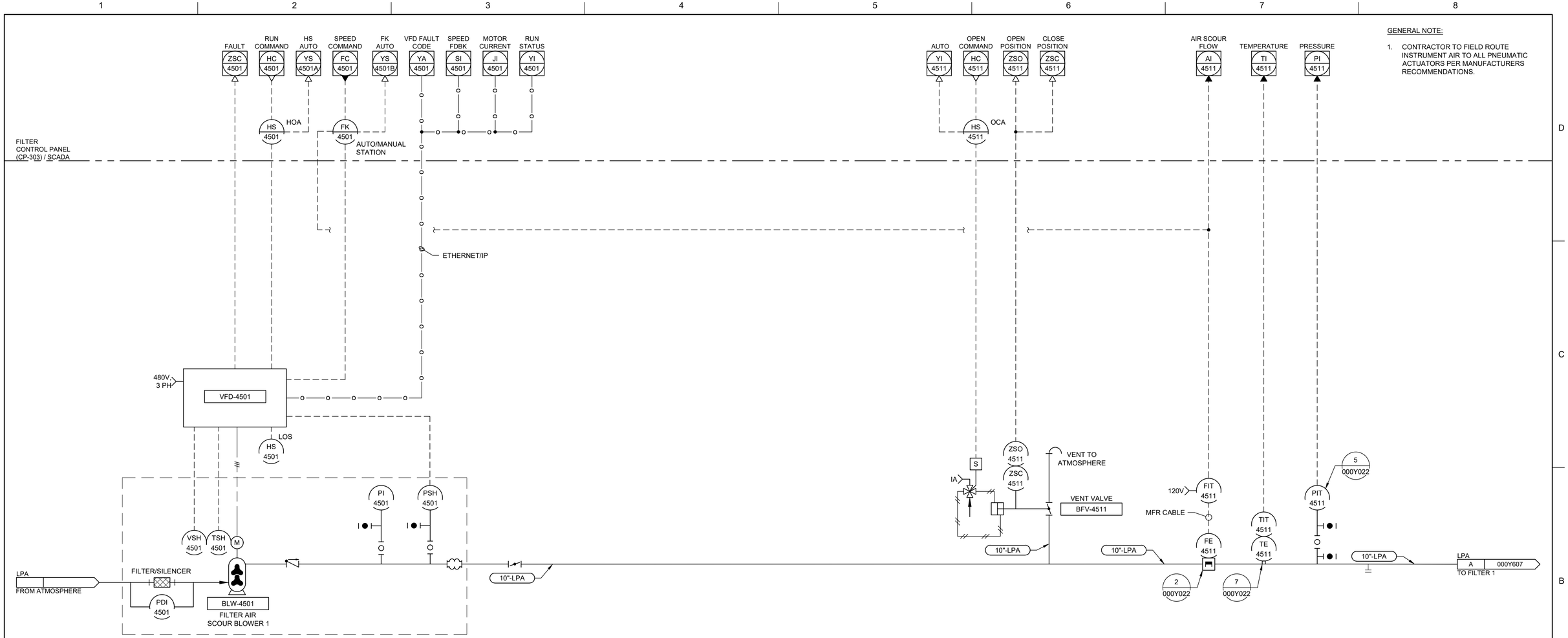

GENERAL NOTE:

1. CONTRACTOR TO FIELD ROUTE INSTRUMENT AIR TO ALL PNEUMATIC ACTUATORS PER MANUFACTURERS RECOMMENDATIONS.

ISSUE	DATE	DESCRIPTION
A	09/2026	ISSUED FOR BIDS

PROJECT MANAGER	PIERRE KWAN
CIVIL	J. MEGRDITCHIAN
STRUCTURAL	P. LINDBLOM
ARCHITECTURAL	V. YANEZ
PROCESS	P. KWAN
MECHANICAL	K. CHEUNG
ELECTRICAL	R. MCCOMB
INSTRUMENTATION	D. BEST
PROJECT NUMBER	10193663

REGISTERED PROFESSIONAL ENGINEER 57142PE DIGITALLY SIGNED OREGON JULY 11, 2006 DONALD E. BEST

EXPIRES: 12/31/2027

CITY OF ASHLAND

Ashland, Oregon

City of Ashland

Ashland Creek Water Treatment Plant

2026

INSTRUMENTATION

LOW PRESSURE AIR P&ID

0 1" 2"

FILENAME 000Y611.dwg

SCALE NTS

SHEET **000Y611**

GENERAL NOTE:

1. CONTRACTOR TO FIELD ROUTE INSTRUMENT AIR TO ALL PNEUMATIC ACTUATORS PER MANUFACTURERS RECOMMENDATIONS.

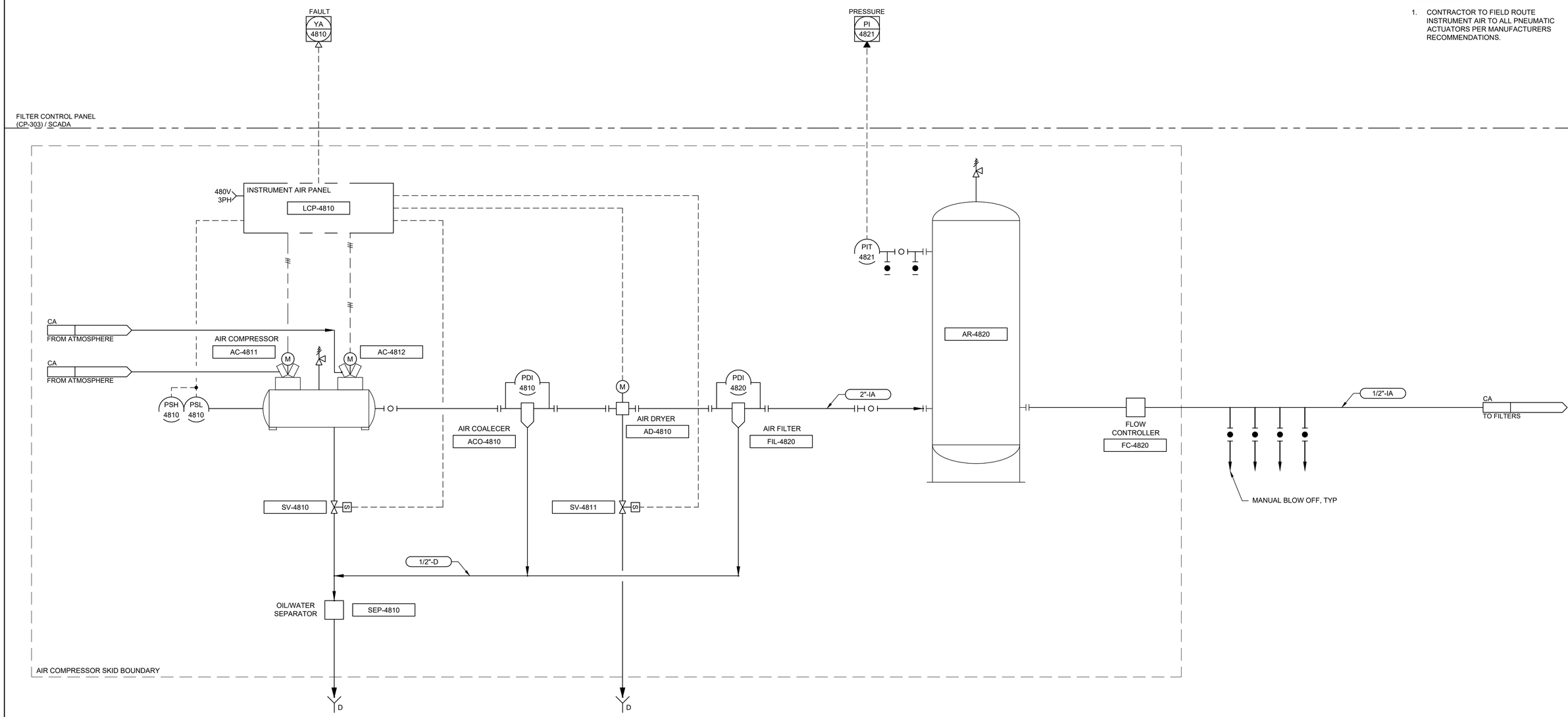

ISSUE	DATE	DESCRIPTION
A	09/2026	ISSUED FOR BIDS

PROJECT MANAGER	PIERRE KWAN
CIVIL	J. MEGRDITCHIAN
STRUCTURAL	P. LINDBLOM
ARCHITECTURAL	V. YANEZ
PROCESS	P. KWAN
MECHANICAL	K. CHEUNG
ELECTRICAL	R. MCCOMB
INSTRUMENTATION	D. BEST
PROJECT NUMBER	10193663

REGISTERED PROFESSIONAL ENGINEER
57142PE
DIGITALLY SIGNED
OREGON
JULY 11, 2000
DONALD E. BEST
EXPIRES: 12/31/2027

CITY OF ASHLAND
Ashland, Oregon

City of Ashland

Ashland Creek Water Treatment Plant

2026

INSTRUMENTATION

INSTRUMENT AIR P&ID

0 1" 2"

FILENAME 000Y612.dwg

SCALE NTS

SHEET **000Y612**

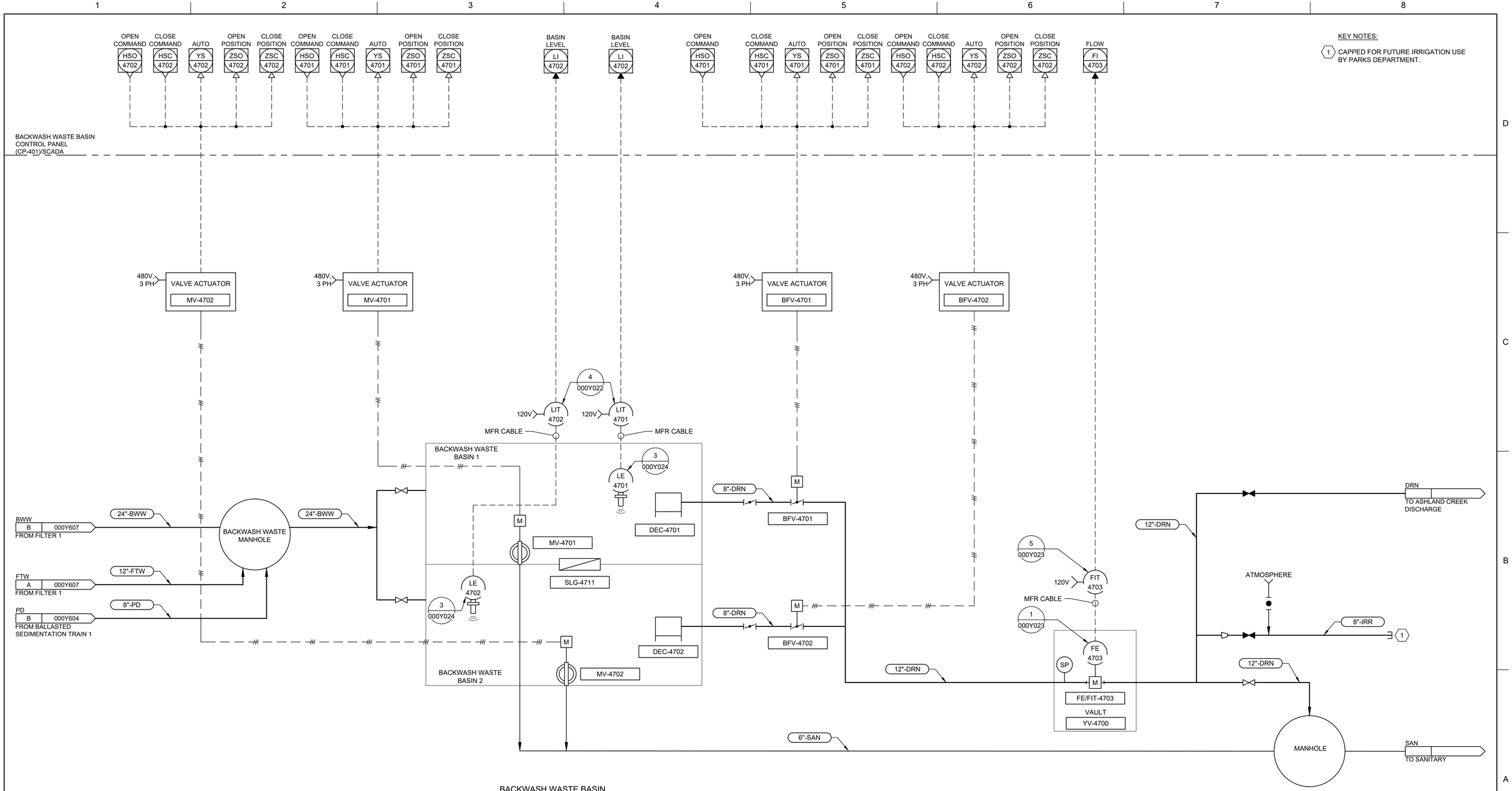

KEY NOTES:

1. CAPPED FOR FUTURE IRRIGATION USE BY PARKS DEPARTMENT.

BACKWASH WASTE BASIN

ISSUE	DATE	DESCRIPTION
A	09/2026	ISSUED FOR BIDS

PROJECT MANAGER	PIERRE KWAN
CIVIL	J. MEGRDITCHIAN
STRUCTURAL	P. LINDBLOM
ARCHITECTURAL	V. YANEZ
PROCESS	P. KWAN
MECHANICAL	K. CHEUNG
ELECTRICAL	R. MCCOMB
INSTRUMENTATION	D. BEST
PROJECT NUMBER	10193663

REGISTERED PROFESSIONAL ENGINEER 57142PE DIGITALLY SIGNED OREGON JULY 11, 2000 DONALD E. BEST

EXPIRES: 12/31/2027

CITY OF ASHLAND

Ashland, Oregon

City of Ashland

Ashland Creek Water Treatment Plant

2026

INSTRUMENTATION

BACKWASH WASTE BASINS P&ID

0 1" 2"

FILENAME 000Y613.dwg

SCALE NTS

SHEET **000Y613**

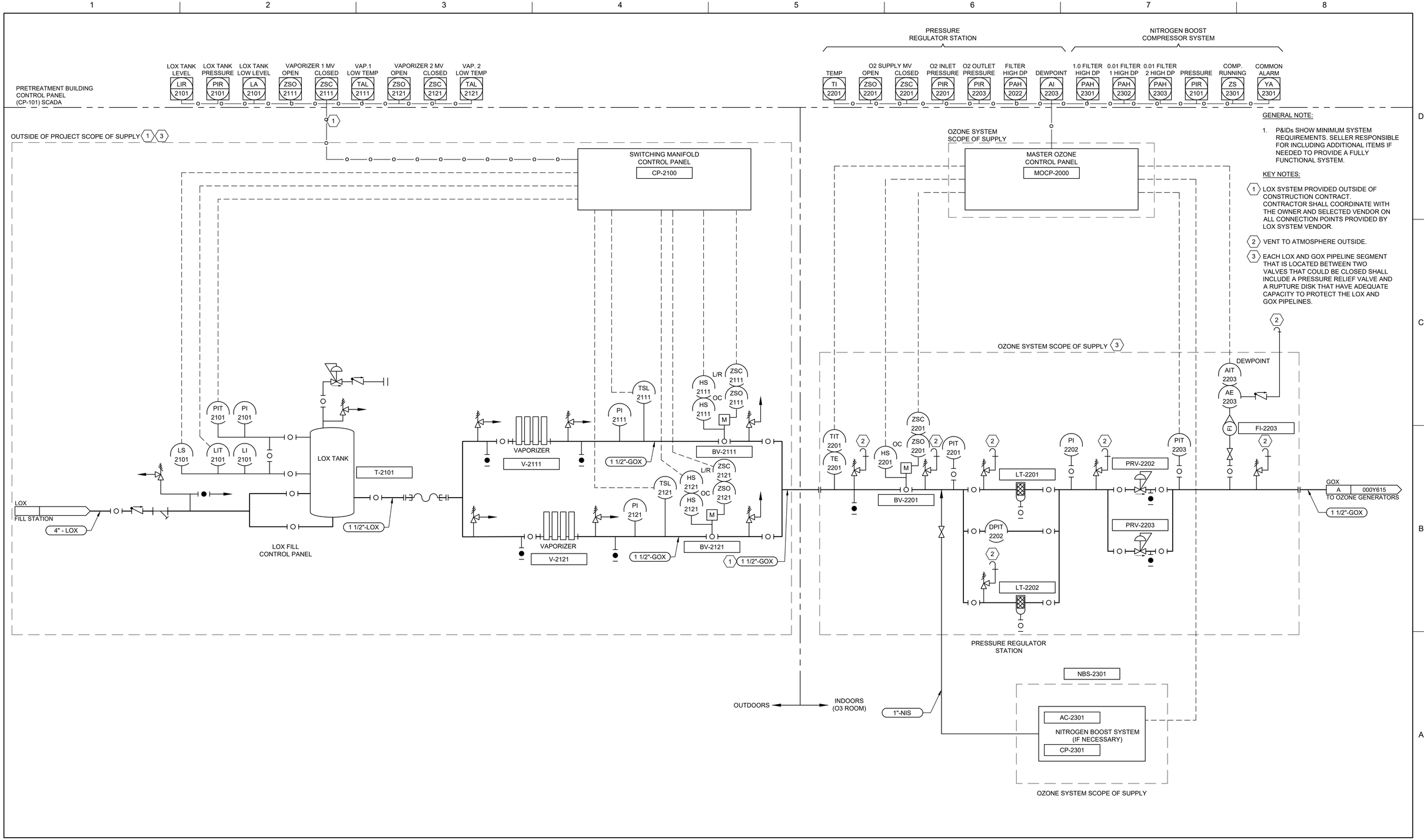

GENERAL NOTE:

1. P&IDs SHOW MINIMUM SYSTEM REQUIREMENTS. SELLER RESPONSIBLE FOR INCLUDING ADDITIONAL ITEMS IF NEEDED TO PROVIDE A FULLY FUNCTIONAL SYSTEM.

KEY NOTES:

1. LOX SYSTEM PROVIDED OUTSIDE OF CONSTRUCTION CONTRACT. CONTRACTOR SHALL COORDINATE WITH THE OWNER AND SELECTED VENDOR ON ALL CONNECTION POINTS PROVIDED BY LOX SYSTEM VENDOR.
2. VENT TO ATMOSPHERE OUTSIDE.
3. EACH LOX AND GOX PIPELINE SEGMENT THAT IS LOCATED BETWEEN TWO VALVES THAT COULD BE CLOSED SHALL INCLUDE A PRESSURE RELIEF VALVE AND A RUPTURE DISK THAT HAVE ADEQUATE CAPACITY TO PROTECT THE LOX AND GOX PIPELINES.

ISSUE	DATE	DESCRIPTION
A	09/2026	ISSUED FOR BIDS

PROJECT MANAGER	PIERRE KWAN
CIVIL	J. MEGRDITCHIAN
STRUCTURAL	P. LINDBLOM
ARCHITECTURAL	V. YANEZ
PROCESS	P. KWAN
MECHANICAL	K. CHEUNG
ELECTRICAL	R. MCCOMB
INSTRUMENTATION	D. BEST
PROJECT NUMBER	10193663

REGISTERED PROFESSIONAL ENGINEER 57142PE DIGITALLY SIGNED OREGON JULY 11, 2000 DONALD E. BEST
EXPIRES: 12/31/2027

CITY OF ASHLAND
Ashland, Oregon

City of Ashland

Ashland Creek Water Treatment Plant

2026

INSTRUMENTATION

LOX STORAGE AND VAPORIZERS P&ID

0 1" 2"

FILENAME 000Y614.dwg
SCALE NTS

SHEET **000Y614**

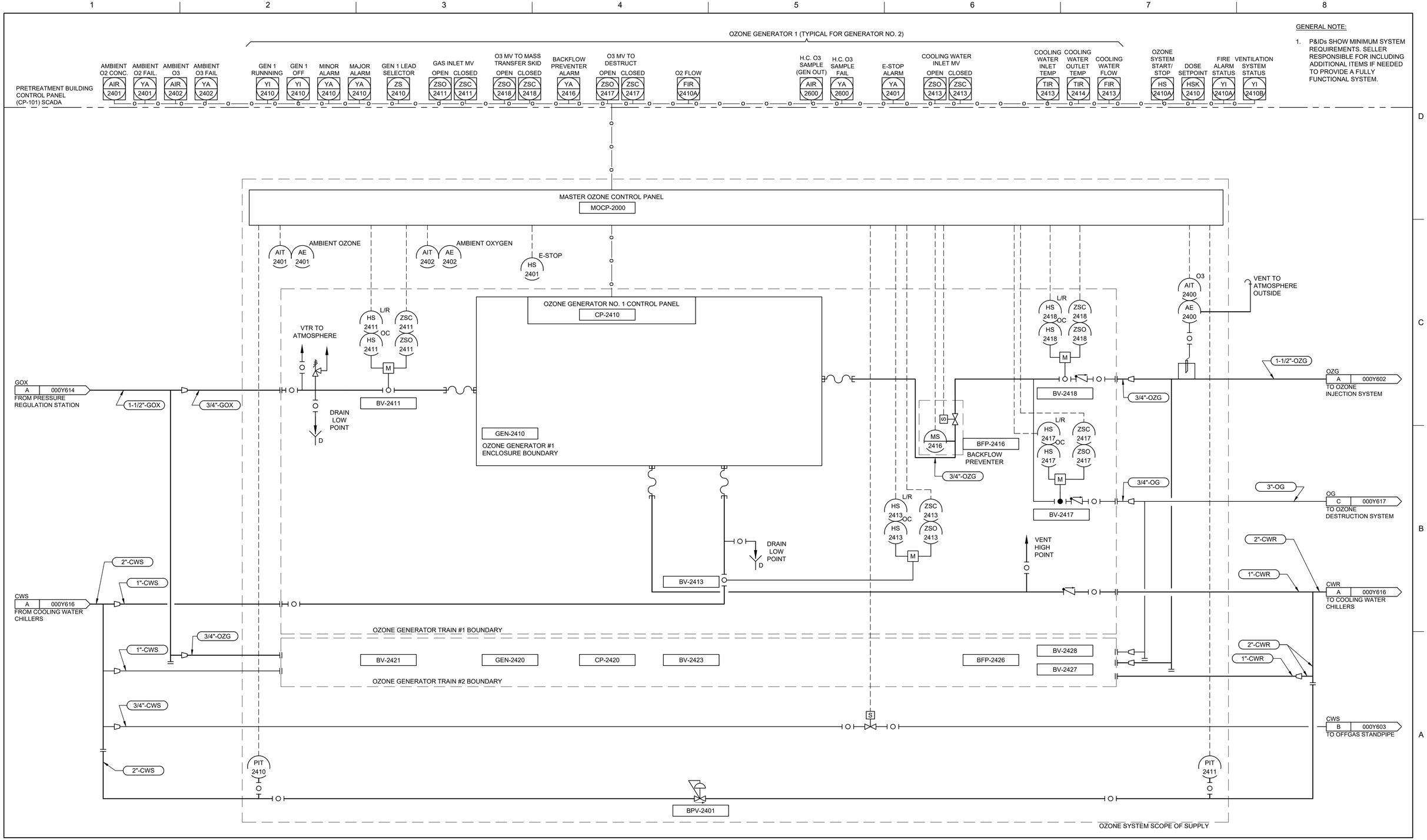

ISSUE	DATE	DESCRIPTION
A	09/2026	ISSUED FOR BIDS

PROJECT MANAGER	PIERRE KWAN
CIVIL	J. MEGRDITCHIAN
STRUCTURAL	P. LINDBLOM
ARCHITECTURAL	V. YANEZ
PROCESS	P. KWAN
MECHANICAL	K. CHEUNG
ELECTRICAL	R. MCCOMB
INSTRUMENTATION	D. BEST
PROJECT NUMBER	10193663

REGISTERED PROFESSIONAL ENGINEER 57142PE DIGITALLY SIGNED OREGON JULY 11, 2000 DONALD E. BEST
EXPIRES: 12/31/2027

CITY OF ASHLAND
Ashland, Oregon

City of Ashland

Ashland Creek Water Treatment Plant

2026

INSTRUMENTATION

OZONE GENERATION SYSTEM P&ID

0 1" 2"

FILENAME	000Y615.dwg
SCALE	NTS

SHEET **000Y615**

GENERAL NOTE:

1. P&IDs SHOW MINIMUM SYSTEM REQUIREMENTS. SELLER RESPONSIBLE FOR INCLUDING ADDITIONAL ITEMS IF NEEDED TO PROVIDE A FULLY FUNCTIONAL SYSTEM.

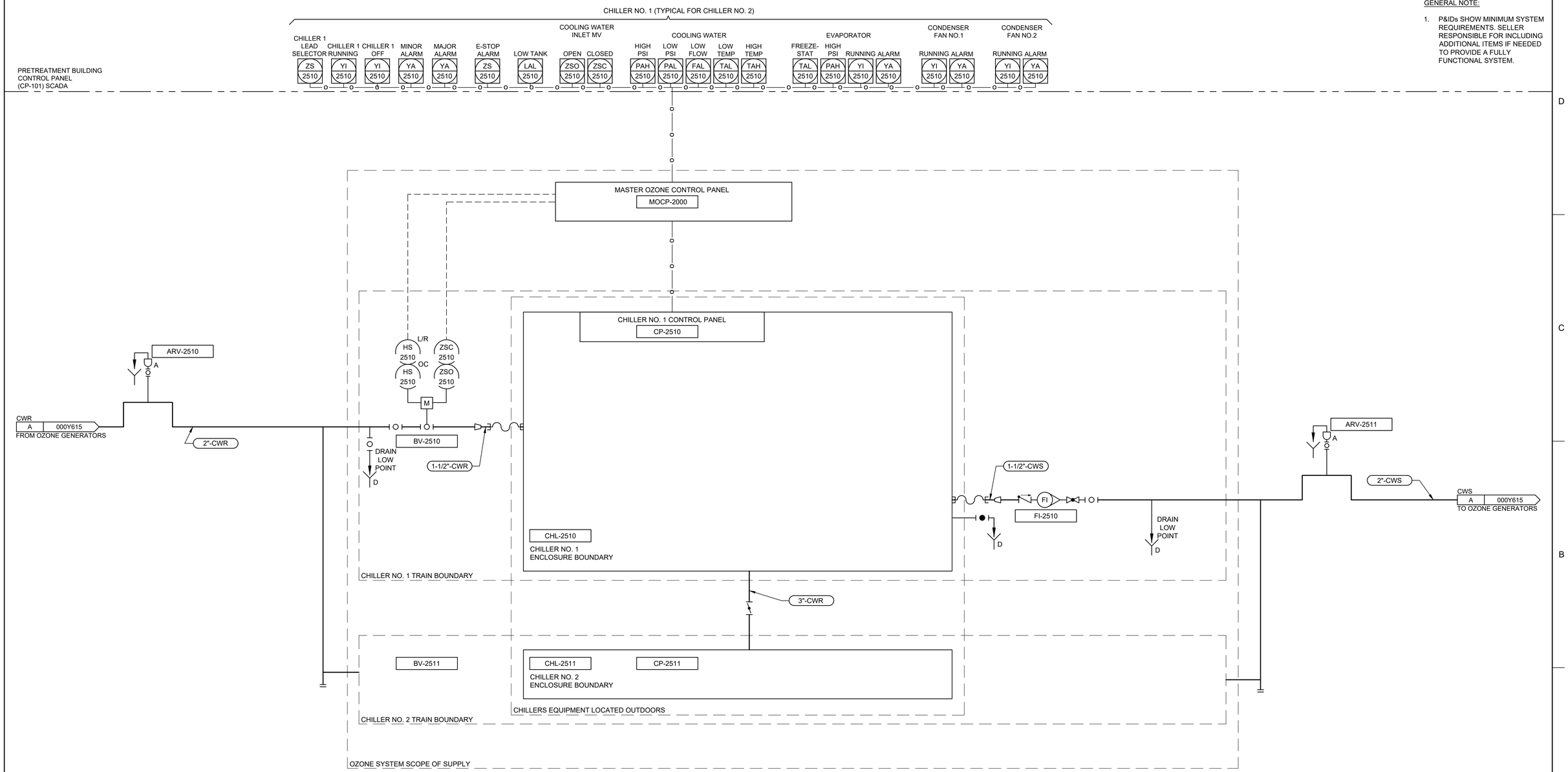

ISSUE	DATE	DESCRIPTION
A	09/2026	ISSUED FOR BIDS

PROJECT MANAGER	PIERRE KWAN
CIVIL	J. MEGRDITCHIAN
STRUCTURAL	P. LINDBLOM
ARCHITECTURAL	V. YANEZ
PROCESS	P. KWAN
MECHANICAL	K. CHEUNG
ELECTRICAL	R. MCCOMB
INSTRUMENTATION	D. BEST
PROJECT NUMBER	10193663

REGISTERED PROFESSIONAL ENGINEER 57142PE DIGITALLY SIGNED OREGON JULY 11, 2000 DONALD E. BEST

EXPIRES: 12/31/2027

CITY OF ASHLAND

Ashland, Oregon

City of Ashland

Ashland Creek Water Treatment Plant

2026

INSTRUMENTATION
OZONE COOLING WATER SYSTEM
OPTION 2 - AIR COOLED CHILLER
P&ID

0 1" 2"

FILENAME	000Y616.dwg
SCALE	NTS

SHEET **000Y616**

GENERAL NOTE:

1. P&IDs SHOW MINIMUM SYSTEM REQUIREMENTS. SELLER RESPONSIBLE FOR INCLUDING ADDITIONAL ITEMS IF NEEDED TO PROVIDE A FULLY FUNCTIONAL SYSTEM.

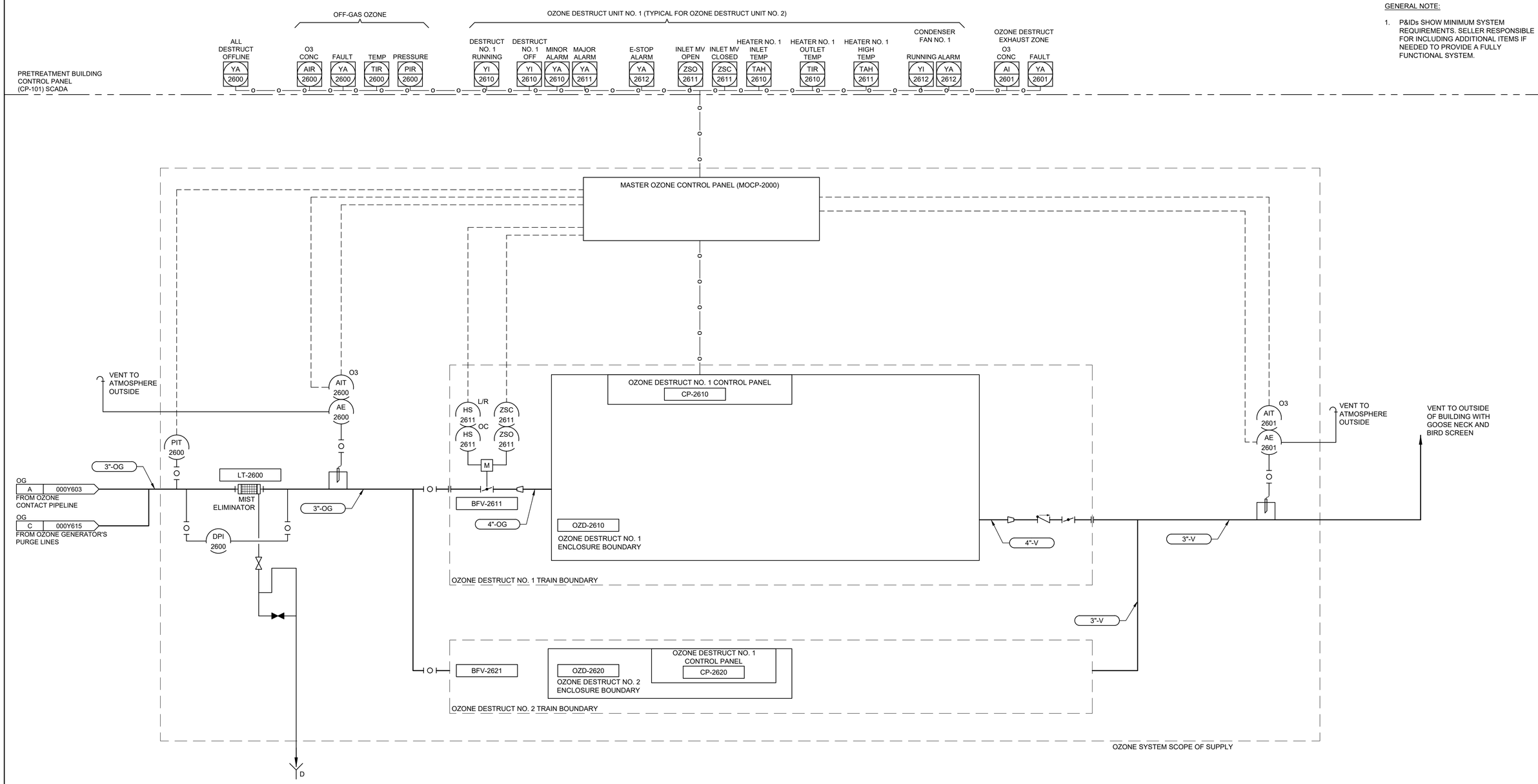

ISSUE	DATE	DESCRIPTION
A	09/2026	ISSUED FOR BIDS

PROJECT MANAGER	PIERRE KWAN
CIVIL	J. MEGRDITCHIAN
STRUCTURAL	P. LINDBLOM
ARCHITECTURAL	V. YANEZ
PROCESS	P. KWAN
MECHANICAL	K. CHEUNG
ELECTRICAL	R. MCCOMB
INSTRUMENTATION	D. BEST
PROJECT NUMBER	10193663

REGISTERED PROFESSIONAL ENGINEER 57142PE DIGITALLY SIGNED OREGON JULY 11, 2000 DONALD E. BEST

EXPIRES: 12/31/2027

CITY OF ASHLAND

Ashland, Oregon

City of Ashland

Ashland Creek Water Treatment Plant

2026

INSTRUMENTATION

OZONE OFF GAS TREATMENT SYSTEM P&ID

0 1" 2"

FILENAME	000Y617.dwg
SCALE	NTS

SHEET **000Y617**

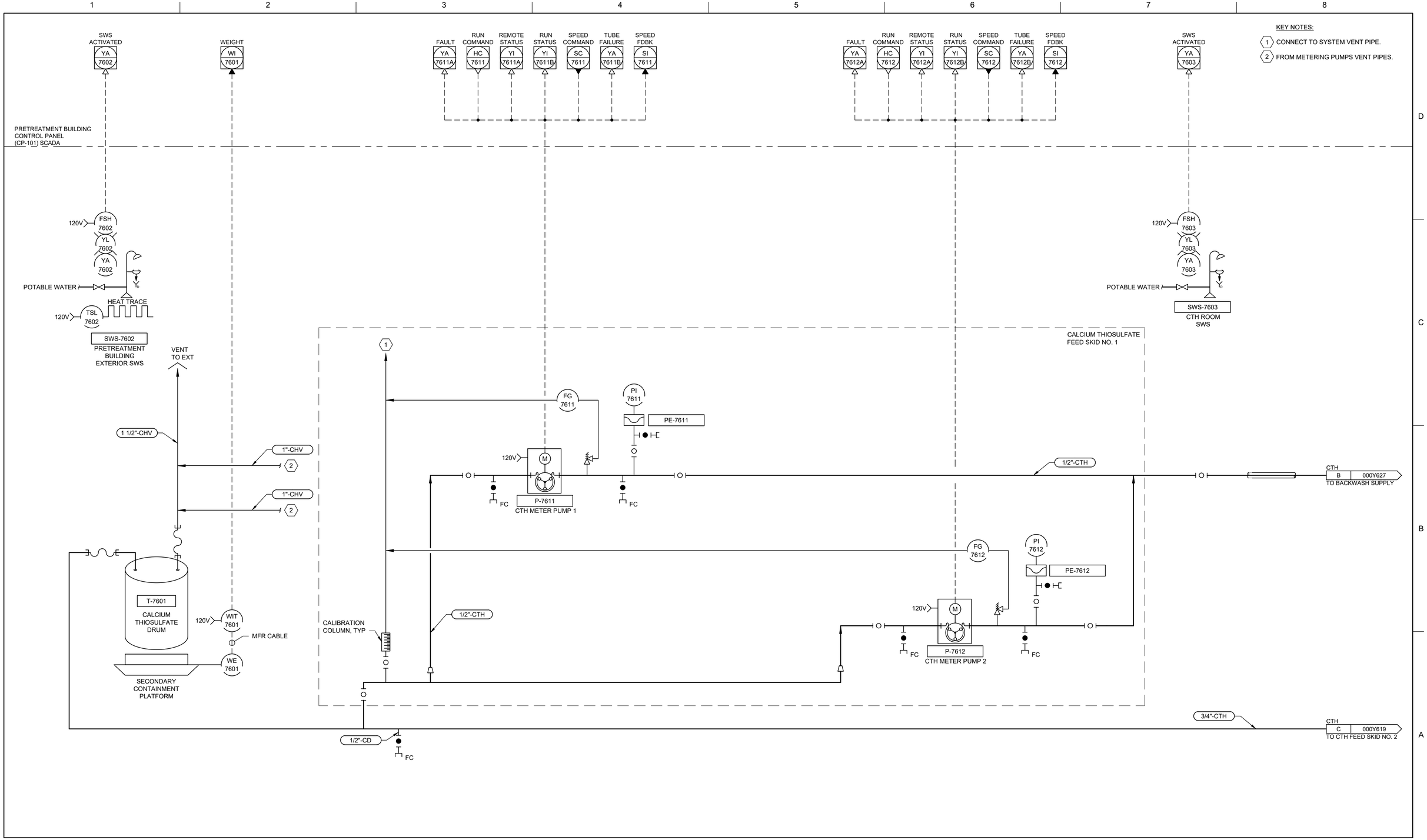

ISSUE	DATE	DESCRIPTION
A	09/2026	ISSUED FOR BIDS

PROJECT MANAGER	PIERRE KWAN
CIVIL	J. MEGRDITCHIAN
STRUCTURAL	P. LINDBLOM
ARCHITECTURAL	V. YANEZ
PROCESS	P. KWAN
MECHANICAL	K. CHEUNG
ELECTRICAL	R. MCCOMB
INSTRUMENTATION	D. BEST
PROJECT NUMBER	10193663

REGISTERED PROFESSIONAL ENGINEER 57142PE DIGITALLY SIGNED OREGON JULY 11, 2006 DONALD E. BEST
EXPIRES: 12/31/2027

CITY OF ASHLAND
Ashland, Oregon

City of Ashland

Ashland Creek Water Treatment Plant

2026

INSTRUMENTATION

CALCIUM THIOSULFATE 1 SYSTEM P&ID

0 1" 2"

FILENAME 000Y618.dwg
SCALE NTS

SHEET **000Y618**

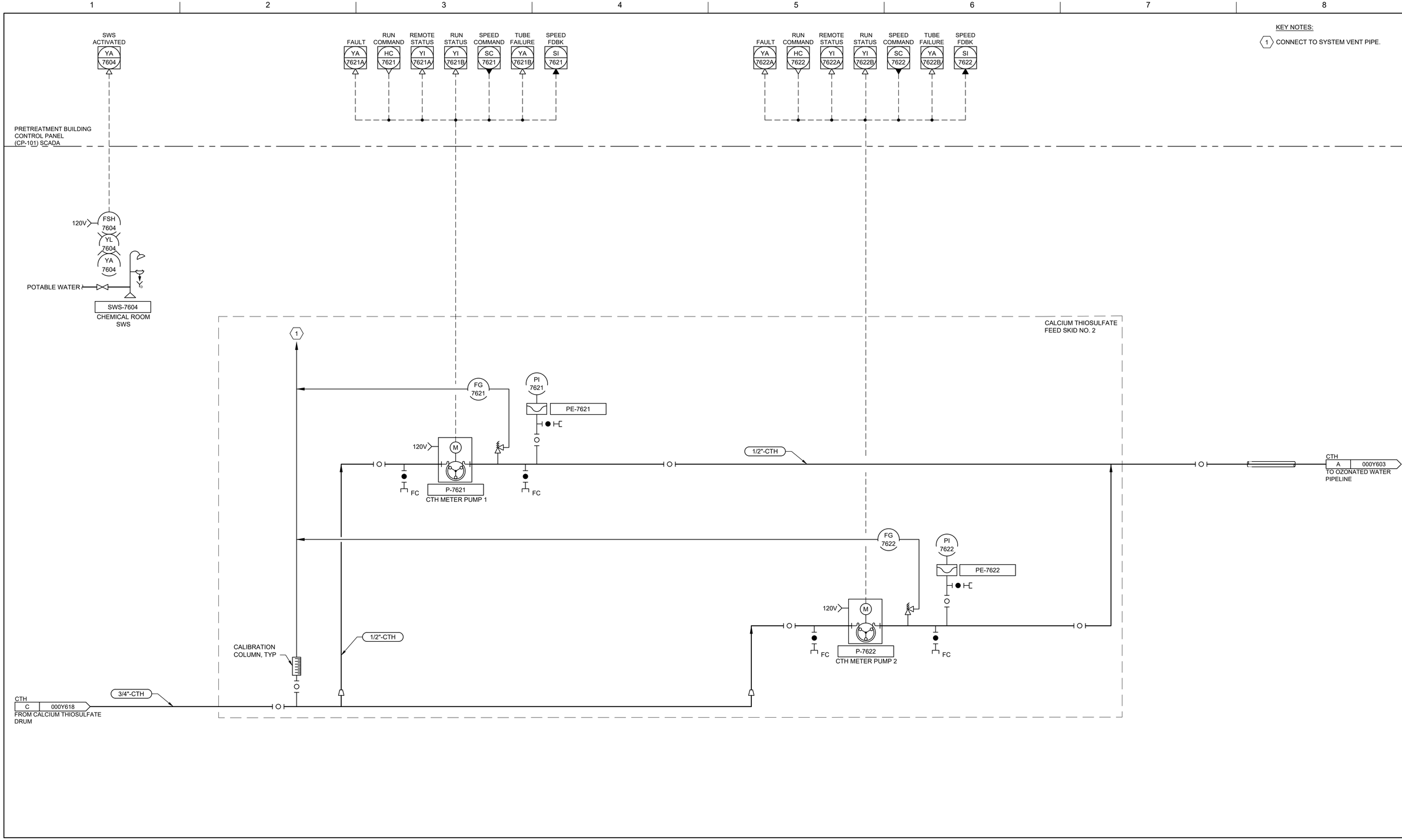

ISSUE	DATE	DESCRIPTION
A	09/2026	ISSUED FOR BIDS

PROJECT MANAGER	PIERRE KWAN
CIVIL	J. MEGRDITCHIAN
STRUCTURAL	P. LINDBLOM
ARCHITECTURAL	V. YANEZ
PROCESS	P. KWAN
MECHANICAL	K. CHEUNG
ELECTRICAL	R. MCCOMB
INSTRUMENTATION	D. BEST
PROJECT NUMBER	10193663

REGISTERED PROFESSIONAL ENGINEER 57142PE DIGITALLY SIGNED OREGON JULY 11, 2006 DONALD E. BEST

EXPIRES: 12/31/2027

CITY OF ASHLAND

Ashland, Oregon

City of Ashland

Ashland Creek Water Treatment Plant

2026

INSTRUMENTATION

CALCIUM THIOSULFATE 2 SYSTEM P&ID

0 1" 2"

FILENAME 000Y619.dwg

SCALE NTS

SHEET **000Y619**

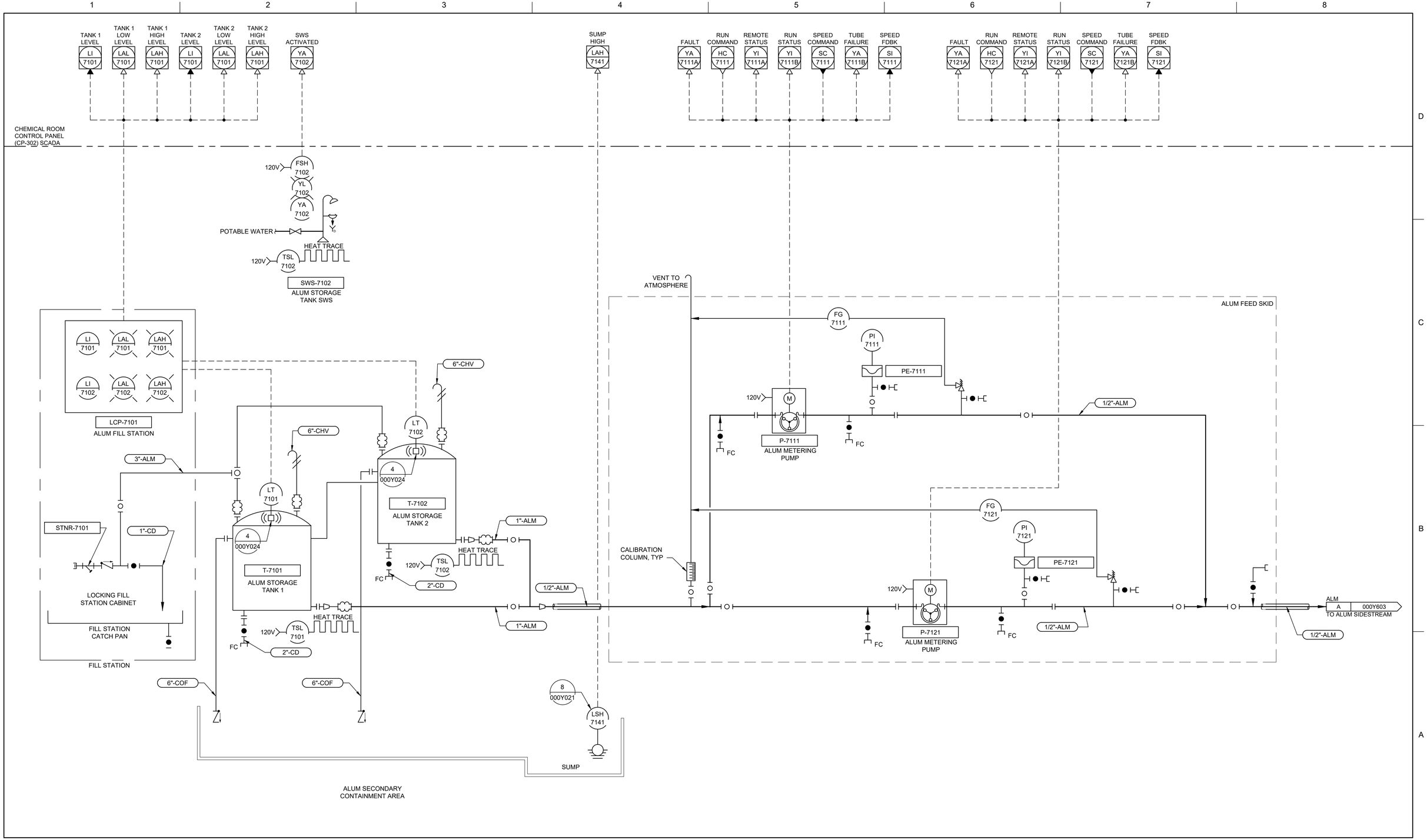

ISSUE	DATE	DESCRIPTION
A	09/2026	ISSUED FOR BIDS

PROJECT MANAGER	PIERRE KWAN
CIVIL	J. MEGRDITCHIAN
STRUCTURAL	P. LINDBLOM
ARCHITECTURAL	V. YANEZ
PROCESS	P. KWAN
MECHANICAL	K. CHEUNG
ELECTRICAL	R. MCCOMB
INSTRUMENTATION	D. BEST
PROJECT NUMBER	10193663

REGISTERED PROFESSIONAL ENGINEER 57142PE DIGITALLY SIGNED OREGON JULY 11, 2006 DONALD E. BEST
EXPIRES: 12/31/2027

CITY OF ASHLAND
Ashland, Oregon

City of Ashland

Ashland Creek Water Treatment Plant

2026

INSTRUMENTATION

ALUM SYSTEM P&ID

0 1" 2"

FILENAME 000Y620.dwg
SCALE NTS

SHEET **000Y620**

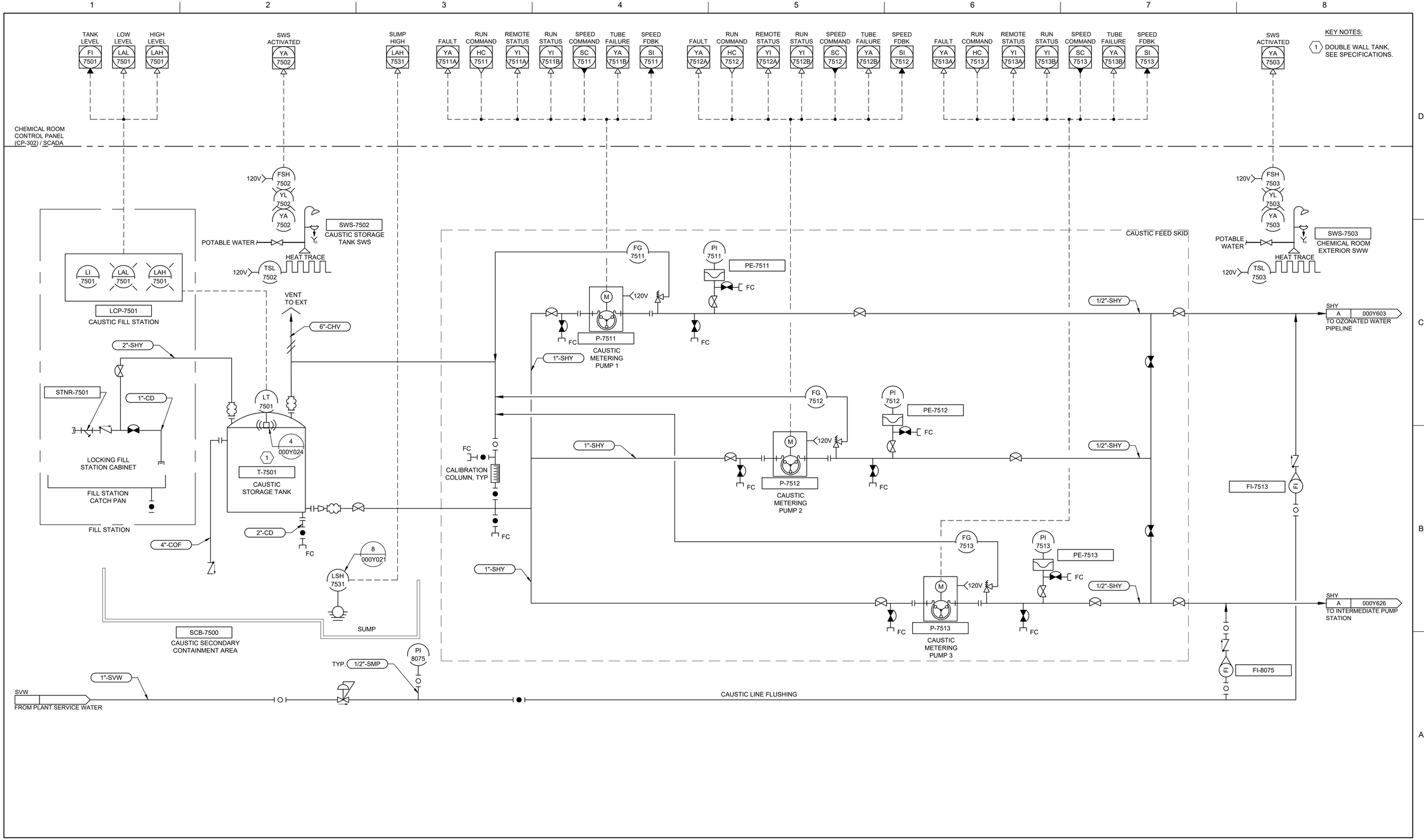

ISSUE	DATE	DESCRIPTION
A	09/2026	ISSUED FOR BIDS

PROJECT MANAGER	PIERRE KWAN
CIVIL	J. MEGRDITCHIAN
STRUCTURAL	P. LINDBLOM
ARCHITECTURAL	V. YANEZ
PROCESS	P. KWAN
MECHANICAL	K. CHEUNG
ELECTRICAL	R. MCCOMB
INSTRUMENTATION	D. BEST
PROJECT NUMBER	10193663

REGISTERED PROFESSIONAL ENGINEER 57142PE
DIGITALLY SIGNED
OREGON
JULY 11, 2000
DONALD E. BEST
EXPIRES: 12/31/2027

CITY OF ASHLAND
Ashland, Oregon

City of Ashland

Ashland Creek Water Treatment Plant

2026

INSTRUMENTATION

CAUSTIC SYSTEM P&ID

0 1" 2"

FILENAME 000Y621.dwg
SCALE NTS

SHEET **000Y621**

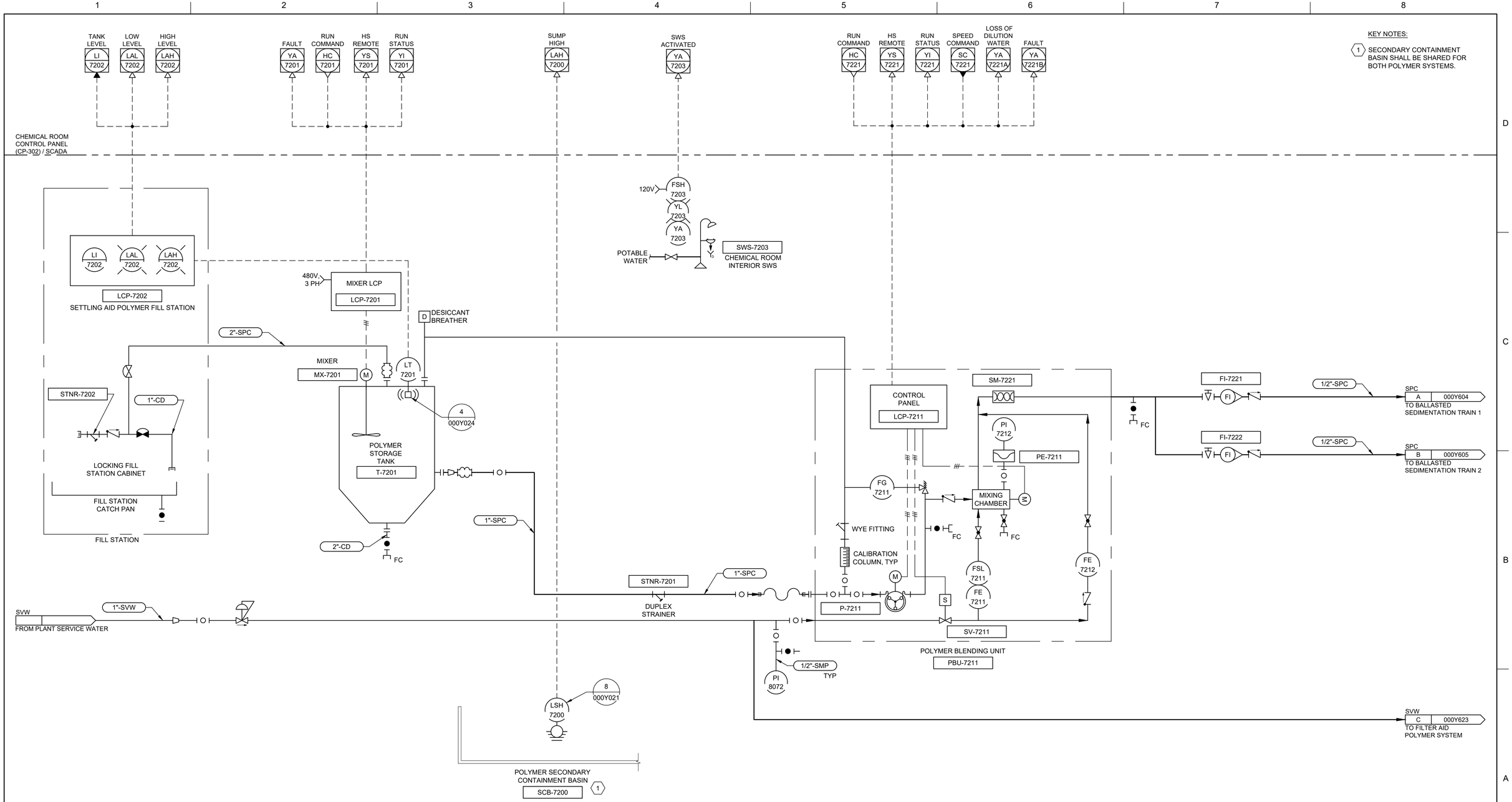

ISSUE	DATE	DESCRIPTION
A	09/2026	ISSUED FOR BIDS

PROJECT MANAGER	PIERRE KWAN
CIVIL	J. MEGRDITCHIAN
STRUCTURAL	P. LINDBLOM
ARCHITECTURAL	V. YANEZ
PROCESS	P. KWAN
MECHANICAL	K. CHEUNG
ELECTRICAL	R. MCCOMB
INSTRUMENTATION	D. BEST
PROJECT NUMBER	10193663

REGISTERED PROFESSIONAL ENGINEER 57142PE DIGITALLY SIGNED OREGON JULY 11, 2000 DONALD E. BEST
EXPIRES: 12/31/2027

CITY OF ASHLAND
Ashland, Oregon

City of Ashland

Ashland Creek Water Treatment Plant

2026

INSTRUMENTATION

SETTLING AID POLMER SYSTEM P&ID

0 1" 2"

FILENAME	000Y622.dwg
SCALE	NTS

SHEET **000Y622**

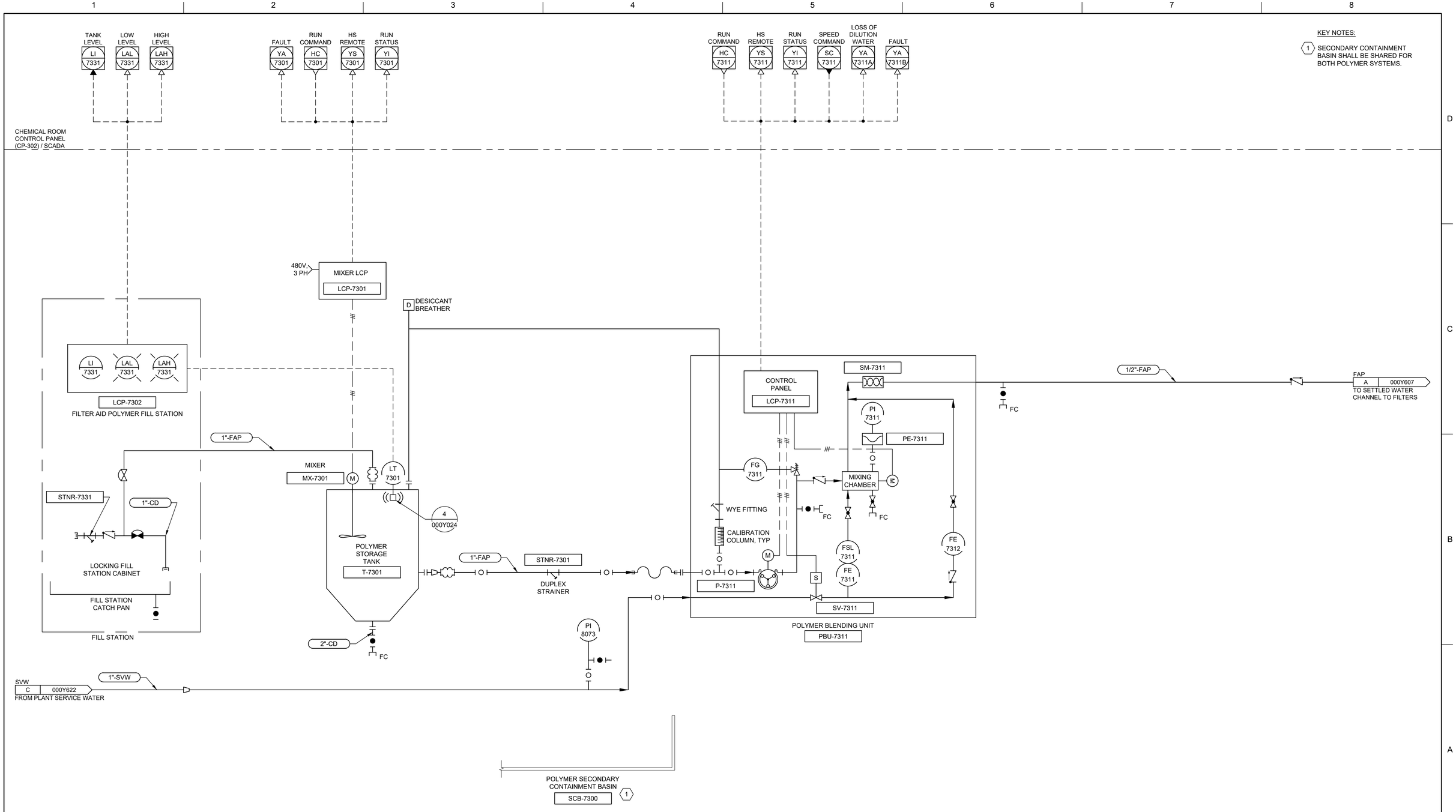

ISSUE	DATE	DESCRIPTION
A	09/2026	ISSUED FOR BIDS

PROJECT MANAGER	PIERRE KWAN
CIVIL	J. MEGRDITCHIAN
STRUCTURAL	P. LINDBLOM
ARCHITECTURAL	V. YANEZ
PROCESS	P. KWAN
MECHANICAL	K. CHEUNG
ELECTRICAL	R. MCCOMB
INSTRUMENTATION	D. BEST
PROJECT NUMBER	10193663

REGISTERED PROFESSIONAL ENGINEER 57142PE DIGITALLY SIGNED OREGON JULY 11, 2000 DONALD E. BEST
EXPIRES: 12/31/2027

CITY OF ASHLAND
Ashland, Oregon

City of Ashland

Ashland Creek Water Treatment Plant

2026

INSTRUMENTATION

FILTER AID POLYMER SYSTEM P&ID

0 1" 2"

FILENAME 000Y623.dwg
SCALE NTS

SHEET **000Y623**

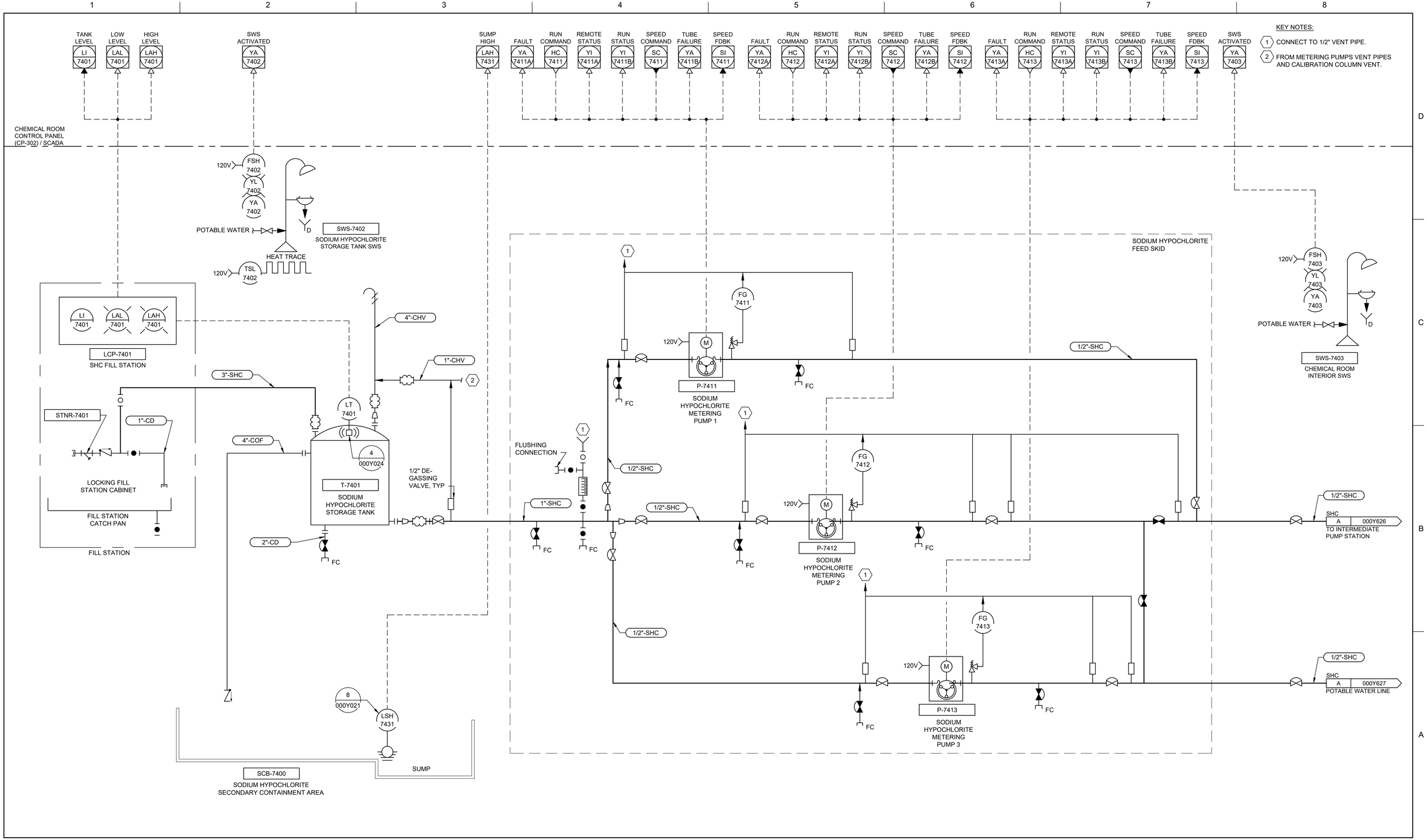

ISSUE	DATE	DESCRIPTION
A	09/2026	ISSUED FOR BIDS

PROJECT MANAGER	PIERRE KWAN
CIVIL	J. MEGRDITCHIAN
STRUCTURAL	P. LINDBLOM
ARCHITECTURAL	V. YANEZ
PROCESS	P. KWAN
MECHANICAL	K. CHEUNG
ELECTRICAL	R. MCCOMB
INSTRUMENTATION	D. BEST
PROJECT NUMBER	10193663

REGISTERED PROFESSIONAL ENGINEER 57142PE DIGITALLY SIGNED OREGON JULY 11, 2000 DONALD E. BEST
EXPIRES: 12/31/2027

CITY OF ASHLAND
Ashland, Oregon

City of Ashland

Ashland Creek Water Treatment Plant

2026

INSTRUMENTATION

SODIUM HYPOCHLORITE SYSTEM P&ID

0 1" 2"

FILENAME 000Y624.dwg
SCALE NTS

SHEET **000Y624**

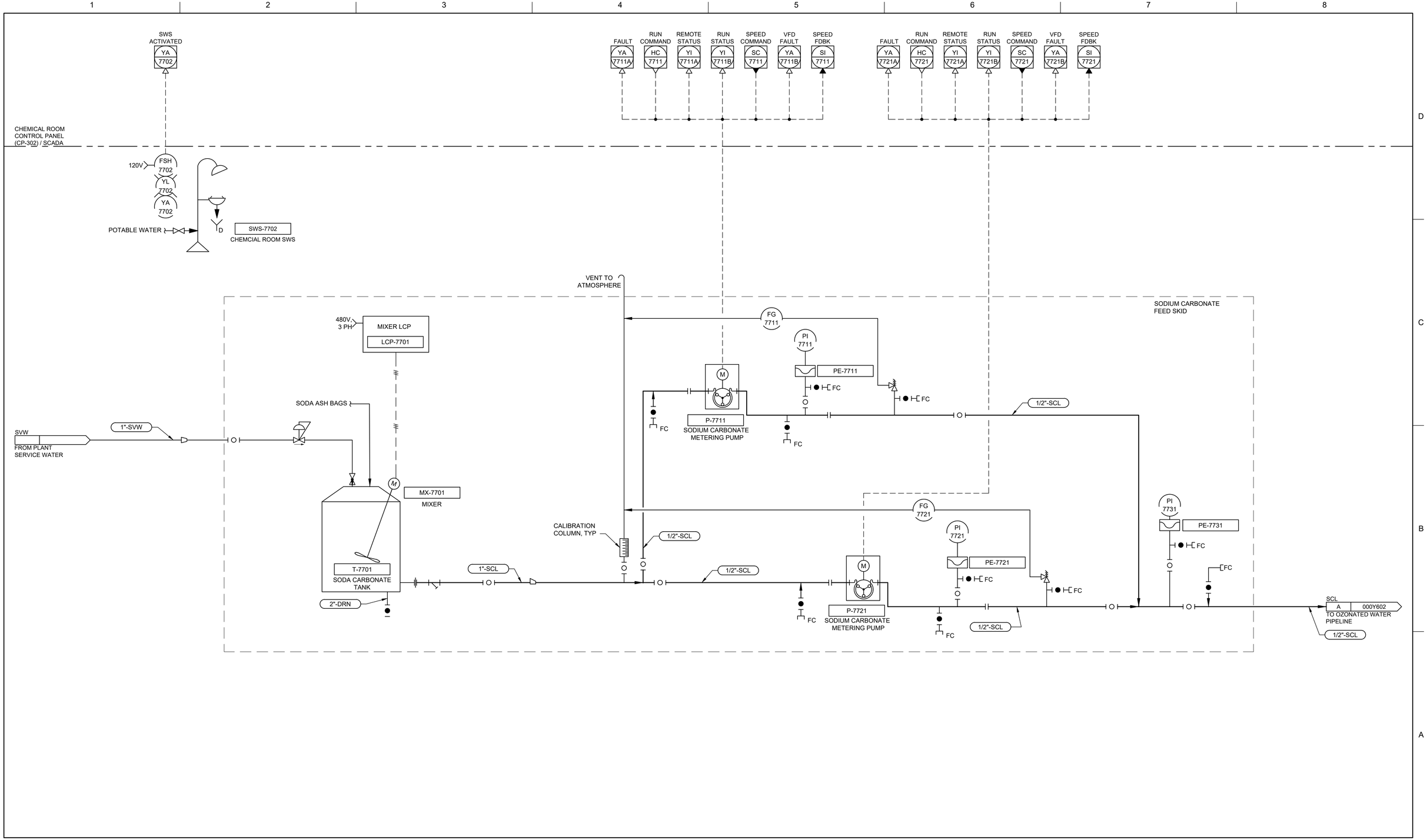

ISSUE	DATE	DESCRIPTION
A	09/2026	ISSUED FOR BIDS

PROJECT MANAGER	PIERRE KWAN
CIVIL	J. MEGRDITCHIAN
STRUCTURAL	P. LINDBLOM
ARCHITECTURAL	V. YANEZ
PROCESS	P. KWAN
MECHANICAL	K. CHEUNG
ELECTRICAL	R. MCCOMB
INSTRUMENTATION	D. BEST
PROJECT NUMBER	10193663

REGISTERED PROFESSIONAL ENGINEER 57142PE DIGITALLY SIGNED OREGON JULY 11, 2006 DONALD E. BEST

EXPIRES: 12/31/2027

CITY OF ASHLAND

Ashland, Oregon

City of Ashland

Ashland Creek Water Treatment Plant

2026

INSTRUMENTATION

SODIUM CARBONATE (LIQUID) SYSTEM P&ID

0 1" 2"

FILENAME 000Y625.dwg

SCALE NTS

SHEET **000Y625**

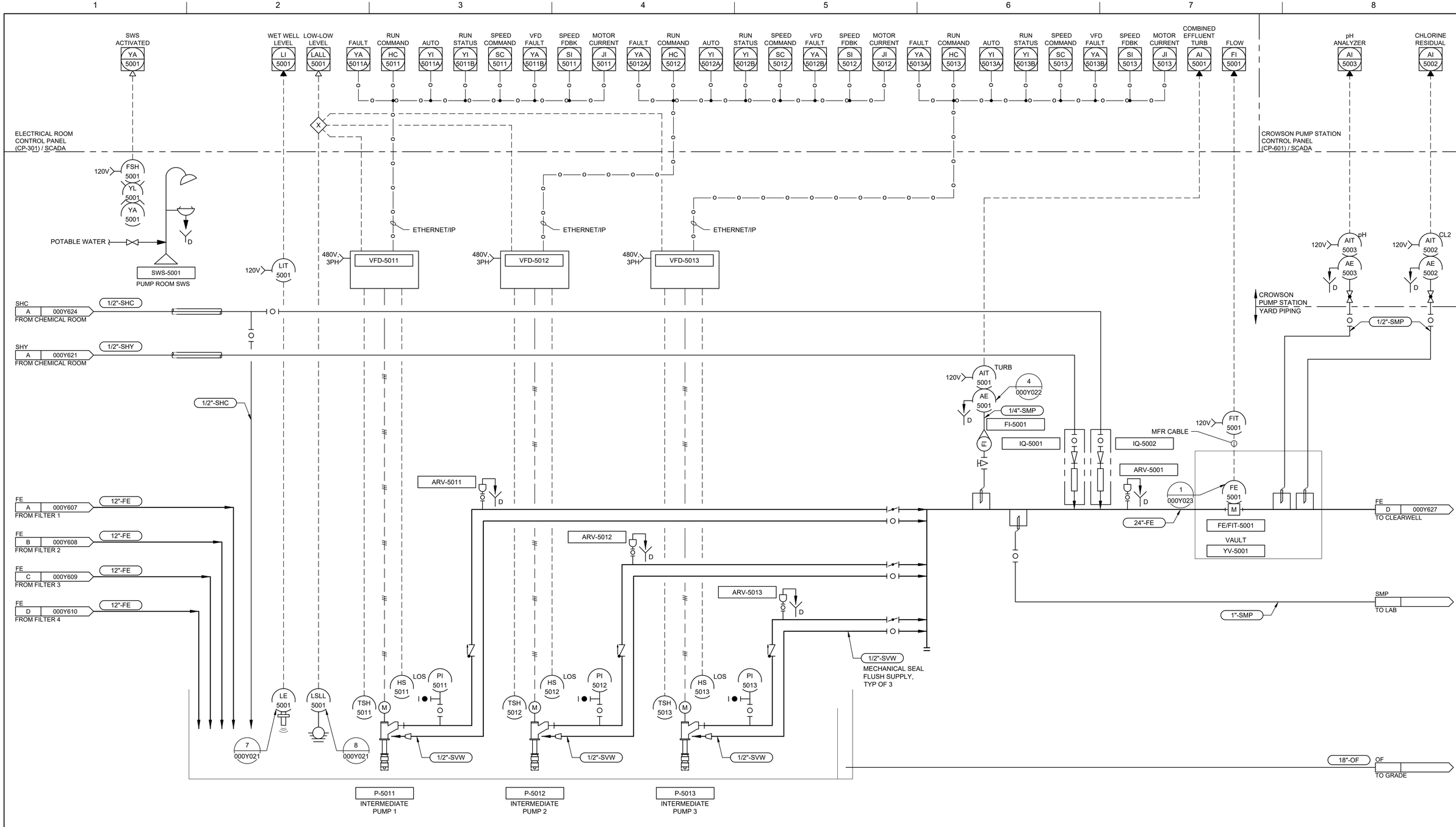

INTERMEDIATE PUMP STATION

ISSUE	DATE	DESCRIPTION
A	09/2026	ISSUED FOR BIDS

PROJECT MANAGER	PIERRE KWAN
CIVIL	J. MEGRDITCHIAN
STRUCTURAL	P. LINDBLOM
ARCHITECTURAL	V. YANEZ
PROCESS	P. KWAN
MECHANICAL	K. CHEUNG
ELECTRICAL	R. MCCOMB
INSTRUMENTATION	D. BEST
PROJECT NUMBER	10193663

REGISTERED PROFESSIONAL ENGINEER 57142PE DIGITALLY SIGNED OREGON JULY 11, 2026 DONALD E. BEST
EXPIRES: 12/31/2027

CITY OF ASHLAND
Ashland, Oregon

City of Ashland

Ashland Creek Water Treatment Plant

2026

INSTRUMENTATION

INTERMEDIATE PUMP STATION P&ID

0 1" 2"

FILENAME 000Y626.dwg
SCALE NTS

SHEET **000Y626**

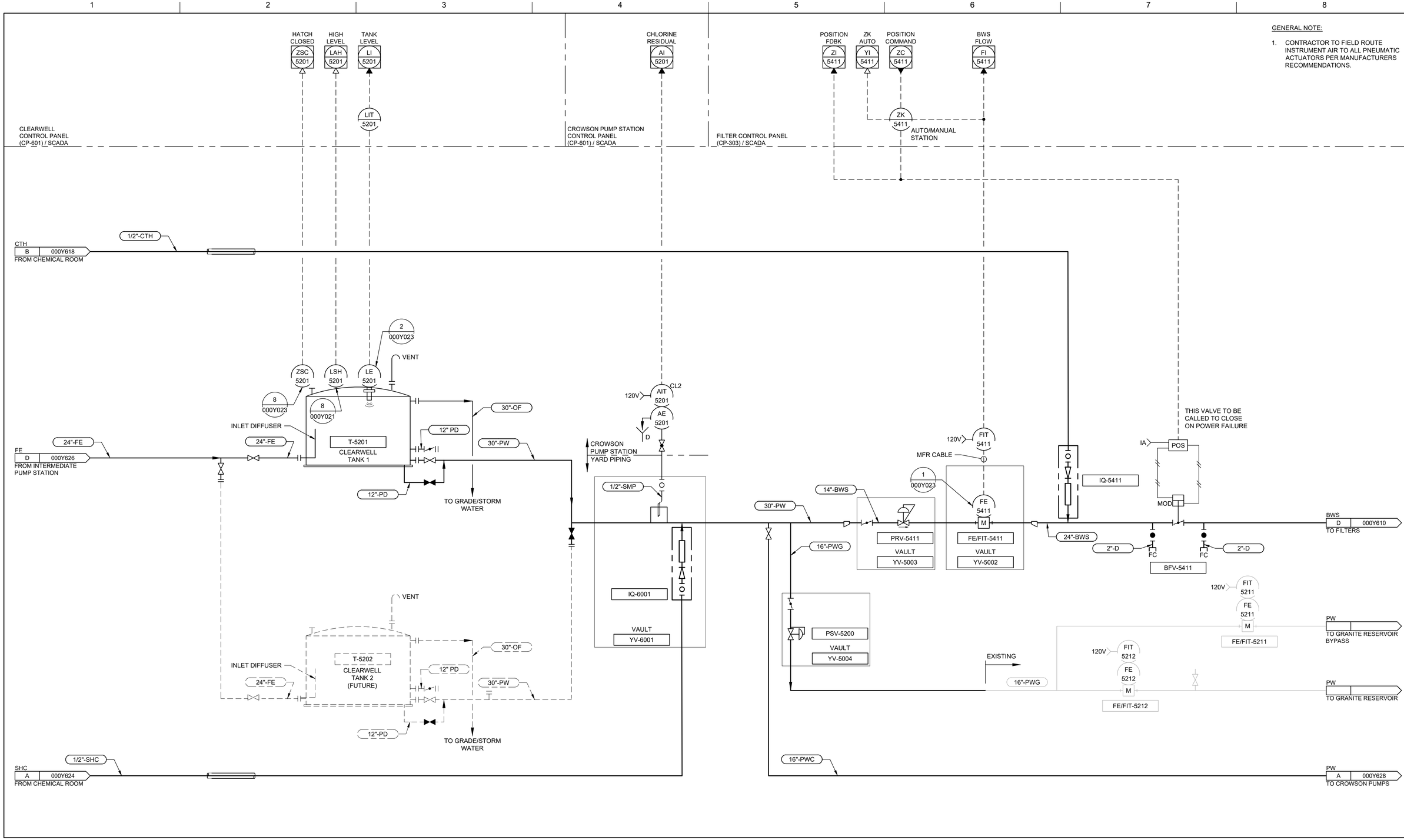

ISSUE	DATE	DESCRIPTION
A	09/2026	ISSUED FOR BIDS

PROJECT MANAGER	PIERRE KWAN
CIVIL	J. MEGRDITCHIAN
STRUCTURAL	P. LINDBLOM
ARCHITECTURAL	V. YANEZ
PROCESS	P. KWAN
MECHANICAL	K. CHEUNG
ELECTRICAL	R. MCCOMB
INSTRUMENTATION	D. BEST
PROJECT NUMBER	10193663

REGISTERED PROFESSIONAL ENGINEER 57142PE
DIGITALLY SIGNED
OREGON
JULY 11, 2006
DONALD E. BEST
EXPIRES: 12/31/2027

CITY OF ASHLAND
Ashland, Oregon

City of Ashland

Ashland Creek Water Treatment Plant

2026

INSTRUMENTATION

CLEARWELL P&ID

0 1" 2"

FILENAME	000Y627.dwg
SCALE	NTS

SHEET **000Y627**

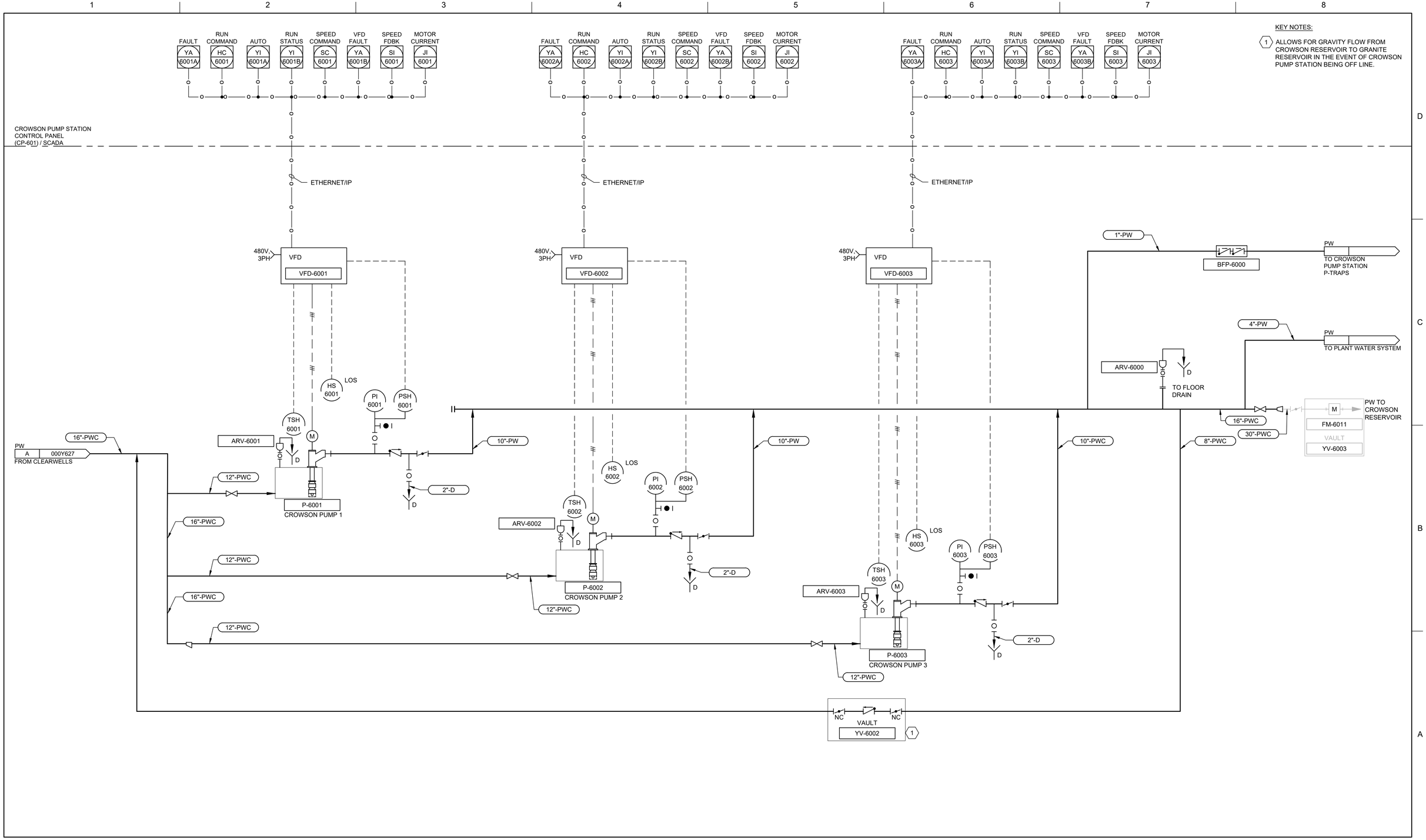

ISSUE	DATE	DESCRIPTION
A	09/2026	ISSUED FOR BIDS

PROJECT MANAGER	PIERRE KWAN
CIVIL	J. MEGRDITCHIAN
STRUCTURAL	P. LINDBLOM
ARCHITECTURAL	V. YANEZ
PROCESS	P. KWAN
MECHANICAL	K. CHEUNG
ELECTRICAL	R. MCCOMB
INSTRUMENTATION	D. BEST
PROJECT NUMBER	10193663

REGISTERED PROFESSIONAL ENGINEER 57142PE DIGITALLY SIGNED OREGON JULY 11, 2000 DONALD E. BEST
EXPIRES: 12/31/2027

CITY OF ASHLAND
Ashland, Oregon

City of Ashland

Ashland Creek Water Treatment Plant

2026

INSTRUMENTATION

CROWSON PUMP STATION P&ID

0 1" 2"

FILENAME 000Y628.dwg
SCALE NTS

SHEET **000Y628**

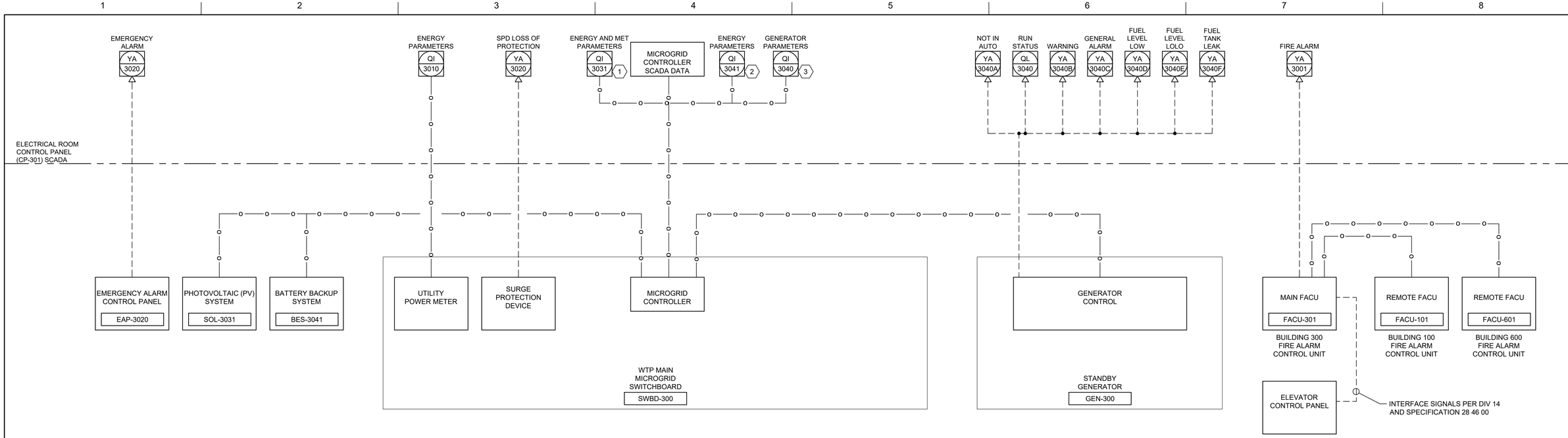

KEY NOTES:

1 PV SYSTEM ENERGY AND MET PARAMETERS:
- PV OUTPUT POWER
- PV OUTPUT CURRENT
- PV POWER FACTOR
- INVERTER 1 GENERAL FAULT
- INVERTER 2 GENERAL FAULT
- INVERTER 3 GENERAL FAULT
- INVERTER 4 GENERAL FAULT
- BACK OF PANEL TEMPERATURE
- AMBIENT TEMPERATURE
- WIND SPEED
- WIND DIRECTION
- GLOBAL HORIZONTAL IRRADIANCE
- PLANE OF ARRAY IRRADIANCE

2 SEE SPECIFICATION 48 17 00 FOR PARAMETERS AND DATA REQUIREMENTS.

2 SEE GENERATOR SPECIFICATION 26 32 14 FOR DATA REQUIREMENTS.

ISSUE	DATE	DESCRIPTION
A	09/2026	ISSUED FOR BIDS

PROJECT MANAGER	PIERRE KWAN
CIVIL	J. MEGRDITCHIAN
STRUCTURAL	P. LINDBLOM
ARCHITECTURAL	V. YANEZ
PROCESS	P. KWAN
MECHANICAL	K. CHEUNG
ELECTRICAL	R. MCCOMB
INSTRUMENTATION	D. BEST
PROJECT NUMBER	10193663

REGISTERED PROFESSIONAL ENGINEER 57142PE DIGITALLY SIGNED OREGON JULY 11, 2000 DONALD E. BEST

EXPIRES: 12/31/2027

CITY OF ASHLAND

Ashland, Oregon

City of Ashland

Ashland Creek Water Treatment Plant

2026

INSTRUMENTATION

MISCELLANEOUS SYSTEM MONITORING P&ID

0 1" 2"

FILENAME 000Y629.dwg

SCALE NTS

SHEET **000Y629**

SURVEY SYMBOLOGY

SYMBOL	DESCRIPTION
	MONUMENT
	MONUMENT IN CASE
	CHISLED "X"
	NAIL
	HUB AND TACK
	SPIKE
	NAIL/FLASHER
	REBAR & ORANGE PLASTIC CAP
	REBAR & RED PLASTIC CAP
	METAL SIGN POST
	WOOD SIGN POST
	SANITARY SEWER MANHOLE
	STORM DRAIN MANHOLE
	CATCH BASIN
	WATER METER
	GAS VALVE
	GAS METER
	TRAFFIC JUNCTION BOX
EL	ELECTRICAL JUNCTION BOX
PM	POWER METER
TC	TELECOMMUNICATION JUNCTION BOX
TV	CABLE TV JUNCTION BOX
	JUNCTION BOX
P	POWER VAULT
T	TELEPHONE VAULT
T	TELEPHONE RISER
	TRANSFORMER
	UTILITY POLE
UG	UTILITY POLE W/CONDUIT
	GUY ANCHOR
GP	GUY POLE
	TRAFFIC SIGNAL POLE W/ LUMINAIRE
	LUMINAIRE
	TRANSMISSION TOWER
	METAL SIGN POST
	METAL SIGN POST
GTP	GATE POST
M MB	MAIL BOX
	TEST HOLE (WITH FIELD IDENTIFIER)
	YARD LIGHT
	GRATE INLET
W	WATER MANHOLE
	WATER VALVE
	WATER BLOWOFF
	FIRE HYDRANT
	CARSONITE POST
MW	MONITORING WELL

SURVEY SYMBOLOGY (CONT.)

LINETYPE	DESCRIPTION
G	GAS LINE
IRR	IRRIGATION
SD	STORM DRAIN OR CULVERT
D	DRAIN PIPE
SS	SANITARY SEWER
W	WATER LINE
UGE	UNDERGROUND POWER
UGF	UNDERGROUND FIBER OPTIC
UGT	UNDERGROUND TELEPHONE
UGTV	UNDERGROUND TELEVISION
OHE	OVERHEAD POWER
OHF	OVERHEAD FIBER OPTIC
OHT	OVERHEAD TELEPHONE
OHTV	OVERHEAD TELEVISION
GUY	OVERHEAD GUYWIRE
PD	PUMPED DRAIN
F	TEMPORARY FIBER (ON GROUND)
X X	FENCE

CIVIL SYMBOLOGY

SYMBOL OR LINETYPE	DESCRIPTION
	ASPHALT (PLAN OR SMALL-SCALE SECTION)
	GRAVEL SURFACING (PLAN)
	CONCRETE (PLAN AND/OR SECTION)
	EARTH (SECTION)
	CRUSHED SURFACING BASE COURSE (SECTION)
	RIPRAP (PLAN AND/OR SECTION)
	SAND (SECTION)
	ROADWAY EXCAVATION
	CLEARING AND GRUBBING
	STRUCTURE EXCAVATION
	VEGETATION LINE
	CONIFEROUS TREE
	DECIDUOUS TREE
	BUSH/SHRUB

CIVIL SYMBOLOGY (CONT.)

SYMBOL OR LINETYPE	DESCRIPTION
MH 29	SANITARY SEWER MANHOLE
CB	CATCH BASIN
	CATCH BASIN INSERT
SU	NEW SURVEY MONUMENT
	SETTLEMENT PLATE
	HORIZONTAL CONTROL LOCATION AND CALLOUT
###	SOIL BORING
TP-101	SOIL TEST PIT
	CONE PENETRATION TEST
	WETLAND DELINEATION SAMPLE PLOT
	UTILITY POTHOLE
75.8	SURFACE SPOT ELEVATION
	DIRECTION OF SURFACE RUNOFF
	CUT SLOPE
	FILL SLOPE
	DITCH OR STREAM CENTERLINE
	TOP/ TOE OF SLOPE
ROW	RIGHT OF WAY LINES
PE	PERMANENT EASEMENT
TCE	TEMPORARY CONSTRUCTION EASEMENT
	EXISTING PERMANENT EASEMENT
	PROPERTY LINES
	RIGHT OF WAY CENTERLINE
X X	EXISTING FENCE OR GATE
x	PROPOSED FENCE OR GATE
	SILT FENCE
CS	COMPOST SOCK
HVF	HIGH VISIBILITY CONSTRUCTION FENCE
HVSF HVSF	HIGH VISIBILITY SILT FENCE
	TREE PROTECTION FENCING
2221	EXISTING MAJOR CONTOURS AND LABELS
2225	EXISTING MINOR CONTOURS AND LABELS
2221	MAJOR CONTOURS AND LABELS
2225	MINOR CONTOURS AND LABELS
	CONSTRUCTION LIMIT
	WETLAND BUFFER
	SHORELINE JURISDICTION
	CREEK EDGE
	STREAM BUFFER
OHW	ORDINARY HIGH WATER
EP	EDGE OF PAVEMENT
	EDGE OF DIRT ROAD
	CULVERT
	STORM DRAIN PIPELINE
	WATER PIPE CENTERLINE
175+00	STATIONING AND TICKS
	WATER PIPE
	WATER PIPE
	GUARD RAIL

GENERAL SYMBOLOGY

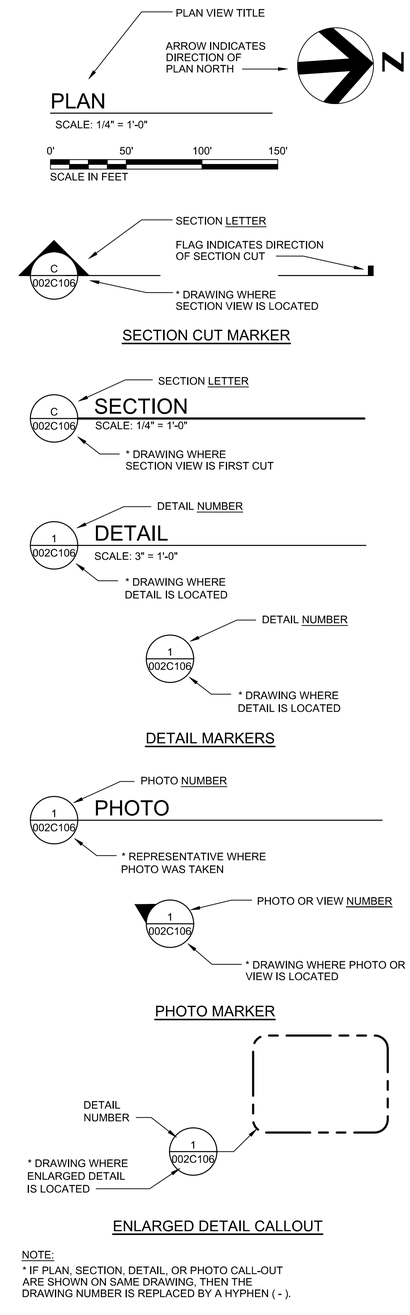

NOTE:
* IF PLAN, SECTION, DETAIL, OR PHOTO CALL-OUT ARE SHOWN ON SAME DRAWING, THEN THE DRAWING NUMBER IS REPLACED BY A HYPHEN (-).

NOTE SYMBOLOGY

SYMBOL OR LINETYPE	DESCRIPTION
1	CONSTRUCTION NOTE
1	KEY NOTE
24-SD	PIPE NOTE (SIZE/TYPE)

ABBREVIATIONS

CONC	CONCRETE
CJ	CONSTRUCTION JOINT
CL	CENTER LINE
DIA	DIAMETER
EF	EACH FACE
EL	ELEVATION
HAT	HIGH ASTRONOMICAL TIDE
HP	HIGH POINT
HTL	HIGH TIDE LINE
LP	LOW POINT
OC	ON CENTER
PE	PERMANENT EASEMENT
ROW	RIGHT OF WAY
TCE	TEMPORARY CONSTRUCTION EASEMENT
TOC	TOP OF CONCRETE, TOP OF COLUMN
TOF	TOP OF FOOTING, TOP OF FOUNDATION
TOW	TOP OF WALL
TYP	TYPICAL
VC	VERTICAL CURVE
VPI	VERTICAL POINT OF INFLECTION
WWTP	WASTEWATER TREATMENT PLANT

GENERAL NOTES

1. THIS IS A STANDARD DRAWING SHOWING COMMON SYMBOLOGY. SOME SYMBOLS AND LINE TYPES MAY NOT CURRENTLY BE IN USE.
2. SCREENING OR SHADING OF WORK IS USED TO INDICATE EXISTING COMPONENTS OR TO DE-EMPHASIZE PROPOSED IMPROVEMENTS TO HIGHLIGHT SELECTED TRADE WORK. REFER TO CONTEXT OF EACH DRAWING FOR USAGE.
3. EROSION CONTROL SHEETS, 000C004-000C011 CONTAIN ADDITIONAL EROSION CONTROL SPECIFIC SYMBOLOGY.

ISSUE	DATE	DESCRIPTION
A	09/2026	ISSUED FOR BIDS

PROJECT MANAGER	PIERRE KWAN
CIVIL	J. MEGRDITCHIAN
STRUCTURAL	P. LINDBLOM
ARCHITECTURAL	V. YANEZ
PROCESS	P. KWAN
MECHANICAL	K. CHEUNG
ELECTRICAL	R. MCCOMB
INSTRUMENTATION	D. BEST
PROJECT NUMBER	10193663

REGISTERED PROFESSIONAL ENGINEER 86507PE DIGITALLY SIGNED OREGON January 09, 2026 JOHN WILLIAM MEGRDITCHIAN
EXPIRES: 12/31/2026

CITY OF ASHLAND
Ashland, Oregon

City of Ashland

Ashland Creek Water Treatment Plant

2026

CIVIL

LEGEND AND SYMBOLOGY

0 1" 2"

FILENAME 000C001.dwg
SCALE 1" = 1'

SHEET **000C001**

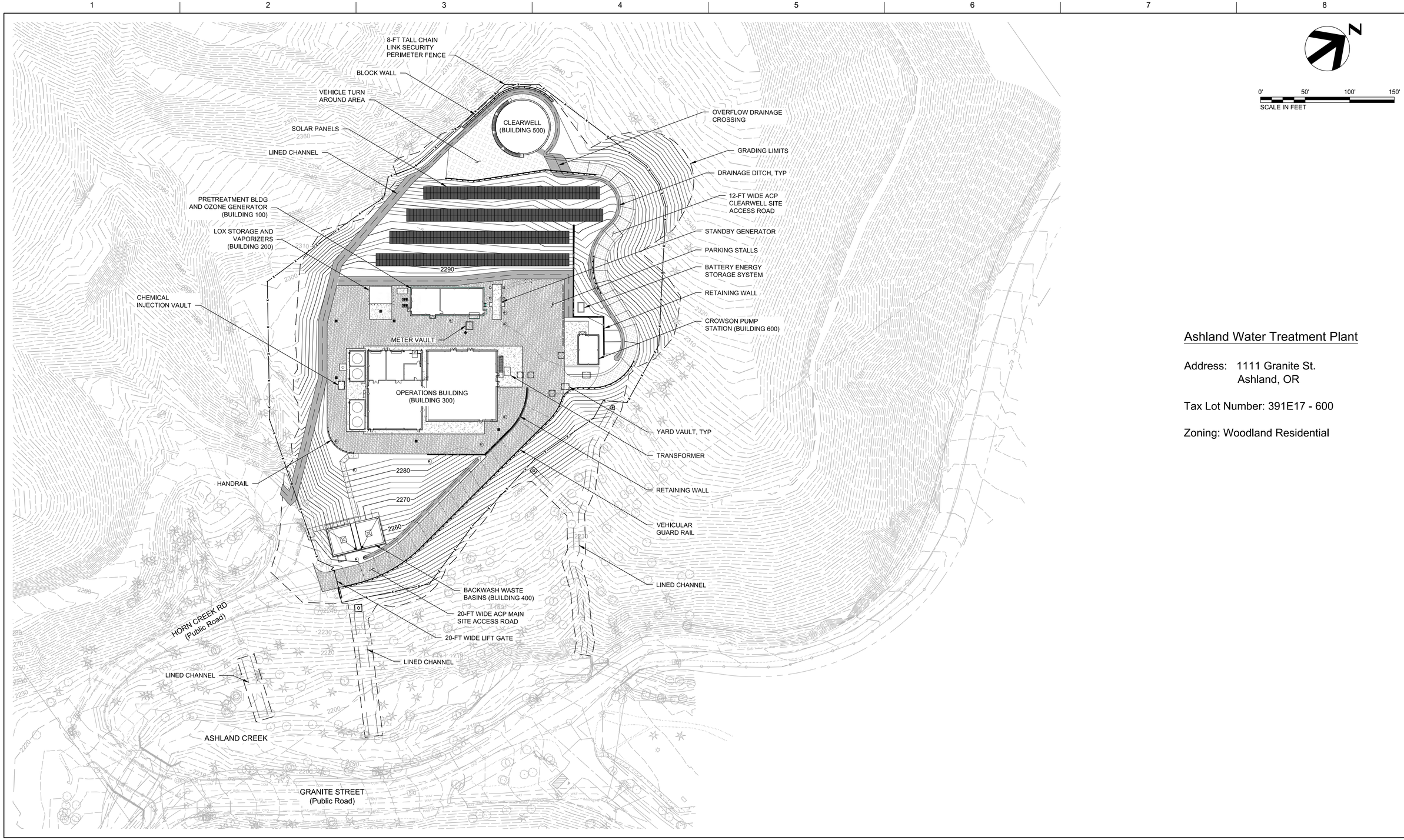

Ashland Water Treatment Plant

Address: 1111 Granite St.
Ashland, OR

Tax Lot Number: 391E17 - 600

Zoning: Woodland Residential

ISSUE	DATE	DESCRIPTION
A	09/2026	ISSUED FOR BIDS

PROJECT MANAGER	PIERRE KWAN
CIVIL	J. MEGRDITCHIAN
STRUCTURAL	P. LINDBLOM
ARCHITECTURAL	V. YANEZ
PROCESS	P. KWAN
MECHANICAL	K. CHEUNG
ELECTRICAL	R. MCCOMB
INSTRUMENTATION	D. BEST
PROJECT NUMBER	10193663

REGISTERED PROFESSIONAL ENGINEER
86507PE
DIGITALLY SIGNED
Date: 2026.09.29 09:13:45 -07'00'
OREGON
January 09, 2026
JOHN WILLIAM MEGRDITCHIAN
EXPIRES: 12/31/2026

CITY OF ASHLAND
Ashland, Oregon

City of Ashland

Ashland Creek Water Treatment Plant

2026

CIVIL OVERALL SITE LAYOUT PLAN

0 1" 2"

FILENAME 000C002.dwg
SCALE 1" = 50'

SHEET **000C002**

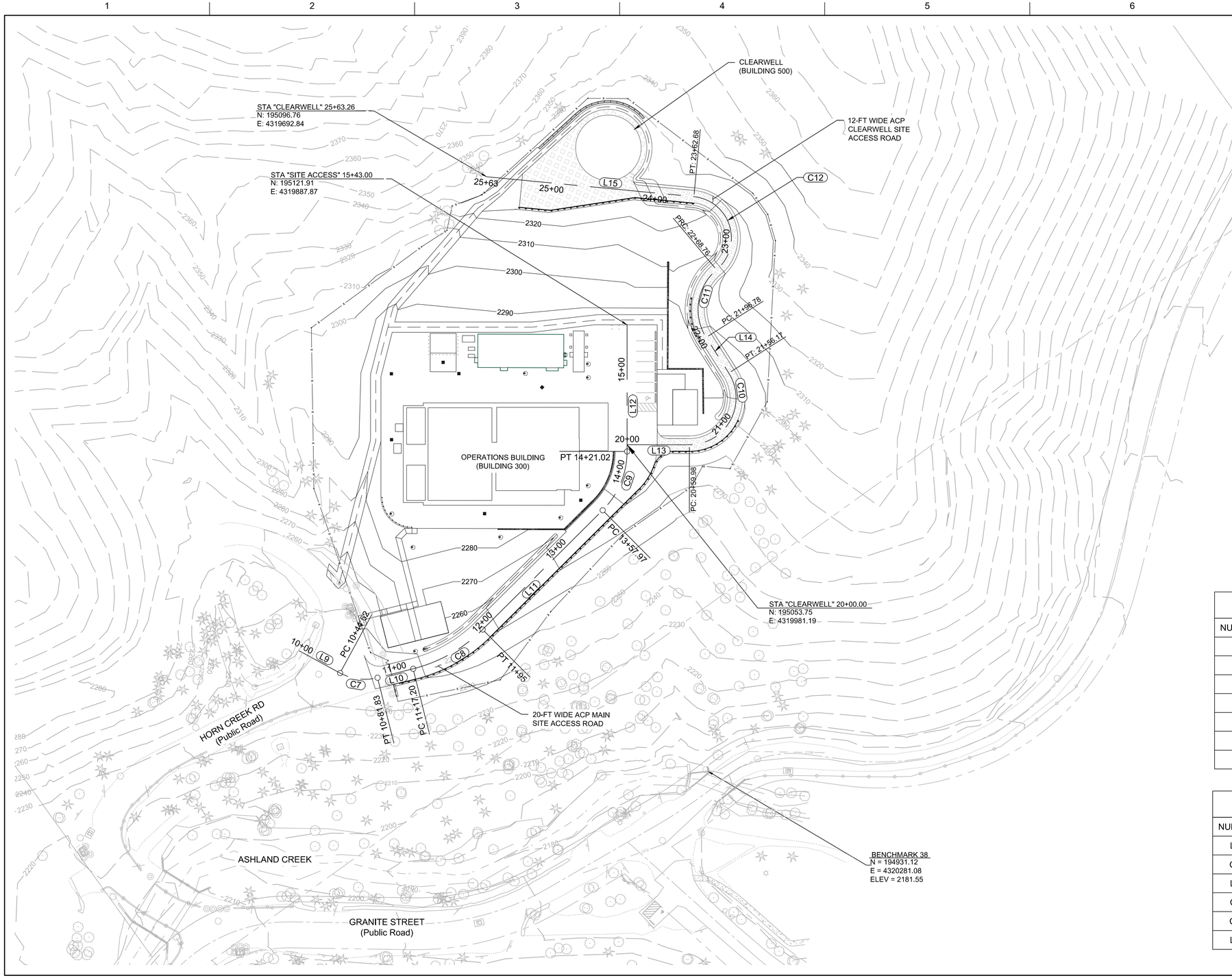

SURVEY NOTES:

1. SURVEY PERFORMED BY AKS ENGINEERING AND FORESTRY, LLC APRIL 02, 2026. SURVEYOR OF RECORD: LOGAN THOMAS MILES, LICENSE NO. 65452PLS.
2. UTILITIES SHOWN ARE BASED ON:
   * PUBLIC UNDERGROUND UTILITY LOCATE MARKINGS AS PROVIDED BY OTHERS, PROVIDED PER UTILITY LOCATE TICKET NUMBERS 26055118, 26055119, 26055120, AND 26055121.
   * THE SURVEYOR MAKES NO GUARANTEE THAT THE UNDERGROUND LOCATES REPRESENT THE ONLY UTILITIES IN THE AREA. CONTRACTORS ARE RESPONSIBLE FOR VERIFYING ALL EXISTING CONDITIONS PRIOR TO BEGINNING CONSTRUCTION.
3. FIELD WORK WAS CONDUCTED MARCH 3-12, 2026.
4. HORIZONTAL DATUM: COORDINATES ARE BASED ON OREGON STATE PLANE SOUTH ZONE 3602, NAD83(2011), EPOCH 2010.0000, INTERNATIONAL FEET. BROUGHT TO GROUND AT A CENTRAL COORDINATE POINT NORTHING:195014.346 EASTING:4319812.367 WITH A SCALE FACTOR OF 1.0000638962 AND A MERIDIAN CONVERGENCE ANGLE OF -1°31'05".
5. VERTICAL DATUM: ELEVATIONS ARE BASED ON CITY OF ASHLAND BENCHMARK NO. 43. LOCATED ON A PILLAR ON THE STAIRS AT THE FRONT OF THE ASHLAND LIBRARY. ELEVATION = 1950.705 FEET, NGVD29(56).
6. THIS IS NOT A PROPERTY BOUNDARY SURVEY TO BE RECORDED WITH THE COUNTY SURVEYOR. BOUNDARIES MAY BE PRELIMINARY AND SHOULD BE CONFIRMED WITH THE STAMPING SURVEYOR PRIOR TO RELYING ON FOR DETAILED DESIGN OR CONSTRUCTION.
7. BUILDING FOOTPRINTS ARE MEASURED TO SIDING UNLESS NOTED OTHERWISE. CONTACT SURVEYOR WITH QUESTIONS REGARDING BUILDING TIES.
8. TREES WITH DIAMETER OF 6" AND GREATER ARE SHOWN. TREE DIAMETERS WERE MEASURED UTILIZING A DIAMETER TAPE AT BREAST HEIGHT. TREE INFORMATION IS SUBJECT TO ARBORIST INSPECTION.

SITE ACCESS RD - ALIGNMENT TABLE

NUMBER	START STATION	LENGTH	RADIUS	DELTA	BEARING	END STATION
L9	10+00.00	44.62'			N64°40'39"E	10+44.62
C7	10+44.62	37.21'	50.00'	42°38'10"		10+81.83
L10	10+81.83	35.37'			N22°02'25"E	11+17.20
C8	11+17.20	77.80'	145.00'	30°44'30"		11+95.00
L11	11+95.00	162.97'			N08°42'01"W	13+57.97
C9	13+57.97	63.05'	80.00'	45°09'20"		14+21.02
L12	14+21.02	121.98'			N53°51'24"W	15+43.00

CLEARWELL ACCESS RD - ALIGNMENT TABLE

NUMBER	START STATION	LENGTH	RADIUS	DELTA	BEARING	END STATION
L13	20+00.00	59.98'			N36°08'36"E	20+59.98
C10	20+59.98	96.19'	45.00'	122°28'10"		21+56.17
L14	21+56.17	40.61'			N86°19'33"W	21+96.78
C11	21+96.78	71.98'	50.00'	82°29'10"		22+68.76
C12	22+68.76	93.92'	40.00'	134°31'50"		23+62.68
L15	23+62.68	200.57'			S41°37'49"W	25+63.26

ISSUE	DATE	DESCRIPTION
A	09/2026	ISSUED FOR BIDS

PROJECT MANAGER	PIERRE KWAN
CIVIL	J. MEGRDITCHIAN
STRUCTURAL	P. LINDBLOM
ARCHITECTURAL	V. YANEZ
PROCESS	P. KWAN
MECHANICAL	K. CHEUNG
ELECTRICAL	R. MCCOMB
INSTRUMENTATION	D. BEST
PROJECT NUMBER	10193663

REGISTERED PROFESSIONAL ENGINEER 86507PE
DIGITALLY SIGNED OREGON January 09, 2026
JOHN WILLIAM MEGRDITCHIAN
EXPIRES: 12/31/2026

CITY OF ASHLAND
Ashland, Oregon

City of Ashland

Ashland Creek Water Treatment Plant

2026

CIVIL
SITE LAYOUT AND HORIZONTAL CONTROL PLAN

0 1" 2"

FILENAME 000C003.dwg
SCALE 1" = 50'

SHEET **000C003**

ASHLAND CREEK WATER TREATMENT PLANT

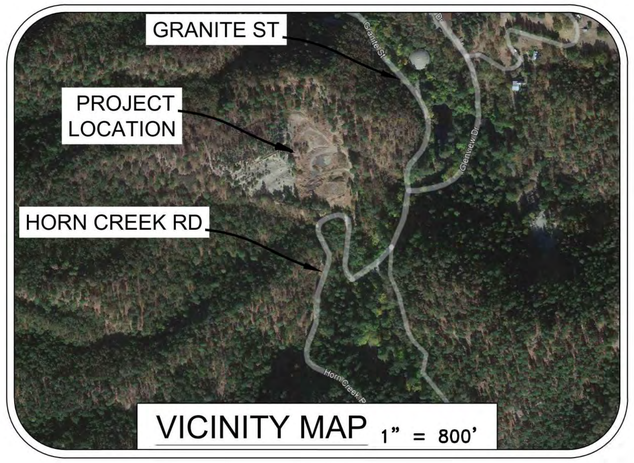

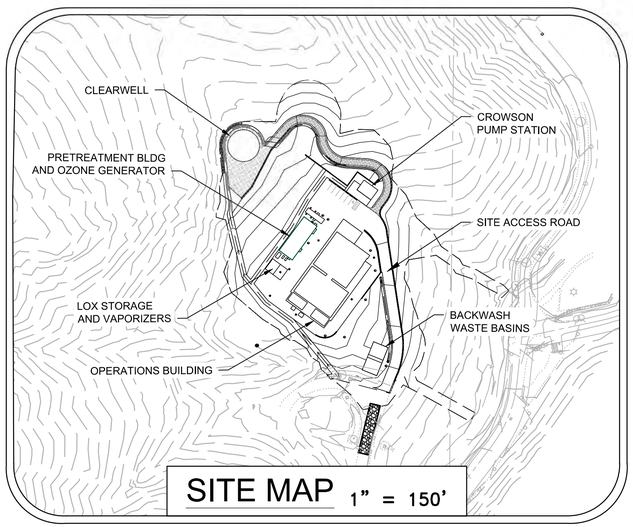

EROSION AND SEDIMENT CONTROL PLAN SHEET INDEX

C004	EROSION AND SEDIMENT CONTROL - COVER SHEET
C005	EROSION AND SEDIMENT CONTROL - GENERAL NOTES
C006	EROSION AND SEDIMENT CONTROL - EXISTING CONDITIONS PLAN 1
C007	EROSION AND SEDIMENT CONTROL - TREE PROTECTION AND REMOVAL PLAN 2
C008	EROSION AND SEDIMENT CONTROL - DEMO, CLEARING, GRADING, EXCAVATING, AND LAND DEVELOPMENT PLAN 3
C009	EROSION AND SEDIMENT CONTROL - STREET AND UTILITIES PLAN 4
C010	EROSION AND SEDIMENT CONTROL - VERTICAL CONSTRUCTION PLAN 5
C011	EROSION AND SEDIMENT CONTROL - FINAL LANDSCAPING AND STABILIZATION PLAN 6
C012	EROSION AND SEDIMENT CONTROL - EXISTING TREE INVENTORY AND ACTION TABLE 1
C013	EROSION AND SEDIMENT CONTROL - EXISTING TREE INVENTORY AND ACTION TABLE 1
C014	EROSION AND SEDIMENT CONTROL - DETAILS 1
C015	EROSION AND SEDIMENT CONTROL - DETAILS 2
C016	EROSION AND SEDIMENT CONTROL - DETAILS 3

PROJECT LOCATION:

LOCATED ALONG HORN CREEK RD., GRANITE ST., AND GLENVIEW DR.
SECTION 17, TOWNSHIP 39 SOUTH, RANGE 01 EAST, WILLAMETTE
PRINCIPAL MERIDIAN, JACKSON COUNTY, OREGON.

LATITUDE = 42°10'47"N LONGITUDE = 122°43'09"W

ATTENTION EXCAVATORS:

OREGON LAW REQUIRES YOU TO FOLLOW RULES ADOPTED BY THE OREGON UTILITY NOTIFICATION CENTER. THOSE RULES ARE SET FORTH IN OAR 952-001-0010 THROUGH OAR 952-001-0090. YOU MAY OBTAIN COPIES OF THESE RULES FROM THE CENTER BY CALLING 503-232-1987. IF YOU HAVE ANY QUESTIONS ABOUT THE RULES, YOU MAY CONTACT THE CENTER. YOU MUST NOTIFY THE CENTER AT LEAST TWO BUSINESS DAYS, BEFORE COMMENCING AN EXCAVATION. CALL 503-246-6699.

OWNER

DEVELOPER: CITY OF ASHLAND
CONTACT: SCOTT FLEURY
20 EAST MAIN STREET, ASHLAND, OR, 97520
PHONE: 541-488-6006

ENGINEERING FIRM

HDR ENGINEERING, INC. CONTACT:
PIERRE KWAN, PE
1050 SW 6TH AVE, STE 1800
PORTLAND OR 97204
PHONE: 206-826-4735

SURVEYING FIRM

AKS ENGINEERING & FORESTRY LLC
CONTACT: LOGAN MILES
1120 EAST JACKSON STREET, MEDFORD
OREGON 97504
PHONE 541-772-7115

NARRATIVE DESCRIPTIONS

EXISTING SITE CONDITIONS

TWO PAVED PUBLIC ROADWAYS, A LOGGING ROAD, A CULVERT, A FORMER ROCK QUARRY WITH FILL MATERIAL, A CREEK, AND A BRIDGE.

DEVELOPED CONDITIONS

OPERATIONS BUILDING, BACKWASH RECOVERY SYSTEM, PUMP STATION, SODA ASH SILO, GENERATOR PAD, STORAGE AND VAPORIZER PAD, STORM SEWER SYSTEM, PARKING STALLS, VEHICLE TURNING AREA, CLEARWELL, GATED ENTRANCE ROAD, PAVED ASPHALT AND GRAVEL ACCESS ROADS.

NATURE OF CONSTRUCTION ACTIVITY AND ESTIMATED TIME TABLE

THE PROJECT CONSTRUCTION TIMELINES ARE TO BE DETERMINED:
* CLEARING (TBD)
* GRADING (TBD)
* UTILITY INSTALLATION (TBD)
* STREET CONSTRUCTION (TBD)
* FINAL STABILIZATION (TBD)

TOTAL SITE AREA = 80.0 ac
TOTAL DISTURBED AREA = 4.2 ac

SITE SOIL CLASSIFICATION:

UNDOCUMENTED FILL MATERIAL CONSISTING OF CONSTRUCTION DEBRIS, ORGANIC MATERIAL, AND SOIL WAS OBSERVED COVERING THE SITE .

RECEIVING WATER BODIES:

ASHLAND CREEK - CREEK IS ADJACENT TO AND EAST OF THE PROJECT SITE.

PERMITTEE'S SITE INSPECTOR:

CONTRACTOR TO PROVIDE

COMPANY/AGENCY: TBD
PHONE: TBD
FAX: TBD
E-MAIL: TBD
DESCRIPTION OF EXPERIENCE: CESCL#: TBD

THE PERMITTEE IS REQUIRED TO MEET ALL THE CONDITIONS OF THE 1200C PERMIT. THIS ESCP AND GENERAL CONDITIONS HAVE BEEN DEVELOPED TO FACILITATE COMPLIANCE WITH THE 1200C PERMIT REQUIREMENTS. IN CASES OF DISCREPANCIES OR OMISSIONS, THE 1200C PERMIT REQUIREMENTS SUPERCEDE REQUIREMENTS OF THIS PLAN.

BMP MATRIX FOR CONSTRUCTION PHASES

REFER TO DEQ GUIDANCE MANUAL FOR A COMPREHENSIVE LIST OF AVAILABLE BMPs.

	CLEARING	MASS GRADING	UTILITY INSTALLATION	STREET CONSTRUCTION	FINAL STABILIZATION	WET WEATHER (OCT. 1 - MAY 31ST)
EROSION PREVENTION						
PRESERVE NATURAL VEGETATION	**X	X	X	X	X	X
GROUND COVER						
HYDRAULIC APPLICATIONS						
PLASTIC SHEETING	X	X	X	X	X	X
MATTING						
DUST CONTROL	X	X	X	X	X	
TEMPORARY/ PERMANENT SEEDING					X	X
BUFFER ZONE	X	X	X	X	X	X
OTHER:						
SEDIMENT CONTROL						
SEDIMENT FENCE (PERIMETER)	**X	X	X	X	X	X
SEDIMENT FENCE (INTERIOR)	**X	X	X	X	X	X
STRAW WATTLES	**X	X	X	X	X	X
FILTER BERM						
INLET PROTECTION			X	X	X	X
DEWATERING						
SEDIMENT TRAP	**X	X	X	X	X	
NATURAL BUFFER ENCROACHMENT						
OTHER:						
RUN OFF CONTROL						
CONSTRUCTION ENTRANCE	X	X	X	X	X	X
PIPE SLOPE DRAIN						
OUTLET PROTECTION				X	X	X
SURFACE ROUGHENING						
CHECK DAMS	X	X	X	X	X	X
DIVERSION	X	X	X	X	X	X
OTHER:						
POLLUTION PREVENTION						
PROPER SIGNAGE		X	X	X	X	X
HAZ WASTE MGMT						
SPILL KIT ON-SITE	X	X	X	X	X	X
CONCRETE WASHOUT AREA	X	X	X	X	X	X
OTHER:						

*SIGNIFIES ADDITIONAL BMPs REQUIRED FOR WORK WITHIN 50' OF WATER OF THE STATE.
**SIGNIFIES BMP THAT WILL BE INSTALLED PRIOR TO ANY GROUND DISTURBING ACTIVITY.

RATIONALE STATEMENT

A COMPREHENSIVE LIST OF AVAILABLE BEST MANAGEMENT PRACTICES (BMP) OPTIONS BASED ON DEQ's GUIDANCE MANUAL HAS BEEN REVIEWED TO COMPLETE THIS EROSION AND SEDIMENT CONTROL PLAN. SOME OF THE ABOVE LISTED BMPs WERE NOT CHOSEN BECAUSE THEY WERE DETERMINED TO NOT EFFECTIVELY MANAGE EROSION PREVENTION AND SEDIMENT CONTROL FOR THIS PROJECT BASED ON SPECIFIC SITE CONDITIONS. THESE INCLUDE SOIL CONDITIONS, TOPOGRAPHIC CONSTRAINTS, ACCESSIBILITY TO THE SITE, AND OTHER RELATED CONDITIONS. AS THE PROJECT PROGRESSES AND THERE IS A NEED TO REVISE THE ESC PLAN, AN ACTION PLAN WILL BE SUBMITTED.

INITIAL _____

INSPECTION FREQUENCY:

SITE CONDITION	MINIMUM FREQUENCY
1. ACTIVE PERIOD	ON INITIAL DATE THAT LAND DISTURBANCE ACTIVITIES COMMENCE. WITHIN 24 HOURS OF ANY STORM EVENT, INCLUDING RUNOFF FROM SNOW MELT, THAT RESULTS IN DISCHARGE FROM THE SITE. AT LEAST ONCE EVERY 14 DAYS, REGARDLESS OF WHETHER STORMWATER RUNOFF IS OCCURRING.
2. INACTIVE PERIODS GREATER THAN FOURTEEN(14) CONSECUTIVE CALENDAR DAYS	THE INSPECTOR MAY REDUCE THE FREQUENCY OF INSPECTIONS IN ANY AREA OF THE SITE WHERE THE STABILIZATION STEPS IN SECTION 2.2.20 HAVE BEEN COMPLETED TO TWICE PER MONTH FOR THE FIRST MONTH, NO LESS THAN 14 CALENDAR DAYS APART, THEN ONCE PER MONTH.
3. PERIODS DURING WHICH THE SITE IS INACCESSIBLE DUE TO INCLEMENT WEATHER	IF SAFE, ACCESSIBLE AND PRACTICAL, INSPECTIONS MUST OCCUR DAILY AT A RELEVANT DISCHARGE POINT OR DOWNSTREAM LOCATION OF THE RECEIVING WATERBODY.
4. PERIODS DURING WHICH CONSTRUCTION ACTIVITIES ARE SUSPENDED AND RUNOFF IS UNLIKELY DUE TO FROZEN CONDITIONS.	VISUAL MONITORING INSPECTIONS MAY BE TEMPORARILY SUSPENDED. IMMEDIATELY RESUME MONITORING UPON THAWING, OR WHEN WEATHER CONDITIONS MAKE DISCHARGES LIKELY.
5. PERIODS DURING WHICH CONSTRUCTION ACTIVITIES ARE CONDUCTED AND RUNOFF IS UNLIKELY DURING FROZEN CONDITIONS.	VISUAL MONITORING INSPECTIONS MAY BE REDUCED TO ONCE A MONTH. IMMEDIATELY RESUME MONITORING UPON THAWING, OR WHEN WEATHER CONDITIONS MAKE DISCHARGES LIKELY.

ISSUE	DATE	DESCRIPTION
A	09/2026	ISSUED FOR BIDS

PROJECT MANAGER	PIERRE KWAN
CIVIL	J. MEGRDITCHIAN
STRUCTURAL	P. LINDBLOM
ARCHITECTURAL	V. YANEZ
PROCESS	P. KWAN
MECHANICAL	K. CHEUNG
ELECTRICAL	R. MCCOMB
INSTRUMENTATION	D. BEST
PROJECT NUMBER	10193663

REGISTERED PROFESSIONAL ENGINEER 86507PE DIGITALLY SIGNED Date: 2026.09.24 08:14:00-07'00' OREGON January 09, 2026 JOHN WILLIAM MEGRDITCHIAN
EXPIRES: 12/31/2026

CITY OF ASHLAND
Ashland, Oregon

City of Ashland

Ashland Creek Water Treatment Plant

2026

CIVIL
EROSION AND SEDIMENT CONTROL COVER SHEET

0 1" 2"

FILENAME 000C004.dwg
SCALE AS SHOWN
SHEET **000C004**

STANDARD EROSION AND SEDIMENT CONTROL PLAN DRAWING NOTES:

1. ONCE KNOWN, INCLUDE A LIST OF ALL CONTRACTORS THAT WILL ENGAGE IN CONSTRUCTION ACTIVITIES ON SITE, AND THE AREAS OF THE SITE WHERE THE CONTRACTOR(S) WILL ENGAGE IN CONSTRUCTION ACTIVITIES. REVISE THE LIST AS APPROPRIATE UNTIL PERMIT COVERAGE IS TERMINATED (SECTION 4.4.C.I). IN ADDITION, INCLUDE A LIST OF ALL PERSONNEL (BY NAME AND POSITION) THAT ARE RESPONSIBLE FOR THE DESIGN, INSTALLATION AND MAINTENANCE OF STORMWATER CONTROL MEASURES (E.G. ESCP DEVELOPER, BMP INSTALLER (SEE SECTION 4.10), AS WELL AS THEIR INDIVIDUAL RESPONSIBILITIES. (SECTION 4.4.C.II)
2. VISUAL MONITORING INSPECTION REPORTS MUST BE MADE IN ACCORDANCE WITH DEQ 1200-C PERMIT REQUIREMENTS. (SECTION 6.5)
3. INSPECTION LOGS MUST BE KEPT IN ACCORDANCE WITH DEQ'S 1200-C PERMIT REQUIREMENTS. (SECTION 6.5.Q)
4. RETAIN A COPY OF THE ESCP AND ALL REVISIONS ON SITE AND MAKE IT AVAILABLE ON REQUEST TO DEQ, AGENT, OR THE LOCAL MUNICIPALITY. (SECTION 4.7)
5. THE PERMIT REGISTRANT MUST IMPLEMENT THE ESCP. FAILURE TO IMPLEMENT ANY OF THE CONTROL MEASURES OR PRACTICES DESCRIBED IN THE ESCP IS A VIOLATION OF THE PERMIT. (SECTIONS 4 AND 4.11)
6. THE ESCP MUST BE ACCURATE AND REFLECT SITE CONDITIONS. (SECTION 4.8)
7. SUBMISSION OF ALL ESCP REVISIONS IS NOT REQUIRED. SUBMITTAL OF THE ESCP REVISIONS IS ONLY UNDER SPECIFIC CONDITIONS. SUBMIT ALL NECESSARY REVISION TO DEQ OR AGENT WITHIN 10 DAYS. (SECTION 4.9)
8. SEQUENCE CLEARING AND GRADING TO THE MAXIMUM EXTENT PRACTICAL TO PREVENT EXPOSED INACTIVE AREAS FROM BECOMING A SOURCE OF EROSION. (SECTION 2.2.2)
9. CREATE SMOOTH SURFACES BETWEEN SOIL SURFACE AND EROSION AND SEDIMENT CONTROLS TO PREVENT STORMWATER FROM BYPASSING CONTROLS AND PONDING. (SECTION 2.2.3)
10. IDENTIFY, MARK, AND PROTECT (BY CONSTRUCTION FENCING OR OTHER MEANS) CRITICAL RIPARIAN AREAS AND VEGETATION INCLUDING IMPORTANT TREES AND ASSOCIATED ROOTING ZONES, AND VEGETATION AREAS TO BE PRESERVED. IDENTIFY VEGETATIVE BUFFER ZONES BETWEEN THE SITE AND SENSITIVE AREAS (E.G., WETLANDS), AND OTHER AREAS TO BE PRESERVED, ESPECIALLY IN PERIMETER AREAS. (SECTION 2.2.1)
11. PRESERVE EXISTING VEGETATION WHEN PRACTICAL AND RE-VEGETATE OPEN AREAS. RE-VEGETATE OPEN AREAS WHEN PRACTICABLE BEFORE AND AFTER GRADING OR CONSTRUCTION. IDENTIFY THE TYPE OF VEGETATIVE SEED MIX USED. (SECTION 2.2.5)
12. MAINTAIN AND DELINEATE ANY EXISTING NATURAL BUFFER WITHIN THE 50-FEET OF WATERS OF THE STATE. (SECTION 2.2.4)
13. INSTALL PERIMETER SEDIMENT CONTROL, INCLUDING STORM DRAIN INLET PROTECTION AS WELL AS ALL SEDIMENT BASINS, TRAPS, AND BARRIERS PRIOR TO LAND DISTURBANCE. (SECTIONS 2.1.3) BARRIERS PRIOR TO LAND DISTURBANCE. (SECTIONS 2.1.3).
14. CONTROL BOTH PEAK FLOW RATES AND TOTAL STORMWATER VOLUME, TO MINIMIZE EROSION AT OUTLETS AND DOWNSTREAM CHANNELS AND STREAMBANKS. (SECTIONS 2.1.1. AND 2.2.16)
15. CONTROL SEDIMENT AS NEEDED ALONG THE SITE PERIMETER AND AT ALL OPERATIONAL INTERNAL STORM DRAIN INLETS AT ALL TIMES DURING CONSTRUCTION, BOTH INTERNALLY AND AT THE SITE BOUNDARY. (SECTIONS 2.2.6 AND 2.2.13)
16. ESTABLISH CONCRETE TRUCK AND OTHER CONCRETE EQUIPMENT WASHOUT AREAS BEFORE BEGINNING CONCRETE WORK. (SECTION 2.2.14)
17. APPLY TEMPORARY AND/OR PERMANENT SOIL STABILIZATION MEASURES IMMEDIATELY ON ALL DISTURBED AREAS AS GRADING PROGRESSES. TEMPORARY OR PERMANENT STABILIZATIONS MEASURES ARE NOT REQUIRED FOR AREAS THAT ARE INTENDED TO BE LEFT UNVEGETATED, SUCH AS DIRT ACCESS ROADS OR UTILITY POLE PADS.(SECTIONS 2.2.20 AND 2.2.21)
18. ESTABLISH MATERIAL AND WASTE STORAGE AREAS, AND OTHER NON-STORMWATER CONTROLS. (SECTION 2.3.7)
19. KEEP WASTE CONTAINER LIDS CLOSED WHEN NOT IN USE AND CLOSE LIDS AT THE END OF THE BUSINESS DAY FOR THOSE CONTAINERS THAT ARE ACTIVELY USED THROUGHOUT THE DAY. FOR WASTE CONTAINERS THAT DO NOT HAVE LIDS, PROVIDE EITHER (1) COVER (E.G., A TARP, PLASTIC SHEETING, TEMPORARY ROOF) TO PREVENT EXPOSURE OF WASTES TO PRECIPITATION, OR (2) A SIMILARLY EFFECTIVE MEANS DESIGNED TO PREVENT THE DISCHARGE OF POLLUTANTS (E.G., SECONDARY CONTAINMENT). (SECTION 2.3.7)
20. PREVENT TRACKING OF SEDIMENT ONTO PUBLIC OR PRIVATE ROADS USING BMPS SUCH AS: CONSTRUCTION ENTRANCE, GRAVELED (OR PAVED)EXITS AND PARKING AREAS, GRAVEL ALL UNPAVED ROADS LOCATED ONSITE, OR USE AN EXIT TIRE WASH. THESE BMPS MUST BE IN PLACE PRIOR TO LAND- DISTURBING ACTIVITIES. (SECTION 2.2.7)
21. WHEN TRUCKING SATURATED SOILS FROM THE SITE, EITHER USE WATER-TIGHT TRUCKS OR DRAIN LOADS ON SITE. (SECTION 2.2.7.F)
22. CONTROL PROHIBITED DISCHARGES FROM LEAVING THE CONSTRUCTION SITE, I.E., CONCRETE WASH-OUT, WASTEWATER FROM CLEANOUT OF STUCCO, PAINT AND CURING COMPOUNDS. (SECTIONS 1.5 AND 2.3.9)
23. ENSURE THAT STEEP SLOPE AREAS WHERE CONSTRUCTION ACTIVITIES ARE NOT OCCURRING ARE NOT DISTURBED. (SECTION 2.2.10)
24. PREVENT SOIL COMPACTION IN AREAS WHERE POST-CONSTRUCTION INFILTRATION FACILITIES ARE TO BE INSTALLED. (SECTION 2.2.12)
25. USE BMPS TO PREVENT OR MINIMIZE STORMWATER EXPOSURE TO POLLUTANTS FROM SPILLS; VEHICLE AND EQUIPMENT FUELING, MAINTENANCE, AND STORAGE; OTHER CLEANING AND MAINTENANCE ACTIVITIES; AND WASTE HANDLING ACTIVITIES. THESE POLLUTANTS INCLUDE FUEL, HYDRAULIC FLUID, AND OTHER OILS FROM VEHICLES AND MACHINERY, AS WELL AS DEBRIS, FERTILIZER, PESTICIDES AND HERBICIDES, PAINTS, SOLVENTS, CURING COMPOUNDS AND ADHESIVES FROM CONSTRUCTION OPERATIONS. (SECTIONS 2.2.15 AND 2.3)
26. PROVIDE PLANS FOR SEDIMENTATION BASINS THAT HAVE BEEN DESIGNED PER SECTION 2.2.17 AND STAMPED BY AN OREGON PROFESSIONAL ENGINEER. (SEE SECTION 2.2.17.A)
27. IF ENGINEERED SOILS ARE USED ON SITE, A SEDIMENTATION BASIN/IMPOUNDMENT MUST BE INSTALLED. (SEE SECTIONS 2.2.17 AND 2.2.18)
28. PROVIDE A DEWATERING PLAN FOR ACCUMULATED WATER FROM PRECIPITATION AND UNCONTAMINATED GROUNDWATER SEEPAGE DUE TO SHALLOW EXCAVATION ACTIVITIES. (SEE SECTION 2.4)
29. IMPLEMENT THE FOLLOWING BMPS WHEN APPLICABLE: WRITTEN SPILL PREVENTION AND RESPONSE PROCEDURES, EMPLOYEE TRAINING ON SPILL PREVENTION AND PROPER DISPOSAL PROCEDURES, SPILL KITS IN ALL VEHICLES, REGULAR MAINTENANCE SCHEDULE FOR VEHICLES AND MACHINERY, MATERIAL DELIVERY AND STORAGE CONTROLS, TRAINING AND SIGNAGE, AND COVERED STORAGE AREAS FOR WASTE AND SUPPLIES. (SECTION 2.3)
30. USE WATER, SOIL-BINDING AGENT OR OTHER DUST CONTROL TECHNIQUE AS NEEDED TO AVOID WIND-BLOWN SOIL. (SECTION 2.2.9)
31. THE APPLICATION RATE OF FERTILIZERS USED TO REESTABLISH VEGETATION MUST FOLLOW MANUFACTURER'S RECOMMENDATIONS TO MINIMIZE NUTRIENT RELEASES TO SURFACE WATERS. EXERCISE CAUTION WHEN USING TIME-RELEASE FERTILIZERS WITHIN ANY WATERWAY RIPARIAN ZONE. (SECTION 2.3.5)
32. IF AN ACTIVE TREATMENT SYSTEM (FOR EXAMPLE, ELECTRO-COAGULATION, FLOCCULATION, FILTRATION, ETC.) FOR SEDIMENT OR OTHER POLLUTANT REMOVAL IS EMPLOYED, SUBMIT AN OPERATION AND MAINTENANCE PLAN (INCLUDING SYSTEM SCHEMATIC, LOCATION OF SYSTEM, LOCATION OF INLET, LOCATION OF DISCHARGE, DISCHARGE DISPERSION DEVICE DESIGN, AND A SAMPLING PLAN AND FREQUENCY) BEFORE OPERATING THE TREATMENT SYSTEM. OBTAIN ENVIRONMENTAL MANAGEMENT PLAN APPROVAL FROM DEQ BEFORE OPERATING THE TREATMENT SYSTEM. OPERATE AND MAINTAIN THE TREATMENT SYSTEM ACCORDING TO MANUFACTURER'S SPECIFICATIONS. (SECTION 1.2.9)
33. TEMPORARILY STABILIZE SOILS AT THE END OF THE SHIFT BEFORE HOLIDAYS AND WEEKENDS, IF NEEDED. THE REGISTRANT IS RESPONSIBLE FOR ENSURING THAT SOILS ARE STABLE DURING RAIN EVENTS AT ALL TIMES OF THE YEAR. (SECTION 2.2)
34. AS NEEDED BASED ON WEATHER CONDITIONS, AT THE END OF EACH WORKDAY SOIL STOCKPILES MUST BE STABILIZED OR COVERED, OR OTHER BMPS MUST BE IMPLEMENTED TO PREVENT DISCHARGES TO SURFACE WATERS OR CONVEYANCE SYSTEMS LEADING TO SURFACE WATERS. (SECTION 2.2.8)
35. SEDIMENT FENCE: REMOVE TRAPPED SEDIMENT BEFORE IT REACHES ONE THIRD OF THE ABOVE GROUND FENCE HEIGHT AND BEFORE FENCE REMOVAL. (SECTION 2.1.5.B)
36. OTHER SEDIMENT BARRIERS (SUCH AS BIOBAGS): REMOVE SEDIMENT BEFORE IT REACHES TWO INCHES DEPTH ABOVE GROUND HEIGHT AND BEFORE BMP REMOVAL. (SECTION 2.1.5.C)
37. CATCH BASINS: CLEAN BEFORE RETENTION CAPACITY HAS BEEN REDUCED BY FIFTY PERCENT. SEDIMENT BASINS AND SEDIMENT TRAPS: REMOVE TRAPPED SEDIMENTS BEFORE DESIGN CAPACITY HAS BEEN REDUCED BY FIFTY PERCENT AND AT COMPLETION OF PROJECT. (SECTION 2.1.5.D)
38. WITHIN 24 HOURS, SIGNIFICANT SEDIMENT THAT HAS LEFT THE CONSTRUCTION SITE, MUST BE REMEDIATED. INVESTIGATE THE CAUSE OF THE SEDIMENT RELEASE AND IMPLEMENT STEPS TO PREVENT A RECURRENCE OF THE DISCHARGE WITHIN THE SAME 24 HOURS. ANY IN-STREAM CLEAN-UP OF SEDIMENT SHALL BE PERFORMED ACCORDING TO THE OREGON DEPARTMENT OF STATE LANDS REQUIRED TIMEFRAME. (SECTION 2.2.19.A)
39. THE INTENTIONAL WASHING OF SEDIMENT INTO STORM SEWERS OR DRAINAGE WAYS MUST NOT OCCUR. VACUUMING OR DRY SWEEPING AND MATERIAL PICKUP MUST BE USED TO CLEANUP RELEASED SEDIMENTS. (SECTION 2.2.19)
40. DOCUMENT ANY PORTION(S) OF THE SITE WHERE LAND DISTURBING ACTIVITIES HAVE PERMANENTLY CEASED OR WILL BE TEMPORARILY INACTIVE FOR 14 OR MORE CALENDAR DAYS. (SECTION 6.5.F.)
41. PROVIDE TEMPORARY STABILIZATION FOR THAT PORTION OF THE SITE WHERE CONSTRUCTION ACTIVITIES CEASE FOR 14 DAYS OR MORE WITH A COVERING OF BLOWN STRAW AND A TACKIFIER, LOOSE STRAW, OR AN ADEQUATE COVERING OF COMPOST MULCH UNTIL WORK RESUMES ON THAT PORTION OF THE SITE. (SECTION 2.2.20)
42. DO NOT REMOVE TEMPORARY SEDIMENT CONTROL PRACTICES UNTIL PERMANENT VEGETATION OR OTHER COVER OF EXPOSED AREAS IS ESTABLISHED. ONCE CONSTRUCTION IS COMPLETE AND THE SITE IS STABILIZED, ALL TEMPORARY EROSION CONTROLS AND RETAINED SOILS MUST BE REMOVED AND DISPOSED OF PROPERLY, UNLESS NEEDED FOR LONG TERM USE FOLLOWING TERMINATION OF PERMIT COVERAGE. (SECTION 2.2.21)

LOCAL AGENCY-SPECIFIC EROSION CONTROL NOTES:

1. IF VEGETATIVE SEED MIXES ARE SPECIFIED, SEEDING MUST TAKE PLACE NO LATER THAT SEPTEMBER 1; THE TYPE AND PERCENTAGES OF SEED IN THE MIX MUST BE IDENTIFIED ON THE PLANS.
2. ALL PUMPING OF SEDIMENT LADEN WATER SHALL BE DISCHARGED OVER AN UNDISTURBED, PREFERABLY VEGETATED AREA, AND THROUGH A SEDIMENT CONTROL BMP I.E. (FILTER BAG).
3. ALL EXPOSED SOILS MUST BE COVERED DURING THE WET WEATHER PERIOD, OCTOBER 01 - MAY 31.

GRADING, STREET, AND UTILITY EROSION AND SEDIMENT CONTROL CONSTRUCTION NOTES:

1. SEED USED FOR TEMPORARY OR PERMANENT SEEDING SHALL BE COMPOSED OF THE FOLLOWING MIXTURE, UNLESS OTHERWISE AUTHORIZED:
   A. ELYMUS ELMOIDES (BOTTLEBRUSH SQUIRREL TAIL) 26.0 LB/ACRE
   B. FESTUCA OVINA (IDAHO SHEEP FESCUE) 9.75 LB/ACRE
   C. FESTUCA OVINA VAR. COVAR (COVAR FESCUE) 9.75 LB/ACRE
   D. KOELERIA MACRANTHA (PRAIRIE JUNEGRASS) 6.50 LB/ACRE
   E. POA SECUNDA SSP. SANDBERGII (SANDBERG'S BLUEGRASS) 13.0 LB/ACRE
2. SLOPE TO RECEIVE TEMPORARY OR PERMANENT SEEDING SHALL HAVE THE SURFACE ROUGHENED BY MEANS OF TRACK-WALKING OR THE USE OF OTHER APPROVED IMPLEMENTS. SURFACE ROUGHENING IMPROVES SEED BEDDING AND REDUCES RUN-OFF VELOCITY.
3. LONG TERM SLOPE STABILIZATION MEASURES SHALL INCLUDE THE ESTABLISHMENT OF PERMANENT VEGETATIVE COVER VIA SEEDING WITH APPROVED MIX AND APPLICATION RATE.
4. TEMPORARY SLOPE STABILIZATION MEASURES SHALL INCLUDE: COVERING EXPOSED SOIL WITH PLASTIC SHEETING, STRAW MULCHING, WOOD CHIPS, OR OTHER APPROVED MEASURES.
5. STOCKPILED SOIL OR STRIPPINGS SHALL BE PLACED IN A STABLE LOCATION AND CONFIGURATION. DURING "WET WEATHER" PERIODS, STOCKPILES SHALL BE COVERED WITH PLASTIC SHEETING OR STRAW MULCH. SEDIMENT FENCE IS REQUIRED AROUND THE PERIMETER OF THE STOCKPILE.
6. EXPOSED CUT OR FILL AREAS SHALL BE STABILIZED THROUGH THE USE OF TEMPORARY SEEDING AND MULCHING, EROSION CONTROL BLANKETS OR MATS, MID-SLOPE SEDIMENT FENCES OR WATTLES, OR OTHER APPROPRIATE MEASURES. SLOPES EXCEEDING 25% MAY REQUIRE ADDITIONAL EROSION CONTROL MEASURES.
7. AREAS SUBJECT TO WIND EROSION SHALL USE APPROPRIATE DUST CONTROL MEASURES INCLUDING THE APPLICATION OF A FINE SPRAY OF WATER, PLASTIC SHEETING, STRAW MULCHING, OR OTHER APPROVED MEASURES.
8. CONSTRUCTION ENTRANCES SHALL BE INSTALLED AT THE BEGINNING OF CONSTRUCTION AND MAINTAINED FOR THE DURATION OF THE PROJECT. ADDITIONAL MEASURES INCLUDING, BUT NOT LIMITED TO, TIRE WASHES, STREET SWEEPING, AND VACUUMING MAY BE BE REQUIRED TO INSURE THAT ALL PAVED AREAS ARE KEPT CLEAN FOR THE DURATION OF THE PROJECT.
9. ACTIVE INLETS TO STORM WATER SYSTEMS SHALL BE PROTECTED THROUGH THE USE OF APPROVED INLET PROTECTION MEASURES. ALL INLET PROTECTION MEASURES ARE TO BE REGULARLY INSPECTED AND MAINTAINED AS NEEDED.
10. SATURATED MATERIALS THAT ARE HAULED OFF-SITE MUST BE TRANSPORTED IN WATER-TIGHT TRUCKS TO ELIMINATE SPILLAGE OF SEDIMENT AND SEDIMENT-LADEN WATER.
11. AN AREA SHALL BE PROVIDED FOR THE WASHING OUT OF CONCRETE TRUCKS IN A LOCATION THAT DOES NOT PROVIDE RUN-OFF THAT CAN ENTER THE STORM WATER SYSTEM. IF THE CONCRETE WASH-OUT AREA CAN NOT BE CONSTRUCTED GREATER THAN 50' FROM ANY DISCHARGE POINT. SECONDARY MEASURES SUCH AS BERMS OR TEMPORARY SETTLING PITS MAY BE REQUIRED. THE WASH-OUT SHALL BE LOCATED WITHIN SIX FEET OF TRUCK ACCESS AND BE CLEANED WHEN IT REACHES 50% OF THE CAPACITY.
12. SWEEPINGS FROM EXPOSED AGGREGATE CONCRETE SHALL NOT BE TRANSFERRED TO THE STORM WATER SYSTEM. SWEEPINGS SHALL BE PICKED UP AND DISPOSED IN THE TRASH.
13. AVOID PAVING IN WET WEATHER WHEN PAVING CHEMICALS CAN RUN-OFF INTO THE STORM WATER SYSTEM.
14. USE BMPs SUCH AS CHECK-DAMS, BERMS, AND INLET PROTECTION TO PREVENT RUN-OFF FROM REACHING DISCHARGE POINTS.
15. COVER CATCH BASINS, MANHOLES, AND OTHER DISCHARGE POINTS WHEN APPLYING SEAL COAT, TACK COAT, ETC. TO PREVENT INTRODUCING THESE MATERIALS TO THE STORM WATER SYSTEM.

ISSUE	DATE	DESCRIPTION
A	09/2026	ISSUED FOR BIDS

PROJECT MANAGER	PIERRE KWAN
CIVIL	J. MEGRDITCHIAN
STRUCTURAL	P. LINDBLOM
ARCHITECTURAL	V. YANEZ
PROCESS	P. KWAN
MECHANICAL	K. CHEUNG
ELECTRICAL	R. MCCOMB
INSTRUMENTATION	D. BEST
PROJECT NUMBER	10193663

REGISTERED PROFESSIONAL ENGINEER 86507PE DIGITALLY SIGNED OREGON January 09, 2018 JOHN WILLIAM MEGRDITCHIAN
EXPIRES: 12/31/2026

CITY OF ASHLAND
Ashland, Oregon

City of Ashland

Ashland Creek Water Treatment Plant

2026

CIVIL
EROSION AND SEDIMENT CONTROL GENERAL NOTES

0 1" 2"

FILENAME 000C005.dwg
SCALE N/A

SHEET **000C005**

ISSUE	DATE	DESCRIPTION
A	09/2026	ISSUED FOR BIDS

PROJECT MANAGER	PIERRE KWAN
CIVIL	J. MEGRDITCHIAN
STRUCTURAL	P. LINDBLOM
ARCHITECTURAL	V. YANEZ
PROCESS	P. KWAN
MECHANICAL	K. CHEUNG
ELECTRICAL	R. MCCOMB
INSTRUMENTATION	D. BEST
PROJECT NUMBER	10193663

REGISTERED PROFESSIONAL ENGINEER
86507PE
DIGITALLY SIGNED Date: 2026.09.26 16:11:11 -08'00'
OREGON
January 09, 2026
JOHN WILLIAM MEGRDITCHIAN
EXPIRES: 12/31/2026

CITY OF ASHLAND
Ashland, Oregon

City of Ashland

Ashland Creek Water Treatment Plant

2026

CIVIL
EROSION AND SEDIMENT CONTROL EXISTING CONDITIONS PLAN 1

0 1" 2"

FILENAME 000C006.dwg
SCALE 1" - 50'

SHEET **000C006**

0' 50' 100' 150'
SCALE IN FEET

LEGEND:

- EXISTING 10' CONTOUR LINE
- EXISTING 2' CONTOUR LINE
- CONSTRUCTION LIMIT
- CREEK EDGE
- EXISTING ROAD EDGE
- EXISTING DITCH
- EXISTING TREES
- 10000 — TREE NUMBER, SEE SHEET 000C012 & 000C013
- EXISTING TREE TO BE PROTECTED
- EXISTING TREE TO BE REMOVED
- EXISTING BOLLARD
- EXISTING POST
- EXISTING SIGN

TREE PROTECTION NOTES:

1. CONTRACTOR SHALL NOTIFY THE ENGINEER AND CITY OF ASHLAND 72 HOURS MIN. PRIOR TO BOTH DEMOLITION AND EXCAVATION WITHIN THE DRIPLINE OF EXISTING TREES.
2. ALL TRENCH EXCAVATION IN THE DRIPLINES OF PROTECTED EXISTING TREES SHALL BE PERFORMED TO FULL DEPTH AND WIDTH OF EXCAVATION WITH AN AIRSPADE UNDER THE DIRECTION OF CITY OF ASHLAND ARBORIST. WATER SLUICING IS NOT ALLOWED. RETAIN ALL STRUCTURAL ROOTS (1 INCH OR GRATER IN DIAMETER) ACROSS TRENCHES. CITY OF ASHLAND ARBORIST TO DIRECT ROOT PRUNING IF NECESSARY.
3. AVOID DAMAGE TO ROOTS OF PROTECTED EXISTING TREES DURING DEMOLITION, EXCAVATION & TRENCHING.
4. PROTECT ROOTS OF PROTECTED EXISTING TREES AFTER EXPOSURE DUE TO CONCRETE REMOVAL, AIRSPADING OR OTHER CONSTRUCTION ACTIVITY. ONLY EXCAVATE AND EXPOSE AREA OF ROOTS THAT CAN BE BACKFILLED AND COVERED WITHIN ONE WORKING DAY. MAINTAIN MOIST SUBGRADE CONDITION UNTIL NEW CONCRETE IS INSTALLED.
5. USE OF BACKHOE IN DRIPLINES OF PROTECTED EXISTING TREES IS PROHIBITED.

ISSUE	DATE	DESCRIPTION
A	09/2026	ISSUED FOR BIDS

PROJECT MANAGER	PIERRE KWAN
CIVIL	J. MEGRDITCHIAN
STRUCTURAL	P. LINDBLOM
ARCHITECTURAL	V. YANEZ
PROCESS	P. KWAN
MECHANICAL	K. CHEUNG
ELECTRICAL	R. MCCOMB
INSTRUMENTATION	D. BEST
PROJECT NUMBER	10193663

REGISTERED PROFESSIONAL ENGINEER 86507PE
DIGITALLY SIGNED January 09, 2026
OREGON
JOHN WILLIAM MEGRDITCHIAN
EXPIRES: 12/31/2026

CITY OF ASHLAND
Ashland, Oregon

City of Ashland

Ashland Creek Water Treatment Plant

2026

CIVIL
EROSION AND SEDIMENT CONTROL
TREE PROTECTION AND REMOVAL PLAN 2

0 1" 2"

FILENAME 000C007.dwg
SCALE 1" - 50'

SHEET **000C007**

GRADING PHASE INFORMATION:

1. ONSITE SOIL TYPES:
   A) PITS, GRAVEL - 51.3%
   B) TALLOWBOX GRAVELLY SANDY LOAM - HYDROLOGIC SOIL GROUP B - 29.9%
   C) SHEFFLEIN LOAM - HYDROLOGIC SOIL GROUP C - 18.8%

2. EXISTING VEGETATION CONSISTS OF SPECIES TYPICAL OF MIXED FORESTS IN THE KLAMATH MOUNTAINS ECOREGION PER THE OREGON DEPARTMENT OF TRANSPORTATION.

3. CUT AND FILL DATA:
   - CUT: 17,100 CY
   - FILL (1.20 FACTOR): 10,500 CY
   - NET ADJUSTED: 6,600 CY (CUT)

4. ONSITE FILL MATERIALS:
   - NATIVE SOIL
   - CRUSHED ROCK

GRADING PHASE INFORMATION:

1. PROPOSED SITE DRAINAGE DITCHES SHALL BE PERMANENTLY STABILIZED AS SOON AS POSSIBLE AFTER EXCAVATION.

2. STRAW MULCH AND/OR HYDROSEED SHALL BE USED FOR TEMPORARY STABILIZATION OF EXPOSED SOILS AFTER EXCAVATION.

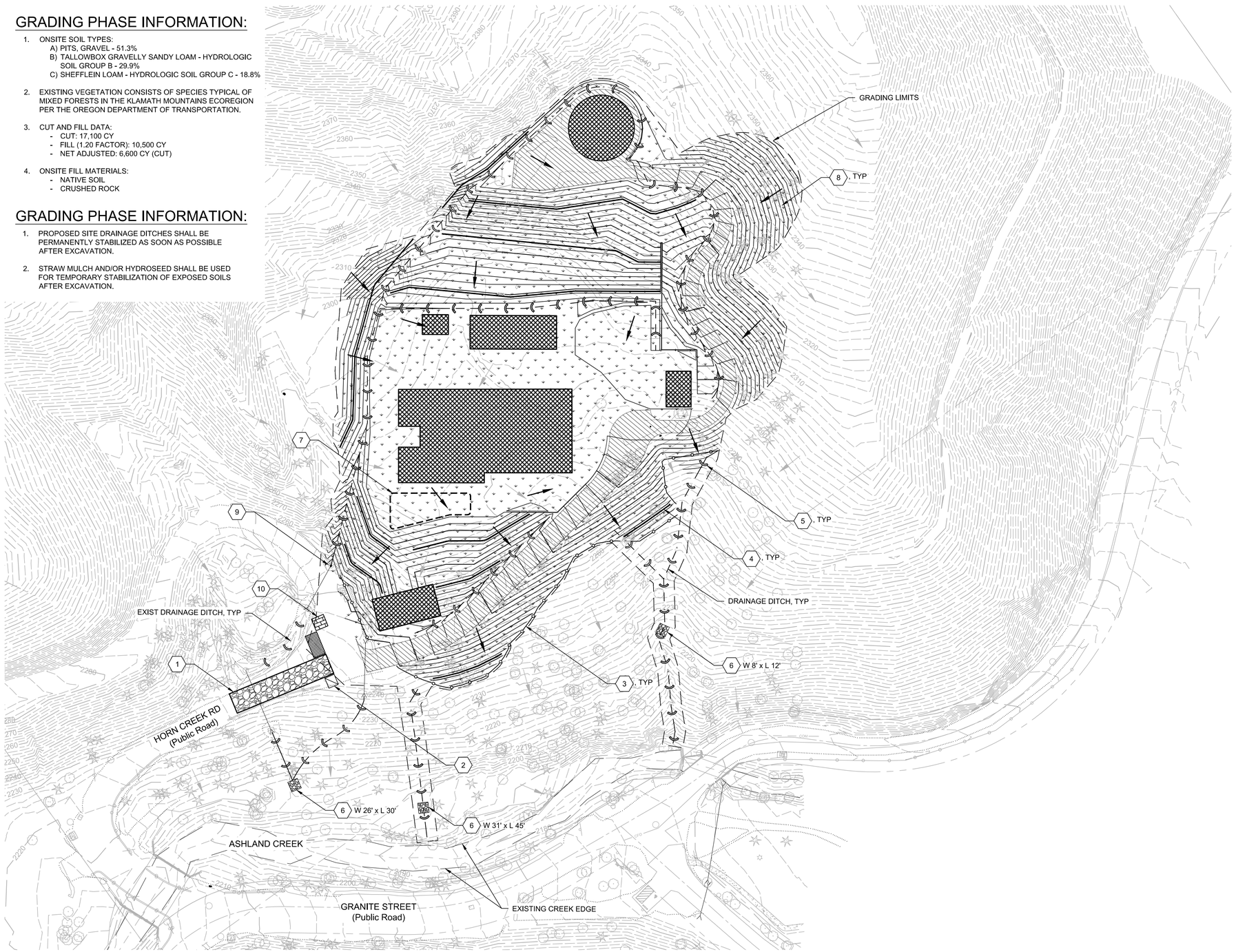

0' 50' 100' 150'
SCALE IN FEET

LEGEND:

- ROADWAY EXCAVATION
- CLEARING AND GRUBBING
- STRUCTURAL EXCAVATION
- CONSTRUCTION ENTRANCE
- CONCRETE WASH AREA
- SEDIMENT TRAP
- CHECK DAM
- INLET PROTECTION - TYPE 3
- INLET PROTECTION - TYPE 4
- STRAW WATTLE
- SEDIMENT FENCE
- 2230 EXISTING 10' CONTOUR LINE
- EXISTING 2' CONTOUR LINE
- CONSTRUCTION LIMIT
- CREEK EDGE
- EXISTING ROAD EDGE
- PROPOSED DITCH
- EXISTING DITCH
- PROPOSED DIRECTION OF RUNOFF
- EXISTING DIRECTION OF RUNOFF
- EXISTING TREES
- EXISTING BOLLARD
- EXISTING POST
- EXISTING SIGN

EROSION CONTROL NOTES:

1. INSTALL TYPE 1 CONSTRUCTION ENTRANCE PER STD DETAIL RD1000 / 000C014
2. INSTALL CONCRETE WASH OUT FACILITY PER STD DETAIL RD1070 / 000C016
3. INSTALL TYPE 1 SEDIMENT FENCE PER STD DETAIL RD1040 / 000C015
4. INSTALL TYPE 3 SEDIMENT BARRIER PER STD DETAIL RD1030 / 000C015
5. INSTALL TYPE 4 CHECK DAMS PER STD DETAIL RD1005 / 000C014
6. INSTALL SEDIMENT TRAPS WITH TOP LENGTH AND TOP WIDTH AS SPECIFIED PER STD DETAIL RD1065 / 000C016
7. SOIL STOCKPILE AREA TO BE COVERED WITH PLASTIC HELD DOWN BY SANDBAGS WHEN NOT IN USE
8. INSTALL MATTING MATERIAL PER ODOT SPEC 00280.10(i) ON THE ACCESS ROAD CUT SLOPES PER STD DETAIL RD1055 / 000C015
9. INSTALL INLET PROTECTION TYPE 4 PER STD DETAIL RD1015 / 000C014
10. STAGING AREA TO INCLUDE SANITARY FACILITY AND WASTE RECEPTACLE WITH LID

ISSUE	DATE	DESCRIPTION
A	09/2026	ISSUED FOR BIDS

PROJECT MANAGER	PIERRE KWAN
CIVIL	J. MEGRDITCHIAN
STRUCTURAL	P. LINDBLOM
ARCHITECTURAL	V. YANEZ
PROCESS	P. KWAN
MECHANICAL	K. CHEUNG
ELECTRICAL	R. MCCOMB
INSTRUMENTATION	D. BEST
PROJECT NUMBER	10193663

REGISTERED PROFESSIONAL ENGINEER 86507PE
DIGITALLY SIGNED OREGON January 09, 2026
JOHN WILLIAM MEGRDITCHIAN
Date: 2026.09.26 09:11:00-07'00'
EXPIRES: 12/31/2026

CITY OF ASHLAND
Ashland, Oregon

City of Ashland

Ashland Creek Water Treatment Plant

2026

CIVIL
EROSION AND SEDIMENT CONTROL DEMO, CLEARING, GRADING, EXCAVATING, AND LAND DEVELOPMENT PLAN 3

0 1" 2"

FILENAME 000C008.dwg
SCALE 1" - 50'

SHEET **000C008**

UTILITIES PHASE NOTES:

1. ANY TRENCH DEWATERING SHALL BE DISCHARGED THROUGH A FILTER BAG OR SEDIMENT TRAP.
2. STRAW MULCH AND/OR HYDROSEED SHALL BE USED FOR TEMPORARY STABILIZATION OF ANY EXPOSED TRENCH SPOILS.

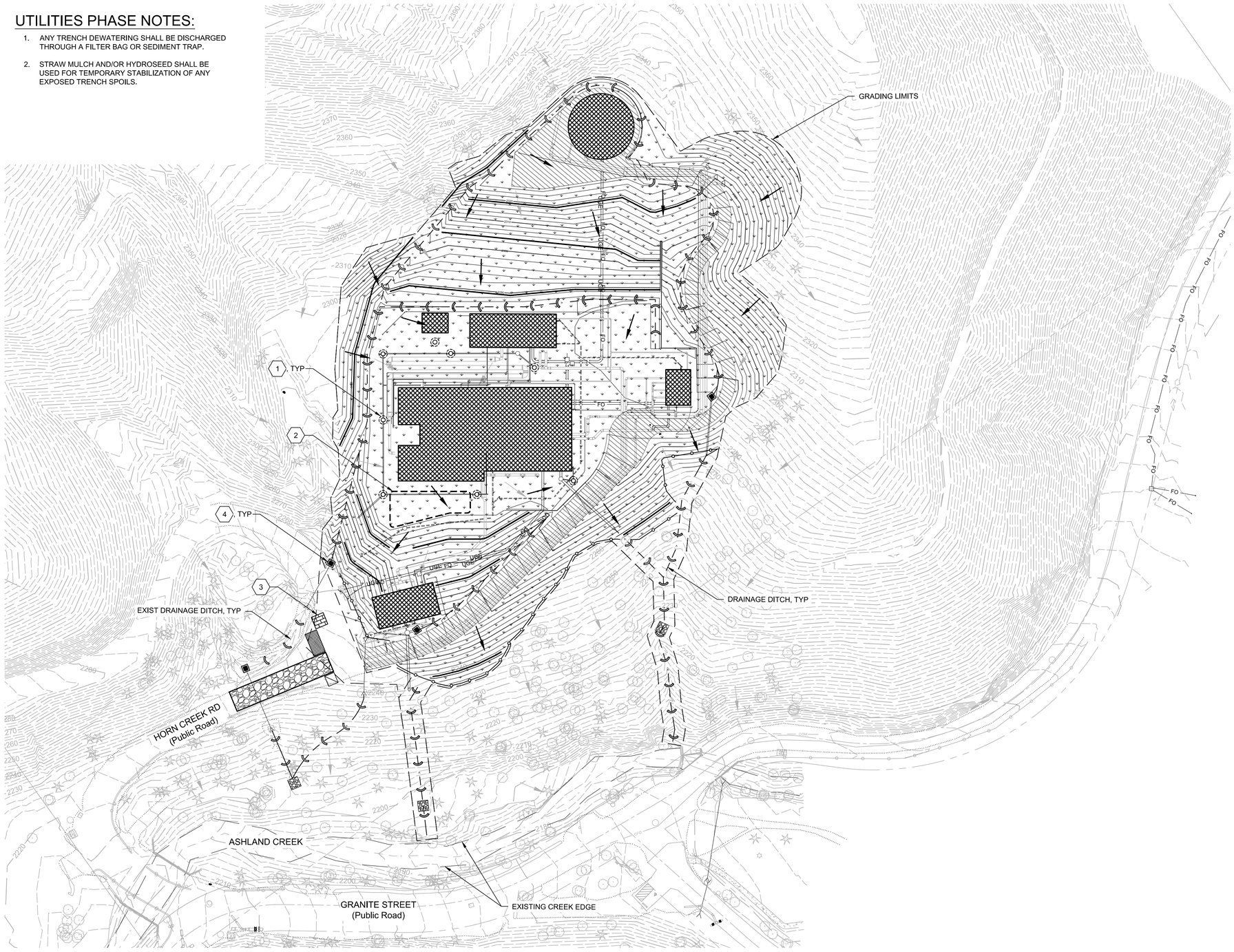

0' 50' 100' 150'
SCALE IN FEET

LEGEND:

- ROADWAY EXCAVATION
- CLEARING AND GRUBBING
- STRUCTURAL EXCAVATION
- CONSTRUCTION ENTRANCE
- CONCRETE WASH AREA
- SEDIMENT TRAP
- CHECK DAM
- INLET PROTECTION - TYPE 3
- INLET PROTECTION - TYPE 4
- STRAW WATTLE
- SEDIMENT FENCE
- EXISTING 10' CONTOUR LINE
- EXISTING 2' CONTOUR LINE
- CONSTRUCTION LIMIT
- CREEK EDGE
- EXISTING ROAD EDGE
- PROPOSED DITCH
- EXISTING DITCH
- PROPOSED DIRECTION OF RUNOFF
- EXISTING DIRECTION OF RUNOFF
- EXISTING TREES
- EXISTING BOLLARD
- EXISTING POST
- EXISTING SIGN
- PROPOSED STORM DRAINAGE LINE AND STRUCTURE
- PROPOSED SANITARY SEWER LINE AND STRUCTURE
- PROPOSED WATER TREATMENT PROCESSING LINE

EROSION CONTROL NOTES:

1. INSTALL INLET PROTECTION TYPE 3 PER STD DETAIL RD1010 / 000C014
2. SOIL STOCKPILE AREA TO BE COVERED WITH PLASTIC HELD DOWN BY SANDBAGS WHEN NOT IN USE
3. STAGING AREA TO INCLUDE SANITARY FACILITY AND WASTE RECEPTACLE WITH LID
4. INSTALL INLET PROTECTION TYPE 4 PER STD DETAIL RD1015 / 000C014

ISSUE	DATE	DESCRIPTION
A	09/2026	ISSUED FOR BIDS

PROJECT MANAGER	PIERRE KWAN
CIVIL	J. MEGRDITCHIAN
STRUCTURAL	P. LINDBLOM
ARCHITECTURAL	V. YANEZ
PROCESS	P. KWAN
MECHANICAL	K. CHEUNG
ELECTRICAL	R. MCCOMB
INSTRUMENTATION	D. BEST
PROJECT NUMBER	10193663

REGISTERED PROFESSIONAL ENGINEER 86507PE DIGITALLY SIGNED OREGON January 09, 2026 JOHN WILLIAM MEGRDITCHIAN
Date: 2026.09.28 09:14:20-07'00'
EXPIRES: 12/31/2026

CITY OF ASHLAND
Ashland, Oregon

City of Ashland

Ashland Creek Water Treatment Plant

2026

CIVIL
EROSION AND SEDIMENT CONTROL
STREET AND UTILITIES PLAN 4

0 1" 2"

FILENAME 000C009.dwg
SCALE 1" - 50'

SHEET **000C009**

GENERAL NOTES:

1. ALL CONSTRUCTION MATERIALS THAT COULD LEAD TO POLLUTION IF SPILLED NOT IN IMMEDIATE USE SHALL BE STORED IN A STORAGE BOX AT THE NORTH OF THE SITE (AS SHOWN) TO PREVENT SPILLS AND EXPOSURE TO WET WEATHER.
2. SPILL PREVENTION SPILL KITS AND OTHER SPILL CONTAINMENT DEVICES SHALL BE KEPT ONSITE WITHIN THE STORAGE CONTAINER MENTIONED ABOVE THROUGH THE COMPLETION OF THE PROJECT.

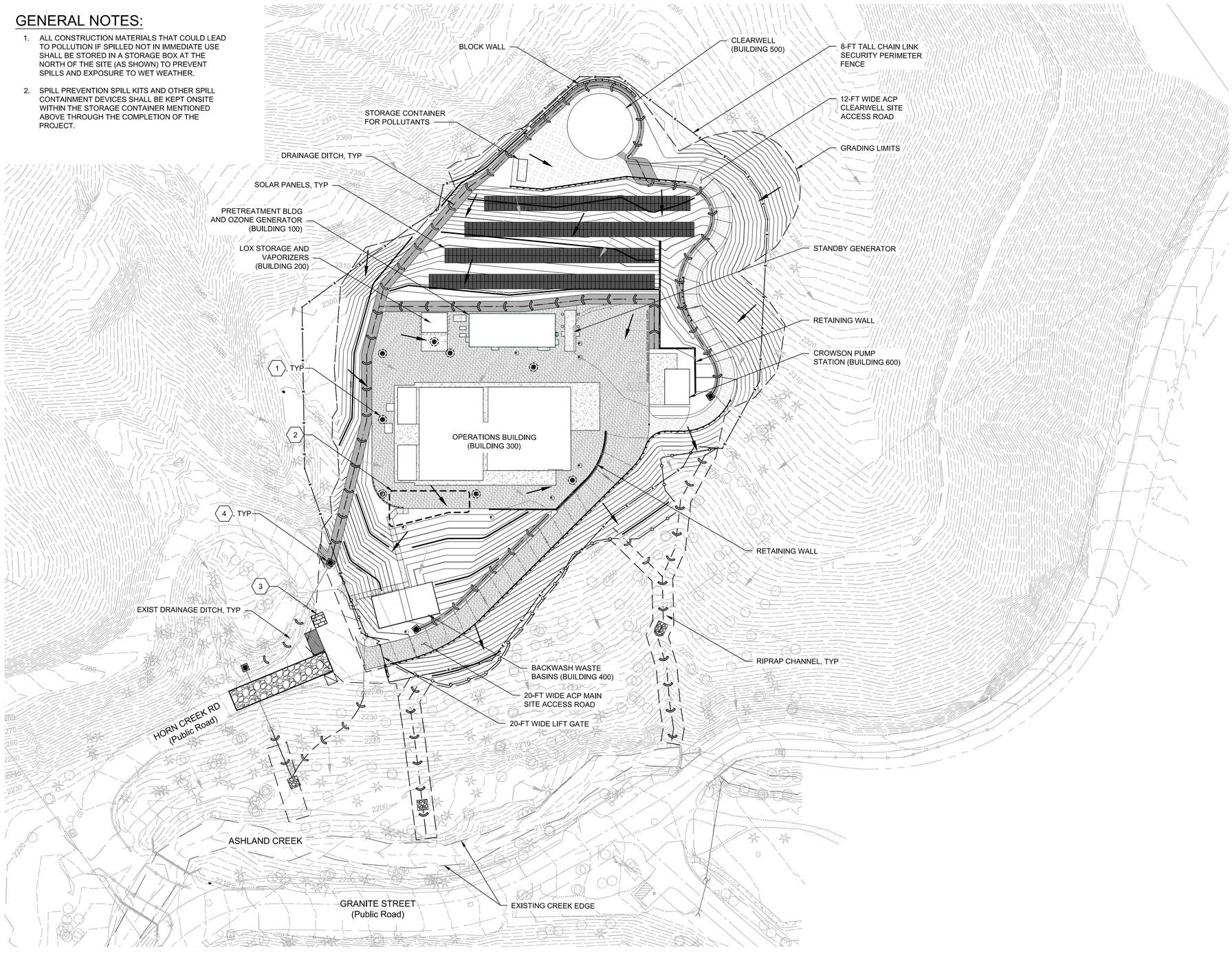

N

0' 50' 100' 150'
SCALE IN FEET

LEGEND:

- ASPHALT ROAD
- GRAVEL ROAD
- CONSTRUCTION ENTRANCE
- CONCRETE WASH AREA
- SEDIMENT TRAP
- CHECK DAM
- INLET PROTECTION - TYPE 3
- INLET PROTECTION - TYPE 4
- STRAW WATTLE
- SEDIMENT FENCE
- 2230 EXISTING 10' CONTOUR LINE
- EXISTING 2' CONTOUR LINE
- CONSTRUCTION LIMIT
- CREEK EDGE
- EXISTING ROAD EDGE
- PROPOSED DITCH
- EXISTING DITCH
- PROPOSED DIRECTION OF RUNOFF
- EXISTING DIRECTION OF RUNOFF
- EXISTING TREES
- EXISTING BOLLARD
- EXISTING POST
- EXISTING SIGN

EROSION CONTROL NOTES:

1. INSTALL INLET PROTECTION TYPE 3 PER STD DETAIL RD1010 / 000C014
2. SOIL STOCKPILE AREA TO BE COVERED WITH PLASTIC HELD DOWN BY SANDBAGS WHEN NOT IN USE
3. STAGING AREA TO INCLUDE SANITARY FACILITY AND WASTE RECEPTACLE WITH LID
4. INSTALL INLET PROTECTION TYPE 4 PER STD DETAIL RD1015 / 000C014

ISSUE	DATE	DESCRIPTION
A	09/2026	ISSUED FOR BIDS

PROJECT MANAGER	PIERRE KWAN
CIVIL	J. MEGRDITCHIAN
STRUCTURAL	P. LINDBLOM
ARCHITECTURAL	V. YANEZ
PROCESS	P. KWAN
MECHANICAL	K. CHEUNG
ELECTRICAL	R. MCCOMB
INSTRUMENTATION	D. BEST
PROJECT NUMBER	10193663

REGISTERED PROFESSIONAL ENGINEER 86507PE DIGITALLY SIGNED January 09, 2026 OREGON JOHN WILLIAM MEGRDITCHIAN
EXPIRES: 12/31/2026

CITY OF ASHLAND
Ashland, Oregon

City of Ashland

Ashland Creek Water Treatment Plant

2026

CIVIL
EROSION AND SEDIMENT CONTROL
VERTICAL CONSTRUCTION PLAN 5

0 1" 2"

FILENAME	000C010.dwg
SCALE	1" - 50'

SHEET **000C010**

FINAL STABILIZATION NOTES:

1. ALL SEDIMENT AND EROSION CONTROLS TO BE REMOVED UPON COMPLETION OF THIS PHASE.
2. SEE LANDSCAPING PLANS FOR PLANT SCHEDULE AND DETAILS.

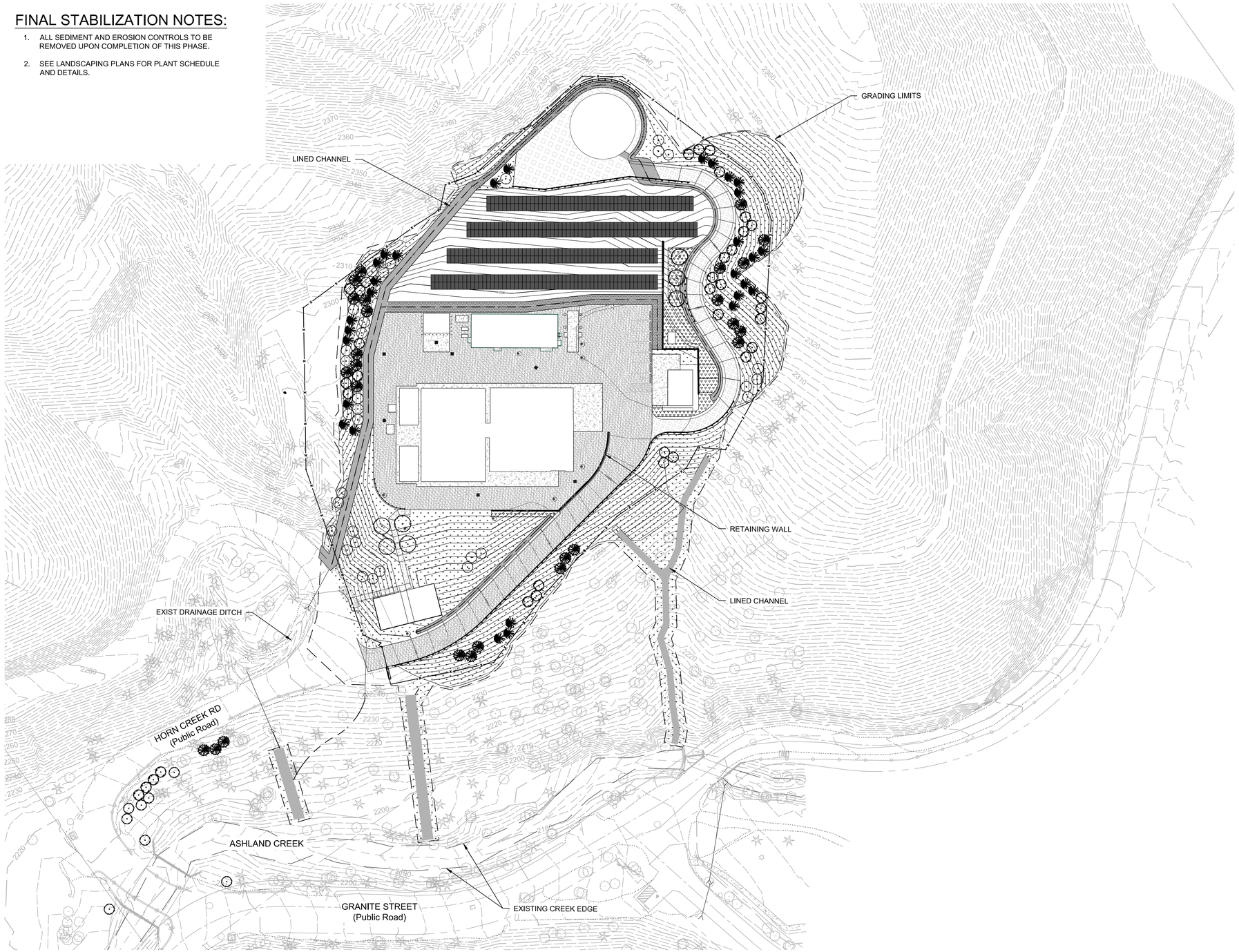

N

0' 50' 100' 150'
SCALE IN FEET

LEGEND:

- ASPHALT ROAD
- GRAVEL ROAD
- SITE RESTORATION SEEDING
- PARKING LOT LANDSCAPING PLANT MIX
- CONSTRUCTION ENTRANCE
- EXISTING 10' CONTOUR LINE
- EXISTING 2' CONTOUR LINE
- CONSTRUCTION LIMIT
- CREEK EDGE
- EXISTING ROAD EDGE
- PROPOSED DITCH
- EXISTING DITCH
- EXISTING TREES
- EXISTING BOLLARD
- EXISTING POST
- EXISTING SIGN

HDR

ISSUE	DATE	DESCRIPTION
A	09/2026	ISSUED FOR BIDS

PROJECT MANAGER	PIERRE KWAN
CIVIL	J. MEGRDITCHIAN
STRUCTURAL	P. LINDBLOM
ARCHITECTURAL	V. YANEZ
PROCESS	P. KWAN
MECHANICAL	K. CHEUNG
ELECTRICAL	R. MCCOMB
INSTRUMENTATION	D. BEST
PROJECT NUMBER	10193663

REGISTERED PROFESSIONAL ENGINEER
86507PE
DIGITALLY SIGNED
OREGON
January 09, 2026
JOHN WILLIAM MEGRDITCHIAN
Date: 2026.09.26 16:14:06 -07'00'
EXPIRES: 12/31/2026

CITY OF ASHLAND
Ashland, Oregon

City of Ashland

Ashland Creek Water Treatment Plant

2026

CIVIL
EROSION AND SEDIMENT CONTROL
FINAL LANDSCAPE AND STABILIZATION PLAN 6

0 1" 2"

FILENAME	000C011.dwg
SCALE	1" - 50'

SHEET
000C011

EXISTING TREE INVENTORY & ACTION TABLE

TREE NUMBER	TYPE	DBH (IN.)	ACTION
10003	DECIDUOUS	18	REMOVE
10004	DECIDUOUS	7	REMOVE
10005	DECIDUOUS	8	REMOVE
10006	DECIDUOUS	12	REMOVE
10007	DECIDUOUS	7	REMOVE
10008	DECIDUOUS	7	REMOVE
10009	DECIDUOUS	9	REMOVE
10013	CONIFEROUS	17	REMOVE
10015	CONIFEROUS	9	REMOVE
10016	CONIFEROUS	6	REMOVE
10017	CONIFEROUS	11	REMOVE
10018	CONIFEROUS	11	REMOVE
10019	CONIFEROUS	18	REMOVE
10020	CONIFEROUS	14	REMOVE
10021	CONIFEROUS	14	REMOVE
10022	CONIFEROUS	11	REMOVE
10023	CONIFEROUS	17	REMOVE
10024	CONIFEROUS	17	REMOVE
10025	CONIFEROUS	9	REMOVE
10026	CONIFEROUS	20	PROTECT
10027	CONIFEROUS	21	PROTECT
10029	CONIFEROUS	22	REMOVE
10030	CONIFEROUS	26	REMOVE
10031	CONIFEROUS	27	REMOVE
10032	CONIFEROUS	9	REMOVE
10033	CONIFEROUS	16	REMOVE
10034	CONIFEROUS	17	REMOVE
10035	CONIFEROUS	13	PROTECT
10036	CONIFEROUS	13	PROTECT
10037	CONIFEROUS	13	PROTECT
10038	CONIFEROUS	15	PROTECT
10039	CONIFEROUS	11	PROTECT
10040	CONIFEROUS	14	PROTECT
10041	DECIDUOUS	9 11	PROTECT
10042	CONIFEROUS	10	PROTECT
10043	CONIFEROUS	7	PROTECT
10044	CONIFEROUS	24	PROTECT
10045	CONIFEROUS	10	PROTECT
10046	CONIFEROUS	22	REMOVE
10047	DECIDUOUS	26	REMOVE
10048	DECIDUOUS	10	REMOVE
10049	DECIDUOUS	16 25	PROTECT
10057	CONIFEROUS	17	PROTECT
10058	CONIFEROUS	9	PROTECT
10059	CONIFEROUS	9	REMOVE
10060	CONIFEROUS	7	REMOVE
10061	CONIFEROUS	6	REMOVE
10062	CONIFEROUS	6	REMOVE
10063	CONIFEROUS	9	REMOVE
10064	CONIFEROUS	8	REMOVE
10065	CONIFEROUS	9	REMOVE
10066	CONIFEROUS	10	REMOVE
10067	CONIFEROUS	8	REMOVE
10068	CONIFEROUS	8	REMOVE
10069	CONIFEROUS	8	REMOVE
10072	DECIDUOUS	16	PROTECT

TREE NUMBER	TYPE	DBH (IN.)	ACTION
10073	DECIDUOUS	6	PROTECT
10074	DECIDUOUS	12	PROTECT
10075	DECIDUOUS	7	PROTECT
10076	DECIDUOUS	13	PROTECT
10077	DECIDUOUS	21	PROTECT
10078	DECIDUOUS	13	PROTECT
10079	DECIDUOUS	18	PROTECT
10080	DECIDUOUS	10 12 13	PROTECT
10081	DECIDUOUS	15 21	PROTECT
10082	DECIDUOUS	12 14	PROTECT
10083	DECIDUOUS	8 10 11	PROTECT
10085	DECIDUOUS	8	PROTECT
10086	DECIDUOUS	12	PROTECT
10087	DECIDUOUS	7	PROTECT
10108	DECIDUOUS	15	PROTECT
10109	DECIDUOUS	11	PROTECT
10110	DECIDUOUS	11	PROTECT
10111	DECIDUOUS	15	PROTECT
10112	DECIDUOUS	10	PROTECT
10113	DECIDUOUS	12	REMOVE
10114	DECIDUOUS	20	PROTECT
10115	DECIDUOUS	8	PROTECT
10116	DECIDUOUS	11	PROTECT
10119	DECIDUOUS	7	PROTECT
10120	DECIDUOUS	11	PROTECT
10123	DECIDUOUS	11	PROTECT
10124	DECIDUOUS	12 14	PROTECT
10125	DECIDUOUS	13	PROTECT
10126	DECIDUOUS	8	PROTECT
10128	DECIDUOUS	9	PROTECT
10129	DECIDUOUS	9	PROTECT
10130	DECIDUOUS	7	PROTECT
10131	DECIDUOUS	14	PROTECT
10133	DECIDUOUS	18	PROTECT
10134	DECIDUOUS	13	PROTECT
10135	DECIDUOUS	13	PROTECT
10136	CONIFEROUS	10	PROTECT
10137	DECIDUOUS	16	PROTECT
10140	CONIFEROUS	7	REMOVE
10141	CONIFEROUS	11	REMOVE
10142	DECIDUOUS	6	REMOVE
10143	CONIFEROUS	10	REMOVE
10144	CONIFEROUS	8	REMOVE
10145	CONIFEROUS	6	REMOVE
10146	CONIFEROUS	12	REMOVE
10147	CONIFEROUS	7	REMOVE
10148	CONIFEROUS	8	REMOVE
10149	CONIFEROUS	7	REMOVE
10150	DECIDUOUS	12	REMOVE
10152	CONIFEROUS	6	REMOVE
10153	DECIDUOUS	6	REMOVE
10155	CONIFEROUS	31	REMOVE
10157	CONIFEROUS	8	REMOVE
10158	CONIFEROUS	9	REMOVE
10160	CONIFEROUS	8	REMOVE
10161	CONIFEROUS	10	REMOVE

TREE NUMBER	TYPE	DBH (IN.)	ACTION
10163	DECIDUOUS	8 12	REMOVE
10164	DECIDUOUS	10	REMOVE
10165	DECIDUOUS	15	REMOVE
10167	CONIFEROUS	6	REMOVE
10168	CONIFEROUS	11	REMOVE
10170	CONIFEROUS	9	REMOVE
10171	CONIFEROUS	13	REMOVE
10172	CONIFEROUS	8	REMOVE
10175	CONIFEROUS	11	REMOVE
10177	CONIFEROUS	7	REMOVE
10178	CONIFEROUS	10	REMOVE
10179	CONIFEROUS	14	REMOVE
10189	DECIDUOUS	6 6	REMOVE
10190	DECIDUOUS	6	REMOVE
10192	DECIDUOUS	6	REMOVE
10193	DECIDUOUS	7	REMOVE
10195	DECIDUOUS	7	REMOVE
10197	CONIFEROUS	9	REMOVE
10198	CONIFEROUS	9	REMOVE
10199	CONIFEROUS	11	REMOVE
10200	CONIFEROUS	12	REMOVE
10202	CONIFEROUS	11	REMOVE
10204	CONIFEROUS	13	REMOVE
10207	DECIDUOUS	14	REMOVE
10208	DECIDUOUS	13	REMOVE
10209	DECIDUOUS	9	PROTECT
10213	DECIDUOUS	6	REMOVE
10214	DECIDUOUS	7 8 9	REMOVE
10215	DECIDUOUS	6	REMOVE
10216	DECIDUOUS	6	REMOVE
10217	DECIDUOUS	8	REMOVE
10219	DECIDUOUS	9	REMOVE
10220	DECIDUOUS	9	REMOVE
10221	DECIDUOUS	7	REMOVE
10222	DECIDUOUS	9	REMOVE
10223	DECIDUOUS	9	REMOVE
10224	DECIDUOUS	7	REMOVE
10225	DECIDUOUS	35	PROTECT
10226	DECIDUOUS	7	PROTECT
10228	DECIDUOUS	7 10	PROTECT
10229	DECIDUOUS	14	PROTECT
10230	DECIDUOUS	6	REMOVE
10231	DECIDUOUS	6 9 15 16	REMOVE
10232	DECIDUOUS	15 19	PROTECT
10233	DECIDUOUS	14	PROTECT
10234	DECIDUOUS	16	PROTECT
10235	DECIDUOUS	9 9 10	PROTECT
10236	DECIDUOUS	6 9 12	PROTECT
10237	DECIDUOUS	13	PROTECT
10238	DECIDUOUS	7	REMOVE
10239	DECIDUOUS	12	PROTECT
10240	DECIDUOUS	8 11	PROTECT
10241	DECIDUOUS	14	REMOVE
10242	DECIDUOUS	8 11 13	REMOVE
10243	CONIFEROUS	12	REMOVE
10244	CONIFEROUS	13	REMOVE

TREE NUMBER	TYPE	DBH (IN.)	ACTION
10245	DECIDUOUS	11	REMOVE
10246	DECIDUOUS	12	REMOVE
10247	DECIDUOUS	14	REMOVE
10248	DECIDUOUS	14	REMOVE
10249	DECIDUOUS	8	REMOVE
10250	DECIDUOUS	11 13 15 16	PROTECT
10251	DECIDUOUS	14	PROTECT
10260	DECIDUOUS	6	REMOVE
10261	DECIDUOUS	8	REMOVE
10262	DECIDUOUS	8 8	REMOVE
10263	DECIDUOUS	11	PROTECT
10264	DECIDUOUS	8	REMOVE
10265	DECIDUOUS	7	PROTECT
10266	DECIDUOUS	13	PROTECT
10267	DECIDUOUS	6 6	PROTECT
10268	DECIDUOUS	7	PROTECT
10269	DECIDUOUS	8	PROTECT
10270	DECIDUOUS	7	PROTECT
10271	DECIDUOUS	16	PROTECT
10272	DECIDUOUS	6 6	PROTECT
10273	DECIDUOUS	9	PROTECT
10274	DECIDUOUS	6	PROTECT
10275	DECIDUOUS	9	PROTECT
10276	DECIDUOUS	6	PROTECT
10277	DECIDUOUS	7	PROTECT
10278	DECIDUOUS	7	PROTECT
10279	DECIDUOUS	9	PROTECT
10280	CONIFEROUS	12	PROTECT
10281	CONIFEROUS	11	PROTECT
10282	CONIFEROUS	6	PROTECT
10283	DECIDUOUS	19	PROTECT
10284	DECIDUOUS	6 17	PROTECT
10285	DECIDUOUS	15	PROTECT
10286	DECIDUOUS	14	PROTECT
10287	DECIDUOUS	11	PROTECT
10288	DECIDUOUS	8 12	PROTECT
10289	DECIDUOUS	6	PROTECT
10290	DECIDUOUS	7	PROTECT
10291	DECIDUOUS	8	PROTECT
10292	DECIDUOUS	39	PROTECT
10293	DECIDUOUS	15	PROTECT
10294	DECIDUOUS	6	PROTECT
10295	DECIDUOUS	6	PROTECT
10296	DECIDUOUS	6	PROTECT
10297	DECIDUOUS	6	PROTECT
10298	DECIDUOUS	6 6	PROTECT
10299	DECIDUOUS	11	PROTECT
10300	DECIDUOUS	8	PROTECT
10301	DECIDUOUS	6	PROTECT
10302	CONIFEROUS	26	PROTECT
10303	CONIFEROUS	30	PROTECT
10304	DECIDUOUS	7	PROTECT
10305	DECIDUOUS	10	PROTECT
10306	DECIDUOUS	11	PROTECT
10307	DECIDUOUS	11 14	PROTECT
10308	DECIDUOUS	17	PROTECT

TREE NUMBER	TYPE	DBH (IN.)	ACTION
10309	DECIDUOUS	7	PROTECT
10310	CONIFEROUS	13	PROTECT
10311	DECIDUOUS	6	PROTECT
10312	DECIDUOUS	6	PROTECT
10313	DECIDUOUS	7	PROTECT
10314	DECIDUOUS	7	PROTECT
10315	DECIDUOUS	6	PROTECT
10316	DECIDUOUS	10 10	PROTECT
10317	CONIFEROUS	7	PROTECT
10318	CONIFEROUS	6	PROTECT
10319	DECIDUOUS	11	PROTECT
10320	DECIDUOUS	7 8	PROTECT
10321	DECIDUOUS	7 8	PROTECT
10322	DECIDUOUS	6	PROTECT
10323	DECIDUOUS	8	PROTECT
10324	DECIDUOUS	8	PROTECT
10325	DECIDUOUS	9	PROTECT
10326	DECIDUOUS	7 8	PROTECT
10327	DECIDUOUS	7 8	PROTECT
10328	CONIFEROUS	10	PROTECT
10329	DECIDUOUS	18	PROTECT
10330	DECIDUOUS	8	PROTECT
10331	DECIDUOUS	8	PROTECT
10332	DECIDUOUS	6 9	PROTECT
10333	DECIDUOUS	8 9	PROTECT
10334	DECIDUOUS	9	PROTECT
10335	DECIDUOUS	9 10	PROTECT
10336	DECIDUOUS	13	PROTECT
10337	DECIDUOUS	6	PROTECT
10338	DECIDUOUS	8	PROTECT
10339	DECIDUOUS	8 9	PROTECT
10340	CONIFEROUS	12	PROTECT
10341	DECIDUOUS	15	PROTECT
10342	CONIFEROUS	13	PROTECT
10343	CONIFEROUS	21	PROTECT
10458	DECIDUOUS	8	PROTECT
10459	DECIDUOUS	6	PROTECT
10460	DECIDUOUS	9	PROTECT
10461	DECIDUOUS	11	PROTECT
10462	CONIFEROUS	27	PROTECT
10463	CONIFEROUS	21	PROTECT
10464	DECIDUOUS	9	PROTECT
10465	DECIDUOUS	9	PROTECT
10466	DECIDUOUS	6	PROTECT
10467	DECIDUOUS	10	PROTECT
10468	DECIDUOUS	9	PROTECT
10469	DECIDUOUS	6	PROTECT
10470	CONIFEROUS	9	PROTECT
10471	CONIFEROUS	10	PROTECT
10472	DECIDUOUS	6 6 9 9	PROTECT
10478	DECIDUOUS	6	PROTECT
10479	CONIFEROUS	17	PROTECT
10481	DECIDUOUS	15	PROTECT
10483	DECIDUOUS	6 6 15	PROTECT
10487	DECIDUOUS	24	PROTECT
10488	DECIDUOUS	14	PROTECT

TREE NUMBER	TYPE	DBH (IN.)	ACTION
10491	DECIDUOUS	6 11	PROTECT
10492	DECIDUOUS	7	PROTECT
10493	DECIDUOUS	14 17	PROTECT
10495	DECIDUOUS	7	PROTECT
10497	DECIDUOUS	8 10 14	PROTECT
10501	DECIDUOUS	14	PROTECT
10503	DECIDUOUS	9	PROTECT
10504	DECIDUOUS	17 17 18	PROTECT
10541	DECIDUOUS	7 7	PROTECT
10546	DECIDUOUS	13	PROTECT
10547	DECIDUOUS	24	PROTECT
10548	CONIFEROUS	15	PROTECT
10552	DECIDUOUS	6	PROTECT
10553	DECIDUOUS	18	PROTECT
10554	DECIDUOUS	15	PROTECT
10555	DECIDUOUS	13	PROTECT
10561	DECIDUOUS	20	PROTECT
10562	DECIDUOUS	6	PROTECT
10574	DECIDUOUS	12	PROTECT
10577	DECIDUOUS	6	PROTECT
10579	CONIFEROUS	19	PROTECT
10580	DECIDUOUS	6	PROTECT
10581	DECIDUOUS	7	PROTECT
10584	CONIFEROUS	41	PROTECT
10592	DECIDUOUS	9	PROTECT
10593	DECIDUOUS	15	PROTECT
10594	DECIDUOUS	7	PROTECT
10619	DECIDUOUS	6	PROTECT
10620	DECIDUOUS	6 8	PROTECT
10621	DECIDUOUS	15	PROTECT
10622	DECIDUOUS	13	PROTECT
10629	DECIDUOUS	7 7 8 9	PROTECT
10631	DECIDUOUS	21	PROTECT
10634	DECIDUOUS	6	PROTECT
10642	CONIFEROUS	9	PROTECT
10644	CONIFEROUS	27 36	PROTECT
10692	DECIDUOUS	21	PROTECT
10693	DECIDUOUS	17	PROTECT
10702	DECIDUOUS	10 12 13	PROTECT
10703	DECIDUOUS	8	PROTECT
10705	DECIDUOUS	19	PROTECT
10706	DECIDUOUS	8	PROTECT
10709	DECIDUOUS	14 15	PROTECT
10712	DECIDUOUS	8	PROTECT
10713	DECIDUOUS	16 17	PROTECT
10714	DECIDUOUS	12	PROTECT
10715	DECIDUOUS	20	PROTECT
10720	CONIFEROUS	11	PROTECT
10721	CONIFEROUS	9	PROTECT
10722	CONIFEROUS	12	PROTECT
10723	DECIDUOUS	6	PROTECT
10724	DECIDUOUS	15	PROTECT
10725	CONIFEROUS	23	PROTECT
10726	DECIDUOUS	11	PROTECT
10727	DECIDUOUS	6	PROTECT
10728	DECIDUOUS	12	PROTECT

TREE NUMBER	TYPE	DBH (IN.)	ACTION
10729	DECIDUOUS	8	PROTECT
10730	DECIDUOUS	8	PROTECT
10731	DECIDUOUS	11	PROTECT
10732	DECIDUOUS	9	PROTECT
10733	DECIDUOUS	8	PROTECT
10734	CONIFEROUS	11	PROTECT
10735	DECIDUOUS	10	PROTECT
10736	CONIFEROUS	6	PROTECT
10737	CONIFEROUS	10	PROTECT
10738	DECIDUOUS	10	PROTECT
10739	DECIDUOUS	7 12	PROTECT
10740	DECIDUOUS	7 12	PROTECT
10741	DECIDUOUS	11	PROTECT
10742	DECIDUOUS	8 16	PROTECT
10743	DECIDUOUS	6	PROTECT
10746	DECIDUOUS	8	PROTECT
10762	DECIDUOUS	7 19	PROTECT
10763	DECIDUOUS	6	PROTECT
10764	CONIFEROUS	7	PROTECT
10848	CONIFEROUS	33	PROTECT
10849	DECIDUOUS	12	PROTECT
10851	DECIDUOUS	7 10	PROTECT
10852	DECIDUOUS	7 9	PROTECT
10853	DECIDUOUS	8	PROTECT
10856	DECIDUOUS	16	PROTECT
10857	DECIDUOUS	8 13	PROTECT
10858	DECIDUOUS	7 10	PROTECT
10859	DECIDUOUS	9 10	PROTECT
10860	CONIFEROUS	8	PROTECT
10861	DECIDUOUS	6 6 10	PROTECT
10862	CONIFEROUS	6	PROTECT
10863	CONIFEROUS	7	PROTECT
10864	CONIFEROUS	6	PROTECT
10865	DECIDUOUS	9	PROTECT
10869	DECIDUOUS	9	PROTECT
10870	DECIDUOUS	15	PROTECT
10871	DECIDUOUS	21	PROTECT
10872	DECIDUOUS	17	PROTECT
10874	CONIFEROUS	45	PROTECT
10875	DECIDUOUS	7	PROTECT
10877	DECIDUOUS	13	PROTECT
10878	DECIDUOUS	7 8	PROTECT
10879	CONIFEROUS	10 6	PROTECT
10880	CONIFEROUS	8	PROTECT
10881	DECIDUOUS	12	PROTECT
10882	DECIDUOUS	11	PROTECT
10883	DECIDUOUS	12	PROTECT
10884	CONIFEROUS	7	PROTECT
10885	DECIDUOUS	19	PROTECT
10887	DECIDUOUS	16	PROTECT
10888	DECIDUOUS	28	PROTECT
10889	DECIDUOUS	12	PROTECT
10893	CONIFEROUS	37	PROTECT
10894	CONIFEROUS	7	PROTECT
11012	DECIDUOUS	7	PROTECT
11013	DECIDUOUS	11	PROTECT

TREE NUMBER	TYPE	DBH (IN.)	ACTION
11015	DECIDUOUS	10	PROTECT
11016	DECIDUOUS	9	PROTECT
11017	DECIDUOUS	6	PROTECT
11018	DECIDUOUS	6	PROTECT
11023	CONIFEROUS	13	PROTECT
11024	DECIDUOUS	17	PROTECT
11025	CONIFEROUS	7	PROTECT
11026	DECIDUOUS	9	PROTECT
11027	DECIDUOUS	10	PROTECT
11028	CONIFEROUS	9	PROTECT
11029	CONIFEROUS	8	PROTECT
11030	CONIFEROUS	8	PROTECT
11031	DECIDUOUS	9	PROTECT
11032	CONIFEROUS	10	PROTECT
11033	DECIDUOUS	7	PROTECT
11034	DECIDUOUS	6	PROTECT
11035	DECIDUOUS	7	PROTECT
11036	DECIDUOUS	9	PROTECT
11037	CONIFEROUS	7	PROTECT
11038	CONIFEROUS	10	PROTECT
11039	CONIFEROUS	7	PROTECT
11040	DECIDUOUS	7	PROTECT
11041	CONIFEROUS	8	PROTECT
11042	CONIFEROUS	7	PROTECT
11043	CONIFEROUS	6	PROTECT
11044	CONIFEROUS	8	PROTECT
11045	DECIDUOUS	7	PROTECT
11046	DECIDUOUS	6	PROTECT
11047	CONIFEROUS	9	PROTECT
11049	CONIFEROUS	9	PROTECT
11050	DECIDUOUS	8	PROTECT
11051	DECIDUOUS	16	PROTECT
11052	CONIFEROUS	7	PROTECT
11053	DECIDUOUS	7	PROTECT
11054	DECIDUOUS	17	PROTECT
11055	CONIFEROUS	7	PROTECT
11056	DECIDUOUS	7	PROTECT
11057	CONIFEROUS	21	PROTECT
11058	CONIFEROUS	6	PROTECT
11059	CONIFEROUS	21	PROTECT
11060	CONIFEROUS	9	PROTECT
11062	CONIFEROUS	9	PROTECT
11063	DECIDUOUS	13 15 17	PROTECT
11065	DECIDUOUS	6	PROTECT
11067	DECIDUOUS	6	PROTECT
11070	DECIDUOUS	10	PROTECT
11071	CONIFEROUS	9	PROTECT
11073	CONIFEROUS	6	PROTECT
11074	CONIFEROUS	7	PROTECT
11078	DECIDUOUS	8	PROTECT
11079	DECIDUOUS	6	PROTECT
11080	DECIDUOUS	9	PROTECT
11081	DECIDUOUS	11	PROTECT
11082	DECIDUOUS	6	PROTECT
11083	CONIFEROUS	6	PROTECT
11084	CONIFEROUS	6	PROTECT

TREE NUMBER	TYPE	DBH (IN.)	ACTION
11087	DECIDUOUS	10	PROTECT
11088	DECIDUOUS	9	PROTECT
11089	DECIDUOUS	11	PROTECT
11093	DECIDUOUS	10	PROTECT
11095	CONIFEROUS	7	PROTECT
11096	CONIFEROUS	29	PROTECT
11097	DECIDUOUS	7 9 9 18	PROTECT
11099	CONIFEROUS	10	PROTECT
11100	DECIDUOUS	7 10 10 11	REMOVE
11103	DECIDUOUS	38	PROTECT
11104	DECIDUOUS	6	PROTECT
11105	CONIFEROUS	7	PROTECT
11106	DECIDUOUS	12 12 13	PROTECT
11108	CONIFEROUS	17	PROTECT
11109	CONIFEROUS	9	PROTECT
11110	CONIFEROUS	29	PROTECT
11111	DECIDUOUS	8	PROTECT
11113	DECIDUOUS	6	PROTECT
11114	DECIDUOUS	6	PROTECT
11184	CONIFEROUS	9	PROTECT
11185	CONIFEROUS	6	PROTECT
11186	CONIFEROUS	8	PROTECT
11187	CONIFEROUS	7	PROTECT
11188	CONIFEROUS	10	PROTECT
11189	CONIFEROUS	8	PROTECT
11191	DECIDUOUS	7	PROTECT
11195	DECIDUOUS	8	PROTECT
11196	DECIDUOUS	8	PROTECT
11197	DECIDUOUS	10	PROTECT
11200	DECIDUOUS	8	PROTECT
11201	CONIFEROUS	14	PROTECT
11202	CONIFEROUS	9	PROTECT
11203	DECIDUOUS	7	PROTECT
11204	DECIDUOUS	11	PROTECT
11205	CONIFEROUS	7	PROTECT
11206	CONIFEROUS	10	PROTECT
11208	CONIFEROUS	9	PROTECT
11209	DECIDUOUS	12	PROTECT
11210	DECIDUOUS	12	PROTECT
11211	DECIDUOUS	9	PROTECT
11214	DECIDUOUS	6	PROTECT
11215	DECIDUOUS	7	PROTECT
11218	DECIDUOUS	10	PROTECT
11219	DECIDUOUS	8	PROTECT
11220	DECIDUOUS	6 7 8	PROTECT
11221	CONIFEROUS	6	PROTECT
11222	CONIFEROUS	7	PROTECT
11223	CONIFEROUS	7	PROTECT
11224	CONIFEROUS	7	PROTECT
11225	CONIFEROUS	7	PROTECT
11232	DECIDUOUS	34	PROTECT
11233	CONIFEROUS	16	PROTECT
11234	CONIFEROUS	17	PROTECT
11236	DECIDUOUS	10 18 19	PROTECT
11237	CONIFEROUS	8	PROTECT
11238	DECIDUOUS	7	PROTECT

ISSUE	DATE	DESCRIPTION
A	09/2026	ISSUED FOR BIDS

PROJECT MANAGER	PIERRE KWAN
CIVIL	J. MEGRDITCHIAN
STRUCTURAL	P. LINDBLOM
ARCHITECTURAL	V. YANEZ
PROCESS	P. KWAN
MECHANICAL	K. CHEUNG
ELECTRICAL	R. MCCOMB
INSTRUMENTATION	D. BEST
PROJECT NUMBER	10193663

REGISTERED PROFESSIONAL ENGINEER 86507PE OREGON January 09, 2018 WILLIAM MEGRDITCHIAN
DIGITALLY SIGNED Date: 2026.09.26 09:14:45 -07'00'
EXPIRES: 12/31/2026

CITY OF ASHLAND
Ashland, Oregon

City of Ashland

Ashland Creek Water Treatment Plant

2026

CIVIL
EROSION AND SEDIMENT CONTROL
EXISTING TREE INVENTORY TABLES 1

0 1" 2"

FILENAME 000C012.dwg
SCALE N/A

SHEET **000C012**

EXISTING TREE INVENTORY & ACTION TABLE (CONTINUED)

TREE NUMBER	TYPE	DBH (IN.)	ACTION
11239	DECIDUOUS	6	PROTECT
11242	DECIDUOUS	10 10	PROTECT
11243	DECIDUOUS	6	PROTECT
11244	DECIDUOUS	7	PROTECT
11245	CONIFEROUS	9	PROTECT
11246	DECIDUOUS	9	PROTECT
11247	CONIFEROUS	8	PROTECT
11248	DECIDUOUS	7	PROTECT
11249	DECIDUOUS	7	PROTECT
11250	DECIDUOUS	7	PROTECT
11251	DECIDUOUS	10	PROTECT
11252	CONIFEROUS	35	PROTECT
11253	CONIFEROUS	34	PROTECT
11254	DECIDUOUS	6	PROTECT
11255	DECIDUOUS	6	PROTECT
11256	DECIDUOUS	15	PROTECT
11257	DECIDUOUS	6	PROTECT
11258	DECIDUOUS	6	PROTECT
11262	CONIFEROUS	7	PROTECT
11265	CONIFEROUS	6	PROTECT
11271	DECIDUOUS	9 9 15 16	PROTECT
11290	DECIDUOUS	13	PROTECT
11291	DECIDUOUS	33	PROTECT
11311	DECIDUOUS	20	PROTECT
11312	DECIDUOUS	14	PROTECT
11313	DECIDUOUS	21	PROTECT
11314	DECIDUOUS	21	PROTECT
11315	DECIDUOUS	21	PROTECT
11316	DECIDUOUS	7	PROTECT
11317	CONIFEROUS	28	PROTECT
11318	CONIFEROUS	14	PROTECT
11328	DECIDUOUS	29	PROTECT
11332	DECIDUOUS	14	PROTECT
11333	DECIDUOUS	12	PROTECT
11334	DECIDUOUS	13	PROTECT
11335	DECIDUOUS	12	PROTECT
11336	DECIDUOUS	24	PROTECT
11337	DECIDUOUS	15	PROTECT
11338	DECIDUOUS	10	PROTECT
11339	DECIDUOUS	8	PROTECT
11340	DECIDUOUS	10 11	PROTECT
11341	DECIDUOUS	20	PROTECT
11348	DECIDUOUS	11 12	PROTECT
11349	DECIDUOUS	8	REMOVE
11350	DECIDUOUS	9	PROTECT
11351	CONIFEROUS	6	REMOVE
11352	DECIDUOUS	7	REMOVE
11353	DECIDUOUS	11	PROTECT
11354	CONIFEROUS	23	PROTECT
11355	DECIDUOUS	11	PROTECT
11358	DECIDUOUS	34	PROTECT
11359	CONIFEROUS	21	PROTECT
11361	CONIFEROUS	7	REMOVE
11363	CONIFEROUS	10	PROTECT
11366	CONIFEROUS	6	PROTECT
11367	CONIFEROUS	8	PROTECT
11368	CONIFEROUS	6	PROTECT
11369	CONIFEROUS	35	PROTECT
11370	DECIDUOUS	9	PROTECT
11371	CONIFEROUS	10	PROTECT
11372	CONIFEROUS	7	PROTECT
11373	CONIFEROUS	11	PROTECT
11376	CONIFEROUS	11	PROTECT
11377	CONIFEROUS	9	PROTECT
11378	CONIFEROUS	11	PROTECT
11379	CONIFEROUS	12 13	PROTECT
11380	DECIDUOUS	11	PROTECT
11381	DECIDUOUS	7	PROTECT
11382	DECIDUOUS	8	PROTECT
11383	DECIDUOUS	11	PROTECT
11384	CONIFEROUS	14	PROTECT
11385	CONIFEROUS	6	PROTECT
11386	CONIFEROUS	8	PROTECT
11387	CONIFEROUS	10	PROTECT
11388	CONIFEROUS	15	PROTECT
11389	CONIFEROUS	11	PROTECT
11390	DECIDUOUS	13 15	PROTECT
11391	DECIDUOUS	9	PROTECT
11392	DECIDUOUS	7	PROTECT
11393	DECIDUOUS	12 16	PROTECT
11394	DECIDUOUS	15	PROTECT
11395	DECIDUOUS	11	PROTECT
11396	DECIDUOUS	8 11	PROTECT
11397	DECIDUOUS	12	PROTECT
11398	DECIDUOUS	17	PROTECT
11399	DECIDUOUS	9 10	PROTECT
11400	CONIFEROUS	10	PROTECT
11401	CONIFEROUS	6	PROTECT
11402	DECIDUOUS	6 6 6	PROTECT
11403	DECIDUOUS	7 16	PROTECT
11404	CONIFEROUS	8	PROTECT
11405	CONIFEROUS	17	PROTECT
11406	CONIFEROUS	9	PROTECT
11407	CONIFEROUS	13	PROTECT
11408	CONIFEROUS	10	PROTECT
11421	DECIDUOUS	7	PROTECT
11426	DECIDUOUS	10 10	PROTECT
11427	DECIDUOUS	10	PROTECT
11428	CONIFEROUS	18	PROTECT
11431	DECIDUOUS	20	PROTECT
11433	CONIFEROUS	6	PROTECT
11434	CONIFEROUS	8	PROTECT
11435	CONIFEROUS	6	PROTECT
11436	CONIFEROUS	8	PROTECT
11440	CONIFEROUS	7	PROTECT
11441	DECIDUOUS	7	PROTECT
11442	DECIDUOUS	8	PROTECT
11443	CONIFEROUS	11	PROTECT
11444	CONIFEROUS	11	PROTECT
11445	CONIFEROUS	17	PROTECT
11446	CONIFEROUS	9	PROTECT
11447	CONIFEROUS	9	PROTECT
11533	CONIFEROUS	14	PROTECT
11534	CONIFEROUS	20	PROTECT
11536	CONIFEROUS	10	PROTECT
11538	DECIDUOUS	6 6	PROTECT
11539	DECIDUOUS	11	PROTECT
11540	DECIDUOUS	11	PROTECT
11541	DECIDUOUS	8	PROTECT
11542	DECIDUOUS	7 7 9	PROTECT
11544	CONIFEROUS	7	PROTECT
11545	DECIDUOUS	9 9 14 16	PROTECT
11547	CONIFEROUS	11	PROTECT
11548	DECIDUOUS	6 7	PROTECT
11549	DECIDUOUS	7	PROTECT
11550	DECIDUOUS	7	PROTECT
11551	CONIFEROUS	8	PROTECT
11552	CONIFEROUS	8	PROTECT
11553	DECIDUOUS	10	PROTECT
11554	CONIFEROUS	14	PROTECT
11555	CONIFEROUS	19	PROTECT
11556	CONIFEROUS	13	PROTECT
11562	CONIFEROUS	16	PROTECT
11563	CONIFEROUS	11	PROTECT
11564	CONIFEROUS	12	PROTECT
11565	CONIFEROUS	10	PROTECT
11566	CONIFEROUS	13	PROTECT
11567	CONIFEROUS	9	PROTECT
11568	CONIFEROUS	9	PROTECT
11569	CONIFEROUS	9	PROTECT
11571	CONIFEROUS	7	PROTECT
11578	CONIFEROUS	11	PROTECT
11579	CONIFEROUS	16	PROTECT
11581	CONIFEROUS	10	PROTECT
11582	CONIFEROUS	8	PROTECT
11584	CONIFEROUS	15	PROTECT
11586	CONIFEROUS	15	PROTECT
11589	CONIFEROUS	13	PROTECT
11590	DECIDUOUS	6	PROTECT
11591	CONIFEROUS	16	PROTECT
11592	CONIFEROUS	13	PROTECT
11596	CONIFEROUS	12	PROTECT
11598	CONIFEROUS	8	PROTECT
11600	CONIFEROUS	11	PROTECT
11601	DECIDUOUS	10	PROTECT
11635	CONIFEROUS	6	REMOVE
11648	CONIFEROUS	7	REMOVE
11656	CONIFEROUS	7	REMOVE
11658	DECIDUOUS	7	REMOVE
11662	CONIFEROUS	10	REMOVE
11663	CONIFEROUS	8	REMOVE
11673	DECIDUOUS	7	PROTECT
11676	CONIFEROUS	17	PROTECT
11680	DECIDUOUS	13	PROTECT
11681	DECIDUOUS	9	PROTECT
11682	DECIDUOUS	10 10 12	PROTECT
11685	DECIDUOUS	8	PROTECT
11686	DECIDUOUS	8	PROTECT
11687	DECIDUOUS	8	PROTECT
11688	DECIDUOUS	10	PROTECT
11693	CONIFEROUS	21	PROTECT
11696	CONIFEROUS	19	PROTECT
11714	CONIFEROUS	13	PROTECT
11716	CONIFEROUS	15	PROTECT
11717	CONIFEROUS	15	PROTECT
11718	CONIFEROUS	15	PROTECT
11726	CONIFEROUS	13	PROTECT
11727	CONIFEROUS	14	PROTECT
11729	CONIFEROUS	9	PROTECT
11737	CONIFEROUS	8	PROTECT
11743	CONIFEROUS	6	PROTECT
11751	CONIFEROUS	19	PROTECT
11752	CONIFEROUS	21	PROTECT
11758	DECIDUOUS	7 7	PROTECT
11759	DECIDUOUS	7 7	REMOVE
11760	DECIDUOUS	9	PROTECT
11761	DECIDUOUS	6	REMOVE
11762	DECIDUOUS	6 6	REMOVE
11763	DECIDUOUS	8	REMOVE
11764	DECIDUOUS	6	REMOVE
11767	DECIDUOUS	9	REMOVE
11772	DECIDUOUS	6	REMOVE
11775	CONIFEROUS	9	PROTECT
11777	DECIDUOUS	8 8 9 9	PROTECT
11780	DECIDUOUS	6	PROTECT
11782	CONIFEROUS	13 13	PROTECT
11783	CONIFEROUS	15	PROTECT
11787	DECIDUOUS	6	PROTECT
11788	DECIDUOUS	6 6 7 7	PROTECT
11790	DECIDUOUS	8	PROTECT
11812	DECIDUOUS	12	PROTECT
11825	DECIDUOUS	7 7	REMOVE
11835	CONIFEROUS	9	PROTECT
11838	CONIFEROUS	15	PROTECT

TREE REPLACEMENT CALCULATION TABLE

ACTION	QUANTITY
EXISTING TREES REMOVED	138
REPLACEMENT TREES REQUIRED	138
REPLACEMENT TREES PROVIDED ONSITE	138

NOTES:
1. FENCE SHALL BE 4' IN HEIGHT AND SET AT TREE DRIP LINE.
2. FENCE MATERIALS SHALL CONSIST OF ORANGE HDPE OF HDPP MESH SECURED TO 2x2 WOOD POSTS OR STEEL T-BAR POSTS.
3. POSTS SHALL BE SET TO A DEPTH OF NO LESS THAN 2 FEET IN NATIVE SOIL.
4. FENCE SHALL REMAIN IN PALCE UNTIL THE COMPLETION OF CONSTRUCTION ACTIVITIES. MOVEMENT FOR REMOVAL OF FENCE REQUIRES APPROVAL BY ENGINEER.

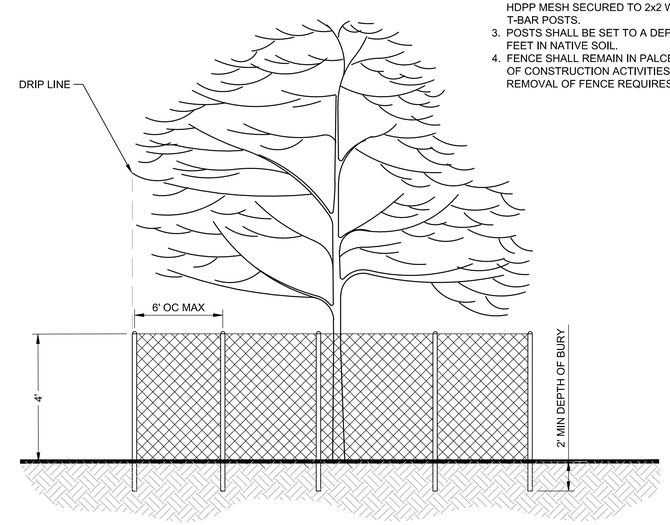

1 - TREE PROTECTION FENCING
SCALE: NTS

TREE PROTECTION NOTES:

1. CONTRACTOR SHALL NOTIFY THE ENGINEER AND CITY OF ASHLAND 72 HOURS MIN. PRIOR TO BOTH DEMOLITION AND EXCAVATION WITHIN THE DRIPLINE OF EXISTING TREES.
2. ALL TRENCH EXCAVATION IN THE DRIPLINES OF PROTECTED EXISTING TREES SHALL BE PERFORMED TO FULL DEPTH AND WIDTH OF EXCAVATION WITH AN AIRSPADE UNDER THE DIRECTION OF CITY OF ASHLAND ARBORIST. WATER SLUICING IS NOT ALLOWED. RETAIN ALL STRUCTURAL ROOTS (1 INCH OR GRATER IN DIAMETER) ACROSS TRENCHES. CITY OF ASHLAND ARBORIST TO DIRECT ROOT PRUNING IF NECESSARY.
3. AVOID DAMAGE TO ROOTS OF PROTECTED EXISTING TREES DURING DEMOLITION, EXCAVATION & TRENCHING.
4. PROTECT ROOTS OF PROTECTED EXISTING TREES AFTER EXPOSURE DUE TO CONCRETE REMOVAL, AIRSPADING OR OTHER CONSTRUCTION ACTIVITY. ONLY EXCAVATE AND EXPOSE AREA OF ROOTS THAT CAN BE BACKFILLED AND COVERED WITHIN ONE WORKING DAY. MAINTAIN MOIST SUBGRADE CONDITION UNTIL NEW CONCRETE IS INSTALLED.
5. USE OF BACKHOE IN DRIPLINES OF PROTECTED EXISTING TREES IS PROHIBITED.

ISSUE	DATE	DESCRIPTION
A	09/2026	ISSUED FOR BIDS

PROJECT MANAGER	PIERRE KWAN
CIVIL	J. MEGRDITCHIAN
STRUCTURAL	P. LINDBLOM
ARCHITECTURAL	V. YANEZ
PROCESS	P. KWAN
MECHANICAL	K. CHEUNG
ELECTRICAL	R. MCCOMB
INSTRUMENTATION	D. BEST
PROJECT NUMBER	10193663

REGISTERED PROFESSIONAL ENGINEER 86507PE OREGON January 09, 2018 JOHN WILLIAM MEGRDITCHIAN
DIGITALLY SIGNED Date: 2026.09.28 08:14:54 -07'00'
EXPIRES: 12/31/2026

CITY OF ASHLAND
Ashland, Oregon

City of Ashland

Ashland Creek Water Treatment Plant

2026

CIVIL
EROSION AND SEDIMENT CONTROL
EXISTING TREE INVENTORY TABLES 2

0 1" 2"

FILENAME 000C013.dwg
SCALE N/A

SHEET **000C013**

1 2 3 4 5 6 7 8

D C B A

20-JAN-2021 RD1000.dgn

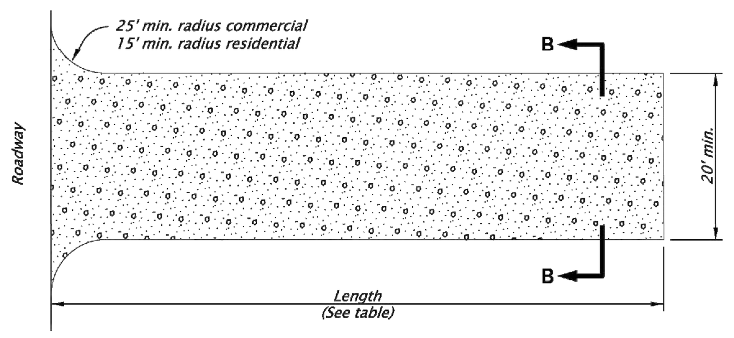

CONSTRUCTION ENTRANCE - TYPE 1
NOT TO SCALE

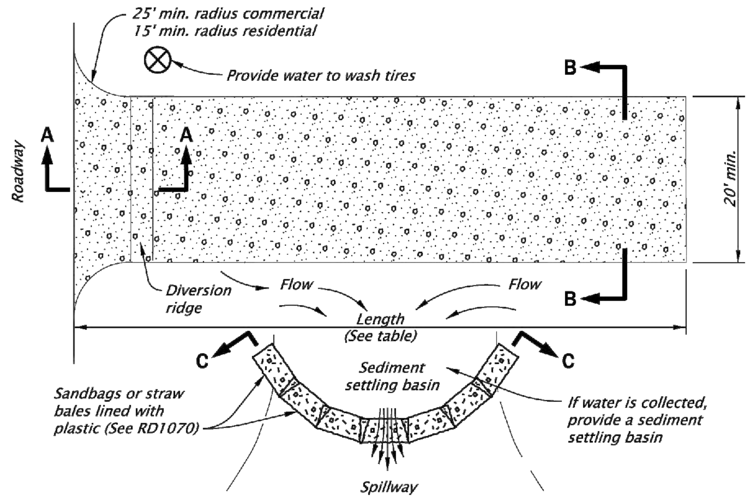

CONSTRUCTION ENTRANCE - TYPE 2
NOT TO SCALE

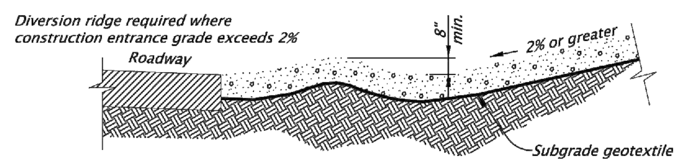

SECTION A-A
NOT TO SCALE

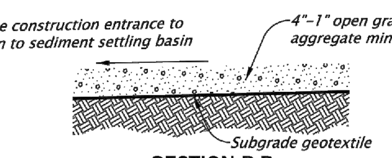

SECTION B-B
NOT TO SCALE

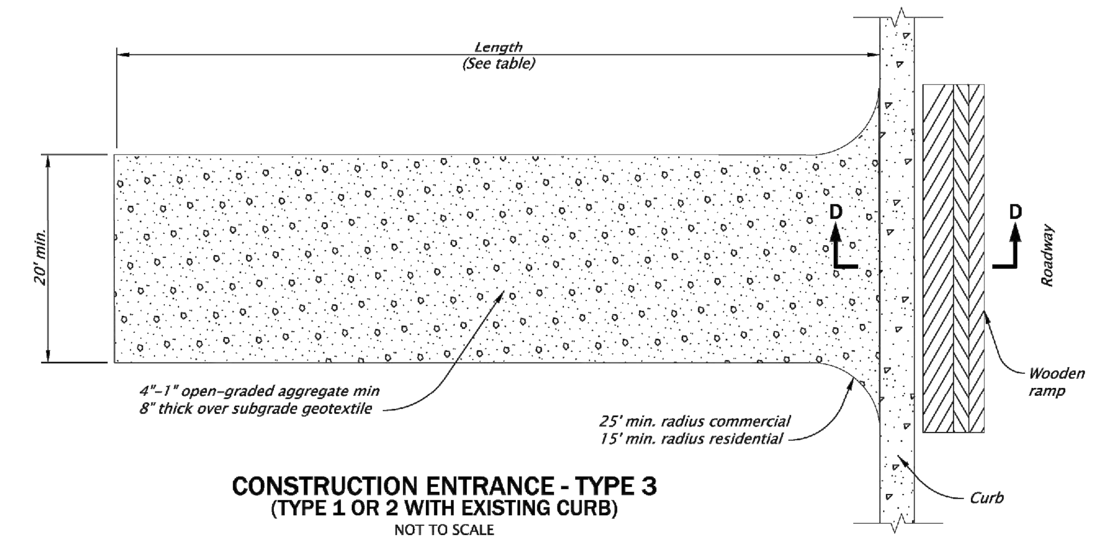

CONSTRUCTION ENTRANCE - TYPE 3
(TYPE 1 OR 2 WITH EXISTING CURB)
NOT TO SCALE

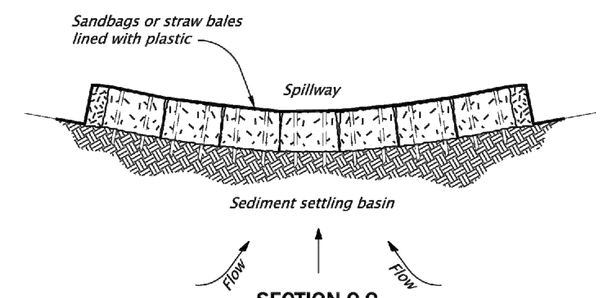

SECTION C-C
NOT TO SCALE

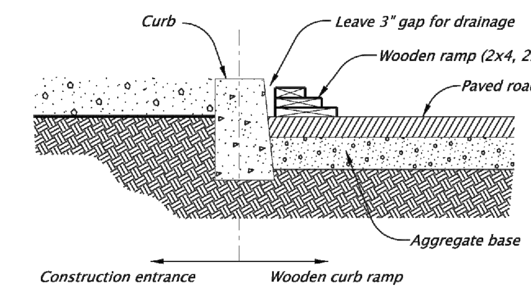

WOODEN CURB RAMP SECTION D-D
NOT TO SCALE

NOTES:
1. The Type 1 entrance is a simple entrance without a diversion ridge or settling basin.
2. The wooden ramp may be used on either Type 1 or Type 2 entrances in situations where there is curb and the curb is not removed for the construction entrance.

CONSTRUCTION ENTRANCE TABLE MINIMUM LENGTH	
Length (FT)	Area Of Exposed Soil (Acre)
20	0.25
50	0.25 < A < 1.0
100	A > 1.0

The selection and use of this Standard Drawing, while designed in accordance with generally accepted engineering principles and practices, is the sole responsibility of the user and should not be used without first consulting a Registered Professional Engineer.

All materials shall be in accordance with the current Oregon Standard Specifications.
OREGON STANDARD DRAWINGS
CONSTRUCTION ENTRANCES
2024

DATE	REVISION DESCRIPTION
01-2021	REMOVED CALC BOOK NUMBERS

CALC. BOOK NO. N/A SDR DATE 20-JAN-2021 **RD1000**

Effective Date: December 1, 2023 - May 31, 2024

20-JAN-2021 RD1005.dgn

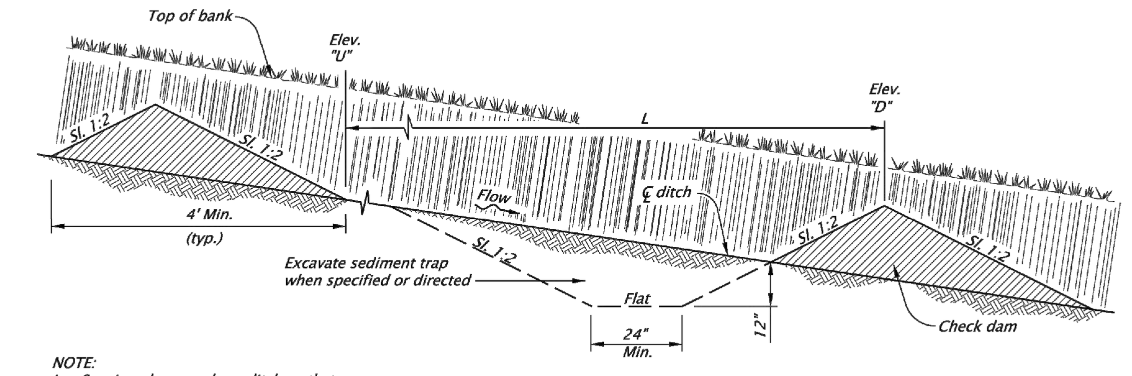

NOTE:
L = Spacing along swale or ditch so that Elevation "U" equals Elevation "D".

TYPICAL PROFILE SECTION CHECK DAMS
(SHOWN WITH AGGREGATE)
NOT TO SCALE

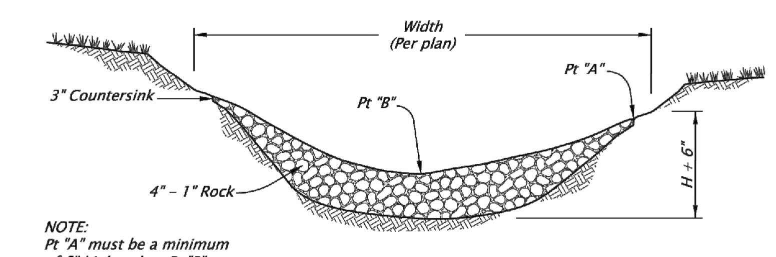

NOTE:
Pt "A" must be a minimum of 6" higher than Pt "B"

AGGREGATE CHECK DAM - TYPE 1
NOT TO SCALE

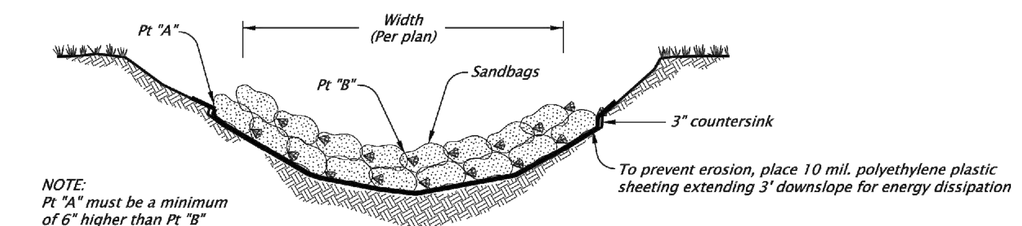

NOTE:
Pt "A" must be a minimum of 6" higher than Pt "B"

SANDBAG CHECK DAM - TYPE 4
NOT TO SCALE

NOTES:
1. Type 3 – stake biofilter bags with two 2"x2"x18" (minimum) wood stakes per bag. Drive stakes a minimum of 6" into the ground and flush with the top of the bags. Omit stakes if placed over paved surfaces. Overlap bags 12" minimum at each joint.
2. Type 4 – Tightly abut or overlap ends of sandbags at each joint.
3. Spacing between check dams for all check dam types shall comply with the typical profile section shown above.

MAXIMUM CHECK DAM SPACING "L"				
Ditch Grade	H=8"	H=12"	H=18"	H=24"
10%	* *	* *	15'	20'
9%	* *	* *	16'	22'
8%	* *	* *	18'	25'
7%	* *	* *	21'	28'
6%	* *	16'	25'	33'
5%	* *	20'	30'	40'
4%	16'	25'	37'	50'
3%	22'	33'	50'	66'
2%	33'	50'	75'	100'

* * Not allowed H = Min. dam height

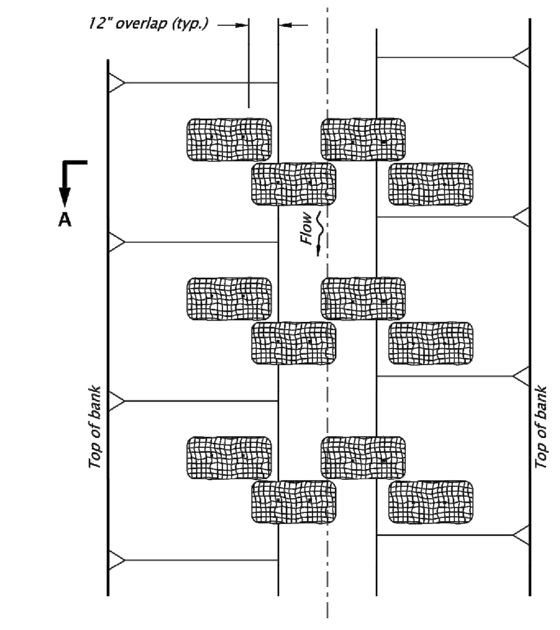

PLAN

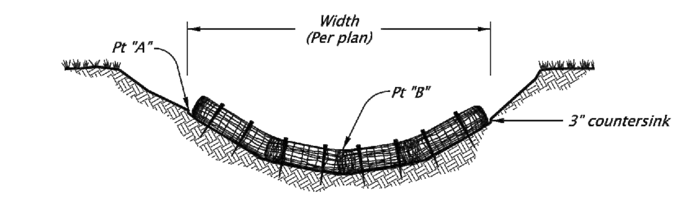

SECTION A-A

BIOFILTER BAG CHECK DAM - TYPE 3
NOT TO SCALE

The selection and use of this Standard Drawing, while designed in accordance with generally accepted engineering principles and practices, is the sole responsibility of the user and should not be used without first consulting a Registered Professional Engineer.

All materials shall be in accordance with the current Oregon Standard Specifications.
OREGON STANDARD DRAWINGS
CHECK DAMS TYPE 1, 3 AND 4
2024

DATE	REVISION DESCRIPTION
01-2021	REMOVED CALC BOOK NUMBERS

CALC. BOOK NO. N/A SDR DATE 20-JAN-2021 **RD1005**

Effective Date: December 1, 2023 - May 31, 2024

20-JAN-2021 RD1010.dgn

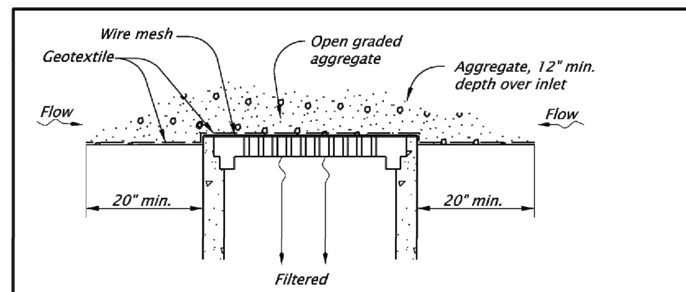

GEOTEXTILE/WIRE MESH/AGGREGATE - TYPE 2
NOT TO SCALE

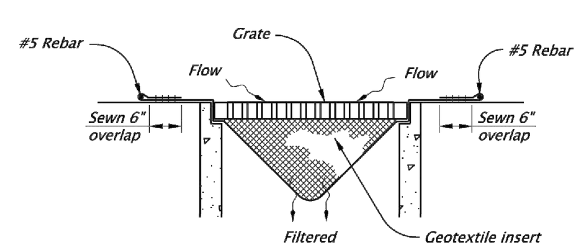

PREFABRICATED FILTER INSERT - TYPE 3
NOT TO SCALE

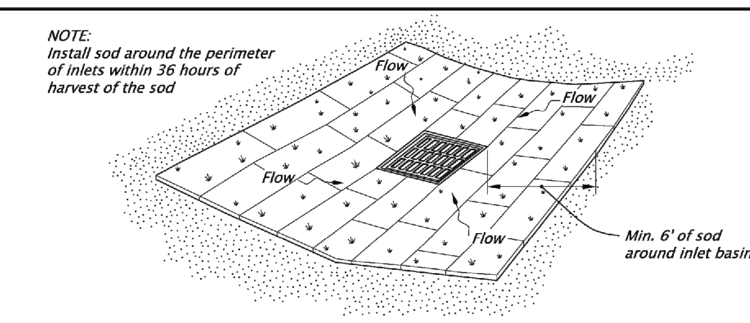

SOD PROTECTION - TYPE 6
NOT TO SCALE

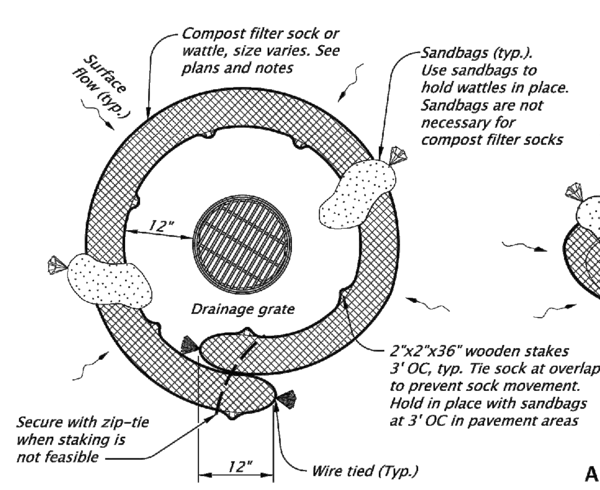

AREA DRAIN PLAN

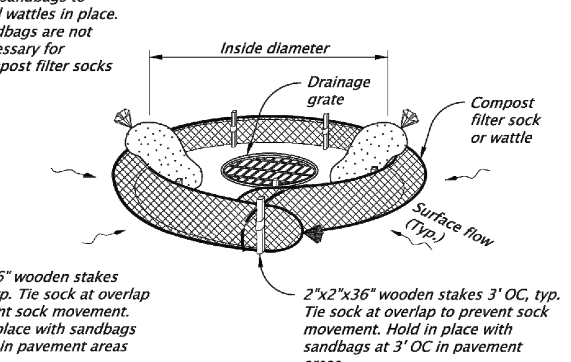

AREA DRAIN PERSPECTIVE VIEW

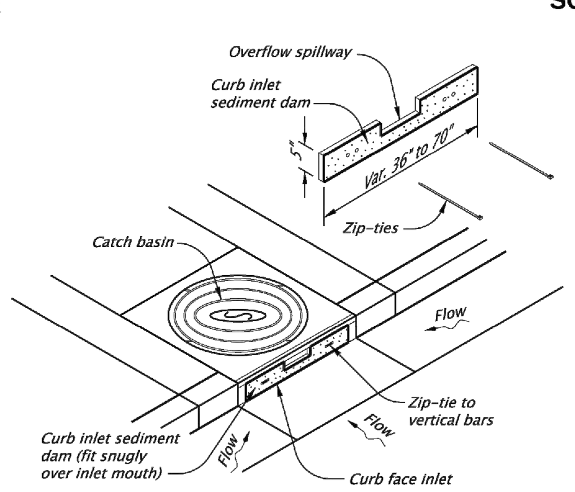

CURB INLET SEDIMENT DAM - TYPE 10
NOT TO SCALE

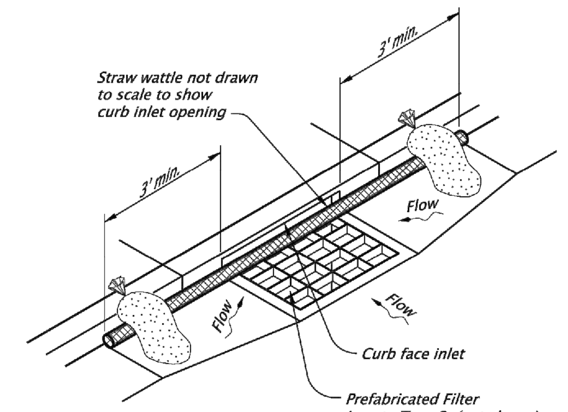

WATTLE BARRIER WITH FILTER INSERT - TYPE 11
NOT TO SCALE

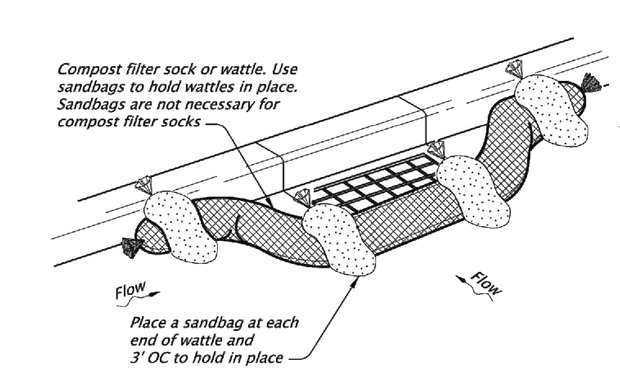

CURB INLET PERSPECTIVE VIEW

COMPOST FILTER SOCK OR WATTLE - TYPE 7
NOT TO SCALE

NOTES:
Type 2 – Geotextile/wire mesh/aggregate
Place the wire mesh over the grate.
Place sediment fence geotextile over the wire mesh and perimeter area around structure.
Install aggregate over the geotextile fabric.

Type 3 – Prefabricated filter inserts
Install prefabricated filter inserts according to the plans, special provisions, and manufacturer recommendations.
Prefabricated inserts with provisions for overflow are allowed only when accompanied by additional BMP's to prevent the potential of sediments entering project storm systems.
Field fabricated inserts are not allowed.

Type 7 – Compost filter sock
Drive 2"x2" wood stakes a minimum of 6" into ground and flush with the top of the sock.
Overlap ends of sock per manufacturers recommendations (12"min., 36" max.).
Use 8" to 12" dia sock on curbside in traffic areas.

(Type 7 cont.)
Use 12" to 18" dia sock in non-traffic areas or areas where the larger socks can be used safely.
use synthetic mesh socks for temporary installations.

Type 10 – Curb inlet sediment dam
Fit curb inlet sediment dam snugly into inlet mouth. Curb inlet sediment dam is required for use with inlet filter insert where at-grade inlet grate and curb inlet are combined at a catch basin.

Type 11 – Wattle barrier with filter insert
Install prefabricated filter insert per Type 3 detail.
Install wattles over opening and 36" to each side of opening tight against curb. Adjust wattle to force storm water to flow through filter insert or wattle prior to leaving the site.
Adjust, replace or modify the inlet protection as needed to prevent sediment laden water from entering the catch basin.

The selection and use of this Standard Drawing, while designed in accordance with generally accepted engineering principles and practices, is the sole responsibility of the user and should not be used without first consulting a Registered Professional Engineer.

All materials shall be in accordance with the current Oregon Standard Specifications.
OREGON STANDARD DRAWINGS
INLET PROTECTION TYPE 2, 3, 6, 7, 10 AND 11
2024

DATE	REVISION DESCRIPTION
01-2021	REMOVED CALC BOOK NUMBERS
01-2021	MOVED NOTES UP FROM OVERLAPPING THE SHEET BORDER

CALC. BOOK NO. N/A SDR DATE 20-JAN-2021 **RD1010**

Effective Date: December 1, 2023 - May 31, 2024

20-JAN-2021 RD1015.dgn

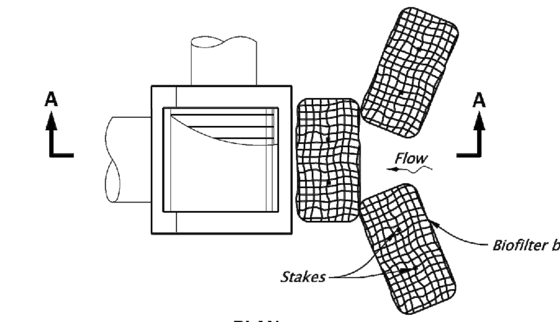

PLAN
DITCH INLET

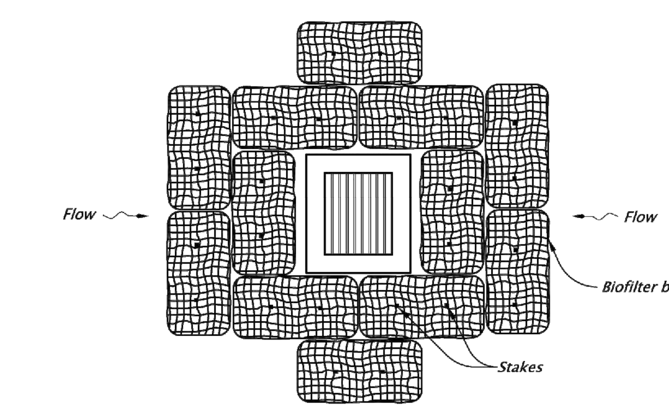

PLAN
AREA DRAIN

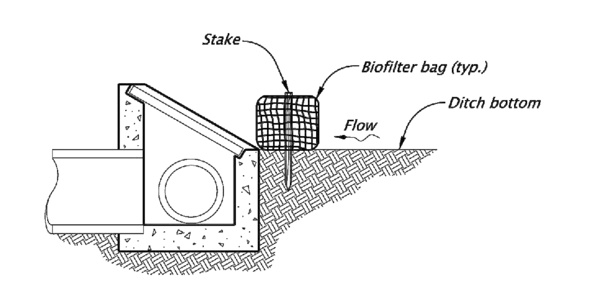

SECTION A-A
DITCH INLET

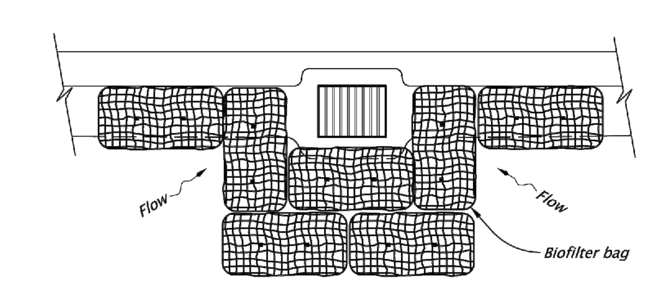

PLAN
CATCH BASIN

BIOFILTER BAGS - TYPE 4
NOT TO SCALE

NOTES:
1. Stake biofilter bags with 2"x2"x36" wood stakes, and use a minimum 2 stakes per bag. Drive stakes a minimum of 6" into the ground and flush with the top of the bags.
2. Omit stakes when bags are placed on pavement surface.
3. Overlap all bag joints 6".
4. Biofilter bags used on active roadways are easily displaced and made ineffective if struck by vehicles. If struck by a cyclist, falls with injury could result. On active roadways alternative inlet protection should be considered.

The selection and use of this Standard Drawing, while designed in accordance with generally accepted engineering principles and practices, is the sole responsibility of the user and should not be used without first consulting a Registered Professional Engineer.

All materials shall be in accordance with the current Oregon Standard Specifications.
OREGON STANDARD DRAWINGS
INLET PROTECTION TYPE 4
2024

DATE	REVISION DESCRIPTION
01-2021	REMOVED CALC BOOK NUMBERS

CALC. BOOK NO. N/A SDR DATE 20-JAN-2021 **RD1015**

Effective Date: December 1, 2023 - May 31, 2024

HDR

ISSUE	DATE	DESCRIPTION
A	09/2026	ISSUED FOR BIDS

PROJECT MANAGER	PIERRE KWAN
CIVIL	J. MEGRDITCHIAN
STRUCTURAL	P. LINDBLOM
ARCHITECTURAL	V. YANEZ
PROCESS	P. KWAN
MECHANICAL	K. CHEUNG
ELECTRICAL	R. MCCOMB
INSTRUMENTATION	D. BEST
PROJECT NUMBER	10193663

REGISTERED PROFESSIONAL ENGINEER
86507PE
DIGITALLY SIGNED Date: 2026.09.26 09:15:11-07'00'
OREGON
January 09, 2018
JOHN WILLIAM MEGRDITCHIAN
EXPIRES: 12/31/2026

CITY OF ASHLAND
Ashland, Oregon

City of Ashland

Ashland Creek Water Treatment Plant

2026

CIVIL
EROSION AND SEDIMENT CONTROL DETAILS 1

0 1" 2"

FILENAME 000C014.dwg
SCALE NTS

SHEET **000C014**

RD1030.dgn 20-JAN-2021

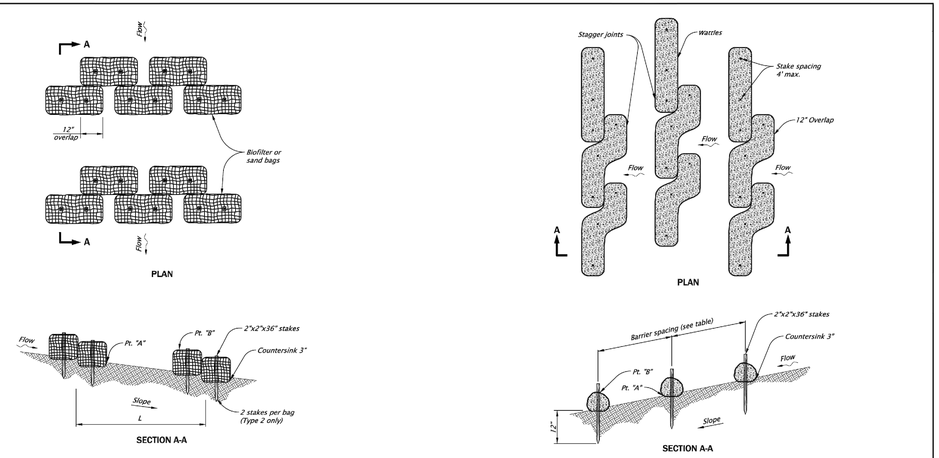

BIOFILTER BAG / SAND BAG BARRIER - TYPE 2 AND 4

NOT TO SCALE

FIBER ROLL BARRIER - TYPE 3

NOT TO SCALE

NOTES:
1. For Type 2 barrier, drive stakes flush with top of bag and into undisturbed ground a min. of 12". Omit stakes if bags are placed on paved surface.
2. For Type 2 and Type 4 barriers, space bags (L) so that the elevation of point "A" is less than or equal to the elevation of point "B".

Type 2 - Biofilter bags
Type 3 - Wattles
Type 4 - Sand bags

BARRIER SPACING		
INSTALL PARALLEL ALONG CONTOURS AS FOLLOWS		
% SLOPE	% SLOPE	MAXIMUM SPACING ON SLOPE
10% Flatter	1:10 or Flatter	300'
10 > % ≥ 15	10 > X ≥ 7.5	150'
15 > % ≥ 20	7.5 > X ≥ 5	100'
20 > % ≥ 30	5 > X ≥ 3	50'
Steeper than 30%	Steeper than 1:3	25'

The selection and use of this Standard Drawing, while designed in accordance with generally accepted engineering principles and practices, is the sole responsibility of the user and should not be used without first consulting a Registered Professional Engineer.

All materials shall be in accordance with the current Oregon Standard Specifications.

OREGON STANDARD DRAWINGS

SEDIMENT BARRIER TYPE 2, 3 AND 4

2024

DATE	REVISION DESCRIPTION
01-2021	REMOVED CALC BOOK NUMBERS

CALC BOOK NO. - - - N/A - - - SOR DATE 20-JAN-2021 **RD1030**

Effective Date: December 1, 2023 - May 31, 2024

RD1040.dgn 20-JAN-2021

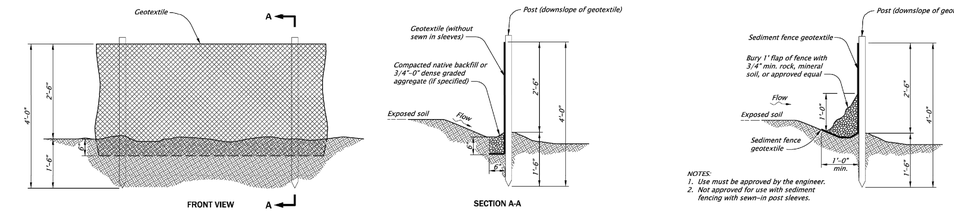

SEDIMENT FENCE AND GEOTEXTILE BURY DETAIL - TYPE 1

NOT TO SCALE

ALTERNATE SEDIMENT FENCE WITHOUT TRENCHING - TYPE 2

NOT TO SCALE

NOTES:
1. Use 2"x2" wood fence posts.
2. Posts to be installed on downhill side of sediment fence geotextile. Position posts to prevent separation from geotextile.
3. Compact filter fabric trench backfill and soil on uphill side of fence.
4. Locate fence no closer than three feet to the toe of a slope.
5. Wing spacing shall comply with "Fence Spacing for General Application Table".

FENCE SPACING FOR GENERAL APPLICATION TABLE	
INSTALL PARALLEL ALONG CONTOURS AS FOLLOWS	
GRADE	MAXIMUM SPACING ON GRADE
Grade < 10%	300'
10% ≤ Grade < 15%	150'
15% ≤ Grade < 20%	100'
20% ≤ Grade < 30%	50'
30% ≤ Grade	25'

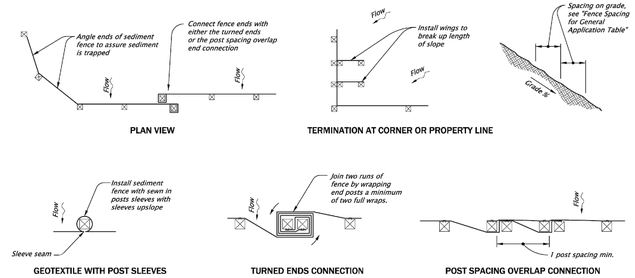

POST SPACING TABLE	
6'	Sediment Fence with Geotextile elongation less than 50%
4'	Sediment Fence with Geotextile elongation 50% or more

GEOTEXTILE END CONNECTIONS

NOT TO SCALE

The selection and use of this Standard Drawing, while designed in accordance with generally accepted engineering principles and practices, is the sole responsibility of the user and should not be used without first consulting a Registered Professional Engineer.

All materials shall be in accordance with the current Oregon Standard Specifications.

OREGON STANDARD DRAWINGS

SEDIMENT FENCE

2024

DATE	REVISION DESCRIPTION
01-2021	REMOVED CALC BOOK NUMBERS

CALC BOOK NO. - - - N/A - - - SOR DATE 20-JAN-2021 **RD1040**

Effective Date: December 1, 2023 - May 31, 2024

RD1050.dgn 20-JAN-2021

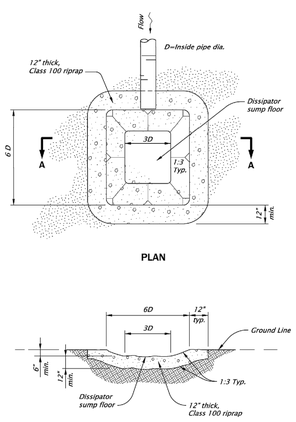

NOTES:
1. All dimensions not indicated will be as directed.
2. Install level spreader, sediment barrier(s), check dam(s) or other appropriate BMP(s) to address volume, velocity and turbidity of discharge water.

TEMPORARY SCOUR BASIN / ENERGY DISSIPATOR

NOT TO SCALE

The selection and use of this Standard Drawing, while designed in accordance with generally accepted engineering principles and practices, is the sole responsibility of the user and should not be used without first consulting a Registered Professional Engineer.

All materials shall be in accordance with the current Oregon Standard Specifications.

OREGON STANDARD DRAWINGS

TEMPORARY SCOUR BASIN / ENERGY DISSIPATOR

2024

DATE	REVISION DESCRIPTION
01-2021	REMOVED CALC BOOK NUMBERS

CALC BOOK NO. - - - N/A - - - SOR DATE 20-JAN-2021 **RD1050**

Effective Date: December 1, 2023 - May 31, 2024

RD1055.dgn 20-JAN-2021

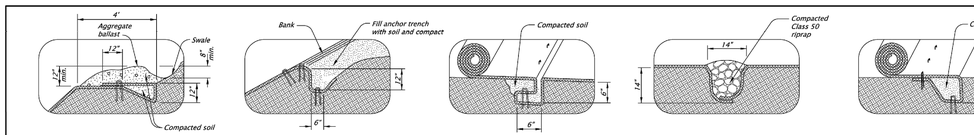

FIGURE A1: TOP OF BANK ANCHOR TRENCH, H>3' AND TERMINAL SLOPE
NOT TO SCALE

FIGURE A2: TOP OF BANK ANCHOR TRENCH, H<3'
NOT TO SCALE

FIGURE A3: CHANNEL CHECK SLOT
NOT TO SCALE

FIGURE A4: CHANNEL CHECK SLOT WITH ROCK BACKFILL
NOT TO SCALE

FIGURE A5: INITIAL CHANNEL ANCHOR TRENCH
NOT TO SCALE

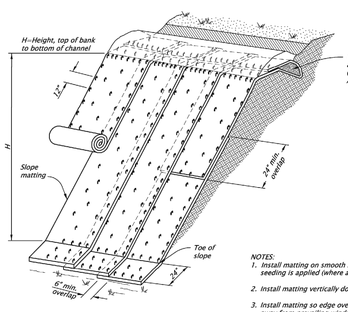

SLOPE MATTING ISOMETRIC VIEW

NOT TO SCALE

NOTES:
1. Install matting on smooth soil surface after seeding is applied (where applicable).
2. Install matting vertically down slope.
3. Install matting so edge overlaps are shingled away from prevailing winds.
4. Place fastener at 12" OC on matting edges
5. Overlap upper mat over lower mat, and fasten.
6. Stagger alternate rows of fasteners placed at 24" OC
7. Extend mat 24" beyond toe of slope; fold mat back under 4" and fasten.
8. Matting Types A through E: Furnish fully biodegradable product. Matting with plastic or photodegradable components will not be accepted.

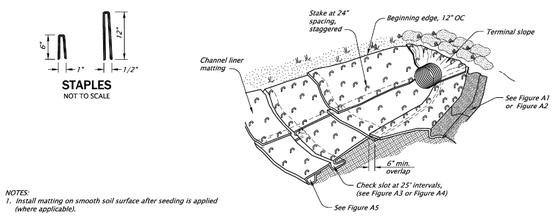

STAPLES
NOT TO SCALE

CHANNEL MATTING ISOMETRIC VIEW

NOT TO SCALE

NOTES:
1. Install matting on smooth soil surface after seeding is applied (where applicable).
2. Install channel liner matting, in the direction of water flow. Anchor upstream end of mat with check slot for culvert outfalls, place mat under pipe 12" minimum upstream from pipe outlet.
3. Construct check slots across channel bottom at 25' spacing and at the end of each mat (Fig. A3 or A4).
4. Overlap side channel liner matting edges 6" over the center channel liner matting and fasten edges 12" OC. Continue overlap and stapling pattern for each additional side channel liner mat.
5. Lap upstream matting end 12" over beginning edge of downstream matting. Fasten 12" OC
6. Anchor top edge of side channel matting in trench and fasten 12" OC (Fig. A2).
7. Fasten matting interior at 24" OC with staggered spacing.
8. Construct initial anchor trench at downstream end of matting and terminal slope anchor at upstream end.
9. Matting Types A through E: Furnish fully biodegradable product. Matting with plastic or photodegradable components will not be accepted.

The selection and use of this Standard Drawing, while designed in accordance with generally accepted engineering principles and practices, is the sole responsibility of the user and should not be used without first consulting a Registered Professional Engineer.

All materials shall be in accordance with the current Oregon Standard Specifications.

OREGON STANDARD DRAWINGS

SLOPE AND CHANNEL MATTING

2024

DATE	REVISION DESCRIPTION
01-2021	REMOVED CALC BOOK NUMBERS

CALC BOOK NO. - - - N/A - - - SOR DATE 20-JAN-2021 **RD1055**

Effective Date: December 1, 2023 - May 31, 2024

ISSUE	DATE	DESCRIPTION
A	09/2026	ISSUED FOR BIDS

PROJECT MANAGER	PIERRE KWAN
CIVIL	J. MEGRDITCHIAN
STRUCTURAL	P. LINDBLOM
ARCHITECTURAL	V. YANEZ
PROCESS	P. KWAN
MECHANICAL	K. CHEUNG
ELECTRICAL	R. MCCOMB
INSTRUMENTATION	D. BEST
PROJECT NUMBER	10193663

REGISTERED PROFESSIONAL ENGINEER 86507PE OREGON January 09, 2026 JOHN WILLIAM MEGRDITCHIAN
DIGITALLY SIGNED Date: 2026.09.29 09:15:22-07'00'
EXPIRES: 12/31/2026

CITY OF ASHLAND
Ashland, Oregon

City of Ashland

Ashland Creek Water Treatment Plant

2026

CIVIL EROSION AND SEDIMENT CONTROL DETAILS 2

0 1" 2"

FILENAME	000C015.dwg
SCALE	NTS

SHEET **000C015**

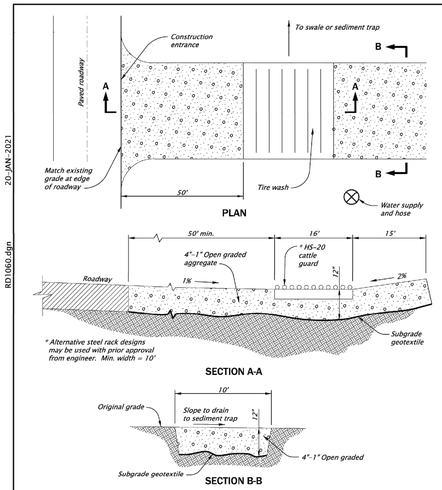

TIRE WASH - TYPE 1 (MANUAL HOSE WASH)
NOT TO SCALE

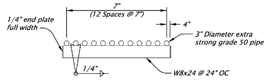

HS-20 CATTLE GUARD
NOT TO SCALE

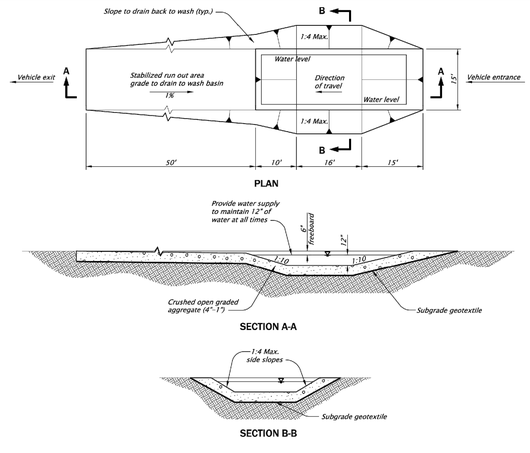

TIRE WASH - TYPE 2
NOT TO SCALE

The selection and use of this Standard Drawing, while designed in accordance with generally accepted engineering principles and practices, is the sole responsibility of the user and should not be used without first consulting a Registered Professional Engineer.

All materials shall be in accordance with the current Oregon Standard Specifications.

OREGON STANDARD DRAWINGS

TIRE WASH FACILITY TYPE 1 AND 2

2024

DATE	REVISION DESCRIPTION
01-2021	REMOVED CALC BOOK NUMBERS

CALC BOOK NO. N/A SDR DATE 20-JAN-2021 **RD1060**

20-JAN-2021 RD1060.dgn

Effective Date: December 1, 2023 - May 31, 2024

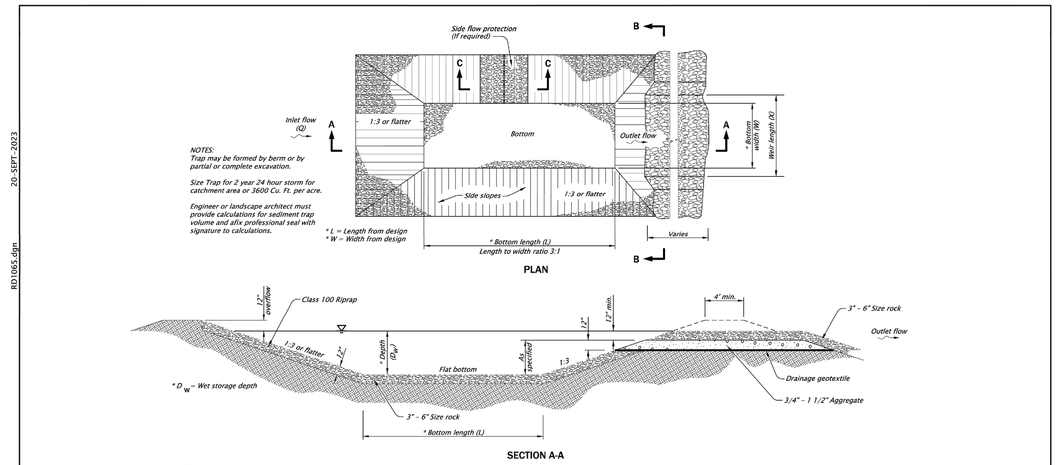

SEDIMENT TRAP
NOT TO SCALE

The selection and use of this Standard Drawing, while designed in accordance with generally accepted engineering principles and practices, is the sole responsibility of the user and should not be used without first consulting a Registered Professional Engineer.

All materials shall be in accordance with the current Oregon Standard Specifications.

OREGON STANDARD DRAWINGS

SEDIMENT TRAP

2024

DATE	REVISION DESCRIPTION
01-2021	REMOVED CALC BOOK NUMBERS
09-2023	UPDATED NOTES

CALC BOOK NO. N/A SDR DATE 20-SEPT-2023 **RD1065**

20-SEPT-2023 RD1065.dgn

Effective Date: December 1, 2023 - May 31, 2024

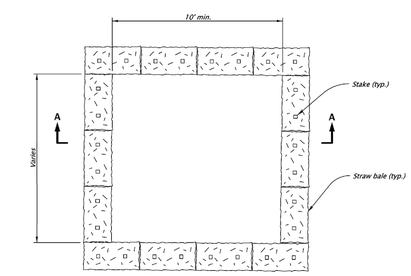

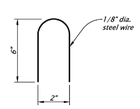

STAPLE DETAIL
NOT TO SCALE

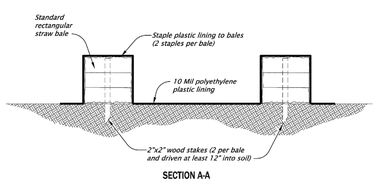

CONCRETE TRUCK WASH OUT FACILITY
NOT TO SCALE

The selection and use of this Standard Drawing, while designed in accordance with generally accepted engineering principles and practices, is the sole responsibility of the user and should not be used without first consulting a Registered Professional Engineer.

All materials shall be in accordance with the current Oregon Standard Specifications.

OREGON STANDARD DRAWINGS

CONCRETE TRUCK WASH OUT

2024

DATE	REVISION DESCRIPTION

CALC BOOK NO. N/A SDR DATE 20-JAN-2021 **RD1070**

20-JAN-2021 RD1070.dgn

Effective Date: December 1, 2023 - May 31, 2024

ISSUE	DATE	DESCRIPTION
A	09/2026	ISSUED FOR BIDS

PROJECT MANAGER	PIERRE KWAN
CIVIL	J. MEGRDITCHIAN
STRUCTURAL	P. LINDBLOM
ARCHITECTURAL	V. YANEZ
PROCESS	P. KWAN
MECHANICAL	K. CHEUNG
ELECTRICAL	R. MCCOMB
INSTRUMENTATION	D. BEST
PROJECT NUMBER	10193663

REGISTERED PROFESSIONAL ENGINEER 86507PE DIGITALLY SIGNED OREGON January 09, 2026 JOHN WILLIAM MEGRDITCHIAN Date: 2026.09.28 09:15:31 -07'00'

EXPIRES: 12/31/2026

CITY OF ASHLAND
Ashland, Oregon

City of Ashland

Ashland Creek Water Treatment Plant

2026

CIVIL
EROSION AND SEDIMENT CONTROL DETAILS 3

0 1" 2"

FILENAME 000C016.dwg
SCALE NTS

SHEET **000C016**

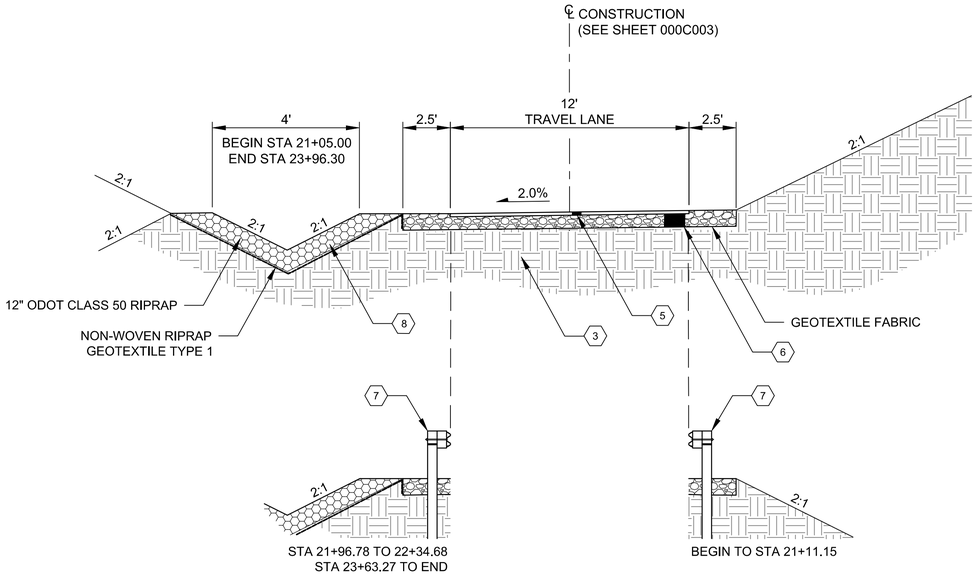

A CLEARWELL ACCESS ROAD

NTS

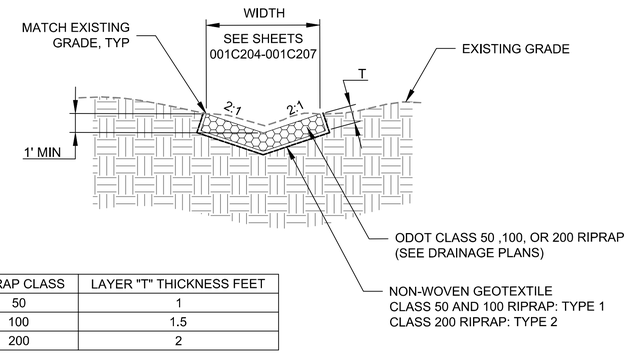

RIPRAP CLASS	LAYER "T" THICKNESS FEET
50	1
100	1.5
200	2

B RIPRAP LINED CHANNEL

NTS

KEYNOTES NOTES:

1. FIBER REINFORCED HMA CL. 4", PG 70-22ER
2. INSTALL MSE WALL, SEE SHEET001C503 FOR ADDITIONAL INFORMATION
3. SUBGRADE COMPACTED TO 95%
4. CRUSHED SURFACING BASE COURSE, 6"
5. CRUSHED SURFACING TOP COURSE, 2"
6. CRUSHED SURFACING BASE COURSE, 8"
7. MIDWEST GUARDRAIL SYSTEM (W-BEAM), FACE OF BARRIER TO BE LOCATED ON EDGE OF TRAVEL LANE. PER ODOT STD DRAWING RD402 AND RD406
8. DRAINAGE DITCH, TYP
9. DRAINAGE CURB (CONCRETE), PER ODOT STD DRAWING RD701

TURF REINFORCEMENT LINED CHANNEL NOTES:

1. EROSION CONTROL BLANKET SHALL HAVE TOP NETTING OF 60X50 WOVEN COIR FIBER NETTING, BOTTOM NETTING OF NATURAL JUTE FIBER, AND MIDDLE LAYER OF COCONUT FIBER. BLANKET SHALL BE FROM ODOT'S QUALIFIED PRODUCT LIST.
2. SEED AND EROSION CONTROL BLANKET PER ODOT STANDARDS AND SPECIFICATIONS SECTION 1030, PERMANENT SEEDING.

RIPRAP LINED CHANNEL NOTES

1. INSTALL RIPRAP GEOTEXTILE PER ODOT STANDARDS AND SPECIFICATIONS SECTION 00350.
2. RIPRAP SHALL BE PER GRADATION IN ODOT STANDARDS AND SPECIFICATIONS SECTION 00390.

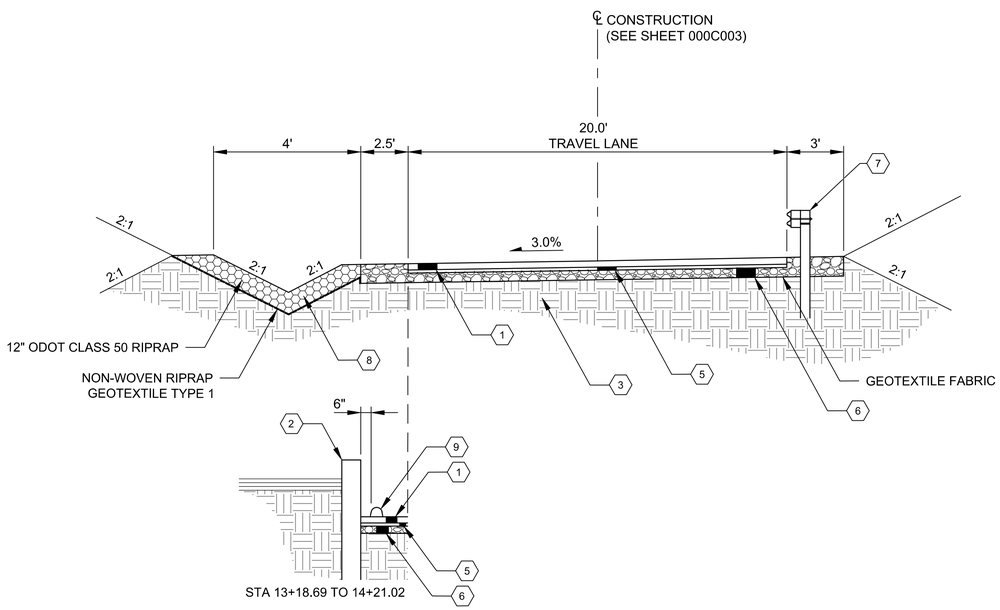

C SITE ACCESS ROAD

NTS

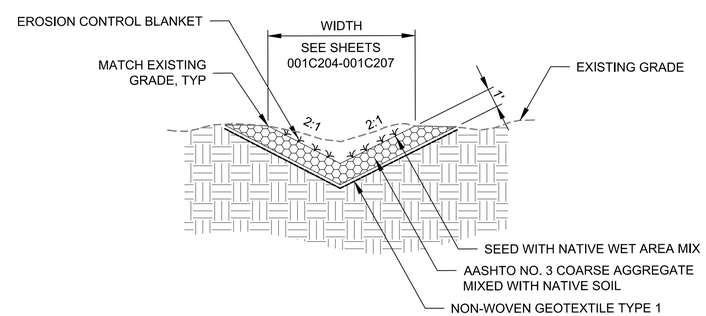

D TURF REINFORCEMENT LINED CHANNEL

NTS

ISSUE	DATE	DESCRIPTION
A	09/2026	ISSUED FOR BIDS

PROJECT MANAGER	PIERRE KWAN
CIVIL	J. MEGRDITCHIAN
STRUCTURAL	P. LINDBLOM
ARCHITECTURAL	V. YANEZ
PROCESS	P. KWAN
MECHANICAL	K. CHEUNG
ELECTRICAL	R. MCCOMB
INSTRUMENTATION	D. BEST
PROJECT NUMBER	10193663

REGISTERED PROFESSIONAL ENGINEER 86507PE
DIGITALLY SIGNED Date: 2026.09.26 09:22:18-07'00'
OREGON
January 09, 2018
JOHN WILLIAM MEGRDITCHIAN
EXPIRES: 12/31/2026

CITY OF ASHLAND
Ashland, Oregon

City of Ashland

Ashland Creek Water Treatment Plant

2026

CIVIL TYPICAL SECTIONS

0 1" 2"

FILENAME	001C101.dwg
SCALE	NTS

SHEET **001C101**

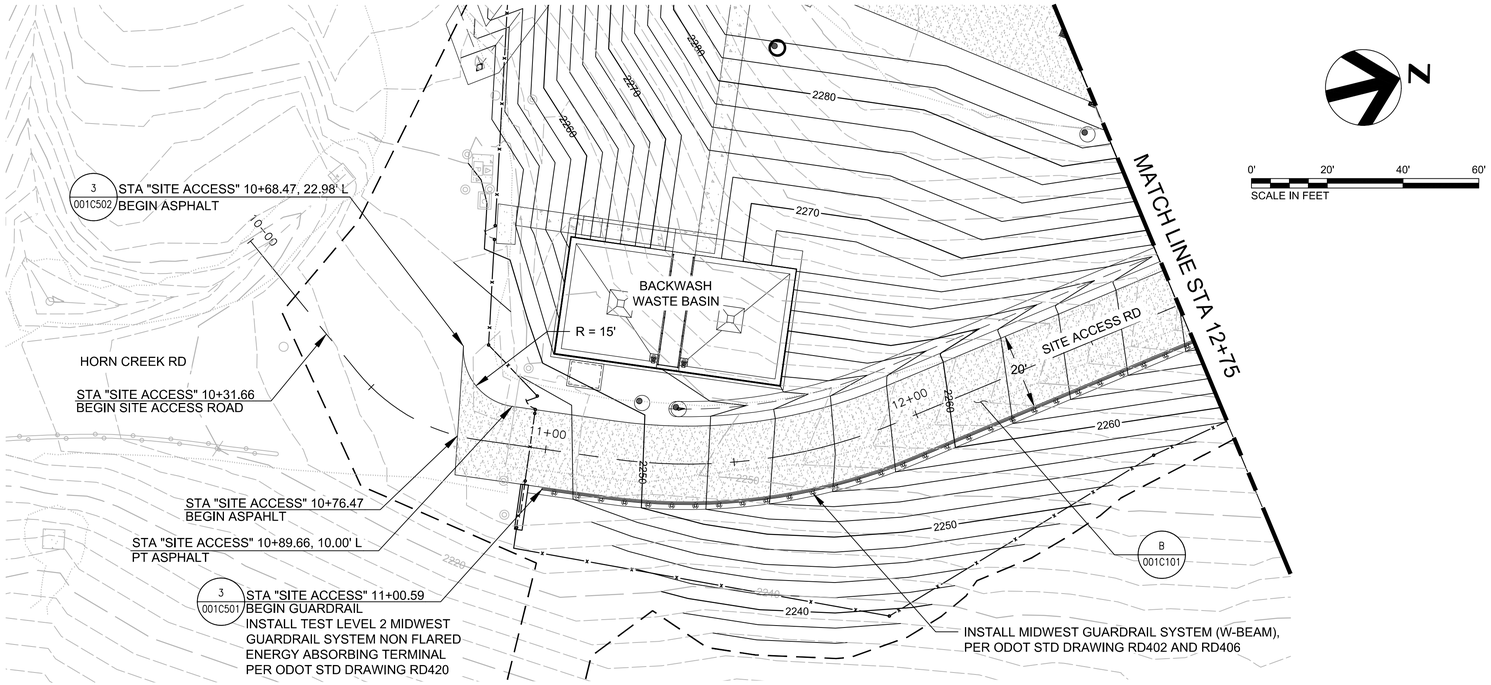

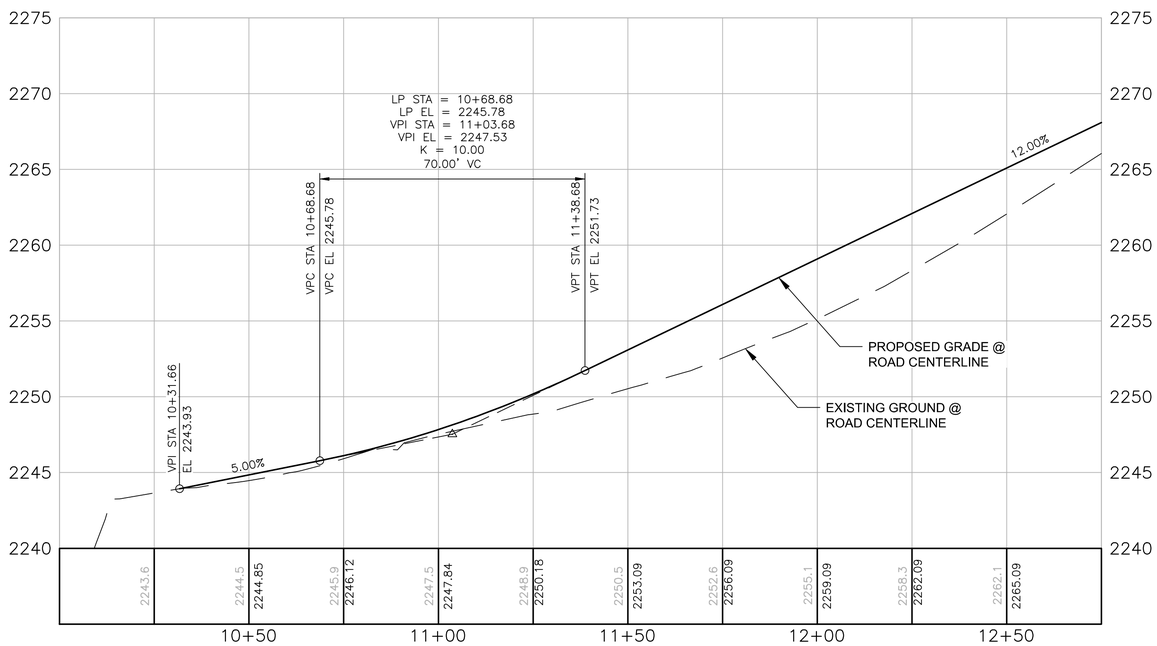

ISSUE	DATE	DESCRIPTION
A	09/2026	ISSUED FOR BIDS

PROJECT MANAGER	PIERRE KWAN
CIVIL	J. MEGRDITCHIAN
STRUCTURAL	P. LINDBLOM
ARCHITECTURAL	V. YANEZ
PROCESS	P. KWAN
MECHANICAL	K. CHEUNG
ELECTRICAL	R. MCCOMB
INSTRUMENTATION	D. BEST
PROJECT NUMBER	10193663

REGISTERED PROFESSIONAL ENGINEER
86507PE
DIGITALLY SIGNED
Date: 2026.09.28 09:22:10-07'00'
OREGON
January 09, 2026
JOHN WILLIAM MEGRDITCHIAN
EXPIRES: 12/31/2026

CITY OF ASHLAND
Ashland, Oregon

City of Ashland

Ashland Creek Water Treatment Plant

2026

CIVIL
SITE ACCESS ROAD
PLAN AND PROFILE A

0 1" 2"

FILENAME	001C102.dwg
SCALE	AS SHOWN

SHEET
001C102

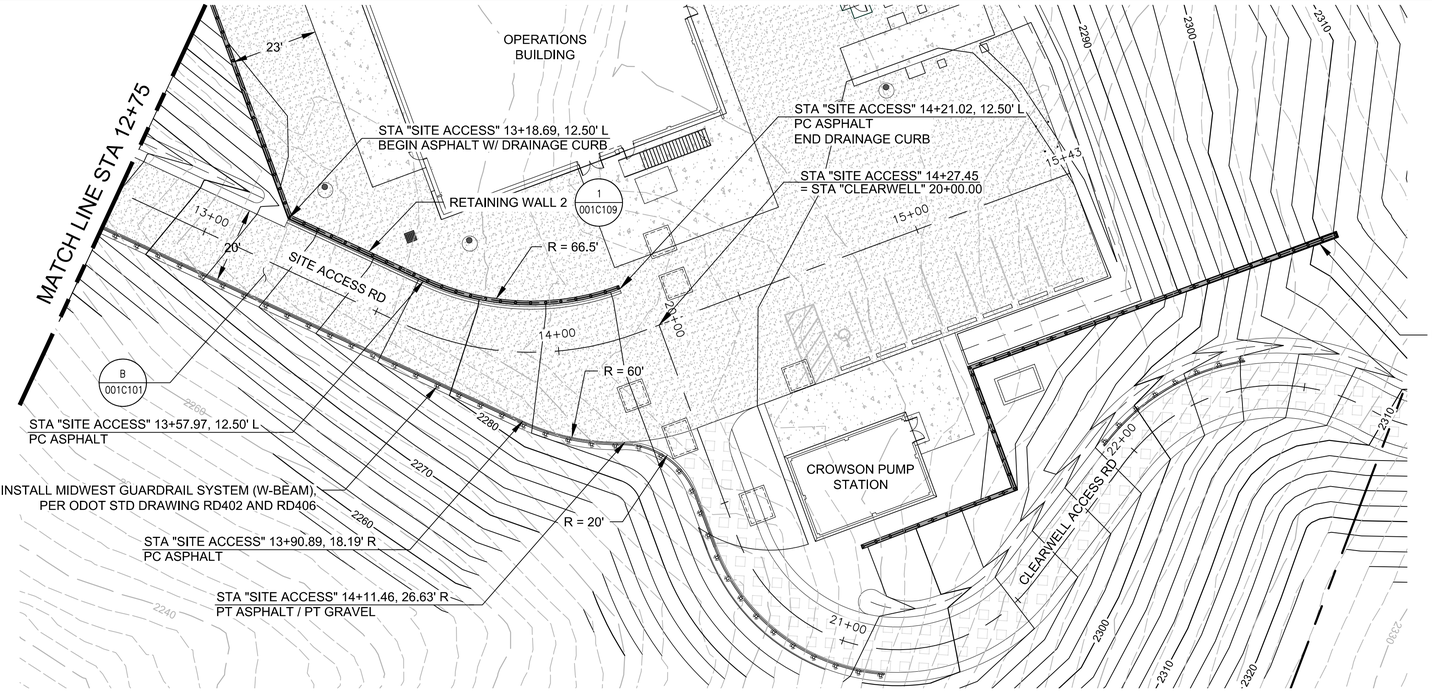

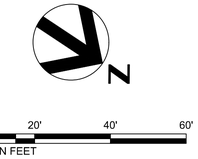

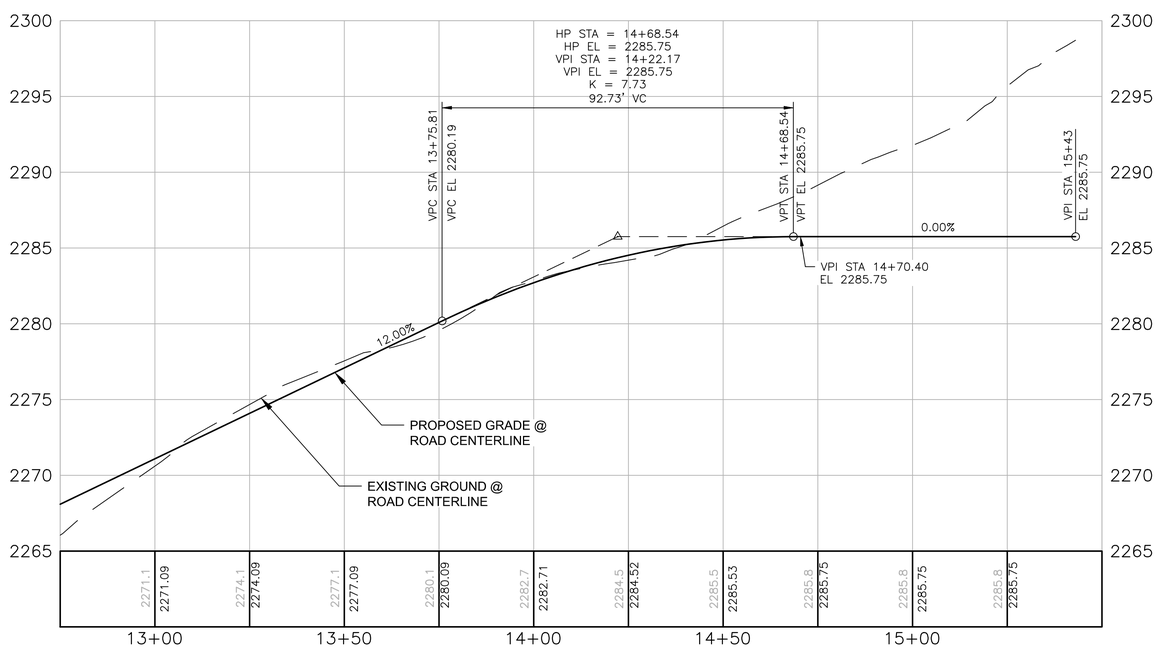

ISSUE	DATE	DESCRIPTION
A	09/2026	ISSUED FOR BIDS

PROJECT MANAGER	PIERRE KWAN
CIVIL	J. MEGRDITCHIAN
STRUCTURAL	P. LINDBLOM
ARCHITECTURAL	V. YANEZ
PROCESS	P. KWAN
MECHANICAL	K. CHEUNG
ELECTRICAL	R. MCCOMB
INSTRUMENTATION	D. BEST
PROJECT NUMBER	10193663

REGISTERED PROFESSIONAL ENGINEER
86507PE
DIGITALLY SIGNED Date: 2026.09.26 09:28:03-07'00'
OREGON
January 09, 2018
JOHN WILLIAM MEGRDITCHIAN
EXPIRES: 12/31/2026

CITY OF ASHLAND
Ashland, Oregon

City of Ashland

Ashland Creek Water Treatment Plant

2026

CIVIL
SITE ACCESS ROAD
PLAN AND PROFILE B

0 1" 2"

FILENAME 001C103.dwg
SCALE AS SHOWN

SHEET
001C103

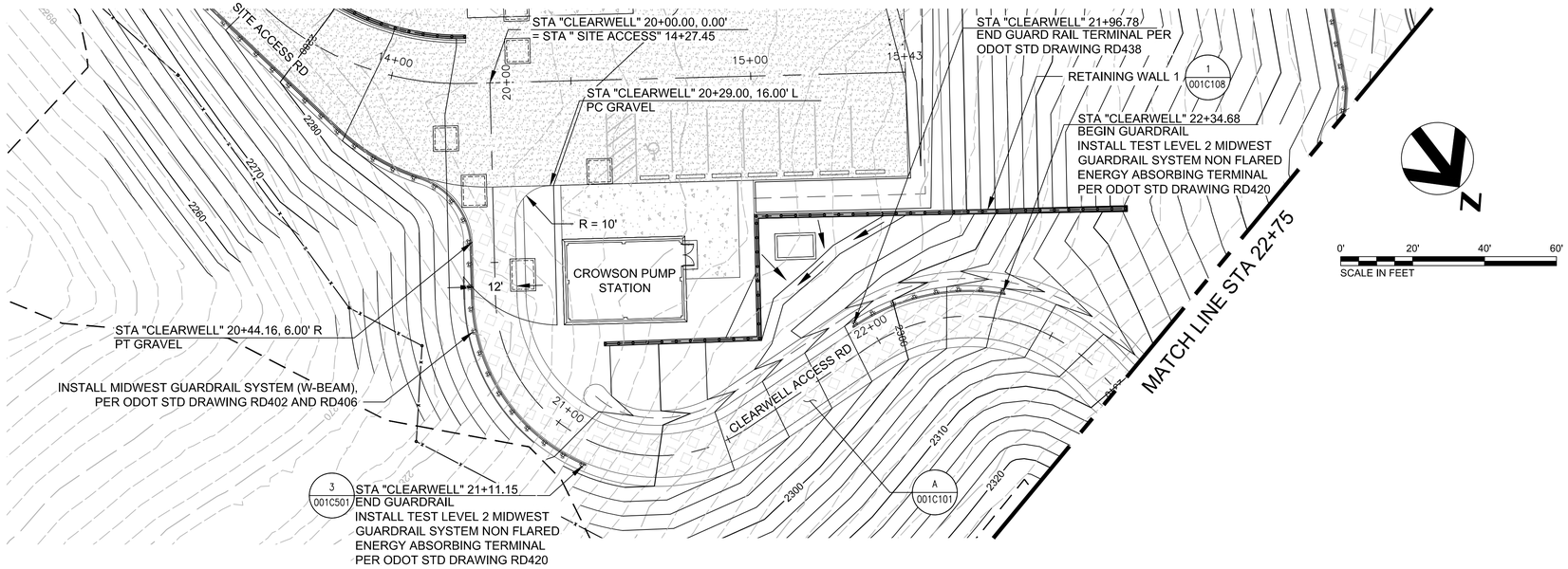

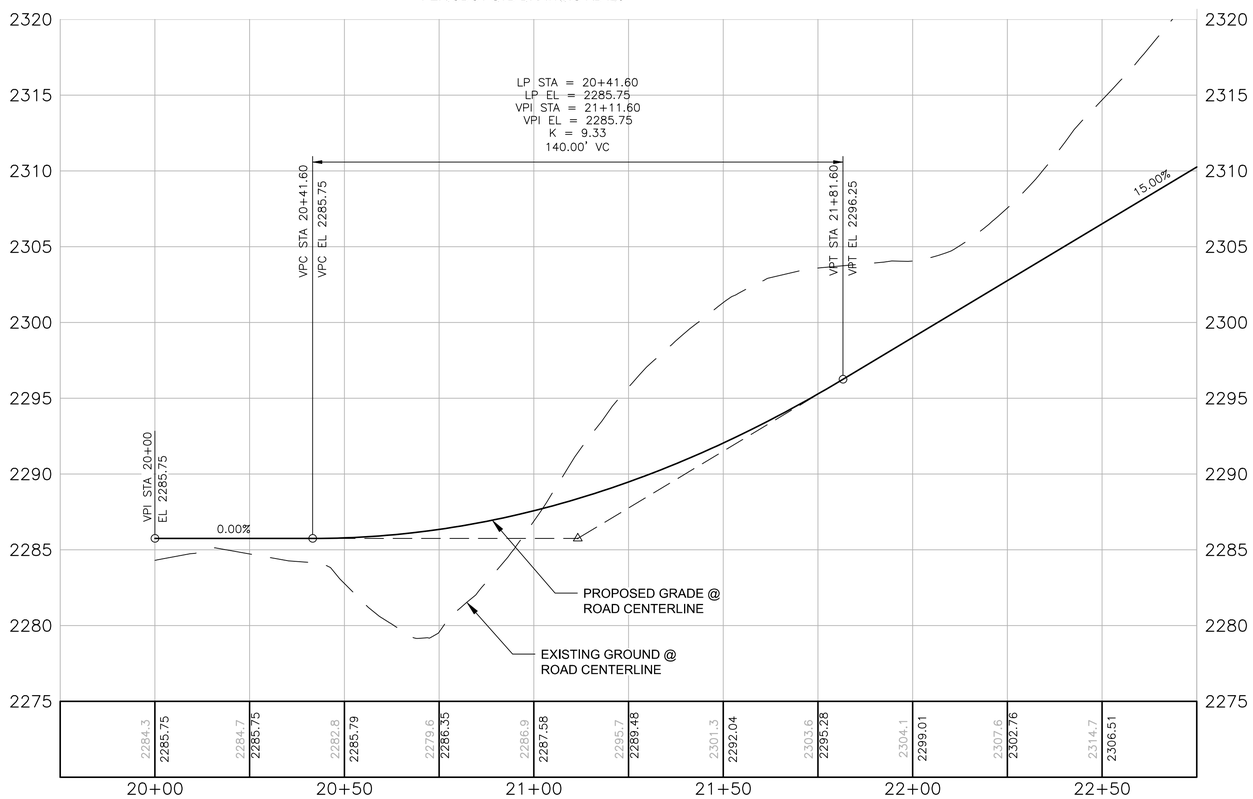

ISSUE	DATE	DESCRIPTION
A	09/2026	ISSUED FOR BIDS

PROJECT MANAGER	PIERRE KWAN
CIVIL	J. MEGRDITCHIAN
STRUCTURAL	P. LINDBLOM
ARCHITECTURAL	V. YANEZ
PROCESS	P. KWAN
MECHANICAL	K. CHEUNG
ELECTRICAL	R. MCCOMB
INSTRUMENTATION	D. BEST
PROJECT NUMBER	10193663

REGISTERED PROFESSIONAL ENGINEER
86507PE
DIGITALLY SIGNED Date: 2026.09.09 09:21:56-07'00'
OREGON
January 09, 2018
JOHN WILLIAM MEGRDITCHIAN
EXPIRES: 12/31/2026

CITY OF ASHLAND
Ashland, Oregon

City of Ashland

Ashland Creek Water Treatment Plant

2026

CIVIL
CLEARWELL ACCESS ROAD
PLAN AND PROFILE A

0 1" 2"

FILENAME	001C104.dwg
SCALE	AS SHOWN

SHEET
001C104

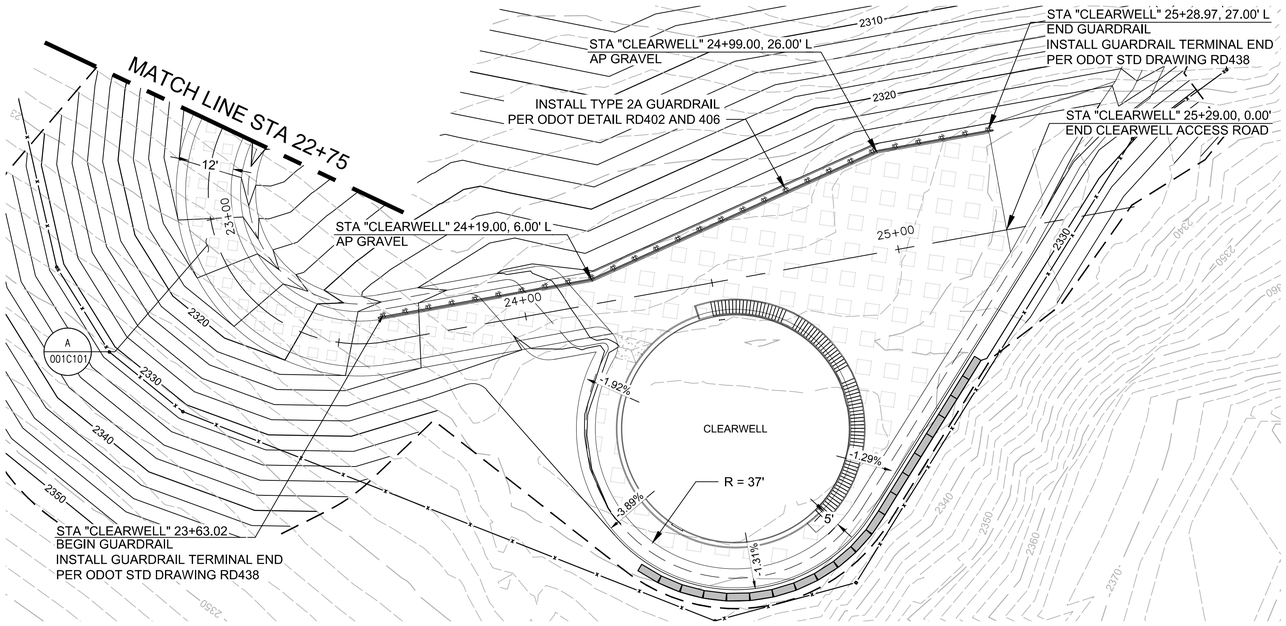

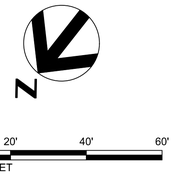

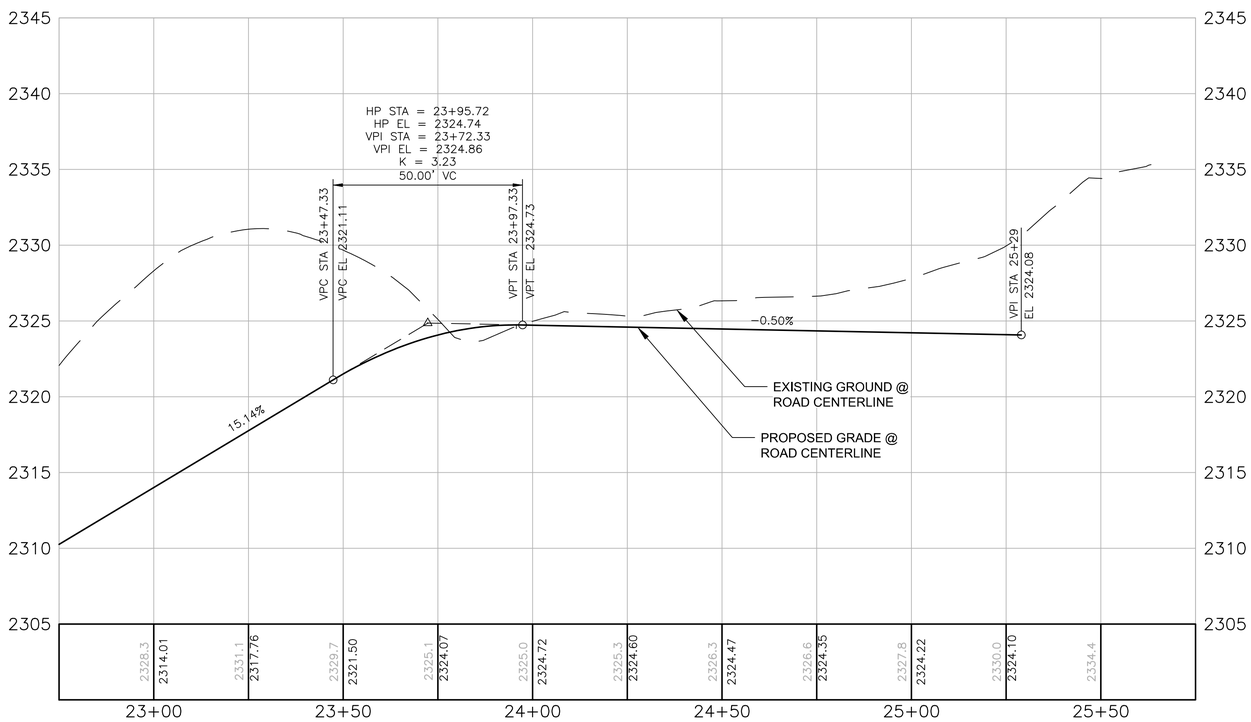

ISSUE	DATE	DESCRIPTION
A	09/2026	ISSUED FOR BIDS

PROJECT MANAGER	PIERRE KWAN
CIVIL	J. MEGRDITCHIAN
STRUCTURAL	P. LINDBLOM
ARCHITECTURAL	V. YANEZ
PROCESS	P. KWAN
MECHANICAL	K. CHEUNG
ELECTRICAL	R. MCCOMB
INSTRUMENTATION	D. BEST
PROJECT NUMBER	10193663

REGISTERED PROFESSIONAL ENGINEER
86507PE
DIGITALLY SIGNED Date: 2026.09.26 09:21:49-07'00'
OREGON
January 09, 2018
JOHN WILLIAM MEGRDITCHIAN
EXPIRES: 12/31/2026

CITY OF ASHLAND
Ashland, Oregon

City of Ashland

Ashland Creek Water Treatment Plant

2026

CIVIL
CLEARWELL ACCESS ROAD
PLAN AND PROFILE B

0 1" 2"

FILENAME 001C105.dwg
SCALE AS SHOWN

SHEET
001C105

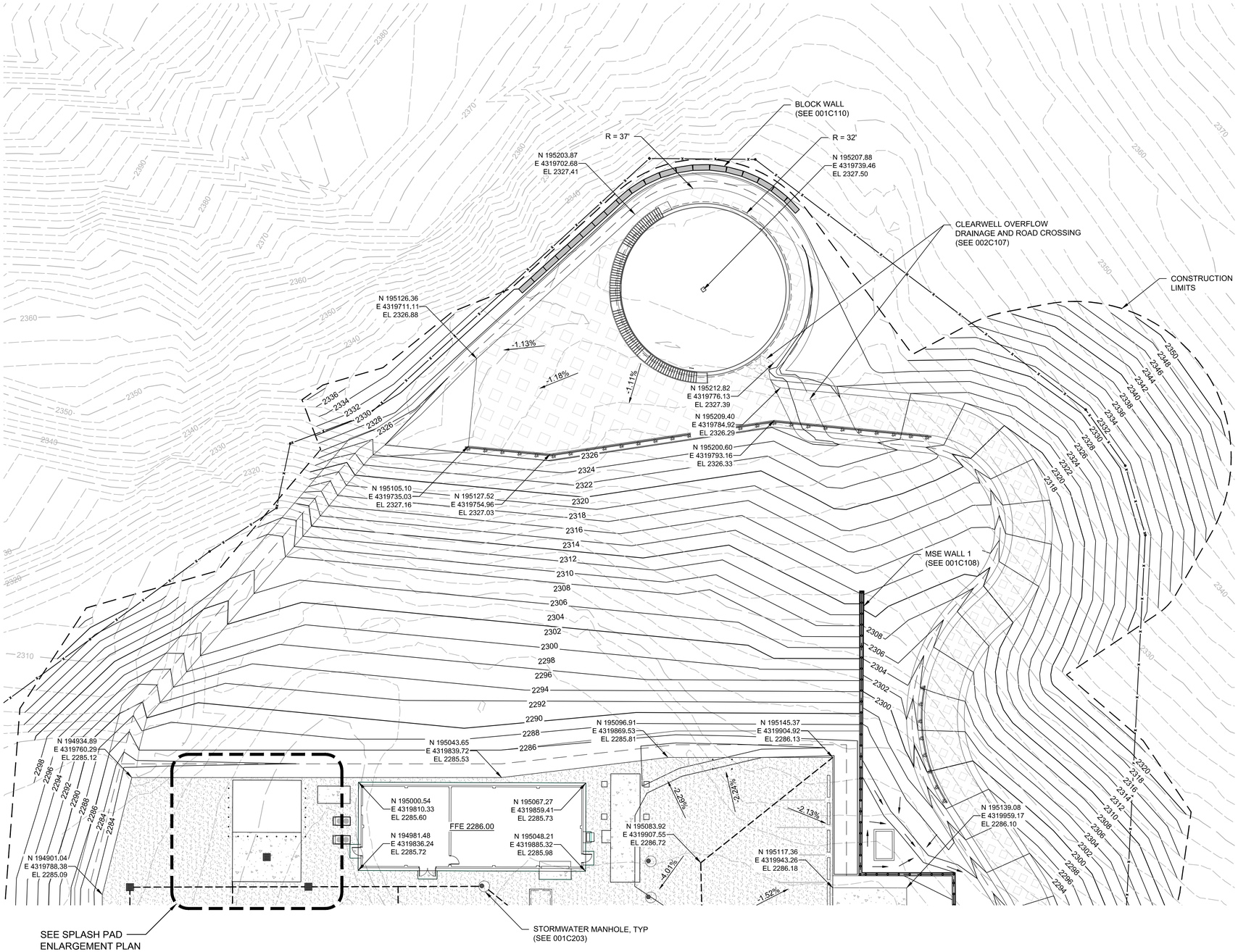

0' 20' 40' 60'
SCALE IN FEET

LEGEND:

- GRADE BREAK
- CONSTRUCTION LIMITS
- CHAIN LINK FENCE
- 2350 — PROPOSED 10' CONTOUR LINE
- 2348 — PROPOSED 2' CONTOUR LINE
- EXISTING 10' CONTOUR LINE
- EXISTING 2' CONTOUR LINE
- EXISTING ROAD EDGE
- -1.00% — SLOPE ARROW
- THICKENED SIDEWALK, SEE 1 / 001C502
- AC PAVEMEN, SEE 2 / 001C502
- CRUSHED SURFACING, SEE A / 001C101
- SIDEWALK, PER ODOT STD RD720

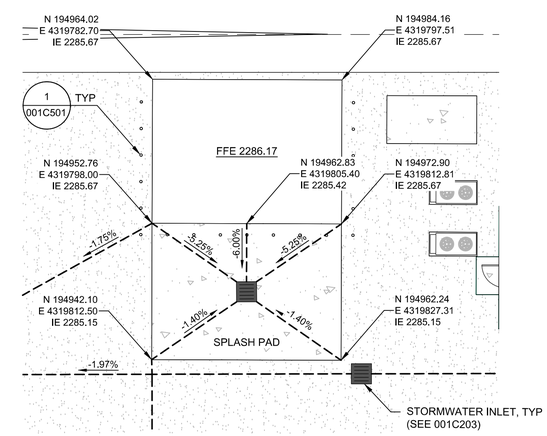

SPLASH PAD ENLARGEMENT PLAN

0' 10' 20' 30'
SCALE IN FEET

ISSUE	DATE	DESCRIPTION
A	09/2026	ISSUED FOR BIDS

PROJECT MANAGER	PIERRE KWAN
CIVIL	J. MEGRDITCHIAN
STRUCTURAL	P. LINDBLOM
ARCHITECTURAL	V. YANEZ
PROCESS	P. KWAN
MECHANICAL	K. CHEUNG
ELECTRICAL	R. MCCOMB
INSTRUMENTATION	D. BEST
PROJECT NUMBER	10193663

REGISTERED PROFESSIONAL ENGINEER
86507PE
DIGITALLY SIGNED Date: 2026.09.26 09:21:43-07'00'
OREGON
January 09, 2018
JOHN WILLIAM MEGRDITCHIAN
EXPIRES: 12/31/2026

CITY OF ASHLAND
Ashland, Oregon

City of Ashland

Ashland Creek Water Treatment Plant

2026

CIVIL GRADING PLAN NORTH

0 1" 2"

FILENAME 001C106.dwg
SCALE AS SHOWN

SHEET **001C106**

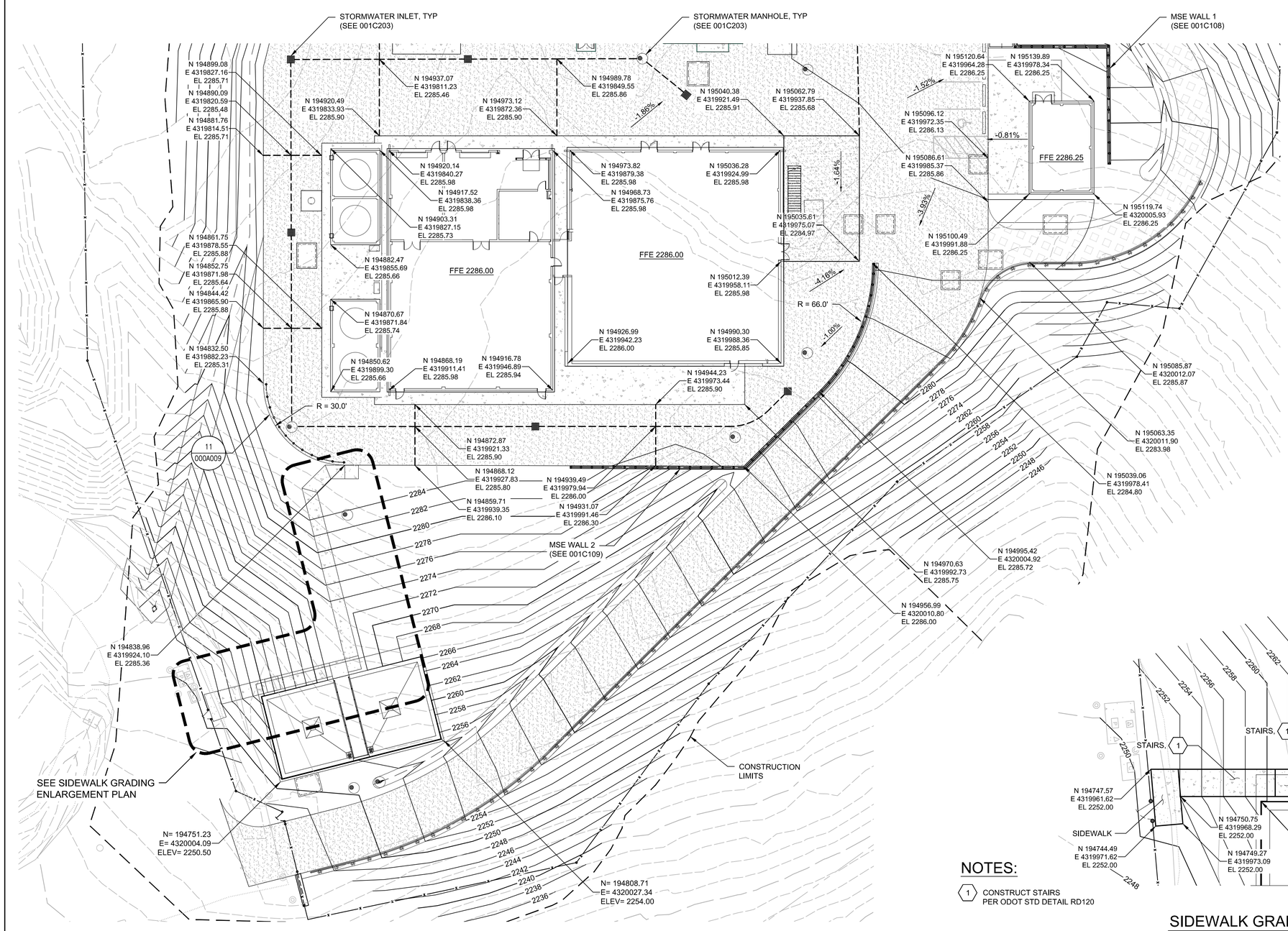

LEGEND:

- GRADE BREAK
- CONSTRUCTION LIMITS
- CHAIN LINK FENCE
- 2350 PROPOSED 10' CONTOUR LINE
- 2348 PROPOSED 2' CONTOUR LINE
- EXISTING 10' CONTOUR LINE
- EXISTING 2' CONTOUR LINE
- EXISTING ROAD EDGE
- -1.00% SLOPE ARROW
- THICKENED SIDEWALK, SEE 1 / 001C502
- AC PAVEMEN, SEE 2 / 001C502
- CRUSHED SURFACING, SEE A / 001C101
- SIDEWALK, PER ODOT STD RD720

0' 20' 40' 60'
SCALE IN FEET

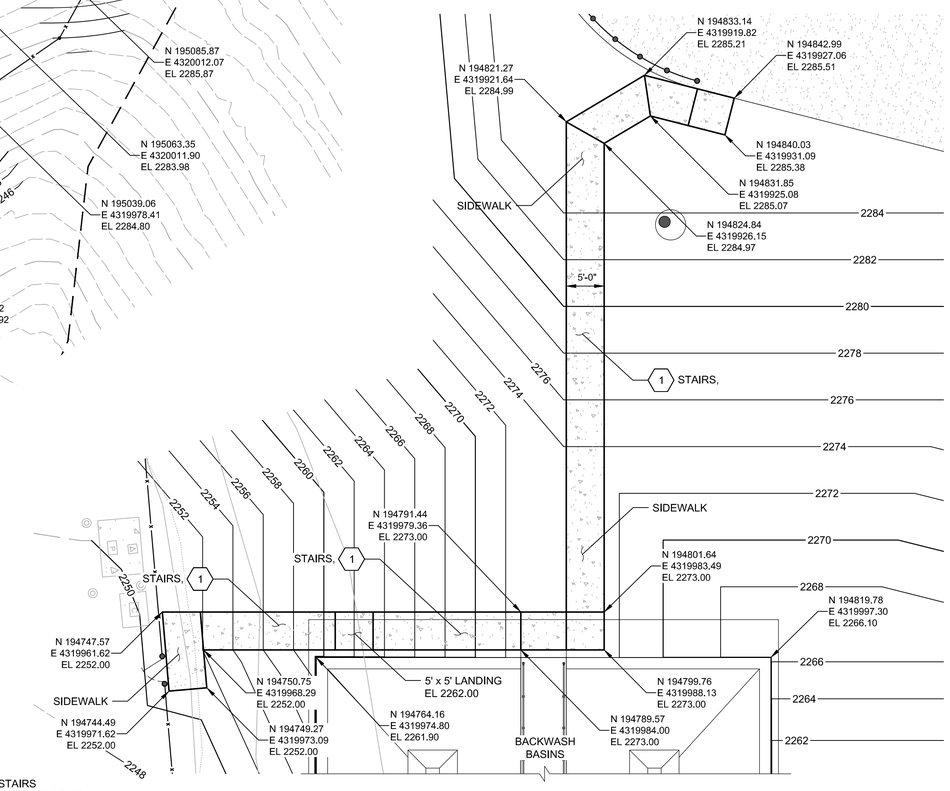

NOTES:

1. CONSTRUCT STAIRS PER ODOT STD DETAIL RD120

SIDEWALK GRADING ENLARGEMENT PLAN

0' 10' 20' 30'
SCALE IN FEET

ISSUE	DATE	DESCRIPTION
A	09/2026	ISSUED FOR BIDS

PROJECT MANAGER	PIERRE KWAN
CIVIL	J. MEGRDITCHIAN
STRUCTURAL	P. LINDBLOM
ARCHITECTURAL	V. YANEZ
PROCESS	P. KWAN
MECHANICAL	K. CHEUNG
ELECTRICAL	R. MCCOMB
INSTRUMENTATION	D. BEST
PROJECT NUMBER	10193663

REGISTERED PROFESSIONAL ENGINEER 86507PE OREGON January 09, 2018 JOHN WILLIAM MEGRDITCHIAN
DIGITALLY SIGNED Date: 2026.09.26 09:21:36-07'00'
EXPIRES: 12/31/2026

CITY OF ASHLAND
Ashland, Oregon

City of Ashland

Ashland Creek Water Treatment Plant

2026

CIVIL GRADING PLAN SOUTH

0 1" 2"

FILENAME 001C107.dwg
SCALE AS SHOWN

SHEET **001C107**

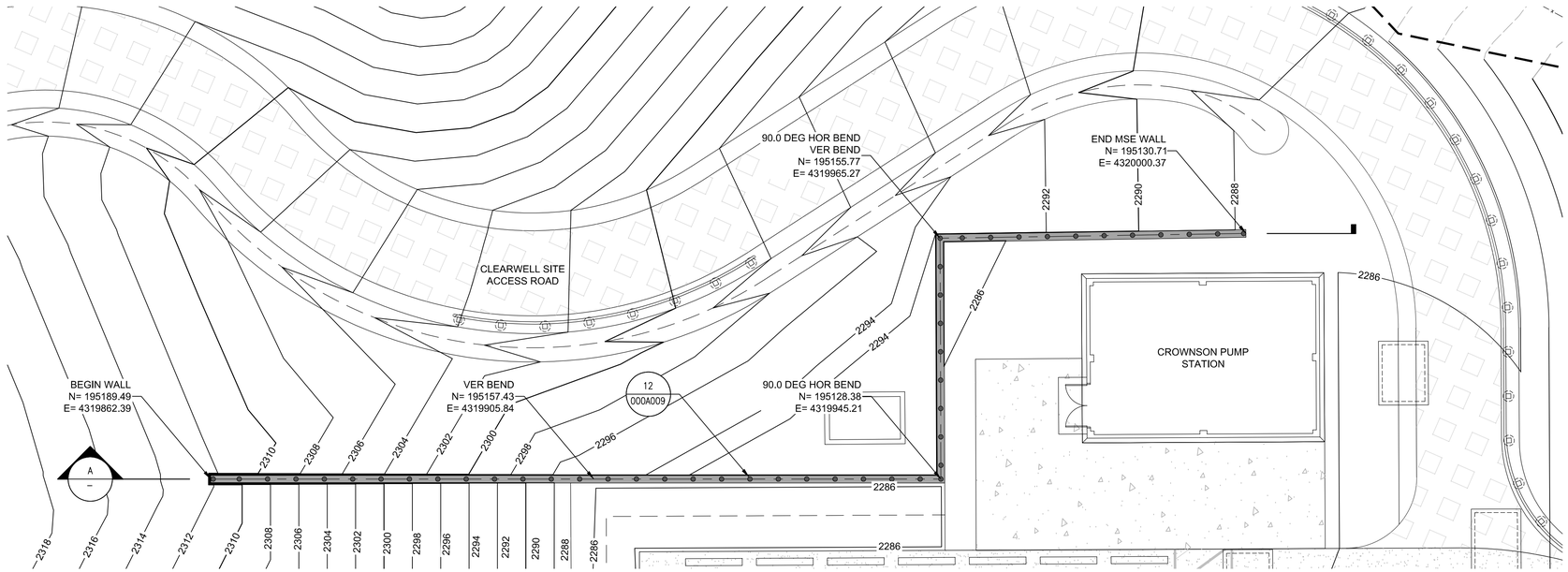

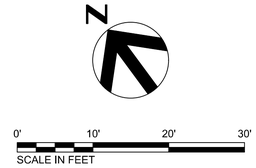

GENERAL NOTES:

1. RETAINING WALL TO BE MSE WALL PER ASHLAND 7.5 MGD WTP GEOTECHNICAL ENGINEERING REPORT DATED AUGUST 22, 2019.
2. NORTHINGS AND EASTINGS ARE CENTER LINE OF MSE WALL.
3. CONTRACTOR'S RESPONSIBILITY TO COORDINATE THE WALL INSTALLATION AND SUPPORTING TIEBACKS OR STRAPS WITH SURROUNDING UTILITIES AND OTHER IMPROVEMENTS.

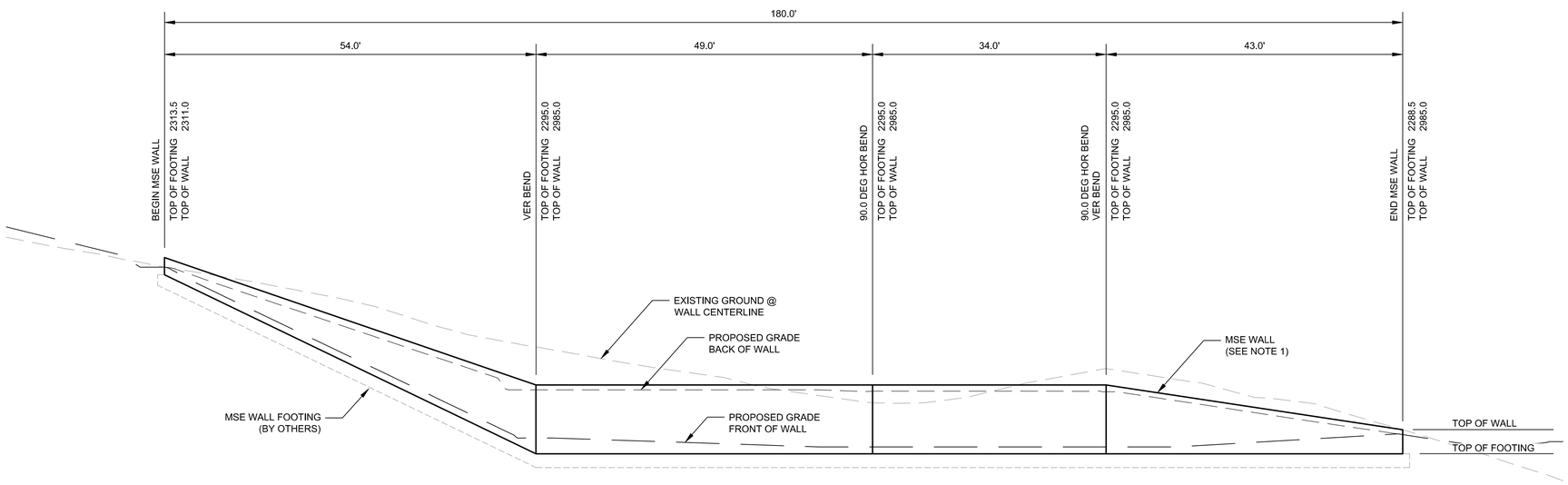

A
-
SECTION
SCALE: 1" = 10'

ISSUE	DATE	DESCRIPTION
A	09/2026	ISSUED FOR BIDS

PROJECT MANAGER	PIERRE KWAN
CIVIL	J. MEGRDITCHIAN
STRUCTURAL	P. LINDBLOM
ARCHITECTURAL	V. YANEZ
PROCESS	P. KWAN
MECHANICAL	K. CHEUNG
ELECTRICAL	R. MCCOMB
INSTRUMENTATION	D. BEST
PROJECT NUMBER	10193663

REGISTERED PROFESSIONAL ENGINEER
86507PE
DIGITALLY SIGNED Date: 2026.09.09 09:21:27-07'00'
OREGON
JANUARY 09, 2018
JOHN WILLIAM MEGRDITCHIAN
EXPIRES: 12/31/2026

CITY OF ASHLAND
Ashland, Oregon

City of Ashland

Ashland Creek Water Treatment Plant

2026

CIVIL
MSE WALL 1 - PLAN AND SECTION

0 1" 2"

FILENAME	001C108.dwg
SCALE	AS SHOWN

SHEET
001C108

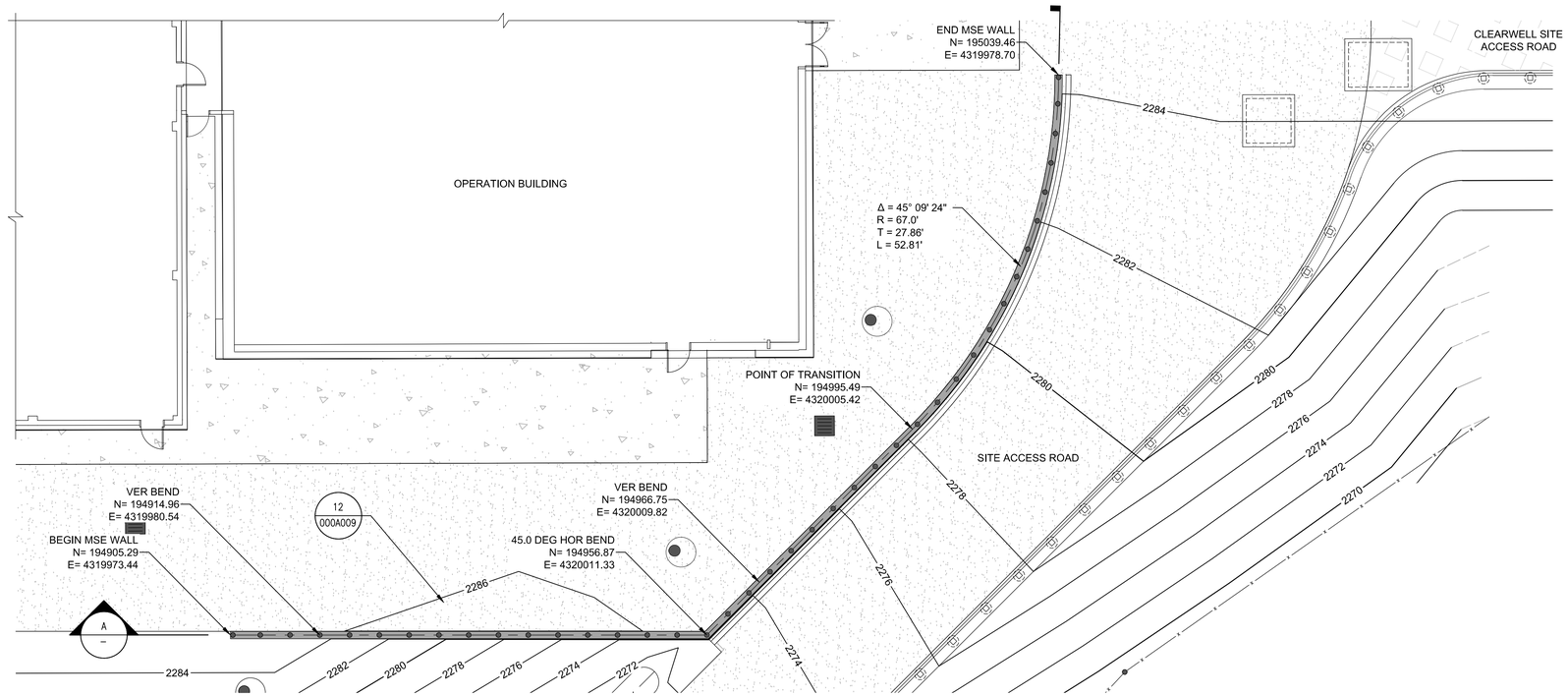

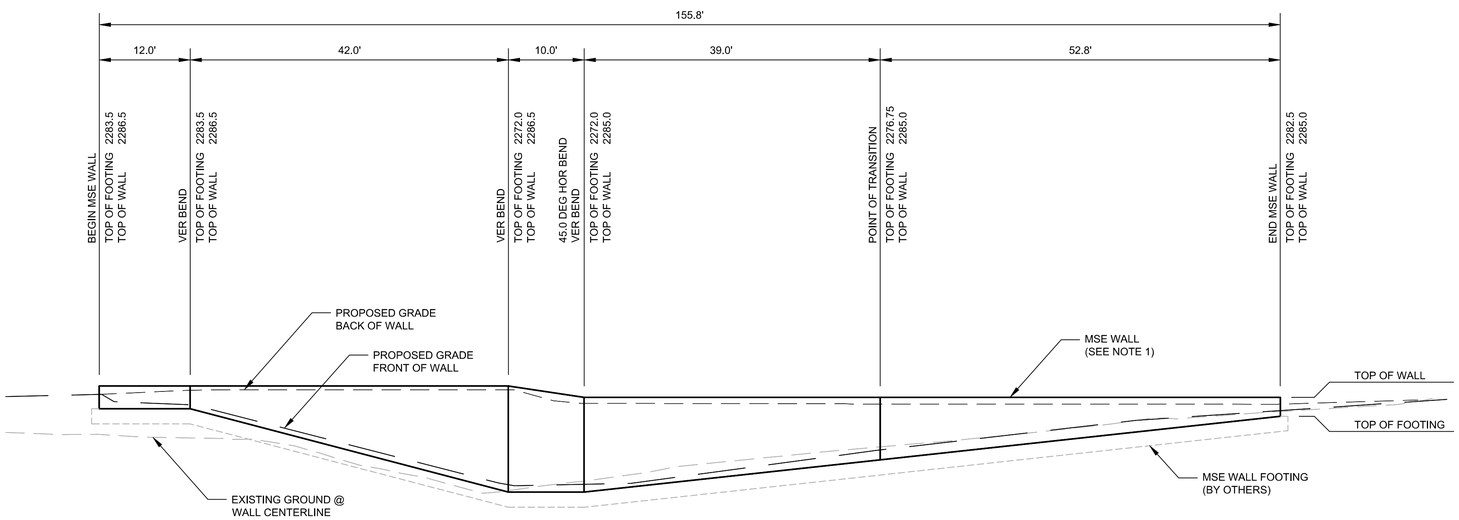

A
-
SECTION
SCALE: 1" = 10'

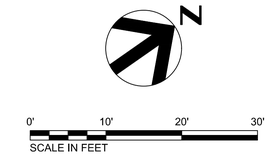

GENERAL NOTES:

1. RETAINING WALL TO BE MSE WALL PER ASHLAND 7.5 MGD WTP GEOTECHNICAL ENGINEERING REPORT DATED AUGUST 22, 2019.
2. NORTHINGS AND EASTINGS ARE CENTER LINE OF MSE WALL.
3. CONTRACTOR'S RESPONSIBILITY TO COORDINATE THE WALL INSTALLATION AND SUPPORTING TIEBACKS OR STRAPS WITH SURROUNDING UTILITIES AND OTHER IMPROVEMENTS.

ISSUE	DATE	DESCRIPTION
A	09/2026	ISSUED FOR BIDS

PROJECT MANAGER	PIERRE KWAN
CIVIL	J. MEGRDITCHIAN
STRUCTURAL	P. LINDBLOM
ARCHITECTURAL	V. YANEZ
PROCESS	P. KWAN
MECHANICAL	K. CHEUNG
ELECTRICAL	R. MCCOMB
INSTRUMENTATION	D. BEST
PROJECT NUMBER	10193663

REGISTERED PROFESSIONAL ENGINEER
86507PE
DIGITALLY SIGNED Date: 2026.09.09 09:21:19-07'00'
OREGON
January 09, 2026
JOHN WILLIAM MEGRDITCHIAN
EXPIRES: 12/31/2026

CITY OF ASHLAND
Ashland, Oregon

City of Ashland

Ashland Creek Water Treatment Plant

2026

CIVIL
MSE WALL 2 - PLAN AND SECTION

0 1" 2"

FILENAME	001C109.dwg
SCALE	AS SHOWN

SHEET
001C109

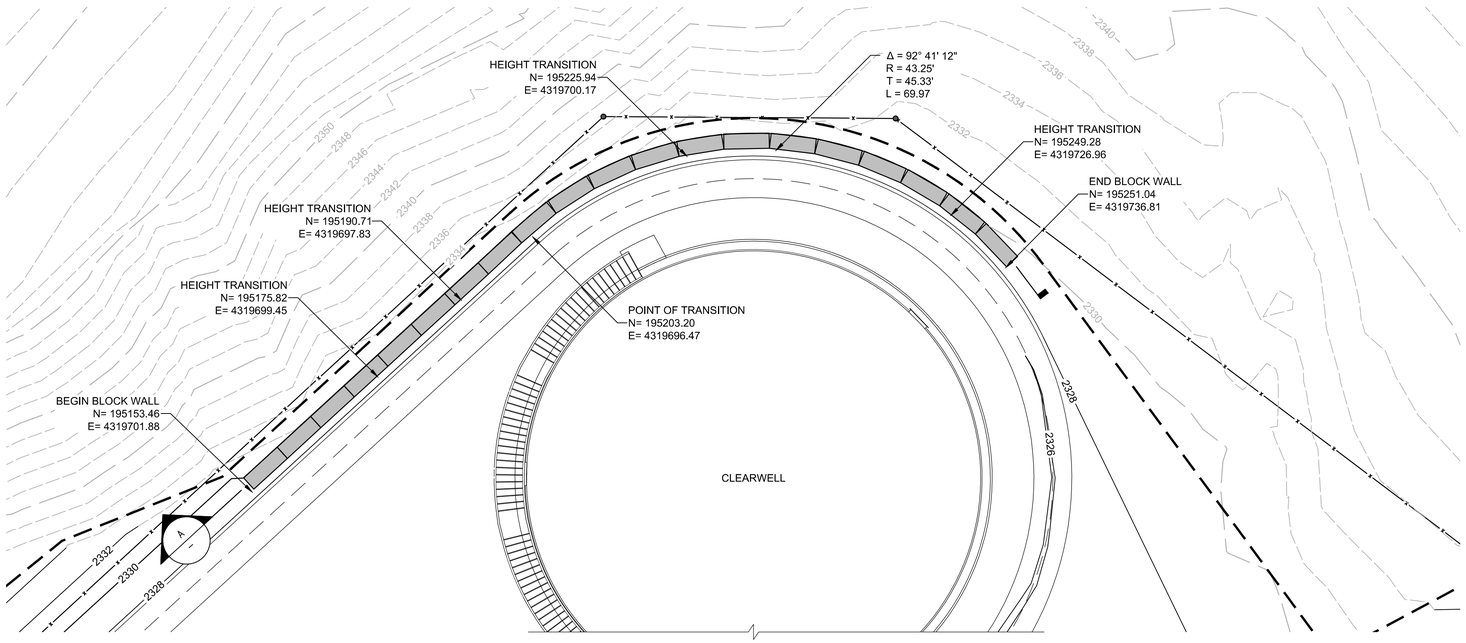

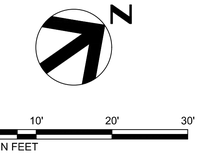

GENERAL NOTES:

1. BLOCK LAYOUT AND SECTION FOR REFERENCE ONLY. CONTRACTOR SHALL SUBMIT MANUFACTURER'S BLOCK LAYOUT PLAN FOR ENGINEER APPROVAL.
2. SEE RETAINING WALL ELEVATION FOR MINIMUM BLOCK HEIGHT.
3. NORTHINGS AND EASTINGS ARE FRONT OF BLOCK WALL.

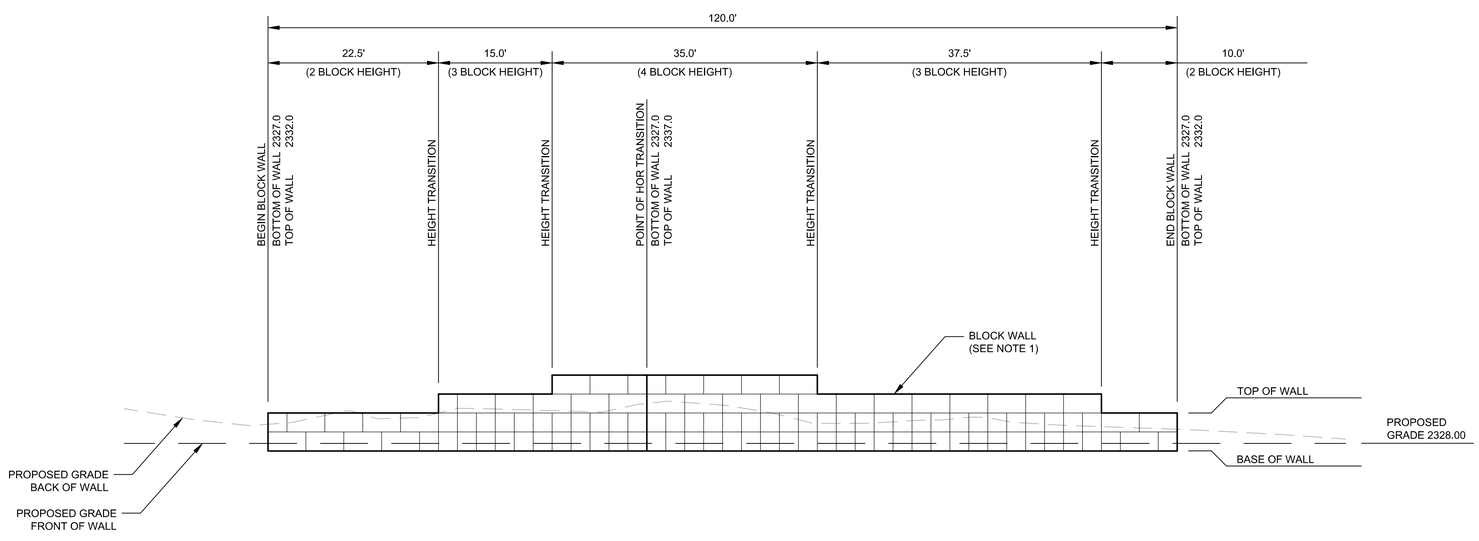

A
-
SECTION
SCALE: 1" = 10'

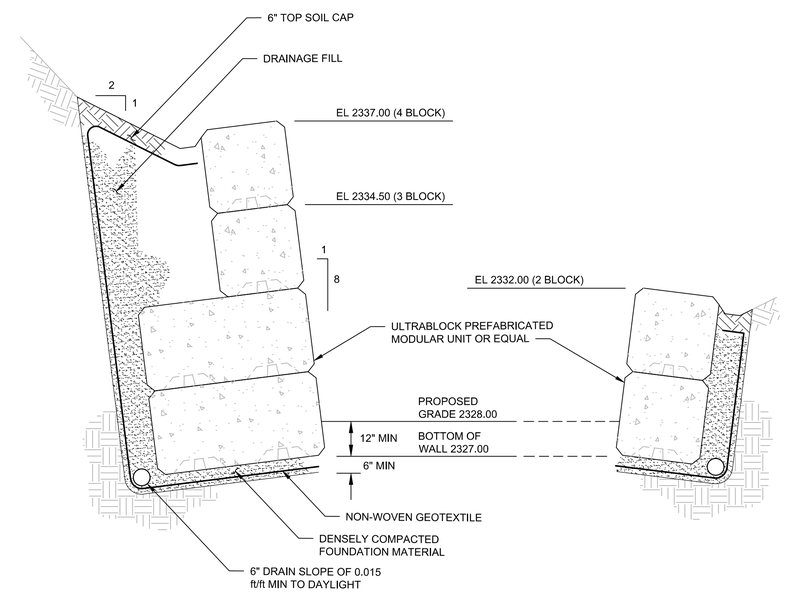

B
-
BLOCK SECTION
SCALE: NTS

HDR

ISSUE	DATE	DESCRIPTION
A	09/2026	ISSUED FOR BIDS

PROJECT MANAGER	PIERRE KWAN
CIVIL	J. MEGRDITCHIAN
STRUCTURAL	P. LINDBLOM
ARCHITECTURAL	V. YANEZ
PROCESS	P. KWAN
MECHANICAL	K. CHEUNG
ELECTRICAL	R. MCCOMB
INSTRUMENTATION	D. BEST
PROJECT NUMBER	10193663

REGISTERED PROFESSIONAL ENGINEER
86507PE
DIGITALLY SIGNED
Date: 2026.09.26 09:21:10-07'00'
OREGON
January 09, 2018
JOHN WILLIAM MEGRDITCHIAN
EXPIRES: 12/31/2026

CITY OF ASHLAND
Ashland, Oregon

City of Ashland

Ashland Creek Water Treatment Plant

2026

CIVIL
BLOCK WALL - PLAN AND SECTIONS

0 1" 2"

FILENAME 001C110.dwg
SCALE AS SHOWN

SHEET
001C110

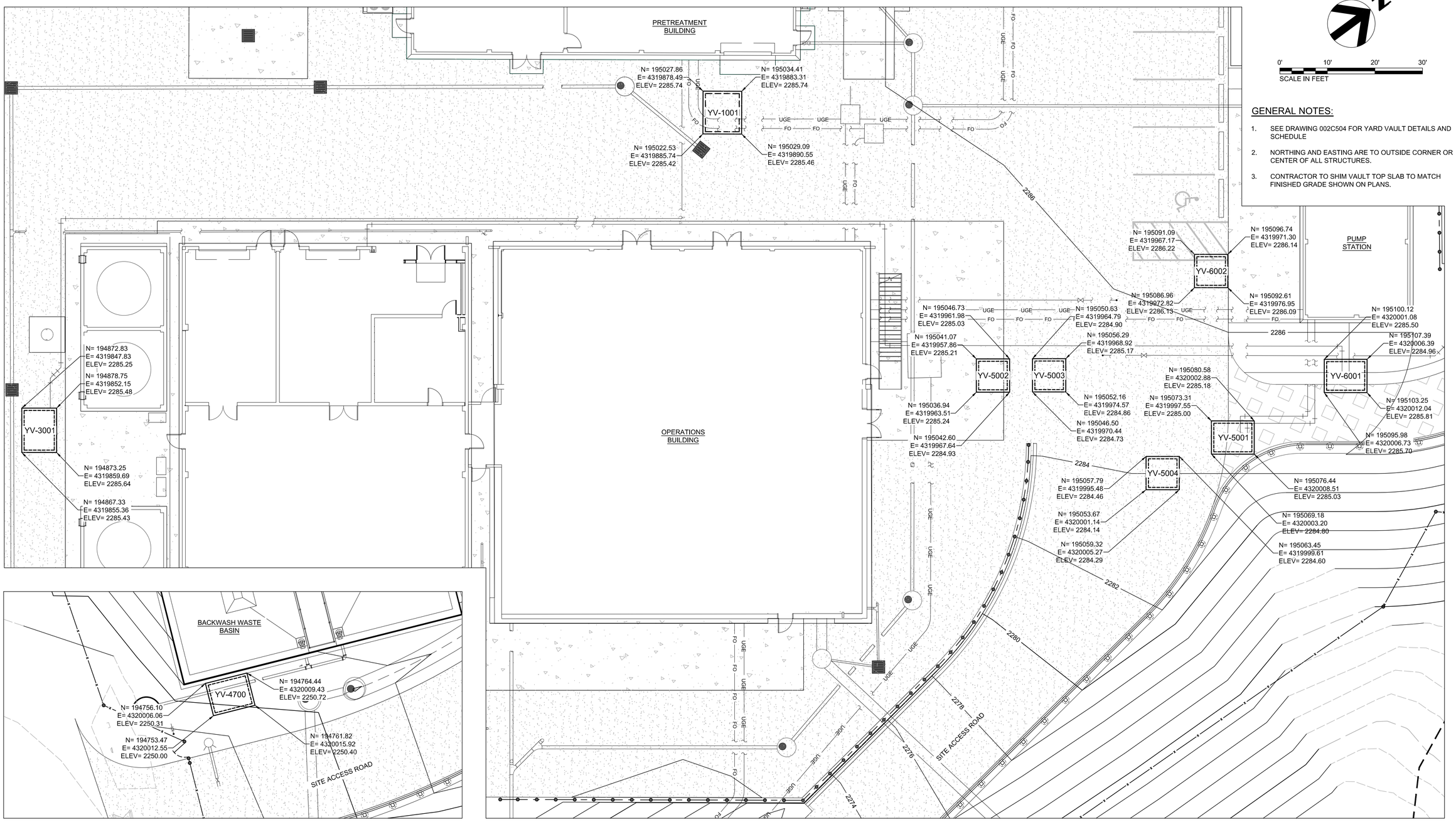

GENERAL NOTES:

1. SEE DRAWING 002C504 FOR YARD VAULT DETAILS AND SCHEDULE
2. NORTHING AND EASTING ARE TO OUTSIDE CORNER OR CENTER OF ALL STRUCTURES.
3. CONTRACTOR TO SHIM VAULT TOP SLAB TO MATCH FINISHED GRADE SHOWN ON PLANS.

ISSUE	DATE	DESCRIPTION
A	09/2026	ISSUED FOR BIDS

PROJECT MANAGER	PIERRE KWAN
CIVIL	J. MEGRDITCHIAN
STRUCTURAL	P. LINDBLOM
ARCHITECTURAL	V. YANEZ
PROCESS	P. KWAN
MECHANICAL	K. CHEUNG
ELECTRICAL	R. MCCOMB
INSTRUMENTATION	D. BEST
PROJECT NUMBER	10193663

REGISTERED PROFESSIONAL ENGINEER 86507PE
DIGITALLY SIGNED Date: 2026.06.26 09:19:38-07'00'
OREGON
January 09, 2018
JOHN WILLIAM MEGRDITCHIAN
EXPIRES: 12/31/2026

CITY OF ASHLAND
Ashland, Oregon

City of Ashland

Ashland Creek Water Treatment Plant

2026

CIVIL

VAULT LOCATION AND GRADING PLAN

0 1" 2"

FILENAME 001C111.dwg
SCALE AS SHOWN

SHEET **001C111**

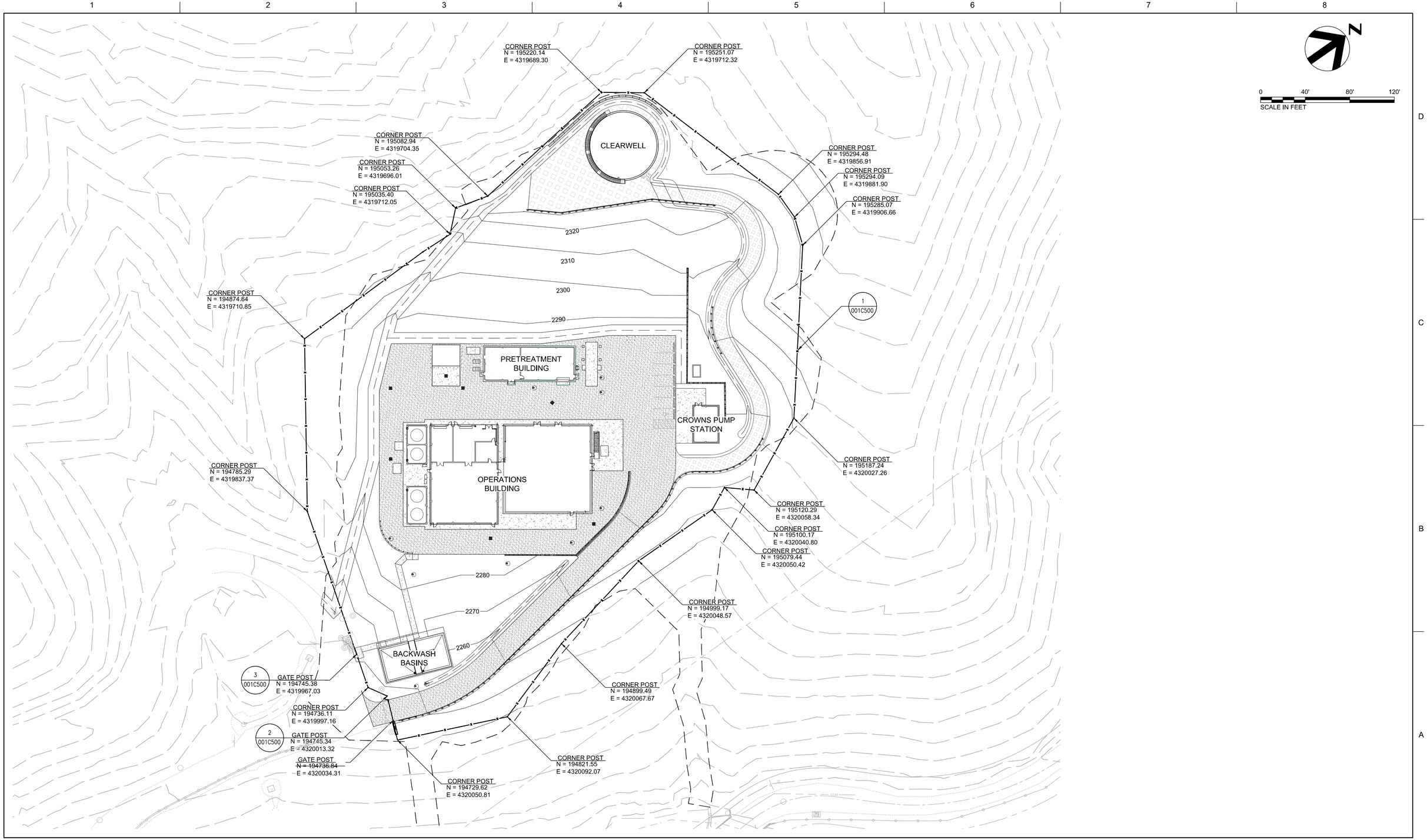

ISSUE	DATE	DESCRIPTION
A	09/2026	ISSUED FOR BIDS

PROJECT MANAGER	PIERRE KWAN
CIVIL	J. MEGRDITCHIAN
STRUCTURAL	P. LINDBLOM
ARCHITECTURAL	V. YANEZ
PROCESS	P. KWAN
MECHANICAL	K. CHEUNG
ELECTRICAL	R. MCCOMB
INSTRUMENTATION	D. BEST
PROJECT NUMBER	10193663

REGISTERED PROFESSIONAL ENGINEER 86507PE
DIGITALLY SIGNED Date: 2026.09.26 09:19:30-07'00'
OREGON January 09, 2026 JOHN WILLIAM MEGRDITCHIAN
EXPIRES: 12/31/2026

CITY OF ASHLAND
Ashland, Oregon

City of Ashland

Ashland Creek Water Treatment Plant

2026

CIVIL

FENCE COORDINATE PLAN

0 1" 2"

FILENAME 001C112.dwg
SCALE AS SHOWN

SHEET **001C112**

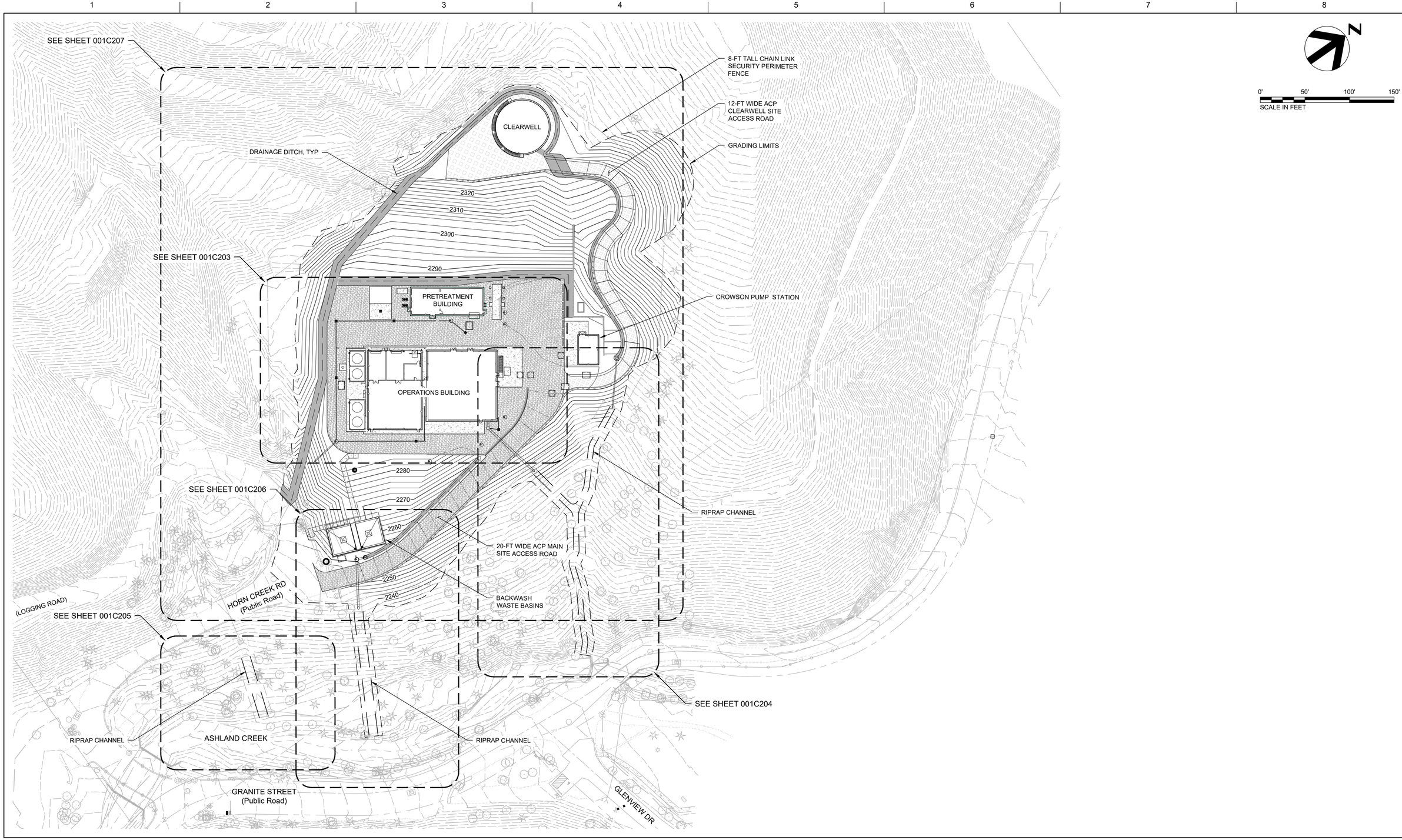

ISSUE	DATE	DESCRIPTION
A	09/2026	ISSUED FOR BIDS

PROJECT MANAGER	PIERRE KWAN
CIVIL	J. MEGRDITCHIAN
STRUCTURAL	P. LINDBLOM
ARCHITECTURAL	V. YANEZ
PROCESS	P. KWAN
MECHANICAL	K. CHEUNG
ELECTRICAL	R. MCCOMB
INSTRUMENTATION	D. BEST
PROJECT NUMBER	10193663

REGISTERED PROFESSIONAL ENGINEER 100489PE
DIGITALLY SIGNED
OREGON
NOVEMBER 8, 2022
NATHAN FASTENAU
EXPIRES: 12/31/2027

CITY OF ASHLAND
Ashland, Oregon

City of Ashland

Ashland Creek Water Treatment Plant

2026

CIVIL
OVERALL STORMWATER LAYOUT PLAN AND KEYMAP

0 1" 2"

FILENAME 001C202.dwg
SCALE 1" = 50'

SHEET
001C202

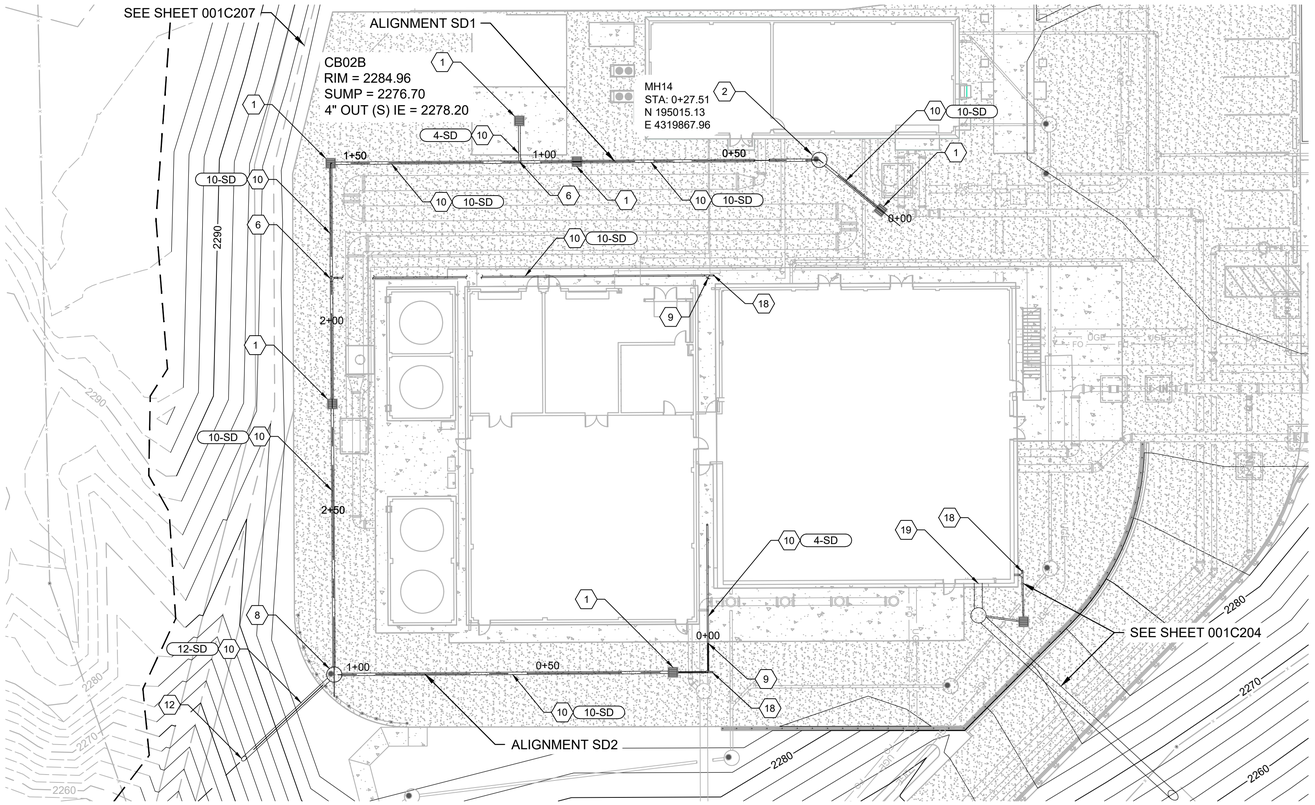

DRAINAGE PLAN - MAIN SITE

0' 20' 40' 60'
SCALE IN FEET

KEY NOTES:

1. CONSTRUCT FIELD INLET PER RD339 (002C520) AND RD374 (002C522).
2. CONSTRUCT STANDARD 48" MANHOLE WITH GRATE PER RD335, RD336, RD344 (002C520), RD345 (002C521), AND RD356 (002C522).
6. INSTALL 4" X 10" PIPE SANITARY TEE.
8. CONSTRUCT 72" MANHOLE WITH GRATED COVER AND WATER QUALITY FILTER PER RD335, RD336, RD344 (002C520), RD345 (002C521), RD356 (002C522), AND DETAIL 2 (002C522). FILTER MUST HAVE A TREATMENT FLOWRATE EQUAL TO OR EXCEEDING 0.13 CFS (58.2 GPM).
9. CONNECT TO BUILDING STORM DRAIN (300P103).
10. INSTALL STORM SEWER PIPE PER RD300 (002C519).
12. CONSTRUCT CULVERT SLOPED END WITH SLOPE PAVING AND RIPRAP PAD PER RD317 AND RD318 (002C519). RIPRAP CLASS MUST MATCH RIPRAP CLASS OF ADJOINING CHANNEL.
18. INSTALL 4" TEE AND CLEANOUT PER DETAIL CD362 (002C523).
19. CONNECT TO OPERATION BUILDING OVERFLOW BOX.

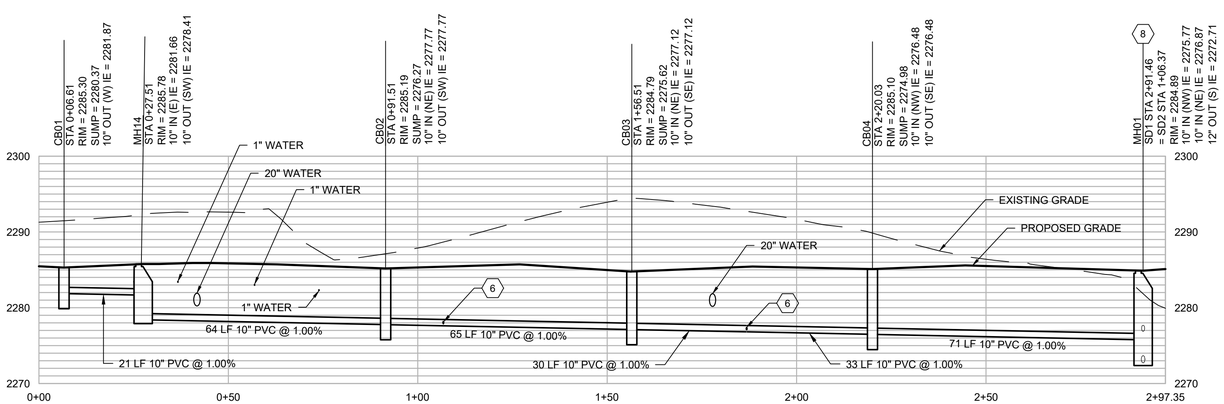

STORMWATER PROFILE - SD1

SCALE: HOR 1" = 20'
VER 1" = 10'

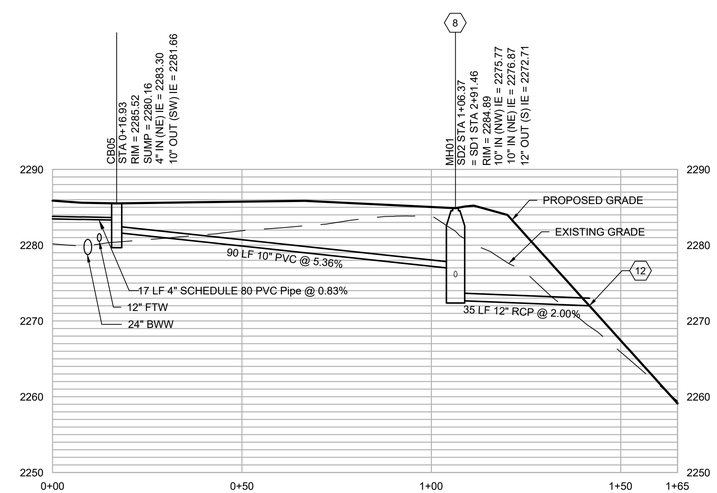

STORMWATER PROFILE - SD2

SCALE: HOR 1" = 20'
VER 1" = 10'

ISSUE	DATE	DESCRIPTION
A	09/2026	ISSUED FOR BIDS

PROJECT MANAGER	PIERRE KWAN
CIVIL	J. MEGRDITCHIAN
STRUCTURAL	P. LINDBLOM
ARCHITECTURAL	V. YANEZ
PROCESS	P. KWAN
MECHANICAL	K. CHEUNG
ELECTRICAL	R. MCCOMB
INSTRUMENTATION	D. BEST
PROJECT NUMBER	10193663

REGISTERED PROFESSIONAL ENGINEER 100489PE
DIGITALLY SIGNED
OREGON
NOVEMBER 8, 2022
NATHAN FASTENAU
EXPIRES: 12/31/2027

CITY OF ASHLAND
Ashland, Oregon

City of Ashland

Ashland Creek Water Treatment Plant

2026

CIVIL STORMWATER PLAN SD1 & SD2 PLAN & PROFILE

0 1" 2"

FILENAME 001C203
SCALE 1" = 20'

SHEET **001C203**

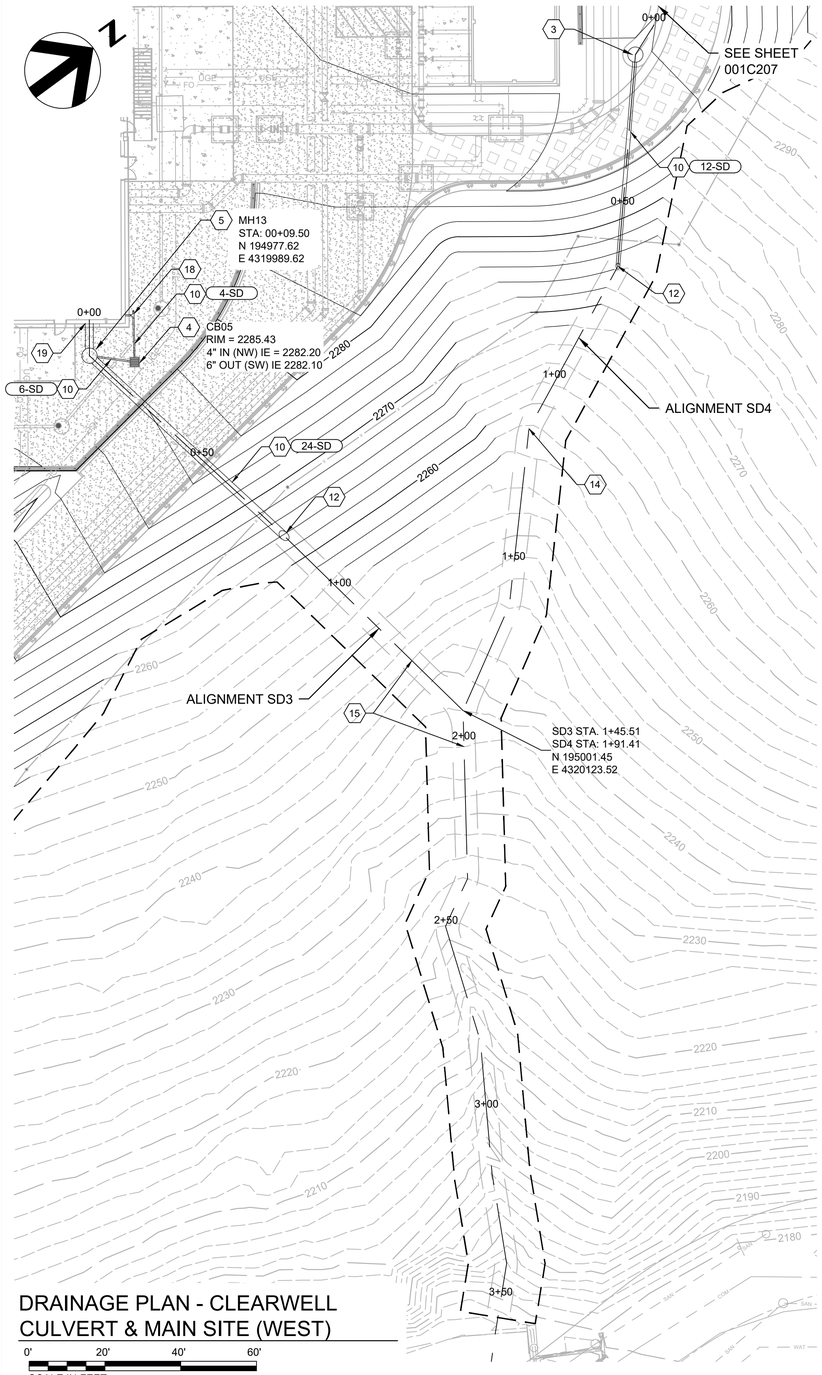

DRAINAGE PLAN - CLEARWELL CULVERT & MAIN SITE (WEST)

0' 20' 40' 60'
SCALE IN FEET

KEY NOTES:

3. CONSTRUCT STANDARD 48" MANHOLE WITH BEEHIVE INLET PER RD335, RD336, RD344 (002C520), RD345 (002C521), RD356 (002C522), AND DETAIL 1 (002C523).
4. CONSTRUCT FIELD INLET WITH WATER QUALITY FILTER PER RD339 (002C520), RD374 (002C522), AND DETAIL 2 (002C523). FILTER MUST HAVE A TREATMENT FLOWRATE EQUAL TO OR EXCEEDING 0.03 CFS (13.4 GPM).
5. CONSTRUCT 48" MANHOLE WITH INLET PER RD335, RD336, RD344 (002C520), RD345, RD348 (002C521), AND RD356 (002C522).
10. INSTALL STORM SEWER PIPE PER RD300 (002C519).
12. CONSTRUCT CULVERT SLOPED END WITH SLOPE PAVING AND RIPRAP PAD PER RD317 AND RD318 (002C519). RIPRAP CLASS MUST MATCH RIPRAP CLASS OF ADJOINING CHANNEL.
14. CONSTRUCT MINIMUM 6' WIDE CLASS 50 RIPRAP LINED CHANNEL PER DETAIL B (001C101).
15. CONSTRUCT MINIMUM 6' WIDE CLASS 100 RIPRAP LINED CHANNEL PER DETAIL B (001C101).
18. INSTALL 4" TEE AND CLEANOUT PER DETAIL CD362 (002C523).
19. CONNECT TO OPERATION BUILDING OVERFLOW BOX.

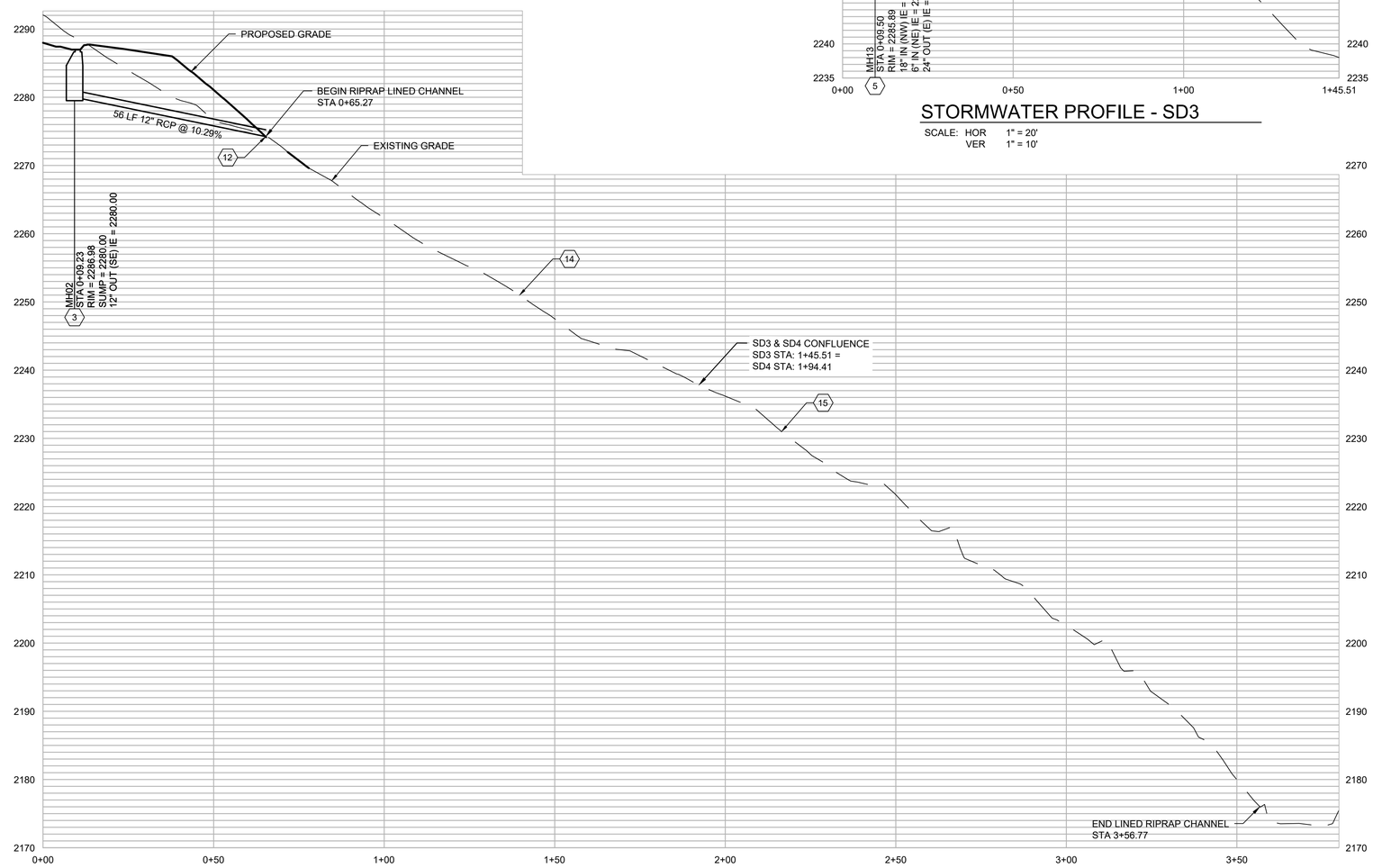

STORMWATER PROFILE - SD4

SCALE: HOR 1" = 20'
VER 1" = 10'

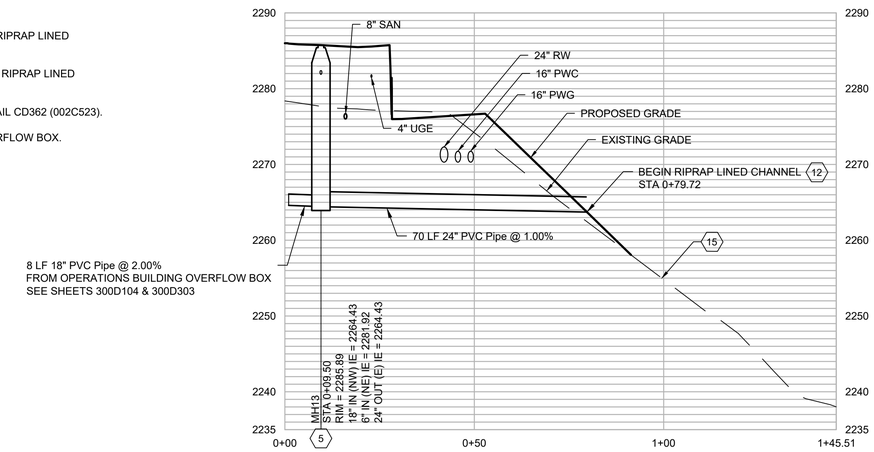

STORMWATER PROFILE - SD3

SCALE: HOR 1" = 20'
VER 1" = 10'

ISSUE	DATE	DESCRIPTION
A	09/2026	ISSUED FOR BIDS

PROJECT MANAGER	PIERRE KWAN
CIVIL	J. MEGRDITCHIAN
STRUCTURAL	P. LINDBLOM
ARCHITECTURAL	V. YANEZ
PROCESS	P. KWAN
MECHANICAL	K. CHEUNG
ELECTRICAL	R. MCCOMB
INSTRUMENTATION	D. BEST
PROJECT NUMBER	10193663

REGISTERED PROFESSIONAL ENGINEER 100489PE
DIGITALLY SIGNED
OREGON
NOVEMBER 8, 2022
NATHAN FASTENAU
EXPIRES: 12/31/2027

CITY OF ASHLAND
Ashland, Oregon

City of Ashland

Ashland Creek Water Treatment Plant

2026

CIVIL
STORMWATER PLAN
SD3 & SD4 PLAN & PROFILE

0 1" 2"

FILENAME 001C204
SCALE 1" = 20'

SHEET
001C204

KEY NOTES:

20 CONSTRUCT MINIMUM 10' WIDE CLASS 200 RIPRAP CHANEL PER DETAIL B (001C101)

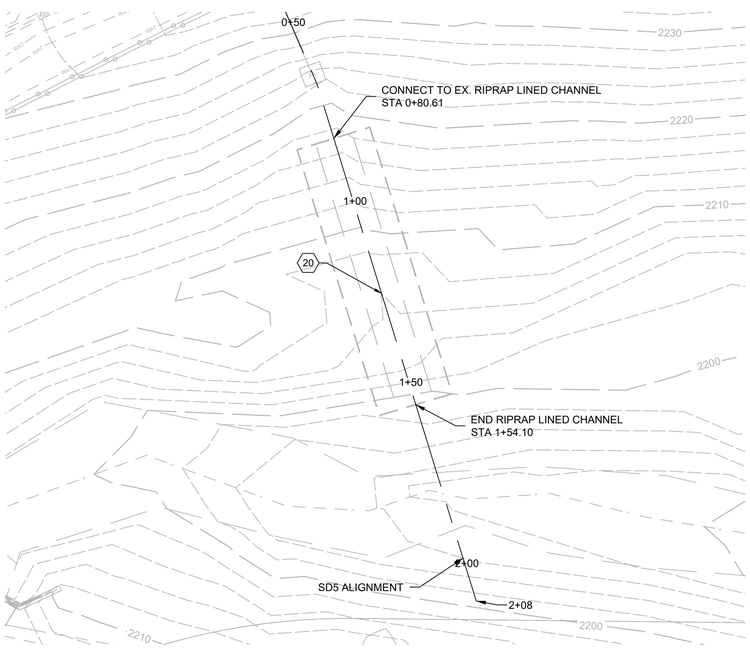

DRAINAGE PLAN -
HORN CREEK ROAD CUVLERTS

0' 20' 40' 60'
SCALE IN FEET

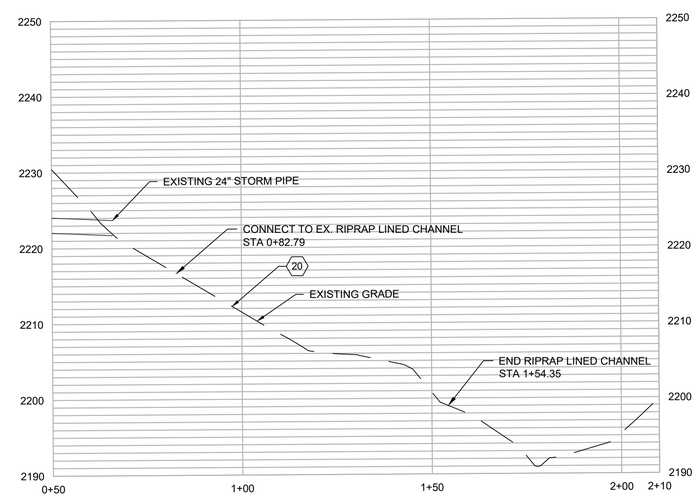

STORMWATER PROFILE - SD5

SCALE: HOR 1" = 20'
VER 1" = 10'

ISSUE	DATE	DESCRIPTION
A	09/2026	ISSUED FOR BIDS

PROJECT MANAGER	PIERRE KWAN
CIVIL	J. MEGRDITCHIAN
STRUCTURAL	P. LINDBLOM
ARCHITECTURAL	V. YANEZ
PROCESS	P. KWAN
MECHANICAL	K. CHEUNG
ELECTRICAL	R. MCCOMB
INSTRUMENTATION	D. BEST
PROJECT NUMBER	10193663

REGISTERED PROFESSIONAL ENGINEER
100489PE
DIGITALLY SIGNED
OREGON
NOVEMBER 8, 2022
NATHAN FASTENAU
EXPIRES: 12/31/2027

CITY OF ASHLAND
Ashland, Oregon

City of Ashland

Ashland Creek Water Treatment Plant

2026

CIVIL
STORMWATER PLAN
SD5 PLAN & PROFILE

0 1" 2"

FILENAME 001C205
SCALE 1" = 20'

SHEET
001C205

KEY NOTES:

2 CONSTRUCT STANDARD 48" MANHOLE PER RD335, RD336, RD344 (002C520), RD345 (002C521), AND RD356 (002C522).

8 CONSTRUCT 48" MANHOLE WITH GRATE AND WATER QUALITY FILTER PER RD335, RD336, RD344 (002C520), RD345 (002C521), RD356 (002C522), AND DETAIL 1 (002C522). FILTER MUST HAVE A TREATMENT FLOWRATE EQUAL TO OR EXCEEDING 0.03 CFS (13.4 GPM).

10 INSTALL STORM SEWER PIPE PER RD300 (002C519).

12 CONSTRUCT CULVERT SLOPED END WITH SLOPE PAVING AND RIPRAP PAD PER RD317 AND RD318 (002C519). RIPRAP CLASS MUST MATCH RIPRAP CLASS OF ADJOINING CHANNEL.

15 CONSTRUCT MINIMUM 6' WIDE CLASS 100 RIPRAP LINED CHANNEL PER DETAIL B (001C101).

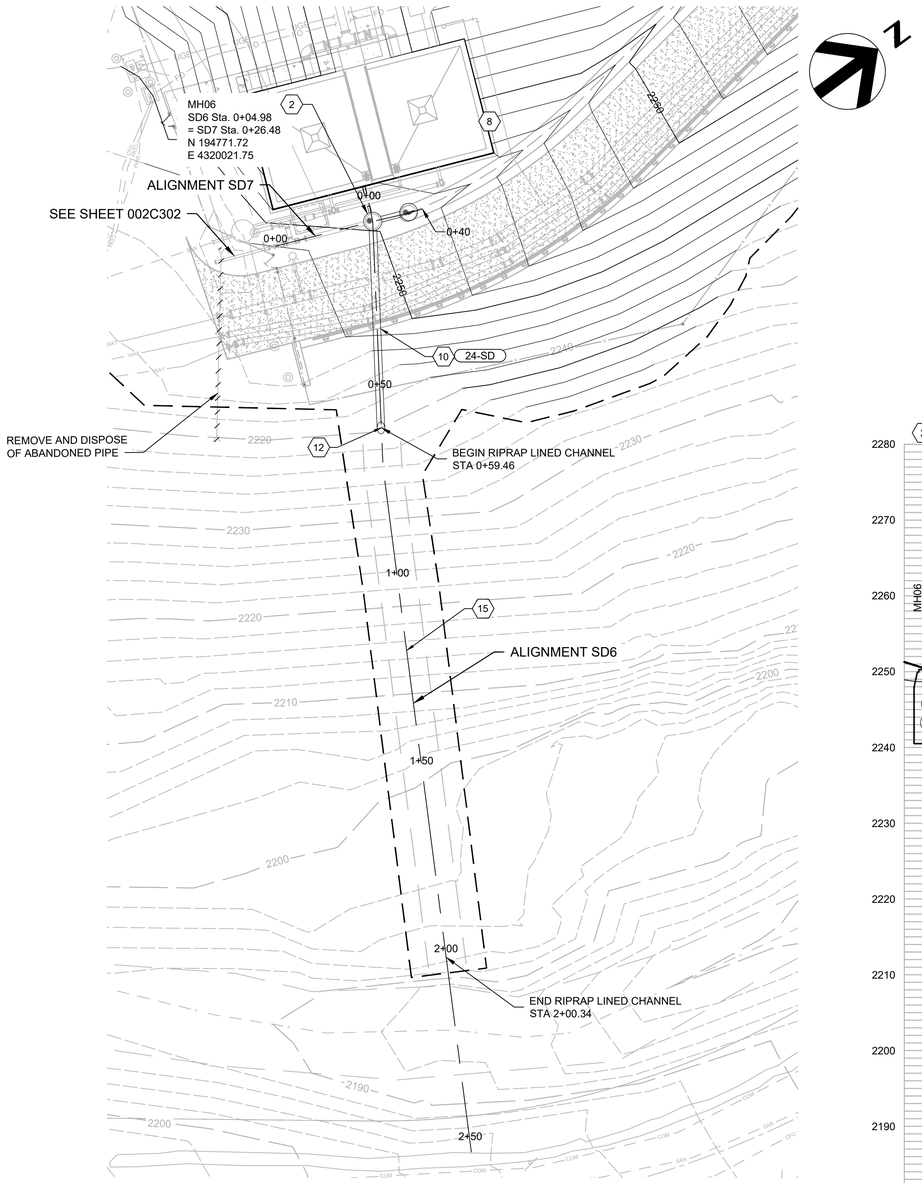

DRAINAGE PLAN - ACCESS ROAD CULVERT

0' 20' 40' 60'
SCALE IN FEET

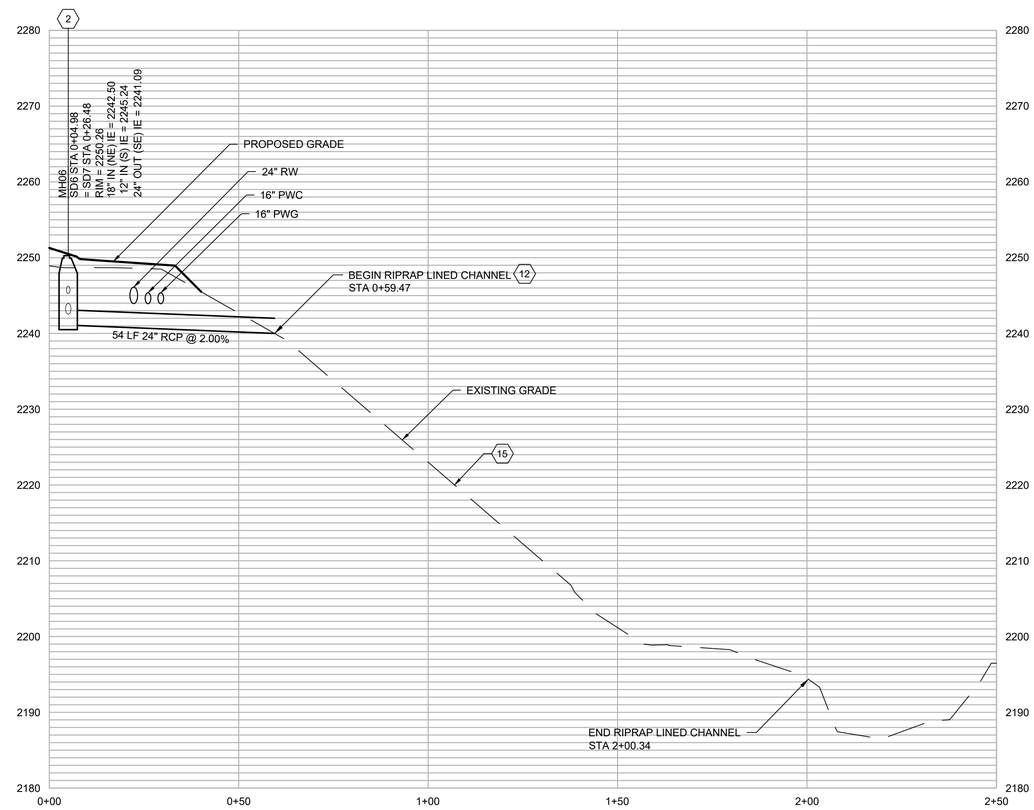

STORMWATER PROFILE - SD6

SCALE: HOR 1" = 20'
VER 1" = 10'

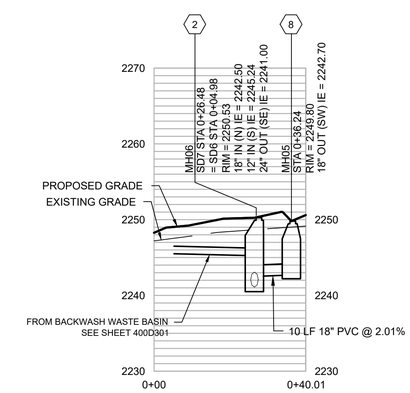

STORMWATER PROFILE - SD7

SCALE: HOR 1" = 20'
VER 1" = 10'

ISSUE	DATE	DESCRIPTION
A	09/2026	ISSUED FOR BIDS

PROJECT MANAGER	PIERRE KWAN
CIVIL	J. MEGRDITCHIAN
STRUCTURAL	P. LINDBLOM
ARCHITECTURAL	V. YANEZ
PROCESS	P. KWAN
MECHANICAL	K. CHEUNG
ELECTRICAL	R. MCCOMB
INSTRUMENTATION	D. BEST
PROJECT NUMBER	10193663

REGISTERED PROFESSIONAL ENGINEER 100489PE
DIGITALLY SIGNED
OREGON
NOVEMBER 8, 2022
NATHAN FASTENAU
EXPIRES: 12/31/2027

CITY OF ASHLAND
Ashland, Oregon

City of Ashland

Ashland Creek Water Treatment Plant

2026

CIVIL STORMWATER PLAN SD6 & SD7 PLAN & PROFILE

0 1" 2"

FILENAME 001C206
SCALE 1" = 20'

SHEET **001C206**

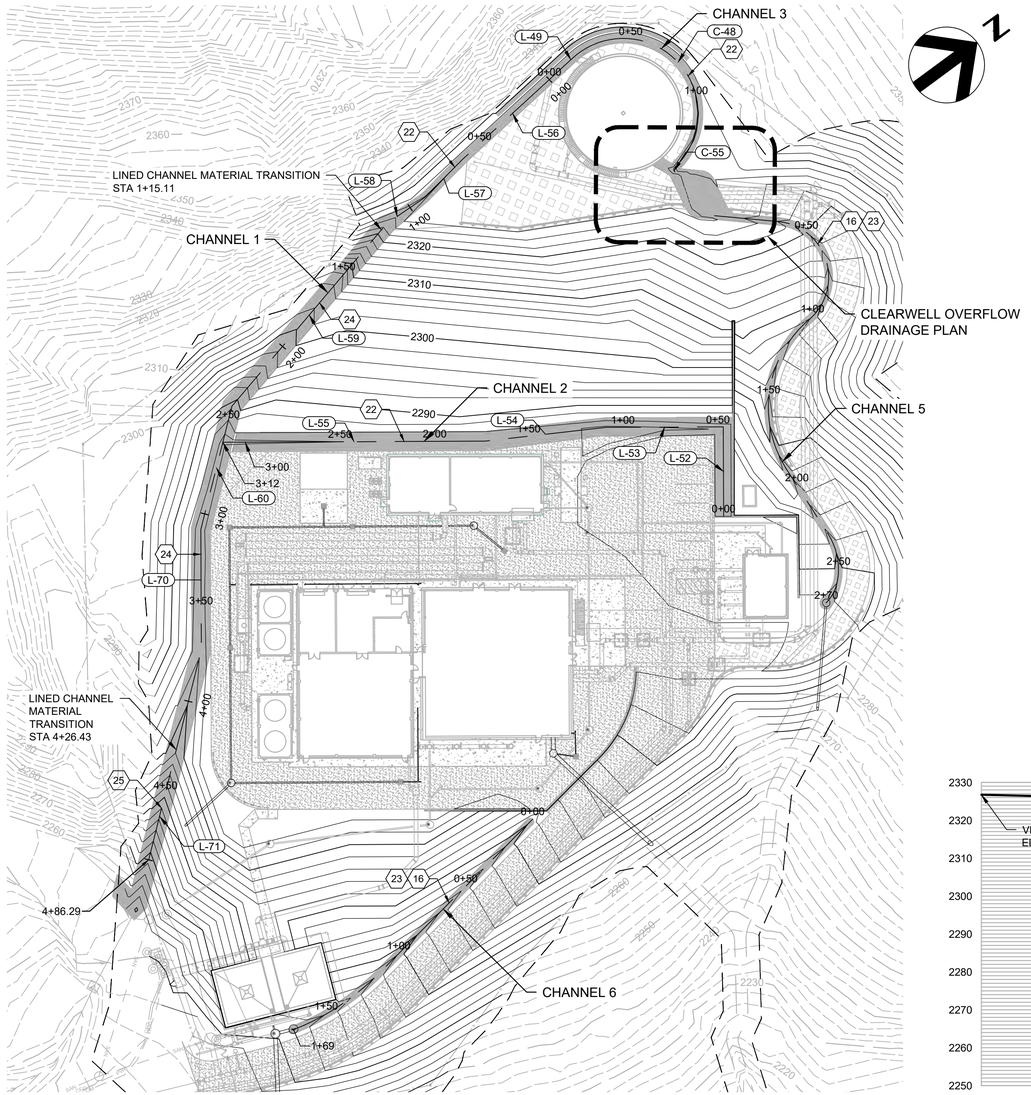

DRAINAGE PLAN - MAIN SITE

0 40' 80' 120'
SCALE IN FEET

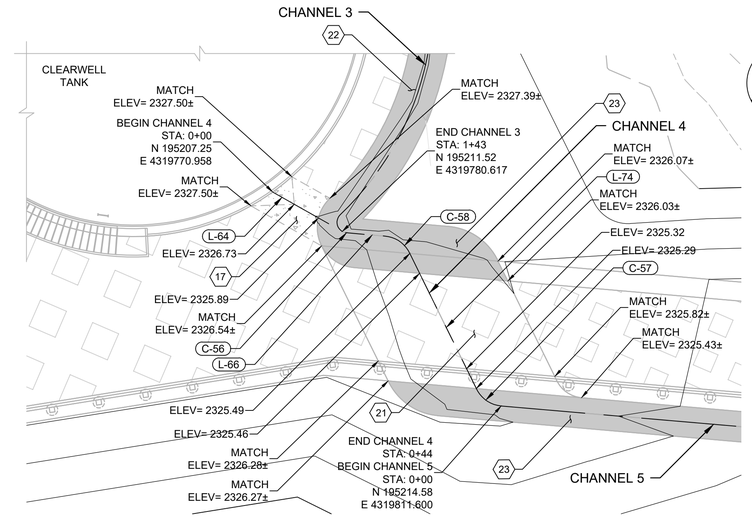

CLEARWELL OVERFLOW DRAINAGE PLAN

0' 10' 20' 30'
SCALE IN FEET

KEY NOTES:

16 CHANNEL GRADE AND ALIGNMENT PARALLEL ROADWAY. SEE PLAN AND PROFILE SHEETS 001C104 THROUGH 001C107 AND SECTIONS DETAIL SHEET 001C101.

17 CONCRETE DRAINAGE CHANNEL 6' WIDE, 4" THICK ON 2" MINIMUM COMPACTED AGGREGATE WITH 3:1 MAX SLOPE.

21 CONSTRUCT FIBER REINFORCED HMA CL. 4", PG 70-22ER DRAINAGE CHANNEL 20' WIDE. SEE DETAIL A (001C101) FOR TOP COURSE AND BOTTOM COURSE THICKNESS.

22 CONSTRUCT TURF REINFORCEMENT LINED CHANNEL PER DETAIL C (001C101).

23 CONSTRUCT CLASS 50 RIPRAP LINED CHANNEL PER DETAIL B (001C101).

24 CONSTRUCT CLASS 100 RIPRAP LINED CHANNEL PER DETAIL B (001C101).

25 CONSTRUCT CLASS 200 RIPRAP LINED CHANNEL PER DETAIL B (001C101)

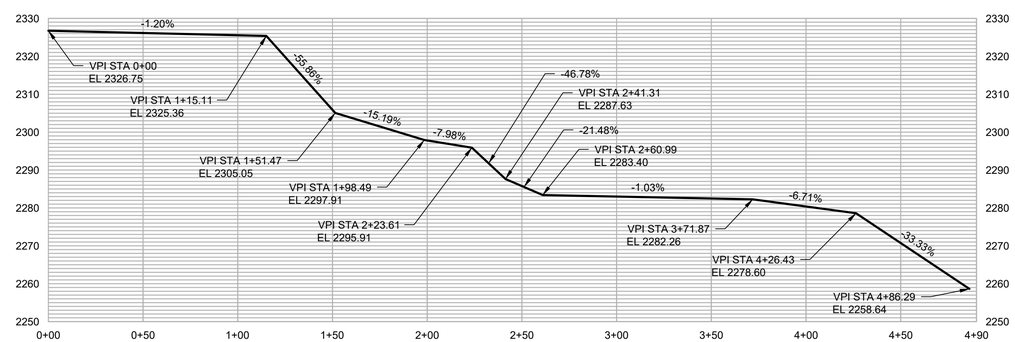

CHANNEL 1 - PROFILE

SCALE: HOR 1" = 40'
VER 1" = 20'

LINE TABLE: CHANNEL ALIGNMENTS				
LINE #	LENGTH	DIRECTION	DESCRIPTION	CHANNEL WIDTH
L-71	114.41	S39° 32' 33.68"E	CHANNEL 1	10'
L-70	63.47	S53° 51' 24.30"E	CHANNEL 1	10'
L-60	67.09	S39° 27' 13.28"E	CHANNEL 1	10'
L-59	126.13	S13° 19' 41.27"E	CHANNEL 1	10'
L-58	24.78	S01° 57' 08.45"W	CHANNEL 1	VARIES
L-57	28.14	S09° 02' 40.58"E	CHANNEL 1	5'
L-56	62.26	S06° 12' 31.12"E	CHANNEL 1	5'
L-55	138.52	S36° 08' 35.70"W	CHANNEL 2	10'
L-54	64.08	S29° 52' 42.19"W	CHANNEL 2	10'
L-53	62.02	S36° 08' 35.70"W	CHANNEL 2	10'
L-52	47.20	N53° 51' 24.60"W	CHANNEL 2	10'
L-49	16.68	N06° 12' 31.12"W	CHANNEL 3	5'
L-74	19.73	S79° 32' 23.00"E	CHANNEL 4	---
L-66	5.09	N41° 37' 49.43"E	CHANNEL 4	---
L-64	10.56	N66° 10' 29.19"E	CHANNEL 4	---

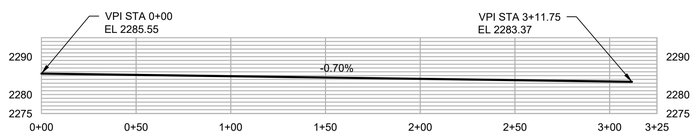

CHANNEL 2 - PROFILE

SCALE: HOR 1" = 40'
VER 1" = 20'

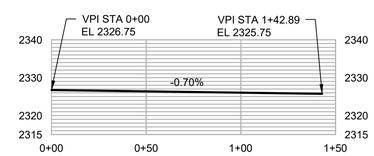

CHANNEL 3 - PROFILE

SCALE: HOR 1" = 40'
VER 1" = 20'

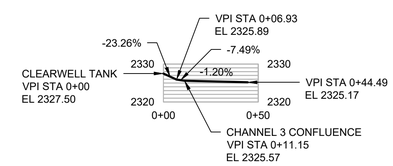

CHANNEL 4 - PROFILE

SCALE: HOR 1" = 40'
VER 1" = 20'

CURVE TABLE: CHANNEL ALIGNMENTS					
CURVE #	RADIUS	LENGTH	CHORD DIRECTION	DESCRIPTION	CHANNEL WIDTH
C-55	1.4	2.57	S60° 49' 15.18"E	CHANNEL 3	5'
C-48	39.5	123.64	N83° 27' 40.32"E	CHANNEL 3	5'
C-58	4.0	4.19	N71° 37' 31.15"E	CHANNEL 4	---
C-57	4.0	4.34	N72° 34' 38.70"E	CHANNEL 4	---
C-56	1.4	0.59	N53° 54' 09.31"E	CHANNEL 4	---

HDR

ISSUE	DATE	DESCRIPTION
A	09/2026	ISSUED FOR BIDS

PROJECT MANAGER	PIERRE KWAN
CIVIL	J. MEGRDITCHIAN
STRUCTURAL	P. LINDBLOM
ARCHITECTURAL	V. YANEZ
PROCESS	P. KWAN
MECHANICAL	K. CHEUNG
ELECTRICAL	R. MCCOMB
INSTRUMENTATION	D. BEST
PROJECT NUMBER	10193663

REGISTERED PROFESSIONAL ENGINEER
100489PE
DIGITALLY SIGNED
OREGON
NOVEMBER 8, 2022
NATHAN FASTENAU
EXPIRES: 12/31/2027

CITY OF ASHLAND
Ashland, Oregon

City of Ashland

Ashland Creek Water Treatment Plant

2026

CIVIL STORMWATER PLAN LINED CHANNELS

0 1" 2"

FILENAME 001C208
SCALE 1" = 50'

SHEET
001C207

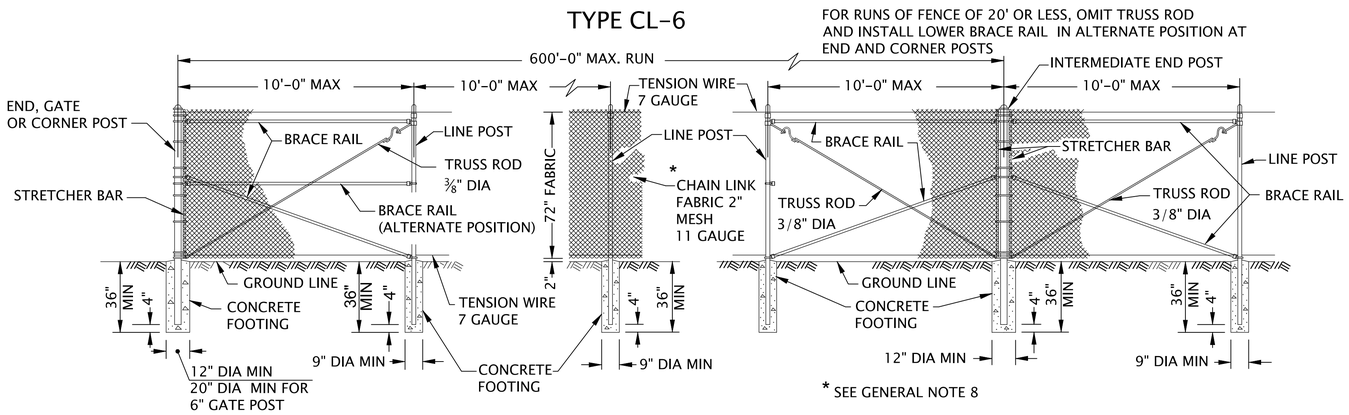

1 - SECURITY FENCE
NOT TO SCALE

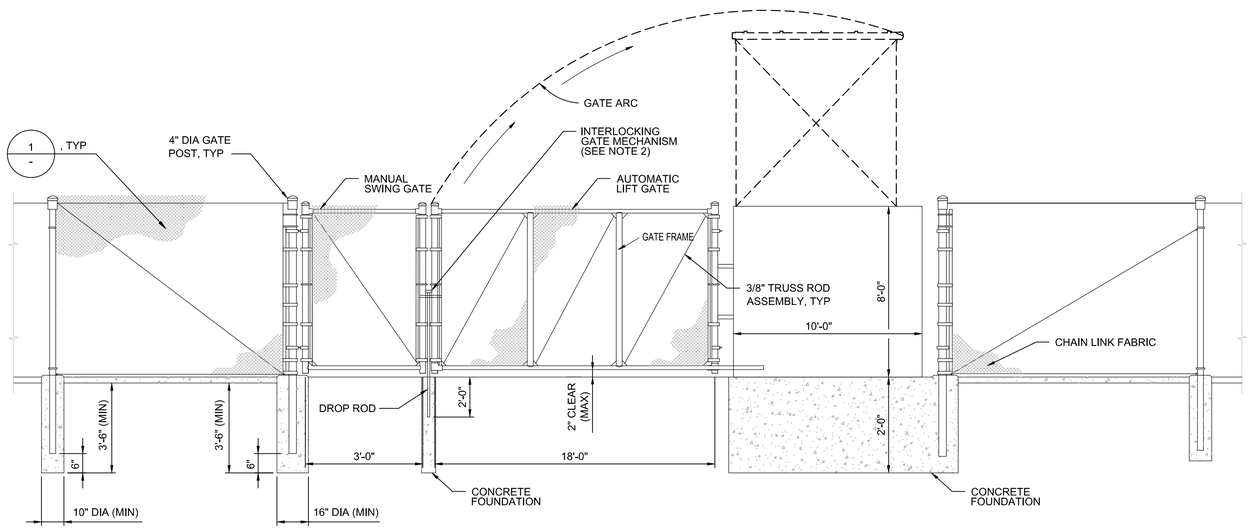

2 - AUTOMATIC LIFT GATE
NOT TO SCALE

GATE NOTES:

1. SEE SPECIFICATIONS FOR FENCE MATERIAL, COATINGS, AND INSTALLATION REQUIREMENTS.
2. COORDINATE SECURITY AND ACCESS REQUIREMENTS WITH OWNER.
3. 12" DIAMETER X 30" DEEP CONCRETE STOP W/ 20 GA STEEL PLUNGER SLEEVE, DIA = ROD OD +1/2".

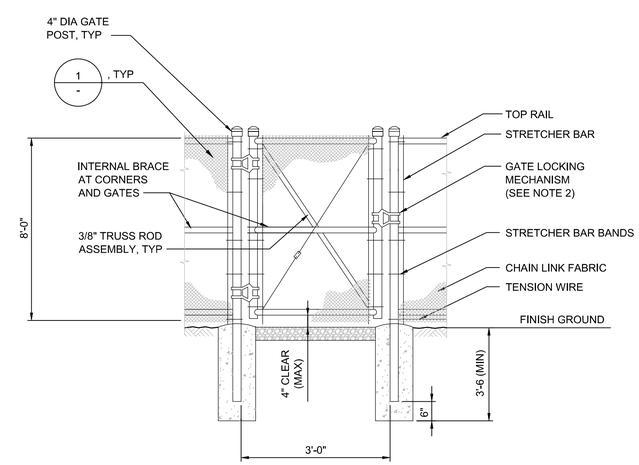

3 - MANUAL SWING GATE
NOT TO SCALE

ISSUE	DATE	DESCRIPTION
A	09/2026	ISSUED FOR BIDS

PROJECT MANAGER	PIERRE KWAN
CIVIL	J. MEGRDITCHIAN
STRUCTURAL	P. LINDBLOM
ARCHITECTURAL	V. YANEZ
PROCESS	P. KWAN
MECHANICAL	K. CHEUNG
ELECTRICAL	R. MCCOMB
INSTRUMENTATION	D. BEST
PROJECT NUMBER	10193663

REGISTERED PROFESSIONAL ENGINEER 86507PE OREGON January 09, 2018 JOHN WILLIAM MEGRDITCHIAN
DIGITALLY SIGNED Date: 2026.09.26 09:17:23-07'00'
EXPIRES: 12/31/2026

CITY OF ASHLAND
Ashland, Oregon

City of Ashland

Ashland Creek Water Treatment Plant

2026

CIVIL

FENCE AND GATE DETAILS

0 1" 2"

FILENAME 001C500.dwg
SCALE AS SHOWN

SHEET **001C500**

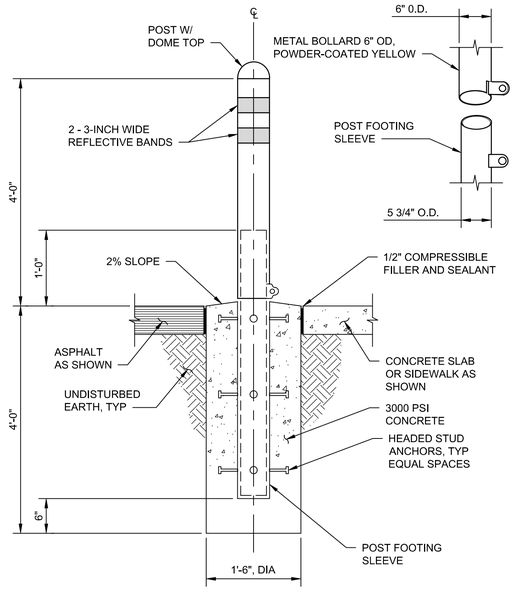

1 - REMOVABLE BOLLARD
NOT TO SCALE

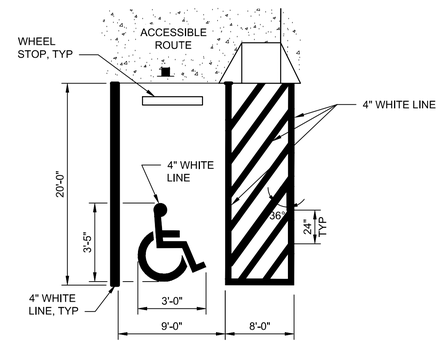

2 - ADA PARKING (WHITE)
NOT TO SCALE

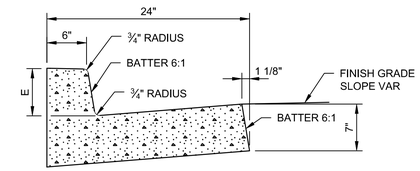

3 - CURB AND GUTTER
NOT TO SCALE

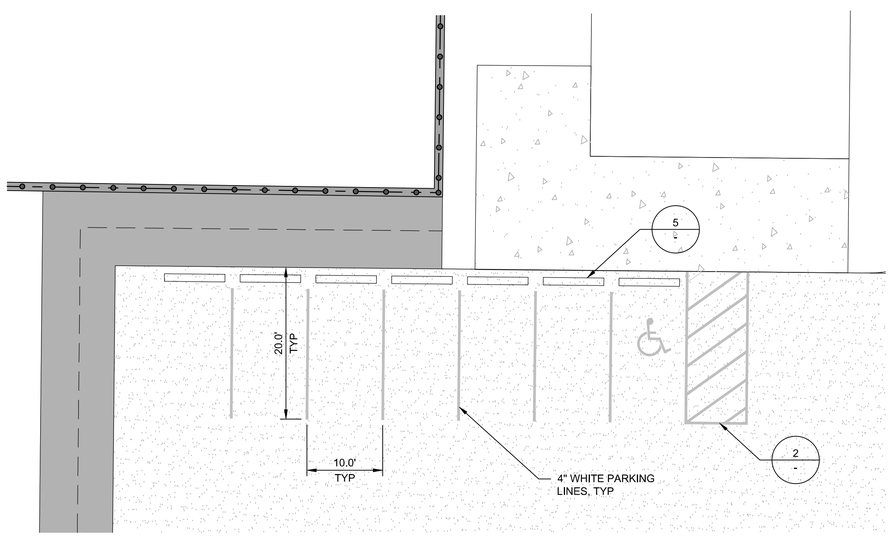

4 - PARKING LAYOUT
NOT TO SCALE

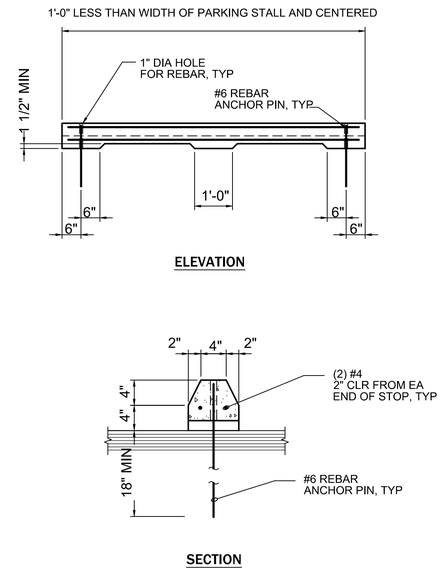

5 - TIRE STOP
NOT TO SCALE

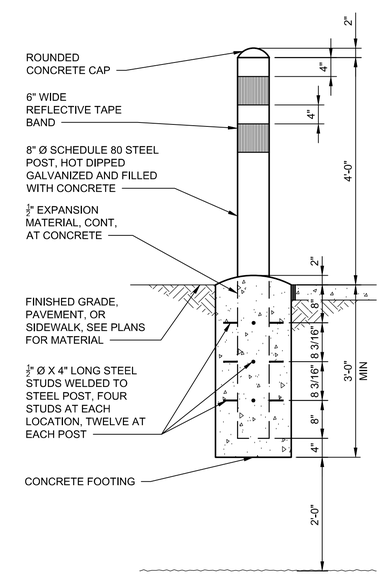

6 - PERMANENT BOLLARD
NOT TO SCALE

ISSUE	DATE	DESCRIPTION
A	09/2026	ISSUED FOR BIDS

PROJECT MANAGER	PIERRE KWAN
CIVIL	J. MEGRDITCHIAN
STRUCTURAL	P. LINDBLOM
ARCHITECTURAL	V. YANEZ
PROCESS	P. KWAN
MECHANICAL	K. CHEUNG
ELECTRICAL	R. MCCOMB
INSTRUMENTATION	D. BEST
PROJECT NUMBER	10193663

REGISTERED PROFESSIONAL ENGINEER
86507PE
DIGITALLY SIGNED
OREGON
January 09, 2026
JOHN WILLIAM MEGRDITCHIAN
EXPIRES: 12/31/2026

CITY OF ASHLAND
Ashland, Oregon

City of Ashland

Ashland Creek Water Treatment Plant

2026

CIVIL

CIVIL SITE DETAILS 1

0 1" 2"

FILENAME 001C501.dwg
SCALE AS NOTED

SHEET
001C501

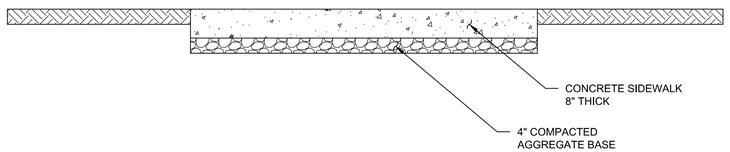

NOTES:

1. CONSTRUCT EXPANSION JOINTS AT MAXIMUM OF 15' INTERVALS.

1 / - THICKENED SIDEWALK
NOT TO SCALE

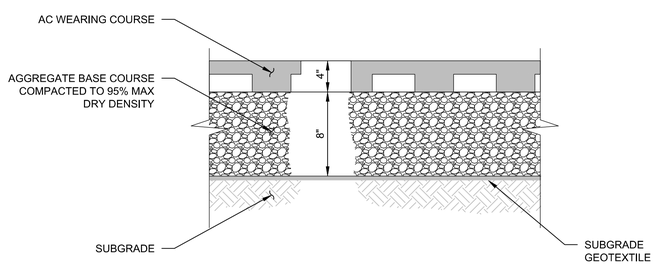

NOTES:

1. AC WEARING AND BASE COURSE USE LEVEL 2, 1/2 INCH DENSE ACP PG 64-22. PLACE IN 2 INCH LIFTS.
2. AGGREGATE BASE AND SUB-BASE COURSE USE 3/4" DENSE GRADED BASE AGGREGATE. THICKNESS MAY NEED TO BE INCREASED TO 12 INCHES OR MORE FOR CONSTRUCTABILITY IN AREAS OF SOFT OR WET SUBGRADE.

2 / - AC PAVEMENT SECTION
NOT TO SCALE

ISSUE	DATE	DESCRIPTION
A	09/2026	ISSUED FOR BIDS

PROJECT MANAGER	PIERRE KWAN
CIVIL	J. MEGRDITCHIAN
STRUCTURAL	P. LINDBLOM
ARCHITECTURAL	V. YANEZ
PROCESS	P. KWAN
MECHANICAL	K. CHEUNG
ELECTRICAL	R. MCCOMB
INSTRUMENTATION	D. BEST
PROJECT NUMBER	10193663

REGISTERED PROFESSIONAL ENGINEER
86507PE
DIGITALLY SIGNED Date: 2026.09.26 09:17:40-07'00'
OREGON
January 09, 2018
JOHN WILLIAM MEGRDITCHIAN
EXPIRES: 12/31/2026

CITY OF ASHLAND
Ashland, Oregon

City of Ashland

Ashland Creek Water Treatment Plant

2026

CIVIL

CIVIL SITE DETAILS 2

0 1" 2"

FILENAME 001C502.dwg
SCALE AS NOTED

SHEET
001C502

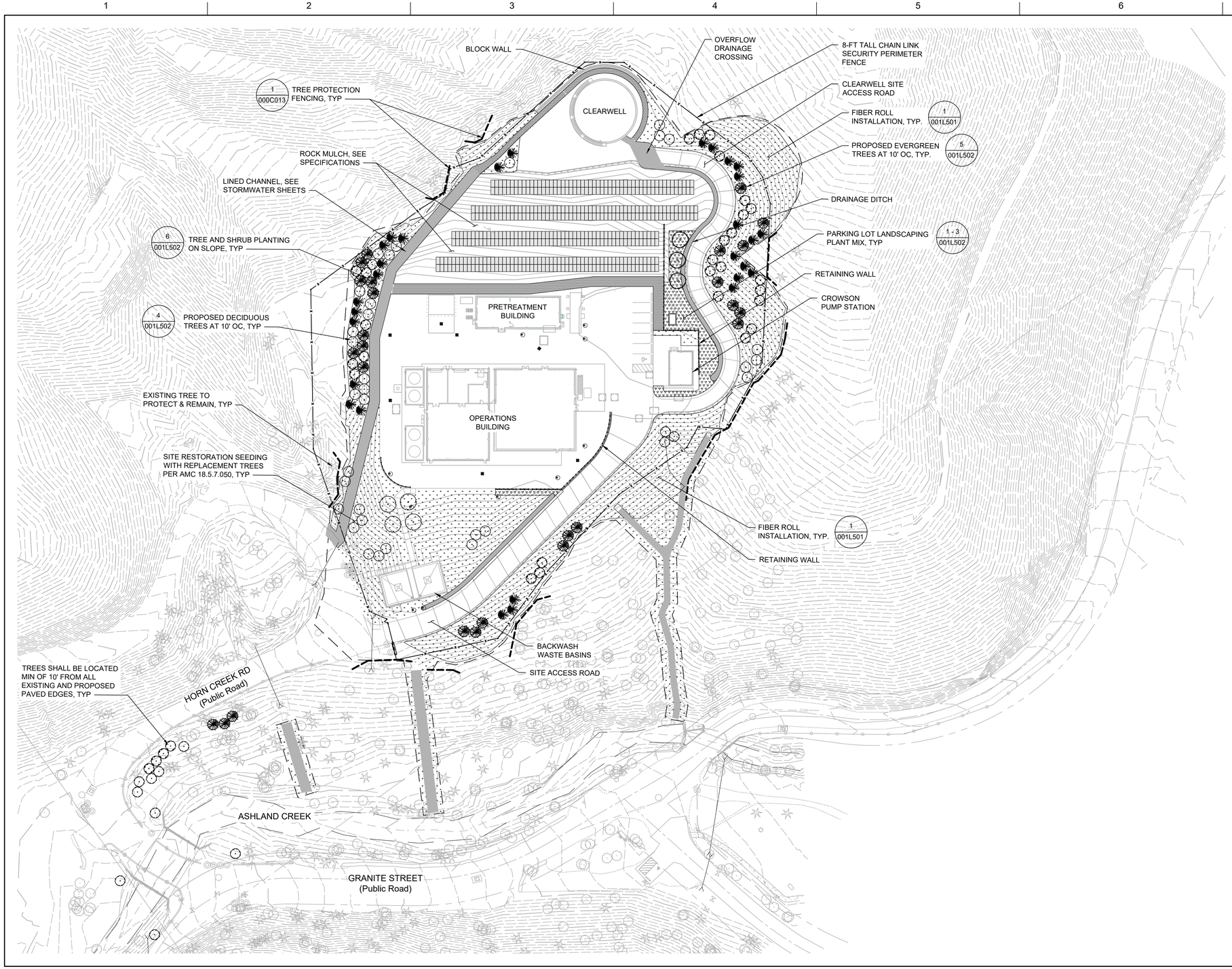

N

0' 50' 100' 150'
SCALE IN FEET

LEGEND:

- CONSTRUCTION LIMIT
- CHAIN LINK FENCE
- TREE PROTECTION FENCING
- EXISTING 10' CONTOUR LINE
- EXISTING 2' CONTOUR LINE
- CREEK EDGE
- EXISTING ROAD EDGE
- EXISTING DITCH
- TURF REINFORCEMENT LINED CHANNEL SEEDING
- SITE RESTORATION SEEDING
- PARKING LOT LANDSCAPING PLANT MIX
- EXISTING TREES
- BIG LEAF MAPLE
- SERVICEBERRY
- BLACK HAWTHORN
- PONDEROSA PINE
- INCENSE CEDAR
- CANYON LIVE OAK
- OREGON WHITE OAK

GENERAL NOTES:

1. SEE SHEET 001L502 FOR LANDSCAPE DETAILS.
2. SEE SHEET 001L601 FOR LANDSCAPE SCHEDULE AND NOTES.
3. SEE SHEET 000C012 & 000C013 FOR EXISTING TREE INVENTORY TABLES.

ISSUE	DATE	DESCRIPTION
A	09/2026	ISSUED FOR BIDS

PROJECT MANAGER	PIERRE KWAN
CIVIL	J. MEGRDITCHIAN
STRUCTURAL	P. LINDBLOM
ARCHITECTURAL	V. YANEZ
PROCESS	P. KWAN
MECHANICAL	K. CHEUNG
ELECTRICAL	R. MCCOMB
INSTRUMENTATION	D. BEST
PROJECT NUMBER	10193663

REGISTERED LANDSCAPE ARCHITECT
Matthew C. Gurrad
OREGON
08/22/12
9/24/2026
EXPIRES: 08/31/27

CITY OF ASHLAND
Ashland, Oregon

City of Ashland

Ashland Creek Water Treatment Plant

2026

LANDSCAPE
OVERALL LANDSCAPE PLAN

0 1" 2"

FILENAME 001L101.dwg
SCALE 1" = 50'-0"

SHEET **001L101**

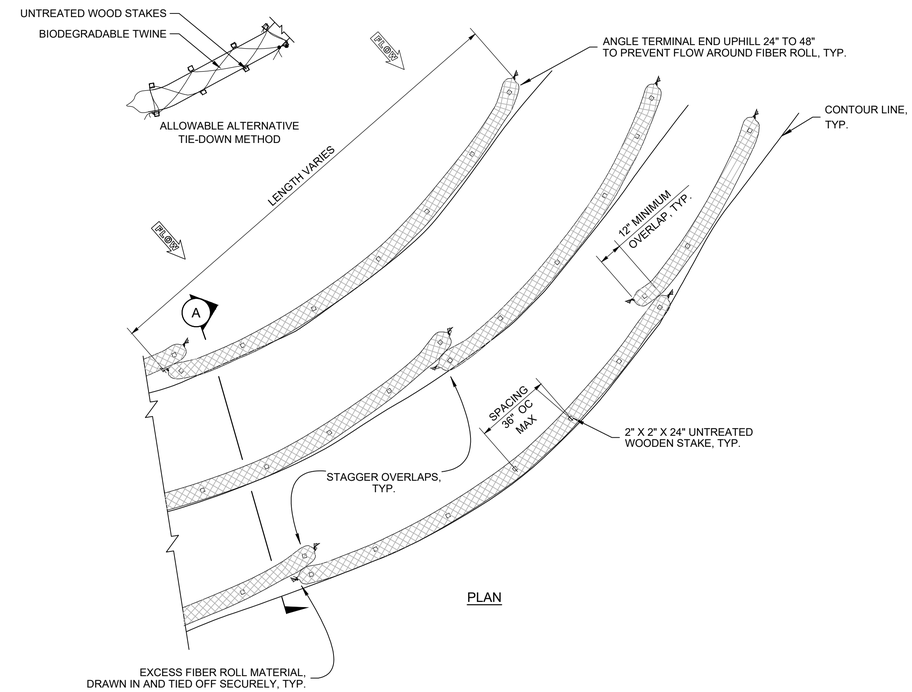

NOTE:

1. COMPACT EXCAVATED SOIL AND TRENCHES TO PREVENT UNDERCUTTING. ADDITIONAL STAKING MAY BE NECESSARY TO PREVENT UNDERCUTTING.

2. FIBER ROLLS SHALL BE INSPECTED REGULARLY, AND IMMEDIATELY AFTER RAIN PRODUCES RUNOFF, TO ENSURE THEY REMAIN THOROUGHLY ENTRENCHED AND IN CONTACT WITH THE SOIL.

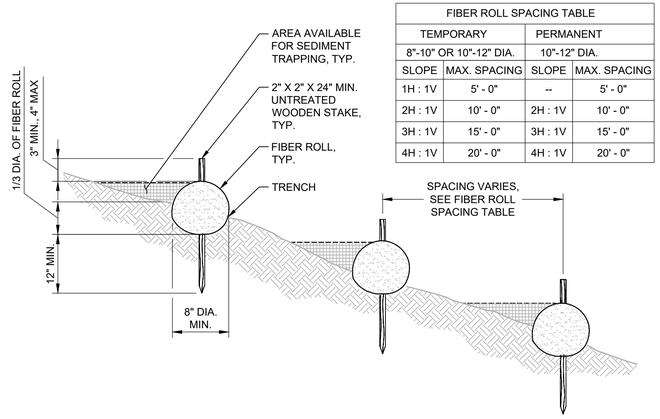

SECTION A

FIBER ROLL SPACING TABLE			
TEMPORARY		PERMANENT	
8"-10" OR 10"-12" DIA.		10"-12" DIA.	
SLOPE	MAX. SPACING	SLOPE	MAX. SPACING
1H : 1V	5' - 0"	--	5' - 0"
2H : 1V	10' - 0"	2H : 1V	10' - 0"
3H : 1V	15' - 0"	3H : 1V	15' - 0"
4H : 1V	20' - 0"	4H : 1V	20' - 0"

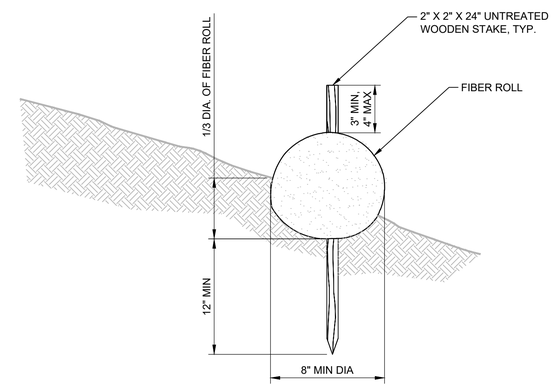

DETAIL

1 FIBER ROLL INSTALLATION

SCALE: NTS

ISSUE	DATE	DESCRIPTION
A	09/2026	ISSUED FOR BIDS

PROJECT MANAGER	PIERRE KWAN
CIVIL	J. MEGRDITCHIAN
STRUCTURAL	P. LINDBLOM
ARCHITECTURAL	V. YANEZ
PROCESS	P. KWAN
MECHANICAL	K. CHEUNG
ELECTRICAL	R. MCCOMB
INSTRUMENTATION	D. BEST
PROJECT NUMBER	10193663

REGISTERED LANDSCAPE ARCHITECT #178 Matthew C. Gurrad OREGON 08/22/12 9/24/2026
EXPIRES: 08/31/27

CITY OF ASHLAND
Ashland, Oregon

City of Ashland

Ashland Creek Water Treatment Plant

2026

LANDSCAPE
LANDSCAPE DETAILS

0 1" 2"

FILENAME 001L501.dwg
SCALE AS SHOWN

SHEET
001L501

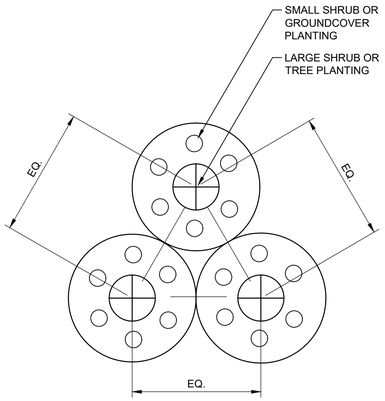

1 - TRIANGULAR PLANT SPACING
SCALE: NTS

NOTE:
PROVIDE MULCH TYPE AS INDICATED IN SPECIFICATIONS

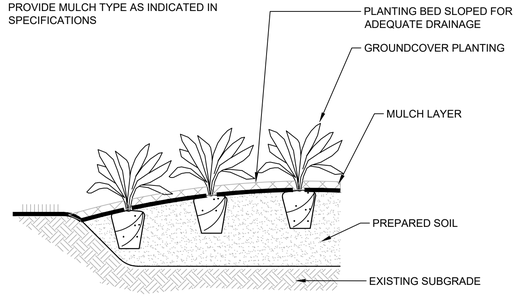

2 - GROUNDCOVER PLANTING
SCALE: NTS

NOTE:
PROVIDE MULCH TYPE AS INDICATED IN PLANS AND IN DETAILS 1/L502 & 2/L502

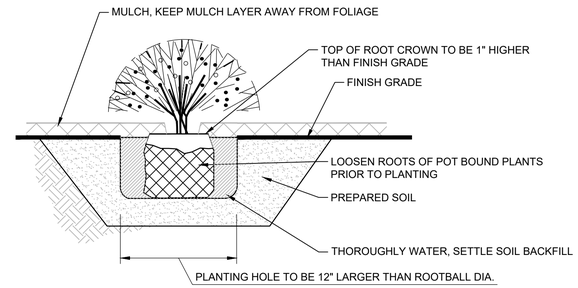

3 - SHRUB PLANTING
SCALE: NTS

NOTE:
1. FOR TREES PLACED IN SEEDED AREAS FORM 5' DIA. MULCH RING.

2. PROVIDE MULCH TYPE AS INDICATED IN THE SPECIFICAITONS.

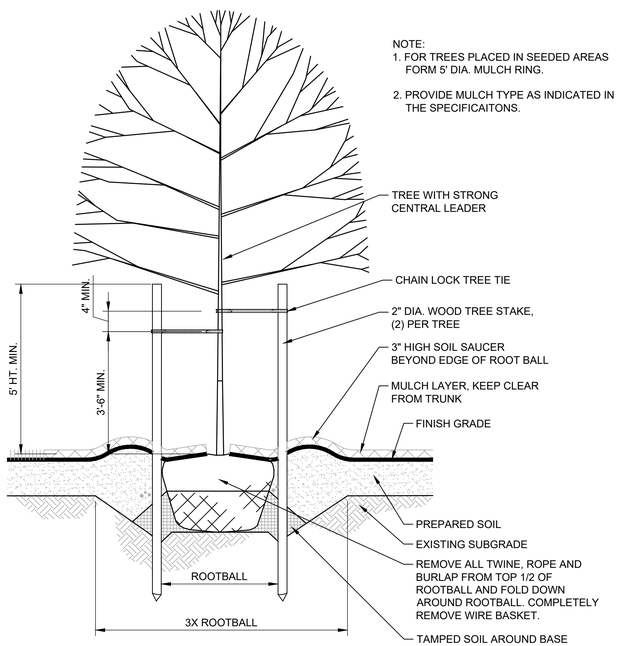

4 - DECIDUOUS TREE PLANTING (1 1/2" CAL TREES)
SCALE: NTS

NOTE:
1. FOR TREES PLACED IN SEEDED AREAS FORM 5' DIA. MULCH RING.

2. PROVIDE MULCH TYPE AS INDICATED IN THE SPECIFICAITONS.

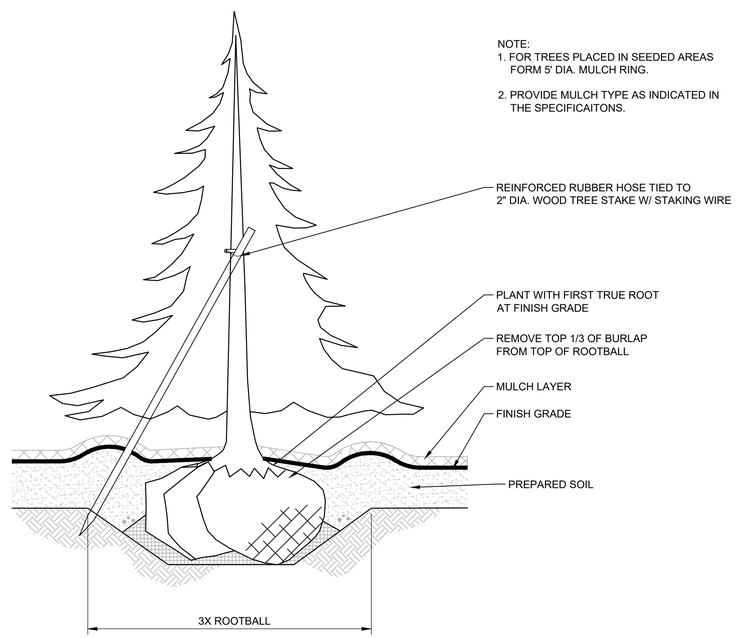

6 - EVERGREEN TREE PLANTING
SCALE: NTS

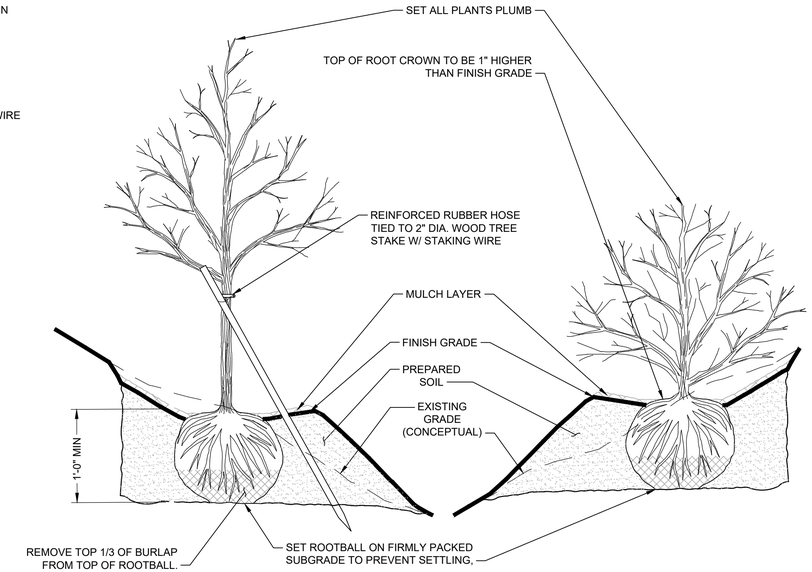

6 - TREE & SHRUB PLANTING ON SLOPE
SCALE: NTS

ISSUE	DATE	DESCRIPTION
A	09/2026	ISSUED FOR BIDS

PROJECT MANAGER	PIERRE KWAN
CIVIL	J. MEGRDITCHIAN
STRUCTURAL	P. LINDBLOM
ARCHITECTURAL	V. YANEZ
PROCESS	P. KWAN
MECHANICAL	K. CHEUNG
ELECTRICAL	R. MCCOMB
INSTRUMENTATION	D. BEST
PROJECT NUMBER	10193663

REGISTERED LANDSCAPE ARCHITECT #778 Matthew C. Gurrad OREGON 08/22/12
9/24/2026
EXPIRES: 08/31/27

CITY OF ASHLAND
Ashland, Oregon

City of Ashland

Ashland Creek Water Treatment Plant

2026

LANDSCAPE
LANDSCAPE DETAILS

0 1" 2"

FILENAME 001L502.dwg
SCALE AS SHOWN

SHEET
001L502

PLANT SCHEDULE

SYMBOL	QTY.	SCIENTIFIC NAME / COMMON NAME	SIZE	COMMENTS
TREES				
	12	ACER MACROPHYLLUM / BIG LEAF MAPLE	#2 CONT 36" HT MIN	SPACE 10' OC
	3	AMELANCHIER ALNIFOLIA / SERVICEBERRY	1 1/2" CAL	SPACE 20' OC
	26	CALOCEDRUS DECURRENS / INCENSE CEDAR	#2 CONT 36" HT MIN	SPACE 10' OC, DO NOT PLANT WITHIN 30' OF ANY STRUCTURE PER AMC 9.04
	4	CRATAEGUS DOUGLASII / BLACK HAWTHORN	1 1/2" CAL	SPACE 20' OC
	29	PINUS PONDEROSA / PONDEROSA PINE	#2 CONT 36" HT MIN	SPACE 10' OC, DO NOT PLANT WITHIN 30' OF ANY STRUCTURE PER AMC 9.04
	32	QUERCUS CHRYSOLEPIS / CANYON LIVE OAK	#2 CONT 18" HT MIN	SPACE 10' OC
	32	QUERCUS GARRYANA / OREGON WHITE OAK	#2 CONT 24" HT MIN	SPACE 10' OC
PARKING LOT LANDSCAPING PLANT MIX				
	48	MAHONIA AQUIFOLIUM 'COMPACTA' / COMPACT OREGON GRAPE	#1 CONT	SPACE AT 4' OC, PLANT IN CLUSTERS OF 7-9 OF THE SAME SPECIES, DO NOT PLANT WITHIN 30' OF ANY STRUCTURE PER AMC 9.04
	61	PAXISTIMA MYRSINITES / OREGON BOXWOOD	#1 CONT	SPACE AT 4' OC, PLANT IN CLUSTERS OF 7-9 OF THE SAME SPECIES
	61	RHUS AROMATICA 'GRO-LOW' 'GRO-LOW' FRAGRANT SUMAC	#1 CONT	SPACE AT 4' OC, PLANT IN CLUSTERS OF 7-9 OF THE SAME SPECIES
	36	SYMPHORICARPOS X CHENAULTII 'HANCOCK' HANCOCK SNOWBERRY	#1 CONT	SPACE AT 4' OC, PLANT IN CLUSTERS OF 7-9 OF THE SAME SPECIES
	36	VACCINIUM OVATUM 'THUNDERBIRD' THUNDERBIRD EVERGREEN HUCKLEBERRY	#1 CONT	SPACE AT 4' OC, PLANT IN CLUSTERS OF 7-9 OF THE SAME SPECIES
	193	RUBUS CALYCINOIDES 'EMERALD CARPET' / CREEPING RASPBERRY	#1 CONT	2' OC SPACING
SITE RESTORATION SEEDING				
	54,316 SF	SEE SPECIFICATIONS		
TURF REINFORCEMENT LINED CHANNEL SEEDING				
	4,389 SF	SEE SPECIFICATIONS		

NOTES:

1. ANY DISCREPANCIES WITH THE DRAWINGS AND/OR SPECIFICATIONS AND SITE CONDITIONS SHALL BE BROUGHT TO THE ATTENTION OF THE ENGINEER PRIOR TO PROCEEDING WITH CONSTRUCTION.
2. THE CONTRACTOR IS RESPONSIBLE FOR LOCATING UTILITIES PRIOR TO BEGINNING CONSTRUCTION.
3. PROVIDE TREE PROTECTION FOR ANY EXISTING TREE MARKED TO REMAIN AND/OR ANY TREE WITHIN 3 FEET OF PROPOSED PERIMETER FENCE NOT OTHERWISE FLAGGED FOR REMOVAL.
4. REMOVE ALL INVASIVE SPECIES WITHIN STREAM RESTORATION PLANTING AREA.
5. PLANT MATERIAL LOCATIONS SHALL BE COORDINATED WITH EXISTING UTILITIES AND OTHER INFRASTRUCTURE TO AVOID CONFLICTS.
6. CONTRACTOR SHALL FIELD STAKE TREE & SHRUB PLANTING LOCATIONS AND SPRAY PAINT GROUNDCOVER BEDS PRIOR TO PLANTING FOR ENGINEER REVIEW AND APPROVAL.
7. ALL PLANT MATERIAL SHALL BE SPACED TRIANGULARLY UNLESS OTHERWISE NOTED.
8. LANDSCAPE SUBCONTRACTOR SHALL BE RESPONSIBLE FOR PLANT ESTABLISHMENT INCLUDING WATERING, PRUNING, REPLACEMENT AND PEST MANAGEMENT FOR ALL PLANT MATERIAL INSTALLED AS PART OF THIS WORK PERIOD FOR ONE YEAR FOLLOWING INITIAL ACCEPTANCE. COORDINATE WITH OWNER FOR SOURCE OF WATER FOR WATERING NEEDS.
9. AT THE CONCLUSION OF THE ONE YEAR PLANT ESTABLISHMENT PERIOD, THE GENERAL CONTRACTOR SHALL ASSIGN THE LANDSCAPE MAINTENANCE CONTRACT TO THE CITY. THE CITY SHALL THEN PROCURE A MAINTENANCE SERVICES CONTRACT FOR THE FIVE YEAR MAINTENANCE AND MONITORING REQUIREMENTS OF LANDSCAPE RESTORATION IN THE WATER RESOURCE PROTECTION ZONE (STREAM RESTORATION PLANT MIX). SEE SPECIFICATIONS. THE CITY SHALL ALSO GET A DEDUCT IN THE FINAL INVOICES FOR THE COST OF THE REMAINING FOUR YEARS OF LANDSCAPE MAINTENANCE TO MEET THE FIVE YEAR MAINTENANCE AND MONITORING REQUIREMENTS OF LANDSCAPE RESTORATION IN THE WATER RESOURCE PROTECTION ZONE.

ISSUE	DATE	DESCRIPTION
A	09/2026	ISSUED FOR BIDS

PROJECT MANAGER	PIERRE KWAN
CIVIL	J. MEGRDITCHIAN
STRUCTURAL	P. LINDBLOM
ARCHITECTURAL	V. YANEZ
PROCESS	P. KWAN
MECHANICAL	K. CHEUNG
ELECTRICAL	R. MCCOMB
INSTRUMENTATION	D. BEST
PROJECT NUMBER	10193663

REGISTERED #778 Matthew C. Gurrad OREGON 08/22/12 LANDSCAPE ARCHITECT 9/24/2026
EXPIRES: 08/31/27

CITY OF ASHLAND
Ashland, Oregon

City of Ashland

Ashland Creek
Water Treatment Plant

2026

LANDSCAPE
LANDSCAPE SCHEDULE & NOTES

0 1" 2"

FILENAME 001L601.dwg
SCALE N/A

SHEET
001L601

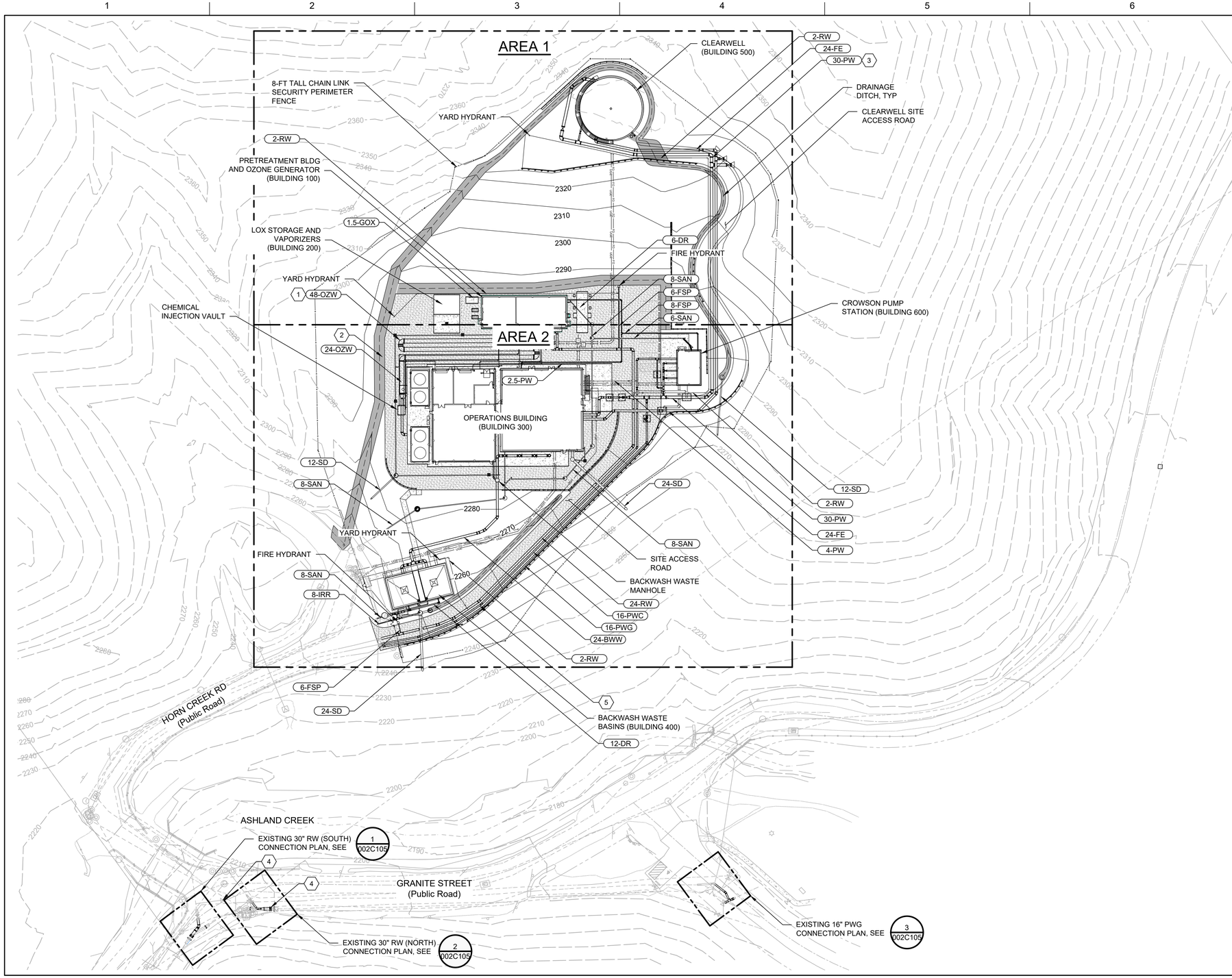

GENERAL NOTES:

1. CONTRACTOR IS RESPONSIBLE FOR THE PROTECTION OF ALL EXISTING OVERHEAD AND UNDERGROUND UTILITIES.
2. SPECIAL PRECAUTIONS MUST BE USED IN AREAS OF EXISTING UTILITIES. EXPLORATORY EXCAVATION SHALL BE EXPECTED BY THE CONTRACTOR, INCLUDING "POT-HOLING" TO EXPOSE THE PIPE SURFACE. FIELD VERIFY ALL EXISTING PIPING LOCATIONS AND ELEVATIONS BEFORE BEGINNING WORK OR OTHER EXCAVATIONS. NOT ALL EXISTING UTILITIES MAY BE SHOWN. THE CONTRACTOR SHALL INFORM THE ENGINEER AND OWNER OF HIS INTENT TO DO SUCH WORK A MINIMUM OF 24 HOURS PRIOR TO COMMENCEMENT OF SUCH WORK.
3. PLACE PIPES AT ELEVATIONS NOTED ON PLANS AND PROFILES. REFER TO BUILDING SECTIONS FOR INVERT ELEVATIONS. FOUR FOOT MINIMUM COVER REQUIRED WHERE ELEVATIONS NOT INDICATED ON YARD PIPING OR DETAIL SHEETS. MAINTAIN SLOPE FOR GRAVITY LINES.
4. FOR PIPING ABBREVIATIONS, SEE SHEET 000G005 AND SPECIFICATIONS. SEE PIPING SCHEDULE IN THE SPECIFICATIONS.
5. PLACE WARNING TAPE ABOVE ALL BURIED PIPE AS REQUIRED PER THE SPECIFICATIONS.
6. OVERHEAD ELECTRICAL SERVICE AND BURIED ELECTRICAL AND NATURAL GAS SERVICES MAY NOT BE SHOWN. COORDINATE LOCATION AND DEPTH WITH UTILITY COMPANIES AND OWNER.
7. CONTRACTOR TO PROVIDE THRUST PROTECTION FOR PIPES WHERE SHOWN OR AS SPECIFIED. SEE STANDARD DETAILS.
8. ASPHALT PAVEMENT RESTORATION REQUIRED WHERE PIPES ARE PLACED UNDER EXISTING PAVEMENT. SEE DETAIL. PIPE TRENCHES ACROSS EXISTING ROADWAYS MUST BE EXCAVATED AND BACKFILLED WITHIN 5 DAYS FOR OPERATOR ACCESS, UNLESS INDICATED OTHERWISE.
9. NOTIFY THE CITY OF ASHLAND A MINIMUM OF SEVEN (7) WORKING DAYS IN ADVANCE OF ANY FACILITY OR PIPELINE SHUTDOWN DATES.
10. THE CONTRACTOR SHALL FIELD VERIFY THE ELEVATIONS, DIMENSIONS, DIAMETERS, LAY LENGTHS, AND JOINT LOCATIONS OF ALL PERTINENT EXISTING PIPING PRIOR TO FABRICATION OF NEW PIPE FITTINGS.
11. THE CITY OF ASHLAND IS RESPONSIBLE FOR THE OPERATION OF ALL EXISTING VALVES.

KEY NOTES:

1. SEE CIVIL ISOMETRIC DRAWINGS FOR OZONE CONTACTOR DETAILS.
2. OZONE OFFGAS STANDPIPE. SEE PROCESS DRAWINGS FOR DETAILS.
3. PROVIDE TEE, ISOLATION VALVE, BLIND FLANGE, AND THRUST BLOCK FOR FUTURE RESERVOIR ON PW AND FE LINES.
4. TEMPORARY FINISHED WATER TO NEW WTP RW PIPELINE BYPASS AND BYPASS VALVE TO PROVIDE WATER TO NEW WTP FOR STARTUP AND COMMISSIONING. BYPASS AND BYPASS VALVE SHALL BE REMOVED FOLLOWING SUBSTANTIAL COMPLETION AND PRIOR TO FINAL ACCEPTANCE.
5. CONTRACTOR MAY ELECT TO LOCATE A TEMPORARY CONNECTION OFF OF PWG AND RW TO ROUTE WATER TO THE BACKWASH BASIN DURING STARTUP AND COMMISSIONING. THE BACKWASH WASTE BASIN COULD SERVE AS A WET WELL FOR CONTRACTOR PROVIDED TEMPORARY PUMPS TO RECIRCULATE WATER THROUGH THE NEW WTP DURING STARTUP.

ISSUE	DATE	DESCRIPTION
A	09/2026	ISSUED FOR BIDS

PROJECT MANAGER	PIERRE KWAN
CIVIL	J. MEGRDITCHIAN
STRUCTURAL	P. LINDBLOM
ARCHITECTURAL	V. YANEZ
PROCESS	P. KWAN
MECHANICAL	K. CHEUNG
ELECTRICAL	R. MCCOMB
INSTRUMENTATION	D. BEST
PROJECT NUMBER	10193663

REGISTERED PROFESSIONAL ENGINEER 85841 DIGITALLY SIGNED OREGON MAY 8, 2018 PIERRE K. KWAN
EXPIRES: 06/30/2027

CITY OF ASHLAND
Ashland, Oregon

City of Ashland

Ashland Creek Water Treatment Plant

2026

CIVIL
OVERALL SITE PIPING PLAN

0 1" 2"

FILENAME 002C101.dwg
SCALE 1" = 50'

SHEET **002C101**

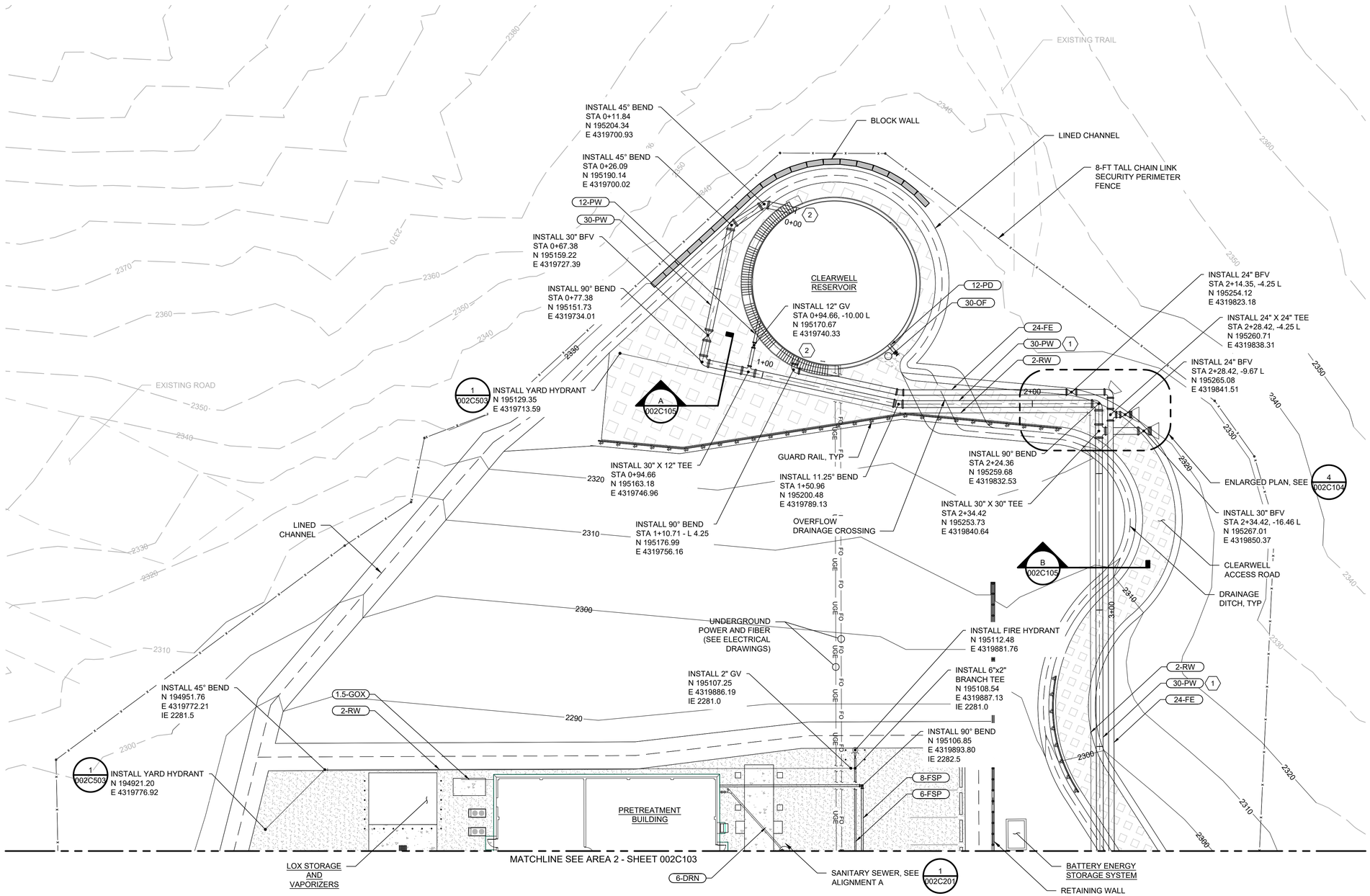

AREA 1

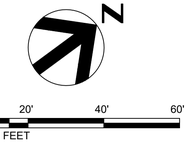

GENERAL NOTES:

1. SEE PROCESS DRAWINGS FOR ALL PIPES, FITTINGS, AND APPURTENANCES WITHIN 5' OF ALL STRUCTURES.
2. NORTHING AND EASTING ARE TO HPI OF ALL PIPES AND OUTSIDE CORNER OR CENTER OF ALL STRUCTURES.
3. ALL BURIED DI PIPES TO BE RESTRAINED JOINT. EXPOSED JOINTS IN VAULTS AND STRUCTURES SHALL BE FLANGED UNLESS OTHERWISE SHOWN.
4. PIPE BREAKS ARE FOR CLARITY ONLY AND DO NOT REPRESENT PIPE ELEVATIONS.

KEY NOTES:

1. SEE PARALLEL TRENCH SECTION FOR PARALLEL PIPING ALIGNMENTS.
2. CLEARWELL RESERVOIR CONNECTION DETAIL SEE PROCESS DRAWING 500D501.

ISSUE	DATE	DESCRIPTION
A	09/2026	ISSUED FOR BIDS

PROJECT MANAGER	PIERRE KWAN
CIVIL	J. MEGRDITCHIAN
STRUCTURAL	P. LINDBLOM
ARCHITECTURAL	V. YANEZ
PROCESS	P. KWAN
MECHANICAL	K. CHEUNG
ELECTRICAL	R. MCCOMB
INSTRUMENTATION	D. BEST
PROJECT NUMBER	10193663

REGISTERED PROFESSIONAL ENGINEER 85841 DIGITALLY SIGNED OREGON MAY 8, 2026 PIERRE K. KWAN
EXPIRES: 06/30/2027

CITY OF ASHLAND
Ashland, Oregon

City of Ashland

Ashland Creek Water Treatment Plant

2026

CIVIL
ENLARGED AREA YARD PIPING PLAN
AREA 1

0 1" 2"

FILENAME 002C102.dwg
SCALE 1" = 20'

SHEET **002C102**

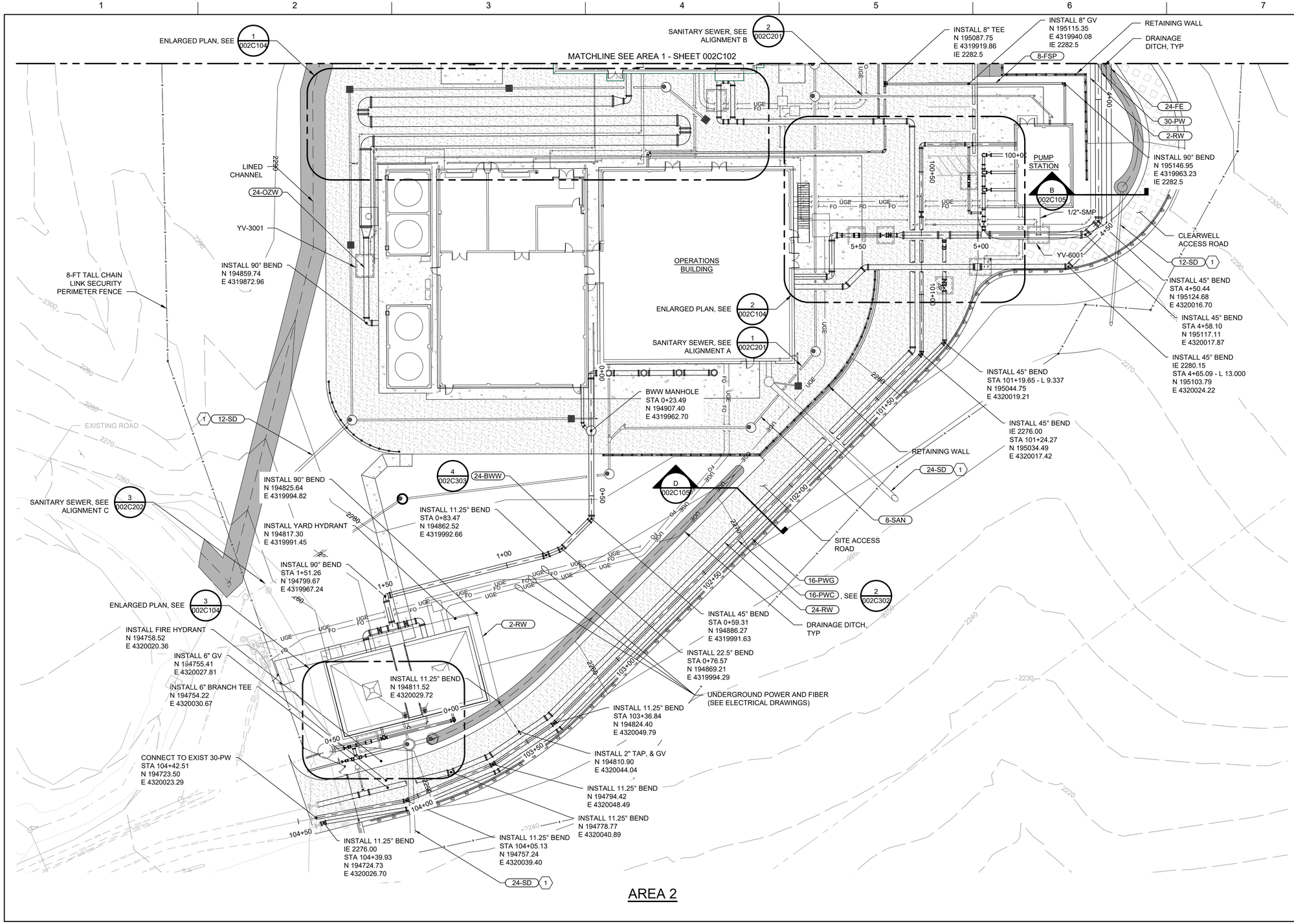

AREA 2

0' 20' 40' 60'
SCALE IN FEET

GENERAL NOTES:

1. SEE PROCESS DRAWINGS FOR ALL PIPES, FITTINGS, AND APPURTENANCES WITHIN 5' OF ALL STRUCTURES.
2. NORTHING AND EASTING ARE TO HPI OF ALL PIPES AND OUTSIDE CORNER OR CENTER OF ALL STRUCTURES.
3. ALL BURIED DI PIPES TO BE RESTRAINED JOINT. EXPOSED JOINTS IN VAULTS AND STRUCTURES SHALL BE FLANGED UNLESS OTHERWISE SHOWN.
4. PIPE BREAKS ARE FOR CLARITY ONLY AND DO NOT REPRESENT PIPE ELEVATIONS.

KEY NOTES:

1. SEE STORMWATER DRAWINGS FOR ALL SD PIPE ALIGNMENTS AND ASSOCIATED STRUCTURE LOCATIONS.
2. PRIOR TO SUBMITTAL OF FINAL LAYOUT PLANS, POTHOLE AND FIELD VERIFY EXISTING LOCATION, DEPTH, AND MATERIAL OF EXISTING PIPE AND FITTINGS.

ISSUE	DATE	DESCRIPTION
A	09/2026	ISSUED FOR BIDS

PROJECT MANAGER	PIERRE KWAN
CIVIL	J. MEGRDITCHIAN
STRUCTURAL	P. LINDBLOM
ARCHITECTURAL	V. YANEZ
PROCESS	P. KWAN
MECHANICAL	K. CHEUNG
ELECTRICAL	R. MCCOMB
INSTRUMENTATION	D. BEST
PROJECT NUMBER	10193663

REGISTERED PROFESSIONAL ENGINEER 85841 DIGITALLY SIGNED OREGON MAY 8, 2026 PIERRE K. KWAN
EXPIRES: 06/30/2027

CITY OF ASHLAND
Ashland, Oregon

City of Ashland

Ashland Creek Water Treatment Plant

2026

CIVIL
ENLARGED AREA YARD PIPING PLAN
AREA 2

0 1" 2"

FILENAME 002C103.dwg
SCALE 1" = 20'

SHEET **002C103**

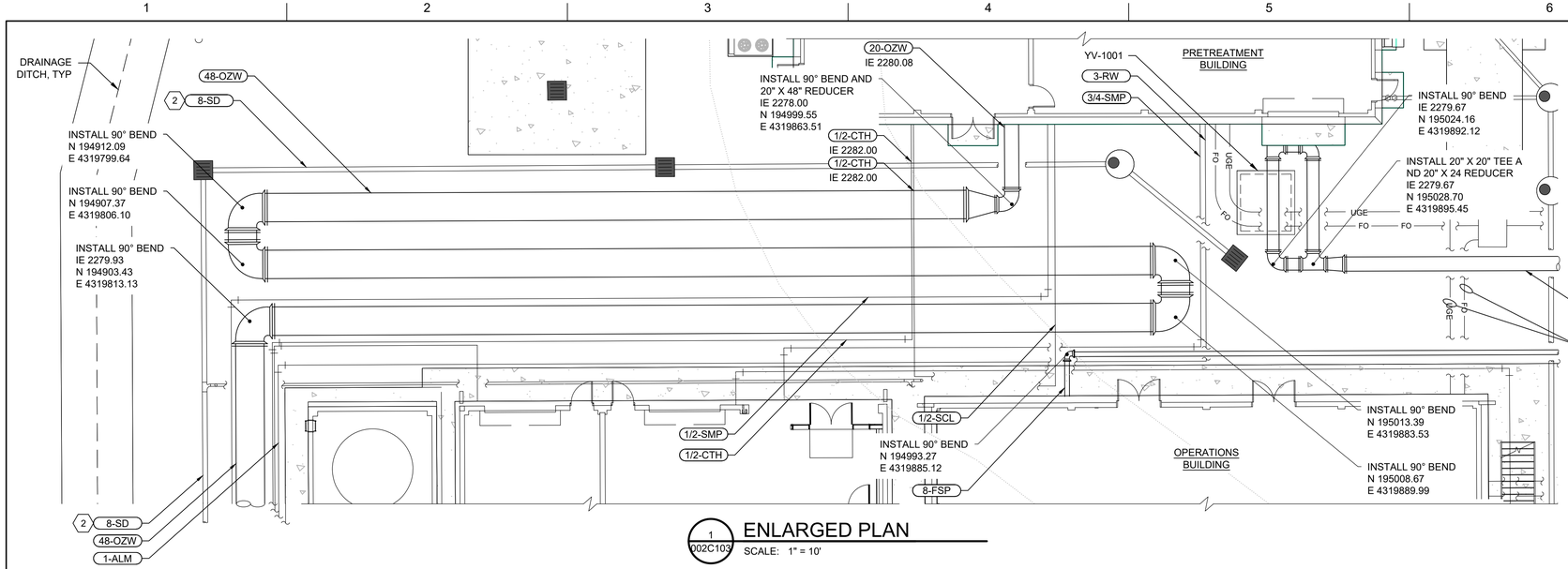

1 002C103 ENLARGED PLAN

SCALE: 1" = 10'

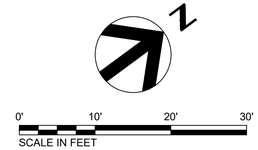

GENERAL NOTES:

1. SEE PROCESS DRAWINGS FOR ALL PIPES, FITTINGS, AND APPURTENANCES WITHIN 5' OF ALL STRUCTURES.
2. NORTHING AND EASTING ARE TO HPI OF ALL PIPES AND OUTSIDE CORNER OR CENTER OF ALL STRUCTURES.
3. ALL BURIED DI PIPES TO BE RESTRAINED JOINT. EXPOSED JOINTS IN VAULTS AND STRUCTURES SHALL BE FLANGED UNLESS OTHERWISE SHOWN.
4. PIPE BREAKS ARE FOR CLARITY ONLY AND DO NOT REPRESENT PIPE ELEVATIONS.

KEY NOTES:

1. SEE PARALLEL TRENCH SECTION FOR PARALLEL PIPING ALIGNMENTS.
2. SEE STORMWATER DRAWINGS FOR ALL SD PIPE ALIGNMENTS AND ASSOCIATED STRUCTURE LOCATIONS.
3. SEE SANITARY DRAWINGS FOR ALL SANITARY PIPE ALIGNMENTS AND ASSOCIATED STRUCTURE LOCATIONS.
4. SEE SAMPLING PROBE DETAIL 1/000D502.

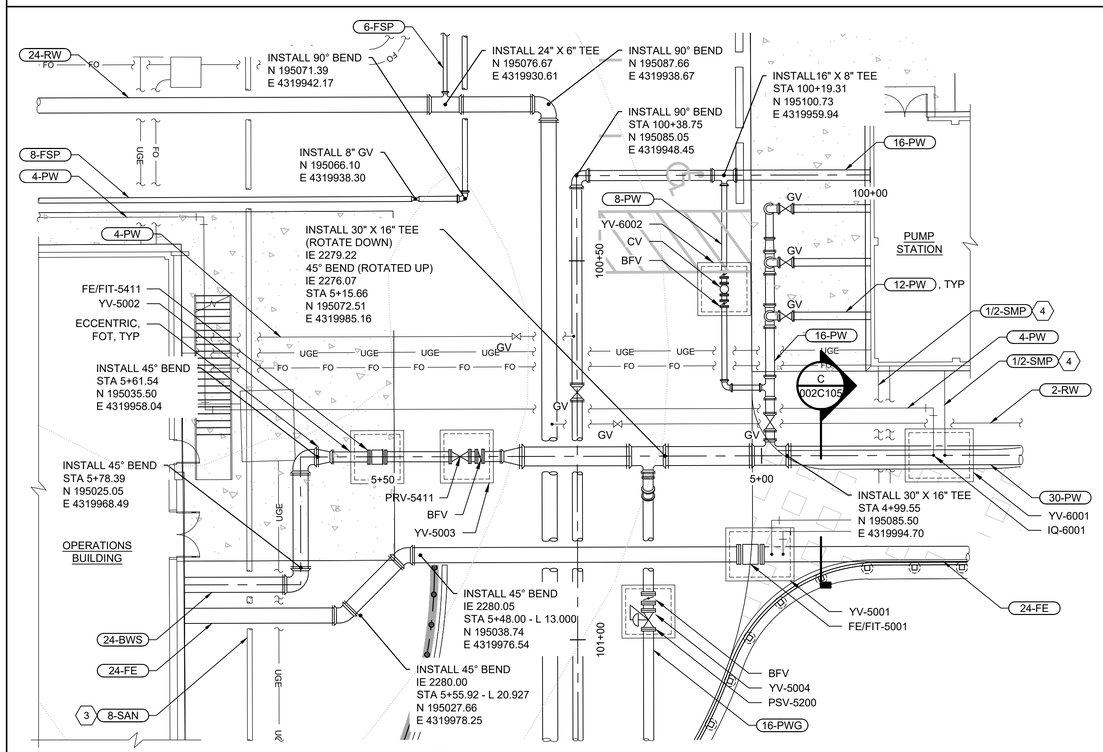

2 002C103 ENLARGED PLAN

SCALE: 1" = 10'

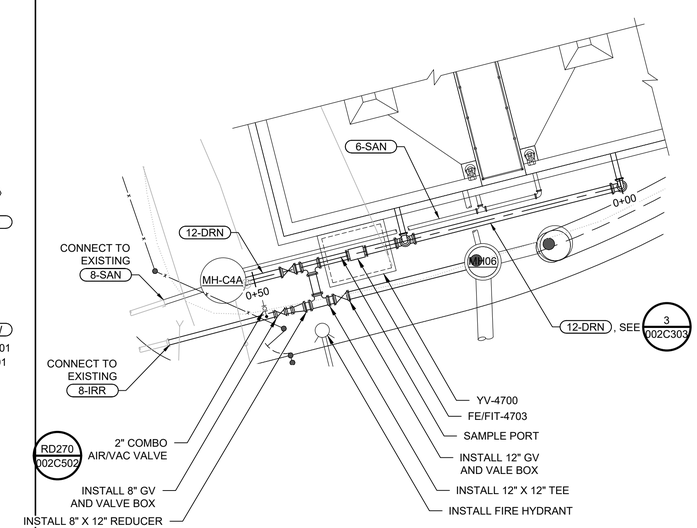

3 002C103 ENLARGED PLAN

SCALE: 1" = 10'

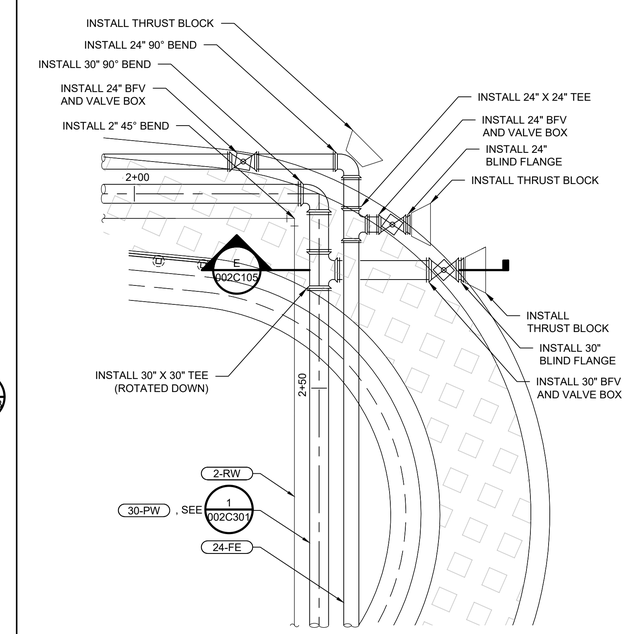

4 002C102 ENLARGED PLAN

SCALE: 1" = 10'

ISSUE	DATE	DESCRIPTION
A	09/2026	ISSUED FOR BIDS

PROJECT MANAGER	PIERRE KWAN
CIVIL	J. MEGRDITCHIAN
STRUCTURAL	P. LINDBLOM
ARCHITECTURAL	V. YANEZ
PROCESS	P. KWAN
MECHANICAL	K. CHEUNG
ELECTRICAL	R. MCCOMB
INSTRUMENTATION	D. BEST
PROJECT NUMBER	10193663

REGISTERED PROFESSIONAL ENGINEER 85841 OREGON PIERRE K. KWAN

DIGITALLY SIGNED

EXPIRES: 06/30/2027

CITY OF ASHLAND

Ashland, Oregon

City of Ashland

Ashland Creek Water Treatment Plant

2026

CIVIL YARD PIPING - ENLARGED PLANS

0 1" 2"

FILENAME 002C104.dwg

SCALE -

SHEET **002C104**

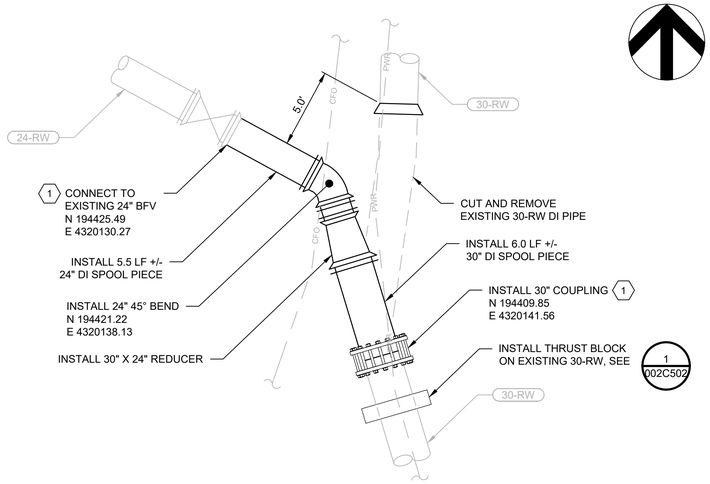

EXISTING 30" RW (SOUTH) CONNECTION PLAN

1 002C101 SCALE: 1" = 5'

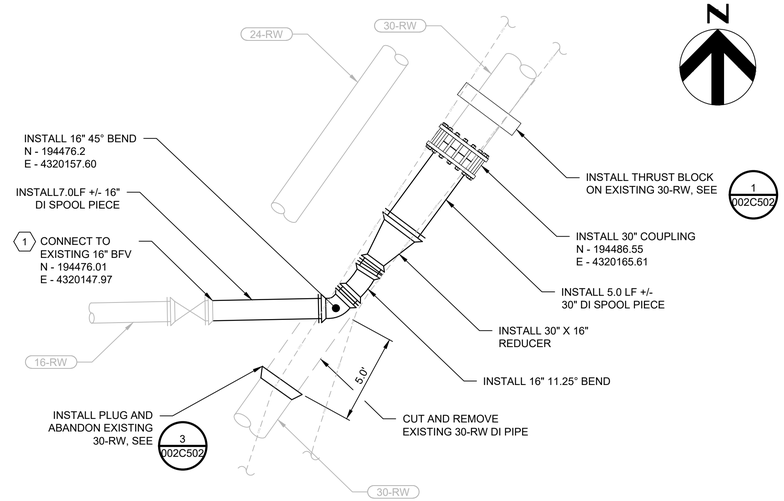

EXISTING 30" RW (NORTH) CONNECTION PLAN

2 002C101 SCALE: 1" = 5'

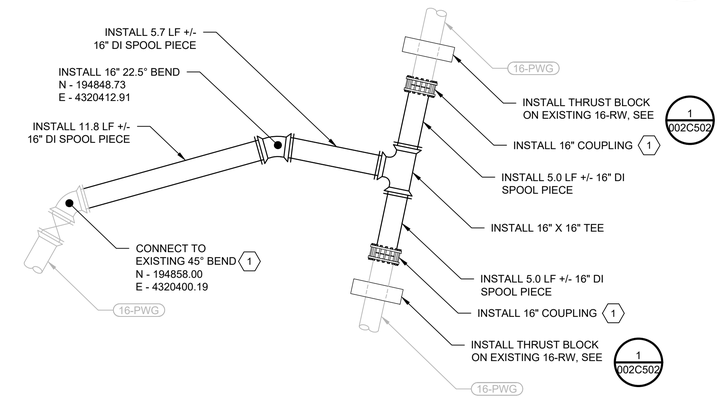

EXISTING 16" CONNECTION PLAN

3 002C101 SCALE: 1" = 5'

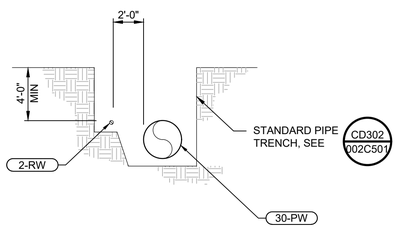

30" PW - TRENCH SECTION STA 0+77.38 TO STA 1+10.71

A 002C102 SCALE: 1" = 5'

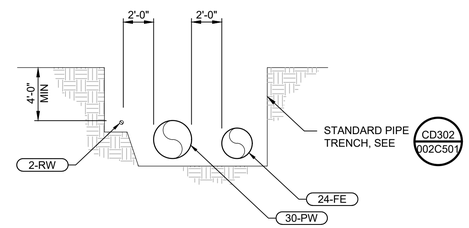

30" PW - TRENCH SECTION STA 1+10.71 TO STA 4+58.10

B 002C103 SCALE: 1" = 5'

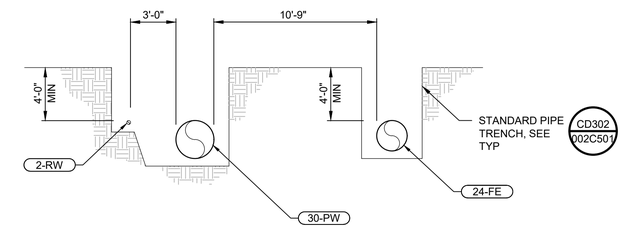

30" PW - TRENCH SECTION STA 4+58.10 TO STA 5+48.00

C 002C106 SCALE: 1" = 5'

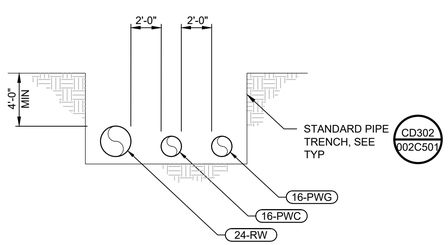

16" PWC - TRENCH SECTION STA 101+24.27 TO STA 104+42.51

D 002C103 SCALE: 1" = 5'

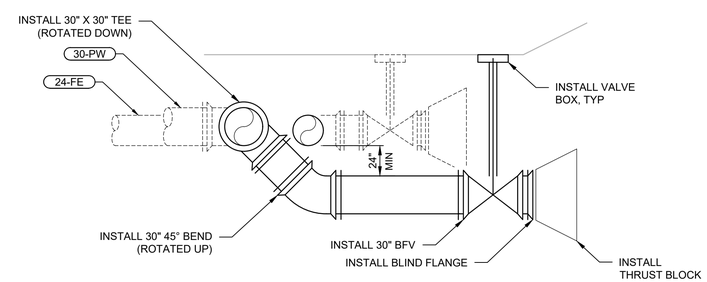

30" PW & 24" FE - BFV SECTION

E 002C104 SCALE: 1" = 5'

KEY NOTES:

1. PRIOR TO SUBMITTAL OF FINAL LAYOUT PLANS, POTHOLE AND FIELD VERIFY EXISTING LOCATION, DEPTH, AND MATERIAL OF EXISTING PIPE AND FITTINGS.

ISSUE	DATE	DESCRIPTION
A	09/2026	ISSUED FOR BIDS

PROJECT MANAGER	PIERRE KWAN
CIVIL	J. MEGRDITCHIAN
STRUCTURAL	P. LINDBLOM
ARCHITECTURAL	V. YANEZ
PROCESS	P. KWAN
MECHANICAL	K. CHEUNG
ELECTRICAL	R. MCCOMB
INSTRUMENTATION	D. BEST
PROJECT NUMBER	10193663

REGISTERED PROFESSIONAL ENGINEER 85841 DIGITALLY SIGNED OREGON MAY 8, 2026 PIERRE K. KWAN EXPIRES: 06/30/2027

CITY OF ASHLAND
Ashland, Oregon

City of Ashland

Ashland Creek Water Treatment Plant

2026

CIVIL YARD PIPING - ENLARGED PLANS AND SECTIONS

0 1" 2"

FILENAME 002C105.dwg
SCALE -

SHEET **002C105**

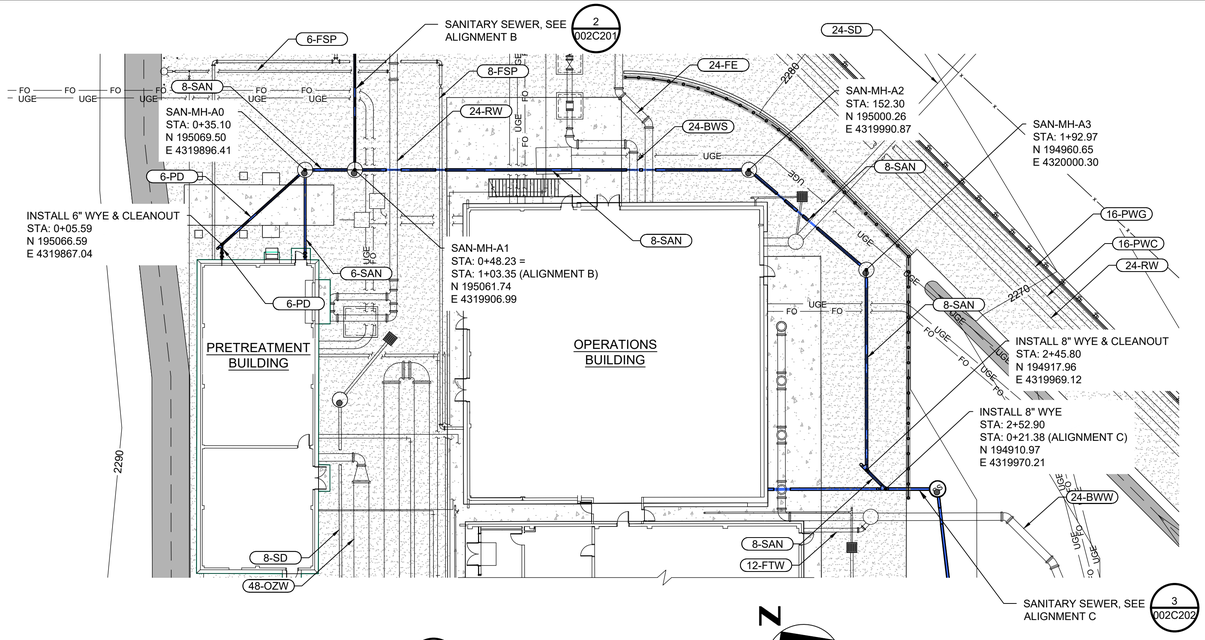

1 PLAN - ALIGNMENT A

0' 20' 40' 60'
SCALE IN FEET

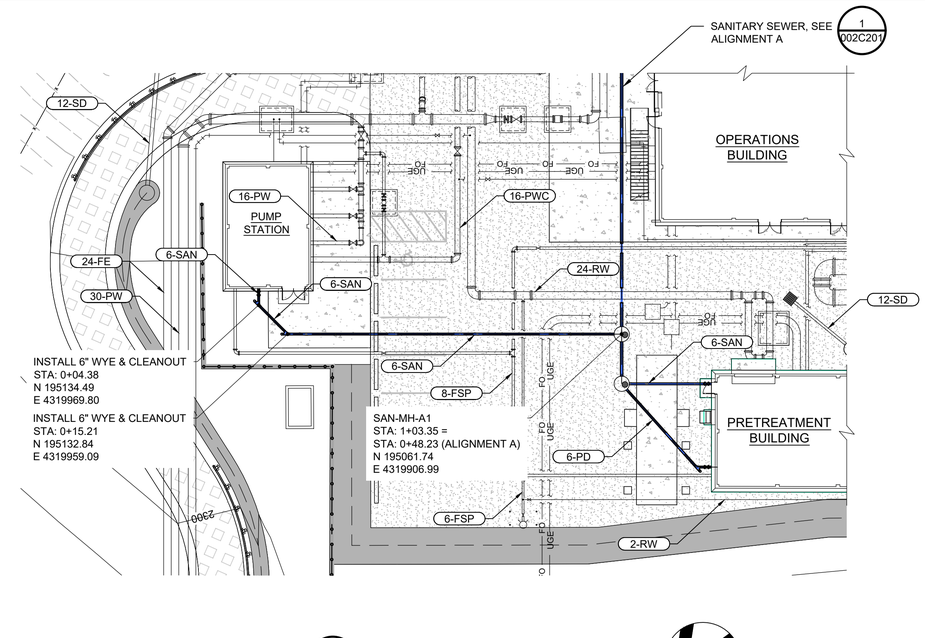

2 PLAN - ALIGNMENT B

0' 20' 40' 60'
SCALE IN FEET

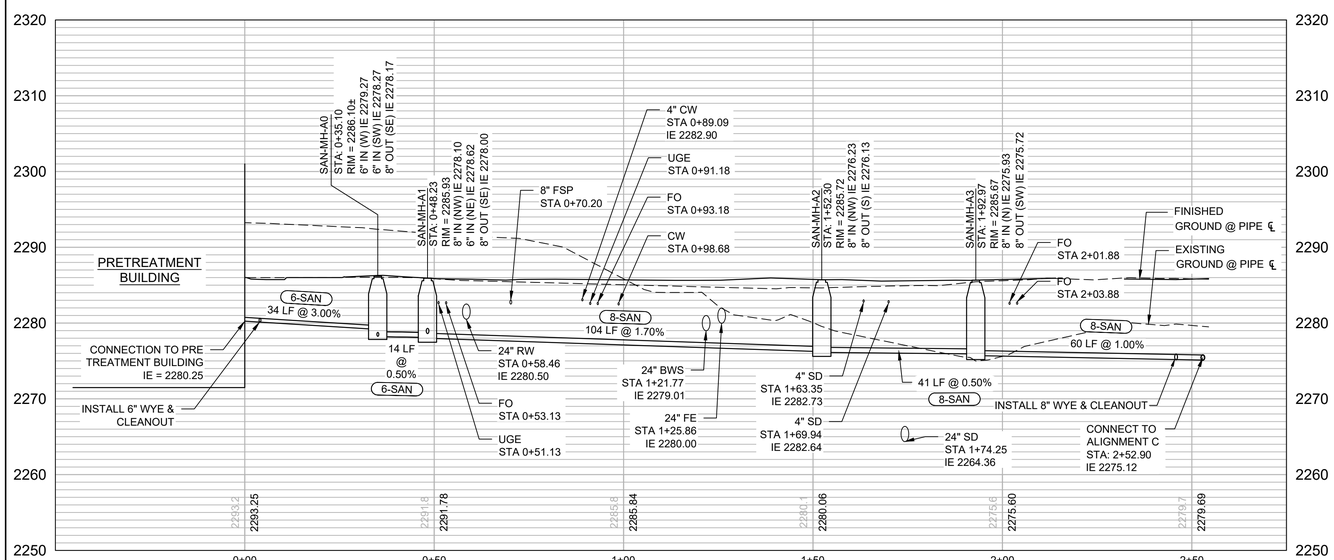

A PROFILE

SCALE: H 1" = 20'
V 1" = 10'

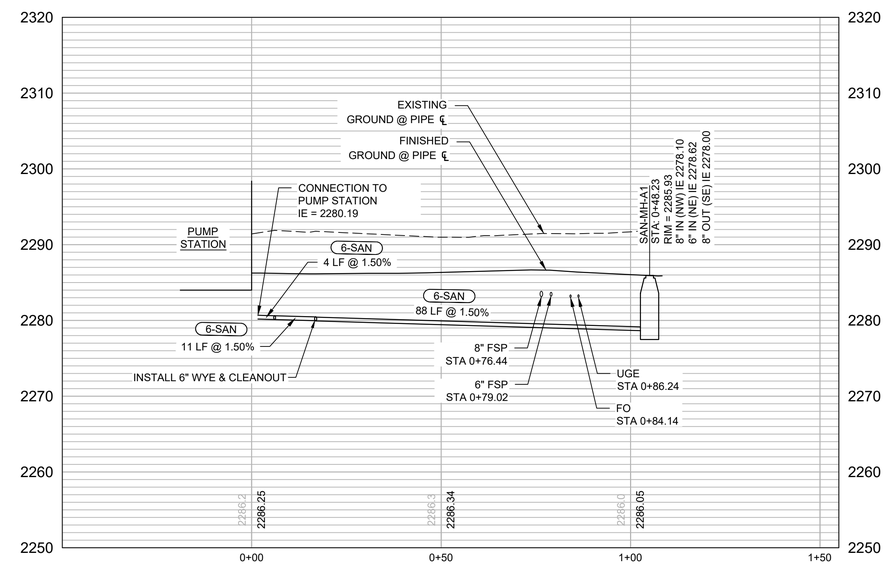

B PROFILE

SCALE: H 1" = 20'
V 1" = 10'

ISSUE	DATE	DESCRIPTION
A	09/2026	ISSUED FOR BIDS

PROJECT MANAGER	PIERRE KWAN
CIVIL	J. MEGRDITCHIAN
STRUCTURAL	P. LINDBLOM
ARCHITECTURAL	V. YANEZ
PROCESS	P. KWAN
MECHANICAL	K. CHEUNG
ELECTRICAL	R. MCCOMB
INSTRUMENTATION	D. BEST
PROJECT NUMBER	10193663

REGISTERED PROFESSIONAL ENGINEER 85841 OREGON PIERRE K. KWAN
DIGITALLY SIGNED
EXPIRES: 06/30/2027

CITY OF ASHLAND
Ashland, Oregon

City of Ashland

Ashland Creek Water Treatment Plant

2026

CIVIL SANITARY PLAN AND PRFOFILE 1

0 1" 2"

FILENAME 002C201.dwg
SCALE 1" = 20'

SHEET **002C201**

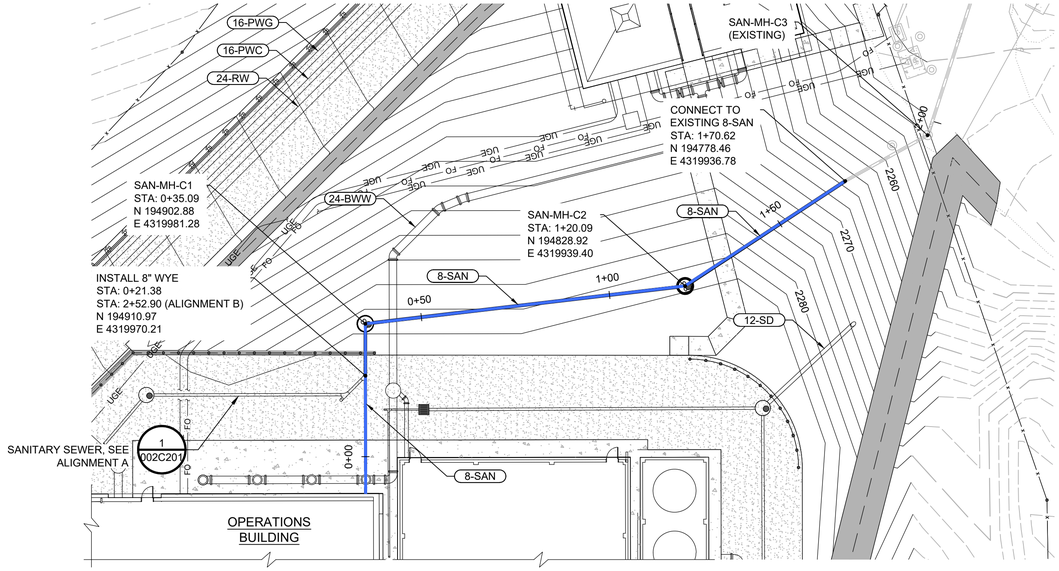

3 - PLAN - ALIGNMENT C

0' 20' 40' 60'
SCALE IN FEET

N

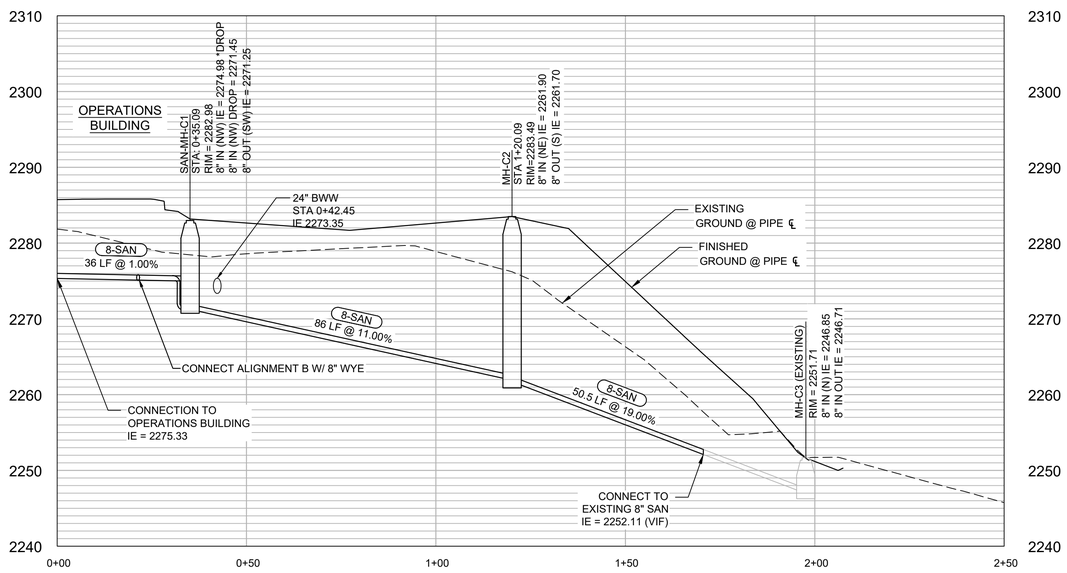

C - PROFILE

SCALE: H 1" = 20'
V 1" = 10'

ISSUE	DATE	DESCRIPTION
A	09/2026	ISSUED FOR BIDS

PROJECT MANAGER	PIERRE KWAN
CIVIL	J. MEGRDITCHIAN
STRUCTURAL	P. LINDBLOM
ARCHITECTURAL	V. YANEZ
PROCESS	P. KWAN
MECHANICAL	K. CHEUNG
ELECTRICAL	R. MCCOMB
INSTRUMENTATION	D. BEST
PROJECT NUMBER	10193663

REGISTERED PROFESSIONAL ENGINEER
85841
DIGITALLY SIGNED
OREGON
MAY 8, 2026
PIERRE K. KWAN
EXPIRES: 06/30/2027

CITY OF ASHLAND
Ashland, Oregon

City of Ashland

Ashland Creek Water Treatment Plant

2026

CIVIL SANITARY PLAN AND PROFILE 2

0 1" 2"

FILENAME 002C202.dwg
SCALE 1" = 20'

SHEET
002C202

GENERAL NOTES:

1. ALL PIPE JOINTS AND FITTINGS SHALL BE RESTRAINED JOINT UNLESS OTHERWISE NOTED.
2. PROVIDE HORIZONTAL AND VERTICAL PIPE DEFLECTIONS AS ALLOWED BY THE SPECIFICATIONS TO ACHIEVE THE APPROXIMATE ALIGNMENT AND DEPTHS SHOWN.

KEY NOTES:

(1) SEE TRENCH SECTION A AND B ON DRAWING 002C105, FOR PARALLEL PIPE ALIGNMENTS.

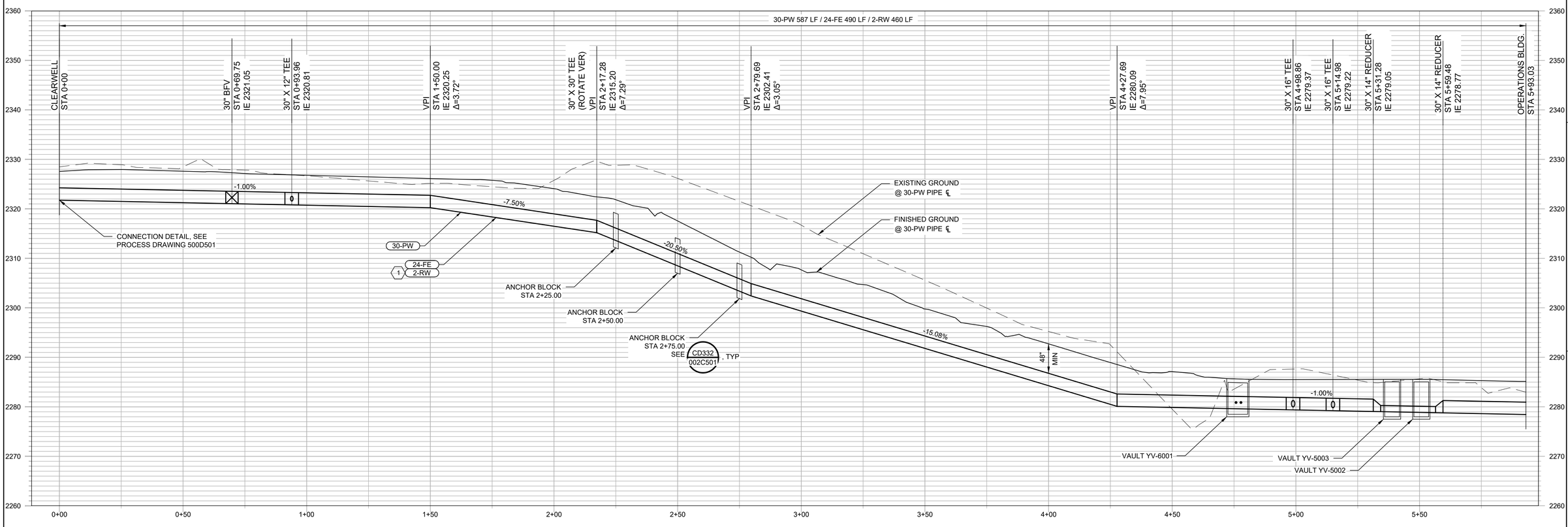

1 PROFILE

SCALE: H 1" = 20'
V 1" = 10'

ISSUE	DATE	DESCRIPTION
A	09/2026	ISSUED FOR BIDS

PROJECT MANAGER	PIERRE KWAN
CIVIL	J. MEGRDITCHIAN
STRUCTURAL	P. LINDBLOM
ARCHITECTURAL	V. YANEZ
PROCESS	P. KWAN
MECHANICAL	K. CHEUNG
ELECTRICAL	R. MCCOMB
INSTRUMENTATION	D. BEST
PROJECT NUMBER	10193663

REGISTERED PROFESSIONAL ENGINEER 85841 DIGITALLY SIGNED OREGON MAY 8, 2012 PIERRE K. KWAN

EXPIRES: 06/30/2027

CITY OF ASHLAND

Ashland, Oregon

City of Ashland

Ashland Creek Water Treatment Plant

2026

CIVIL

YARD PIPING - PROFILE 1

0 1" 2"

FILENAME 002C301.dwg

SCALE 1" = 20'

SHEET 002C301

GENERAL NOTES:

1. ALL PIPE JOINTS AND FITTINGS SHALL BE RESTRAINED JOINT UNLESS OTHERWISE NOTED.
2. PROVIDE HORIZONTAL AND VERTICAL PIPE DEFLECTIONS AS ALLOWED BY THE SPECIFICATIONS TO ACHIEVE THE APPROXIMATE ALIGNMENT AND DEPTHS SHOWN.

KEY NOTES:

(1) SEE TRENCH SECTION C AND D ON DRAWING 002C105, FOR PARALLEL PIPE ALIGNMENTS.

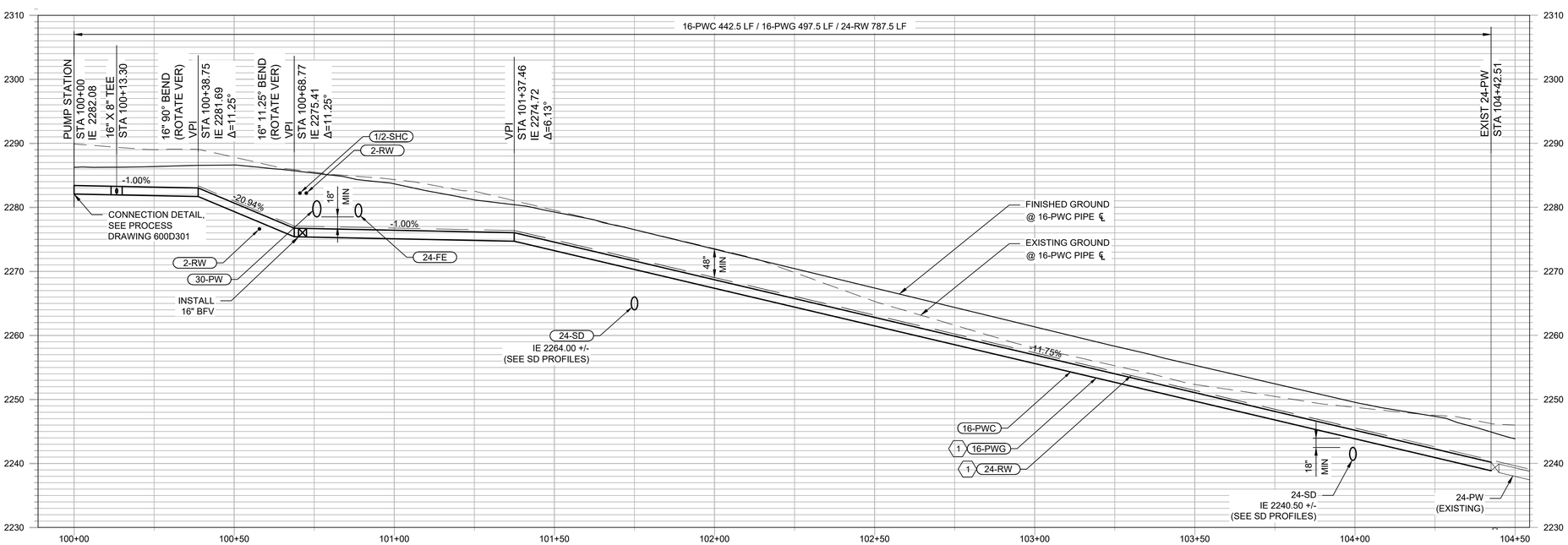

2 / - PROFILE

SCALE: H 1" = 20'
V 1" = 10'

ISSUE	DATE	DESCRIPTION
A	09/2026	ISSUED FOR BIDS

PROJECT MANAGER	PIERRE KWAN
CIVIL	J. MEGRDITCHIAN
STRUCTURAL	P. LINDBLOM
ARCHITECTURAL	V. YANEZ
PROCESS	P. KWAN
MECHANICAL	K. CHEUNG
ELECTRICAL	R. MCCOMB
INSTRUMENTATION	D. BEST
PROJECT NUMBER	10193663

REGISTERED PROFESSIONAL ENGINEER 85841 OREGON PIERRE K. KWAN
DIGITALLY SIGNED
EXPIRES: 06/30/2027

CITY OF ASHLAND
Ashland, Oregon

City of Ashland

Ashland Creek Water Treatment Plant

2026

CIVIL

YARD PIPING - PROFILE 2

0 1" 2"

FILENAME	002C302.dwg
SCALE	1" = 20'

SHEET **002C302**

GENERAL NOTES:

1. ALL PIPE JOINTS AND FITTINGS SHALL BE RESTRAINED JOINT UNLESS OTHERWISE NOTED.
2. PROVIDE HORIZONTAL AND VERTICAL PIPE DEFLECTIONS AS ALLOWED BY THE SPECIFICATIONS TO ACHIEVE THE APPROXIMATE ALIGNMENT AND DEPTHS SHOWN.

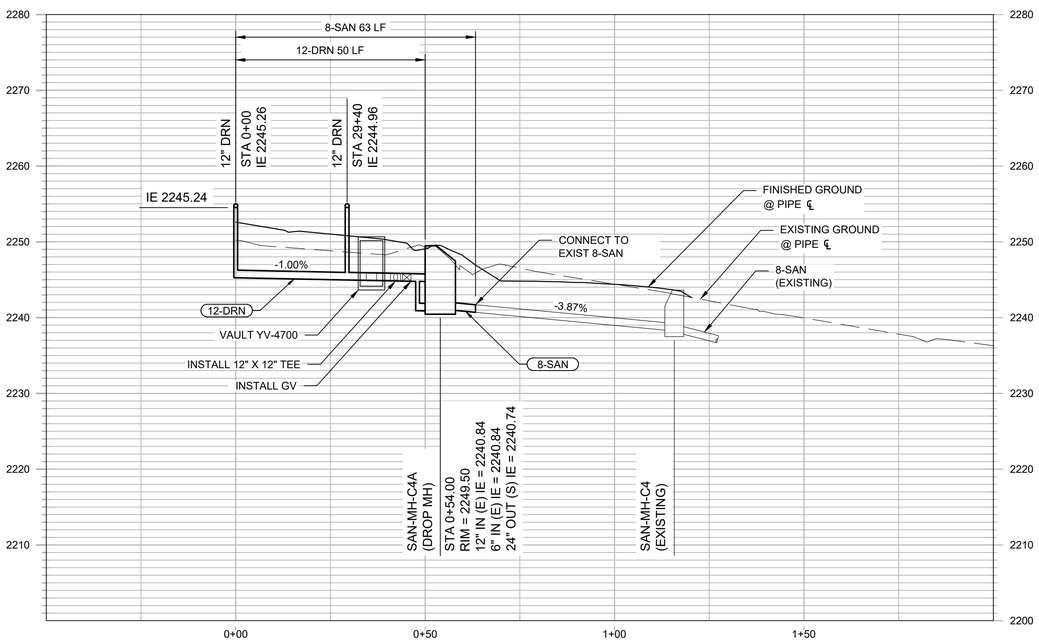

3 - PROFILE

SCALE: H 1" = 20'
V 1" = 10'

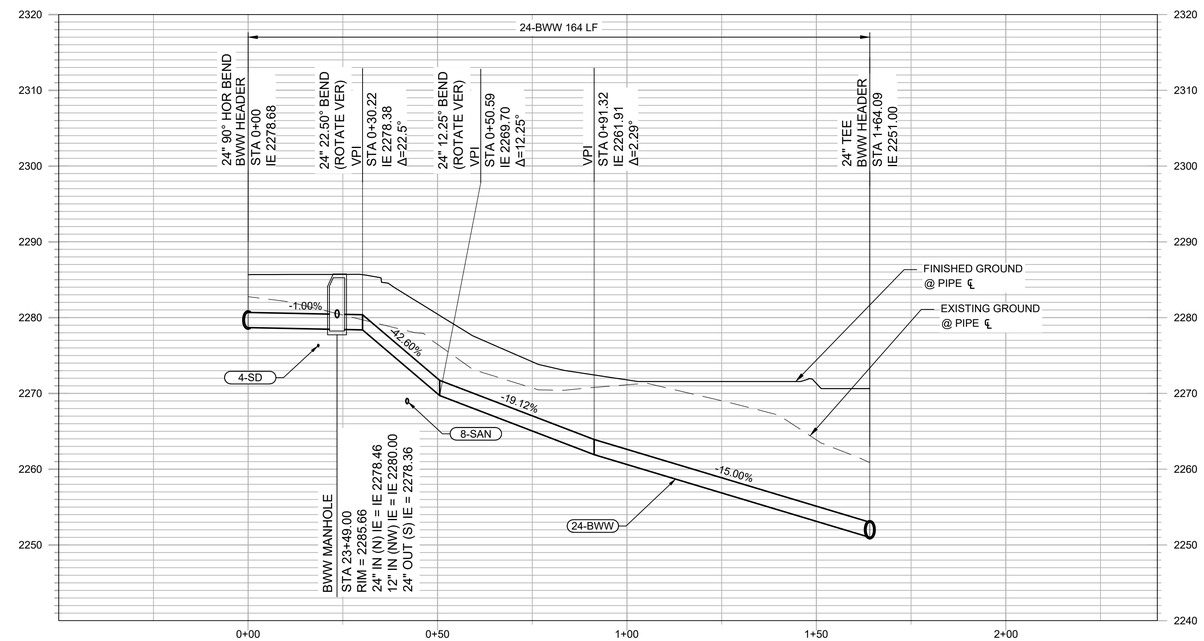

4 - PROFILE

SCALE: H 1" = 20'
V 1" = 10'

ISSUE	DATE	DESCRIPTION
A	09/2026	ISSUED FOR BIDS

PROJECT MANAGER	PIERRE KWAN
CIVIL	J. MEGRDITCHIAN
STRUCTURAL	P. LINDBLOM
ARCHITECTURAL	V. YANEZ
PROCESS	P. KWAN
MECHANICAL	K. CHEUNG
ELECTRICAL	R. MCCOMB
INSTRUMENTATION	D. BEST
PROJECT NUMBER	10193663

REGISTERED PROFESSIONAL ENGINEER 85841 DIGITALLY SIGNED OREGON PIERRE K. KWAN
EXPIRES: 06/30/2027

CITY OF ASHLAND
Ashland, Oregon

City of Ashland

Ashland Creek Water Treatment Plant

2026

CIVIL

YARD PIPING - PROFILE 3

0 1" 2"

FILENAME 002C303.dwg
SCALE 1" = 20'

SHEET **002C303**

GENERAL NOTES:

1. ALL BAFFLES SHALL EXTEND DOWN FROM THE CROWN OF THE PIPE TO THE CENTERLINE.
2. BAFFLE AND GUSSETS SHALL BE COMPLETELY EXTRUSION BELDED TO PIPE ID, FULL PERIMETER OF BAFFLE AND GUSSET.
3. BAFFEL PLATES SHALL HAVE A PRESSURE RATING EXCEEDING THAT OF PIPE PRESSURE RATING.

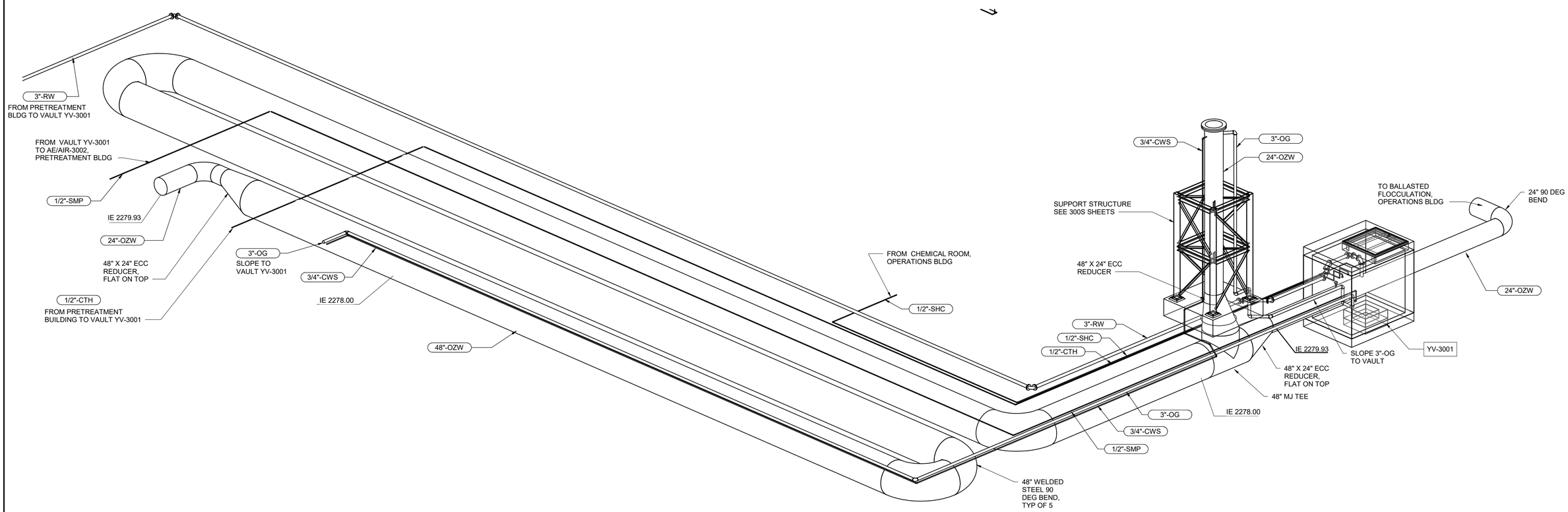

ISSUE	DATE	DESCRIPTION
A	09/2026	ISSUED FOR BIDS

PROJECT MANAGER	PIERRE KWAN
CIVIL	J. MEGRDITCHIAN
STRUCTURAL	P. LINDBLOM
ARCHITECTURAL	V. YANEZ
PROCESS	P. KWAN
MECHANICAL	K. CHEUNG
ELECTRICAL	R. MCCOMB
INSTRUMENTATION	D. BEST
PROJECT NUMBER	10193663

REGISTERED PROFESSIONAL ENGINEER 85841 DIGITALLY SIGNED OREGON PIERRE K. KWAN
EXPIRES: 06/30/2027

CITY OF ASHLAND
Ashland, Oregon

City of Ashland

Ashland Creek Water Treatment Plant

2026

CIVIL
YARD PIPING -
OZONE CONTACT PIPE ISO VIEW

0 1" 2"

FILENAME: 10193663-AWTP-300_D.rvt
SCALE: NONE
SHEET: 002C304

Autodesk Docs://10193663_Ashland_WTP_Final_Design_2024/10193663-AWTP-300_D.rvt
9/22/2026 10:03:18 PM

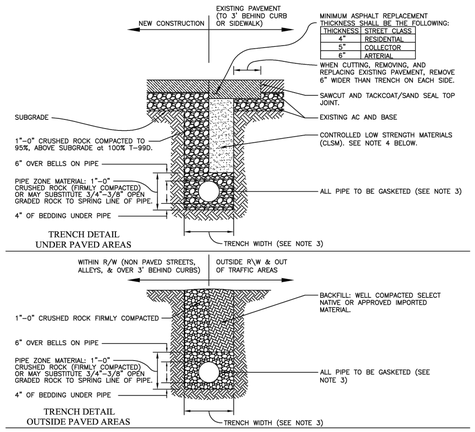

THICKNESS	STREET CLASS
4"	RESIDENTIAL
5"	COLLECTOR
6"	ARTERIAL

GENERAL NOTES:

1. COLD MIX AC MAY BE USED AS TEMPORARY PATCH ONLY.
2. ALL STEEL TRAFFIC PLATES IN TRAVELED AREAS MUST BE "RAMPED" WITH COLD MIX AC TO ALLOW SMOOTHER TRANSITION.
   a) MINIMUM 12" LAP OF STEEL PLATES ONTO EXISTING PAVEMENT.
   b) MINIMUM 3/4" STEEL PLATE THICKNESS.
3. ALL GASKETED JOINTS SHALL BE PRESSURE TESTABLE. (CONCRETE PIPE – ASTM C443; PVC & HDPE PIPE – ASTM D3212)
   a) SMALL PIPES (24" DIA. OR LESS) – MINIMUM TRENCH WIDTH SHALL BE I.D. PLUS 18".
   b) LARGE PIPES (30" DIA. OR GREATER) – MINIMUM TRENCH WIDTH SHALL BE O.D. PLUS 24", AT THE BELL END THE TRENCH WIDTH SHALL INCREASE TO ACHIEVE THE 24".
4. CONTROLLED LOW-STRENGTH MATERIAL (CLSM) IS HIGHLY FLOWABLE LEAN CONCRETE MIX; A MIXTURE OF FLY ASH, CEMENT, FINE AGGREGATES, WATER AND ADMIXTURES. IF NECESSARY, CLSM SHALL ATTAIN A 28-DAY COMPRESSIVE STRENGTH OF 150 TO 250 psi AND SHALL COMPLY WITH 2002 OREGON APWA/ODOT SECTION 00442.

STANDARD PIPE TRENCH

ISSUED: LB CRZ	DATE: 9/27/05 7/28/05	PUBLIC WORKS ENGINEERING	DRAWING NO.
REVISED:	DATE:	Ashland – Medford – Rogue Valley Sewer Services	CD302

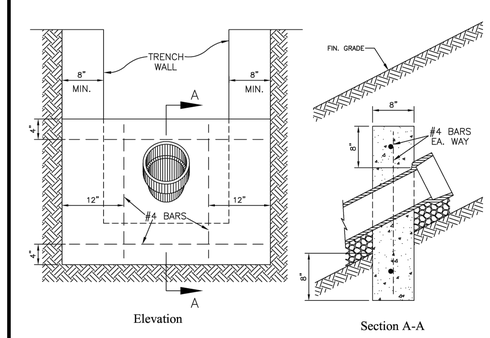

SPACING FOR ANCHOR BLOCKS

SLOPE %	APPROXIMATE SPACING
0–19	NONE
20–34	35 FT.
35–50	25 FT.
51 or MORE	15 FT. or SPECIAL DESIGN

GENERAL NOTES:

1. FOR 4" PIPE, ANCHOR AS REQUIRED ABOVE, BUT NO REINFORCEMENT REQUIRED.
2. ANCHOR BLOCK SHALL ALWAYS BE IN BARREL SECTION OF PIPE, AND SHALL INCORPORATE PART OF THE BELL.
3. "WINGS" OF ANCHOR TO BE POURED INTO EXISTING UNDISTURBED GROUND.
4. CONCRETE TO BE COMMERCIAL GRADE CONCRETE (CGC) PER 2002 ODOT/OREGON APWA SECTION 00440.00

ANCHOR BLOCK DETAIL

ISSUED: LB CRZ	DATE: 9/27/05 7/28/05	PUBLIC WORKS ENGINEERING	DRAWING NO.
REVISED:	DATE:	Ashland – Medford – Rogue Valley Sewer Services	CD332

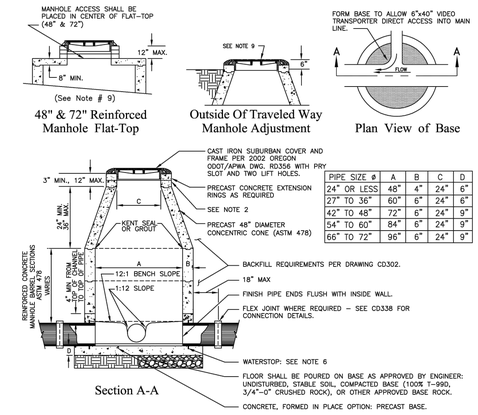

PIPE SIZE ø	A	B	C	D
24" OR LESS	48"	4"	24"	6"
27" TO 36"	60"	6"	24"	6"
42" TO 48"	72"	6"	24"	9"
54" TO 60"	84"	6"	24"	9"
66" TO 72"	96"	6"	24"	9"

GENERAL NOTES:

1. CONCRETE TO BE COMMERCIAL GRADE CONCRETE (CGC) PER 2002 ODOT/OREGON APWA SECTION 00440.00
2. FRAME AND RISER RINGS SHALL BE SEALED WITH PREFORMED PLASTIC OR RUBBER TO FORM A WATERTIGHT SEAL. GROUT MAY BE USED FOR STORM SYSTEMS.
3. FORM STRAIGHT "U" CHANNEL WITH 1:12 SLOPE MORTAR SIDE. FULL CHANNEL PIPE WITH TOP HALF REMOVED IS ACCEPTABLE.
4. MAKE ALIGNMENT CHANGES WITH UNIFORM "U" CHANNEL, WITH SMOOTH CURVED PATH.
5. MAKE CHANGES IN CHANNEL SIZE WITH A SMOOTH, TAPERING TRANSITION.
6. PIPE CONNECTION SHALL CONFORM WITH 2002 ODOT/OREGON APWA STANDARD SPEC'S FOR PUBLIC WORKS CONSTRUCTION SECTION 00470.40(b)
7. ALL 48" DIA. MANHOLES WITH A DEPTH OF 42" OR GREATER, FROM THE RIM TO THE TOP OF PIPE, SHALL USE A CONCENTRIC CONE (ASTM 478), LESS THAN 42" USE FLAT-TOP.
8. STANDARD MANHOLE COVER MARKED "S" FOR SEWER AND "D" FOR DRAINAGE.
9. RING AND COVER TO PROJECT 6" ABOVE ADJACENT GROUND FOR MANHOLES OUTSIDE OF THE TRAVELED WAY. SEE DRAWING CD360 FOR MANHOLES IN THE TRAVELED WAY.
10. MAX. DROP ACROSS MANHOLE: 2'. DROPS EXCEEDING 2' SHALL BE A DROP MANHOLE, PER DWG. CD352.
11. MANHOLE SHALL CONFORM WITH 2002 ODOT/OREGON APWA STANDARD SPEC'S FOR PUBLIC WORKS CONSTRUCTION, AS AMENDED BY THE GOVERNING AGENCY.
12. NEW MANHOLES SHALL BE TESTED FOR LEAKAGE PER 2002 ODOT/OREGON APWA SECTION 306.3.03.

STANDARD MANHOLE DETAIL

ISSUED: LB CRZ	DATE: 9/27/05 7/28/05	PUBLIC WORKS ENGINEERING	DRAWING NO.
REVISED:	DATE:	Ashland – Medford – Rogue Valley Sewer Services	CD336

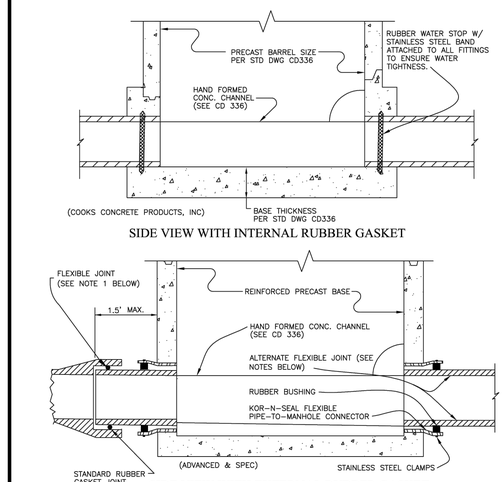

GENERAL NOTES:

1. FLEXIBLE JOINT WITHIN 18" OF MANHOLE SHALL BE REQUIRED WITH CONCRETE PIPE 18" AND LESS IN DIAMETER.

MANHOLE CONNECTION DETAIL

ISSUED: LB CRZ	DATE: 9/27/05 7/28/05	PUBLIC WORKS ENGINEERING	DRAWING NO.
REVISED:	DATE:	Ashland – Medford – Rogue Valley Sewer Services	CD344

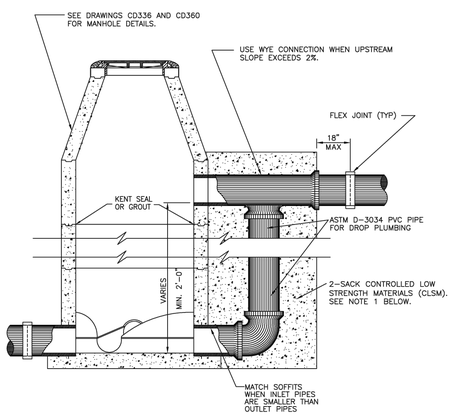

GENERAL NOTES:

1. 2-SACK CONTROLLED LOW-STRENGTH MATERIAL IS HIGHLY FLOWABLE LEAN CONCRETE MIX; A MIXTURE OF FLY ASH, CEMENT, FINE AGGREGATES, WATER AND ADMIXTURES. IF NECESSARY, 2-SACK CLSM SHALL ATTAIN A 28-DAY COMPRESSIVE STRENGTH OF 250 TO 350 psi AND SHALL COMPLY WITH 2002 OREGON APWA/ODOT SECTION 00442.

TYPICAL OUTSIDE DROP MANHOLE

ISSUED: LB CRZ	DATE: 9/27/05 7/28/05	PUBLIC WORKS ENGINEERING	DRAWING NO.
REVISED:	DATE:	Ashland – Medford – Rogue Valley Sewer Services	CD352

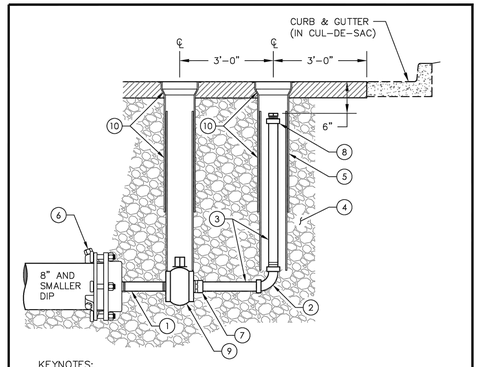

KEYNOTES:

1. 2" X 12" BRASS NIPPLE
2. 2" CTS x CTS 90° ELBOW
3. 2" TYPE K RIGID COPPER
4. GRANULAR DRAIN BACKFILL MATERIAL
5. 8" PVC ASTM D-3034, LENGTH AS REQUIRED
6. MJ RESTRAINED JOINT W/ MEGAPLUG, CAP TAPPED 2" IP THREAD
7. 2" MIPT x CTS ADAPTOR
8. FIPT x CTS ADAPTOR W/ 2" MIPT BRASS PLUG (HAND TIGHT)
9. 2" GATE VALVE W/2" OPERATING NUT FIPT x FIPT
10. VALVE BOX & LID. SEE DRAWING 640-2

NOTES:

1. THIS DETAIL IS APPLICABLE TO DEAD END LINES SERVING CUSTOMERS WHICH WILL NOT BE EXTENDED IN THE FUTURE.

2" STANDARD BLOW-OFF ASSEMBLY - PERMANENT	SCALE: NONE	630-3

FILENAME: 630-3.dwg

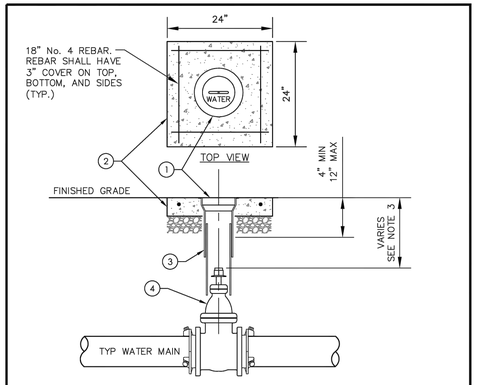

KEYNOTES :

1. OLYMPIC FOUNDRY VB910 VALVE BOX & COVER WITH "WATER" CAST IN THE TOP SURFACE.
2. UNPAVED AREAS ONLY: PROVIDE 24" SQUARE BY 5½" THICK CONCRETE PAD CENTERED ON VALVE BOX. INSTALL OVER 4" COMPACTED ¾"-0" CRUSHED ROCK.
3. 6" SCH 40 OR D3034 PVC PIPE RISER WITH END CUT TO FIT OVER VALVE HOUSING, LENGTH AS NECESSARY.
4. MJ GATE VALVE (BUTTERFLY VALVE SIMILAR, NOT SHOWN)

NOTES :

1. CENTER VALVE BOX ON AXIS OF OPERATING NUT AND SET PLUMB WITH FINISHED GRADE.
2. OPERATOR EXTENSION REQUIRED WHEN VALVE NUT IS DEEPER THAN 6 FEET FROM FINISHED GRADE. REFER TO DRAWING 640-4

TYPICAL STANDARD VALVE BOX SETTING	SCALE: NONE	640-2

FILENAME: 640-2.dwg

ISSUE	DATE	DESCRIPTION
A	09/2026	ISSUED FOR BIDS

PROJECT MANAGER	PIERRE KWAN
CIVIL	J. MEGRDITCHIAN
STRUCTURAL	P. LINDBLOM
ARCHITECTURAL	V. YANEZ
PROCESS	P. KWAN
MECHANICAL	K. CHEUNG
ELECTRICAL	R. MCCOMB
INSTRUMENTATION	D. BEST
PROJECT NUMBER	10193663

REGISTERED PROFESSIONAL ENGINEER 85841 OREGON PIERRE K. KWAN

DIGITALLY SIGNED

EXPIRES: 06/30/2027

CITY OF ASHLAND

Ashland, Oregon

City of Ashland

Ashland Creek Water Treatment Plant

2026

CIVIL
PIPELINE DETAILS 1

0 1" 2"

FILENAME 002C501.dwg

SCALE NTS

SHEET **002C501**

20-JUL-2020

RD270.dgn

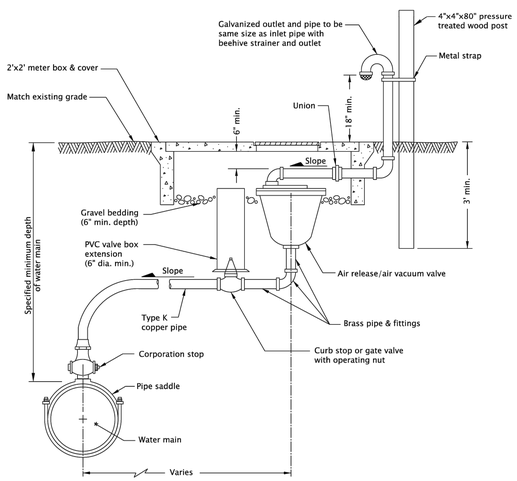

GENERAL NOTES FOR ALL DETAILS ON THIS SHEET:

1. Air release/air vacuum valve shall be size specified in Contract. Piping and valves to be same size as combination air release/air vacuum valve.
2. Locate at high point of main.
3. Tap top of main.
4. Provide insulation and additional depth when specified for freeze protection.
5. See project plans for details not shown.

The selection and use of this Standard Drawing, while designed in accordance with generally accepted engineering principles and practices, is the sole responsibility of the user and should not be used without first consulting a Registered Professional Engineer.

All materials shall be in accordance with the current Oregon Standard Specifications.

OREGON STANDARD DRAWINGS

COMBINATION AIR RELEASE AIR VACUUM VALVE ASSEMBLY (2" AND SMALLER)

2024

DATE	REVISION DESCRIPTION

CALC. BOOK NO. N/A SDR DATE 25-JUL-2017 **RD270**

Effective Date: December 1, 2023 - May 31, 2024

20-JUL-2020

RD254.dgn

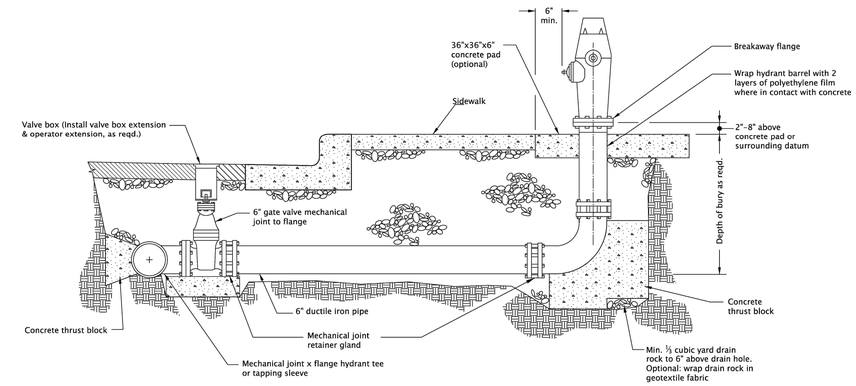

HYDRANT ASSEMBLY

GENERAL NOTES FOR ALL DETAILS ON THIS SHEET:

1. When pipe is shorter than 18', no joints allowed. Use mechanical joint retainer glands. Two ¾" galvanized tie rods may be used in lieu of thrust blocks for installations less than 18' long. Coat tie rods with two coats of coal tar epoxy.
2. When pipe is longer that 18' retainer glands not required.
3. There shall be a minimum of 18" horizontal clearance around hydrant.
4. When placed adjacent to curb, hydrant port shall be 24" from face of curb.
5. Concrete thrust blocks shall be constructed as per thrust blocking Std. Dwg. RD250. Do not block drain holes.
6. Extensions required for hydrant systems shall be installed to the manufacturer's specifications.
7. Hydrants shall be placed to provide a minimum of 5' clearance from driveways, poles, and other obstructions.
8. Hydrant pumper port shall face direction of access.
9. Set hydrant plumb in all directions.
10. See project plans for details not shown.

The selection and use of this Standard Drawing, while designed in accordance with generally accepted engineering principles and practices, is the sole responsibility of the user and should not be used without first consulting a Registered Professional Engineer.

All materials shall be in accordance with the current Oregon Standard Specifications.

OREGON STANDARD DRAWINGS

HYDRANT INSTALLATION

2024

DATE	REVISION DESCRIPTION

CALC. BOOK NO. N/A SDR DATE 25-JUL-2017 **RD254**

Effective Date: December 1, 2023 - May 31, 2024

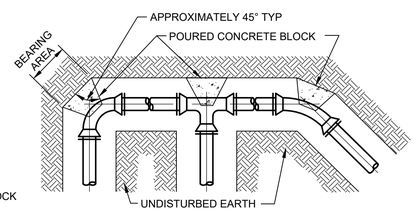

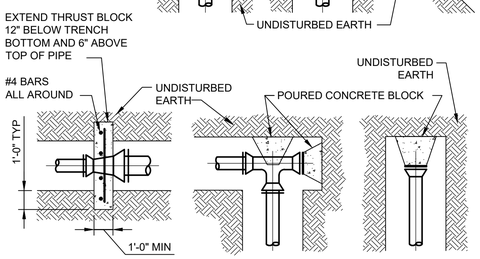

FITTING SIZES	BEARING AREA OF BLOCK IN SQ. FT.				
	TEE & END	90° BEND	45° BEND	22 1/2° BEND	11 1/4° BEND
4"	1.0	1.4	1.0	-	-
6"	2.1	3.0	1.6	1.0	-
8"	3.8	5.3	2.9	1.5	1.0
10"	5.9	8.4	4.6	2.4	1.2
12"	8.5	12.0	6.6	3.4	1.7
14"	11.5	16.3	8.8	4.5	2.3
16"	15.0	21.3	11.6	6.0	3.0
18"	19.0	27.0	14.6	7.6	3.8
20"	23.5	33.3	18.1	9.4	4.7
24"	34.0	48.0	26.2	13.6	6.8
30"	53.0	75.0	40.6	20.7	10.4
36"	76.3	107.9	58.3	29.8	15.0

NOTES:

1. PLACE 4 MIL POLYETHYLENE BETWEEN CONCRETE AND FITTING. CONSTRUCT BLOCK SUCH THAT CONCRETE DOES NOT INTERFERE WITH THE ADJACENT PIPE JOINT.
2. THE HEIGHT OF THE BLOCK SHALL BE EQUAL TO OR LESS THAN 1/2 THE TOTAL DEPTH FROM FINISHED GRADE TO THE BOTTOM THE BLOCK BUT NOT LESS THAN THE PIPE DIAMETER.
3. THE HORIZONTAL DIMENSION OF THE BEARING AREA SHALL BE BETWEEN 1 AND 2 TIMES THE VERTICAL DIMENSION.
4. THRUST BLOCK ORIENTATION SHALL BE SUCH THAT THE CENTER OF THE FITTING CORRESPONDS WITH THE CENTER OF THE THRUST BLOCK.
5. CONCRETE SHALL HAVE A MINIMUM COMPRESSIVE STRENGTH OF 4000 PSI AT 28 DAYS.
6. LISTED AREAS ARE BASED ON TEST PRESSURE OF 100 P.S.I. AND AN ALLOWABLE SOIL BEARING STRESS OF 2,000 LBS PSF. TO PSI BEARING AREAS FOR DIFFERENT TEST PRESSURE AND SOIL BEARING PRESSURE. USE THE FOLLOWING EQUATION: BEARING AREA = (TEST PRESSURE/100) x (TABLE VALUE) x 2000/BEARING PRESSURE.

1 / - THRUST BLOCK DETAIL

NTS

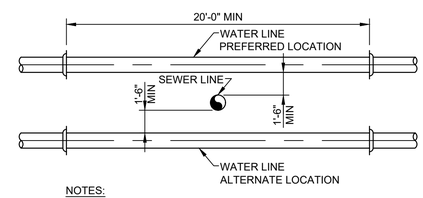

NOTES:

1. MEET ALL STATE REGULATORY CROSSING REQUIREMENTS.
2. INSTALL AIR RELIEF VALVE IF THE CROSSING CREATES A HIGH POINT IN THE PIPE PROFILE.
3. CONSTRUCT THRUST BLOCKS OR INSTALL RESTRAINED JOINT FITTINGS FOR VERTICAL OR HORIZONTAL CHANGES IN ALIGNMENT REQUIRED TO AVOID UTILITY CONFLICTS.
4. CENTER WATER PIPE OVER SEWER PIPE CROSSING TO MAXIMIZE SPACING OF JOINTS FROM THE PIPE CROSSING.

2 / - WATER/SEWER CROSSING DETAIL

NTS

HDR

ISSUE	DATE	DESCRIPTION
A	09/2026	ISSUED FOR BIDS

PROJECT MANAGER	PIERRE KWAN
CIVIL	J. MEGRDITCHIAN
STRUCTURAL	P. LINDBLOM
ARCHITECTURAL	V. YANEZ
PROCESS	P. KWAN
MECHANICAL	K. CHEUNG
ELECTRICAL	R. MCCOMB
INSTRUMENTATION	D. BEST
PROJECT NUMBER	10193663

REGISTERED PROFESSIONAL ENGINEER 85841 DIGITALLY SIGNED OREGON MAY 8, 2018 PIERRE K. KWAN

EXPIRES: 06/30/2027

CITY OF ASHLAND

Ashland, Oregon

City of Ashland

Ashland Creek Water Treatment Plant

2026

CIVIL
PIPELINE DETAILS 2

0 1" 2"

FILENAME 002C502.dwg

SCALE NTS

SHEET **002C502**

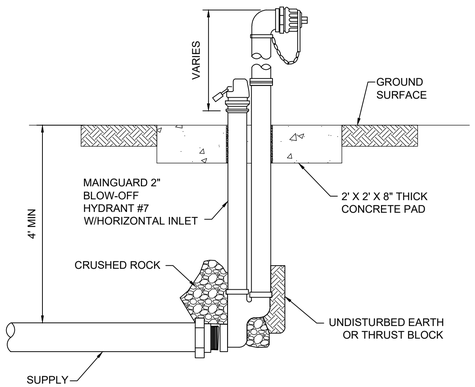

NOTES:

1. POST HYDRANTS SHALL BE NON-FREEZING, SELF DRAINING TYPE. HYDRANTS SHALL BE FURNISHED WITH A 2" HORIZONTAL INLET, A NON-TURNING OPERATING ROD, AND HALL OPEN TO THE LEFT. ALL OF THE WORKING PARTS SHALL BE OF BRONZE-TO-BRONZE DESIGN, AND BE SERVICEABLE FROM ABOVE GRADE WITH NO DIGGING. THE OUTLET SHALL ALSO BE BRONZE AND BE 2-1/2" NST. HYDRANTS SHALL BE LOCKABLE TO PREVENT UNAUTHORIZED USE AS MANUFACTURED BY KUPFERLE FOUNDRY CO., ST. LOUIS, MO, OR APPROVED EQUAL.
2. MATCH DRAIN PORT SIZE PROVIDED BY MANUFACTURER.
3. PROVIDE WARNING SIGN WHEN SUPPLY IS NON-POTABLE PER DETAIL 2 OF THIS SHEET.

1 / - YARD HYDRANT YH-1
NTS

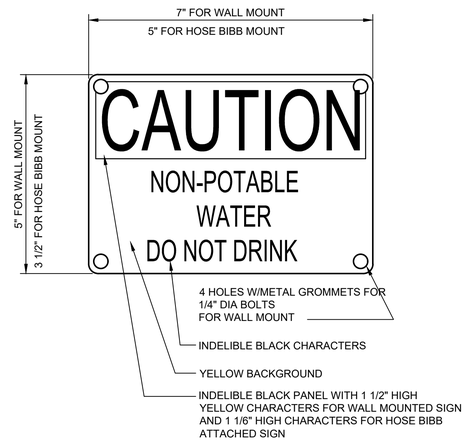

NOTES:

1. MATERIAL TO BE SIMI-RIGID BUTYRATE OR APPROVED EQUAL, AS MANUFACTURED BY W.H. BRADY CO., MILWAUKEE, WIS. 53201 OR EQUAL.
2. COLORS AND LETTER SIZES TO BE PER OSHA STANDARDS FOR CAUTION SIGNS.
3. PROVIDE AND INSTALL THIS SIGN AT ALL YARD HYDRANT LOCATIONS DELIVERING NON-POTABLE WATER.
4. ATTACH TO YARD HYDRANT WITH PLASTIC STRAPS AROUND VERTICAL RISER, OR SUSPEND FROM VALVE W/RETAINER CHAIN, AS DIRECTED BY OWNER.

2 / - NON POTABLE SIGN DETAIL
NTS

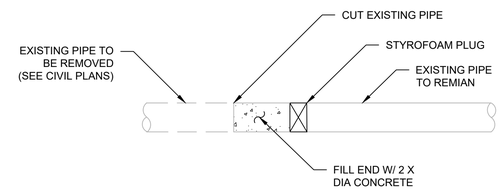

3 / - ABANDON EXISTING PIPE DETAIL
NTS

ISSUE	DATE	DESCRIPTION
A	09/2026	ISSUED FOR BIDS

PROJECT MANAGER	PIERRE KWAN
CIVIL	J. MEGRDITCHIAN
STRUCTURAL	P. LINDBLOM
ARCHITECTURAL	V. YANEZ
PROCESS	P. KWAN
MECHANICAL	K. CHEUNG
ELECTRICAL	R. MCCOMB
INSTRUMENTATION	D. BEST
PROJECT NUMBER	10193663

REGISTERED PROFESSIONAL ENGINEER 85841 DIGITALLY SIGNED OREGON MAY 8, 2012 PIERRE K. KWAN
EXPIRES: 06/30/2027

CITY OF ASHLAND
Ashland, Oregon

City of Ashland

Ashland Creek Water Treatment Plant

2026

CIVIL
PIPELINE DETAILS 3

0 1" 2"

FILENAME 002C503.dwg
SCALE NTS

SHEET
002C503

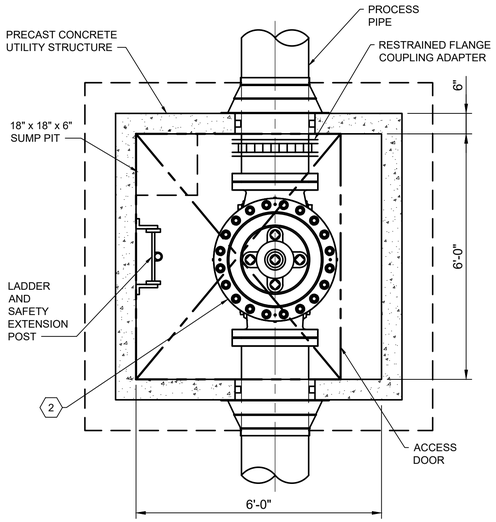

1 VALVE AND FLOW METER YARD VAULT DETAIL PLAN
NTS

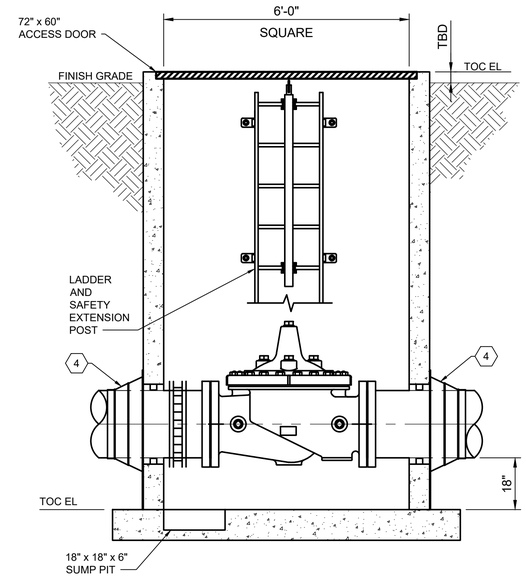

2 VALVE AND FLOW METER YARD VAULT DETAIL SECTION
NTS

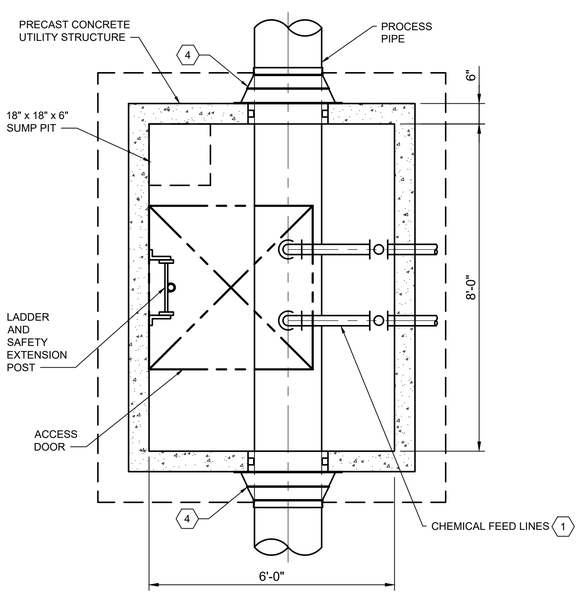

3 CHEMICAL INJECTION YARD VAULT DETAIL PLAN
NTS

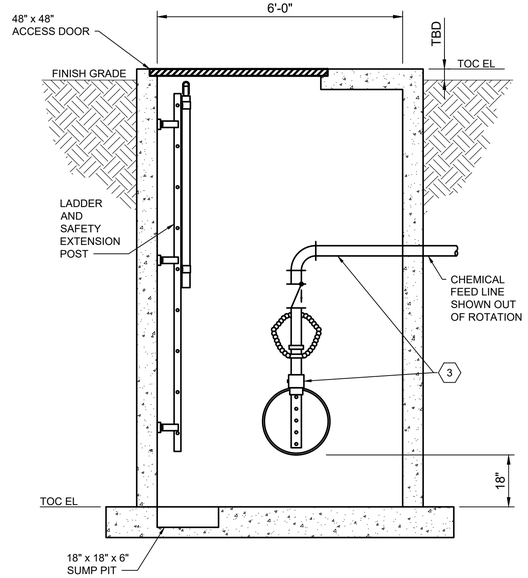

4 CHEMICAL INJECTION YARD VAULT DETAIL SECTION
NTS

YARD VAULT SCHEDULE

VAULT TAG	PROCESS PIPE DESCRIPTION	DESCRIPTION	ACCESS DOOR	CLEAR OPENING SIZE	VAULT SIZE
YV-1001	20"-RW	FM	HTCH-1001	72" x 60"	6' x 8'
YV-3001	24"-OZW	1/2"-SHY, 1/2"-CTH, 1/2"-SMP, PRV, PIT, OZONE OFFGAS	HTCH-3001	48" x 48"	6' x 8'
YV-4700	12"-DRN	FM, SAMPLE PORT	HTCH-4700	48" x 48"	6' x 8'
YV-5001	24"-FE	FM, 1/2"-SMP, 1/2"-SMP	HTCH-5001	48" x 48"	6' x 8'
YV-5002	14"-BWS	FM	HTCH-5002	72" x 60"	6' x 6'
YV-5003	14"-BWS	BFV, PRV	HTCH-5003	72" x 60"	6' x 6'
YV-5004	16"-PWG	BFV, PSV	HTCH-5004	72" x 60"	6' x 8'
YV-6001	30"-PW	1/2"-SHC, 1/2"-SMP	HTCH-6001	48" x 48"	6' x 8'
YV-6002	8"-PWC	BFV, CV, BFV	HTCH-6002	72" x 60"	6' x 6'

KEY NOTES: (#)

1. CHEMICAL FEED LINES TO BE INSTALLED PERPENDICULAR TO PROCESS PIPING.
2. PRESSURE REDUCING VALVE SHOWN, OTHER YARD VAULTS REQUIRING OTHER TYPES ARE SIMILAR.
3. SEE DETAIL 5/000D504 FOR INJECTION QUILL AND DETAIL 1/000D502 FOR SAMPLE TAP.
4. WATERTIGHT EPDM BOOT WITH SST CLAMPS.

GENERAL NOTES:

1. SUPPORT ALL VALVES AND FITTINGS WITH INDIVIDUAL PIPE SUPPORTS PER SPECIFICATIONS.
2. ALL VAULTS TO MEET THE REQUIREMENTS OF SPECIFICATION SECTION 33 05 15 – PRECAST CONCRETE UTILITY STRUCTURES".

ISSUE	DATE	DESCRIPTION
A	09/2026	ISSUED FOR BIDS

PROJECT MANAGER	PIERRE KWAN
CIVIL	J. MEGRDITCHIAN
STRUCTURAL	P. LINDBLOM
ARCHITECTURAL	V. YANEZ
PROCESS	P. KWAN
MECHANICAL	K. CHEUNG
ELECTRICAL	R. MCCOMB
INSTRUMENTATION	D. BEST
PROJECT NUMBER	10193663

REGISTERED PROFESSIONAL ENGINEER 85841 DIGITALLY SIGNED OREGON MAY 8, 2026 PIERRE K. KWAN
EXPIRES: 06/30/2027

CITY OF ASHLAND
Ashland, Oregon

City of Ashland

Ashland Creek Water Treatment Plant

2026

CIVIL
PIPELINE DETAILS 4
YARD VAULT DETAILS

0 1" 2"

FILENAME 002C504.dwg
SCALE NTS

SHEET 002C504

TABLE A

"A" (in)	"B" (in)	"C" (in)	"D" (in)
4	10	4	8
6	10	4	8
8	10	6	10
10	10	6	10
12	12	6	10
15	12	6	10
18	16	6	12
21	16	6	12
24	18	6	12
30	18	6	12
36	24	6	14
42	24	6	14
48	24	6	14
54	24	6	14
60	24	6	14
66	24	6	14
72	24	6	14

For pipes over 72" diameter, see general note 3.

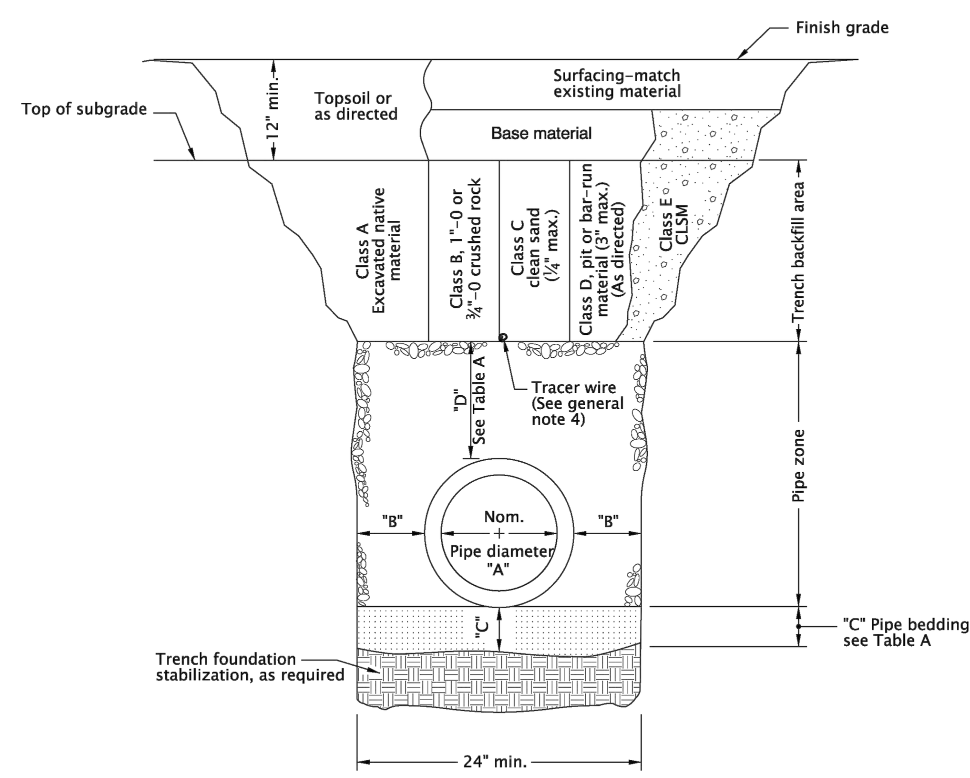

MULTIPLE INSTALLATIONS

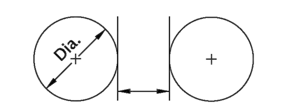

DIAMETER	MIN. SPACE BETWEEN PIPES
Up to 48"	24"
48" to 72"	One half (½) dia. of pipe

GENERAL NOTES FOR ALL DETAILS:

1. Surfacing of paved areas shall comply with street cut Std. Dwg. RD302.
2. For pipe installation in embankment areas where the trench method will not be used and the pipe is ≥ 36" diameter, increase dimension "B" to nominal pipe diameter.
3. Pipes over 72" diameter are structures, and are not applicable to this drawing.
4. See Std. Dwg. RD336 for tracer wire details (When required).

CALC. BOOK NO. N/A
BASELINE REPORT DATE 14-JUL-2014

NOTE: All material and workmanship shall be in accordance with the current Oregon Standard Specifications

The selection and use of this Standard Drawing, while designed in accordance with generally accepted engineering principles and practices, is the sole responsibility of the user and should not be used without consulting a Registered Professional Engineer.

OREGON STANDARD DRAWINGS

TRENCH BACKFILL, BEDDING, PIPE ZONE AND MULTIPLE INSTALLATIONS

2018

DATE	REVISION DESCRIPTION

rd300.dgn 25-JUL-2017

RD300

Effective Date: June 1, 2020 - November 30, 2020 RD300

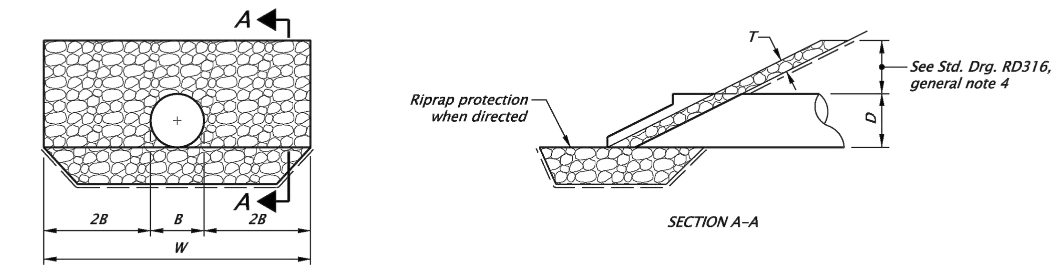

SLOPED OR PROJECTING END

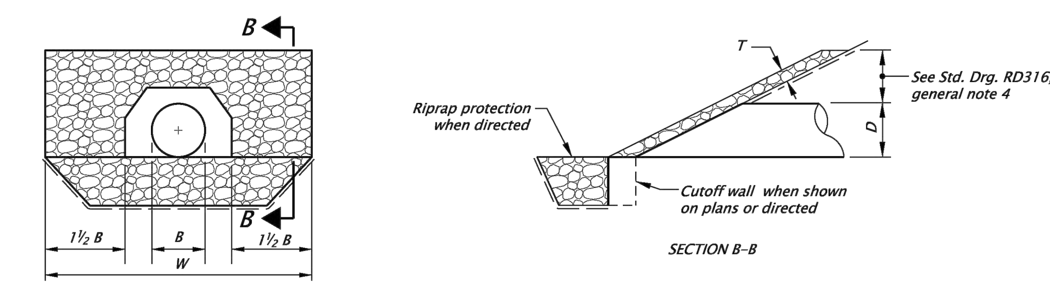

SLOPED END WITH SLOPE PAVING

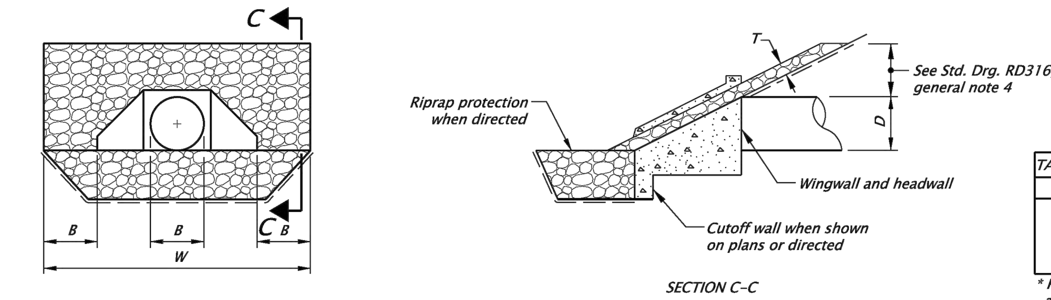

HEADWALL AND WINGWALLS

B = Diameter of circular barrel or span of arch pipe, box, or open–bottom arch.
D = Diameter of circular barrel or rise of arch pipe, box, or open–bottom arch.
T = Thickness of riprap blanket, see Table A.

EMBANKMENT PROTECTION

TABLE A – Embankment Slope Protection	
Riprap Class	*T Distance*
50	12 Inches
100	18 Inches
200	24 Inches *
700	36 Inches *

** Riprap backing required between riprap and embankment*

TABLE B – Riprap Pad Dimensions		
Riprap Class	*L * (ft)*	*T (ft)*
50	4B or 1.3	2.3
100	4B or 1.6	3.3
200	4B or 2.0	4.3
700	4B or 3.3	5.6

** L is the greater of 4B or the listed dimension.*

B = Diameter or span of conduit, ft
L = Length of bottom of riprap pad, ft
T = Thickness of riprap pad, ft
W= Width of top of riprap pad, ft

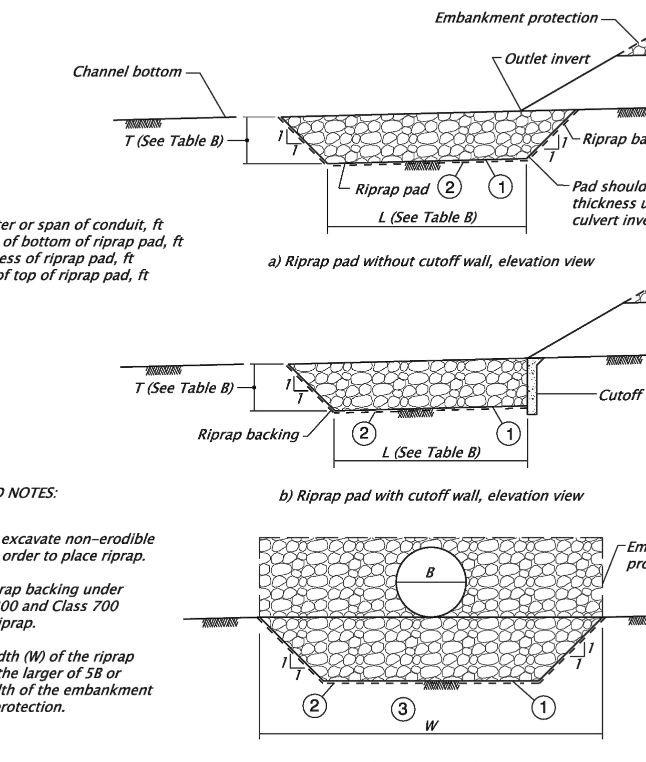

RIPRAP PAD NOTES:

1. *Do not excavate non–erodible rock in order to place riprap.*
2. *Use riprap backing under Class 200 and Class 700 loose riprap.*
3. *Top width (W) of the riprap pad is the larger of 5B or the width of the embankment slope protection.*

RIPRAP PADS

GENERAL NOTES FOR ALL DETAILS:

1. *See Std. Drg's. RD300 & RD304 for installation details.*
2. *Open ends of pipes normally require a site specific design, and may require special treatment (sloped ends, culvert embankment protection, paved end slopes, safety end sections, or other measures). See special details or Standard Drawings as called for on plans.*

CALC. BOOK NO. N/A
BASELINE REPORT DATE 24-Nov-2015

NOTE: All material and workmanship shall be in accordance with the current Oregon Standard Specifications

The selection and use of this Standard Drawing, while designed in accordance with generally accepted engineering principles and practices, is the sole responsibility of the user and should not be used without consulting a Registered Professional Engineer.

OREGON STANDARD DRAWINGS

CULVERT EMBANKMENT PROTECTION and RIPRAP PADS

2018

DATE	REVISION DESCRIPTION

rd317.dgn 06-01-2017

RD317

Effective Date: June 1, 2020 - November 30, 2020 RD317

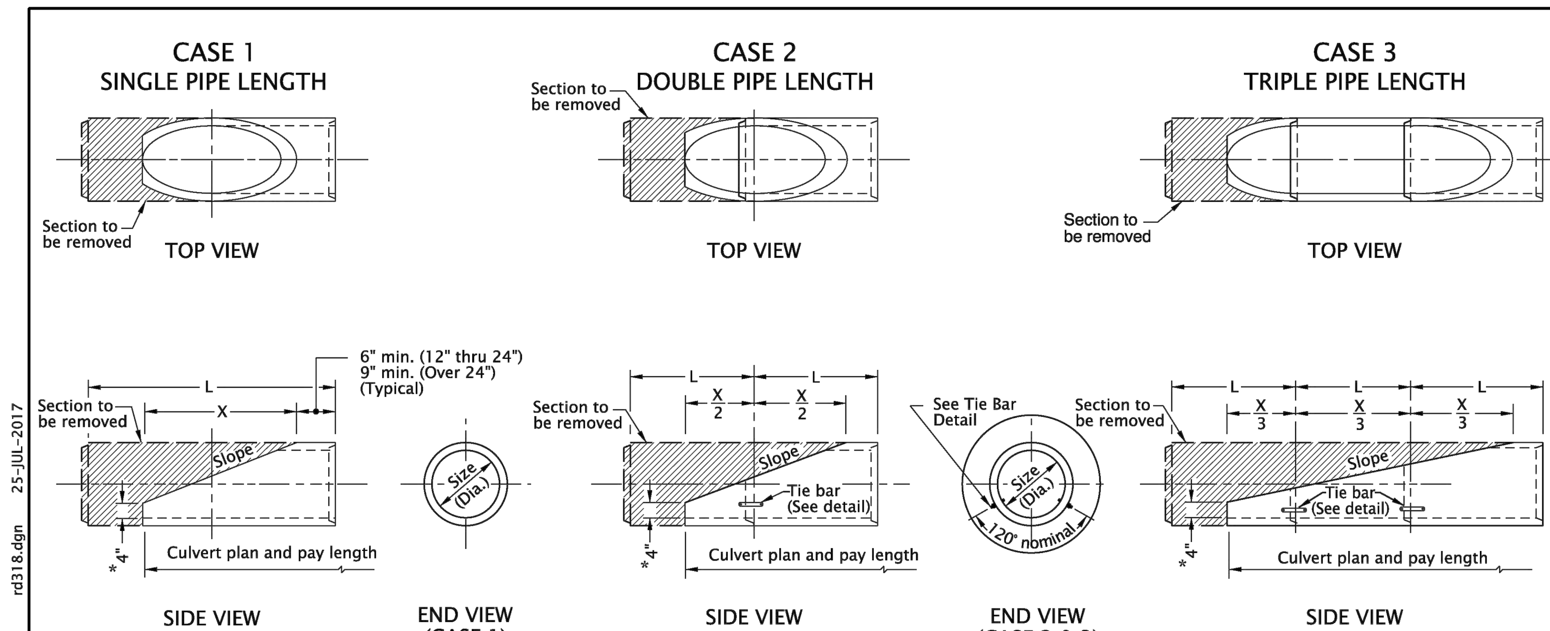

* 0 when used with paved end slope.

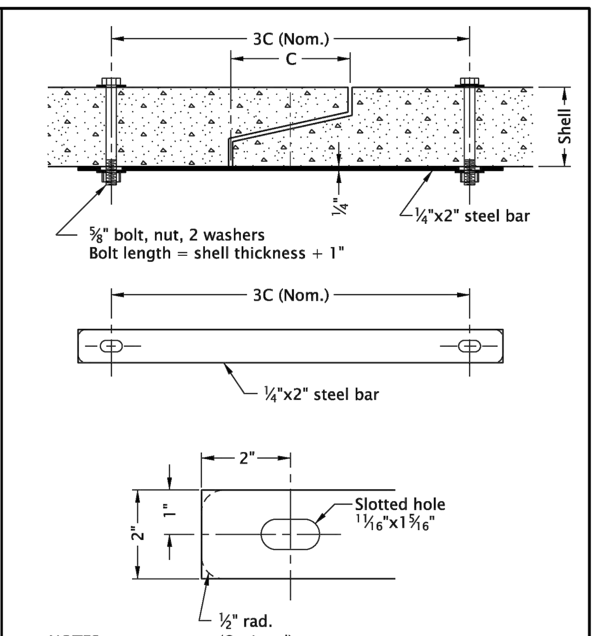

NOTES:

1. All bolts, nuts and washers to be galvanized.
2. Tie bar to be galvanized after fabrication.
3. "C" is tongue length.
4. Install 2 tie bars at each joint (See end view, Case 2 & 3).

TIE BAR DETAIL

NOTE:
Sloped ends shall be made from minimum Class III concrete pipe.
"X" Values shown are for vertical dimension at bottom of sloped end = 0.

TABLE A

SIZE (Diameter)	SLOPE 1:1.5 X	1:1.5 CASE 1 L (Min.)	1:1.5 CASE 2 L (Min.)	1:2 X	1:2 CASE 1 L (Min.)	1:2 CASE 2 L (Min.)	1:2.5 X	1:2.5 CASE 1 L (Min.)	1:2.5 CASE 2 L (Min.)	1:3 X	1:3 CASE 1 L (Min.)	1:3 CASE 2 L (Min.)	1:4 X	1:4 CASE 1 L (Min.)	1:4 CASE 2 L (Min.)	1:4 CASE 3 L (Min.)	1:6 X	1:6 CASE 1 L (Min.)	1:6 CASE 2 L (Min.)	1:6 CASE 3 L (Min.)	SIZE (Diameter)
DIMENSION IN INCHES																					
12	18	36	36	24	36	36	30	48	36	36	72	36	48	72	36		72	90	48		12
15	22.5	36	36	30	48	36	37.5	72	36	45	72	36	60	72	36		90		72		15
18	27	48	36	36	48	36	45	72	36	54	72	36	72	90	48		108		72		18
21	31.5	48	36	42	72	36	52.5	72	36	63	90	48	84		72		126		90		21
24	36	48	36	48	72	36	60	90	48	72	90	48	96		72		144		90		24
27	40.5	72	36	54	72	36	67.5	90	48	81		72	108		72		162			72	27
30	45	72	36	60	90	48	75		48	90		72	120		90		180			72	30
33	49.5	72	36	66	90	48	82.5		72	99		72	132		90		198			90	33
36	54	72	36	72	90	48	90		72	108		72	144		90		216			90	36
42	63	90	48	84		72	105		72	126		90	168			72	252			90	42
48	72	90	48	96		72	120		90	144		90	192			90	288				48
54	81		72	108		72	135		90				216			90	324				54

GENERAL NOTES FOR ALL DETAILS:

1. For dimensions indicated by letter, see Table A.
2. Open ends of pipes normally require a site specific design, and may require special treament (Slope ends, culvert embankment protection, paved end slopes, safety end sections, or other measures). See special details or Standard Drawings as called for on plans.
3. See Std. Dwg. RD317 for culvert embankment protection and riprap pads (When reqd.).

CALC. BOOK NO. N/A
BASELINE REPORT DATE 15-JAN-2016

NOTE: All material and workmanship shall be in accordance with the current Oregon Standard Specifications

The selection and use of this Standard Drawing, while designed in accordance with generally accepted engineering principles and practices, is the sole responsibility of the user and should not be used without consulting a Registered Professional Engineer.

OREGON STANDARD DRAWINGS

SLOPED ENDS FOR CONCRETE PIPE

2018

DATE	REVISION DESCRIPTION

rd318.dgn 25-JUL-2017

RD318

Effective Date: June 1, 2020 - November 30, 2020 RD318

ISSUE	DATE	DESCRIPTION
A	09/2026	ISSUED FOR BIDS

PROJECT MANAGER	PIERRE KWAN
CIVIL	J. MEGRDITCHIAN
STRUCTURAL	P. LINDBLOM
ARCHITECTURAL	V. YANEZ
PROCESS	P. KWAN
MECHANICAL	K. CHEUNG
ELECTRICAL	R. MCCOMB
INSTRUMENTATION	D. BEST
PROJECT NUMBER	10193663

REGISTERED PROFESSIONAL ENGINEER 100489PE DIGITALLY SIGNED OREGON NOVEMBER 8, 2022 NATHAN FASTENAU
EXPIRES: 12/31/2027

CITY OF ASHLAND
Ashland, Oregon

City of Ashland

Ashland Creek Water Treatment Plant

2026

CIVIL STORMWATER DETAILS I

0 1" 2"

FILENAME 002C519 - 002C523.dwg
SCALE NTS

SHEET **002C519**

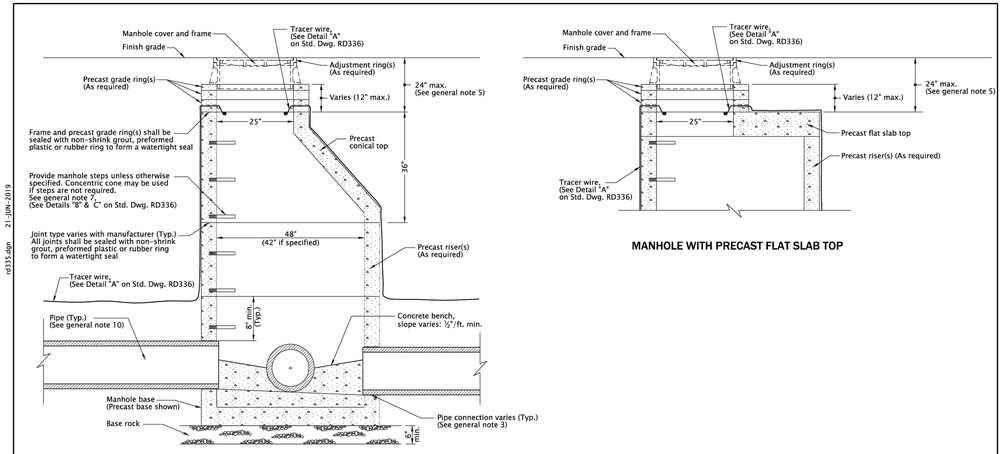

MANHOLE WITH PRECAST CONICAL TOP

MANHOLE WITH PRECAST FLAT SLAB TOP

rd335.dgn 21-JUN-2019

GENERAL NOTES FOR ALL DETAILS ON THIS SHEET:

1. All precast products shall conform to requirements of ASTM C478.
2. Standard precast manhole section diameter shall be 48". Use 42" if specified by the Engineer.
3. See Std. Dwg. RD345 for pipe to manhole connections.
4. See Std. Dwg. RD344 for manhole base section.
5. Adjust 24" maximum.
6. All connecting pipes shall have a tracer wire, or approved alternate.
7. See Std. Dwg. RD336 for manhole steps.
8. See Std. Dwg. RD336 for details not shown.
9. See Std. Dwg. RD356 for manhole covers and frames, manhole adjustment rings, etc.
10. Max. pipe diameter varies with pipe material.
11. See Std. Dwg. RD342 for shallow manholes.
12. Location, elevation, diameter, slope, and number of pipe(s) varies, see project plans.

CALC. BOOK NO. N/A

BASELINE REPORT DATE 21-JUN-2019

NOTE: All material and workmanship shall be in accordance with the current Oregon Standard Specifications

The selection and use of this Standard Drawing, while designed in accordance with generally accepted engineering principles and practices, is the sole responsibility of the user and should not be used without consulting a Registered Professional Engineer.

OREGON STANDARD DRAWINGS

STANDARD STORM SEWER MANHOLE

2018

DATE	REVISION DESCRIPTION
01-2019	REVISED NOTE
06-2019	ADDED DETAIL TITLES

RD335

Effective Date: June 1, 2020 - November 30, 2020

RD335

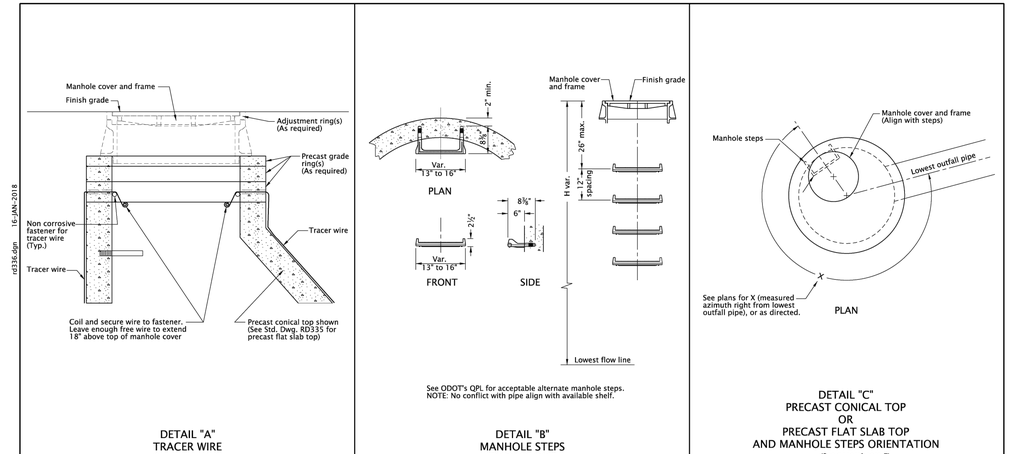

See ODOT's QPL for acceptable alternate manhole steps.
NOTE: No conflict with pipe align with available shelf.

DETAIL "A"
TRACER WIRE
(See general note 6)

DETAIL "B"
MANHOLE STEPS
(See general note 7)

DETAIL "C"
PRECAST CONICAL TOP
OR
PRECAST FLAT SLAB TOP
AND MANHOLE STEPS ORIENTATION
(See general note 7)

rd336.dgn 16-JAN-2018

GENERAL NOTES FOR ALL DETAILS ON THIS SHEET:

1. All precast products shall conform to requirements of ASTM C478.
2. Standard precast manhole section diameter shall be 48". Use 42" if specified by the Engineer.
3. See Std. Dwg. RD345 for pipe to manhole connections.
4. See Std. Dwg. RD344 for manhole base section.
5. Adjust 24" maximum.
6. All connecting pipes shall have a tracer wire, or approved alternate. Place tracer wire directly over pipe centerline and on top of the pipe zone material.
7. Steps shall conform to requirements of ASTM C478. When H=42" or less omit steps. See Detail "C" for alignment of steps, and manhole cover and frame.
8. See Std. Dwg. RD335 for details not shown.
9. See Std. Dwg. RD356 for manhole covers and frames, manhole adjustment rings, etc.
10. Max. pipe diameter varies with pipe material.
11. See Std. Dwg. RD342 for shallow manholes.
12. See project plans for details not shown.

CALC. BOOK NO. N/A

BASELINE REPORT DATE 16-JAN-2019

NOTE: All material and workmanship shall be in accordance with the current Oregon Standard Specifications

The selection and use of this Standard Drawing, while designed in accordance with generally accepted engineering principles and practices, is the sole responsibility of the user and should not be used without consulting a Registered Professional Engineer.

OREGON STANDARD DRAWINGS

STANDARD MANHOLE DETAILS

2018

DATE	REVISED NOTES	REVISION DESCRIPTION
01-2019	REVISED NOTES	

RD336

Effective Date: June 1, 2020 - November 30, 2020

RD336

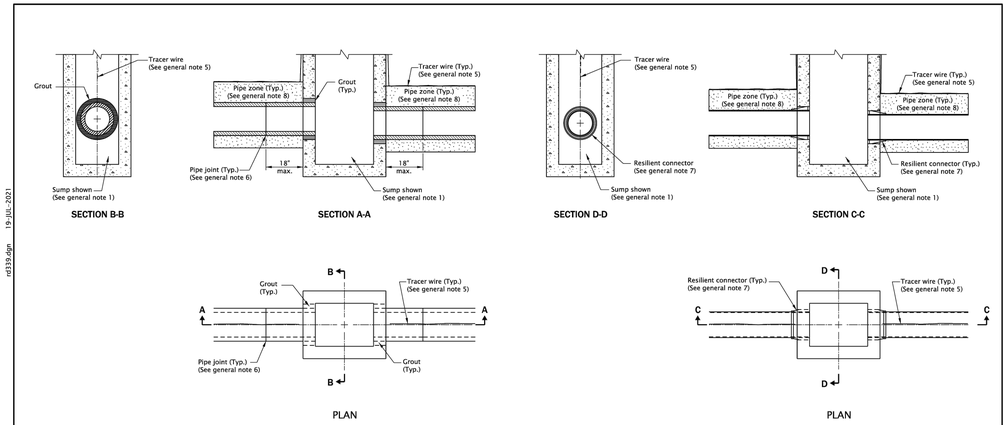

CONNECTION OF RIGID PIPE TO STRUCTURE

CONNECTION OF FLEXIBLE PIPE TO STRUCTURE

rd339.dgn 19-JUL-2021

GENERAL NOTES FOR ALL DETAILS ON THIS SHEET:

1. See Std. Dwgs. RD364, RD365, and RD366 for inlet details not shown.
2. See appropriate standard drawings or special project details for other similar structures.
3. Location, elevation, diameter, slope, and number of pipe(s) varies, see project plans.
4. Maximum pipe diameter varies with pipe material.
5. All connecting pipes shall have a tracer wire, or approved alternate. See Std. Dwg. RD336 for tracer wire details.
6. When rigid pipe is used, the connecting pipe shall have a flexible, gasketted and unrestrained joint within 18" of structure wall. Joint type varies with manufacturer.
7. When flexible pipe is used, install resilient connectors conforming to requirements of ASTM C923.
8. Pipe zone varies, see Std. Dwg. RD300.

CALC. BOOK NO. N/A

SDR DATE 19-JUL-2021

NOTE: All material and workmanship shall be in accordance with the current Oregon Standard Specifications

The selection and use of this Standard Drawing, while designed in accordance with generally accepted engineering principles and practices, is the sole responsibility of the user and should not be used without consulting a Registered Professional Engineer.

OREGON STANDARD DRAWINGS

PIPE TO STRUCTURE CONNECTIONS

2021

DATE	REVISED NOTES	REVISION DESCRIPTION
07-2021	REVISED NOTES	
06-2022	REVISED NOTES	

RD339

Effective Date: December 1, 2022 - May 31, 2023

RD339

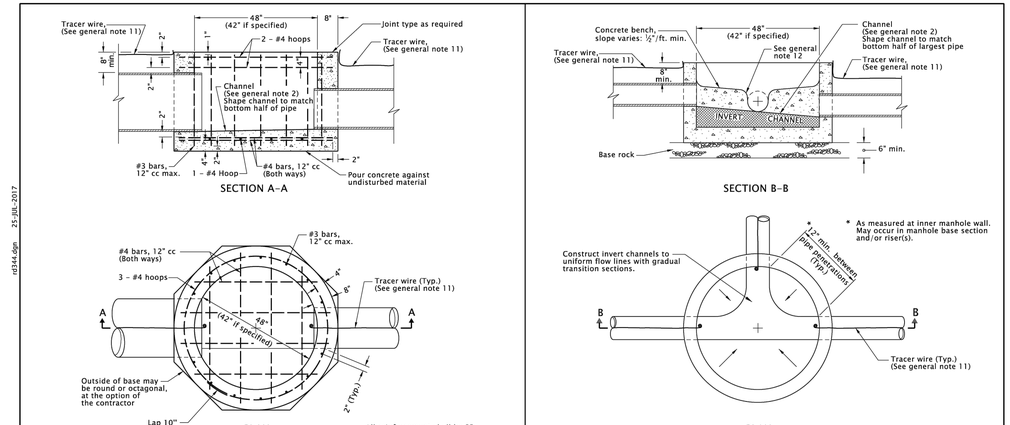

CAST IN PLACE MANHOLE BASE
(For invert channel details, see precast option at right)

PRECAST MANHOLE BASE

rd344.dgn 25-JUL-2017

GENERAL NOTES FOR ALL DETAILS:

1. All concrete shall be commercial grade concrete.
2. Channels shall be constructed to provide smooth slopes and radii to outlet pipe.
3. Bases may be precast or cast in place.
4. Max. pipe diameter varies with pipe material.
5. Use on 42" and 48" diameter manhole.
6. Extend pipe into manhole and grout smooth. Pipe(s) may extend 2" max. beyond the interior manhole wall.
7. Location, elevation, diameter, slope, and number of pipe(s) varies, see project plans.
8. All precast products shall conform to the requirements of ASTM C478.
9. See Std. Dwg. RD345 for pipe to manhole connections.
10. See Std. Dwg. RD336 for manhole steps details.
11. See Std. Dwg. RD336 for tracer wire details.
12. At spring line of pipe, extend channel up to crown line on 12:1 batter.

CALC. BOOK NO. N/A

BASELINE REPORT DATE 14-JUL-2014

NOTE: All material and workmanship shall be in accordance with the current Oregon Standard Specifications

The selection and use of this Standard Drawing, while designed in accordance with generally accepted engineering principles and practices, is the sole responsibility of the user and should not be used without consulting a Registered Professional Engineer.

OREGON STANDARD DRAWINGS

STANDARD MANHOLE BASE SECTION

2018

DATE	REVISION DESCRIPTION

RD344

Effective Date: June 1, 2020 - November 30, 2020

RD344

ISSUE	DATE	DESCRIPTION
A	09/2026	ISSUED FOR BIDS

PROJECT MANAGER	PIERRE KWAN
CIVIL	J. MEGRDITCHIAN
STRUCTURAL	P. LINDBLOM
ARCHITECTURAL	V. YANEZ
PROCESS	P. KWAN
MECHANICAL	K. CHEUNG
ELECTRICAL	R. MCCOMB
INSTRUMENTATION	D. BEST
PROJECT NUMBER	10193663

REGISTERED PROFESSIONAL ENGINEER 100489PE DIGITALLY SIGNED OREGON NOVEMBER 8, 2022 NATHAN FASTENAU

EXPIRES: 12/31/2027

CITY OF ASHLAND

Ashland, Oregon

City of Ashland

Ashland Creek Water Treatment Plant

2026

CIVIL STORMWATER DETAILS II

0 1" 2"

FILENAME 002C520.dwg

SCALE NTS

SHEET **002C520**

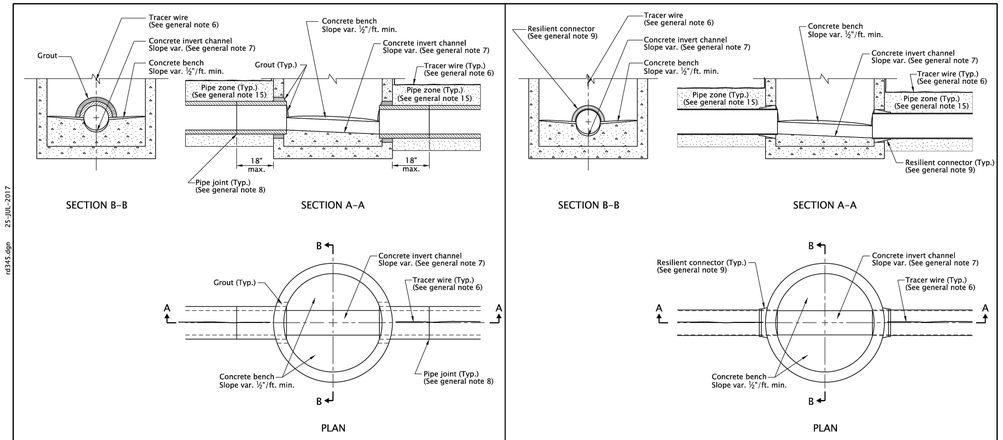

GENERAL NOTES FOR ALL DETAILS:

1. All precast sections shall conform to requirements of ASTM C478.
2. Manhole base sections may be precast or cast-in-place.
3. All concrete shall be commercial grade concrete.
4. Location, elevation, diameter, slope, and number of pipe(s) varies, see project plans.
5. Max. pipe diameter varies with pipe material.
6. All connecting pipes shall have a tracer wire, or approved alternate. See Std. Dwg. RD336 for tracer wire details.
7. Invert channels shall be constructed to provide smooth slopes and radii to outlet pipe.
8. When rigid pipe is used, the connecting pipe shall have a flexible, gasketted and unrestrained joint within 18" of manhole wall. Joint type varies with manufacturer.
9. When flexible pipe is used, install resilient connectors conforming to requirements of ASTM C923.
10. See Std. Dwgs. RD335, RD336, and RD338 for details not shown.
11. See Std. Dwg. RD336 for manhole steps details.
12. See Std. Dwg. RD342 for shallow manholes.
13. See Std. Dwg. RD344 for manhole base section.
14. See Std. Dwg. RD356 for manhole covers and frames, manhole adjustment rings, etc.
15. Pipe zone varies, see Std. Dwg. RD300.

CALC. BOOK NO. N/A

BASELINE REPORT DATE 14-JUL-2014

NOTE: All material and workmanship shall be in accordance with the current Oregon Standard Specifications

The selection and use of this Standard Drawing, while designed in accordance with generally accepted engineering principles and practices, is the sole responsibility of the user and should not be used without consulting a Registered Professional Engineer.

OREGON STANDARD DRAWINGS

PIPE TO MANHOLE CONNECTIONS

2018

DATE	REVISION DESCRIPTION

rd342.dgn 25-JUL-2017

Effective Date: June 1, 2020 - November 30, 2020

RD345

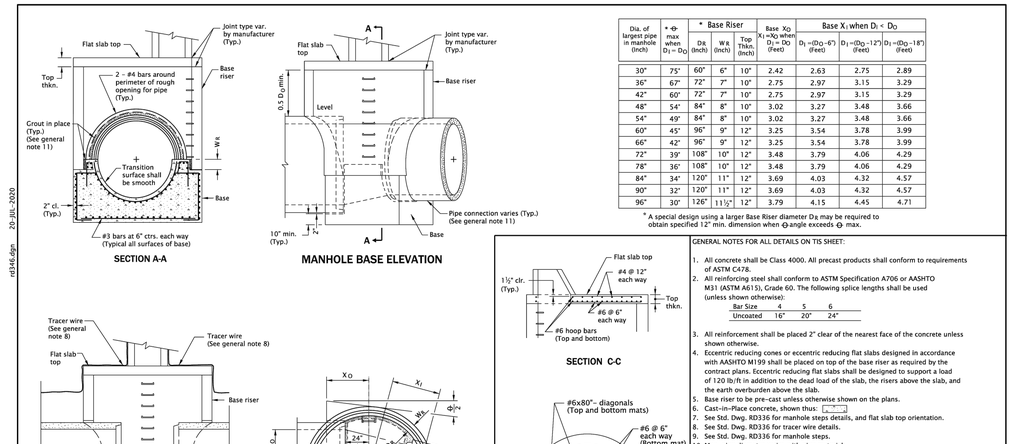

Dia. of largest pipe in manhole (Inch)	* Φ max when D1 = D0	* Base Riser D1k (Inch)	* Base Riser W k (Inch)	* Base Riser Top Thkn. (Inch)	Base X0 X1 = X0 when D1 = D0 (Feet)	Base X1 when D1 < D0: D1 = (D0 -6") (Feet)	Base X1 when D1 < D0: D1 = (D0 -12") (Feet)	Base X1 when D1 < D0: D1 = (D0 -18") (Feet)
30"	75°	60"	6"	10"	2.42	2.63	2.75	2.89
36"	67°	72"	7"	10"	2.75	2.97	3.15	3.29
42"	60°	72"	7"	10"	2.75	2.97	3.15	3.29
48"	54°	84"	8"	10"	3.02	3.27	3.48	3.66
54"	49°	84"	8"	10"	3.02	3.27	3.48	3.66
60"	45°	96"	9"	12"	3.25	3.54	3.78	3.99
66"	42°	96"	9"	12"	3.25	3.54	3.78	3.99
72"	39°	108"	10"	12"	3.48	3.79	4.06	4.29
78"	36°	108"	10"	12"	3.48	3.79	4.06	4.29
84"	34°	120"	11"	12"	3.69	4.03	4.32	4.57
90"	32°	120"	11"	12"	3.69	4.03	4.32	4.57
96"	30°	126"	11½"	12"	3.79	4.15	4.45	4.71

* A special design using a larger Base Riser diameter Dk may be required to obtain specified 12" min. dimension when Φ angle exceeds Φ max.

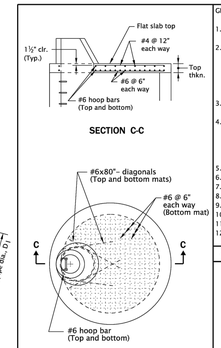

GENERAL NOTES FOR ALL DETAILS ON TIS SHEET:

1. All concrete shall be Class 4000. All precast products shall conform to requirements of ASTM C478.
2. All reinforcing steel shall conform to ASTM Specification A706 or AASHTO M31 (ASTM A615), Grade 60. The following splice lengths shall be used (unless shown otherwise):

Bar Size	4	5	6
Uncoated	16"	20"	24"

3. All reinforcement shall be placed 2" clear of the nearest face of the concrete unless shown otherwise.
4. Eccentric reducing cones or eccentric reducing flat slabs designed in accordance with AASHTO M199 shall be placed on top of the base riser as required by the contract plans. Eccentric reducing flat slabs shall be designed to support a load of 120 lb/ft in addition to the dead load of the slab, the risers above the slab, and the earth overburden above the slab.
5. Base riser to be pre-cast unless otherwise shown on the plans.
6. Cast-in-Place concrete, shown thus:
7. See Std. Dwg. RD336 for manhole steps details, and flat slab top orientation.
8. See Std. Dwg. RD336 for tracer wire details.
9. See Std. Dwg. RD336 for manhole steps.
10. Max. pipe diameter varies with pipe material.
11. See Std. Dwg. RD345 for pipe to manhole connections.
12. Location, elevation, diameter, slope, and number of pipe(s) varies, see project plans.

CALC. BOOK NO. N/A

SDR DATE 25-JUL-2017

NOTE: All material and workmanship shall be in accordance with the current Oregon Standard Specifications

The selection and use of this Standard Drawing, while designed in accordance with generally accepted engineering principles and practices, is the sole responsibility of the user and should not be used without consulting a Registered Professional Engineer.

OREGON STANDARD DRAWINGS

LARGE PRECAST MANHOLE

2021

DATE	REVISION DESCRIPTION

rd346.dgn 20-JUL-2020

Effective Date: December 1, 2022 - May 31, 2023

RD346

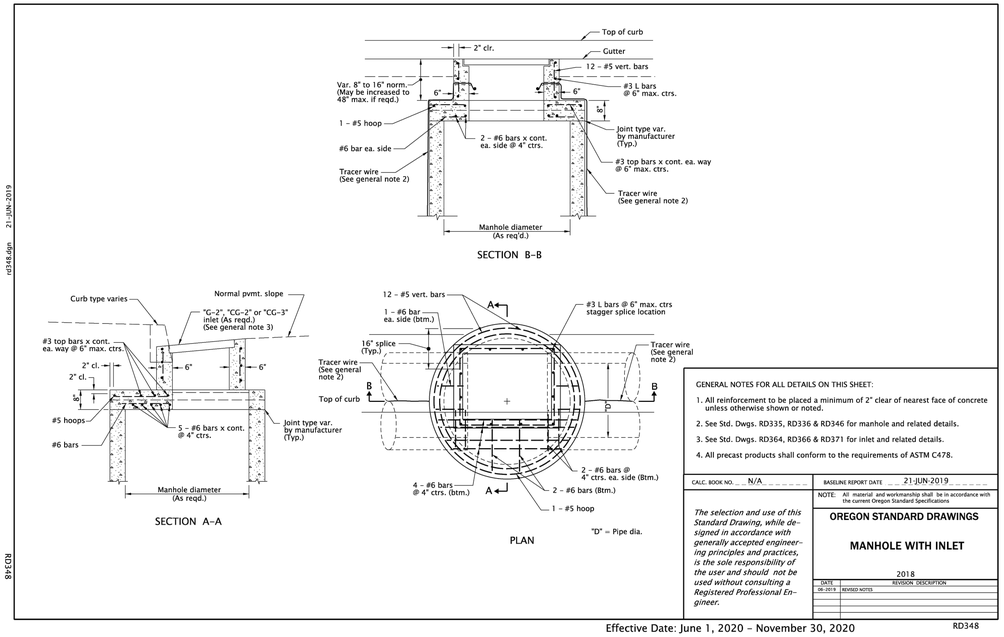

GENERAL NOTES FOR ALL DETAILS ON THIS SHEET:

1. All reinforcement to be placed a minimum of 2" clear of nearest face of concrete unless otherwise shown or noted.
2. See Std. Dwgs. RD335, RD336 & RD346 for manhole and related details.
3. See Std. Dwgs. RD364, RD366 & RD371 for inlet and related details.
4. All precast products shall conform to the requirements of ASTM C478.

CALC. BOOK NO. N/A

BASELINE REPORT DATE 21-JUN-2019

NOTE: All material and workmanship shall be in accordance with the current Oregon Standard Specifications

The selection and use of this Standard Drawing, while designed in accordance with generally accepted engineering principles and practices, is the sole responsibility of the user and should not be used without consulting a Registered Professional Engineer.

OREGON STANDARD DRAWINGS

MANHOLE WITH INLET

2018

DATE	REVISION DESCRIPTION
06-2019	REVISED NOTES

rd348.dgn 21-JUN-2019

RD348

Effective Date: June 1, 2020 - November 30, 2020

RD348

ISSUE	DATE	DESCRIPTION
A	09/2026	ISSUED FOR BIDS

PROJECT MANAGER	PIERRE KWAN
CIVIL	J. MEGRDITCHIAN
STRUCTURAL	P. LINDBLOM
ARCHITECTURAL	V. YANEZ
PROCESS	P. KWAN
MECHANICAL	K. CHEUNG
ELECTRICAL	R. MCCOMB
INSTRUMENTATION	D. BEST
PROJECT NUMBER	10193663

REGISTERED PROFESSIONAL ENGINEER 100489PE OREGON NOVEMBER 8, 2022 NATHAN FASTENAU

DIGITALLY SIGNED

EXPIRES: 12/31/2027

CITY OF ASHLAND

Ashland, Oregon

City of Ashland

Ashland Creek Water Treatment Plant

2026

CIVIL
STORMWATER DETAILS III

0 1" 2"

FILENAME 002C521.dwg

SCALE NTS

SHEET **002C521**

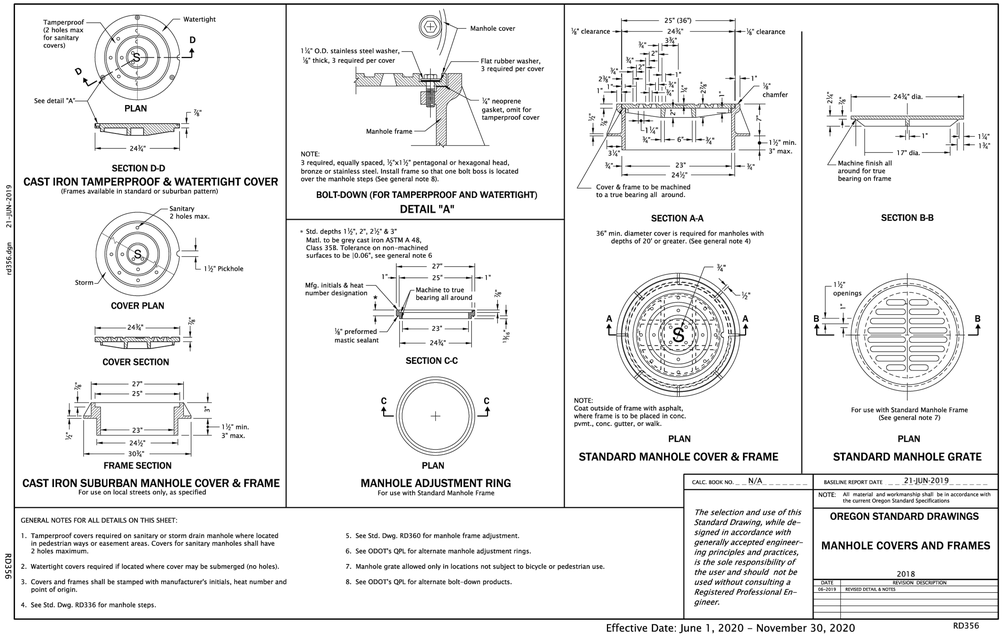

Effective Date: June 1, 2020 - November 30, 2020

RD356

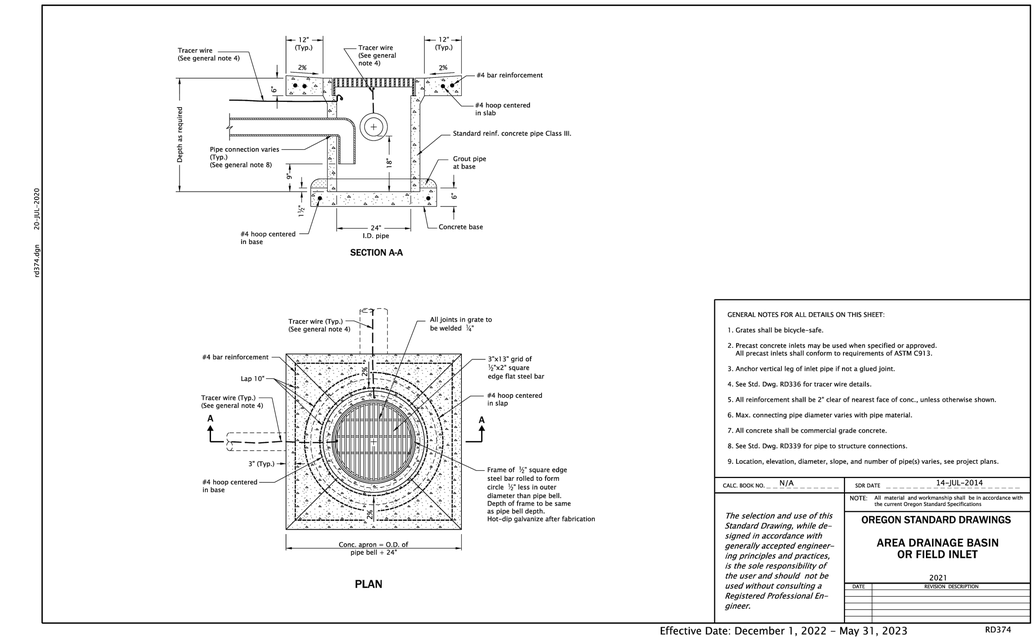

Effective Date: December 1, 2022 - May 31, 2023

RD374

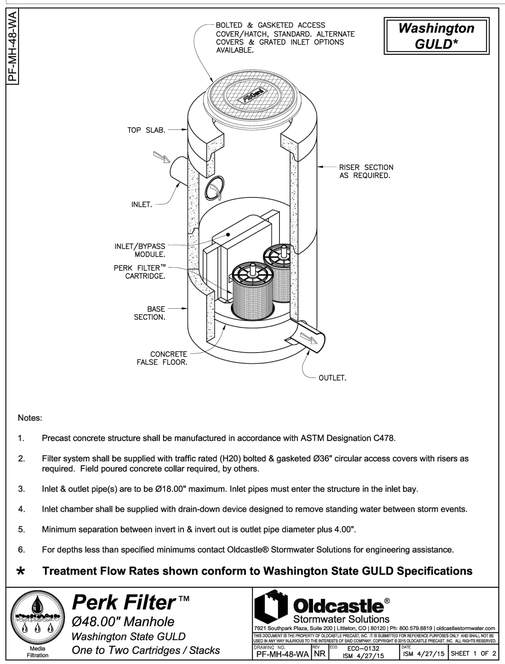

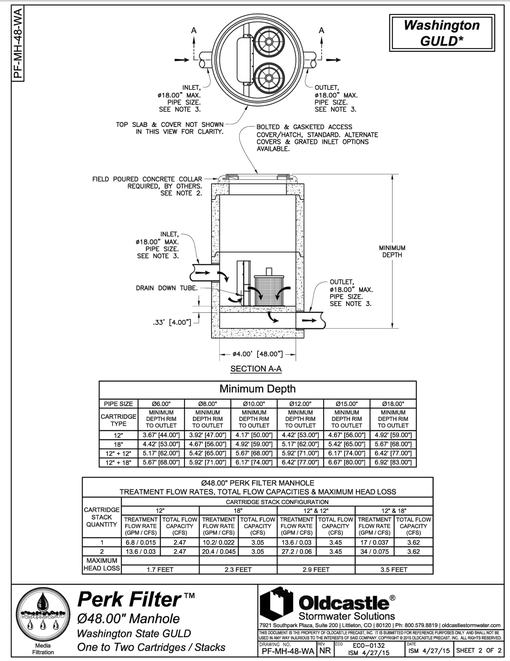

1 - 48" MANHOLE FILTER

SCALE: NTS

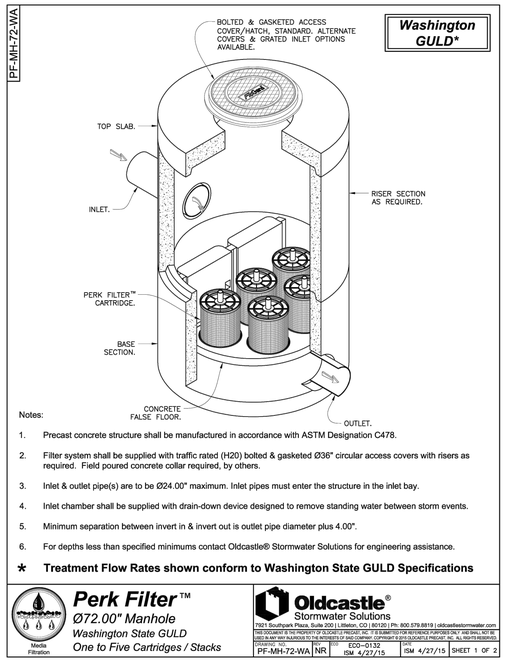

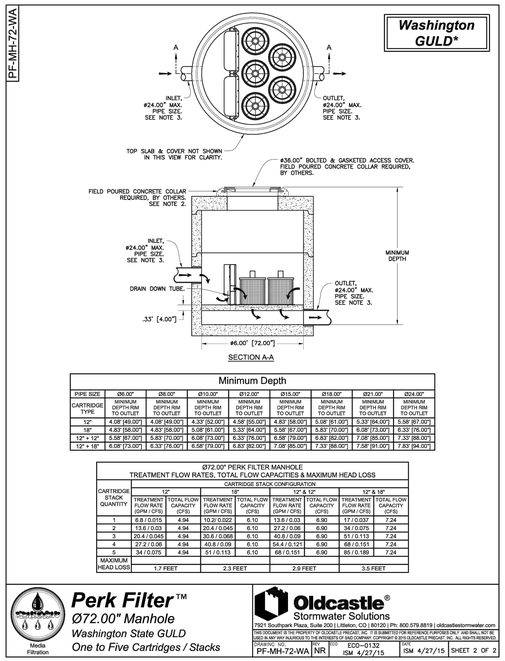

2 - 72" MANHOLE FILTER

SCALE: NTS

ISSUE	DATE	DESCRIPTION
A	09/2026	ISSUED FOR BIDS

PROJECT MANAGER	PIERRE KWAN
CIVIL	J. MEGRDITCHIAN
STRUCTURAL	P. LINDBLOM
ARCHITECTURAL	V. YANEZ
PROCESS	P. KWAN
MECHANICAL	K. CHEUNG
ELECTRICAL	R. MCCOMB
INSTRUMENTATION	D. BEST
PROJECT NUMBER	10193663

REGISTERED PROFESSIONAL ENGINEER 100489PE OREGON NOVEMBER 8, 2022 NATHAN FASTENAU

DIGITALLY SIGNED

EXPIRES: 12/31/2027

CITY OF ASHLAND

Ashland, Oregon

City of Ashland

Ashland Creek Water Treatment Plant

2026

CIVIL STORMWATER DETAILS IV

0 1" 2"

FILENAME 002C522.dwg

SCALE NTS

SHEET 002C522

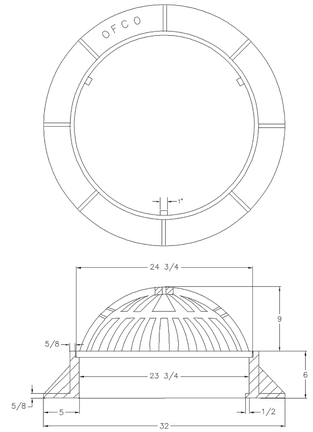

NOTES:
Beehive grate also compatible with MH30 rings

OLYMPIC FOUNDRY INC.

23" X 6" MANHOLE RING & BEEHIVE GRATE

MATL: Cast Iron ASTM A48 CL30	RATING: N/A	PART NO. MH25BH	
APPROX WT: 332 Lbs	REV: A DATE: 7/21/2003 New border		REV A
DOCUMENT APPROVED BY: DATE:	DWN: CL DATE: 7/21/2003	TOLERANCE XX +-.1 XXX +-.06 XXXX +-.030 +-.2 DEG	REV: A DATE: 12/2/2003 Revised weight
	CHKD: CL DATE: 7/21/2003	DWG #: MH25Beehive	SCALE: N/A SHEET: 1 OF 1

1 - BEEHIVE INLET

SCALE: NTS

SITE SPECIFIC DATA				
Structure ID				ID
Treatment Flow Rate (cfs)				-
Peak Flow Rate (cfs)				1.3 cfs
Rim Elevation				X.XX'
Pipe Data	**Pipe Location**	**Pipe Size**	**Pipe Type**	**Invert Elevation**
Outlet	XXX	XX"	XXX	X.XX'
Inlet	XXX	XX"	XXX	X.XX'
Notes: -				

PERFORMANCE SPECIFICATIONS	
Treatment Flow Capacities:*	
NJDEP 80% Removal, 75 micron	0.053 cfs
WA Ecology GULD - Basic & Phosphorus	0.03 cfs

*Contact Oldcastle for alternative treatment flow capacities.

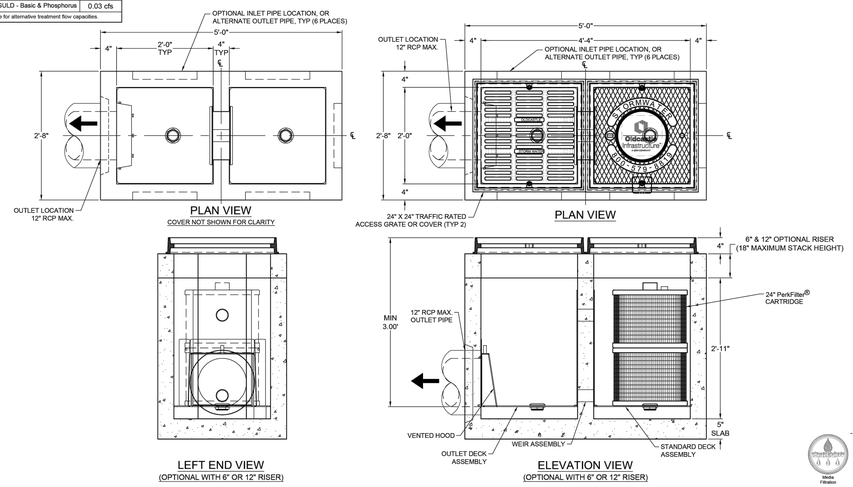

NOTES:

1. DESIGN LOADINGS:
   A. AASHTO HS-20-44 W/ IMPACT.
   B. STATIC LOAD: DESIGN FILL: MAX TOP OF STRUCTURE.
   C. ASSUMED WATER TABLE: BELOW STRUCTURE.
   D. DRY LATERAL EARTH PRESSURE (EFP) = 45 PCF.
   E. LATERAL LIVE LOAD SURCHARGE = 80 PSF (APPLIED TO 8' BELOW GRADE).
   F. NO LATERAL SURCHARGE FROM ADJACENT BUILDINGS, WALLS, PIERS, OR FOUNDATIONS.
2. CONCRETE 28 DAY COMPRESSIVE STRENGTH SHALL BE 5,000 PSI MINIMUM.
3. STEEL REINFORCEMENT: REBAR, ASTM A-615 OR A-706, GRADE 60.
4. CEMENT: ASTM C-150 SPECIFICATION.
5. REQUIRED ALLOWABLE SOIL BEARING PRESSURE = 2,500 PSF.
   CONTRACTOR RESPONSIBLE TO ENSURE ADEQUATE BEARING SURFACE IS PROVIDED (I.E. COMPACTED AND LEVEL PER PROJECT SPECIFICATIONS).
6. REFERENCE STANDARD:
   A. ASTM C-890
   B. ASTM C-913
   C. ACI 318-14
7. OUTLET HOLES WILL BE FACTORY CORED/CAST PER PLANS/CUSTOMER REQUIREMENTS. OUTLET LOCATIONS CAN BE CHANGED.
8. MAXIMUM PICK WEIGHT (COMBINED WEIGHT OF BASE, CARTRIDGE & ACCESS COVER) = TBD.
9. FOR SITE SPECIFIC DRAWINGS WITH DETAILED STRUCTURE DIMENSIONS AND WEIGHTS, PLEASE CONTACT OLDCASTLE INFRASTRUCTURE.

Oldcastle Infrastructure™
A CRH COMPANY

THIS DOCUMENT IS THE PROPERTY OF OLDCASTLE INFRASTRUCTURE, INC. IT IS CONFIDENTIAL, SUBMITTED FOR REFERENCE PURPOSES ONLY AND SHALL NOT BE USED IN ANY WAY INJURIOUS TO THE INTERESTS OF OR COMPETITIVE WITH OLDCASTLE INFRASTRUCTURE, INC. OR ITS AFFILIATES. COPYRIGHT © 2022 OLDCASTLE INFRASTRUCTURE, INC. ALL RIGHTS RESERVED.

ParkFilter® Concrete Catch Basin
24" Cartridge

CUSTOMER -

PROJECT NAME -					
DATE --/--/22	MFG -	DRAWN -	ENGINEER -	CHECKED -	SALES ORDER -
		SHEET SIZE Specifier Drawing PFCB-25-1x24		REV BLOCK REV DATE	SHEET 1 OF 1

Stormwater Solutions
Media Filtration

2 - CATCH BASIN FILTER

SCALE: NTS

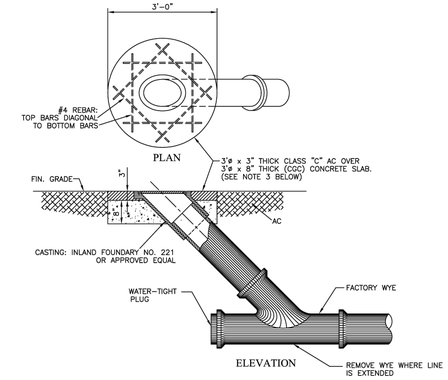

STANDARD CLEANOUT FOR SANITARY MAINS

GENERAL NOTES:

1. CLEANOUT ONLY TO BE USED WHEN AUTHORIZED BY CITY ENGINEER.
2. PIPE AND FITTINGS SHALL BE COMPATIBLE. ONLY FACTORY FITTINGS SHALL BE USED.
3. CONCRETE TO BE COMMERCIAL GRADE CONCRETE (CGC) PER 2002 ODOT/OREGON APWA SECTION 00440.00
4. CLEANOUT ALLOWED ONLY WITHIN STREET OR ALLEY PAVED AREA WHERE MAIN IS TO BE EXTENDED. EXCEPTION MADE FOR RVSS

STANDARD CLEANOUT DETAIL

ISSUED: LB CRZ	DATE: 9/27/05 7/28/05	PUBLIC WORKS ENGINEERING *Ashland – Medford – Rogue Valley Sewer Services*	DRAWING NO. CD362
REVISED:	DATE:		

3 - STANDARD CLEANOUT

SCALE: NTS

HDR

ISSUE	DATE	DESCRIPTION
A	09/2026	ISSUED FOR BIDS

PROJECT MANAGER	PIERRE KWAN
CIVIL	J. MEGRDITCHIAN
STRUCTURAL	P. LINDBLOM
ARCHITECTURAL	V. YANEZ
PROCESS	P. KWAN
MECHANICAL	K. CHEUNG
ELECTRICAL	R. MCCOMB
INSTRUMENTATION	D. BEST
PROJECT NUMBER	10193663

REGISTERED PROFESSIONAL ENGINEER 100489PE
DIGITALLY SIGNED
OREGON
NOVEMBER 8, 2022
NATHAN FASTENAU
EXPIRES: 12/31/2027

CITY OF ASHLAND
Ashland, Oregon

City of Ashland

Ashland Creek
Water Treatment Plant

2026

CIVIL
STORMWATER DETAILS V

0 1" 2"

FILENAME 002C523.dwg
SCALE NTS

SHEET
002C523

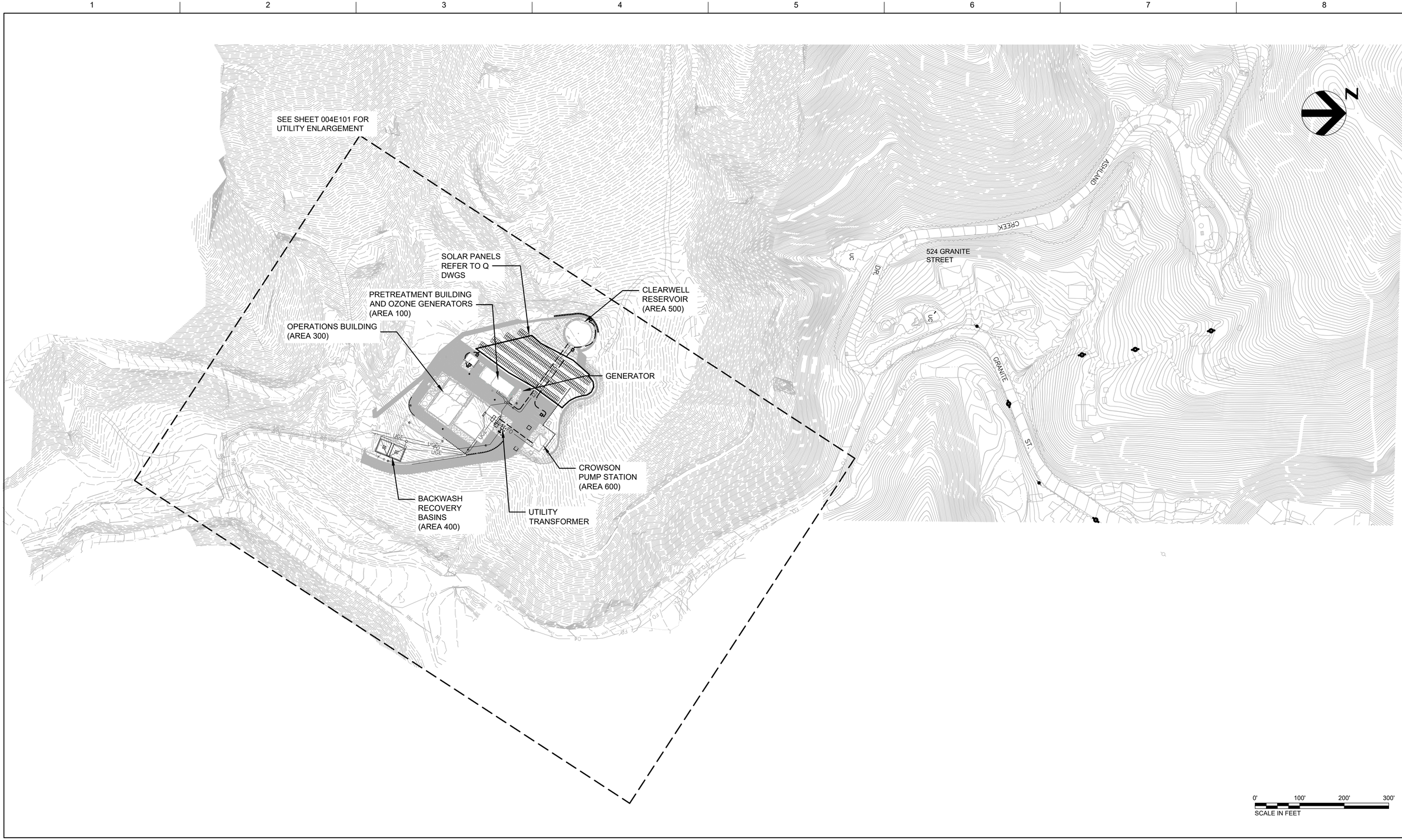

ISSUE	DATE	DESCRIPTION
A	09/2026	ISSUED FOR BIDS

PROJECT MANAGER	PIERRE KWAN
CIVIL	J. MEGRDITCHIAN
STRUCTURAL	P. LINDBLOM
ARCHITECTURAL	V. YANEZ
PROCESS	P. KWAN
MECHANICAL	K. CHEUNG
ELECTRICAL	R. MCCOMB
INSTRUMENTATION	D. BEST
PROJECT NUMBER	10193663

REGISTERED PROFESSIONAL ENGINEER
88023PE
DIGITALLY SIGNED
OREGON
MAY 14, 2013
ROBB J. MCCOMB
EXPIRES: 12/31/2026

CITY OF ASHLAND
Ashland, Oregon

City of Ashland

Ashland Creek Water Treatment Plant

2026

ELECTRICAL OVERALL SITE PLAN

0 1" 2"

FILENAME 004E100.dwg
SCALE 1" = 100'

SHEET
004E100

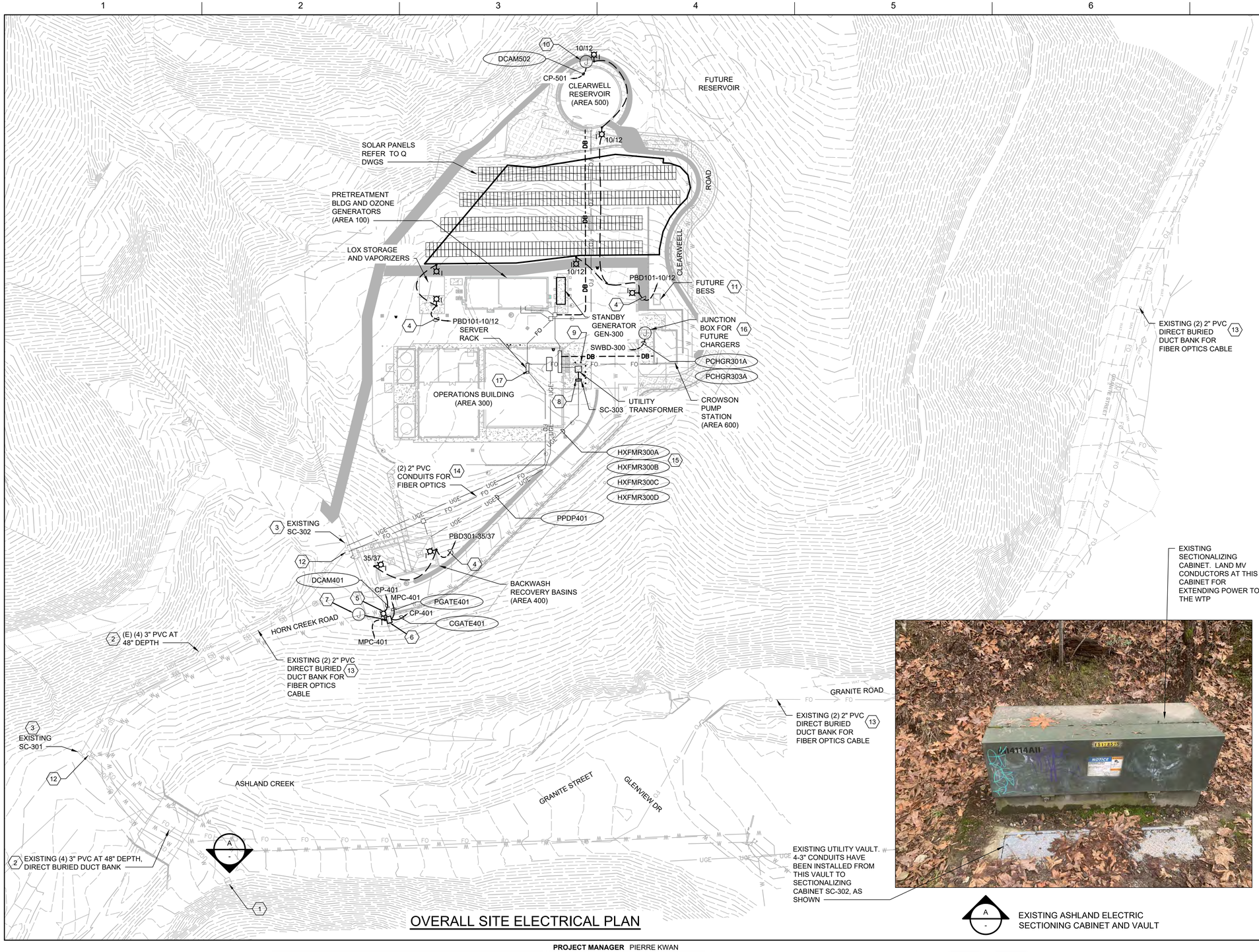

OVERALL SITE ELECTRICAL PLAN

EXISTING ASHLAND ELECTRIC SECTIONING CABINET AND VAULT

GENERAL NOTES:

1. SEE SHEET 000E001 FOR GENERAL NOTES.
2. ALL EXTERIOR UNDERGROUND CONDUITS SHALL BE CONCRETE ENCASED UNLESS OTHERWISE NOTED; SEE SHEET 000E701, DETAIL 2. LIGHTING AND RECEPTACLE CONDUITS CAN BE DIRECT BURIED, TYP.
3. ELECTRICAL AREA (ENCLOSURE) CLASSIFICATION FOR OUTDOOR AREAS ARE WET AREAS. ENCLOSURES WITH NEMA 250 TYPE 4X RATING REQUIRED.
4. PROVIDE MINIMUM 1" CONDUITS FOR ALL FIELD LIGHTING CIRCUITS, TYP.

(#) KEYNOTES:

1. EXISTING 15KV, 3-PHASE SECTIONALIZING CABINET AND VAULT. EXISTING CONDUITS INSTALLED IN CULVER CROSSING PROJECT. ASHLAND ELECTRIC TO PULL PRIMARY CONDUCTORS FROM EXISTING CABINET TO TRANSFORMER.
2. EXISTING CONDUITS INSTALLED FROM EXISTING UTILITY SECTIONALIZING CABINETS TO SECTIONALIZING CABINET SC-302.
3. EXISTING SECTIONALIZING CABINETS. COORDINATE IN THE FIELD FOR EXACT LOCATIONS OF CABINETS AND EXISTING EQUIPMENT.
4. VIA LCP101.
5. INSTALL LIGHT POLE AND LIGHT NEAR FRONT GATE. COORDINATE THE FIELD FOR OPTIMAL LOCATION. INSTALL A JUNCTION BOX FOR A CAMERA, TO BE INSTALLED ON THE LIGHT POLE AT THE TOP. COORDINATE WITH OWNER FOR CAMERA LOCATION AND CAMERA DETAILS.
6. COORDINATE WITH THE GATE AND GATE MOTOR SPECIFICATION. PROVIDE CONTROLS AND SIGNALS BACK TO THE CONTROL PANEL, CP-401, LOCATED AT THE BACKWASH TANK AREA. PROVIDE 1" CONDUIT FROM GATE CONTROLLER, TO KEYPAD, AT FRONT GATE ENTRANCE.
7. PROVIDE A JUNCTION BOX LOCATED WHERE THE CARD READER AND GATE KEYPAD WILL BE INSTALLED. PROVIDE JUNCTION BOX AT THE BOTTOM AT THE BOTTOM OF THE LIGHT POLE AND PROVIDE A 1" CONDUIT OVER TO HAND STATION AND CARD READ, TO BE INSTALLED AT THE FRONT GATE. CONDUCTORS SHALL BE ROUTED BACK IN THE SAME CONDUIT AS THE SECURITY CAMERA.
8. ASHLAND ELECTRIC TO PROVIDE A SECTIONALIZING CABINET, 600A, 3 SETS OF POSTS. PROVIDE WITH CONCRETE UNDERGROUND VAULT FOR EACH CABINET. COORDINATE WITH ASHLAND ELECTRIC FOR ALL SECTIONALIZING CABINETS, FOR ALL CABINET AND VAULT LOCATIONS AND FOR ALL INSTALLATION SPECIFICATIONS. CONTRACTOR SHALL PROVIDE THE UNDERGROUND VAULT, TYP. VAULTS SHALL BE TYPE 575-SECT-ASHLAND, 4X6, CITY OF ASHLAND, NO EQUAL.
9. PROVIDE BOLLARDS IN FRONT OF THE SECTIONALIZING CABINETS AND UTILITY TRANSFORMER. PROVIDE REMOVABLE BOLLARDS WHERE ACCESS TO TRANSFORMER IS REQUIRED.
10. INSTALL A JUNCTION BOX FOR A CAMERA, TO BE INSTALLED ON THE LIGHT POLE AT THE TOP. COORDINATE WITH OWNER FOR CAMERA LOCATION AND CAMERA DETAILS. CAMERA TO BE AIMED NORTH, TOWARDS THE NEARBY WALKING TRAIL.
11. REFER TO SERIES 700 DWGS FOR SOLAR AND BESS EQUIPMENT.
12. EXISTING PULLBOXES FOR FIBER OPTIC CABLES. EXISTING CONDUITS AND PULLBOXES TO BE UTILIZED FOR FINAL FIBER OPTIC RUN.
13. EXISTING FIBER OPTIC CONDUITS INSTALLED FROM VAULT V5178705 TO PULLBOX NEAR SC-302. COORDINATE WITH FIBER OPTIC CONTRACTOR. FOR THIS PROJECT, EXTEND (2) 2" PVC FIBER OPTIC CONDUITS FROM PULLBOX TO PLANT SERVER ROOM.
14. PROVIDE TRACER WIRE ABOVE CONDUITS. INSTALL PER DETAIL 1 ON DWG 000E701.
15. INSTALL DUCTBANK PER DETAIL 1 ON DWG 000E701. COORDINATE WITH ASHLAND ELECTRICAL FOR ANY ADDITIONAL REQUIREMENTS. ASHLAND ELECTRIC TO PULL CONDUCTORS FOR FINAL POWER CONNECTIONS.
16. PROVIDE A NEMA 3R JUNCTION BOX, 18" x 18" x 8" DEEP, FOR FUTURE EV CAR CHARGER CONNECTIONS, TYP OF 2. COORDINATE IN THE FIELD FOR OPTIMAL INSTALLATION LOCATION. PROVIDE EQUIPMENT MOUNTING STAND TO MOUNT JUNCTION BOX ON.
17. ROUTE FIBER OPTIC CONDUITS TO THE SERVER RACK, SVR-3000. REFER TO DWG 300E105 FOR LOCATION OF SERVER RACK.

ISSUE	DATE	DESCRIPTION
A	09/2026	ISSUED FOR BIDS

PROJECT MANAGER	PIERRE KWAN
CIVIL	J. MEGRDITCHIAN
STRUCTURAL	P. LINDBLOM
ARCHITECTURAL	V. YANEZ
PROCESS	P. KWAN
MECHANICAL	K. CHEUNG
ELECTRICAL	R. MCCOMB
INSTRUMENTATION	D. BEST
PROJECT NUMBER	10193663

REGISTERED PROFESSIONAL ENGINEER 88023PE OREGON MAY 14, 2013 ROBB J. MCCOMB
DIGITALLY SIGNED
EXPIRES: 12/31/2026

CITY OF ASHLAND
Ashland, Oregon

City of Ashland

Ashland Creek Water Treatment Plant

2026

ELECTRICAL ENLARGED SITE PLAN

0 1" 2"

FILENAME 004E101.dwg
SCALE 1" = 50'

SHEET **004E101**

CODE REVIEW ANALYSIS

1.0 INTRODUCTION

THE FOLLOWING CODE REVIEW NARRATIVE IS PROVIDED TO SERVE AS A BASIS OF UNDERSTANDING FOR THE DEVELOPMENT OF THE DESIGN, DRAWINGS AND SPECIFICATIONS FOR THE ASHLAND CREEK WATER TREATMENT PLANT (WTP) IN ASHLAND, OREGON. THE FOLLOWING ANALYSIS REVIEWS THE APPLICABLE BUILDING AND LIFE SAFETY CODES.

THE AUTHORITIES HAVING JURISDICTION (AHJ'S) FOR THIS PROJECT INCLUDE THE CITY OF ASHLAND BUILDING DIVISION AND THE CITY OF ASHLAND FIRE DEPARTMENT.

1.1 DESIGN CODES

BUILDING CODE	2019 OREGON STRUCTURAL SPECIALTY CODE (OSSC)
MUNICIPAL CODE	2021 ASHLAND MUNICIPAL CODE
FIRE CODE	2025 OREGON FIRE CODE (OFC)
PLUMBING CODE	2023 OREGON PLUMBING SPECIALTY CODE
ENERGY CONSERVATION CODE	2025 OREGON ENERGY EFFICIENCY SPECIALTY CODE
MECHANICAL CODE	2025 OREGON MECHANICAL SPECIALTY CODE
ELECTRICAL CODE	2023 OREGON ELECTRICAL SPECIALTY CODE (NFPA 70)

CODE DATA TABLE

2.0 ASHLAND CREEK WTP - PRETREATMENT BUILDING [100]

2.1 DESCRIPTION

THE FOLLOWING CODE REVIEW NARRATIVE IS PROVIDED TO SERVE AS A BASIS OF UNDERSTANDING FOR THE DEVELOPMENT OF THE DESIGN, DRAWINGS AND SPECIFICATIONS FOR THE PRETREATMENT BUILDING TO BE BUILT AS PART OF THE ASHLAND CREEK WATER TREATMENT PLANT (WTP) IN ASHLAND, OREGON.

2.2 GENERAL BUILDING DATA SUMMARY

OCCUPANCY CLASSIFICATION(S)	GROUP F-1 OCCUPANCIES
BUILDING AREA	2,500 SF
FIRE AREA	2,500 SF
HEIGHT	18'-0" (1 STORY ABOVE GRADE)
TYPE OF CONSTRUCTION	II-B (NON-COMBUSTIBLE)
FIRE SEPARATION DISTANCE	10' ≤ X < 30'
FIRE PROTECTION SYSTEMS	FIRE EXTINGUISHERS FIRE HYDRANT FIRE SPRINKLERS DEDICATED FIRE ALARM CONTROL UNIT (SPRINKLER WATERFLOW AND SUPERVISORY ALARM PANEL)
OCCUPANT LOAD (TOTAL)	9 (SEE 2.10 FOR CALCULATION)

2.3 USE & OCCUPANCY CLASSIFICATION:		OSSC	OFC
OCCUPANCY GROUP(S):	GROUP F-1 OCCUPANCIES	§306	-
ACCESS. OCCUPANCY (<10%)	NA	§508.2	-
HAZARDOUS MATERIALS	ALL CHEMICALS THAT ARE BEING STORED INDOORS AND OUTDOORS WILL NOT BE OVER THE MAQ; OXYGEN (LIQUIFIED), OZONE, AND REFRIGERANT TYPE R454B ARE ALL CLASSIFIED BY THE OSSC & OFC AS HEALTH HAZARDS (SEE 2.4.1) CALCIUM THIOSULFATE IS AN IRRITANT, WHICH IS A HAZARD CLASSIFICATION NOT REGULATED BY THE OSSC OR OFC.	§307	-
CLASSIFICATION OF HAZARDS	CRYOGENIC OXIDIZING, CORROSIVE, HIGHLY TOXIC, OXIDIZING GAS, FLAMMABLE GAS, IRRITANT	TABLES 307.1(1) & 307.1(2)	TABLES 5003.1.1(1), 5003.1.1(2), & 5003.1.1(3)

2.4 SPECIAL REQUIREMENTS:		OSSC	OFC
AREAS WITH HAZARDOUS MATERIALS	OZONE ROOM, PRETREATMENT ROOM, & OUTDOOR STORAGE	§414	-
EMERGENCY EYEWASH (EW) AND EMERGENCY SHOWER / EMERGENCY EYEWASH (ESEW) COMBINATION STATIONS	EW: CALCIUM THIOSULFATE ESEW: OXYGEN (LIQUIFIED) RECOMMENDED ESEW: REFRIGERANT TYPE R454B	[29 CODE OF FEDERAL REGULATIONS, OSHA 1910.151]	-

2.4.1 HAZARDOUS MATERIALS CLASSIFICATIONS

MATERIAL NAME AND QUANTITY PRESENT; LOCATION AND ANY RELEVANT DETAILS	HAZARD CLASSIFICATIONS (MAXIMUM ALLOWABLE QUANTITY, OR MAQ); IF OVER MAQ, OCCUPANCIES RESULTING:	CONCENTRATION	C.A.S. # (HMEX)
CALCIUM THIOSULFATE STORAGE TANK 50 GALLONS LOCATED IN THIO STORAGE ROOM 100-102	PHYSICAL HAZARD: IRRITANT HEATH HAZARD: N/A;	THIOSULFURIC ACID, CALCIUM SALT 20-30% LIQUID SOLUTION	[10124-41-1]
OZONE 1 LBS USE-CLOSE SYSTEM LOCATED IN OZONE ROOM 100-101	PHYSICAL HAZARD: CORROSIVE, HIGHLY TOXIC AND OXIDIZING GAS HEATH HAZARD: NOT OVER MAQ; CORROSIVE (5,000 LBS MAQ); HIGHLY TOXIC (10 LBS MAQ); OXIDIZING GAS (150 LBS MAQ)	10% GASEOUS	[10028-15-6]
OXYGEN (LIQUIFIED) STORAGE TANK 9,000 GALLONS LOCATED IN OUTDOOR LOX STORAGE AREA	PHYSICAL HAZARD: CRYOGENIC OXIDIZING HEATH HAZARD: CRYOGENIC OXIDIZING (NO MAQ WHEN STORED OUTSIDE);	100% LIQUID	[7782-44-7]
REFRIGERANT TYPE R454B STORAGE/USE 38.72 LBS LOCATED IN DUCTLESS SPLIT SYSTEM FC-1001 AND HEAT PUMP UNIT PHP-1001	PHYSICAL HAZARD: NOT OVER MAQ; FLAMMABLE GAS 1B - HIGH BV (150 LBS) HEATH HAZARD: N/A;	1,1-DIFLUOROMETHANE [68.9 %] 2,3,3,3-TETRAFLUORO PROP-1-EN [31.1%]	1,1-DIFLUOROMETHANE [75-10-5]; 2,3,3,3-TETRAFLUORO PROP-1-EN [754-12-1]

2.4.2 REQUIREMENTS:		OSSC	OFC
HIGH HAZARD CLASSIFICATION	CHEMICALS QUANTITIES STORED AND USED INSIDE THE BUILDING AND OUTSIDE WILL BE UNDER THE MAQ PER THE OSSC & OFC AS HEALTH HAZARDS	§307.6	-
PERMISSIBLE STORAGE (MAQ)	SEE 2.4.1 ABOVE FOR QUANTITIES PRESENT & MAQ'S	TABLES 307.1(1) & 307.1(2)	TABLES 5003.1.1(1), 5003.1.1(2), & 5003.1.1(3)
GENERAL SAFETY PRECAUTIONS	REQUIRED; FOLLOW SDS AS WELL AS APPLICABLE CODES	-	§5003.9
INCOMPATIBLE MATERIALS & CORROSIVITY	MATERIAL CORROSIVITY - SEE SDS SHEETS FOR DETAILS; OZONE IS A CORROSIVE, HIGHLY TOXIC AND OXIDIZING GAS. FROM SDS: "OZONE IS HIGHLY UNSTABLE AND HIGHLY REACTIVE. AVOID CONTACT WITH OXIDIZABLE SUBSTANCES, INCLUDING ALKENES, BENZENE AND OTHER AROMATIC COMPOUNDS, RUBBER, DICYANOGEN, BROMINE DIETHYL ETHER, DINTROGEN TETROXIDE, NITROGEN TRICHLORIDE, HYDROGEN BROMIDE, AND TETRALUOROHYDRAZINE. OZONE WILL READILY REACT AND SPONTANEOUSLY DECOMPOSE UNDER NORMAL AMBIENT TEMPERATURES." OXYGEN (LIQUIFIED) IS A CRYOGENIC OXIDIZING. FROM SDS: "HIGHLY REACTIVE OR INCOMPATIBLE WITH THE FOLLOWING MATERIALS: COMBUSTIBLE MATERIALS, REDUCING MATERIALS, GREASE & OIL" CALCIUM THIOSULFATE IS AN IRRITANT. FROM SDS: "AVOID INTERACTION WITH HEAT, FLAMES, OXIDIZERS OR ACIDS"; STRONG OXIDIZERS SUCH AS NITRATES, NITRITES OR CHLORATES CAN CAUSE EXPLOSIVE MIXTURES IF HEATED TO DRYNESS. ACIDS WILL CAUSE THE RELEASE OF SULFUR DIOXIDE, A SEVERE RESPIRATORY HAZARD. THE FOLLOWING MATERIALS OF CONSTRUCTION ARE NOT COMPATIBLE WITH CALCIUM THIOSULFATE SOLUTIONS; CARBON STEEL, COPPER OR ITS ALLOYS (BRASS, BRONZE) OR GALVANIZED STEEL"; SODIUM CARBONATE SOLUTION IS A CORROSIVE & ACIDS ARE INCOMPATIBLE, BASED UPON BASIC PH. FROM SDS: "STRONG OXIDIZING AGENTS ARE INCOMPATIBLE"; REFRIGERANT TYPE 454B, CHEMICALLY REACTIVE METALS: POTASSIUM, CALCIUM, POWDERED ALUMINUM, MAGNESIUM, AND ZINC.	-	§5003.9.8
VENTILATION	REQUIRED PER IMC [1 CFM / SF MINIMUM]	-	§5004.3 & §5307.2 [NFPA 55, 2020, §6.17]
OUTDOOR VAPORIZER CLEARANCE	BULK OXYGEN VAPORIZERS SHALL BE SEPARATED FROM EXPOSURE HAZARDS IN ACCORDANCE WITH THE REQUIREMENTS OF TABLE 8.6.2 AS APPLICABLE.	-	[NFPA 55, 2020, §9.4.2]
OUTDOOR TANKS CLEARANCE	BULK OXYGEN SYSTEMS SHALL BE SEPARATED FROM EXPOSURE HAZARDS IN ACCORDANCE WITH THE REQUIREMENTS OF TABLE 9.3.2 AS APPLICABLE.	-	[NFPA 55, 2020, §9.3.2]

2.5 BUILDING HEIGHTS & AREAS:		OSSC	OFC
ACTUAL HEIGHT & AREA	18'-0" (1 STORY ABOVE GRADE) TOTAL BUILDING AREA = 2,500 SF	-	-
FIRE AREA	2,500 SF (SAME AS TOTAL BUILDING AREA)	-	-
ALLOWABLE AREA/STORY;	GROUP F-1: 62,000 SF	TABLE 506.2	-
ALLOWABLE HEIGHT	75'-0" AND THREE STORIES	TABLE 504.3, TABLE 504.4	-
MEZZANINE AREA (%)	N/A	§505	-
EQUIPMENT PLATFORM AREA (%)	N/A	§505	-
FRONTAGE INCREASE	N/A	§506.3	-
UNLIMITED AREA BUILDINGS	N/A	§507	-
MIXED-USE & OCCUPANCY	N/A	§508	-
INCIDENTAL USES	N/A	§509	-
SPECIAL PROVISIONS	N/A	§510	-

2.6 TYPES OF CONSTRUCTION:		OSSC	OFC
CONSTRUCTION TYPE	II-B	§602	-
GENERAL BUILDING FIRE-RESISTANCE RATINGS (PRIMARY STRUCTURAL FRAME, BEARING AND NONBEARING WALLS AND PARTITIONS, FLOOR, ROOF)	0-HR	TABLE 601	-
FIRE SEPARATION DISTANCE (FSD)	10' ≤ X < 30'	TABLE 602	-
FIRE-RESISTANCE RATING REQUIREMENTS FOR EXTERIOR WALLS BASED UPON FSD	0-HR	TABLE 602	-

2.7 FIRE & SMOKE PROTECTION:		OSSC	OFC
SHAFT ENCLOSURES FIRE-RESISTANCE RATINGS	N/A	§707.3.1 & §713.4	-
VERTICAL EXIT ENCLOSURE FIRE-RESISTANCE RATINGS	N/A	§707.3.2 & §1023.2	-
OCCUPANCY SEPARATION	N/A	§508.4	-
OPENING PROTECTIVES	N/A	§716	-
DUCT AND AIR TRANSFER OPENINGS	N/A	§717	-
EXTERIOR WALLS	NO LIMIT	TABLE 705.8, §705.8.1 EXCEPTION 2	-
CORRIDORS	N/A	§1020	-

2.8 INTERIOR FINISHES:		OSSC	OFC
CEILING & WALL (EXIT ENCLOSURES)	SPRINKLERED F-1: CLASS A, B OR C	TABLE 803.13	-
CEILING & WALL (CORRIDORS)	SPRINKLERED F-1: CLASS A, B OR C		
CEILING & WALL (ROOMS AND ENCL. SPACES)	SPRINKLERED F-1: CLASS A, B OR C		
FLOOR	CLASS II MATERIALS COMPLYING WITH DOC FF-1 "PILL TEST" (CPSC 16 CFR PART 1630) OR WITH ASTM D2859	§804.4	

2.9 FIRE PROTECTION SYSTEMS:		OSSC	OFC
AUTOMATIC SPRINKLER SYSTEM	REQUIRED FOR GROUP F-1 WITH FIRE AREA GREATER THAN 12,000 SF; REQUIRED PER ASHLAND FIRE & RESCUE EMAIL DATED 11-10-22 AS PART OF APPROVAL FOR FIRE APPARATUS ACCESS ROADS HAVING A GRADE THAT EXCEEDS 10 PERCENT	§903	§903
PORTABLE FIRE EXTINGUISHERS	REQUIRED; PROVIDED THROUGHOUT	-	§906
FIRE ALARM AND DETECTION	NOT REQUIRED	§907.2.4	§907.2.4
DEDICATED FUNCTION FIRE ALARM CONTROL UNIT (FACU)	DEDICATED FUNCTION PANEL, "SPRINKLER WATERFLOW AND SUPERVISORY ALARM" PER NFPA 72	§903.4	§903.4
FIRE-FLOW REQUIREMENT	1,000 GPM (@20 PSI) FOR 2 HOURS (REDUCED FROM 1,500 GPM FOR FULLY SPRINKLERED BUILDING)	-	§B105, TABLE B105.1(2), TABLE B105.2
MINIMUM NUMBER OF HYDRANTS	1 HYDRANT (SEE SITE CIVIL PLANS FOR LOCATIONS)	-	TABLE C102.1

2.10 MEANS OF EGRESS:		OSSC	OFC
ACCESSORY STORAGE AREAS, MECHANICAL EQUIPMENT ROOMS, BUSINESS AREAS	9 OCCUPANTS	§1004	-
EQUIPMENT SPACES (WTP)	2,500 SF @ 1:300 SF (GROSS) = 9		
EGRESS CAPACITY PER OCCUPANT LOAD	0.3 (STAIRS) & 0.2 (OTHER)	§1005.3	-
EXIT ACCESS - COMMON PATH	SPRINKLERED GROUP F: 100 FT	TABLE 1006.2.1	-
EXIT ACCESS - TRAVEL DISTANCE	SPRINKLERED GROUP F-1: 250 FT	TABLE 1017.2	-
MIN. EXIT DOORS	1; SEE LIFE SAFETY PLANS FOR EXITING NOTE: TWO EXITS PROVIDED	§1006	-
ACCESSIBLE MEANS OF EGRESS	NOT REQUIRED FOR GROUP F-1	§1009	-
EXIT DISCHARGE; ACCESS TO PUBLIC WAY	PUBLIC WAY	§1028.5	-

2.11 ACCESSIBILITY:		OSSC	OFC
SCOPING REQUIREMENTS	N/A, EQUIPMENT SPACES ARE EXEMPT	§1103.2.9 [2010 ADA §203.5]	-

ISSUE	DATE	DESCRIPTION
A	09/2026	ISSUED FOR BIDS

PROJECT MANAGER	PIERRE KWAN
CIVIL	J. MEGRDITCHIAN
STRUCTURAL	P. LINDBLOM
ARCHITECTURAL	V. YANEZ
PROCESS	P. KWAN
MECHANICAL	K. CHEUNG
ELECTRICAL	R. MCCOMB
INSTRUMENTATION	D. BEST
PROJECT NUMBER	10193663

REGISTERED PROFESSIONAL ENGINEER 84327PE DIGITALLY SIGNED OREGON JANUARY 12, 2024 STUART D GRAHAM
EXPIRES: 6/30/2027

CITY OF ASHLAND
Ashland, Oregon

City of Ashland
Ashland Creek
Water Treatment Plant
2026

PRETREATMENT BUILDING
FIRE PROTECTION
CODE ANALYSIS

0 1" 2"

FILENAME 10193663-AWTP-100_F.rte
SCALE NONE
SHEET 100G001

Autodesk Docs://10193663_Ashland_WTP_Final_Design_2024/10193663-AWTP-100_F.rvt
9/22/2026 9:51:19 PM

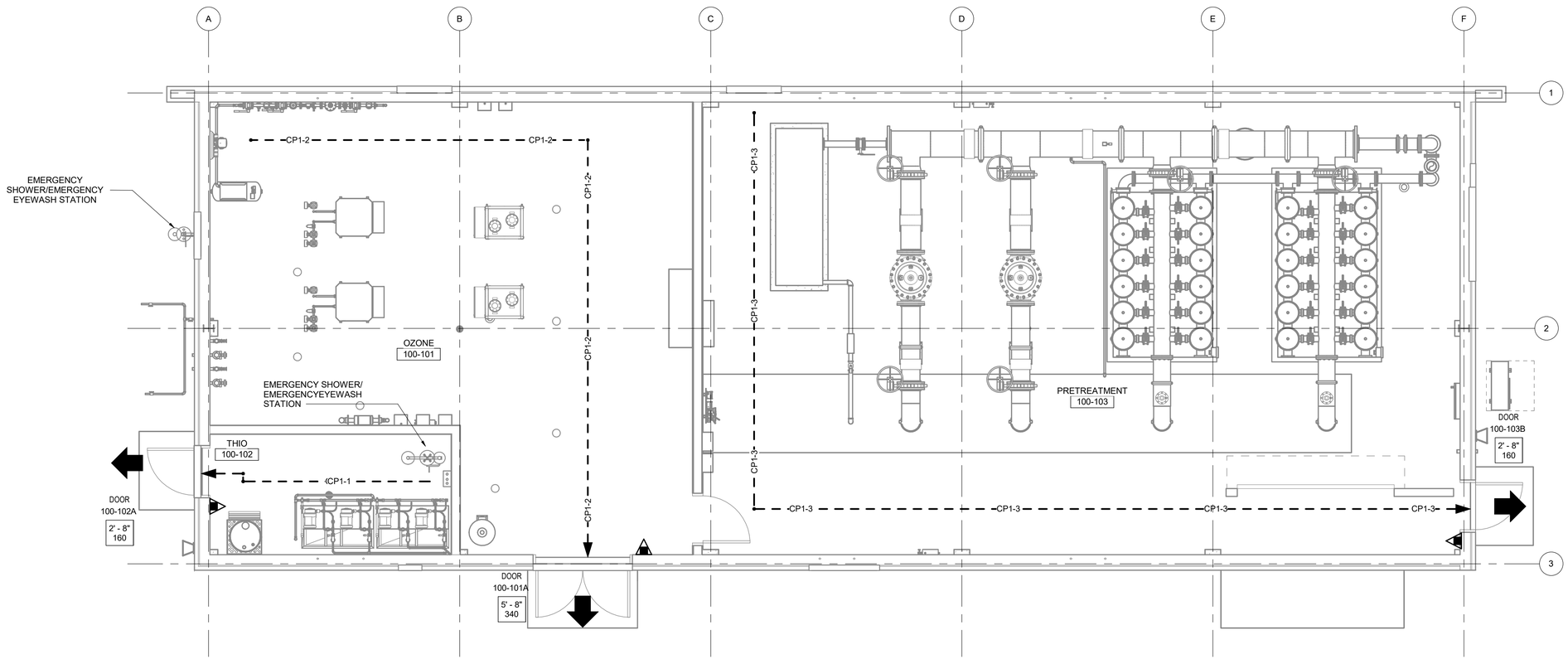

GROUND FLOOR LIFE SAFETY PLAN

1/4" = 1'-0"

LIFE SAFETY NOTES:

1. FOR EXIT LIGHTS AND EMERGENCY LIGHTING, SEE ELECTRICAL LIGHTING DRAWINGS (E SERIES).

LIFE SAFETY SYMBOLS:

EXIT DOOR TAG

A	CLEAR DOOR WIDTH [FEET - INCHES]
B	OCCUPANT LOAD CAPACITY [NO.OF PEOPLE]

OTHERS

FIRE EXTINGUISHER

LINE TYPES FOR MEANS OF EGRESS:

COMPONENT	SYMBOL
TRAVEL DISTANCE	TD
COMMON PATH	CP

EXIT DISCHARGE

EXIT DISCHARGE ARROW

MEANS OF EGRESS ARRANGEMENT DISTANCE SCHEDULE - BUILDING SUMMARY

EGRESS PATH ID	EGRESS DISTANCE	
	PROVIDED	MAXIMUM PERMITTED
CP1-1	15' - 6"	100' - 0"
CP1-2	48' - 0"	100' - 0"
CP1-3	71' - 0"	100' - 0"

MEANS OF EGRESS WIDTH CAPACITY

EXIT ID	PROVIDED EGRESS CAPACITY - LEVEL COMPONENTS & RAMPS		
	EGRESS CAPACITY FACTOR	CLEAR WIDTH	OCCUPANT LOAD CAPACITY
100-101 A	0.2	5' - 8"	340
100-102 A	0.2	2' - 8"	160
100-103 B	0.2	2' - 8"	160

ISSUE	DATE	DESCRIPTION
A	09/2026	ISSUED FOR BIDS

PROJECT MANAGER	PIERRE KWAN
CIVIL	J. MEGRDITCHIAN
STRUCTURAL	P. LINDBLOM
ARCHITECTURAL	V. YANEZ
PROCESS	P. KWAN
MECHANICAL	K. CHEUNG
ELECTRICAL	R. MCCOMB
INSTRUMENTATION	D. BEST
PROJECT NUMBER	10193663

REGISTERED PROFESSIONAL ENGINEER 84327PE DIGITALLY SIGNED OREGON JANUARY 12, 2026 STUART D GRAHAM

EXPIRES: 6/30/2027

City of Ashland

Ashland Creek Water Treatment Plant

Ashland, Oregon 2026

PRETREATMENT BUILDING FIRE PROTECTION GROUND FLOOR LIFE SAFETY PLAN

0 1" 2"

FILENAME 10193663-AWTP-100_F.rte

SCALE 1/4" = 1'-0"

SHEET 100G101

Autodesk Docs://10193663_Ashland_WTP_Final_Design_2024/10193663-AWTP-100_F.rvt
9/22/2026 9:51:23 PM

GENERAL NOTES:

1. CONTRACTOR TO CONFIRM GENERATOR PAD DIMENSIONS WITH GENERATOR MANUFACTURER DRAWINGS. ANCHOR GENERATOR TO PAD PER MANUFACTUERS INSTRUCTIONS.

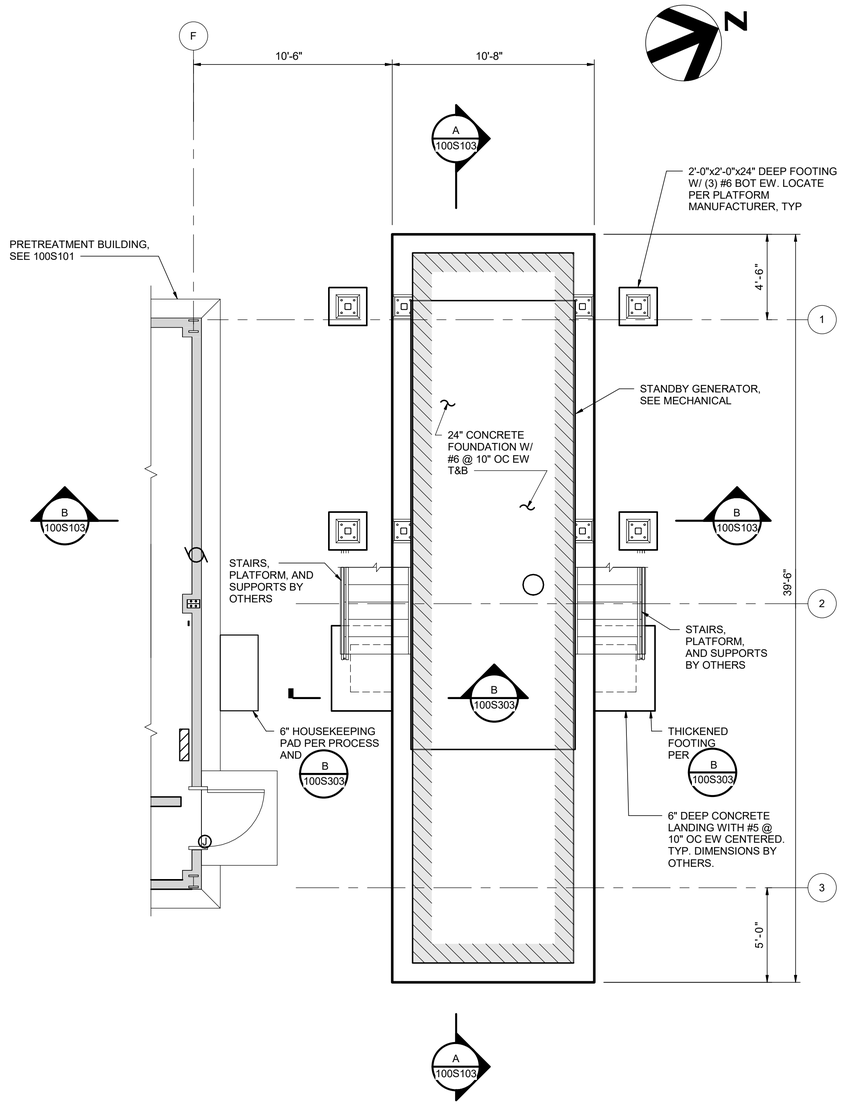

GENERATOR FOUNDATION

1/4" = 1'-0"

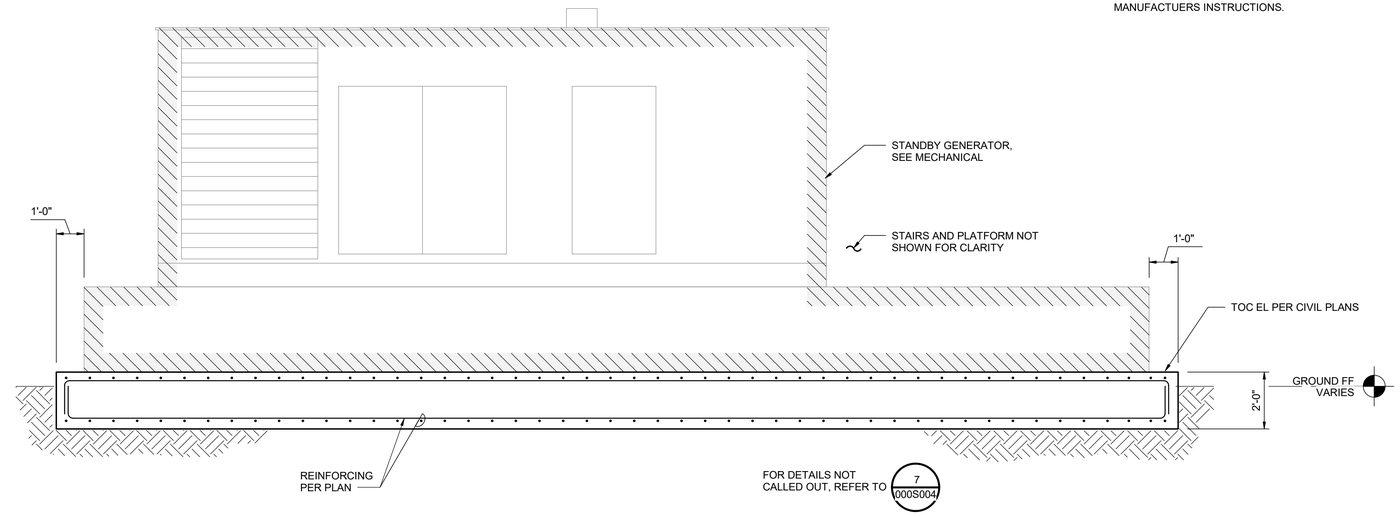

A 100S103 SECTION

3/8" = 1'-0"

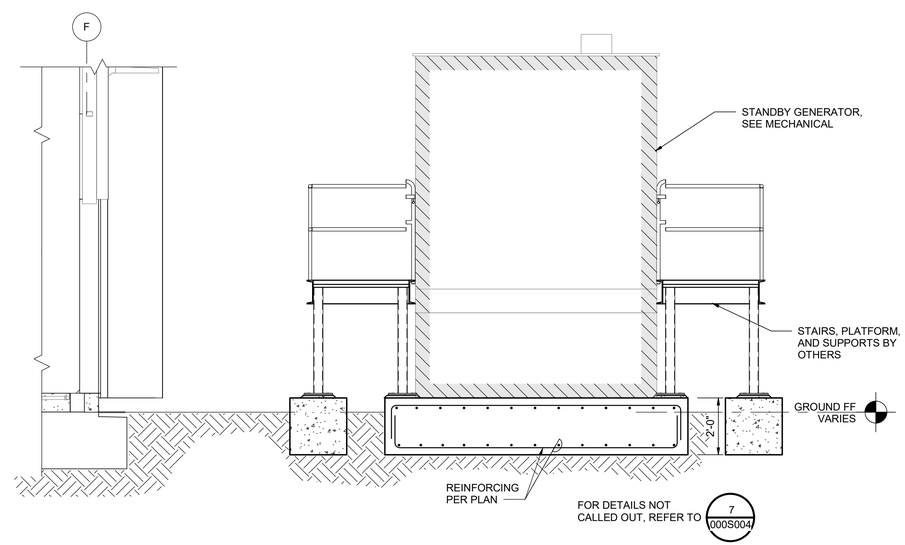

B 100S103 SECTION

3/8" = 1'-0"

Autodesk Docs://10193663_Ashland_WTP_Final_Design_2024/10193663-AWTP-100_S.rvt
9/23/2026 12:01:05 PM

ISSUE	DATE	DESCRIPTION
A	09/2026	ISSUED FOR BIDS

PROJECT MANAGER	PIERRE KWAN
CIVIL	J. MEGRDITCHIAN
STRUCTURAL	P. LINDBLOM
ARCHITECTURAL	V. YANEZ
PROCESS	P. KWAN
MECHANICAL	K. CHEUNG
ELECTRICAL	R. MCCOMB
INSTRUMENTATION	D. BEST
PROJECT NUMBER	10193663

REGISTERED PROFESSIONAL ENGINEER 93585PE DIGITALLY SIGNED OREGON MAY 8, 2018 ANDREW JACK FORTNER
EXPIRES: 12-31-2027

CITY OF ASHLAND
Ashland, Oregon

City of Ashland

Ashland Creek
Water Treatment Plant

2019

PRETREATMENT BUILDING
STRUCTURAL
GENERATOR FOUNDATION

0 1" 2"

FILENAME 10193663-AWTP-100_S.rte
SCALE As indicated

SHEET
100S103

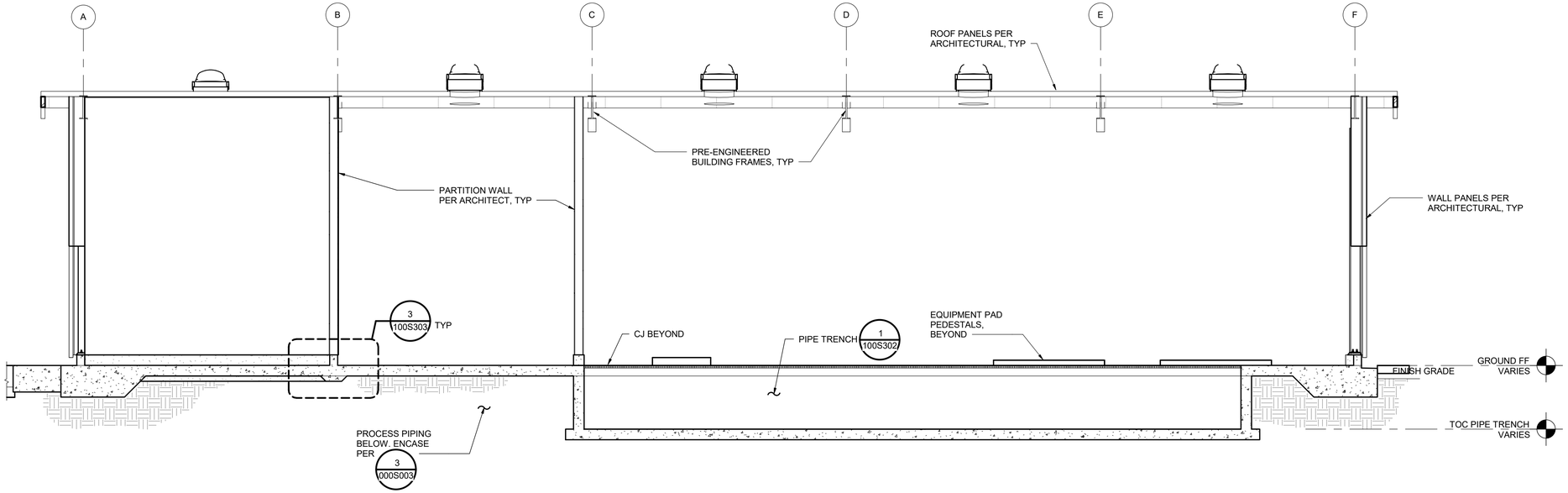

A 100S101 SECTION
1/4" = 1'-0"

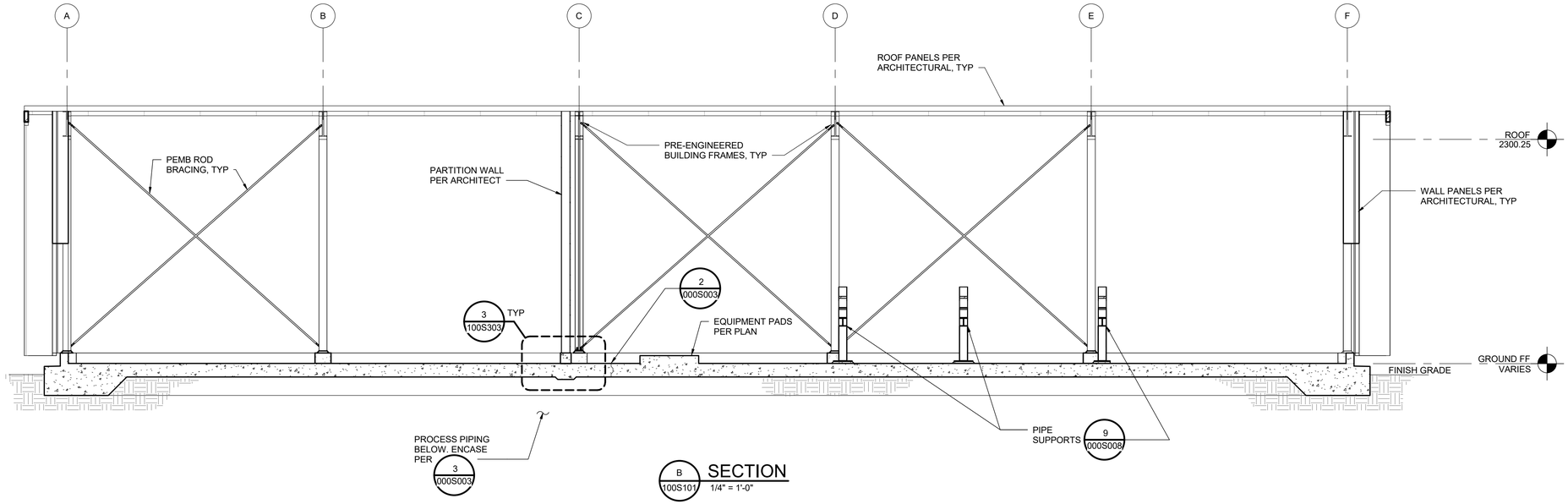

B 100S101 SECTION
1/4" = 1'-0"

Autodesk Docs://10193663_Ashland_WTP_Final_Design_2024/10193663-AWTP-100_S.rvt
9/23/2026 12:01:06 PM

ISSUE	DATE	DESCRIPTION
A	09/2026	ISSUED FOR BIDS

PROJECT MANAGER	PIERRE KWAN
CIVIL	J. MEGRDITCHIAN
STRUCTURAL	P. LINDBLOM
ARCHITECTURAL	V. YANEZ
PROCESS	P. KWAN
MECHANICAL	K. CHEUNG
ELECTRICAL	R. MCCOMB
INSTRUMENTATION	D. BEST
PROJECT NUMBER	10193663

REGISTERED PROFESSIONAL ENGINEER 93585PE DIGITALLY SIGNED OREGON MAY 8, 2018 ANDREW JACK FORTNER
EXPIRES: 12-31-2027

CITY OF ASHLAND
Ashland, Oregon

City of Ashland

Ashland Creek Water Treatment Plant

2019

PRETREATMENT BUILDING STRUCTURAL SECTIONS

0 1" 2"

FILENAME 10193663-AWTP-100_S.rte
SCALE 1/4" = 1'-0"

SHEET **100S301**

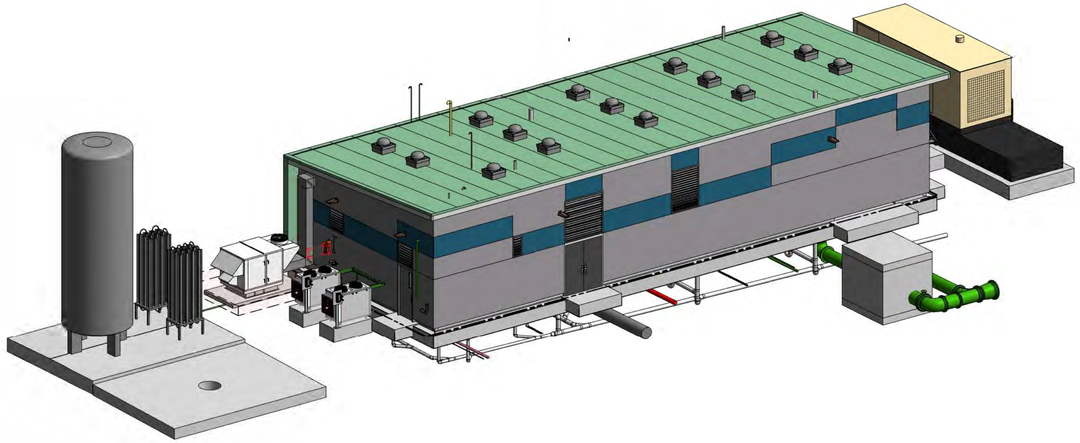

3D VIEW

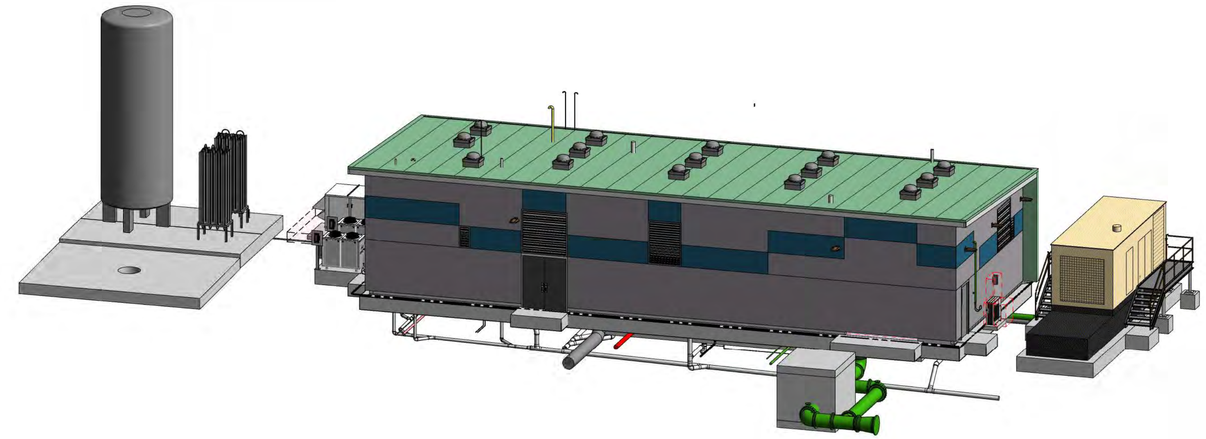

3D VIEW

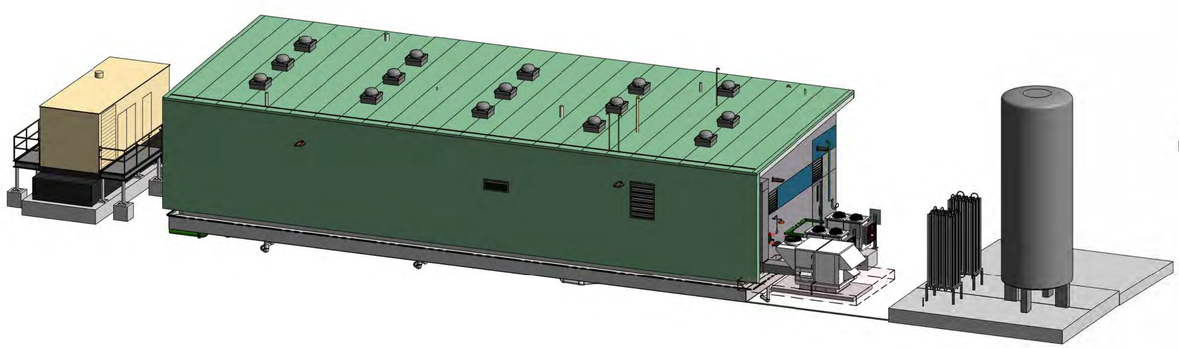

3D VIEW

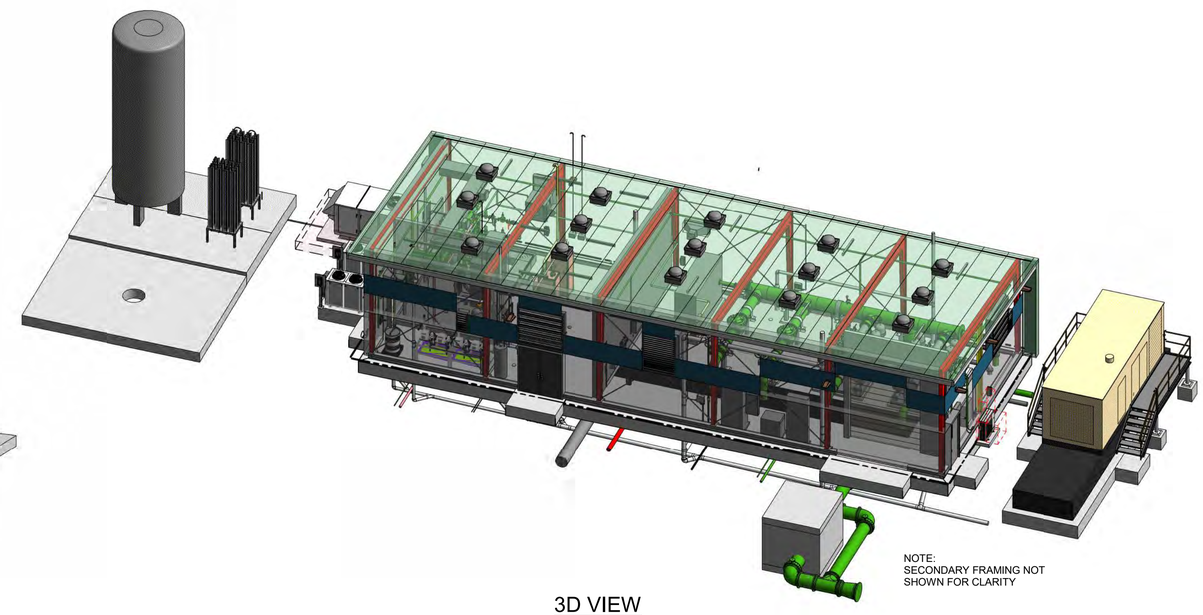

NOTE:
SECONDARY FRAMING NOT
SHOWN FOR CLARITY

3D VIEW

ISSUE	DATE	DESCRIPTION
A	09/2026	ISSUED FOR BIDS

PROJECT MANAGER	PIERRE KWAN
CIVIL	J. MEGRDITCHIAN
STRUCTURAL	P. LINDBLOM
ARCHITECTURAL	V. YANEZ
PROCESS	P. KWAN
MECHANICAL	K. CHEUNG
ELECTRICAL	R. MCCOMB
INSTRUMENTATION	D. BEST
PROJECT NUMBER	10193663

REGISTERED PROFESSIONAL ENGINEER 93585PE DIGITALLY SIGNED OREGON MAY 8, 2018 ANDREW JACK FORTNER
EXPIRES: 12-31-2027

REGISTERED PROFESSIONAL ENGINEER 108753PE DIGITALLY SIGNED OREGON JAN 13, 2026 PATRICK DANIEL LINDBLOM
EXPIRES: 12/31/2028

CITY OF ASHLAND
Ashland, Oregon

City of Ashland

Ashland Creek Water Treatment Plant

2019

PRETREATMENT BUILDING STRUCTURAL 3D VIEWS

0 1" 2"

FILENAME 10193663-AWTP-100_S.rte

SCALE

SHEET **100S901**

Autodesk Docs://10193663_Ashland_WTP_Final_Design_2024/10193663-AWTP-100_S.rvt
9/23/2026 12:01:37 PM

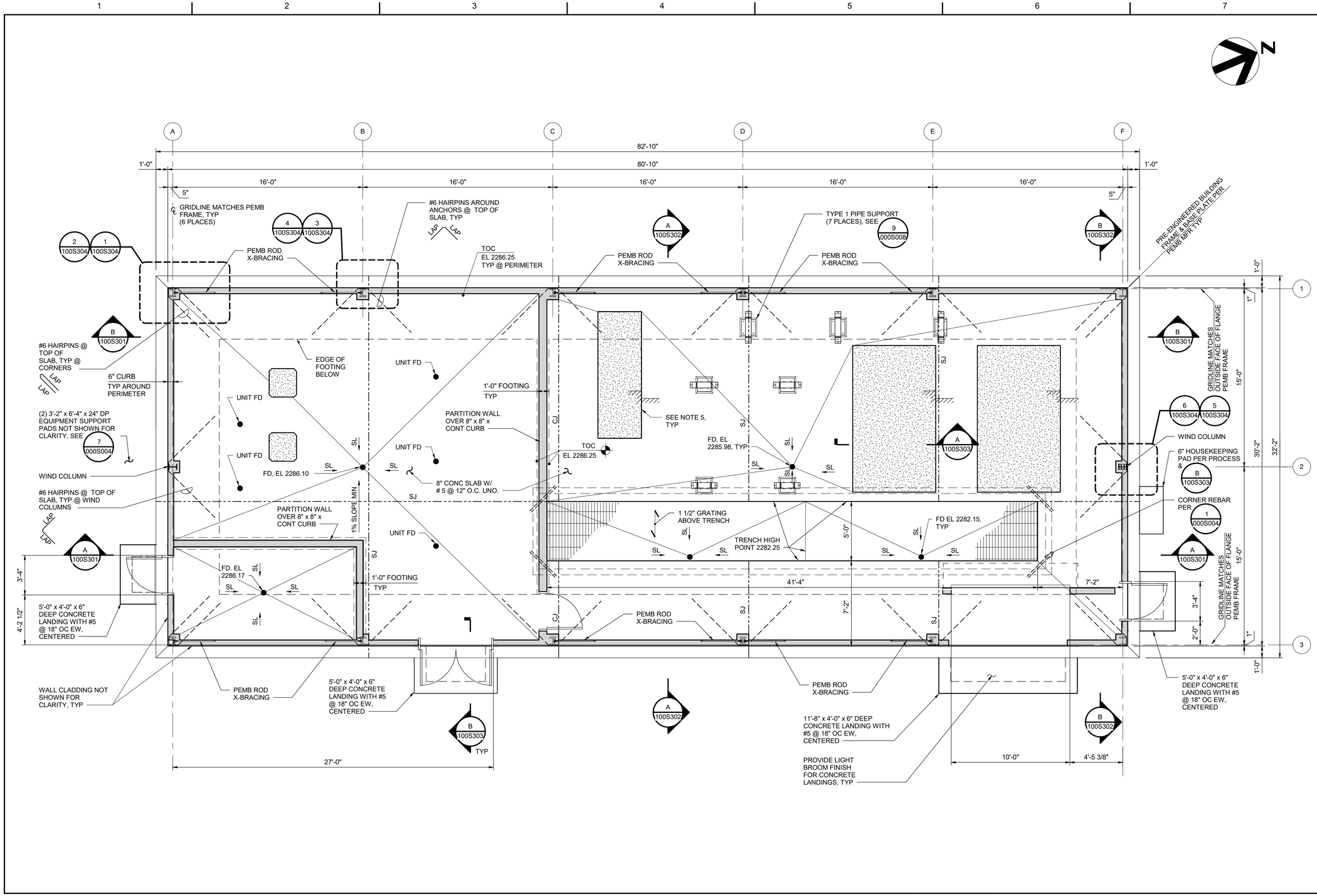

FACILITY STRUCTURAL NOTES:

1. FOR DESIGN CRITERIA AND GENERAL STRUCTURAL NOTES, SEE 000S001
2. FOR SPECIAL INSPECTION AND TESTING REQUIREMENTS SEE 000S002 AND 000S003
3. FOR STANDARD DETAILS SEE 000S003 THRU 000S009
4. ADDITIONAL DESIGN CRITERIA SPECIFIC TO THIS FACILITY:
   A. DEAD LOAD:
      1. COLLATERAL ROOF LOADING: 15 psf
   B. LIVE LOAD:
      1. FLOOR:
         a. 125 PSF
         b. 2000 LB CONCRETE
      2. ROOF:
         a. 20 PSF (NON-REDUCIBLE)
         b. 300 LB (ROOF SURFACE)
         c. 2000 LB (ON FRAME BEAMS)
   C. WIND DESIGN CRITERIA:
      1. MAXIMUM COMPONENT AND CLADDING PRESSURE: +16 PSF/-61 PSF
   D. SEISMIC DESIGN CRITERIA:
      1. BASIC SEISMIC FORCE RESISTING SYSTEM (ASSUMED):
         a. N-S: ORDINARY STEEL CONCENTRICALLY BRACED FRAMES
         b. E-W: ORDINARY STEEL MOMENT FRAMES
      2. ANALYSIS PROCEDURE: EQUIVALENT LATERAL FORCE
      3. RESPONSE MODIFICATION FACTOR, R:
         a. N-S: 3.25
         b. E-W: 3.5
      4. SEISMIC RESPONSE COEFFICIENT, C_S:
         a. N-S: 0.232
         b. E-W: 0.215
5. REFER TO ARCHITECTURAL, PROCESS, MECHANICAL AND ELECTRICAL PLANS FOR EQUIPMENT AND PENETRATION SIZE AND LOCATION. FOR EQUIPMENT PADS, REFER TO 1 000S005 / 4 000S005
   FOR OPENINGS, REFER TO 1 000S004
6. CJ INDICATES CONSTRUCTION JOINTS REFER TO 2 000S003
7. SJ INDICATES SLAB JOINT. REFER TO 4 000S004
8. PROVIDE VAPOR BARRIER DIRECTLY BELOW ALL SLAB-ON-GRADE.
9. PROVIDE PIPE ENCASEMENT PER 3 000S003 TYP

ISSUE	DATE	DESCRIPTION
A	09/2026	ISSUED FOR BIDS

PROJECT MANAGER	PIERRE KWAN
CIVIL	J. MEGRDITCHIAN
STRUCTURAL	P. LINDBLOM
ARCHITECTURAL	V. YANEZ
PROCESS	P. KWAN
MECHANICAL	K. CHEUNG
ELECTRICAL	R. MCCOMB
INSTRUMENTATION	D. BEST
PROJECT NUMBER	10193663

REGISTERED PROFESSIONAL ENGINEER 108753PE DIGITALLY SIGNED OREGON JAN 13, 2026 PATRICK DANIEL LINDBLOM

EXPIRES: 12/31/2028

CITY OF ASHLAND

Ashland, Oregon

City of Ashland

Ashland Creek Water Treatment Plant

2019

PRETREATMENT BUILDING STRUCTURAL FOUNDATION PLAN

0 1" 2"

FILENAME	10193663-AWTP-100_S.rte
SCALE	1/4"=1'-0"
SHEET	100S101

Autodesk Docs://10193663_Ashland_WTP_Final_Design_2024/10193663-AWTP-100_S.rvt
9/23/2026 12:01:03 PM

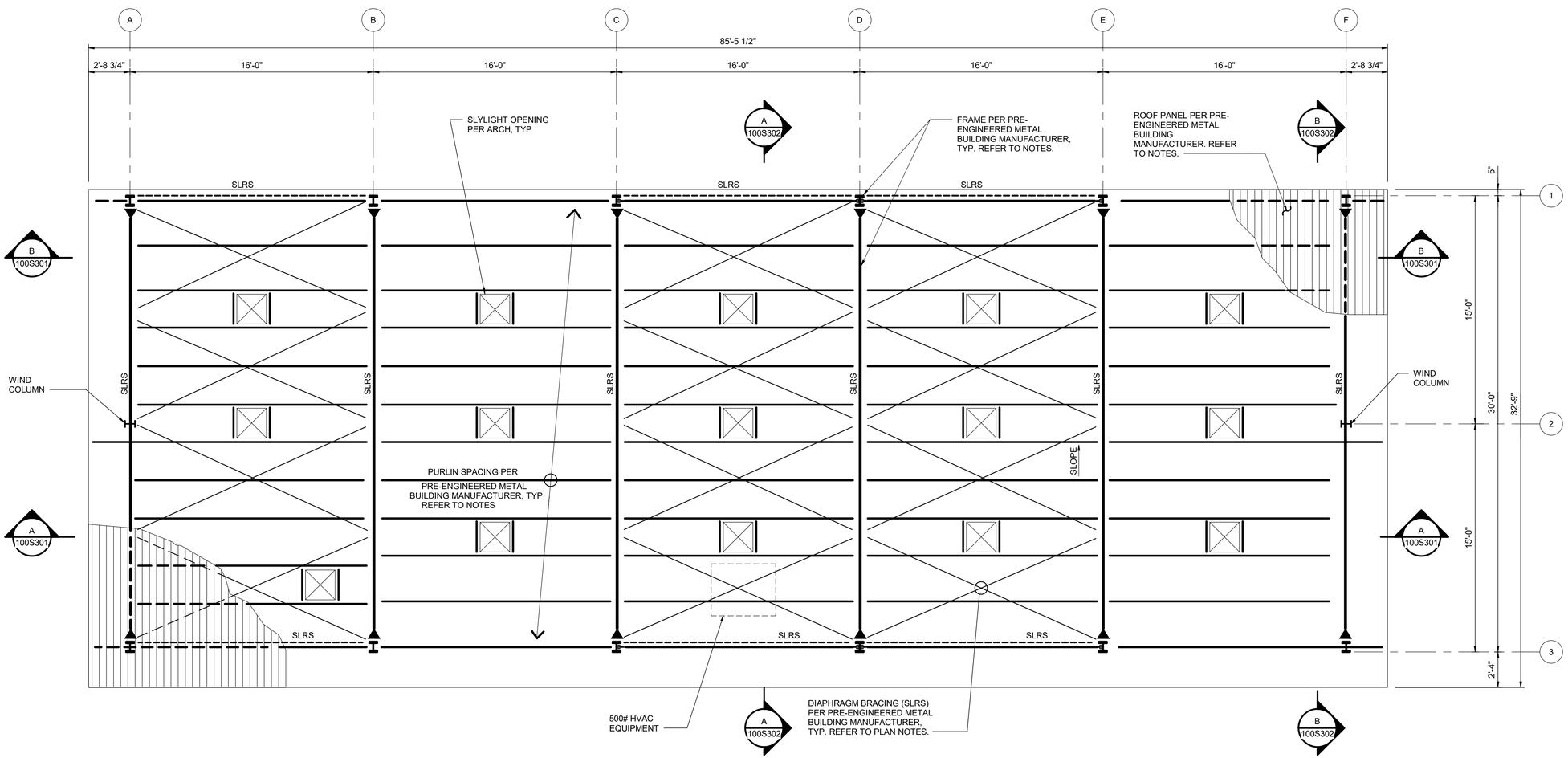

NOTES:

1. THIS PLAN SHOWS THE GENERAL LOCATION OF STRUCTURAL MEMBERS AND REPRESENTS THE ASSUMED FRAMING LAYOUT USED IN FOUNDATION DESIGN. REFER TO ARCHITECTURAL, PROCESS, MECHANICAL AND ELECTRICAL PLANS FOR ADDITIONAL INFORMATION.
2. BUILDING STRUCTURE SHALL BE DESIGNED BY PRE-ENGINEERED METAL BUILDING MANUFACTURER.
3. LOCATION, DIMENSIONS AND MATERIALS SHALL BE PROVIDED BY PRE-ENGINEERED METAL BUILDING MANUFACTURER PER SPECIFICATIONS SECTION 13 34 19.
4. THE SEISMIC LOAD RESISTING SYSTEM (SLRS) IS DENOTED ON THE FRAMING PLANS AND FRAME ELEVATIONS. THE SLRS DESIGNATION INCLUDES THE MEMBER AND CONNECTIONS AT EACH END. FRAMES ARE DENOTED AS FOLLOWS:

   A. MOMENT FRAME: (SLRS)

   B: BRACED FRAME: (SLRS)

   FOR SLRS SYSTEMS OR PARTS OF SYSTEMS THAT ARE NOT INCLUDED IN FRAMES, (SLRS) IS PLACED NEXT TO THE BEAM SIZE ON THE FRAMING PLAN (eg: ON A COLLECTOR ELEMENT (DRAG STRUT): MEMBER DESIGNATION (SLRS)
5. ALL SHOP DRAWINGS SHALL BE REVIEWED AND APPROVED BY OWNER AND ENGINEER PRIOR TO PURCHASE.
6. PROVIDE MISCELLANEOUS STEEL BETWEEN PURLINS TO SUPPORT ROOF SAFETY ANCHORS. REFER TO ARCHITECTURAL DRAWINGS.

ISSUE	DATE	DESCRIPTION
A	09/2026	ISSUED FOR BIDS

PROJECT MANAGER	PIERRE KWAN
CIVIL	J. MEGRDITCHIAN
STRUCTURAL	P. LINDBLOM
ARCHITECTURAL	V. YANEZ
PROCESS	P. KWAN
MECHANICAL	K. CHEUNG
ELECTRICAL	R. MCCOMB
INSTRUMENTATION	D. BEST
PROJECT NUMBER	10193663

REGISTERED PROFESSIONAL ENGINEER 108753PE DIGITALLY SIGNED OREGON JAN 13, 2026 PATRICK DANIEL LINDBLOM

EXPIRES: 12/31/2028

CITY OF ASHLAND

Ashland, Oregon

City of Ashland

Ashland Creek Water Treatment Plant

2019

PRETREATMENT BUILDING STRUCTURAL CONCEPTUAL ROOF FRAMING PLAN

0 1" 2"

FILENAME 10193663-AWTP-100_S.rte

SCALE As indicated

SHEET 100S102

Autodesk Docs://10193663_Ashland_WTP_Final_Design_2024/10193663-AWTP-100_S.rvt
9/23/2026 12:01:04 PM

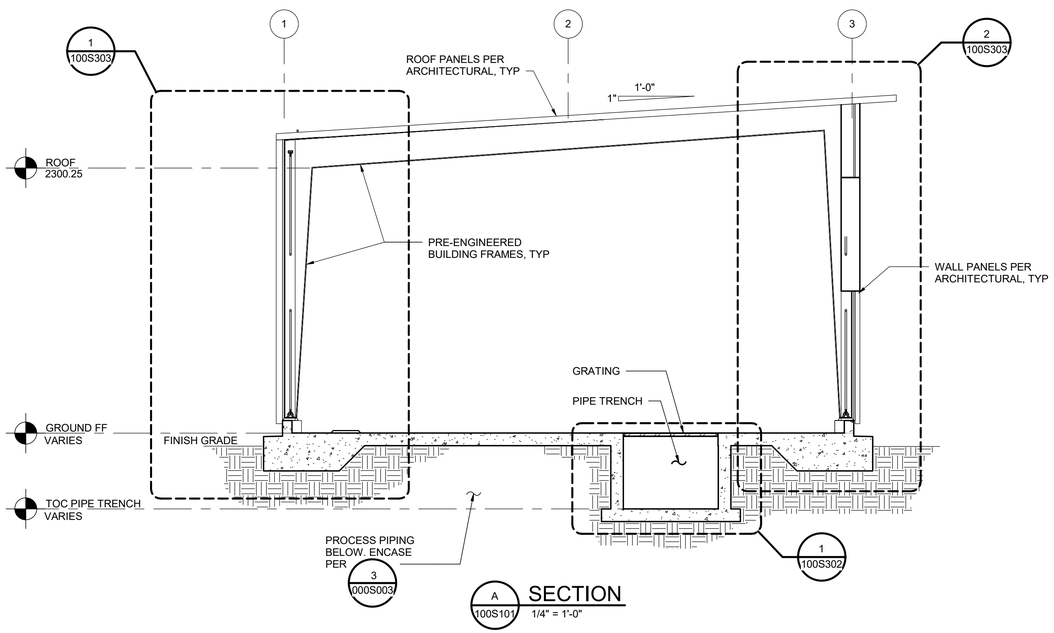

A 100S101 SECTION
1/4" = 1'-0"

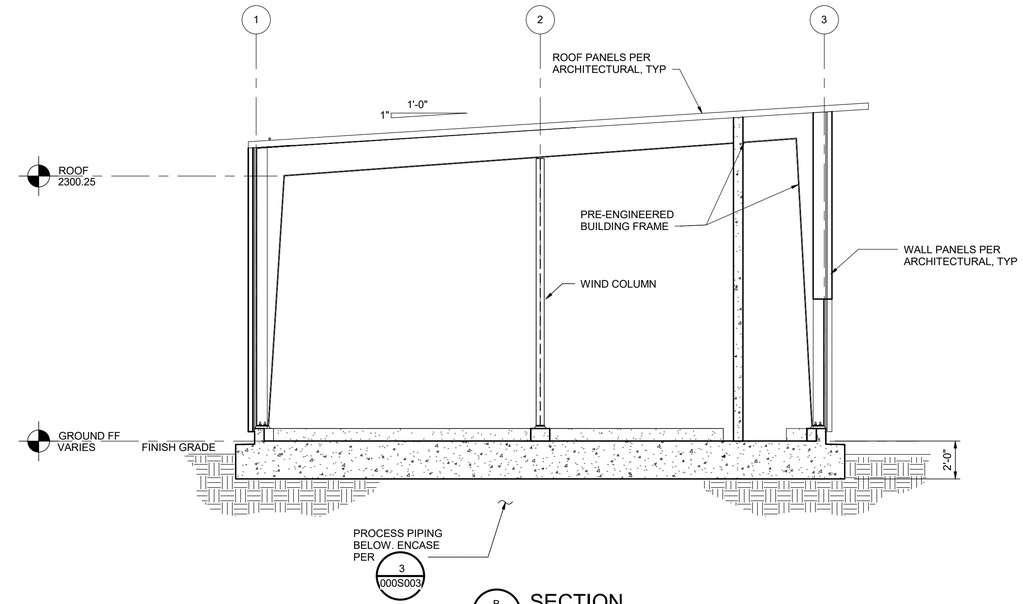

B 100S101 SECTION
1/4" = 1'-0"

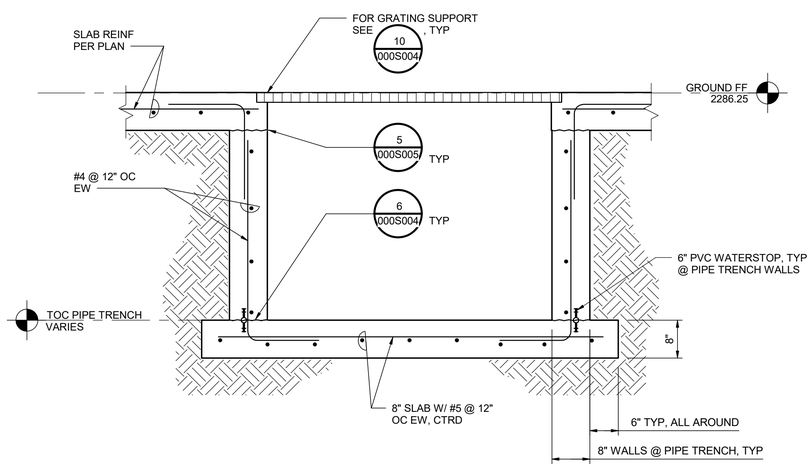

1 100S302 DETAIL
3/4" = 1'-0"

ISSUE	DATE	DESCRIPTION
A	09/2026	ISSUED FOR BIDS

PROJECT MANAGER	PIERRE KWAN
CIVIL	J. MEGRDITCHIAN
STRUCTURAL	P. LINDBLOM
ARCHITECTURAL	V. YANEZ
PROCESS	P. KWAN
MECHANICAL	K. CHEUNG
ELECTRICAL	R. MCCOMB
INSTRUMENTATION	D. BEST
PROJECT NUMBER	10193663

REGISTERED PROFESSIONAL ENGINEER
108753PE
DIGITALLY SIGNED
OREGON
JAN 13, 2026
PATRICK DANIEL LINDBLOM
EXPIRES: 12/31/2028

CITY OF ASHLAND
Ashland, Oregon

City of Ashland

Ashland Creek Water Treatment Plant

2019

PRETREATMENT BUILDING STRUCTURAL SECTIONS

0 1" 2"

FILENAME 10193663-AWTP-100_S.rte
SCALE As indicated

SHEET **100S302**

Autodesk Docs://10193663_Ashland_WTP_Final_Design_2024/10193663-AWTP-100_S.rvt
9/23/2026 12:01:07 PM

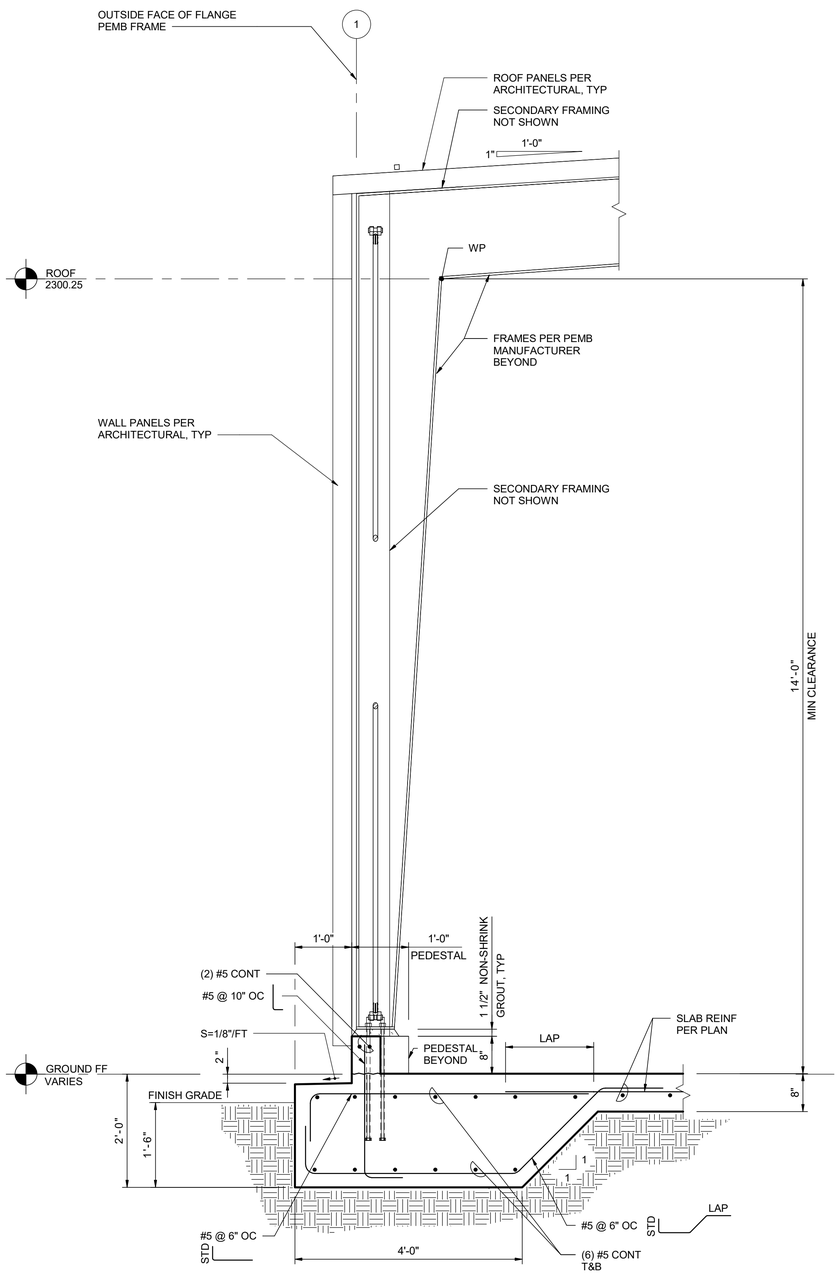

1 100S302 DETAIL
3/4" = 1'-0"

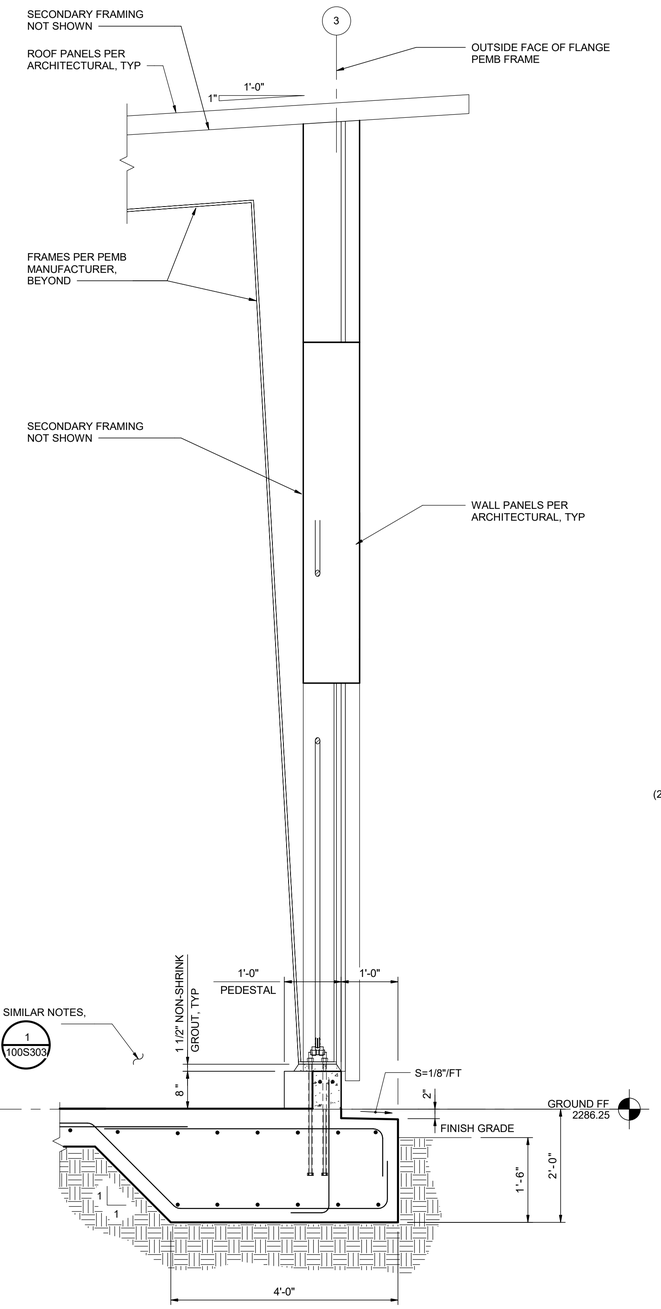

2 100S302 DETAIL
3/4" = 1'-0"

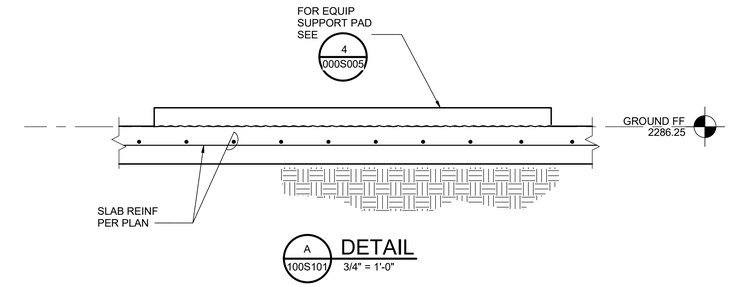

A 100S101 DETAIL
3/4" = 1'-0"

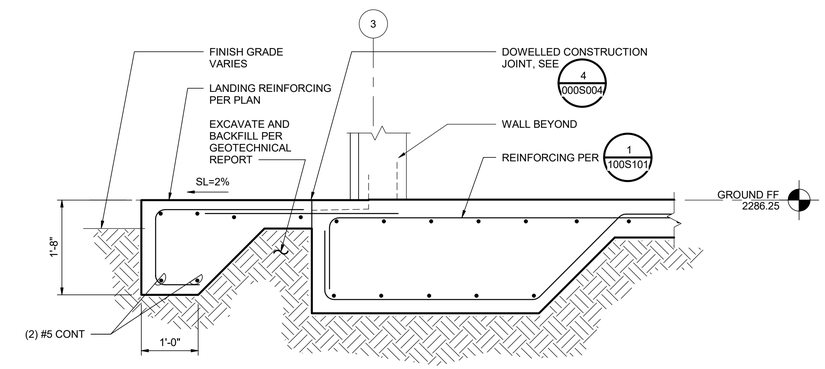

B 100S101 DOOR LANDING SECTION
3/4" = 1'-0"

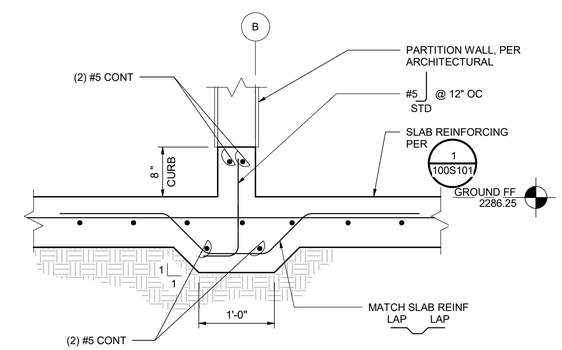

3 100S301 DETAIL
1" = 1'-0"

ISSUE	DATE	DESCRIPTION
A	09/2026	ISSUED FOR BIDS

PROJECT MANAGER	PIERRE KWAN
CIVIL	J. MEGRDITCHIAN
STRUCTURAL	P. LINDBLOM
ARCHITECTURAL	V. YANEZ
PROCESS	P. KWAN
MECHANICAL	K. CHEUNG
ELECTRICAL	R. MCCOMB
INSTRUMENTATION	D. BEST
PROJECT NUMBER	10193663

REGISTERED PROFESSIONAL ENGINEER
108753PE
DIGITALLY SIGNED
OREGON
JAN 13, 2026
PATRICK DANIEL LINDBLOM
EXPIRES: 12/31/2028

CITY OF ASHLAND
Ashland, Oregon

City of Ashland

Ashland Creek Water Treatment Plant

2019

PRETREATMENT BUILDING STRUCTURAL SECTIONS AND DETAILS

0 1" 2"

FILENAME 10193663-AWTP-100_S.rte
SCALE As indicated

SHEET **100S303**

Autodesk Docs://10193663_Ashland_WTP_Final_Design_2024/10193663-AWTP-100_S.rvt
9/23/2026 12:01:08 PM

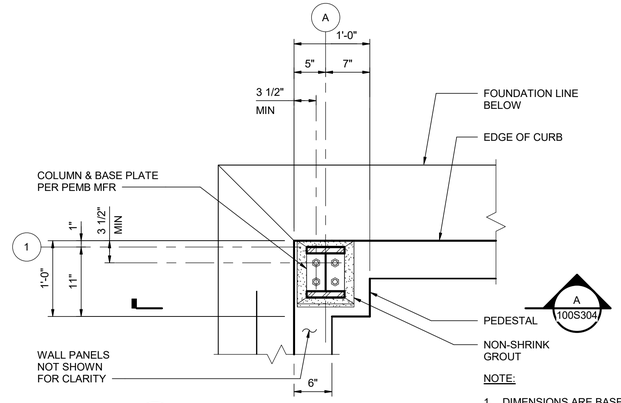

NOTE:

1. DIMENSIONS ARE BASED ON ASSUMED PEMB DIMENSIONS AND ARE SUBJECT TO CHANGE DURING CONSTRUCTION.

1 / 100S101 CORNER BASE PLATE PLAN

1" = 1'-0"

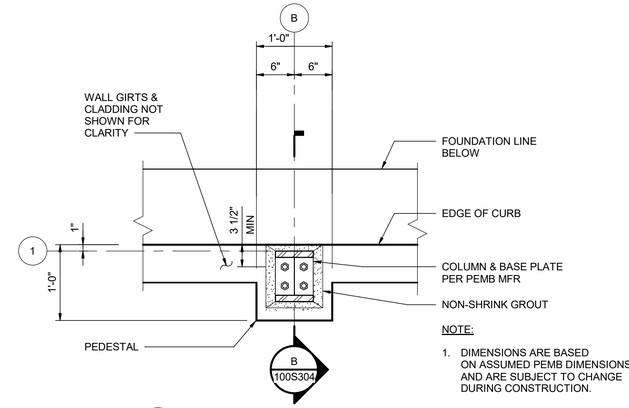

NOTE:

1. DIMENSIONS ARE BASED ON ASSUMED PEMB DIMENSIONS AND ARE SUBJECT TO CHANGE DURING CONSTRUCTION.

3 / 100S101 SIDE BASE PLATE PLAN

1" = 1'-0"

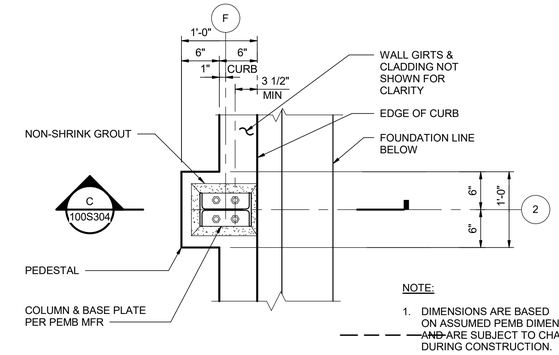

NOTE:

1. DIMENSIONS ARE BASED ON ASSUMED PEMB DIMENSIONS AND ARE SUBJECT TO CHANGE DURING CONSTRUCTION.

5 / 100S101 WIND COLUMN BASE PLATE PLAN

1" = 1'-0"

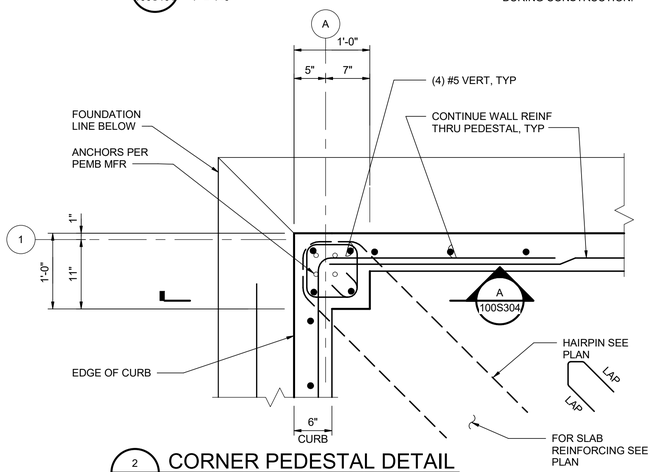

2 / 100S101 CORNER PEDESTAL DETAIL

1" = 1'-0"

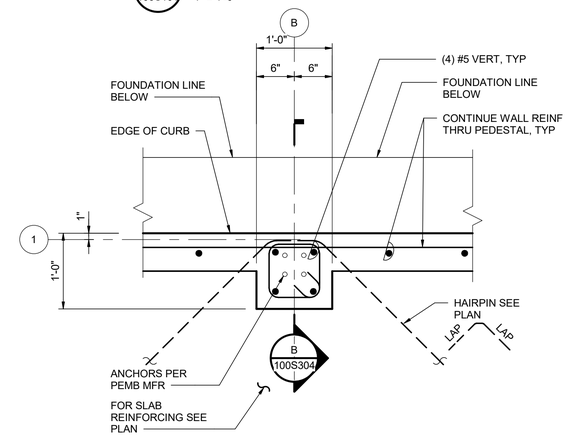

4 / 100S101 SIDE PEDESTAL DETAIL

1" = 1'-0"

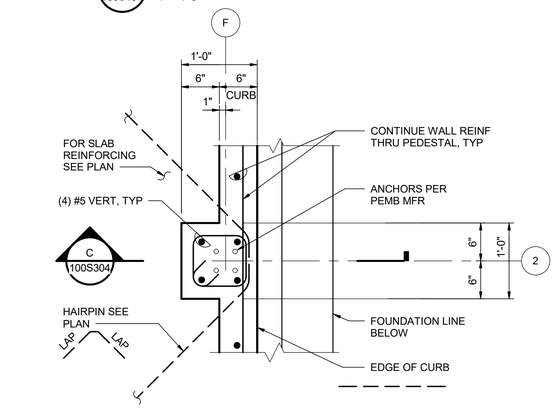

6 / 100S101 WIND COLUMN PEDESTAL DETAIL

1" = 1'-0"

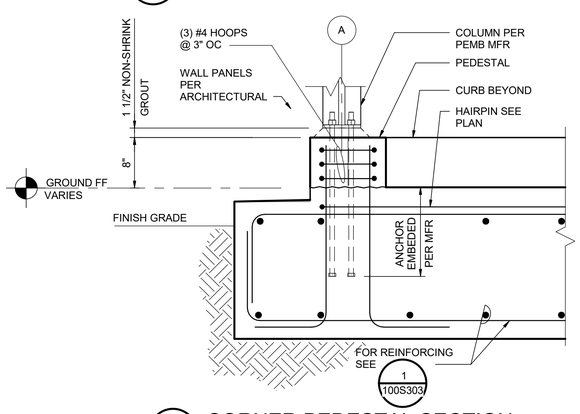

A / 100S304 CORNER PEDESTAL SECTION

1" = 1'-0"

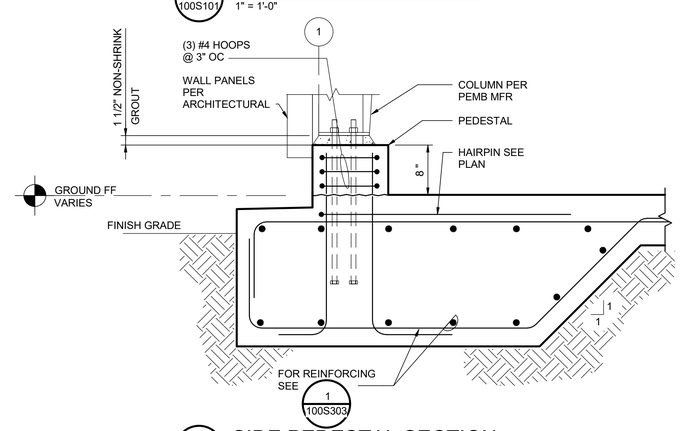

B / 100S304 SIDE PEDESTAL SECTION

1" = 1'-0"

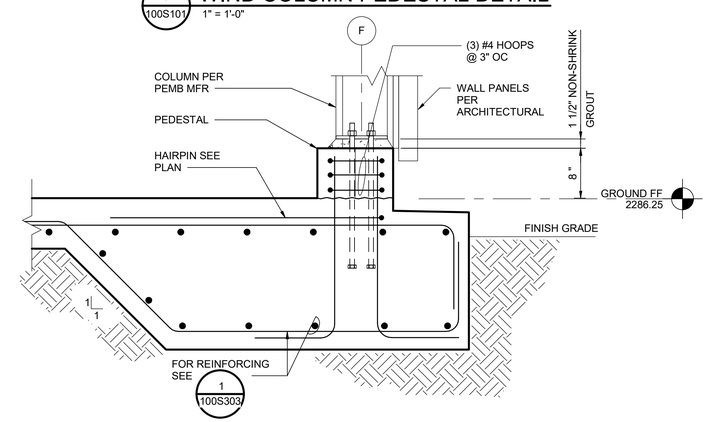

C / 100S304 WIND COLUMN PEDESTAL SECTION

1" = 1'-0"

Autodesk Docs://10193663_Ashland_WTP_Final_Design_2024/10193663-AWTP-100_S.rvt
9/23/2026 12:01:10 PM

ISSUE	DATE	DESCRIPTION
A	09/2026	ISSUED FOR BIDS

PROJECT MANAGER	PIERRE KWAN
CIVIL	J. MEGRDITCHIAN
STRUCTURAL	P. LINDBLOM
ARCHITECTURAL	V. YANEZ
PROCESS	P. KWAN
MECHANICAL	K. CHEUNG
ELECTRICAL	R. MCCOMB
INSTRUMENTATION	D. BEST
PROJECT NUMBER	10193663

REGISTERED PROFESSIONAL ENGINEER
108753PE
DIGITALLY SIGNED
OREGON
JAN 13, 2026
PATRICK DANIEL LINDBLOM
EXPIRES: 12/31/2028

CITY OF ASHLAND
Ashland, Oregon

City of Ashland

Ashland Creek Water Treatment Plant

2019

PRETREATMENT BUILDING STRUCTURAL SECTIONS AND DETAILS

0 1" 2"

FILENAME	10193663-AWTP-100_S.rte
SCALE	1" = 1'-0"
SHEET	100S304

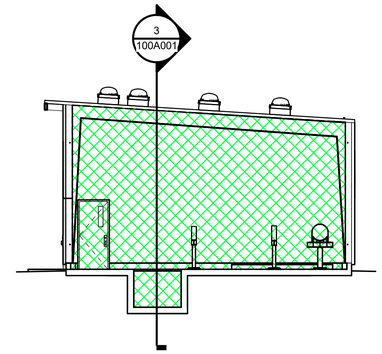

AIR BARRIER CROSS SECTION
1/8" = 1'-0"

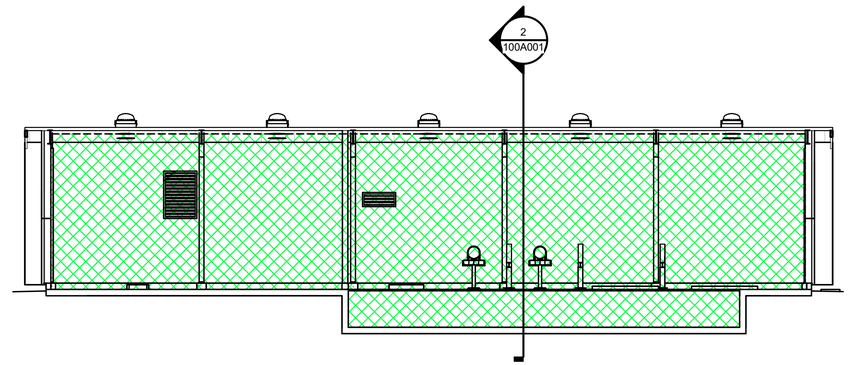

AIR BARRIER LONGITUDINAL SECTION
1/8" = 1'-0"

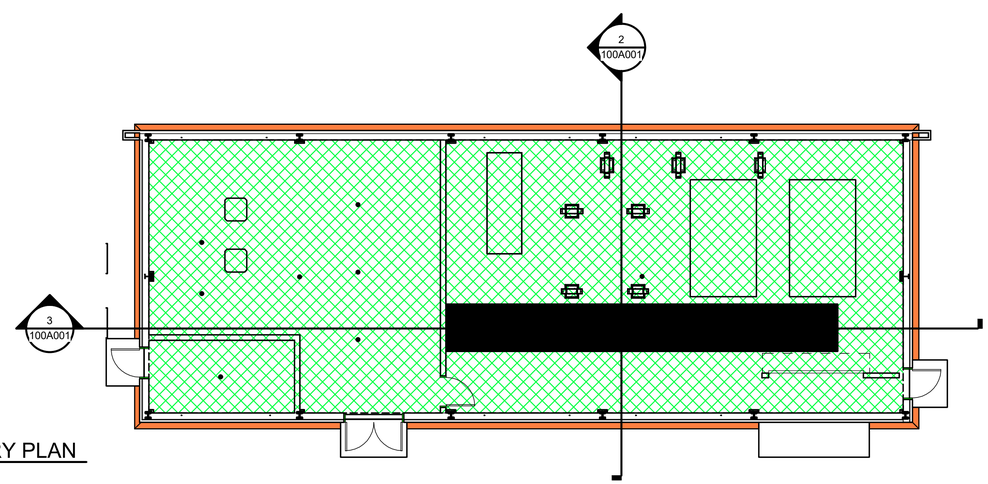

AIR BARRIER BOUNDRY PLAN
1/8" = 1'-0"

GENERAL NOTES

1. DEFINITIONS OF TERMS ARE FROM ANSI/ ASHRAE/ IESNA STANDARD 90.1-2019.
2. U-VALUES AND R-VALUES ARE FROM U.S. ARMY CORPS OF ENGINEERS, ERDC-CERL. ENERGY BRANCH, AND BASED ON ANSI/ ASHRAE/ IESNA STANDARD 90.1-2019, NORMATIVE APPENDIX A.
3. A CONTINUOUS PLANE OF AIR-TIGHTNESS MUST BE TRACED THROUGHOUT THE BUILDING ENVELOPE WITH ALL MOVING JOINTS MADE FLEXIBLE AND SEALED.
4. CONTRACTOR CAN INSTALL WHAT IT CONSIDERS TO BE BETTERMENT IN EACH SYSTEM.
5. THE SYSTEM NOT SPECIFIED SHALL BE INSTALLED BY MANUFACTURER'S INSTRUCTION AND SPECIFICATIONS.
6. UNIT OF R-VALUES INDICATED IS AS FOLLOWS:

   R-US VALUE (SI VALUE)
   US UNIT: H.SFT .F/BTU
7. THE EXTERIOR ENVELOPE AREA MUST BE PROVIDED INSPECTION & TEST FOR CONDITIONED SPACE: TOTAL AIR BARRIER AREA : 22,768 SF

BUILDING ENVELOPE REQUIREMENTS

ITEM	COMPONENTS	CONDITIONED			REMARKS
		ASSEMBLY MAX.	INSULATION MIN. R-VALUE	DESIGNGED R-VALUE	
ROOF	STEEL FRAMED	U-0.021	R-49	R-49	
WALLS	MASS WALL	U-0.090	R-11.4	R-16	
METAL DOORS	SWING	U-0.370	N/A	R-4	
GLAZING	METAL FRAMED	U-0.36	R-2.77	R-2.77	
INFILT - RATION	H.SF.F/BTU	U-0.45	N/A	N/A	

ITEM	COMPONENTS	UNCONDITIONED			REMARKS
		ASSEMBLY MAX.	INSULATION MIN. R-VALUE	DESIGNGED R-VALUE	
ROOF	STEEL FRAMED	N/A	N/A	N/A	
WALLS	MASS WALL	N/A	N/A	N/A	
INFILT - RATION	H.SF.F/BTU	N/A	N/A	N/A	

AIR BARRIER

1. THE AIR BARRIER SHALL BE CONTINUOS AROUND THE ENTIRE BUILDING ENVELOPE.
2. THE AIR BARRIER SHALL BE INSTALLED HEREIN TO BRIDGE AND SEAL THE FOLLOWING AIR LEAKAGE PATHWAYS AND GAPS:
   - CONNECTIONS OF THE WALLS TO THE ROOF AIR BARRIER
   - CONNECTIONS OF THE WALLS TO THE FOUNDATIONS
   - SEISMIC AND EXPANSION JOINTS
   - OPENINGS AND PENETRATIONS OF WINDOW AND DOOR FRAMES
   - PIPING, CONDUIT, DUCT AND SIMILAR PENETRATIONS
   - SCREWS, BOLTS, EXP. BOLTS OF EXTERIOR GRANITE SUPPORTS, AND SIMILAR PENETRATIONS
3. THE AIR BARRIER MATERIALS MUST HAVE AN AIR PERMEANCE NOT TO EXCEED 0.004cfm/sf @0.3" wg (0.02L/SM @75Pa) WHEN TESTED IN ACCORDANCE WITH ASTM E2178.
4. THE AIR BARRIER MATERIAL OF EACH ASEMBLY SHALL BE JOINED AND SEALED IN A FLEXIBLE MANNER TO THE AIR BARRIER MATERIAL OF ADJACENT ASSEMBLIES, ALLOWING FOR THE RELATIVE MOVEMENT OF THESE ASSEMBLES AND COMPONENTS.
5. THE AIR BARRIER MUST BE SUPPORTED SO AS TO WITHSTAND THE MAXIMUM POSITIVE AND NEGATIVE AIR PRESSURE TO BE PLACED ON THE BUILDING WITHOUT DISPLACEMENT, OR DAMAGE, AND TRANSFER THE LOAD TO THE STRUCTURE.
6. PENETRATIONS OF THE AIR BARRIER MUST BE SEALED.
7. THE AIR BARRIER MUST BE DURABLE TO LAST THE ANTICIPATED SERVICE LIFE OF THE ASSEMBLY.
8. FIXED OPEN LOUVERS MUST BE PROVIDED WITH A MOTORIZED DAMPER IN THE CLOSED POSITION.

INSULATION

1. INSTALL WITH END JOINTS STAGGERED TO AVOID HAVING INSULATION JOINTS COINCIDING WITH JOINTS IN DECK. IN MULTI-LAYER INSTALLATIONS, STAGGER JOINTS IN TOP AND BOTTOM LAYER.
2. USE LTTR (LONG TERM THERMAL RESISTANCE PREDICTED) VALUES IN ACCORDANCE WITH CAN/ULC-S770 AND ASTM C 1289 FOR POLYISO AND OTHERS.
3. LENGTH OF PERIMETER INSULATION SHALL BE EXCEED 47 INCHES AT EXTERIOR WALLS.

DOORS AND WINDOWS

1. ALL EXTERIOR DOORS AND WINDOWS SHALL COMPLY WITH BOTH AT/FP REQUIREMENTS AS SCHEDULED AND THERMAL PERFORMACE WITH AIR TIGHTNESS SEALANT AT GAPS FOR AIR BARRIER REQUIREMENT.

LEGEND

EXTERIOR ENVELOPE (INSPECTION & TESTING)

CONDITIONED SPACE

ISSUE	DATE	DESCRIPTION
A	09/2026	ISSUED FOR BIDS

PROJECT MANAGER	PIERRE KWAN
CIVIL	J. MEGRDITCHIAN
STRUCTURAL	P. LINDBLOM
ARCHITECTURAL	V. YANEZ
PROCESS	P. KWAN
MECHANICAL	K. CHEUNG
ELECTRICAL	R. MCCOMB
INSTRUMENTATION	D. BEST
PROJECT NUMBER	10193663

REGISTERED ARCHITECT
VICTOR H. YANEZ
DIGITALLY SIGNED
FOLSOM, CA
ARI-15755
STATE OF OREGON

CITY OF ASHLAND
Ashland, Oregon

City of Ashland

Ashland Creek Water Treatment Plant

2019

PRETREATMENT BUILDING ARCHITECTURAL AIR BARRIER

0 1" 2"

FILENAME 10193663-AWTP-100_S.rte
SCALE As indicated
SHEET **100A001**

Autodesk Docs://10193663_Ashland_WTP_Final_Design_2024/10193663-AWTP-100_S.rvt
9/22/2026 9:57:23 PM

GENERAL NOTES:

1. SEE MECHANICAL DRAWING FOR LOCATION OF EQUIPMENT, FIXTURES.
2. SEE ELECTRICAL DRAWING FOR LOCATION OF EQUIPMENT, FIXTURES.
3. SEE TELECOM DRAWING FOR LOCATION OF EQUIPMENT, FIXTURES.
4. SEE ROOM FINISH SCHEDULE FOR MATERIALS AND FINISHES.

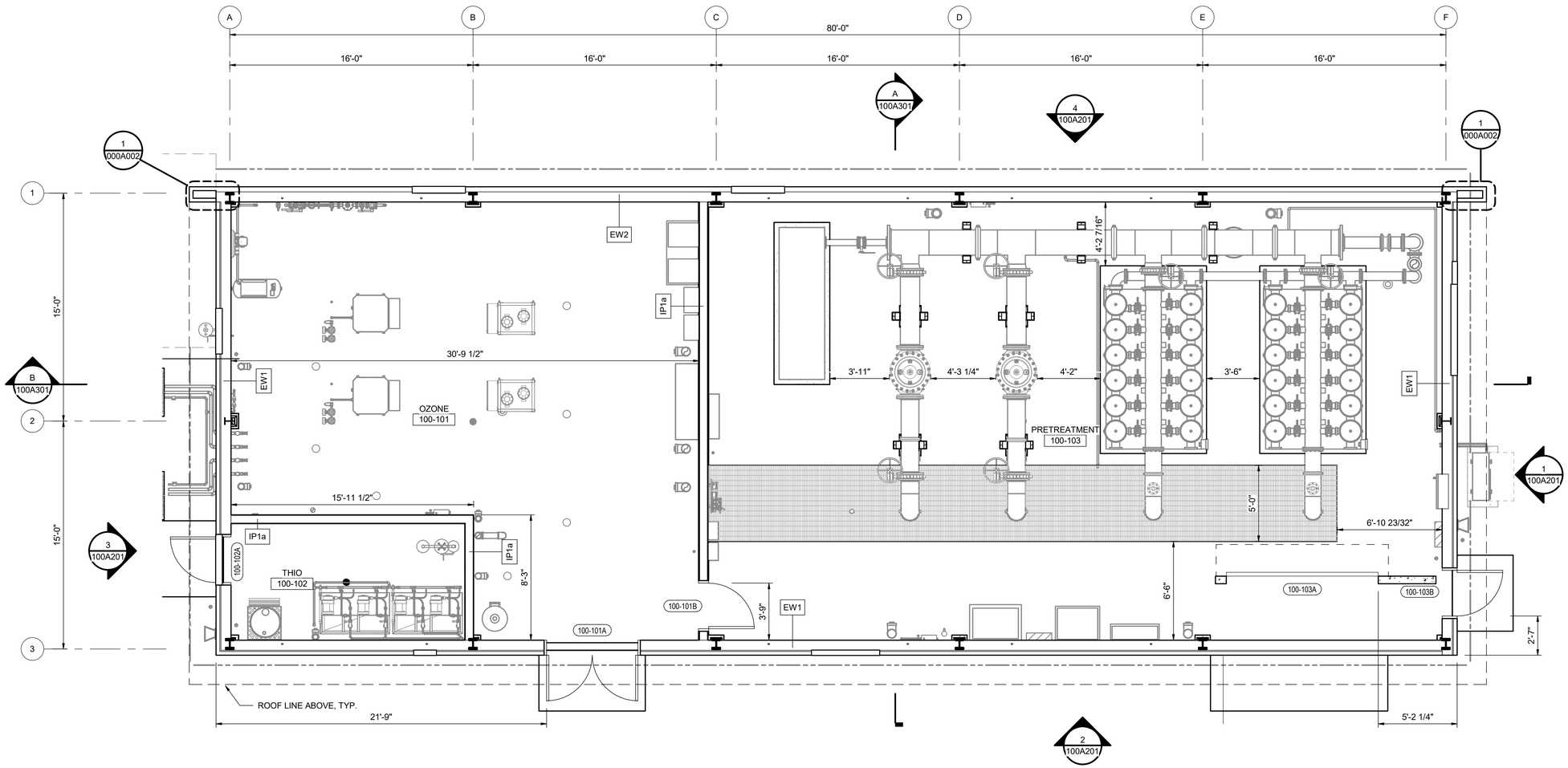

GROUND FLOOR PLAN

1/4" = 1'-0"

ISSUE	DATE	DESCRIPTION
A	09/2026	ISSUED FOR BIDS

PROJECT MANAGER	PIERRE KWAN
CIVIL	J. MEGRDITCHIAN
STRUCTURAL	P. LINDBLOM
ARCHITECTURAL	V. YANEZ
PROCESS	P. KWAN
MECHANICAL	K. CHEUNG
ELECTRICAL	R. MCCOMB
INSTRUMENTATION	D. BEST
PROJECT NUMBER	10193663

REGISTERED ARCHITECT
VICTOR H. YANEZ
DIGITALLY SIGNED
FOLSOM, CA
ARI-15755
STATE OF OREGON

CITY OF ASHLAND
Ashland, Oregon

City of Ashland

Ashland Creek Water Treatment Plant

2019

PRETREATMENT BUILDING ARCHITECTURAL GROUND FLOOR PLAN

0 1" 2"

FILENAME	10193663-AWTP-100_S.rte
SCALE	As indicated

SHEET **100A101**

Autodesk Docs://10193663_Ashland_WTP_Final_Design_2024/10193663-AWTP-100_S.rvt
9/22/2026 9:57:29 PM

GENERAL NOTES:

1. SEE MECHANICAL DRAWING FOR LOCATION OF EQUIPMENT, FIXTURES.
2. SEE ELECTRICAL DRAWING FOR LOCATION OF EQUIPMENT, FIXTURES.
3. SEE TELECOM DRAWING FOR LOCATION OF EQUIPMENT, FIXTURES.
4. SEE ROOM FINISH SCHEDULE FOR MATERIALS AND FINISHES.

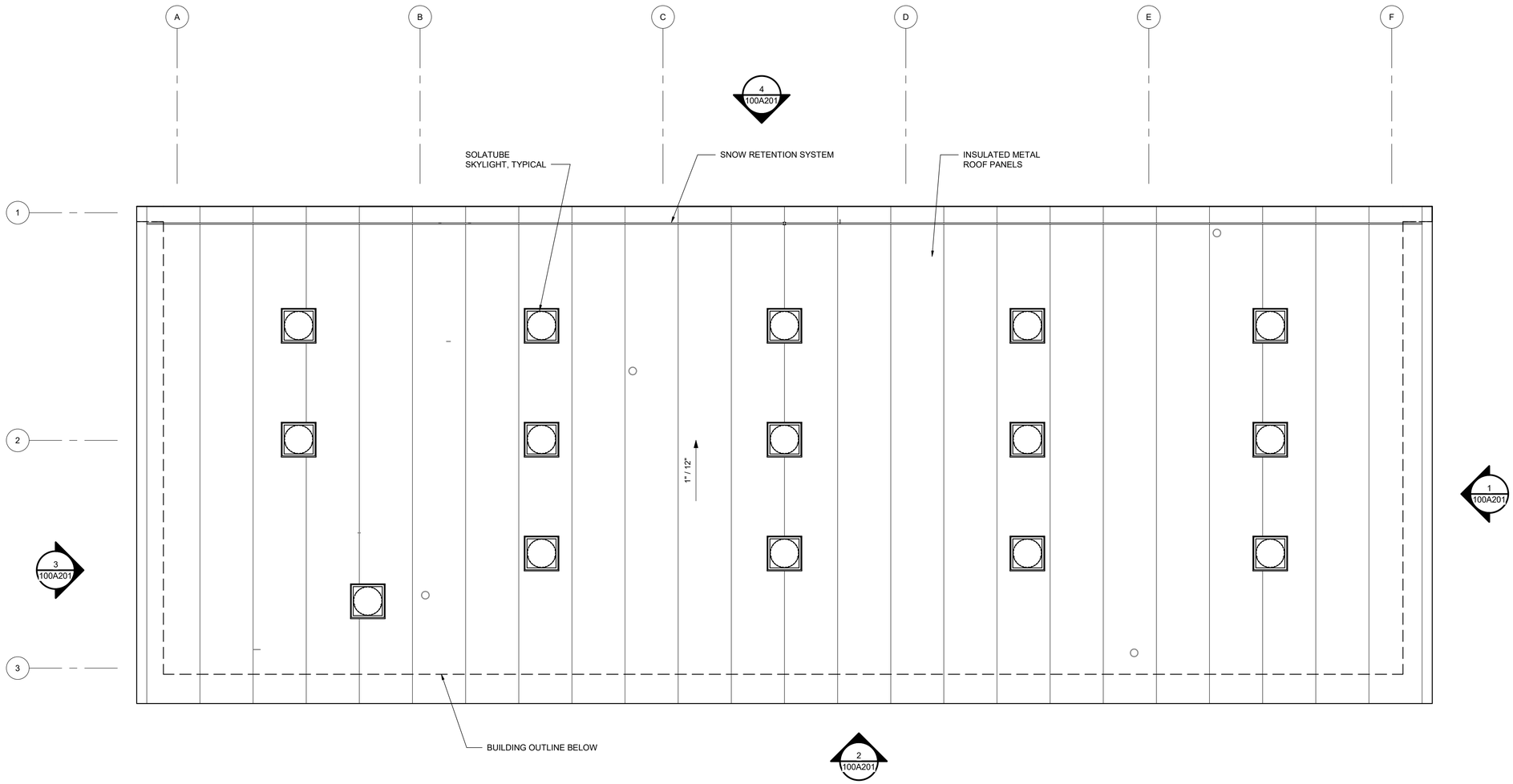

ROOF PLAN

1/4" = 1'-0"

ISSUE	DATE	DESCRIPTION
A	09/2026	ISSUED FOR BIDS

PROJECT MANAGER	PIERRE KWAN
CIVIL	J. MEGRDITCHIAN
STRUCTURAL	P. LINDBLOM
ARCHITECTURAL	V. YANEZ
PROCESS	P. KWAN
MECHANICAL	K. CHEUNG
ELECTRICAL	R. MCCOMB
INSTRUMENTATION	D. BEST
PROJECT NUMBER	10193663

REGISTERED ARCHITECT
VICTOR H. YANEZ
DIGITALLY SIGNED
FOLSOM, CA
ARI-15755
STATE OF OREGON

CITY OF ASHLAND
Ashland, Oregon

City of Ashland

Ashland Creek Water Treatment Plant

2019

PRETREATMENT BUILDING ARCHITECTURAL ROOF PLAN

0 1" 2"

FILENAME	10193663-AWTP-100_S.rte
SCALE	As indicated

SHEET **100A102**

Autodesk Docs://10193663_Ashland_WTP_Final_Design_2024/10193663-AWTP-100_S.rvt
9/22/2026 9:57:30 PM

GENERAL NOTES:

1. SEE MECHANICAL DRAWING FOR LOCATION OF EQUIPMENT, FIXTURES.
2. SEE ELECTRICAL DRAWING FOR LOCATION OF EQUIPMENT, FIXTURES.
3. SEE TELECOM DRAWING FOR LOCATION OF EQUIPMENT, FIXTURES.
4. SEE ROOM FINISH SCHEDULE FOR MATERIALS AND FINISHES.

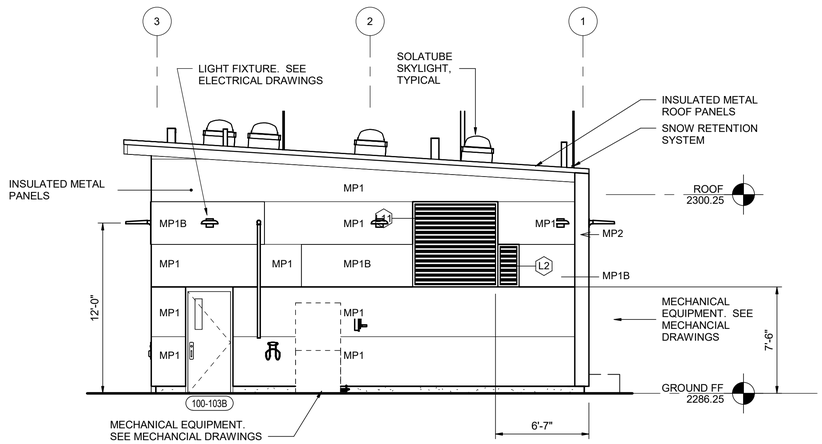

1 100A101 NORTH ELEVATION
3/16" = 1'-0"

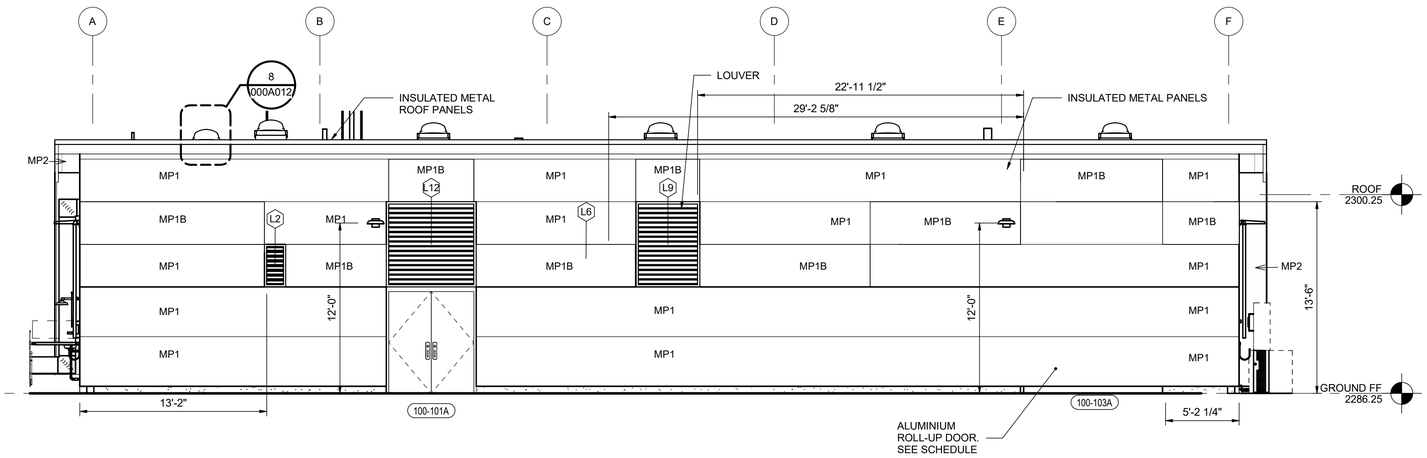

2 100A101 EAST ELEVATION
3/16" = 1'-0"

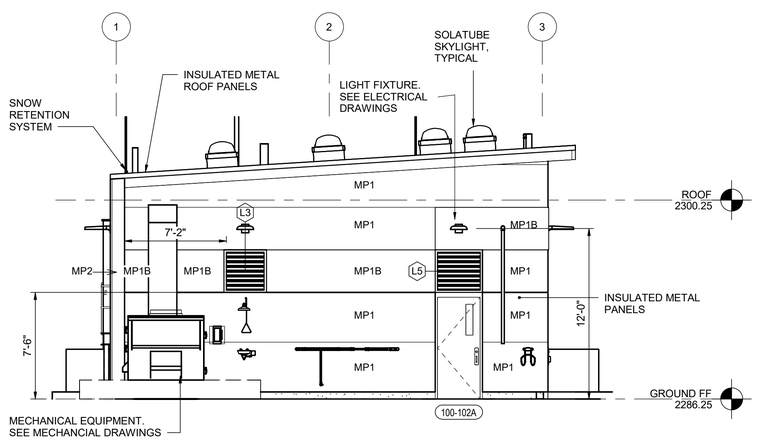

3 100A101 SOUTH ELEVATION
3/16" = 1'-0"

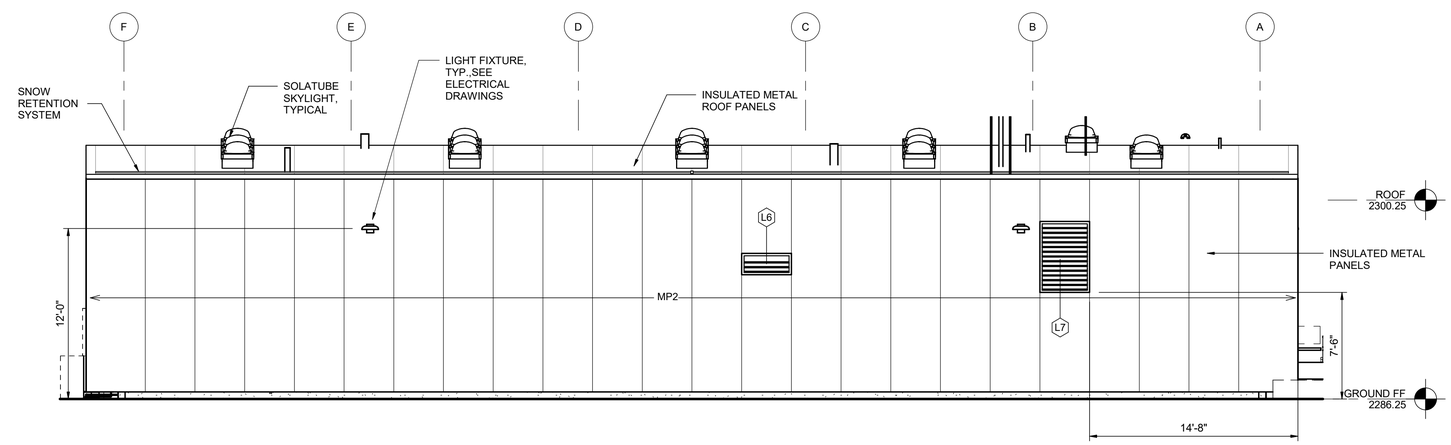

4 100A101 WEST ELEVATION
3/16" = 1'-0"

ISSUE	DATE	DESCRIPTION
A	09/2026	ISSUED FOR BIDS

PROJECT MANAGER	PIERRE KWAN
CIVIL	J. MEGRDITCHIAN
STRUCTURAL	P. LINDBLOM
ARCHITECTURAL	V. YANEZ
PROCESS	P. KWAN
MECHANICAL	K. CHEUNG
ELECTRICAL	R. MCCOMB
INSTRUMENTATION	D. BEST
PROJECT NUMBER	10193663

REGISTERED ARCHITECT
VICTOR H. YANEZ
DIGITALLY SIGNED
FOLSOM, CA
AR-15755
STATE OF OREGON

CITY OF ASHLAND
Ashland, Oregon

City of Ashland

Ashland Creek Water Treatment Plant

2019

PRETREATMENT BUILDING ARCHITECTURAL EXTERIOR ELEVATIONS 1

0 1" 2"

FILENAME 10193663-AWTP-100_S.rte
SCALE As indicated
SHEET **100A201**

Autodesk Docs://10193663_Ashland_WTP_Final_Design_2024/10193663-AWTP-100_S.rvt
9/22/2026 9:57:46 PM

EXTERIOR FINISH SCHEDULE				
MARK	MATERIAL	COLOR	MNF	NOTE
MP1	PREFINISHED METAL	TUNDRA	METL-SPAN	CF ARCHITECTURAL WALL PANEL
MP1B	PREFINISHED METAL	AEGEAN BLUE	METL-SPAN	CF ARCHITECTURAL WALL PANEL
MP2	PREFINISHED METAL	NATURAL PATINA(GREEN)	METL-SPAN	CF ARCHITECTURAL WALL PANEL

GENERAL NOTES:

1. SEE MECHANICAL DRAWING FOR LOCATION OF EQUIPMENT, FIXTURES.
2. SEE ELECTRICAL DRAWING FOR LOCATION OF EQUIPMENT, FIXTURES.
3. SEE TELECOM DRAWING FOR LOCATION OF EQUIPMENT, FIXTURES.
4. SEE ROOM FINISH SCHEDULE FOR MATERIALS AND FINISHES.

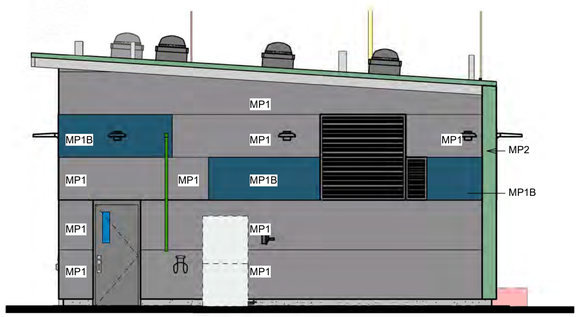

2 NORTH ELEVATION (RENDERED)
3/16" = 1'-0"

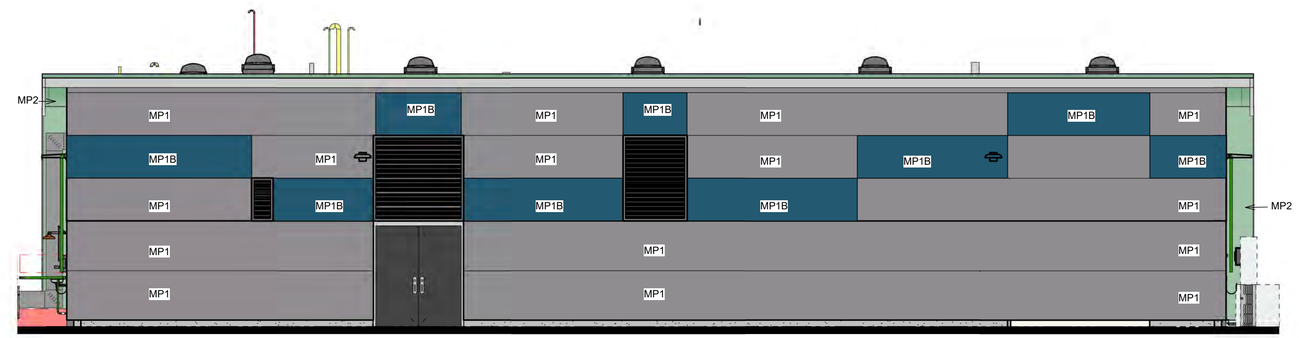

3 EAST ELEVATION (RENDERED)
3/16" = 1'-0"

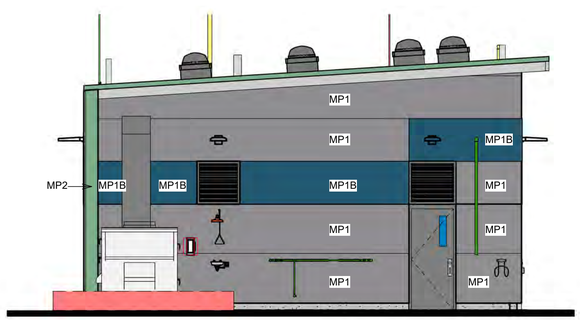

4 SOUTH ELEVATION (RENDERED)
3/16" = 1'-0"

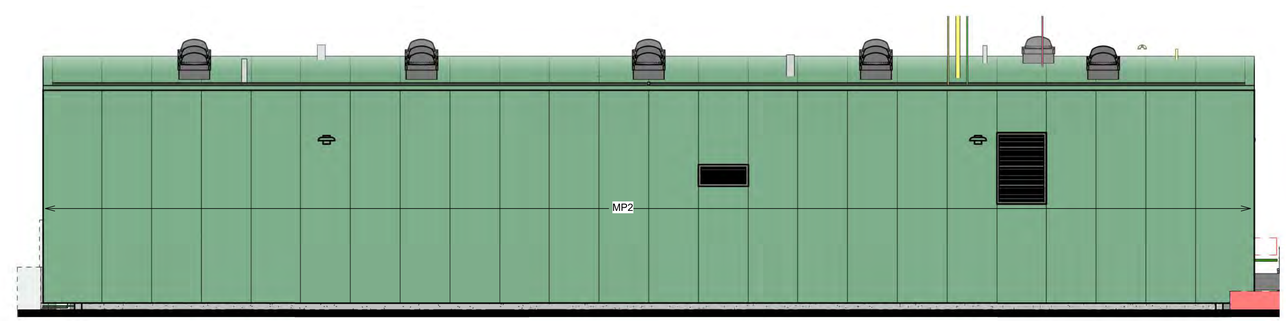

1 WEST ELEVATION (RENDERED)
3/16" = 1'-0"

Autodesk Docs://10193663_Ashland_WTP_Final_Design_2024/10193663-AWTP-100_S.rvt
9/22/2026 9:58:09 PM

ISSUE	DATE	DESCRIPTION
A	09/2026	ISSUED FOR BIDS

PROJECT MANAGER	PIERRE KWAN
CIVIL	J. MEGRDITCHIAN
STRUCTURAL	P. LINDBLOM
ARCHITECTURAL	V. YANEZ
PROCESS	P. KWAN
MECHANICAL	K. CHEUNG
ELECTRICAL	R. MCCOMB
INSTRUMENTATION	D. BEST
PROJECT NUMBER	10193663

REGISTERED ARCHITECT
VICTOR H. YANEZ
DIGITALLY SIGNED
FOLSOM, CA
ARI-15755
STATE OF OREGON

CITY OF ASHLAND
Ashland, Oregon

City of Ashland

Ashland Creek Water Treatment Plant

2019

PRETREATMENT BUILDING ARCHITECTURAL EXTERIOR ELEVATIONS 2

0 1" 2"

FILENAME 10193663-AWTP-100_S.rte
SCALE As indicated

SHEET **100A202**

GENERAL NOTES:

1. SEE MECHANICAL DRAWING FOR LOCATION OF EQUIPMENT, FIXTURES.
2. SEE ELECTRICAL DRAWING FOR LOCATION OF EQUIPMENT, FIXTURES.
3. SEE TELECOM DRAWING FOR LOCATION OF EQUIPMENT, FIXTURES.
4. SEE ROOM FINISH SCHEDULE FOR MATERIALS AND FINISHES.

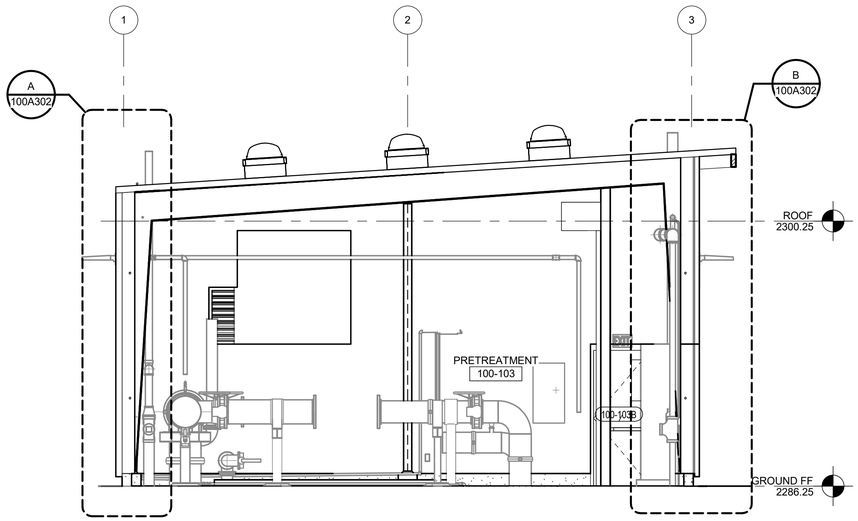

A 100A101 CROSS SECTION
1/4" = 1'-0"

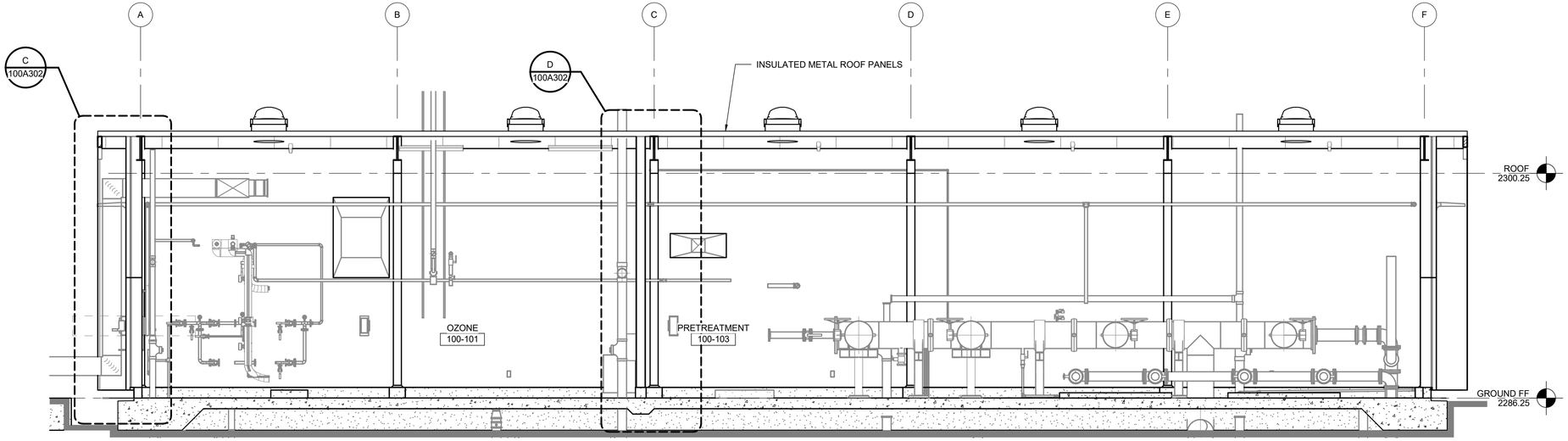

B 100A101 LONGITUDINAL SECTION
1/4" = 1'-0"

ISSUE	DATE	DESCRIPTION
A	09/2026	ISSUED FOR BIDS

PROJECT MANAGER	PIERRE KWAN
CIVIL	J. MEGRDITCHIAN
STRUCTURAL	P. LINDBLOM
ARCHITECTURAL	V. YANEZ
PROCESS	P. KWAN
MECHANICAL	K. CHEUNG
ELECTRICAL	R. MCCOMB
INSTRUMENTATION	D. BEST
PROJECT NUMBER	10193663

REGISTERED ARCHITECT
VICTOR H. YANEZ
DIGITALLY SIGNED
FOLSOM, CA
ARI-15755
STATE OF OREGON

CITY OF ASHLAND
Ashland, Oregon

City of Ashland

Ashland Creek Water Treatment Plant

2019

PRETREATMENT BUILDING ARCHITECTURAL BUILDING SECTIONS

0 1" 2"

FILENAME	10193663-AWTP-100_S.rte
SCALE	As indicated
SHEET	100A301

Autodesk Docs://10193663_Ashland_WTP_Final_Design_2024/10193663-AWTP-100_S.rvt
9/22/2026 9:58:11 PM

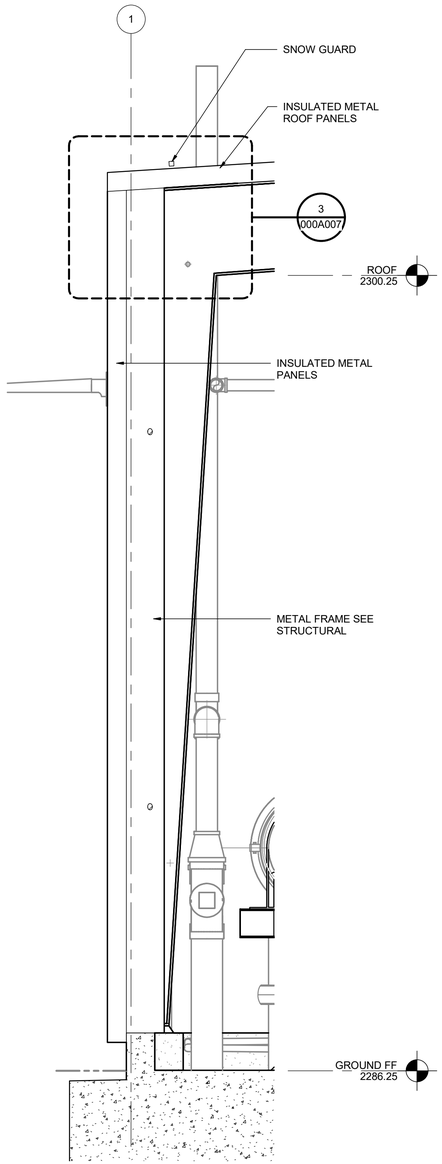

A 100A301 CROSS SECTION @ GRID 1
3/4" = 1'-0"

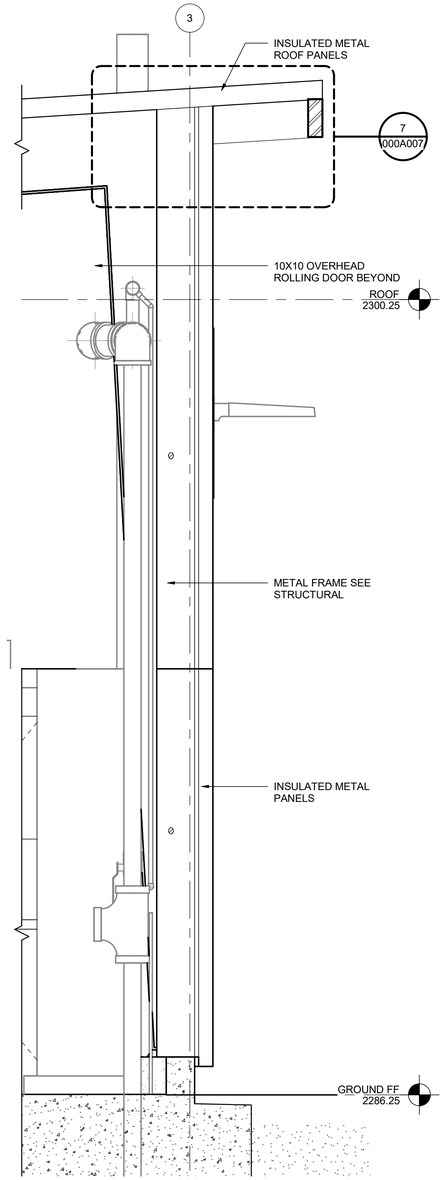

B 100A301 CROSS SECTION @ GRID 3
3/4" = 1'-0"

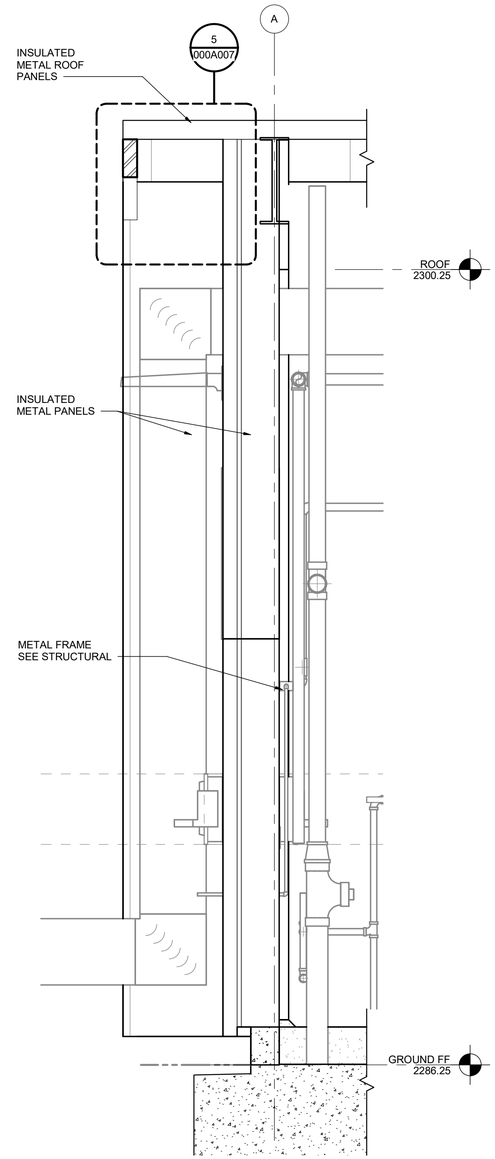

C 100A301 LONGITUDINAL SECTION @ GRID A
3/4" = 1'-0"

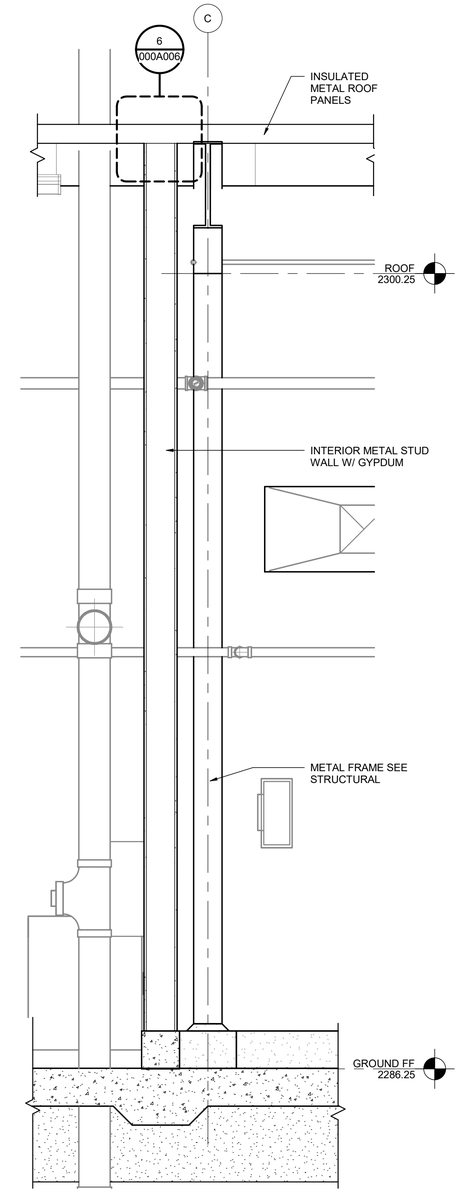

D 100A301 LONGITUDINAL SECTION @ GRID C
3/4" = 1'-0"

ISSUE	DATE	DESCRIPTION
A	09/2026	ISSUED FOR BIDS

PROJECT MANAGER	PIERRE KWAN
CIVIL	J. MEGRDITCHIAN
STRUCTURAL	P. LINDBLOM
ARCHITECTURAL	V. YANEZ
PROCESS	P. KWAN
MECHANICAL	K. CHEUNG
ELECTRICAL	R. MCCOMB
INSTRUMENTATION	D. BEST
PROJECT NUMBER	10193663

REGISTERED ARCHITECT
VICTOR H. YANEZ
DIGITALLY SIGNED
FOLSOM, CA
ARI-15755
STATE OF OREGON

CITY OF ASHLAND
Ashland, Oregon

City of Ashland

Ashland Creek
Water Treatment Plant

2019

PRETREATMENT BUILDING ARCHITECTURAL WALL SECTIONS

0 1" 2"

FILENAME 10193663-AWTP-100_S.rte
SCALE 3/4" = 1'-0"

SHEET
100A302

Autodesk Docs://10193663_Ashland_WTP_Final_Design_2024/10193663-AWTP-100_S.rvt
9/22/2026 9:58:12 PM

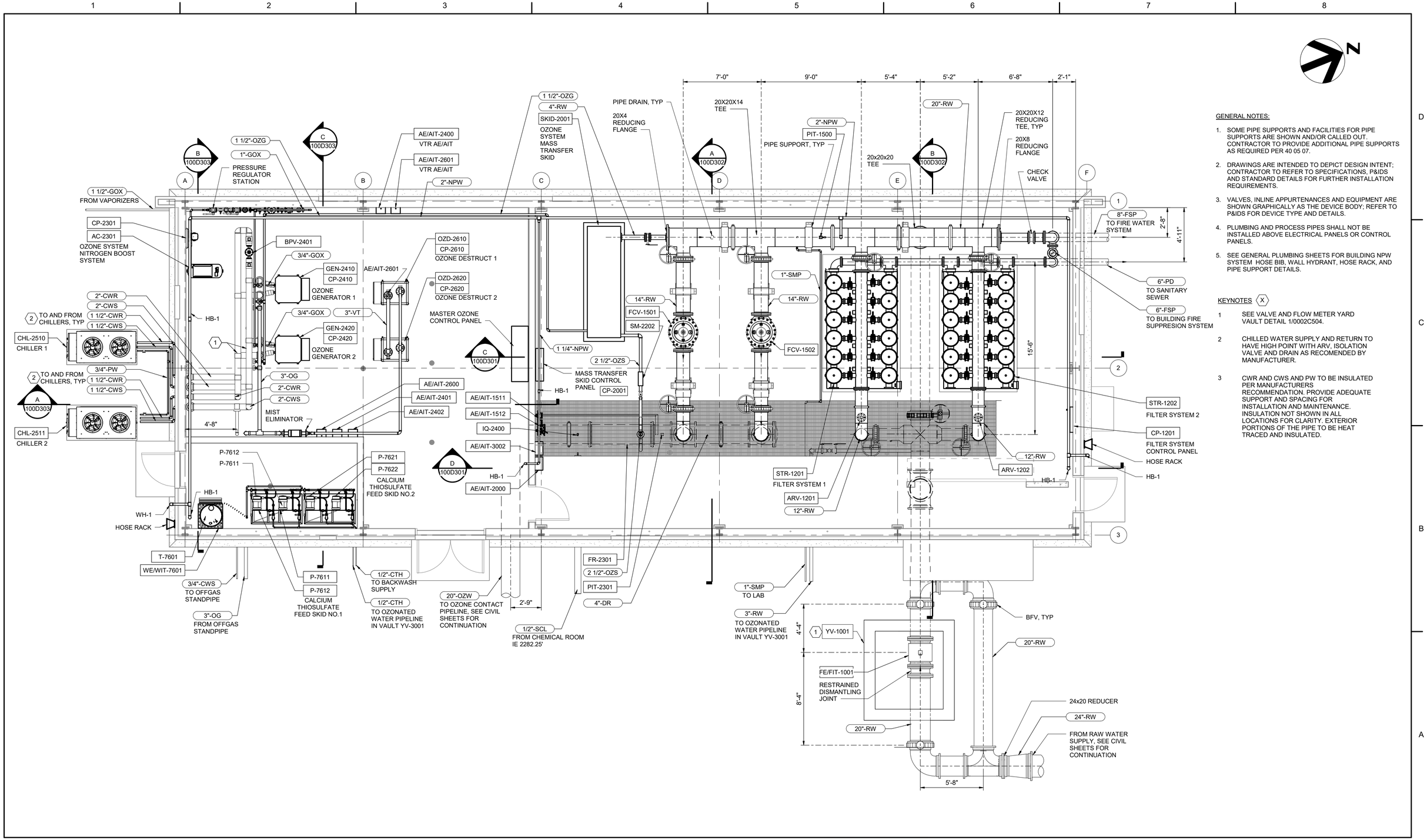

GENERAL NOTES:

1. SOME PIPE SUPPORTS AND FACILITIES FOR PIPE SUPPORTS ARE SHOWN AND/OR CALLED OUT. CONTRACTOR TO PROVIDE ADDITIONAL PIPE SUPPORTS AS REQUIRED PER 40 05 07.
2. DRAWINGS ARE INTENDED TO DEPICT DESIGN INTENT; CONTRACTOR TO REFER TO SPECIFICATIONS, P&IDS AND STANDARD DETAILS FOR FURTHER INSTALLATION REQUIREMENTS.
3. VALVES, INLINE APPURTENANCES AND EQUIPMENT ARE SHOWN GRAPHICALLY AS THE DEVICE BODY; REFER TO P&IDS FOR DEVICE TYPE AND DETAILS.
4. PLUMBING AND PROCESS PIPES SHALL NOT BE INSTALLED ABOVE ELECTRICAL PANELS OR CONTROL PANELS.
5. SEE GENERAL PLUMBING SHEETS FOR BUILDING NPW SYSTEM HOSE BIB, WALL HYDRANT, HOSE RACK, AND PIPE SUPPORT DETAILS.

KEYNOTES (X)

1 SEE VALVE AND FLOW METER YARD VAULT DETAIL 1/0002C504.

2 CHILLED WATER SUPPLY AND RETURN TO HAVE HIGH POINT WITH ARV, ISOLATION VALVE AND DRAIN AS RECOMENDED BY MANUFACTURER.

3 CWR AND CWS AND PW TO BE INSULATED PER MANUFACTURERS RECOMMENDATION. PROVIDE ADEQUATE SUPPORT AND SPACING FOR INSTALLATION AND MAINTENANCE. INSULATION NOT SHOWN IN ALL LOCATIONS FOR CLARITY. EXTERIOR PORTIONS OF THE PIPE TO BE HEAT TRACED AND INSULATED.

ISSUE	DATE	DESCRIPTION
A	09/2026	ISSUED FOR BIDS

PROJECT MANAGER	PIERRE KWAN
CIVIL	J. MEGRDITCHIAN
STRUCTURAL	P. LINDBLOM
ARCHITECTURAL	V. YANEZ
PROCESS	P. KWAN
MECHANICAL	K. CHEUNG
ELECTRICAL	R. MCCOMB
INSTRUMENTATION	D. BEST
PROJECT NUMBER	10193663

REGISTERED PROFESSIONAL ENGINEER 85841 DIGITAL SIGNATURE OREGON PIERRE K. KWAN
EXPIRES: 06/30/2027

CITY OF ASHLAND
Ashland, Oregon

City of Ashland

Ashland Creek Water Treatment Plant

2026

PRETREATMENT BUILDING PROCESS FLOOR PLAN

0 1" 2"

FILENAME 10193663-AWTP-100_D.rvt
SCALE NONE

SHEET **100D101**

Autodesk Docs://10193663_Ashland_WTP_Final_Design_2024/10193663-AWTP-100_D.rvt
9/22/2026 9:41:11 PM

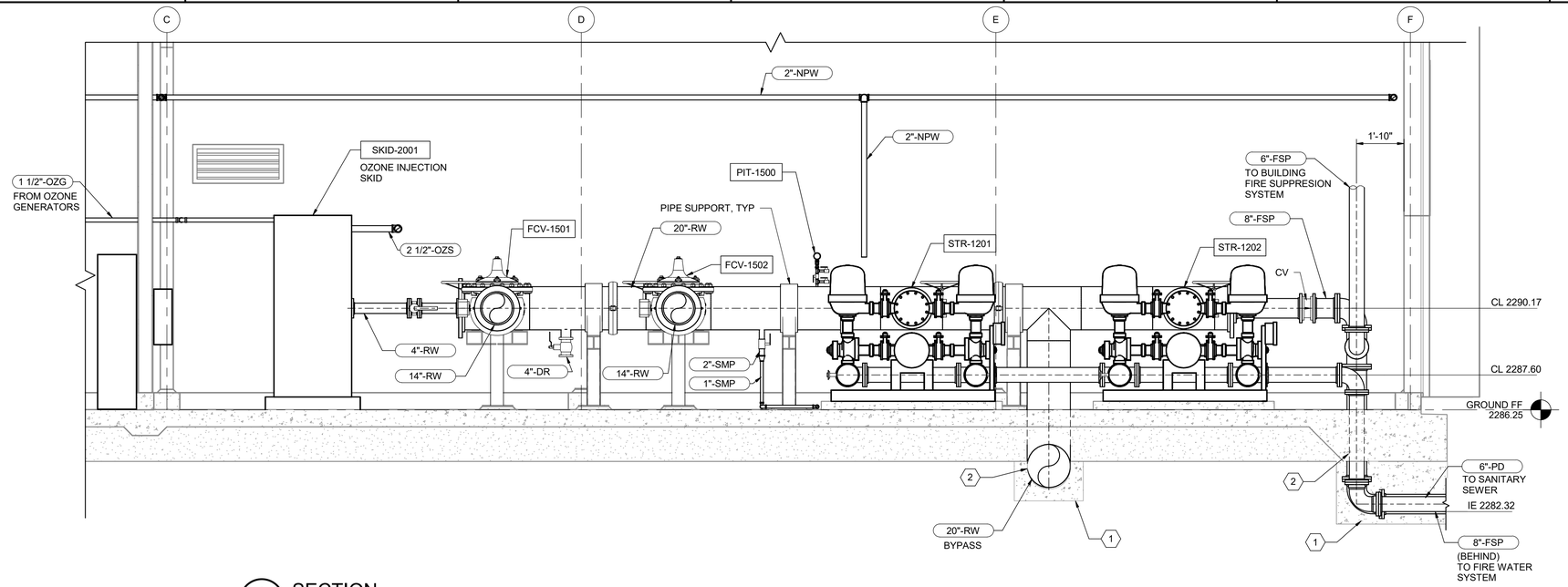

C 100D101 SECTION
3/8" = 1'-0"

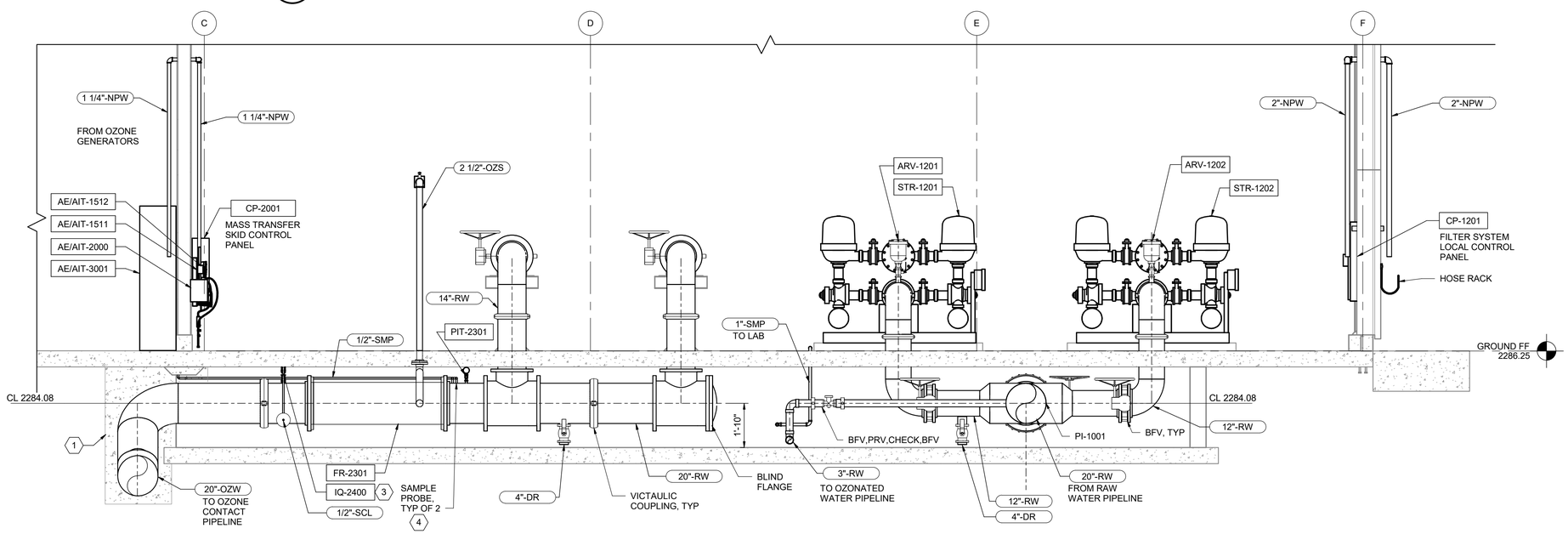

D 100D101 SECTION
3/8" = 1'-0"

GENERAL NOTES:

1. SOME PIPE SUPPORTS AND FACILITIES FOR PIPE SUPPORTS ARE SHOWN AND/OR CALLED OUT. CONTRACTOR TO PROVIDE ADDITIONAL PIPE SUPPORTS AS REQUIRED PER 40 05 07.
2. DRAWINGS ARE INTENDED TO DEPICT DESIGN INTENT; CONTRACTOR TO REFER TO SPECIFICATIONS, P&IDS AND STANDARD DETAILS FOR FURTHER INSTALLATION REQUIREMENTS.
3. VALVES, INLINE APPURTENANCES AND EQUIPMENT ARE SHOWN GRAPHICALLY AS THE DEVICE BODY; REFER TO P&IDS FOR DEVICE TYPE AND DETAILS.
4. PLUMBING AND PROCESS PIPES SHALL NOT BE INSTALLED ABOVE ELECTRICAL PANELS OR CONTROL PANELS.
5. SEE GENERAL PLUMBING SHEETS FOR BUILDING NPW SYSTEM HOSE BIB, WALL HYDRANT, HOSE RACK, AND PIPE SUPPORT DETAILS.

KEYNOTES

1 SEE UNDERSLAB PIPE ENCASEMENT DETAIL 3/000S003.

2 SEE STEEL WALL PIPE DETAIL 5/000D501.

3 SEE CHEMICAL INJECTION QUILL DETAIL 5/000D504.

4 SEE SAMPLING PROBE TAP DETAIL 1/000D502.

ISSUE	DATE	DESCRIPTION
A	09/2026	ISSUED FOR BIDS

PROJECT MANAGER	PIERRE KWAN
CIVIL	J. MEGRDITCHIAN
STRUCTURAL	P. LINDBLOM
ARCHITECTURAL	V. YANEZ
PROCESS	P. KWAN
MECHANICAL	K. CHEUNG
ELECTRICAL	R. MCCOMB
INSTRUMENTATION	D. BEST
PROJECT NUMBER	10193663

REGISTERED PROFESSIONAL ENGINEER 85841 DIGITAL SIGNATURE OREGON PIERRE K. KWAN EXPIRES: 06/30/2027

CITY OF ASHLAND
Ashland, Oregon

City of Ashland
Ashland Creek
Water Treatment Plant
2026

PRETREATMENT BUILDING
PROCESS
SECTIONS 1

0 1" 2"

FILENAME 10193663-AWTP-100_D.rvt
SCALE 3/8" = 1'-0"
SHEET 100D301

Autodesk Docs://10193663_Ashland_WTP_Final_Design_2024/10193663-AWTP-100_D.rvt
9/22/2026 9:41:14 PM

GENERAL NOTES:

1. SOME PIPE SUPPORTS AND FACILITIES FOR PIPE SUPPORTS ARE SHOWN AND/OR CALLED OUT. CONTRACTOR TO PROVIDE ADDITIONAL PIPE SUPPORTS AS REQUIRED PER 40 05 07.
2. DRAWINGS ARE INTENDED TO DEPICT DESIGN INTENT; CONTRACTOR TO REFER TO SPECIFICATIONS, P&IDS AND STANDARD DETAILS FOR FURTHER INSTALLATION REQUIREMENTS.
3. VALVES, INLINE APPURTENANCES AND EQUIPMENT ARE SHOWN GRAPHICALLY AS THE DEVICE BODY; REFER TO P&IDS FOR DEVICE TYPE AND DETAILS.
4. PLUMBING AND PROCESS PIPES SHALL NOT BE INSTALLED ABOVE ELECTRICAL PANELS OR CONTROL PANELS.

KEYNOTES (X)

1 SEE UNDERSLAB PIPE ENCASEMENT DETAIL 3/000S003.

2 SEE AIR RELEASE VALVE DETAIL 4/000D504.

3 SEE TYPE 'A' WALL PENETRATION SEAL DETAIL 7/000D501.

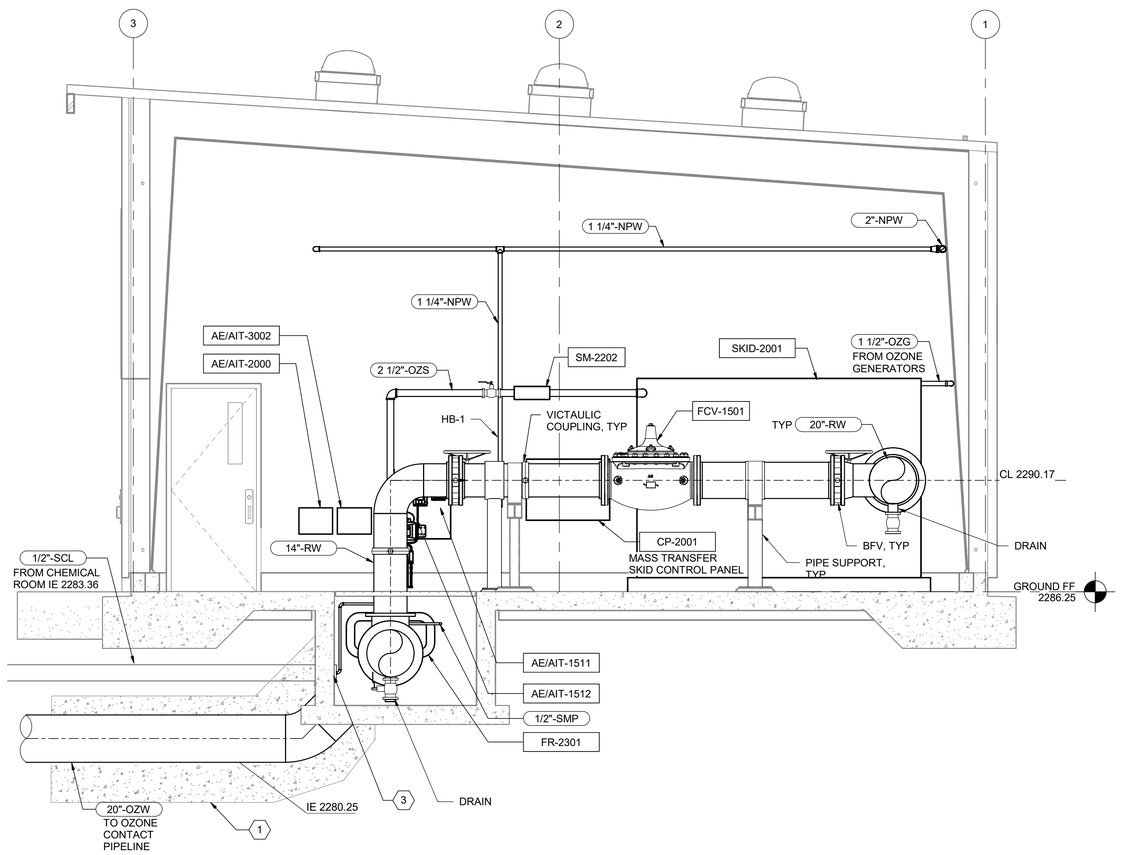

A 100D101 SECTION
3/8" = 1'-0"

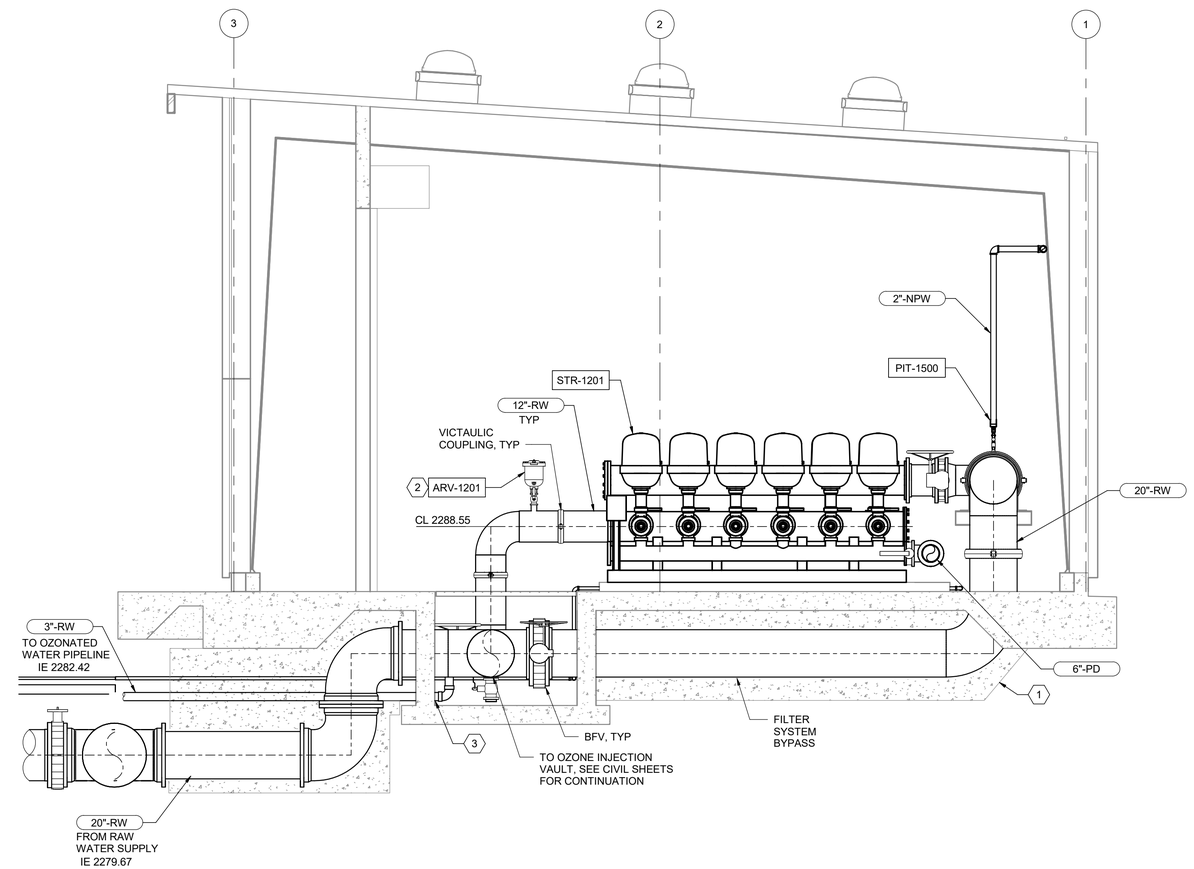

B 100D101 SECTION
3/8" = 1'-0"

ISSUE	DATE	DESCRIPTION
A	09/2026	ISSUED FOR BIDS

PROJECT MANAGER	PIERRE KWAN
CIVIL	J. MEGRDITCHIAN
STRUCTURAL	P. LINDBLOM
ARCHITECTURAL	V. YANEZ
PROCESS	P. KWAN
MECHANICAL	K. CHEUNG
ELECTRICAL	R. MCCOMB
INSTRUMENTATION	D. BEST
PROJECT NUMBER	10193663

REGISTERED PROFESSIONAL ENGINEER 85841 DIGITAL SIGNATURE OREGON MAY 8, 2015 PIERRE K. KWAN
EXPIRES: 06/30/2027

CITY OF ASHLAND
Ashland, Oregon

City of Ashland

Ashland Creek Water Treatment Plant

2026

PRETREATMENT BUILDING PROCESS SECTIONS 2

0 1" 2"

FILENAME 10193663-AWTP-100_D.rvt
SCALE 3/8" = 1'-0"
SHEET **100D302**

Autodesk Docs://10193663_Ashland_WTP_Final_Design_2024/10193663-AWTP-100_D.rvt
9/22/2026 9:41:19 PM

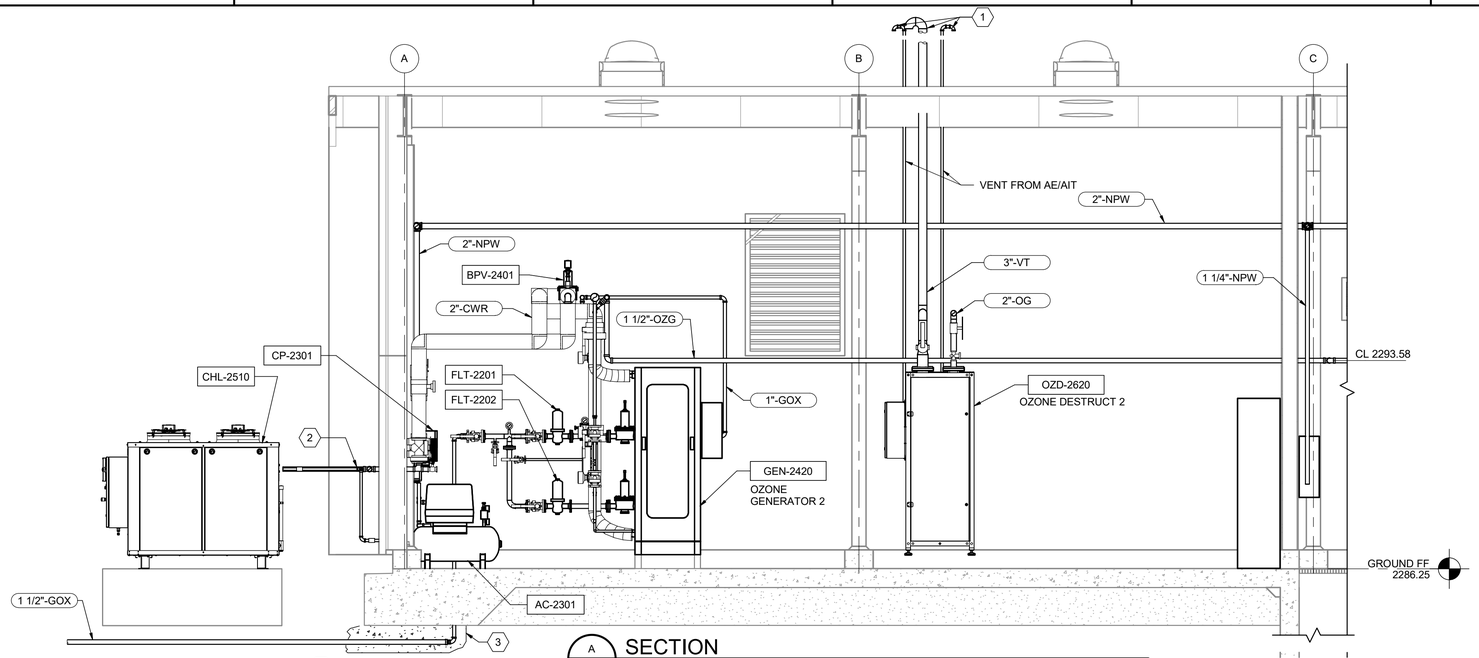

A 100D101 SECTION
3/8" = 1'-0"

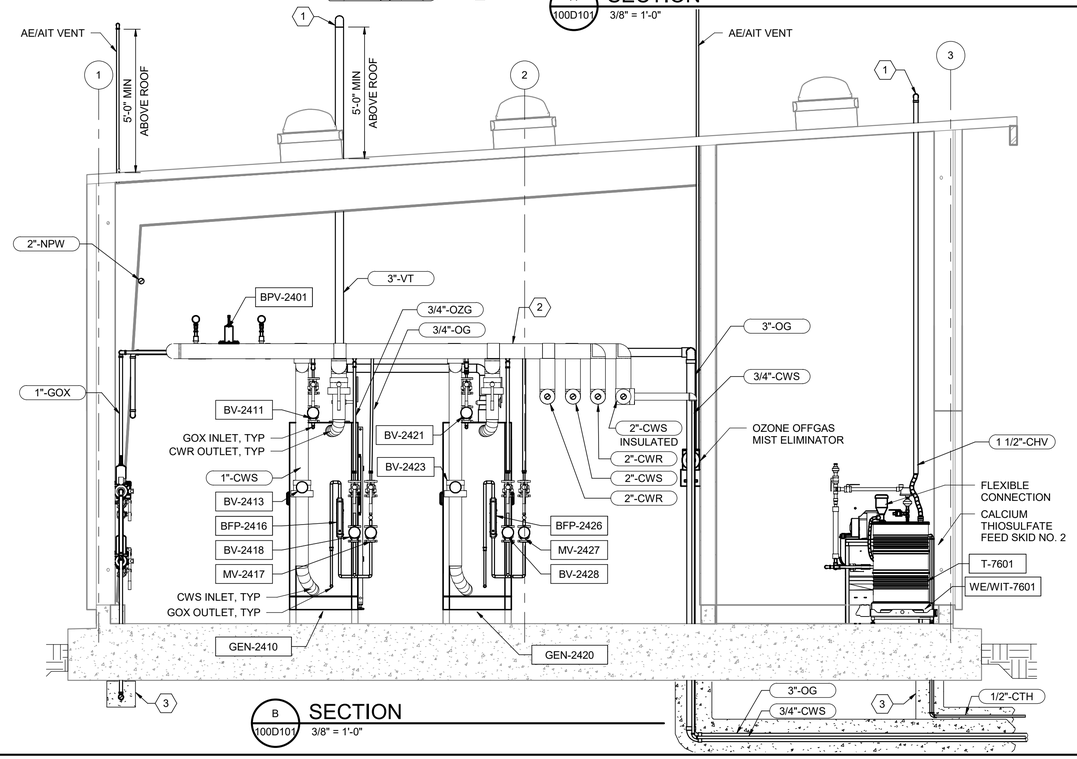

B 100D101 SECTION
3/8" = 1'-0"

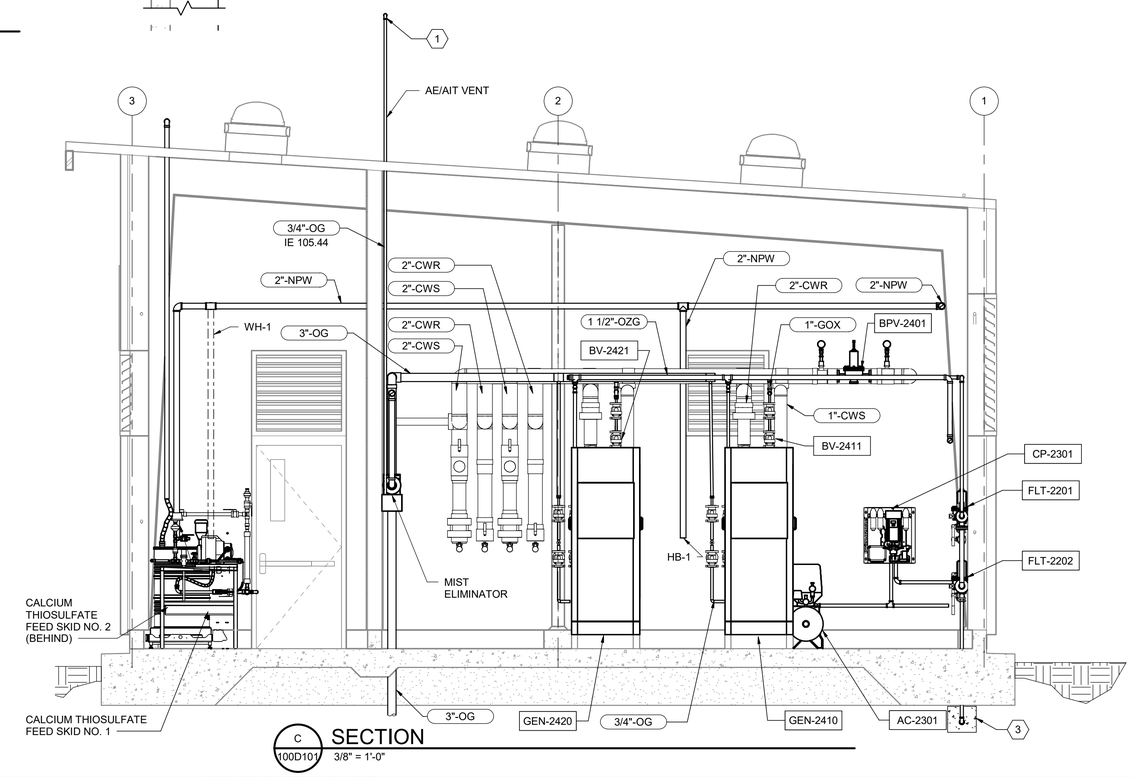

C 100D101 SECTION
3/8" = 1'-0"

GENERAL NOTES:

1. SOME PIPE SUPPORTS AND FACILITIES FOR PIPE SUPPORTS ARE SHOWN AND/OR CALLED OUT. CONTRACTOR TO PROVIDE ADDITIONAL PIPE SUPPORTS AS REQUIRED PER 40 05 07.
2. DRAWINGS ARE INTENDED TO DEPICT DESIGN INTENT; CONTRACTOR TO REFER TO SPECIFICATIONS, P&IDS AND STANDARD DETAILS FOR FURTHER INSTALLATION REQUIREMENTS.
3. VALVES, INLINE APPURTENANCES AND EQUIPMENT ARE SHOWN GRAPHICALLY AS THE DEVICE BODY; REFER TO P&IDS FOR DEVICE TYPE AND DETAILS.
4. PLUMBING AND PROCESS PIPES SHALL NOT BE INSTALLED ABOVE ELECTRICAL PANELS OR CONTROL PANELS.

KEYNOTES (X)

1 SEE VENT DETAIL 6/000D504.

2 CWR AND CWS AND PW TO BE INSULATED PER MANUFACTURERS RECOMMENDATION. PROVIDE ADEQUATE SUPPORT AND SPACING FOR INSTALLATION AND MAINTENANCE. INSULATION NOT SHOWN IN ALL LOCATIONS FOR CLARITY. EXTERIOR PORTIONS OF THE PIPE TO BE HEAT TRACED AND INSULATED.

3 SEE UNDERSLAB PIPE ENCASEMENT DETAIL 3/000S003.

ISSUE	DATE	DESCRIPTION
A	09/2026	ISSUED FOR BIDS

PROJECT MANAGER	PIERRE KWAN
CIVIL	J. MEGRDITCHIAN
STRUCTURAL	P. LINDBLOM
ARCHITECTURAL	V. YANEZ
PROCESS	P. KWAN
MECHANICAL	K. CHEUNG
ELECTRICAL	R. MCCOMB
INSTRUMENTATION	D. BEST
PROJECT NUMBER	10193663

REGISTERED PROFESSIONAL ENGINEER 85841 DIGITAL SIGNATURE OREGON MAY 8, 2018 PIERRE K. KWAN
EXPIRES: 06/30/2027

CITY OF ASHLAND
Ashland, Oregon

City of Ashland
Ashland Creek
Water Treatment Plant
2026

PRETREATMENT BUILDING
PROCESS
OZONE SECTIONS

0 1" 2"

FILENAME 10193663-AWTP-100_D.rvt
SCALE 3/8" = 1'-0"

SHEET
100D303

Autodesk Docs://10193663_Ashland_WTP_Final_Design_2024/10193663-AWTP-100_D.rvt
9/22/2026 9:41:29 PM

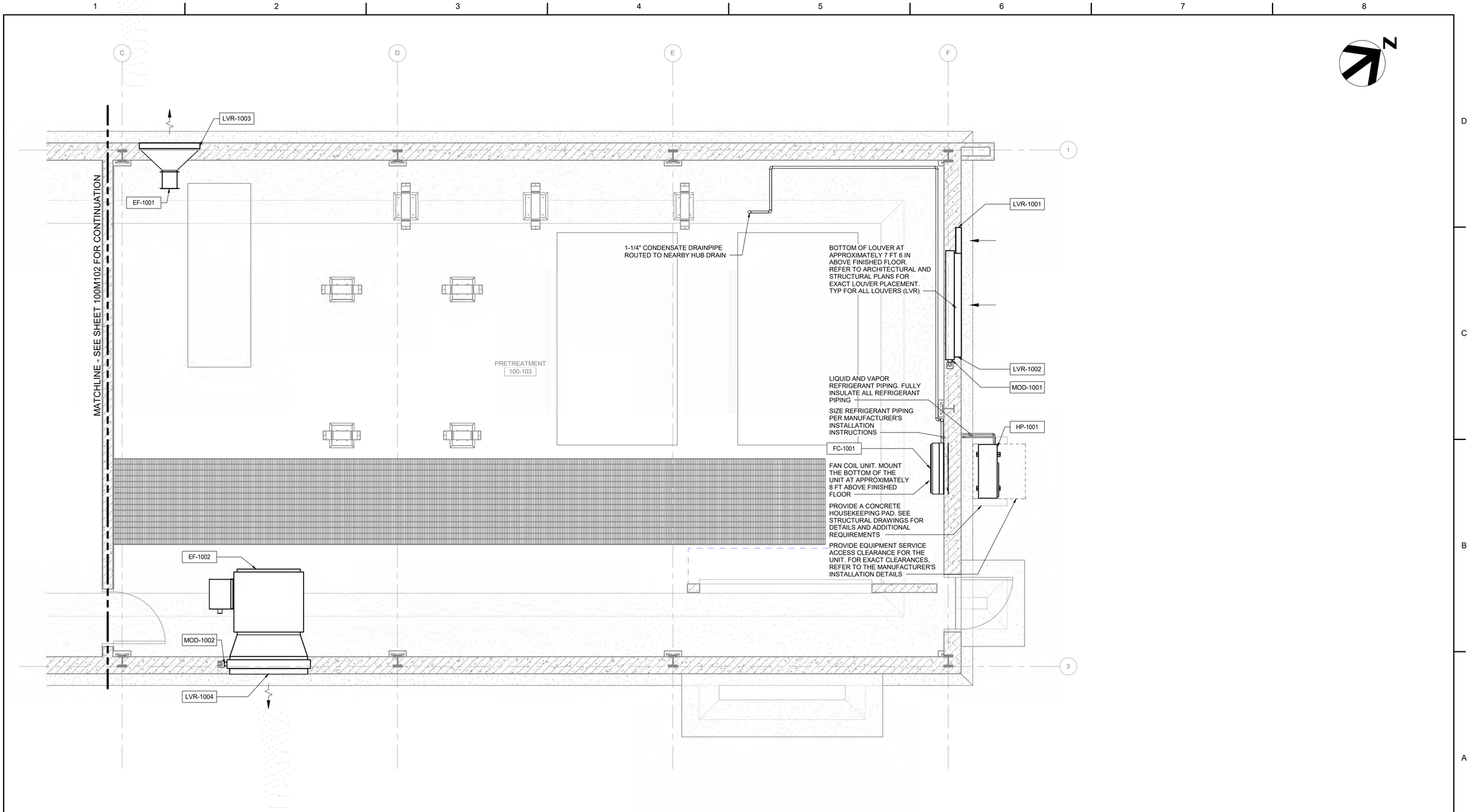

BUILDING 100 - PRETREATMENT BUILDING HVAC PLAN - NORTH

3/8" = 1'-0"

ISSUE	DATE	DESCRIPTION
A	09/2026	ISSUED FOR BIDS

PROJECT MANAGER	PIERRE KWAN
CIVIL	J. MEGRDITCHIAN
STRUCTURAL	P. LINDBLOM
ARCHITECTURAL	V. YANEZ
PROCESS	P. KWAN
MECHANICAL	K. CHEUNG
ELECTRICAL	R. MCCOMB
INSTRUMENTATION	D. BEST
PROJECT NUMBER	10193663

REGISTERED PROFESSIONAL ENGINEER 67096PE DIGITALLY SIGNED OREGON JULY 11, 2024 KARL M. SUTTON

EXPIRES 6/30/2028

CITY OF ASHLAND

Ashland, Oregon

City of Ashland

Ashland Creek Water Treatment Plant

2026

PRETREATMENT BUILDING MECHANICAL NORTH HVAC FLOOR PLAN

0 1" 2"

FILENAME 10193663-AWTP-100_M.rvt

SCALE 3/8" = 1'-0"

SHEET **100M101**

Autodesk Docs://10193663_Ashland_WTP_Final_Design_2024/10193663-AWTP-100_M.rvt
9/22/2026 9:54:21 PM

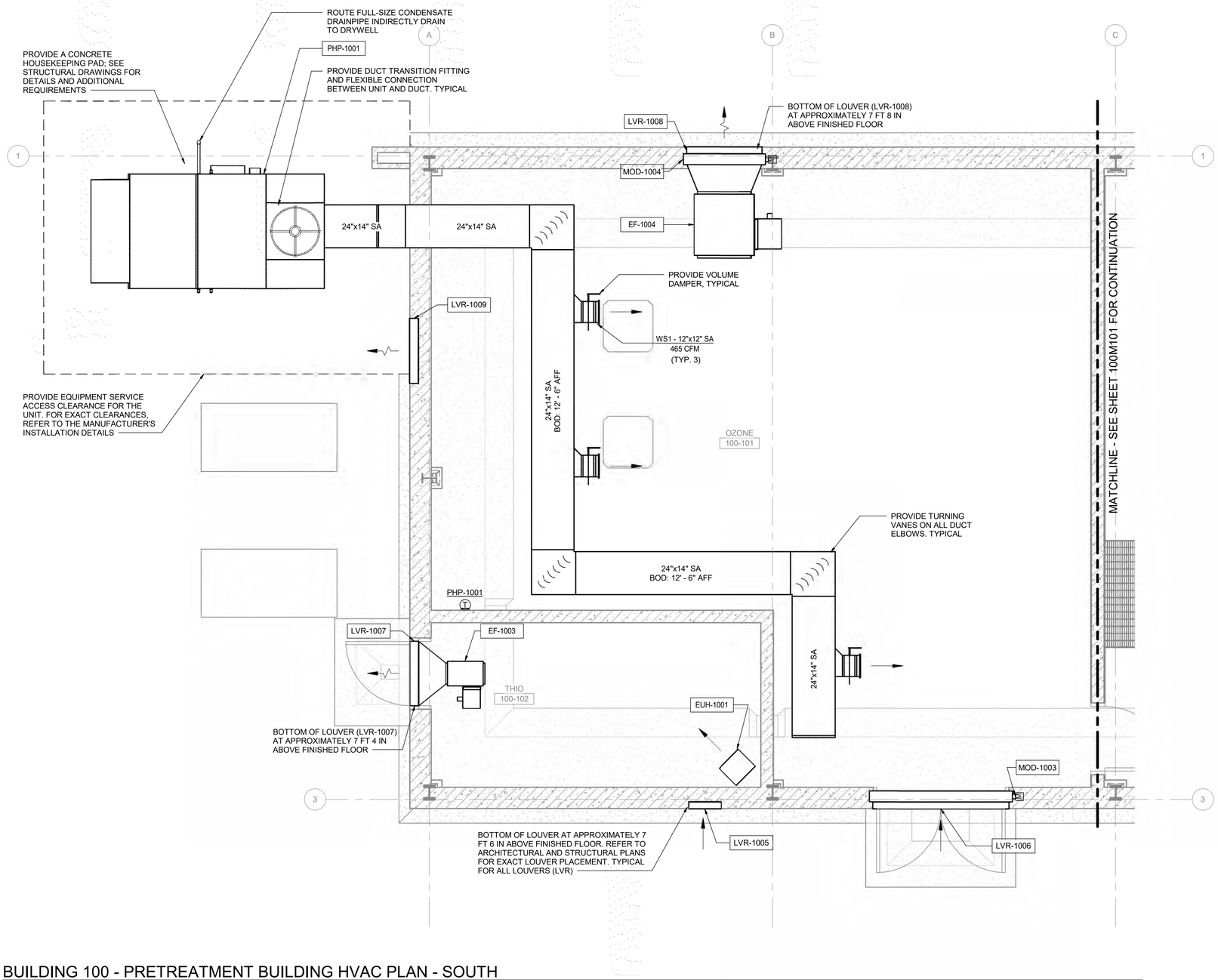

BUILDING 100 - PRETREATMENT BUILDING HVAC PLAN - SOUTH

3/8" = 1'-0"

Autodesk Docs://10193663_Ashland_WTP_Final_Design_2024/10193663-AWTP-100_M.rvt
9/22/2026 9:54:23 PM

ISSUE	DATE	DESCRIPTION
A	09/2026	ISSUED FOR BIDS

PROJECT MANAGER	PIERRE KWAN
CIVIL	J. MEGRDITCHIAN
STRUCTURAL	P. LINDBLOM
ARCHITECTURAL	V. YANEZ
PROCESS	P. KWAN
MECHANICAL	K. CHEUNG
ELECTRICAL	R. MCCOMB
INSTRUMENTATION	D. BEST
PROJECT NUMBER	10193663

REGISTERED PROFESSIONAL ENGINEER 67096PE DIGITALLY SIGNED OREGON JULY 11, 2024 KARL M. SUTTON
EXPIRES 6/30/2028

CITY OF ASHLAND
Ashland, Oregon

City of Ashland

Ashland Creek Water Treatment Plant

2026

PRETREATMENT BUILDING MECHANICAL SOUTH HVAC FLOOR PLAN

0 1" 2"

FILENAME 10193663-AWTP-100_M.rvt
SCALE 3/8" = 1'-0"

SHEET **100M102**

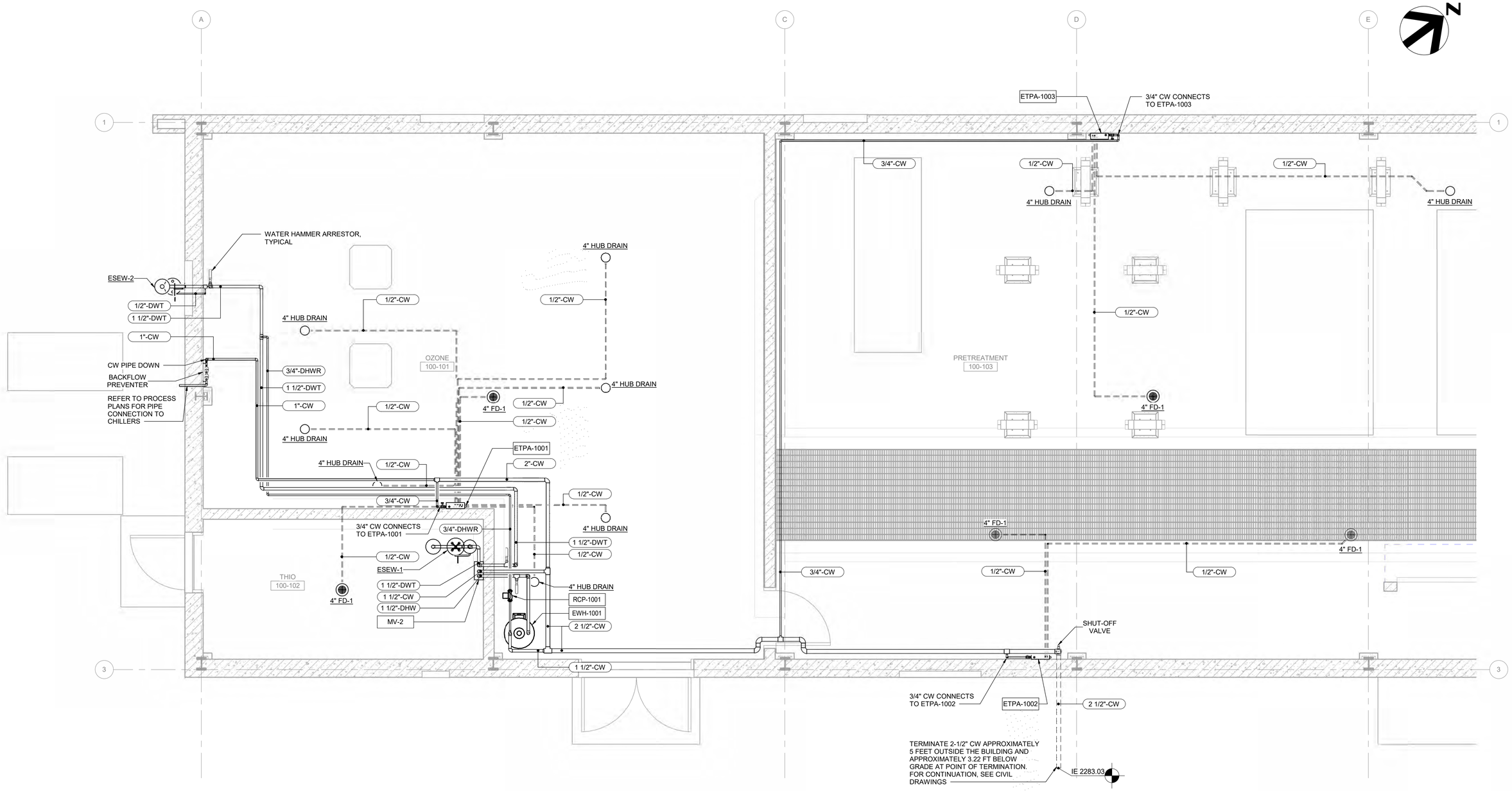

BUILDING 100 - PRETREATMENT BUILDING DOMESTIC WATER PIPING PLAN - SOUTH

3/8" = 1'-0"

ISSUE	DATE	DESCRIPTION
A	09/2026	ISSUED FOR BIDS

PROJECT MANAGER	PIERRE KWAN
CIVIL	J. MEGRDITCHIAN
STRUCTURAL	P. LINDBLOM
ARCHITECTURAL	V. YANEZ
PROCESS	P. KWAN
MECHANICAL	K. CHEUNG
ELECTRICAL	R. MCCOMB
INSTRUMENTATION	D. BEST
PROJECT NUMBER	10193663

REGISTERED PROFESSIONAL ENGINEER 67096PE DIGITALLY SIGNED OREGON JULY 11, 2024 KARL M. SUTTON

EXPIRES 6/30/2028

CITY OF ASHLAND

Ashland, Oregon

City of Ashland

Ashland Creek Water Treatment Plant

2026

PRETREATMENT BUILDING PLUMBING DOMESTIC WATER PIPING PLAN

0 1" 2"

FILENAME 10193663-AWTP-100_M.rvt

SCALE 3/8" = 1'-0"

SHEET **100P101**

Autodesk Docs://10193663_Ashland_WTP_Final_Design_2024/10193663-AWTP-100_M.rvt
9/22/2026 9:54:26 PM

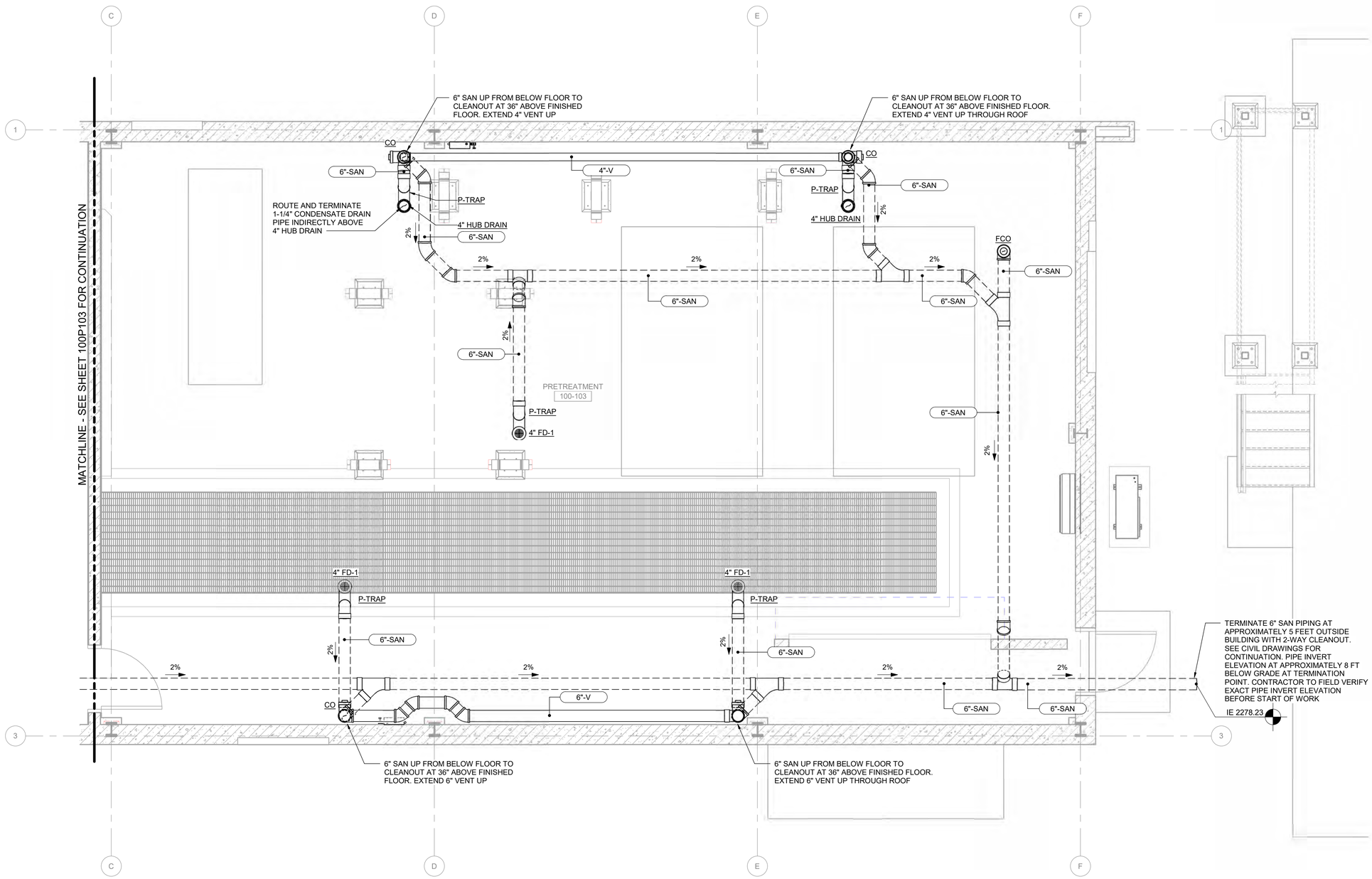

BUILDING 100 - PRETREATMENT BUILDING WASTE AND VENT PIPING PLAN - NORTH

3/8" = 1'-0"

ISSUE	DATE	DESCRIPTION
A	09/2026	ISSUED FOR BIDS

PROJECT MANAGER	PIERRE KWAN
CIVIL	J. MEGRDITCHIAN
STRUCTURAL	P. LINDBLOM
ARCHITECTURAL	V. YANEZ
PROCESS	P. KWAN
MECHANICAL	K. CHEUNG
ELECTRICAL	R. MCCOMB
INSTRUMENTATION	D. BEST
PROJECT NUMBER	10193663

REGISTERED PROFESSIONAL ENGINEER 67096PE DIGITALLY SIGNED OREGON JULY 11, 2024 KARL M. SUTTON

EXPIRES 6/30/2028

CITY OF ASHLAND

Ashland, Oregon

City of Ashland

Ashland Creek Water Treatment Plant

2026

PRETREATMENT BUILDING PLUMBING NORTH WASTE AND VENT PIPING PLAN

0 1" 2"

FILENAME 10193663-AWTP-100_M.rvt

SCALE 3/8" = 1'-0"

SHEET **100P102**

Autodesk Docs://10193663_Ashland_WTP_Final_Design_2024/10193663-AWTP-100_M.rvt
9/22/2026 9:54:28 PM

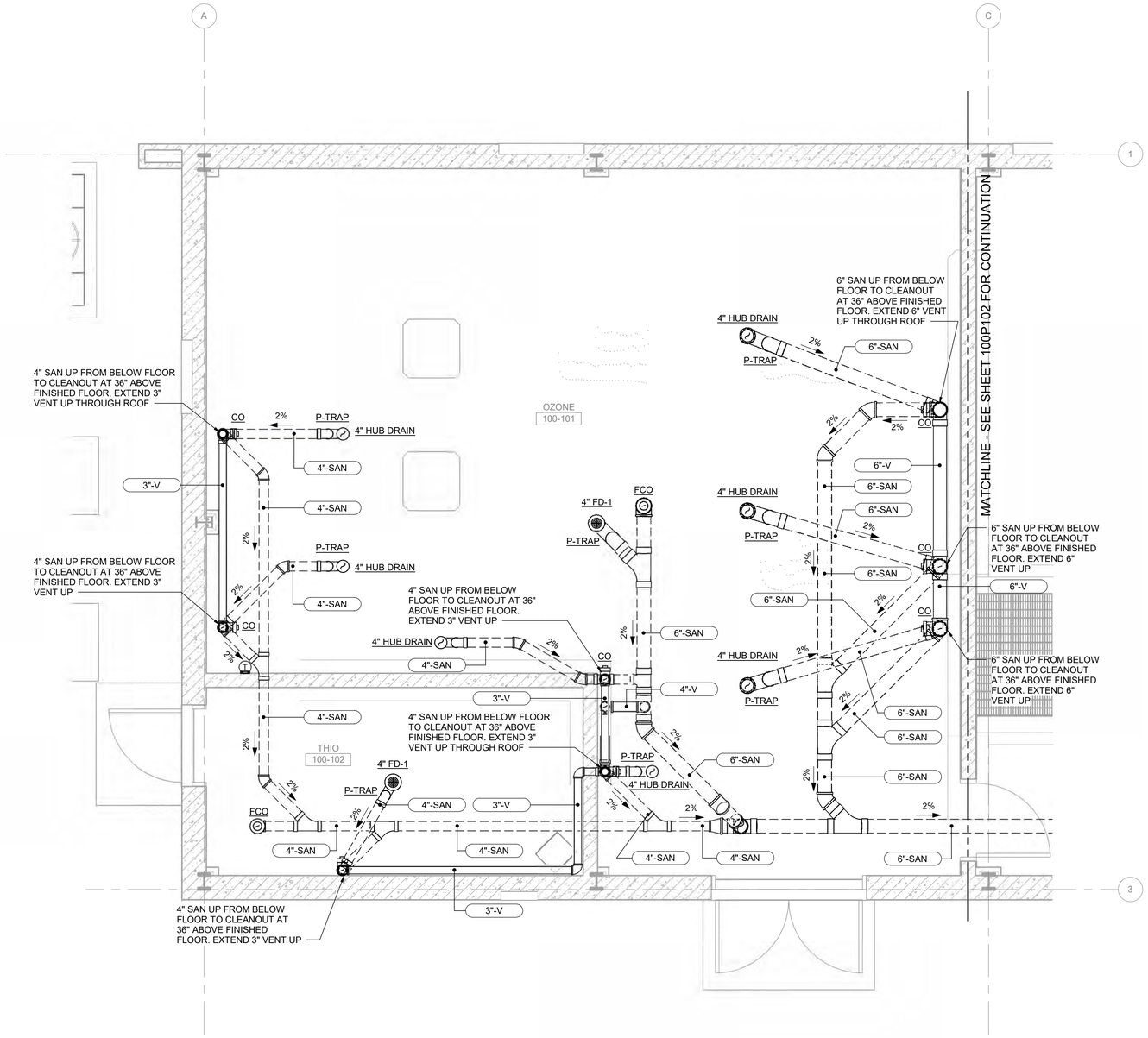

BUILDING 100 - PRETREATMENT BUILDING WASTE AND VENT PIPING PLAN - SOUTH

3/8" = 1'-0"

Autodesk Docs://10193663_Ashland_WTP_Final_Design_2024/10193663-AWTP-100_M.rvt
9/22/2026 9:54:30 PM

ISSUE	DATE	DESCRIPTION
A	09/2026	ISSUED FOR BIDS

PROJECT MANAGER	PIERRE KWAN
CIVIL	J. MEGRDITCHIAN
STRUCTURAL	P. LINDBLOM
ARCHITECTURAL	V. YANEZ
PROCESS	P. KWAN
MECHANICAL	K. CHEUNG
ELECTRICAL	R. MCCOMB
INSTRUMENTATION	D. BEST
PROJECT NUMBER	10193663

REGISTERED PROFESSIONAL ENGINEER 67096PE OREGON JULY 11, 1986 KARL M. SUTTON
DIGITALLY SIGNED
EXPIRES 6/30/2028

CITY OF ASHLAND
Ashland, Oregon

City of Ashland

Ashland Creek Water Treatment Plant

2026

PRETREATMENT BUILDING PLUMBING SOUTH WASTE AND VENT PIPING PLAN

0 1" 2"

FILENAME	10193663-AWTP-100_M.rvt
SCALE	3/8" = 1'-0"

SHEET **100P103**

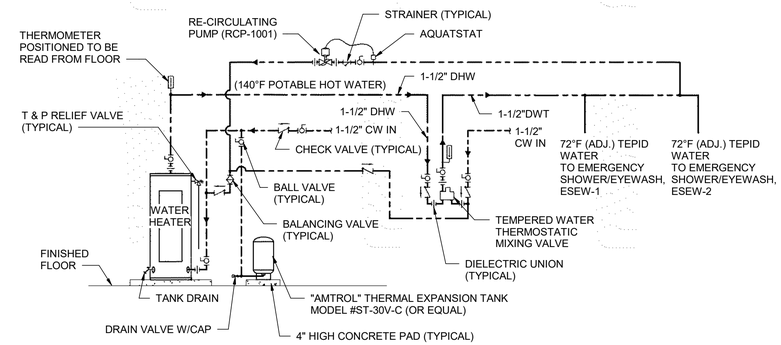

NOTES:

1. DRAWINGS ARE FOR SCHEMATICS PURPOSES ONLY. ALL VALVES & EQUIPMENT MUST BE PIPED/INSTALLED PER MANUFACTURER'S INSTALLATION INSTRUCTIONS FOR A FULLY FUNCTIONAL SYSTEM.
2. PROVIDE REQUIRED CLEARANCES TO COMBUSTIBLES AND SERVICING PER MANUFACTURER'S RECOMMENDATION.
3. PROVIDE REDUCERS AS NECESSARY FOR INSTALLATION OF EQUIPMENT.
4. PROVIDE THE MINIMUM CLEARANCES ON ALL SIDES PER MANUFACTURER'S RECOMMENDATIONS.
5. PROVIDE WATER HEATER WITH 20 GAUGE STEEL, 1" WIDE SEISMIC RESTRAINT STRAPS AT 1/3 AND 2/3 POSITION. SECURE UNIT TO WALL WITH SCREWS.
6. ROUTE ALL DRAIN PIPES TO NEARBY FLOOR DRAIN.
7. PIPE AND INSTALL TEPID/TEMPERED WATER THERMOSTATIC MIXING VALVES PER MANUFACTURER'S INSTALLATION INSTRUCTIONS.
8. REFER TO STRUCTURAL PLANS FOR CONCRETE PAD DETAIL.
9. PROVIDE HEAT TRAP AS REQUIRED BY THE EQUIPMENT MANUFACTURER.
10. REFER TO SPECS FOR ADDITIONAL REQUIREMENTS.

ELECTRIC WATER HEATER (EWH-1001) PIPING DIAGRAM

NOT TO SCALE

ISSUE	DATE	DESCRIPTION
A	09/2026	ISSUED FOR BIDS

PROJECT MANAGER	PIERRE KWAN
CIVIL	J. MEGRDITCHIAN
STRUCTURAL	P. LINDBLOM
ARCHITECTURAL	V. YANEZ
PROCESS	P. KWAN
MECHANICAL	K. CHEUNG
ELECTRICAL	R. MCCOMB
INSTRUMENTATION	D. BEST
PROJECT NUMBER	10193663

REGISTERED PROFESSIONAL ENGINEER 67096PE DIGITALLY SIGNED OREGON JULY 11, 2025 KARL M. SUTTON

EXPIRES 6/30/2028

CITY OF ASHLAND

Ashland, Oregon

City of Ashland

Ashland Creek Water Treatment Plant

2026

PRETREATMENT BUILDING
PLUMBING
PLUMBING DETAILS

0 1" 2"

FILENAME 10193663-AWTP-100_M.rvt

SCALE 6" = 1'-0"

SHEET **100P601**

Autodesk Docs://10193663_Ashland_WTP_Final_Design_2024/10193663-AWTP-100_M.rvt
9/22/2026 9:54:31 PM

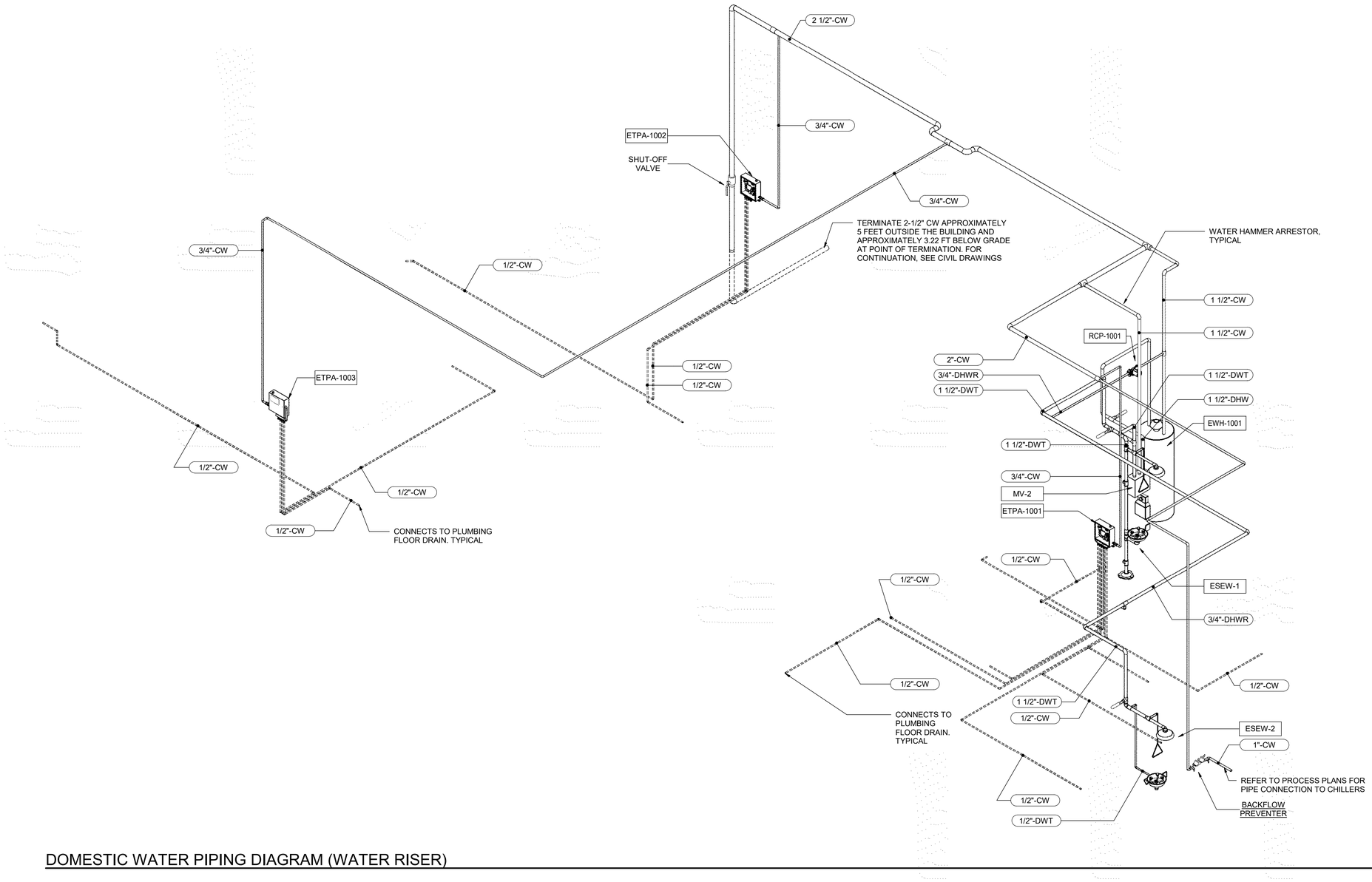

DOMESTIC WATER PIPING DIAGRAM (WATER RISER)

Autodesk Docs://10193663_Ashland_WTP_Final_Design_2024/10193663-AWTP-100_M.rvt
9/22/2026 9:54:33 PM

ISSUE	DATE	DESCRIPTION
A	09/2026	ISSUED FOR BIDS

PROJECT MANAGER	PIERRE KWAN
CIVIL	J. MEGRDITCHIAN
STRUCTURAL	P. LINDBLOM
ARCHITECTURAL	V. YANEZ
PROCESS	P. KWAN
MECHANICAL	K. CHEUNG
ELECTRICAL	R. MCCOMB
INSTRUMENTATION	D. BEST
PROJECT NUMBER	10193663

REGISTERED PROFESSIONAL ENGINEER 67096PE DIGITALLY SIGNED OREGON JULY 11, 2024 KARL M. SUTTON
EXPIRES 6/30/2028

CITY OF ASHLAND
Ashland, Oregon

City of Ashland

Ashland Creek Water Treatment Plant

2026

PLUMBING
DOMESTIC WATER PIPING DIAGRAM (WATER RISER)

0 1" 2"
SCALE

FILENAME 10193663-AWTP-100_M.rvt

SHEET **100P901**

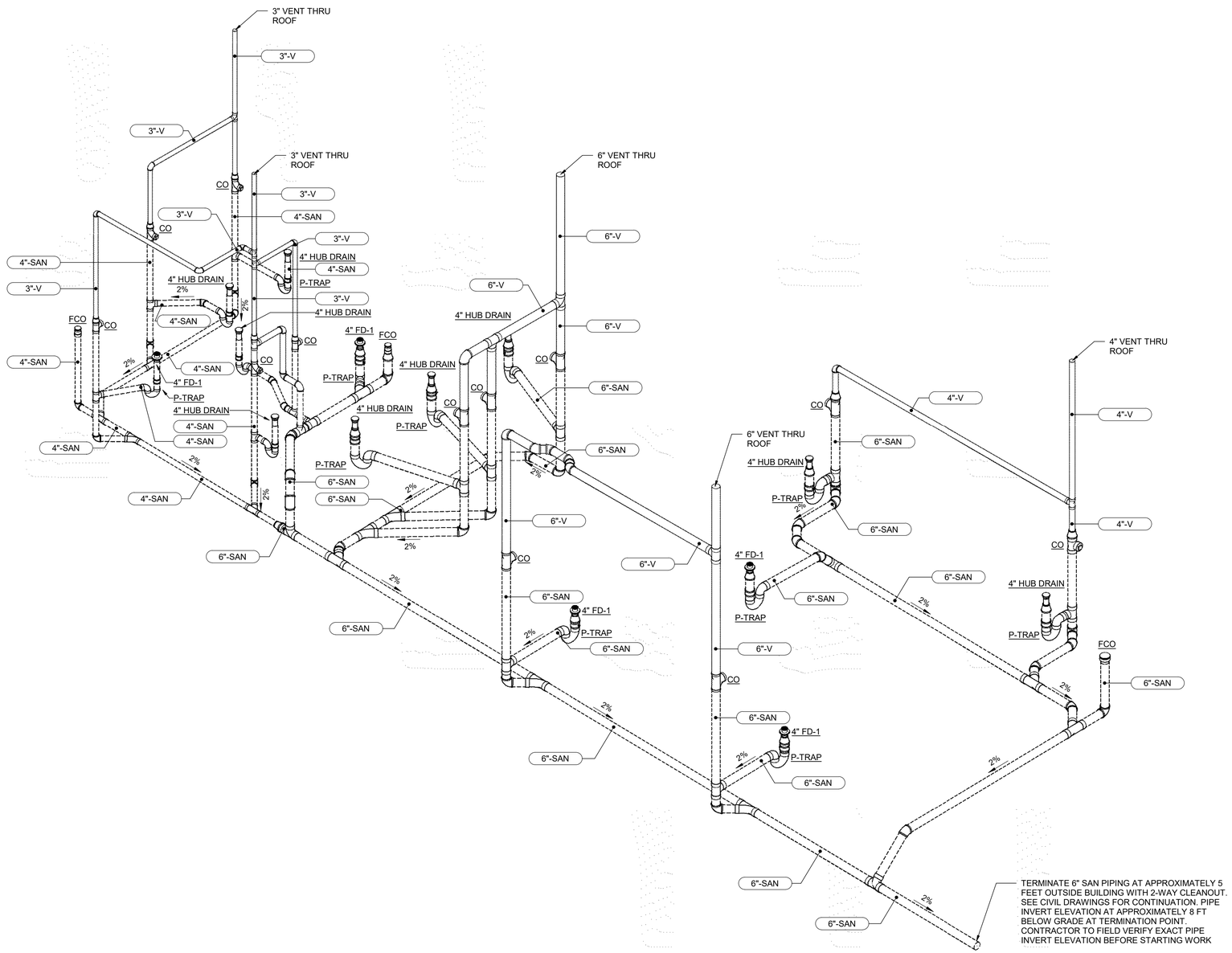

WASTE AND VENT PIPING DIAGRAM (SANITARY RISER)

ISSUE	DATE	DESCRIPTION
A	09/2026	ISSUED FOR BIDS

PROJECT MANAGER	PIERRE KWAN
CIVIL	J. MEGRDITCHIAN
STRUCTURAL	P. LINDBLOM
ARCHITECTURAL	V. YANEZ
PROCESS	P. KWAN
MECHANICAL	K. CHEUNG
ELECTRICAL	R. MCCOMB
INSTRUMENTATION	D. BEST
PROJECT NUMBER	10193663

REGISTERED PROFESSIONAL ENGINEER 67096PE DIGITALLY SIGNED OREGON JULY 11, 2025 KARL M. SUTTON
EXPIRES 6/30/2028

CITY OF ASHLAND
Ashland, Oregon

City of Ashland

Ashland Creek Water Treatment Plant

2026

PLUMBING
WASTE AND VENT PIPING DIAGRAM (SANITARY RISER)

0 1" 2"

FILENAME 10193663-AWTP-100_M.rvt

SCALE

SHEET **100P902**

Autodesk Docs://10193663_Ashland_WTP_Final_Design_2024/10193663-AWTP-100_M.rvt
9/22/2026 9:54:35 PM

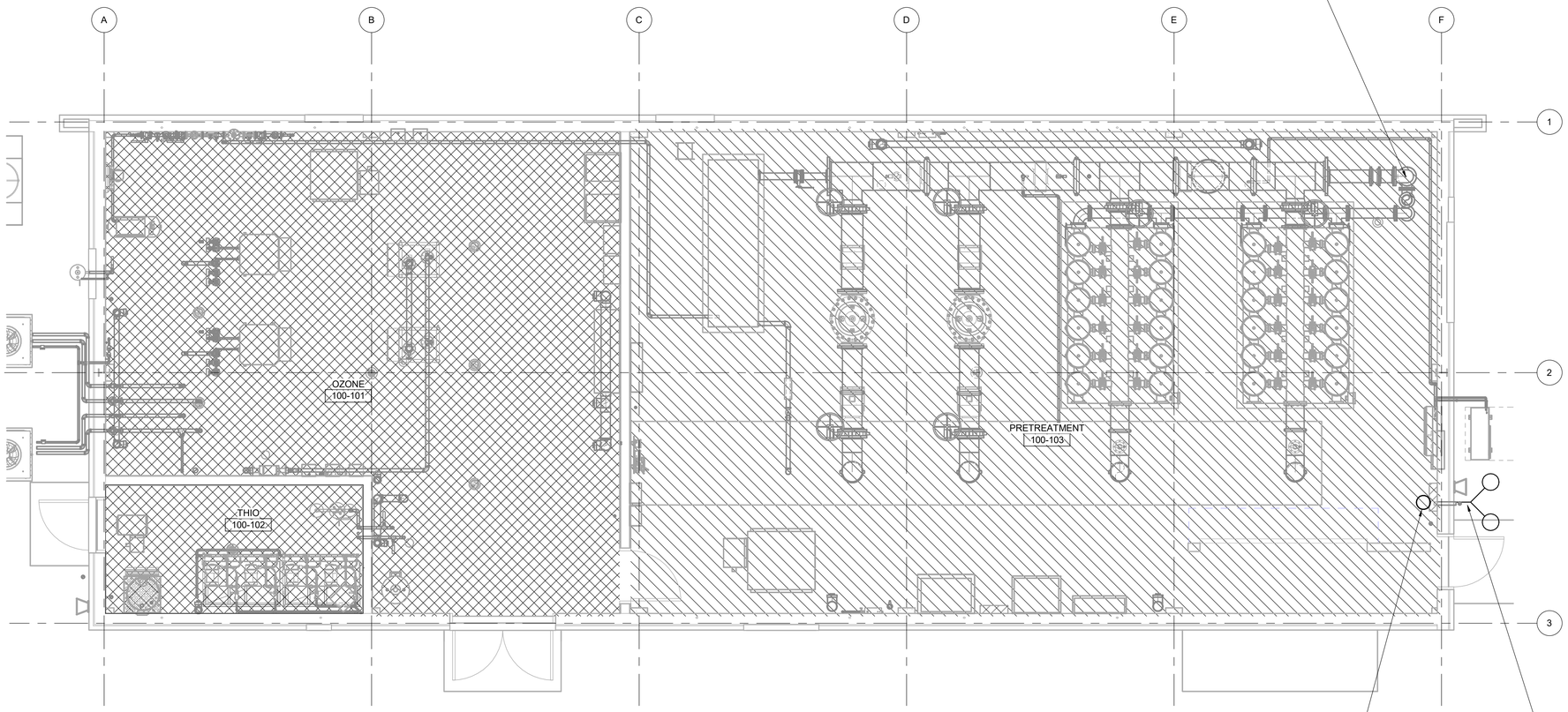

FIRE PROTECTION PLAN

1/4" = 1'-0"

FIRE PROTECTION GENERAL NOTES

1. THE FIRE SPRINKLER SYSTEM IS A DELEGATED DESIGN WITH PERFORMANCE SPECIFICATIONS. PROVIDE A CODE COMPLIANT SPRINKLER SYSTEM SERVING THE ASHLAND CREEK WATER TREATMENT PLANT - PRETREATMENT BUILDING [100], THAT MEETS THE REQUIREMENTS OF ALL APPLICABLE LOCAL, AND NATIONAL CODES. LOCATION OF THE FIRE DEPARTMENT CONNECTION (FDC) SHALL BE APPROVED BY THE AHJ. THIS PLAN TO BE READ IN CONJUNCTION WITH THE FIRE PROTECTION SYSTEMS SPECIFICATION 21 13 00.
2. ALL SPRINKLER SYSTEM VALVES SHALL BE PROVIDED WITH A SUPERVISORY TAMPER SWITCHES MONITORED BY THE LISTED FIRE ALARM CONTROL UNIT (FACU). A DEDICATED FUNCTION FIRE ALARM CONTROL UNIT (FACU) SHALL BE PROVIDED TO MEET THE SPRINKLER SYSTEM SUPERVISION, ALARMS AND MONITORING REQUIREMENTS OF OSSC §903. THIS DEDICATED FUNCTION FACU WILL SERVE AS A "SPRINKLER WATERFLOW AND SUPERVISORY SYSTEM" AS DESCRIBED IN 2016 NFPA 72.
3. FIRE DEPARTMENT CONNECTION SHALL BE LOCATED NOT LESS THAN 18 IN. OR MORE THAN 48 IN. ABOVE THE LEVEL OF THE ADJOINING GROUND, SIDEWALK, OR GRADE SURFACE. EACH FIRE DEPARTMENT CONNECTION (FDC) SHALL BE DESIGNATED BY A SIGN HAVING LETTERS, AT LEAST 1 IN. IN HEIGHT, THAT READS "AUTO SPRK" ALONG WITH A SIGN THAT INDICATES THE HYDRAULIC DESIGN INFORMATION AND PRESSURE REQUIRED AT THE INLETS TO DELIVER THE SYSTEM DEMAND.
4. PROVIDE FIRE STOPPING AT RATED WALL PENETRATIONS AND FIRE CAULKING AT PENETRATIONS OF ALL FIRE OR SMOKE-RATED SEPARATIONS.
5. COORDINATE ALL WORK WITH ARCHITECTURAL, STRUCTURAL, MECHANICAL, PLUMBING, AND ELECTRICAL TRADES. PROVIDE ALL OFFSETS TO AVOID INTERFERENCE WITH EQUIPMENT, PIPING, DUCTWORK, LIGHTS, CONDUIT, OR STRUCTURAL MEMBERS.
6. INSTALL SPRINKLER SYSTEM SUCH THAT NO SPRINKLER PIPING, SPRINKLER FITTINGS OR SPRINKLER HEADS ARE INSTALLED WITHIN THE DEDICATED ELECTRIC SPACE LOCATED ABOVE ELECTRICAL EQUIPMENT IN ACCORDANCE WITH NEC (NFPA 70), ARTICLE 110.26(E).
7. THE OSSC AND 2010 ASCE 7 REQUIRE SEISMIC RESTRAINT FOR THE FIRE PROTECTION SPRINKLER SYSTEM SEISMIC IN DESIGN CATEGORY C.
8. PROVIDE AUXILIARY DRAIN(S) TO ENSURE THAT ALL THE WATER IS REMOVED AND NOT TRAPPED WITHIN THE FIRE SPRINKLER PROTECTION PIPING. AUXILIARY DRAINS SHALL BE ACCESSIBLE FROM THE GROUND AND SHALL NOT REQUIRE A LADDER.
9. THE SPRINKLER SYSTEM SHALL BE HYDRAULICALLY DESIGNED TO MINIMIZE THE PRESSURE LOSS BY INCREASING PIPE SIZES, REDUCED HEAD SPACING, ADJUSTING SPRINKLER HEAD K-FACTORS, AND SO FORTH AS NECESSARY TO MAKE THE SYSTEM WORK WITH THE AVAILABLE WATER SUPPLY WITHOUT THE NEED FOR THE ADDITION OF A FIRE PUMP.

SPRINKLER SYSTEM SCHEDULE*

AREA	HAZARD CLASS	MIN. DENSITY (GPM/ SQ.-FT.)	MIN. SPK. SYS. HYDR. DESIGN AREA (SQ.-FT.)	HOSE * (GPM)	(MIN) DURATION
AREA NOT HATCHED	LIGHT HAZARD	0.10	1500	100	30
	ORDINARY HAZARD GROUP 1	0.15	1500	250	60
	ORDINARY HAZARD GROUP 2	0.20	1500	250	60

* HOSE STREAM DEMAND TO BE INCLUDED IN HYDRAULIC CALCULATIONS IN ACCORDANCE WITH NFPA 13

NOTE:

1.) THE FIRE SPRINKLER CONTRACTOR SHALL BE RESPONSIBLE FOR DESIGNING A SPRINKLER SYSTEM THAT MINIMIZES FRICTION LOSSES AND PRESSURE DEMAND SUCH THAT THE ASHLAND CREEK WTP WATER SUPPLY IS CAPABLE OF MEETING THE SYSTEM DEMAND AND DURATION WITHOUT THE ADDITION OF A FIRE PUMP. THIS SHALL BE DONE AT NO ADDITIONAL COST TO THE OWNER.

2.) THE CONTRACTOR SHALL CONDUCT A HYDRANT FLOW TEST IN ACCORDANCE WITH NFPA 291 AT NO ADDITIONAL COST TO THE OWNER PRIOR TO THE DESIGN OF AUTOMATIC SPRINKLER SYSTEM. THE CONTRACTOR SHALL COMPARE THEIR FLOW TEST RESULTS WITH TEST DATA BELOW AND USE THE LOWEST PRESSURE OF THE TWO DESIGNS, INCLUDING SAFETY FACTORS IN FIRE PROTECTION SYSTEMS SPEC 21 05 00.

3.) HYDRANT MODELED FLOW TEST:

HYDRANT LOCATION	NA
STATIC PRESSURE	58 PSI
RESIDUAL PRESSURE	53 PSI
COMBINED FLOW RATE	1,000 GPM
FIRE FLOW AVAILABLE AT 20 PSI	2,700 GPM

ISSUE	DATE	DESCRIPTION
A	09/2026	ISSUED FOR BIDS

PROJECT MANAGER	PIERRE KWAN
CIVIL	J. MEGRDITCHIAN
STRUCTURAL	P. LINDBLOM
ARCHITECTURAL	V. YANEZ
PROCESS	P. KWAN
MECHANICAL	K. CHEUNG
ELECTRICAL	R. MCCOMB
INSTRUMENTATION	D. BEST
PROJECT NUMBER	10193663

REGISTERED PROFESSIONAL ENGINEER 84327PE DIGITALLY SIGNED OREGON JANUARY 12, 2026 STUART D GRAHAM
EXPIRES: 6/30/2027

CITY OF ASHLAND
Ashland, Oregon

City of Ashland
Ashland Creek
Water Treatment Plant
2026

PRETREATMENT BUILDING
FIRE PROTECTION
GROUND FLOOR FIRE PROTECTION PLAN

0 1" 2"

FILENAME 10193663-AWTP-100_F.rte
SCALE 1/4" = 1'-0"
SHEET 100F101

Autodesk Docs://10193663_Ashland_WTP_Final_Design_2024/10193663-AWTP-100_F.rvt
9/22/2026 9:52:19 PM

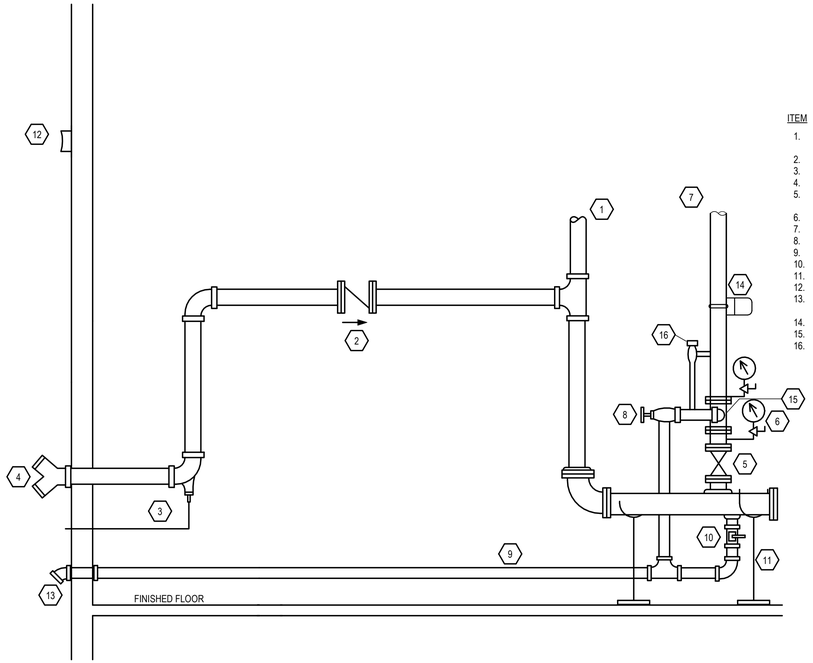

ITEM	DESCRIPTION
1.	CONNECT TO THE WATER SPRINKLER SUPPLY. SEE SHEET 100F101 FOR CONNECTION LOCATION.
2.	CHECK VALVE.
3.	BALL DRIP. PIPE TO OUTSIDE.
4.	AHJ COMPLIANT FIRE DEPARTMENT CONNECTION.
5.	NORMALLY OPEN CONTROL VALVE WITH TAMPER SWITCH.
6.	PRESSURE GAUGE.
7.	TO WET SPRINKLER SYSTEM ZONE.
8.	MAIN DRAIN VALVE.
9.	MAIN DRAIN.
10.	BALL VALVE FOR LOW POINT DRAIN.
11.	PIPE STAND.
12.	ELECTRIC HORN AND STROBE TO FACU.
13.	MAIN DRAIN DISCHARGE TO OUTSIDE WITH GALVANIZED WALL PLATE.
14.	WATER FLOW SWITCH
15.	RISER ALARM CHECK VALVE WITH RETARD CHAMBER
16.	PRESSURE RELIEF VALVE

DETAIL IS FOR DIAGRAMMATIC PURPOSES ONLY.

1 - WET SYSTEM FIRE SPRINKLER RISER SCHEMATIC
NOT TO SCALE

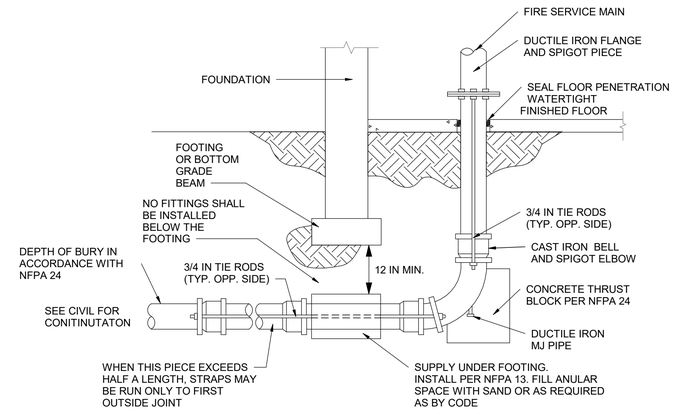

2 - FIRE SERVICE MAIN ENTRANCE DETAIL
NOT TO SCALE

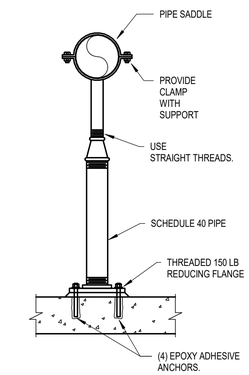

3 - FLOOR PIPE SUPPORT DETAIL
NOT TO SCALE

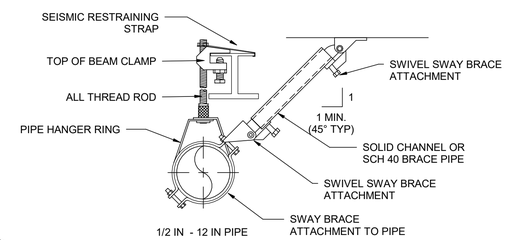

4 - TRANSVERSE SEISMIC BRACING DETAIL
NOT TO SCALE

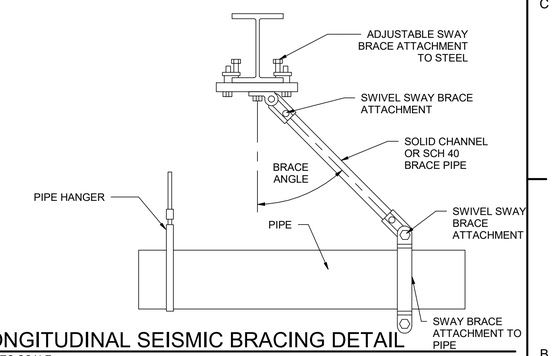

5 - LONGITUDINAL SEISMIC BRACING DETAIL
NOT TO SCALE

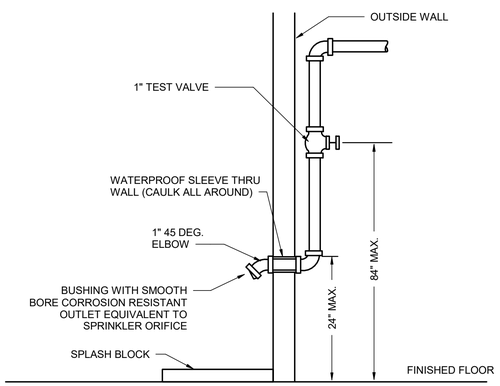

6 - INSPECTOR'S TEST CONNECTION DETAIL
NOT TO SCALE

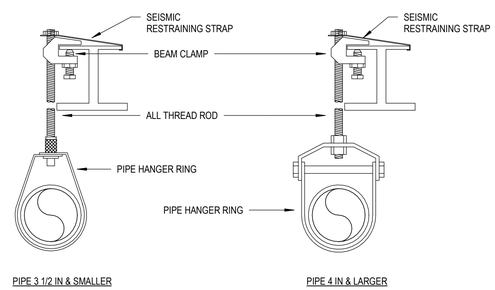

7 - BEAM CLAMP PIPE HANGER DETAIL
NOT TO SCALE

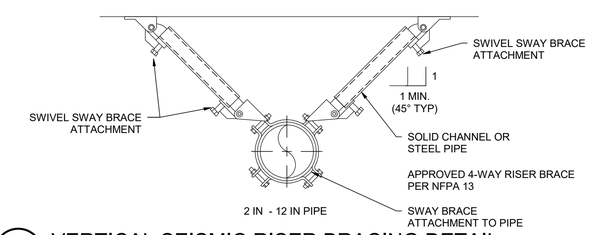

8 - VERTICAL SEISMIC RISER BRACING DETAIL
NOT TO SCALE

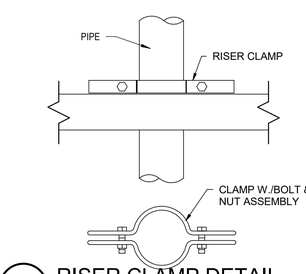

9 - RISER CLAMP DETAIL
NOT TO SCALE

ISSUE	DATE	DESCRIPTION
A	09/2026	ISSUED FOR BIDS

PROJECT MANAGER	PIERRE KWAN
CIVIL	J. MEGRDITCHIAN
STRUCTURAL	P. LINDBLOM
ARCHITECTURAL	V. YANEZ
PROCESS	P. KWAN
MECHANICAL	K. CHEUNG
ELECTRICAL	R. MCCOMB
INSTRUMENTATION	D. BEST
PROJECT NUMBER	10193663

REGISTERED PROFESSIONAL ENGINEER 84327PE DIGITALLY SIGNED OREGON JANUARY 12, 2026 STUART D GRAHAM
EXPIRES: 6/30/2027

CITY OF ASHLAND
Ashland, Oregon

City of Ashland

Ashland Creek Water Treatment Plant

2026

PRETREATMENT BUILDING
FIRE PROTECTION
FIRE PROTECTION DETAILS

0 1" 2"

FILENAME: 10193663-AWTP-100_F.rte
SCALE: As indicated
SHEET: 100F501

Autodesk Docs://10193663_Ashland_WTP_Final_Design_2024/10193663-AWTP-100_F.rvt
9/22/2026 9:52:19 PM

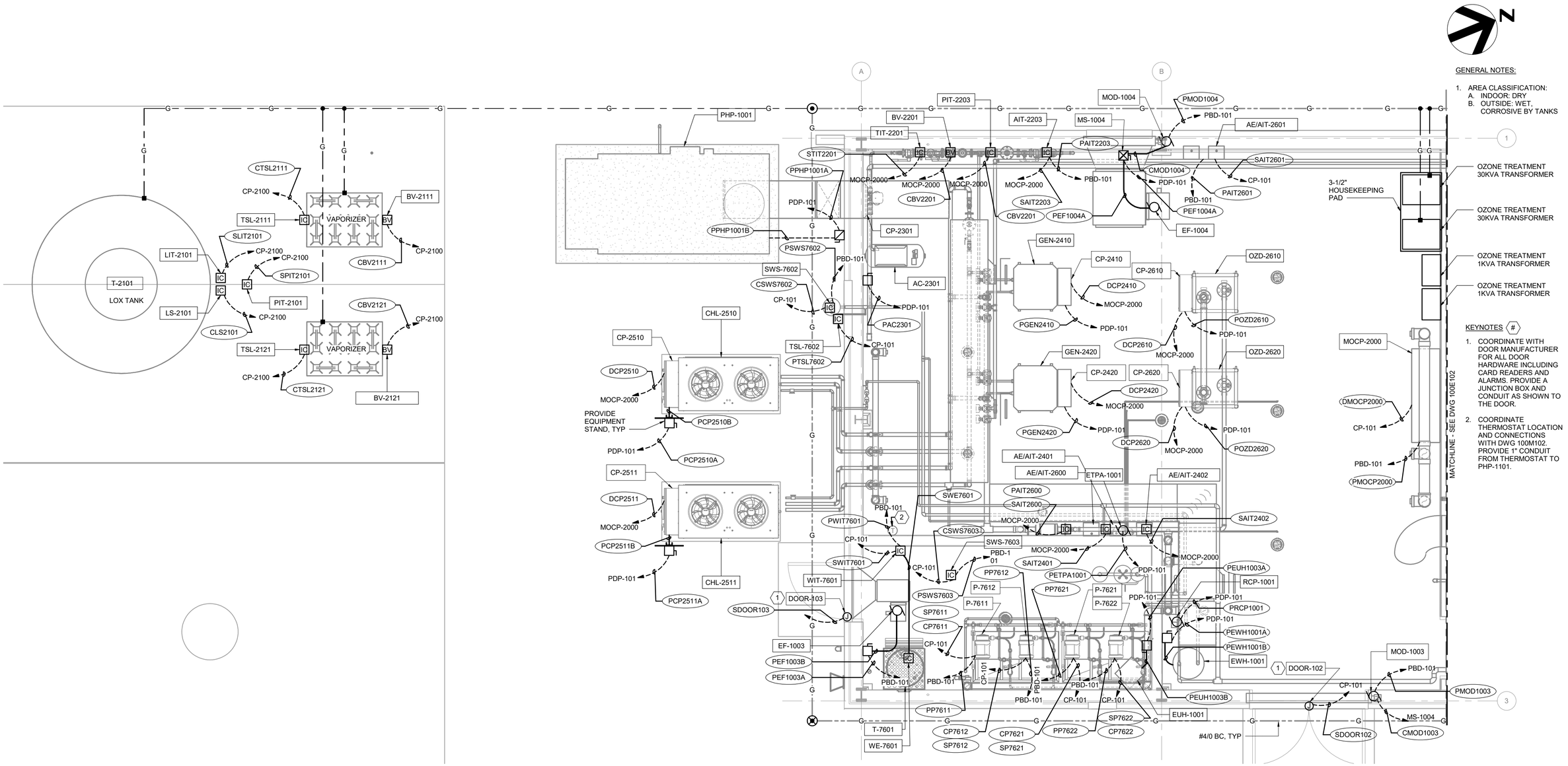

GENERAL NOTES:

1. AREA CLASSIFICATION:
   A. INDOOR: DRY
   B. OUTSIDE: WET, CORROSIVE BY TANKS

KEYNOTES #

1. COORDINATE WITH DOOR MANUFACTURER FOR ALL DOOR HARDWARE INCLUDING CARD READERS AND ALARMS. PROVIDE A JUNCTION BOX AND CONDUIT AS SHOWN TO THE DOOR.
2. COORDINATE THERMOSTAT LOCATION AND CONNECTIONS WITH DWG 100M102. PROVIDE 1" CONDUIT FROM THERMOSTAT TO PHP-1101.

POWER & CONTROL PLAN SOUTH

3/8" = 1'-0"

ISSUE	DATE	DESCRIPTION
A	09/2026	ISSUED FOR BIDS

PROJECT MANAGER	PIERRE KWAN
CIVIL	J. MEGRDITCHIAN
STRUCTURAL	P. LINDBLOM
ARCHITECTURAL	V. YANEZ
PROCESS	P. KWAN
MECHANICAL	K. CHEUNG
ELECTRICAL	R. MCCOMB
INSTRUMENTATION	D. BEST
PROJECT NUMBER	10193663

REGISTERED PROFESSIONAL ENGINEER 88023PE DIGITALLY SIGNED OREGON MAY 14, 2013 ROBB J. MCCOMB

EXPIRES: 12/31/2026

CITY OF ASHLAND

Ashland, Oregon

City of Ashland

Ashland Creek Water Treatment Plant

2026

PRETREATMENT BUILDING ELECTRICAL POWER AND CONTROL PLAN SOUTH

0 1" 2"

FILENAME 10193663-AWTP-100_E.rvt

SCALE 3/8" = 1'-0"

SHEET **100E101**

Autodesk Docs://10193663_Ashland_WTP_Final_Design_2024/10193663-AWTP-100_E.rvt
9/22/2026 9:48:13 PM

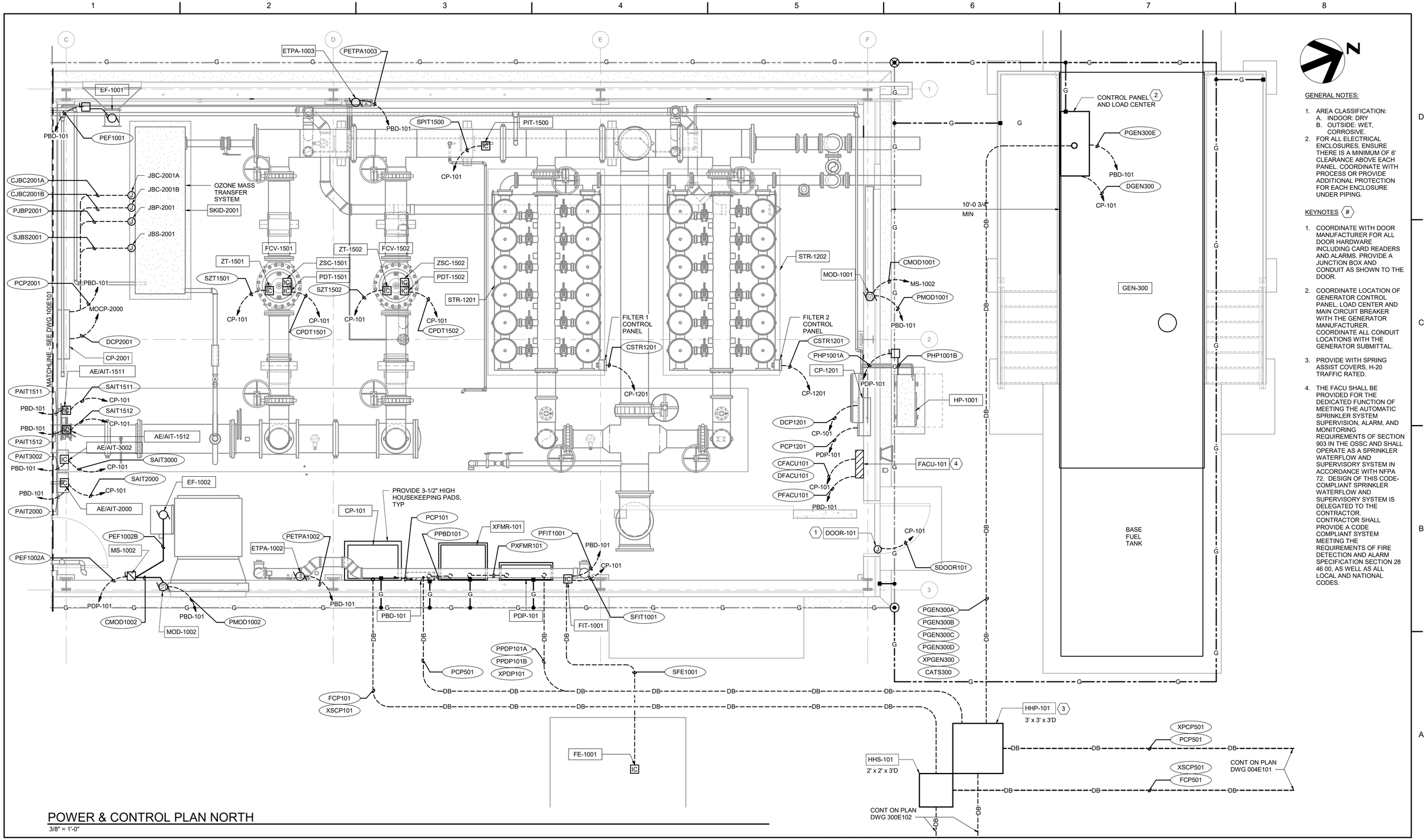

POWER & CONTROL PLAN NORTH

3/8" = 1'-0"

GENERAL NOTES:

1. AREA CLASSIFICATION:
   A. INDOOR: DRY
   B. OUTSIDE: WET, CORROSIVE.
2. FOR ALL ELECTRICAL ENCLOSURES, ENSURE THERE IS A MINIMUM OF 6' CLEARANCE ABOVE EACH PANEL. COORDINATE WITH PROCESS OR PROVIDE ADDITIONAL PROTECTION FOR EACH ENCLOSURE UNDER PIPING.

KEYNOTES (#)

1. COORDINATE WITH DOOR MANUFACTURER FOR ALL DOOR HARDWARE INCLUDING CARD READERS AND ALARMS. PROVIDE A JUNCTION BOX AND CONDUIT AS SHOWN TO THE DOOR.
2. COORDINATE LOCATION OF GENERATOR CONTROL PANEL, LOAD CENTER AND MAIN CIRCUIT BREAKER WITH THE GENERATOR MANUFACTURER. COORDINATE ALL CONDUIT LOCATIONS WITH THE GENERATOR SUBMITTAL.
3. PROVIDE WITH SPRING ASSIST COVERS, H-20 TRAFFIC RATED.
4. THE FACU SHALL BE PROVIDED FOR THE DEDICATED FUNCTION OF MEETING THE AUTOMATIC SPRINKLER SYSTEM SUPERVISION, ALARM, AND MONITORING REQUIREMENTS OF SECTION 903 IN THE OSSC AND SHALL OPERATE AS A SPRINKLER WATERFLOW AND SUPERVISORY SYSTEM IN ACCORDANCE WITH NFPA 72. DESIGN OF THIS CODE-COMPLIANT SPRINKLER WATERFLOW AND SUPERVISORY SYSTEM IS DELEGATED TO THE CONTRACTOR. CONTRACTOR SHALL PROVIDE A CODE COMPLIANT SYSTEM MEETING THE REQUIREMENTS OF FIRE DETECTION AND ALARM SPECIFICATION SECTION 28 46 00, AS WELL AS ALL LOCAL AND NATIONAL CODES.

ISSUE	DATE	DESCRIPTION
A	09/2026	ISSUED FOR BIDS

PROJECT MANAGER	PIERRE KWAN
CIVIL	J. MEGRDITCHIAN
STRUCTURAL	P. LINDBLOM
ARCHITECTURAL	V. YANEZ
PROCESS	P. KWAN
MECHANICAL	K. CHEUNG
ELECTRICAL	R. MCCOMB
INSTRUMENTATION	D. BEST
PROJECT NUMBER	10193663

REGISTERED PROFESSIONAL ENGINEER 98023PE OREGON MAY 14, 2013 ROBB J. MCCOMB
DIGITALLY SIGNED
EXPIRES: 12/31/2026

CITY OF ASHLAND
Ashland, Oregon

City of Ashland

Ashland Creek Water Treatment Plant

2026

PRETREATMENT BUILDING ELECTRICAL POWER AND CONTROL PLAN NORTH

0 1" 2"

FILENAME 10193663-AWTP-100_E.rvt
SCALE 3/8" = 1'-0"
SHEET 100E102

Autodesk Docs://10193663_Ashland_WTP_Final_Design_2024/10193663-AWTP-100_E.rvt
9/22/2026 9:48:27 PM

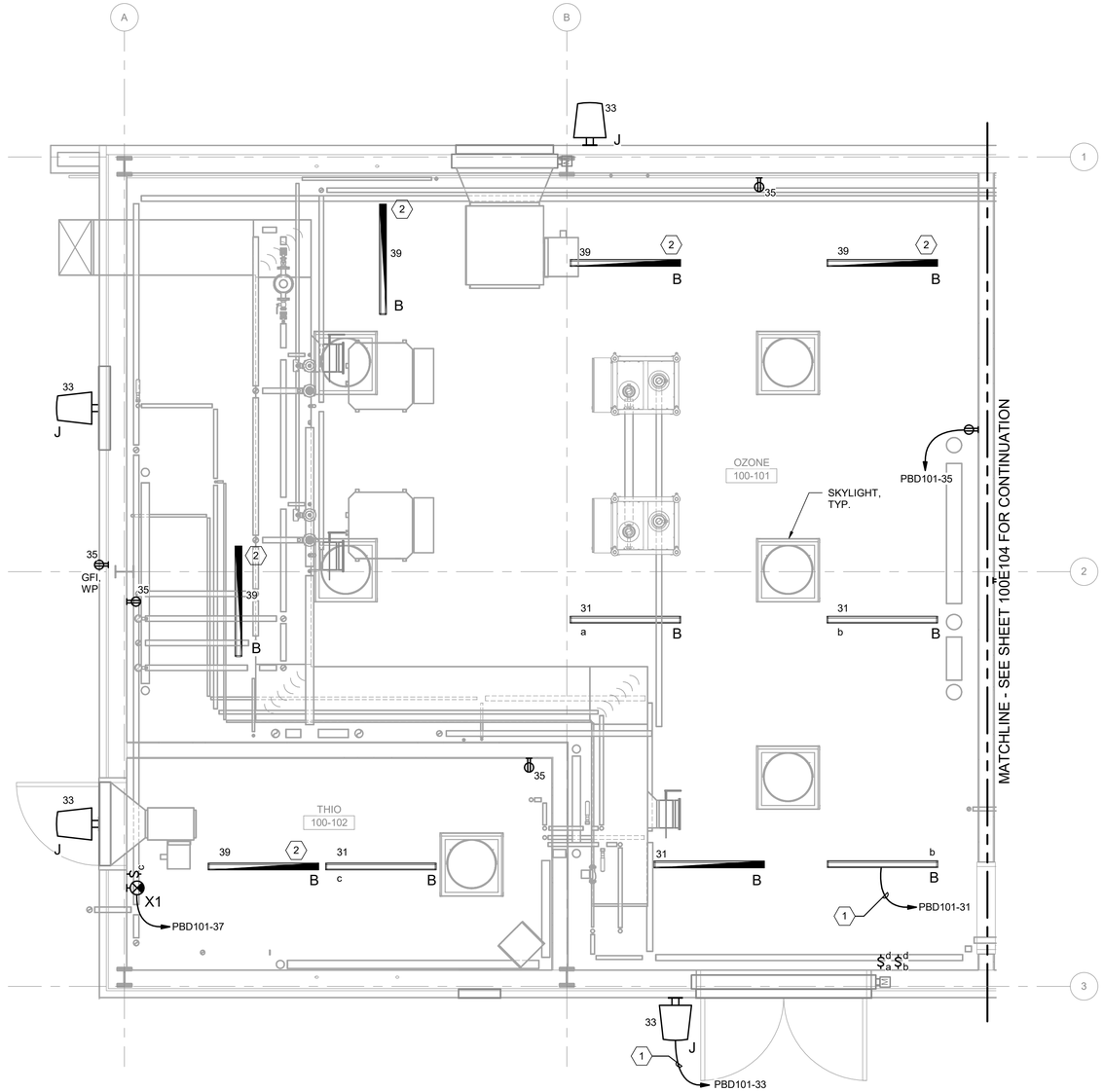

LIGHTING & RECEPTACLES PLAN SOUTH

3/8" = 1'-0"

GENERAL NOTES

1 PROVIDE OCCUPANCY SENSOR AND DAY LIGHT CONTROL FOR ALL FIXTURES TYPE "B" UNLESS OTHERWISE NOTED.

KEYNOTES (#)

1 VIA LIGHTING CONTROL PANEL 'LCP100'.

2 THESE FIXTURES ARE PROVIDING ILLUMINATION FOR PATH OF EGRESS AND WILL NOT HAVE OCCUPANCY SENSOR AND DAY LIGHT CONTROL. PROVIDE BATTERY PACK LISTED FOR UL924. PROVIDE UNSWITCHED CIRCUIT.

ISSUE	DATE	DESCRIPTION
A	09/2026	ISSUED FOR BIDS

PROJECT MANAGER	PIERRE KWAN
CIVIL	J. MEGRDITCHIAN
STRUCTURAL	P. LINDBLOM
ARCHITECTURAL	V. YANEZ
PROCESS	P. KWAN
MECHANICAL	K. CHEUNG
ELECTRICAL	R. MCCOMB
INSTRUMENTATION	D. BEST
PROJECT NUMBER	10193663

REGISTERED PROFESSIONAL ENGINEER 88023PE DIGITALLY SIGNED OREGON MAY 14, 2013 ROBB J. MCCOMB

EXPIRES: 12/31/2026

CITY OF ASHLAND

Ashland, Oregon

City of Ashland

Ashland Creek Water Treatment Plant

2026

PRETREATMENT BUILDING ELECTRICAL LIGHTING & RECEPTACLES PLAN SOUTH

0 1" 2"

FILENAME 10193663-AWTP-100_E.rvt

SCALE 3/8" = 1'-0"

SHEET **100E103**

Autodesk Docs://10193663_Ashland_WTP_Final_Design_2024/10193663-AWTP-100_E.rvt
9/22/2026 9:48:32 PM

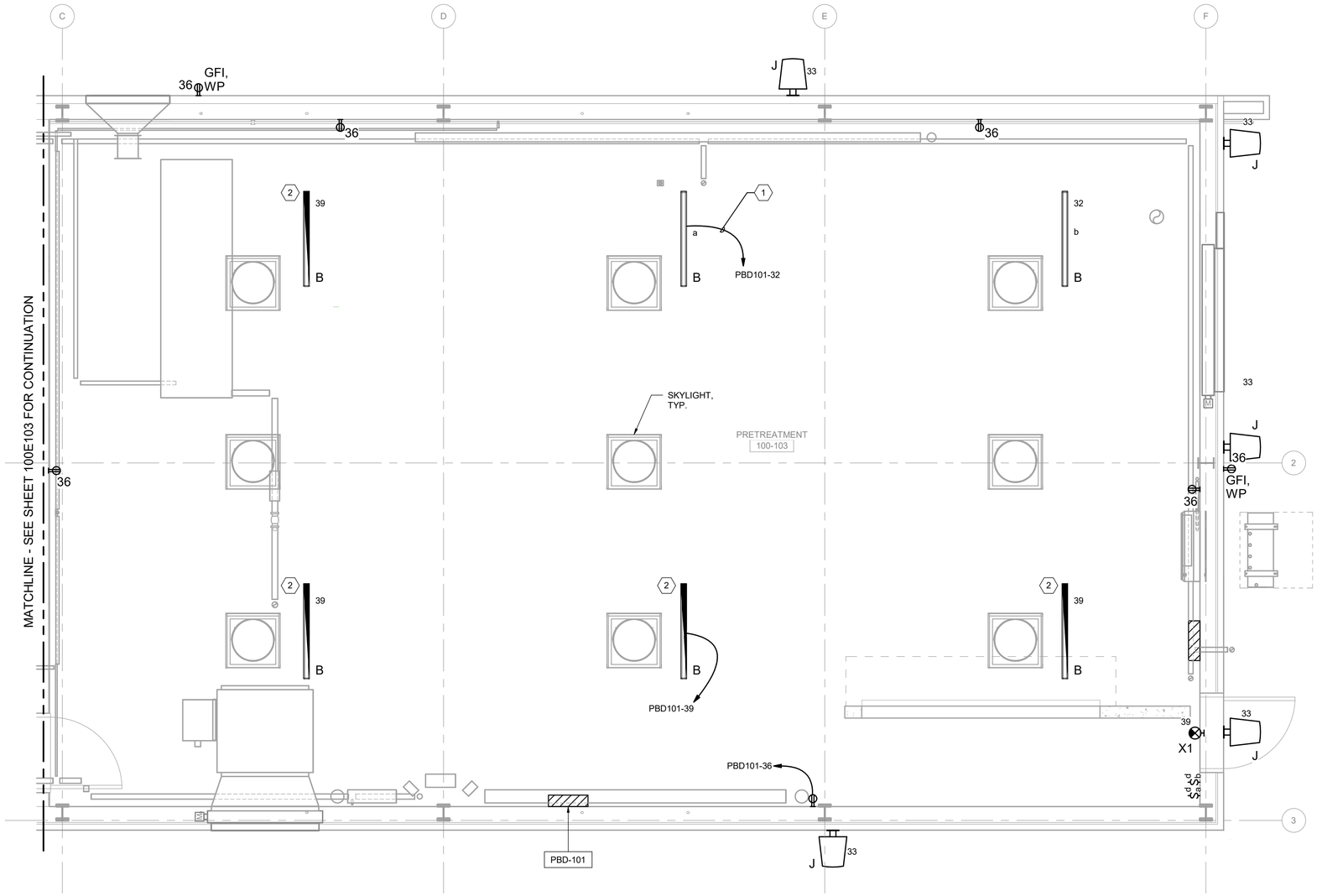

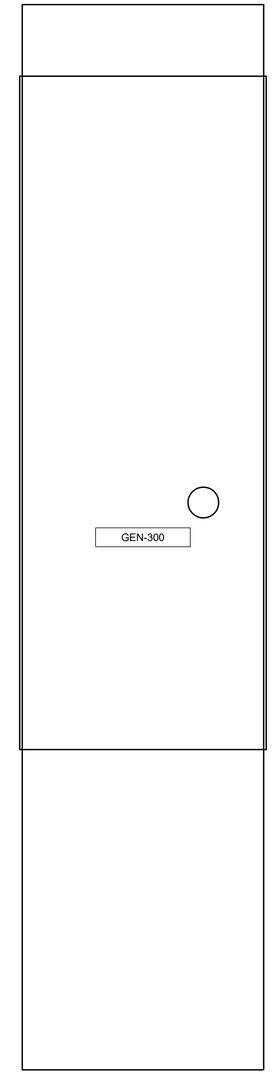

GENERAL NOTES

1 PROVIDE OCCUPANCY SENSOR AND DAY LIGHT CONTROL FOR ALL FIXTURES TYPE "B" UNLESS OTHERWISE NOTED.

2 INSTALL LIGHT FIXTURES WHERE EQUIPMENT BELOW WILL NOT INHIBIT MAINTENANCE ACCESS WHERE POSSIBLE. ADJUST FIXTURES IN THE FIELD DURING CONSTRUCTION AS REQUIRED.

KEYNOTES

1 VIA LIGHTING CONTROL PANEL 'LCP100'.

2 THESE FIXTURES ARE PROVIDING ILLUMINATION FOR PATH OF EGRESS AND WILL NOT HAVE OCCUPANCY SENSOR AND DAY LIGHT CONTROL. PROVIDE BATTERY PACK LISTED FOR UL924. PROVIDE UNSWITCHED CIRCUIT.

LIGHTING & RECEPTACLES PLAN NORTH

3/8" = 1'-0"

ISSUE	DATE	DESCRIPTION
A	09/2026	ISSUED FOR BIDS

PROJECT MANAGER	PIERRE KWAN
CIVIL	J. MEGRDITCHIAN
STRUCTURAL	P. LINDBLOM
ARCHITECTURAL	V. YANEZ
PROCESS	P. KWAN
MECHANICAL	K. CHEUNG
ELECTRICAL	R. MCCOMB
INSTRUMENTATION	D. BEST
PROJECT NUMBER	10193663

REGISTERED PROFESSIONAL ENGINEER
88023PE
DIGITALLY SIGNED
OREGON
MAY 14, 2013
ROBB J. MCCOMB
EXPIRES: 12/31/2026

CITY OF ASHLAND
Ashland, Oregon

City of Ashland

Ashland Creek Water Treatment Plant

2026

PRETREATMENT BUILDING ELECTRICAL LIGHTING & RECEPTACLES PLAN NORTH

0 1" 2"

FILENAME 10193663-AWTP-100_E.rvt

SCALE 3/8" = 1'-0"

SHEET **100E104**

Autodesk Docs://10193663_Ashland_WTP_Final_Design_2024/10193663-AWTP-100_E.rvt
9/22/2026 9:48:33 PM

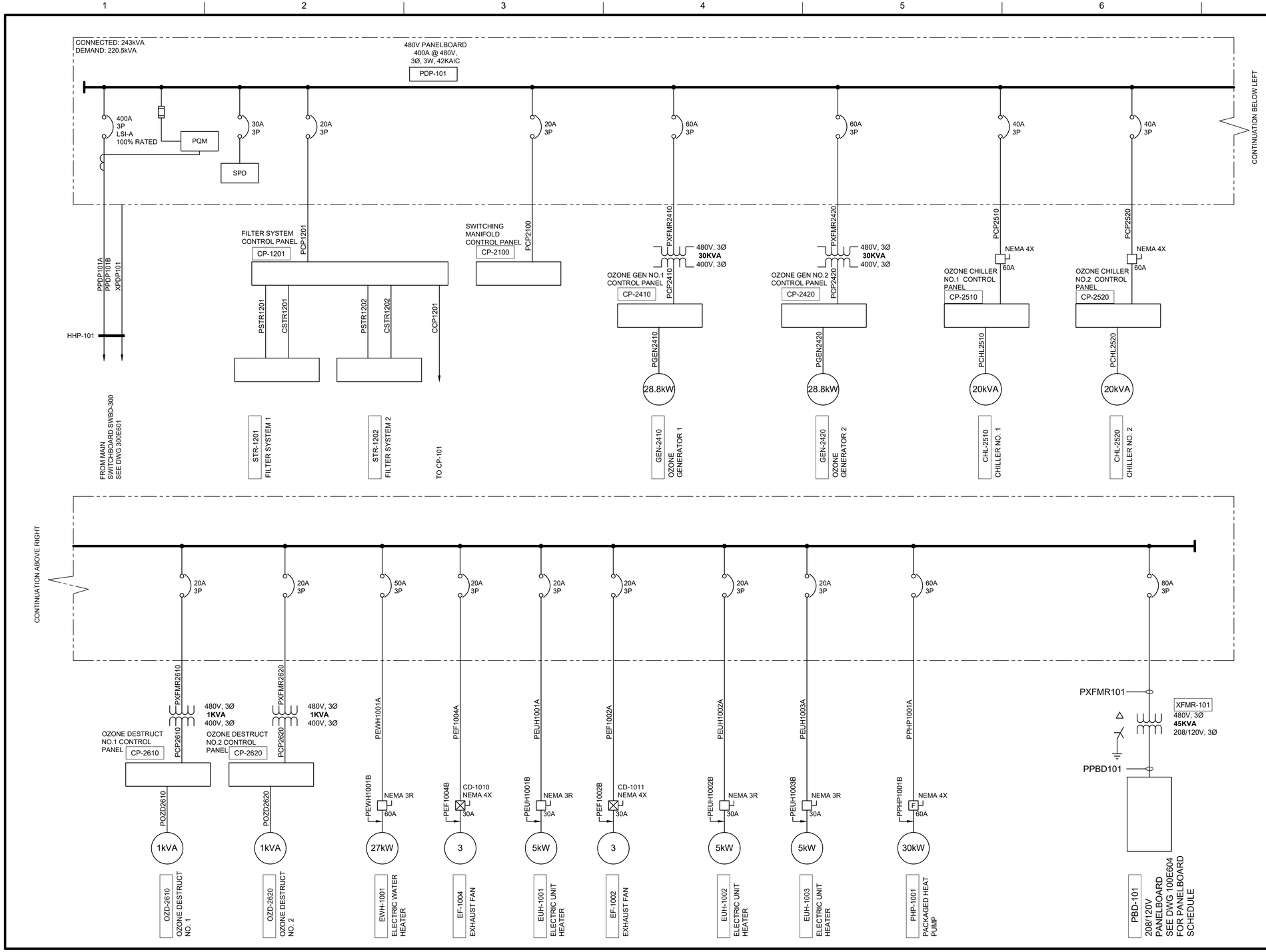

GENERAL NOTES:

1. CONTROL PANELS SHALL CONTAIN A MAIN DISCONNECT INSIDE THE CONTROL PANEL, TYP. PROVIDE DISCONNECT HANDLE ON THE OUTSIDE OF THE CONTROL PANEL WHEN THERE IS NOT A SEPARATE DISCONNECT SWITCH.

ISSUE	DATE	DESCRIPTION
A	09/2026	ISSUED FOR BIDS

PROJECT MANAGER	PIERRE KWAN
CIVIL	J. MEGRDITCHIAN
STRUCTURAL	P. LINDBLOM
ARCHITECTURAL	V. YANEZ
PROCESS	P. KWAN
MECHANICAL	K. CHEUNG
ELECTRICAL	R. MCCOMB
INSTRUMENTATION	D. BEST
PROJECT NUMBER	10193663

REGISTERED PROFESSIONAL ENGINEER
98023PE
DIGITALLY SIGNED
OREGON
MAY 14, 2013
ROBB J. MCCOMB
EXPIRES: 12/31/2026

CITY OF ASHLAND
Ashland, Oregon

City of Ashland

Ashland Creek Water Treatment Plant

2026

PRETREATMENT BUILDING ELECTRICAL

PDP-101 ONE LINE DIAGRAM

0 1" 2"

FILENAME 200E601
SCALE NONE

SHEET **100E601**

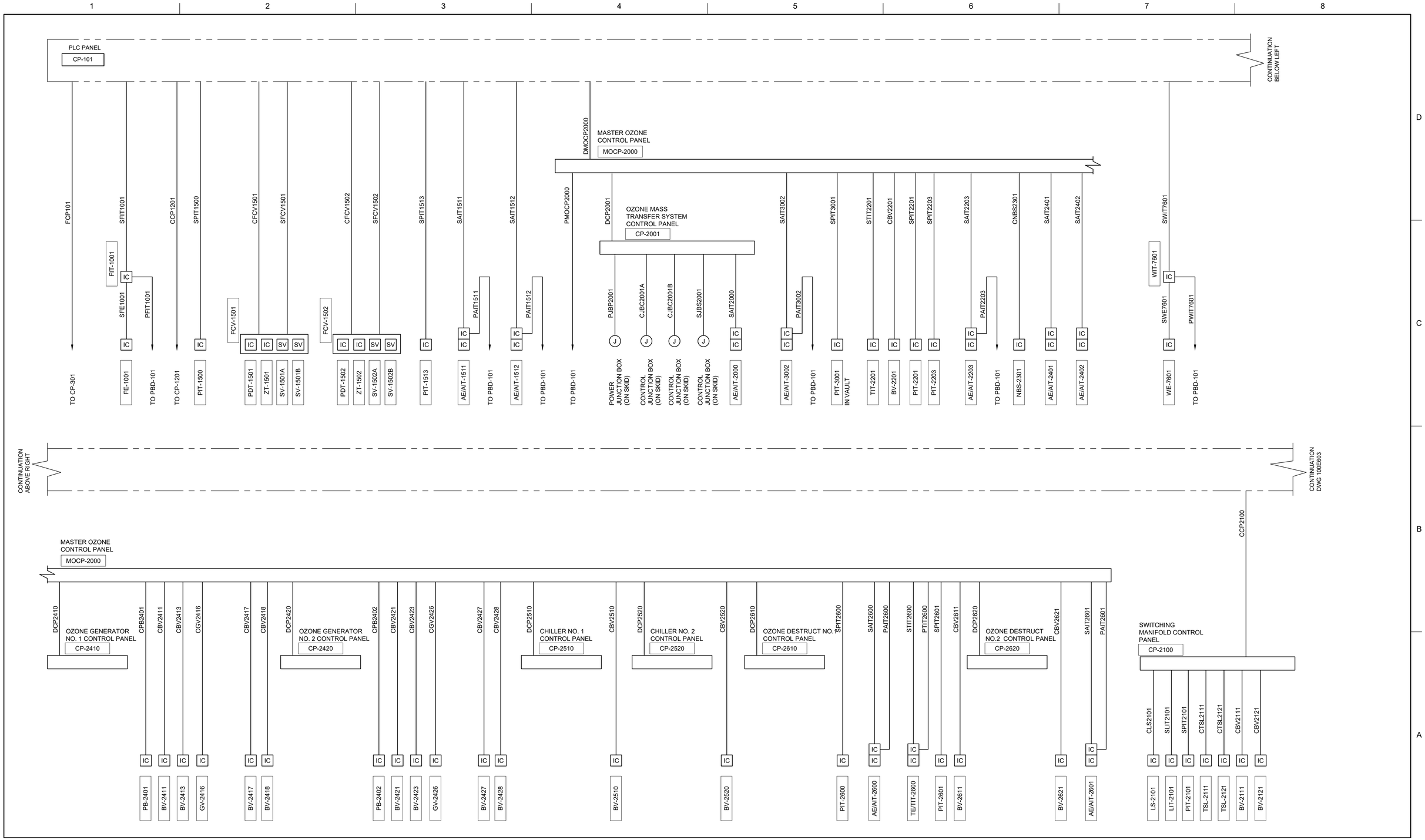

ISSUE	DATE	DESCRIPTION
A	09/2026	ISSUED FOR BIDS

PROJECT MANAGER	PIERRE KWAN
CIVIL	J. MEGRDITCHIAN
STRUCTURAL	P. LINDBLOM
ARCHITECTURAL	V. YANEZ
PROCESS	P. KWAN
MECHANICAL	K. CHEUNG
ELECTRICAL	R. MCCOMB
INSTRUMENTATION	D. BEST
PROJECT NUMBER	10193663

REGISTERED PROFESSIONAL ENGINEER 88023PE DIGITALLY SIGNED OREGON MAY 14, 2013 ROBB J. MCCOMB
EXPIRES: 12/31/2026

CITY OF ASHLAND
Ashland, Oregon

City of Ashland

Ashland Creek Water Treatment Plant

2026

PRETREATMENT BUILDING ELECTRICAL

CP-101 ONE LINE DIAGRAM 1

0 1" 2"

FILENAME 100E602.dwg
SCALE NTS

SHEET **100E602**

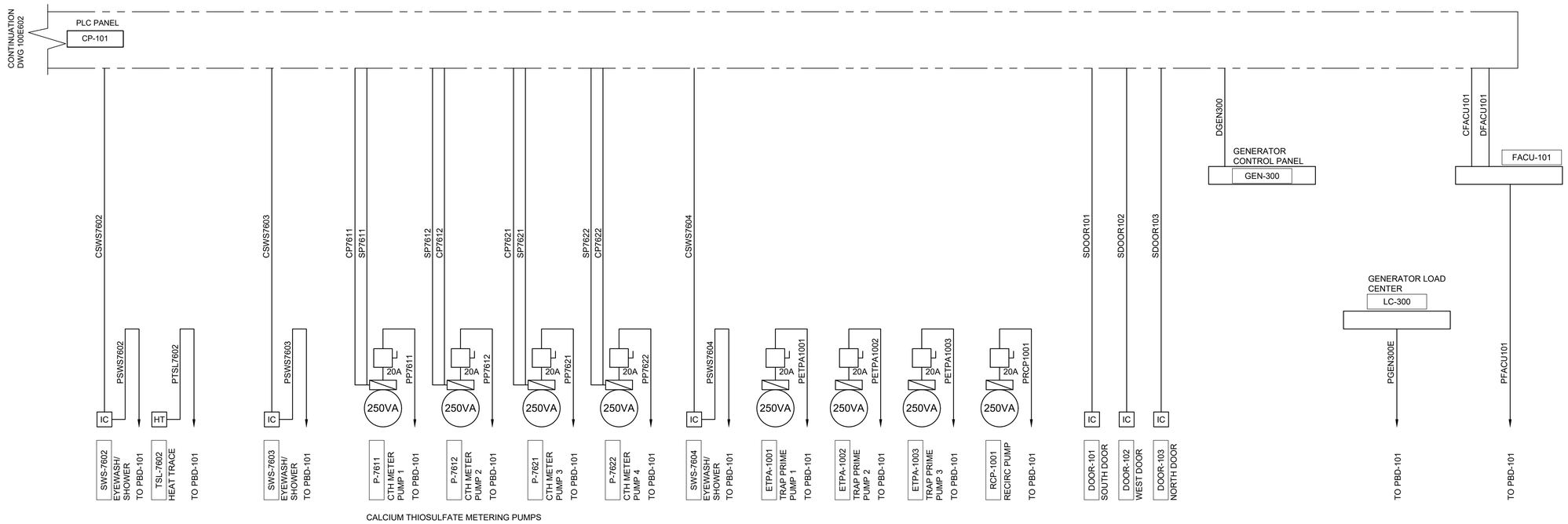

ISSUE	DATE	DESCRIPTION
A	09/2026	ISSUED FOR BIDS

PROJECT MANAGER	PIERRE KWAN
CIVIL	J. MEGRDITCHIAN
STRUCTURAL	P. LINDBLOM
ARCHITECTURAL	V. YANEZ
PROCESS	P. KWAN
MECHANICAL	K. CHEUNG
ELECTRICAL	R. MCCOMB
INSTRUMENTATION	D. BEST
PROJECT NUMBER	10193663

REGISTERED PROFESSIONAL ENGINEER
88023PE
DIGITALLY SIGNED
OREGON
MAY 14, 2013
ROBB J. MCCOMB
EXPIRES: 12/31/2026

CITY OF ASHLAND
Ashland, Oregon

City of Ashland

Ashland Creek Water Treatment Plant

2026

PRETREATMENT BUILDING ELECTRICAL

CP-101 ONE LINE DIAGRAM 2

0 1" 2"

FILENAME	100E603.dwg
SCALE	NTS

SHEET **100E603**

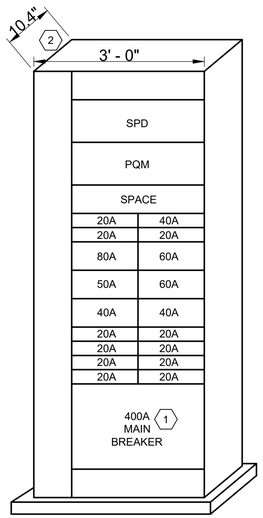

PDP-101 FRONT ELEVATION

SCALE: 3/4" = 1' - 0"

KEYNOTES: (#)

1. ACTUAL CIRCUIT BREAKER LAYOUT MAY VARY. CONFIRM WITH SUBMITTAL OF PANELBOARD FOR FINAL LAYOUT AND LOCATION OF CIRCUIT BREAKERS.
2. DIMENSIONS SHOWN FOR EATON DISTRIBUTION PANELBOARDS, TYPE POW-R-LINE 4X. WHERE ANOTHER MANUFACTURER IS PROVIDED, ENSURE PANELBOARD DIMENSIONS WILL FIT AS DESIGNED.

PANEL 'PDP-101'

LOCATION:	OZONE BUILDING	VOLTAGE:	480 V	KAIC:	42 BUSSING SHALL BE FULLY RATED
MOUNTING:	WALL	PHASE:	3 P / 4W	CODES:	0=EQPT, 1=RCPT, 2=LTG, 3=A/C, 4=HEAT
ENCLOSURE:	NEMA 12 STYLE: PRL-4X	BUSSING:	400 A		5=CONTINUOUS MOTORS, 6=LRGST MOTOR, 7=PANEL
BRKR MTG:	BOLT-ON	MCB:	400 A	ACCESSORIES:	GROUND BUS, 42 SPACE
BREAKERS:	75 DEGREE TERMINALS	MLO:	A		

CODE	BRKR	CIRCUIT USE	CKT	VA	A	B	C	VA	CKT	CIRCUIT USE	BRKR	CODE
0			1	500	X			500	2			0
0	20/3	CP-1201 - FILTER CONTROL PANEL	3	500		X		500	4	CP-2100 - SWITCHING MANIFOLD CONTROL PNL	20/3	0
0			5	500			X	500	6			0
6			7	10,000	X			10,000	8			0
6	60/3	CP-2410 - OZONE GENERATOR 1 XFMR	9	10,000		X		10,000	10	CP-2420 - OZONE GENERATOR 2 XFMR	60/3	0
6			11	10,000			X	10,000	12			0
0			13	6,666	X			6,666	14			0
0	40/3	CP-2510 - OZONE CHILLER 1	15	6,666		X		6,666	16	CP-2520 - OZONE CHILLER 2	40/3	0
0			17	6,666			X	6,666	18			0
0			19	333	X			333	20			0
0	20/3	CP-2610 - OZONE DESTRUCT 1	21	333		X		333	22	CP-2620 - OZONE DESTRUCT 2	20/3	0
0			23	333			X	333	24			0
0			25	9,000	X			1,000	26			0
0	50/3	EWH-1001 ELECTRIC WATER HEATER	27	9,000		X		1,000	28	EF-1002 EXHAUST FAN	20/3	0
0			29	9,000			X	1,000	30			0
0			31	1,666	X			1,000	32			0
0	20/3	EUH-1001 ELECTRIC UNIT HEATER	33	1,666		X		1,000	34	EF-1004 EXHAUST FAN	20/3	0
0			35	1,666			X	1,000	36			0
0			37	1,666	X			1,666	38			0
0	20/3	EUH-1002 ELECTRIC UNIT HEATER	39	1,666		X		1,666	40	EUH-1003 ELECTRIC UNIT HEATER	20/3	0
0			41	1,666			X	1,666	42			0
0			43	10,000	X			5,000	44			0
0	60/3	PHP-1001 PACKAGED HEAT PUMP	45	10,000		X		5,000	46	XFMR-101	30/3	0
0			47	10,000			X	5,000	48			0
0			49		X				50			0
0	20/3	SPARE	51			X			52	SPARE	20/3	0
0			53				X		54			0
0			55		X				56			0
0	20/3	SPARE	57			X			58	SPARE	20/3	0
0			59				X		60			0
0			61		X				62			0
0	20/3	SPARE	63			X			64	SPARE	20/3	0
0			65				X		66			0
0			67		X				68			0
0		SPACE	69			X			70	SPACE		0
0			71				X		72			0

	EQPT VA	RCPT VA	LTG VA	HEAT VA	MOTORS	LRG MTR	CONN VA	PANEL VA	PHASE AMP
PHASE A	55996	0	0	0	0	10000	65996	68496	247
PHASE B	55996	0	0	0	0	10000	65996	68496	247
PHASE C	55996	0	0	0	0	10000	65996	68496	247
TOTAL	167988	0	0	0	0	30000	197988	205488	

PANEL DEMAND KVA:	205.49	PANEL DEMAND AMPACITY:	247	AMPS
RESERVE KVA:	41.10	RESERVE AMPACITY:	37	AMPS
DESIGN KVA:	246.59	DESIGN AMPACITY:	284	AMPS

PANEL 'PBD-101'

LOCATION:	OZONE BLDG	VOLTAGE:	208/120 V	KAIC:	22 BUSSING SHALL BE FULLY RATED
MOUNTING:	WALL	PHASE:	3 P / 4W	CODES:	0=EQPT, 1=RCPT, 2=LTG, 3=A/C, 4=HEAT
ENCLOSURE:	NEMA 12 STYLE: PL1A	BUSSING:	200 A		5=CONTINUOUS MOTORS, 6=LRGST MOTOR, 7=PANEL
BRKR MTG:	BOLT-ON	MCB:	150 A	ACCESSORIES:	GROUND BUS, 42 SPACE
BREAKERS:	75 DEGREE TERMINALS	MLO:	A		*PROVIDE 30mA GFI BREAKER

CODE	BRKR	CIRCUIT USE	CKT	LOAD	A	B	C	LOAD	CKT	CIRCUIT USE	BRKR	CODE
0	20/1	CP-101 - (PLC)	1	500	X			500	2	CP-101 - PANEL (HTR, LTG, RECPT)	20/1	0
0	20/1	EF-1001	3	200		X		250	4	MOD-1001	20/1	0
0	20/1	MOD-1002	5	250			X	250	6	MOD-1003	20/1	0
4	20/1	MOD-1004	7	250	X			200	8	EF-1001	20/1	0
0	20/1	LCP-101	9	200		X		250	10	PARKING LOT LIGHTING	20/2	2
0	20/1	CP-501 CLEARWELL CONTROL PANEL	11	500			X		12			
0	20/1	CP-2001	13	500	X			500	14	MOCP-2000 OZONE MASTER CONTROL PANEL	20/1	0
6	20/1	P-7611	15	1,000		X		1,000	16	P-7612	20/1	0
0	20/1	P-7621	17	1,000			X	1,000	18	P-7622	20/1	0
0	20/1	FIT-1001	19	250	X			250	20	AIT-1511	20/1	0
0	20/1	AIT-1512	21	250		X		250	22	AIT-2203	20/1	0
0	*20/1	TSL-2510 - HEAT TRACE	23	1,000			X	250	24	AIT-3002	20/1	0
0	20/1	WIT-7601	25	250	X			250	26	SWS-7602	20/1	0
0	*20/1	TSL-7602 - HEAT TRACE	27	1,000		X		250	28	SWS-7603	20/1	0
0	20/1	SWS-7604	29				X	250	30	FACP-1001	20/1	0
2	20/1	LIGHTING - INTERIOR SOUTH	31	264	X			264	32	LIGHTING - INTERIOR NORTH	20/1	2
2	20/1	LIGHTING - EXTERIOR	33	560		X		500	34	LIGHTING - EXTERIOR NORTH	20/1	2
1	20/1	RECEPTS - SOUTH	35	720			X	720	36	RECEPTS - NORTH	20/1	1
2	20/1	EXIT SIGN	37	100	X			3,500	38	GENERATOR LOAD CENTER	50/3	0
2	20/1	LIGHTING - PATH OF EGRESS	39	396		X		3,500	40			0
0	20/1	RCP-1001	41	250			X	3,500	42			0
0	20/1	ETPA-1001	43	250	X			250	44	ETPA-1002	20/1	0
0	20/1	ETPA-1003	45	250		X		250	46	FACU-101	20/1	0
0	20/1	SPARE	47				X		48	SPARE	20/1	0
0	20/1	SPARE	49		X				50	SPARE	20/1	0
0	20/1	SPARE	51			X			52	SPARE	20/1	0
0	20/1	SPARE	53				X		54	SPARE	20/1	0

	EQPT VA	RCPT VA	LTG VA	AC/HEAT VA	MOTORS	LRG MTR	CONN VA	PANEL VA	PHASE AMP
PHASE A	7200	0	628	250	0	0	8078	8235	69

ISSUE	DATE	DESCRIPTION
A	09/2026	ISSUED FOR BIDS

PROJECT MANAGER	PIERRE KWAN
CIVIL	J. MEGRDITCHIAN
STRUCTURAL	P. LINDBLOM
ARCHITECTURAL	V. YANEZ
PROCESS	P. KWAN
MECHANICAL	K. CHEUNG
ELECTRICAL	R. MCCOMB
INSTRUMENTATION	D. BEST
PROJECT NUMBER	10193663

REGISTERED PROFESSIONAL ENGINEER 88023PE OREGON MAY 14, 2013 ROBB J. MCCOMB
DIGITALLY SIGNED
EXPIRES: 12/31/2026

CITY OF ASHLAND
Ashland, Oregon

City of Ashland

Ashland Creek Water Treatment Plant

2026

PRETREATMENT BUILDING

PDP-101 ELEVATION AND PANELBOARD SCHEDULES

0 1" 2"

FILENAME 100E604.dwg
SCALE AS SHOWN

SHEET **100E604**

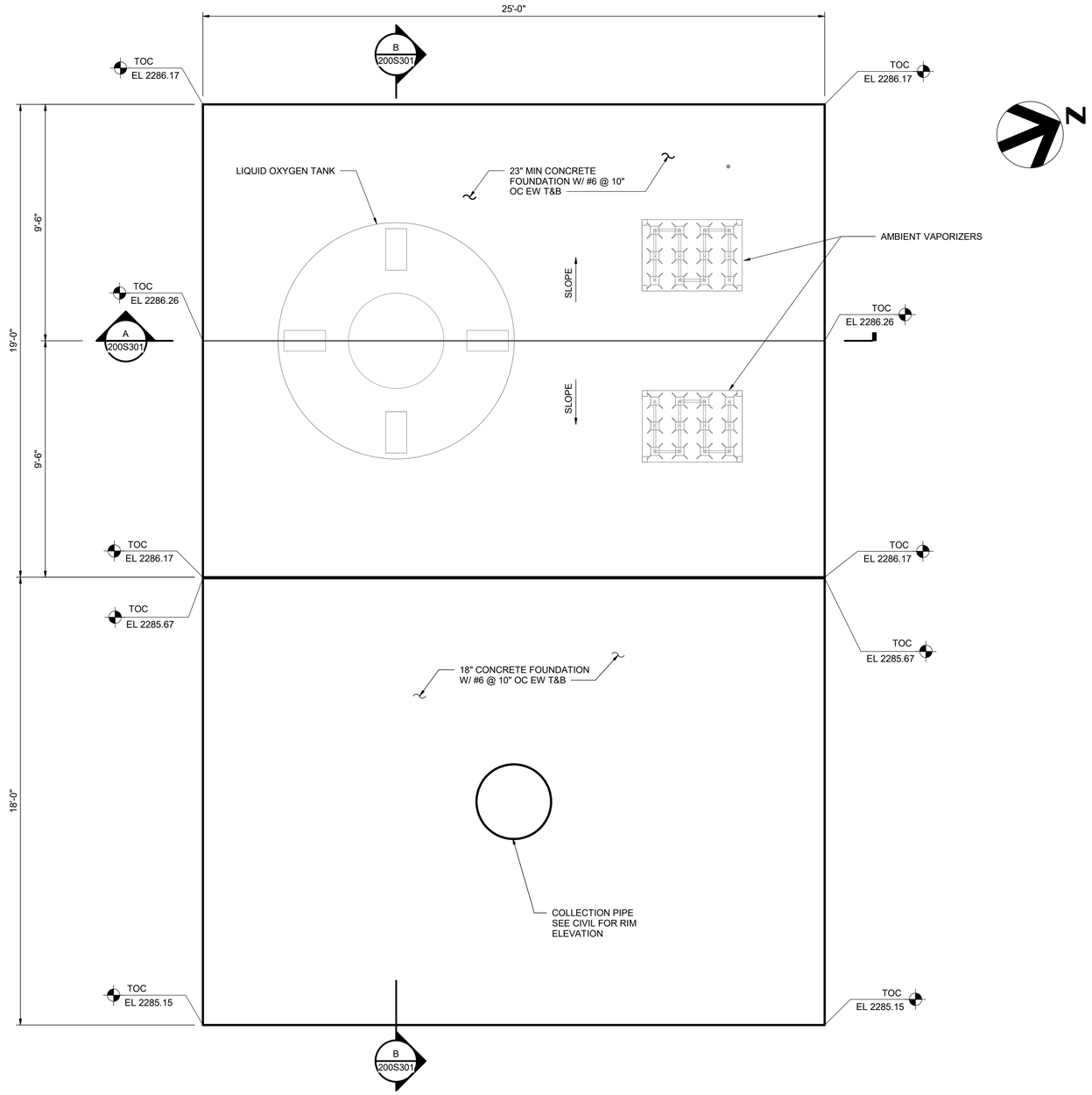

GENERAL NOTES:

1. COORDINATE LOCATION OF PAD WITH CIVIL DRAWINGS.
2. PAD DIMENSIONS TO BE CONFIRMED WITH FINAL MANUFACTURER DRAWINGS.
3. ANCHOR VAPORIZERS AND LOX TANK TO PAD PER MANUFACTURERS RECOMMENDATIONS.

LIQUID OXYGEN TANK FOUNDATION PLAN

3/8" = 1'-0"

ISSUE	DATE	DESCRIPTION
A	09/2026	ISSUED FOR BIDS

PROJECT MANAGER	PIERRE KWAN
CIVIL	J. MEGRDITCHIAN
STRUCTURAL	P. LINDBLOM
ARCHITECTURAL	V. YANEZ
PROCESS	P. KWAN
MECHANICAL	K. CHEUNG
ELECTRICAL	R. MCCOMB
INSTRUMENTATION	D. BEST
PROJECT NUMBER	10193663

REGISTERED PROFESSIONAL ENGINEER
93585PE
DIGITALLY SIGNED
OREGON
MAY 8, 2018
ANDREW JACK FORTNER
EXPIRES: 12-31-2027

CITY OF ASHLAND
Ashland, Oregon

City of Ashland

Ashland Creek Water Treatment Plant

2019

PRETREATMENT BUILDING STRUCTURAL FOUNDATION PLAN

0 1" 2"

FILENAME	10193663-AWTP-100_S.rte
SCALE	As indicated

SHEET **200S101**

Autodesk Docs://10193663_Ashland_WTP_Final_Design_2024/10193663-AWTP-100_S.rvt
9/23/2026 12:01:02 PM

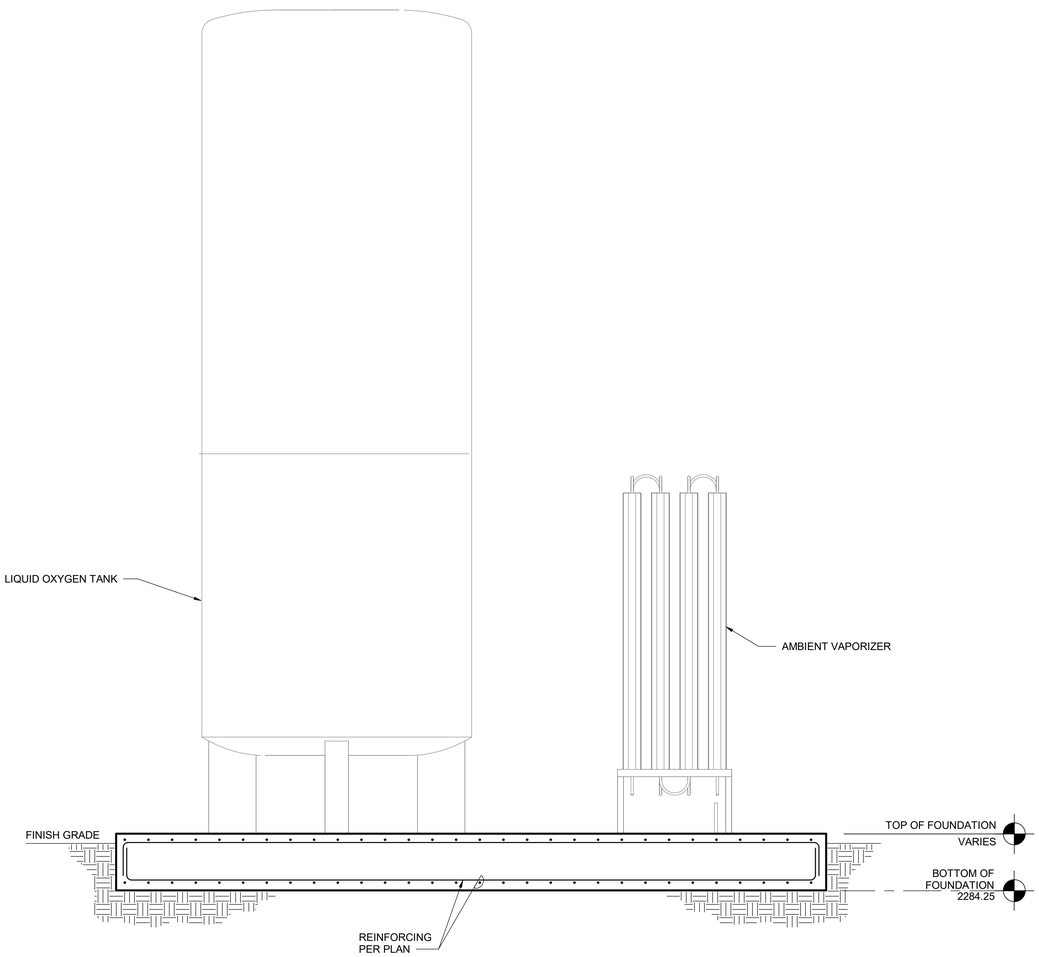

A 200S101 SECTION
3/8" = 1'-0"

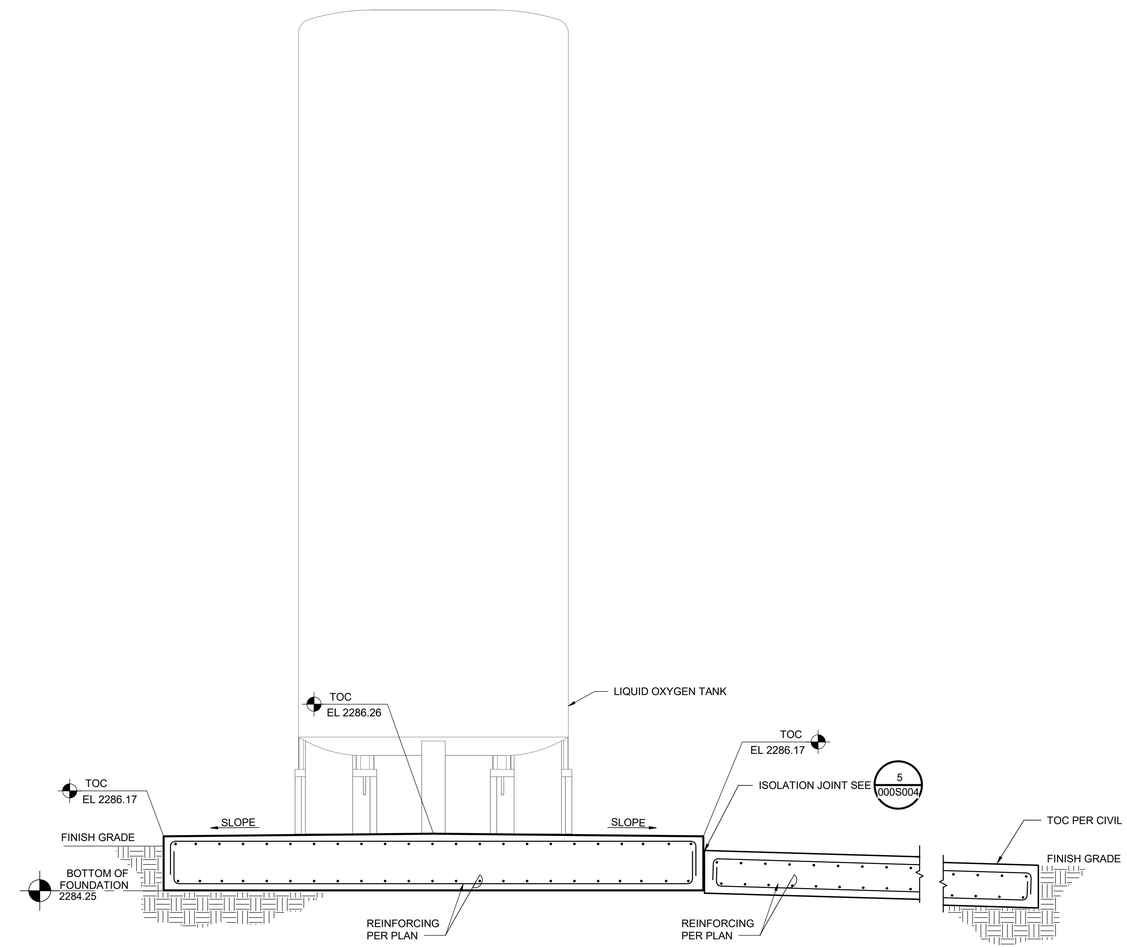

B 200S101 SECTION
3/8" = 1'-0"

Autodesk Docs://10193663_Ashland_WTP_Final_Design_2024/10193663-AWTP-100_S.rvt
9/23/2026 12:01:03 PM

ISSUE	DATE	DESCRIPTION
A	09/2026	ISSUED FOR BIDS

PROJECT MANAGER	PIERRE KWAN
CIVIL	J. MEGRDITCHIAN
STRUCTURAL	P. LINDBLOM
ARCHITECTURAL	V. YANEZ
PROCESS	P. KWAN
MECHANICAL	K. CHEUNG
ELECTRICAL	R. MCCOMB
INSTRUMENTATION	D. BEST
PROJECT NUMBER	10193663

REGISTERED PROFESSIONAL ENGINEER
93585PE
DIGITALLY SIGNED
OREGON
MAY 8, 2018
ANDREW JACK FORTNER
EXPIRES: 12-31-2027

CITY OF ASHLAND
Ashland, Oregon

City of Ashland

Ashland Creek Water Treatment Plant

2019

PRETREATMENT BUILDING STRUCTURAL FOUNDATION SECTIONS

0 1" 2"

FILENAME	10193663-AWTP-100_S.rte
SCALE	3/8" = 1'-0"

SHEET
200S301

CODE REVIEW ANALYSIS

1.0 INTRODUCTION

THE FOLLOWING CODE REVIEW NARRATIVE IS PROVIDED TO SERVE AS A BASIS OF UNDERSTANDING FOR THE DEVELOPMENT OF THE DESIGN, DRAWINGS AND SPECIFICATIONS FOR THE ASHLAND CREEK WATER TREATMENT PLANT (WTP) IN ASHLAND, OREGON. THE FOLLOWING ANALYSIS REVIEWS THE APPLICABLE BUILDING AND LIFE SAFETY CODES.

THE AUTHORITIES HAVING JURISDICTION (AHJ'S) FOR THIS PROJECT INCLUDE THE CITY OF ASHLAND BUILDING DIVISION AND THE CITY OF ASHLAND FIRE DEPARTMENT.

1.1 DESIGN CODES

BUILDING CODE	2019 OREGON STRUCTURAL SPECIALTY CODE (OSSC)
MUNICIPAL CODE	2021 ASHLAND MUNICIPAL CODE
FIRE CODE	2025 OREGON FIRE CODE (OFC)
PLUMBING CODE	2023 OREGON PLUMBING SPECIALTY CODE
ENERGY CONSERVATION CODE	2025 OREGON ENERGY EFFICIENCY SPECIALTY CODE
MECHANICAL CODE	2025 OREGON MECHANICAL SPECIALTY CODE
ELECTRICAL CODE	2023 OREGON ELECTRICAL SPECIALTY CODE (NFPA 70)

CODE DATA TABLE

2.0 ASHLAND CREEK WTP - OPERATIONS BUILDING [300]

2.1 DESCRIPTION

THE FOLLOWING CODE REVIEW NARRATIVE IS PROVIDED TO SERVE AS A BASIS OF UNDERSTANDING FOR THE DEVELOPMENT OF THE DESIGN, DRAWINGS AND SPECIFICATIONS FOR THE OPERATIONS BUILDING TO BE BUILT AS PART OF THE ASHLAND CREEK WATER TREATMENT PLANT (WTP) IN ASHLAND, OREGON.

2.2 GENERAL BUILDING DATA SUMMARY

OCCUPANCY CLASSIFICATION(S)	MIXED USE; - NON-SEPARATED GROUP B AND F-1 OCCUPANCIES - SEPARATED GROUP H-4 - CHEM STORAGE ROOMS 300-104 & 300-105 (H-4); SECOND LEVEL (B); BALANCE OF BUILDING (F-1)
BUILDING AREA	14,850 SF
FIRE AREA	14,850 SF
HEIGHT	30'-0" (2 STORIES ABOVE GRADE)
TYPE OF CONSTRUCTION	II-B (NON-COMBUSTIBLE)
FIRE SEPARATION DISTANCE	10' ≤ X < 30'
FIRE PROTECTION SYSTEMS	FIRE EXTINGUISHERS FIRE HYDRANT FIRE SPRINKLERS DEDICATED FIRE ALARM CONTROL UNIT (SPRINKLER WATERFLOW AND SUPERVISORY ALARM PANEL)
OCCUPANT LOAD (TOTAL)	54 (SEE 2.10 FOR CALCULATION)

2.3 USE & OCCUPANCY CLASSIFICATION:		OSSC	OFC
OCCUPANCY GROUP(S):	NON-SEPARATED GROUP B AND F-1 OCCUPANCIES SEPARATED GROUP H-4	§306	-
ACCESS. OCCUPANCY (<10%)	GROUP S-1	§508.2	-
HAZARDOUS MATERIALS	SODIUM HYDROXIDE (CAUSTIC), ALUMINUM SULFATE (ALUM), SODIUM HYPOCHLORITE, REFRIGERANT TYPES R454B AND R32 ARE ALL CLASSIFIED BY THE OSSC & OFC AS HEALTH HAZARDS (SEE 2.4.1); SETTLING AID POLYMER, FILTER AID POLYMER AND SODIUM CARBONATE ARE ALL IRRITANTS, WHICH IS A HAZARD CLASSIFICATION NOT REGULATED BY THE OSSC OR OFC.	§307	-
CLASSIFICATION OF HAZARDS	CORROSIVE, IRRITANT, WATER REACTIVE CLASS 1, COMBUSTIBLE LIQUID CLASS IIIB, FLAMMABLE GAS	TABLES 307.1(1) & 307.1(2)	TABLES 5003.1.1(1), 5003.1.1(2), 5003.1.1(3), & 5003.1.1(4)

2.4 SPECIAL REQUIREMENTS:		OSSC	OFC
AREAS WITH HAZARDOUS MATERIALS	CHEMICAL ROOMS, OUTDOOR STORAGE, MEETING 300-208, LOBBY 300-100, OFFICE, 300-206, IT CLOSET 300,207, COMMAND ROOM 300-205, LAB 300-204, ELEVATOR LOBBY 300-101, & ELECTRICAL ROOM 300-111	§414	-
EMERGENCY EYEWASH (EW) AND EMERGENCY SHOWER / EMERGENCY EYEWASH (ESEW) COMBINATION STATIONS	EW: SETTLING AID POLYMER, FILTER AID POLYMER, SODIUM CARBONATE ESEW: SODIUM HYDROXIDE, ALUMINUM SULFATE, SODIUM HYPOCHLORITE RECOMMENDED ESEW: REFRIGERANT TYPES R454B AND R32	[29 CODE OF FEDERAL REGULATIONS, OSHA 1910.151]	-

2.4.1 HAZARDOUS MATERIALS CLASSIFICATIONS

MATERIAL NAME AND QUANTITY PRESENT; LOCATION AND ANY RELEVANT DETAILS	HAZARD CLASSIFICATIONS (MAXIMUM ALLOWABLE QUANTITY, OR MAQ); IF OVER MAQ, OCCUPANCIES RESULTING:	CONCENTRATION	C.A.S. # (HMEX)
SODIUM HYDROXIDE (CAUSTIC SODA) STORAGE TANK 1,500 GALLONS LOCATED IN OUTDOOR CHEMICAL STORAGE AREA	PHYSICAL HAZARD: CORROSIVE, WATER REACTIVE CLASS I HEATH HAZARD: CORROSIVE (2,000 GALLONS MAQ);	24-26% LIQUID SOLUTION	[1310-73-2]
ALUMINUM SULFATE (ALUM) STORAGE TANK 12,200 GALLONS LOCATED IN OUTDOOR CHEMICAL STORAGE AREA	PHYSICAL HAZARD: CORROSIVE HEATH HAZARD: CORROSIVE (2,000 GALLONS MAQ);	<50% LIQUID SOLUTION	[10043-01-3]
SODIUM HYPOCHLORITE STORAGE TANK 6,100 GALLONS LOCATED IN OUTDOOR CHEMICAL STORAGE AREA	PHYSICAL HAZARD: CORROSIVE HEATH HAZARD: CORROSIVE (2,000 GALLONS MAQ);	12.5% LIQUID SOLUTION	[7681-52-9]
SETTLING AID POLYMER (NALCLEAR 7768) STORAGE TANK 370 GALLONS LOCATED IN CHEMICAL STORAGE ROOM 300-104	PHYSICAL HAZARD: IRRITANT, COMBUSTIBLE LIQUID CLASS IIIB HEATH HAZARD: COMBUSTIBLE LIQUID CLASS IIIB (13,200 GALLONS MAQ); CREATES GROUP N/A	UNKNOWN LIQUID SOLUTION (PROPRIETARY MIXTURE)	UNKNOWN (PROPRIETARY MIXTURE)
FILTER AID POLYMER (SUPERFLOC N-300 LMW FLOCCULANT) STORAGE TANK 370 GALLONS LOCATED IN CHEMICAL STORAGE ROOM 300-104	PHYSICAL HAZARD: IRRITANT HEALTH HAZARD: N/A;	UNKNOWN LIQUID SOLUTION (PROPRIETARY MIXTURE)	UNKNOWN (PROPRIETARY MIXTURE)
SODIUM CARBONATE SOLUTION (SODA ASH) STORAGE 220 POUNDS LOCATED IN CHEMICAL STORAGE ROOM 300-105	PHYSICAL HAZARD: IRRITANT HEALTH HAZARD: N/A;	CARBONIC ACID SODIUM SALT ≥99% DRY CONCENTRATION	[497-19-8]
REFRIGERANT TYPE 454B STORAGE/USE 61.8 LBS LOCATED IN DUCTLESS SPLIT SYSTEMS FC-3001, FC-3002, FC-3003, FC-3004, FC-3005, FC-3006, FC-3007 AND HEAT PUMP BLOWER COIL UNIT BCU-3001	PHYSICAL HAZARD: NOT OVER MAQ; FLAMMABLE GAS 1B - HIGH BV (150 LBS) HEATH HAZARD: N/A;	1,1-DIFLUOROMETHANE [68.9 %] 2,3,3,3-TETRAFLUOROPROP-1-EN [31.1%]	1,1-DIFLUOROMETHANE [75-10-5]; 2,3,3,3-TETRAFLUOROPROP-1-EN [754-12-1]
REFRIGERANT TYPE R2 STORAGE/USE 0.9 LBS LOCATED IN DOAS UNIT DOAS-3001	PHYSICAL HAZARD: NOT OVER MAQ; FLAMMABLE GAS 1B - LOW BV (10,000 LBS) HEATH HAZARD: N/A;	1,1-DIFLUOROMETHANE [100%]	[75-10-5]

2.4.2 REQUIREMENTS:		OSSC	OFC
HIGH HAZARD CLASSIFICATION	SODIUM HYDROXIDE (CAUSTIC), ALUMINUM SULFATE (ALUM), AND SODIUM HYPOCHLORITE ARE ALL CLASSIFIED BY THE OSSC & OFC AS HEALTH HAZARDS	§307.6	-
PERMISSIBLE STORAGE (MAQ)	SEE 2.4.1 ABOVE FOR QUANTITIES PRESENT & MAQ'S	TABLES 307.1(1) & 307.1(2)	TABLES 5003.1.1(1), 5003.1.1(2), 5003.1.1(3), & 5003.1.1(4)
CONTROL AREA FIRE BARRIER	N/A (SEE 2.7 FOR OCCUPANCY SEPARATION)	TABLES 414.2.2 & 508.4	-
MIXED OCCUPANCY	NOT ALLOWED FOR GROUP H	§508.2.4 EX. 1 §508.3.3 EX. 1	-
MAXIMUM CONTROL AREAS	N/A (SEE 2.7 FOR OCCUPANCY SEPARATION)	TABLES 414.2.2 & 508.4	-
GENERAL SAFETY PRECAUTIONS	REQUIRED; FOLLOW SDS AS WELL AS APPLICABLE CODES	-	§5003.9
SPILL CONTROL	REQUIRED: > 55 GALLON CAPACITY OF INDIVIDUAL VESSEL, >1,000 GALLON AGGREGATE CAPACITY	-	§5004.2.1, §5005.1.3 & §5005.3.6
SECONDARY CONTAINMENT, DRAINAGE METHODS	REQUIRED: LIQUIDS > 55 GALLON CAPACITY OF INDIVIDUAL VESSEL OR >1,000 GALLON AGGREGATE CAPACITY;	-	TABLE 5004.2.2, TABLE 5005.2.1.4, §5004.2.2.6 & §5005.3.7
VENTILATION	REQUIRED PER IMC [1 CFM / SF MINIMUM]	-	§5004.3 & §5405.1.2
INCOMPATIBLE MATERIALS & CORROSIVITY	MATERIAL CORROSIVITY - SEE SDS SHEETS FOR DETAILS; SODIUM HYDROXIDE IS A CORROSIVE, WATER-REACTIVE CLASS I (EXOTHERMIC), & INCOMPATIBLE WITH ACIDS, METALS (E.G. TIN, ALUMINUM, ZINC & ALLOYS CONTAINING THESE METALS), HALOGENATED COMPOUNDS, NITROGEN COMPOUNDS & PHOSPHOROUS; ALUMINUM SULFATE IS A CORROSIVE & BASES ARE INCOMPATIBLE, BASED UPON ACIDIC PH. FROM SDS: "ALKALIS, METALS. ALKALIS (BASES): VIOLENT REACTION. METALS: MAY BE CORROSIVE IN THE PRESENCE OF MOISTURE"; SODIUM HYPOCHLORITE IS A CORROSIVE & ACIDS ARE INCOMPATIBLE, BASED UPON BASIC PH. TYPICAL INCOMPATIBLES INCLUDE, METALS, STRONG OXICIZING AGENTS, AMMONIA, AMINES, AMMONIUM SALTS, METHANOL, CELLULOSE, REDUCING AGENTS, BISULFITES, ETC. FROM SDS: "STRONG ACIDS. IRON, COPPER, AMMONIUM COMPOUNDS, ORGANICS, OXIDIZERS, AMINES, METHANOL, FORMIC ACID"; REFRIGERANT TYPE R454B, CHEMICALLY REACTIVE METALS: POTASSIUM, CALCIUM, POWDERED ALUMINUM, MAGNESIUM, AND ZINC; REFRIGERANT TYPE R32, CHEMICALLY REACTIVE METALS: POTASSIUM, CALCIUM, POWDERED ALUMINUM, MAGNESIUM, AND ZINC;	-	§5003.9.8 & §5004.4

2.4.2 REQUIREMENTS (CONTINUED):		OSSC	OFC
INCOMPATIBLE MATERIALS & CORROSIVITY (CONTINUED)	SETTLING AID POLYMER IS AN IRRITANT, COMBUSTIBLE LIQUID CLASS IIIB, & BASES ARE INCOMPATIBLE, BASED UPON ACIDIC PH: FROM SDS: "MATERIALS TO AVOID: ADDITION OF WATER RESULTS IN GELLING. CONTACT WITH STRONG OXIDIZERS (E.G. CHLORINE, PEROXIDES, CHROMATES, NITRIC ACID, PERCHLORATE, CONCENTRATED OXYGEN, PERMANGANATE) MAY GENERATE HEAT, FIRES, EXPLOSIONS AND/OR TOXIC VAPORS"; FILTER AID POLYMER IS AN IRRITANT & BASES ARE INCOMPATIBLE, BASED UPON ACIDIC PH: FROM SDS: "STRONG OXIDIZING AGENTS ARE INCOMPATIBLE"; SODIUM CARBONATE (SODA ASH) IS AN IRRITANT & ACIDS ARE INCOMPATIBLE, BASED UPON BASIC PH. FROM SDS: "ALUMINUM, POWDERED ALUMINUM AND ACIDS."		§5003.9.8 & §5004.4
AUTOMATIC SPRINKLER SYSTEMS	REQUIRED FOR INDOOR STORAGE EXCEEDING THE MAQ (GROUP H); SEE 2.9	-	§5004.5
EXPLOSION CONTROL	N/A	-	§5004.6
EMERGENCY & STANDBY POWER	REQUIRED FOR VENTILATION, TEMPERATURE CONTROL, EMERGENCY ALARM SYSTEMS, ETC.	-	§5004.7 §5005.1.5
LIMIT CONTROLS	REQUIRED FOR TEMPERATURE AND/OR PRESSURE, LOW-LIQUID-LEVEL CONTROL AS APPLICABLE	-	§5004.8 §5005.1.4
EMERGENCY ALARMS	A MANUAL EMERGENCY ALARM SYSTEM IS REQUIRED FOR ALL GROUP H OCCUPANCIES (SEE 2.9)	§415.5	§5004.9
SUPERVISION AND MONITORING	REQUIRED: REQUIRED SYSTEMS SHALL BE SUPERVISED/MONITORED; APPROVED CENTRAL STATION OR APPROVED LOCAL AUDIBLE/VISUAL FOR TANKS OVER OUTDOOR MAQ, VISUAL INSPECTION SHALL BE PROVIDED TO DETECT HAZARDOUS MATERIALS WITHIN THE SECONDARY CONTAINMENT SYSTEM.	§415.5	§5004.2.2.5 & §5004.10
NONCOMBUSTIBLE FLOOR	REQUIRED	-	§5004.12
OUTDOOR TANKS CLEARANCE	KEEP 30' MINIMUM AROUND OUTDOOR TANKS CLEAR OF COMBUSTIBLE MATERIALS AND VEGETATION.	-	§5005.3.8
LIQUID-TIGHT FLOORS	INDOOR STORAGE AREAS OF CORROSIVES EXCEEDING THE MAQ SHALL BE PROVIDED WITH LIQUID-TIGHT FLOORS.	-	§5404.1.1

ISSUE	DATE	DESCRIPTION
A	09/2026	ISSUED FOR BIDS

PROJECT MANAGER	PIERRE KWAN
CIVIL	J. MEGRDITCHIAN
STRUCTURAL	P. LINDBLOM
ARCHITECTURAL	V. YANEZ
PROCESS	P. KWAN
MECHANICAL	K. CHEUNG
ELECTRICAL	R. MCCOMB
INSTRUMENTATION	D. BEST
PROJECT NUMBER	10193663

REGISTERED PROFESSIONAL ENGINEER 84327PE DIGITALLY SIGNED OREGON JANUARY 12, 2026 STUART D GRAHAM
EXPIRES: 6/30/2027

CITY OF ASHLAND
Ashland, Oregon

City of Ashland
Ashland Creek
Water Treatment Plant
2026

OPERATIONS BUILDING
FIRE PROTECTION
CODE ANALYSIS

0 1" 2"

FILENAME 10193663-AWTP-300_F.rte
SCALE NONE
SHEET 300G001

Autodesk Docs://10193663_Ashland_WTP_Final_Design_2024/10193663-AWTP-300_F.rvt
9/22/2026 10:17:15 PM

2.5 BUILDING HEIGHTS & AREAS:		OSSC	OFC
ACTUAL HEIGHT & AREA	30'-0" (2 STORIES ABOVE GRADE; 1 STORY BELOW GRADE) TOTAL BUILDING AREA = 14,850 SF LOWER LEVEL PIPE GALLERY = 1,100 SF (F-1 OCCUPANCY) GROUND FLOOR = PROCCESS AREAS 9,900 SF (F-1 OCCUPANCY) CHEM STORAGE ROOM 300-104 = 750 SF (H-4 OCCUPANCY) CHEM STORAGE ROOM 300-105 = 750 SF (H-4 OCCUPANCY) 2ND FLOOR = 2,250 SF (B OCCUPANCY)	-	-
FIRE AREA	14,850 SF (SAME AS TOTAL BUILDING AREA)	-	-
ALLOWABLE AREA/STORY;	LOWER LEVEL GROUP F-1: 52,500 SF GROUND FLOOR SEPARATED GROUP F-1 AND H-4: SEE SUM OF THE RATIOS CALCULATION ON NEXT ROW 2ND FLOOR GROUP B: 69,000 SF	TABLE 506.2	-
SUM OF THE RATIOS	SEPARATED OCCUPANCIES SUM OF THE RATIOS FOR GROUND FLOOR SEPARATED GROUP F-1 AND H-4 (ACTUAL SF/TABULAR ALLOWABLE SF): F-1(9,900/46,500) + H-4(1,500/52,500) = 0.213 + 0.028 = 0.241 (LESS THAN 1 AS REQUIRED BY OSSC §508.4.2)	§506.2.4	-
ALLOWABLE HEIGHT	75'-0" AND THREE STORIES	TABLE 504.3, TABLE 504.4	-
MEZZANINE AREA (%)	N/A	§505	-
EQUIPMENT PLATFORM AREA (%)	62%	§505	-
FRONTAGE INCREASE	N/A	§506.3	-
UNLIMITED AREA BUILDINGS	N/A	§507	-
MIXED-USE & OCCUPANCY	MIXED USE, NON-SEPARATED GROUP B AND F-1 OCCUPANCIES AND SEPARATED GROUP H-4	§508	-
INCIDENTAL USES	N/A	§509	-
SPECIAL PROVISIONS	N/A	§510	-
2.6 TYPES OF CONSTRUCTION:		OSSC	OFC
CONSTRUCTION TYPE	II-B	§602	-
GENERAL BUILDING FIRE-RESISTANCE RATINGS (PRIMARY STRUCTURAL FRAME, BEARING AND NONBEARING WALLS AND PARTITIONS, FLOOR, ROOF)	0-HR	TABLE 601	-
FIRE SEPARATION DISTANCE (FSD)	GROUP B AND F: 10' ≤ X < 30' GROUP H-4: 30' ≤ X	TABLE 602	-
FIRE-RESISTANCE RATING REQUIREMENTS FOR EXTERIOR WALLS BASED UPON FSD	0-HR	TABLE 602	-
2.7 FIRE & SMOKE PROTECTION:		OSSC	OFC
SHAFT ENCLOSURES FIRE-RESISTANCE RATINGS	N/A	§707.3.1 & §713.4	-
VERTICAL EXIT ENCLOSURE FIRE-RESISTANCE RATINGS	1-HR RATED EXIT ENCLOSURE IS REQUIRED FOR STAIRS SERVING LESS THAN 4 STORIES	§707.3.2 & §1023.2	-
OCCUPANCY SEPARATION	THE HIGH-HAZARD GROUP H-4 OCCUPANCY IS REQUIRED TO BE SEPARATED FROM THE F-1 OCCUPANCY BY A 1-HOUR FIRE BARRIER WHEN THE BUILDING IS EQUIPPED THROUGHOUT WITH AN AUTOMATIC SPRINKLER SYSTEM INSTALLED IN ACCORDANCE WITH §903.3.1.1; LIKEWISE, THE CEILING OF THE HIGH-HAZARD GROUP H-4 OCCUPANCY IS REQUIRED TO BE SEPARATED FROM THE 2ND FLOOR GROUP B OCCUPANCY ABOVE BY A 1-HOUR FIRE-RATED HORIZONTAL ASSEMBLY.	§508.4	-
OPENING PROTECTIVES	REQUIRED FOR ALL FIRE-RATED BARRIERS, PARTITIONS, ASSEMBLIES, ETC.	§716	-
DUCT AND AIR TRANSFER OPENINGS	REQUIRED FOR ALL FIRE-RATED BARRIERS, PARTITIONS, ASSEMBLIES, ETC.	§717	-
EXTERIOR WALLS	NO LIMIT	TABLE 705.8, §705.8.1 EXCEPTION 2	-
CORRIDORS	GROUP B OR F-1: 0-HR IN FULLY SPRINKLERED BUILDING GROUP H-4: NO CORRIDORS	§1020	-
2.8 INTERIOR FINISHES:		OSSC	OFC
CEILING & WALL (EXIT ENCLOSURES)	SPRINKLERED B: CLASS A OR B SPRINKLERED F-1: CLASS A, B OR C SPRINKLERED H-4: CLASS A OR B	TABLE 803.13	-
CEILING & WALL (CORRIDORS)	SPRINKLERED B: CLASS A, B OR C SPRINKLERED F-1: CLASS A, B OR C SPRINKLERED H-4: CLASS A OR B		
CEILING & WALL (ROOMS AND ENCL. SPACES)	SPRINKLERED B: CLASS A, B OR C SPRINKLERED F-1: CLASS A, B OR C SPRINKLERED H-4: CLASS A, B OR C		
FLOOR	CLASS II MATERIALS COMPLYING WITH DOC FF-1 "PILL TEST" (CPSC 16 CFR PART 1630) OR WITH ASTM D2859	§804.4	

2.9 FIRE PROTECTION SYSTEMS:		OSSC	OFC
AUTOMATIC SPRINKLER SYSTEM	REQUIRED FOR ALL GROUP H OCCUPANCIES; REQUIRED FOR GROUP F-1 WITH FIRE AREA GREATER THAN 12,000 SF; REQUIRED PER ASHLAND FIRE & RESCUE EMAIL DATED 11-10-22 AS PART OF APPROVAL FOR FIRE APPARATUS ACCESS ROADS HAVING A GRADE THAT EXCEEDS 10 PERCENT; PROVIDED THROUGHOUT	§903	§903
PORTABLE FIRE EXTINGUISHERS	REQUIRED; PROVIDED THROUGHOUT	-	§906
FIRE ALARM AND DETECTION	NOT REQUIRED	§907.2.2, §907.2.4 & §907.2.5	§907.2.2, §907.2.4 & §907.2.5
DEDICATED FUNCTION FIRE ALARM CONTROL UNIT (FACU)	DEDICATED FUNCTION PANEL, "SPRINKLER WATERFLOW AND SUPERVISORY ALARM" PER NFPA 72	§903.4	§903.4
FIRE-FLOW REQUIREMENT	1,000 GPM (@20 PSI) FOR 2 HOURS (REDUCED FROM 2,500 GPM FOR FULLY SPRINKLERED BUILDING)	-	§B105, TABLE B105.1(2), TABLE B105.2
MINIMUM NUMBER OF HYDRANTS	1 HYDRANT (SEE SITE CIVIL PLANS FOR LOCATIONS)	-	TABLE C102.1
2.10 MEANS OF EGRESS:		OSSC	OFC
ACCESSORY STORAGE AREAS, MECHANICAL EQUIPMENT ROOMS, BUSINESS AREAS	54 OCCUPANTS	§1004	-
BUSINESS AREAS	2,250 SF @ 1:150 SF (GROSS) = 15		
EQUIPMENT SPACES (WTP)	11,500 SF @ 1:300 SF (GROSS) = 39		
EGRESS CAPACITY PER OCCUPANT LOAD	0.3 (STAIRS) & 0.2 (OTHER)	§1005.3	-
EXIT ACCESS - COMMON PATH	SPRINKLERED GROUP B & F: 100 FT SPRINKLERED GROUP H-4: 75 FT	TABLE 1006.2.1	-
EXIT ACCESS - TRAVEL DISTANCE	SPRINKLERED GROUP B: 300 FT SPRINKLERED GROUP F-1: 250 FT SPRINKLERED GROUP H-4: 175 FT	TABLE 1017.2	-
MIN. EXIT DOORS	2; SEE LIFE SAFETY PLANS FOR EXITING NOTE: ONLY ONE EXIT FROM 2ND FLOOR GROUP B OFFICE SPACE	§1006	-
ACCESSIBLE MEANS OF EGRESS	NOT REQUIRED FOR GROUP F-1 OR H-4; REQUIRED FOR GROUP B	§1009	-
EXIT DISCHARGE; ACCESS TO PUBLIC WAY	PUBLIC WAY	§1028.5	-
2.11 ACCESSIBILITY:		OSSC	OFC
SCOPING REQUIREMENTS	EQUIPMENT SPACES ARE EXEMPT; ONLY GROUP B REQUIRES ACCESSIBILITY	§1103.2.9 [2010 ADA §203.5]	-
2.12 HIGH-PILED STORAGE REQUIREMENTS:		OSSC	OFC
NOTE: BUILDING 300 IS NOT OPEN TO THE PUBLIC			
CLASS I-IV COMMODITIES	STORAGE OF CLASS I-III COMMODITIES MUST BE KEPT BELOW 12' AND CLASS IV COMMODITIES MUST BE KEPT BELOW 10' TO AVOID ADDITIONAL FIRE PROTECTION AND LIFE SAFETY REQUIREMENTS FOR HIGH-PILLED STORAGE FROM THE OFC AND NFPA 13, 2016.	-	CH 32 & TABLE 3206.2
HIGH HAZARD COMMODITIES (GROUP A PLASTICS, TIRES, COMBUSTIBLE/FLAMMABLE MATERIALS, ETC.)	STORAGE OF HIGH HAZARD COMMODITIES MUST BE KEPT BELOW 5' TO AVOID ADDITIONAL FIRE PROTECTION AND LIFE SAFETY REQUIREMENTS FOR HIGH-PILLED STORAGE FROM THE OFC AND NFPA 13, 2016.	-	CH 32 & TABLE 3206.2

Autodesk Docs://10193663_Ashland_WTP_Final_Design_2024/10193663-AWTP-300_F.rvt
9/22/2026 10:17:15 PM

ISSUE	DATE	DESCRIPTION
A	09/2026	ISSUED FOR BIDS

PROJECT MANAGER	PIERRE KWAN
CIVIL	J. MEGRDITCHIAN
STRUCTURAL	P. LINDBLOM
ARCHITECTURAL	V. YANEZ
PROCESS	P. KWAN
MECHANICAL	K. CHEUNG
ELECTRICAL	R. MCCOMB
INSTRUMENTATION	D. BEST
PROJECT NUMBER	10193663

REGISTERED PROFESSIONAL ENGINEER 84327PE DIGITALLY SIGNED OREGON JANUARY 12, 2026 STUART D GRAHAM
EXPIRES: 6/30/2027

CITY OF ASHLAND
Ashland, Oregon

City of Ashland

Ashland Creek Water Treatment Plant

2026

OPERATIONS BUILDING FIRE PROTECTION CODE ANALYSIS

0 1" 2"

FILENAME 10193663-AWTP-300_F.rte
SCALE NONE

SHEET **300G002**

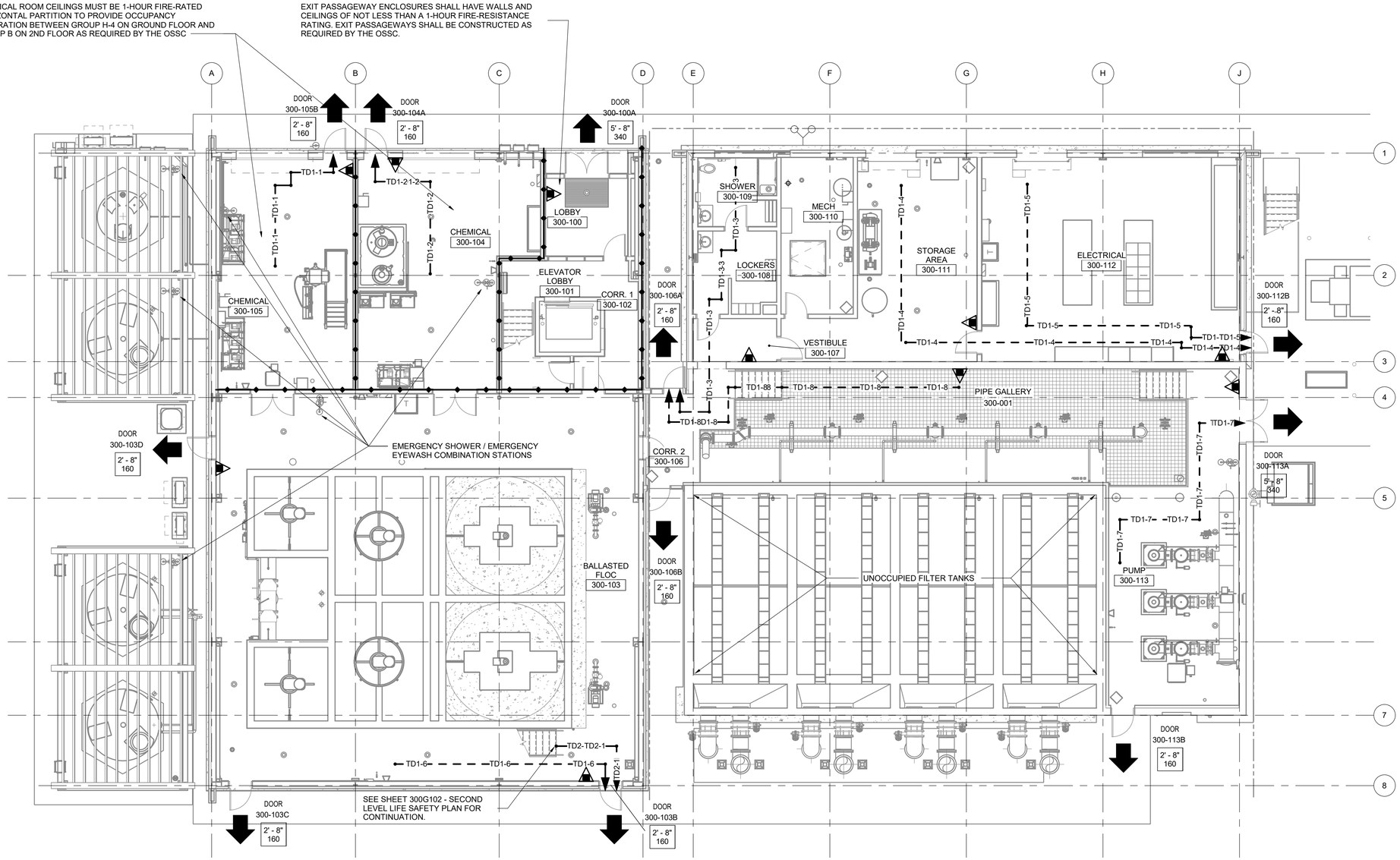

FIRST LEVEL LIFE SAFETY PLAN

1/8" = 1'-0"

LIFE SAFETY NOTES:

1. FOR EXIT LIGHTS AND EMERGENCY LIGHTING, SEE ELECTRICAL LIGHTING DRAWINGS (E SERIES).

LIFE SAFETY SYMBOLS:

EXIT DOOR TAG

A	CLEAR DOOR WIDTH [FEET - INCHES]
B	OCCUPANT LOAD CAPACITY [NO.OF PEOPLE]

OTHERS

FIRE EXTINGUISHER

LINE TYPES FOR MEANS OF EGRESS:

COMPONENT	SYMBOL
TRAVEL DISTANCE	TD
COMMON PATH	CP

EXIT DISCHARGE

EXIT DISCHARGE ARROW

WALL RATINGS

1 HOUR FIRE BARRIER

MEANS OF EGRESS WIDTH CAPACITY - LEVEL 1

EXIT ID	PROVIDED EGRESS CAPACITY - LEVEL COMPONENTS & RAMPS		
	EGRESS CAPACITY FACTOR	CLEAR WIDTH	OCCUPANT LOAD CAPACITY
300-100A	0.2	5' - 8"	340
300-103B	0.2	2' - 8"	160
300-103C	0.2	2' - 8"	160
300-103D	0.2	2' - 8"	160
300-104A	0.2	2' - 8"	160
300-105B	0.2	2' - 8"	160
300-106A	0.2	2' - 8"	160
300-106B	0.2	2' - 8"	160
300-112B	0.2	2' - 8"	160
300-113A	0.2	5' - 8"	340
300-113B	0.2	2' - 8"	160

MEANS OF EGRESS ARRANGEMENT DISTANCE SCHEDULE - BUILDING SUMMARY

EGRESS PATH ID	EGRESS DISTANCE	
	PROVIDED	MAXIMUM PERMITTED
TD1-1	23' - 6"	175' - 0"
TD1-2	24' - 6"	250' - 0"
TD1-3	45' - 0"	250' - 0"
TD1-4	71' - 0"	250' - 0"
TD1-5	53' - 6"	250' - 0"
TD1-6	33' - 0"	250' - 0"
TD1-7	37' - 0"	250' - 0"
TD1-8	54' - 6"	250' - 0"
TD2-1	83' - 6"	250' - 0"

ISSUE	DATE	DESCRIPTION
A	09/2026	ISSUED FOR BIDS

PROJECT MANAGER	PIERRE KWAN
CIVIL	J. MEGRDITCHIAN
STRUCTURAL	P. LINDBLOM
ARCHITECTURAL	V. YANEZ
PROCESS	P. KWAN
MECHANICAL	K. CHEUNG
ELECTRICAL	R. MCCOMB
INSTRUMENTATION	D. BEST
PROJECT NUMBER	10193663

REGISTERED PROFESSIONAL ENGINEER 84327PE DIGITALLY SIGNED OREGON JANUARY 12, 2026 STUART D GRAHAM
EXPIRES: 6/30/2027

CITY OF ASHLAND
Ashland, Oregon

City of Ashland

Ashland Creek Water Treatment Plant

2026

OPERATIONS BUILDING FIRE PROTECTION GROUND LEVEL LIFE SAFETY PLAN

0 1" 2"

FILENAME 10193663-AWTP-300_F.rte
SCALE 1/8" = 1'-0"
SHEET **300G101**

Autodesk Docs://10193663_Ashland_WTP_Final_Design_2024/10193663-AWTP-300_F.rvt
9/22/2026 10:17:21 PM

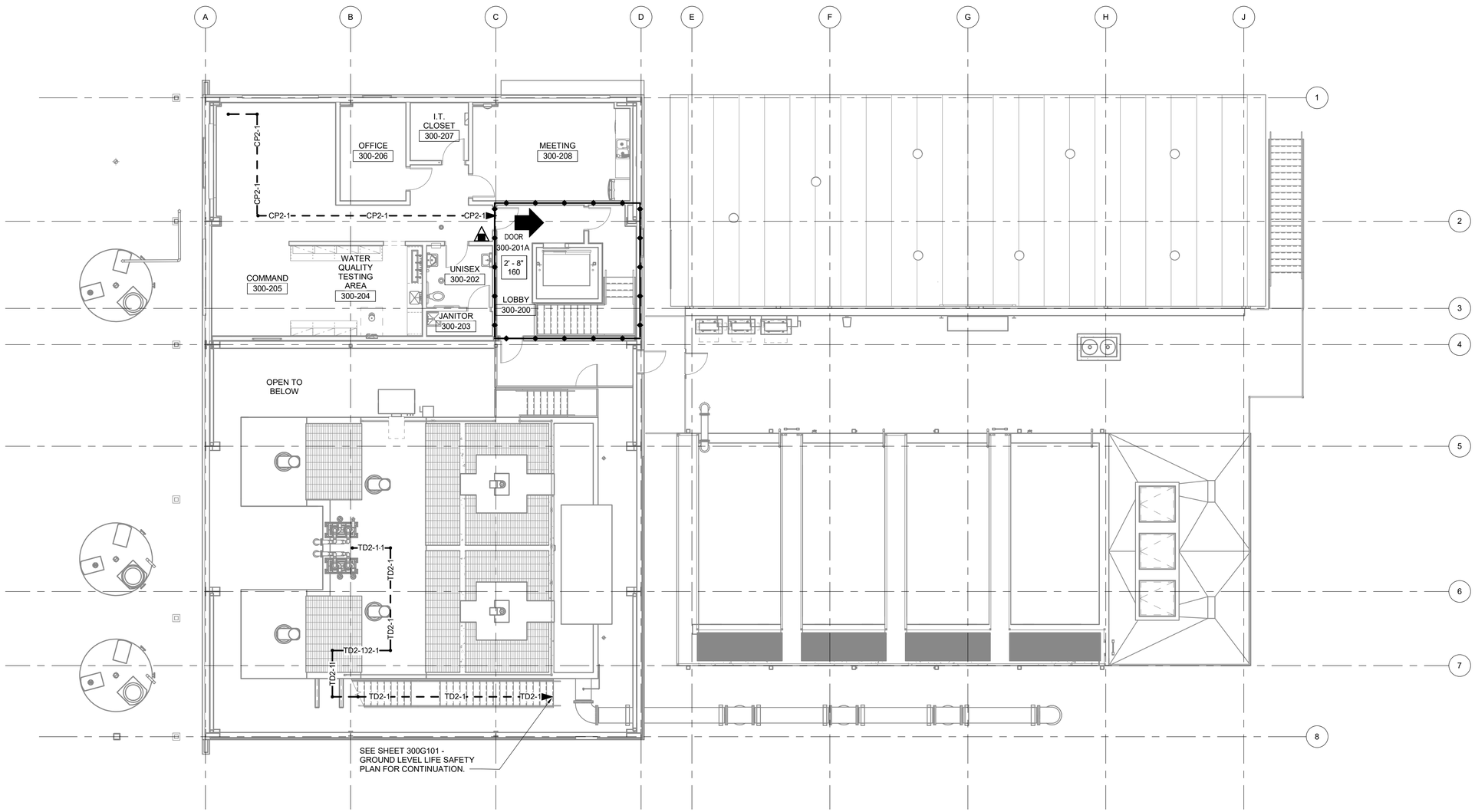

SECOND LEVEL LIFE SAFETY PLAN

1/8" = 1'-0"

LIFE SAFETY NOTES:

1. FOR EXIT LIGHTS AND EMERGENCY LIGHTING, SEE ELECTRICAL LIGHTING DRAWINGS (E SERIES).

LIFE SAFETY SYMBOLS:

EXIT DOOR TAG

A	CLEAR DOOR WIDTH [FEET - INCHES]
B	OCCUPANT LOAD CAPACITY [NO.OF PEOPLE]

OTHERS

FIRE EXTINGUISHER

LINE TYPES FOR MEANS OF EGRESS:

COMPONENT	SYMBOL
TRAVEL DISTANCE	TD
COMMON PATH	CP

EXIT DISCHARGE

EXIT DISCHARGE ARROW

WALL RATINGS

1 HOUR FIRE BARRIER

MEANS OF EGRESS ARRANGEMENT DISTANCE SCHEDULE - BUILDING SUMMARY

EGRESS PATH ID	EGRESS DISTANCE	
	PROVIDED	MAXIMUM PERMITTED
CP2-1	51' - 0"	100' - 0"

MEANS OF EGRESS WIDTH CAPACITY - LEVEL 2

EXIT ID	PROVIDED EGRESS CAPACITY - LEVEL COMPONENTS & RAMPS		
	EGRESS CAPACITY FACTOR	CLEAR WIDTH	OCCUPANT LOAD CAPACITY
300-201A	0.2	2' - 8"	160

Autodesk Docs://10193663_Ashland_WTP_Final_Design_2024/10193663-AWTP-300_F.rvt
9/22/2026 10:17:23 PM

ISSUE	DATE	DESCRIPTION
A	09/2026	ISSUED FOR BIDS

PROJECT MANAGER	PIERRE KWAN
CIVIL	J. MEGRDITCHIAN
STRUCTURAL	P. LINDBLOM
ARCHITECTURAL	V. YANEZ
PROCESS	P. KWAN
MECHANICAL	K. CHEUNG
ELECTRICAL	R. MCCOMB
INSTRUMENTATION	D. BEST
PROJECT NUMBER	10193663

REGISTERED PROFESSIONAL ENGINEER 84327PE DIGITALLY SIGNED OREGON JANUARY 12, 2024 STUART D GRAHAM

EXPIRES: 6/30/2027

CITY OF ASHLAND
Ashland, Oregon

City of Ashland

Ashland Creek Water Treatment Plant

2026

OPERATIONS BUILDING
FIRE PROTECTION
SECOND LEVEL LIFE SAFETY PLAN

0 1" 2"

FILENAME 10193663-AWTP-300_F.rte

SCALE 1/8" = 1'-0"

SHEET **300G102**

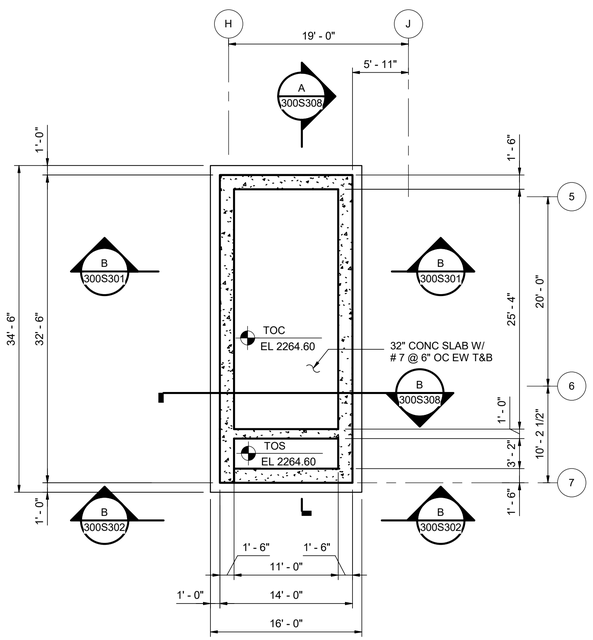

BOTTOM OF WET WELL SUMP EL 2264.60

1/8" = 1'-0"

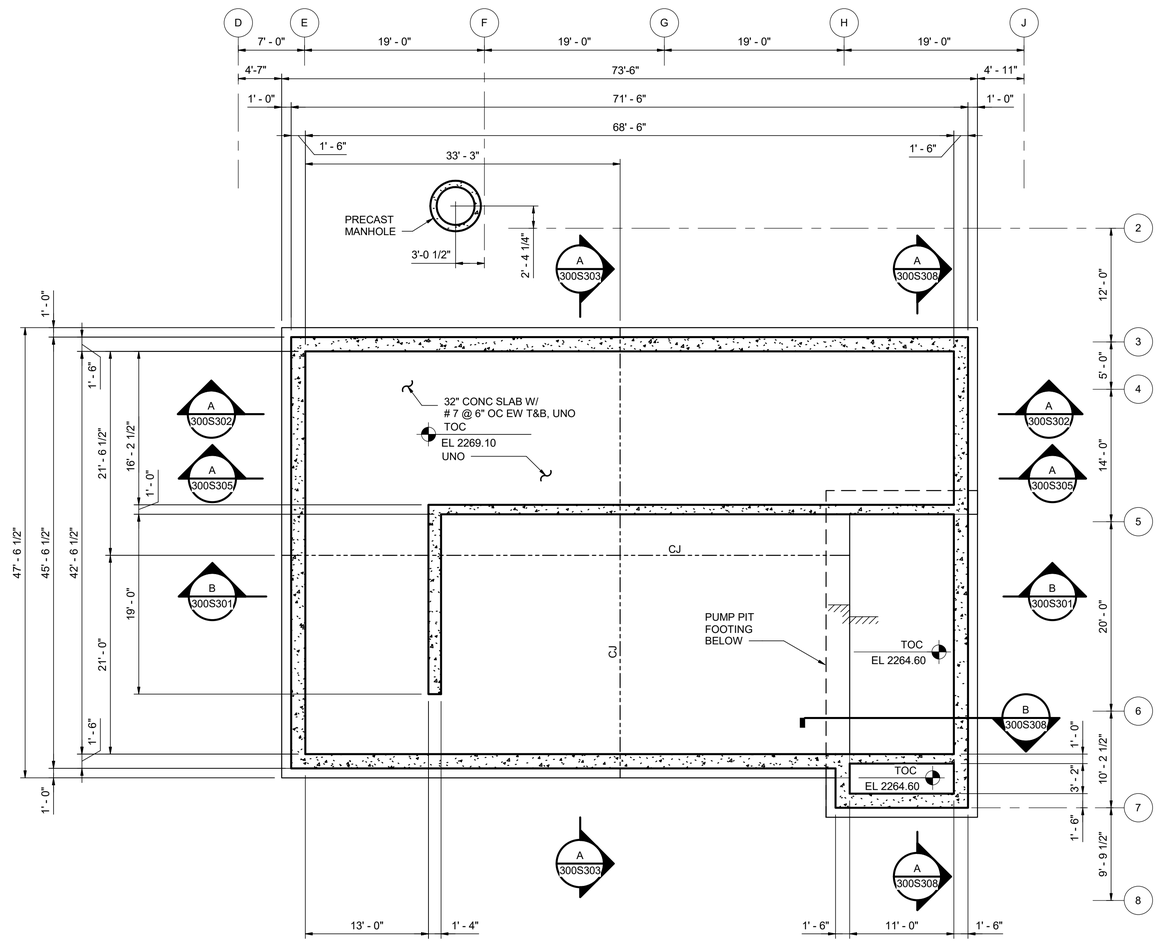

WET WELL PLAN AT EL 2269.10

1/8" = 1'-0"

FACILITY STRUCTURAL NOTES:

1. FOR GENERAL STRUCTURAL NOTES, SEE 000S001
2. FOR SPECIAL INSPECTIONS, SEE 000S002 AND 000S003
3. FOR STANDARD DETAILS SEE 000S003 THRU 000S009
4. ADDITIONAL DESIGN CRITERIA SPECIFIC TO THIS FACILITY: FILTERS
   A. SEISMIC DESIGN CRITERIA:
   1. BASIC SEISMIC FORCE RESISTING SYSTEM: REINFORCED NON-SLIDING BASE TANK
   2. ANALYSIS PROCEDURE: EQUIVALENT LATERAL FORCE
   3. RESPONSE MODIFICATION FACTOR, R: 2
   4. SEISMIC RESPONSE COEFFICIENT, C_S: 0.376
5. REFER TO ARCHITECTURAL, PROCESS, MECHANICAL AND ELECTRICAL PLANS FOR EQUIPMENT AND PENETRATION SIZE AND LOCATION. FOR EQUIPMENT PADS, REFER TO 1/000S005

   FOR OPENINGS, REFER TO 1/000S004
6. CJ INDICATES CONSTRUCTION JOINTS REFER TO 2/000S003

ISSUE	DATE	DESCRIPTION
A	09/2026	ISSUED FOR BIDS

PROJECT MANAGER	PIERRE KWAN
CIVIL	J. MEGRDITCHIAN
STRUCTURAL	P. LINDBLOM
ARCHITECTURAL	V. YANEZ
PROCESS	P. KWAN
MECHANICAL	K. CHEUNG
ELECTRICAL	R. MCCOMB
INSTRUMENTATION	D. BEST
PROJECT NUMBER	10193663

REGISTERED PROFESSIONAL ENGINEER 93585PE OREGON DIGITALLY SIGNED MAY 8, 2019 ANDREW JACK FORTNER EXPIRES: 12-31-2027

CITY OF ASHLAND
Ashland, Oregon

City of Ashland

Ashland Creek
Water Treatment Plant

2019

OPERATIONS BUILDING
STRUCTURAL
WET WELL PLANS AT EL 2264.60 & 2269.10

0 1" 2"

FILENAME 10193663-AWTP-300_S.rte
SCALE As indicated
SHEET 300S101

Autodesk Docs://10193663_Ashland_WTP_Final_Design_2024/10193663-AWTP-300_S.rvt
9/23/2026 12:07:00 PM

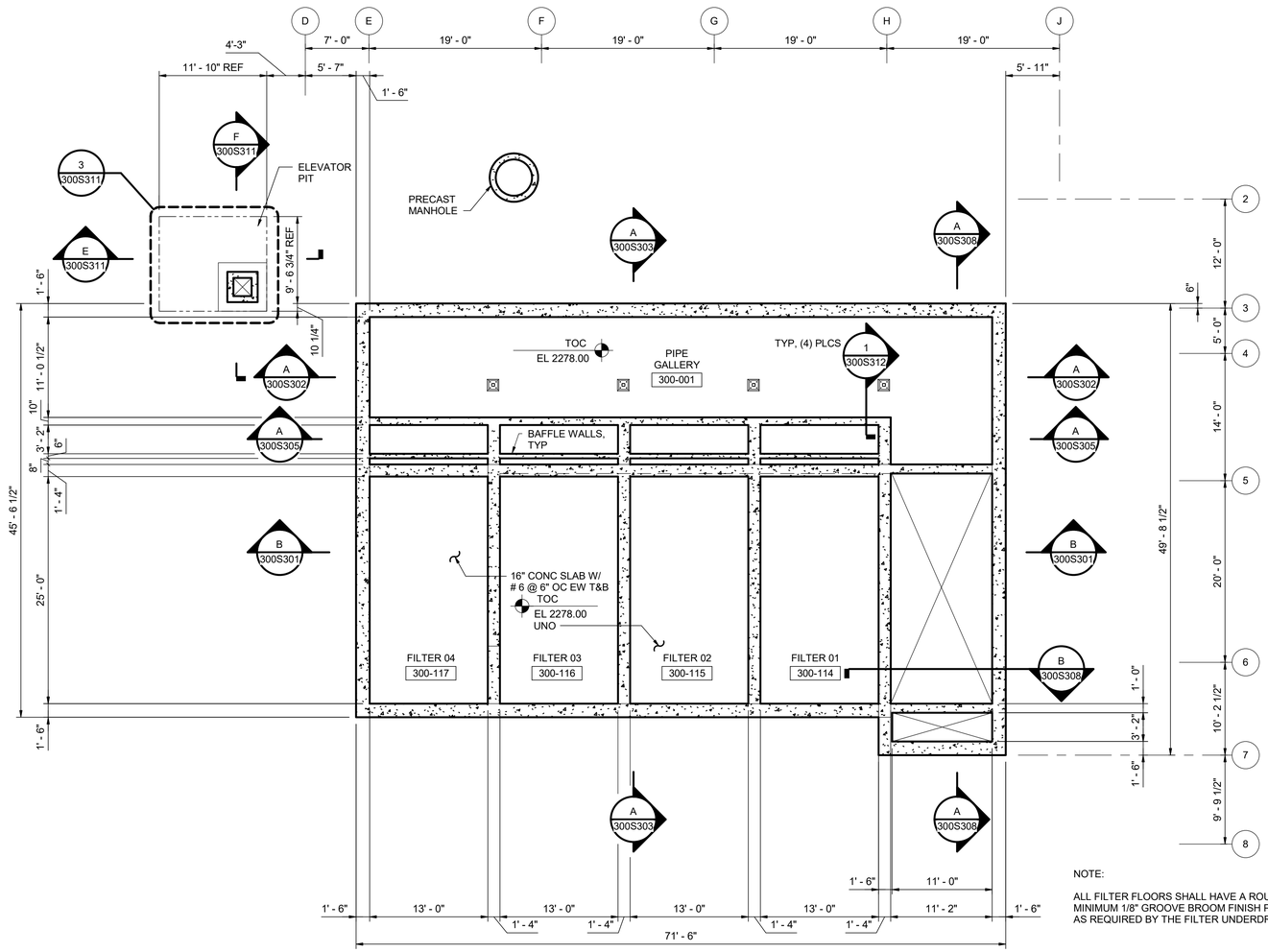

NOTE:

ALL FILTER FLOORS SHALL HAVE A ROUGH SURFACE EQUIVALENT TO A MINIMUM 1/8" GROOVE BROOM FINISH PRIOR TO PLACING THE BASE GROUT AS REQUIRED BY THE FILTER UNDERDRAIN MANUFACTURER.

FILTER FLOOR PLAN AT EL 2278.00

1/8" = 1'-0"

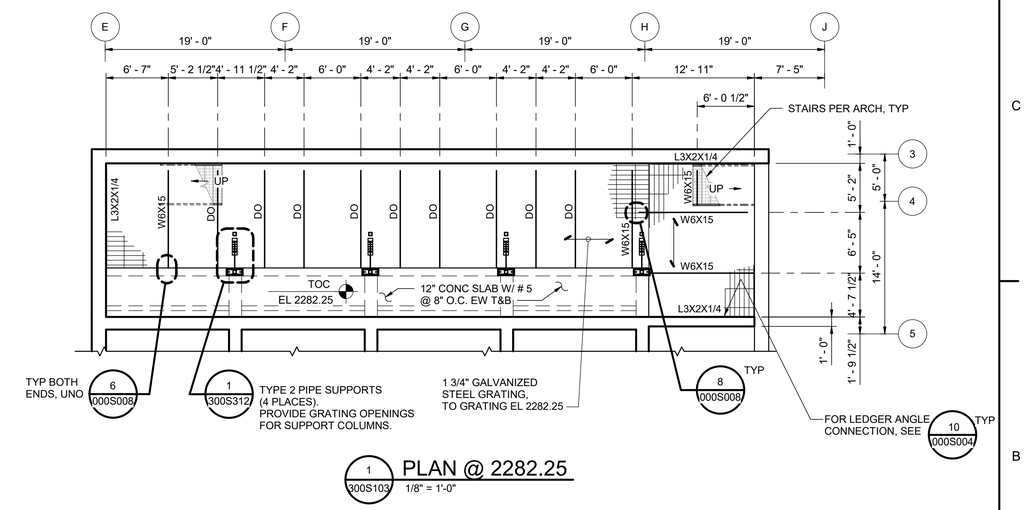

PLAN @ 2282.25

1 / 300S103 — 1/8" = 1'-0"

ISSUE	DATE	DESCRIPTION
A	09/2026	ISSUED FOR BIDS

PROJECT MANAGER	PIERRE KWAN
CIVIL	J. MEGRDITCHIAN
STRUCTURAL	P. LINDBLOM
ARCHITECTURAL	V. YANEZ
PROCESS	P. KWAN
MECHANICAL	K. CHEUNG
ELECTRICAL	R. MCCOMB
INSTRUMENTATION	D. BEST
PROJECT NUMBER	10193663

REGISTERED PROFESSIONAL ENGINEER 93585PE OREGON MAY 8, 2018 ANDREW JACK FORTNER
DIGITALLY SIGNED
EXPIRES: 12-31-2027

CITY OF ASHLAND
Ashland, Oregon

City of Ashland

Ashland Creek Water Treatment Plant

2019

OPERATIONS BUILDING
STRUCTURAL
FILTER PLANS AT EL 2278.00 AND 2285.25

0 1" 2"

FILENAME	10193663-AWTP-300_S.rte
SCALE	1/8" = 1'-0"
SHEET	300S102

Autodesk Docs://10193663_Ashland_WTP_Final_Design_2024/10193663-AWTP-300_S.rvt
9/23/2026 12:07:01 PM

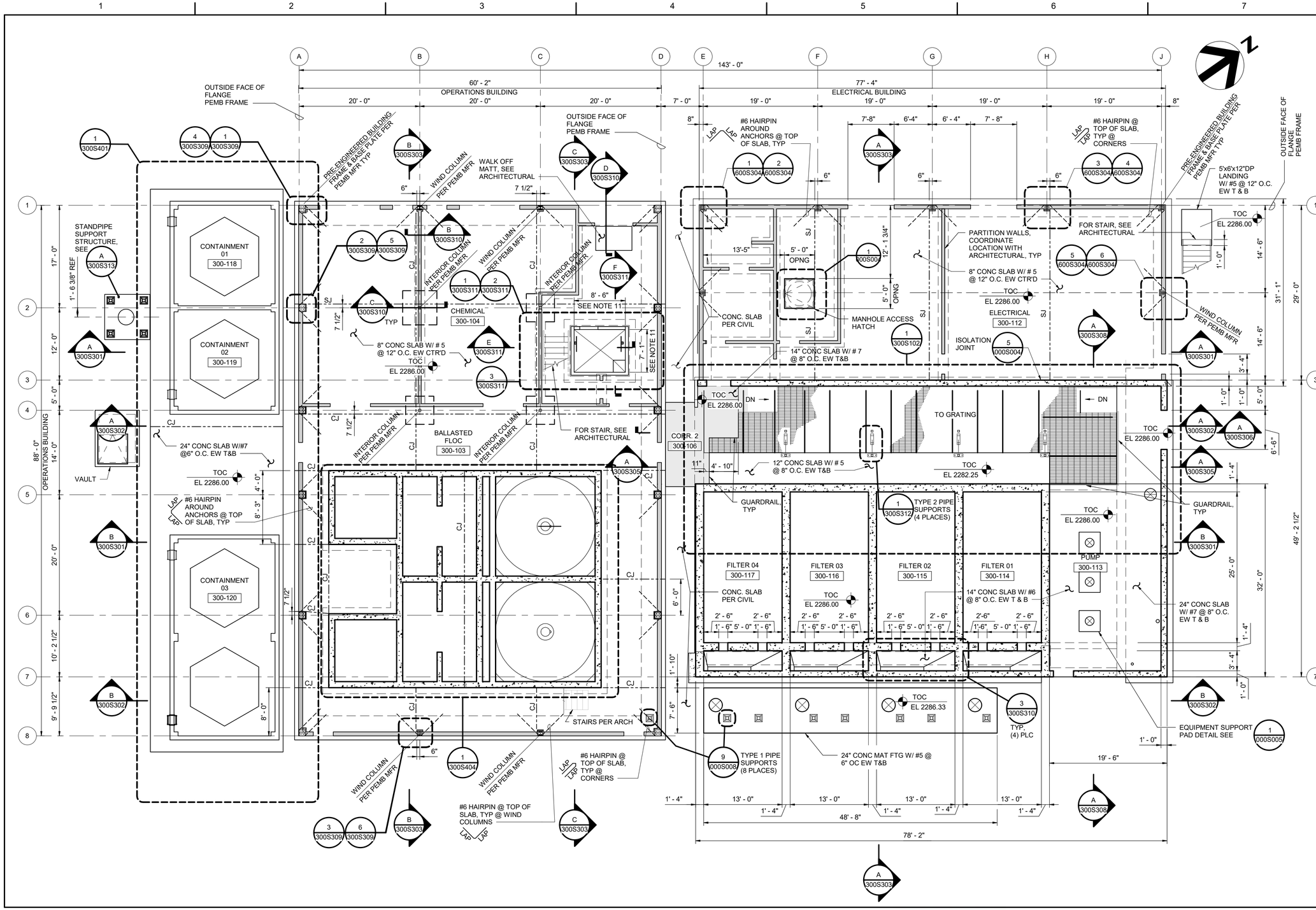

FACILITY STRUCTURAL NOTES:

1. FOR GENERAL STRUCTURAL NOTES, SEE 000S001
2. FOR SPECIAL INSPECTIONS, SEE 000S002 AND 000S003
3. FOR STANDARD DETAILS SEE 000S003 THRU 000S009
4. ADDITIONAL DESIGN CRITERIA SPECIFIC TO THIS FACILITY: ELECTRICAL BUILDING
   A. DEAD LOAD:
      1. COLLATERAL ROOF LOADING: 15 psf
   B. LIVE LOAD:
      1. FLOOR:
         a. 125 PSF
         b. 2000 LB CONC.
      2. ROOF:
         a. 20 PSF (NON-REDUCIBLE)
         b. 300 LB (ROOF SURFACE)
         c. 2000 LB (ON FRAME BEAMS)
   C. WIND DESIGN CRITERIA:
      1. MAXIMUM COMPONENT AND CLADDING PRESSURE: +16 PSF/-62 PSF
   D. SEISMIC DESIGN CRITERIA:
      1. BASIC SEISMIC FORCE RESISTING SYSTEM (ASSUMED):
         a. N-S (GRID 1): ORDINARY STEEL CONCENTRICALLY BRACED FRAMES
         b. E-W (GRID E-J): ORDINARY STEEL MOMENT FRAMES
      2. ANALYSIS PROCEDURE: EQUIVALENT LATERAL FORCE
      3. RESPONSE MODIFICATION FACTOR, R:
         a. N-S: 3.25
         b. E-W: 3.5
      4. SEISMIC RESPONSE COEFFICIENT, C_S:
         a. N-S: 0.232
         b. E-W: 0.215
5. REFER TO ARCHITECTURAL, PROCESS, MECHANICAL AND ELECTRICAL PLANS FOR EQUIPMENT AND PENETRATION SIZE AND LOCATION. FOR EQUIPMENT PADS, REFER TO (1/000S005)
   FOR OPENINGS, REFER TO (1/000S004)
6. CJ INDICATES CONSTRUCTION JOINTS REFER TO (2/000S003)
7. SJ INDICATES SLAB JOINT. REFER TO (4/000S004)
8. IN PRE-ENGINEERED METAL BUILDINGS, PROVIDE VAPOR BARRIER DIRECTLY BELOW ALL SLAB-ON-GRADE.
9. ALL FILTER FLOORS SHALL HAVE A ROUGH SURFACE EQUIVALENT TO A MINIMUM 1/8" GROOVE BROOM FINISH PRIOR TO PLACING THE BASE GROUT AS REQUIRED BY THE FILTER UNDERDRAIN MANUFACTURER.
10. PROVIDE PIPE ENCASEMENT PER TYPICAL (3/000S003)
11. DIMENSIONS ARE BASED ON ASSUMED ELEVATOR DIMENSIONS AND ARE SUBJECT TO CHANGE DURING CONSTRUCTION.

ISSUE	DATE	DESCRIPTION
A	09/2026	ISSUED FOR BIDS

PROJECT MANAGER	PIERRE KWAN
CIVIL	J. MEGRDITCHIAN
STRUCTURAL	P. LINDBLOM
ARCHITECTURAL	V. YANEZ
PROCESS	P. KWAN
MECHANICAL	K. CHEUNG
ELECTRICAL	R. MCCOMB
INSTRUMENTATION	D. BEST
PROJECT NUMBER	10193663

REGISTERED PROFESSIONAL ENGINEER 93585PE DIGITALLY SIGNED OREGON MAY 8, 2018 ANDREW JACK FORTNER
EXPIRES: 12-31-2027

REGISTERED PROFESSIONAL ENGINEER 108753PE DIGITALLY SIGNED OREGON JAN 13, 2026 PATRICK DANIEL LINDBLOM
EXPIRES: 12/31/2028

CITY OF ASHLAND
Ashland, Oregon

City of Ashland

Ashland Creek
Water Treatment Plant

2019

OPERATIONS BUILDING STRUCTURAL GROUND FLOOR PLAN AT EL 2286.00

0 1" 2"

FILENAME 10193663-AWTP-300_S.rte
SCALE 1/8"=1'-0"
SHEET 300S103

Autodesk Docs://10193663_Ashland_WTP_Final_Design_2024/10193663-AWTP-300_S.rvt
9/23/2026 12:07:04 PM

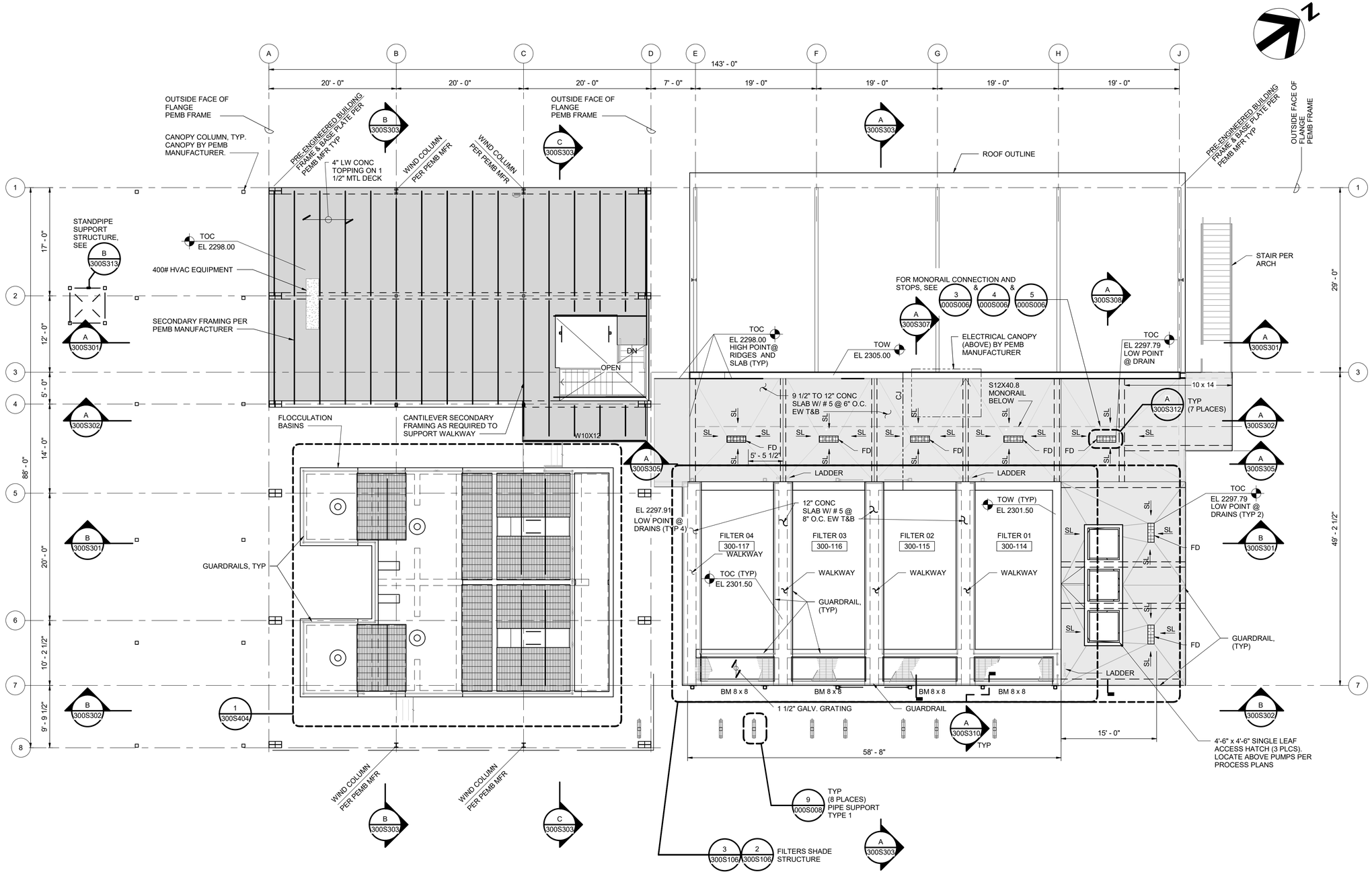

GENERAL NOTES:

1. REFER TO DRAWING 300S310 FOR CONCRETE BEAM DETAILS
2. REFER TO ARCHITECTURAL, PROCESS, MECHANICAL AND ELECTRICAL PLANS FOR EQUIPMENT AND PENETRATION SIZE AND LOCATION. FOR EQUIPMENT PADS, REFER TO 1/000S005
   FOR OPENINGS, REFER TO 1/000S004
3. CJ INDICATES CONSTRUCTION JOINTS REFER TO 2/000S003
4. HATCH DRAINS TO BE DAYLIGHTED THROUGH SIDE OF CONCRETE CURB

ISSUE	DATE	DESCRIPTION
A	09/2026	ISSUED FOR BIDS

PROJECT MANAGER	PIERRE KWAN
CIVIL	J. MEGRDITCHIAN
STRUCTURAL	P. LINDBLOM
ARCHITECTURAL	V. YANEZ
PROCESS	P. KWAN
MECHANICAL	K. CHEUNG
ELECTRICAL	R. MCCOMB
INSTRUMENTATION	D. BEST
PROJECT NUMBER	10193663

REGISTERED PROFESSIONAL ENGINEER 93585PE DIGITALLY SIGNED OREGON MAY 8, 2018 ANDREW JACK FORTNER
EXPIRES: 12-31-2027

REGISTERED PROFESSIONAL ENGINEER 108753PE DIGITALLY SIGNED OREGON JAN 13, 2026 PATRICK DANIEL LINDBLOM
EXPIRES: 12/31/2028

CITY OF ASHLAND
Ashland, Oregon

City of Ashland

Ashland Creek Water Treatment Plant

2019

OPERATIONS BUILDING STRUCTURAL SECOND FLOOR PLAN AT EL 2298.00

0 1" 2"

FILENAME 10193663-AWTP-300_S.rte
SCALE As indicated
SHEET **300S104**

Autodesk Docs://10193663_Ashland_WTP_Final_Design_2024/10193663-AWTP-300_S.rvt
9/23/2026 12:07:06 PM

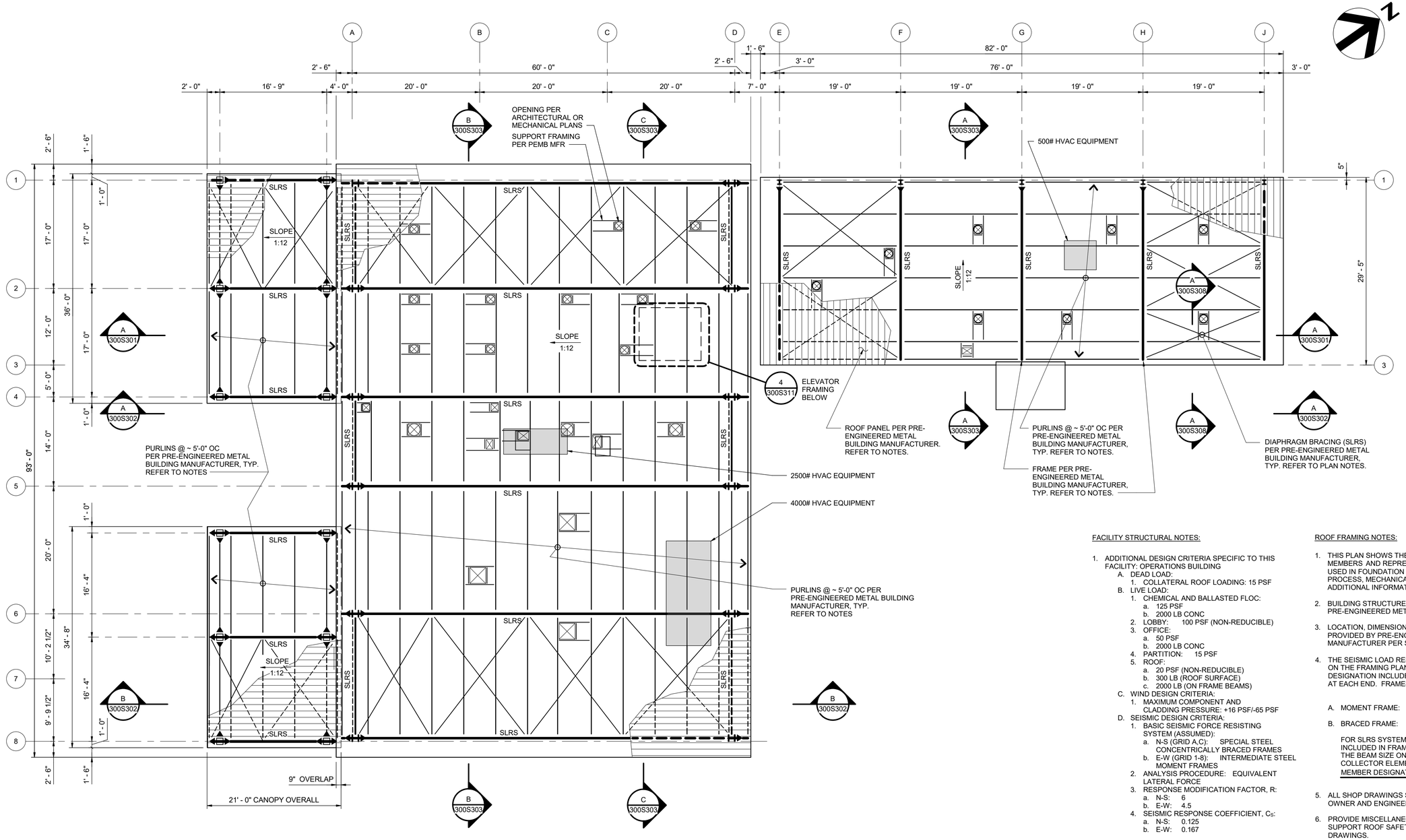

FACILITY STRUCTURAL NOTES:

1. ADDITIONAL DESIGN CRITERIA SPECIFIC TO THIS FACILITY: OPERATIONS BUILDING
   A. DEAD LOAD:
      1. COLLATERAL ROOF LOADING: 15 PSF
   B. LIVE LOAD:
      1. CHEMICAL AND BALLASTED FLOC:
         a. 125 PSF
         b. 2000 LB CONC
      2. LOBBY: 100 PSF (NON-REDUCIBLE)
      3. OFFICE:
         a. 50 PSF
         b. 2000 LB CONC
      4. PARTITION: 15 PSF
      5. ROOF:
         a. 20 PSF (NON-REDUCIBLE)
         b. 300 LB (ROOF SURFACE)
         c. 2000 LB (ON FRAME BEAMS)
   C. WIND DESIGN CRITERIA:
      1. MAXIMUM COMPONENT AND CLADDING PRESSURE: +16 PSF/-65 PSF
   D. SEISMIC DESIGN CRITERIA:
      1. BASIC SEISMIC FORCE RESISTING SYSTEM (ASSUMED):
         a. N-S (GRID A,C): SPECIAL STEEL CONCENTRICALLY BRACED FRAMES
         b. E-W (GRID 1-8): INTERMEDIATE STEEL MOMENT FRAMES
      2. ANALYSIS PROCEDURE: EQUIVALENT LATERAL FORCE
      3. RESPONSE MODIFICATION FACTOR, R:
         a. N-S: 6
         b. E-W: 4.5
      4. SEISMIC RESPONSE COEFFICIENT, C_S:
         a. N-S: 0.125
         b. E-W: 0.167

ROOF FRAMING NOTES:

1. THIS PLAN SHOWS THE GENERAL LOCATION OF STRUCTURAL MEMBERS AND REPRESENTS THE ASSUMED FRAMING LAYOUT USED IN FOUNDATION DESIGN. REFER TO ARCHITECTURAL, PROCESS, MECHANICAL AND ELECTRICAL PLANS FOR ADDITIONAL INFORMATION.
2. BUILDING STRUCTURE SHALL BE DESIGNED BY PRE-ENGINEERED METAL BUILDING MANUFACTURER.
3. LOCATION, DIMENSIONS AND MATERIALS SHALL BE PROVIDED BY PRE-ENGINEERED METAL BUILDING MANUFACTURER PER SPECIFICATIONS SECTION 13 34 19.
4. THE SEISMIC LOAD RESISTING SYSTEM (SLRS) IS DENOTED ON THE FRAMING PLANS AND FRAME ELEVATIONS. THE SLRS DESIGNATION INCLUDES THE MEMBER AND CONNECTIONS AT EACH END. FRAMES ARE DENOTED AS FOLLOWS:
   A. MOMENT FRAME: (SLRS)
   B. BRACED FRAME: (SLRS)
   FOR SLRS SYSTEMS OR PARTS OF SYSTEMS THAT ARE NOT INCLUDED IN FRAMES, (SLRS) IS PLACED NEXT TO THE BEAM SIZE ON THE FRAMING PLAN (eg: ON A COLLECTOR ELEMENT (DRAG STRUT):
   MEMBER DESIGNATION (SLRS)
5. ALL SHOP DRAWINGS SHALL BE REVIEWED AND APPROVED BY OWNER AND ENGINEER PRIOR TO PURCHASE.
6. PROVIDE MISCELLANEOUS STEEL BETWEEN PURLINS TO SUPPORT ROOF SAFETY ANCHORS. REFER TO ARCHITECTURAL DRAWINGS.
7. IN ADDITION TO SUPPORTING LOADING NOTED IN SPECIFICATIONS, GENERAL STRUCTURAL NOTES, FACILITY STRUCTURAL NOTES, AND BUILDING FLOOR AND ROOF PLANS, PEMB SHALL SUPPORT LATERAL LIVE AND SEISMIC LOADS GENERATED BY THE ELEVATOR AND ELEVATOR SUPPORT FRAME. PEMB DESIGN SHALL INCLUDE ATTACHMENT DETAILING NECESSARY TO TRANSMIT LATERAL LOADS FROM ELEVATOR SUPPORT FRAME TO SUPPORTING STRUCTURE.

ISSUE	DATE	DESCRIPTION
A	09/2026	ISSUED FOR BIDS

PROJECT MANAGER	PIERRE KWAN
CIVIL	J. MEGRDITCHIAN
STRUCTURAL	P. LINDBLOM
ARCHITECTURAL	V. YANEZ
PROCESS	P. KWAN
MECHANICAL	K. CHEUNG
ELECTRICAL	R. MCCOMB
INSTRUMENTATION	D. BEST
PROJECT NUMBER	10193663

REGISTERED PROFESSIONAL ENGINEER 93585PE DIGITALLY SIGNED OREGON MAY 8, 2019 ANDREW JACK FORTNER
EXPIRES: 12-31-2027

REGISTERED PROFESSIONAL ENGINEER 108753PE DIGITALLY SIGNED OREGON JAN 13, 2026 PATRICK DANIEL LINDBLOM
EXPIRES: 12/31/2028

CITY OF ASHLAND
Ashland, Oregon

City of Ashland

Ashland Creek Water Treatment Plant

2019

OPERATIONS BUILDING STRUCTURAL CONCEPTUAL ROOF FRAMING PLAN

0 1" 2"

FILENAME 10193663-AWTP-300_S.rte
SCALE As indicated
SHEET 300S105

Autodesk Docs://10193663_Ashland_WTP_Final_Design_2024/10193663-AWTP-300_S.rvt
9/23/2026 12:07:07 PM

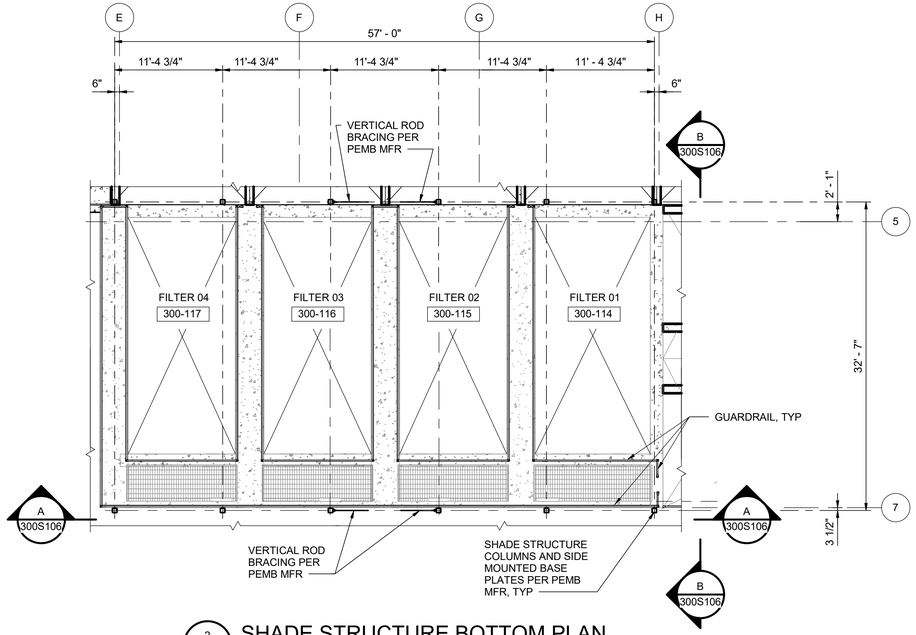

2 300S104 SHADE STRUCTURE BOTTOM PLAN
1/8" = 1'-0"

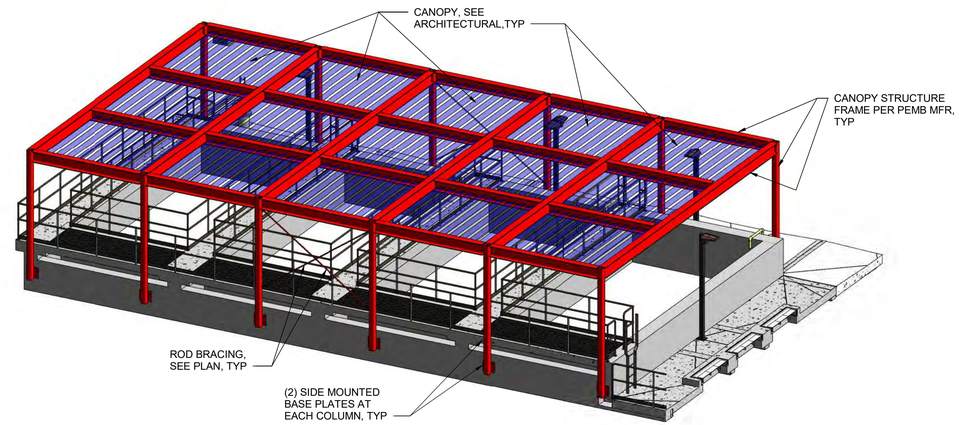

3D VIEW - SHADE STRUCTURE
NOT TO SCALE

NOTES:

1. THIS PLAN SHOWS THE GENERAL LOCATION OF STRUCTURAL MEMBERS AND REPRESENTS THE ASSUMED FRAMING LAYOUT USED IN FOUNDATION DESIGN.
2. BUILDING STRUCTURE SHALL BE DESIGNED BY PRE-ENGINEERED METAL BUILDING MANUFACTURER. THE FILTER WALLS TO BE EVALUATED FOR BUILDING REACTIONS PROVIDED BY PEMB MANUFACTURER. DETAILS FOR ANCHOR BOLTS INTO CONCRETE WALLS, AND ANY REQUIRED SUPPLEMENTAL REINFORCING WILL BE PROVIDED TO THE CONTRACTOR AFTER RECEIPT AND REVIEW OF METAL BUILDING SHOP DRAWINGS.
3. LOCATION, DIMENSIONS AND MATERIALS SHALL BE PROVIDED BY PRE-ENGINEERED METAL BUILDING MANUFACTURER PER SPECIFICATIONS SECTION 13 34 19.
4. THE SEISMIC LOAD RESISTING SYSTEM (SLRS) IS DENOTED ON THE FRAMING PLANS AND FRAME ELEVATIONS. THE SLRS DESIGNATION INCLUDES THE MEMBER AND CONNECTIONS AT EACH END. FRAMES ARE DENOTED AS FOLLOWS:
   A. MOMENT FRAME: ► (SLRS) ◄
   FOR SLRS SYSTEMS OR PARTS OF SYSTEMS THAT ARE NOT INCLUDED IN FRAMES, (SLRS) IS PLACED NEXT TO THE BEAM SIZE ON THE FRAMING PLAN (eg: ON A COLLECTOR ELEMENT (DRAG STRUT): MEMBER DESIGNATION (SLRS)
5. ALL SHOP DRAWINGS SHALL BE REVIEWED AND APPROVED BY OWNER PRIOR TO PURCHASE.
6. SHADE STRUCTURE DESIGN CRITERIA:
   SNOW LOAD = 34 PSF
   WIND LOAD = 106 MPH
   COLLATERAL LOAD FOR ROOF SYSTEM AND SUPPLEMENTAL FRAMING = 10 PSF

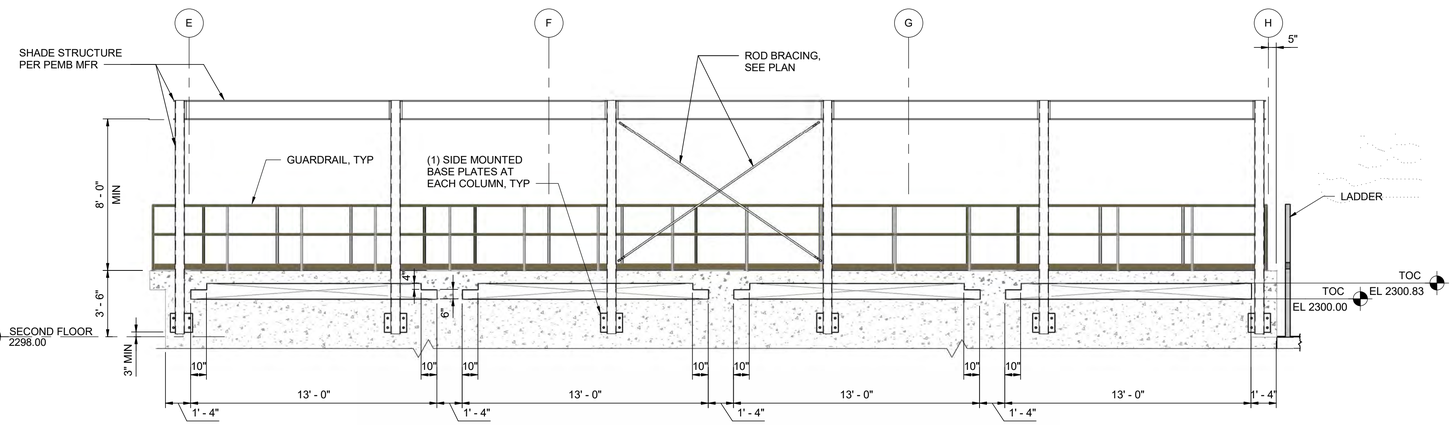

A - SECTION
1/4" = 1'-0"

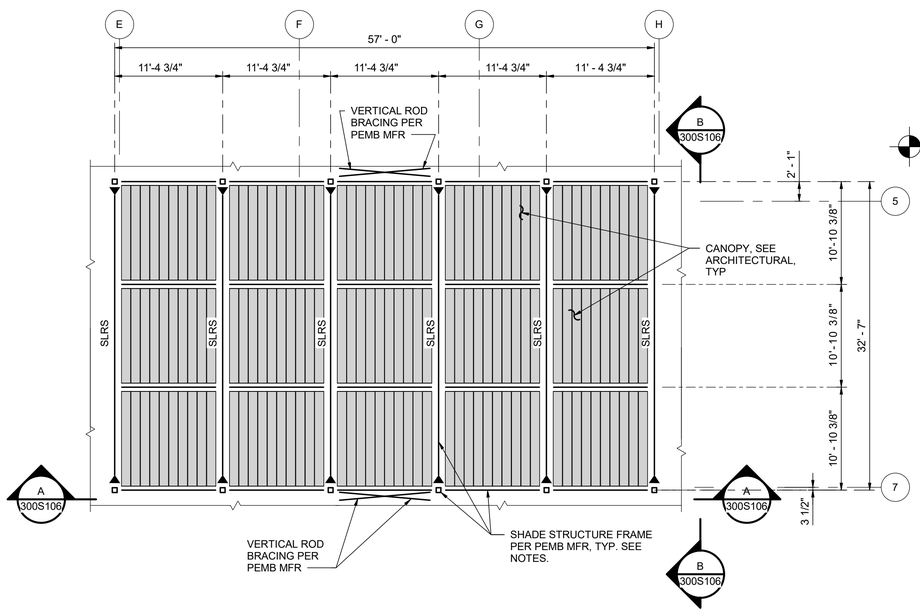

3 300S104 SHADE STRUCTURE CONCEPTUAL ROOF FRAMING PLAN
1/8" = 1'-0"

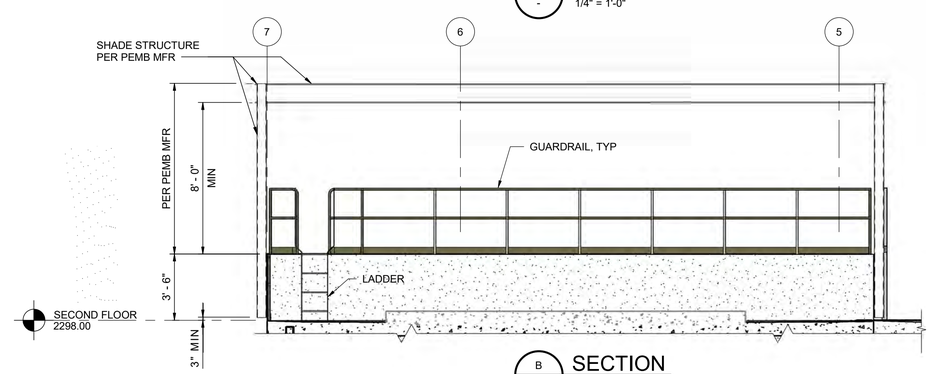

B - SECTION
1/4" = 1'-0"

ISSUE	DATE	DESCRIPTION
A	09/2026	ISSUED FOR BIDS

PROJECT MANAGER	PIERRE KWAN
CIVIL	J. MEGRDITCHIAN
STRUCTURAL	P. LINDBLOM
ARCHITECTURAL	V. YANEZ
PROCESS	P. KWAN
MECHANICAL	K. CHEUNG
ELECTRICAL	R. MCCOMB
INSTRUMENTATION	D. BEST
PROJECT NUMBER	10193663

REGISTERED PROFESSIONAL ENGINEER 93585PE OREGON DIGITALLY SIGNED MAY 8, 2019 ANDREW JACK FORTNER
EXPIRES: 12-31-2027

REGISTERED PROFESSIONAL ENGINEER 108753PE OREGON DIGITALLY SIGNED JAN 13, 2026 PATRICK DANIEL LINDBLOM
EXPIRES: 12/31/2028

CITY OF ASHLAND
Ashland, Oregon

City of Ashland

Ashland Creek Water Treatment Plant

2019

OPERATIONS BUILDING STRUCTURAL ENLARGED SHADE COVER

0 1" 2"

FILENAME 10193663-AWTP-300_S.rte
SCALE As indicated
SHEET **300S106**

Autodesk Docs://10193663_Ashland_WTP_Final_Design_2024/10193663-AWTP-300_S.rvt
9/23/2026 12:07:11 PM

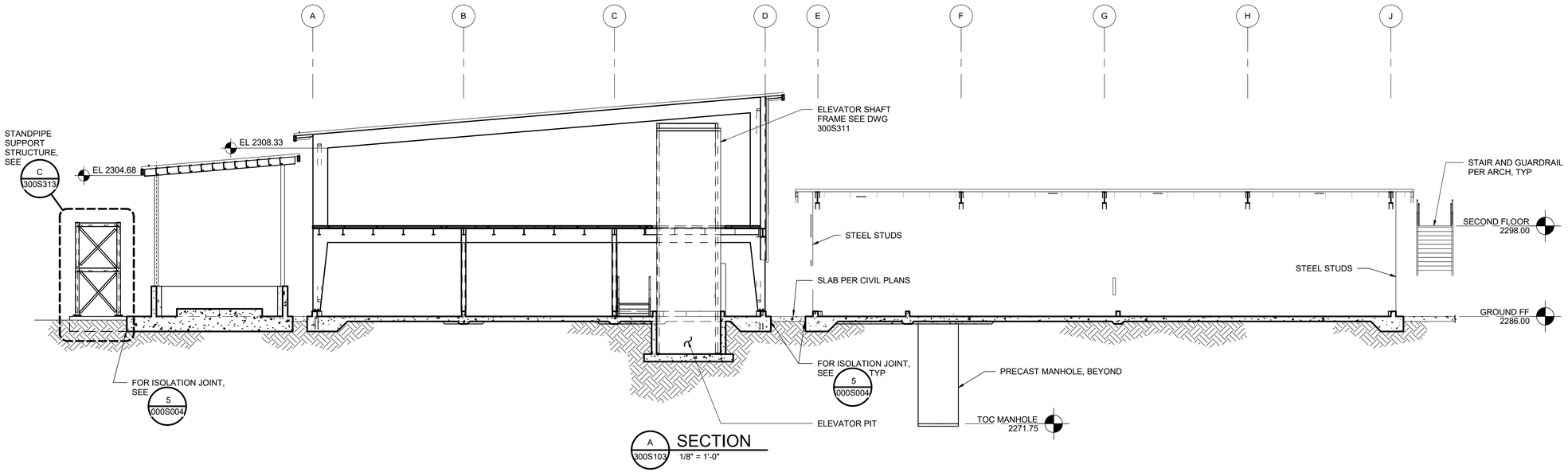

A 300S103 SECTION 1/8" = 1'-0"

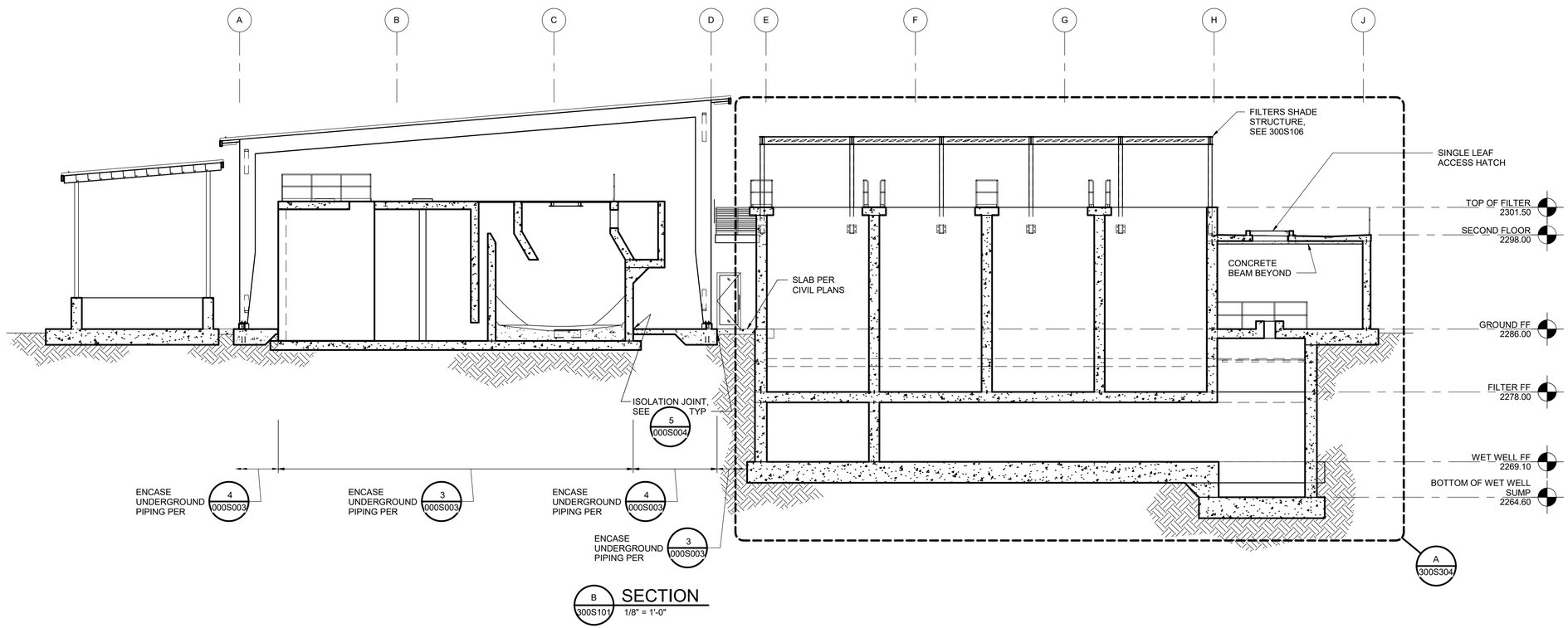

B 300S101 SECTION 1/8" = 1'-0"

Autodesk Docs://10193663_Ashland_WTP_Final_Design_2024/10193663-AWTP-300_S.rvt
9/23/2026 12:07:12 PM

ISSUE	DATE	DESCRIPTION
A	09/2026	ISSUED FOR BIDS

PROJECT MANAGER	PIERRE KWAN
CIVIL	J. MEGRDITCHIAN
STRUCTURAL	P. LINDBLOM
ARCHITECTURAL	V. YANEZ
PROCESS	P. KWAN
MECHANICAL	K. CHEUNG
ELECTRICAL	R. MCCOMB
INSTRUMENTATION	D. BEST
PROJECT NUMBER	10193663

REGISTERED PROFESSIONAL ENGINEER 93585PE DIGITALLY SIGNED OREGON MAY 8, 2018 ANDREW JACK FORTNER
EXPIRES: 12-31-2027

REGISTERED PROFESSIONAL ENGINEER 108753PE DIGITALLY SIGNED OREGON JAN 13, 2026 PATRICK DANIEL LINDBLOM
EXPIRES: 12/31/2028

CITY OF ASHLAND
Ashland, Oregon

City of Ashland

Ashland Creek Water Treatment Plant

2019

OPERATIONS BUILDING STRUCTURAL BUILDING SECTIONS 1

0 1" 2"

FILENAME 10193663-AWTP-300_S.rte
SCALE 1/8" = 1'-0"

SHEET **300S301**

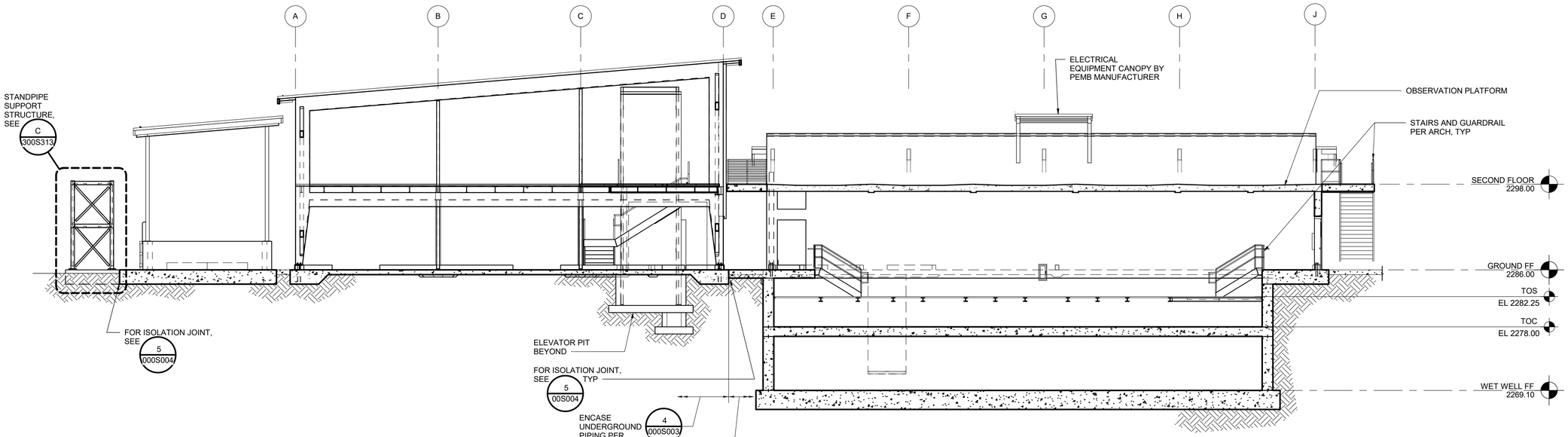

A 300S101 SECTION 1/8" = 1'-0"

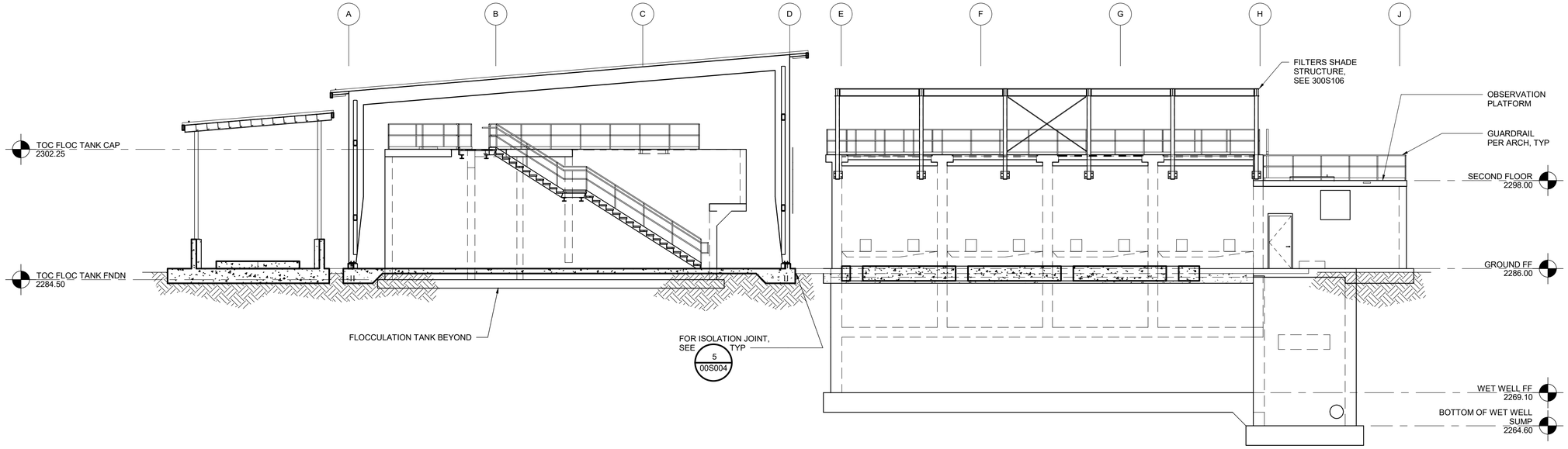

B 300S101 SECTION 1/8" = 1'-0"

ISSUE	DATE	DESCRIPTION
A	09/2026	ISSUED FOR BIDS

PROJECT MANAGER	PIERRE KWAN
CIVIL	J. MEGRDITCHIAN
STRUCTURAL	P. LINDBLOM
ARCHITECTURAL	V. YANEZ
PROCESS	P. KWAN
MECHANICAL	K. CHEUNG
ELECTRICAL	R. MCCOMB
INSTRUMENTATION	D. BEST
PROJECT NUMBER	10193663

REGISTERED PROFESSIONAL ENGINEER 93585PE DIGITALLY SIGNED OREGON MAY 8, 2018 ANDREW JACK FORTNER
EXPIRES: 12-31-2027

REGISTERED PROFESSIONAL ENGINEER 108753PE DIGITALLY SIGNED OREGON JAN 13, 2026 PATRICK DANIEL LINDBLOM
EXPIRES: 12/31/2028

CITY OF ASHLAND
Ashland, Oregon

City of Ashland

Ashland Creek Water Treatment Plant

2019

OPERATIONS BUILDING STRUCTURAL BUILDING SECTIONS 2

0 1" 2"

FILENAME 10193663-AWTP-300_S.rte
SCALE 1/8" = 1'-0"

SHEET **300S302**

Autodesk Docs://10193663_Ashland_WTP_Final_Design_2024/10193663-AWTP-300_S.rvt
9/23/2026 12:07:14 PM

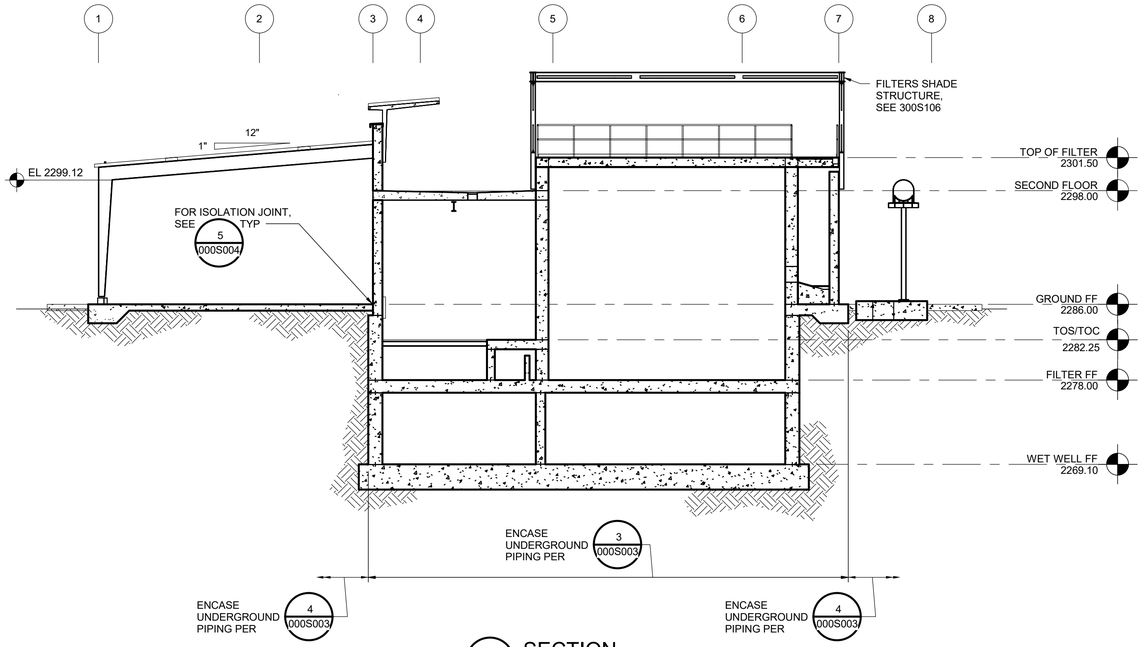

A 300S101 SECTION 1/8" = 1'-0"

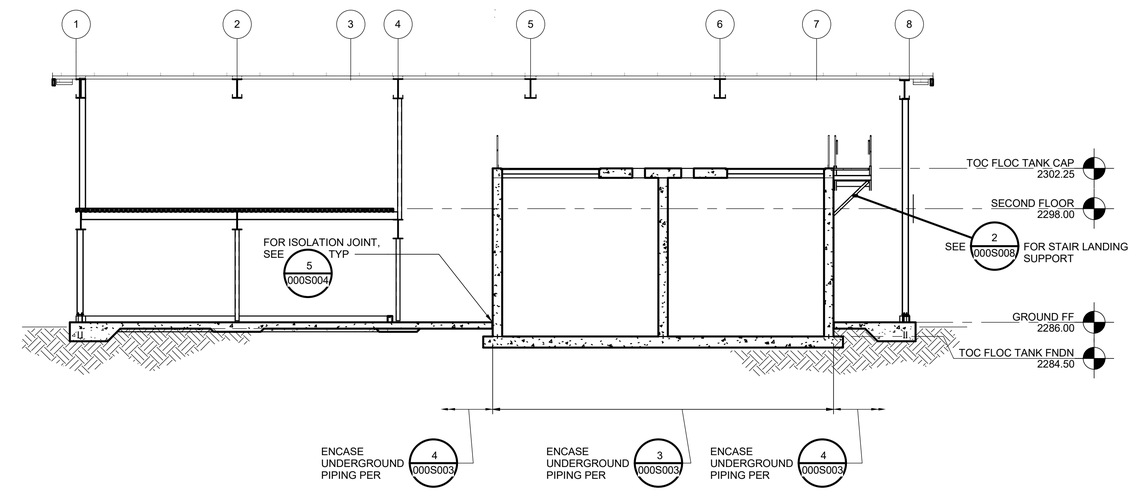

B 300S103 SECTION 1/8" = 1'-0"

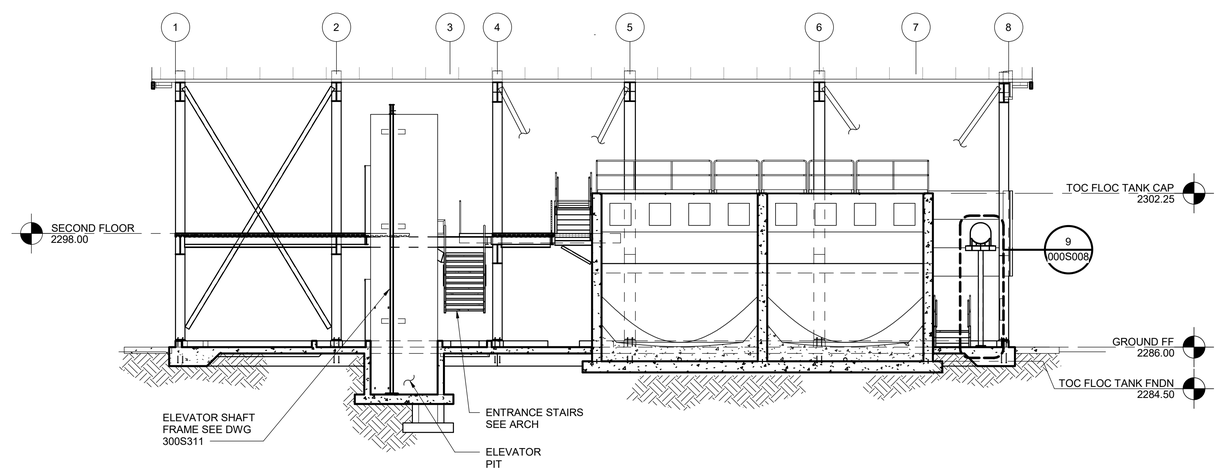

C 300S103 SECTION 1/8" = 1'-0"

ISSUE	DATE	DESCRIPTION
A	09/2026	ISSUED FOR BIDS

PROJECT MANAGER	PIERRE KWAN
CIVIL	J. MEGRDITCHIAN
STRUCTURAL	P. LINDBLOM
ARCHITECTURAL	V. YANEZ
PROCESS	P. KWAN
MECHANICAL	K. CHEUNG
ELECTRICAL	R. MCCOMB
INSTRUMENTATION	D. BEST
PROJECT NUMBER	10193663

REGISTERED PROFESSIONAL ENGINEER 93585PE DIGITALLY SIGNED OREGON MAY 8, 2018 ANDREW JACK FORTNER
EXPIRES: 12-31-2027

REGISTERED PROFESSIONAL ENGINEER 108753PE DIGITALLY SIGNED OREGON JAN 13, 2026 PATRICK DANIEL LINDBLOM
EXPIRES: 12/31/2028

CITY OF ASHLAND
Ashland, Oregon

City of Ashland

Ashland Creek Water Treatment Plant

2019

OPERATIONS BUILDING STRUCTURAL BUILDING SECTIONS 3

0 1" 2"

FILENAME 10193663-AWTP-300_S.rte
SCALE 1/8" = 1'-0"

SHEET **300S303**

Autodesk Docs://10193663_Ashland_WTP_Final_Design_2024/10193663-AWTP-300_S.rvt
9/23/2026 12:07:15 PM

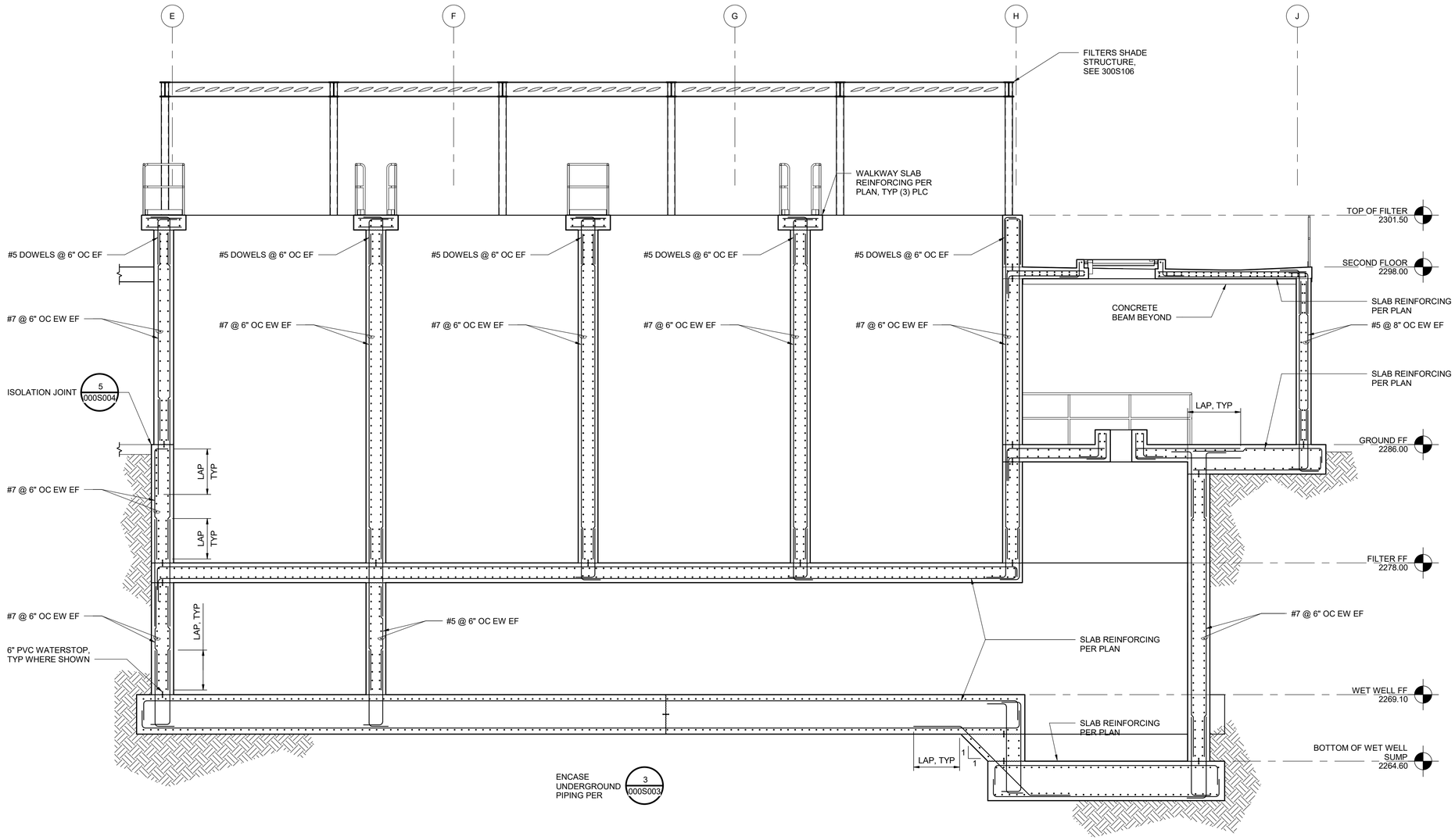

A 300S301 SECTION
1/4" = 1'-0"

A	09/2026	ISSUED FOR BIDS
ISSUE	DATE	DESCRIPTION

PROJECT MANAGER	PIERRE KWAN
CIVIL	J. MEGRDITCHIAN
STRUCTURAL	P. LINDBLOM
ARCHITECTURAL	V. YANEZ
PROCESS	P. KWAN
MECHANICAL	K. CHEUNG
ELECTRICAL	R. MCCOMB
INSTRUMENTATION	D. BEST
PROJECT NUMBER	10193663

REGISTERED PROFESSIONAL ENGINEER 93585PE DIGITALLY SIGNED OREGON MAY 8, 2018 ANDREW JACK FORTNER
EXPIRES: 12-31-2027

REGISTERED PROFESSIONAL ENGINEER 108753PE DIGITALLY SIGNED OREGON JAN 13, 2026 PATRICK DANIEL LINDBLOM
EXPIRES: 12/31/2028

CITY OF ASHLAND
Ashland, Oregon

City of Ashland

Ashland Creek
Water Treatment Plant

2019

OPERATIONS BUILDING
STRUCTURAL
ENLARGED FILTERS SECTION 1

0 1" 2"

FILENAME 10193663-AWTP-300_S.rte
SCALE 1/4" = 1'-0"
SHEET 300S304

Autodesk Docs://10193663_Ashland_WTP_Final_Design_2024/10193663-AWTP-300_S.rvt
9/23/2026 12:07:16 PM

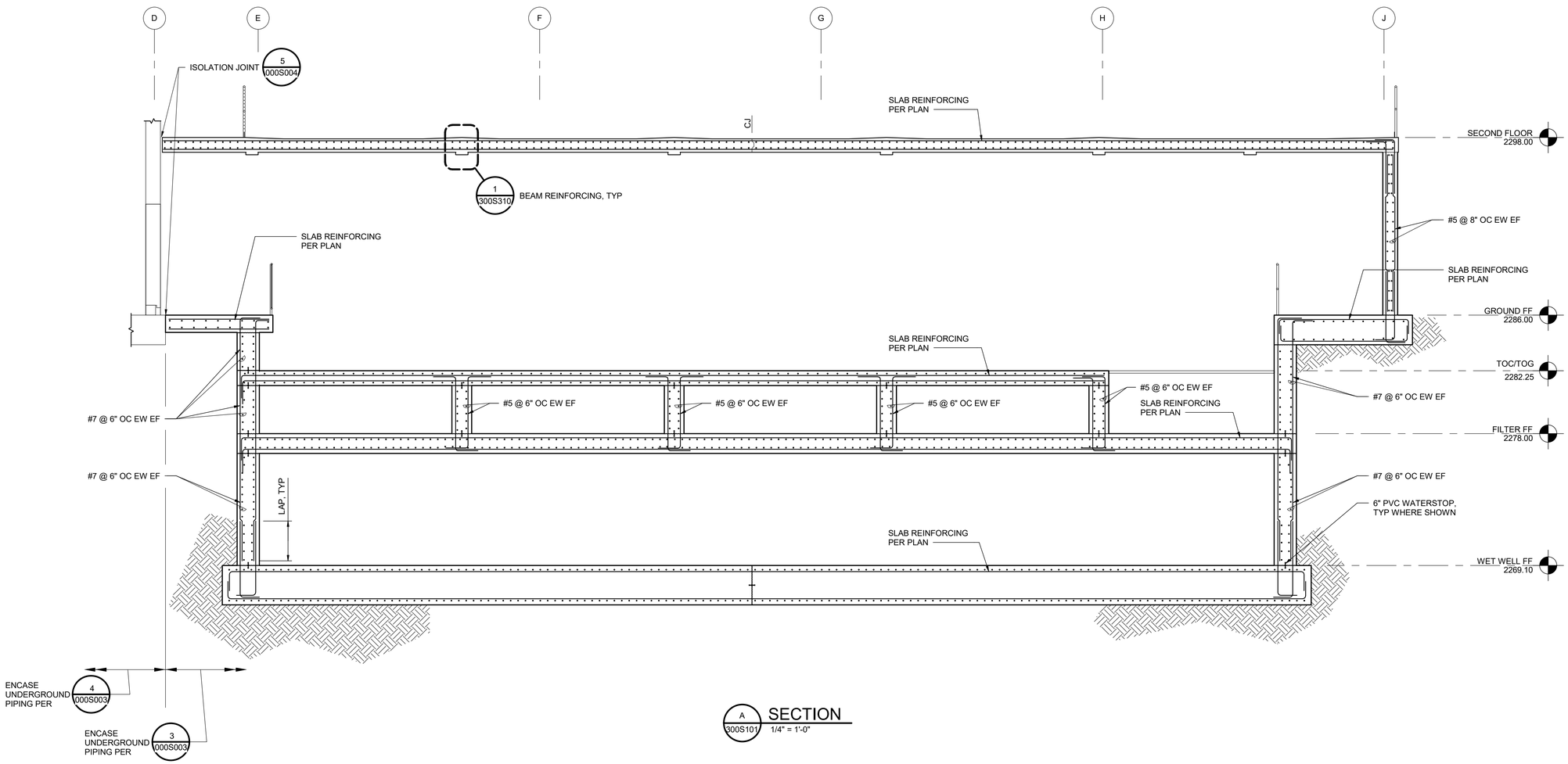

A
300S101
SECTION
1/4" = 1'-0"

ISSUE	DATE	DESCRIPTION
A	09/2026	ISSUED FOR BIDS

PROJECT MANAGER	PIERRE KWAN
CIVIL	J. MEGRDITCHIAN
STRUCTURAL	P. LINDBLOM
ARCHITECTURAL	V. YANEZ
PROCESS	P. KWAN
MECHANICAL	K. CHEUNG
ELECTRICAL	R. MCCOMB
INSTRUMENTATION	D. BEST
PROJECT NUMBER	10193663

REGISTERED PROFESSIONAL ENGINEER
93585PE
DIGITALLY SIGNED
OREGON
MAY 8, 2018
ANDREW JACK FORTNER
EXPIRES: 12-31-2027

CITY OF ASHLAND
Ashland, Oregon

City of Ashland

Ashland Creek
Water Treatment Plant

2019

OPERATIONS BUILDING
STRUCTURAL
ENLARGED FILTERS SECTION 2

0 1" 2"

FILENAME 10193663-AWTP-300_S.rte
SCALE 1/4" = 1'-0"

SHEET
300S305

Autodesk Docs://10193663_Ashland_WTP_Final_Design_2024/10193663-AWTP-300_S.rvt
9/23/2026 12:07:17 PM

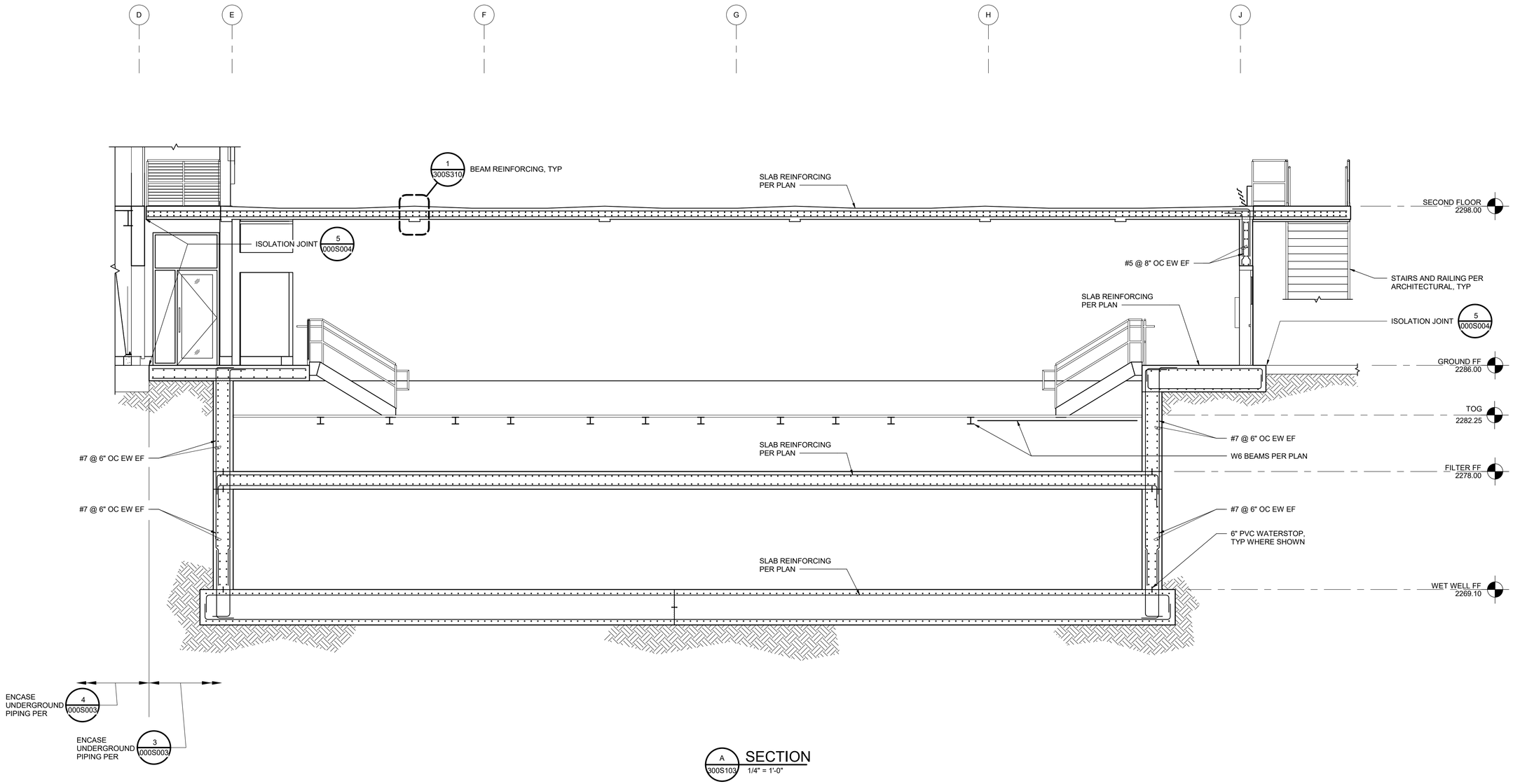

A 300S103 SECTION
1/4" = 1'-0"

Autodesk Docs://10193663_Ashland_WTP_Final_Design_2024/10193663-AWTP-300_S.rvt
9/23/2026 12:07:19 PM

ISSUE	DATE	DESCRIPTION
A	09/2026	ISSUED FOR BIDS

PROJECT MANAGER	PIERRE KWAN
CIVIL	J. MEGRDITCHIAN
STRUCTURAL	P. LINDBLOM
ARCHITECTURAL	V. YANEZ
PROCESS	P. KWAN
MECHANICAL	K. CHEUNG
ELECTRICAL	R. MCCOMB
INSTRUMENTATION	D. BEST
PROJECT NUMBER	10193663

REGISTERED PROFESSIONAL ENGINEER
93585PE
DIGITALLY SIGNED
OREGON
MAY 8, 2018
ANDREW JACK FORTNER
EXPIRES: 12-31-2027

CITY OF ASHLAND
Ashland, Oregon

City of Ashland

Ashland Creek
Water Treatment Plant

2019

OPERATIONS BUILDING
STRUCTURAL
ENLARGED FILTERS SECTION 3

0 1" 2"

FILENAME	10193663-AWTP-300_S.rte
SCALE	1/4" = 1'-0"

SHEET
300S306

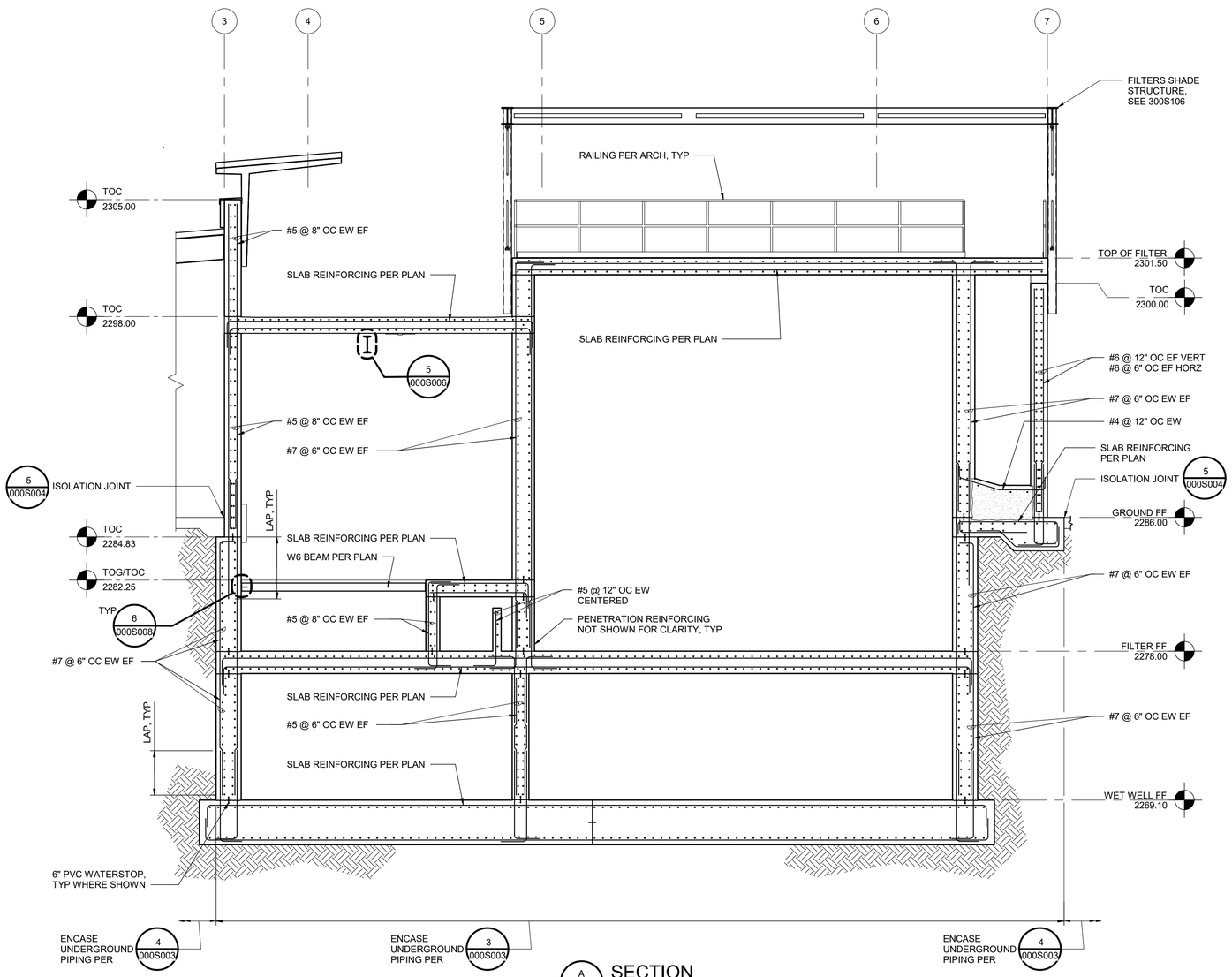

A 300S104 SECTION
1/4" = 1'-0"

ISSUE	DATE	DESCRIPTION
A	09/2026	ISSUED FOR BIDS

PROJECT MANAGER	PIERRE KWAN
CIVIL	J. MEGRDITCHIAN
STRUCTURAL	P. LINDBLOM
ARCHITECTURAL	V. YANEZ
PROCESS	P. KWAN
MECHANICAL	K. CHEUNG
ELECTRICAL	R. MCCOMB
INSTRUMENTATION	D. BEST
PROJECT NUMBER	10193663

REGISTERED PROFESSIONAL ENGINEER 93585PE DIGITALLY SIGNED OREGON MAY 8, 2018 ANDREW JACK FORTNER
EXPIRES: 12-31-2027

CITY OF ASHLAND
Ashland, Oregon

City of Ashland

Ashland Creek Water Treatment Plant

2019

OPERATIONS BUILDING STRUCTURAL ENLARGED FILTERS SECTION 4

0 1" 2"

FILENAME 10193663-AWTP-300_S.rte
SCALE 1/4" = 1'-0"

SHEET **300S307**

Autodesk Docs://10193663_Ashland_WTP_Final_Design_2024/10193663-AWTP-300_S.rvt
9/23/2026 12:07:20 PM

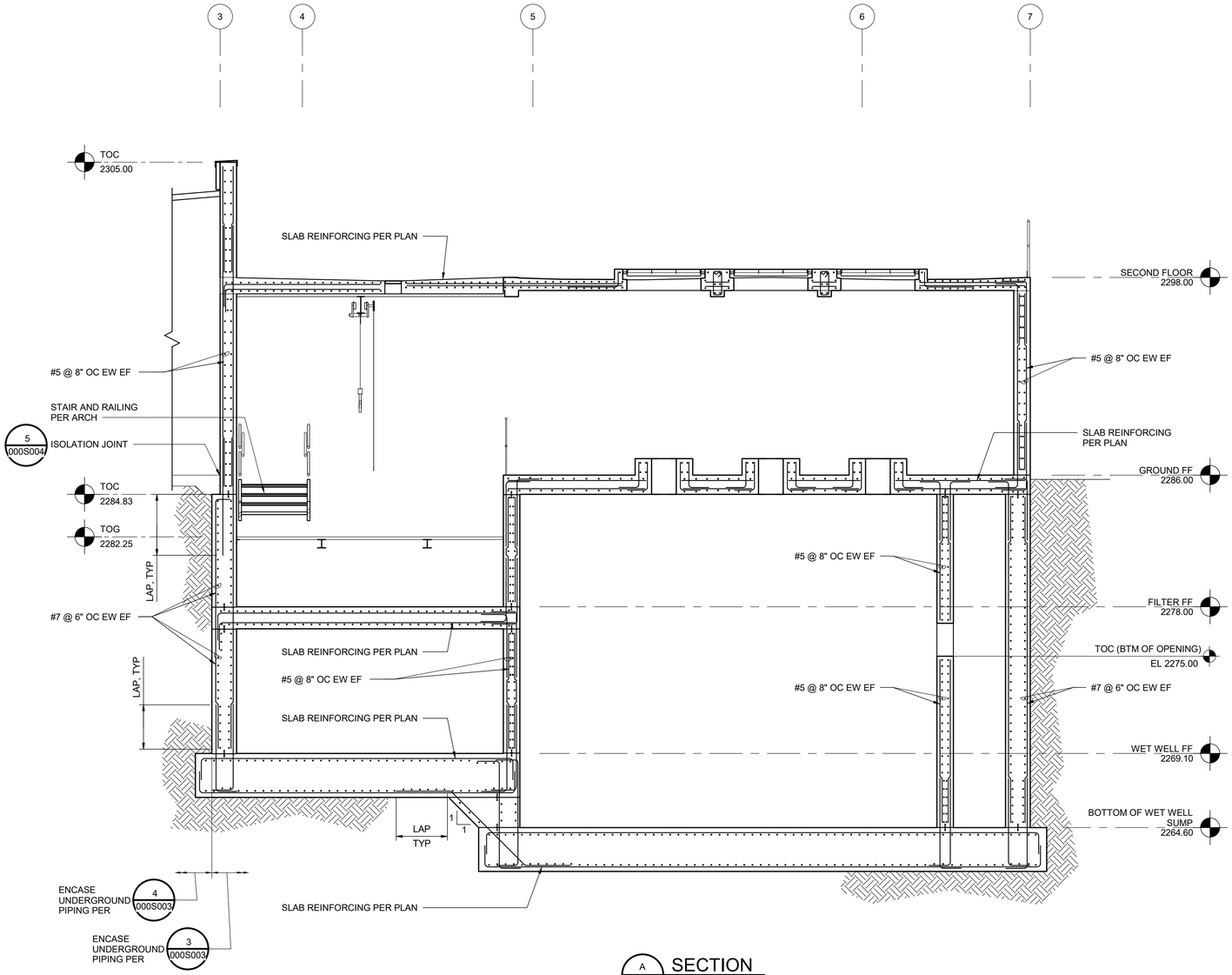

A 300S101 SECTION
1/4" = 1'-0"

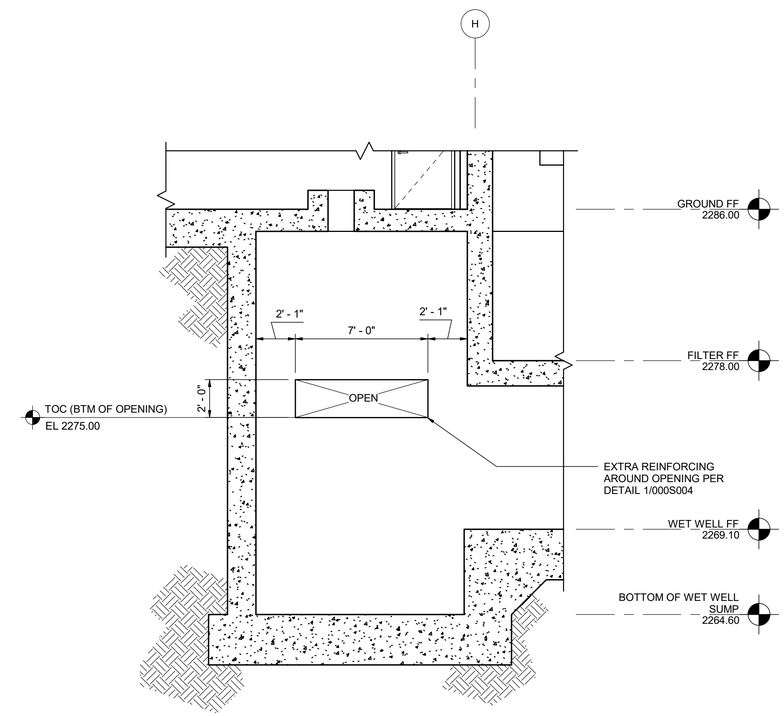

B 300S101 SECTION
1/4" = 1'-0"

ISSUE	DATE	DESCRIPTION
A	09/2026	ISSUED FOR BIDS

PROJECT MANAGER	PIERRE KWAN
CIVIL	J. MEGRDITCHIAN
STRUCTURAL	P. LINDBLOM
ARCHITECTURAL	V. YANEZ
PROCESS	P. KWAN
MECHANICAL	K. CHEUNG
ELECTRICAL	R. MCCOMB
INSTRUMENTATION	D. BEST
PROJECT NUMBER	10193663

REGISTERED PROFESSIONAL ENGINEER
93585PE
DIGITALLY SIGNED
OREGON
MAY 8, 2018
ANDREW JACK FORTNER
EXPIRES: 12-31-2027

CITY OF ASHLAND
Ashland, Oregon

City of Ashland

Ashland Creek
Water Treatment Plant

2019

OPERATIONS BUILDING
STRUCTURAL
ENLARGED FILTERS SECTION 5

0 1" 2"

FILENAME	10193663-AWTP-300_S.rte
SCALE	1/4" = 1'-0"

SHEET
300S308

Autodesk Docs://10193663_Ashland_WTP_Final_Design_2024/10193663-AWTP-300_S.rvt
9/23/2026 12:07:21 PM

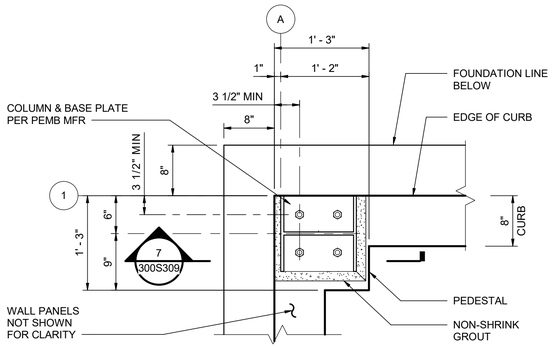

NOTE:

1. DIMENSIONS ARE BASED ON ASSUMED PEMB DIMENSIONS AND ARE SUBJECT TO CHANGE DURING CONSTRUCTION.

1 / 300S103 CORNER BASEPLATE PLAN
1" = 1'-0"

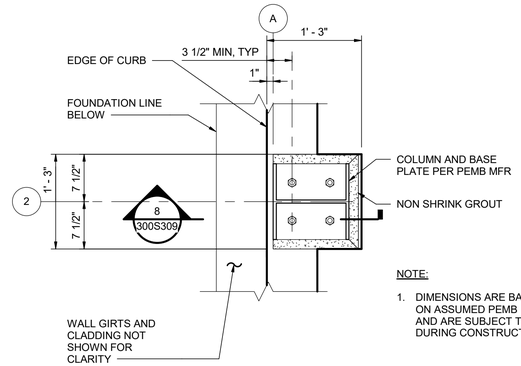

NOTE:

1. DIMENSIONS ARE BASED ON ASSUMED PEMB DIMENSIONS AND ARE SUBJECT TO CHANGE DURING CONSTRUCTION.

2 / 300S103 SIDE BASE PLATE PLAN
1" = 1'-0"

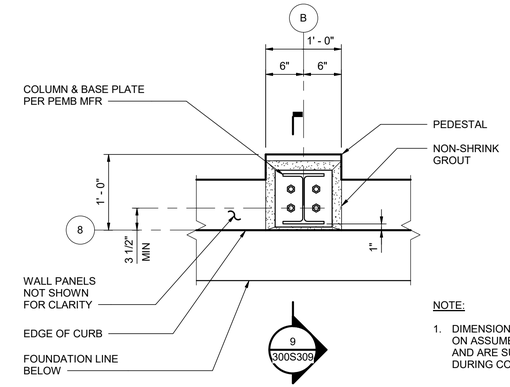

NOTE:

1. DIMENSIONS ARE BASED ON ASSUMED PEMB DIMENSIONS AND ARE SUBJECT TO CHANGE DURING CONSTRUCTION.

3 / 300S103 WIND COLUMN BASE PLATE PLAN
1" = 1'-0"

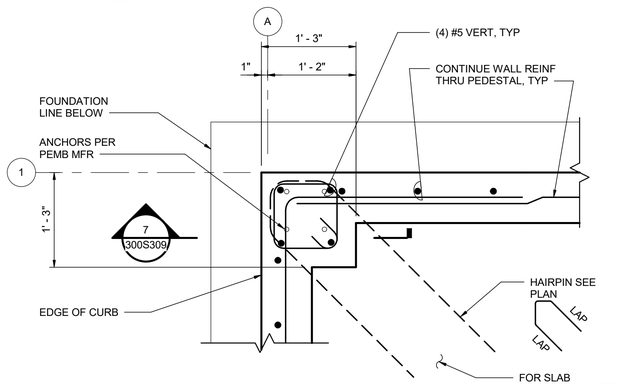

4 / 300S103 CORNER PEDESTAL DETAIL
1" = 1'-0"

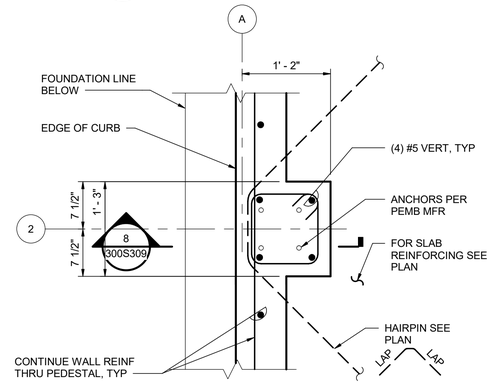

5 / 300S103 SIDE PEDESTAL DETAIL
1" = 1'-0"

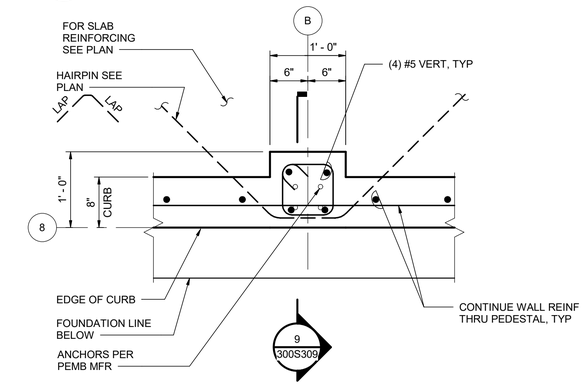

6 / 300S103 WIND COLUMN PEDESTAL DETAIL
1" = 1'-0"

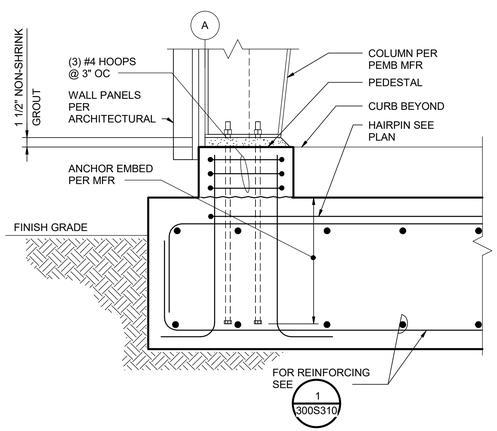

7 / 300S309 CORNER PEDESTAL SECTION
1" = 1'-0"

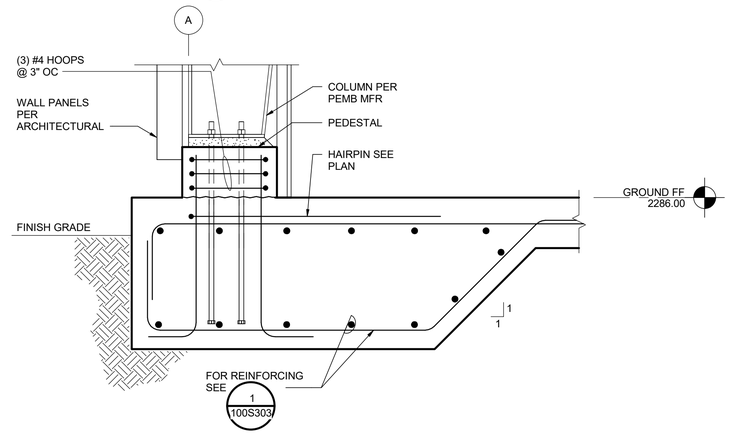

8 / 300S309 SIDE PEDESTAL SECTION
1" = 1'-0"

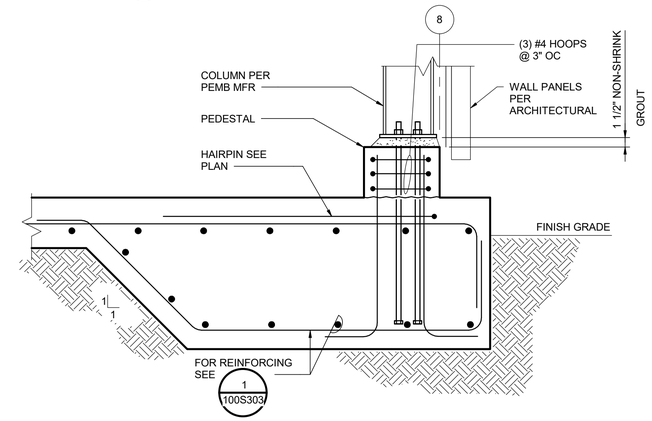

9 / 300S309 WIND COLUMN PEDESTAL SECTION
1" = 1'-0"

ISSUE	DATE	DESCRIPTION
A	09/2026	ISSUED FOR BIDS

PROJECT MANAGER	PIERRE KWAN
CIVIL	J. MEGRDITCHIAN
STRUCTURAL	P. LINDBLOM
ARCHITECTURAL	V. YANEZ
PROCESS	P. KWAN
MECHANICAL	K. CHEUNG
ELECTRICAL	R. MCCOMB
INSTRUMENTATION	D. BEST
PROJECT NUMBER	10193663

REGISTERED PROFESSIONAL ENGINEER 108753PE DIGITALLY SIGNED OREGON JAN 13, 2026 PATRICK DANIEL LINDBLOM

EXPIRES: 12/31/2028

CITY OF ASHLAND
Ashland, Oregon

City of Ashland

Ashland Creek Water Treatment Plant

2019

OPERATIONS BUILDING STRUCTURAL SECTIONS AND DETAILS

0 1" 2"

FILENAME 10193663-AWTP-300_S.rte
SCALE 1" = 1'-0"

SHEET **300S309**

Autodesk Docs://10193663_Ashland_WTP_Final_Design_2024/10193663-AWTP-300_S.rvt
9/23/2026 12:07:22 PM

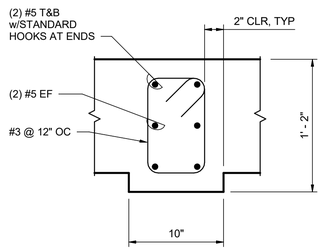

SLAB REINFORCING NOT SHOWN FOR CLARITY

1 300S305 DETAIL
1 1/2" = 1'-0"

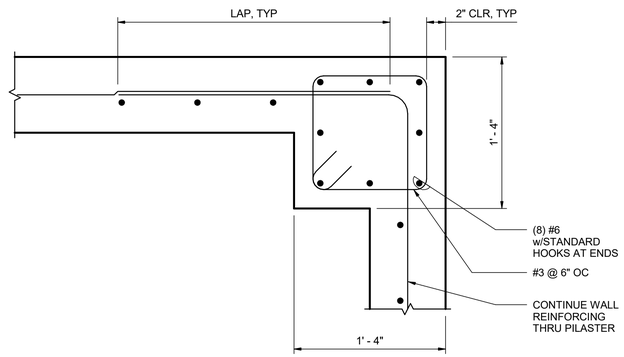

2 300S401 DETAIL
1 1/2" = 1'-0"

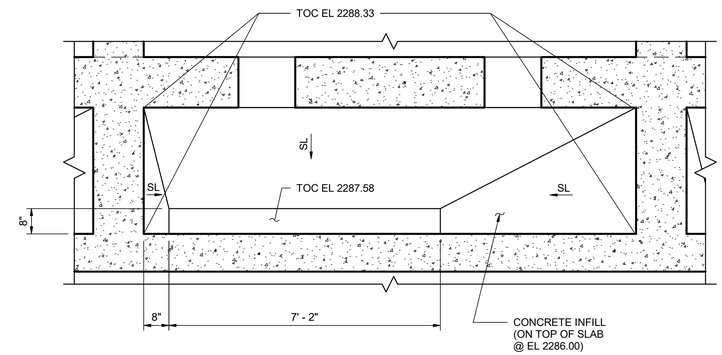

3 300S103 DETAIL
1/2" = 1'-0"

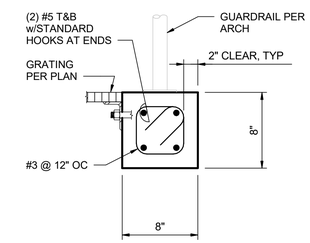

A 300S104 SECTION
1 1/2" = 1'-0"

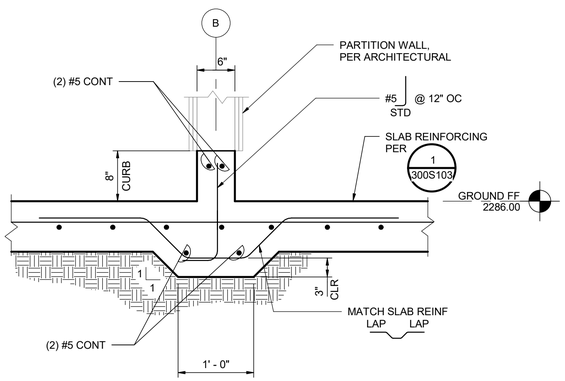

B 300S103 SECTION
1" = 1'-0"

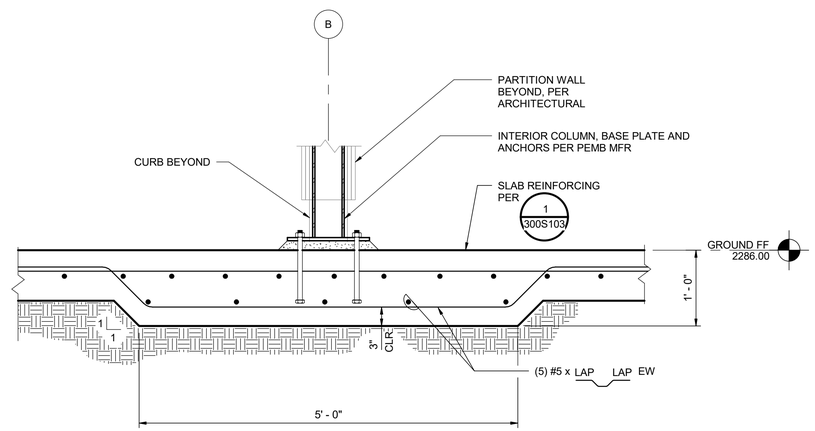

C 300S103 SECTION
1" = 1'-0"

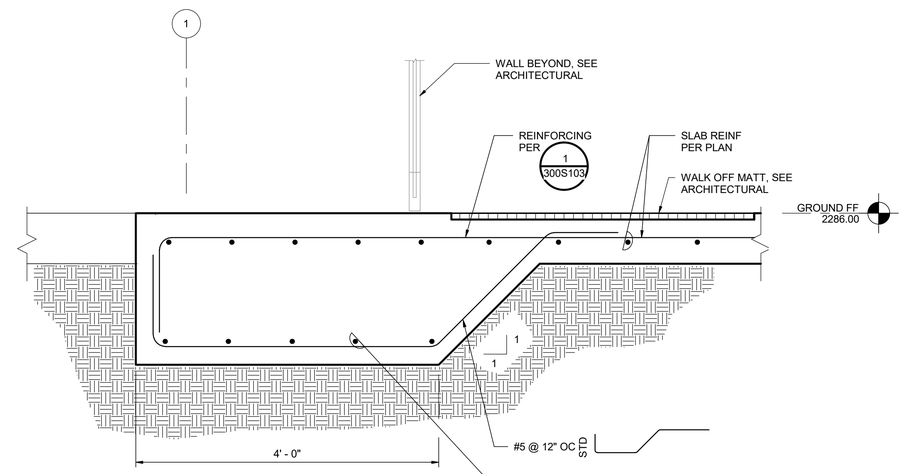

D 300S103 SECTION
1" = 1'-0"

ISSUE	DATE	DESCRIPTION
A	09/2026	ISSUED FOR BIDS

PROJECT MANAGER	PIERRE KWAN
CIVIL	J. MEGRDITCHIAN
STRUCTURAL	P. LINDBLOM
ARCHITECTURAL	V. YANEZ
PROCESS	P. KWAN
MECHANICAL	K. CHEUNG
ELECTRICAL	R. MCCOMB
INSTRUMENTATION	D. BEST
PROJECT NUMBER	10193663

REGISTERED PROFESSIONAL ENGINEER
108753PE
DIGITALLY SIGNED
OREGON
JAN 13, 2026
PATRICK DANIEL LINDBLOM
EXPIRES: 12/31/2028

CITY OF ASHLAND
Ashland, Oregon

City of Ashland

Ashland Creek
Water Treatment Plant

2019

OPERATIONS BUILDING
STRUCTURAL
SECTIONS AND DETAILS

0 1" 2"

FILENAME 10193663-AWTP-300_S.rte
SCALE As indicated

SHEET
300S310

Autodesk Docs://10193663_Ashland_WTP_Final_Design_2024/10193663-AWTP-300_S.rvt
9/23/2026 12:07:23 PM

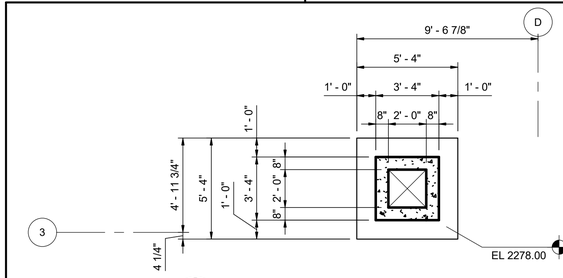

1 300S103 ELEVATOR SUMP PLAN
1/4" = 1'-0"

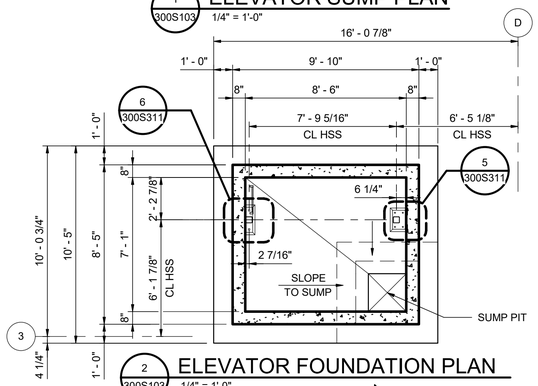

2 300S103 ELEVATOR FOUNDATION PLAN
1/4" = 1'-0"

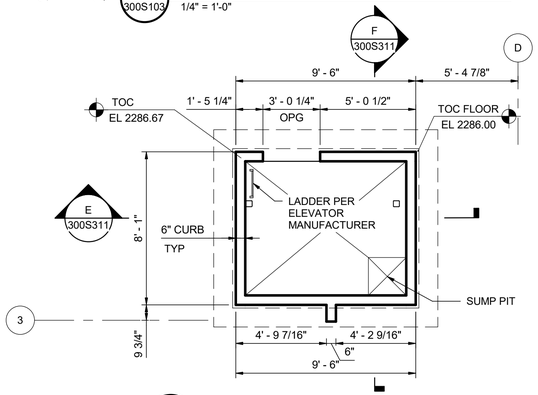

3 300S102 ELEVATOR FLOOR PLAN
1/4" = 1'-0"

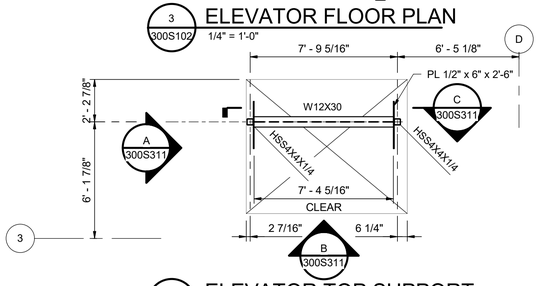

4 300S105 ELEVATOR TOP SUPPORT
1/4" = 1'-0"

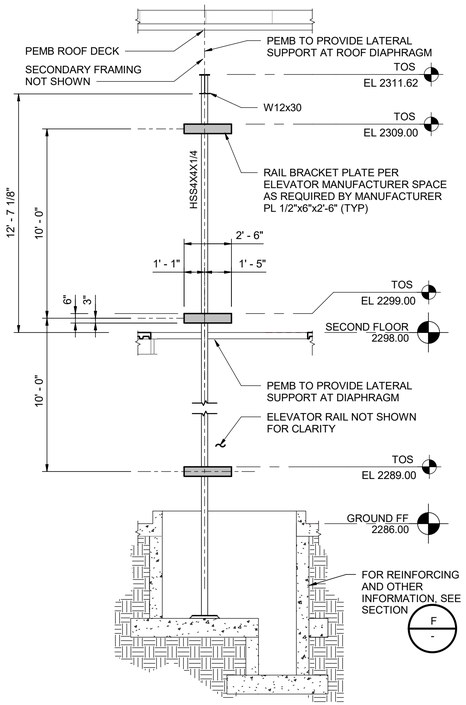

A - ELEVATOR SHAFT FRAME ELEVATION 1
1/4" = 1'-0"

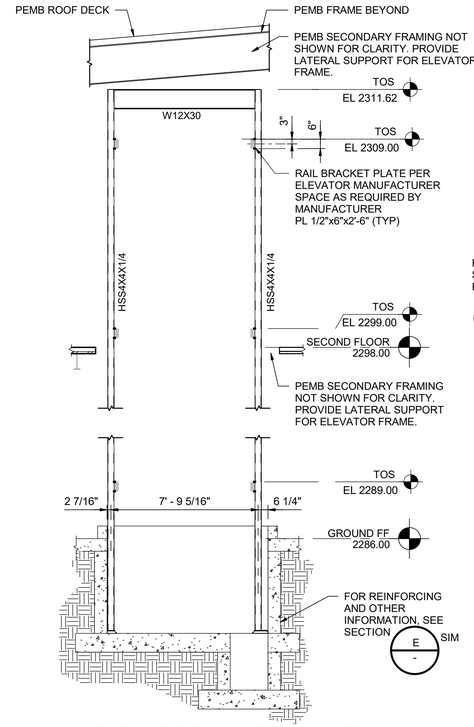

B - ELEVATOR SHAFT FRAME ELEVATION 2
1/4" = 1'-0"

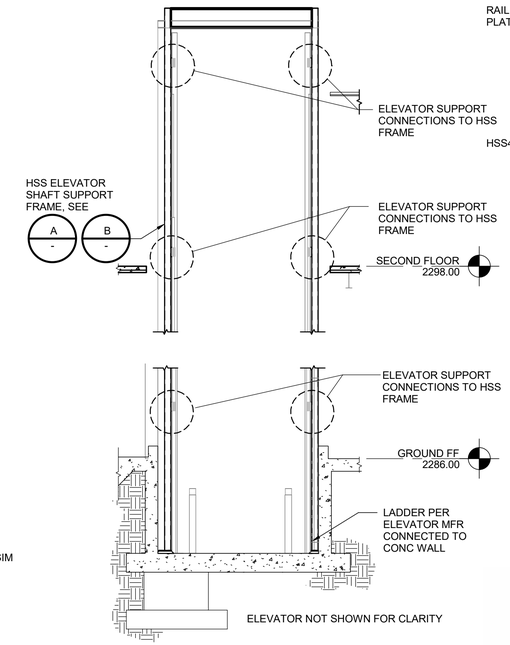

C - ELEVATOR SHAFT CONNECTION POINTS
1/4" = 1'-0"

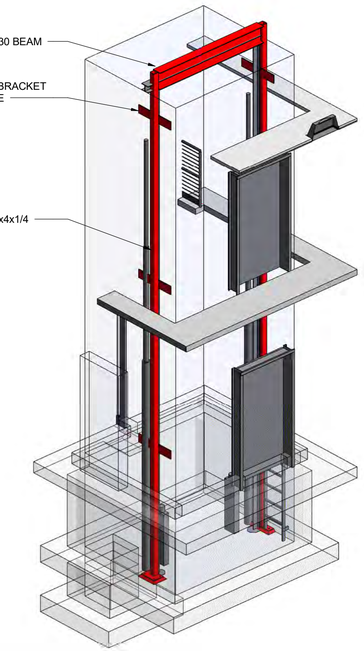

D - 3D VIEW - ELEVATOR SHAFT FRAMING

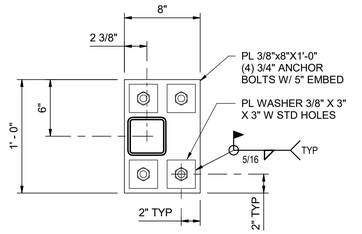

5 - BASE PLATE
1 1/2" = 1'-0"

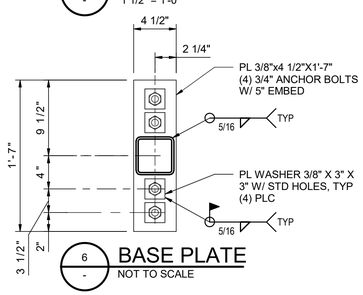

6 - BASE PLATE
NOT TO SCALE

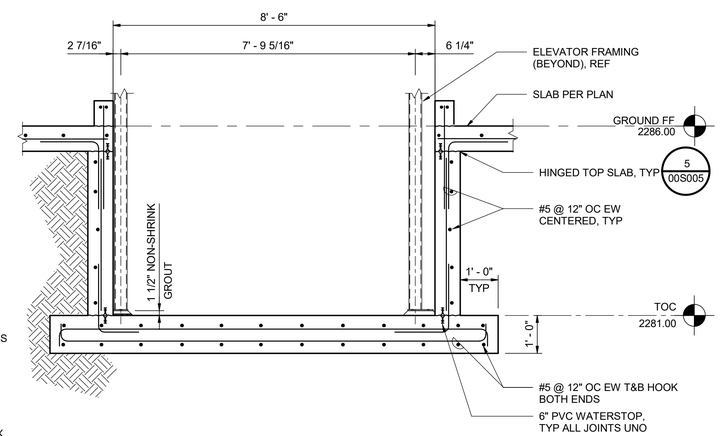

E 300S102 SECTION
1/2" = 1'-0"

NOTES:

1. DIMENSIONS ARE BASED ON ASSUMED ELEVATOR DIMENSIONS AND ARE SUBJECT TO CHANGE DURING CONSTRUCTION

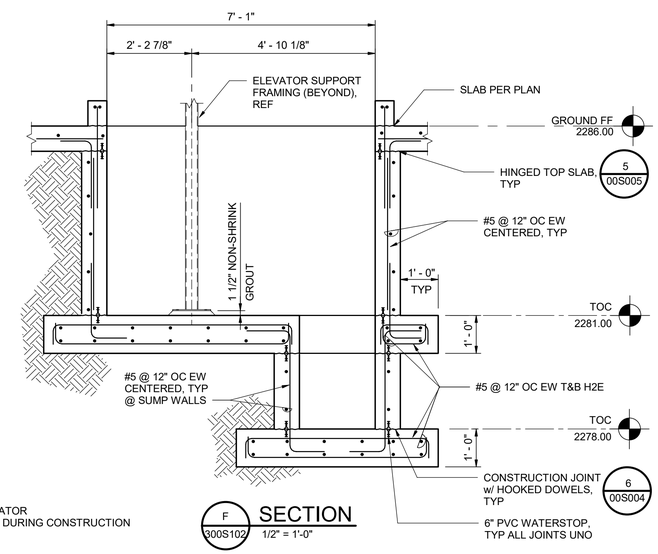

F 300S102 SECTION
1/2" = 1'-0"

ISSUE	DATE	DESCRIPTION
A	09/2026	ISSUED FOR BIDS

PROJECT MANAGER	PIERRE KWAN
CIVIL	J. MEGRDITCHIAN
STRUCTURAL	P. LINDBLOM
ARCHITECTURAL	V. YANEZ
PROCESS	P. KWAN
MECHANICAL	K. CHEUNG
ELECTRICAL	R. MCCOMB
INSTRUMENTATION	D. BEST
PROJECT NUMBER	10193663

REGISTERED PROFESSIONAL ENGINEER 108753PE DIGITALLY SIGNED OREGON JAN 13, 2026 PATRICK DANIEL LINDBLOM
EXPIRES: 12/31/2028

CITY OF ASHLAND
Ashland, Oregon

City of Ashland

Ashland Creek Water Treatment Plant

2019

OPERATIONS BUILDING
STRUCTURAL
ELEVATOR SHAFT
FRAMING ELEVATIONS AND PIT SECTIONS

0 1" 2"

FILENAME 10193663-AWTP-300_S.rte
SCALE As indicated
SHEET 300S311

Autodesk Docs://10193663_Ashland_WTP_Final_Design_2024/10193663-AWTP-300_S.rvt
9/23/2026 12:07:26 PM

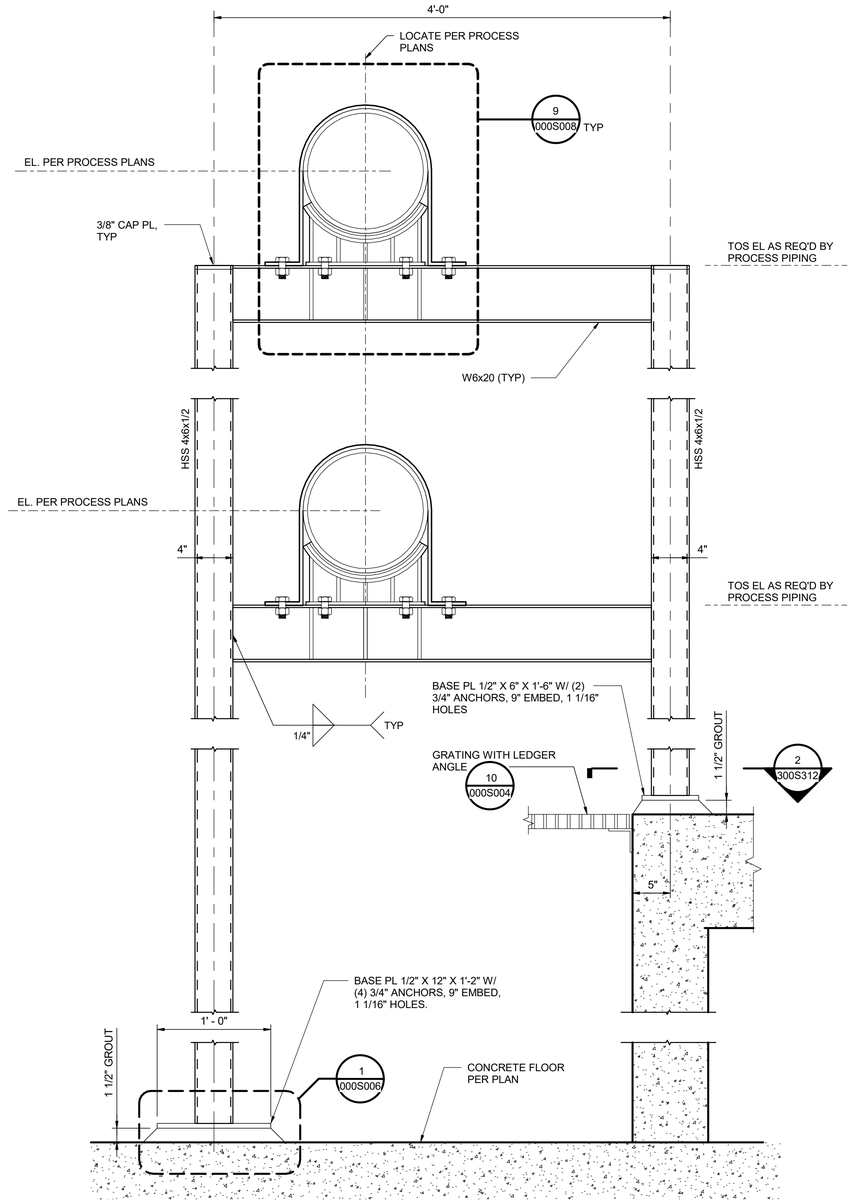

1 / 300S102 PIPE SUPPORT TYPE 2
1 1/2" = 1'-0"

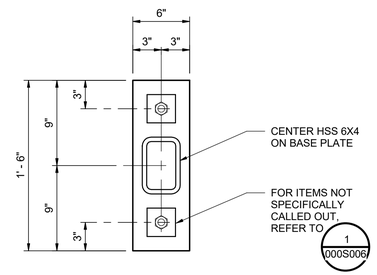

2 / 300S312 BASE PL DETAIL
1 1/2" = 1'-0"

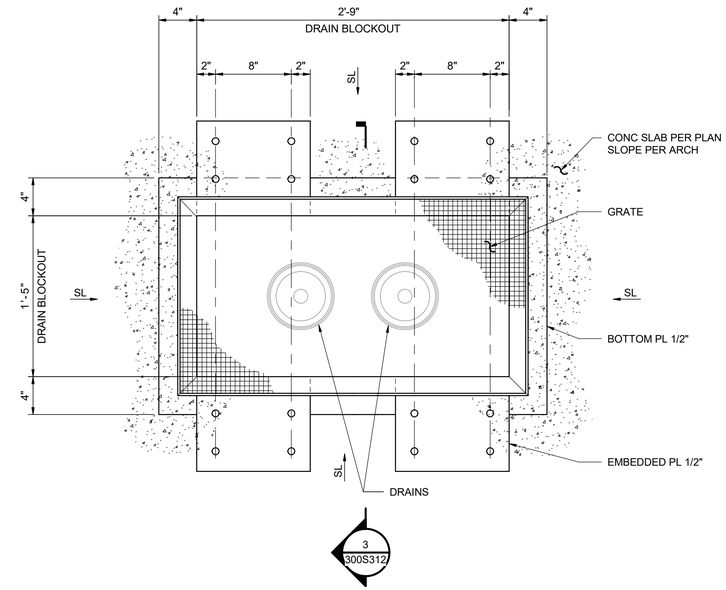

A / 300S104 BALCONY ROOF DRAIN PLAN
1 1/2" = 1'-0"

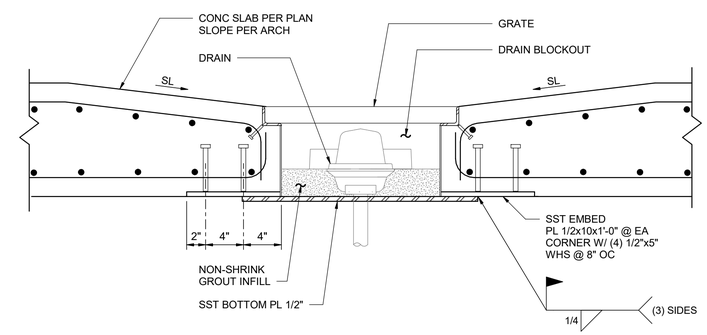

3 / - BALCONY ROOF DRAIN SECTION
1 1/2" = 1'-0"

ISSUE	DATE	DESCRIPTION
A	09/2026	ISSUED FOR BIDS

PROJECT MANAGER	PIERRE KWAN
CIVIL	J. MEGRDITCHIAN
STRUCTURAL	P. LINDBLOM
ARCHITECTURAL	V. YANEZ
PROCESS	P. KWAN
MECHANICAL	K. CHEUNG
ELECTRICAL	R. MCCOMB
INSTRUMENTATION	D. BEST
PROJECT NUMBER	10193663

REGISTERED PROFESSIONAL ENGINEER 108753PE DIGITALLY SIGNED OREGON JAN 13, 2026 PATRICK DANIEL LINDBLOM
EXPIRES: 12/31/2028

CITY OF ASHLAND
Ashland, Oregon

City of Ashland

Ashland Creek Water Treatment Plant

2019

STRUCTURAL SECTIONS AND DETAILS

0 1" 2"

FILENAME 10193663-AWTP-300_S.rte
SCALE 1 1/2" = 1'-0"

SHEET **300S312**

Autodesk Docs://10193663_Ashland_WTP_Final_Design_2024/10193663-AWTP-300_S.rvt
9/23/2026 12:07:27 PM

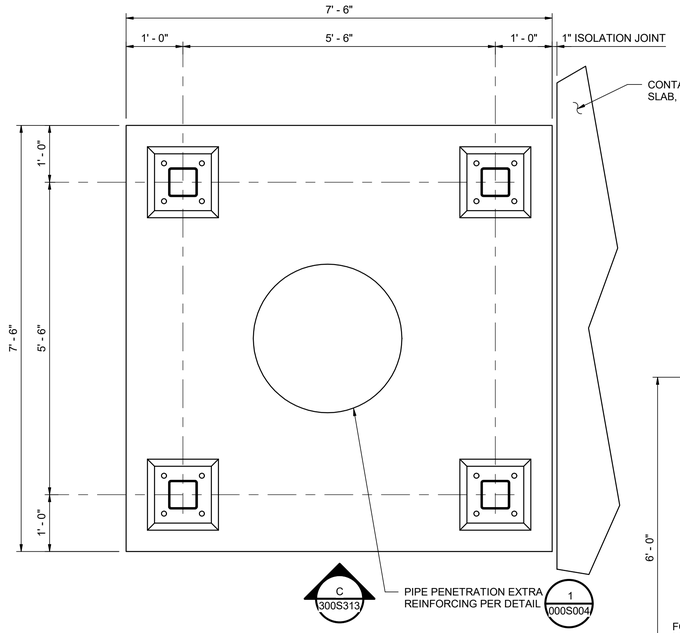

A 300A201 FOUNDATION PLAN
3/4" = 1'-0"

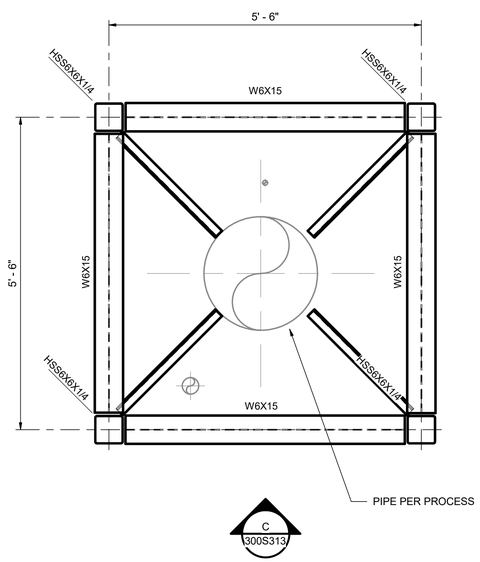

B 300A201 TOP AND MIDDLE FRAMING PLAN
3/4" = 1'-0"

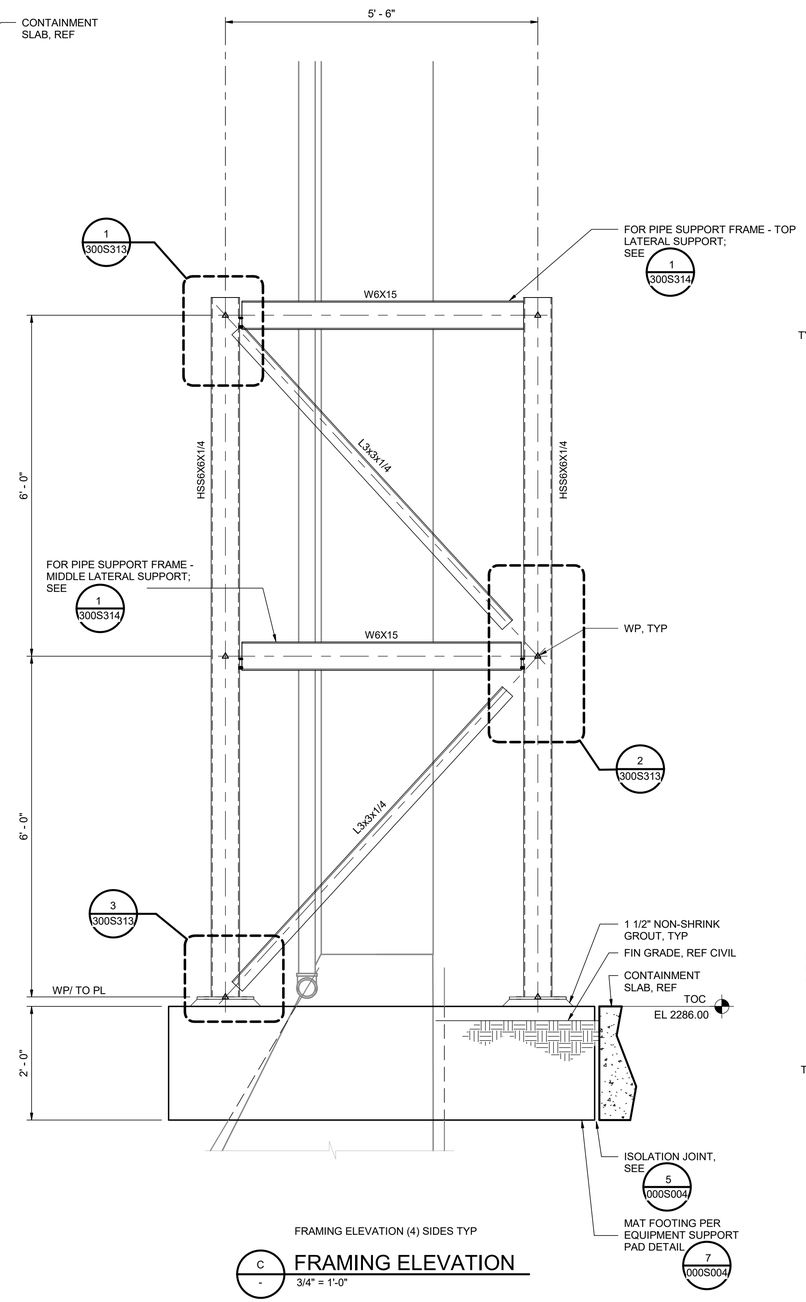

FRAMING ELEVATION (4) SIDES TYP

C - FRAMING ELEVATION
3/4" = 1'-0"

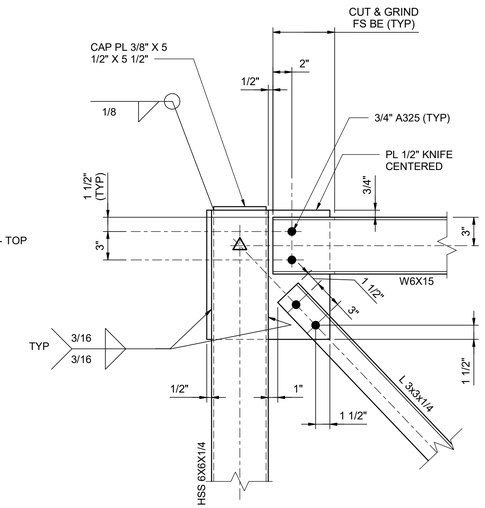

1 300S313 DETAIL
1 1/2" = 1'-0"

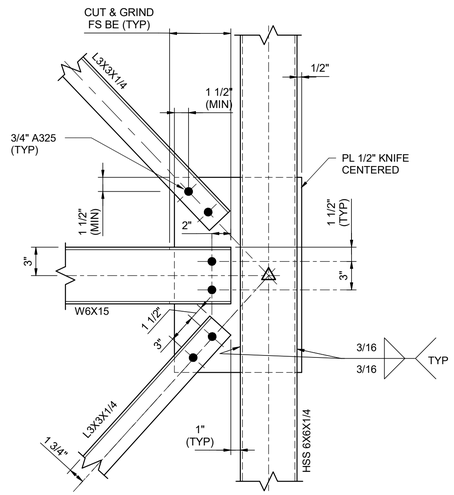

2 300S313 DETAIL
1 1/2" = 1'-0"

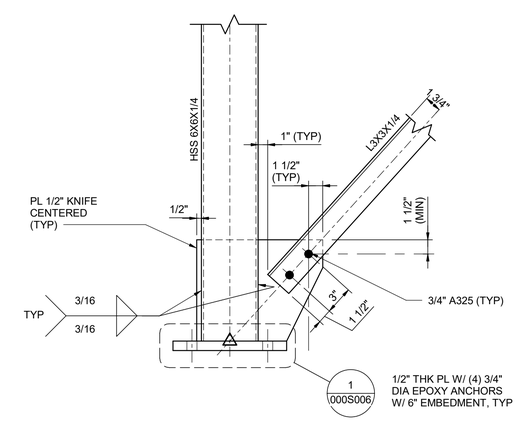

3 300S313 DETAIL
1 1/2" = 1'-0"

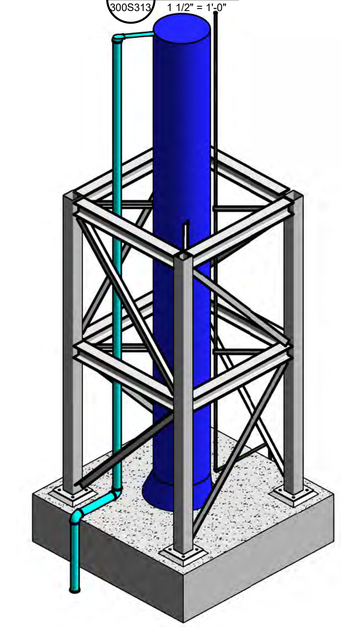

3D VIEW

ISSUE	DATE	DESCRIPTION
A	09/2026	ISSUED FOR BIDS

PROJECT MANAGER	PIERRE KWAN
CIVIL	J. MEGRDITCHIAN
STRUCTURAL	P. LINDBLOM
ARCHITECTURAL	V. YANEZ
PROCESS	P. KWAN
MECHANICAL	K. CHEUNG
ELECTRICAL	R. MCCOMB
INSTRUMENTATION	D. BEST
PROJECT NUMBER	10193663

REGISTERED PROFESSIONAL ENGINEER 93585PE DIGITALLY SIGNED OREGON MAY 8, 2019 ANDREW JACK FORTNER EXPIRES: 12-31-2027

CITY OF ASHLAND
Ashland, Oregon

City of Ashland

Ashland Creek Water Treatment Plant

2019

STRUCTURAL PLANS, ELEVATIONS, AND DETAILS

0 1" 2"

FILENAME 10193663-AWTP-300_S.rte
SCALE As indicated
SHEET **300S313**

Autodesk Docs://10193663_Ashland_WTP_Final_Design_2024/10193663-AWTP-300_S.rvt
9/23/2026 12:07:29 PM

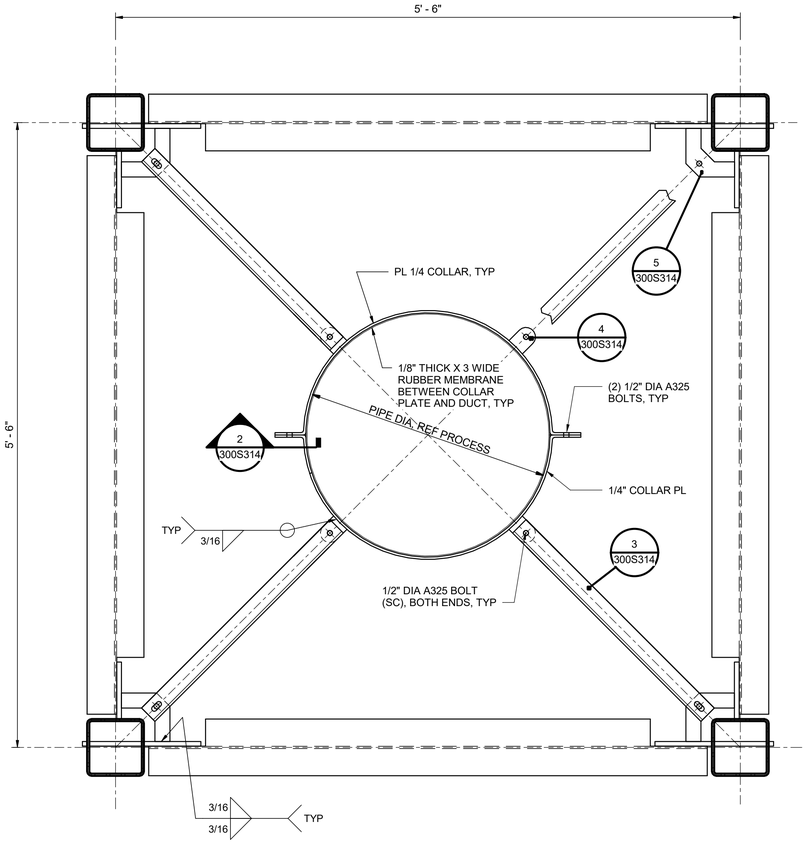

C 300S313

1 300S313 MIDDLE & TOP LATERAL SUPPORT PLAN
1 1/2" = 1'-0"

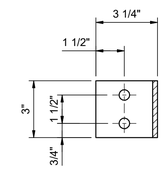

2 - DETAIL
3" = 1'-0"

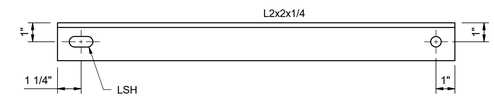

3 - DETAIL
3" = 1'-0"

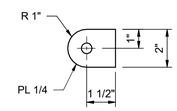

4 - DETAIL
3" = 1'-0"

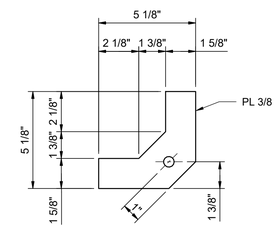

5 - DETAIL
3" = 1'-0"

ISSUE	DATE	DESCRIPTION
A	09/2026	ISSUED FOR BIDS

PROJECT MANAGER	PIERRE KWAN
CIVIL	J. MEGRDITCHIAN
STRUCTURAL	P. LINDBLOM
ARCHITECTURAL	V. YANEZ
PROCESS	P. KWAN
MECHANICAL	K. CHEUNG
ELECTRICAL	R. MCCOMB
INSTRUMENTATION	D. BEST
PROJECT NUMBER	10193663

REGISTERED PROFESSIONAL ENGINEER 93585PE DIGITALLY SIGNED OREGON MAY 8, 2018 ANDREW JACK FORTNER
EXPIRES: 12-31-2027

CITY OF ASHLAND
Ashland, Oregon

City of Ashland

Ashland Creek Water Treatment Plant

2019

STRUCTURAL PLAN AND DETAILS

0 1" 2"

FILENAME	10193663-AWTP-300_S.rte
SCALE	As indicated

SHEET **300S314**

Autodesk Docs://10193663_Ashland_WTP_Final_Design_2024/10193663-AWTP-300_S.rvt
9/23/2026 12:07:30 PM

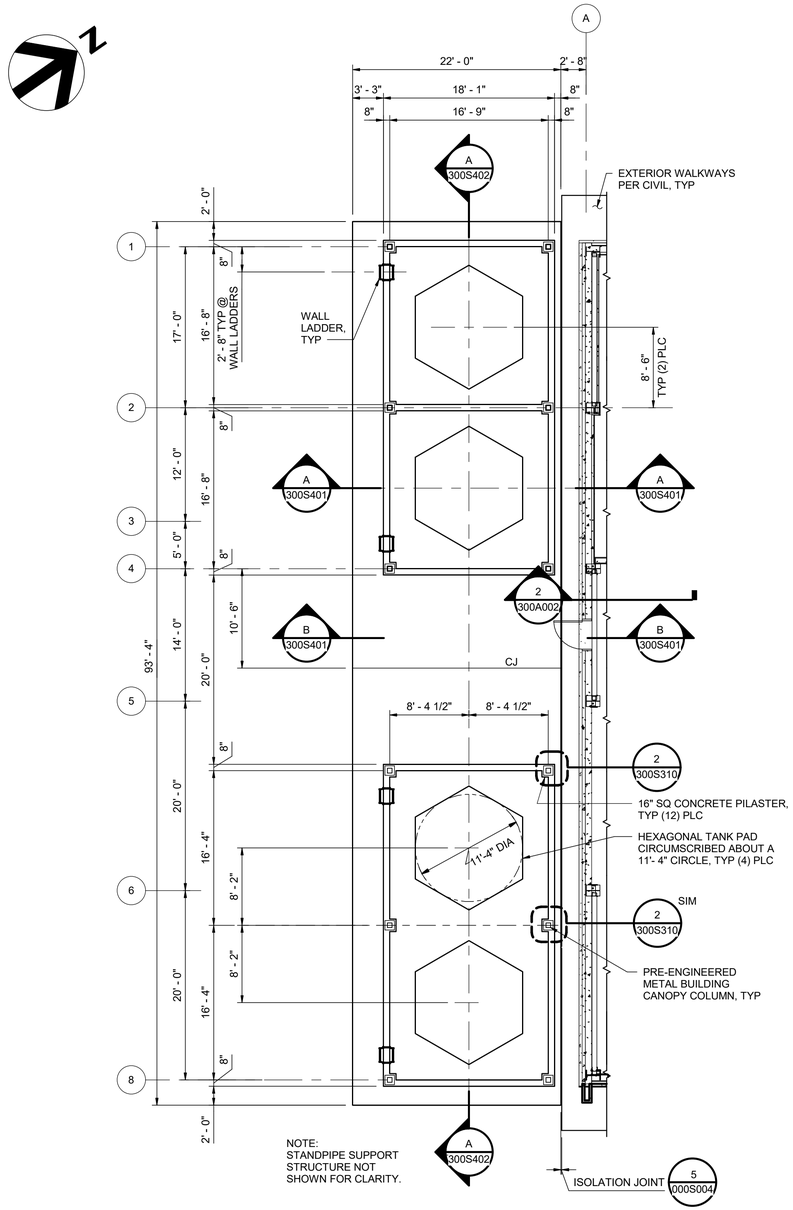

1 300S103 CONTAINMENT AREA ENLARGED PLAN
1/8" = 1'-0"

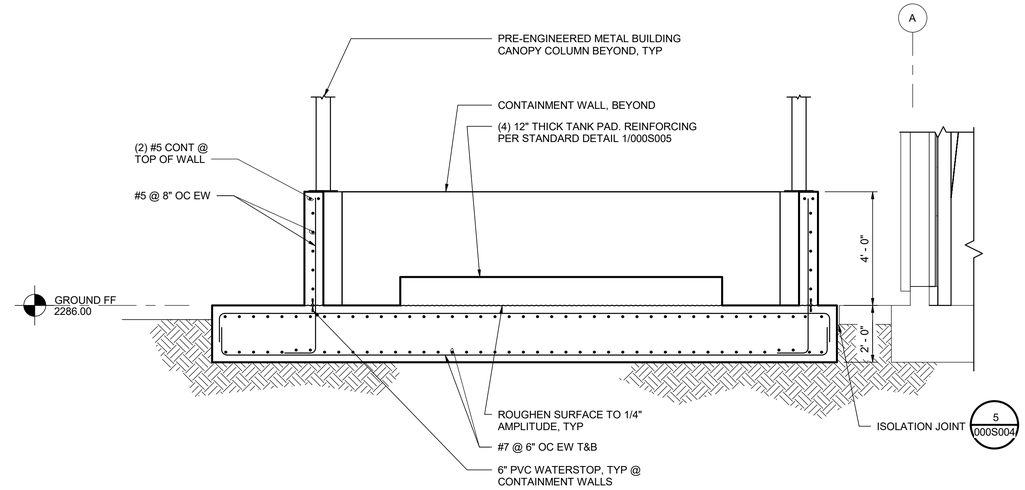

A - SECTION
3/8" = 1'-0"

NOTES:

1. CONTRACTOR TO COORDINATE PAD SIZE WITH TANK MANUFACTURER.

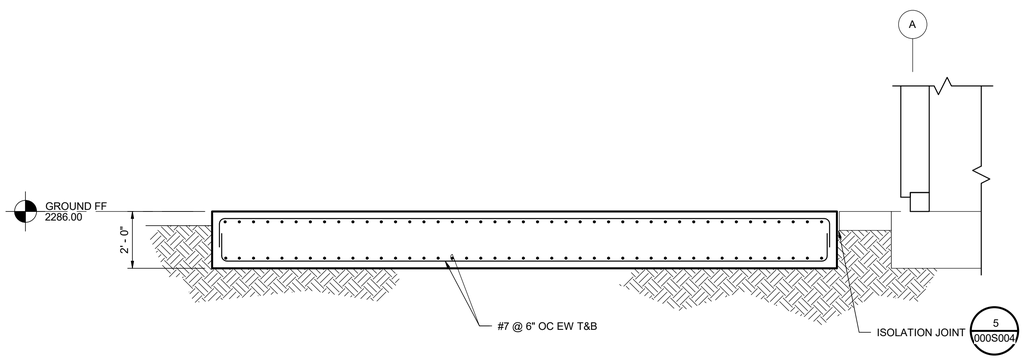

B - SECTION
3/8" = 1'-0"

A	09/2026	ISSUED FOR BIDS
ISSUE	DATE	DESCRIPTION

PROJECT MANAGER	PIERRE KWAN
CIVIL	J. MEGRDITCHIAN
STRUCTURAL	P. LINDBLOM
ARCHITECTURAL	V. YANEZ
PROCESS	P. KWAN
MECHANICAL	K. CHEUNG
ELECTRICAL	R. MCCOMB
INSTRUMENTATION	D. BEST
PROJECT NUMBER	10193663

REGISTERED PROFESSIONAL ENGINEER
93585PE
DIGITALLY SIGNED
OREGON
MAY 8, 2018
ANDREW JACK FORTNER
EXPIRES: 12-31-2027

CITY OF ASHLAND
Ashland, Oregon

City of Ashland

Ashland Creek
Water Treatment Plant

2019

OPERATIONS BUILDING
STRUCTURAL
CONTAINMENT AREA
PARTIAL PLAN AND SECTIONS

0 1" 2"

FILENAME 10193663-AWTP-300_S.rte
SCALE AS NOTED
SHEET **300S401**

Autodesk Docs://10193663_Ashland_WTP_Final_Design_2024/10193663-AWTP-300_S.rvt
9/23/2026 12:07:31 PM

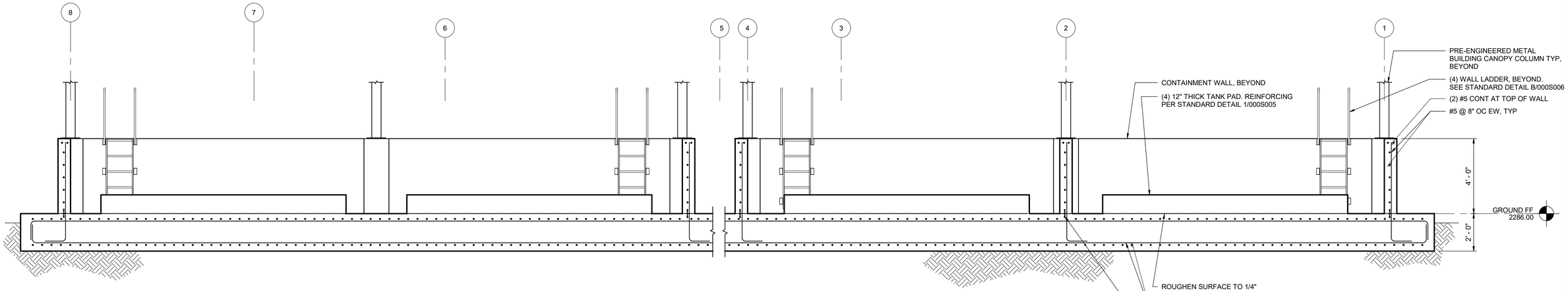

A 300S401 SECTION
3/8" = 1'-0"

ISSUE	DATE	DESCRIPTION
A	09/2026	ISSUED FOR BIDS

PROJECT MANAGER	PIERRE KWAN
CIVIL	J. MEGRDITCHIAN
STRUCTURAL	P. LINDBLOM
ARCHITECTURAL	V. YANEZ
PROCESS	P. KWAN
MECHANICAL	K. CHEUNG
ELECTRICAL	R. MCCOMB
INSTRUMENTATION	D. BEST
PROJECT NUMBER	10193663

REGISTERED PROFESSIONAL ENGINEER
93585PE
DIGITALLY SIGNED
OREGON
MAY 8, 2019
ANDREW JACK FORTNER
EXPIRES: 12-31-2027

CITY OF ASHLAND
Ashland, Oregon

City of Ashland

Ashland Creek Water Treatment Plant

2019

OPERATIONS BUILDING STRUCTURAL CONTAINMENT AREA SECTIONS AND DETAILS

0 1" 2"

FILENAME 10193663-AWTP-300_S.rte
SCALE AS NOTED

SHEET **300S402**

Autodesk Docs://10193663_Ashland_WTP_Final_Design_2024/10193663-AWTP-300_S.rvt
9/23/2026 12:07:32 PM

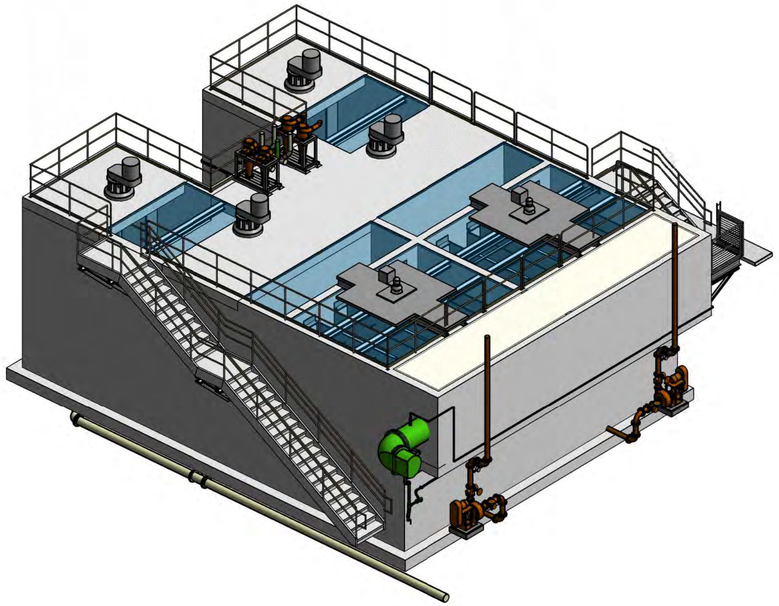

3D VIEW 1
NOT TO SCALE

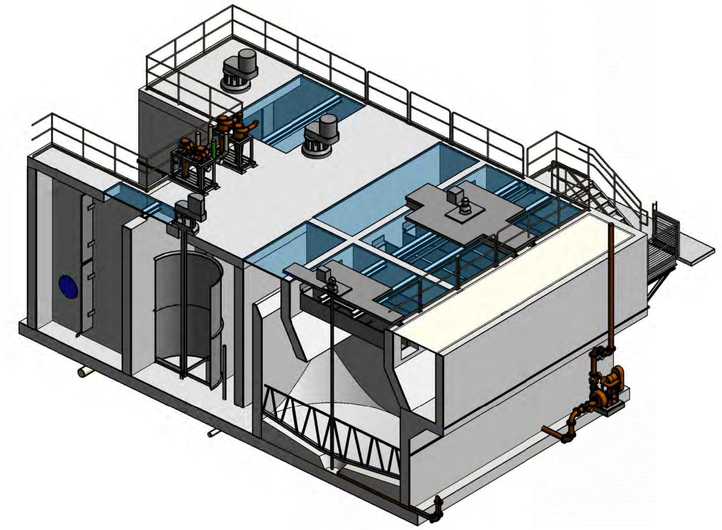

3D VIEW 2
NOT TO SCALE

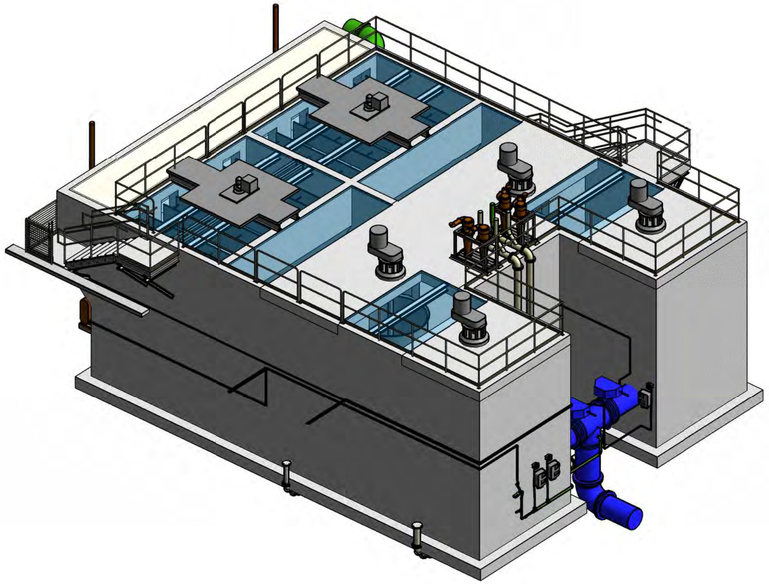

3D VIEW 3
NOT TO SCALE

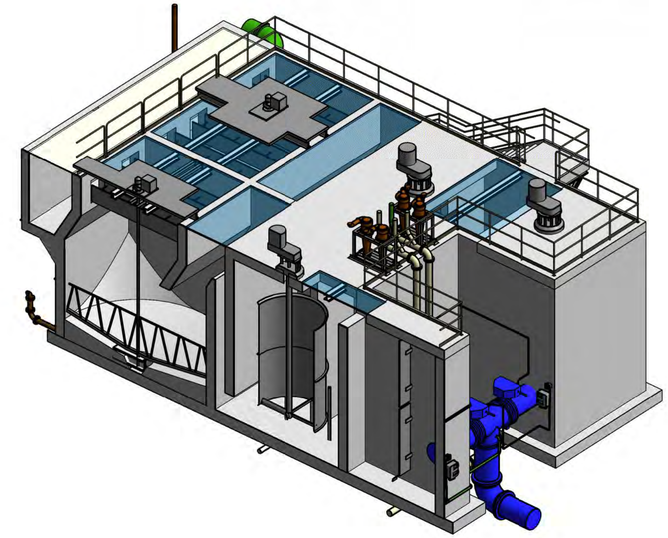

3D VIEW 4
NOT TO SCALE

NOTES:

1. TANK ACCESS AND SURROUNDING STRUCTURE NOT SHOWN FOR CLARITY.

ISSUE	DATE	DESCRIPTION
A	09/2026	ISSUED FOR BIDS

PROJECT MANAGER	PIERRE KWAN
CIVIL	J. MEGRDITCHIAN
STRUCTURAL	P. LINDBLOM
ARCHITECTURAL	V. YANEZ
PROCESS	P. KWAN
MECHANICAL	K. CHEUNG
ELECTRICAL	R. MCCOMB
INSTRUMENTATION	D. BEST
PROJECT NUMBER	10193663

REGISTERED PROFESSIONAL ENGINEER
93585PE
DIGITALLY SIGNED
OREGON
MAY 8, 2018
ANDREW JACK FORTNER
EXPIRES: 12-31-2027

CITY OF ASHLAND
Ashland, Oregon

City of Ashland

Ashland Creek
Water Treatment Plant

2019

OPERATIONS BUILDING
STRUCTURAL
BALLASTED FLOCCULATION TANKS
3D VIEWS

0 1" 2"

FILENAME 10193663-AWTP-300_S.rte
SCALE NONE

SHEET
300S403

Autodesk Docs://10193663_Ashland_WTP_Final_Design_2024/10193663-AWTP-300_S.rvt
9/23/2026 12:07:36 PM