REFERENCE DRAWINGS
POST POINT SLUDGE TANK REPLACEMENT PROJECT
EU194

Reference drawings, including previous bid, as-built, record or project drawings related to the Post Point Wastewater Treatment Plant are provided as relative to this project.

Contractors shall understand that these drawings are provided for reference and convenience only; these drawings may not represent the as-built or existing condition of any previous project or structure located at the project site. The Contractor shall be responsible to determine the conditions and configuration of the existing infrastructure in the field as relevant to the work required by the Contract.

The following additional reference documents regarding the Post Point Wastewater Treatment Plant are provided:

1. 1972 Plant Construction Record Drawings (122 Sheets)
2. 1973 Sludge Thickener Arrangement Drawing (1 Sheet)
3. 1990 Plant Expansion Drawings (521 Sheets)
4. 2017 RAS Pipe Emergency Replacement Drawings (9 Sheets)
5. 2020 Sludge Pump System Replacement Drawings (14 Sheets)

CITY OF BELLINGHAM WASHINGTON
POST POINT POLLUTION CONTROL PLANT

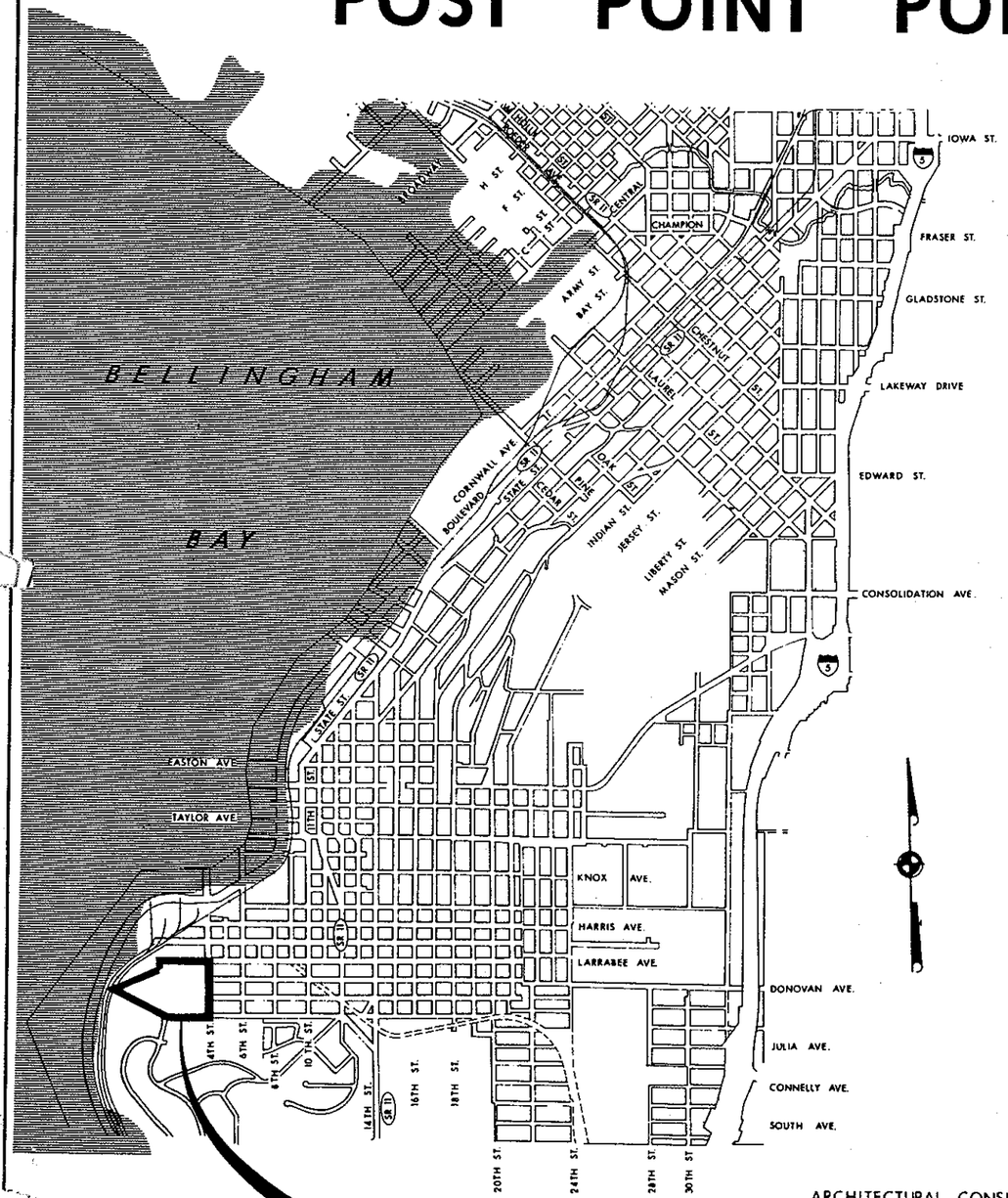

ARCHITECTURAL CONSULTANT
JOHN MORSE & ASSOCIATES, ARCHITECTS
SEATTLE, WASHINGTON

LANDSCAPE ARCHITECTURAL CONSULTANT
RICHARD HAAG, ASSOCIATES, INC.
SEATTLE, WASHINGTON

SCHEDULE T - TREATMENT PLANT

SHEET NO.	TITLE
INTRODUCTORY SHEETS	
1	VICINITY MAP AND INDEX TO DRAWINGS
2	GENERAL LEGENDS
GENERAL	
3	SITE PLAN
4	GRADING PLAN - EAST
5	GRADING PLAN - WEST
6	EXISTING SITE CONDITIONS - PLAN
7	EXISTING SITE CONDITIONS - SECTIONS
8	EXISTING SITE CONDITIONS - TEST HOLE LOGS
9	EXISTING SITE CONDITIONS - TEST HOLE LOGS
10	PIPING PLAN
11	PLUMBING PLAN
12	LANDSCAPING PLAN
13	IRRIGATION SYSTEM PLAN
HEADWORKS BUILDING	
14	ARCHITECTURAL - ELEVATIONS
15	ARCHITECTURAL - ELEVATIONS
15A	STRUCTURAL - FOUNDATION PLAN
16	STRUCTURAL - MAIN FLOOR PLAN
17	STRUCTURAL - ROOF PLAN
18	STRUCTURAL - SECTIONS
19	STRUCTURAL - SECTIONS
20	STRUCTURAL - RETAINING WALL AND STAIRWAY SECTIONS
21	STRUCTURAL - ROOF SECTIONS AND DETAILS
22	MECHANICAL - PLAN
23	MECHANICAL - PLAN
24	MECHANICAL - SECTIONS
25	MECHANICAL - SECTIONS
26	MECHANICAL - DETAILS
27	GRIT HOPPER PLAN AND SECTIONS
PRIMARY CLARIFIERS	
28	PLAN
29	SECTIONS AND DETAILS
30	SECTIONS
31	SECTIONS AND DETAILS
32	SECTIONS AND DETAILS
33	ROOF PLAN AND DETAILS
PRIMARY SLUDGE PUMP STATION	
34	STRUCTURAL - FOUNDATION PLAN AND SECTIONS
35	STRUCTURAL - ROOF PLAN AND SECTIONS
36	MECHANICAL - PLAN AND SECTIONS
CHLORINE CONTACT CHAMBER	
37	PLAN
38	WALL REINFORCEMENT PLAN AND DETAILS
39	SECTIONS
40	SECTIONS AND DETAILS
41	MECHANICAL - DETAILS
CHLORINE BUILDING	
42	ARCHITECTURAL - ELEVATIONS
43	STRUCTURAL - FOUNDATION PLAN AND ROOF PLAN
44	STRUCTURAL - SECTIONS
45	STRUCTURAL - SECTIONS AND DETAILS
46	MECHANICAL - PLAN
47	MECHANICAL - DETAILS
ADMINISTRATION BUILDING	
48	ARCHITECTURAL - ELEVATIONS
49	STRUCTURAL - FOUNDATION PLAN
50	STRUCTURAL - SECTIONS AND DETAILS
51	ARCHITECTURAL - FLOOR PLAN
52	STRUCTURAL - ROOF PLAN
53	STRUCTURAL - SECTIONS AND DETAILS
54	ARCHITECTURAL - INTERIOR ELEVATIONS
55	ARCHITECTURAL - CEILING PLAN, SECTIONS AND DETAILS
56	ARCHITECTURAL - CABINET AND COUNTER DETAILS
57	ARCHITECTURAL - STORAGE AND SHELVING DETAILS
58	MECHANICAL - PLUMBING PLAN
59	MECHANICAL - HEATING AND VENTILATING

SCHEDULE T - TREATMENT PLANT

SHEET NO.	TITLE
INCINERATION BUILDING	
60	ARCHITECTURAL - ELEVATIONS
61	ARCHITECTURAL - ELEVATIONS
62	STRUCTURAL - LOWER LEVEL FLOOR PLAN
63	STRUCTURAL - UPPER LEVEL FLOOR PLAN
64	STRUCTURAL - ROOF PLAN
65	STRUCTURAL - SECTIONS AND DETAILS
66	STRUCTURAL - BEAM SCHEDULE AND SECTIONS
67	STRUCTURAL - SECTIONS
68	STRUCTURAL - PANEL AND COLUMN SCHEDULES AND SECTIONS
69	MECHANICAL - LOWER LEVEL PLAN
70	MECHANICAL - UPPER LEVEL PLAN
71	MECHANICAL - SECTIONS AND DETAILS
SHOP BUILDING	
72	ARCHITECTURAL - ELEVATIONS
73	STRUCTURAL - FOUNDATION PLAN
74	STRUCTURAL - ROOF PLAN
75	STRUCTURAL - SECTIONS AND DETAILS
76	STRUCTURAL - SECTIONS AND DETAILS
GENERAL DETAILS	
77	ARCHITECTURAL DETAILS - MISCELLANEOUS
78	ARCHITECTURAL DETAILS - MISCELLANEOUS
79	ARCHITECTURAL DETAILS - RELITE AND MISCELLANEOUS
80	ARCHITECTURAL DETAILS - EXTERIOR DOORS
81	ARCHITECTURAL DETAILS - WINDOWS, OVERHEAD DOORS AND MISCELLANEOUS
82	ARCHITECTURAL DETAILS - LOUVERS AND MISCELLANEOUS
83	ARCHITECTURAL - DOOR SCHEDULE
84	ARCHITECTURAL - FINISH SCHEDULE
85	STRUCTURAL - DETAILS
86	PRECAST WALL PANEL DETAILS AND SCHEDULE
87	MECHANICAL - STANDARD DETAILS
88	GATES, GATE GUIDES, GRATING SUPPORT, HANDRAIL AND MISCELLANEOUS DETAILS
89	ROAD, CURB, WALK AND DRAINAGE DETAILS
ELECTRICAL	
90	NOTES AND LEGEND
91	SCHEDULES
92	SITE PLAN
93	HEADWORKS BUILDING - LIGHTING AND POWER
94	HEADWORKS BUILDING - MOTOR CONTROL CENTER NO. 2
95	HEADWORKS BUILDING - CONTROL DIAGRAMS
96	PRIMARY SLUDGE PUMP STATION
97	ADMINISTRATION BUILDING - LIGHTING
98	ADMINISTRATION BUILDING - POWER AND INTERCOM
99	INCINERATION BUILDING - LOWER LEVEL
100	INCINERATION BUILDING - UPPER LEVEL
101	INCINERATION BUILDING - MOTOR CONTROL CENTER NO. 1
102	INCINERATION BUILDING - CONTROL DIAGRAMS
103	SHOP BUILDING
104	CHLORINE BUILDING
105	SHOP AND CHLORINE BUILDING - DETAILS
106	MISCELLANEOUS DETAILS
INSTRUMENTATION AND CONTROL	
107	PLANT OPERATIONS PANEL
108	PLANT OPERATIONS PANEL SCHEDULE
	SCHEDULE F - SOLIDS HANDLING SYSTEM
MECHANICAL	
109	FLOW DIAGRAM
110	LOWER LEVEL FLOOR PLAN
111	UPPER LEVEL FLOOR PLAN
112 & 113	SECTIONS

LYLE G. HASSELBLOCK
STATE OF WASHINGTON
REGISTERED
PROFESSIONAL ENGINEER

NO.	DATE	RECORD DRAWINGS / REVISION	DNB / BY	APD.

CH2M HILL
ENGINEERS PLANNERS ECONOMISTS

CORNELL, HOWLAND, HAYES & MERRYFIELD

CLAIR A. HILL & ASSOCIATES

CITY OF BELLINGHAM, WASHINGTON
POST POINT POLLUTION CONTROL PLANT
SCHEDULE T

VICINITY MAP AND INDEX TO DRAWINGS

DES. GRG
DR. MJM
CK. GRG
RN 5819B.1
SHEET 1 OF 113
DATE: APRIL 1972
SCALE: AS SHOWN
DRAWING NO. C 6198-2

TOPOGRAPHIC LEGEND AND NOTES

NOTES:

1. IN GENERAL EXISTING STRUCTURES ARE SHOWN IN LIGHT LINE WEIGHTS.
2. IN GENERAL NEW STRUCTURES ARE SHOWN IN HEAVY LINE WEIGHTS.
3. FINISH GRADES SHALL SLOPE UNIFORMLY BETWEEN SPOT ELEVATIONS SHOWN.
4. CLEAR AND GRUB TO LIMITS SHOWN OR SPECIFIED.
5. BORROW AND WASTE ONLY IN INDICATED AREAS.

LEGEND:

- EXISTING STRUCTURES.
- NEW STRUCTURES.
- P/L — PROPERTY LINE.
- EXISTING FENCE.
- EXISTING FENCE TO BE MOVED.
- NEW FENCE - TYPE AS SPECIFIED.
- EXISTING STRUCTURE TO BE REMOVED (CROSS HATCHED WHERE REQUIRED FOR CLARITY).
- EXISTING A.C. PAVEMENT (CROSS HATCHED WHERE REQUIRED FOR CLARITY).
- NEW A.C. PAVEMENT:
- NEW CURB - (EXISTING SHOWN WITH LIGHT LINES).
- TC 1000.9 — TOP OF CURB ELEVATION
- GRAVEL SURFACE
- DRAINAGE DITCH.
- CB 1000.9 — CATCH BASIN RIM ELEVATION
- EXISTING CONTOUR
- 1000 — NEW CONTOUR.
- ⊗ 1000 — FINISH GRADE.
- EXISTING EMBANKMENT - SLOPE AS INDICATED.
- 4:1 — NEW EMBANKMENT - SLOPE AS INDICATED.
- EXISTING TREES - REMAIN OR REMOVE.
- MANHOLE (MH; EXISTING SHOWN WITH LIGHT LINES.)
- CATCH BASIN (CB, EXISTING SHOWN WITH LIGHT LINES)
- TEST HOLE OR TEST PIT LOCATION
- LIMITS OF TOPSOIL AND SEEDING (UNLESS OTHERWISE NOTED).
- SIGN.
- BENCHMARK

PLUMBING AND HEATING LEGEND AND NOTES

GENERAL PIPING NOTES:

1. LAY PIPE TO UNIFORM GRADE BETWEEN INDICATED ELEVATION POINTS.
2. SIZE OF FITTINGS SHOWN ON PLANS SHALL CORRESPOND TO ADJACENT STRAIGHT RUN OF PIPE, UNLESS OTHERWISE INDICATED. TYPE OF JOINT AND FITTING MATERIAL SHALL BE THE SAME AS SHOWN FOR ADJACENT STRAIGHT RUN OF PIPE.
3. LOCATION AND NUMBER OF PIPE HANGERS AND PIPE SUPPORTS SHOWN IS ONLY APPROXIMATE. FINAL SUPPORT REQUIREMENTS SHALL BE DETERMINED IN THE FIELD AND APPROVED BY THE ENGINEER PRIOR TO INSTALLATION. MAXIMUM SPACING SHALL BE AS SPECIFIED.
4. BELL WALL CASTINGS SHALL HAVE A CAULKED LEAD JOINT. ALL JOINTS SHALL BE WATERTIGHT. CONTRACTOR MAY USE PUSH ON JOINT AT HIS OPTION.
5. ALL FLEXIBLE CONNECTORS OR FLANGED COUPLING ADAPTERS SHALL BE PROVIDED WITH THRUST TIES OR STUDS UNLESS OTHERWISE NOTED. THRUST PROTECTION SHALL BE ADEQUATE FOR TEST PRESSURES SPECIFIED.

PLUMBING AND HEATING LEGEND AND NOTES (CONTINUED)

GENERAL PIPING NOTES: (CONTINUED)

6. ALL BURIED PIPING EXCEPT FLANGED OR SCREWED SPECIFIED TO BE PRESSURE TESTED SHALL BE PROVIDED WITH CONCRETE THRUST BLOCKS AT ALL DIRECTION CHANGES, UNLESS OTHERWISE NOTED. MINIMUM AREA OF THRUST BLOCK POURED AGAINST UNDISTURBED EARTH SHALL BE AS FOLLOWS:

SIZE OF PIPE	MINIMUM AREA OF THRUST BLOCK		
	90° BEND	45 BEND	22½° BEND
4"	2 SF	2 SF	2 SF
8"-8"	3 SF	3 SF	2 SF
10"-12"	4 SF	3 SF	2 SF

> 12" PROVIDE 1 SF PER 1500# THRUST BASED ON SPECIFIED TEST PRESSURE.

7. NUMBER AND LOCATION OF UNIONS SHOWN ON PLANS IS ONLY APPROXIMATE. PROVIDE ALL UNIONS NECESSARY TO FACILITATE CONVENIENT REMOVAL OF VALVES AND MECHANICAL EQUIPMENT.
8. SYMBOLS, LEGENDS AND USE IDENTIFICATIONS WHICH ARE SHOWN ARE FOLLOWED THROUGHOUT THE PLANS WHEREVER APPLICABLE. ALL OF THE VARIOUS PIPING APPLICATIONS ARE NOT NECESSARILY UTILIZED IN THE PROJECT.

PIPE USE IDENTIFICATION:

HW	HOT WATER (POTABLE)
CW	COLD WATER (POTABLE)
NPW	NON POTABLE WATER
IRR	IRRIGATION
SN	SCUM
NG	NATURAL GAS
P/S	PRIMARY SLUDGE
W	WASTE
RD	ROOF DRAIN
V	VENT
VTR	VENT THRU ROOF
D	DRAIN
SD	STORM DRAIN
CG	CHLORINE GAS
CS	CHLORINE SOLUTION
CL	CHLORINE LIQUID
S	SEWAGE
SA	SAMPLE

PIPE MATERIALS:

CI	CAST IRON
CIF	CAST IRON FLANGED
CIMJ	CAST IRON MECHANICAL JOINT
CISP	CAST IRON SOIL PIPE
GL	GLASS LINED
GLCI	GLASS LINED CAST IRON
GLS	GLASS LINED STEEL
WS	WELDED STEEL (OR WATER STOP, AS APPLICABLE)
GS	GALVANIZED STEEL
WI	GENUINE WROUGHT IRON
BS	BLACK STEEL
PVC	POLYVINYL CHLORIDE

PLUMBING AND HEATING LEGEND AND NOTES (CONTINUED)

PIPE MATERIALS: (CONTINUED)

CU	COPPER
SS	STAINLESS STEEL
CONC.	CONCRETE
CMP	CORRUGATED METAL PIPE
P	PLASTIC - SCHEDULE AND TYPE AS NOTED

- OR — EXISTING PIPE TO BE REMOVED.
- OR — EXISTING PIPE TO REMAIN.
- OR — NEW PIPE

HEATING AND VENTILATING:

- SUPPLY DUCT (SECTION).
- RETURN DUCT (SECTION)
- T — THERMOSTAT

A / 1/2 — SECTION OR DETAIL DESIGNATION; SHEET WHERE SECTION OR DETAIL IS SHOWN; SHEET WHERE SECTION OR DETAIL IS TAKEN

SECTION DESIGNATION

VALVES

- OR — GATE VALVE (KNIFE GATE IF SO DESIGNATED)
- OR — PLUG VALVE
- OR — BUTTERFLY VALVE
- OR — BALL VALVE
- OR — GLOBE VALVE
- OR — FLOW — CHECK VALVE
- OR — PRESSURE REGULATING VALVE
- SV / NV — SOLENOID VALVE OR NEEDLE VALVE
- SQUARE HEAD COCK
- FLANGED COUPLING ADAPTER } SEE GENERAL PIPING NOTE NO.5
- FLEXIBLE COUPLING } SEE GENERAL PIPING NOTE NO.5

PLUMBING AND HEATING LEGEND AND NOTES (CONTINUED)

MISCELLANEOUS PLUMBING ITEMS:

- HOSE BIB (HB-2 OR HB-3) WITH HOSE RACK UNLESS OTHERWISE NOTED.
- UNION
- GAUGE WITH GAUGE COCK
- STRAINER
- DIRECTION OF FLOW
- FIRE EXTINGUISHER
- HOSE BIB (HB-1) WITH HOSE RACK UNLESS OTHERWISE NOTED.

PIPING LEGEND

PS	PIPE SUPPORT	RD	ROOF DRAIN (TYPE AS SPECIFIED)
PH	PIPE HANGER	FD	FLOOR DRAIN (TYPE AS SPECIFIED)
AB, MB	ANCHOR BOLT OR MACHINE BOLT	P	PLUMBING FIXTURE (TYPE AS SPECIFIED)
INV	INVERT	HB	HOSE BIB (VALVE)
℄	CENTER LINE	WS	WATER STOP (OR WELDED STEEL, AS APPLICABLE)
TB	THRUST BLOCK	CO	CLEAN OUT

WALL PIPES

PE	PLAIN END
B	BELL
F	FLANGE

PIPE AND FITTING END PATTERNS

B	BELL
S	SPIGOT
F	FLANGE
MJ	MECHANICAL JOINT
PE	PLAIN END

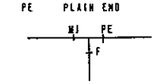

ABOVE DENOTES MECH. JT. X PLAIN END X FLANGED TEE

ARCHITECTURAL SYMBOLS

- EARTH
- CONCRETE, CEMENT
- THINSET TERRAZZO FLOORING
- BATT INSULATION
- RIGID INSULATION
- ACOUSTICAL CEILING
- FINISHED WOOD
- ROUGH WOOD (SECTION)
- BLOCKING (SECTION)
- STUD WALL & PARTITION
- PLYWOOD
- GYPSUM BOARD
- BACKING BOARD
- GLU-LAM BEAM OR COLUMN

ARCH. ABBREVIATIONS SEE SHT. 84

EYLE G. HASSEBROEK — STATE OF WASHINGTON — REGISTERED PROFESSIONAL ENGINEER

NO.	DATE	REVISION	BY	APPD
△	APRIL 75	RECORD DRAWINGS	DNB	GRG

CH2M HILL — ENGINEERS PLANNERS ECONOMISTS

CORNELL HOWLAND HAYES & MERRYFIELD

CLAIR A. HILL & ASSOCIATES

CITY OF BELLINGHAM, WASHINGTON
POST POINT POLLUTION CONTROL PLANT
SCHEDULE T

GENERAL LEGENDS

DES. GRG | DR. LAT | CK. GRG | RN 56198.1 | SHEET 2 OF 113 | DATE: APRIL 1972 | SCALE: AS SHOWN | DRAWING NO. C 6198-2

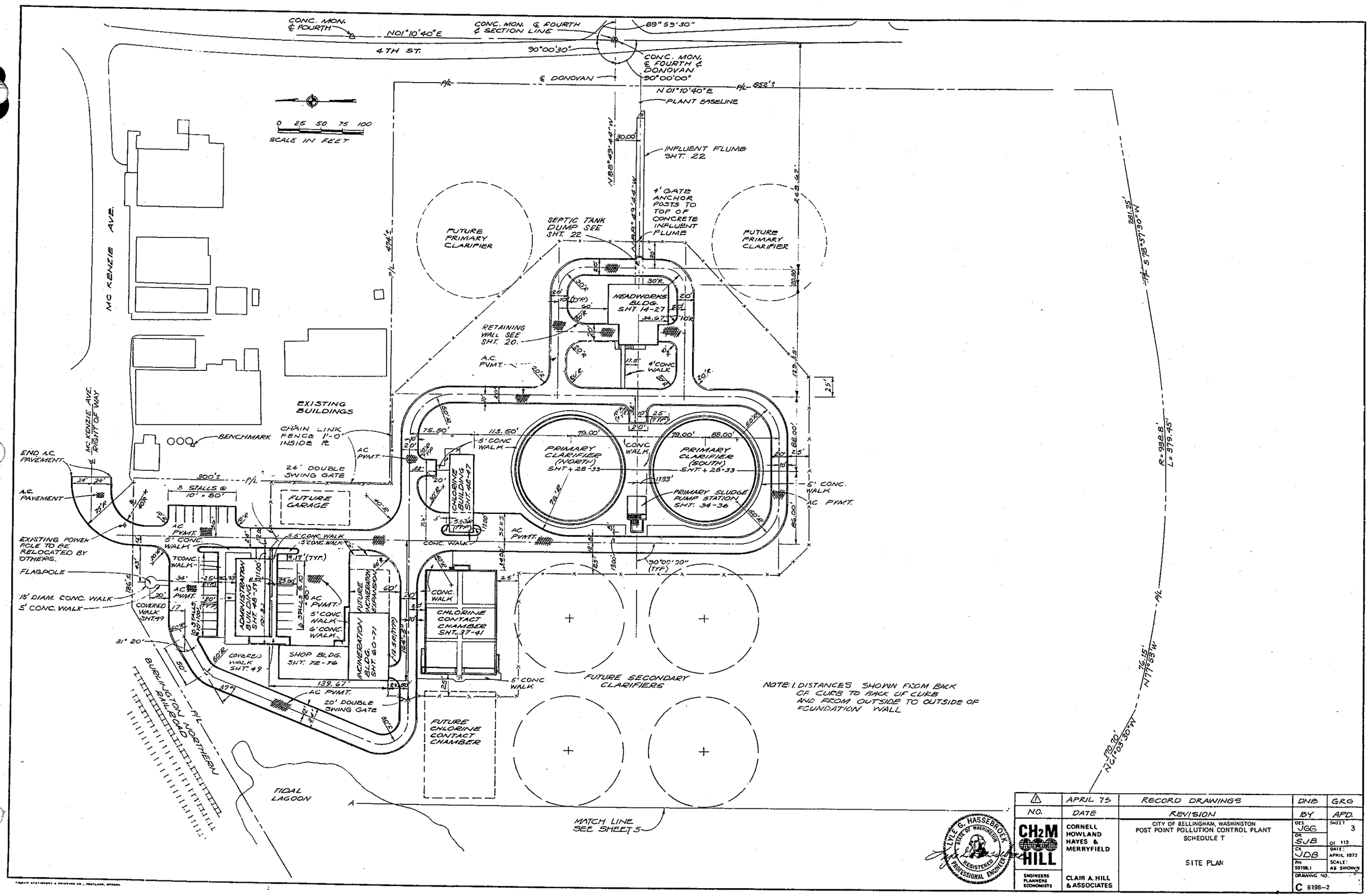

NO.	DATE	REVISION	BY	APD.
1	APRIL 75	RECORD DRAWINGS	DNB	GRG

CH2M HILL — ENGINEERS PLANNERS ECONOMISTS

CORNELL HOWLAND HAYES & MERRYFIELD

CLAIR A. HILL & ASSOCIATES

CITY OF BELLINGHAM, WASHINGTON
POST POINT POLLUTION CONTROL PLANT
SCHEDULE T

SITE PLAN

DES. JGG | DR. SJB | CK. JDB | RN 58198.1 | SHEET 3 OF 113 | DATE: APRIL 1972 | SCALE: AS SHOWN | DRAWING NO. C 6198-2

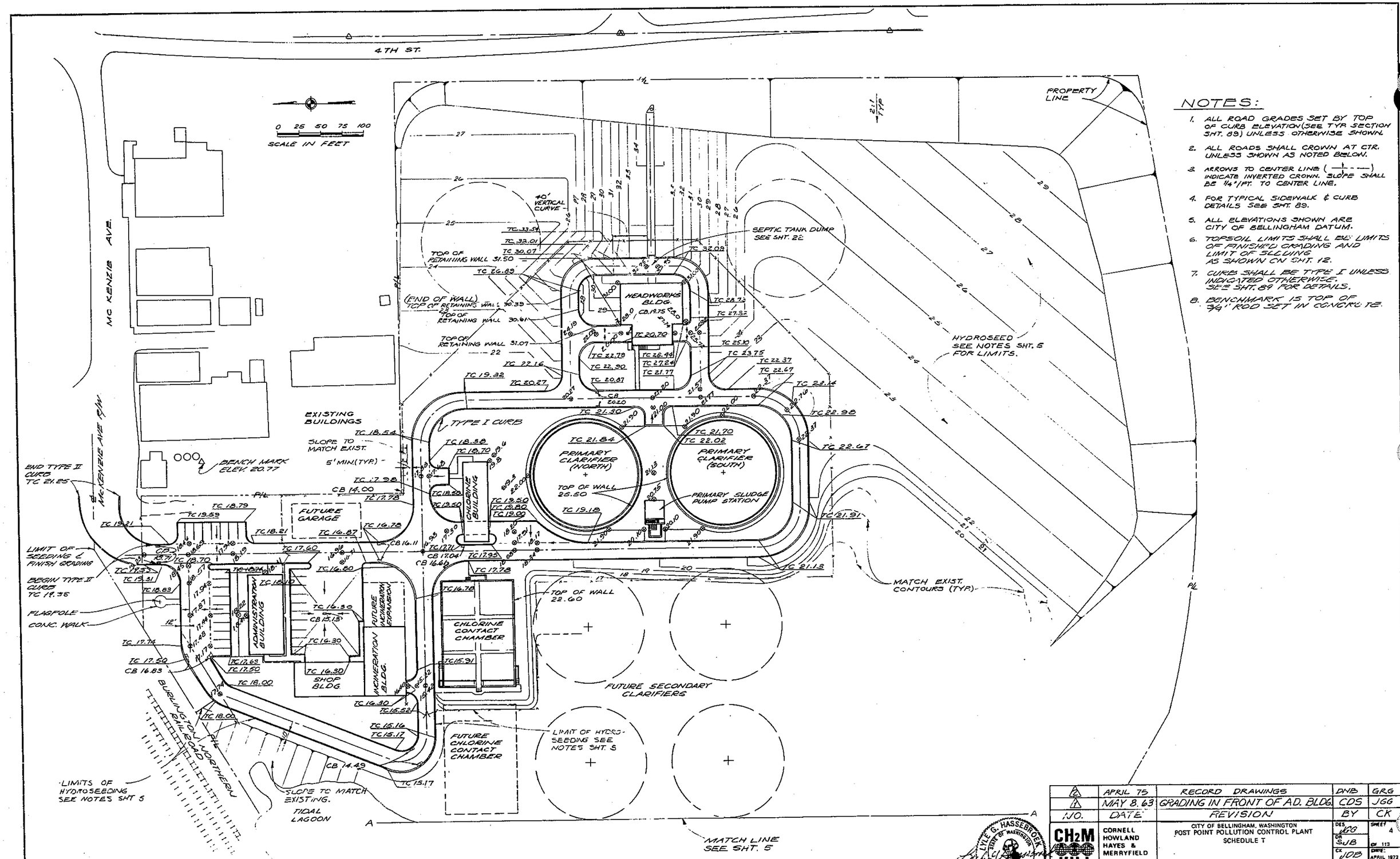

NOTES:

1. ALL ROAD GRADES SET BY TOP OF CURB ELEVATION (SEE TYP. SECTION SHT. 89) UNLESS OTHERWISE SHOWN.
2. ALL ROADS SHALL CROWN AT CTR. UNLESS SHOWN AS NOTED BELOW.
3. ARROWS TO CENTER LINE (—+—) INDICATE INVERTED CROWN. SLOPE SHALL BE 1/4"/FT. TO CENTER LINE.
4. FOR TYPICAL SIDEWALK & CURB DETAILS SEE SHT. 89.
5. ALL ELEVATIONS SHOWN ARE CITY OF BELLINGHAM DATUM.
6. TOPSOIL LIMITS SHALL BE: LIMITS OF FINISHED GRADING AND LIMIT OF SLOPING AS SHOWN ON SHT. 12.
7. CURB SHALL BE TYPE I UNLESS INDICATED OTHERWISE. SEE SHT. 89 FOR DETAILS.
8. BENCHMARK IS TOP OF 3/4" ROD SET IN CONCRETE.

NO.	DATE	REVISION	BY	CK
2	APRIL 75	RECORD DRAWINGS	DNB	GRG
1	MAY 8, 63	GRADING IN FRONT OF AD. BLDG.	CDS	JGG

CH2M HILL — ENGINEERS PLANNERS ECONOMISTS

CORNELL HOWLAND HAYES & MERRYFIELD

CLAIR A. HILL & ASSOCIATES

CITY OF BELLINGHAM, WASHINGTON
POST POINT POLLUTION CONTROL PLANT
SCHEDULE T

GRADING PLAN - EAST

DES. JGG
DR. SJB
CK. JOB
RN 56198.1
SHEET 4 OF 113
DATE: APRIL 1972
SCALE: AS SHOWN
DRAWING NO. C 6198-2

LYLE G. HASSEBROEK — STATE OF WASHINGTON — REGISTERED PROFESSIONAL ENGINEER

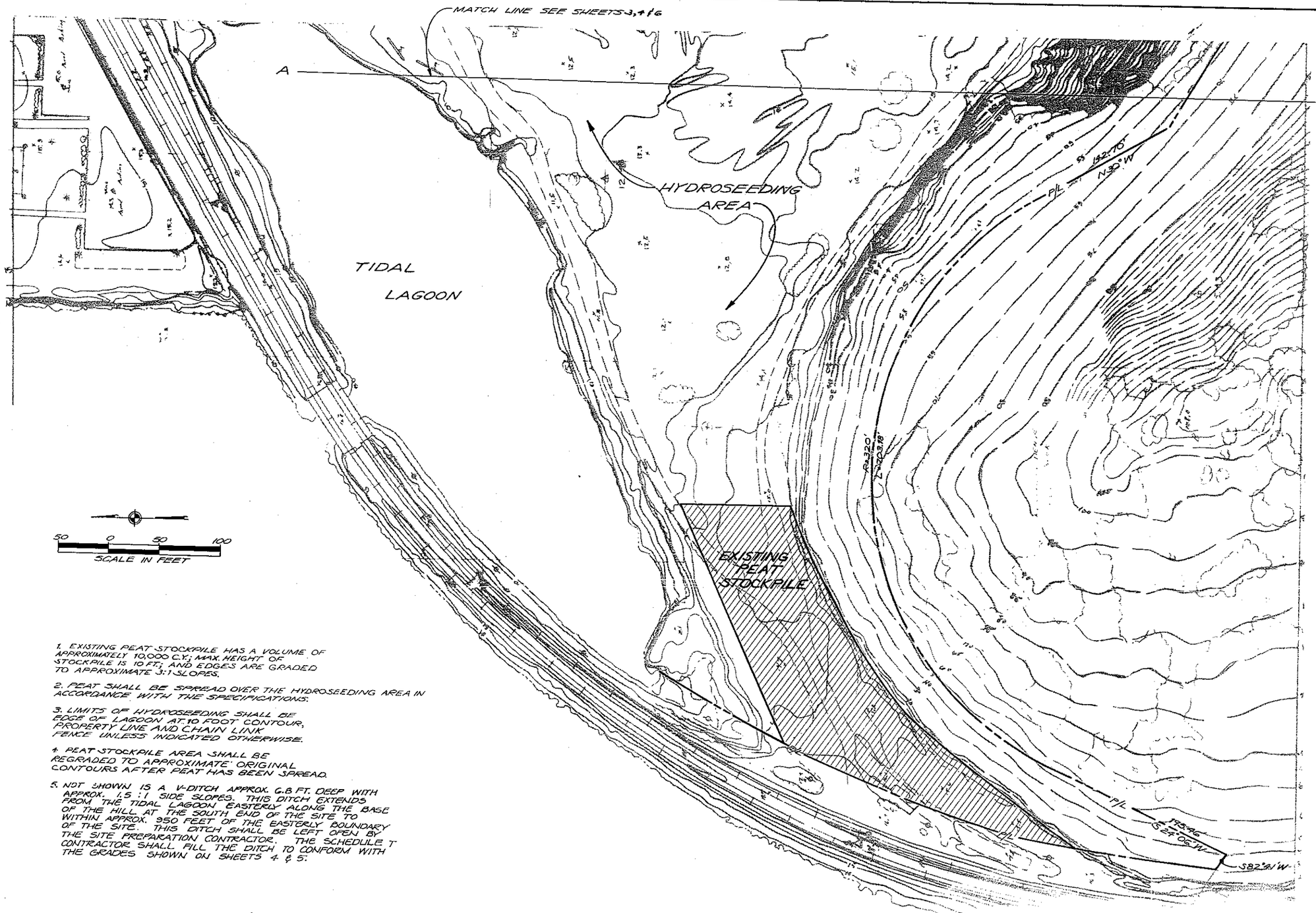

1. EXISTING PEAT STOCKPILE HAS A VOLUME OF APPROXIMATELY 10,000 C.Y.; MAX. HEIGHT OF STOCKPILE IS 10 FT.; AND EDGES ARE GRADED TO APPROXIMATE 3:1 SLOPES.

2. PEAT SHALL BE SPREAD OVER THE HYDROSEEDING AREA IN ACCORDANCE WITH THE SPECIFICATIONS.

3. LIMITS OF HYDROSEEDING SHALL BE EDGE OF LAGOON AT 10 FOOT CONTOUR, PROPERTY LINE AND CHAIN LINK FENCE UNLESS INDICATED OTHERWISE.

4. PEAT STOCKPILE AREA SHALL BE REGRADED TO APPROXIMATE ORIGINAL CONTOURS AFTER PEAT HAS BEEN SPREAD.

5. NOT SHOWN IS A V-DITCH APPROX. 6.8 FT. DEEP WITH APPROX. 1.5 : 1 SIDE SLOPES. THIS DITCH EXTENDS FROM THE TIDAL LAGOON EASTERLY ALONG THE BASE OF THE HILL AT THE SOUTH END OF THE SITE TO WITHIN APPROX. 950 FEET OF THE EASTERLY BOUNDARY OF THE SITE. THIS DITCH SHALL BE LEFT OPEN BY THE SITE PREPARATION CONTRACTOR. THE SCHEDULE T CONTRACTOR SHALL FILL THE DITCH TO CONFORM WITH THE GRADES SHOWN ON SHEETS 4 & 5.

LYLE G. HASSEBROEK — STATE OF WASHINGTON — REGISTERED PROFESSIONAL ENGINEER

NO.	DATE	REVISION	BY	APD.
△	APRIL 75	RECORD DRAWINGS	DNB	GRG

CH2M HILL — ENGINEERS PLANNERS ECONOMISTS

CORNELL HOWLAND HAYES & MERRYFIELD

CLAIR A. HILL & ASSOCIATES

CITY OF BELLINGHAM, WASHINGTON
POST POINT POLLUTION CONTROL PLANT
SCHEDULE T

GRADING PLAN - WEST

DES LGG | DR CPC | CK JDB | RN 56198.1

SHEET 5 OF 113

DATE: APRIL 1972

SCALE: AS SHOWN

DRAWING NO. C 6198-2

SUMMIT STATIONERY & PRINTING CO., PORTLAND, ORE.

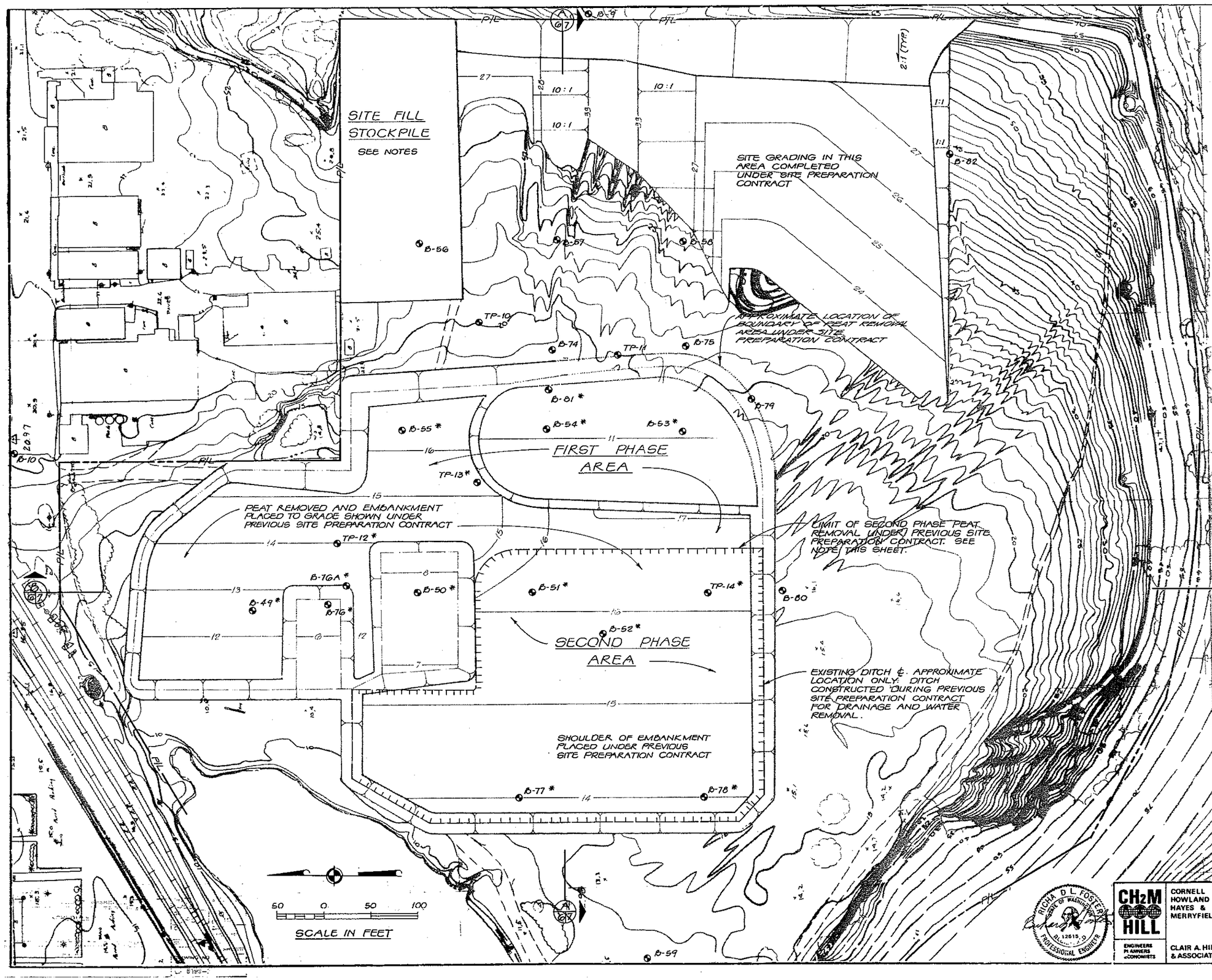

LEGEND

SECOND PHASE AREA — PREVIOUS SITE PREPARATION CONTRACT ADMINISTERED IN TWO PHASES. FIRST PHASE SCHEDULED FOR COMPLETION BY 30 JUNE 1972. SECOND PHASE AREA OUTLINED ON THIS SHEET SCHEDULED FOR COMPLETION BY 21 AUGUST 1972.

TEST HOLE LOCATION & DESIGNATION:
B-54 TEST BORING
TP-13 TEST PIT
SEE SHTS. 8 & 9 FOR TEST HOLE LOGS

* INDICATES THAT THE TEST HOLE LOG HAS BEEN ALTERED BY WORK PERFORMED IN PREVIOUS SITE PREPARATION CONTRACT.

NOTES

1. ALL CONTOURS SHOWN ARE EXISTING.
2. SITE FILL STOCKPILE. MATERIAL STOCKPILED IN THIS AREA BY OTHERS IS TO BE USED TO COMPLETE GENERAL SITE FILL & SITE GRADING. SUFFICIENT MATERIAL WILL BE AVAILABLE TO COMPLETE GRADING.
3. ALL ELEVATIONS SHOWN ARE CITY OF BELLINGHAM DATUM.
4. NOT SHOWN IS A V-DITCH APPROX. 6.8 FT. DEEP WITH APPROX. 1.5 : 1 SIDE SLOPE. THIS DITCH EXTENDS TO THE TIDAL LAGOON EASTERLY ALONG THE BASE OF THE HILL AT THE SOUTH END OF THE SITE TO WITHIN APPROX 350 FT. OF THE EASTERLY BOUNDARY OF THE SITE. THIS DITCH SHALL BE LEFT OPEN BY THE SITE PREPARATION CONTRACTOR. THE SCHEDULE T CONTRACTOR SHALL FILL THE DITCH TO CONFORM WITH THE GRADES ON SHEETS 4 & 5.

NO.	DATE	REVISION	BY	APD
1	APRIL 76	RECORD DRAWINGS	DNB	GRG

CH2M HILL — ENGINEERS PLANNERS ECONOMISTS

CORNELL HOWLAND HAYES & MERRYFIELD
CLAIR A. HILL & ASSOCIATES

RICHARD L. FOSTER, STATE OF WASHINGTON, REGISTERED PROFESSIONAL ENGINEER

CITY OF BELLINGHAM, WASHINGTON
POST POINT POLLUTION CONTROL PLANT
SCHEDULE T

EXISTING SITE CONDITIONS PLAN

DES JGG
DR CPC
CK JDB
RN 56198.1
SHEET 6 OF 113
DATE: APRIL 1972
SCALE: AS SHOWN
DRAWING NO. C 6198-2

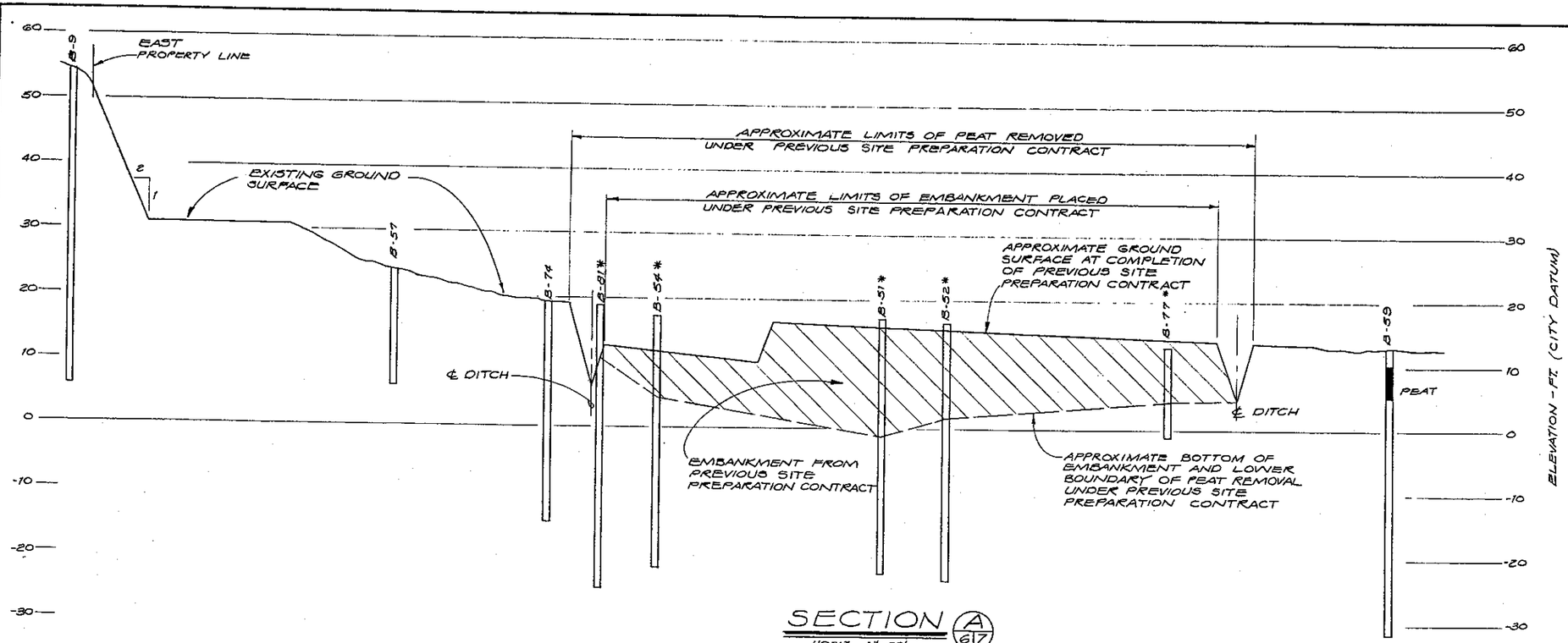

SECTION A 6/7

HORIZ. 1" = 50'
VERT. 1" = 10'

NOTES

1. B-77* - THE * INDICATES THAT THAT PORTION OF THE TEST HOLE LOG WITHIN THE EMBANKMENT HAS BEEN ALTERED BY WORK PERFORMED IN A PREVIOUS CONTRACT.
2. THE DITCHES SHOWN WERE CONSTRUCTED UNDER PREVIOUS SITE PREPARATION CONTRACT. THEY WERE CONSTRUCTED TO PERMIT DRAINAGE AND WATER REMOVAL DURING THE SITE PREPARATION CONTRACT. THE DITCHES HAVE BEEN LEFT IN PLACE FOR USE DURING THIS CONTRACT
3. SEE SHTS. 8 & 9 FOR TEST HOLE LOGS
4. EMBANKMENT MATERIAL USED DURING PREVIOUS SITE PREPARATION CONTRACT WAS SILTY SAND W/ GRAVEL. MATERIAL CAME FROM BORROW AREA AT EAST SIDE OF SITE AND FROM THE OVERBURDEN REMOVED FROM ABOVE THE PEAT
5. SEE SHT 4 FOR FINISH EMBANKMENT GRADES REQUIRED UNDER THIS CONTRACT.

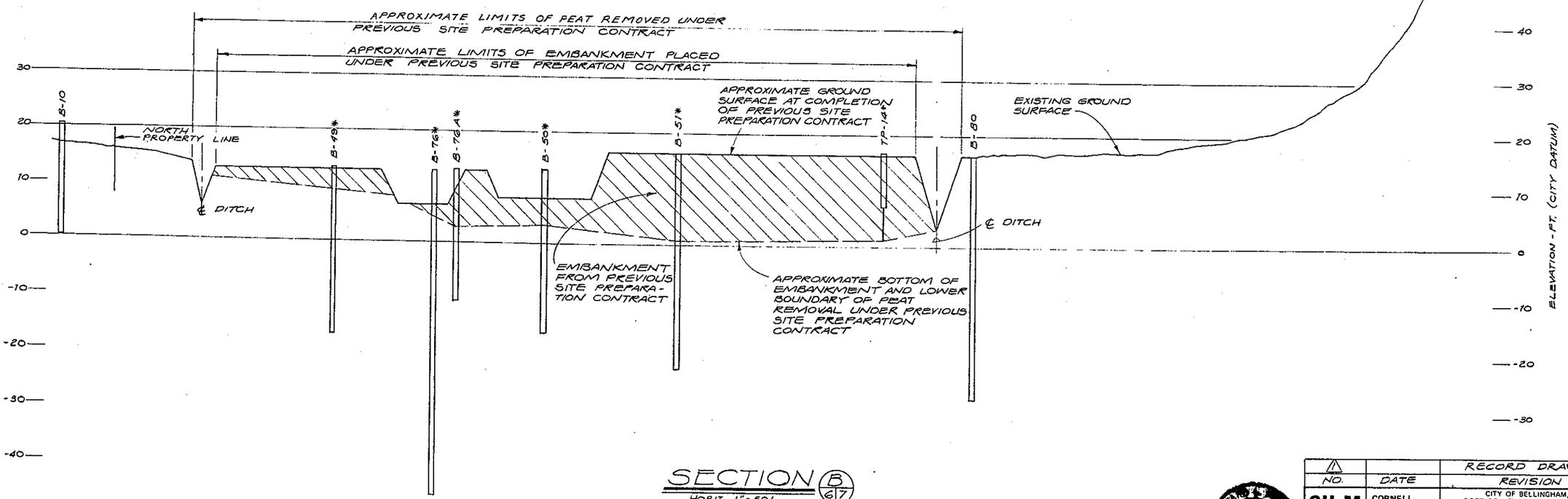

SECTION B 6/7

HORIZ. 1" = 50'
VERT. 1" = 10'

NO.	DATE	REVISION	BY	APD.
1		RECORD DRAWINGS	DNB	

CH2M HILL — ENGINEERS PLANNERS ECONOMISTS

CORNELL HOWLAND HAYES & MERRYFIELD

CLAIR A. HILL & ASSOCIATES

CITY OF BELLINGHAM, WASHINGTON
POST POINT POLLUTION CONTROL PLANT
SCHEDULE T

EXISTING SITE CONDITIONS - SECTIONS

DES. MDG
DR. CPC
CK. J
PN. 56198.1
SHEET 7 OF 113
DATE: APRIL 1972
SCALE: AS SHOWN
DRAWING NO. C 6198-2

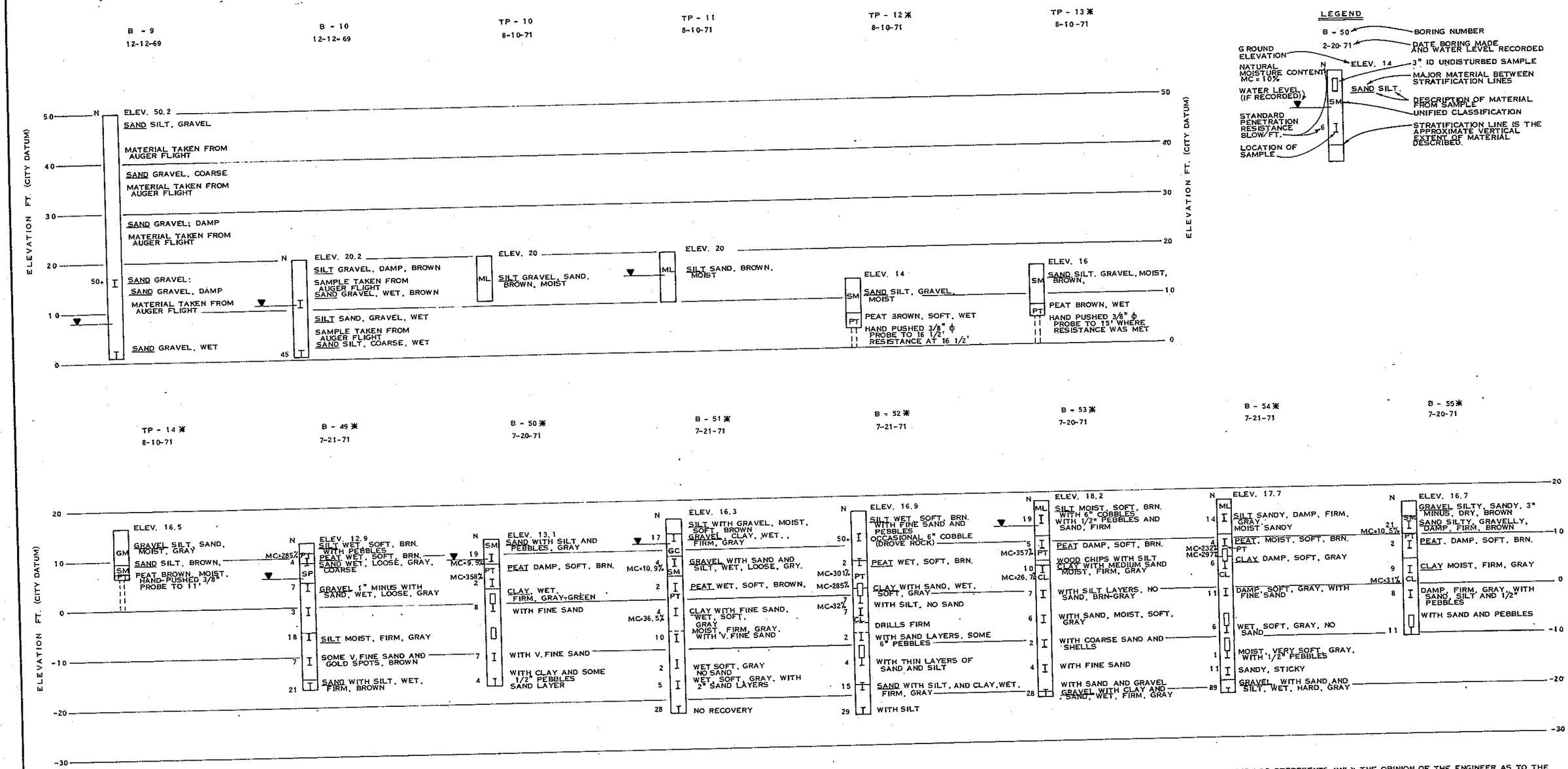

NOTE: THIS LOG REPRESENTS ONLY THE OPINION OF THE ENGINEER AS TO THE CHARACTER OF MATERIALS ENCOUNTERED IN THE TEST HOLES. NO WARRANTY, EXPRESSED OR IMPLIED, IS GIVEN IN REGARD TO ANY VARIATIONS WHICH MAY OCCUR BETWEEN TEST HOLE SITES.

THE STRATIFICATION LINES REPRESENT THE APPROXIMATE BOUNDARY BETWEEN SOIL TYPES AND THE TRANSITION MAY BE GRADUAL.

* INDICATES THAT THOSE TEST HOLE LOGS SHOW THE MATERIALS THAT EXISTED PRIOR TO THE SITE PREPARATION WHICH BEGAN APPROXIMATELY APRIL 1972.

RICHARD L. FOSSEN, STATE OF WASHINGTON, 2613, REGISTERED PROFESSIONAL ENGINEER

NO.	DATE	RECORD DRAWINGS / REVISION	BY	APD
			DNB	

CH2M HILL — ENGINEERS PLANNERS ECONOMISTS

CORNELL HOWLAND HAYES & MERRYFIELD

CLAIR A. HILL & ASSOCIATES

CITY OF BELLINGHAM, WASHINGTON
POST POINT POLLUTION CONTROL PLANT
SCHEDULE T

EXISTING SITE CONDITIONS - TEST HOLE LOGS

DES MDG
DR
CK RLF
RN 56198.1

SHEET 1 OF 113
DATE APRIL 1972
SCALE: AS SHOWN
DRAWING NO. C .6198-2

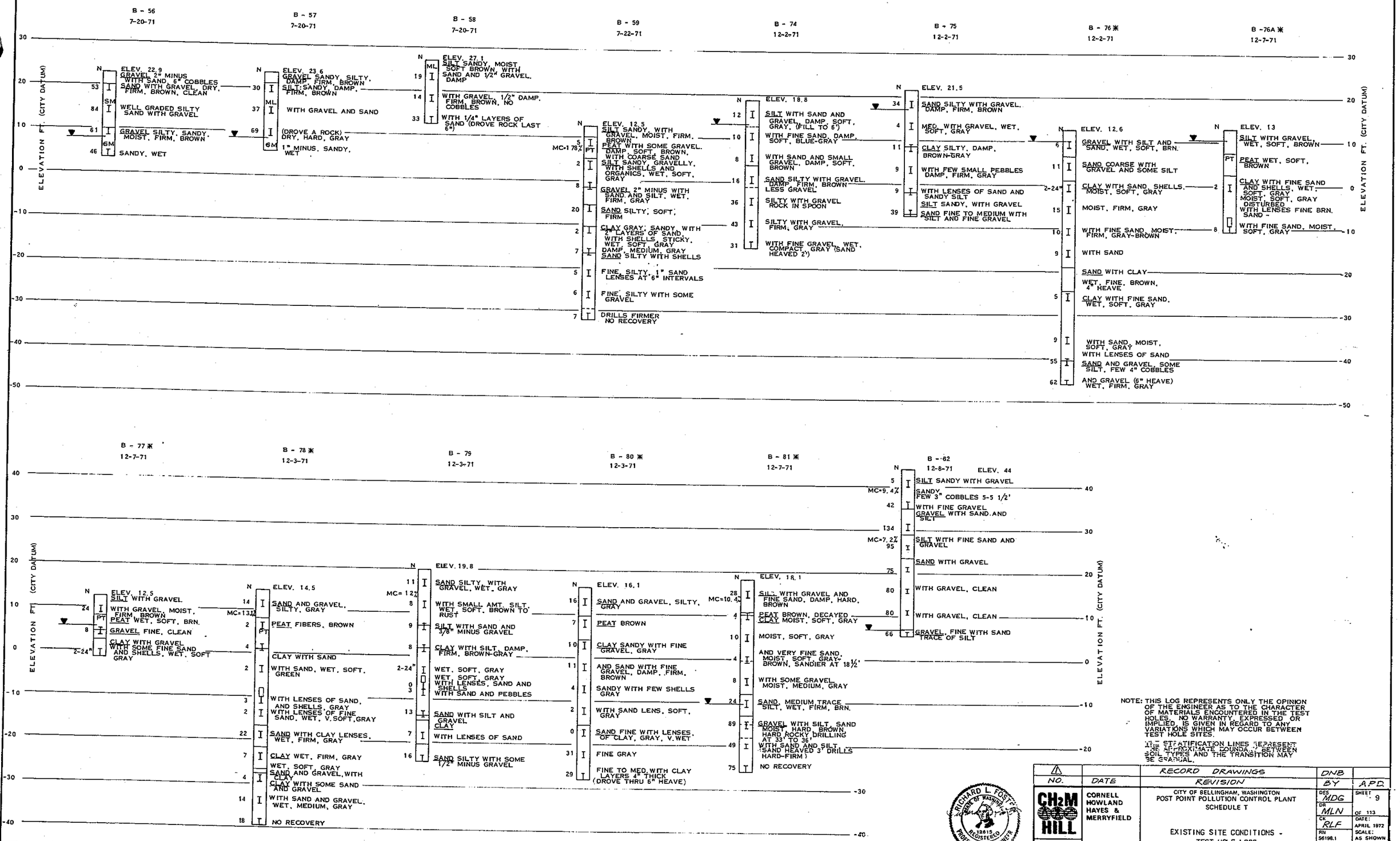

NOTE: THIS LOG REPRESENTS ONLY THE OPINION OF THE ENGINEER AS TO THE CHARACTER OF MATERIALS ENCOUNTERED IN THE TEST HOLES. NO WARRANTY, EXPRESSED OR IMPLIED, IS GIVEN IN REGARD TO ANY VARIATIONS WHICH MAY OCCUR BETWEEN TEST HOLE SITES.

NOTE: STRATIFICATION LINES REPRESENT THE APPROXIMATE BOUNDARY BETWEEN SOIL TYPES AND THE TRANSITION MAY BE GRADUAL.

NO.	DATE	REVISION	BY
⚠		RECORD DRAWINGS	DNB

CH2M HILL — ENGINEERS PLANNERS ECONOMISTS

CORNELL HOWLAND HAYES & MERRYFIELD

CLAIR A. HILL & ASSOCIATES

CITY OF BELLINGHAM, WASHINGTON
POST POINT POLLUTION CONTROL PLANT
SCHEDULE T

EXISTING SITE CONDITIONS - TEST HOLE LOGS

DES MDG | DR MLN | CK RLF | RN S6198.1 | SHEET 9 OF 113 | DATE: APRIL 1972 | SCALE: AS SHOWN

DRAWING NO. C 6198-2

RICHARD L. FOSTER — STATE OF WASHINGTON — R-12615 — REGISTERED PROFESSIONAL ENGINEER

BILMAR STATIONERY & PRINTING CO., PORTLAND, ORE.

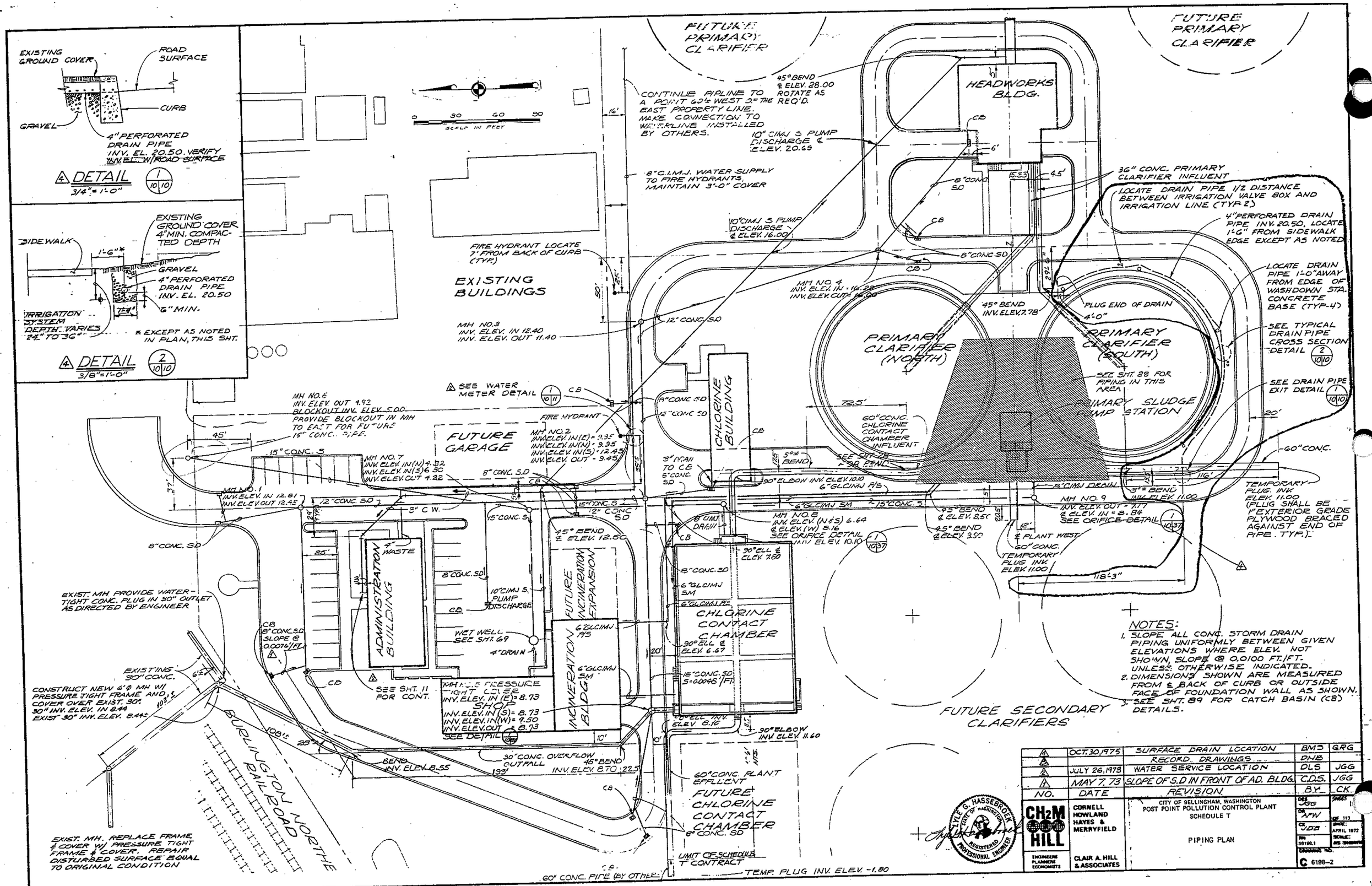
EXISTING GROUND COVER
ROAD SURFACE
CURB
GRAVEL
4" PERFORATED DRAIN PIPE INV. EL. 20.50. VERIFY INV. ELEV. W/ ROAD SURFACE
4 DETAIL 1/10/10
3/4" = 1'-0"
EXISTING GROUND COVER 4" MIN. COMPACTED DEPTH
SIDEWALK
1'-6"*
GRAVEL
4" PERFORATED DRAIN PIPE INV. EL. 20.50
6" MIN.
IRRIGATION SYSTEM DEPTH VARIES 24" TO 36"
* EXCEPT AS NOTED IN PLAN, THIS SHT.
4 DETAIL 2/10/10
3/8" = 1'-0"
SCALE IN FEET
0 30 60 90
FUTURE PRIMARY CLARIFIER
FUTURE PRIMARY CLARIFIER
CONTINUE PIPLINE TO A POINT 60'± WEST OF THE EAST PROPERTY LINE. MAKE CONNECTION TO WATERLINE INSTALLED BY OTHERS.
45° BEND ℄ ELEV. 28.00 ROTATE AS REQ'D.
HEADWORKS BLDG.
10" CIMJ S PUMP DISCHARGE ℄ ELEV. 20.69
8" C.I.M.J. WATER SUPPLY TO FIRE HYDRANTS, MAINTAIN 3'-0" COVER
36" CONC. PRIMARY CLARIFIER INFLUENT
LOCATE DRAIN PIPE 1/2 DISTANCE BETWEEN IRRIGATION VALVE BOX AND IRRIGATION LINE (TYP. 2)
4" PERFORATED DRAIN PIPE INV. 20.50, LOCATE 1'-6" FROM SIDEWALK EDGE EXCEPT AS NOTED
10" CIMJ S PUMP DISCHARGE ℄ ELEV. 16.00
FIRE HYDRANT LOCATE 7' FROM BACK OF CURB (TYP.)
EXISTING BUILDINGS
MH NO. 4 INV. ELEV. IN = 16.28 INV. ELEV. OUT = 16.00
8" CONC SD
45° BEND INV. ELEV. 7.78
PLUG END OF DRAIN 4'-0"
LOCATE DRAIN PIPE 1'-0" AWAY FROM EDGE OF WASHDOWN STA. CONCRETE BASE (TYP-4)
MH NO. 3 INV. ELEV. IN 12.40 INV. ELEV. OUT 11.40
12" CONC. SD
PRIMARY CLARIFIER (NORTH)
PRIMARY CLARIFIER (SOUTH)
SEE TYPICAL DRAIN PIPE CROSS SECTION DETAIL 2/10/10
SEE SHT. 28 FOR PIPING IN THIS AREA
PRIMARY SLUDGE PUMP STATION
SEE DRAIN PIPE EXIT DETAIL 1/10/10
SEE WATER METER DETAIL 1/10/11
CHLORINE BUILDING
MH NO. 6 INV. ELEV OUT 4.92 BLOCKOUT INV. ELEV. 5.00 PROVIDE BLOCKOUT IN MH TO EAST FOR FUTURE 15" CONC. PIPE.
FIRE HYDRANT
9" CONC SD
12" CONC SD
60" CONC. CHLORINE CONTACT CHAMBER INFLUENT
FUTURE GARAGE
MH NO. 2 INV. ELEV. IN (E) = 9.35 INV. ELEV. IN (N) = 9.35 INV. ELEV. IN (S) = 12.45 INV. ELEV. OUT = 9.45
15" CONC. S
MH NO. 7 INV. ELEV. IN (N) 4.32 INV. ELEV. IN (S) 6.30 INV. ELEV. OUT 4.22
8" CONC. SD
3" DRAIN TO CB 8" CONC. SD
SEE SHT. 28 FOR DETAIL
60" CONC.
90° ELBOW INV. ELEV. 10.10 6" GLCIMJ P/S
8" CIMJ DRAIN
MH NO. 1 INV. ELEV. IN 12.81 INV. ELEV. OUT 12.45
12" CONC. SD
3" C.W.
15" CONC. S
12" CONC SD
15" CONC. S
MH NO. 8 INV. ELEV. (N & S) 6.64 ℄ ELEV. (W) 8.16 SEE ORIFICE DETAIL INV. ELEV. 10.10 1/10/37
45° BEND ℄ ELEV. 8.50
45° BEND ℄ ELEV. 3.50
MH NO. 9 INV. ELEV. OUT = 7.17 ℄ ELEV. IN = 8.84 SEE ORIFICE DETAIL 1/10/37
TEMPORARY PLUG. INV. ELEV. 11.00 (PLUG SHALL BE 1" EXTERIOR GRADE PLYWOOD BRACED AGAINST END OF PIPE. TYP.)
8" CONC. SD
45° BEND ℄ ELEV. 12.50
FUTURE INCINERATION EXPANSION
90° ELL ℄ ELEV. 7.60
8" CONC. SD
6" GLCIMJ SM
6" GLCIMJ P/S
℄ PLANT WEST
60" CONC. TEMPORARY PLUG INV. ELEV. 11.00
118'-3"
EXIST. MH. PROVIDE WATER-TIGHT CONC. PLUG IN 30" OUTLET AS DIRECTED BY ENGINEER
ADMINISTRATION BUILDING
4" WASTE
8" CONC. SD
10" CIMJ S. PUMP DISCHARGE
WET WELL SEE SHT. 69
4" DRAIN
6" GLCIMJ P/S
6" GLCIMJ SM
CHLORINE CONTACT CHAMBER
90° ELL ℄ ELEV. 6.67
16" CONC. SD S = 0.0046'/FT.
CB 8" CONC. SD SLOPE @ 0.0076'/FT.
SEE SHT. 11 FOR CONT.
MH NO. 5 PRESSURE TIGHT COVER INV. ELEV. IN (E) = 8.73 SHOP INV. ELEV. IN (S) = 8.73 INV. ELEV. IN (W) = 9.50 INV. ELEV. OUT = 8.73 SEE DETAIL 1/10/38
INCINERATION BLDG.
WELL INV. ELEV 6.16
90° ELBOW INV. ELEV. 11.60
FUTURE SECONDARY CLARIFIERS
EXISTING 30" CONC.
CONSTRUCT NEW 6'Ø MH W/ PRESSURE TIGHT FRAME AND COVER OVER EXIST. 30". 30" INV. ELEV. IN 8.44 EXIST. 30" INV. ELEV. 8.44±
BURLINGTON NORTHERN RAILROAD
BEND INV. ELEV. 8.55
30" CONC. OVERFLOW OUTFALL INV. ELEV. 8.70
45° BEND
60" CONC. PLANT EFFLUENT
FUTURE CHLORINE CONTACT CHAMBER
8" CONC. SD
EXIST. MH. REPLACE FRAME & COVER W/ PRESSURE TIGHT FRAME & COVER. REPAIR DISTURBED SURFACE EQUAL TO ORIGINAL CONDITION
60" CONC. PIPE (BY OTHERS)
LIMIT OF SCHEDULE T CONTRACT
TEMP. PLUG INV. ELEV. -1.80
NOTES:
1. SLOPE ALL CONC. STORM DRAIN PIPING UNIFORMLY BETWEEN GIVEN ELEVATIONS WHERE ELEV. NOT SHOWN, SLOPE @ 0.0100 FT./FT. UNLESS OTHERWISE INDICATED.
2. DIMENSIONS SHOWN ARE MEASURED FROM ℄ BACK OF CURB OR OUTSIDE FACE OF FOUNDATION WALL AS SHOWN.
3. SEE SHT. 89 FOR CATCH BASIN (CB) DETAILS.
LYLE G. HASSEBROEK STATE OF WASHINGTON REGISTERED PROFESSIONAL ENGINEER
NO. | DATE | REVISION | BY | CK.
OCT. 30, 1975 | SURFACE DRAIN LOCATION | BMS | GRG
RECORD DRAWINGS | DNB
JULY 26, 1973 | WATER SERVICE LOCATION | DLS | JGG
MAY 7, 73 | SLOPE OF S.D IN FRONT OF AD. BLDG. | C.D.S. | JGG
CH2M HILL
ENGINEERS PLANNERS ECONOMISTS
CORNELL HOWLAND HAYES & MERRYFIELD
CLAIR A. HILL & ASSOCIATES
CITY OF BELLINGHAM, WASHINGTON
POST POINT POLLUTION CONTROL PLANT
SCHEDULE T
PIPING PLAN
DES JGG
DR AJW
CK JDB
SHEET 1
DATE APRIL 1972
SCALE: AS SHOWN
DRAWING NO. C 6198-2

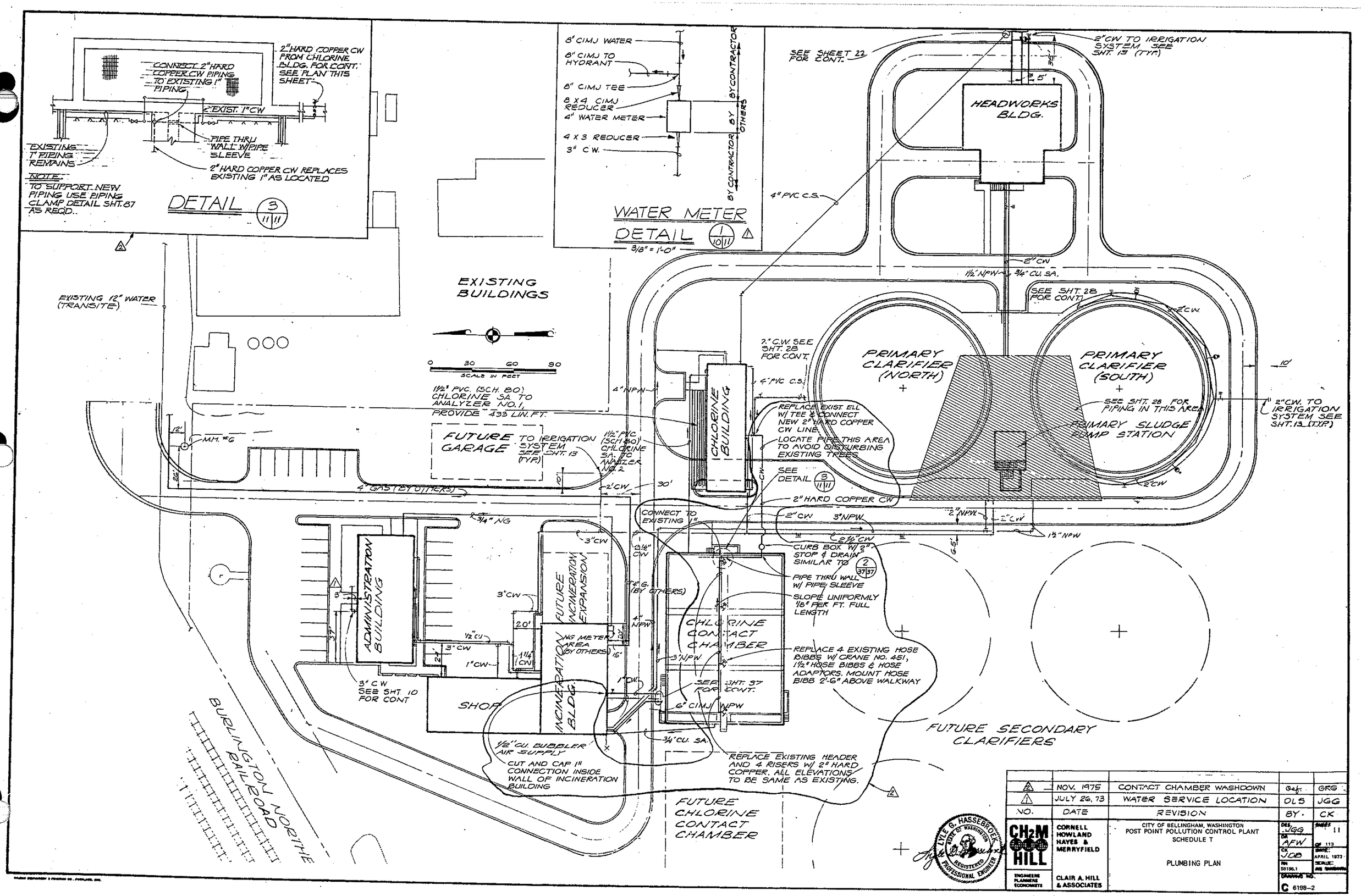

NO.	DATE	REVISION	BY	CK
2	NOV. 1975	CONTACT CHAMBER WASHDOWN	Cat.	GRG
1	JULY 26, 73	WATER SERVICE LOCATION	DLS	JGG

CH2M HILL — ENGINEERS PLANNERS ECONOMISTS

CORNELL HOWLAND HAYES & MERRYFIELD

CLAIR A. HILL & ASSOCIATES

CITY OF BELLINGHAM, WASHINGTON
POST POINT POLLUTION CONTROL PLANT
SCHEDULE T

PLUMBING PLAN

DES. JGG
DR. AFW
CK. JDB
PM 5819B.1
SHEET 11 OF 113
DATE: APRIL 1972
SCALE: AS SHOWN
DRAWING NO. C 6198-2

PLANT SCHEDULE

QUANT.	BOTANICAL NAME	COMMON NAME	SIZE AND SPECIFICATIONS
	TREES		
6	ACER RUBRUM	RED MAPLE	2"-2½" CAL., 12'-14' HT., TYPE 1, B&B
8	CORNUS FLORIDA	FLOWERING DOGWOOD	1"-1¼" CAL., 8'-10' HT., TYPE 3, MIN. 7 BRANCHES, B&B
1	CORNUS NUTTALLII	PACIFIC DOGWOOD	2"-2½" CAL., MIN 8'-10' HT., TYPE 2, B&B
76	MALUS DOROTHEA	DOROTHEA CRABAPPLE	1"-1¼" CAL., 8'-10' HT., TYPE 3, MIN. 7 BRANCHES, B&B
23	MALUS FLORIBUNDA	JAP. FLWR. CRABAPPLE	1"-1¼" CAL., 8'-10' HT., TYPE 3, MIN. 7 BRANCHES, B&B
18	PINUS SYLVESTRIS	SCOTS PINE	5'-6' HT., MIN 3'-4' SPREAD, TYPE 4, B&B
135	POPULUS NIGRA 'ITALICA'	LOMBARDY POPLAR	1"-1½" CAL., 12'-14' HT., TYPE 1, B&B
20	PRUNUS SUB. AUTUMNALIS	AUTUMN CHERRY	1"-1¼" CAL., 8'-10' HT., TYPE 3, B&B
48	TSUGA HETEROPHYLLA	WESTERN HEMLOCK	5'-6' HT., MIN 3'-4' SPREAD, TYPE 4, B&B

SYMBOL	QUANT.	BOTANICAL NAME	COMMON NAME	SIZE AND SPECIFICATION
		SHRUBS		
	114	VIBURNUM DAVIDI	DAVID VIBURNUM	12"-15" HT., MIN SPREAD 8", TYPE 4, B&B
	180	MAHONIA AQUIFOLIUM	OREGON GRAPE	18"-24" HT., MIN SPREAD 12", TYPE 4, B&B
		GROUND COVER		
	17,450	HEDERA HELIX	ENGLISH IVY	1 SEASON EST., 100/FLAT, MIN. 2 RUNNERS, 4" OR LONGER

122,000 SQ. FT. GRASS - SEEDED
17.50 ACRES HYDROSEEDED W/ WILDFLOWERS. SEE SPECS.

NOTES:
1. THE FENCE LINE IS THE APPROXIMATE LIMIT OF HYDROSEEDING UNLESS OTHERWISE NOTED.
2. MAHONIA AQUIFOLIUM TO BE PLANTED 3' O.C.
3. VIBURNUM DAVIDI TO BE PLANTED 4' O.C.
4. HEDERA HELIX TO BE PLANTED EQUIDISTANT FROM EACH OTHER 10' O.C.
5. SEE GRADING PLAN SHTS #4 & 5 FOR LIMITS OF HYDROSEEDING.
6. THE FENCE LINE IS THE APPROXIMATE LIMIT OF FINISH GRADING AND GRASS SEEDING UNLESS OTHERWISE NOTED.

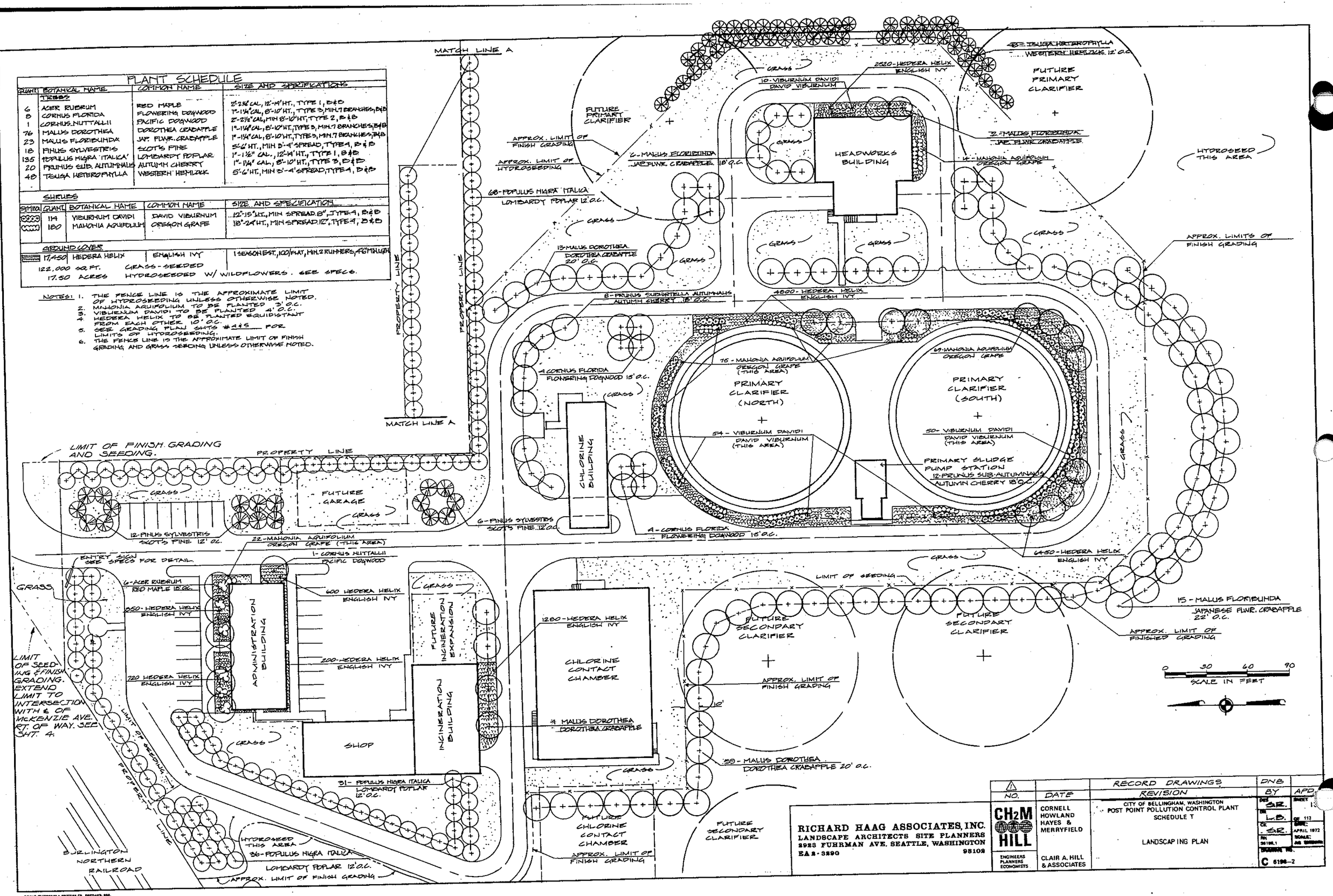

NO.	DATE	REVISION	BY	APD.
		RECORD DRAWINGS	DNB	

CH2M HILL — ENGINEERS PLANNERS ECONOMISTS

CORNELL HOWLAND HAYES & MERRYFIELD

CLAIR A. HILL & ASSOCIATES

RICHARD HAAG ASSOCIATES, INC.
LANDSCAPE ARCHITECTS SITE PLANNERS
2923 FUHRMAN AVE. SEATTLE, WASHINGTON 98102
EA 2-3290

CITY OF BELLINGHAM, WASHINGTON
POST POINT POLLUTION CONTROL PLANT
SCHEDULE T

LANDSCAPING PLAN

DES. S.R. DR. L.B. CK. S.R. PR. 36106.1 DATE APRIL 1972 SCALE: AS SHOWN SHEET 13 OF 113 DRAWING NO. C 6196-2

IRRIGATION SCHEDULE

SYMBOL	DESCRIPTION	GPM	PSI	RAD.	Δ'
	BUCKNER 8250 ROTOR POP-UP 5/32" NOZZLE	30	38	39'	45'
	BUCKNER 8255 ROTOR POP-UP 5/32" NOZZLE	30	38	38'	45'
	BUCKNER 1300 ROTOR POP-UP 1/8" x 1/8" NOZZLE	30	39	25'	32'
	BUCKNER 1300H ROTOR POP-UP 1/8" x 1/8" NOZZLE	30	2.6	24'	32'
	BUCKNER 404 PF LAWN SPRAY	35	2.2	17'	23'
	BUCKNER 404 DH LAWN SPRAY	35	3.8	17'	23'
	BUCKNER 404 DQ LAWN SPRAY	35	3.0	17'	23'
	BUCKNER 403 SJF SHRUB SPRAY	20	3.0	10'	14'
	BUCKNER 403 SJH SHRUB SPRAY	20	2.2	10'	14'
	BUCKNER 403 SJQ SHRUB SPRAY	20	1.5	10'	14'
	BUCKNER QUICK COUPLING VALVE #13				
	CRANE GATE VALVE				
	MOODY 6000 SERIES ELECTRIC VALVE				
A	MOODY M-E-30W AUTOMATIC CONTROLLER				
1	CONTROLLER CIRCUIT NUMBER				
2"	VALVE SIZE				
50.0	GALLONS PER MINUTE				
	CLASS 200 SCR 21 PVC PIPE (LATERAL)				
	SCHEDULE 40 PIPE (MAIN LINE)				
	VACUUM BREAKER, REQUIRED WHERE SHOWN. SEE VACUUM BREAKER DETAIL THIS SHEET.				
	IRRAGATION CONNECTION TO CW SYSTEM, SEE SHEET 11.				
E	ELECTRICAL CABLE, TYPE UF, DIRECT BURIED.				

NOTES:
1. SYSTEM IS DESIGNED FOR REDUCED PRESSURE OF 80 PSI
2. PROVIDE GATE VALVE UPSTREAM OF EACH ELECTRIC VALVE AS PER VALVE BOX SCHEMATIC THIS SHEET.
3. CONNECT SCH. 40 PVC MAIN TO CW LINES AS INDICATED ON DRAWINGS. SEE SHT #11 FOR CW LINES LAYOUT.
4. INSTALL WIRING UNDER ROADS IN TRANSIT SLEEVE BEFORE ASPHALT IS LAID
5. INSTALL AUTOMATIC CONTROLLER IN ADMINISTRATION BLDG. SEE SHT. 51 FOR LOCATION.
6. RUN ELECT. CABLES IN TRENCH WITH SPRINKLER LINES, GENERALLY ON THE NORTH OR WEST.

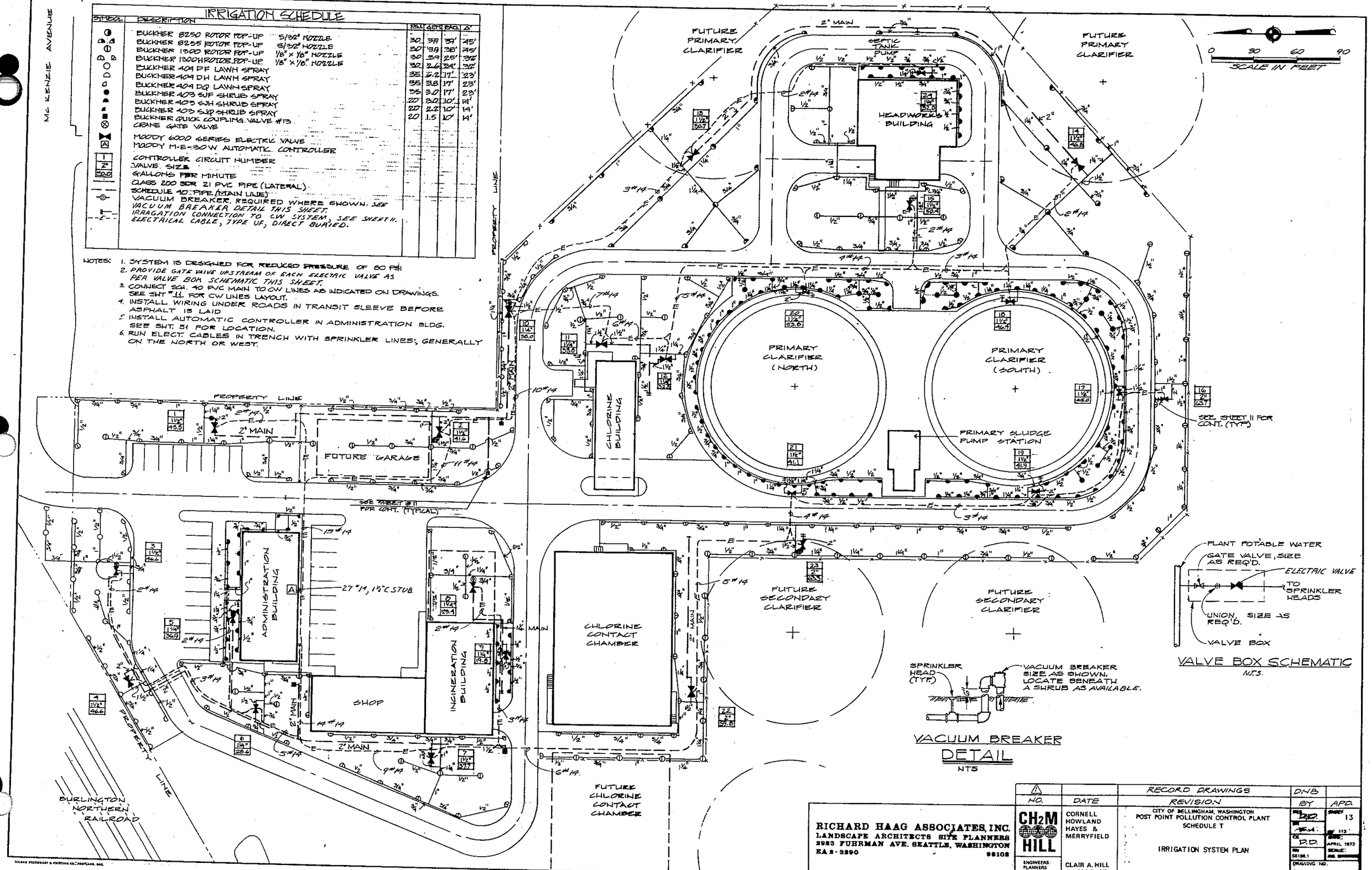

NO.	DATE	REVISION	BY	APD.
		RECORD DRAWINGS	DNB	

RICHARD HAAG ASSOCIATES, INC.
LANDSCAPE ARCHITECTS SITE PLANNERS
2923 FUHRMAN AVE. SEATTLE, WASHINGTON
EA 2-3290 98102

CH2M HILL
ENGINEERS-PLANNERS ECONOMISTS

CORNELL HOWLAND HAYES & MERRYFIELD
CLAIR A. HILL & ASSOCIATES

CITY OF BELLINGHAM, WASHINGTON
POST POINT POLLUTION CONTROL PLANT
SCHEDULE T

IRRIGATION SYSTEM PLAN

SHEET 13 OF 113
DATE: APRIL 1972
SCALE:
DRAWING NO. C 6198-2

SILVER STANDARD & PRINTING CO. PORTLAND, ORE.

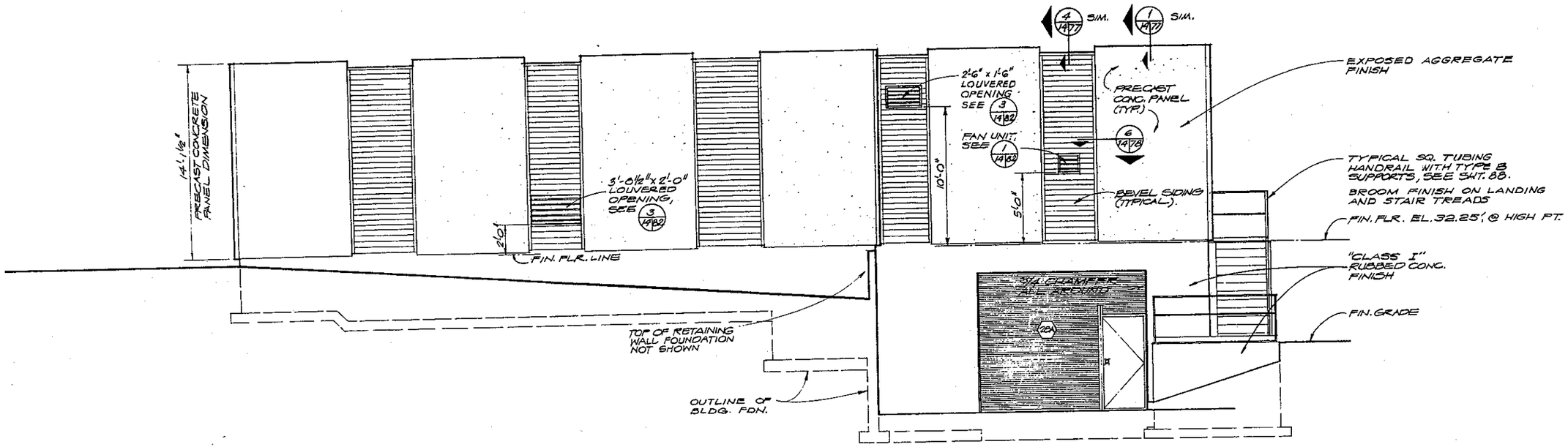

NORTH ELEVATION

1/4" = 1'-0"

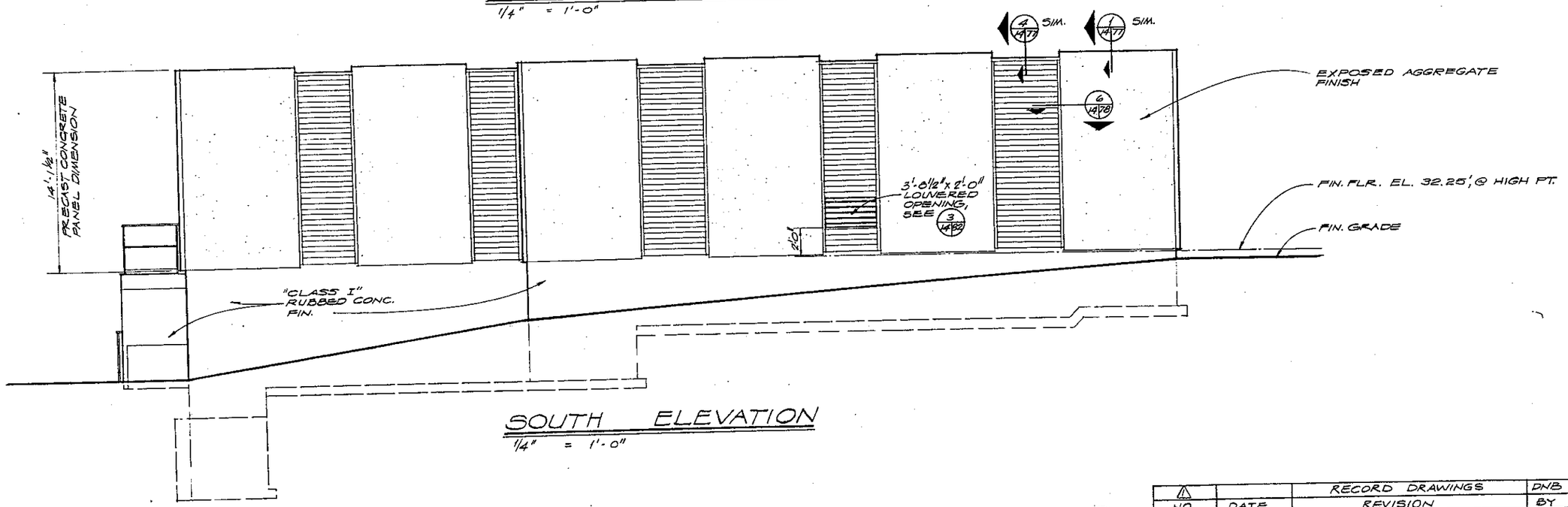

SOUTH ELEVATION

1/4" = 1'-0"

NO.	DATE	RECORD DRAWINGS / REVISION	DNB / BY	APD
		CITY OF BELLINGHAM, WASHINGTON POST POINT POLLUTION CONTROL PLANT SCHEDULE T HEADWORKS BUILDING - ARCHITECTURAL - ELEVATIONS	DES. OAF DR. OAF CK. JOB NO. 6196.1	SHEET 1 OF 113 DATE: APRIL 1972 SCALE: DRAWING NO. C 6196-2

CH2M HILL — ENGINEERS PLANNERS ECONOMISTS

CORNELL HOWLAND HAYES & MERRYFIELD

CLAIR A. HILL & ASSOCIATES

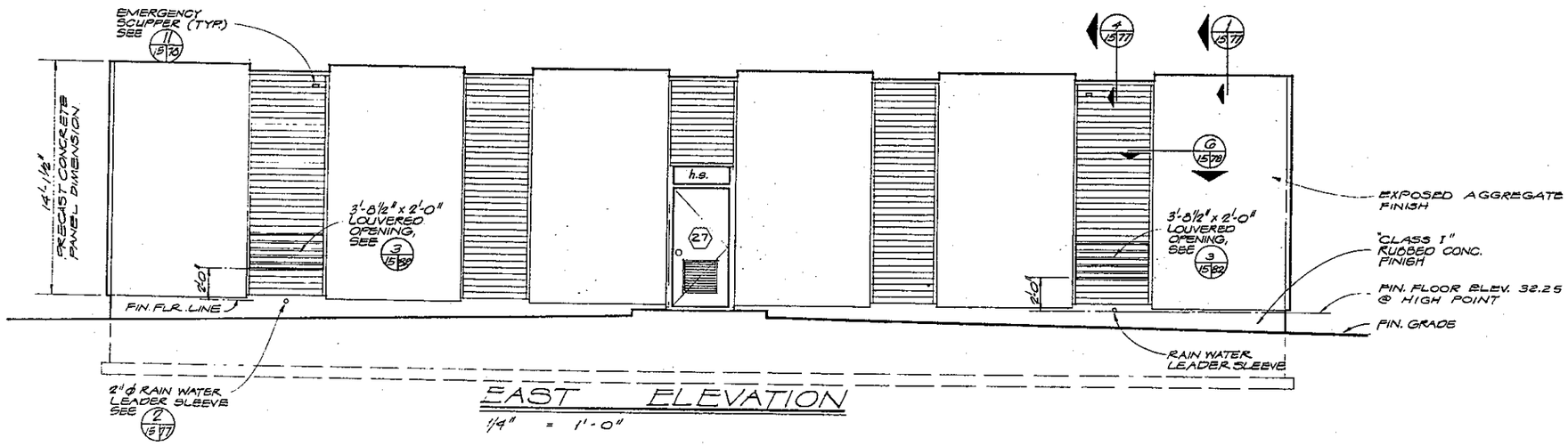

EAST ELEVATION

1/4" = 1'-0"

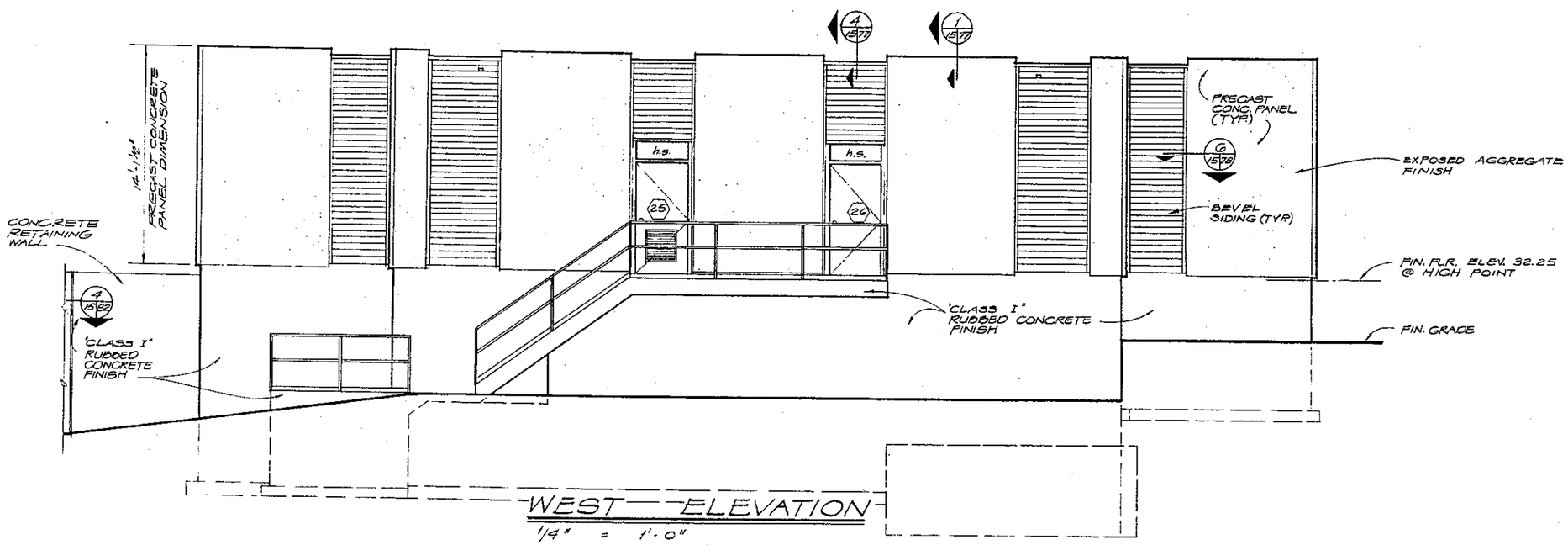

WEST ELEVATION

1/4" = 1'-0"

NO.	DATE	REVISION	BY	APD.
		RECORD DRAWINGS	DNB	

CH2M HILL — ENGINEERS PLANNERS ECONOMISTS

CORNELL HOWLAND HAYES & MERRYFIELD

CLAIR A. HILL & ASSOCIATES

CITY OF BELLINGHAM, WASHINGTON
POST POINT POLLUTION CONTROL PLANT
SCHEDULE T

HEADWORKS BUILDING -
ARCHITECTURAL - ELEVATIONS

DES. ·
DR. J.A.F.
CK. ·
RN 56198.1
DRAWING NO. C 6198-2

SHEET 15 OF 113
DATE: APRIL 1972
SCALE: AS SHOWN

BILBAR STATIONERY & PRINTING CO., PORTLAND, ORE.

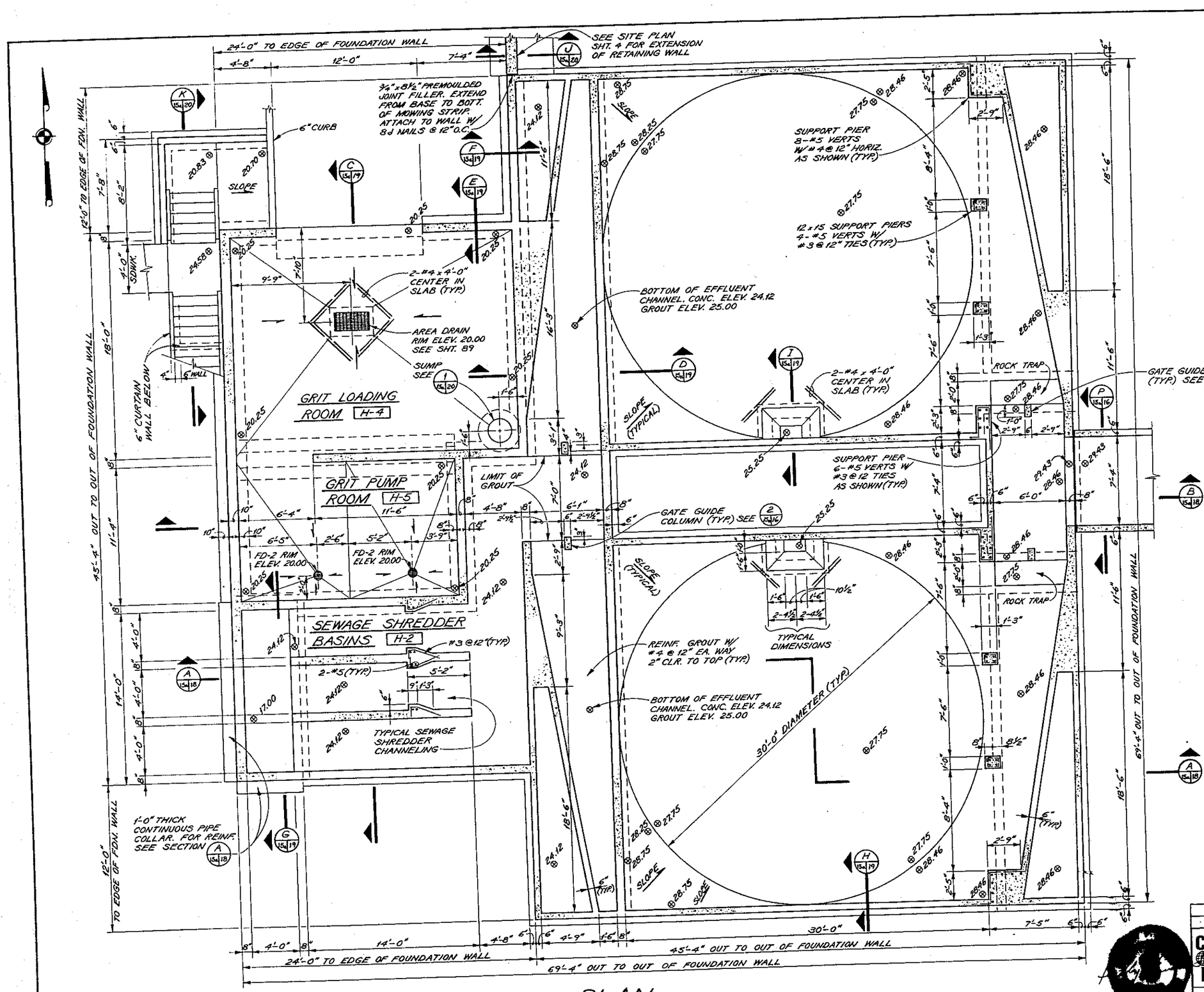

PLAN
1/4" = 1'-0"

FOUNDATION NOTES

1. ALL DIMENSIONS SHALL BE VERIFIED BY THE EQUIPMENT MANUFACTURER.
2. ALL REINF. LAPS SHALL BE: #4 - 1'-3", #5 - 1'-6", #6 - 1'-6", UNLESS OTHERWISE NOTED.
3. CENTER REINF. IN WALLS UNLESS OTHERWISE NOTED.
4. SLAB REINF. CLEARANCES UNLESS OTHERWISE NOTED SHALL BE:
   SLAB ON GRADE - 3" CLR. TO BOTTOM
   STRUCTURAL SLAB - 1" CLR. TO BOTTOM
5. WALL DOWELS INTO SLAB ON GRADE SHALL HAVE 1'-0" MIN. HOOK. 3" CLR. TO BOTTOM OF SLAB.
6. HORIZONTAL REINF. STEEL SHALL BE BENT CONTINUOUS AROUND ALL CORNERS.
7. WALL PANEL ANCHOR BOLTS SHALL BE PLACED IN FOUNDATION CURB AS PER SHTS. 85 & 86.
8. GRATING SUPPORTS, GATE GUIDES, WALL PIPES, ETC. SHALL BE PLACED AS SHOWN ON SHTS. 22 - 27.

NO.	DATE	RECORD DRAWINGS / REVISIONS	BY
			DNB

CH2M HILL — ENGINEERS PLANNERS ECONOMISTS

CORNELL HOWLAND HAYES & MERRYFIELD

CLAIR A. HILL & ASSOCIATES

CITY OF BELLINGHAM, WASHINGTON
POST POINT POLLUTION CONTROL PLANT
SCHEDULE T

HEADWORKS BUILDING -
STRUCTURAL - FOUNDATION PLAN

DES. RAH
DR.
CK.
PN. 56196.1
DATE: APRIL 1972
SCALE: AS SHOWN
SHEET 15 OF 113
DRAWING NO. C 6196-2

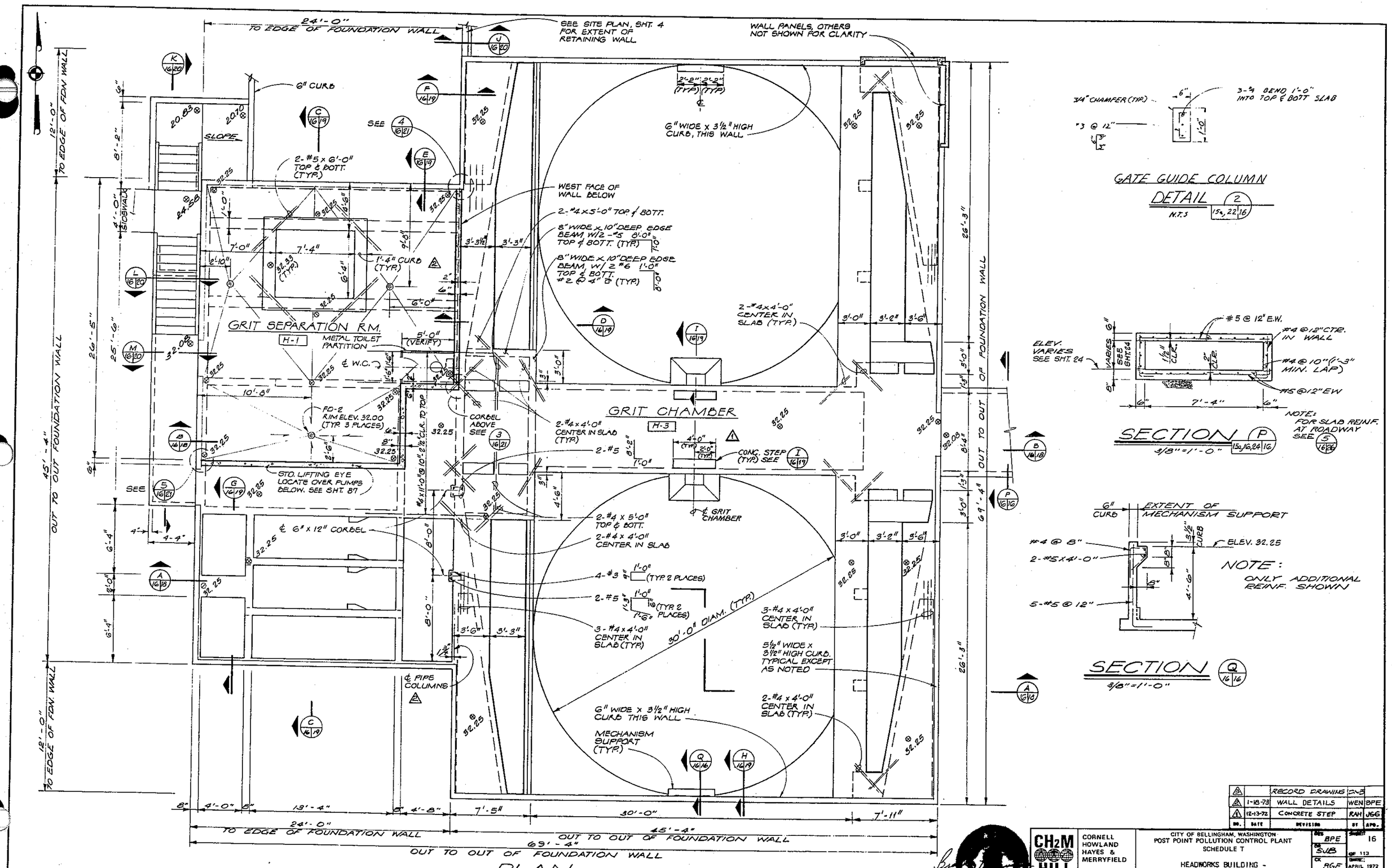

PLAN
1/4" = 1'-0"

GATE GUIDE COLUMN DETAIL 2 15a,22/16
N.T.S.

SECTION P 15a,16,24/16
3/8" = 1'-0"

NOTE: FOR SLAB REINF. AT ROADWAY SEE 5 16/26

NOTE: ONLY ADDITIONAL REINF. SHOWN

SECTION Q 16/16
3/8" = 1'-0"

NO.	DATE	REVISION	BY	APD.
3		RECORD DRAWING	SWB	
2	1-18-73	WALL DETAILS	WEN	BPE
1	12-13-72	CONCRETE STEP	RAH	JGG

CH2M HILL — ENGINEERS PLANNERS ECONOMISTS

CORNELL HOWLAND HAYES & MERRYFIELD — CLAIR A. HILL & ASSOCIATES

CITY OF BELLINGHAM, WASHINGTON
POST POINT POLLUTION CONTROL PLANT
SCHEDULE T

HEADWORKS BUILDING - STRUCTURAL - MAIN FLOOR PLAN

DES. BPE
DR. SWB
CK. RGE
RN 5618.1
SHEET 16 OF 113
DATE: APRIL 1972
SCALE: AS SHOWN
DRAWING NO. C 6198-2

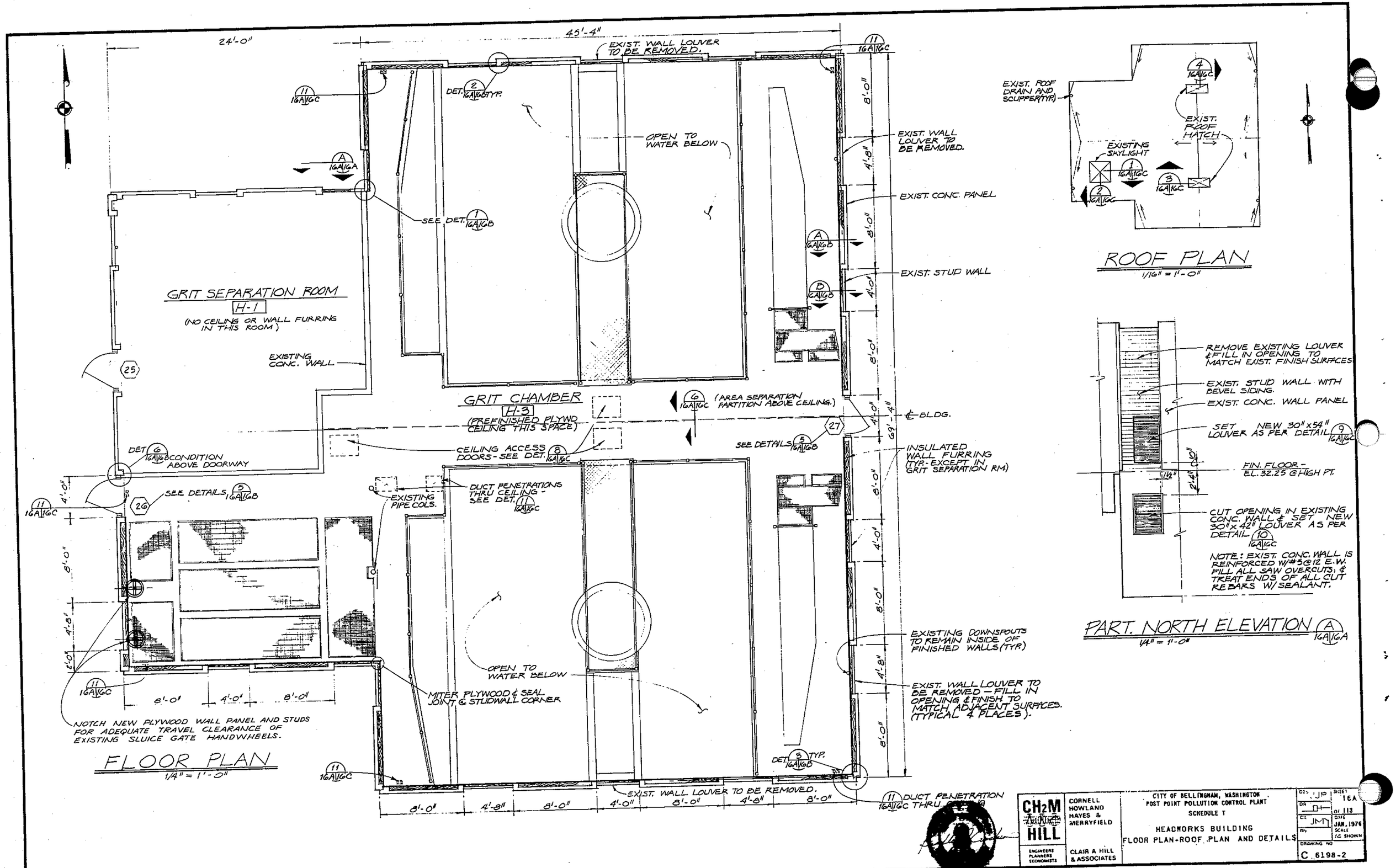
24'-0"
45'-4"
EXIST. WALL LOUVER TO BE REMOVED.
11 16A/16C
DET. 2 16A/16B TYP.
OPEN TO WATER BELOW
EXIST. WALL LOUVER TO BE REMOVED.
EXIST. CONC. PANEL
EXIST. STUD WALL
A 16A/16A
SEE DET. 1 16A/16B
A 16A/16B
D 16A/16B
GRIT SEPARATION ROOM
H-1
(NO CEILING OR WALL FURRING IN THIS ROOM)
EXISTING CONC. WALL
25
GRIT CHAMBER
H-3
(PREFINISHED PLYWD CEILING THIS SPACE)
6 16A/16C (AREA SEPARATION PARTITION ABOVE CEILING.)
27
℄ BLDG.
SEE DETAILS 5 16A/16B
INSULATED WALL FURRING (TYP. EXCEPT IN GRIT SEPARATION RM.)
DET 6 16A/16B CONDITION ABOVE DOORWAY
CEILING ACCESS DOORS - SEE DET. 8 16A/16C
26
SEE DETAILS 5 16A/16B
EXISTING PIPE COLS.
DUCT PENETRATIONS THRU CEILING - SEE DET. 11 16A/16C
EXISTING DOWNSPOUTS TO REMAIN INSIDE OF FINISHED WALLS (TYP.)
OPEN TO WATER BELOW
MITER PLYWOOD & SEAL JOINT @ STUDWALL CORNER
EXIST. WALL LOUVER TO BE REMOVED - FILL IN OPENING & FINISH TO MATCH ADJACENT SURFACES. (TYPICAL 4 PLACES).
NOTCH NEW PLYWOOD WALL PANEL AND STUDS FOR ADEQUATE TRAVEL CLEARANCE OF EXISTING SLUICE GATE HANDWHEELS.
DET. 3 16A/16B TYP.
EXIST. WALL LOUVER TO BE REMOVED.
11 16A/16C DUCT PENETRATION THRU CEILING
8'-0" 4'-8" 8'-0" 4'-0" 8'-0" 4'-0" 8'-0" 4'-8" 8'-0"
8'-0" 4'-0" 8'-0"
FLOOR PLAN
1/4" = 1'-0"
EXIST. ROOF DRAIN AND SCUPPER (TYP.)
4 16A/16C
EXIST. ROOF HATCH
EXISTING SKYLIGHT
1 16A/16C
3 16A/16C
2 16A/16C
ROOF PLAN
1/16" = 1'-0"
REMOVE EXISTING LOUVER & FILL IN OPENING TO MATCH EXIST. FINISH SURFACES
EXIST. STUD WALL WITH BEVEL SIDING.
EXIST. CONC. WALL PANEL
SET NEW 30" x 54" LOUVER AS PER DETAIL 9 16A/16C
FIN. FLOOR - EL. 32.25 @ HIGH PT.
CUT OPENING IN EXISTING CONC. WALL & SET NEW 30" x 42" LOUVER AS PER DETAIL 10 16A/16C
NOTE: EXIST. CONC. WALL IS REINFORCED W/#5@12 E.W. FILL ALL SAW OVERCUTS, & TREAT ENDS OF ALL CUT REBARS W/ SEALANT.
PART. NORTH ELEVATION A 16A/16A
1/4" = 1'-0"
CH2M HILL
ENGINEERS PLANNERS ECONOMISTS
CORNELL HOWLAND HAYES & MERRYFIELD
CLAIR A. HILL & ASSOCIATES
CITY OF BELLINGHAM, WASHINGTON
POST POINT POLLUTION CONTROL PLANT
SCHEDULE T
HEADWORKS BUILDING
FLOOR PLAN-ROOF PLAN AND DETAILS
DS JP
DR
CK JMT
SHEET 16A of 113
DATE JAN. 1976
SCALE AS SHOWN
DRAWING NO C 6198-2

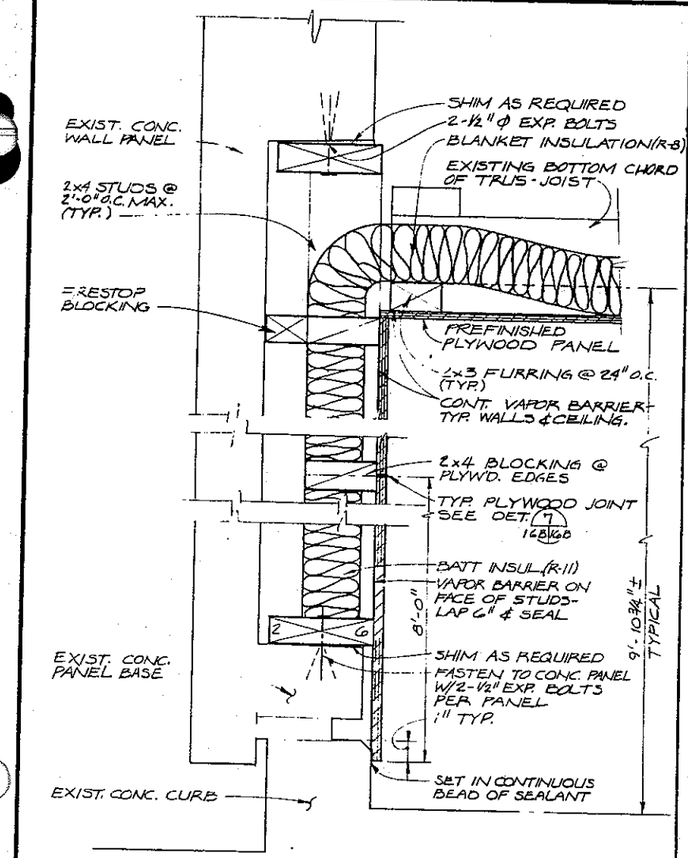

TYP. SECTION @ CONC. WALL PANELS (A) 16A/16B

3" = 1'-0"

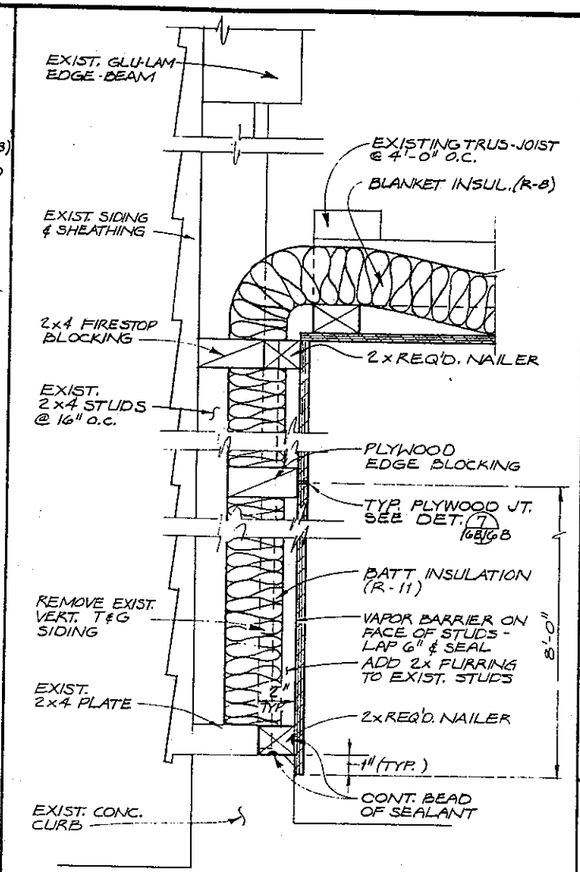

TYPICAL STUD WALL SECTION (B) 16A/16B

3" = 1'-0"

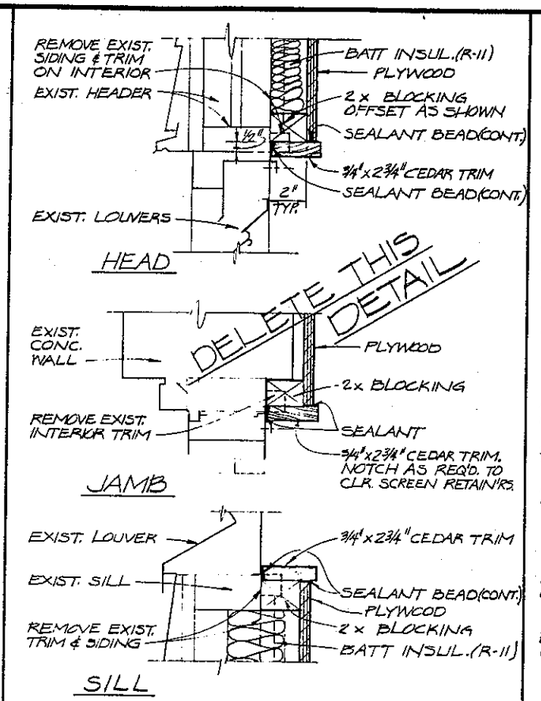

LOUVER DETAILS (4) 16A/16B

3" = 1'-0"

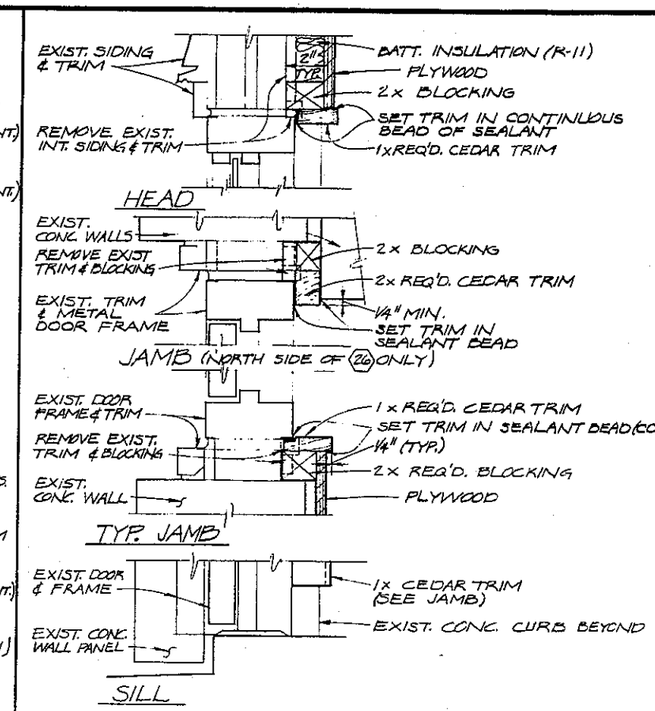

DOOR DETAILS (5) 16A/16B

3" = 1'-0"

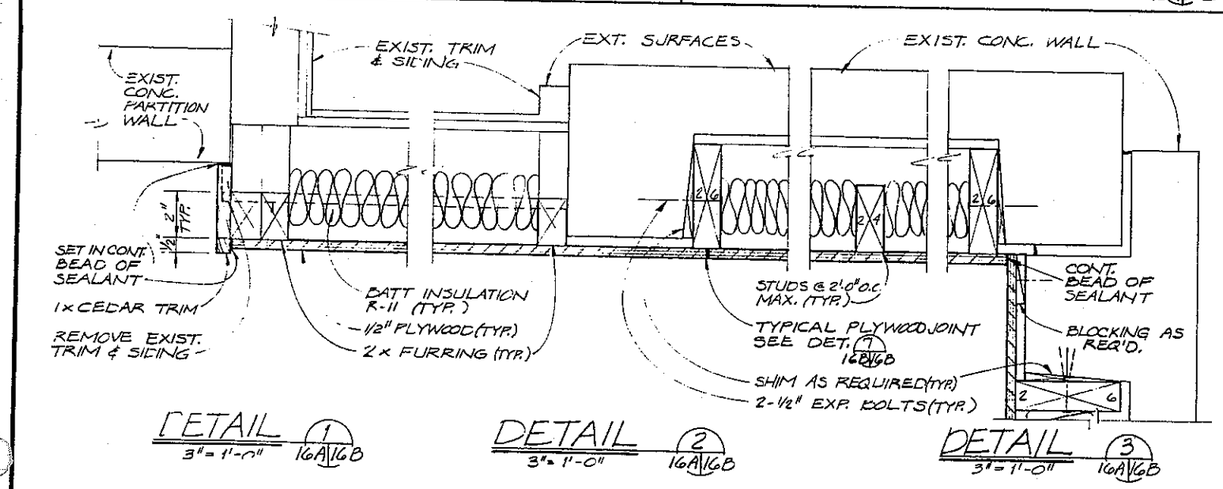

DETAIL (1) 16A/16B

3" = 1'-0"

DETAIL (2) 16A/16B

3" = 1'-0"

DETAIL (3) 16A/16B

3" = 1'-0"

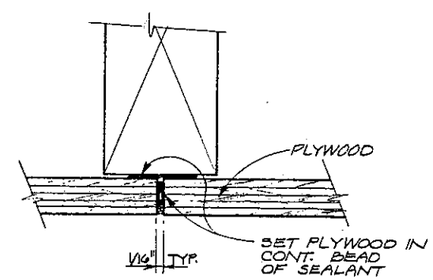

TYP. PLYWOOD JOINT (7) 16B/16B

FULL SIZE

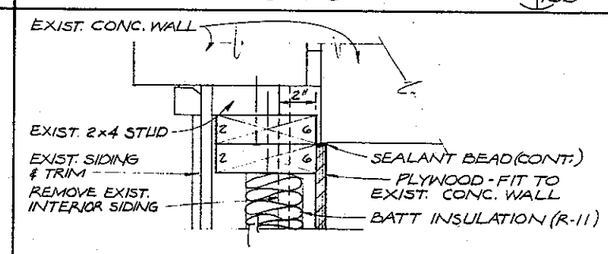

DETAIL (6) 16A/16B

3" = 1'-0"

NOTES:

1. APPLY PLYWOOD PANELS VERTICALLY TO STUDS W/ 6d GALVANIZED SIDING NAILS @ 6" O.C. AT PANEL EDGES AND 12" O.C. AT INTERMEDIATE SUPPORTS.
2. PAINT PLYWOOD WALL PANELS WITH:
   1 COAT EXTERIOR LATEX PRIMER (BEFORE INSTALLATION & ON PANEL EDGES)
   2 COATS EXT. ACRYLIC LATEX (OLYMPIC "BEIGE GRAY"). APPLY AFTER INSTALLATION.
3. PAINT INTERIOR WOOD TRIM WITH:
   1 COAT PRIMER-SEALER (BEFORE INSTALLATION)
   2 COATS EXT. ACRYLIC LATEX (OLYMPIC "BEIGE GRAY").
4. APPLY PLYWOOD TO 2x3 FURRING (@ 24" O.C.) W/ 6d GALVANIZED SIDING NAILS @ 6" O.C. @ PANEL EDGES & @ 12" O.C. @ INTERMEDIATE SUPPORTS.

CH2M HILL — ENGINEERS PLANNERS ECONOMISTS	CORNELL HOWLAND HAYES & MERRYFIELD CLAIR A HILL & ASSOCIATES	CITY OF BELLINGHAM, WASHINGTON POST POINT POLLUTION CONTROL PLANT SCHEDULE T HEADWORKS BUILDING WALL INSULATION DETAILS	DI: JJP DR: DH CK: JM C.L.:
			SHEET 16B of 113 DATE JAN. 1976 SCALE AS SHOWN DRAWING NO. C 6198-2

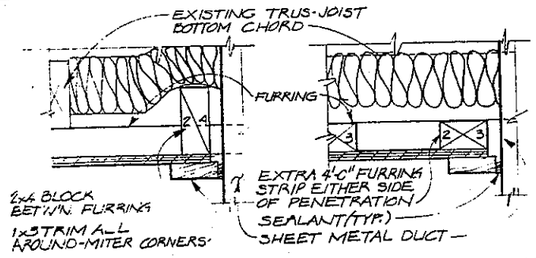

NORTH & SOUTH EDGES EAST & WEST EDGES

CEILING DUCT PENETRATIONS - TYPICAL EDGE DETAILS (11) 16A/16C

3" = 1'-0"

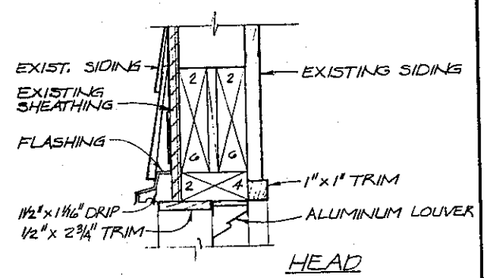

HEAD

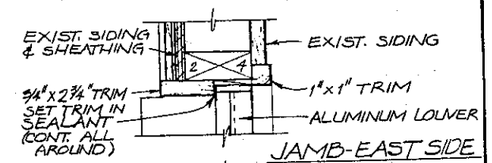

JAMB-EAST SIDE

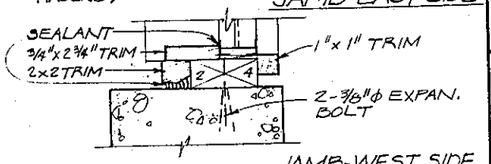

JAMB-WEST SIDE

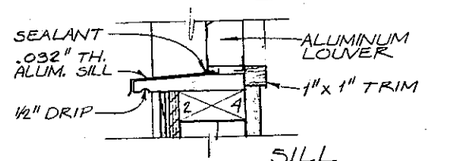

SILL

LOUVER DETAILS (9) 16A/16C

3" = 1'-0"

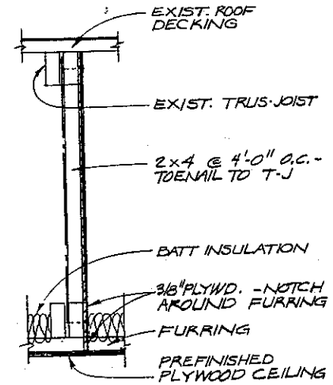

AREA SEPARATION DETAIL (6) 16A/16C

1½" = 1'-0"

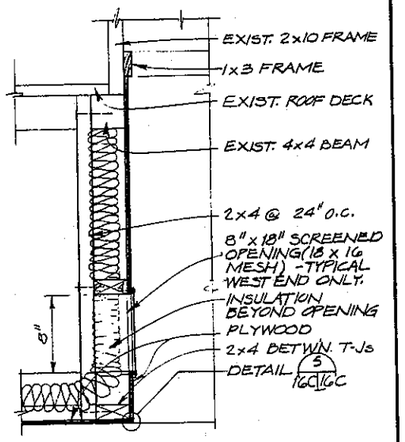

DETAIL (3) 16A/16C

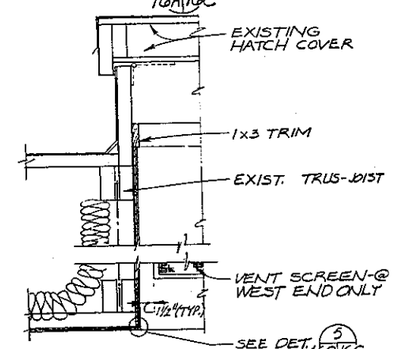

DETAIL (4) 16A/16C

ROOF HATCH DETAILS

1½" = 1'-0"

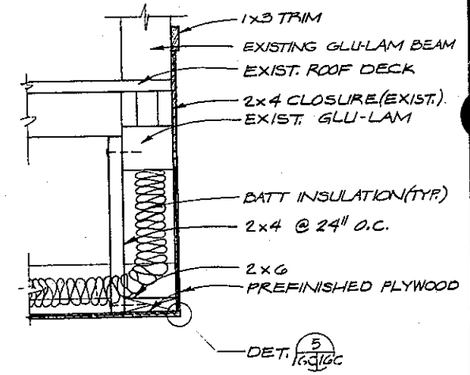

DETAIL (1) 16A/16C

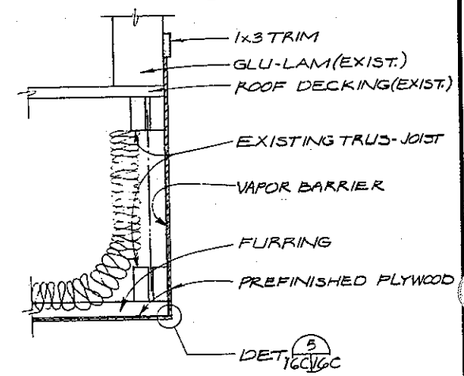

DETAIL (2) 16A/16C

SKYLIGHT DETAILS

1½" = 1'-0"

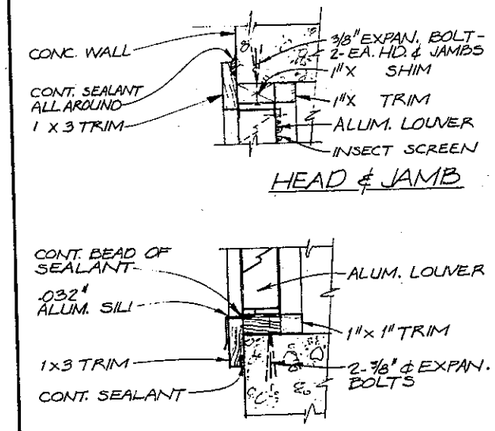

HEAD & JAMB

SILL

LOUVER DETAILS (10) 16A/16C

3" = 1'-0"

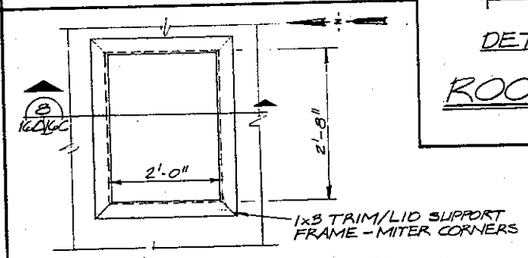

REFLECTED CEILING PLAN OF ACCESS OPENING (TYP.)

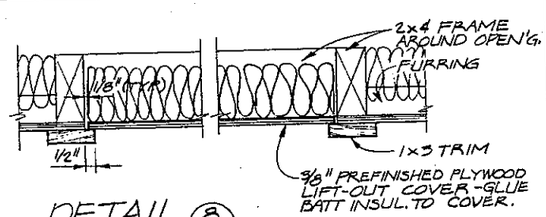

DETAIL (8) 16A/16C

3" = 1'-0"

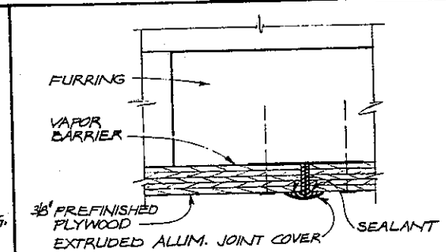

TYPICAL CEILING JOINT DETAIL

ACTUAL SIZE

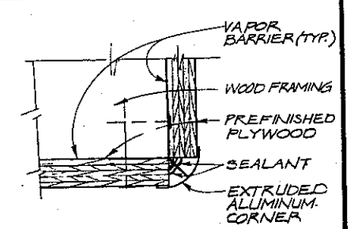

DETAIL (5) 16C/16C

ACTUAL SIZE

CH2M HILL — ENGINEERS PLANNERS ECONOMISTS

CORNELL HOWLAND HAYES & MERRYFIELD

CLAIR A. HILL & ASSOCIATES

CITY OF BELLINGHAM, WASHINGTON
POST POINT POLLUTION CONTROL PLANT
SCHEDULE T

HEADWORKS BUILDING
MISCELLANEOUS DETAILS

DES JJF | DR | CK JMY | RN | DATE JAN. 1976 | SCALE AS SHOWN | SHEET 16C OF 113 | DRAWING NO C 6198-2

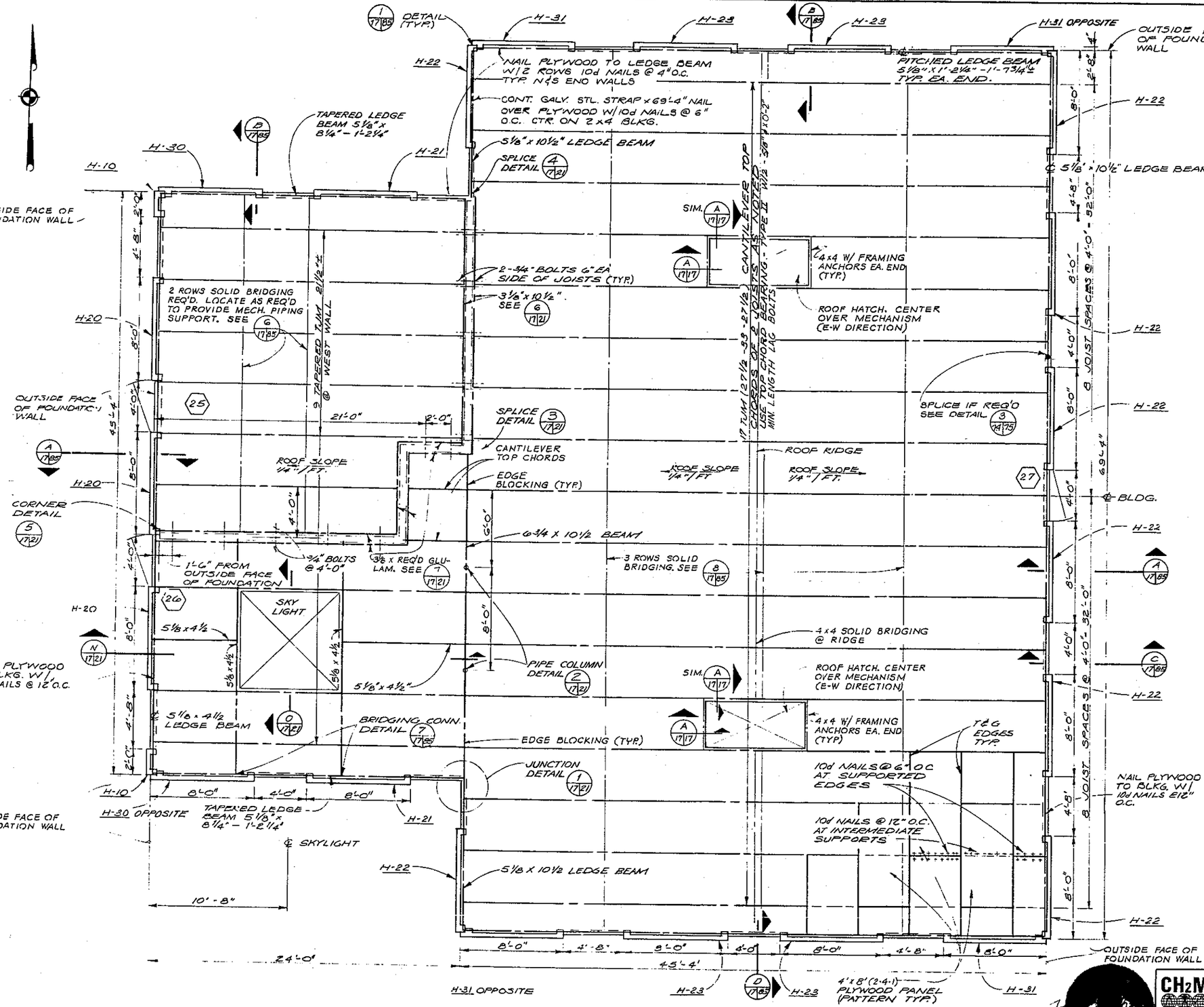

ROOF FRAMING PLAN

1/4" = 1'-0"

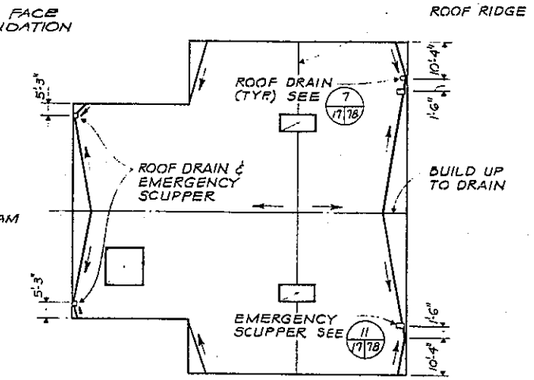

ROOF DRAINAGE PLAN

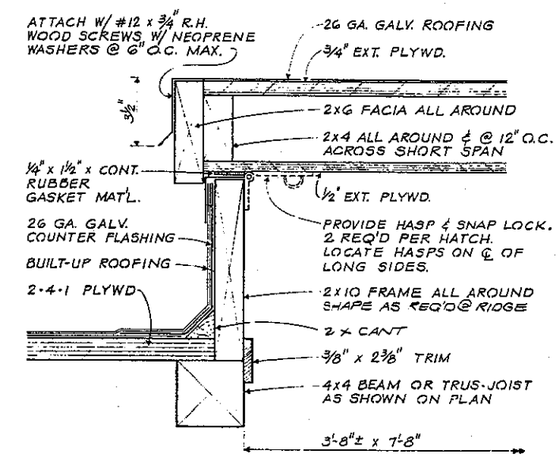

SECTION A 17/17

3" = 1'-0"

GENERAL NOTES

1. ALL PANELS W/ SAME SERIES DESIGNATIONS H-10's, H-20's & H-30's ARE SIMILAR. SECOND NUMERAL INDICATES INSERT & SLEEVE SCHEDULE I.E. H-20 & H-21 HAVE DIFFERENT INSERT & SLEEVE REQUIREMENTS. ADDITIONAL SPECIAL FASTENERS OR INSERTS ARE NOTED ON PANEL SHEET 86.
2. TRUSS DESIGN LOADS A: ↓ 40 P.S.F. (SNOW & D.L.) + RANDOM 500# LOAD APPLIED AT ANY TRUSS PIN LOCATION. B: ↑ 15 P.S.F. WIND UPLIFT.
3. BOTTOM CHORDS OF TJM'S @ UNIFORM ELEVATION 42.44±
4. LENGTH OF TAPERED TJM'S VARY. DESIGN WEB SPACING TO PERMIT SKYLIGHT FRAMING.
5. PREDRILL HOLES FOR 10d NAILS IN END WALL LEDGE BEAMS.
6. FASTEN ALL BRIDGING W/ BOLTS DESIGNED BY THE MFR. INSTALL CONT. 2x4 @ ENDS OF BTM. JST. CHORDS. SPLICE PER DET. 5/85/85.
7. PROVIDE STD. ℞ WASHERS @ ALL BOLTED CONNECTION SURFACES UNLESS OTHERWISE NOTED. 2" O.D. FOR 3/4" ϕ BOLTS.

NO.	DATE	REVISION	BY	APD.
1		RECORD DRAWINGS	DNB	

CH2M HILL — ENGINEERS PLANNERS ECONOMISTS

CORNELL HOWLAND HAYES & MERRYFIELD

CLAIR A. HILL & ASSOCIATES

CITY OF BELLINGHAM, WASHINGTON
POST POINT POLLUTION CONTROL PLANT
SCHEDULE T

HEADWORKS BUILDING -
STRUCTURAL - ROOF PLAN

DES -C
DR CDS
CK
FN 56198.1
SHEET 17 OF 113
DATE: APRIL 1972
SCALE: AS SHOWN
DRAWING NO. C 6198-2

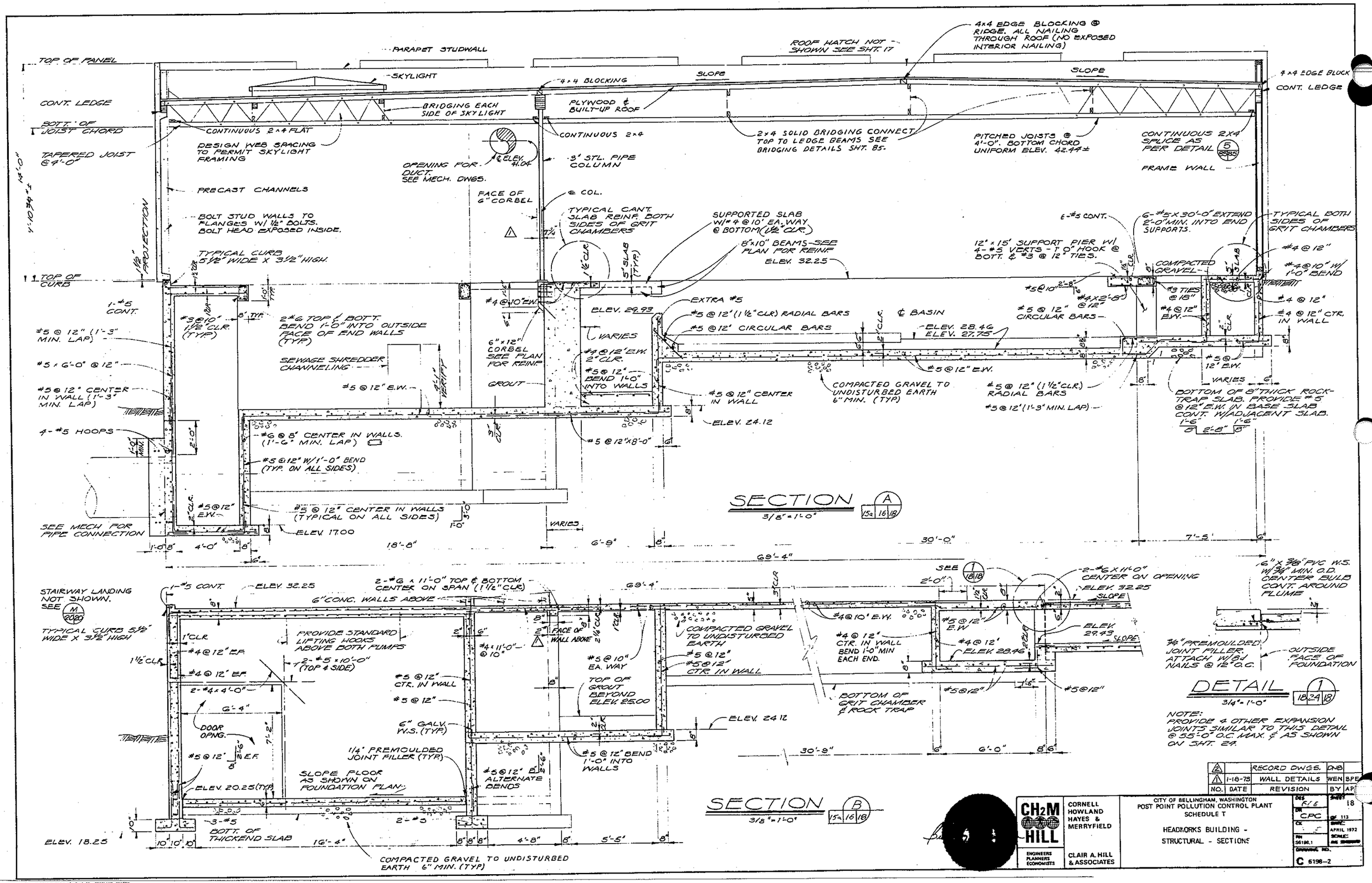
TOP OF PANEL
PARAPET STUDWALL
SKYLIGHT
4x4 BLOCKING
SLOPE
ROOF HATCH NOT SHOWN SEE SHT. 17
4x4 EDGE BLOCKING @ RIDGE. ALL NAILING THROUGH ROOF (NO EXPOSED INTERIOR NAILING)
4x4 EDGE BLOCK
CONT. LEDGE
BRIDGING EACH SIDE OF SKYLIGHT
PLYWOOD & BUILT-UP ROOF
BOTT. OF JOIST CHORD
CONTINUOUS 2x4 FLAT
CONTINUOUS 2x4
2x4 SOLID BRIDGING CONNECT TOP TO LEDGE BEAMS SEE BRIDGING DETAILS SHT. 85.
PITCHED JOISTS @ 4'-0". BOTTOM CHORD UNIFORM ELEV. 42.44±
CONTINUOUS 2X4 SPLICE AS PER DETAIL 5
TAPERED JOIST @4'-0"
DESIGN WEB SPACING TO PERMIT SKYLIGHT FRAMING
OPENING FOR DUCT. SEE MECH. DWGS.
℄ ELEV. 41.04
3" STL. PIPE COLUMN
FRAME WALL
PRECAST CHANNELS
FACE OF 6" CORBEL
℄ COL.
BOLT STUD WALLS TO FLANGES W/ 1/2" BOLTS. BOLT HEAD EXPOSED INSIDE.
TYPICAL CANT. SLAB REINF. BOTH SIDES OF GRIT CHAMBERS
SUPPORTED SLAB W/#4 @ 10' EA. WAY @ BOTTOM (1 1/2" CLR.)
8"x10" BEAMS-SEE PLAN FOR REINF.
ELEV. 32.25
6-#5 CONT.
6-#5 x 30'-0" EXTEND 2'-0" MIN. INTO END SUPPORTS.
TYPICAL BOTH SIDES OF GRIT CHAMBERS
12" x 15" SUPPORT PIER W/ 4-#5 VERTS - 1'-0" HOOK @ BOTT. & #3 @ 12" TIES.
TYPICAL CURB 5 1/2" WIDE x 3 1/2" HIGH.
TOP OF CURB
COMPACTED GRAVEL
#4 @ 12"
#4 @ 10" W/ 1'-0" BEND
#5 @ 10"
#4 x 2'-8" @ 12"
#3 TIES @ 18"
#4 @ 12" E.W.
#4 @ 12"
#4 @ 12" CTR. IN WALL
1-#5 CONT.
#4 @ 10" E.W.
EXTRA #5
#5 @ 12' (1 1/2" CLR) RADIAL BARS
#5 @ 12' CIRCULAR BARS
℄ BASIN
ELEV. 28.46
ELEV. 27.75
#5 @ 12" CIRCULAR BARS
#3 @ 10" 1 1/2" CLR. (TYP)
2-#6 TOP & BOTT. BEND 1'-0" INTO OUTSIDE FACE OF END WALLS (TYP)
ELEV. 29.93
VARIES
#4 @ 12" E.W. 2" CLR.
#5 @ 12" BEND 1'-0" INTO WALLS
6" x 12" CORBEL SEE PLAN FOR REINF.
#5 @ 12" (1 1/2" CLR.) RADIAL BARS
#5 @ 12" (1'-3" MIN. LAP)
#5 @ 12" (1'-3" MIN. LAP)
#5 @ 12" (1'-3" MIN. LAP)
#5 @ 12" CENTER IN WALL (1'-3" MIN. LAP)
#5 x 6'-0" @ 12"
SEWAGE SHREDDER CHANNELING
#5 @ 12" E.W.
GROUT
#5 @ 12" CENTER IN WALL
#5 @ 12" E.W.
#5 @ 12" E.W.
COMPACTED GRAVEL TO UNDISTURBED EARTH 6" MIN. (TYP)
VARIES
BOTTOM OF 8" THICK ROCK-TRAP SLAB. PROVIDE #5 @ 12" E.W. IN BASE SLAB CONT. W/ ADJACENT SLAB.
4-#5 HOOPS
ELEV. 24.12
#6 @ 8" CENTER IN WALLS. (1'-6" MIN. LAP)
#5 @ 12" x 8'-0"
#5 @ 12" W/ 1'-0" BEND (TYP. ON ALL SIDES)
#5 @ 12" E.W.
#5 @ 12" CENTER IN WALLS (TYPICAL ON ALL SIDES)
ELEV. 17.00
SEE MECH FOR PIPE CONNECTION
VARIES
18'-8"
6'-9"
30'-0"
7'-5"
69'-4"
SECTION A
3/8" = 1'-0"
STAIRWAY LANDING NOT SHOWN. SEE M 2020
1-#5 CONT.
ELEV. 32.25
2-#6 x 11'-0" TOP & BOTTOM CENTER ON SPAN (1 1/2" CLR.)
6" CONC. WALLS ABOVE
SEE 1 18/18
2-#6 x 11'-0" CENTER ON OPENING
ELEV. 32.25
SLOPE
6" x 3/8" PVC W.S. W/ 3/4" MIN. O.D. CENTER BULB CONT. AROUND FLUME
TYPICAL CURB 5 1/2" WIDE x 3 1/2" HIGH
PROVIDE STANDARD LIFTING HOOKS ABOVE BOTH PUMPS
FACE OF WALL ABOVE
COMPACTED GRAVEL TO UNDISTURBED EARTH
#4 @ 10" E.W.
#5 @ 12" E.W.
ELEV. 29.43
SLOPE
#4 @ 12" E.F.
2-#5 x 10'-0" (TOP & SIDE)
#4 @ 10" EA. WAY
#5 @ 12"
#5 @ 12"
#4 @ 12" CTR. IN WALL BEND 1'-0" MIN EACH END.
#4 @ 12"
ELEV. 28.46
3/4" PREMOULDED JOINT FILLER. ATTACH W/ 8d NAILS @ 12" O.C.
OUTSIDE FACE OF FOUNDATION
#4 @ 12" E.F.
2-#4 x 4'-0"
#5 @ 12" CTR. IN WALL
#5 @ 12" CTR. IN WALL
TOP OF GROUT BEYOND ELEV. 25.00
BOTTOM OF GRIT CHAMBER & ROCK TRAP
#5 @ 12"
#5 @ 12"
DETAIL 1
3/4" = 1'-0"
18/24/18
6'-4"
DOOR OPNG.
6" GALV. W.S. (TYP)
ELEV. 24.12
#5 @ 12" E.F.
1/4" PREMOULDED JOINT FILLER (TYP)
#5 @ 12" BEND 1'-0" INTO WALLS
30'-9"
6'-0"
NOTE: PROVIDE 4 OTHER EXPANSION JOINTS SIMILAR TO THIS DETAIL @ 55'-0" O.C. MAX. & AS SHOWN ON SHT. 24.
SLOPE FLOOR AS SHOWN ON FOUNDATION PLAN
#5 @ 12" ALTERNATE BENDS
ELEV. 20.25 (TYP)
3-#5
2-#5
BOTT. OF THICKEND SLAB
16'-4"
4'-8"
5'-5"
ELEV. 18.25
COMPACTED GRAVEL TO UNDISTURBED EARTH 6" MIN. (TYP)
SECTION B
3/8" = 1'-0"
15a 16 18
RECORD DWGS. DNB
1-18-75 WALL DETAILS WEN SPE
NO. DATE REVISION BY AP
CH2M HILL
ENGINEERS PLANNERS ECONOMISTS
CORNELL HOWLAND HAYES & MERRYFIELD
CLAIR A. HILL & ASSOCIATES
CITY OF BELLINGHAM, WASHINGTON
POST POINT POLLUTION CONTROL PLANT
SCHEDULE T
HEADWORKS BUILDING - STRUCTURAL - SECTIONS
DES. F/E
DR. CPC
CK.
PN 56198.1
SHEET 18 OF 113
DATE APRIL 1972
SCALE: AS SHOWN
DRAWING NO. C 6198-2

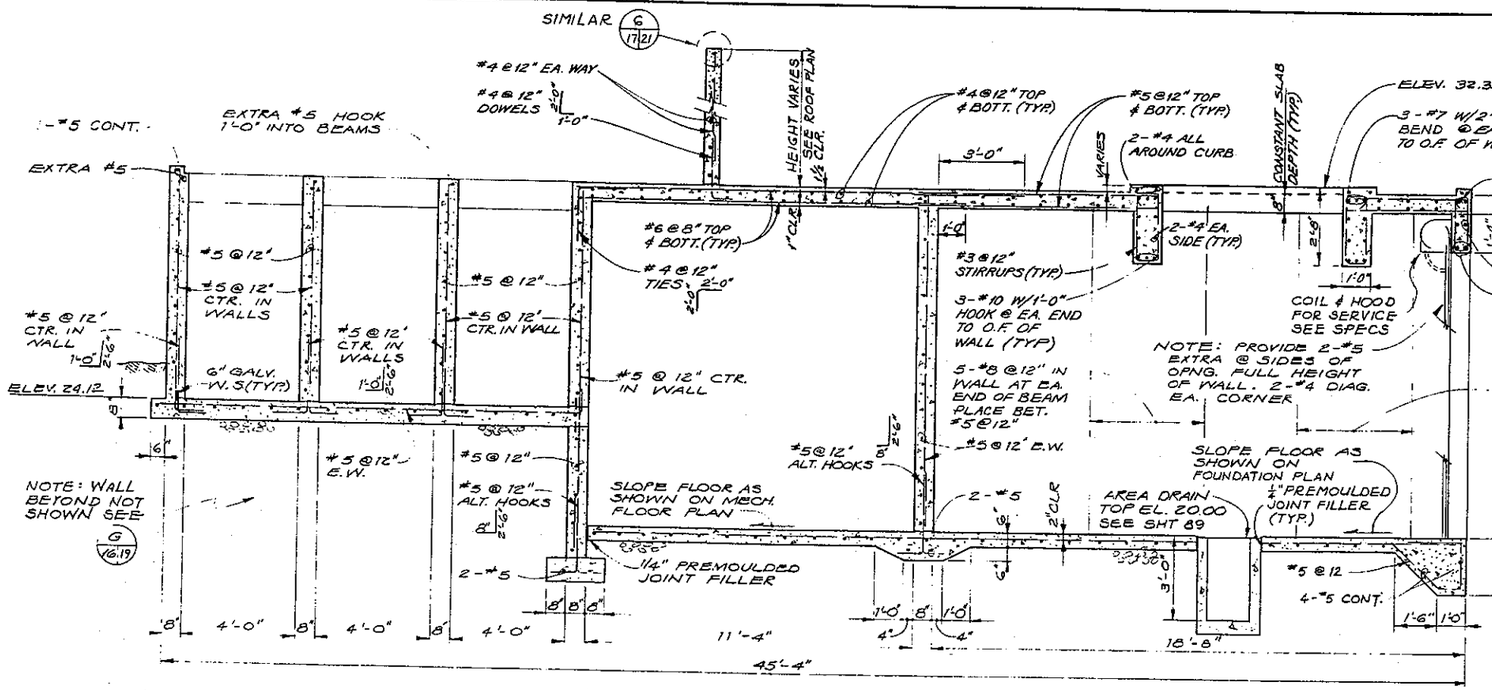

SECTION G
3/8" = 1'-0"
15a 16 19

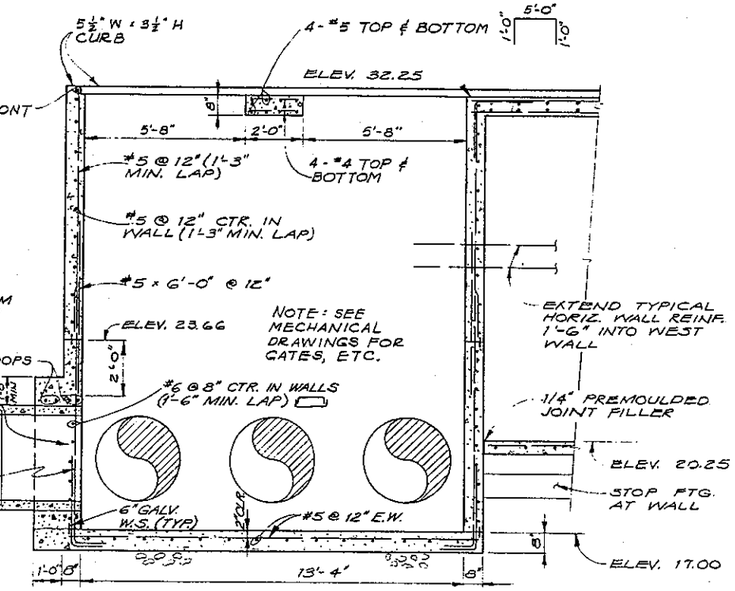

SECTION G
3/8" = 1'-0"
15a 16 19

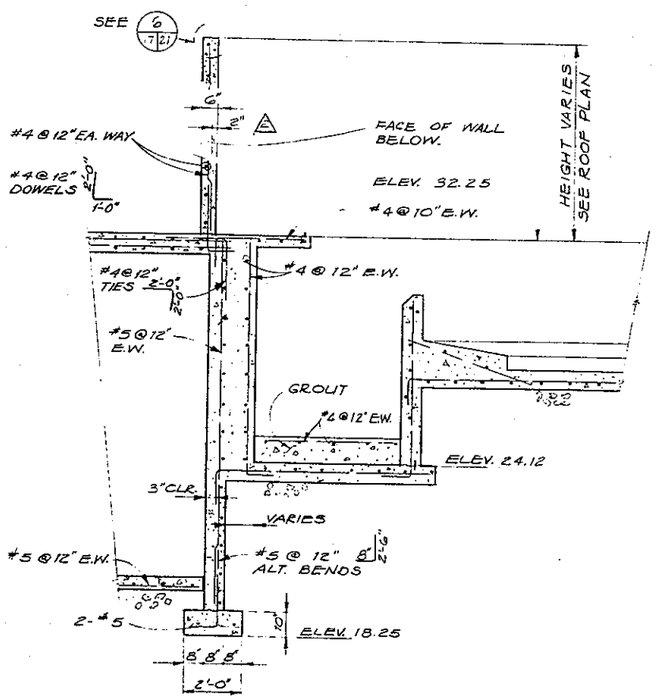

SECTION D
3/8" = 1'-0"
15a 16 19

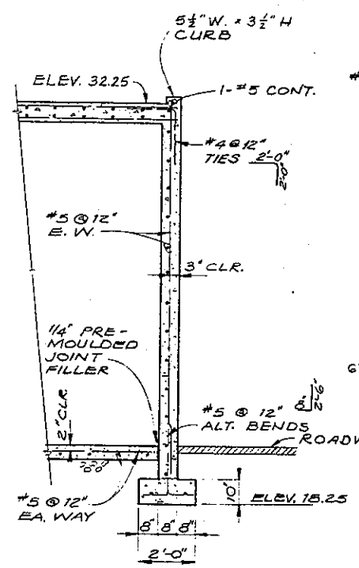

SECTION E
3/8" = 1'-0"
15a 16 19

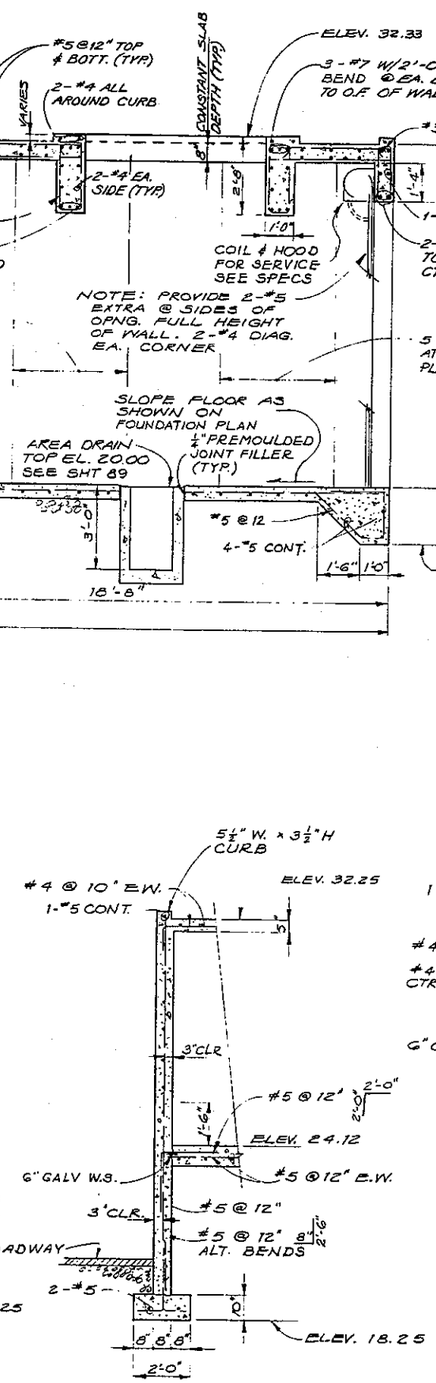

SECTION F
3/8" = 1'-0"
15a 16 19

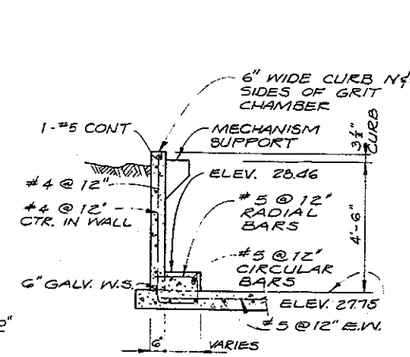

SECTION H
3/8" = 1'-0"
15a 16 19

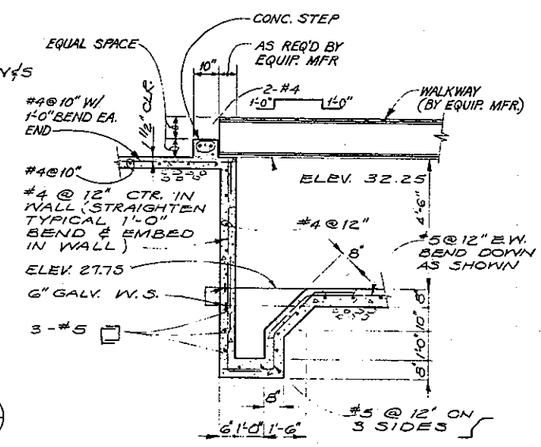

SECTION I
3/8" = 1'-0"
15a 16 19

NO.	DATE	REVISION	BY	APP.
3		RECORD DWGS.	DNB	
2	1-18-73	WALL DETAILS	WEN	BPE
1	12-13-72	CONCRETE STEP	RAH	JGG

CH2M HILL — ENGINEERS PLANNERS ECONOMISTS

CORNELL HOWLAND HAYES & MERRYFIELD

CLAIR A. HILL & ASSOCIATES

CITY OF BELLINGHAM, WASHINGTON
POST POINT POLLUTION CONTROL PLANT
SCHEDULE T

HEADWORKS BUILDING - STRUCTURAL - SECTIONS

DES. BPE
DR. CPC
CK. RGE
PROJ. 56198.1
DATE APRIL 1972
SCALE: AS SHOWN
SHEET 19 OF 113
DRAWING NO. C 6198-2

NOTES:

1. SEE SITE PLAN SHT 4, FOR LOCATION AND CURVATURE.
2. CURVATURE SHALL BE MADE WITH CURVED FORMS.
3. SEE ARCH. ELEV. AND (4/15a 82) FOR VERTICAL RUSTICATIONS.
4. 3/4" PREMOLDED JT. FILLER BETWEEN BLDG. FDN. & END OF WALL SECURE TO RETAINING WALL WITH 8d NAILS @ 1'-0"

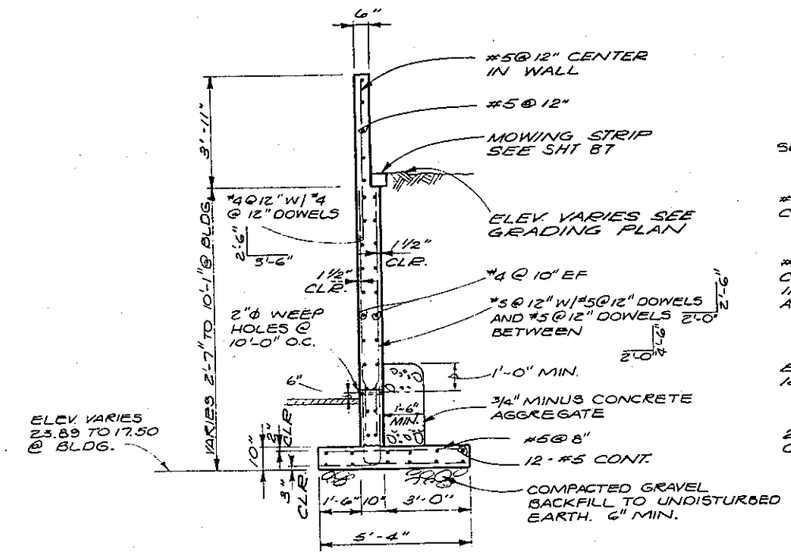

SECTION (J / 15a 16 20)
3/8" = 1'-0"

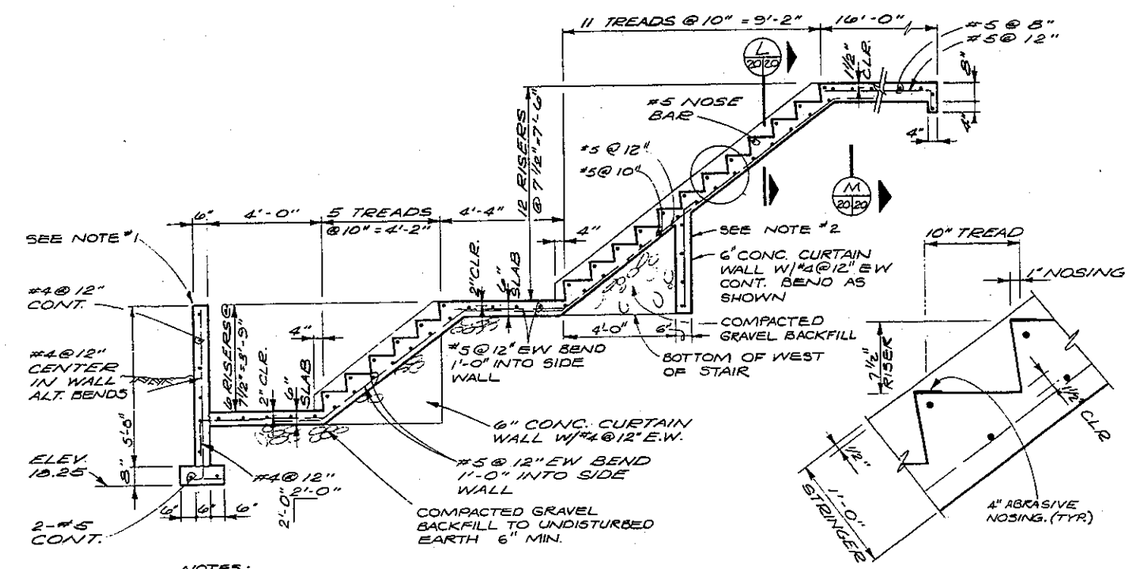

NOTES:
1. CONTINUE RETAINING WALL AS SHOWN ON FOUNDATION PLAN. REINF IS CONT.
2. CONTINUE CURTAIN WALL SHOWN ON FDN. PLAN. REINF IS CONT.

SECTION (K / 15a 16 20)
3/8" = 1'-0"

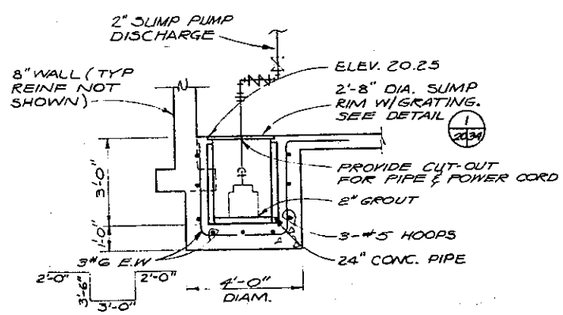

SUMP PUMP DETAIL (1 / 15a 23 20)
3/8" = 1'-0"

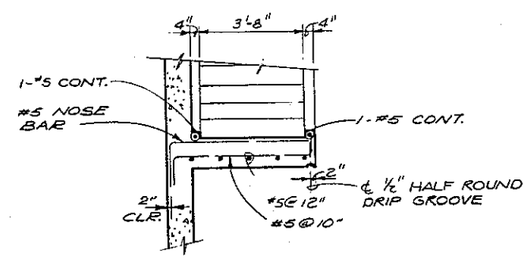

SECTION (L / 16 20 20)
3/8" = 1'-0"

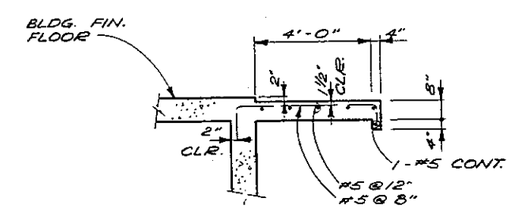

SECTION (M / 16 20 20)
3/8" = 1'-0"

NO.	DATE	REVISION	BY	APD.
		RECORD DRAWINGS	DNB	

CH2M HILL — ENGINEERS PLANNERS ECONOMISTS

CORNELL HOWLAND HAYES & MERRYFIELD

CLAIR A. HILL & ASSOCIATES

CITY OF BELLINGHAM, WASHINGTON
POST POINT POLLUTION CONTROL PLANT
SCHEDULE T

HEADWORKS BUILDING -
STRUCTURAL - RETAINING WALL AND STAIRWAY SECTIONS

DES. RPE
DR. SJB
CK. RGE
JOB NO. 56198.1
SHEET 20 OF 113
DATE: APRIL 1972
SCALE: AS SHOWN
DRAWING NO. C 6198-2

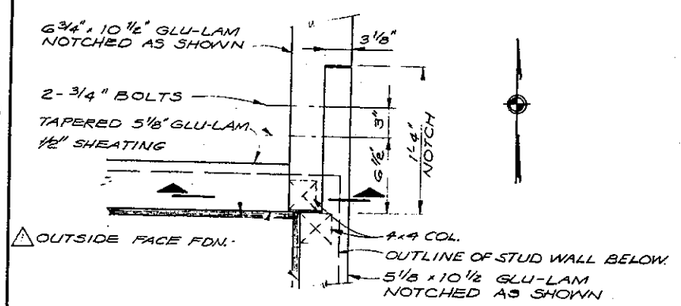

PLAN

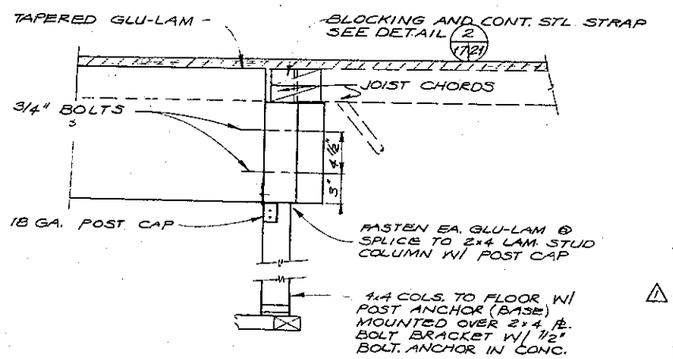

SECTION

JUNCTION DETAIL 1/17/21

1 1/2" = 1'-0"

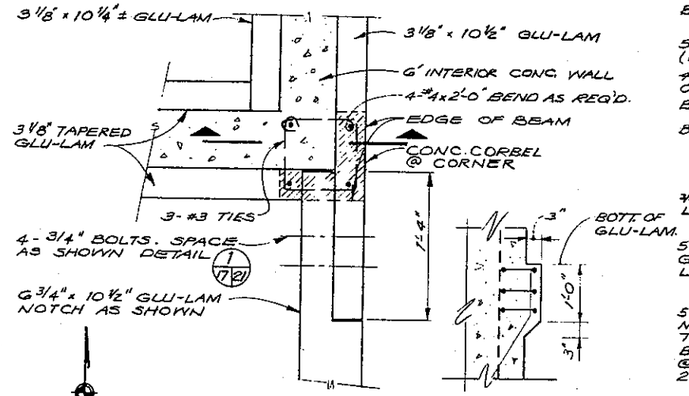

PLAN SECTION

N.T.S.

SPLICE DETAIL 3/16,17/21

1 1/2" = 1'-0"

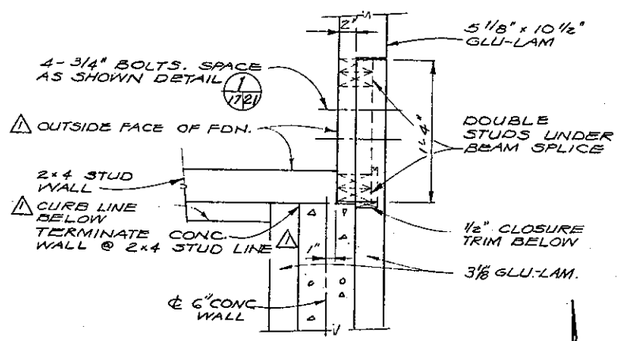

PLAN

SPLICE DETAIL 4/16,17/21

1 1/2" = 1'-0"

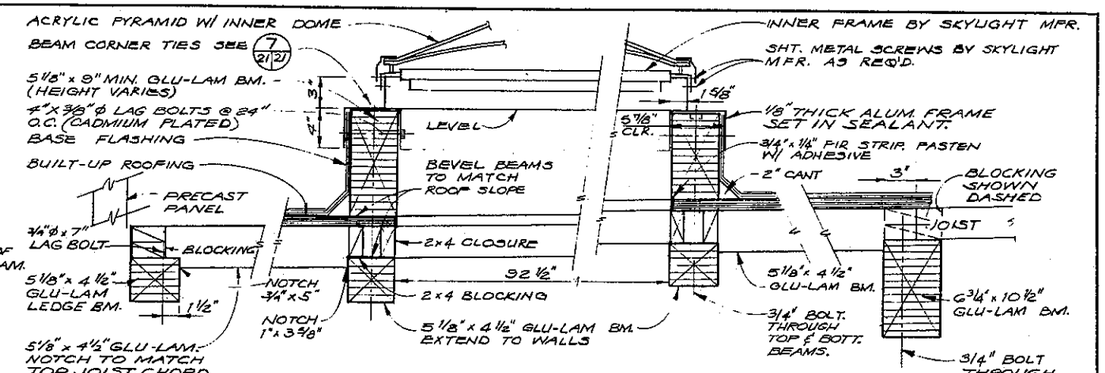

SECTION N/17/21

1 1/2" = 1'-0"

NOTE:
COUNTERSINK TOPS OF ALL BEAMS FOR PLUSH BOLT HEAD. CAULK OVER TO PREVENT ALUMINUM FRAME TO BOLT CONTACT.

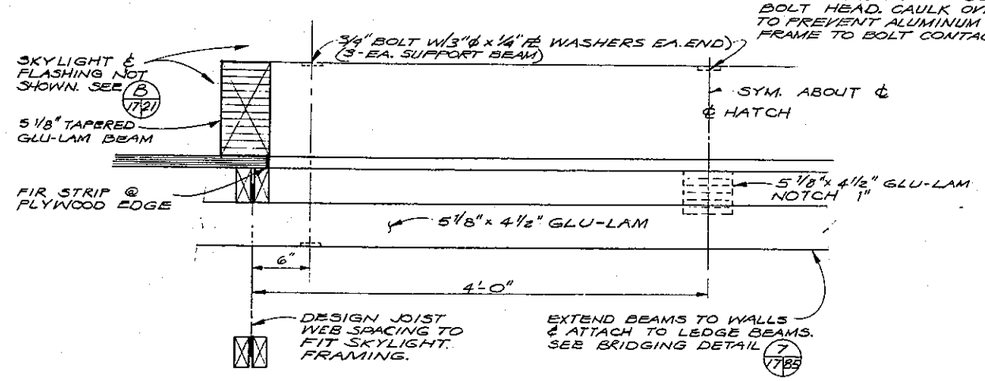

SECTION O/17/21

1 1/2" = 1'-0"

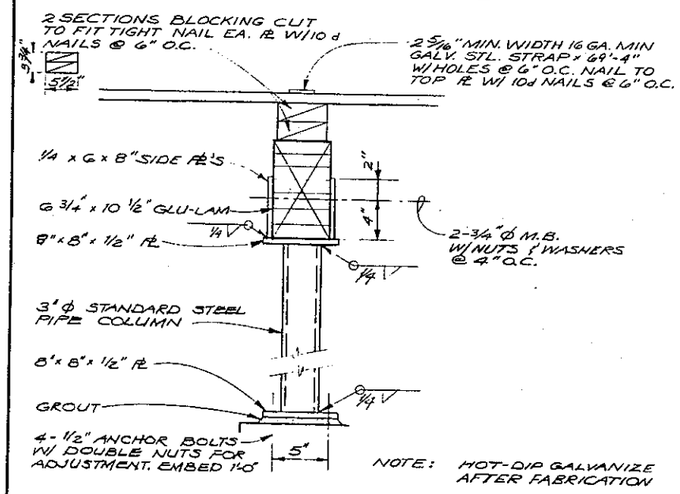

NOTE: HOT-DIP GALVANIZE AFTER FABRICATION

PIPE COLUMN DETAIL 2/17/21

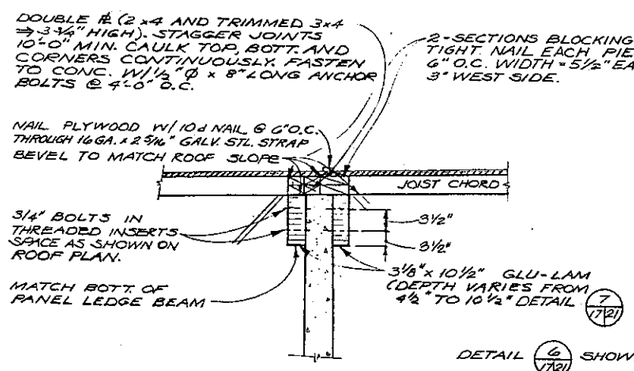

SECTION

DETAIL 6/17/21 7/17/21

N.T.S.

DETAIL 6/17/21 SHOWN 7/17/21 SIMILAR W/ THE FOLLOWING EXCEPTIONS

1. DOUBLE PL'S OVER CONC. WALL 2 x 6 & 3 x 6 TRIMMEL ⇒ 3 3/4" HIGH. NAIL PLYWOOD TO TOP PL W/ 10d NAILS @ 6" O.C.
2. NO GALV. STL. STRAP

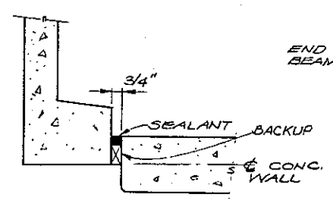

CORNER DETAIL 5/16/17/21

N.T.S.

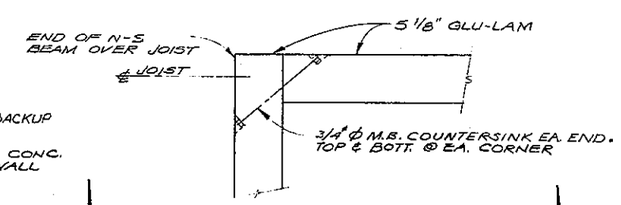

PLAN

DETAIL 7/21/21

N.T.S.

NO.	DATE	REVISION	BY	APD
		RECORD DWGS.	DNB	
1	1-18-73	WALL DETAILS	WEN	BPE

CH2M HILL — ENGINEERS PLANNERS ECONOMISTS

CORNELL HOWLAND HAYES & MERRYFIELD — CLAIR A. HILL & ASSOCIATES

CITY OF BELLINGHAM, WASHINGTON
POST POINT POLLUTION CONTROL PLANT
SCHEDULE T

HEADWORKS BUILDING -
STRUCTURAL - ROOF SECTIONS AND DETAILS

DES. PGK — DR. CPC — CK. PGE — DWG. S6198.1

SHEET 21 OF 113

DATE: APRIL 1972

SCALE: AS SHOWN

Drawing No. C 6198-2

SILVER STATIONERY & PRINTING CO., PORTLAND, ORE.

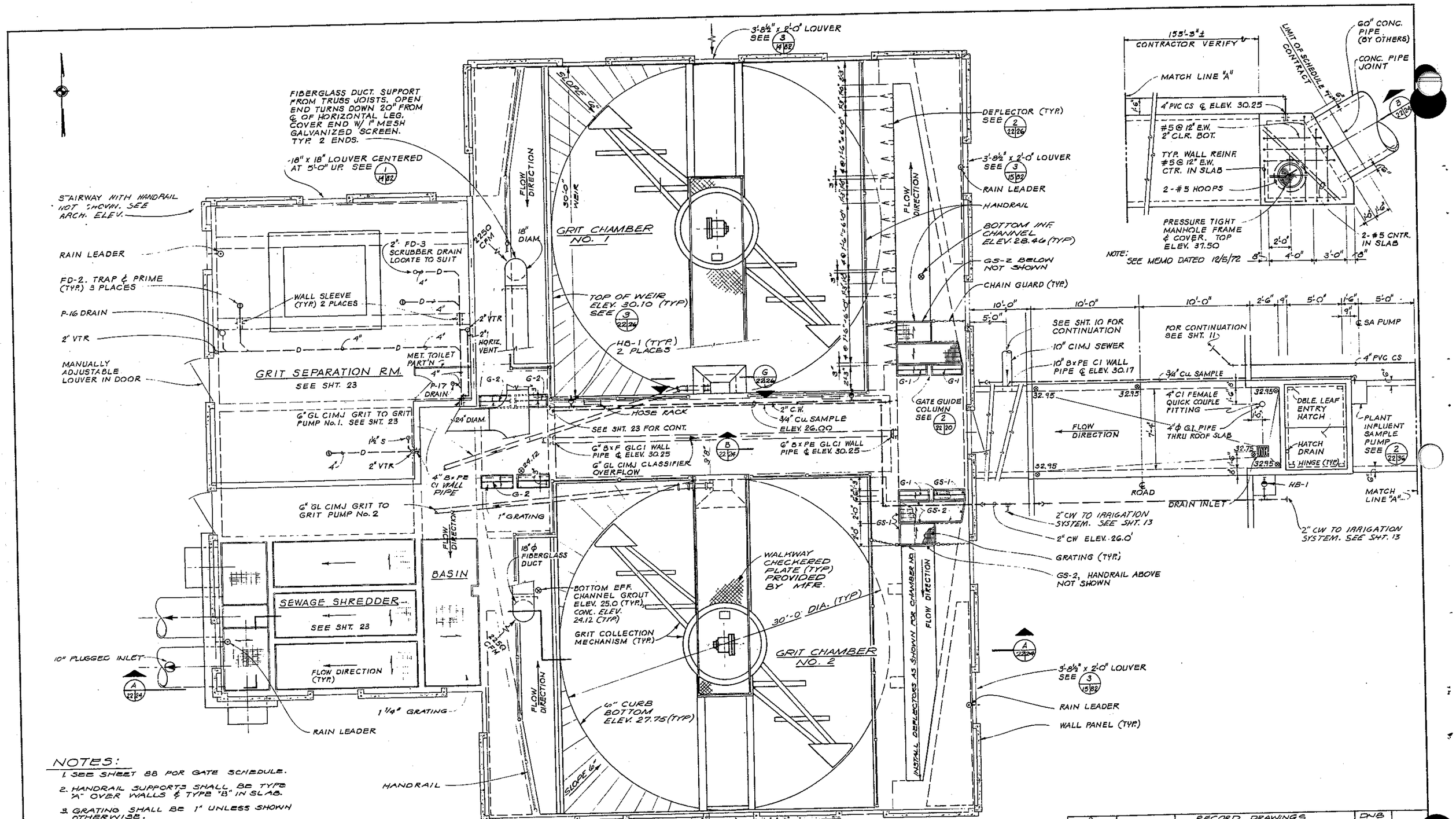

NOTES:

1. SEE SHEET 88 FOR GATE SCHEDULE.
2. HANDRAIL SUPPORTS SHALL BE TYPE "A" OVER WALLS & TYPE "B" IN SLAB.
3. GRATING SHALL BE 1" UNLESS SHOWN OTHERWISE.
4. NOTCH AND BAND GRATING AS REQ'D FOR SLUICE GATE LIFTS & COMMINUTORS (SEE SHEET 23)
5. GRATING SUPPORTS SHALL BE GS-1 UNLESS SHOWN OTHERWISE.

UPPER LEVEL PLAN

¼" = 1'-0"

NO.	DATE	RECORD DRAWINGS REVISION	BY	APD.
1			DWB	

CH2M HILL — ENGINEERS PLANNERS ECONOMISTS

CORNELL HOWLAND HAYES & MERRYFIELD — CLAIR A. HILL & ASSOCIATES

CITY OF BELLINGHAM, WASHINGTON
POST POINT POLLUTION CONTROL PLANT
SCHEDULE T

HEADWORKS BUILDING - MECHANICAL - PLAN

DWN: SJB
CK: CAH
APPROVED: CAH
DATE: APRIL 1972
SCALE: AS SHOWN
DRAWING NO. C 6198-2
SHEET 22 OF 113

LYLE G. HASSELKOTH — STATE OF WASHINGTON — REGISTERED PROFESSIONAL ENGINEER

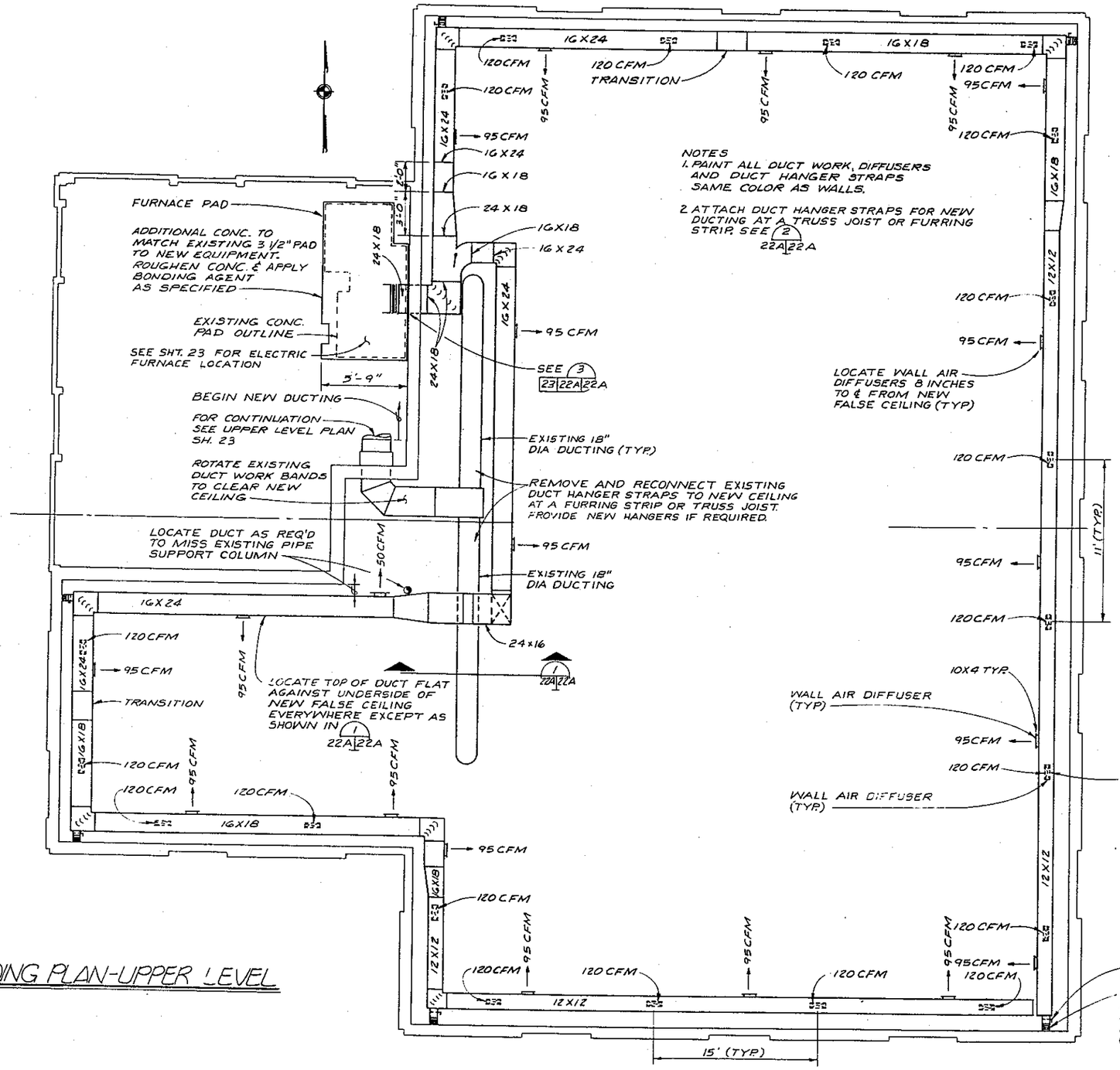

NOTES
1. PAINT ALL DUCT WORK, DIFFUSERS AND DUCT HANGER STRAPS SAME COLOR AS WALLS.
2. ATTACH DUCT HANGER STRAPS FOR NEW DUCTING AT A TRUSS JOIST OR FURRING STRIP. SEE 2 22A 22A

BUILDING PLAN-UPPER LEVEL
1/4"=1'-0"

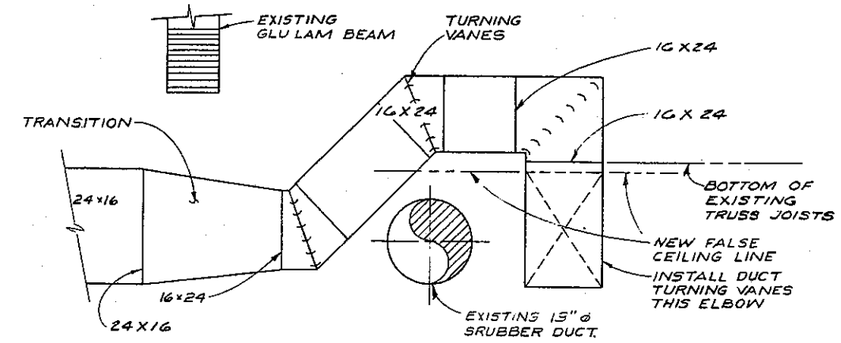

DETAIL 1 (22A 22A)
3/4"=1'-0"

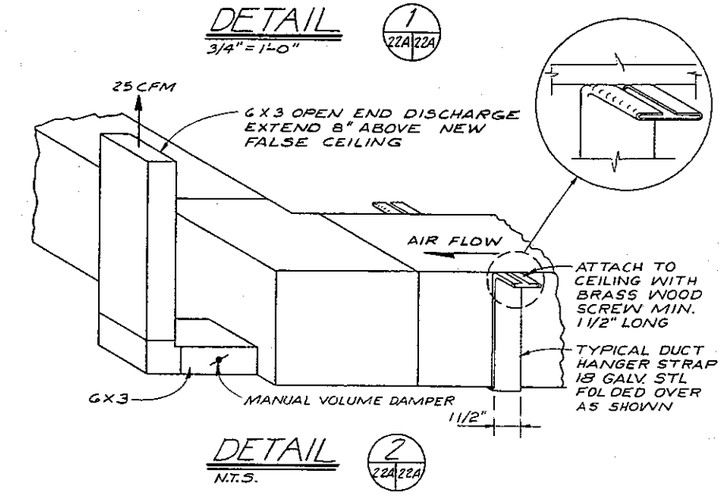

DETAIL 2 (22A 22A)
N.T.S.

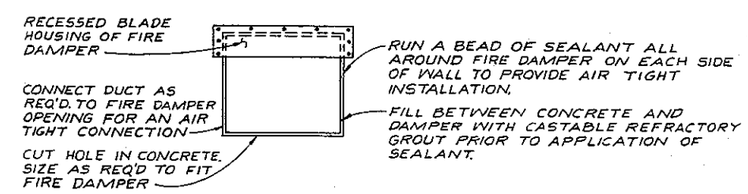

ELEVATION

DETAIL 3 (23 22A 22A)
3/4"=1'-0"

CH2M HILL — ENGINEERS ARCHITECTS ECONOMISTS

CORNELL HOWLAND HAYES & MERRYFIELD

CLAIR A HILL & ASSOCIATES

CITY OF BELLINGHAM, WASHINGTON
POST POINT POLLUTION CONTROL PLANT
SCHEDULE T

HEADWORKS BUILDING
MECHANICAL-PLAN

DES G-E
DR. L-S
CK. G-E-S
RN
SHEET 22A OF 113
DATE JAN. 1976
SCALE AS SHOWN
DRAWING C 6198-2

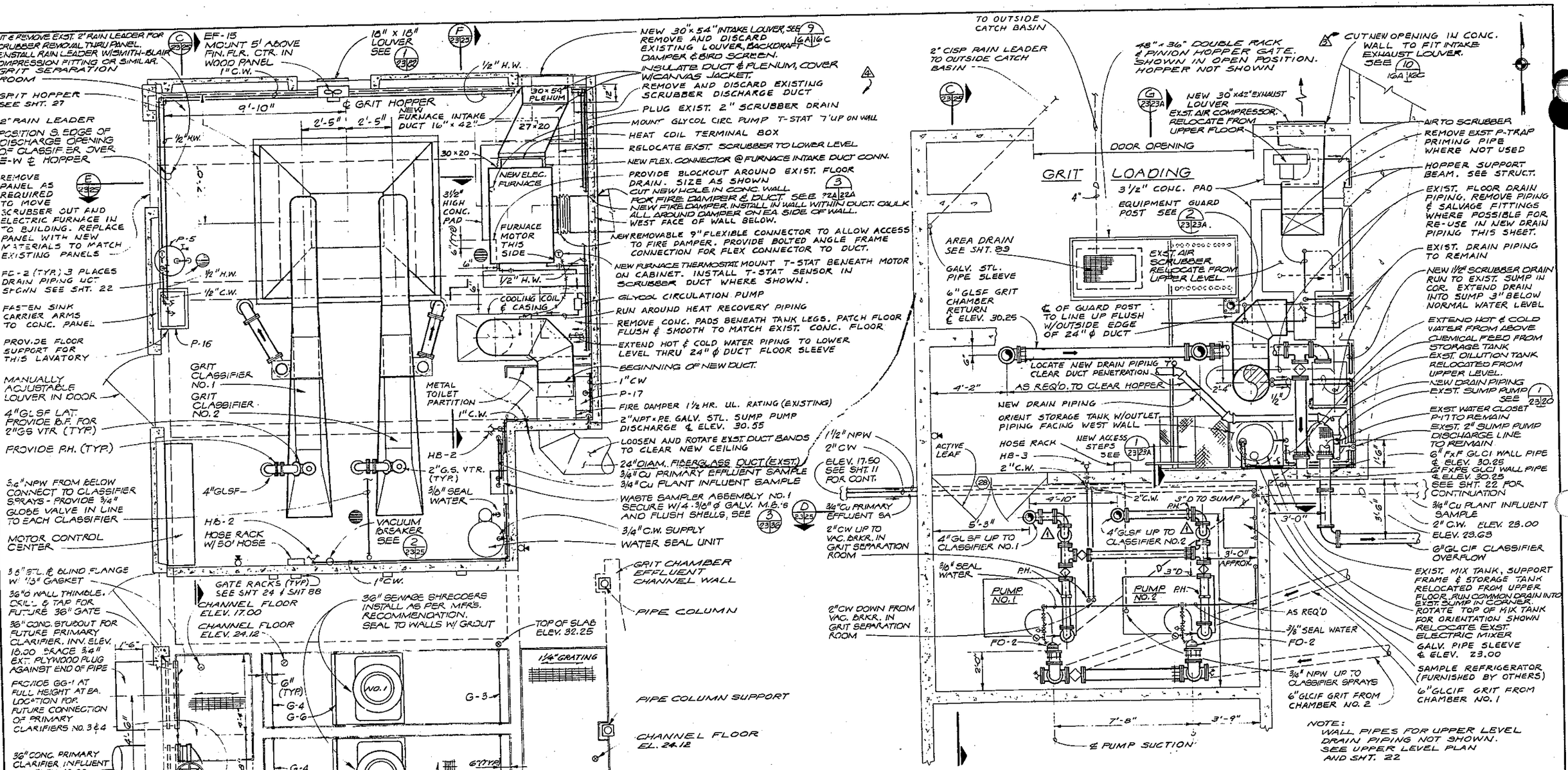

NO.	DATE	REVISION	BY	APP
4	2/19/76	INSTALL FURNACE & HEAT RECOVERY SYSTEM	GTP	GRG
3	2/19/76	RELOCATE SCRUBBER FROM UPPER TO LOWER LEVEL	GTP	GRG
2	11/20/75	RECORD DRAWINGS	DNB	GRG
1	6/15/73	GRIT PUMP DISCHARGE PIPING	RAH	JC

CH2M HILL — ENGINEERS PLANNERS ECONOMISTS

CORNELL HOWLAND HAYES & MERRYFIELD

CLAIR A. HILL & ASSOCIATES

CITY OF BELLINGHAM, WASHINGTON
POST POINT POLLUTION CONTROL PLANT
SCHEDULE T

HEADWORKS BUILDING -
MECHANICAL - PLAN

DES. DCM
DR. CDS
CK. C.L.
SW. S6198.1
SHEET 22
SCALE: 3/8" = 1'-0"
DATE: APRIL 1972
DRAWING NO. C 6198-2

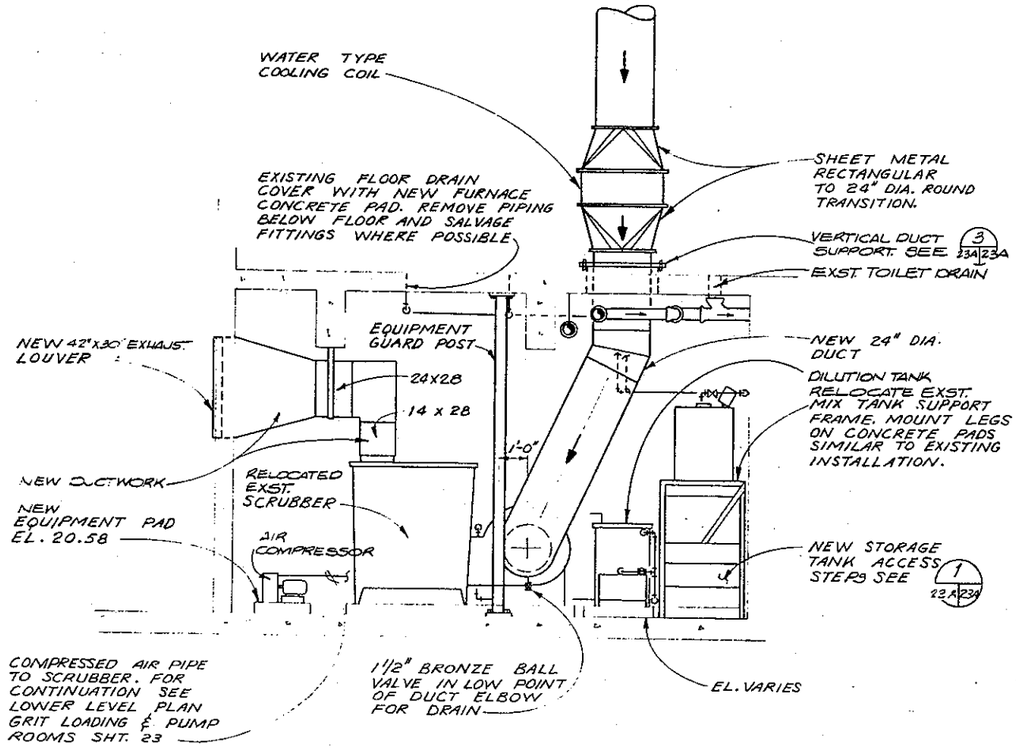

SECTION G
3/8" = 1'-0"
23 23A

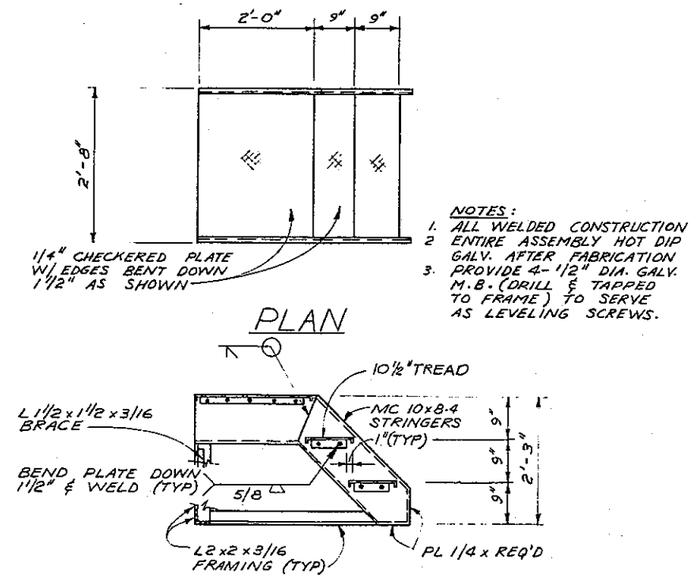

NOTES:
1. ALL WELDED CONSTRUCTION
2. ENTIRE ASSEMBLY HOT DIP GALV. AFTER FABRICATION
3. PROVIDE 4-1 1/2" DIA. GALV. M.B. (DRILL & TAPPED TO FRAME) TO SERVE AS LEVELING SCREWS.

SECTION

DETAIL 1
3/4 = 1'-0"
23 23A 23A

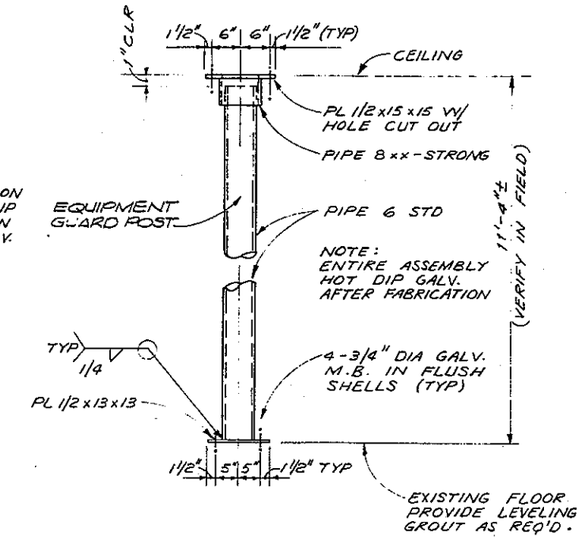

DETAIL 2
3/4" = 1'-0"
23 23A

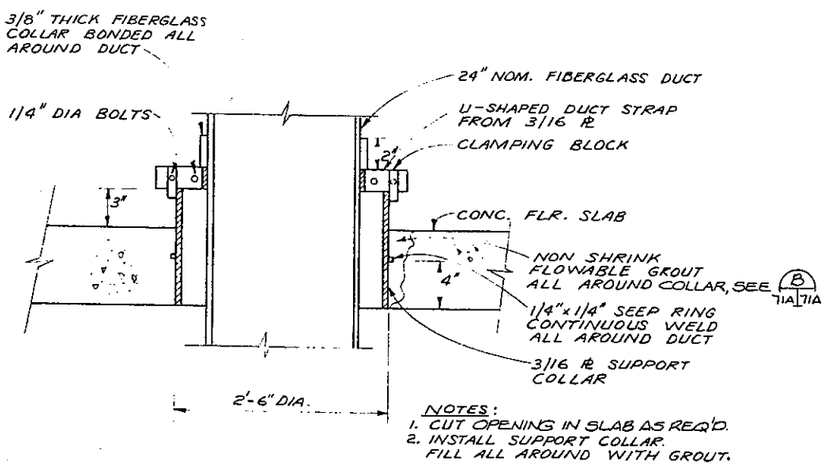

NOTES:
1. CUT OPENING IN SLAB AS REQ'D.
2. INSTALL SUPPORT COLLAR. FILL ALL AROUND WITH GROUT.

VERT. DUCT SUPPORT

DETAIL 3
NTS
23A 25 23A

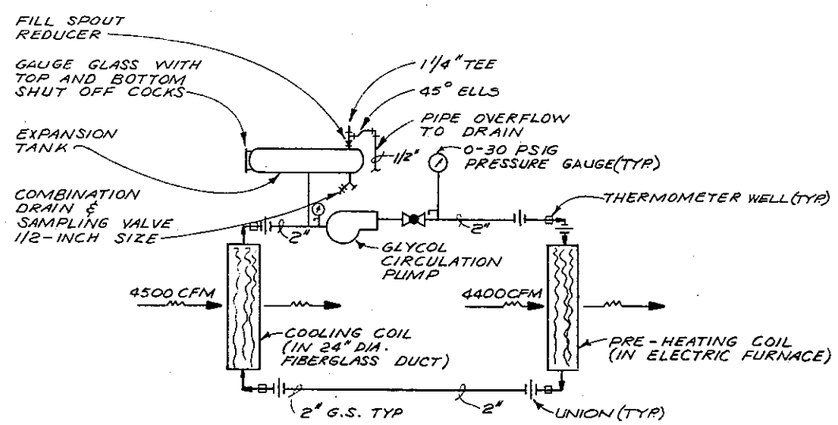

NOTE:
FILL SYSTEM WITH 20% BY WEIGHT ETHYLENE GLYCOL AND WATER SOLUTION

HEAT RECOVERY SYSTEM
RUN AROUND COIL SCHEMATIC

DETAIL 4
NTS
25 23A 23A

CH2M HILL ENGINEERS PLANNERS ECONOMISTS	CORNELL HOWLAND HAYES & MERRYFIELD CLAIR A HILL & ASSOCIATES	CITY OF BELLINGHAM, WASHINGTON POST POINT POLLUTION CONTROL PLANT SCHEDULE T HEADWORKS BUILDING MECHANICAL-SECTIONS AND DETAILS	DES. DR. CK. RN. SHEET 23A OF 113 DATE JAN. 1976 SCALE AS SHOWN DRAWING NO C 6198-2

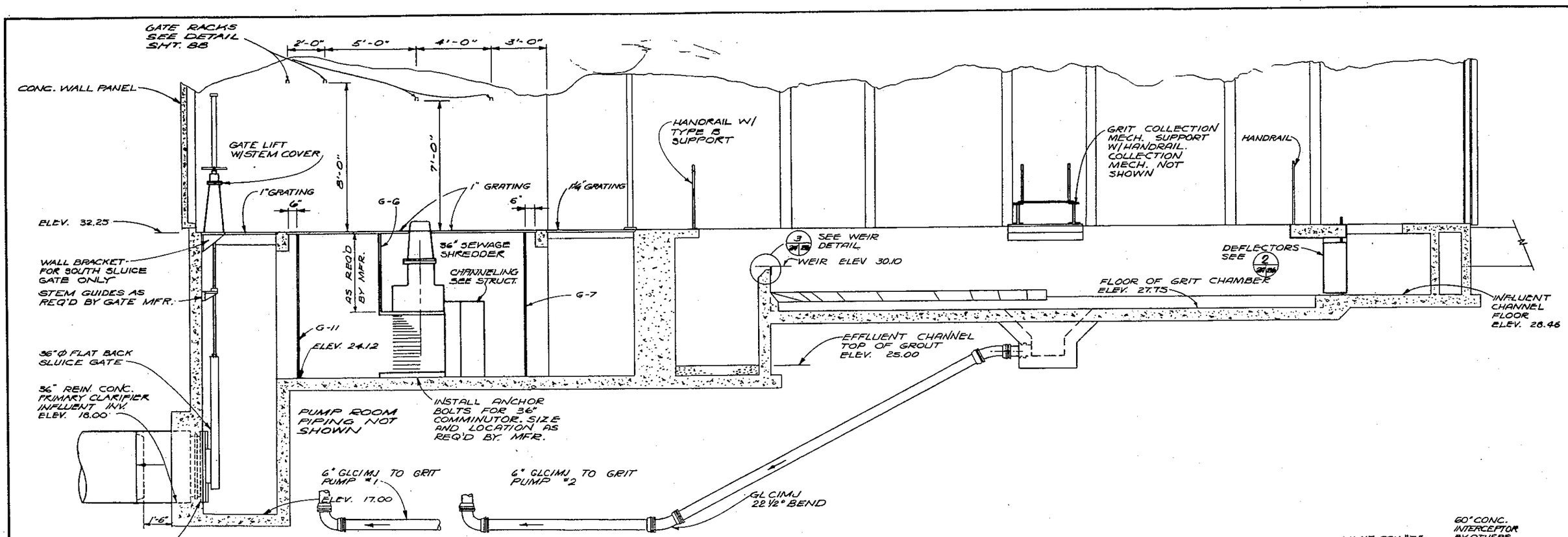

SECTION A (22/23/24)
3/8" = 1'-0"

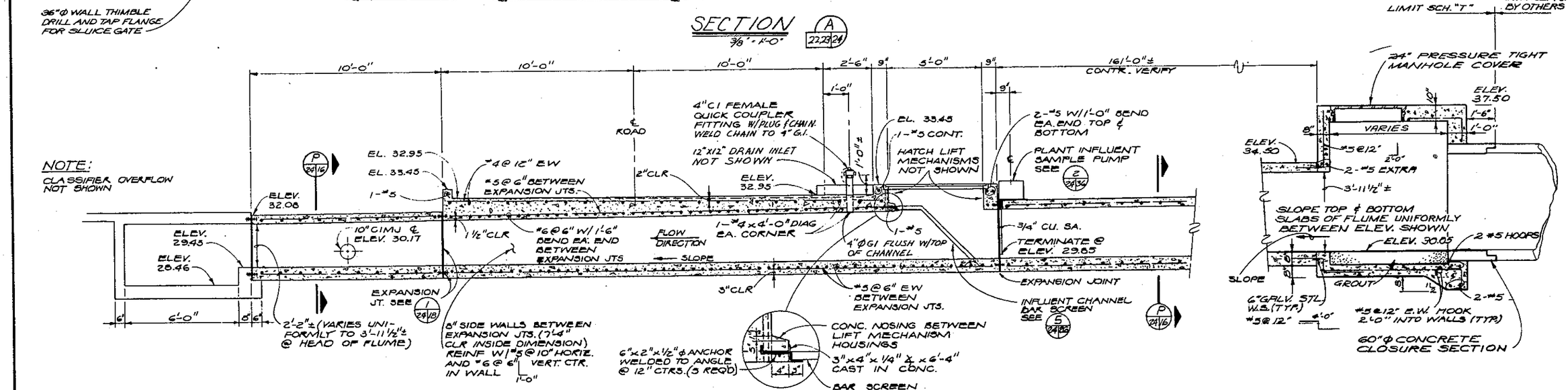

SECTION B (22/24)
3/8" = 1'-0"

NO.	DATE	RECORD DRAWINGS REVISION	DNB BY	APD.
	CORNELL HOWLAND HAYES & MERRYFIELD	CITY OF BELLINGHAM, WASHINGTON POST POINT POLLUTION CONTROL PLANT SCHEDULE T	DES. DCM	SHEET 24
		HEADWORKS BUILDING - MECHANICAL - SECTIONS	DR. KGB	OF 113
			CK. JDB	DATE: APRIL 1972
	CLAIR A. HILL & ASSOCIATES		JOB NO. 06198.1	SCALE: AS SHOWN
			DRAWING NO. C 6198-2	

CH2M HILL — ENGINEERS PLANNERS ECONOMISTS

LYLE G. HASSEBROEK — STATE OF WASHINGTON — REGISTERED PROFESSIONAL ENGINEER

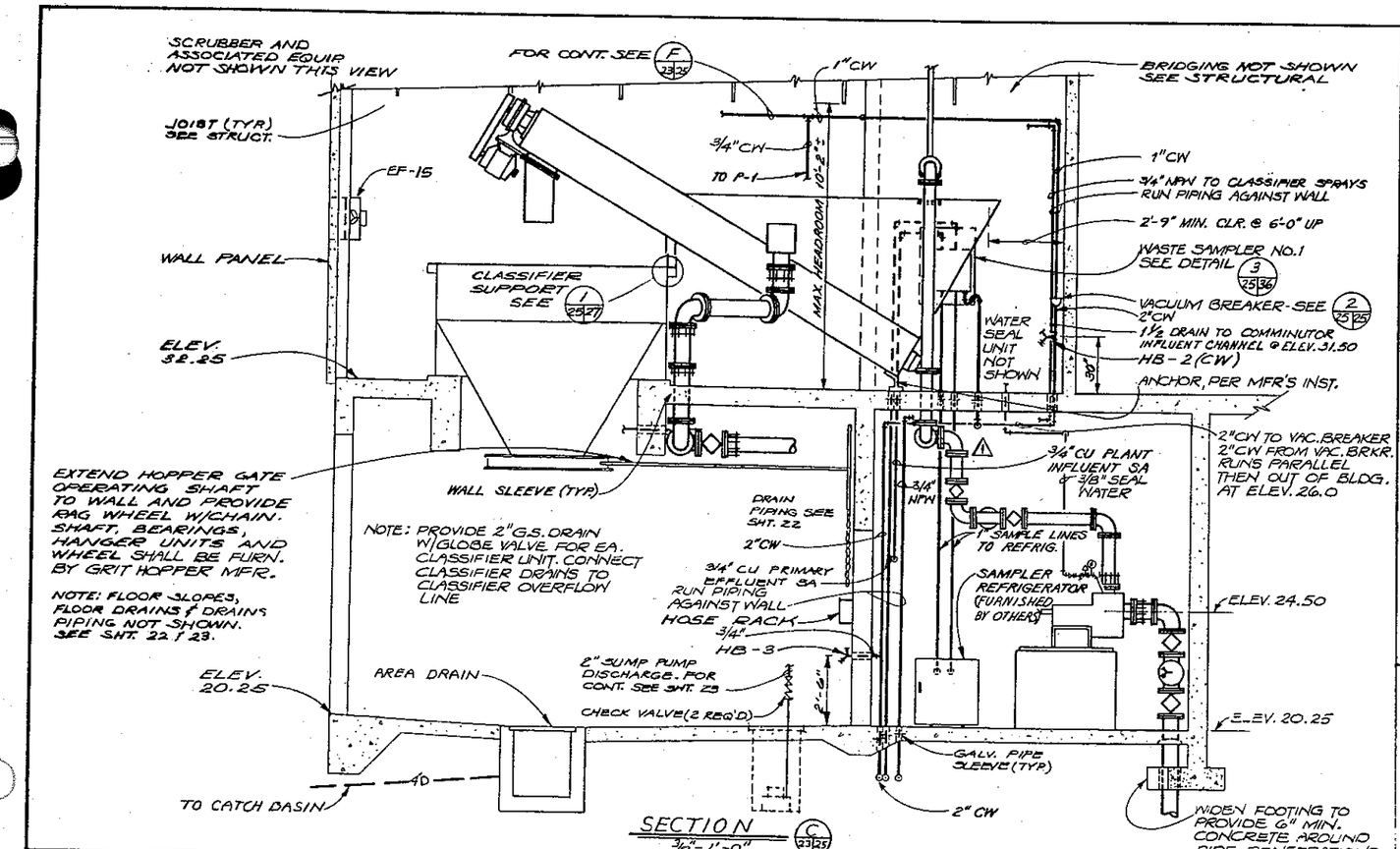

SECTION C 23/25
3/8" = 1'-0"

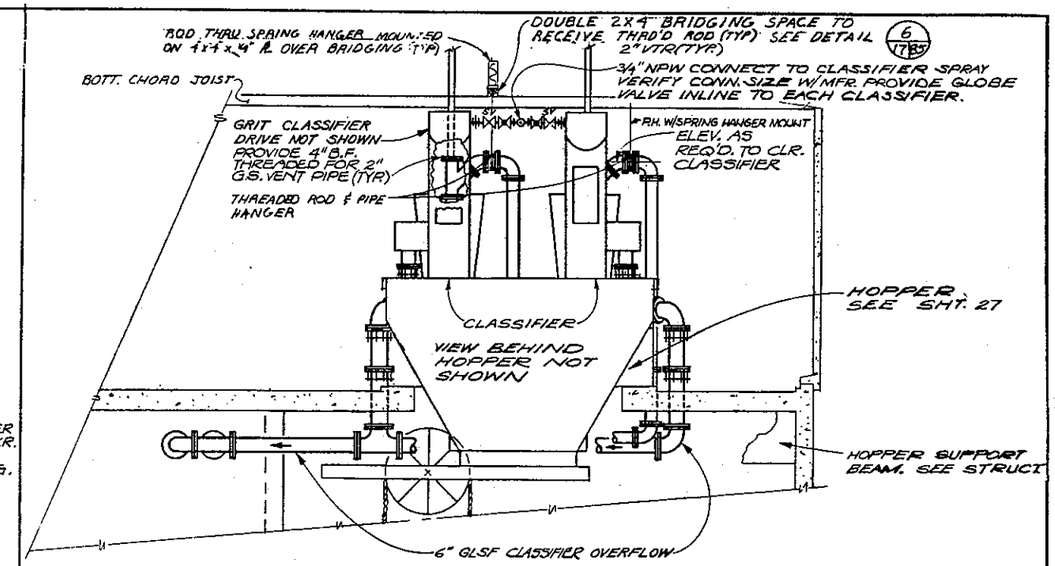

SECTION E 23/25
3/8" = 1'-0"

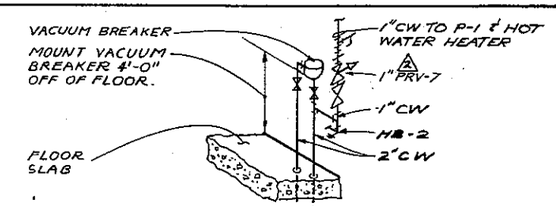

VACUUM BREAKER DETAIL 2 23/25/25
N.T.S.

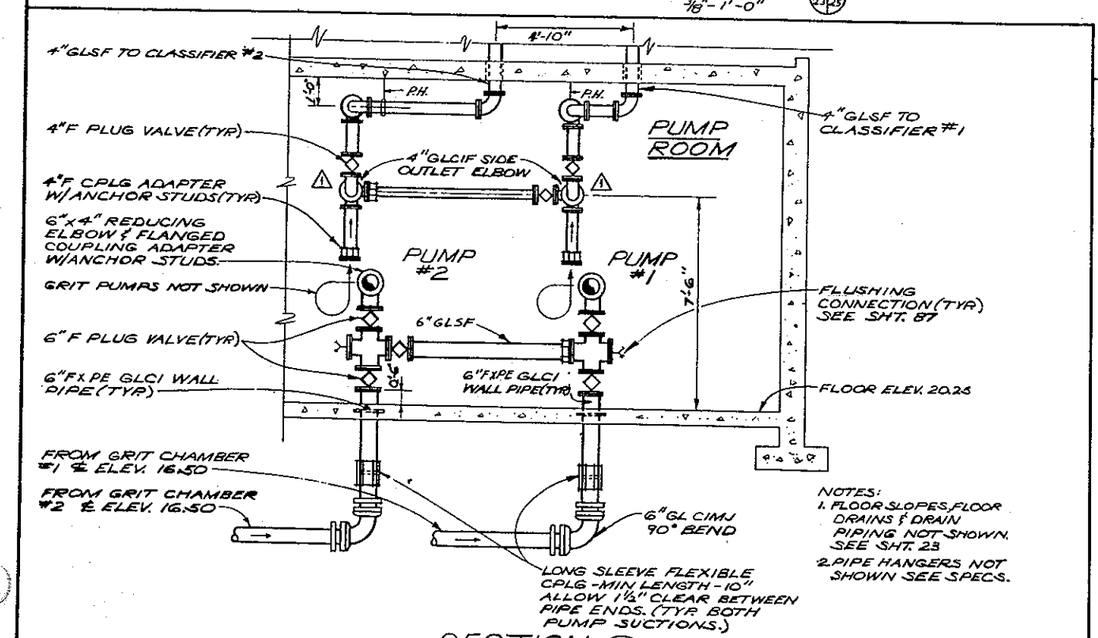

NOTES:
1. FLOOR SLOPES, FLOOR DRAINS & DRAIN PIPING NOT SHOWN. SEE SHT. 23
2. PIPE HANGERS NOT SHOWN SEE SPECS.

SECTION D 23/25
3/8" = 1'-0"

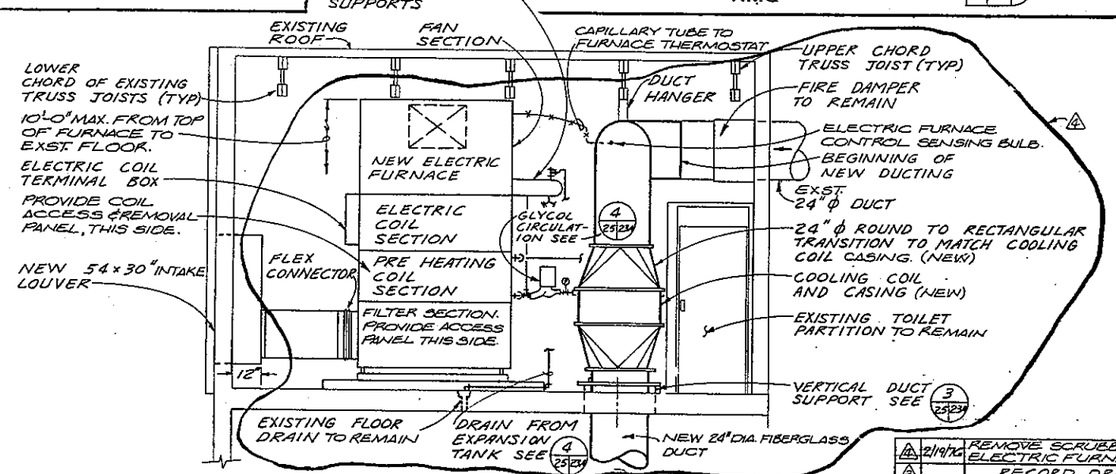

SECTION F 23/25
3/8" = 1'-0"

NO.	DATE	REVISION	BY	APR.
12	2/19/76	REMOVE SCRUBBER, INSTALL ELECTRIC FURNACE	GTF	GRS
11		RECORD DRAWINGS	DNB	
10	4/11/74	ADD 1" PRV-7	GEN	GTF
1	6/15/73	GRIT PUMP DISCHARGE PIPING	RAH	JGG

LYLE G. HASSEBROEK — STATE OF WASHINGTON — REGISTERED PROFESSIONAL ENGINEER

CH2M HILL — ENGINEERS PLANNERS ECONOMISTS

CORNELL HOWLAND HAYES & MERRYFIELD

CLAIR A. HILL & ASSOCIATES

CITY OF BELLINGHAM, WASHINGTON
POST POINT POLLUTION CONTROL PLANT
SCHEDULE T

HEADWORKS BUILDING
MECHANICAL - SECTIONS

DES. DCM
DR. WTM
CK. JDB
RH. 56198.1
DRAWING NO. C 6198-2
SHEET 25 OF 113
DATE: APRIL 1972
SCALE: AS SHOWN

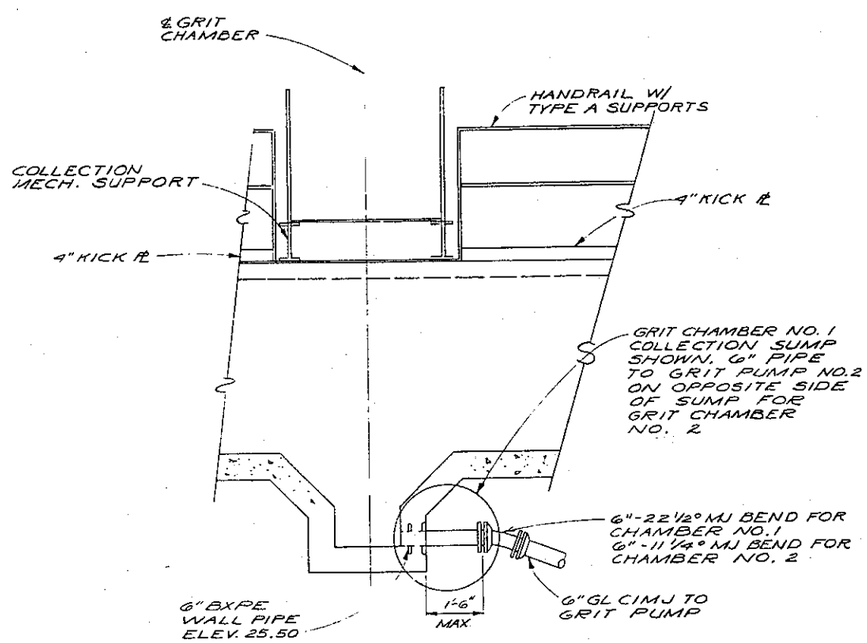

SECTION (G 22 26)

1/2" = 1'-0"

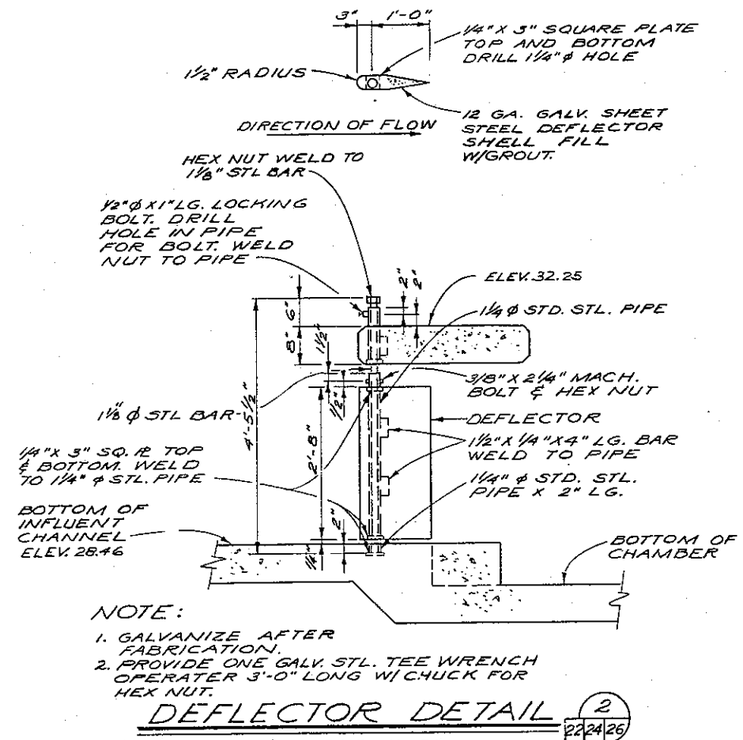

NOTE:

1. GALVANIZE AFTER FABRICATION.
2. PROVIDE ONE GALV. STL. TEE WRENCH OPERATER 3'-0" LONG W/ CHUCK FOR HEX NUT.

DEFLECTOR DETAIL (2 22 24 26)

(32 REQ'D) 3/4" = 1'-0"

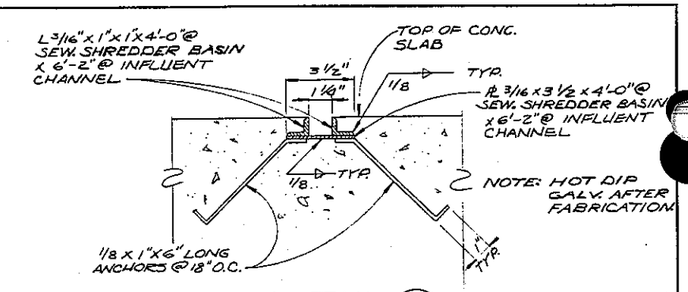

DETAIL (4 26 26)

NTS

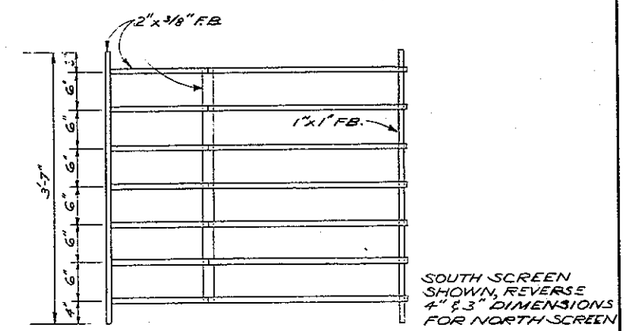

PLAN

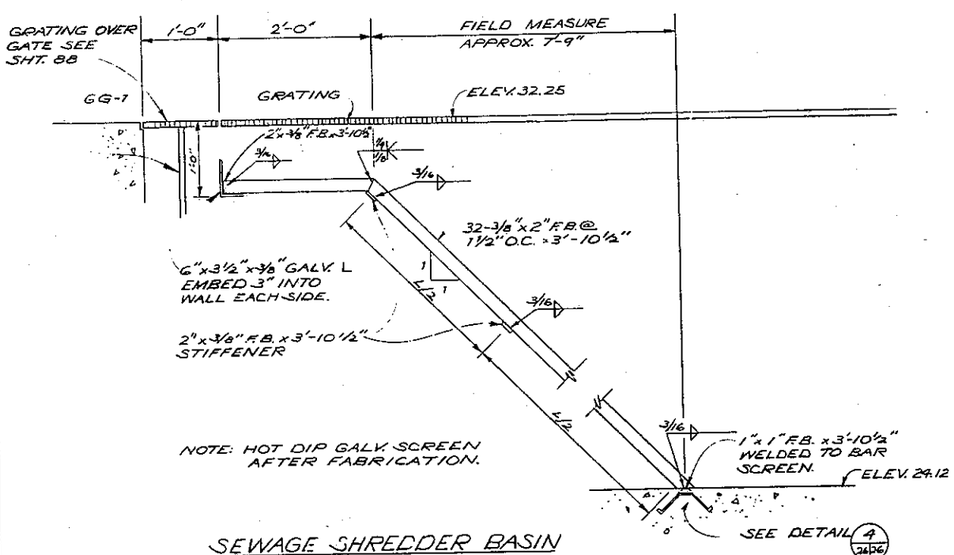

SEWAGE SHREDDER BASIN BAR SCREEN

DETAIL (1 23 26)

1" = 1'-0"

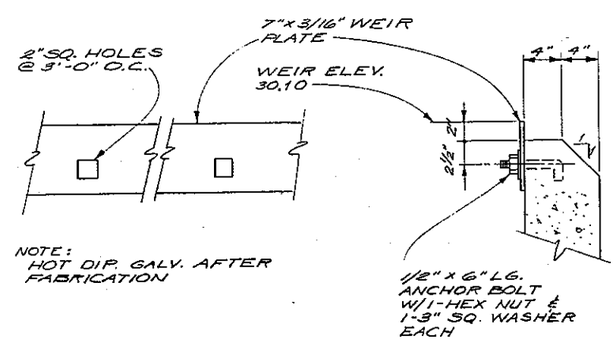

GRIT WORKS EFFLUENT WEIR

DETAIL (3 22 24 26)

1 1/2" = 1'-0"

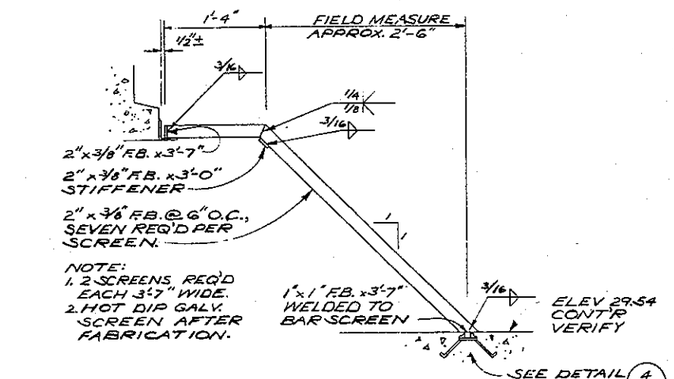

ELEVATION

INFLUENT CHANNEL BAR SCREEN

DETAIL (5 24 26)

1" = 1'-0"

NO.	DATE	RECORD DRAWINGS REVISION	DNB BY	APD
	CORNELL HOWLAND HAYES & MERRYFIELD	CITY OF BELLINGHAM, WASHINGTON POST POINT POLLUTION CONTROL PLANT SCHEDULE T	DES JGG	SHEET 26
CH2M HILL			DR.	OF 113
		HEADWORKS BUILDING -	CK. JCB	DATE: APRIL 1972
ENGINEERS PLANNERS ECONOMISTS	CLAIR A. HILL & ASSOCIATES	MECHANICAL - DETAILS	RN 56198.1	SCALE: AS SHOWN
			DRAWING NO. C 6198-2	

GILPAD STATIONERY & PRINTING CO., PORTLAND, ORE.

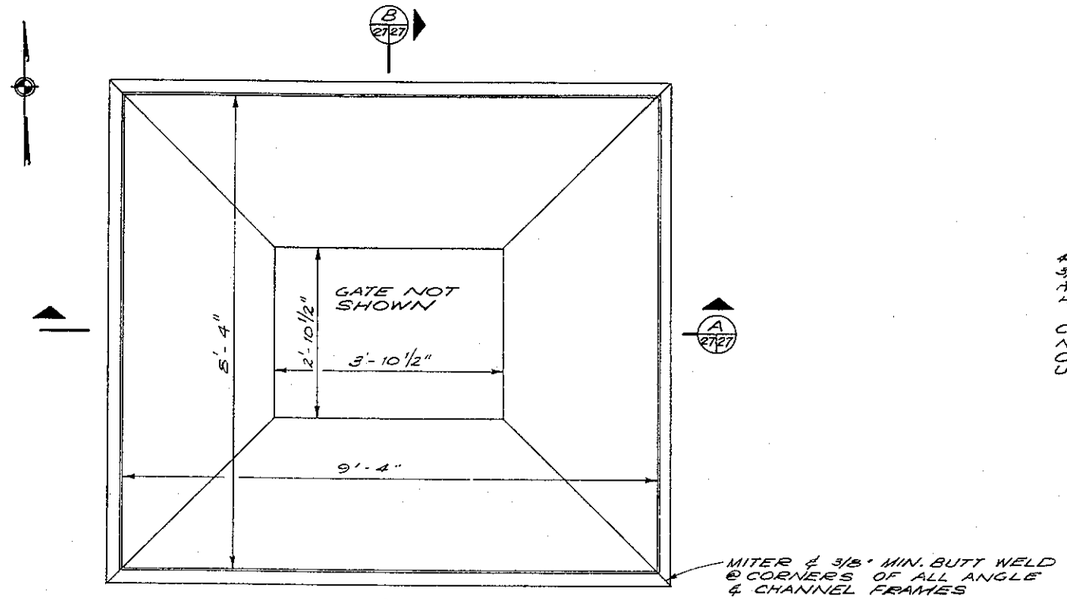

GRIT HOPPER

3/4" = 1'-0"

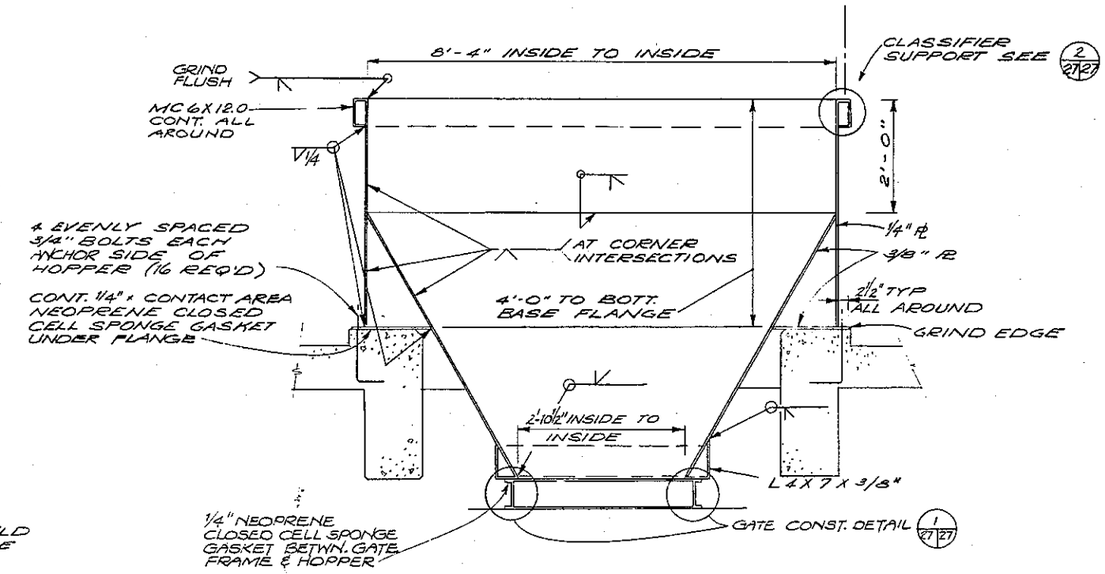

SECTION B 27/27

3/4" = 1'-0"

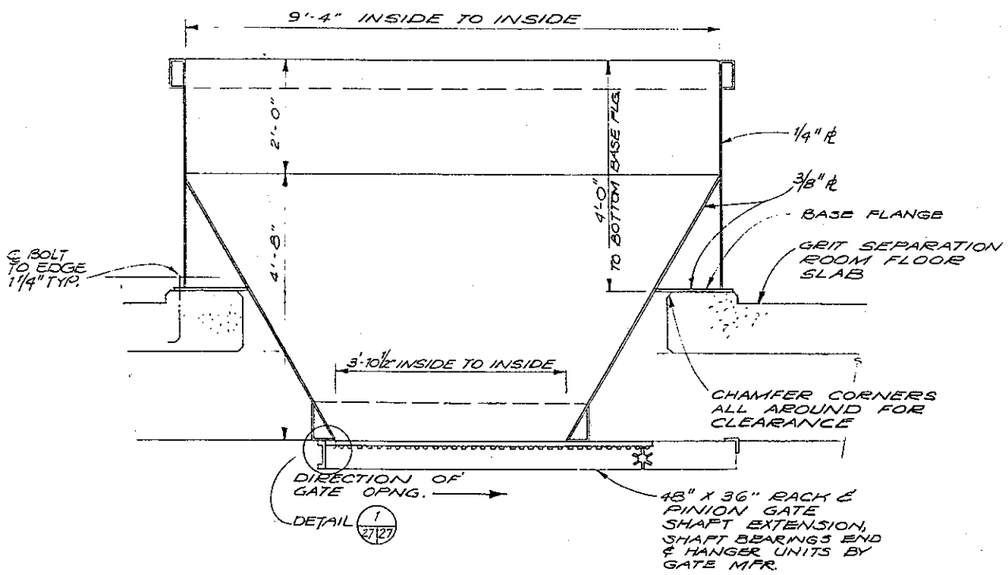

SECTION A 27/27

3/4" = 1'-0"

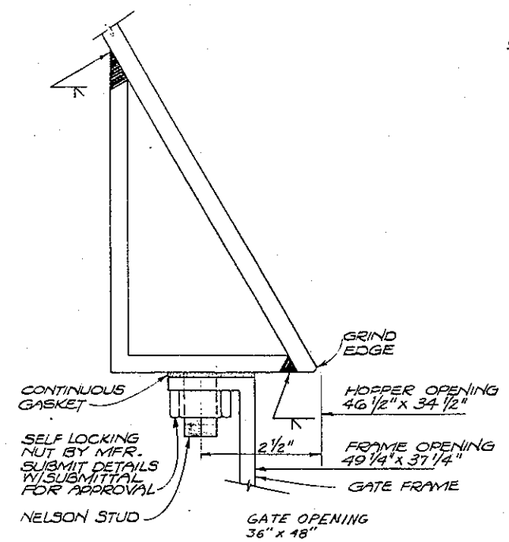

DETAIL 1 27/27

N.T.S.

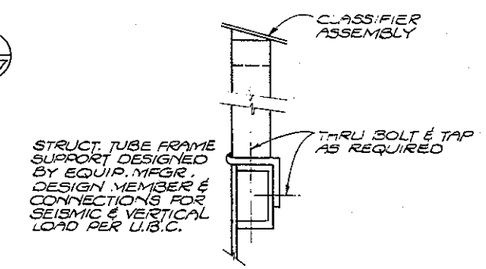

DETAIL 2 27/27

GENERAL NOTES

1. ACCURATELY BEVEL EDGES OF ALL STRUCTURAL SHAPES & PLATES TO BE WELDED. USE FULL PENETRATION WELDS UNLESS OTHERWISE NOTED.
2. NUMBER SIZE, LENGTH & SPACING OF STUDS TO CONNECT GATE FRAME TO HOPPER, AS REQUIRED BY GATE MFR.
3. GALVANIZE 3/4" ANCHOR BOLTS. EMBED 8" W/6" BENDS IN CONCRETE.
4. SEE SHT. 106 FOR HEAT TAPE DETAIL.

NO.	DATE	REVISION	BY	APD.
		RECORD DRAWINGS	DNB	

CH2M HILL — ENGINEERS PLANNERS ECONOMISTS

CORNELL HOWLAND HAYES & MERRYFIELD

CLAIR A. HILL & ASSOCIATES

CITY OF BELLINGHAM, WASHINGTON
POST POINT POLLUTION CONTROL PLANT
SCHEDULE T

HEADWORKS BUILDING -
GRIT HOPPER PLAN AND SECTIONS

DES. SJB
DR. SJB
CK. RJE
PM 06186.1
DRAWING NO. C 6198-2
SHEET 27 OF 113
DATE: APRIL 1972
SCALE: AS SHOWN

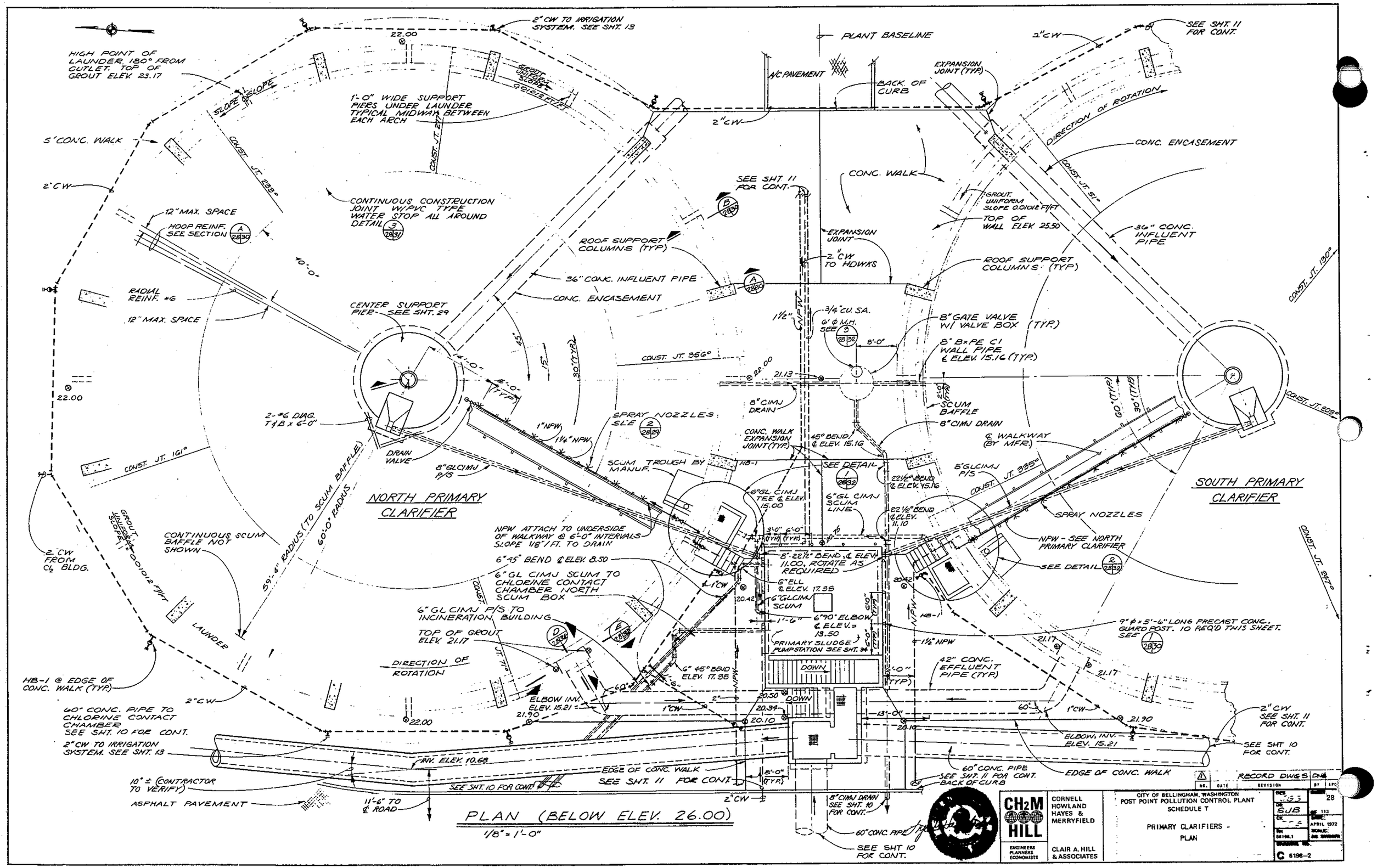
PLAN (BELOW ELEV. 26.00)
1/8" = 1'-0"
NORTH PRIMARY CLARIFIER
SOUTH PRIMARY CLARIFIER
PLANT BASELINE
A/C PAVEMENT
BACK OF CURB
EXPANSION JOINT (TYP)
DIRECTION OF ROTATION
CONC. ENCASEMENT
CONC. WALK
5' CONC. WALK
2" CW
2" CW TO IRRIGATION SYSTEM. SEE SHT. 13
SEE SHT. 11 FOR CONT.
HIGH POINT OF LAUNDER 180° FROM OUTLET. TOP OF GROUT ELEV. 23.17
1'-0" WIDE SUPPORT PIERS UNDER LAUNDER TYPICAL MIDWAY BETWEEN EACH ARCH
CONTINUOUS CONSTRUCTION JOINT W/PVC TYPE WATER STOP ALL AROUND DETAIL 3/28 31
12" MAX. SPACE
HOOP REINF. SEE SECTION A/28 30
RADIAL REINF. #6
CENTER SUPPORT PIER - SEE SHT. 29
ROOF SUPPORT COLUMNS (TYP)
36" CONC. INFLUENT PIPE
EXPANSION JOINT
2" CW TO HDWKS
GROUT UNIFORM SLOPE 0.01012 FT/FT
TOP OF WALL ELEV. 25.50
ROOF SUPPORT COLUMNS (TYP)
36" CONC. INFLUENT PIPE
3/4" CU. SA.
6' Φ M.H. SEE B/28 32
8" GATE VALVE W/ VALVE BOX (TYP.)
8" B×PE CI WALL PIPE ℄ ELEV. 15.16 (TYP.)
8" CIMJ DRAIN
SCUM BAFFLE
℄ WALKWAY (BY MFR.)
2-#6 DIAG. T&B × 6'-0"
DRAIN VALVE
SPRAY NOZZLES SEE 2/28 29
8" GLCIMJ P/S
SCUM TROUGH BY MANUF.
CONC. WALK EXPANSION JOINT (TYP.)
45° BEND ℄ ELEV. 15.16
SEE DETAIL 1/28 32
22½° BEND ℄ ELEV. 15.16
6" GL CIMJ TEE ℄ ELEV. 15.00
6" GL CIMJ SCUM LINE
22½° BEND ℄ ELEV. 11.10
8" GLCIMJ P/S
SPRAY NOZZLES
NPW - SEE NORTH PRIMARY CLARIFIER
SEE DETAIL 2/28 32
NPW ATTACH TO UNDERSIDE OF WALKWAY @ 6'-0" INTERVALS SLOPE 1/8" / FT. TO DRAIN
6" 45° BEND ℄ ELEV. 8.50
8" 22½° BEND, ℄ ELEV. 11.00, ROTATE AS REQUIRED
6" ELL ℄ ELEV. 17.88
6" GLCIMJ SCUM
6" 90° ELBOW ℄ ELEV. = 13.50
6" GL CIMJ SCUM TO CHLORINE CONTACT CHAMBER NORTH SCUM BOX
6" GL CIMJ P/S TO INCINERATION BUILDING
TOP OF GROUT ELEV. 21.17
PRIMARY SLUDGE PUMPSTATION SEE SHT. 34
DOWN
6" 45° BEND ELEV. 17.88
42" CONC. EFFLUENT PIPE (TYP.)
9" Φ × 5'-6" LONG PRECAST CONC. GUARD POST. 10 REQ'D THIS SHEET. SEE 1/28 30
CONTINUOUS SCUM BAFFLE NOT SHOWN
59'-4" RADIUS (TO SCUM BAFFLE)
60'-0" RADIUS
GROUT UNIFORM SLOPE 0.01012 FT/FT
LAUNDER
2" CW FROM CL BLDG.
HB-1 @ EDGE OF CONC. WALK (TYP.)
40" CONC. PIPE TO CHLORINE CONTACT CHAMBER SEE SHT. 10 FOR CONT.
2" CW TO IRRIGATION SYSTEM. SEE SHT. 13
INV. ELEV. 10.68
10" ± (CONTRACTOR TO VERIFY)
ASPHALT PAVEMENT
11'-6" TO ℄ ROAD
EDGE OF CONC. WALK
SEE SHT. 10 FOR CONT.
SEE SHT. 11 FOR CONT.
ELBOW INV. ELEV. 15.21
60" CONC. PIPE
SEE SHT. 11 FOR CONT.
BACK OF CURB
8" CIMJ DRAIN SEE SHT. 10 FOR CONT.
60" CONC. PIPE
SEE SHT. 10 FOR CONT.
2" CW SEE SHT. 11 FOR CONT.
SEE SHT. 10 FOR CONT.
CONST. JT. 271°
CONST. JT. 233°
CONST. JT. 161°
CONST. JT. 366°
CONST. JT. 51°
CONST. JT. 130°
CONST. JT. 203°
CONST. JT. 385°
CONST. JT. 247°
CONST. JT. 71°
22.00
21.13
20.42
20.50
20.34
20.10
21.90
21.17
15.21
10.68
CH2M HILL
ENGINEERS PLANNERS ECONOMISTS
CORNELL HOWLAND HAYES & MERRYFIELD
CLAIR A. HILL & ASSOCIATES
CITY OF BELLINGHAM, WASHINGTON
POST POINT POLLUTION CONTROL PLANT
SCHEDULE T
PRIMARY CLARIFIERS - PLAN
RECORD DWGS
NO. DATE REVISION BY APD
DES. SJB
DR.
CK.
APPROVED
APRIL 1972
SCALE: AS SHOWN
DRAWING NO. C 5196-2
SHEET 28 OF 113

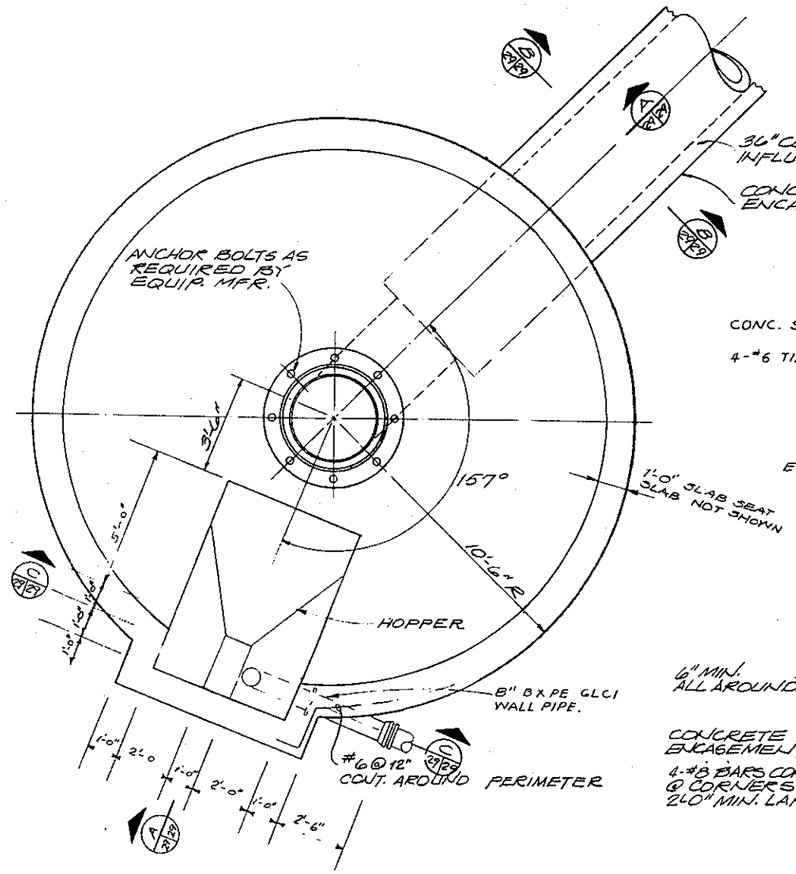

PLAN-CENTER SUPPORT PIER
3/8" = 1'-0"

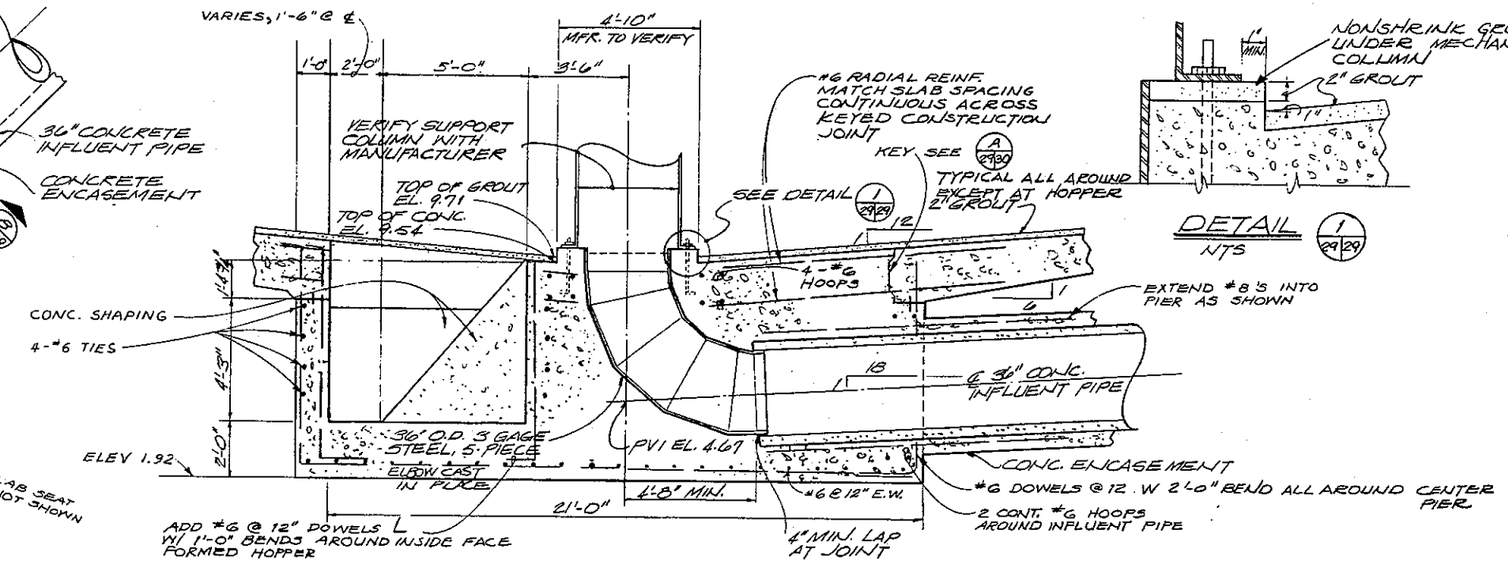

SECTION A/29/29
3/8" = 1'-0"

DETAIL 1/29/29
NTS

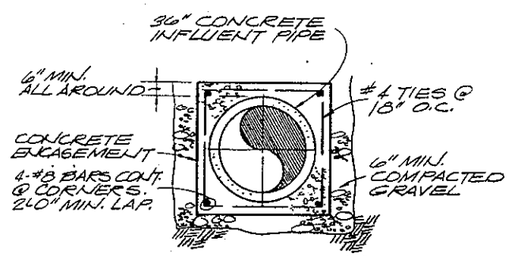

SECTION B/29/29
3/8" = 1'-0"

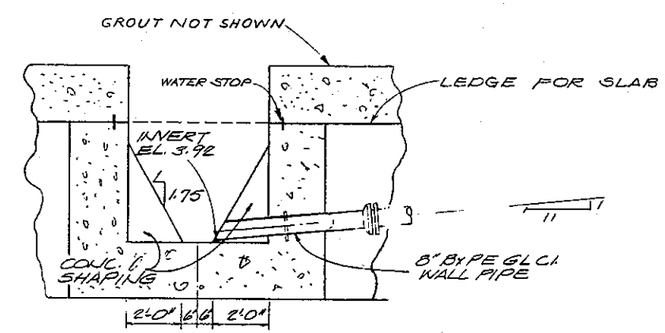

SECTION C/29/29
3/8" = 1'-0"

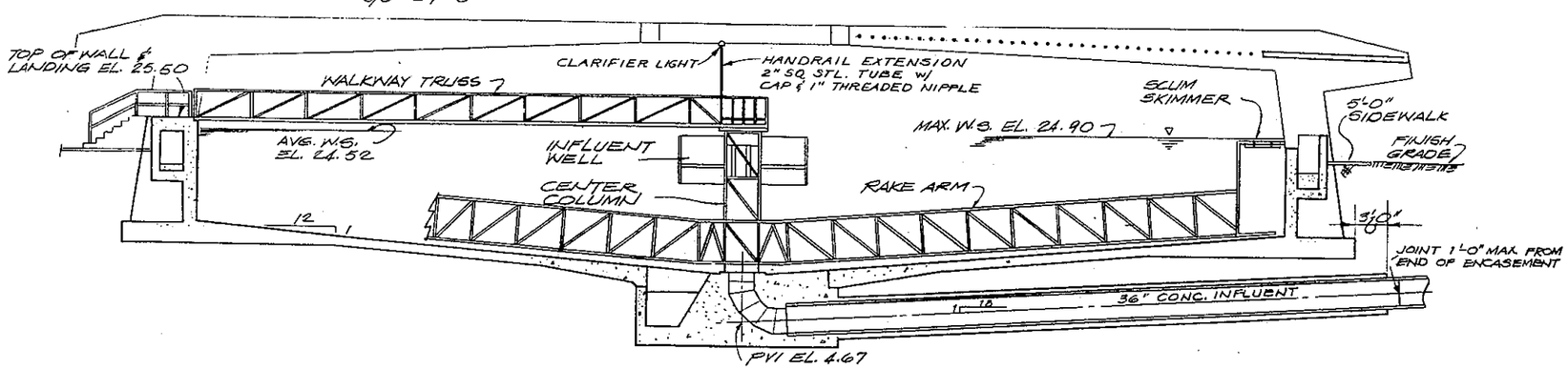

COMPOSITE SECTION OF CLARIFIER
1/8" = 1'-0"

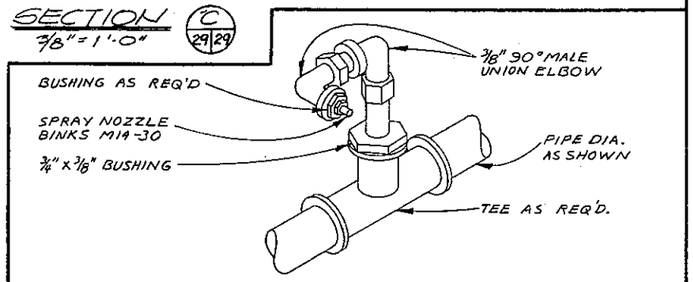

SPRAY NOZZLE DETAIL 2/28/29
N.T.S.

NO.	DATE	RECORD DRAWINGS REVISION	DNB BY	APD.
		CITY OF BELLINGHAM, WASHINGTON POST POINT POLLUTION CONTROL PLANT SCHEDULE T PRIMARY CLARIFIERS - SECTIONS AND DETAILS	DES. J.S. DR. D.I. CK. JDR DATE APRIL 1972 56198.1 C 6198-2	SHEET 29 OF 113

CH2M HILL — ENGINEERS PLANNERS ECONOMISTS
CORNELL HOWLAND HAYES & MERRYFIELD
CLAIR A. HILL & ASSOCIATES

LYLE C. HOLMAN — STATE OF WASHINGTON — REGISTERED PROFESSIONAL ENGINEER

EILMAN STATIONERY & PRINTING CO., PORTLAND, ORE.

SECTION A-A (TYP)

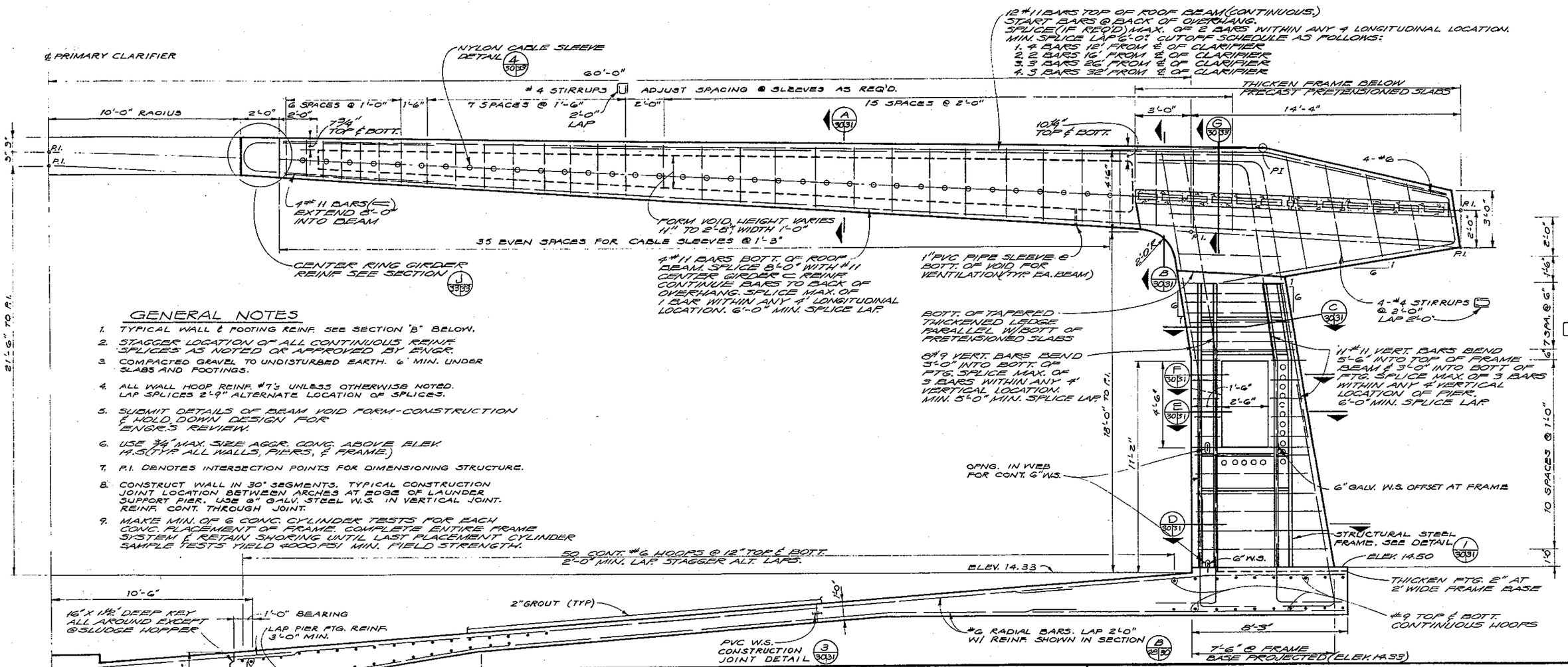

GENERAL NOTES

1. TYPICAL WALL & FOOTING REINF. SEE SECTION "B" BELOW.
2. STAGGER LOCATION OF ALL CONTINUOUS REINF. SPLICES AS NOTED OR APPROVED BY ENGR.
3. COMPACTED GRAVEL TO UNDISTURBED EARTH. 6" MIN. UNDER SLABS AND FOOTINGS.
4. ALL WALL HOOP REINF. #7's UNLESS OTHERWISE NOTED. LAP SPLICES 2'-9" ALTERNATE LOCATION OF SPLICES.
5. SUBMIT DETAILS OF BEAM VOID FORM-CONSTRUCTION & HOLD DOWN DESIGN FOR ENGR.'S REVIEW.
6. USE ¾" MAX. SIZE AGGR. CONC. ABOVE ELEV. 14.5 (TYP. ALL WALLS, PIERS, & FRAME.)
7. P.I. DENOTES INTERSECTION POINTS FOR DIMENSIONING STRUCTURE.
8. CONSTRUCT WALL IN 30' SEGMENTS. TYPICAL CONSTRUCTION JOINT LOCATION BETWEEN ARCHES AT EDGE OF LAUNDER SUPPORT PIER. USE 6" GALV. STEEL W.S. IN VERTICAL JOINT. REINF. CONT. THROUGH JOINT.
9. MAKE MIN. OF 6 CONC. CYLINDER TESTS FOR EACH CONC. PLACEMENT OF FRAME. COMPLETE ENTIRE FRAME SYSTEM & RETAIN SHORING UNTIL LAST PLACEMENT CYLINDER SAMPLE TESTS YIELD 4000 PSI MIN. FIELD STRENGTH.

SECTION A 28 30

3/8" = 1'-0"

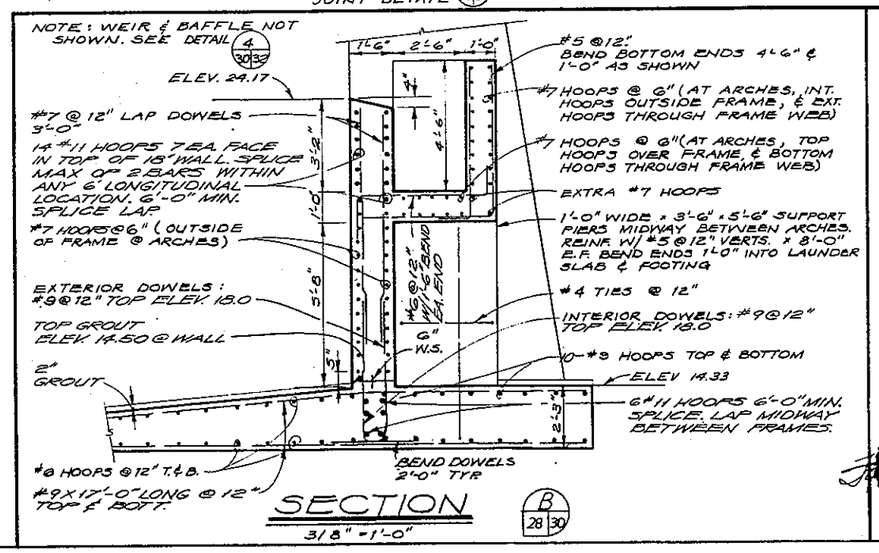

SECTION B 28 30

3/8" = 1'-0"

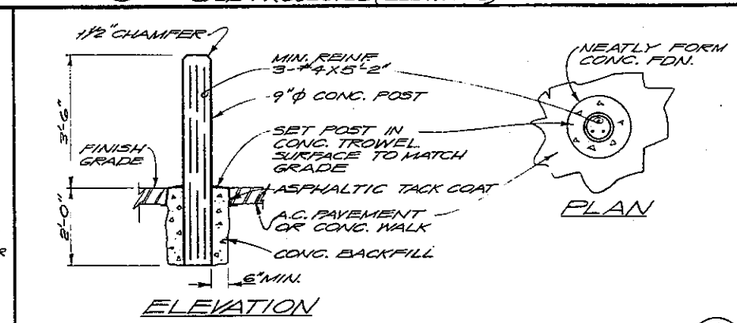

ELEVATION

GUARD POST DETAIL 1 28 72 30

1/2" = 1'-0"

NO.	DATE	RECORD DRAWINGS / REVISION	DHB / BY	APD
			DES OR ARK	SHEET 30
			DR. JAC WVK	OF 113
			CK. RGE	DATE: APRIL 1972
			JOB NO. 56198.1	SCALE: AS SHOWN
				DRAWING NO. C 6198-2

CH2M HILL — ENGINEERS PLANNERS ECONOMISTS

CORNELL HOWLAND HAYES & MERRYFIELD

CLAIR A. HILL & ASSOCIATES

CITY OF BELLINGHAM, WASHINGTON
POST POINT POLLUTION CONTROL PLANT
SCHEDULE T

PRIMARY CLARIFIERS - SECTIONS

NOTE:
CONTINUOUS WEIR & BAFFLE NOT SHOWN. SEE DETAIL ON SHT. 32

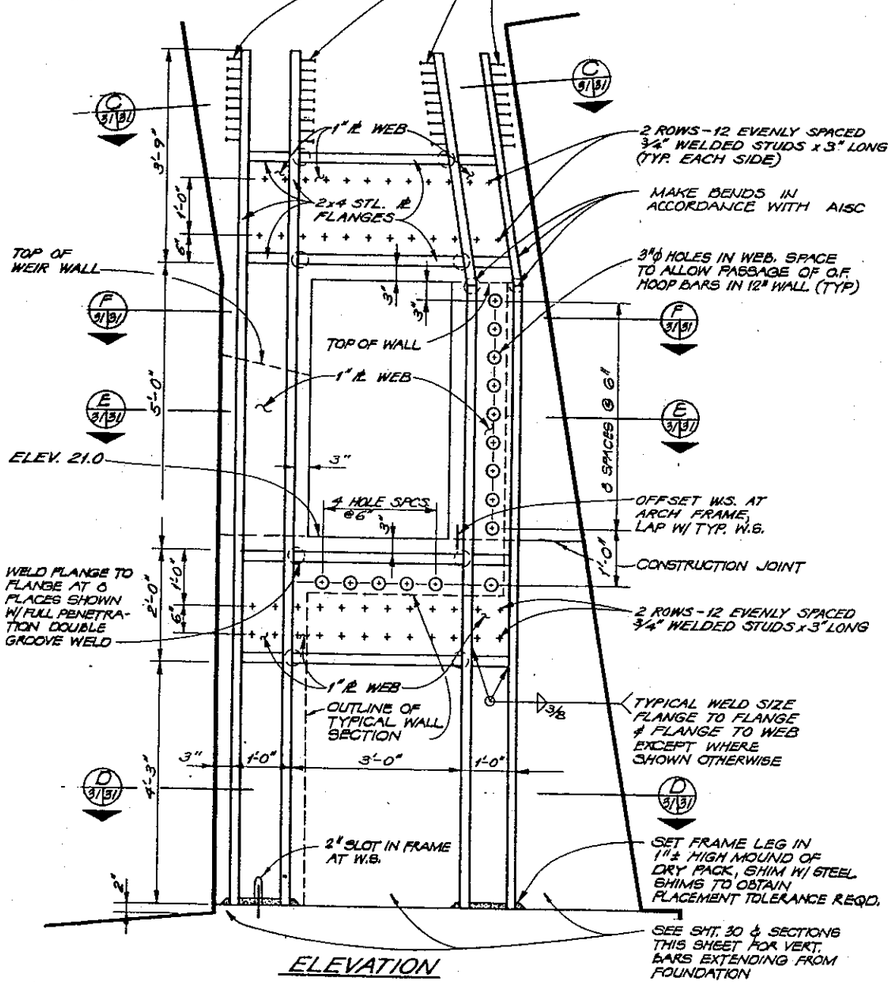

ELEVATION

STRUCTURAL STEEL FRAME DETAIL (1 / 30,31)

12 UNITS REQ'D ONE IN EACH ARCH
3/4" = 1'-0"

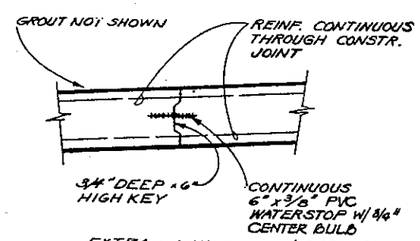

DETAIL (3 / 28,30,31)

NTS

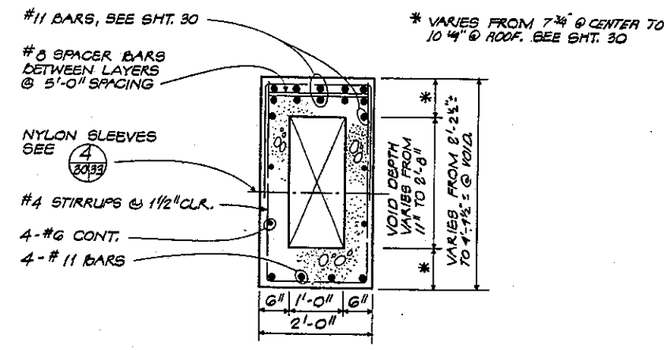

SECTION (A / 30,31)

3/4" = 1'-0"

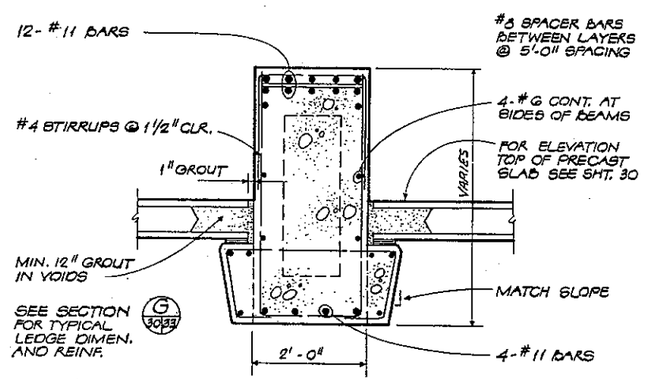

SECTION (B / 30,31)

3/4" = 1'-0"

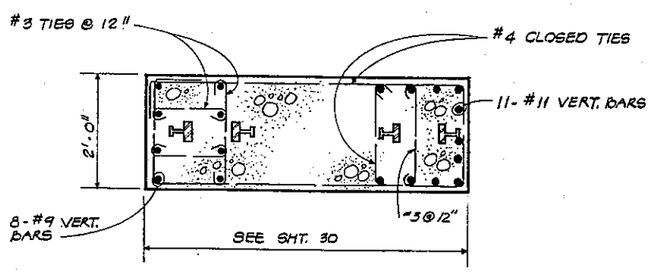

SECTION (C / 30,31)

3/4" = 1'-0"

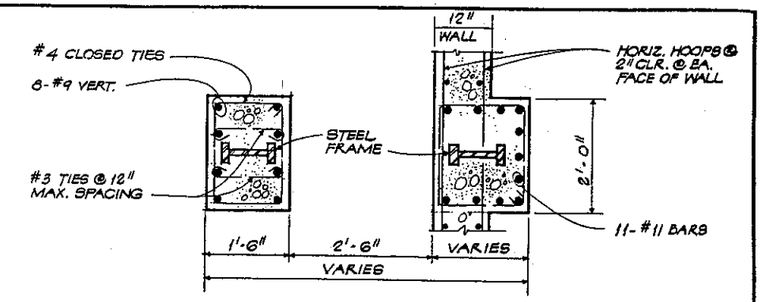

SECTION (F / 30,31)

3/4" = 1'-0"

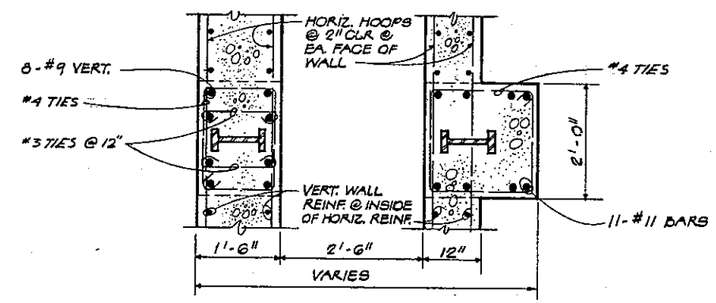

SECTION (E / 30,31)

3/4" = 1'-0"

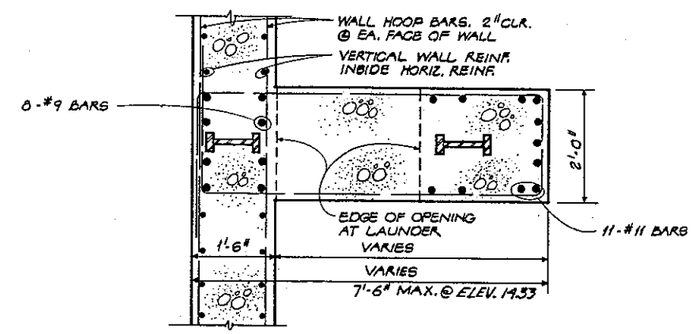

SECTION (D / 30,31)

3/4" = 1'-0"

NO.	DATE	REVISION	BY	APD.
1	APRIL 75	RECORD DRAWINGS	DNB	GRG

CH2M HILL — ENGINEERS PLANNERS ECONOMISTS

CORNELL HOWLAND HAYES & MERRYFIELD — CLAIR A. HILL & ASSOCIATES

CITY OF BELLINGHAM, WASHINGTON
POST POINT POLLUTION CONTROL PLANT
SCHEDULE T

PRIMARY CLARIFIERS
SECTIONS AND DETAILS

DES. OK — DR. RAN/GAF — CK. AGE — RN. 36188.1

SHEET 31 OF 113

DATE: APRIL 1972
SCALE: AS SHOWN

DRAWING NO. C 6198-2

FREDERICK G. KERN — STATE OF WASHINGTON — 9236 — REGISTERED PROFESSIONAL ENGINEER

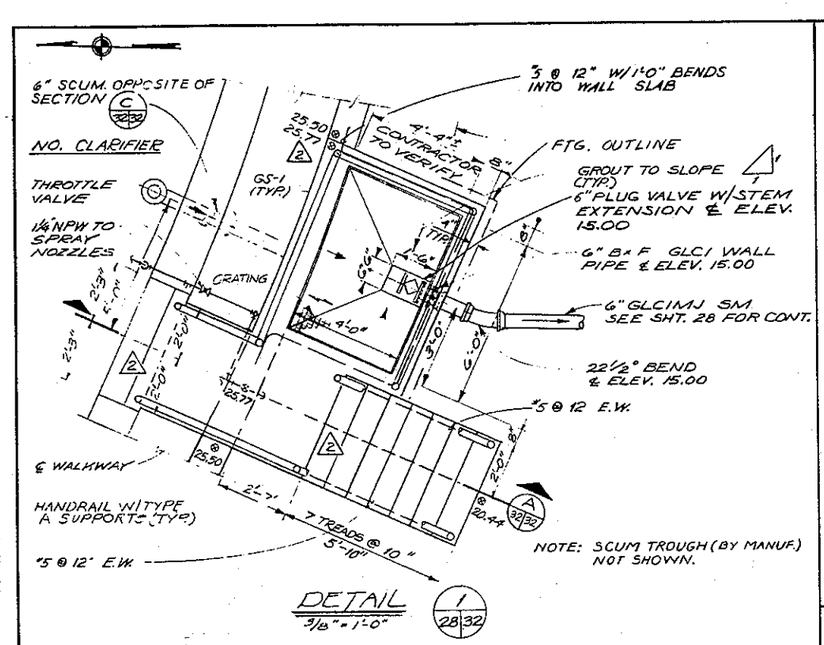

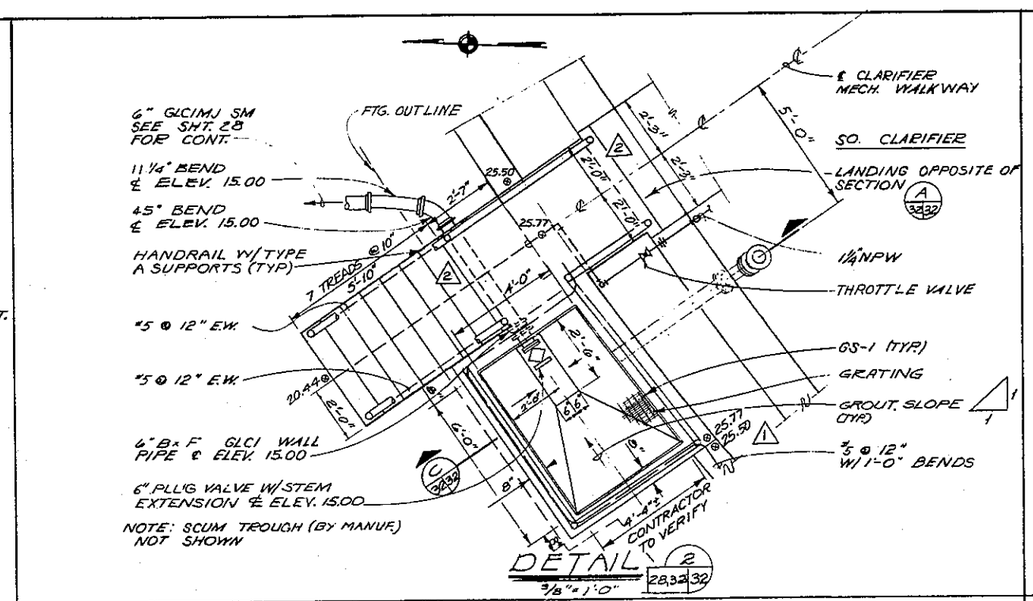

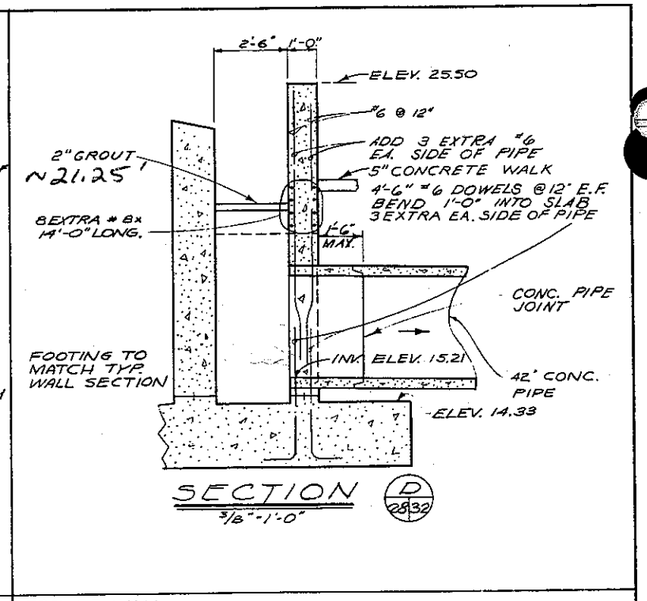

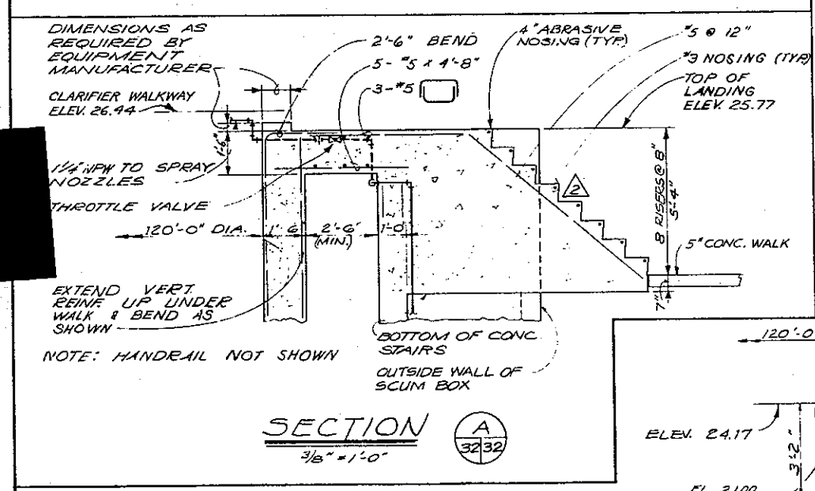

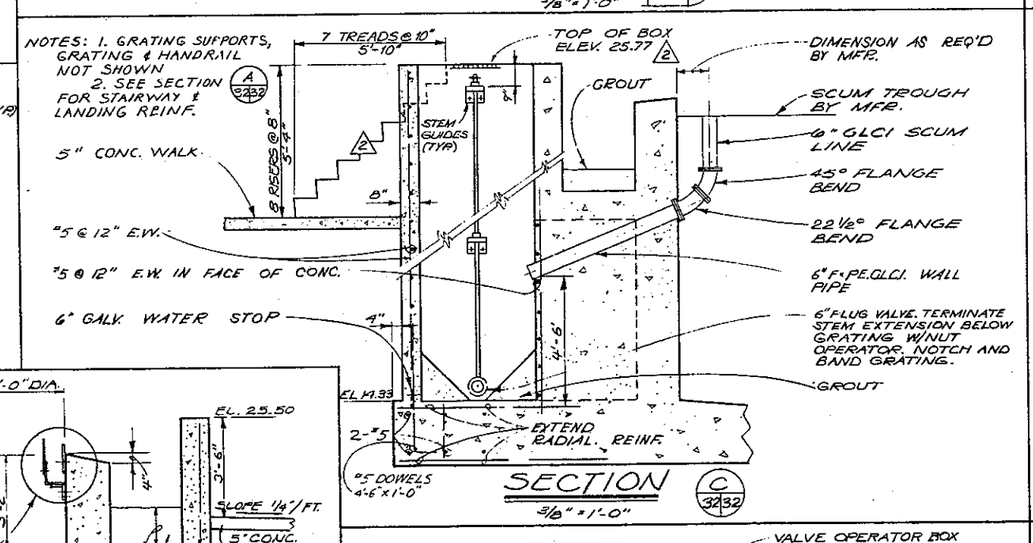

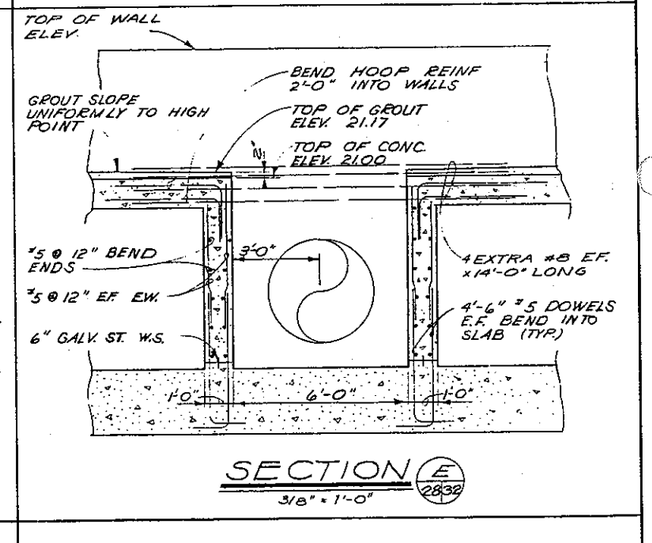

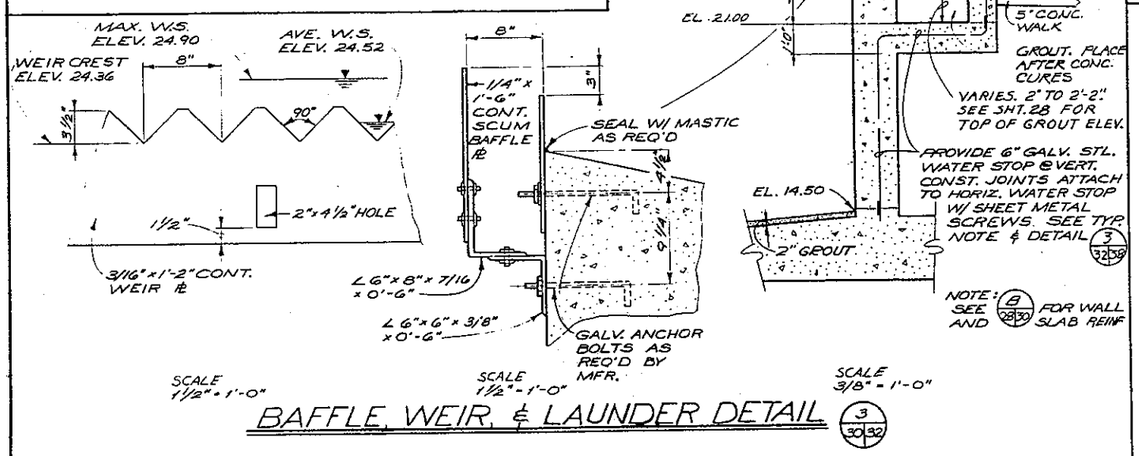

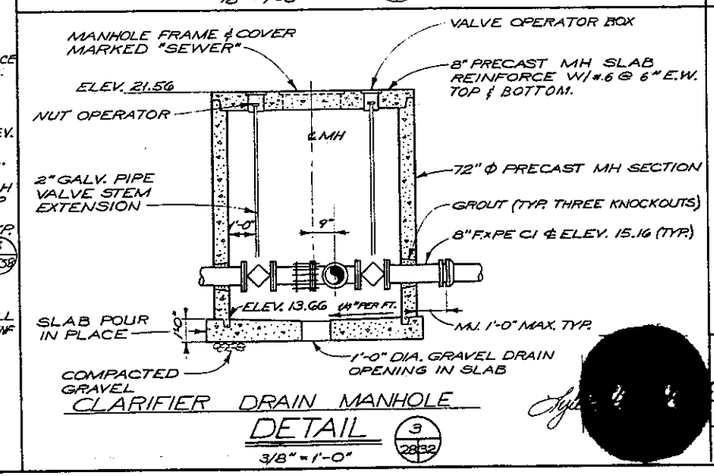

NO.	DATE	REVISIONS	BY	APP.
2		RECORD DWGS.	DNB	
1	1-16-72	STAIR & LANDING	RAH	GRG
1	12-6-72	STAIR & LANDING	EBL	JGG

CH2M HILL — ENGINEERS PLANNERS ECONOMISTS

CORNELL HOWLAND HAYES & MERRYFIELD

CLAIR A. HILL & ASSOCIATES

CITY OF BELLINGHAM, WASHINGTON
POST POINT POLLUTION CONTROL PLANT
SCHEDULE T

PRIMARY CLARIFIERS - SECTIONS AND DETAILS

DES. VGG/GSK
DR. CDS
CK. JDB
WH. 5198.1
SHEET 32 OF 113
DATE: APRIL 1972
SCALE: AS SHOWN
DRAWING NO. C 5198-2

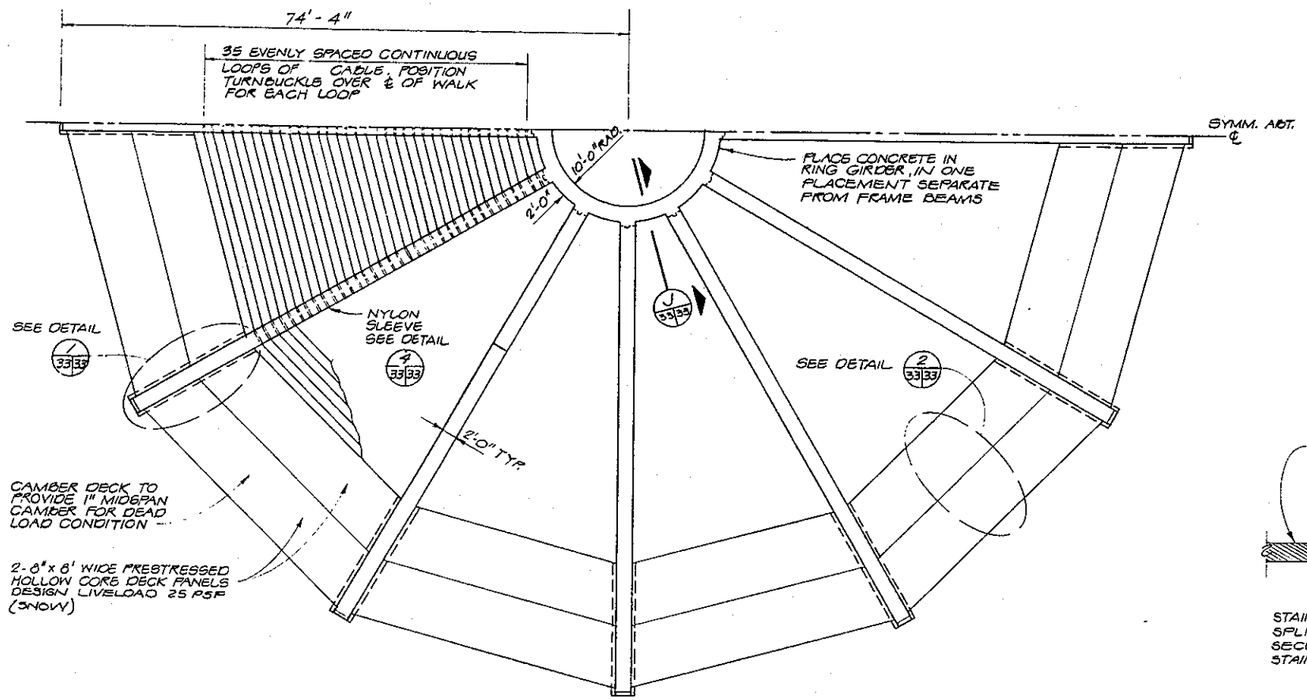

ARCH FRAMING PLAN

1" = 10'

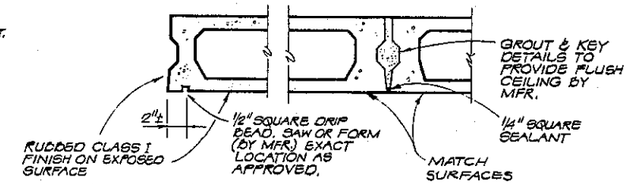

DETAIL 2 (33/33)

N.T.S.

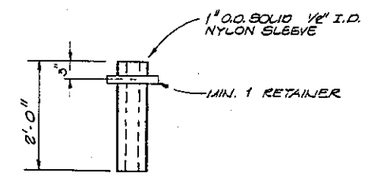

NYLON SLEEVE DETAIL 4 (30/33/33)

N.T.S.

CONSTRUCT RING TO SLEEVE CONNECTIONS TO BE EQUIVALENT TO MONOLITHIC NYLON. PROVIDE TIGHT FIT THROUGH VOID FORM TO PREVENT CONCRETE LEAKAGE INTO VOID

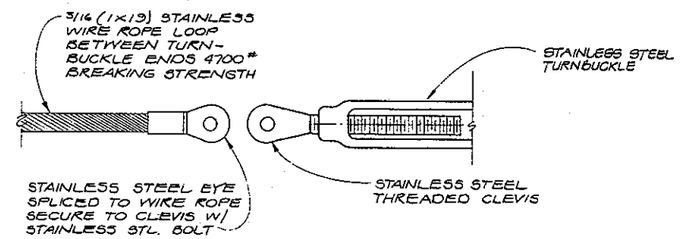

TURNBUCKLE DETAIL 3 (33/33)

N.T.S.

1. SUBMIT COMPLETE DETAILS & MATERIALS SAMPLES FOR WIRE ROPE LOOPS & ATTACHMENTS.
2. ALL MATERIALS SHALL BE STAINLESS STEEL SUITED FOR MARINE ENVIRONMENT.
3. ALL COMPONENTS TURNBUCKLE CLEVIS & EYE SHALL HAVE STRENGTH EQUAL TO THE WIRE ROPE BREAKING STRENGTH.

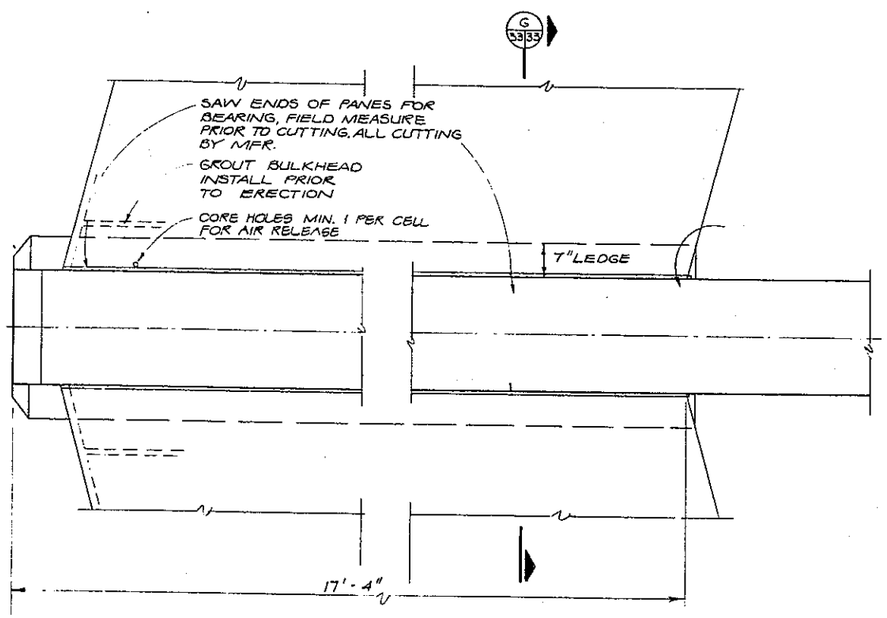

DETAIL 1 (33/33)

3/4" = 1'-0"

NOTE:
CAREFULLY ALIGN 7/8" THREADED DOWELS & INSERTS (W/ TEMPLATES) PARALLEL WITH PANELS TO ALLOW UNRESTRICTED SLAB MOVEMENT. SUBMIT CONSTRUCTION DETAILS FOR APPROVAL

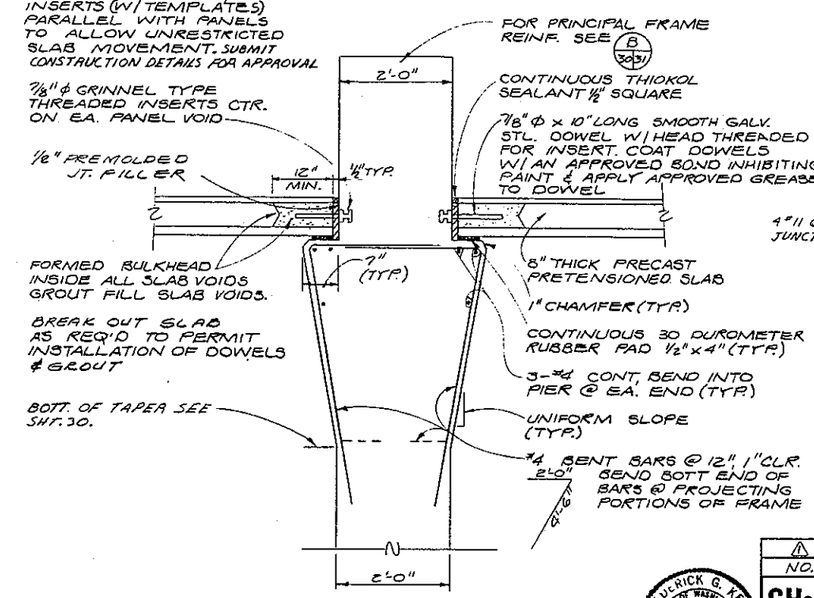

SECTION G (30/33/33)

3/4" = 1'-0"

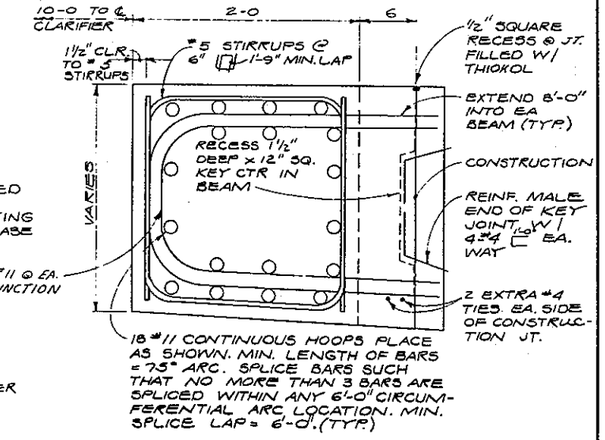

NOTE:
#5 STIRRUPS & LONG. #11 REINF. SIMILAR BETWEEN BEAM JCTS.

SECTION J (33/33)

1 1/2" = 1'-0"

NO.	DATE	REVISION	BY	APD.
		RECORD DRAWINGS	DWB	

CH2M HILL — ENGINEERS PLANNERS ECONOMISTS

CORNELL HOWLAND HAYES & MERRYFIELD — CLAIR A. HILL & ASSOCIATES

CITY OF BELLINGHAM, WASHINGTON
POST POINT POLLUTION CONTROL PLANT
SCHEDULE T

PRIMARY CLARIFIERS -
ROOF PLAN AND DETAILS

DES. — DR. Daf — CK. — DATE: APRIL 1972 — SCALE: AS SHOWN — SHEET 33 OF 113 — DRAWING NO. C 6198-2

FREDERICK G. ALEXANDER — STATE OF WASHINGTON — REGISTERED PROFESSIONAL ENGINEER

SILVER STATIONERY & PRINTING CO., PORTLAND, ORE.

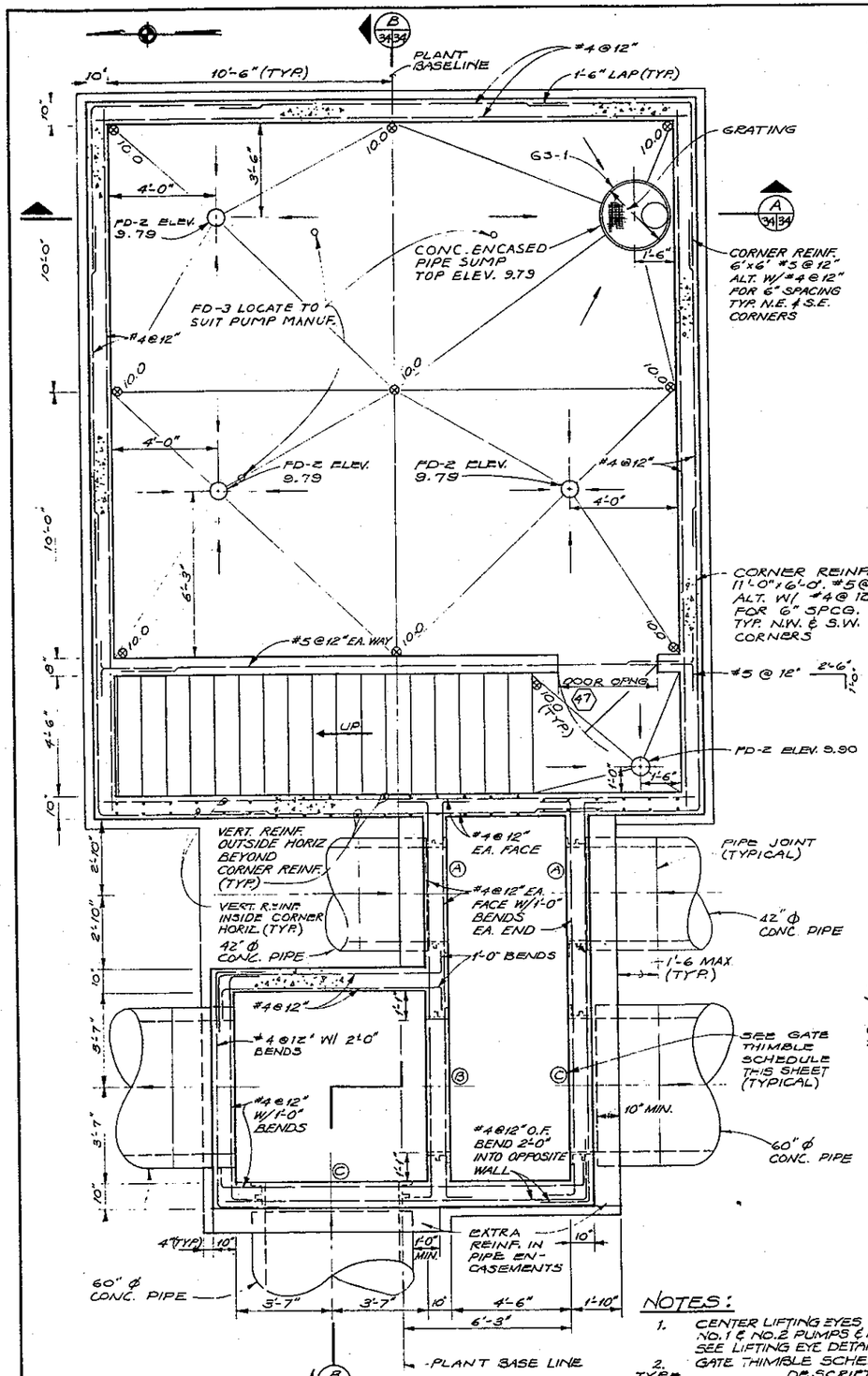

FOUNDATION PLAN

3/8" = 1'-0"

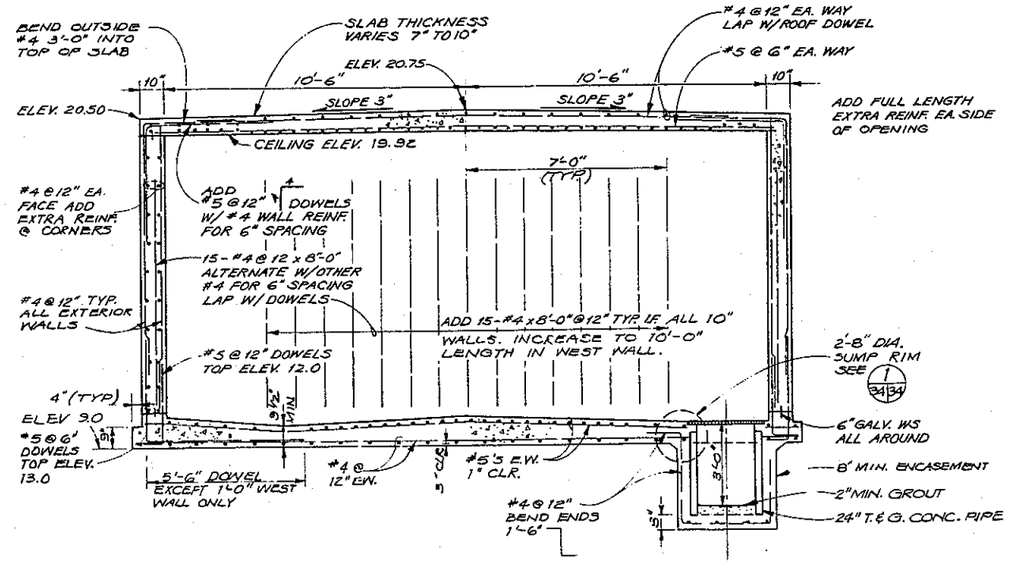

SECTION A 34/34

3/8" = 1'-0"

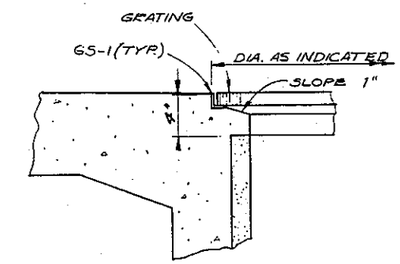

SUMP RIM DETAIL

N.T.S. 1 / 20/34/62/34

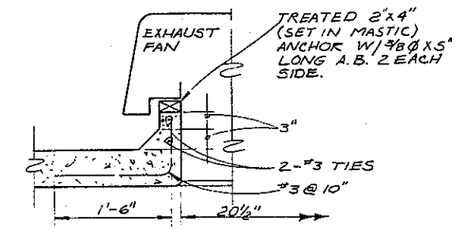

FLASHING-CURB EXHAUST FAN DETAIL

N.T.S. 2 / 35/34

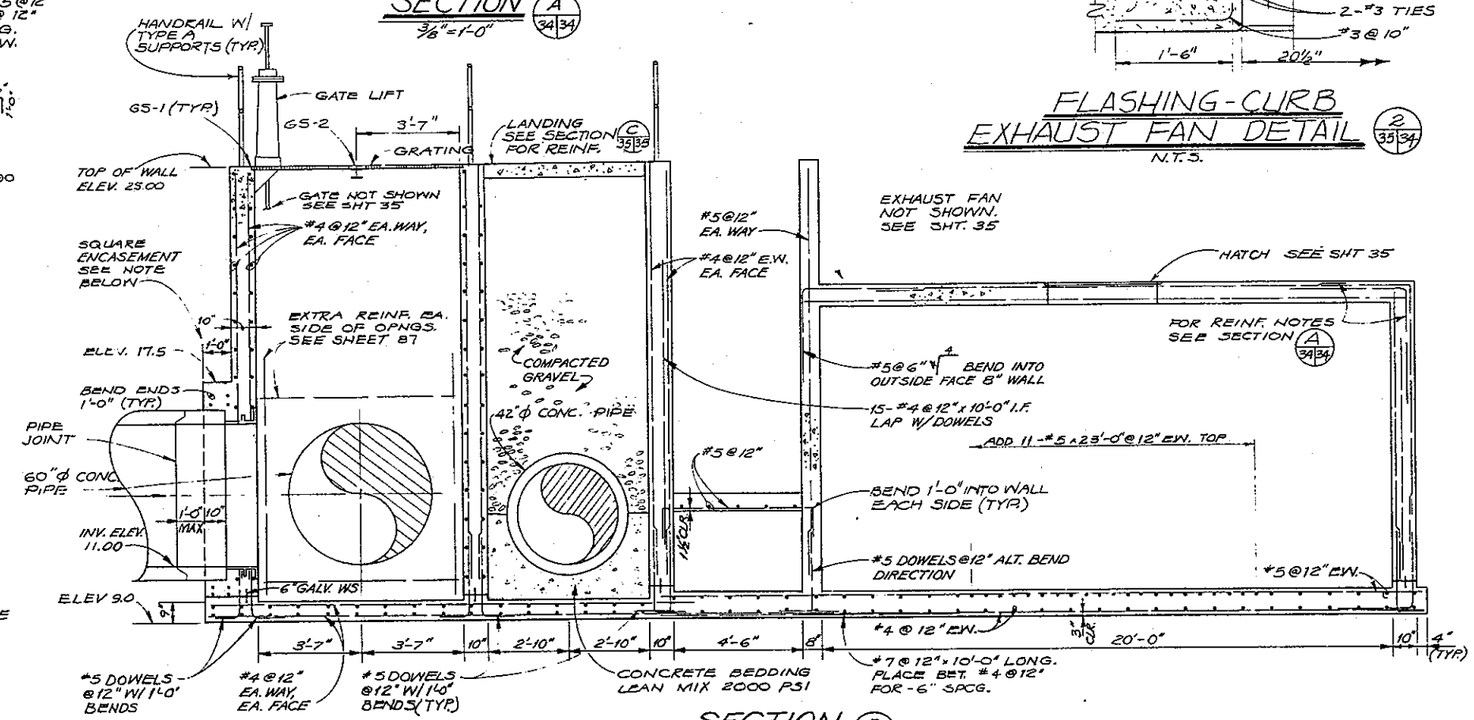

SECTION B 34/34

3/8" = 1'-0"

NOTES:

1. CENTER LIFTING EYES OVER SCUM, SLUDGE, NO. 1 & NO. 2 PUMPS & MOTORS. 6 EYES REQ'D. SEE LIFTING EYE DETAIL SHEET 87.
2. GATE THIMBLE SCHEDULE:

TYPE	DESCRIPTION
A	42" SQUARE FLANGE ROUND OPNG. x 8" L
B	60" SQUARE FLANGE SQUARE OPNG. x 10" L
C	60" SQUARE FLANGE ROUND OPNG. x 12" L

3. REINF. PIPE ENCASEMENT WITH REINFORCEMENT EQUIVALENT TO THAT CUT AT WALL OPNG, BUT NOT LESS THAN #4 @ 12" EW. E.F.
4. TOP ELEV. FOR ALL FOUNDATION DOWELS 12.0 UNLESS OTHERWISE NOTED.
5. SECTION 'A' REINF. SHOWN IN NORTH WALL TYPICAL FOR EAST & SOUTH WALLS. WEST WALL SIMILAR EXCEPT AS NOTED.
6. COMPACTED GRAVEL TO UNDIST. EARTH. 6" MIN. UNDER SLABS & SUMP
7. MECH. EQUIPMENT NOT SHOWN SEE SHT. 36

NO.	DATE	REVISION	BY	APD
1		RECORD DRAWINGS	DNB	

CH2M HILL — ENGINEERS PLANNERS ECONOMISTS

CORNELL HOWLAND HAYES & MERRYFIELD

CLAIR A. HILL & ASSOCIATES

CITY OF BELLINGHAM, WASHINGTON
POST POINT POLLUTION CONTROL PLANT
SCHEDULE T

PRIMARY SLUDGE PUMP STATION - STRUCTURAL - FOUNDATION PLAN AND SECTIONS

DES. FGK
DR. RAH
CK. RGE
DATE: APRIL 1972
SCALE: AS SHOWN
DRAWING NO. C 6196-2
SHEET 34 OF 113

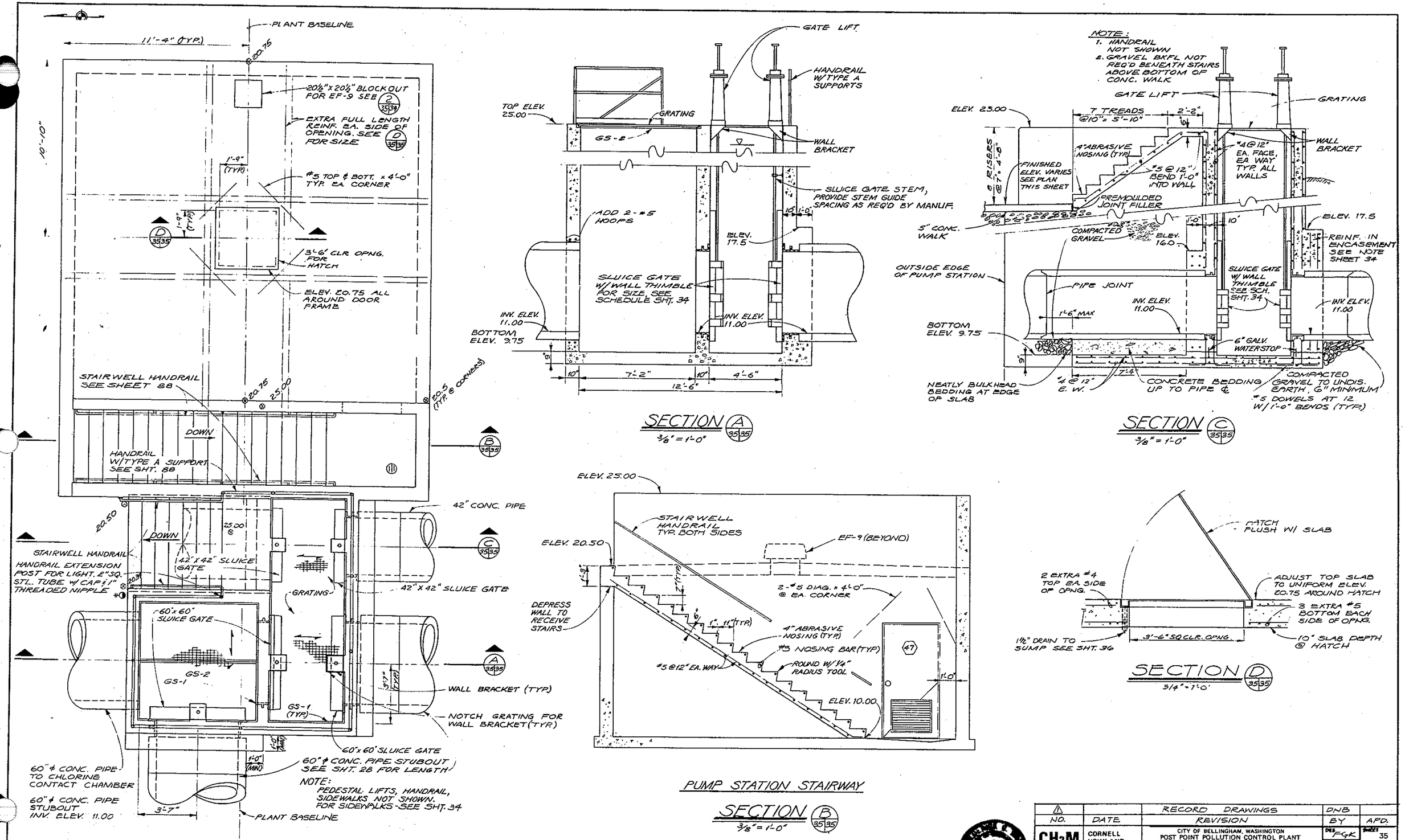

NO.	DATE	RECORD DRAWINGS REVISION	DNB BY	APD.

CH2M HILL — ENGINEERS PLANNERS ECONOMISTS

CORNELL HOWLAND HAYES & MERRYFIELD — CLAIR A. HILL & ASSOCIATES

CITY OF BELLINGHAM, WASHINGTON
POST POINT POLLUTION CONTROL PLANT
SCHEDULE T

PRIMARY SLUDGE PUMP STATION - STRUCTURAL - ROOF PLAN AND SECTIONS

DES FGK · DR RAH · CK RGE · PM 56198.1 · SHEET 35 OF 113 · DATE: APRIL 1972 · SCALE: AS SHOWN · DRAWING NO. C 6198-2

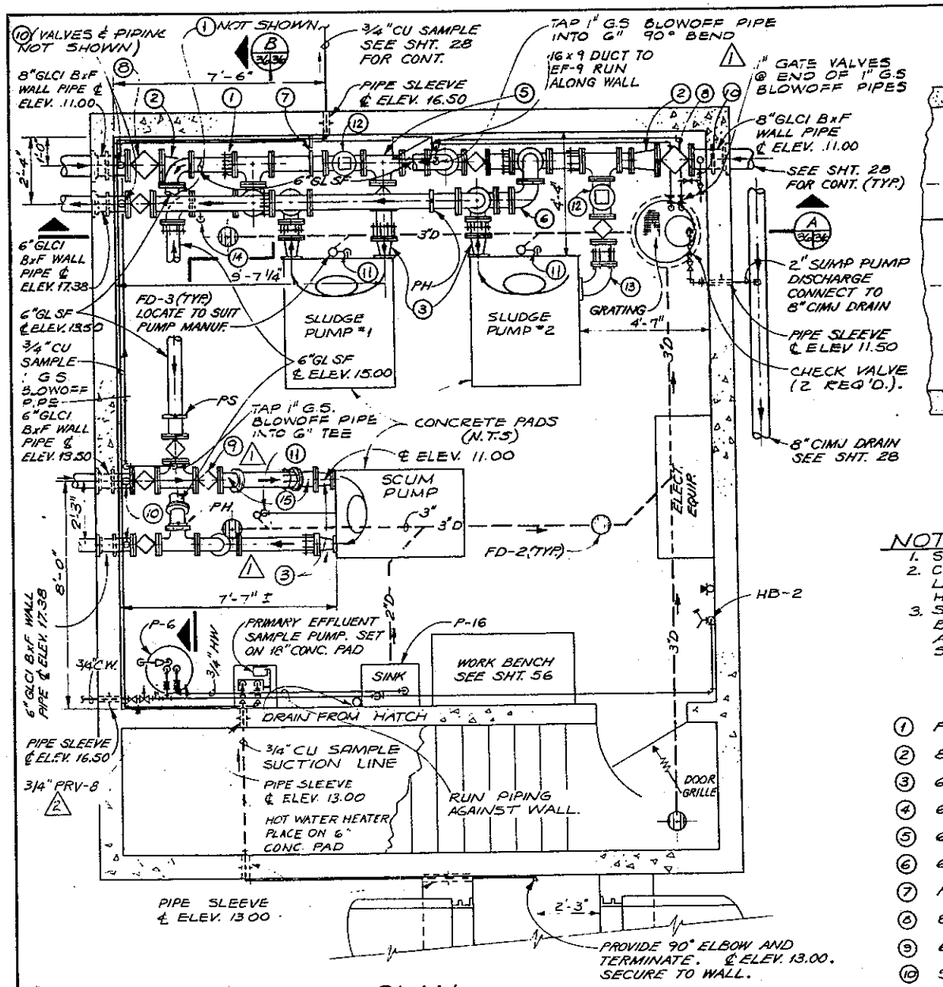

PLAN

3/8" = 1'-0"

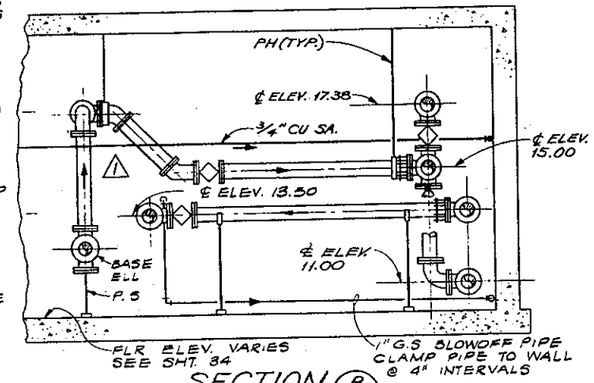

SECTION (B) 36/36

3/8" = 1'-0"

NOTES:
1. SEE SHEET 87 FOR CONC. PS & PH DETAILS
2. CONC. PADS SHALL BE 3" WIDER AND 3" LONGER THAN PUMP ASSEMBLY BASE PLATE. HEIGHT SHALL BE AS REQ'D BY PUMP MANUF.
3. STEAM/WATER FLUSHING CONNECTION SHALL BE 3/4" W/ 3/4" NPT X 3/4" FEMALE HOSE ADAPTER & STEAM QUICK COUPLE TO SUIT OWNERS STEAM GENERATOR.

LEGEND (THIS BLDG. ONLY)

1. FLANGED COUPLING ADAPTER W/ ANCHOR STUDS (TYP.)
2. 8"x6" GL CIF CONCENTRIC REDUCER
3. 6"x4" GL CIF CONCENTRIC REDUCER (TYP.)
4. 6" SIGHT GLASS
5. 6" GL CIF TEE (TYP.)
6. 6" GL CIF ELL (TYP.)
7. PIPE WALL SUPPORT. SEE SHEET 88
8. 8" PLUG VALVE
9. 6" PLUG VALVE (TYP. UNLESS INDICATED OTHERWISE)
10. STEAM / WATER FLUSHING CONNECTION
11. PIPE DRIP RAIL TO DRAIN.
12. 6" SIGHT GLASS
13. 6" x 4" GL CI REDUCING ELL.
14. 2" SAMPLING CONNECTION. END 4'-0" ABOVE FLOOR.
15. △1 6" GLCIF 45° BEND

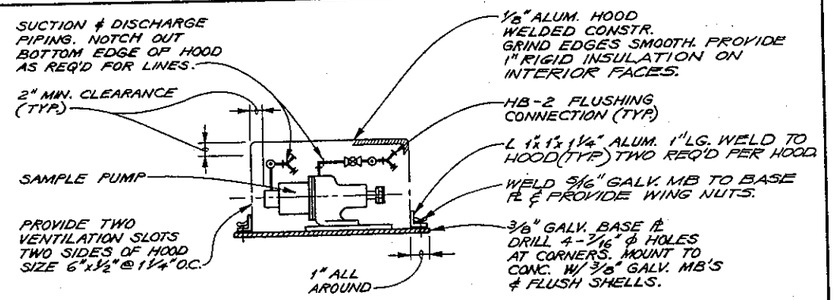

NOTE:
1. INSULATE ABOVE GROUND EXPOSED SAMPLE PIPING W/ OWENS-CORNING FIBERGLAS 25 W/ ALUMINUM JACKET.
2. PROVIDE ALL SAMPLE PUMPS W/ FLUSHING CONN. AS SHOWN.

SAMPLE PUMP DETAIL (2)

NTS

22 24 40 47 36

NAME PLATE SCHEDULE	
CODE	INSCRIPTION
A	PLANT INFLUENT
B	PRIMARY EFFLUENT
C	FINAL EFFLUENT (SAMPLER ASSEMBLY NO. 2)

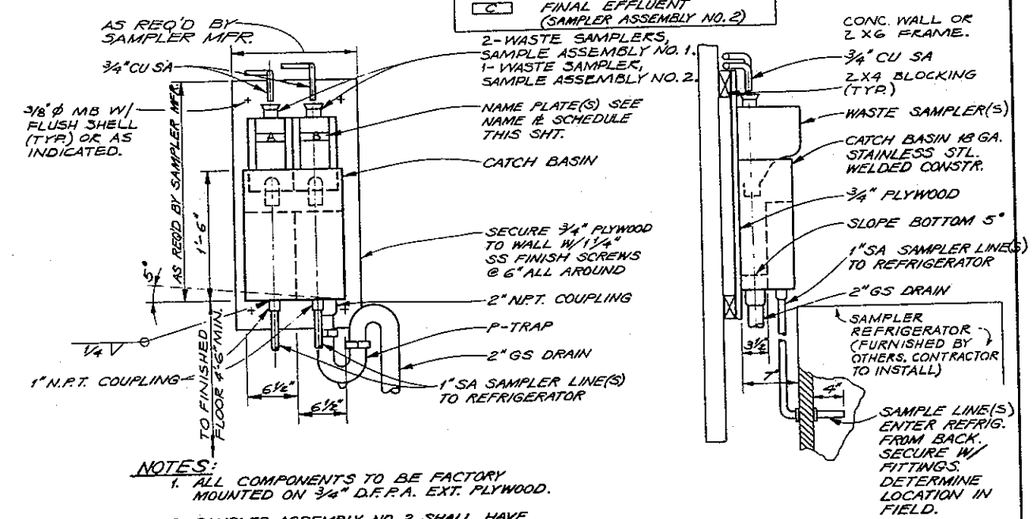

NOTES:
1. ALL COMPONENTS TO BE FACTORY MOUNTED ON 3/4" D.F.P.A. EXT. PLYWOOD.
2. SAMPLER ASSEMBLY NO. 2 SHALL HAVE ONE WASTE SAMPLER
3. SAMPLER CONTROLS MOUNTED IN LABORATORY

FRONT ELEVATION — COMPOSITE SECTION

WASTE SAMPLER ASSEMBLY DETAIL (3)

NTS

23 25 70 36

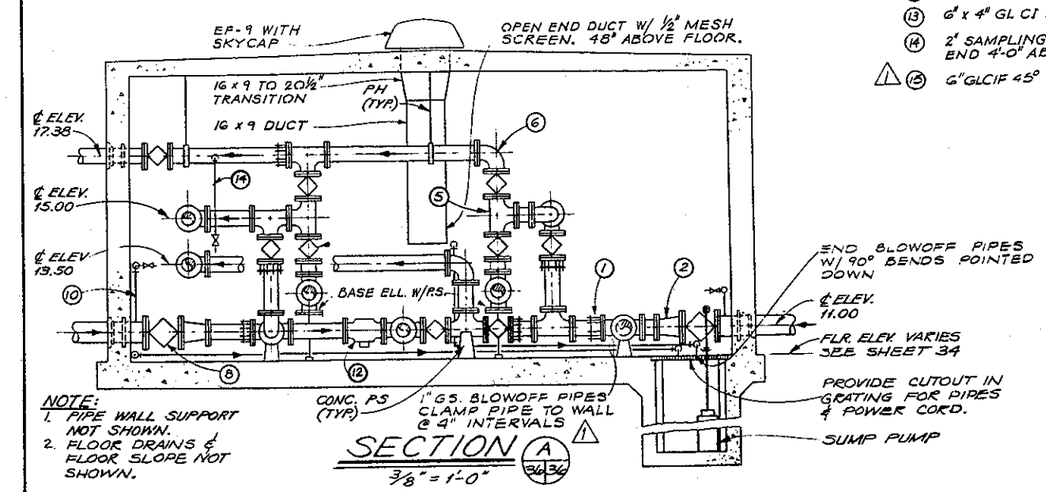

NOTE:
1. PIPE WALL SUPPORT NOT SHOWN.
2. FLOOR DRAINS & FLOOR SLOPE NOT SHOWN.

SECTION (A) 36/36

3/8" = 1'-0"

NO.	DATE	REVISION	BY	CHK
3		RECORD DRAWINGS	DHB	
2	11 APRIL '74	ADD 3/4" PRV-8	GEN	GTF
1	24 SEPT. 73	SCUM PUMP PIPING MODIFICATION	DLS	ALS

CH2M HILL — ENGINEERS PLANNERS ECONOMISTS

CORNELL HOWLAND HAYES & MERRYFIELD — CLAIR A. HILL & ASSOCIATES

CITY OF BELLINGHAM, WASHINGTON
POST POINT POLLUTION CONTROL PLANT
SCHEDULE T

PRIMARY SLUDGE PUMP STATION - MECHANICAL - PLAN AND SECTIONS

DES. JGG — DR. RAH — CK. JDS — DATE: APRIL 1972 — SCALES: AS SHOWN — SHEET 36 — OF 113 — DRAWING NO. C 6196-2

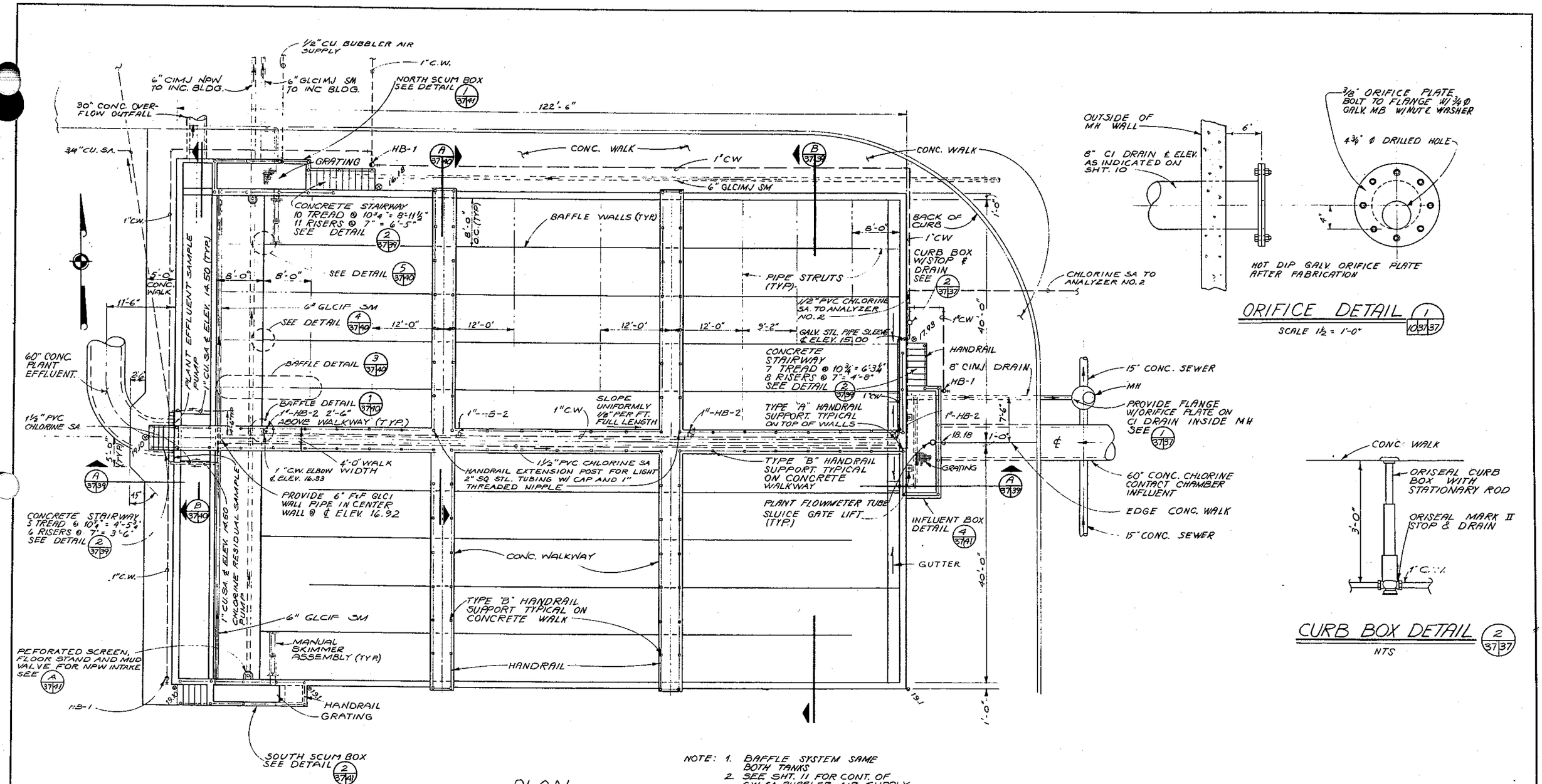

PLAN

SCALE: 1/8" = 1'-0"

NOTE:
1. BAFFLE SYSTEM SAME BOTH TANKS
2. SEE SHT. 11 FOR CONT. OF C.W., SA., BUBBLER AIR SUPPLY & NPW PIPING.
3. SEE SHT. 10 FOR CONT. OF OTHER PIPING

NO.	DATE	REVISION	BY	APD.
		RECORD DRAWINGS	DNB	

CH2M HILL — ENGINEERS PLANNERS ECONOMISTS

CORNELL HOWLAND HAYES & MERRYFIELD — CLAIR A. HILL & ASSOCIATES

CITY OF BELLINGHAM, WASHINGTON
POST POINT POLLUTION CONTROL PLANT
SCHEDULE T

CHLORINE CONTACT CHAMBER - PLAN

DES. JGG
DR. LF
CK. JDB
PM 36196.1
SHEET 37 OF 113
DATE: APRIL 1972
SCALE: AS SHOWN
DRAWING NO. C 6196-2

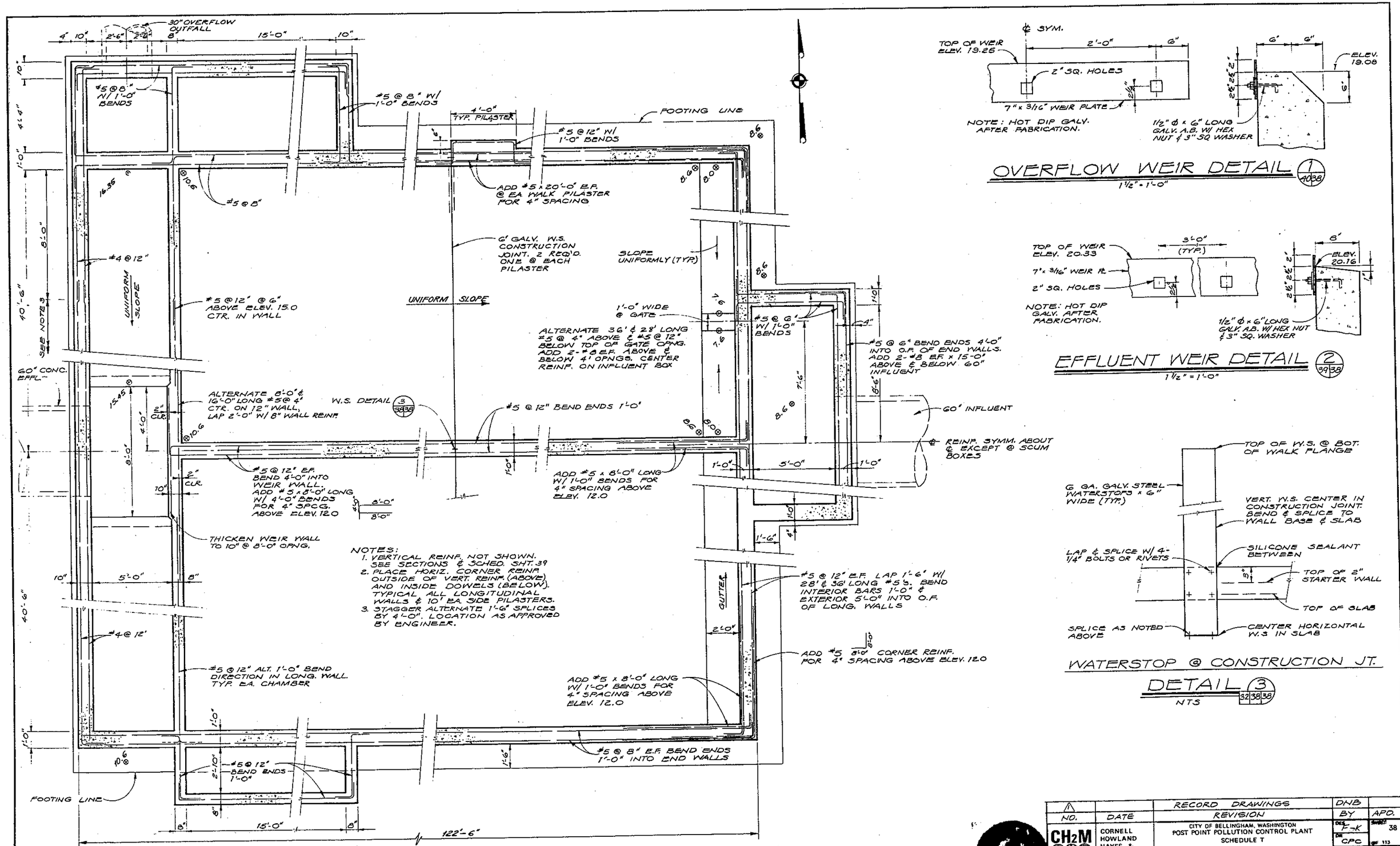

WALL REINFORCING PLAN
CORNER DETAILS
N.T.S.

NO.	DATE	RECORD DRAWINGS / REVISION	DNB / BY	APD.
CH2M HILL — ENGINEERS PLANNERS ECONOMISTS	CORNELL HOWLAND HAYES & MERRYFIELD — CLAIR A. HILL & ASSOCIATES	CITY OF BELLINGHAM, WASHINGTON POST POINT POLLUTION CONTROL PLANT SCHEDULE T CHLORINE CONTACT CHAMBER - WALL REINFORCEMENT PLAN AND DETAILS	DES. F-K DR. CPC CK. A-E SH. S6198.1	SHEET 38 OF 113 DATE: APRIL 1972 SCALE: DRAWING NO. C 6198-2

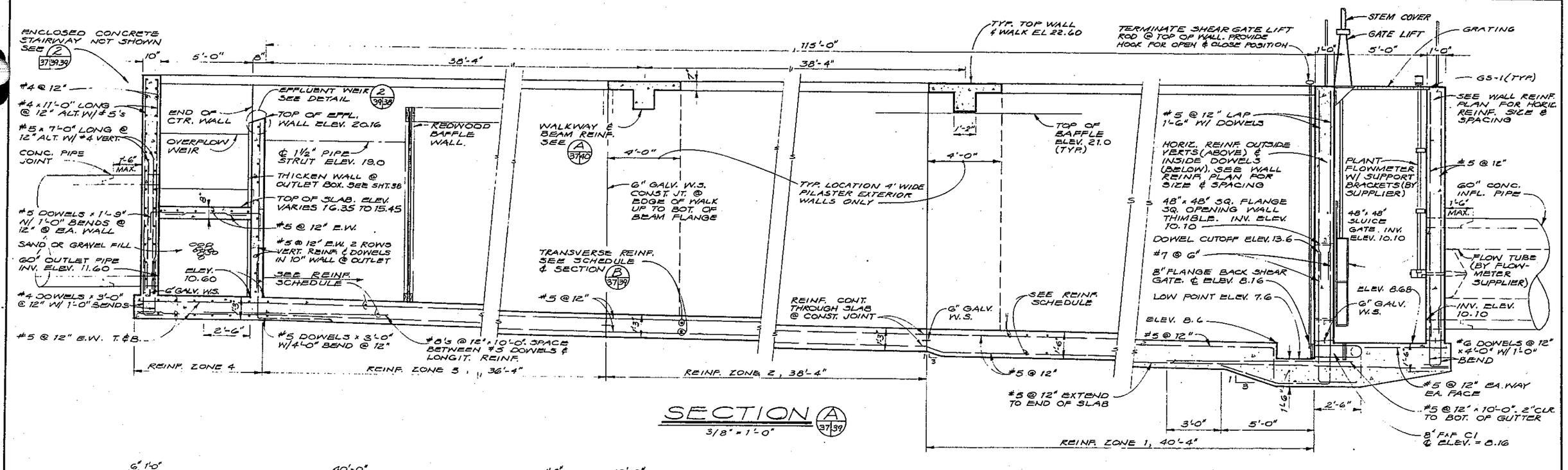

SECTION A 37/39

3/8" = 1'-0"

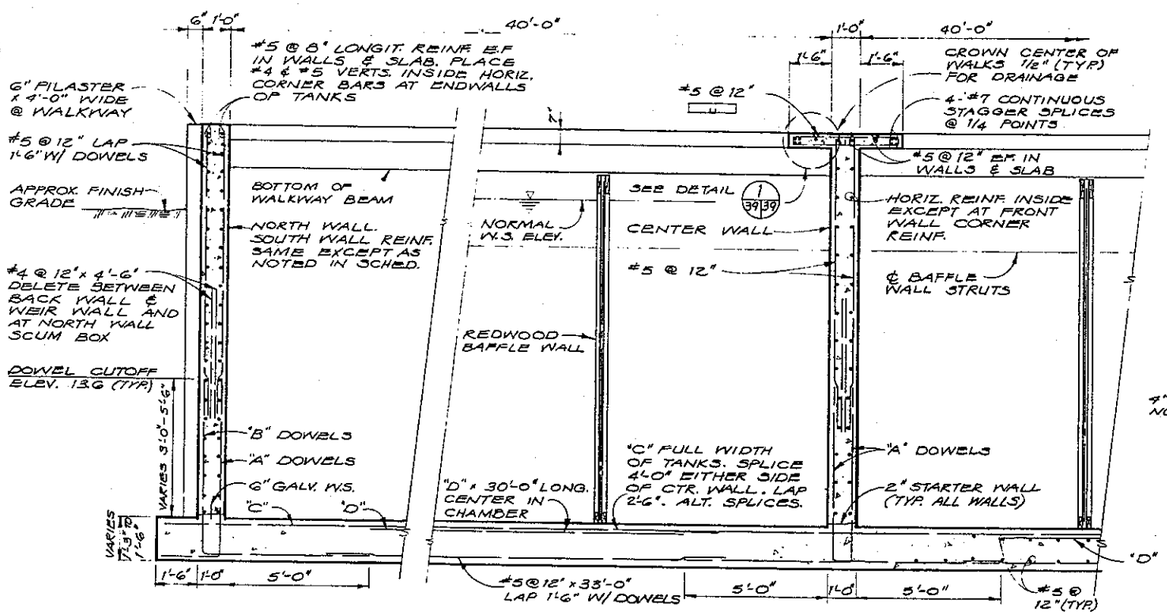

SECTION B 37/39

3/8" = 1'-0"

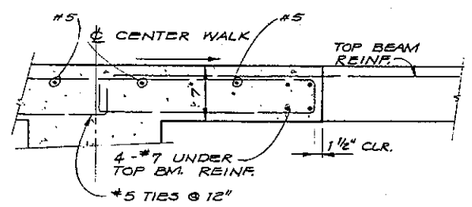

DETAIL 1 39/39

N.T.S.

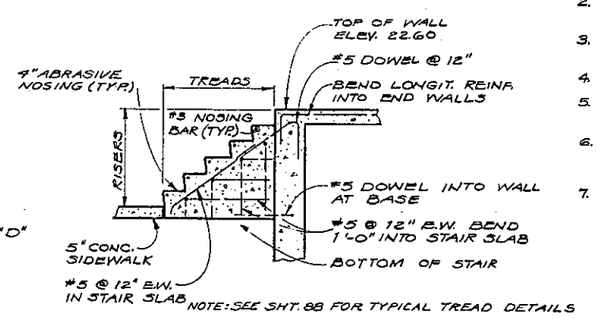

TYPICAL STAIRWAY DETAIL 2 37,39/39,41

N.T.S.

REINFORCEMENT SCHEDULE

BAR DESIG.	TYPE	SIZE & SPACING ZONE 1	ZONE 2	ZONE 3	ZONE 4	REMARKS
A	DOWEL	#7 @ 4'	#7 @ 4½"	#7 @ 5"	SEE	SEE NOTE 3
B	DOWEL	#6 @ 4'	#6 @ 4½"	#6 @ 5"	NOTE	SEE NOTE 3
C	STRAIGHT	#8 @ 12"	#8 @ 12"	#8 @ 12"	1	
D	STRAIGHT	#8 @ 12"	#8 @ 12"	#8 @ 12"		

GENERAL NOTES

1. ZONE 4, USE #5 @ 12" EA. WAY, EA. FACE IN SLAB & WALLS.
2. STAGGER ALTERNATE 1'-6" SPLICES BY 4'-0" (LONG DIRECTION OF TANKS). SPLICE LOCATIONS AS APPROVED BY ENGINEER.
3. INCREASE DOWEL SPACING TO 12", 5'-0" EACH SIDE OF EACH PILASTER ℄, & AT NORTH SCUM BOX.
4. 2" STARTER WALLS TYPICAL FOR ALL WALLS.
5. PLACE EXTRA LAYER OF HORIZONTAL REINFORCING OF BAR SIZE NOTED @ TOP OF ALL WALLS.
6. REINFORCING CLEARANCE 1½" FOR ALL INTERIOR SURFACES TYPICAL WALLS AND SLAB, 3" FOR SLAB BOTTOM REINF., 2" FOR ALL EXTERIOR WALL SURFACES.
7. COMPACTED GRAVEL TO UNDISTURBED EARTH, 6" MINIMUM UNDER ALL SLABS, FOOTINGS & STAIR WALLS.

NO.	DATE	RECORD DRAWINGS REVISION	DWB BY	APD.

CH2M HILL — ENGINEERS PLANNERS ECONOMISTS

CORNELL HOWLAND HAYES & MERRYFIELD

CLAIR A. HILL & ASSOCIATES

CITY OF BELLINGHAM, WASHINGTON
POST POINT POLLUTION CONTROL PLANT
SCHEDULE T

CHLORINE CONTACT CHAMBER - SECTIONS

DES. F.K. — DR. C.P.C. — CK. F.E. — IN 36196.1

SHEET 39 OF 113

DATE: APRIL 1972

SCALE: AS SHOWN

DRAWING NO. C 6196-2

BIRMAR STATIONERY & PRINTING CO., PORTLAND, ORE.

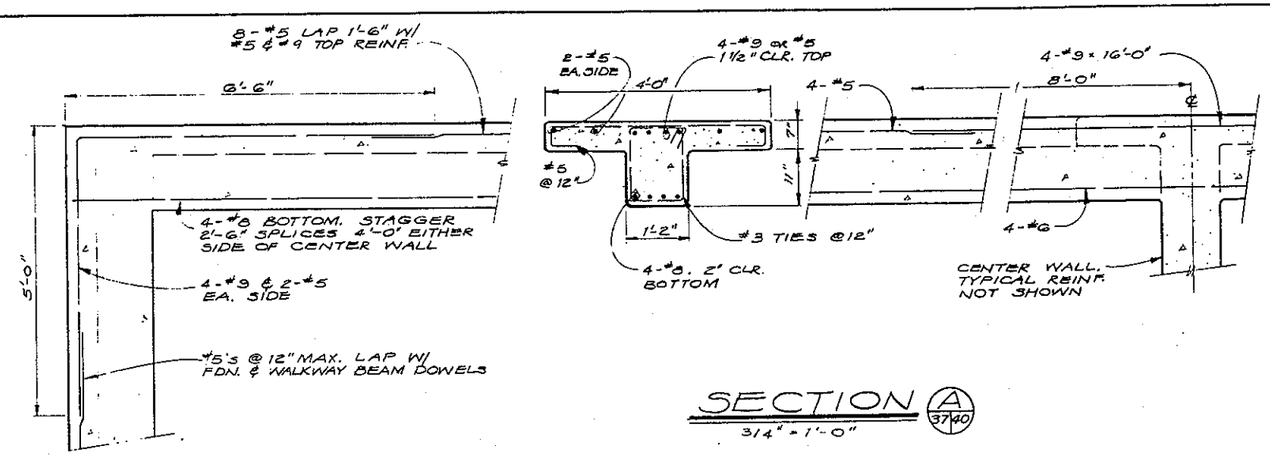

SECTION (A 37/40)
3/4" = 1'-0"

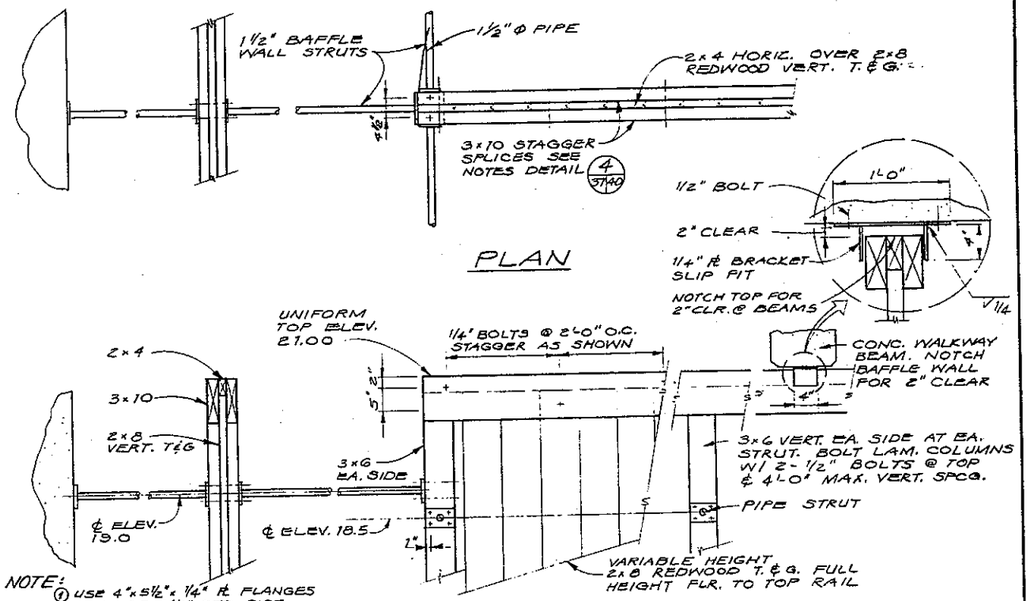

NOTE:
① USE 4"x5 1/2"x 1/4" PL FLANGES ON EA. END OF 1 1/2" STD. PIPE STRUT. DRILL FOR 4-1/2" BOLTS. ℄ BOLT TO EDGE PL 1" TYPICAL. CONNECT FLANGES W/ 1/4" FILLET WELDS ALL AROUND. ALLOW 1/2" SHIM SPACE EA. END OF STRUTS. USE TREATED PLYWOOD WASHERS SIZE TO MATCH FLANGES FOR SOLID CONNECTION.
② PIPE STRUTS, ANGLES, AND MISC. METALS REQ'D FOR COMPLETE BAFFLE SYSTEM SHALL BE HOT DIP GALVANIZED.

ELEVATION DETAIL (3 37/40)
3/4" = 1'-0"

FLOOR CONNECTION DETAIL (2 40/40)

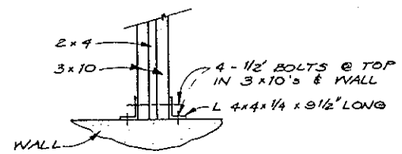

DETAIL (1 37/40)
3/4" = 1'-0"

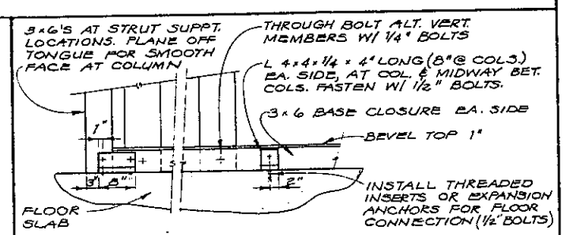

TYPICAL FLOOR CONNECTION
DETAIL (2 40/40)
N.T.S.

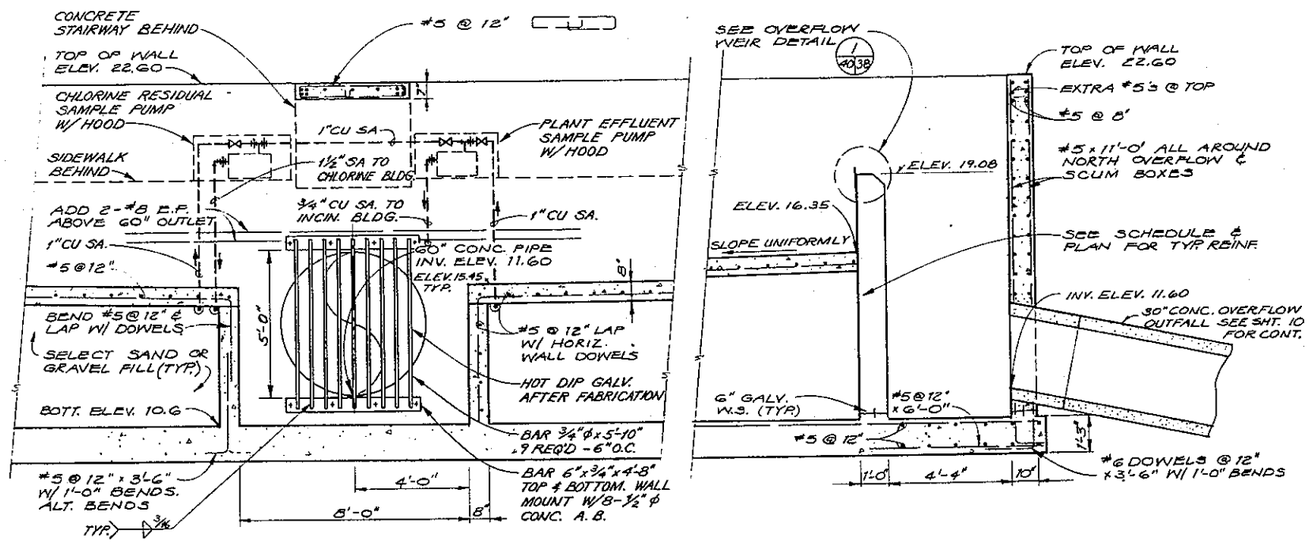

NOTE:
PROVIDE HOOD AND FLUSHING CONNECTIONS ON EACH SAMPLE PUMP AS PER DETAIL (2 40/36)

SECTION (B 37/40)
3/8" = 1'-0"

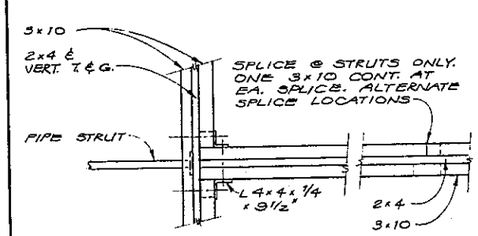

PLAN

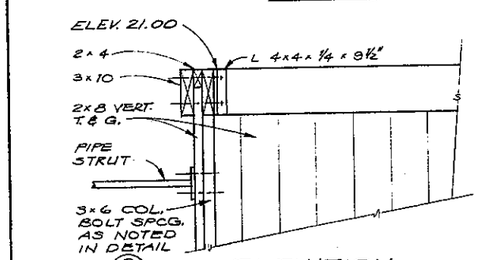

ELEVATION
DETAIL (4 37/40)
3/4" = 1'-0"

FLOOR CONN. DETAIL (2 40/40)

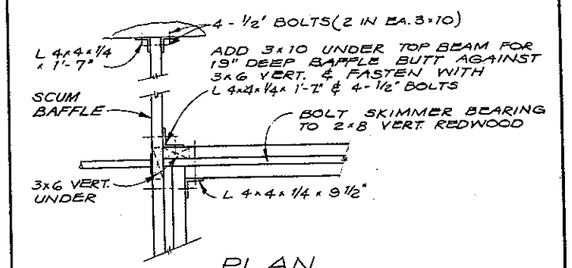

PLAN

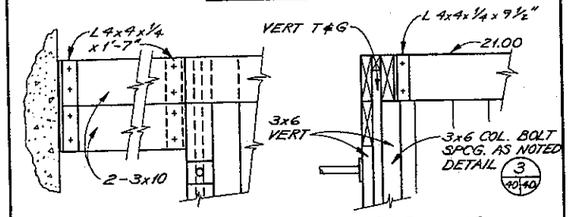

ELEVATION (SCUM BAFFLE)
ELEVATION

DETAIL (5 37/40)
3/4" = 1'-0"

FLOOR CONN. DETAIL (2 40/40)

NO.	DATE	REVISION	BY	APD.
1		RECORD DRAWINGS	DNB	

CH2M HILL
ENGINEERS PLANNERS ECONOMISTS

CORNELL HOWLAND HAYES & MERRYFIELD
CLAIR A. HILL & ASSOCIATES

CITY OF BELLINGHAM, WASHINGTON
POST POINT POLLUTION CONTROL PLANT
SCHEDULE T

CHLORINE CONTACT CHAMBER - SECTIONS AND DETAILS

DES. F.K.
DR. CRC
CK. F.E.
RM 56196.1
DRAWING NO. C 6196-2
SHEET 40 OF 113
DATE: APRIL 1972
SCALE:

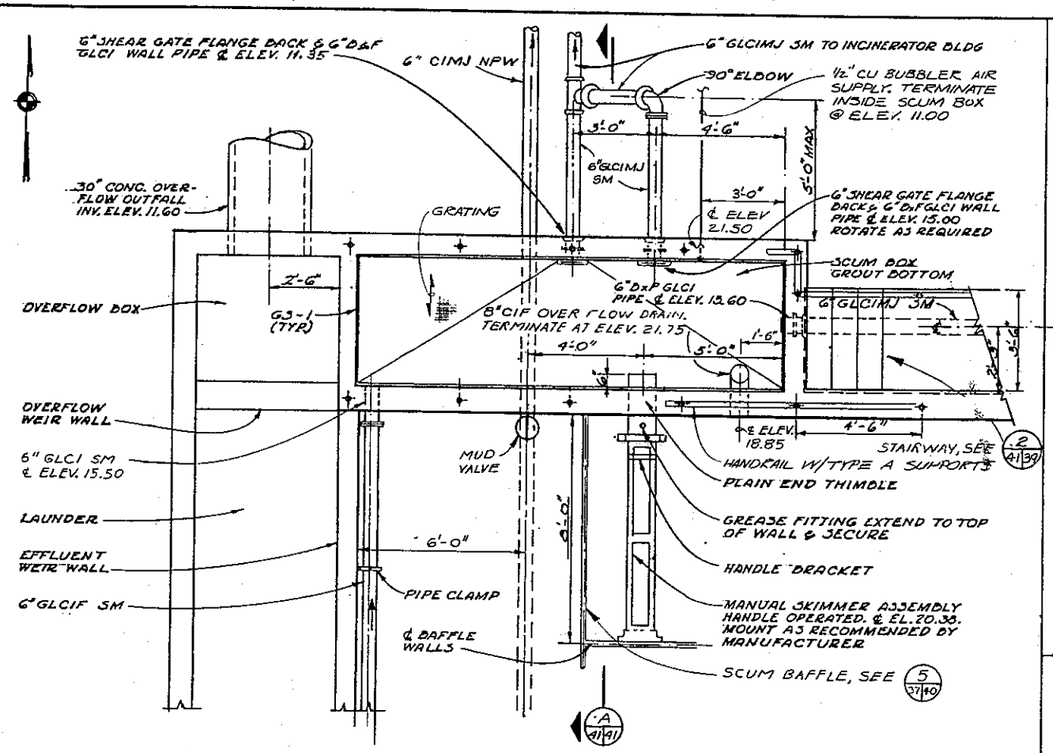

NORTH SCUM BOX DETAIL 1/37/41
3/8" = 1'-0"

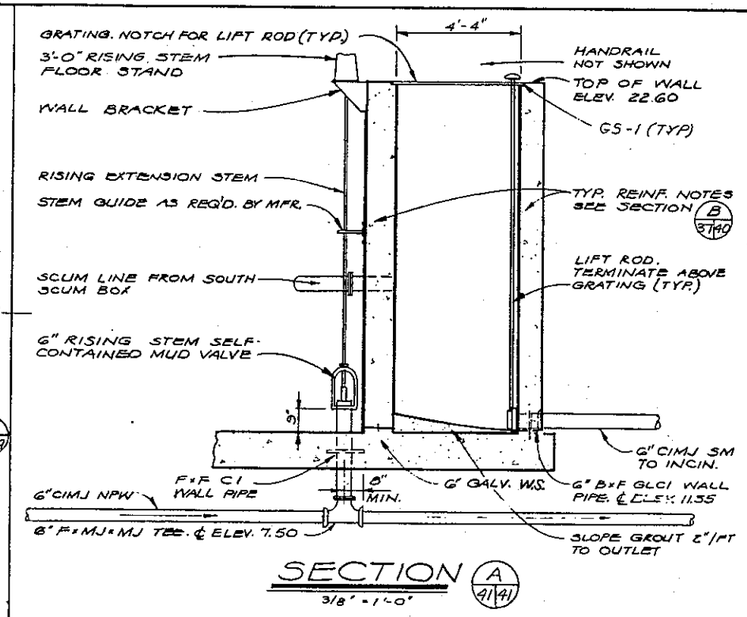

SECTION A/41/41
3/8" = 1'-0"

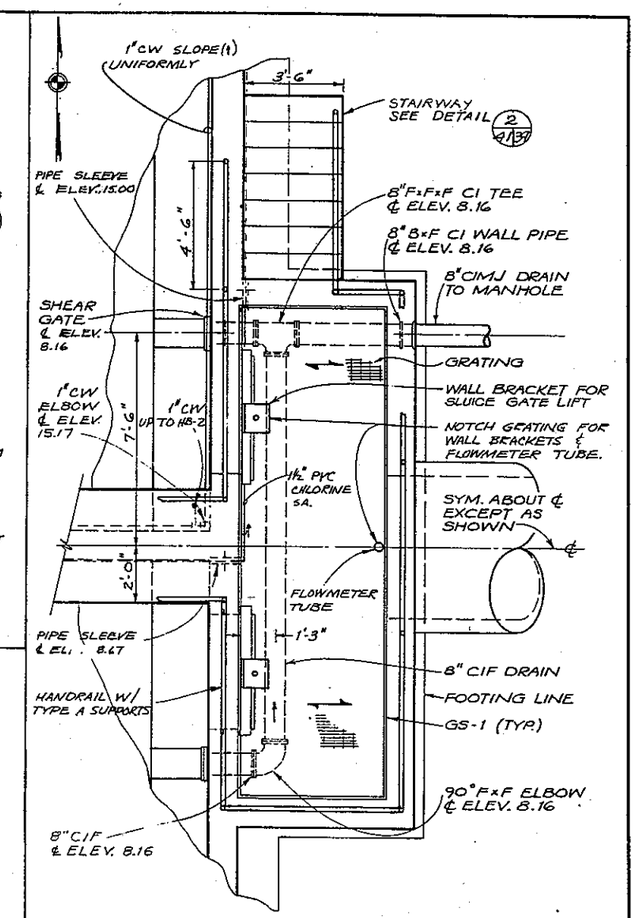

INFLUENT BOX DETAIL 4/37/41
3/8" = 1'-0"

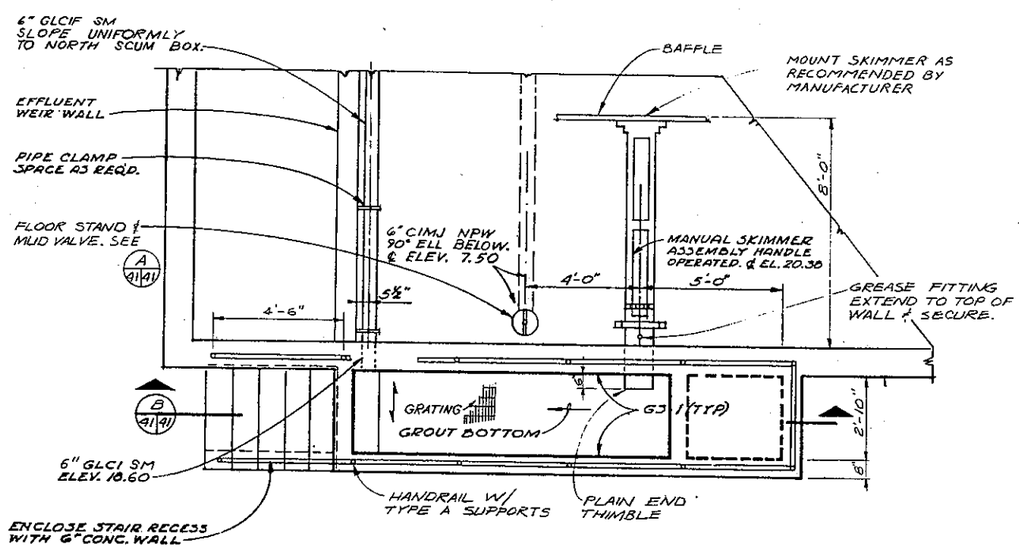

SOUTH SCUM BOX DETAIL 2/37/41
3/8" = 1'-0"

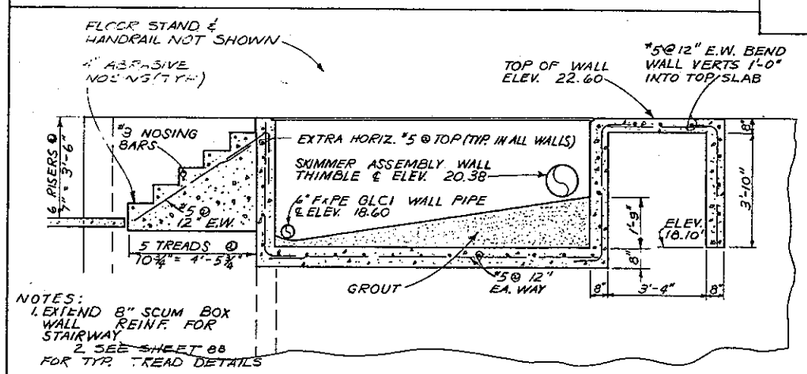

SECTION B/41/41
3/8" = 1'-0"

NO.	DATE	RECORD DRAWINGS / REVISION	DNB / BY	APD

CH2M HILL — ENGINEERS PLANNERS ECONOMISTS

CORNELL HOWLAND HAYES & MERRYFIELD

CLAIR A. HILL & ASSOCIATES

CITY OF BELLINGHAM, WASHINGTON
POST POINT POLLUTION CONTROL PLANT
SCHEDULE T

CHLORINE CONTACT CHAMBER - MECHANICAL - DETAILS

DES JGG | DR CPC | CK JDB | RH 58198.1 | SHEET 41 OF 113 | DATE: APRIL 1972 | SCALE: AS SHOWN | DRAWING NO. C 6198-2

LYLE G. HASSEBROEK — STATE OF WASHINGTON — REGISTERED PROFESSIONAL ENGINEER

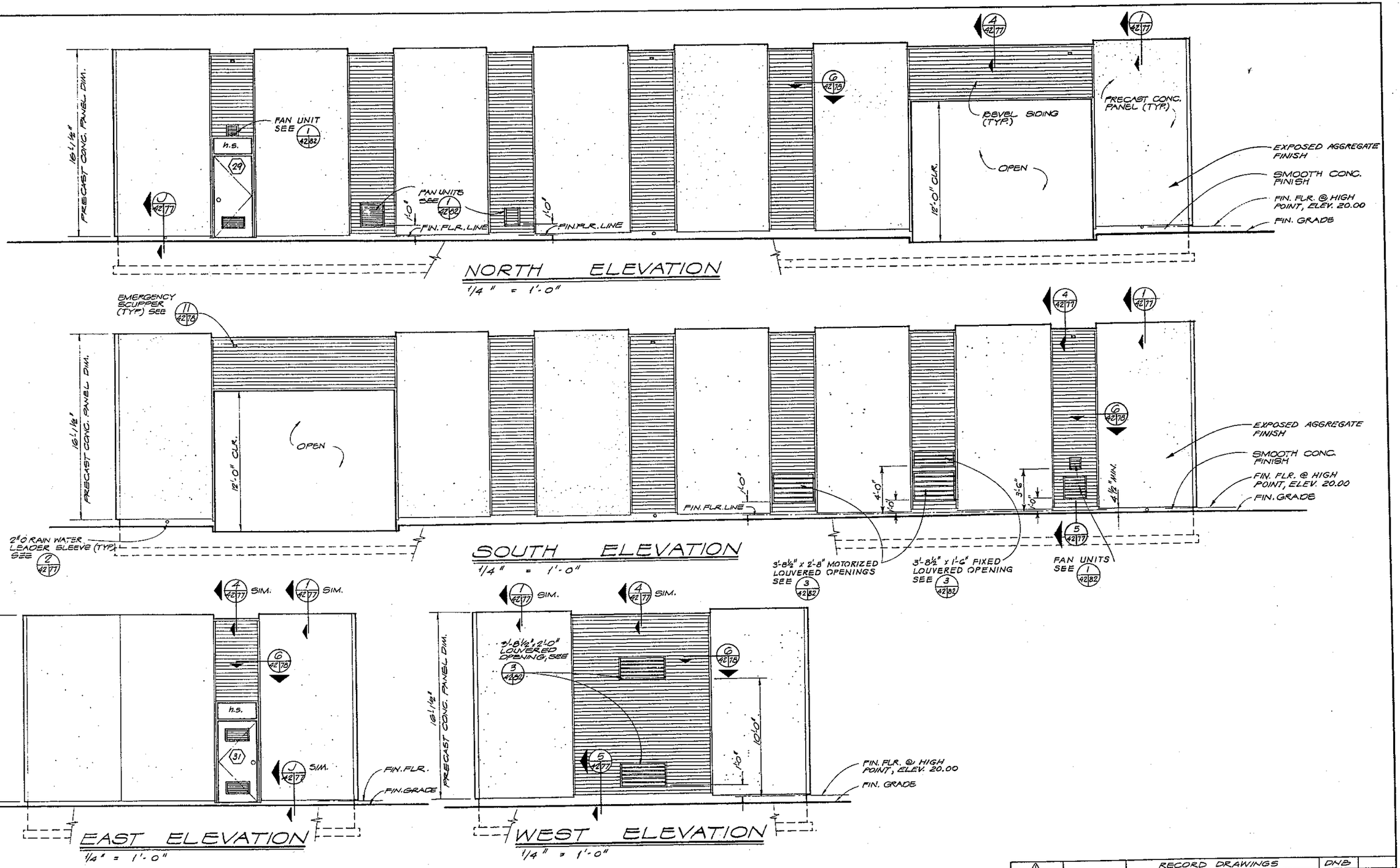

NO.	DATE	RECORD DRAWINGS / REVISION	DNB BY	APD.

CH2M HILL — ENGINEERS PLANNERS ECONOMISTS

CORNELL HOWLAND HAYES & MERRYFIELD

CLAIR A. HILL & ASSOCIATES

CITY OF BELLINGHAM, WASHINGTON
POST POINT POLLUTION CONTROL PLANT
SCHEDULE T

CHLORINE BUILDING -
ARCHITECTURAL - ELEVATIONS

DES. JMY
DR. JAF
CK.
DATE: APRIL 1972
SCALE: AS SHOWN
SHEET 42 OF 113
DRAWING NO. C 6196-2

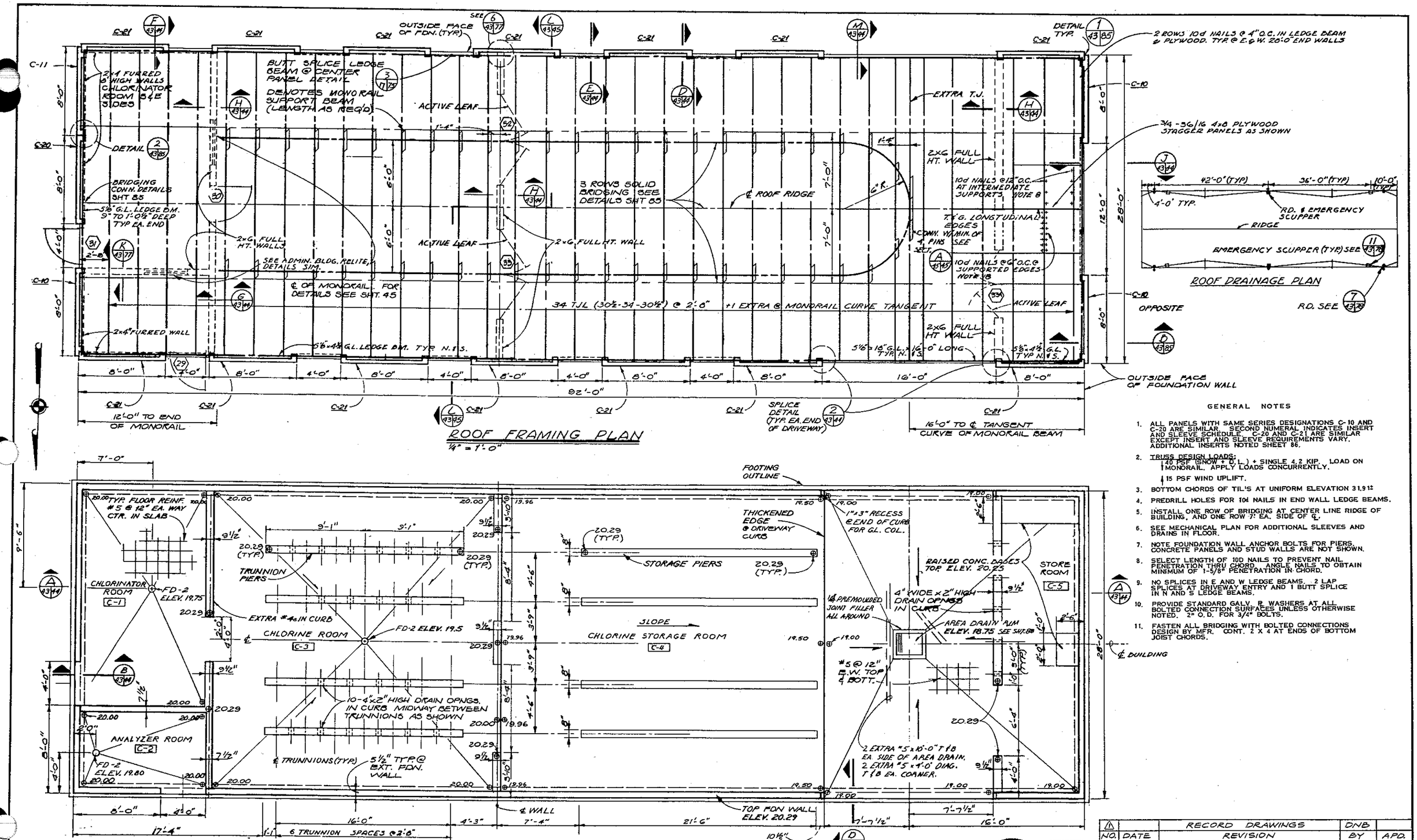

GENERAL NOTES

1. ALL PANELS WITH SAME SERIES DESIGNATIONS C-10 AND C-20 ARE SIMILAR. SECOND NUMERAL INDICATES INSERT AND SLEEVE SCHEDULE. C-20 AND C-21 ARE SIMILAR EXCEPT INSERT AND SLEEVE REQUIREMENTS VARY. ADDITIONAL INSERTS NOTED SHEET 86.
2. TRUSS DESIGN LOADS:
   - 40 PSF (SNOW + D.L.) + SINGLE 4.2 KIP. LOAD ON MONORAIL. APPLY LOADS CONCURRENTLY.
   - 15 PSF WIND UPLIFT.
3. BOTTOM CHORDS OF TIL'S AT UNIFORM ELEVATION 31.9 1/2
4. PREDRILL HOLES FOR 10d NAILS IN END WALL LEDGE BEAMS.
5. INSTALL ONE ROW OF BRIDGING AT CENTER LINE RIDGE OF BUILDING, AND ONE ROW 7' EA. SIDE OF ℄.
6. SEE MECHANICAL PLAN FOR ADDITIONAL SLEEVES AND DRAINS IN FLOOR.
7. NOTE FOUNDATION WALL ANCHOR BOLTS FOR PIERS, CONCRETE PANELS AND STUD WALLS ARE NOT SHOWN.
8. SELECT LENGTH OF 10D NAILS TO PREVENT NAIL PENETRATION THRU CHORD. ANGLE NAILS TO OBTAIN MINIMUM OF 1-5/8" PENETRATION IN CHORD.
9. NO SPLICES IN E AND W LEDGE BEAMS. 2 LAP SPLICES AT DRIVEWAY ENTRY AND 1 BUTT SPLICE IN N AND S LEDGE BEAMS.
10. PROVIDE STANDARD GALV. R WASHERS AT ALL BOLTED CONNECTION SURFACES UNLESS OTHERWISE NOTED. 2" O.D. FOR 3/4" BOLTS.
11. FASTEN ALL BRIDGING WITH BOLTED CONNECTIONS DESIGN BY MFR. CONT. 2 X 4 AT ENDS OF BOTTOM JOIST CHORDS.

NO.	DATE	REVISION	BY	APD.
1		RECORD DRAWINGS	DNB	

CORNELL HOWLAND HAYES & MERRYFIELD

CH2M HILL — ENGINEERS PLANNERS ECONOMISTS

CLAIR A. HILL & ASSOCIATES

CITY OF BELLINGHAM, WASHINGTON
POST POINT POLLUTION CONTROL PLANT
SCHEDULE T

CHLORINE BUILDING -
STRUCTURAL - FOUNDATION PLAN AND ROOF PLAN

DES. FJK · DR. CVC · RAH · CK. · RN 36198.1 · SHEET 43 OF 113 · DATE: APRIL 1973 · SCALE: AS SHOWN · DRAWING NO. C 6196-2

FREDERICK G. KERN — STATE OF WASHINGTON — REGISTERED PROFESSIONAL ENGINEER

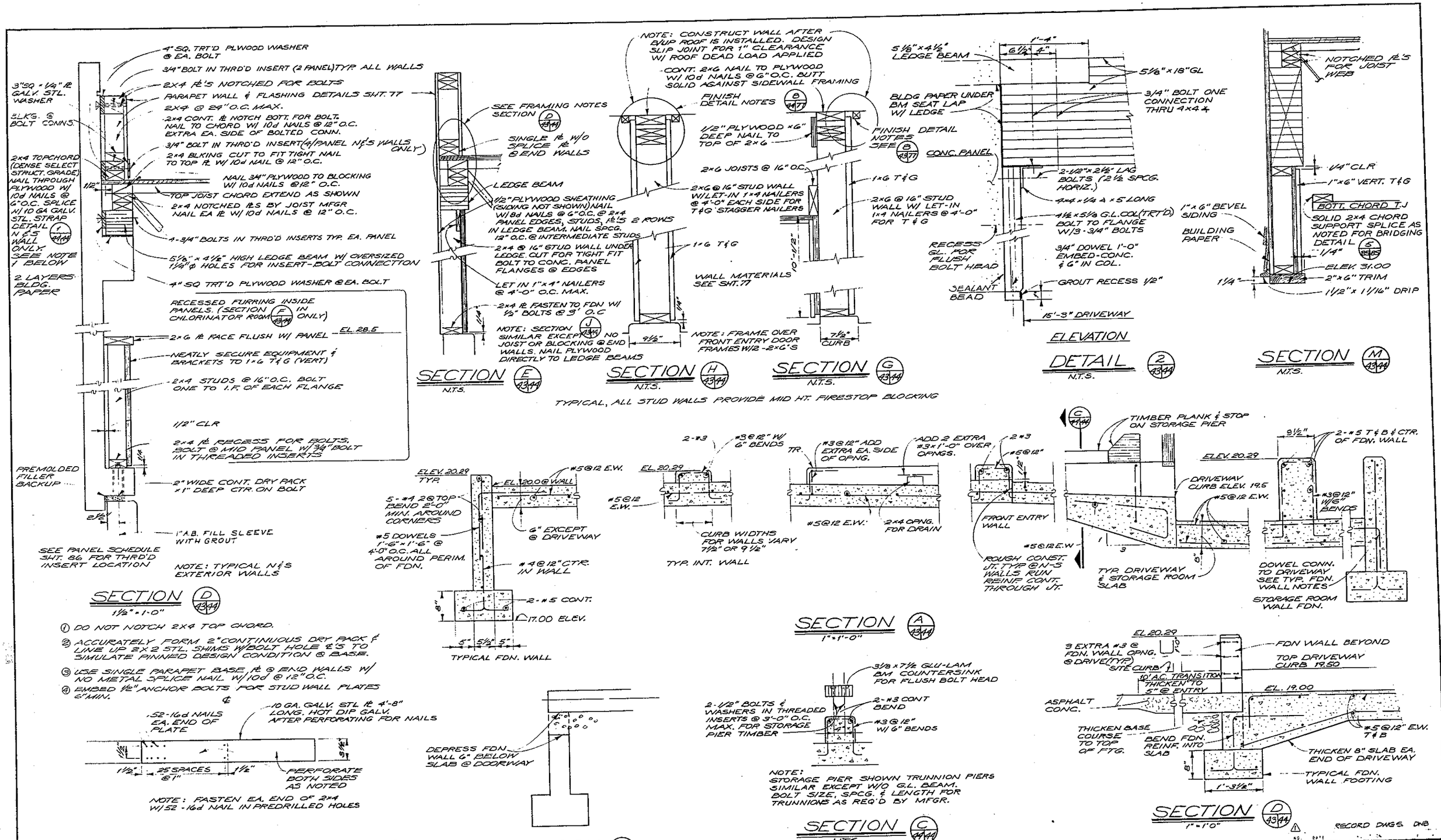
4" SQ. TRT'D PLWOOD WASHER @ EA. BOLT
3/4" BOLT IN THRD'D INSERT (2 PANEL) TYP. ALL WALLS
2X4 PL'S NOTCHED FOR BOLTS
PARAPET WALL & FLASHING DETAILS SHT. 77
2X4 @ 24" O.C. MAX.
2X4 CONT. PL NOTCH BOTT. FOR BOLT. NAIL TO CHORD W/ 10d NAILS @ 12" O.C. EXTRA EA. SIDE OF BOLTED CONN.
3/4" BOLT IN THRD'D INSERT (4/PANEL NS'S WALLS ONLY)
2X4 BLKING CUT TO FIT TIGHT NAIL TO TOP PL W/ 10d NAIL @ 12" O.C.
3"SQ x 1/4" PL GALV. STL. WASHER
BLKG. @ BOLT CONNS.
2X4 TOPCHORD (DENSE SELECT STRUCT. GRADE) NAIL THROUGH PLYWOOD W/ 10d NAILS @ 6" O.C. SPLICE W/ 10 GA GALV. STL. STRAP DETAIL 1 N S'S WALL ONLY. SEE NOTE 1 BELOW
NAIL 3/4" PLYWOOD TO BLOCKING W/ 10d NAILS @ 12" O.C.
TOP JOIST CHORD EXTEND AS SHOWN
2X4 NOTCHED PL'S BY JOIST MFGR NAIL EA PL W/ 10d NAILS @ 12" O.C.
4-3/4" BOLTS IN THRD'D INSERTS TYP. EA. PANEL
5 1/8" x 4 1/2" HIGH LEDGE BEAM W/ OVERSIZED 1 1/4" Φ HOLES FOR INSERT-BOLT CONNECTION
4" SQ TRT'D PLYWOOD WASHER @ EA. BOLT
2 LAYERS BLDG. PAPER
RECESSED FURRING INSIDE PANELS. (SECTION F IN CHLORINATOR ROOM ONLY)
EL. 28.5
2X6 PL FACE FLUSH W/ PANEL
NEATLY SECURE EQUIPMENT & BRACKETS TO 1X6 T&G (VERT)
2X4 STUDS @ 16" O.C. BOLT ONE TO I.F. OF EACH FLANGE
1/2" CLR
2X4 PL RECESS FOR BOLTS. BOLT @ MID PANEL W/ 3/4" BOLT IN THREADED INSERTS
PREMOLDED FILLER BACKUP
2" WIDE CONT. DRY PACK x 1" DEEP CTR. ON BOLT
1" A.B. FILL SLEEVE WITH GROUT
SEE PANEL SCHEDULE SHT. 86 FOR THRD'D INSERT LOCATION
NOTE: TYPICAL N S'S EXTERIOR WALLS
SECTION D 43/44
1 1/2" = 1'-0"
1 DO NOT NOTCH 2X4 TOP CHORD.
2 ACCURATELY FORM 2" CONTINUOUS DRY PACK & LINE UP 2X2 STL. SHIMS W/ BOLT HOLE & S TO SIMULATE PINNED DESIGN CONDITION @ BASE.
3 USE SINGLE PARAPET BASE PL @ END WALLS W/ NO METAL SPLICE NAIL W/ 10d @ 12" O.C.
4 EMBED 1/2" ANCHOR BOLTS FOR STUD WALL PLATES 6" MIN.
.52-16d NAILS EA. END OF PLATE
10 GA. GALV. STL PL 4'-8" LONG. HOT DIP GALV. AFTER PERFORATING FOR NAILS
1 1/2" 25 SPACES @ 1" 1 1/2"
PERFORATE BOTH SIDES AS NOTED
NOTE: FASTEN EA. END OF 2X4 W/ 52-16d NAIL IN PREDRILLED HOLES
TOP CHORD SPLICE DETAIL 1 44/44
N.T.S.
SEE FRAMING NOTES SECTION D 43/44
SINGLE PL W/O SPLICE PL @ END WALLS
LEDGE BEAM
1/2" PLYWOOD SHEATHING (SIDING NOT SHOWN) NAIL W/ 8d NAILS @ 6" O.C. @ 2X4 PANEL EDGES, STUDS, PL'S 2 ROWS IN LEDGE BEAM. NAIL SPCG. 12" O.C. @ INTERMEDIATE STUDS
2X4 @ 16" STUD WALL UNDER LEDGE. CUT FOR TIGHT FIT BOLT TO CONC. PANEL FLANGES @ EDGES
LET IN 1"x4" NAILERS @ 4'-0" O.C. MAX.
2X4 PL FASTEN TO FDN W/ 1/2" BOLTS @ 3' O.C
NOTE: SECTION J 43/44 SIMILAR EXCEPT NO JOIST OR BLOCKING @ END WALLS. NAIL PLYWOOD DIRECTLY TO LEDGE BEAMS
SECTION E 43/44
N.T.S.
NOTE: CONSTRUCT WALL AFTER B/UP ROOF IS INSTALLED. DESIGN SLIP JOINT FOR 1" CLEARANCE W/ ROOF DEAD LOAD APPLIED
CONT. 2X6 NAIL TO PLYWOOD W/ 10d NAILS @ 6" O.C. BUTT SOLID AGAINST SIDEWALL FRAMING
FINISH DETAIL NOTES B 44/77
1/2" PLYWOOD x 6" DEEP NAIL TO TOP OF 2X6
2X6 JOISTS @ 16" O.C.
2X6 @ 16" STUD WALL W/ LET-IN 1X4 NAILERS @ 4'-0" EACH SIDE FOR T&G STAGGER NAILERS
1X6 T&G
WALL MATERIALS SEE SHT. 77
10'-1 1/2"
1 1/4"
9 1/2"
SECTION H 43/44
N.T.S.
FINISH DETAIL NOTES SEE B 44/77
2X6 @ 16" STUD WALL W/ LET-IN 1X4 NAILERS @ 4'-0" FOR T&G
7 1/2" CURB
NOTE: FRAME OVER FRONT ENTRY DOOR FRAMES W/ 2-2X6'S
SECTION G 43/44
N.T.S.
TYPICAL, ALL STUD WALLS PROVIDE MID HT. FIRESTOP BLOCKING
5 1/8" x 4 1/2" LEDGE BEAM
1'-4"
6 1/2" 4"
5 1/8" x 18" GL
BLDG PAPER UNDER BM SEAT LAP W/ LEDGE
3/4" BOLT ONE CONNECTION THRU 4X4 ✱
CONC. PANEL
2-1/2" x 2 1/2" LAG BOLTS (2 1/2 SPCG. HORIZ.)
4x4 x 1/4 ∠ x 5' LONG
4 1/2 x 5 1/2 G.L. COL (TRT'D) BOLT TO FLANGE W/ 3-3/4" BOLTS
3/4" DOWEL 1'-0" EMBED-CONC. & 6" IN COL.
RECESS GL. FOR FLUSH BOLT HEAD
SEALANT BEAD
GROUT RECESS 1/2"
15'-3" DRIVEWAY
ELEVATION
DETAIL 2 43/44
N.T.S.
NOTCHED PL'S FOR JOIST WEB
1/4" CLR
1" x 6" VERT. T&G
BOTT. CHORD T.J
SOLID 2X4 CHORD SUPPORT SPLICE AS NOTED FOR BRIDGING DETAIL 5 88/85
1" x 6" BEVEL SIDING
BUILDING PAPER
1/4"
ELEV. 31.00
2" x 6" TRIM
1 1/2" x 1 1/16" DRIP
SECTION M 43/44
N.T.S.
ELEV. 20.29 TYP.
EL. 20.0 @ WALL
#5 @ 12 E.W.
5-#4 2 @ TOP BEND 2'-0" MIN. AROUND CORNERS
6" EXCEPT @ DRIVEWAY
#5 DOWELS 1'-6" x 1'-6" @ 4'-0" O.C. ALL AROUND PERIM. OF FDN.
#4 @ 12" CTR. IN WALL
2-#5 CONT.
17.00 ELEV.
8"
5" 5 1/2" 5"
TYPICAL FDN. WALL
2-#3
#3 @ 12" W/ 6" BENDS
EL. 20.29
#5 @ 12 E.W.
CURB WIDTHS FOR WALLS VARY 7 1/2" OR 9 1/2"
TYP. INT. WALL
TR.
#3 @ 12" ADD EXTRA EA. SIDE OF OPNG.
ADD 2 EXTRA #3 x 1'-0" OVER OPNGS.
#5 @ 12 E.W.
2X4 OPNG. FOR DRAIN
2 #3
#5 @ 12"
FRONT ENTRY WALL
#5 @ 12 E.W.
ROUGH CONST. JT. TYP @ N-S WALLS RUN REINF CONT. THROUGH JT.
C 44/44
TIMBER PLANK & STOP ON STORAGE PIER
DRIVEWAY CURB ELEV. 19.5
#5 @ 12 E.W.
TYP. DRIVEWAY & STORAGE ROOM SLAB
9 1/2"
2-#5 T&B & CTR. OF FDN. WALL
ELEV. 20.29
#3 @ 12" 11/16" BENDS
DOWEL CONN. TO DRIVEWAY SEE TYP. FDN. WALL NOTES
STORAGE ROOM WALL FDN.
SECTION A 43/44
1" = 1'-0"
DEPRESS FDN WALL 6" BELOW SLAB @ DOORWAY
SECTION B 43/44
N.T.S.
3 1/8 x 7 1/2 GLU-LAM BM COUNTERSINK FOR FLUSH BOLT HEAD
2-1/2" BOLTS & WASHERS IN THREADED INSERTS @ 3'-0" O.C. MAX. FOR STORAGE PIER TIMBER
2-#3 CONT BEND
#3 @ 12" W/ 6" BENDS
NOTE: STORAGE PIER SHOWN TRUNNION PIERS SIMILAR EXCEPT W/O G.L. BEAM. BOLT SIZE, SPCG. & LENGTH FOR TRUNNIONS AS REQ'D BY MFGR.
SECTION C 44/44
N.T.S.
EL. 20.29
3 EXTRA #3 @ FDN. WALL OPNG. @ DRIVE (TYP.)
SITE CURB
FDN WALL BEYOND
TOP DRIVEWAY CURB 19.50
10' A.C. TRANSITION THICKEN TO 5" @ ENTRY
EL. 19.00
ASPHALT CONC.
THICKEN BASE COURSE TO TOP OF FTG.
BEND FDN. REINF. INTO SLAB
#5 @ 12" E.W. T&B
THICKEN 8" SLAB EA. END OF DRIVEWAY
8"
1'-9 1/2"
TYPICAL FDN. WALL FOOTING
SECTION D 43/44
1" = 1'-0"
RECORD DWGS. DNB
NO. DATE
CH2M HILL
ENGINEERS PLANNERS ECONOMISTS
CORNELL HOWLAND HAYES & MERRYFIELD
CLAIR A. HILL & ASSOCIATES
CITY OF BELLINGHAM, WASHINGTON
POST POINT POLLUTION CONTROL PLANT
SCHEDULE T
CHLORINE BUILDING -
STRUCTURAL - SECTIONS
DES. PGK
DR. CDS
CK. RGE
APPR. 56198.1
DRAWING NO. C 6198-2
SHEET 44
DATE APRIL 1972

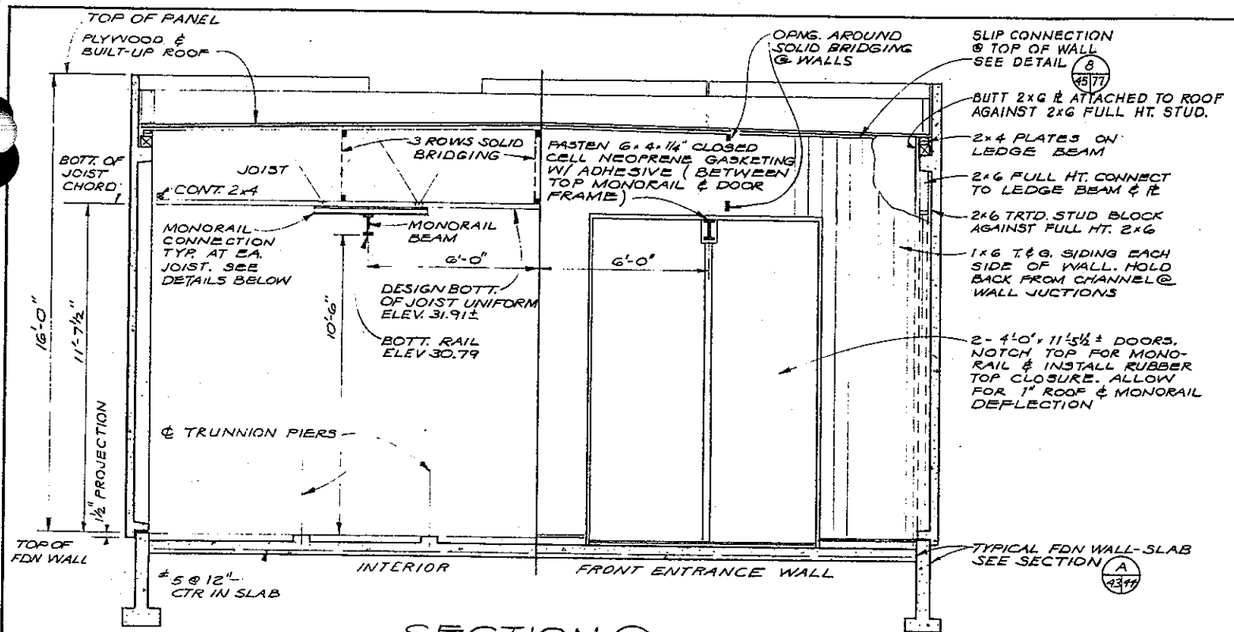

SECTION L/S75
3/8" = 1'-0"

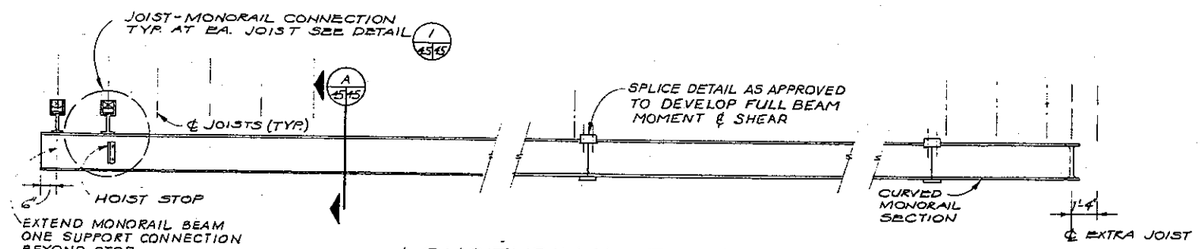

LONGITUDINAL ELEVATION
1/4" = 1'-0" HORIZONTAL
3/4" = 1'-0" VERTICAL

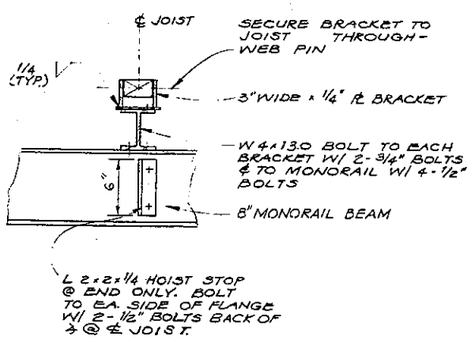

CONNECTION DETAIL 1/S45
1 1/2" = 1'-0"

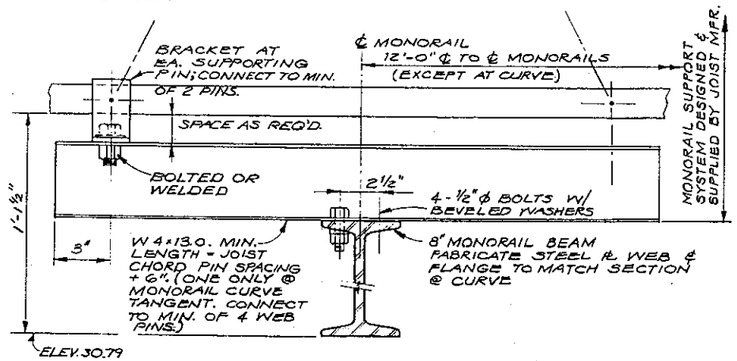

SECTION A/S45
N.T.S.

MONORAIL DETAILS

MINIMUM STRUCTURAL SECTIONS & DESIGN CONCEPT SHOWN ALL CONNECTION DETAILS, FINAL DIMENSIONS & DESIGN SHALL BE COORDINATED BY THE CONTRACTOR & SUBMITTED TO THE ENGINEER FOR APPROVAL.

NO.	DATE	REVISION	BY	APD.
△		RECORD DRAWINGS	DNB	

CH2M HILL — ENGINEERS PLANNERS ECONOMISTS

CORNELL HOWLAND HAYES & MERRYFIELD

CLAIR A. HILL & ASSOCIATES

CITY OF BELLINGHAM, WASHINGTON
POST POINT POLLUTION CONTROL PLANT
SCHEDULE T

CHLORINE BUILDING -
STRUCTURAL - SECTIONS AND DETAILS

DES. F.S.K. — SHEET 45 OF 113
DR. J.J.O.
CK.
DATE: APRIL 1972
JOB NO. 56198.1
SCALE: AS SHOWN
DRAWING NO. C 6198-2

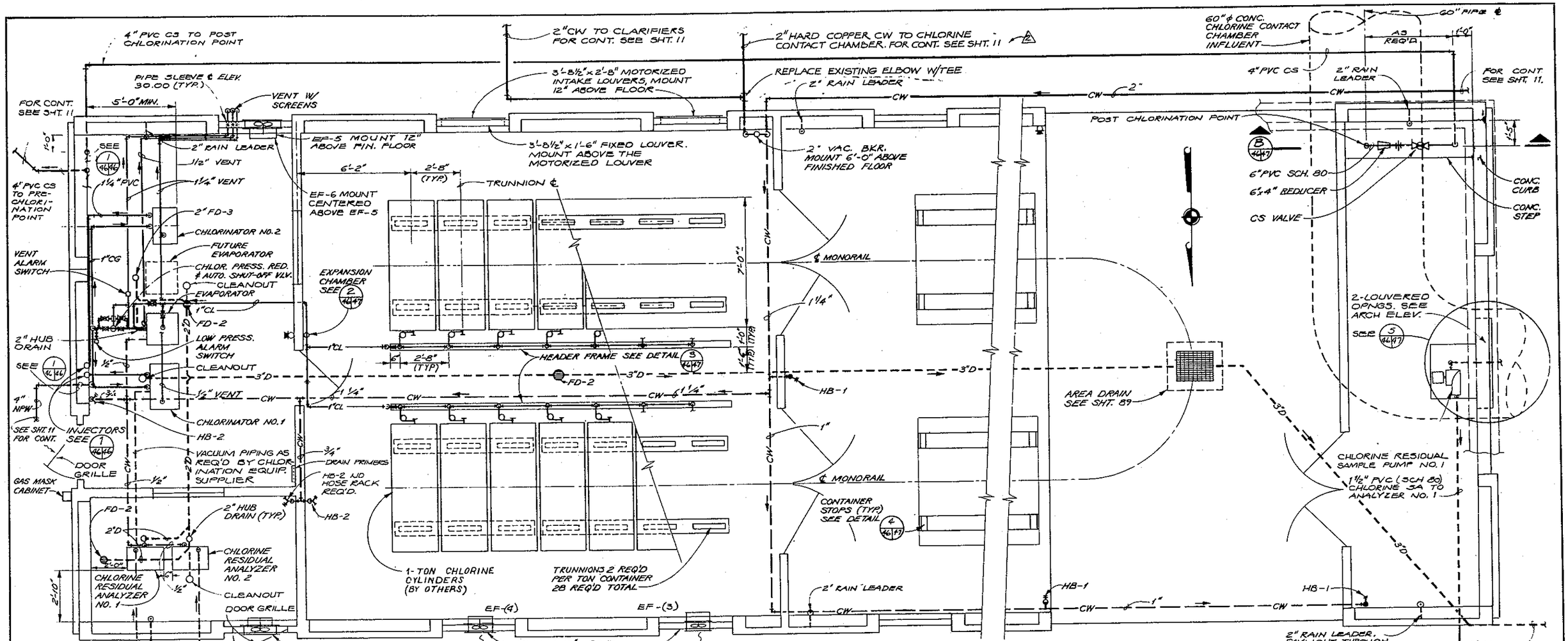

CHLORINE BUILDING PLAN

3/8" = 1'-0"

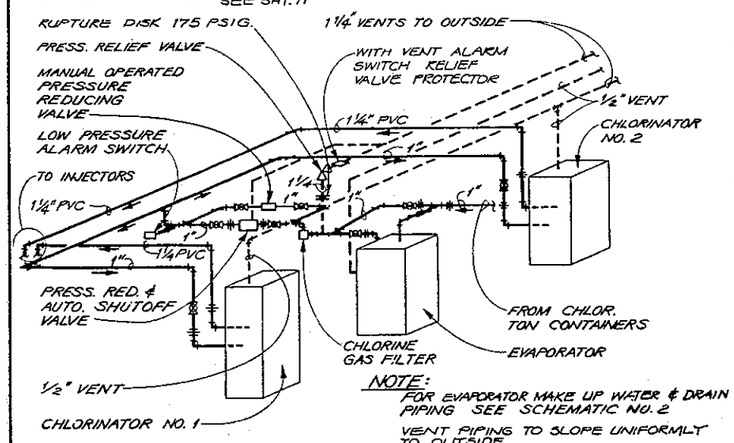

NOTE:
FOR EVAPORATOR MAKE UP WATER & DRAIN PIPING SEE SCHEMATIC NO. 2
VENT PIPING TO SLOPE UNIFORMLY TO OUTSIDE

CHLORINE PIPING SCHEMATIC NO. 1

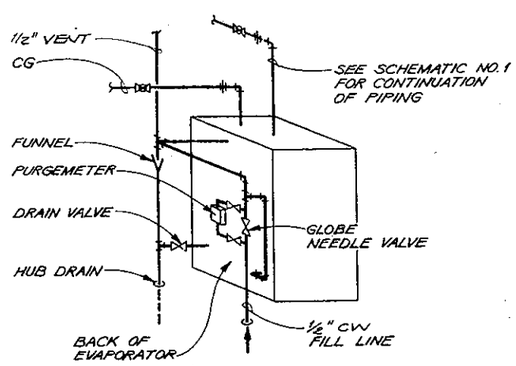

SCHEMATIC NO. 2

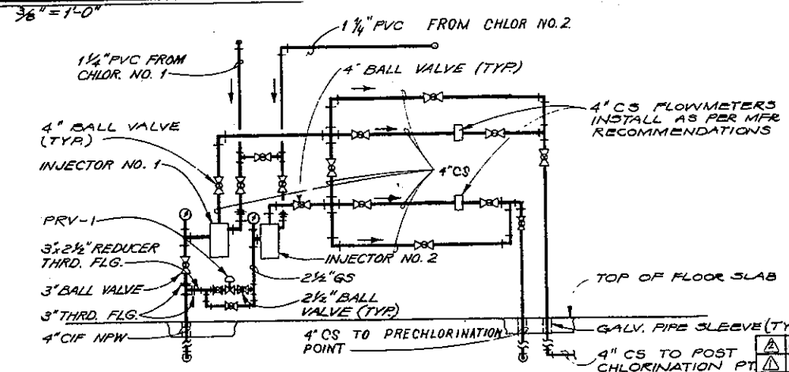

DETAIL 1/46A6

N.T.S.

NO.	DATE	REVISION	BY	APD.
A	JUNE 75	CONTACT CHAMBER WASHDOWN	BMS	GRG
1		RECORD DRAWINGS	DNB	

CH2M HILL — ENGINEERS PLANNERS ECONOMISTS

CORNELL HOWLAND HAYES & MERRYFIELD — CLAIR A. HILL & ASSOCIATES

CITY OF BELLINGHAM, WASHINGTON
POST POINT POLLUTION CONTROL PLANT
SCHEDULE T

CHLORINE BUILDING - MECHANICAL - PLAN

DES. JGG
DR. RAH
CK. JDB
SHEET 46 OF 113
DATE APRIL 1972
C 6198-2

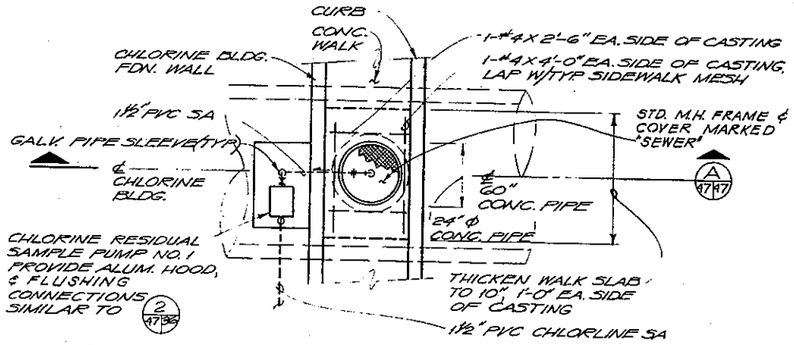

CHLORINE RESIDUAL SAMPLE PUMP

PLAN

3/8"=1'-0"

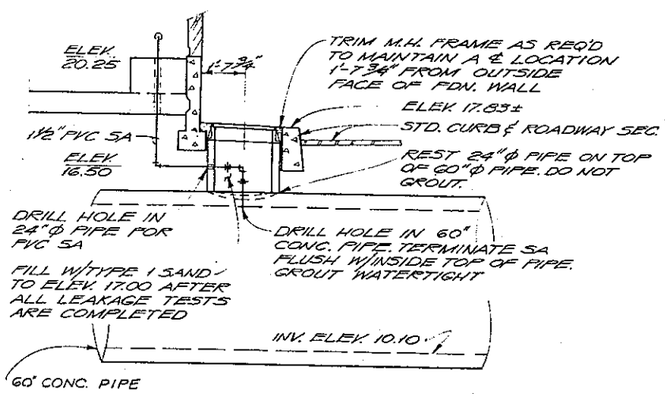

SECTION A 47/47

3/8"=1'-0"

DETAIL 5 46/47

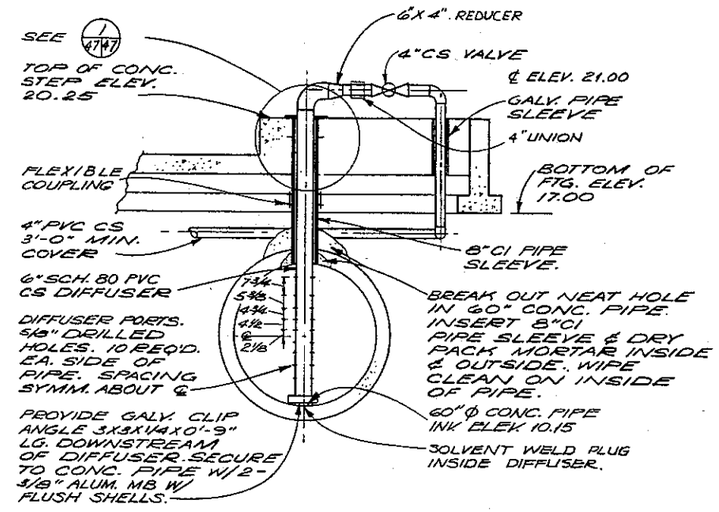

SECTION B 46/47

3/8"=1'-0"

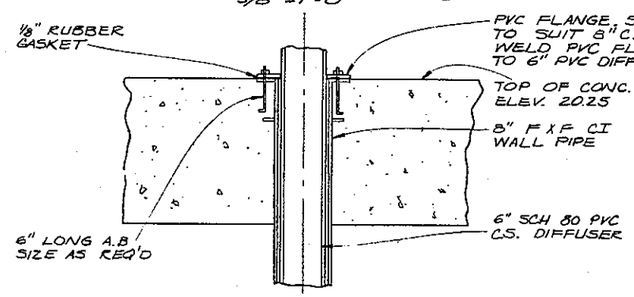

DETAIL 1 47/47

NTS

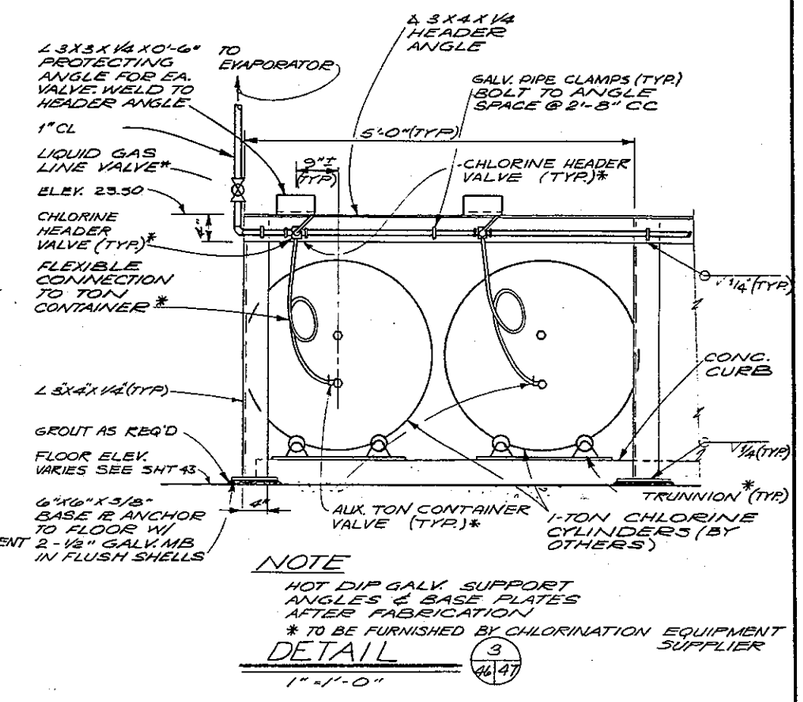

NOTE

HOT DIP GALV. SUPPORT ANGLES & BASE PLATES AFTER FABRICATION

* TO BE FURNISHED BY CHLORINATION EQUIPMENT SUPPLIER

DETAIL 3 46/47

1"=1'-0"

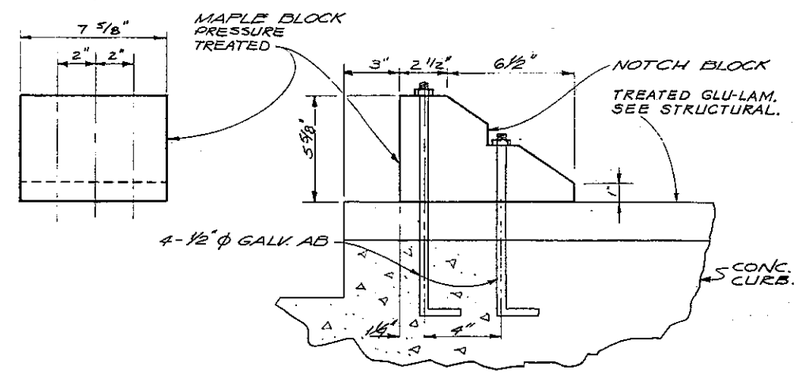

CONTAINER STOP DETAIL 4 46/47

3"=1'-0"

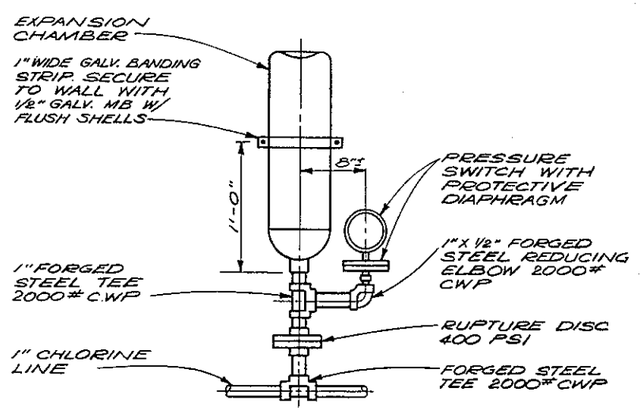

EXPANSION CHAMBER DETAIL 2 46/47

NTS

NO.	DATE	RECORD DRAWINGS REVISION	DNB BY	APD.

CH2M HILL — ENGINEERS PLANNERS ECONOMISTS

CORNELL HOWLAND HAYES & MERRYFIELD

CLAIR A. HILL & ASSOCIATES

CITY OF BELLINGHAM, WASHINGTON
POST POINT POLLUTION CONTROL PLANT
SCHEDULE T

CHLORINE BUILDING - MECHANICAL - DETAILS

DES. JGG — SHEET 47
DR. SJB — SPEC. 113
CK. LJDB — DATE: APRIL 1972
SCALE:
REFERENCE NO. C 6196-2

NO.	DATE	REVISION	BY	APD.
		RECORD DRAWINGS	DWB	

CH2M HILL
ENGINEERS PLANNERS ECONOMISTS

CORNELL HOWLAND HAYES & MERRYFIELD

CLAIR A. HILL & ASSOCIATES

CITY OF BELLINGHAM, WASHINGTON
POST POINT POLLUTION CONTROL PLANT
SCHEDULE T

ADMINISTRATION BUILDING - ARCHITECTURAL - ELEVATIONS

CAF

SHEET 48

APRIL 1972

C 6196-2

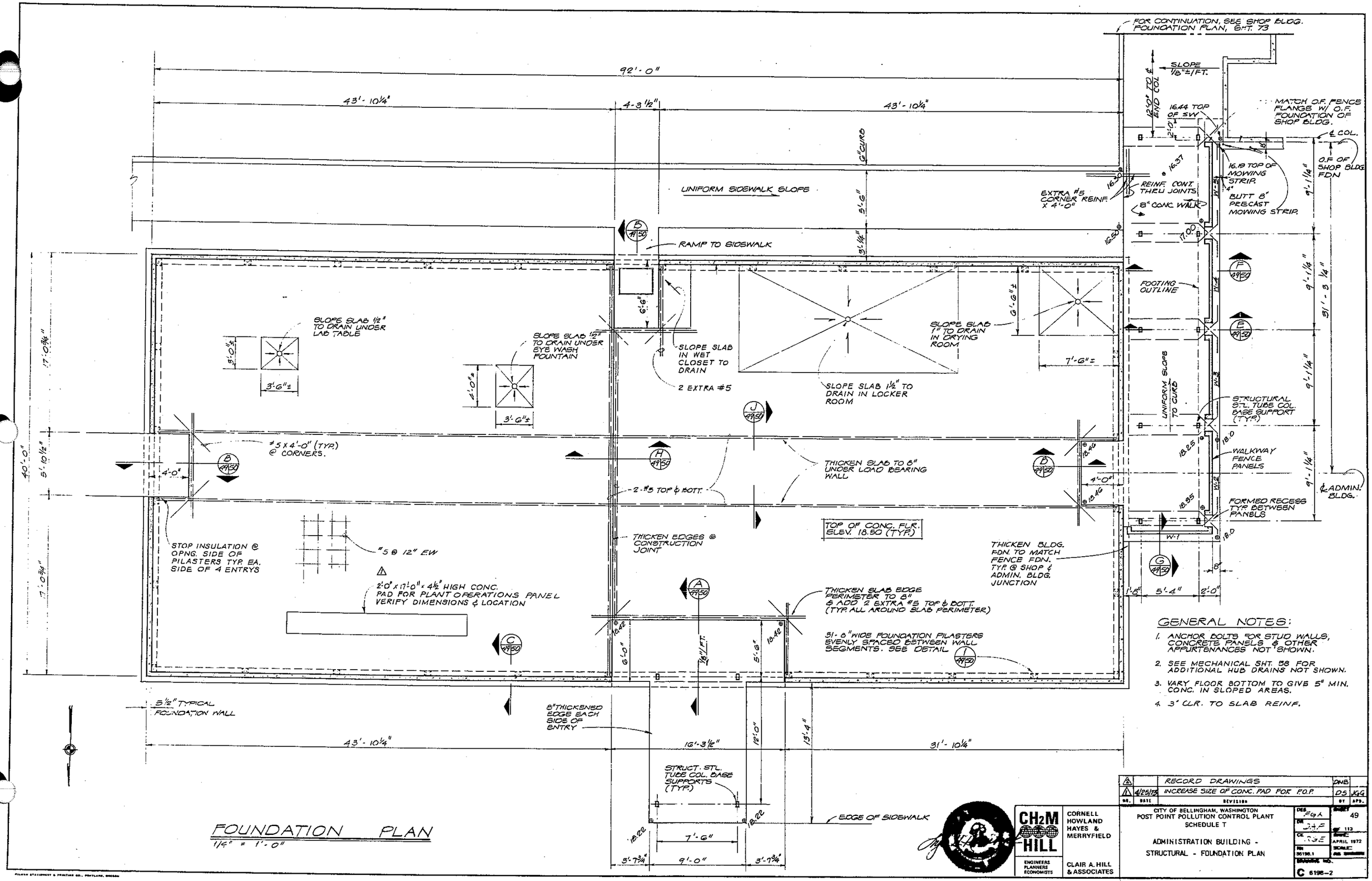

GENERAL NOTES:

1. ANCHOR BOLTS FOR STUD WALLS, CONCRETE PANELS & OTHER APPURTENANCES NOT SHOWN.
2. SEE MECHANICAL SHT. 58 FOR ADDITIONAL HUB DRAINS NOT SHOWN.
3. VARY FLOOR BOTTOM TO GIVE 5" MIN. CONC. IN SLOPED AREAS.
4. 3" CLR. TO SLAB REINF.

FOUNDATION PLAN

1/4" = 1'-0"

NO.	DATE	REVISION	BY	APP.
2		RECORD DRAWINGS	DWB	
1	4/26/73	INCREASE SIZE OF CONC. PAD FOR P.O.P.	DS	KGG

CH2M HILL — ENGINEERS PLANNERS ECONOMISTS

CORNELL HOWLAND HAYES & MERRYFIELD

CLAIR A. HILL & ASSOCIATES

CITY OF BELLINGHAM, WASHINGTON
POST POINT POLLUTION CONTROL PLANT
SCHEDULE T

ADMINISTRATION BUILDING - STRUCTURAL - FOUNDATION PLAN

DES. FGA
DR. JAF
CK. RGE
NO. 351190.1

SHEET 49 OF 113
DATE: APRIL 1972
SCALE: AS SHOWN

DRAWING NO. C 6198-2

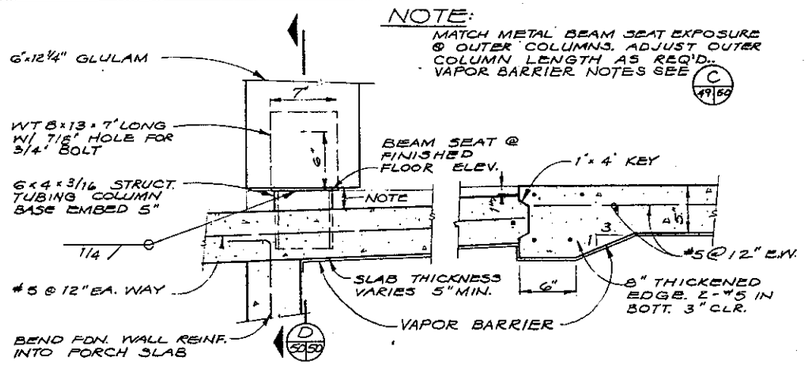

SECTION A 49/50
1 1/2" = 1'-0"

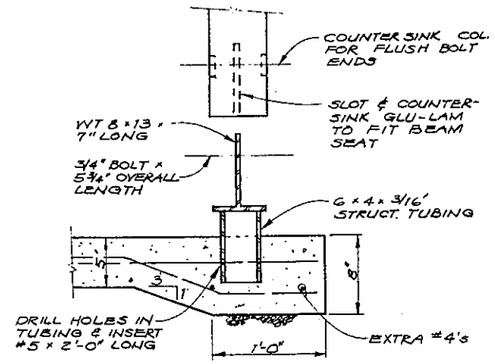

SECTION D 50/50
1 1/2" = 1'-0"

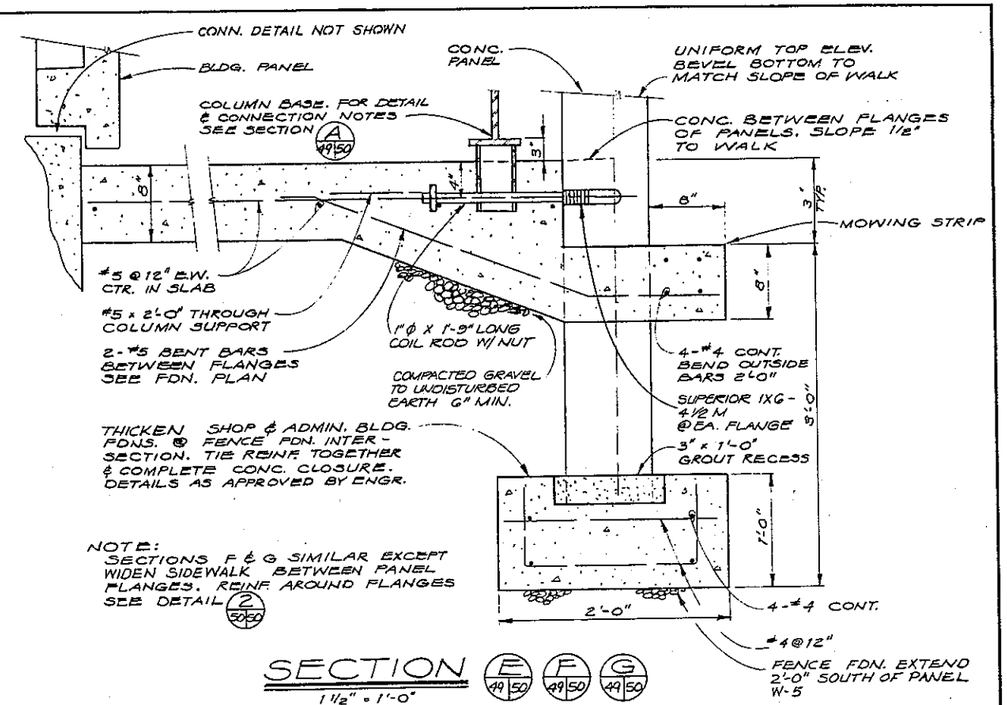

SECTION E 49/50 F 49/50 G 49/50
1 1/2" = 1'-0"
E 49/50 SHOWN

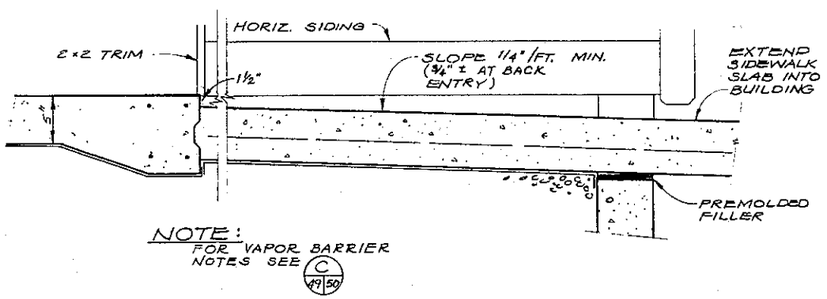

SECTION B 49/50
1 1/2" = 1'-0"

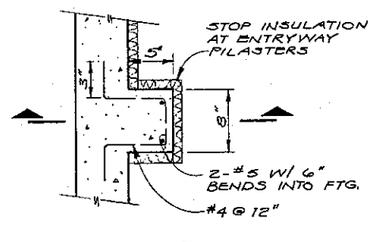

PLAN

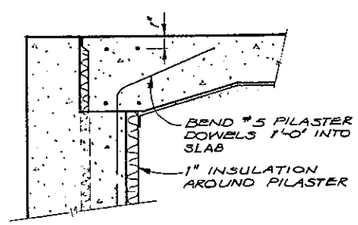

SECTION
PILASTER DETAIL 1 49/50
1 1/2" = 1'-0"

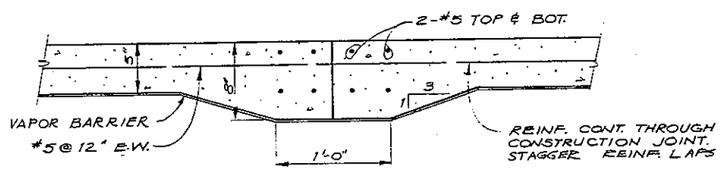

SECTION H 49/50
1 1/2" = 1'-0"

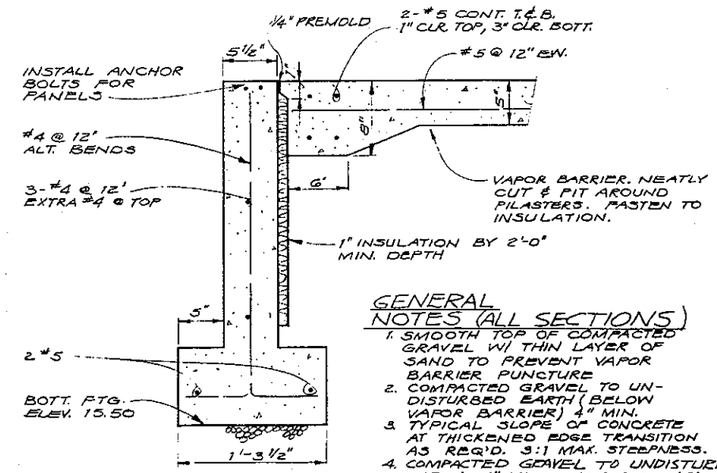

GENERAL NOTES (ALL SECTIONS)

1. SMOOTH TOP OF COMPACTED GRAVEL W/ THIN LAYER OF SAND TO PREVENT VAPOR BARRIER PUNCTURE
2. COMPACTED GRAVEL TO UNDISTURBED EARTH (BELOW VAPOR BARRIER) 4" MIN.
3. TYPICAL SLOPE OF CONCRETE AT THICKENED EDGE TRANSITION AS REQ'D. 3:1 MAX. STEEPNESS.
4. COMPACTED GRAVEL TO UNDISTURBED EARTH 6" MIN. UNDER FOOTINGS & EXTERIOR SLABS.
5. THIN SET FLOORING NOT SHOWN. FINISH SLAB AS SPECIFIED.

SECTION C 49/50
1 1/2" = 1'-0"

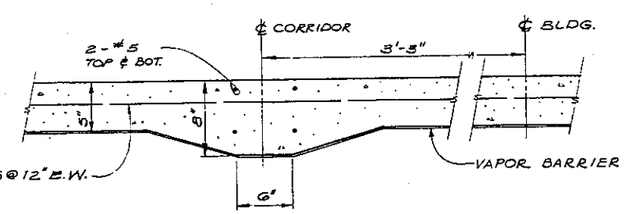

SECTION J 49/50
1 1/2" = 1'-0"

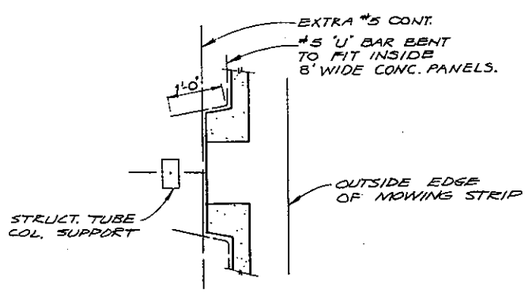

DETAIL 2 50/50
3/4" = 1'-0"

NO.	DATE	REVISION	BY	APD.
		RECORD DRAWINGS	DWB	

CH2M HILL — ENGINEERS PLANNERS ECONOMISTS

CORNELL HOWLAND HAYES & MERRYFIELD

CLAIR A. HILL & ASSOCIATES

CITY OF BELLINGHAM, WASHINGTON
POST POINT POLLUTION CONTROL PLANT
SCHEDULE T

ADMINISTRATION BUILDING -
STRUCTURAL - SECTIONS AND DETAILS

DES. FGK
DR. CPC
CK. RGE
FDN. 55190.1
SHEET 50
NO. 173
DATE: APRIL 1972
SCALE: AS SHOWN
DRAWING NO. C 6198-2

FREDERICK G. KEAN — STATE OF WASHINGTON — REGISTERED PROFESSIONAL ENGINEER

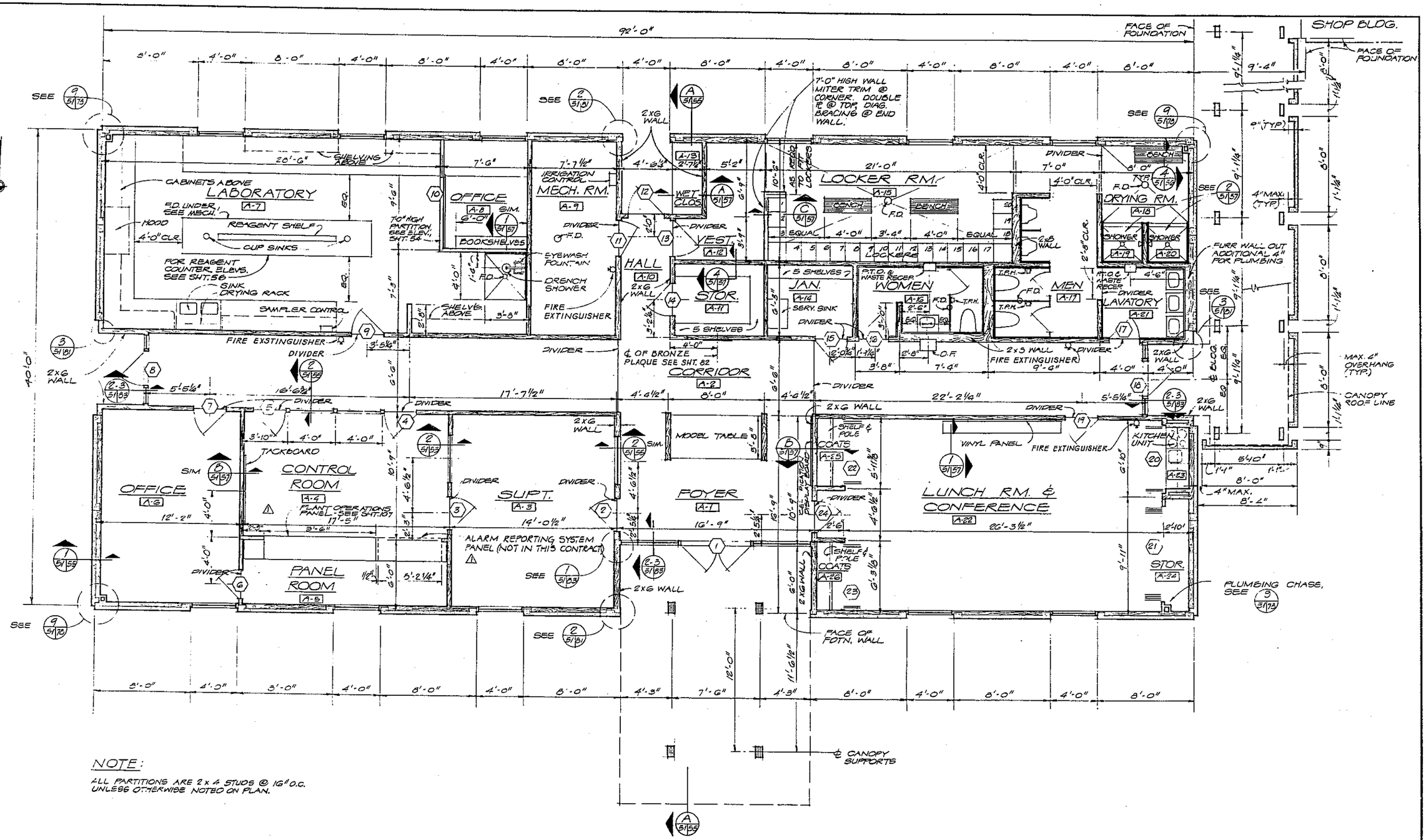

NOTE:

ALL PARTITIONS ARE 2 x 4 STUDS @ 16" O.C. UNLESS OTHERWISE NOTED ON PLAN.

FLOOR PLAN
1/4" = 1'-0"

2		RECORD DRAWINGS
1	4/23/73	RELOCATE PLANT OPERATIONS PANEL
NO.	DATE	REVISION

DNB
DS AGG
BY APD.

CH2M HILL
ENGINEERS PLANNERS ECONOMISTS

CORNELL HOWLAND HAYES & MERRYFIELD

CLAIR A. HILL & ASSOCIATES

CITY OF BELLINGHAM, WASHINGTON
POST POINT POLLUTION CONTROL PLANT
SCHEDULE T

ADMINISTRATION BUILDING -
ARCHITECTURAL - FLOOR PLAN

DES.
DR. OAF.
CK.
APPR.
SHEET 51 OF 113
DATE APRIL 1972
SCALE: AS SHOWN
DRAWING NO. C 6198-2

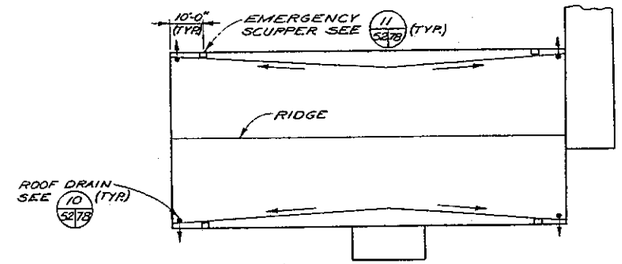

ROOF-DRAINAGE PLAN

GENERAL NOTES

1. INTERIOR NON-LOAD BEARING WALLS NOT ILLUSTRATED. SEE FLOOR PLAN FOR WALL LOCATION.
2. ROOF DRAINS ON SOUTH SIDE OF BLDG. TO DAYLIGHT THRU SIDEWALK CURB.
3. LEDGE BEAM SPLICES SEE 3/74/75
4. ALL PRECAST PANELS W/SAME SERIES DESIGNATIONS A10'S A20'S ARE SIMILAR. SECOND NUMERAL INDICATES INSERT & SLEEVE SCHEDULE I.E. A10-A11 HAVE DIFFERENT INSERT & SLEEVE REQUIREMENTS. ADDITIONAL SPECIAL FASTENERS OR INSERTS ARE NOTED ON PANEL, SHT. 86
5. BOTTOM OF LEDGE BEAM AT N & S WALLS = 29.50
6. PROVIDE STANDARD GALV. ℔ WASHERS AT ALL BOLTED CONNECTION SURFACES UNLESS OTHERWISE NOTED. 2" O.D. FOR 3/4" ϕ BOLTS.

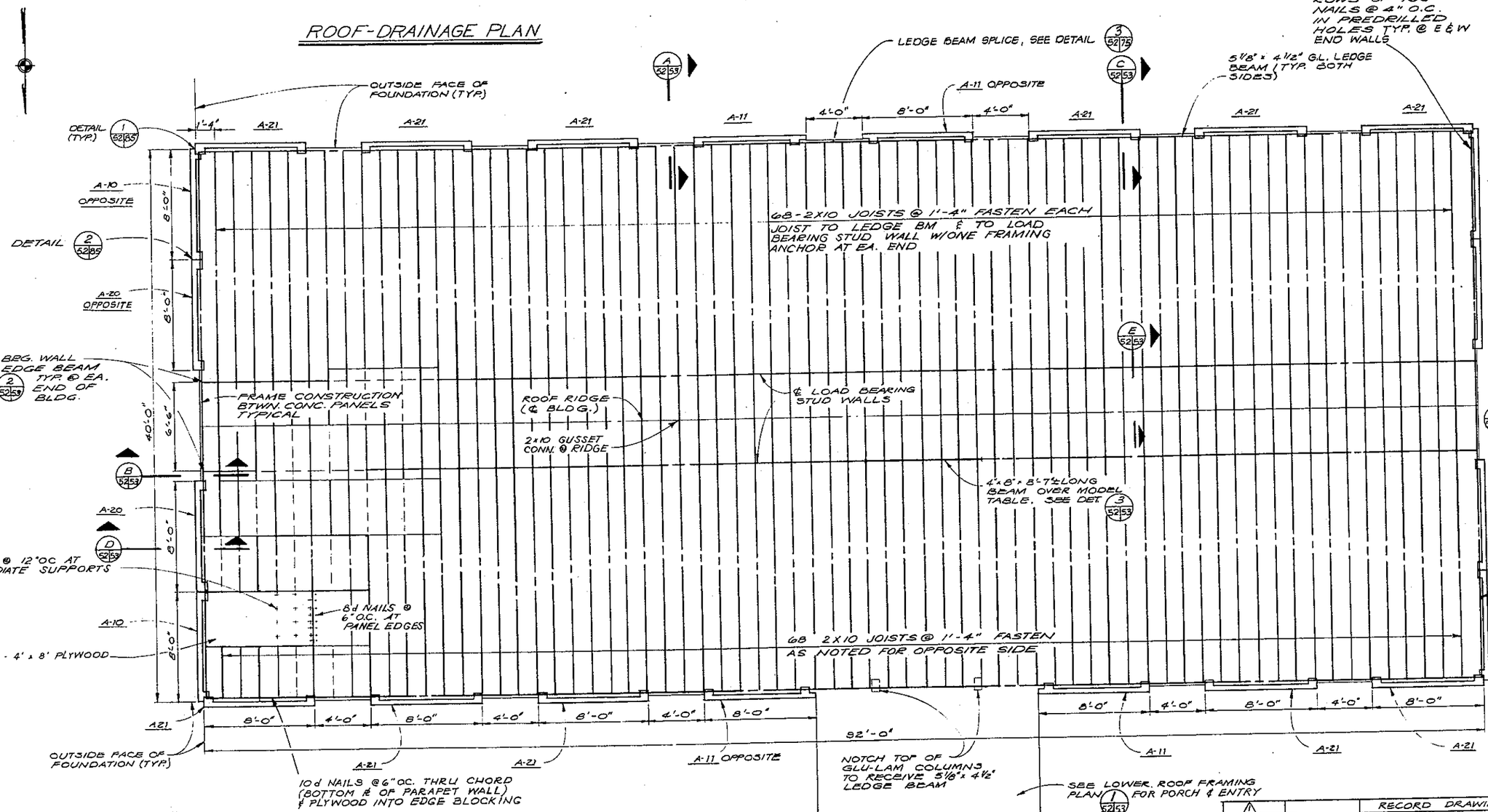

ROOF FRAMING PLAN

1/4" = 1'-0"

NO.	DATE	REVISION	BY	APD.
		RECORD DRAWINGS	DNB	

CH2M HILL — ENGINEERS PLANNERS ECONOMISTS

CORNELL HOWLAND HAYES & MERRYFIELD

CLAIR A. HILL & ASSOCIATES

CITY OF BELLINGHAM, WASHINGTON
POST POINT POLLUTION CONTROL PLANT
SCHEDULE T

ADMINISTRATION BUILDING - STRUCTURAL - ROOF PLAN

DES FGK | DR CPC | CK RGE | PM 56196.1

SHEET 52 OF 113

DATE: APRIL 1972

SCALE: AS SHOWN

DRAWING NO. C-6196-2

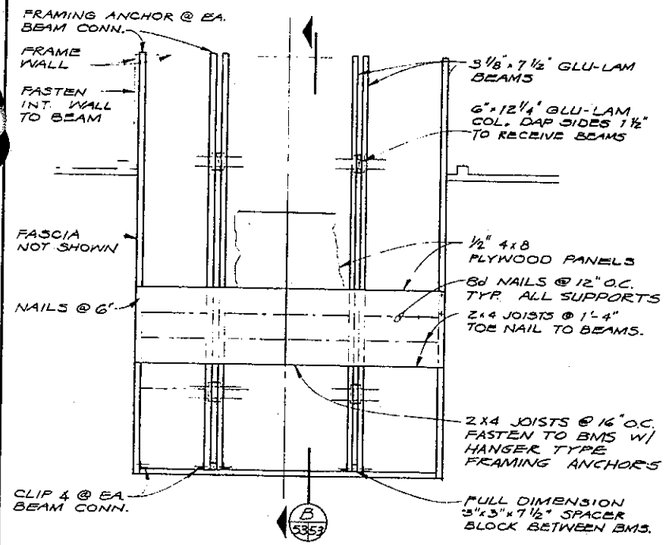

LOWER ROOF FRAMING PLAN

DETAIL 1 (52/53)

1/4" = 1'-0"

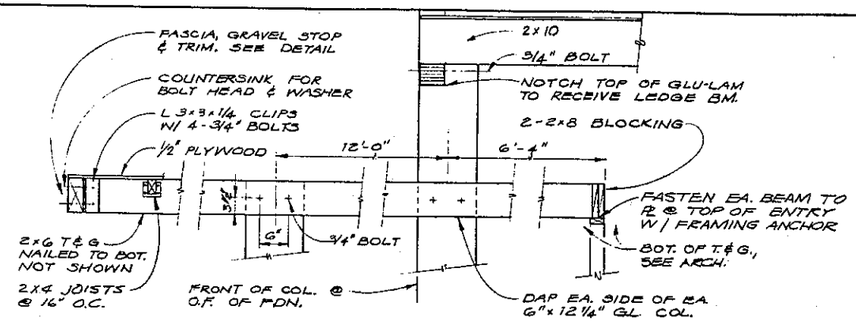

SECTION B (53/53)

3/4" = 1'-0"

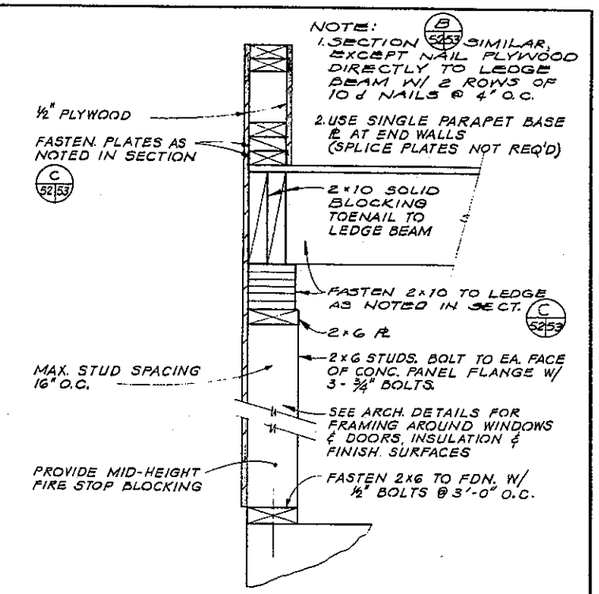

SECTION A (52/53) B (52/53)

1 1/2" = 1'-0"

A (52/53) SHOWN

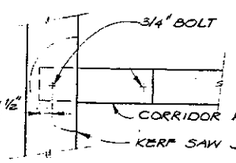

PLAN

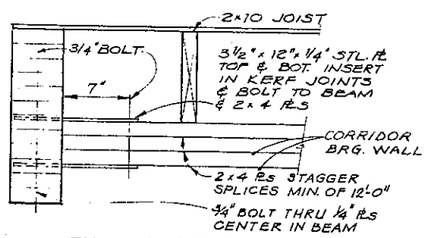

ELEVATION

DETAIL 2 (52/53)

1 1/2" = 1'-0"

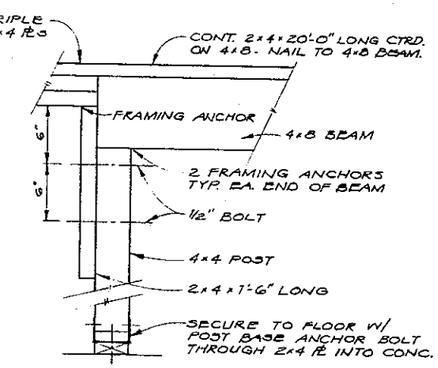

DETAIL 3 (52/53)

1 1/2" = 1'-0"

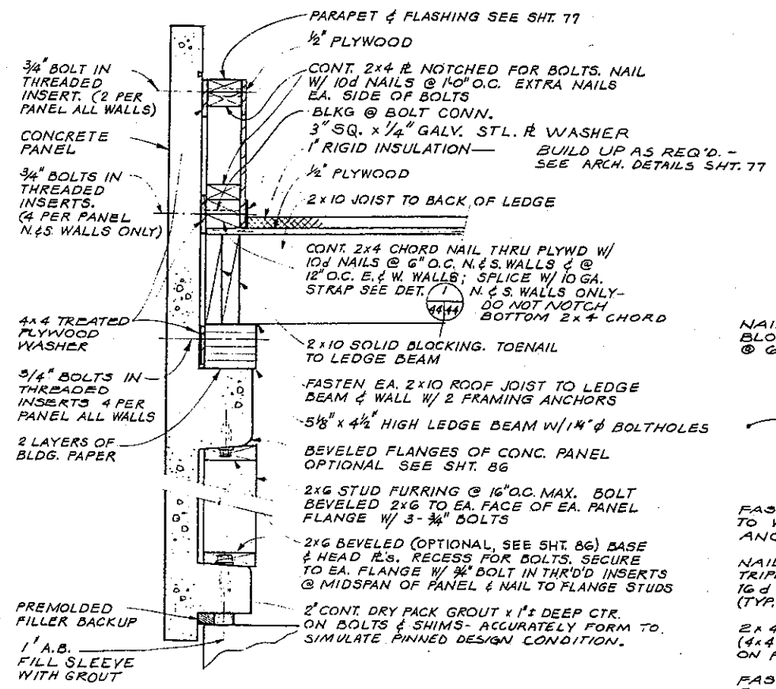

NOTES:

1. SEE ARCHITECTURAL DETAILS FOR INSULATION & WALL MATERIALS.
2. SECTION D SIMILAR, EXCEPT AS NOTED & NAIL PLYWOOD DIRECTLY TO LEDGE BEAM WITH 2 ROWS OF 10d NAILS @ 4" O.C. USE SINGLE 2x4 PARAPET BASE PL AT END WALLS (SPLICE PLATES NOT REQ'D)

SECTION C (52/53) D (52/53)

1 1/2" = 1'-0"

C (52/53) SHOWN

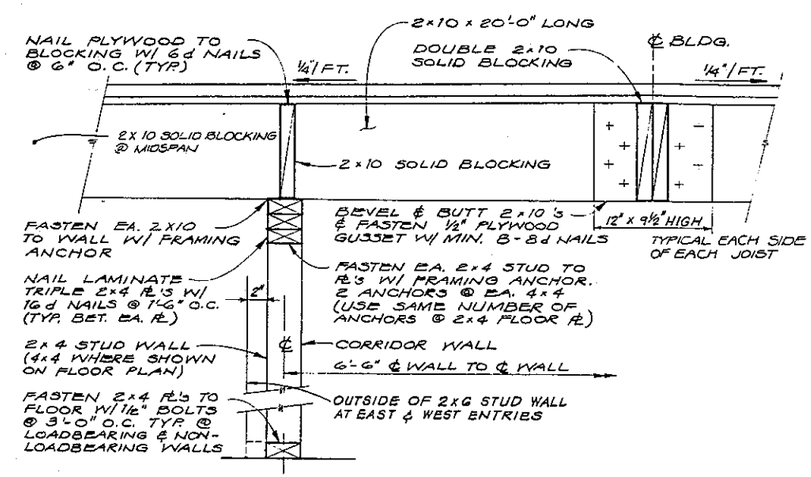

SECTION E (52/53)

1 1/2" = 1'-0"

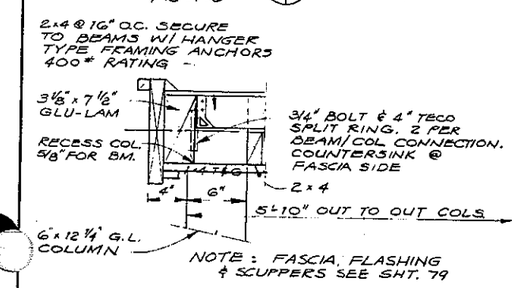

NOTE: FASCIA, FLASHING & SCUPPERS SEE SHT. 79

SECTION F (52/53)

1 1/2" = 1'-0"

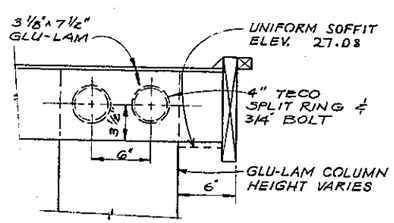

NOTE: TYP. EA. END OF COVERED WALK

SECTION G (52/53)

1 1/2" = 1'-0"

NO.	DATE	RECORD DRAWINGS REVISION	DNB BY	APD.
		CITY OF BELLINGHAM, WASHINGTON POST POINT POLLUTION CONTROL PLANT SCHEDULE T	DES. FGK	SHEET 53
			DR. GPC	OF 113
		ADMINISTRATION BUILDING - STRUCTURAL - SECTIONS AND DETAILS	CK. RGE	DATE: APRIL 1972
			JOB 56198.1	SCALE: AS SHOWN
				DRAWING NO. C 6196-2

CH2M HILL — ENGINEERS PLANNERS ECONOMISTS

CORNELL HOWLAND HAYES & MERRYFIELD

CLAIR A. HILL & ASSOCIATES

KILHAM STATIONERY & PRINTING CO., PORTLAND, ORE.

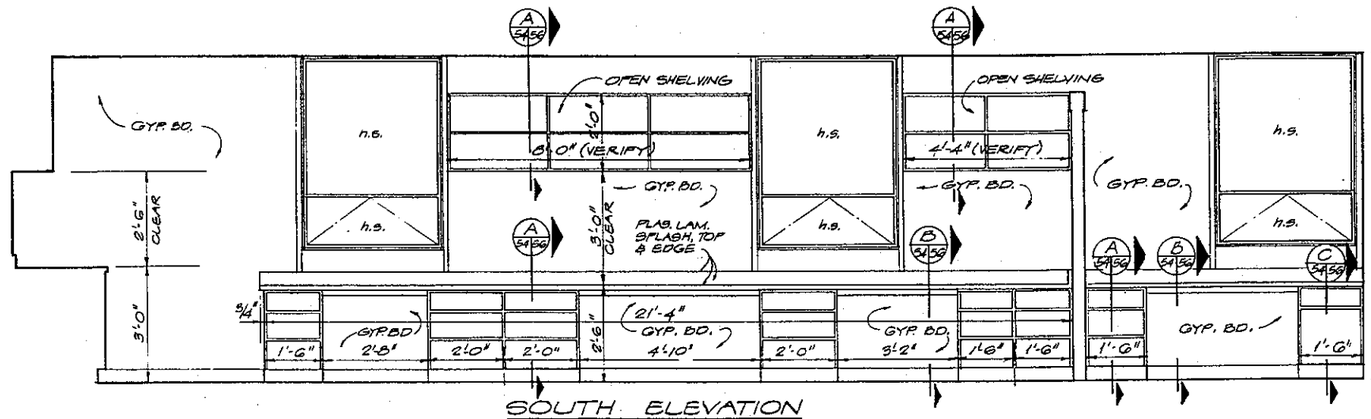

SOUTH ELEVATION

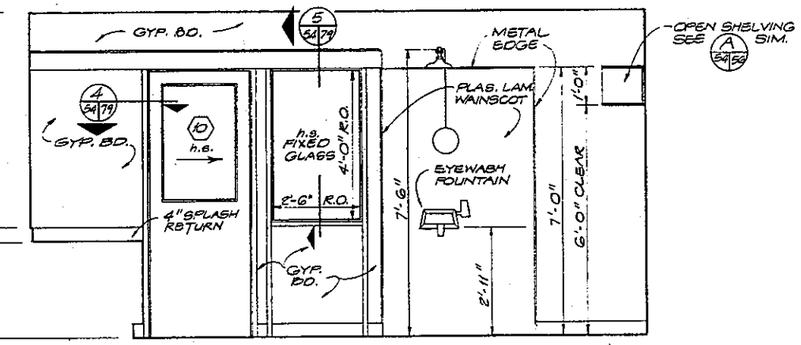

WEST ELEVATION

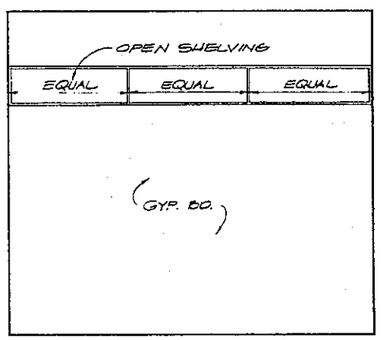

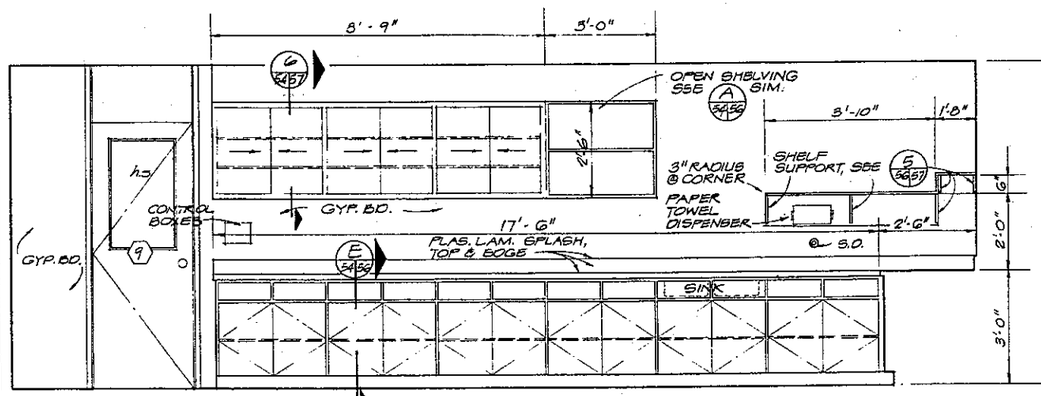

NORTH ELEVATION

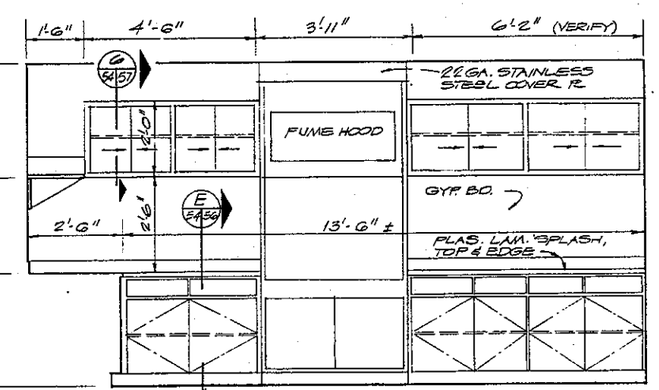

EAST ELEVATION

LABORATORY WALL ELEVATIONS

1/2" = 1'-0"

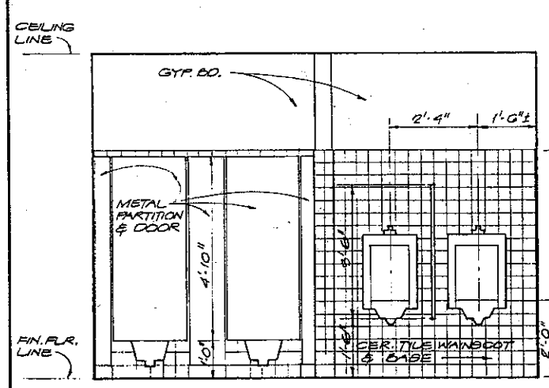

MEN'S TOILET
EAST WALL
1/2" = 1'-0"

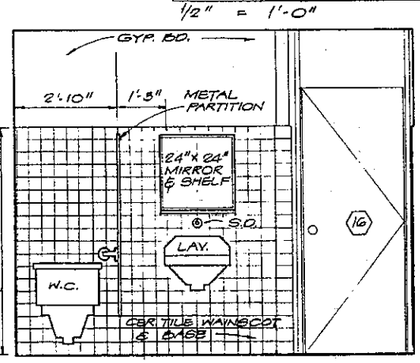

WOMEN'S TOILET
NORTH WALL
1/2" = 1'-0"

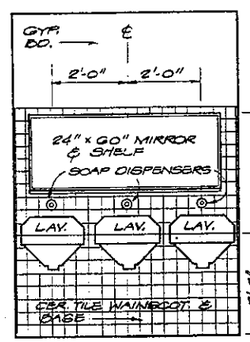

MEN'S LAVATORY
WEST WALL
1/2" = 1'-0"

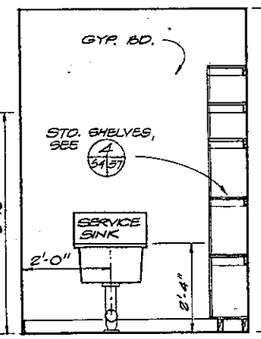

JANITOR'S RM.
EAST WALL
1/2" = 1'-0"

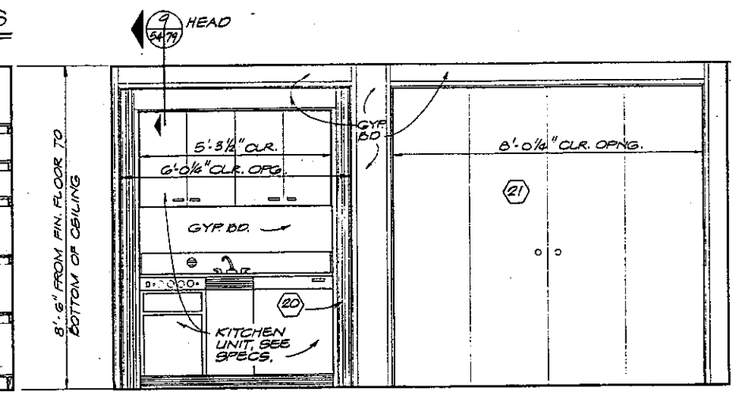

LUNCH ROOM & CONFERENCE
WEST WALL
1/2" = 1'-0"

NO.	DATE	RECORD DRAWING / REVISION	BY	APP.
			DNB	

CH2M HILL — ENGINEERS PLANNERS ECONOMISTS

CORNELL HOWLAND HAYES & MERRYFIELD

CLAIR A. HILL & ASSOCIATES

CITY OF BELLINGHAM, WASHINGTON
POST POINT POLLUTION CONTROL PLANT
SCHEDULE T

ADMINISTRATION BUILDING -
ARCHITECTURAL - INTERIOR ELEVATIONS

DES. DR. CK. RN

SHEET 54 OF 113

DATE: APRIL 1972

SCALE: AS SHOWN

DRAWING NO. C 6198-2

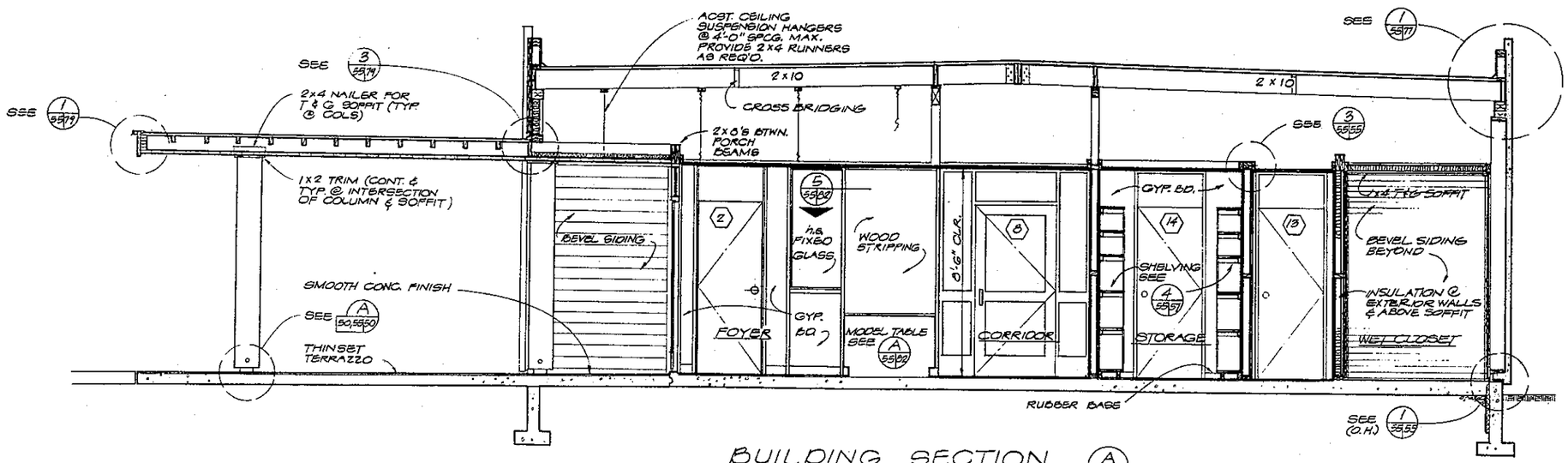

BUILDING SECTION A/51,55

3/8" = 1'-0"

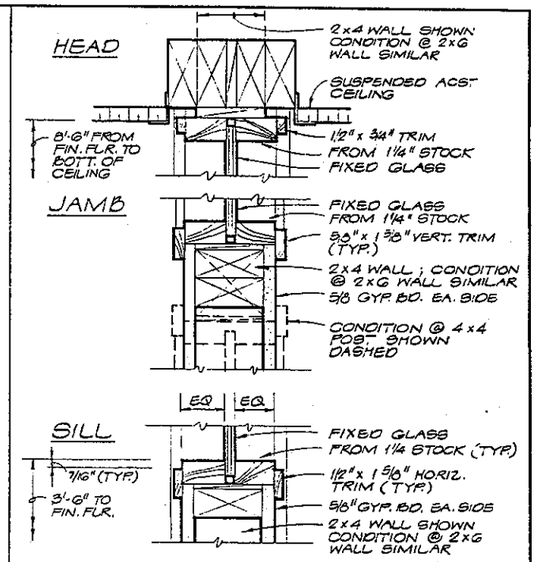

RELITE DETAILS 2/51,55

3" = 1'-0"

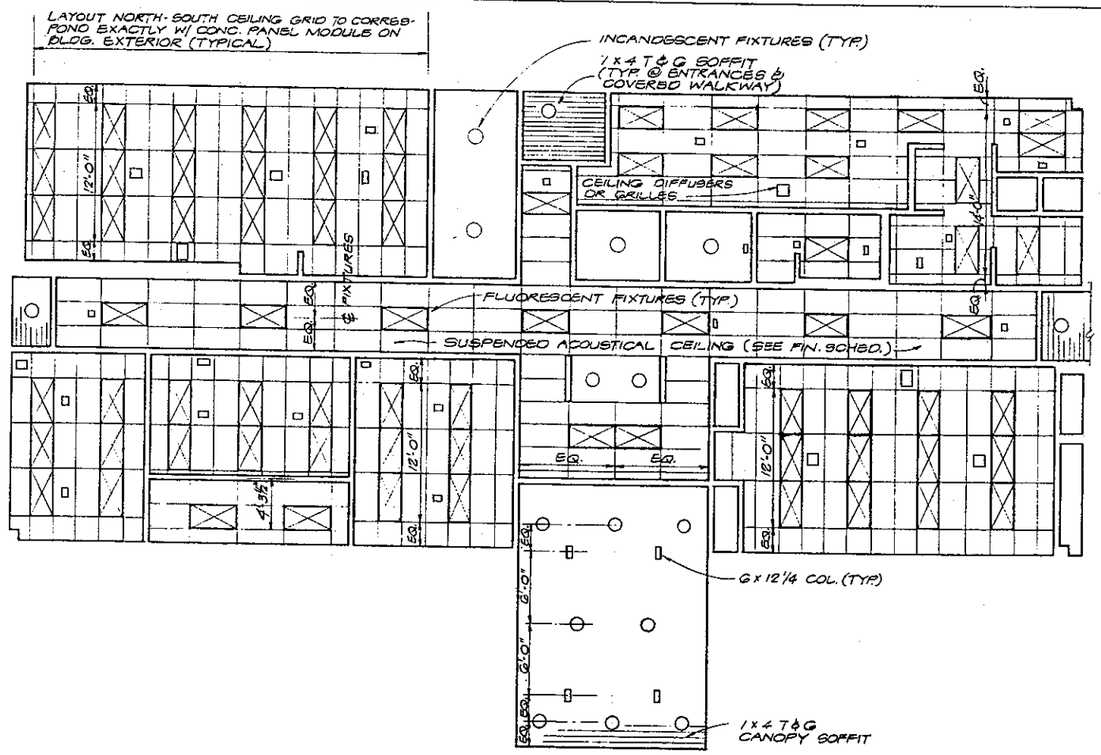

REFLECTED CEILING PLAN

N.T.S.

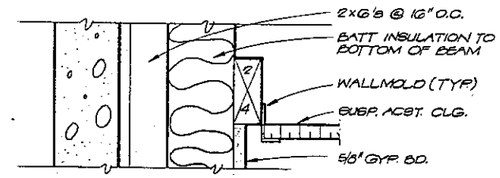

SUSP. CLG. DETAIL

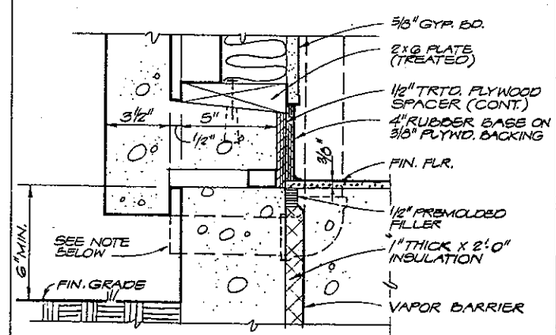

BASE DETAIL

PARTIAL SECTION THRU CONC. PANEL WALL 1/40,51,55

3" = 1'-0"

NOTE: PROVIDE SLEEVES FOR LEADERS @ NE & NW CORNERS AS INDICATED. PROVIDE SLEEVE THRU FDTN. WALL 3" BELOW FINISHED GRADE AT SE & SW CORNERS AND DAYLIGHT THRU SIDEWALK CURBS. PROVIDE 12" x 12" x 3½" CONC. SPLASH BLOCK AT NE & NW CORNERS.

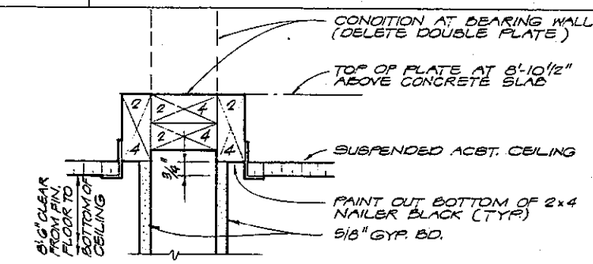

TYP. TOP OF WALL AT SUSPENDED CEILING 3/55,55

3" = 1'-0"

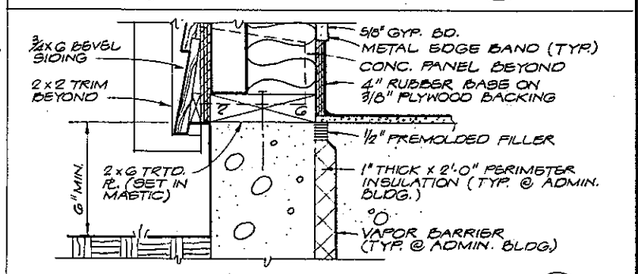

DETAIL @ FRAME WALL BASE 4/40,55

3" = 1'-0"

NO.	DATE	RECORD DRAWINGS REVISION	DWB BY	APD.

CH2M HILL — ENGINEERS PLANNERS ECONOMISTS

CORNELL HOWLAND HAYES & MERRYFIELD — CLAIR A. HILL & ASSOCIATES

CITY OF BELLINGHAM, WASHINGTON
POST POINT POLLUTION CONTROL PLANT
SCHEDULE T

ADMINISTRATION BUILDING - ARCHITECTURAL - CEILING PLAN, SECTIONS AND DETAILS

SHEET 55 OF 113
DATE: APRIL 1972
SCALE: AS SHOWN
DRAWING NO. 5196-2

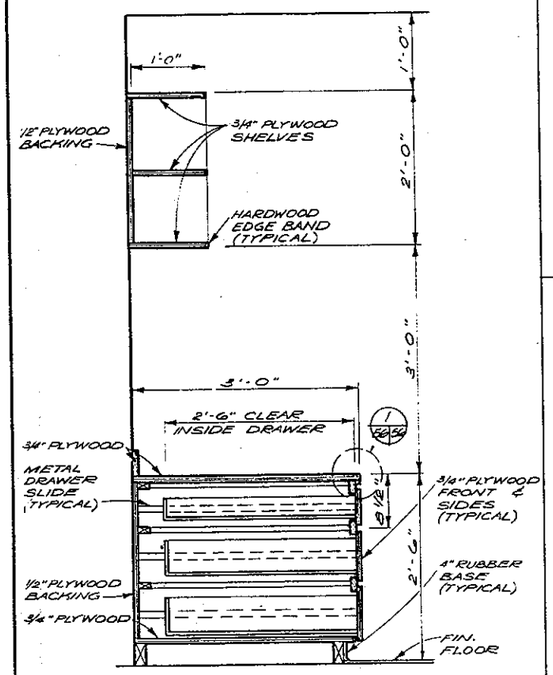

SECTION A 54,56|56
1" = 1'-0"

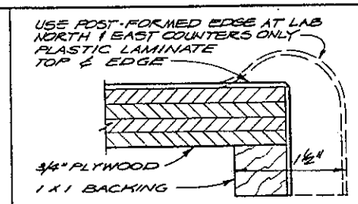

TYP. COUNTER EDGE 1 56|56
N.T.S.

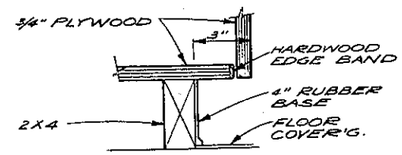

TYP. CABINET BASE 2 56|56
N.T.S.

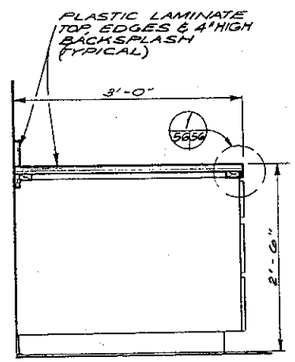

SECTION B 54,56|56
1" = 1'-0"

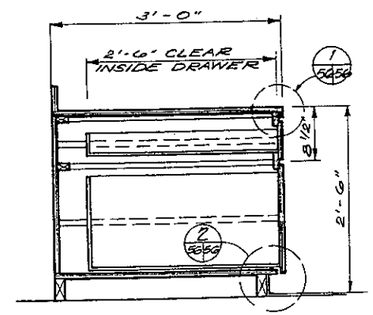

SECTION C 54|56
1" = 1'-0"

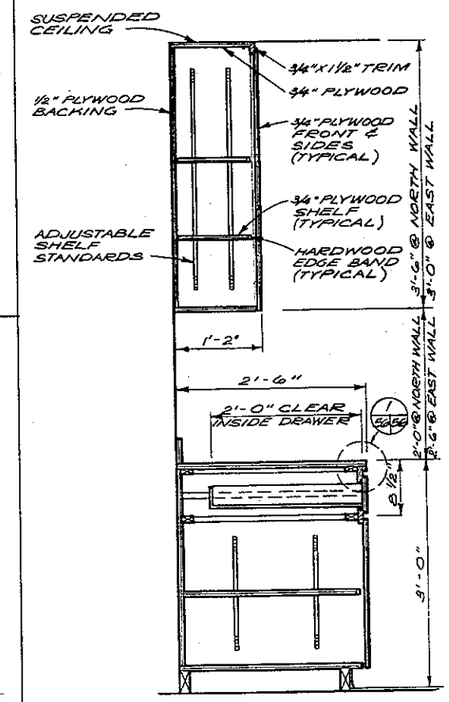

SECTION E 54,56|56
1" = 1'-0"

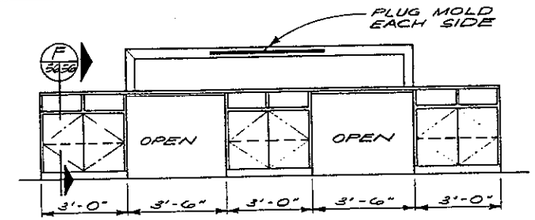

ELEVATION OF REAGENT COUNTER
3/8" = 1'-0"

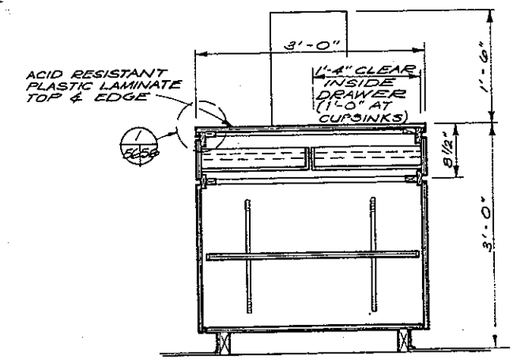

SECTION F 56|56
1" = 1'-0"

LAB COUNTER DETAILS

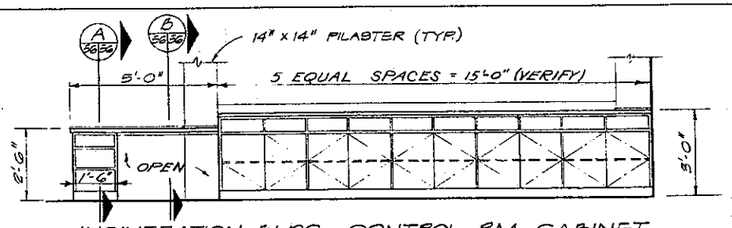

INCINERATION BLDG. CONTROL RM. CABINET
ELEVATION
3/8" = 1'-0"

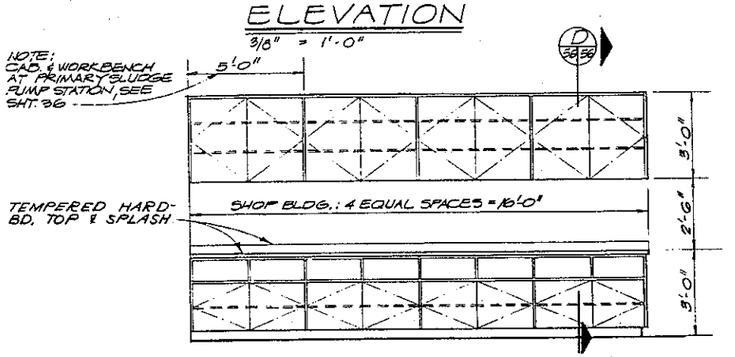

SHOP BLDG. MAINTENANCE RM. WORKBENCH & CABINET
ELEVATION
3/8" = 1'-0"

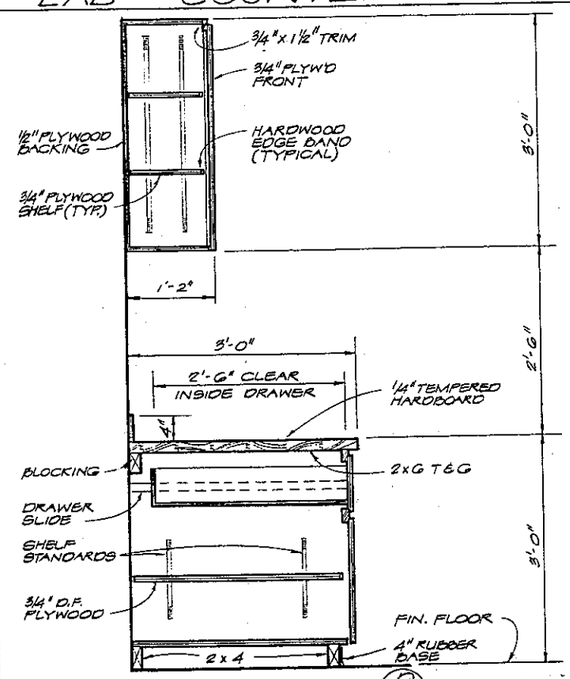

SECTION D 56|56
1" = 1'-0"

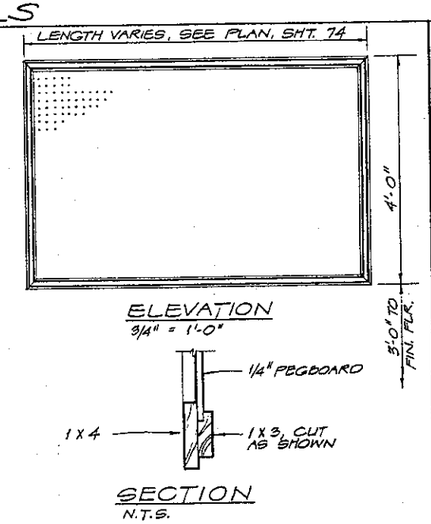

ELEVATION
3/4" = 1'-0"

SECTION
N.T.S.

PEG BD. DETAIL 3 74|56

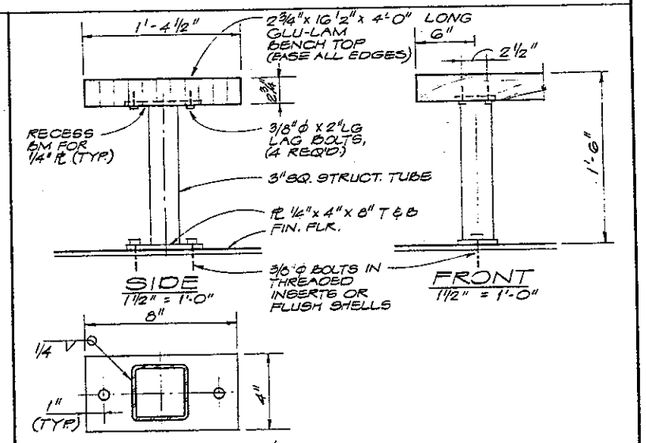

PLAN OF BOTTOM PL
3" = 1'-0"

LOCKER RM. BENCH DET. 4 51|56

NO.	DATE	RECORD DRAWINGS / REVISION	DWB BY	APD

CH2M HILL — ENGINEERS PLANNERS ECONOMISTS

CORNELL HOWLAND HAYES & MERRYFIELD

CLAIR A. HILL & ASSOCIATES

CITY OF BELLINGHAM, WASHINGTON
POST POINT POLLUTION CONTROL PLANT
SCHEDULE T

ADMINISTRATION BUILDING - ARCHITECTURAL - CABINET AND COUNTER DETAILS

SHEET 56 OF 113
DATE: APRIL 1972
SCALE: AS SHOWN
56190.1
C 6198-2

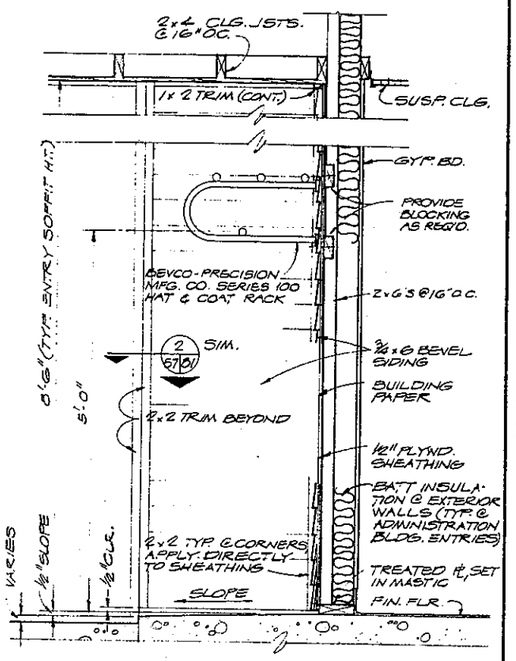

WET CLOSET SECTION (A / 51,55|57)

1" = 1'-0"

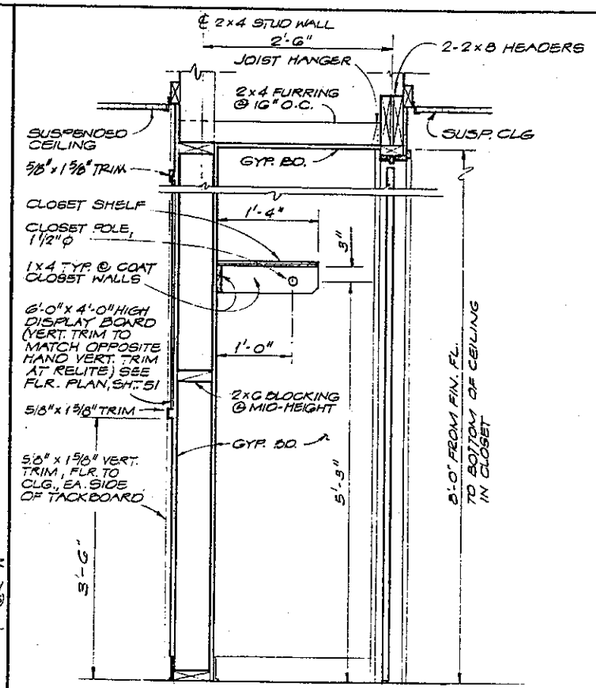

NOTE:
STORAGE CLOSET A-24 SIMILAR
NO CLOSET POLE OR SHELF

COAT CLOSET SECTION (B / 51|57)

1" = 1'-0"

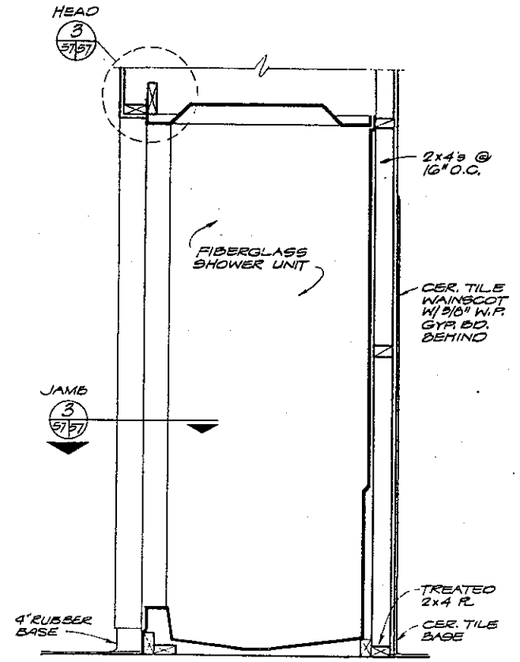

SHOWER STALL DETAIL (2 / 51|57)

N.T.S.

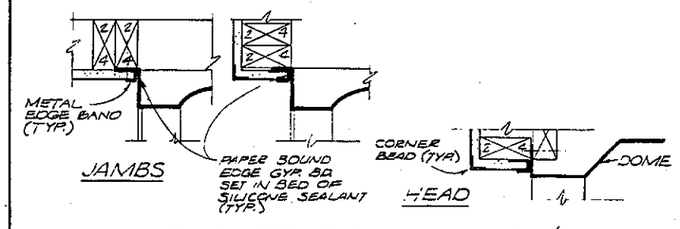

SHOWER STALL JAMB & HEAD DETAIL (3 / 51|57)

N.T.S.

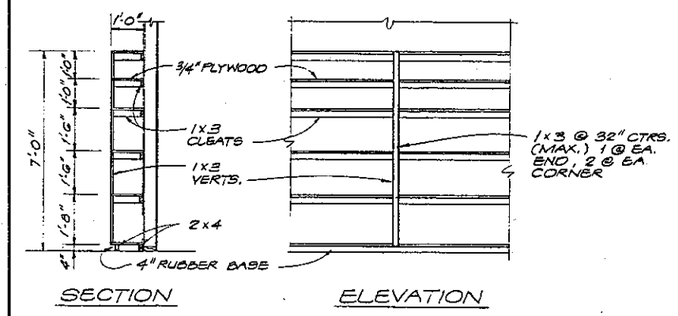

STORAGE SHELVES DETAIL (4 / 51,54,55|57)

N.T.S.

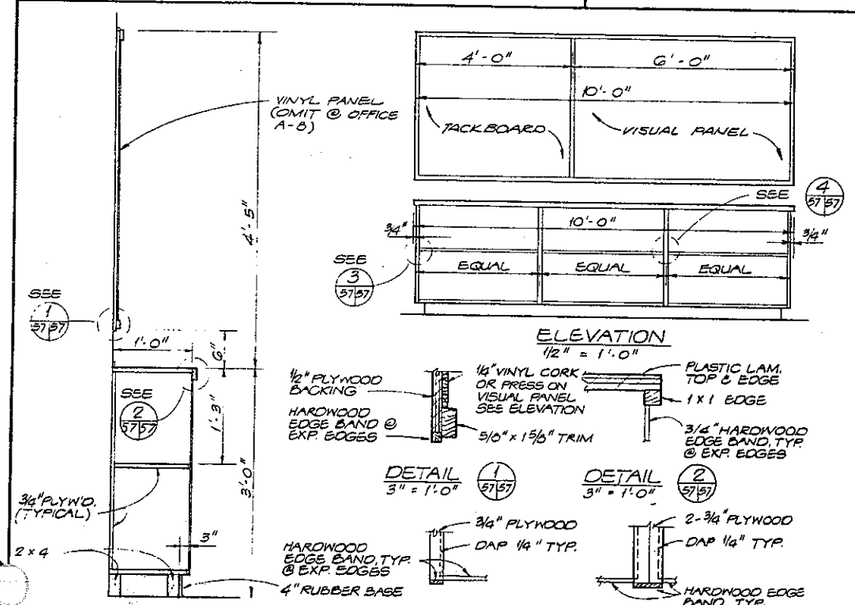

DETAILS OF CONFERENCE ROOM BOOKSHELF (1 / 51|57)

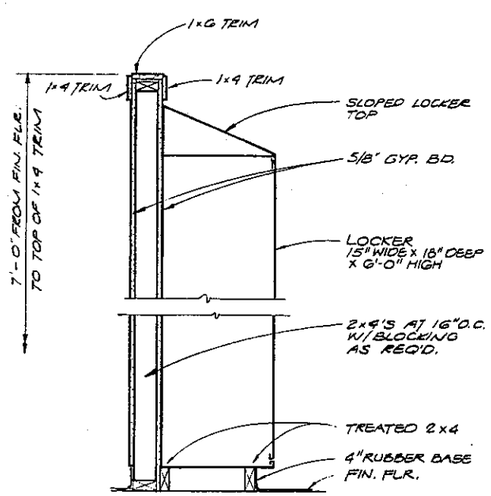

LOCKER SECTION (C / 51|57)

1" = 1'-0"

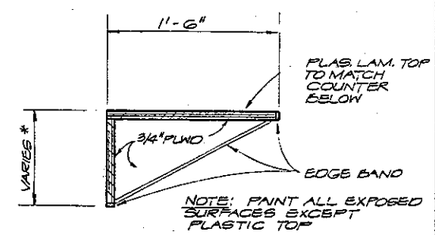

SHELF SUPPORT DETAIL (5 / 54|57)

N.T.S.

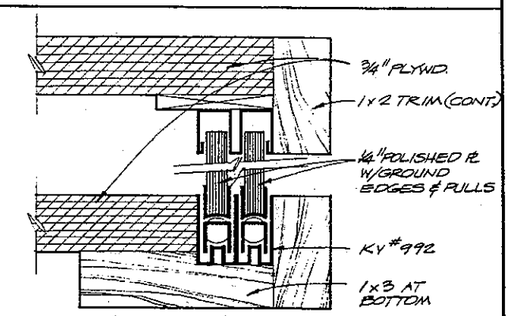

SLIDING GLASS DOOR DETAIL (6 / 54|57)

FULL SCALE

NO.	DATE	REVISION	BY	APD.
1		RECORD DRAWINGS	DNB	

CH2M HILL — ENGINEERS PLANNERS ECONOMISTS

CORNELL HOWLAND HAYES & MERRYFIELD

CLAIR A. HILL & ASSOCIATES

CITY OF BELLINGHAM, WASHINGTON
POST POINT POLLUTION CONTROL PLANT
SCHEDULE T

ADMINISTRATION BUILDING -
ARCHITECTURAL - STORAGE AND SHELVING DETAILS

DES. — DR. — CK. — SHEET 57 OF 113 — DATE: APRIL 1972 — SCALE: AS SHOWN — JOB 56196.1 — DRAWING NO. C 6196-2

GILBERT STATIONERY & PRINTING CO., PORTLAND, ORE.

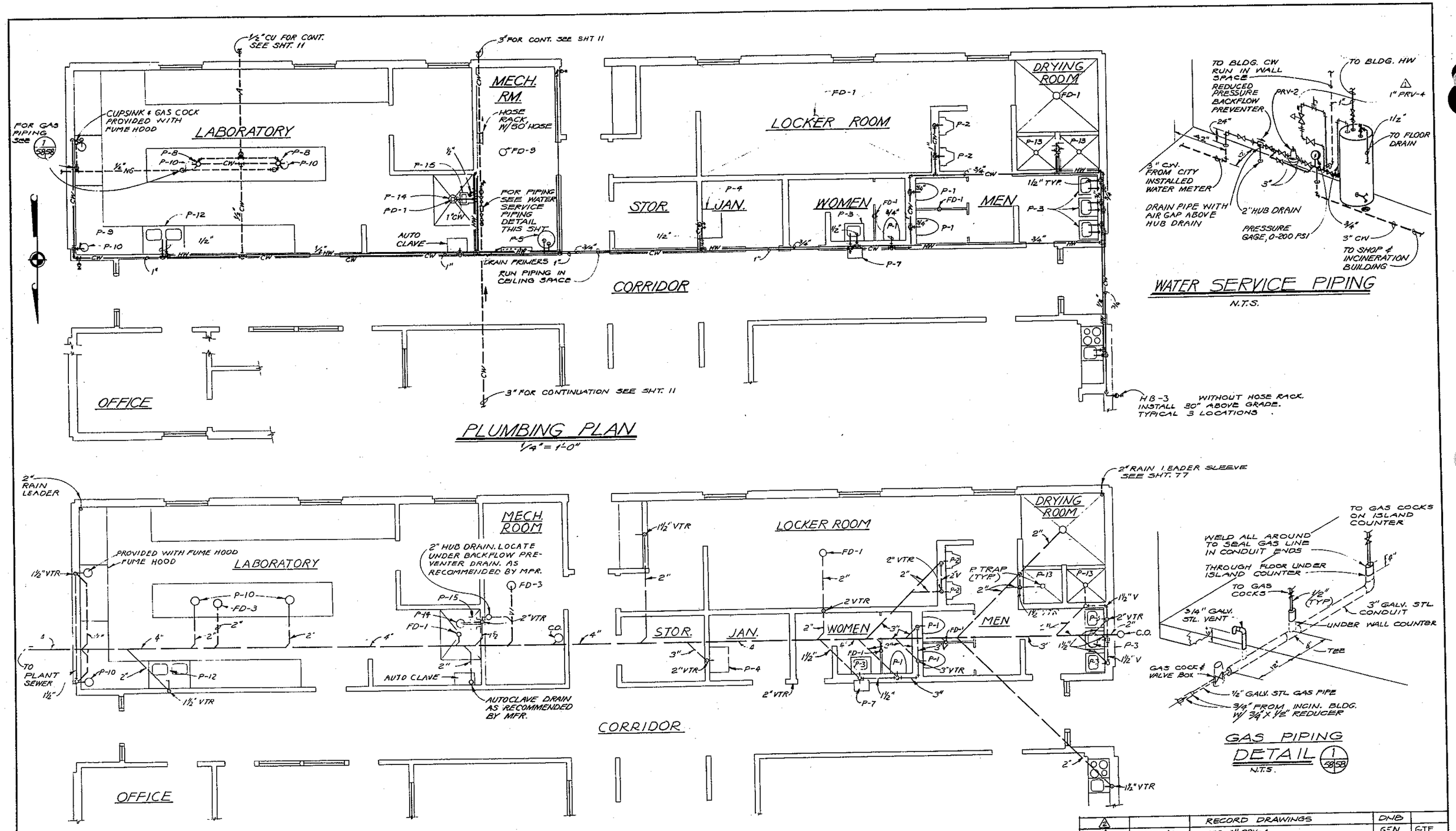

NO.	DATE	REVISION	BY	CHK.
2		RECORD DRAWINGS	DNB	
1	11 APRIL '74	ADD 3" PRV-4	GEN	GTF

CH2M HILL — ENGINEERS PLANNERS ECONOMISTS

CORNELL HOWLAND HAYES & MERRYFIELD

CLAIR A. HILL & ASSOCIATES

CITY OF BELLINGHAM, WASHINGTON
POST POINT POLLUTION CONTROL PLANT
SCHEDULE T

ADMINISTRATION BUILDING - MECHANICAL - PLUMBING PLAN

DES. GTF
DR. RAH
CK. HPC
PM 58196.1

SHEET 58 OF 113
DATE: APRIL 1972
SCALE: AS SHOWN
DRAWING NO. C 6198-2

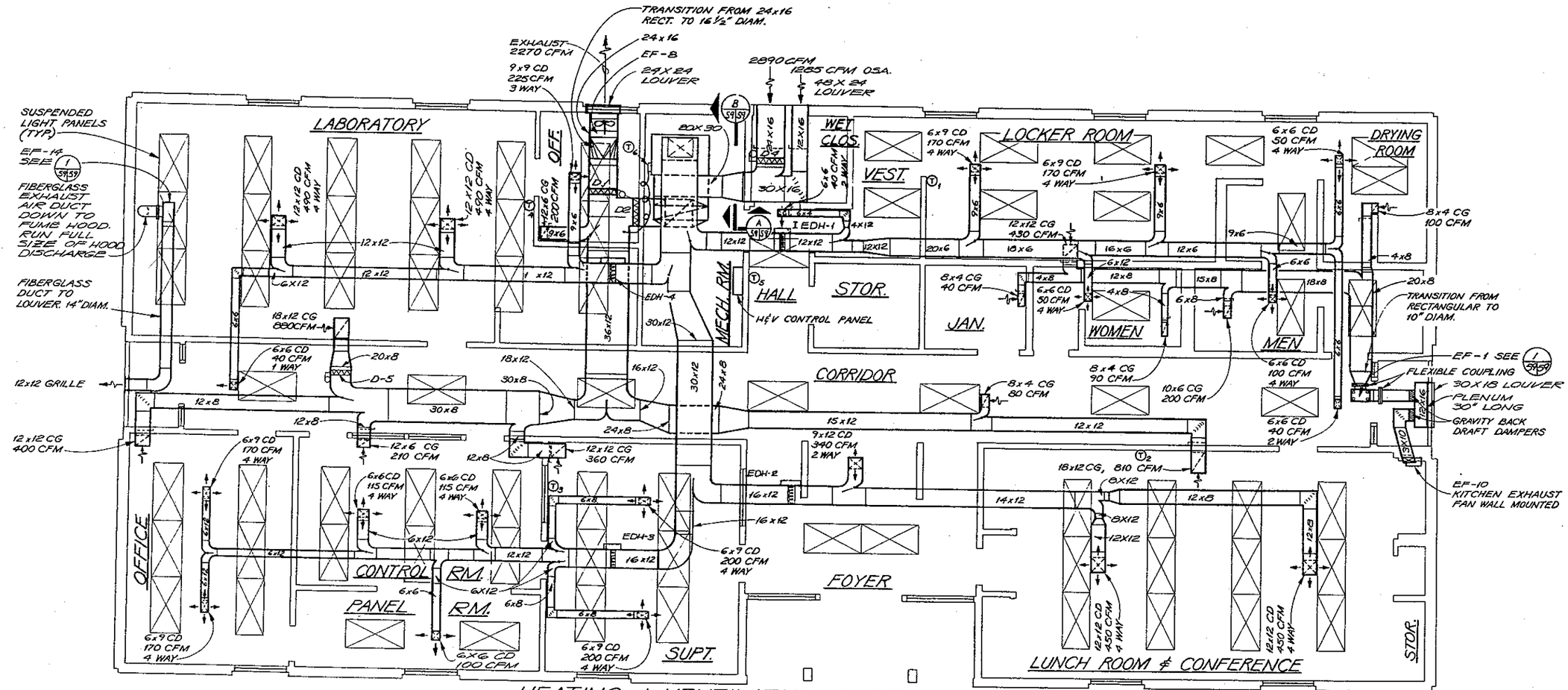

HEATING & VENTILATION PLAN

¼" = 1'-0"

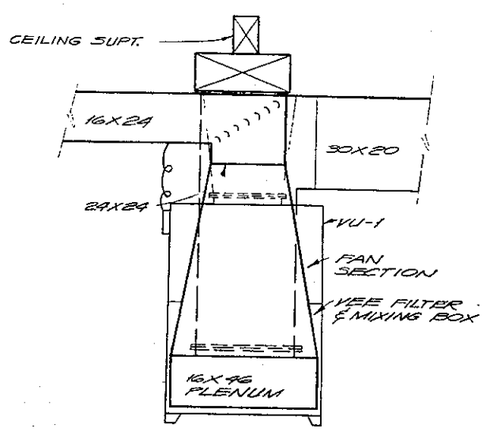

SECTION A 1/59 59

½" = 1'-0"

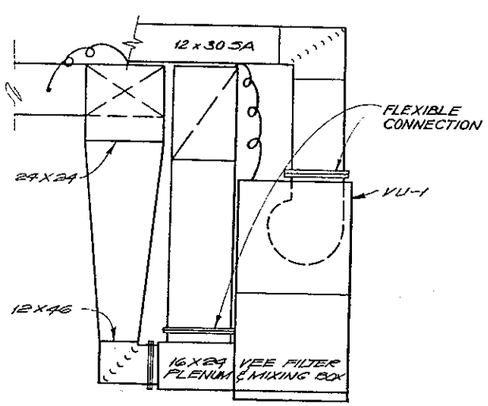

SECTION B 1/59 59

½" = 1'-0"

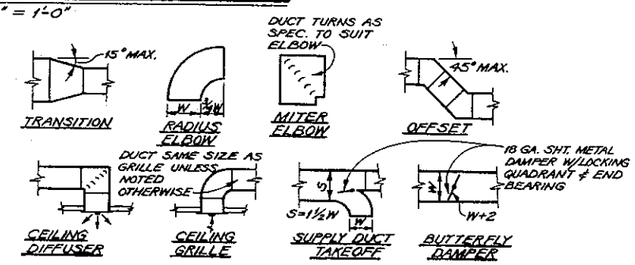

TYPICAL DUCT CONSTRUCTION DETAILS N.T.S.

GENERAL DUCTWORK NOTES:

1. CEILING DIFFUSERS AND GRILLES ARE TO BE LOCATED IN THE PANELS BETWEEN THE T-BAR GRIDS IN ALL SUSPENDED CEILING SYSTEMS. LOCATE DIFFUSERS AND GRILLES AS INDICATED ABOVE.
2. PROVIDE SPLITTER DAMPER AT EACH SUPPLY DUCT TAKEOFF IN ACCORDANCE WITH TYPICAL DUCT CONSTRUCTION DETAILS SHOWN ABOVE.
3. PROVIDE VOLUME DAMPERS FOR EACH GRILLE AT EACH RETURN CONNECTION AND ANY OTHER LOCATIONS INDICATED ON THE DRAWINGS IN ACCORDANCE WITH TYPICAL DUCT CONSTRUCTION DETAILS SHOWN ABOVE. DAMPERS TO BE INSTALLED MINIMUM OF 5'-0" FROM GRILLE EXCEPT AS REQUIRED.
4. PATCH ALL OUTSIDE WALL PENETRATIONS WITH AN APPROVED GROUT AND/OR CAULKING MATERIAL AND PAINT TO MATCH ADJACENT FINISH. PROVIDE ESCUTCHEONS ON ALL INTERIOR WALL PENETRATIONS.

LEGEND

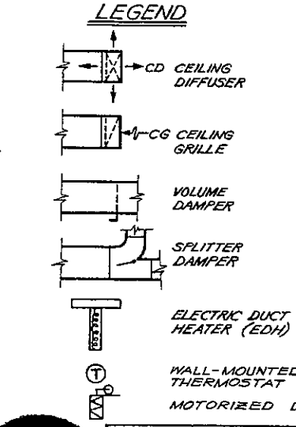

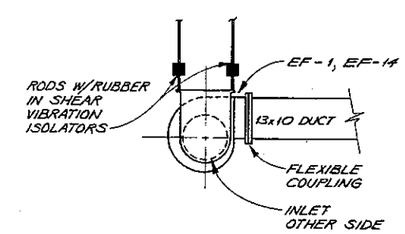

EXHAUST FAN DETAIL 1/59 59

½" = 1'-0"

RECORD DWGS. DNB

NO.	DATE	REVISION	BY	CHK	APPD

CH2M HILL — ENGINEERS PLANNERS ECONOMISTS

CORNELL HOWLAND HAYES & MERRYFIELD — CLAIR A. HILL & ASSOCIATES

CITY OF BELLINGHAM, WASHINGTON
POST POINT POLLUTION CONTROL PLANT
SCHEDULE T

ADMINISTRATION BUILDING -
MECHANICAL - HEATING AND VENTILATING

DES. GTF — DR. RAH — CK. HCR — DWG. 58196.1 — SHEET 59 OF 113 — SCALE: AS SHOWN — DATE: APRIL 1972 — DRAWING NO. C 8196-2

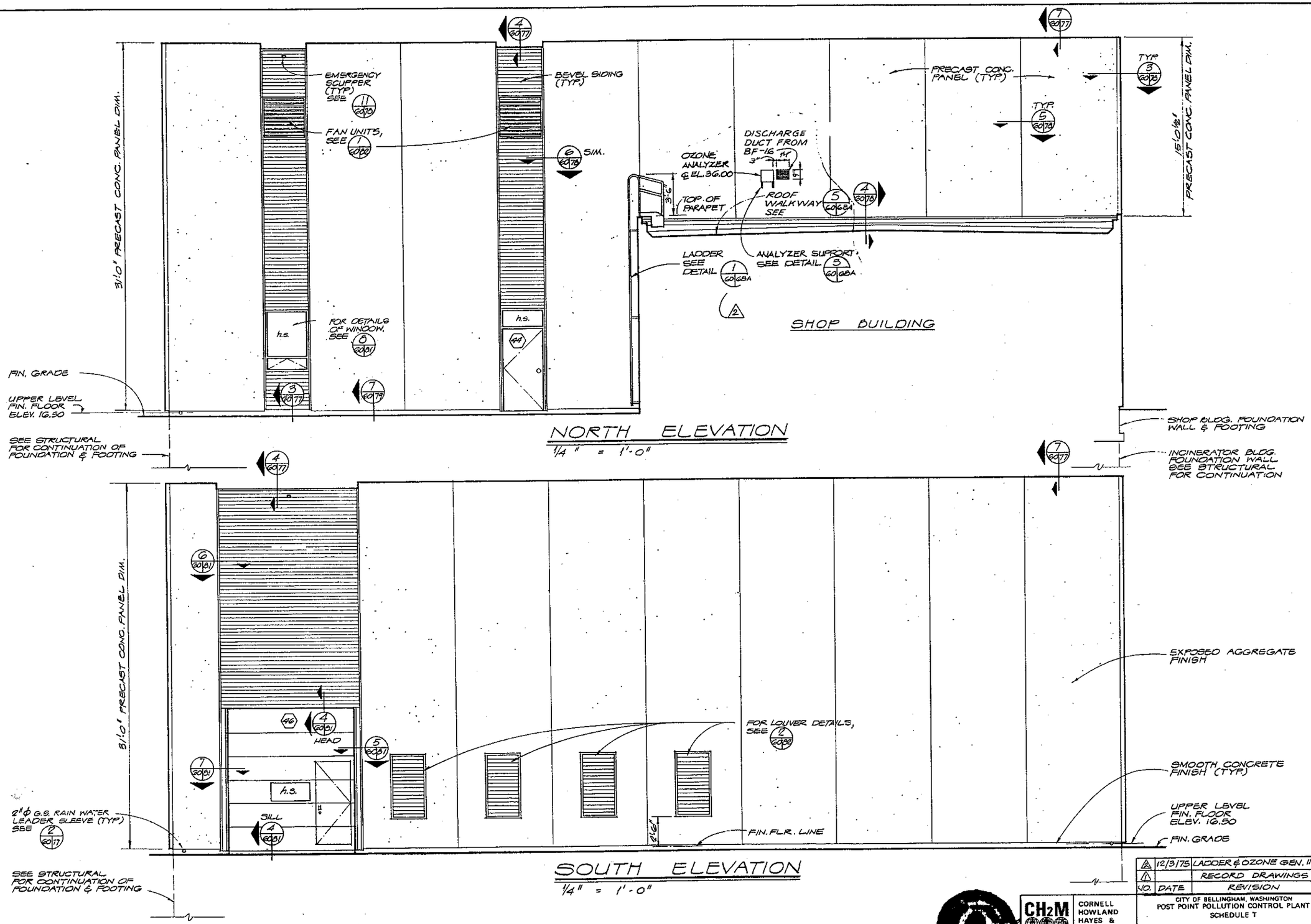

NO.	DATE	REVISION	BY	APD.
2	12/3/75	LADDER & OZONE GEN. INST.	BMS	GRG
1		RECORD DRAWINGS	DNB	

CH2M HILL — ENGINEERS PLANNERS ECONOMISTS

CORNELL HOWLAND HAYES & MERRYFIELD

CLAIR A. HILL & ASSOCIATES

CITY OF BELLINGHAM, WASHINGTON
POST POINT POLLUTION CONTROL PLANT
SCHEDULE T

INCINERATION BUILDING -
ARCHITECTURAL - ELEVATIONS

DES.
DR. L.F.
CK.
FIN. 36198.1

SHEET 60 OF 113
DATE: APRIL 1972
SCALE: AS SHOWN
DRAWING NO. C 6198-2

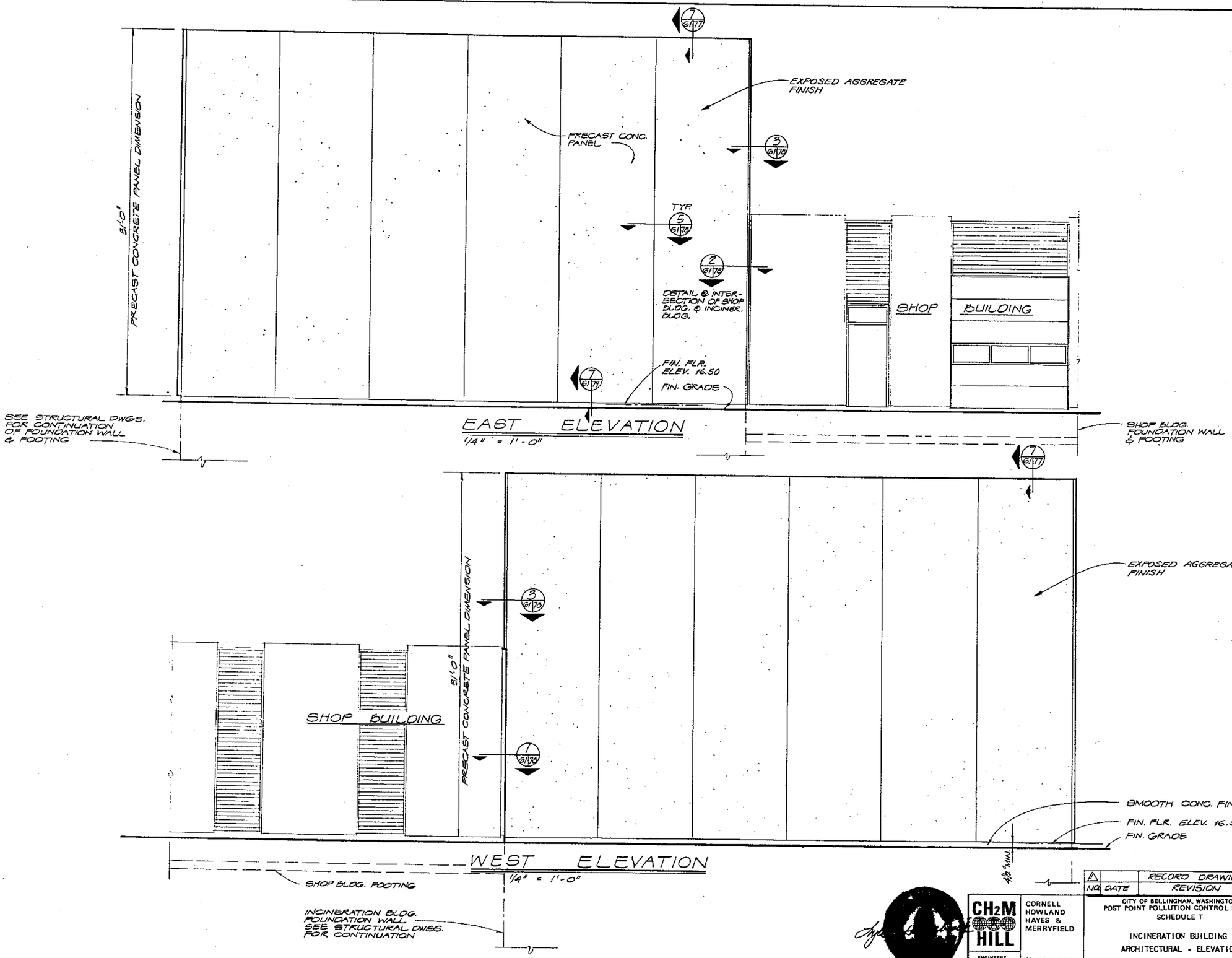

NO.	DATE	REVISION	BY	APD.
1		RECORD DRAWINGS	JLS	

CH2M HILL
ENGINEERS PLANNERS ECONOMISTS

CORNELL HOWLAND HAYES & MERRYFIELD

CLAIR A. HILL & ASSOCIATES

CITY OF BELLINGHAM, WASHINGTON
POST POINT POLLUTION CONTROL PLANT
SCHEDULE T

INCINERATION BUILDING -
ARCHITECTURAL - ELEVATIONS

DES.
DR.
CK.
DATE: APRIL 1972
SCALE: AS SHOWN
SHEET 61 OF 113
DWG. NO. C 6198-2

BLAIR STATIONERY & PRINTING CO., PORTLAND, ORE.

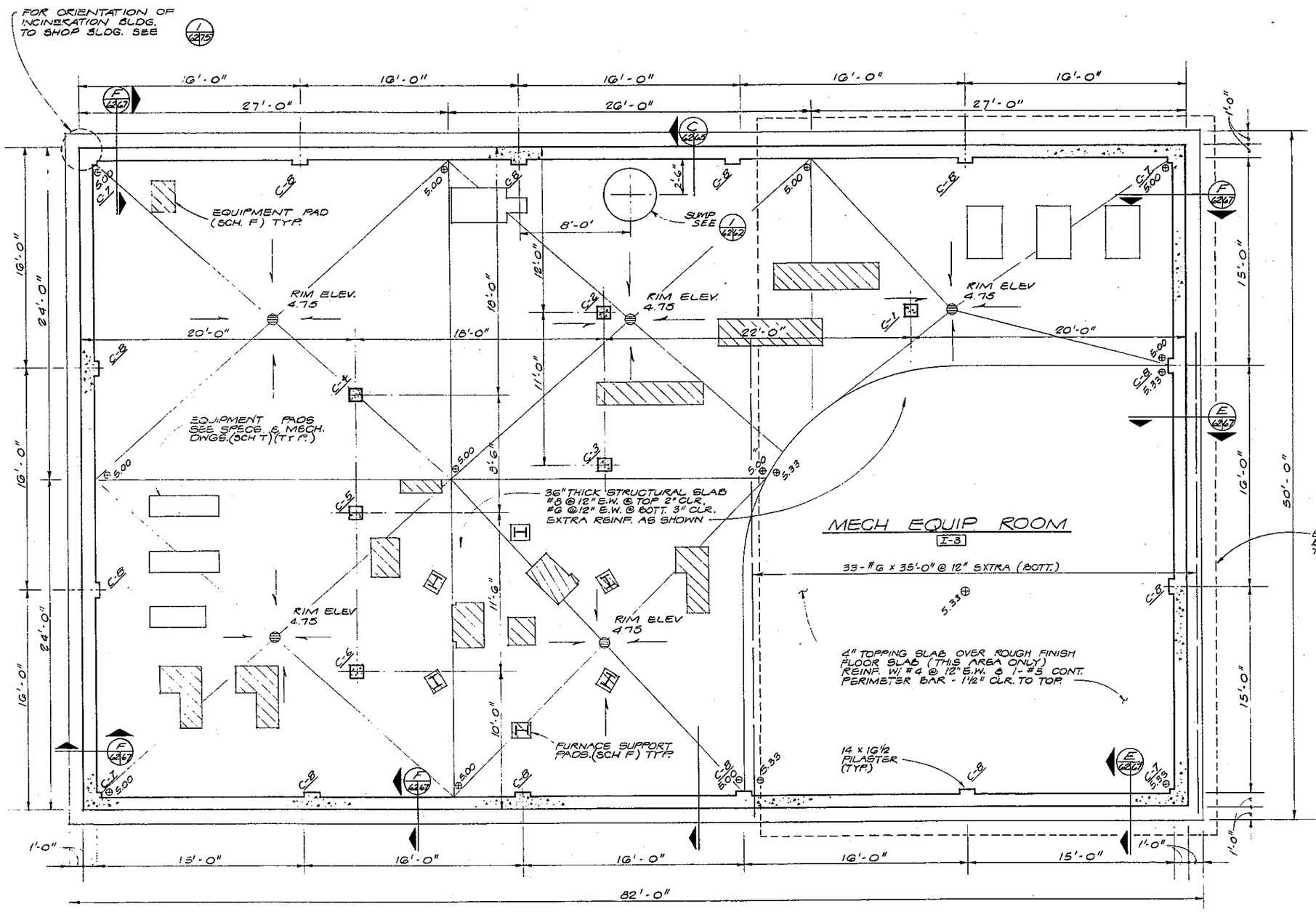

LOWER LEVEL FLOOR PLAN

1/4" = 1'-0"

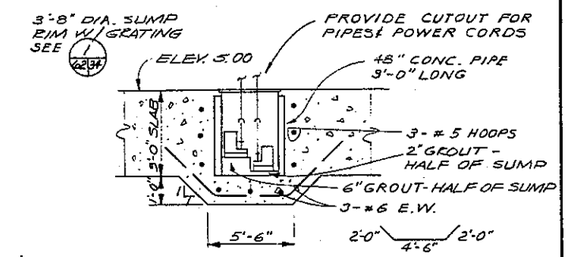

SUMP PUMP DETAIL 1/62.62

N.T.S.

NO.	DATE	REVISION	BY	APD.
1		RECORD DRAWINGS	JLS	

CH2M HILL — ENGINEERS PLANNERS ECONOMISTS

CORNELL HOWLAND HAYES & MERRYFIELD

CLAIR A. HILL & ASSOCIATES

CITY OF BELLINGHAM, WASHINGTON
POST POINT POLLUTION CONTROL PLANT
SCHEDULE T

INCINERATION BUILDING - STRUCTURAL - LOWER LEVEL FLOOR PLAN

DES. — DR. — CK. — RH 56198.1

SHEET 62 OF 113

DATE: APRIL 1972

SCALE: AS SHOWN

DRAWING NO. C 6196-2

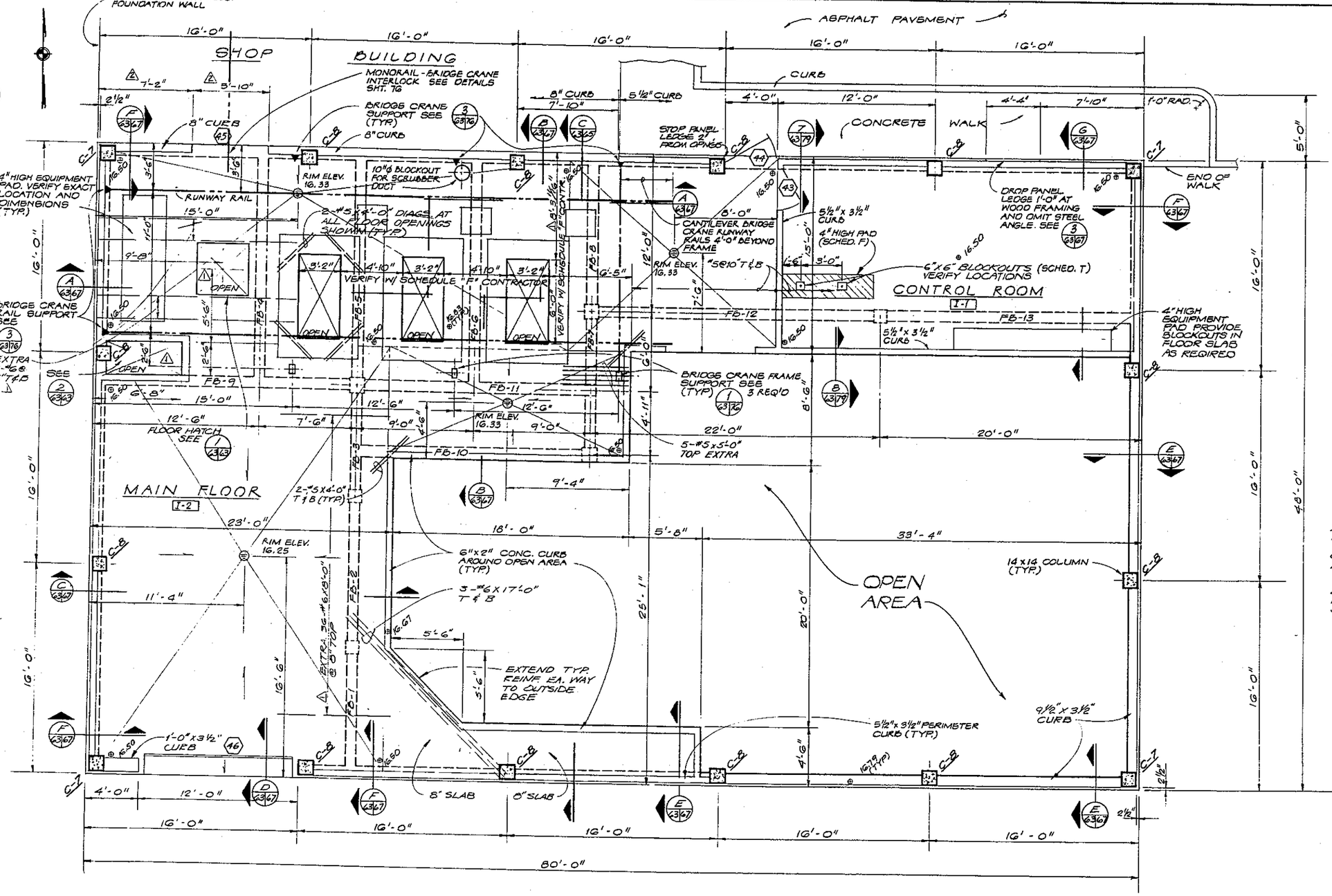

UPPER LEVEL FLOOR PLAN

1/4" = 1'-0"

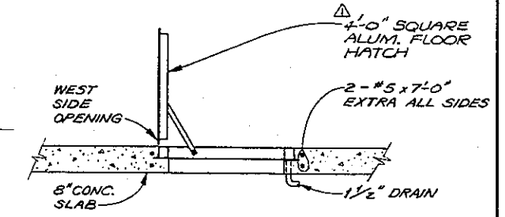

DETAIL 1 (63/63)

1/2" = 1'-0"

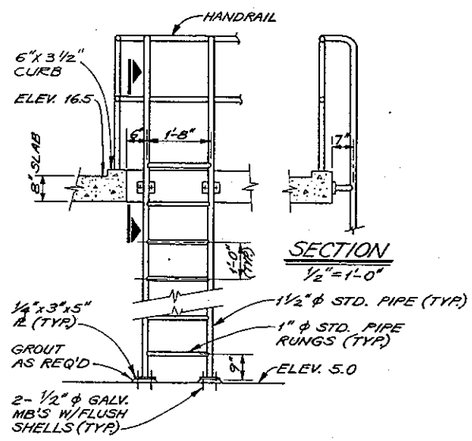

NOTES:
1. WELD ALL CONNECTIONS
2. HOT DIP GALV. AFTER FABRICATION

EMERGENCY EXIT LADDER

DETAIL 2 (63/69/70/63)

1/2" = 1'-0"

NO.	DATE	REVISION	BY	APD.
5		RECORD DRAWINGS	JLS	
4	5/21/73	FIREDOOR OPENING MOD.	RGB	JGG
3	3/15/73	MECH. EQUIP. MODIFICATION	WVK	BPE

CH2M HILL
ENGINEERS PLANNERS ECONOMISTS

CORNELL HOWLAND HAYES & MERRYFIELD
CLAIR A. HILL & ASSOCIATES

CITY OF BELLINGHAM, WASHINGTON
POST POINT POLLUTION CONTROL PLANT
SCHEDULE T

INCINERATION BUILDING -
STRUCTURAL - UPPER LEVEL
FLOOR PLAN

DES. BPE
DR. COY
CK. GFD
DATE APRIL 1972
SCALE: AS SHOWN
SHEET 63 OF 113
DRAWING NO. C 6196-2

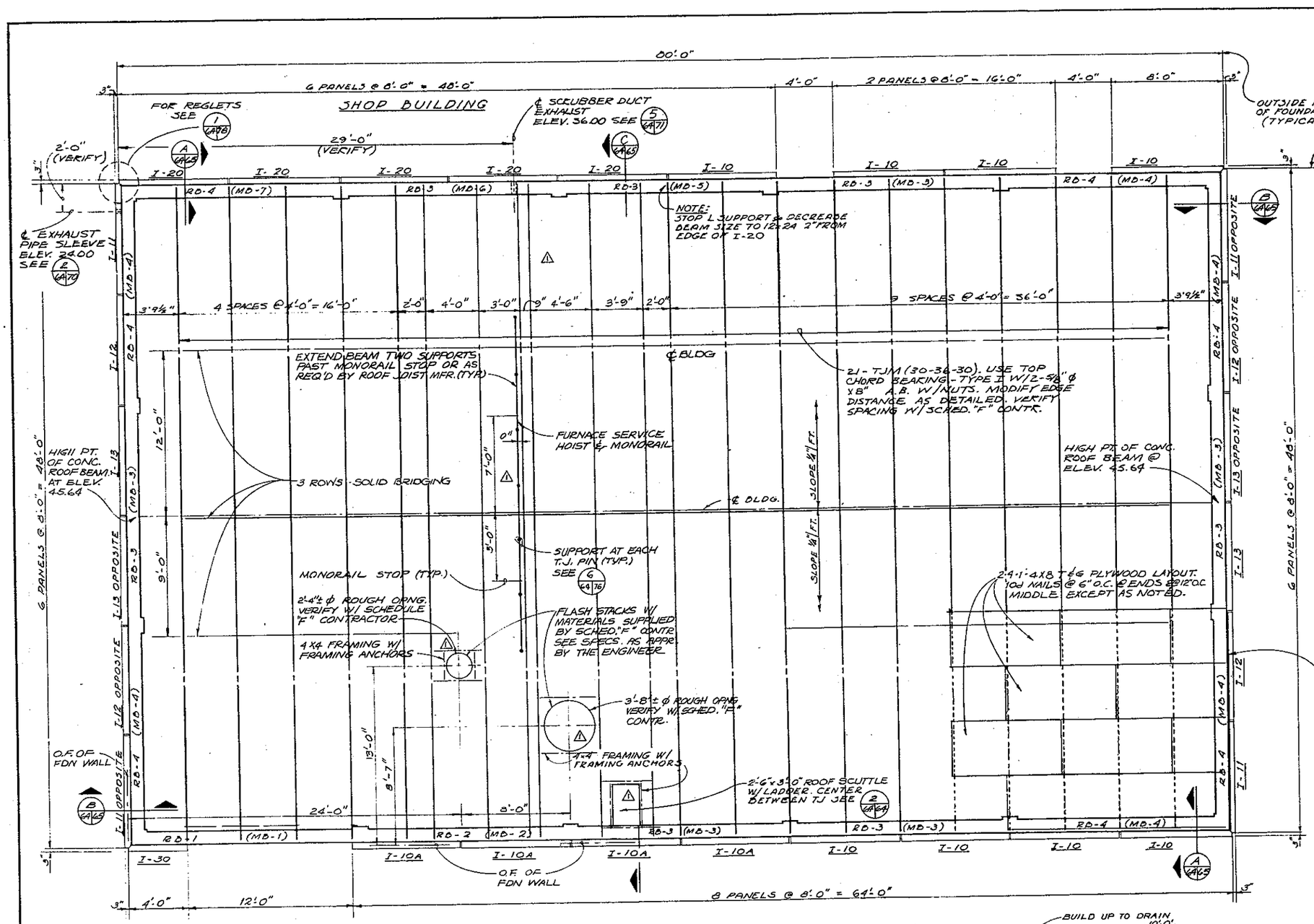

ROOF PLAN
1/4" = 1'-0"

GENERAL NOTES

1. ALL PANELS WITH THE SAME SERIES DESIGNATIONS I-10'S, I-20'S AND I-30'S ARE SIMILAR SECOND NUMERAL INDICATES INSERT LOCATIONS FOR CONNECTION TO BLDG. FRAME.
2. TRUS-JOIST DESIGN LOADS
   A. 40 PSF (SNOW + D.L.)
   B. 15 PSF WIND UPLIFT
   C. 2300 POUND TOTAL MONO RAIL LOAD (APPLIED CONCURRENTLY WITH SNOW & D.L.)
3. BOTTOM CHORDS OF TJM'S @ UNIFORM ELEVATION. 43.26 ±
4. CONCRETE PANEL AND LEDGE BEAM ANCHOR BOLTS ARE NOT SHOWN
5. FASTEN ALL BRIDGING WITH BOLTED CONNECTIONS DESIGNED BY MFR. INSTALL CONT. 2X4 AT ENDS OF BOTTOM JOIST CHORDS. SPLICE PER DETAIL 5/S5B5

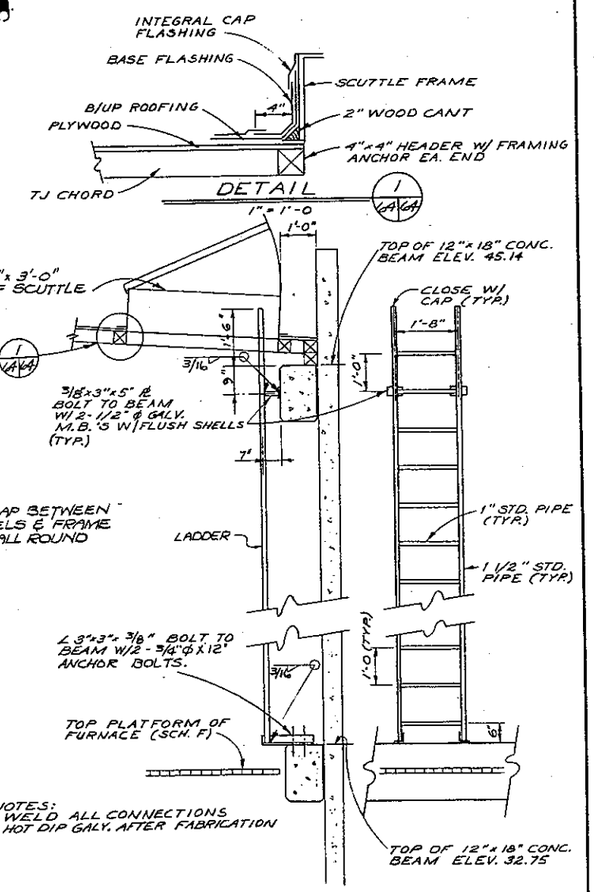

LADDER & ROOF SCUTTLE 2/4A4
1/2" = 1'-0

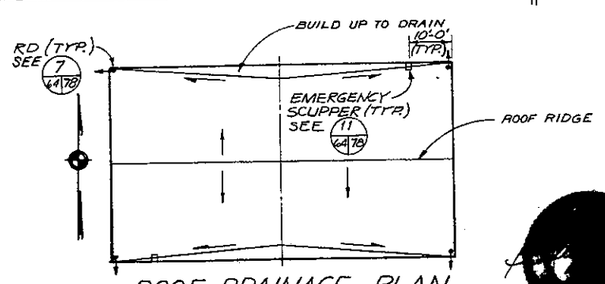

ROOF DRAINAGE PLAN
N.T.S.

NO.	DATE	REVISION	BY	APD.
2		RECORD DRAWINGS	JLS	
1	3/15/73	MECH. EQUIP. MODIFICATION	BBL	BPE

CH2M HILL — ENGINEERS PLANNERS ECONOMISTS

CORNELL HOWLAND HAYES & MERRYFIELD — CLAIR A. HILL & ASSOCIATES

CITY OF BELLINGHAM, WASHINGTON
POST POINT POLLUTION CONTROL PLANT
SCHEDULE T

INCINERATION BUILDING - STRUCTURAL - ROOF PLAN

DES. BPE
DR. OAF
CK. GFD
FIN. 56196.1
SHEET 64 OF 113
DATE: APRIL 1972
SCALE: AS SHOWN
DRAWING NO. C 6196-2

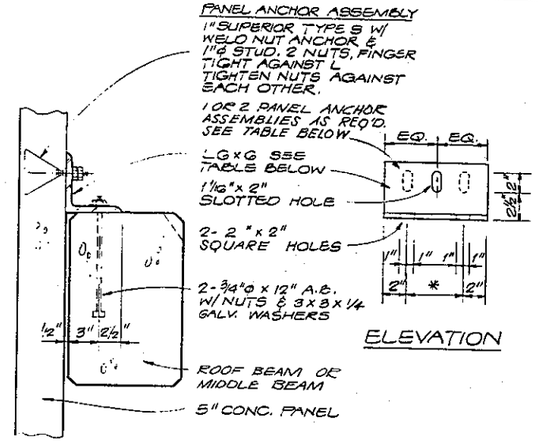

ELEVATION

SECTION

NOTES:
1. HOT DIP GALVANIZE L'S AFTER FABRICATION. ALL FASTENERS SHALL BE GALVANIZED OR CADMIUM PLATED.
2. ERECT PANEL SO THAT 1"ø STUD IS CENTERED IN SLOTTED HOLE ADJUST ELEVATION W/ SHIMS THE SAME SIZE AS L.

TOP CONNECTIONS					MIDDLE CONNECTIONS			
PANEL SIZE	L SIZE	PANEL ANCHOR ASSY/CONN.	CONN/ PANEL	*	L SIZE	PANEL ANCHOR ASSY/CONN.	CONN/ PANEL	*
8'x 31'	LGxGx1/2	1	2	7"	LGxGx3/4	2	3	10"
8'x15'-0 1/2"	LGxGx5/8	2	2	7"	—	—	—	—
4'x 31'	LGxGx1/2	1	2	7"	LGxGx3/4	2	2	7"

TOP & MIDDLE CONNECTIONS

DETAIL 1 (65/68/65)
1 1/2" = 1'-0"

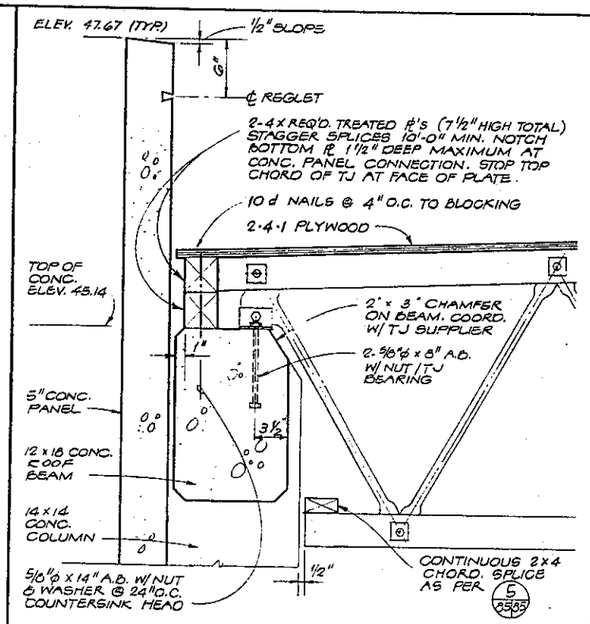

SECTION A (64/68/65)
1 1/2" = 1'-0"

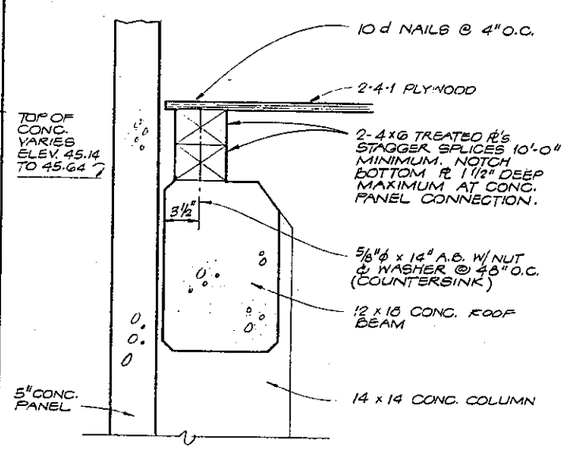

SECTION B (1A/65)
1 1/2" = 1'-0"

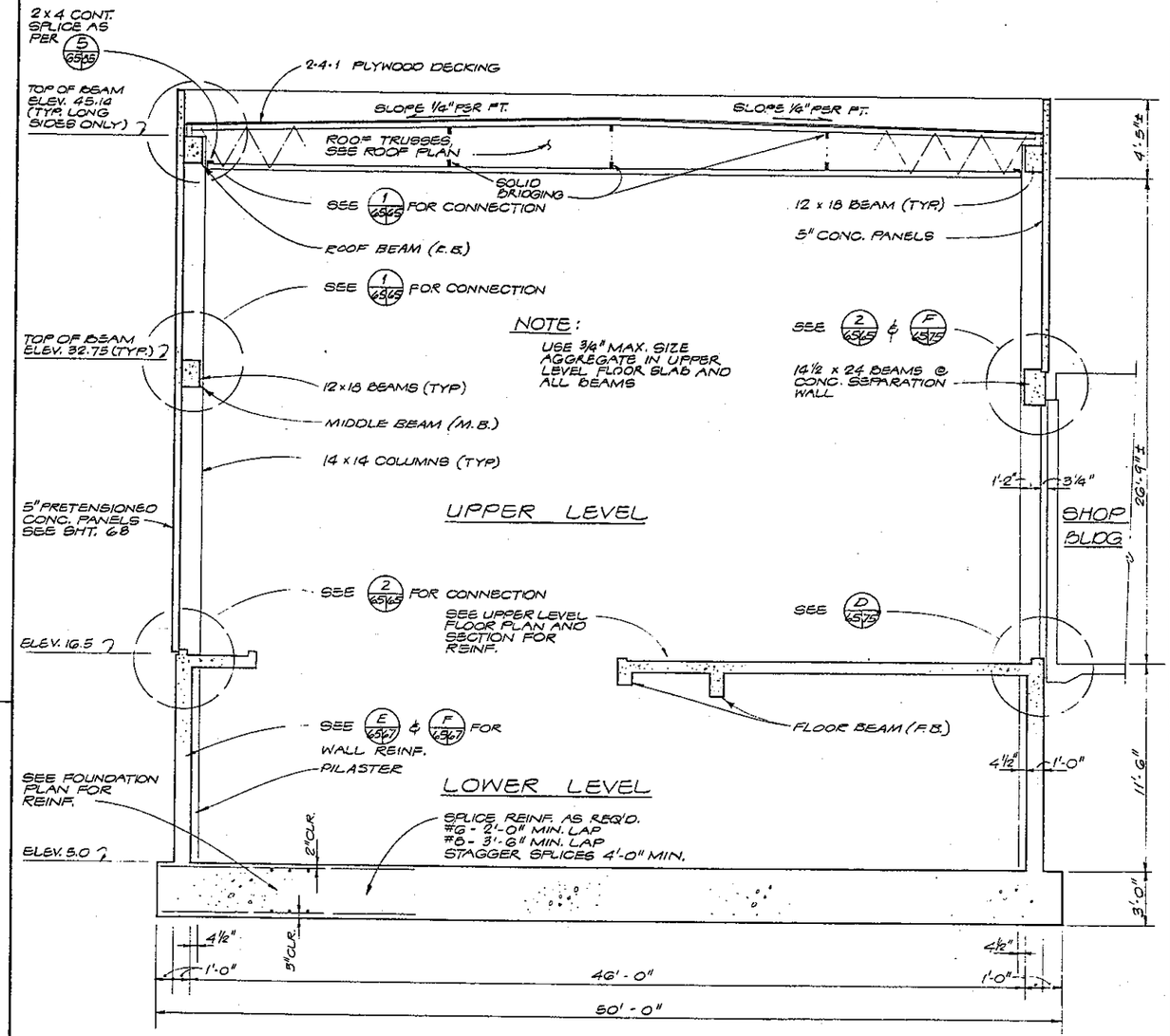

SECTION C (62/63/6A/65)
1/4" = 1'-0"

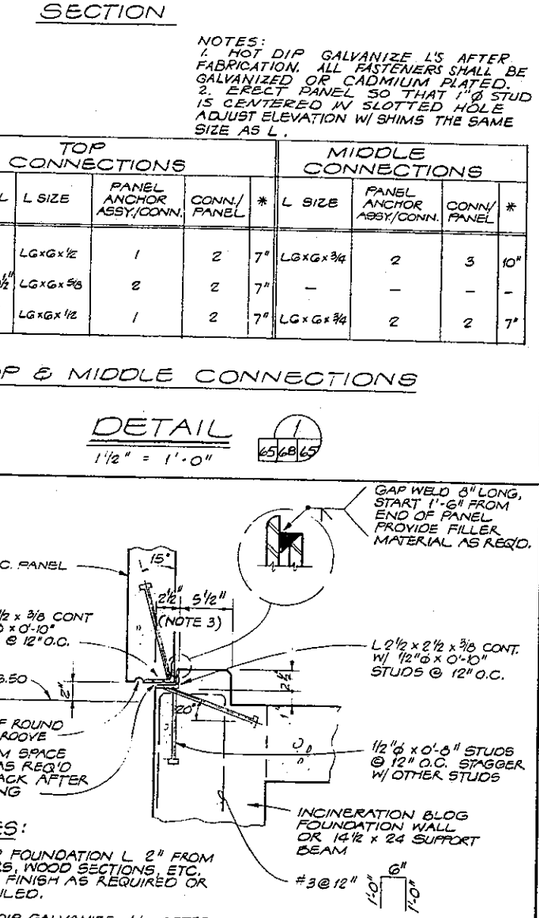

NOTES:
1. STOP FOUNDATION L 2" FROM DOORS, WOOD SECTIONS, ETC. AND FINISH AS REQUIRED OR DETAILED.
2. HOT DIP GALVANIZE L'S AFTER FABRICATION
3. SEE SHT 63 FOR CURB SIZE

BOTTOM CONNECTION

DETAIL 2 (66/67/68/75/65)
1 1/2" = 1'-0"

NO.	DATE	RECORD DRAWINGS / REVISION	BY	APD.
△			JLS	

CH2M HILL — ENGINEERS PLANNERS ECONOMISTS

CORNELL HOWLAND HAYES & MERRYFIELD

CLAIR A. HILL & ASSOCIATES

CITY OF BELLINGHAM, WASHINGTON
POST POINT POLLUTION CONTROL PLANT
SCHEDULE T

INCINERATION BUILDING -
STRUCTURAL - SECTIONS AND DETAILS

DES. DPE
DR. [illegible]
CK. GFD
PM 56196.1
SHEET 65 OF 113
DATE: APRIL 1972
SCALE: AS SHOWN
DRAWING NO. C 6196-2

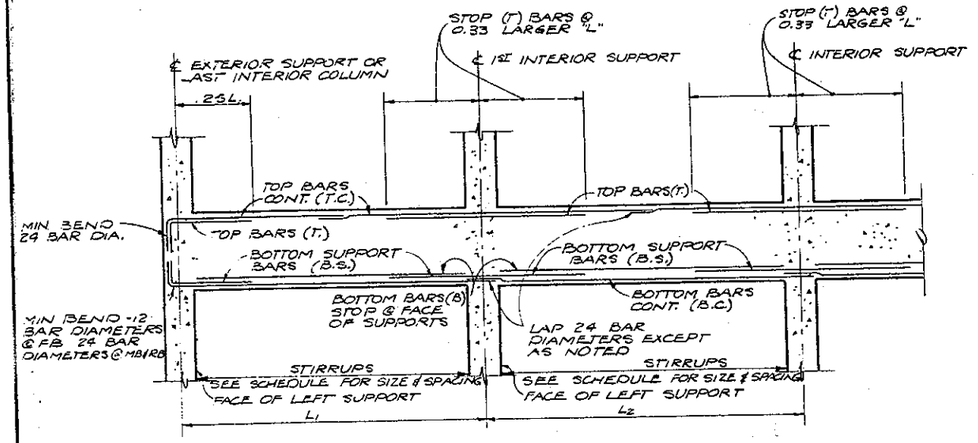

NOTE:
LEFT SUPPORT IS @ WEST OR SOUTH END OF BEAM (TYP)

TYPICAL BEAM REINFORCING DETAIL

N.T.S.

NOTE:
USE 3/4" MAX. SIZE AGGREGATE IN ALL BEAMS. AND UPPER LEVEL SLAB

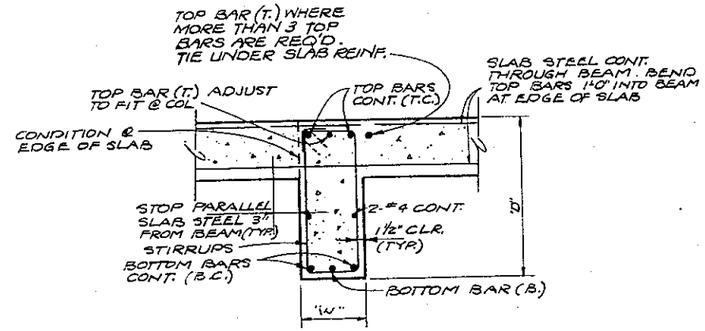

FLOOR BEAMS

N.T.S.

BEAM SCHEDULE								
BEAM MARK	BEAM SIZE		LONGITUDINAL REINF.		SHEAR REINF.		REMARKS
	W	D	NO. SIZE	TYPE	NO. SIZE	SPACING FROM LEFT SUPPORT	
FB-1	10	18	2#9 2#9	T.C. B.C.	15#3	4@6", 6@8", 4@6"	ALL CLOSED STIRRUPS
FB-2	10	18	2#9 2#9	T.C. B.C.	28#3	9@4", 9@6", 9@4"	ALL CLOSED STIRRUPS
FB-3	10	18	2#9 2#9	T.C. B.C.	22#3	#3@4"	ALL CLOSED STIRRUPS
FB-4	10	18	2#9 2#8 2#9 1#9	T.C. T. B.C. B.	28#3	6@6", 15@8", 8@6"	
FB-5 FB-6	10	18	2#9 1#9 2#8 1#8	T.C. T. B.C. B.	25#3	#3@8"	
FB-7	10	18	2#8 2#8	T.C. B.C.	15#3	#3@8"	ALL CLOSED STIRRUPS
FB-8	10	16	2#6 2#6	T.C. B.C.	16#3	#3@8"	ALL CLOSED STIRRUPS
FB-9 ⚠	10	24	2#8 2#9 2#8 1#8	T. T.C. B.C. B.	37#3	18@4", 18@8"	ALL CLOSED STIRRUPS AT OPENING
FB-10 ⚠	10	18	2#8 2#8	T.C. B.C.	26#3	#3@8"	ALL CLOSED STIRRUPS
FB-11	10	24	2#9 1#9 2#8 1#8	T.C. T. B.C. B.	21#3	#3@10"	
FB-12	10	24	2#9 1#9 2#8 1#7	T.C. T. B.C. B.	25#3	#3@10"	
FB-13	10	24	2#8 1#8 2#8 1#8	T.C. T. B.C. B.	24#3	3@8", 17@10", 3@8"	
MB-1 MB-2 MB-3 MB-4	12	18	2#7 2#6 2#7 2#6	T.C. T. B.C. B.S.	24#3	#3@8" WITH 1 EXTRA EACH END	ALL CLOSED STIRRUPS. SPLICE B.C. BARS AT ℄ SPAN 2'-6" MINIMUM AS REQUIRED
MB-5	14½ 12	24	2#7 2#7 2#7 1#7 2#6	T.C. T. B.C. B. B.S.	24#3	#3@8" WITH 1 EXTRA EACH END	ALL CLOSED STIRRUPS SEE ROOF PLAN FOR WIDTH CHANGE. DO NOT SPLICE B.C. BARS.
MB-6 MB-7	14½	24	2#7 2#7 2#7 1#7 2#6	T.C. T. B.C. B. B.S.	24#3	#3@8" WITH 1 EXTRA EACH END	ALL CLOSED STIRRUPS. SPLICE B.C. BARS AT ℄ SPAN 2'-6" MINIMUM AS REQUIRED.
RB-1 RB-2 RB-3 RB-4	12	18	2#7 2#7	T.C. B.C.	24#3	#3@8" WITH 1 EXTRA EACH END	ALL CLOSED STIRRUPS. SPLICE B.C. BARS AT ℄ SPAN 2'-6" MINIMUM AS REQUIRED.

NOTE: ADJUST OUTSIDE BEAM BARS TO FIT AT COLUMN CONNECTION

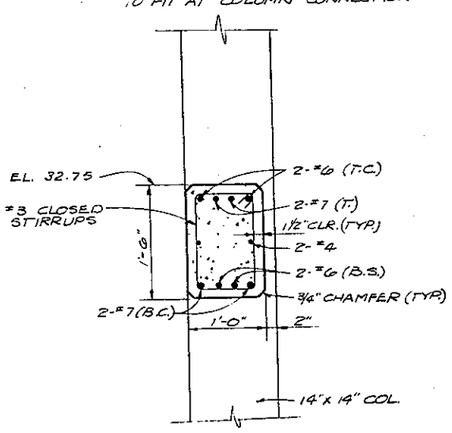

NON BEARING MIDDLE BEAMS

1"=1'-0"

NOTES:
1. CONTINUE L @ 14½" WIDTH PAST COL. FACE
2. DROP WIDTH TO 12"* 2" FROM EDGE OF EAST SHORT PANEL. ADJUST REINF. TO FIT
3. ADJUST OUTSIDE BEAM BARS TO FIT AT COLUMN CONNECTION. PROVIDE SPLICE BARS AS REQ'D AND AS APPROVED.

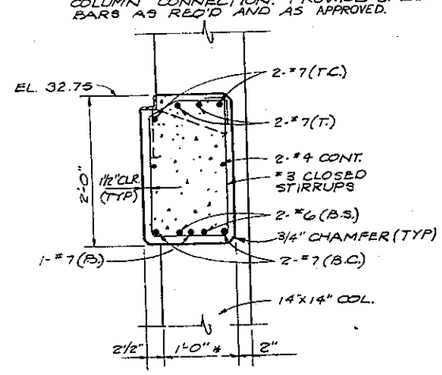

BEARING MIDDLE BEAMS

1"=1'-0"

NOTE:
ADJUST OUTSIDE BEAM BARS TO FIT AT COLUMN CONNECTION.

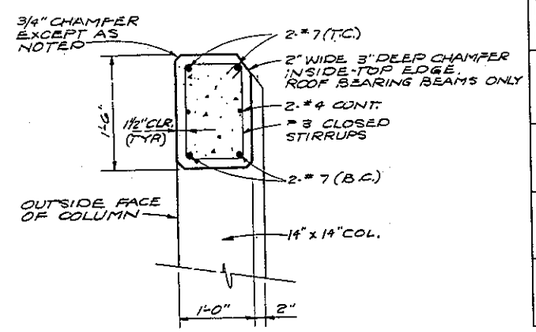

ROOF BEAMS

1"=1'-0"

NO	DATE	REVISION	BY	APD
⚠		RECORD DRAWINGS	JLS	
⚠	3/15/73	MECH. EQUIP. MODIFICATIONS	BM	BPE

CH2M HILL
ENGINEERS PLANNERS ECONOMISTS

CORNELL HOWLAND HAYES & MERRYFIELD

CLAIR A. HILL & ASSOCIATES

CITY OF BELLINGHAM, WASHINGTON
POST POINT POLLUTION CONTROL PLANT
SCHEDULE T

INCINERATION BUILDING -
STRUCTURAL - BEAM SCHEDULE AND SECTIONS

DES. BPE
DR. DLK
CK. GFD
APR. 56196.1
DRAWING NO. C 6196-2
SHEET 66 OF 113
DATE APRIL 1972
SCALE: AS SHOWN

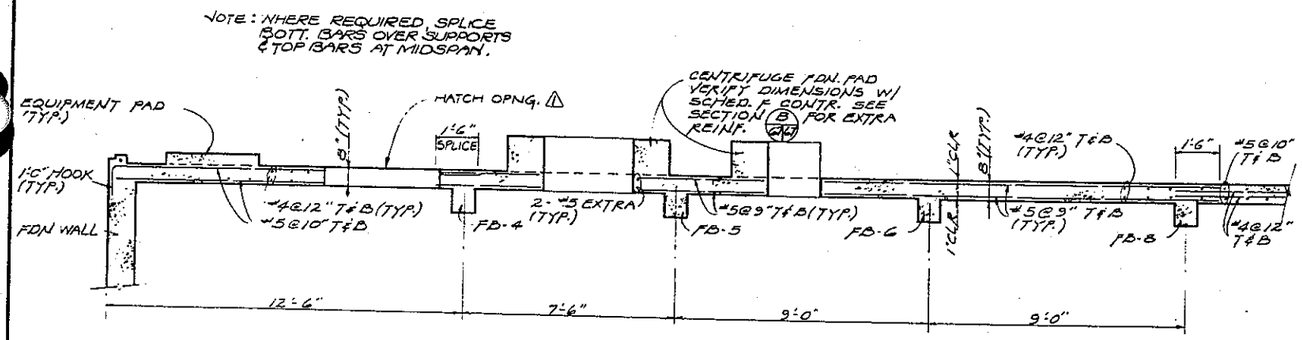

SECTION A 63/67
3/8" = 1'-0"

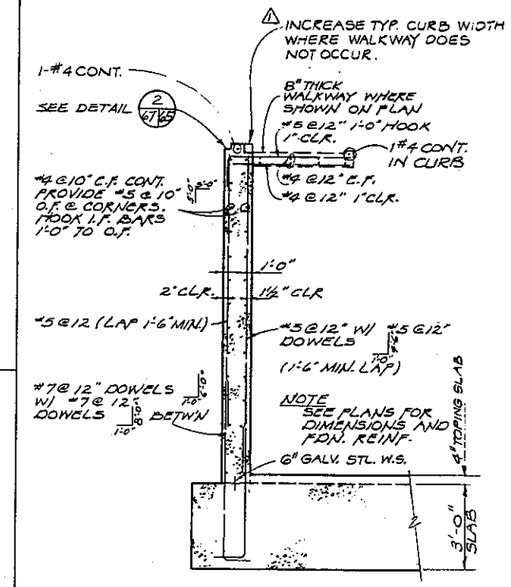

SECTION E
3/8" = 1'-0"
62 63 65 67

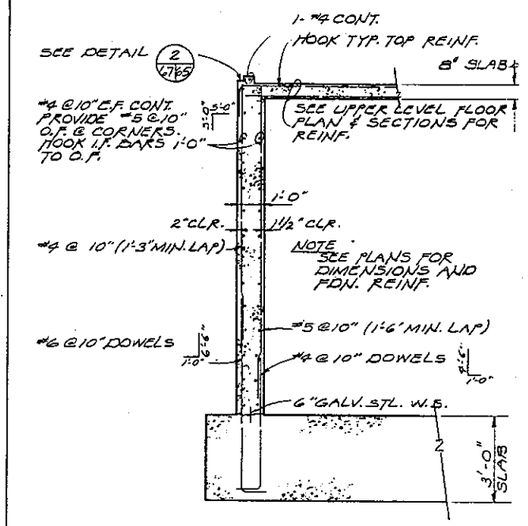

SECTION F
3/8" = 1'-0"
62 63 65 67

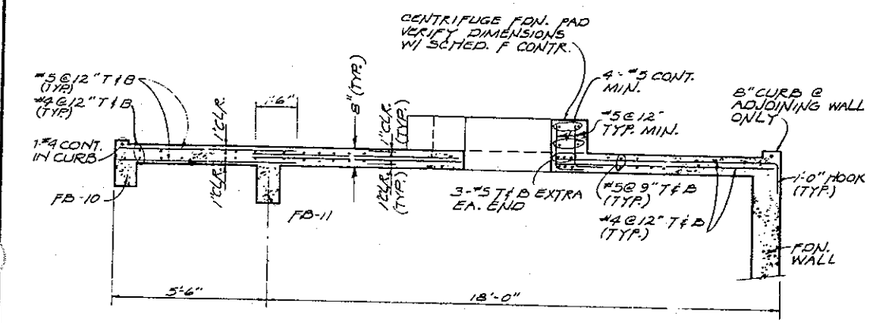

SECTION B
3/8" = 1'-0"
63 67 67

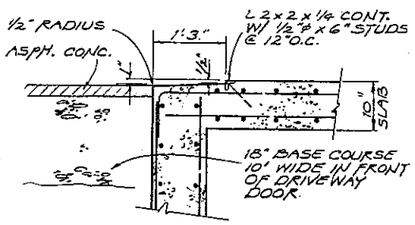

SECTION D
3/4" = 1'-0"
63 67

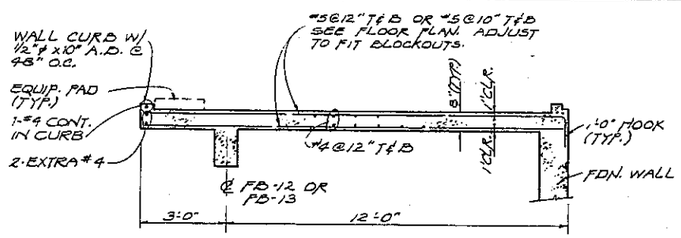

SECTION G
3/8" = 1'-0"
63 67

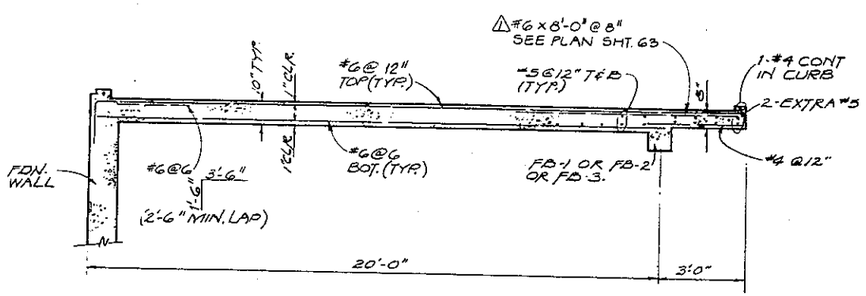

SECTION C
3/8" = 1'-0"
63 67

NO.	DATE	REVISION	BY	APD.
2		RECORD DRAWINGS	JLS	
1	3/15/73	MECH. EQUIP. MODIFICATION	DLS	BPE

CH2M HILL
ENGINEERS PLANNERS ECONOMISTS

CORNELL HOWLAND HAYES & MERRYFIELD

CLAIR A. HILL & ASSOCIATES

CITY OF BELLINGHAM, WASHINGTON
POST POINT POLLUTION CONTROL PLANT
SCHEDULE T

INCINERATION BUILDING - STRUCTURAL - SECTIONS

DES. BPE
DR. AFW
CK. GFD
SH. S6196.1
SHEET 67 OF 113
DATE: APRIL 1972
SCALE:
DRAWING NO. C 6196-2

BILLAD STATIONERY & PRINTING CO., PORTLAND, ORE.

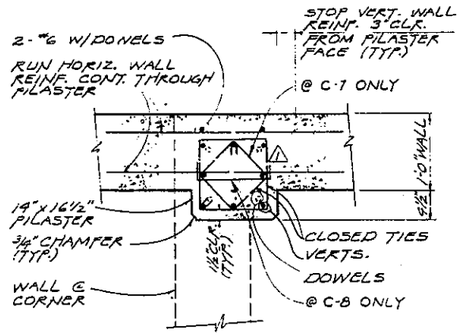

EXTERIOR WALL PILASTER
1"=1'-0"

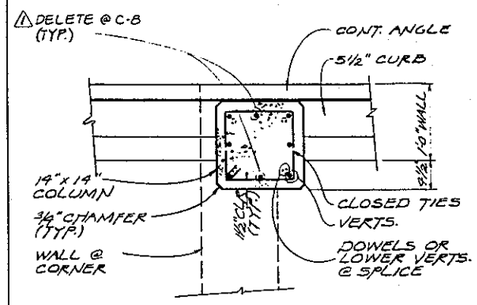

EXTERIOR WALL COLUMN
1"=1'-0"

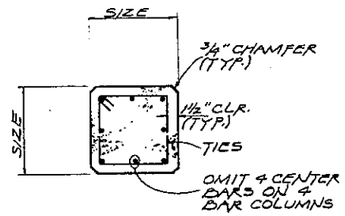

4 OR 8 BAR COLUMN
1"=1'-0"

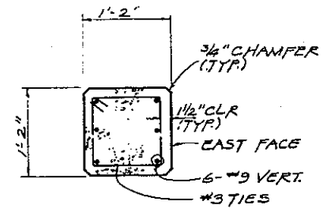

COLUMN C-2
1"=1'-0"

COLUMN SCHEDULE

COLUMN MARK	C-1 C-5 C-6	C-2	C-3	C-4	C-7	C-8	
ROOF LEVEL							
COLUMN SIZE INCHES					14x14	14x14	
VERTICAL REINF.					8#9	6#9	
TIES					#3@12"	#3@12"	
MIDDLE LEVEL							
COLUMN SIZE INCHES					14x14	14x14	
VERTICAL REINF.					8#9	6#9	
TIES					#3@12"	#3@12"	
UPPER LEVEL							
COLUMN SIZE INCHES	12x12	14x14	14x14	14x14	16½x16½	16½x14	
VERTICAL REINF.	4#7	6#9	8#9	4#9	8#9	6#9	
TIES	#3@12"	#3@12"	#3@12"	#3@12"	2-#3@12"	2-#3@12"	
LOWER LEVEL							

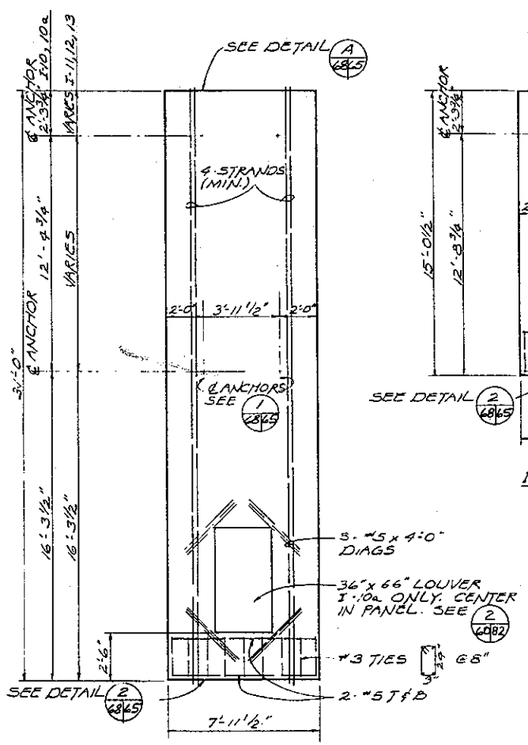

I-10 (8-REQ'D)
I-10A (4-REQ'D)
I-11, I-11opp. (2 EA. REQ'D)
I-12, I-12opp. (2 EA. REQ'D)
I-13, I-13opp. (2 EA. REQ'D)

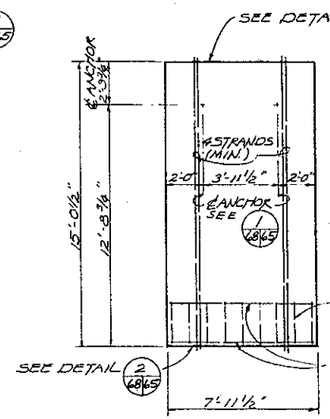

I-20 (5-REQ'D)

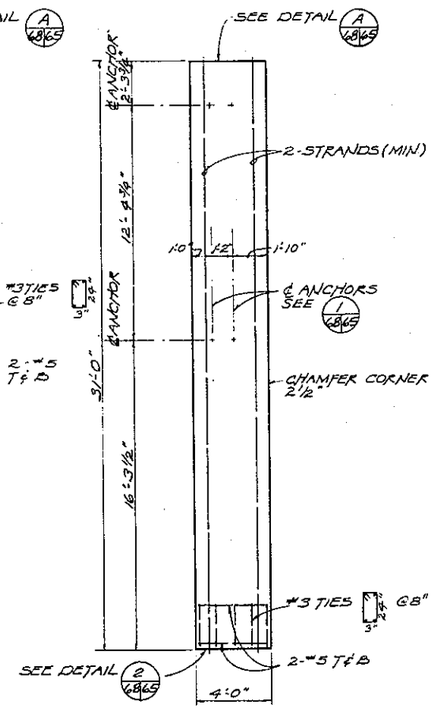

I-30 (1-REQ'D)

PANEL ELEVATIONS
¼"=1'-0"

PRETENSIONED PRECAST CONCRETE PANEL NOTES

1. ALL PANELS SHALL BE DESIGNED IN ACCORDANCE WITH ACI CODE 318-71 AND 1970 UBC.
2. DESIGN CALCULATIONS AND SHOP DRAWINGS SHALL BE SUBMITTED TO THE ENGINEER FOR REVIEW.
3. THE CONCRETE COMPRESSIVE STRENGTH SHALL BE 5000 PSI.
4. PANELS SHOWN AS SEEN FROM INSIDE.
5. ALL PANELS SHALL BE 5 INCHES THICK.
6. SEE SPECIFICATIONS FOR PANEL FINISH.
7. DIMENSIONS SHOWN SHALL BE THOSE AFTER ELASTIC SHORTENING TAKES PLACE.
8. THE PANELS SHALL HAVE A MINIMUM NUMBER OF ½"Φ 270 K STRANDS AND MILD STEEL REINFORCING AS SHOWN ON THE PLANS AND NOTED. THE CONTRACTOR SHALL DESIGN THE PANELS FOR ERECTION AND ADD ANY ADDITIONAL REINFORCING TO INSURE THAT THE PANELS ARE SAFELY ERECTED.
9. MINIMUM PRESTRESSING SHALL BE 200 PSI.
10. PROVIDE #4@12" HORIZ. REINFORCING TYPICALLY (MIN.).
11. CHAMFER INSIDE VERTICAL EDGE 2½ INCHES AT CORNERS OF BUILDING.
12. ROUND ALL INSIDE EDGES AND CORNERS TO ⅜± INCH RADIUS
13. PANELS SHALL BE CONSTRUCTED WITH THE PRESTRESSING STRANDS AT THE C.G. OF THE PANEL. PANELS THAT DO NOT MATCH OR HAVE EXCESSIVE BOWING WILL BE REJECTED.
14. ALL PANELS SHALL BE ALIGNED AND TRUED AND THE ROOF SYSTEM SHALL BE INSTALLED COMPLETE PRIOR TO WELDING AND DRY PACKING.
15. NO INSERTS SHALL BE PLACED IN ANY EXTERIOR SURFACE.
16. PROVIDE REGLETS, ETC., AS DETAILED ON ARCHITECTURAL AND STRUCTURAL DRAWINGS.
17. SEE ROOF PLAN FOR BLOCKOUTS FOR WALL PANEL PENETRATIONS.
18. SUPPORT PANELS AS NECESSARY TO PREVENT DAMAGE TO PANELS OR STRUCTURE DURING CONSTRUCTION.
19. TAKE CARE TO PREVENT CRACKING OF PANELS DURING AND AFTER FABRICATION AND ERECTION.
20. A POST-TENSIONING METHOD WILL NOT BE ALLOWED. FABRICATION OF ALL PANELS SHALL BE DONE IN A QUALIFIED PRE-STRESSING PLANT.

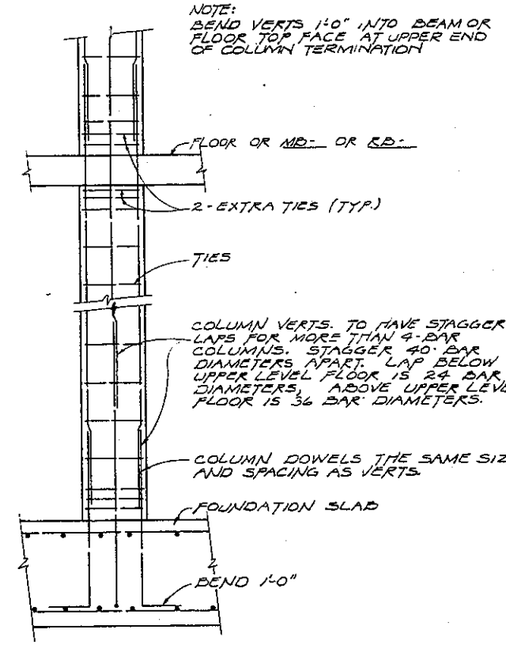

TYPICAL COLUMN DETAIL
N.T.S.

NO.	DATE	REVISION	BY	APD
2		RECORD DRAWINGS	JLS	
1	3/13/73	DETAIL CLARIFICATION	WVK	BPE

CH2M HILL
ENGINEERS PLANNERS ECONOMISTS

CORNELL HOWLAND HAYES & MERRYFIELD
CLAIR A. HILL & ASSOCIATES

CITY OF BELLINGHAM, WASHINGTON
POST POINT POLLUTION CONTROL PLANT
SCHEDULE T

INCINERATION BUILDING -
STRUCTURAL - PANEL AND COLUMN
SCHEDULES AND SECTIONS

DES. BPE
DR. APW
CK. GFD
JOB NO. 6198.1
DRAWING NO. C 6198-2
SHEET 68
OF 113
DATE: APRIL 1972
SCALE: AS SHOWN

BALLARD STATIONERY & PRINTING CO., PORTLAND, ORE.

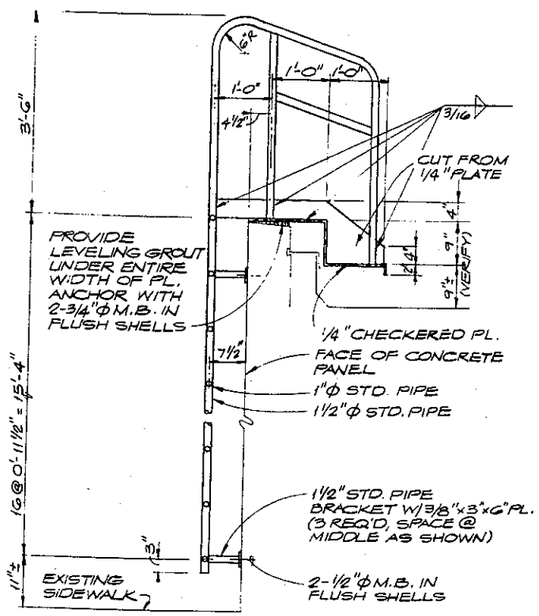

NOTES:
1. WELD ALL CONNECTIONS.
2. HOT DIP GALVANIZE ALL PARTS AFTER FABRICATION.
3. FIELD VERIFY ALL DIMENSIONS.

SECTION

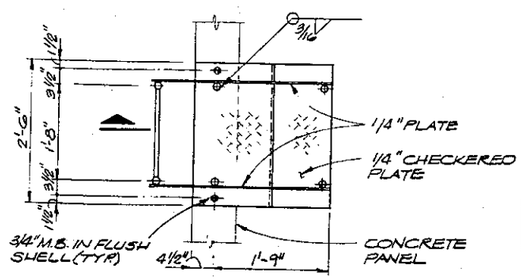

PLAN

LADDER DETAIL (1 / 60 | 68A)
3/4" = 1'-0"

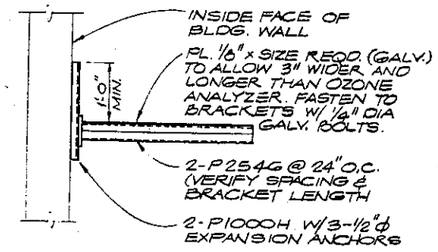

NOTE:
SEE NOTES WITH DETAIL (4 / 71A | 68A)

EXHAUST FAN SUPPORT

DETAIL (2 / 71A | 68A)
3/4" = 1'-0"

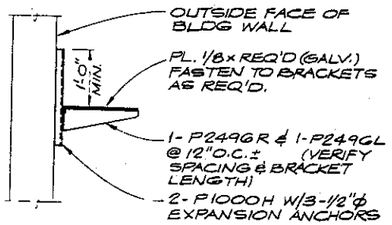

NOTE:
SEE NOTES WITH DETAIL (4 / 71A | 68A)

OZONE ANALYZER SUPPORT

DETAIL (3 / 60 | 71A | 68A)
3/4" = 1'-0"

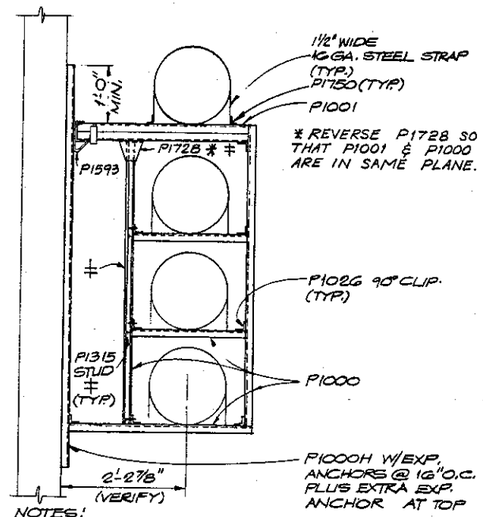

NOTES:
1. ALL DETAILING CALLOUTS ON THIS SHEET REFER TO UNISTRUT CATALOG NO. G FITTINGS.
2. ALL BOLTS ARE 1/2"φ.
3. EXPANSION ANCHORS ARE 1/2"φ M.B. IN FLUSH SHELL WITH P1064.
4. SUPPORT AT COLUMN SIMILAR EXCEPT-
   a) PARTS MARKED ‡ NOT REQ'D
   b) ATTACH P1000 DIRECTLY TO WALL WITH P102G AND 1/2"φ EXPANSION ANCHOR.
   c) P1000H IS ONLY 20"± LONG WITH 3-1/2"φ EXPANSION ANCHORS.
5. IN LIEU OF THE P1001 WITH P1593 BRACKET, A P254G, (P1000) MAY BE USED.
6. ALL PARTS TO BE HOT-DIPPED GALVANIZED.

PIPE SUPPORT

DETAIL (4 / 71A | 68A)
3/4" = 1'-0"

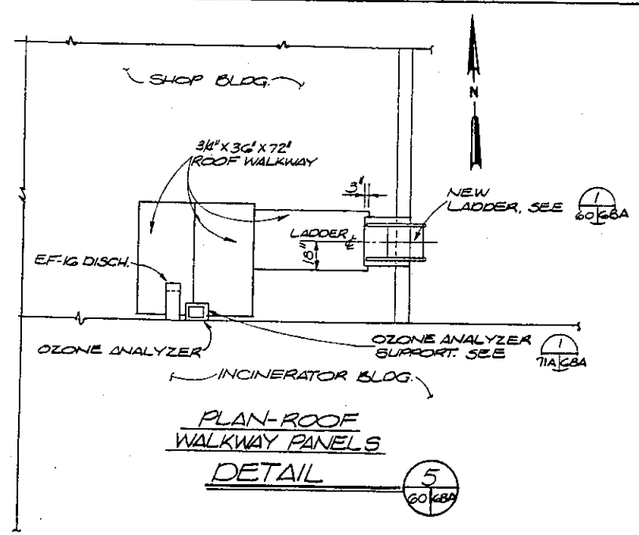

PLAN-ROOF WALKWAY PANELS

DETAIL (5 / 60 | 68A)

CH2M HILL — ENGINEERS PLANNERS ECONOMISTS	CORNELL HOWLAND HAYES & MERRYFIELD CLAIR A. HILL & ASSOCIATES	CITY OF BELLINGHAM, WASHINGTON POST POINT POLLUTION CONTROL PLANT SCHEDULE T HEADWORKS BUILDING STRUCTURAL DETAILS	DES. CS DR. SS CK. KSE SHEET 68A OF 113 DATE JAN. 1976 SCALE AS SHOWN DRAWING NO. C 6198-2

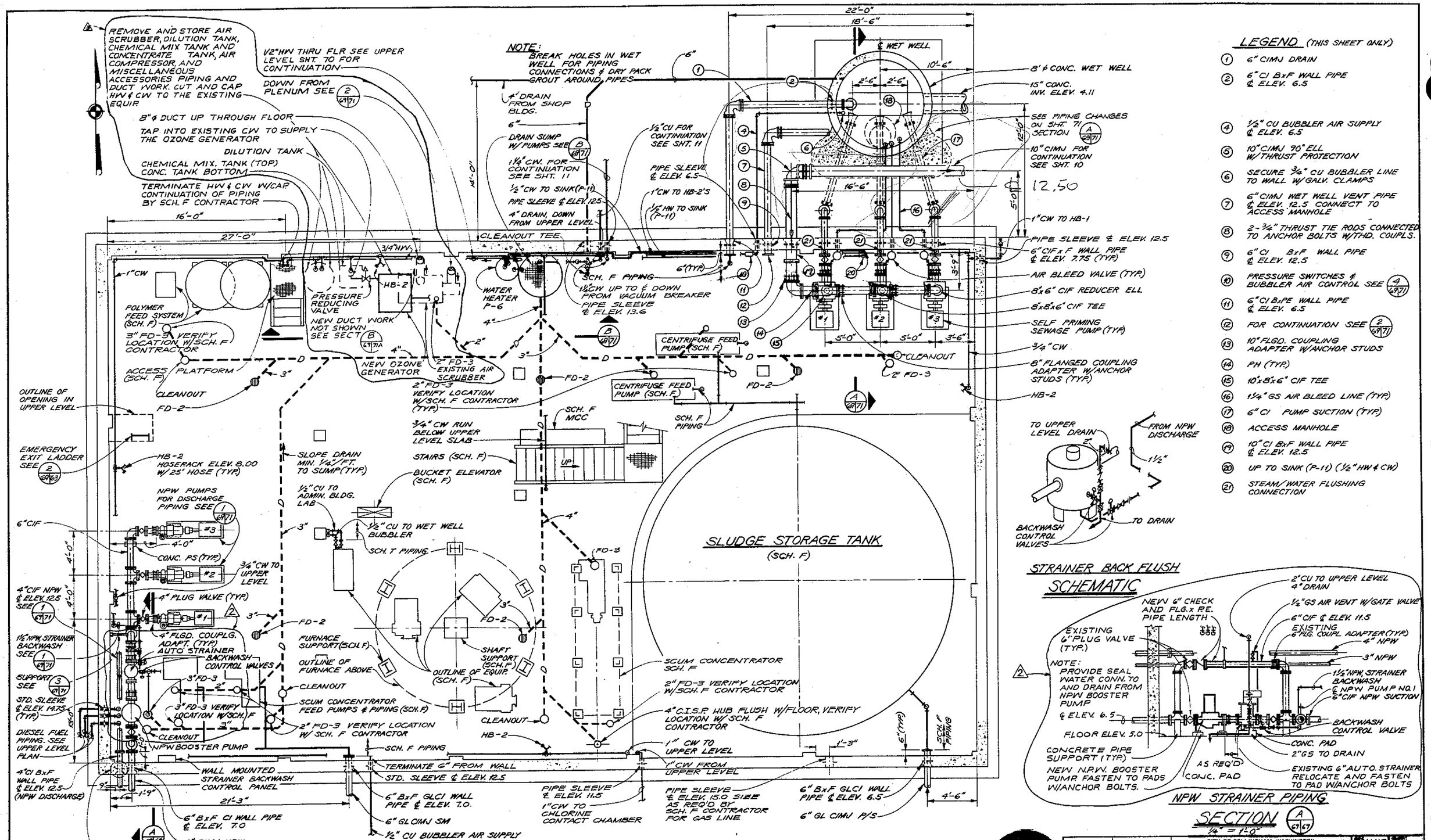

NO.	DATE	REVISIONS	BY	APD.
2	2/19/76	SCRUBBER REMOVAL AND ADD OZONE GENERATOR	BMS	GRG
1	11/7/75	NPW BOOSTER PUMP	BMS	GRG
		RECORD DRAWINGS	JLS	

CH2M HILL
ENGINEERS PLANNERS ECONOMISTS

CORNELL HOWLAND HAYES & MERRYFIELD

CLAIR A. HILL & ASSOCIATES

CITY OF BELLINGHAM, WASHINGTON
POST POINT POLLUTION CONTROL PLANT
SCHEDULE T

INCINERATION BUILDING -
MECHANICAL - LOWER LEVEL PLAN

DES. HHS
DR. RAH
CK. WJE
APRIL 1972
C 6198-2

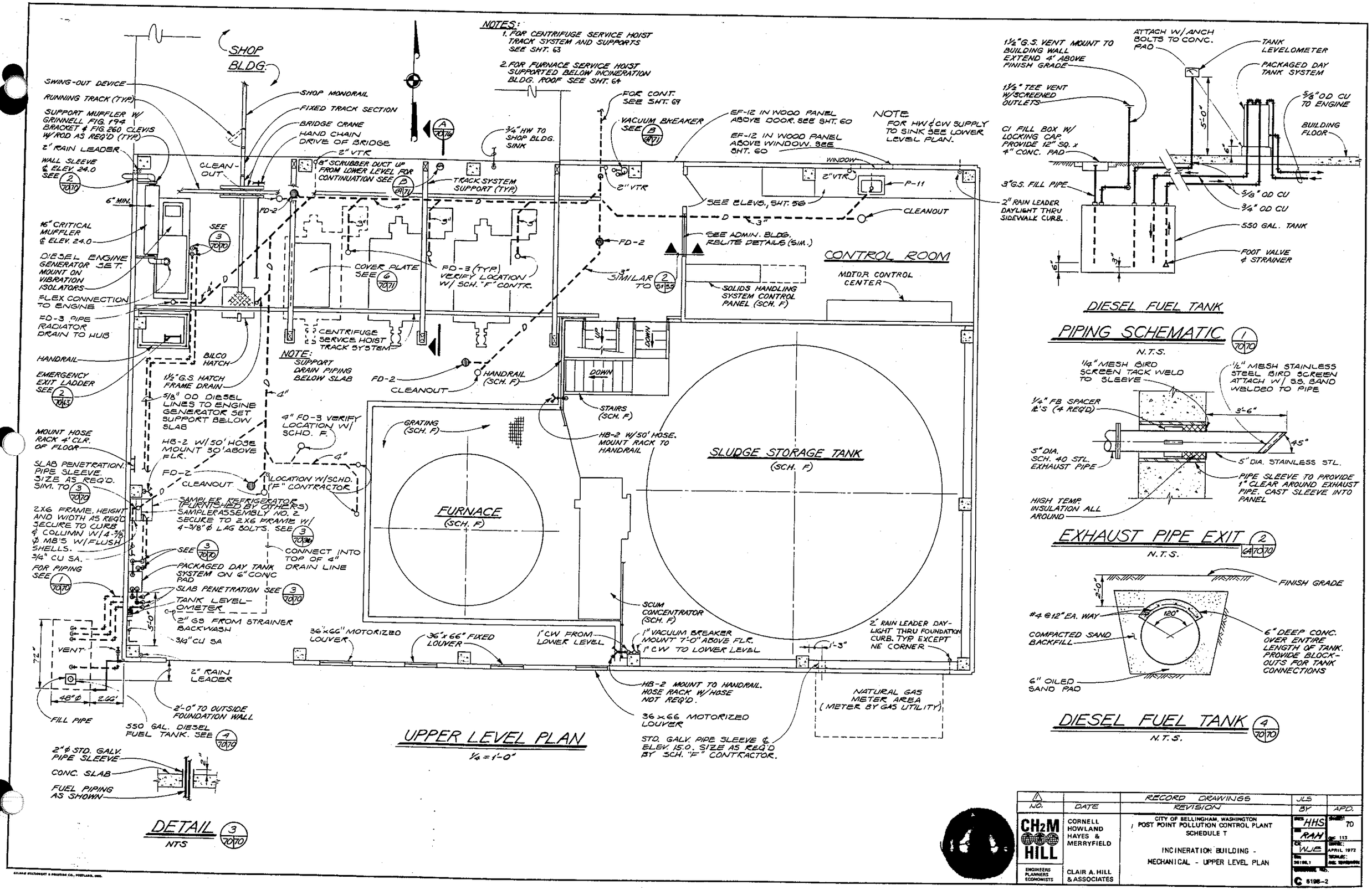

NO.	DATE	RECORD DRAWINGS REVISION	JLS BY	APD.

CH2M HILL — ENGINEERS PLANNERS ECONOMISTS

CORNELL HOWLAND HAYES & MERRYFIELD — CLAIR A. HILL & ASSOCIATES

CITY OF BELLINGHAM, WASHINGTON
POST POINT POLLUTION CONTROL PLANT
SCHEDULE T

INCINERATION BUILDING -
MECHANICAL - UPPER LEVEL PLAN

DR. HHS
DES. RAH
CK. WJE
DATE: APRIL 1972
SHEET 70
C 6198-2

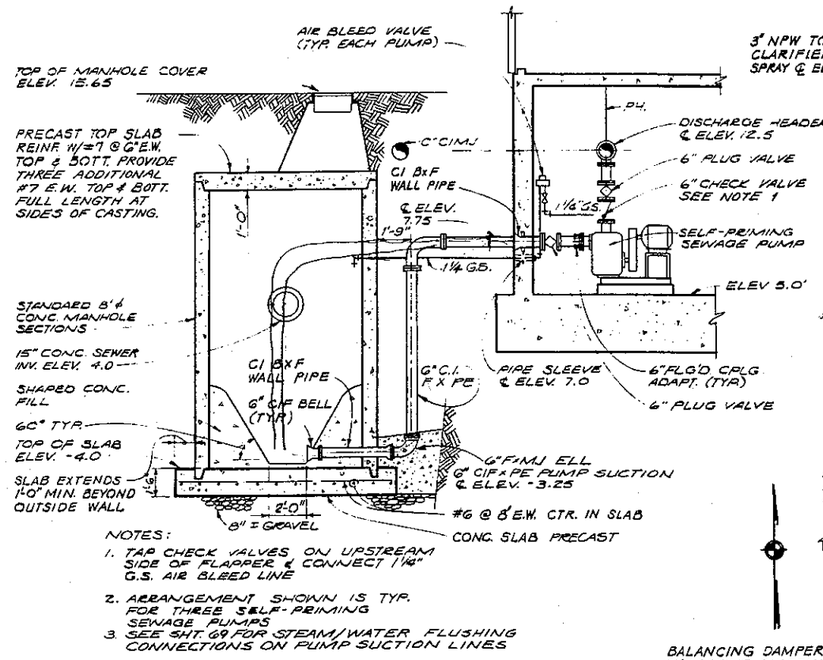

NOTES:

1. TAP CHECK VALVES ON UPSTREAM SIDE OF FLAPPER & CONNECT 1/4" G.S. AIR BLEED LINE
2. ARRANGEMENT SHOWN IS TYP. FOR THREE SELF-PRIMING SEWAGE PUMPS
3. SEE SHT. 69 FOR STEAM/WATER FLUSHING CONNECTIONS ON PUMP SUCTION LINES

SECTION A
1/4" = 1'-0"
(69/71)

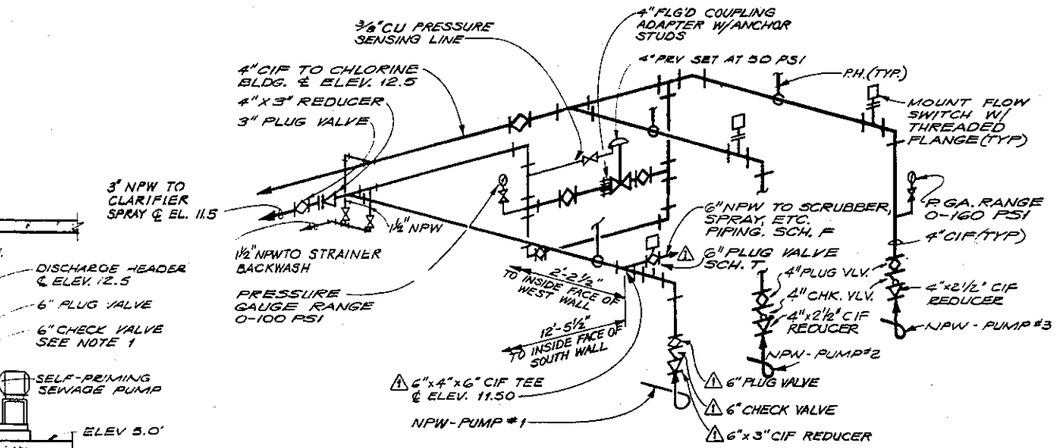

NPW SYSTEM - DISCHARGE PIPING SCHEMATIC
NTS
(1/69/71)

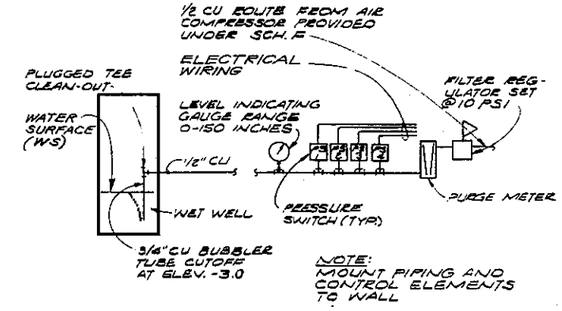

NOTE:
MOUNT PIPING AND CONTROL ELEMENTS TO WALL

PRESSURE SWITCH SETTINGS			
NO.	FUNCTION	FT. WATER	WS ELEV.
PS-1	PUMP #1 START	7.0	4.0
	STOP	1.0	-2.0
PS-2	PUMP #2 START	7.5	4.5
	STOP	1.5	-1.5
PS-3	PUMP #3 START	8.0	5.0
	STOP	2.0	-1.0
PS-4	HIGH LEVEL ALARM	9.5	6.5

PUMP CONTROL SCHEMATIC
NTS
(4/69/71)

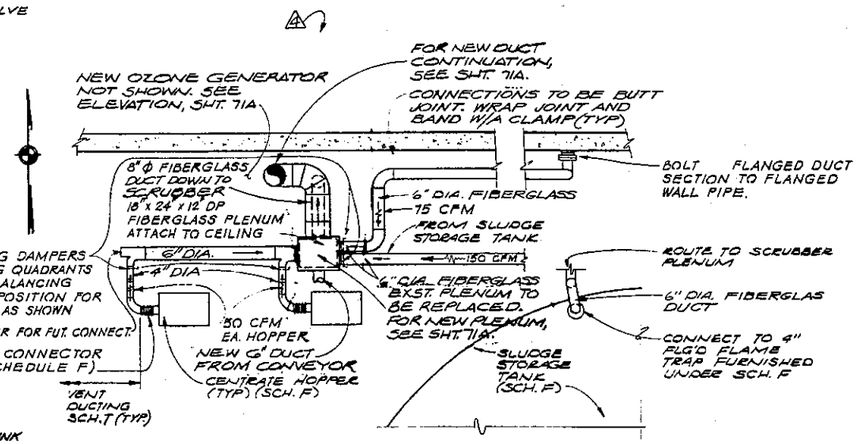

PLAN

SCRUBBER DUCTWORK DETAIL
NTS
(2/69/71/71)

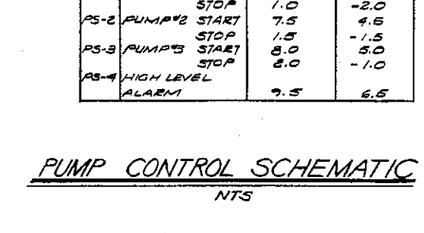

SECTION A
NTS
(A/71/71)

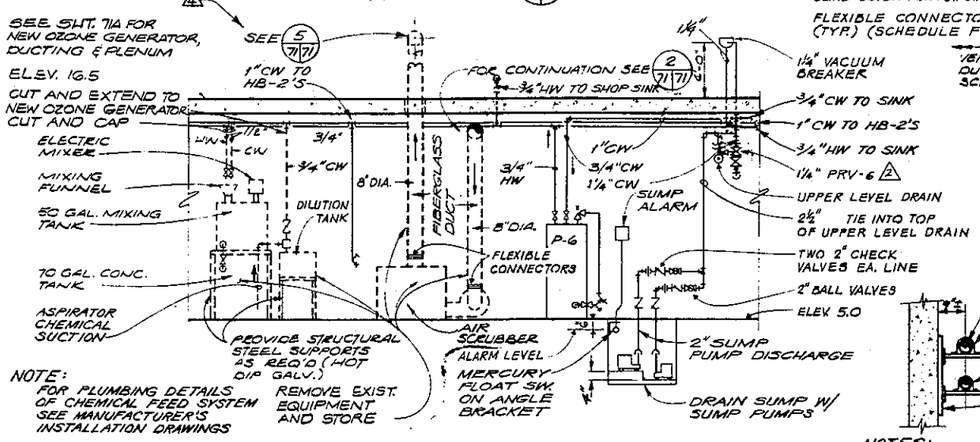

NOTE:
FOR PLUMBING DETAILS OF CHEMICAL FEED SYSTEM SEE MANUFACTURER'S INSTALLATION DRAWINGS

SECTION B
1/4" = 1'-0"
(B/69/71)

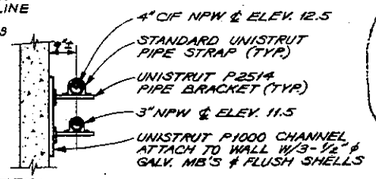

NOTES:

1. HOT DIP GALV. ALL SUPPORT COMPONENTS
2. TWO SUPPORTS REQ'D SPACE EVENLY

PIPE SUPPORT
NTS
(3/69/71)

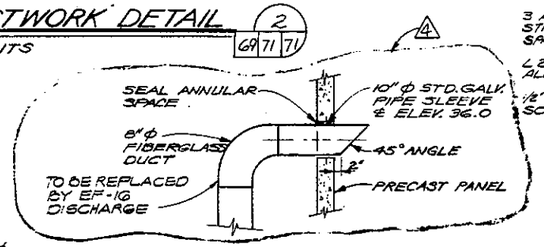

SCRUBBER DUCT EXHAUST
NTS
(5/69/71/71)

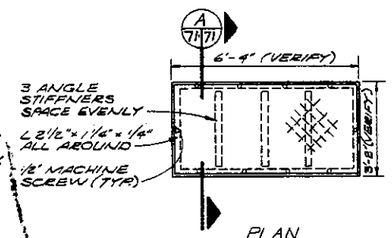

PLAN

FUTURE CENTRIFUGE OPENING COVER PLATE DETAIL
3/8" = 1'-0"
(6/70/71)

NO.	DATE	REVISION	BY	CHK
		RECORD DRAWINGS	JLS	
2	11 APRIL '74	ADD 1 1/4" PRV-6	GEN	GTF
1	27 JULY '73	INCREASE SIZE NPW-PUMP #1 DISCHARGE PIPING	OOK	JGG
3	25 FEB 76	REMOVE SCRUBBER, ADD NEW PLENUM, DUCT & OZONE GENERATOR		GTF

CH2M HILL
ENGINEERS PLANNERS ECONOMISTS

CORNELL HOWLAND HAYES & MERRYFIELD
CLAIR A. HILL & ASSOCIATES

CITY OF BELLINGHAM, WASHINGTON
POST POINT POLLUTION CONTROL PLANT
SCHEDULE T

INCINERATION BUILDING -
MECHANICAL - SECTIONS AND DETAILS

HHS/GTF
JEB
WJE
APRIL 1972
C 6196-2

BINGHAM STATIONERY & PRINTING CO., PORTLAND, ORE.

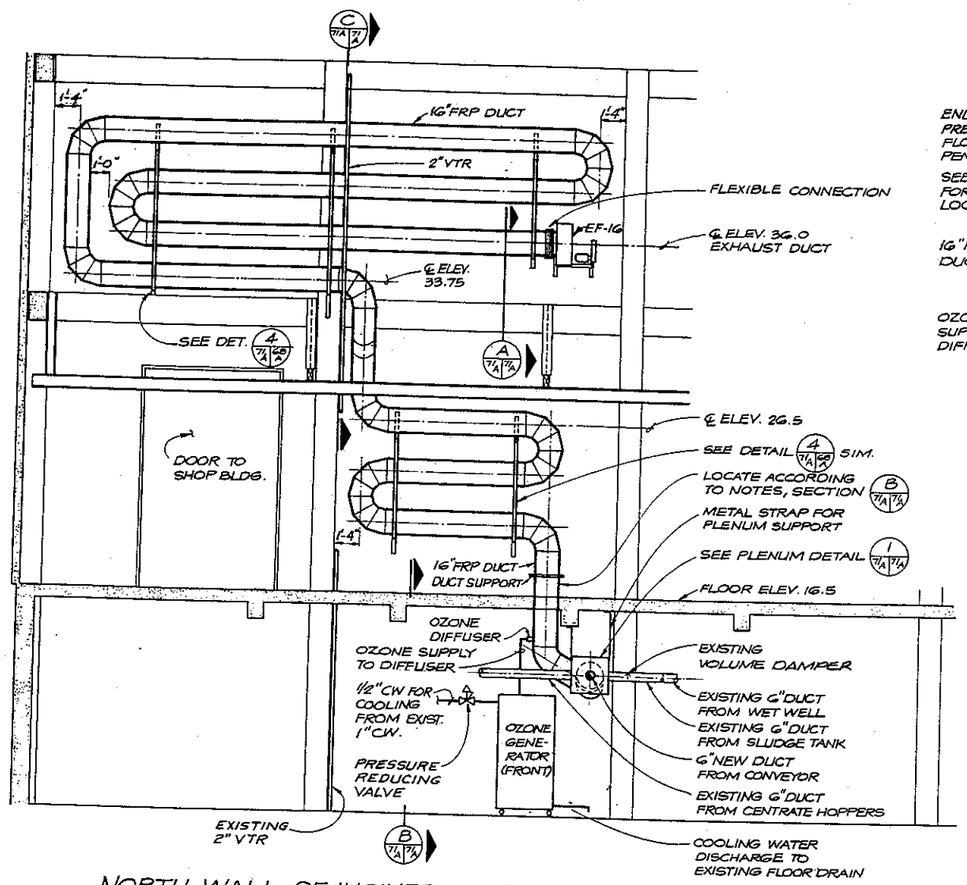

NORTH WALL OF INCINERATION BUILDING - WEST END

ELEVATION

1/4" = 1'-0"

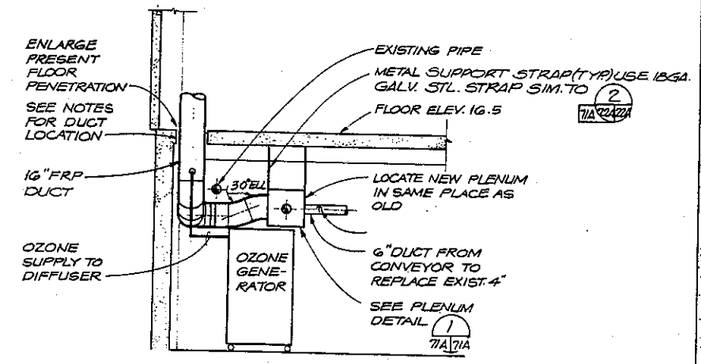

NOTES ON FLOOR PENETRATION:

1. MATCH DISTANCE OF EXISTING ℄ TO ADJACENT COLUMN IF POSSIBLE BUT AVOID ADJACENT BEAM BY 2" MINIMUM.
2. CAREFULLY CORE AND/OR SAW NEW FLOOR OPENING TO 21" DIAMETER MAXIMUM.
3. PIPE SLEEVE SHALL BE 18" I.D. x 1/8" MIN. WALL, PROJECTING 2" ABOVE FLOOR AND FLUSH WITH SOFFIT. PROVIDE 1/4" SQ. ANULAR RING FOR ANCHORAGE AND AS A SEEP RING.
4. GROUT PIPE SLEEVE IN PLACE WITH NON-SHRINK FLOWABLE GROUT. (MASTER BUILDERS MASTER-FLOW 713 OR EQUAL)

SECTION B 7/A 7/A

1/4" = 1'-0"

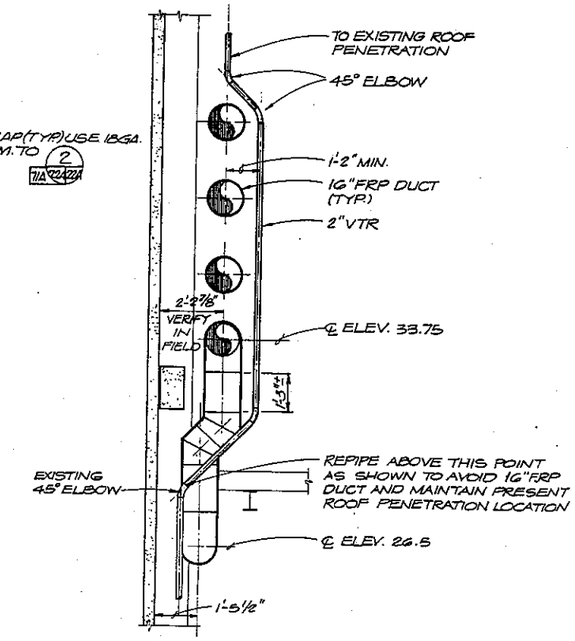

SECTION C 7/A 7/A

3/8" = 1'-0"

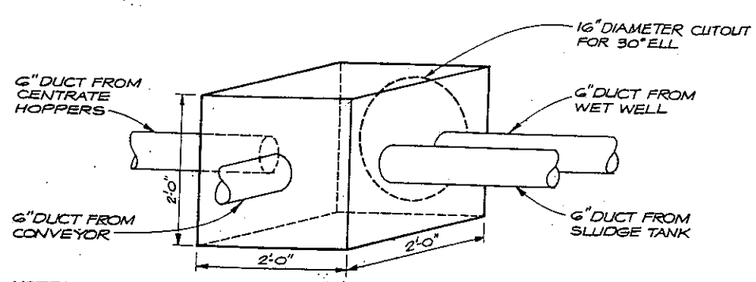

NOTE:
VOLUME DAMPERS NOT SHOWN.

PLENUM DETAIL 1 7/A 7/A

N.T.S.

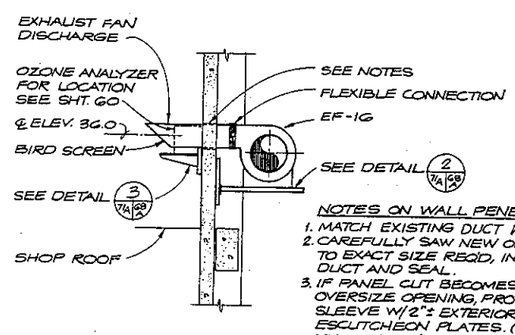

NOTES ON WALL PENETRATION:

1. MATCH EXISTING DUCT WALL PENETRATION & LOCATION.
2. CAREFULLY SAW NEW OPENING CENTERED OVER EXISTING OPENING TO EXACT SIZE REQ'D, INSTALL DUCT AND SEAL.
3. IF PANEL CUT BECOMES JAGGED, OVERSIZE OPENING, PROVIDE GALV. SLEEVE W/2": EXTERIOR AND INTERIOR ESCUTCHEON PLATES. (1/8" MIN. PL. THICKNESS) DRYPACK SLEEVE IN PLACE.
4. CAULK W/SILICONE SEALANT ALL AROUND DUCT PENETRATION, EACH SIDE OF WALL.

SECTION A 7/A 7/A

3/8" = 1'-0"

PETER F. WIEDEMANN — STATE OF WASHINGTON — REGISTERED PROFESSIONAL ENGINEER

CH2M HILL — ENGINEERS PLANNERS ECONOMISTS	CORNELL HOWLAND HAYES & MERRYFIELD — CLAIR A. HILL & ASSOCIATES	CITY OF BELLINGHAM, WASHINGTON POST POINT POLLUTION CONTROL PLANT SCHEDULE T INCINERATION BUILDING - REVISIONS OZONE GENERATION AND DUCT INSTALLATION	OBS GTF DR BBL CK GRG RN	SHEET T1A OF 113 DATE JAN. 1978 SCALE AS SHOWN DRAWING NO C 6198-2

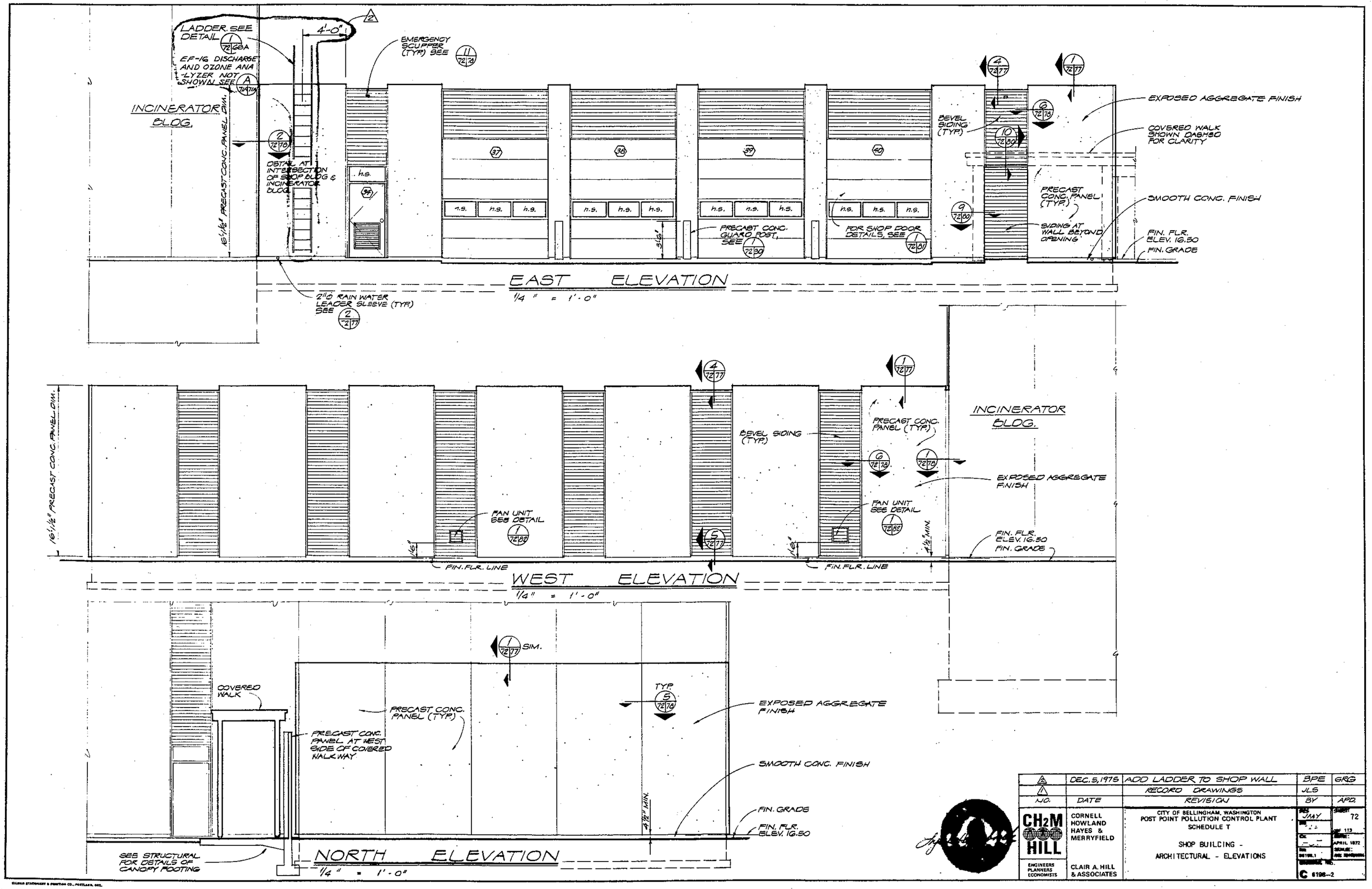

NO.	DATE	REVISION	BY	APD.
2	DEC. 5, 1975	ADD LADDER TO SHOP WALL	BPE	GRG
1		RECORD DRAWINGS	JLS	

CH2M HILL
ENGINEERS PLANNERS ECONOMISTS

CORNELL HOWLAND HAYES & MERRYFIELD

CLAIR A. HILL & ASSOCIATES

CITY OF BELLINGHAM, WASHINGTON
POST POINT POLLUTION CONTROL PLANT
SCHEDULE T

SHOP BUILDING -
ARCHITECTURAL - ELEVATIONS

DRG. JAY
SHEET 72 OF 113
DATE APRIL 1972
SCALE:
C 6198-2

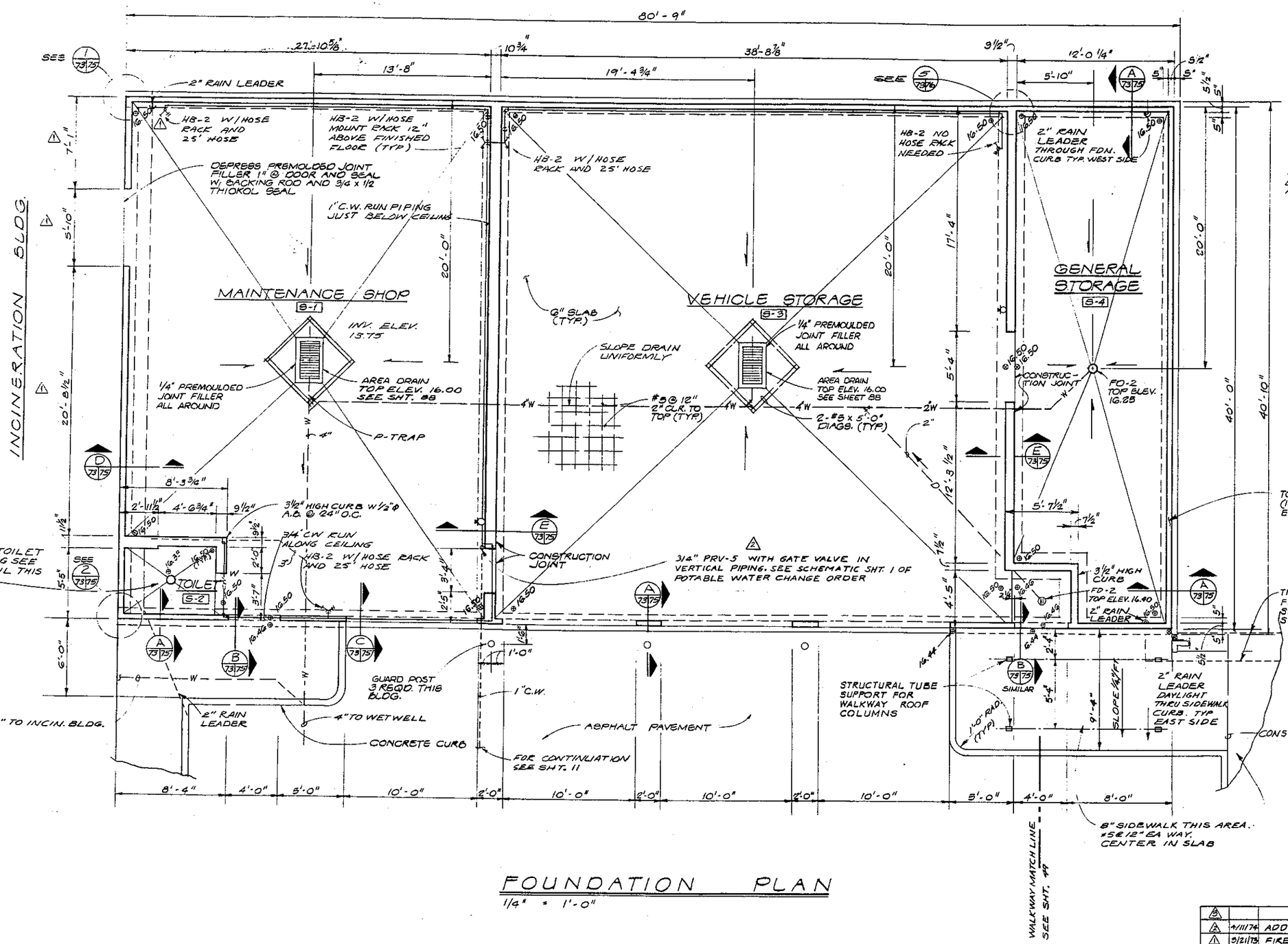

FOUNDATION PLAN

1/4" = 1'-0"

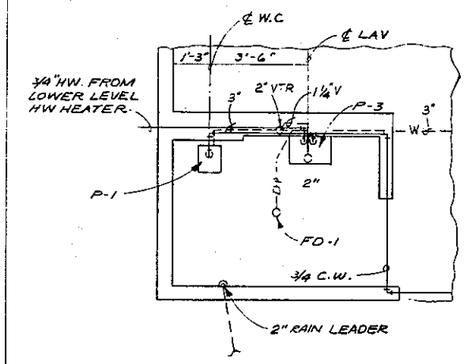

TOILET PIPING

3/8" = 1'-0"

NOTE: FOUNDATION WALL ANCHOR BOLTS FOR CONCRETE PANELS AND STUD WALLS ARE NOT SHOWN

NO.	DATE	REVISION	BY	APD.
3		RECORD DRAWINGS	JLS	
2	4/11/74	ADD 3/4" PRV-5	GEN	GTF
1	5/21/73	FIREDOOR OPENING MOD	KGB	JGG

CH2M HILL — ENGINEERS PLANNERS ECONOMISTS

CORNELL HOWLAND HAYES & MERRYFIELD

CLAIR A. HILL & ASSOCIATES

CITY OF BELLINGHAM, WASHINGTON
POST POINT POLLUTION CONTROL PLANT
SCHEDULE T

SHOP BUILDING -
STRUCTURAL - FOUNDATION PLAN

DES. BPE
DR. DAF
CK. RSE
DATE 5/19/71
SHEET 73 OF 113
DATE: APRIL 1972
SCALE: AS SHOWN
DRAWING NO. C 6198-2

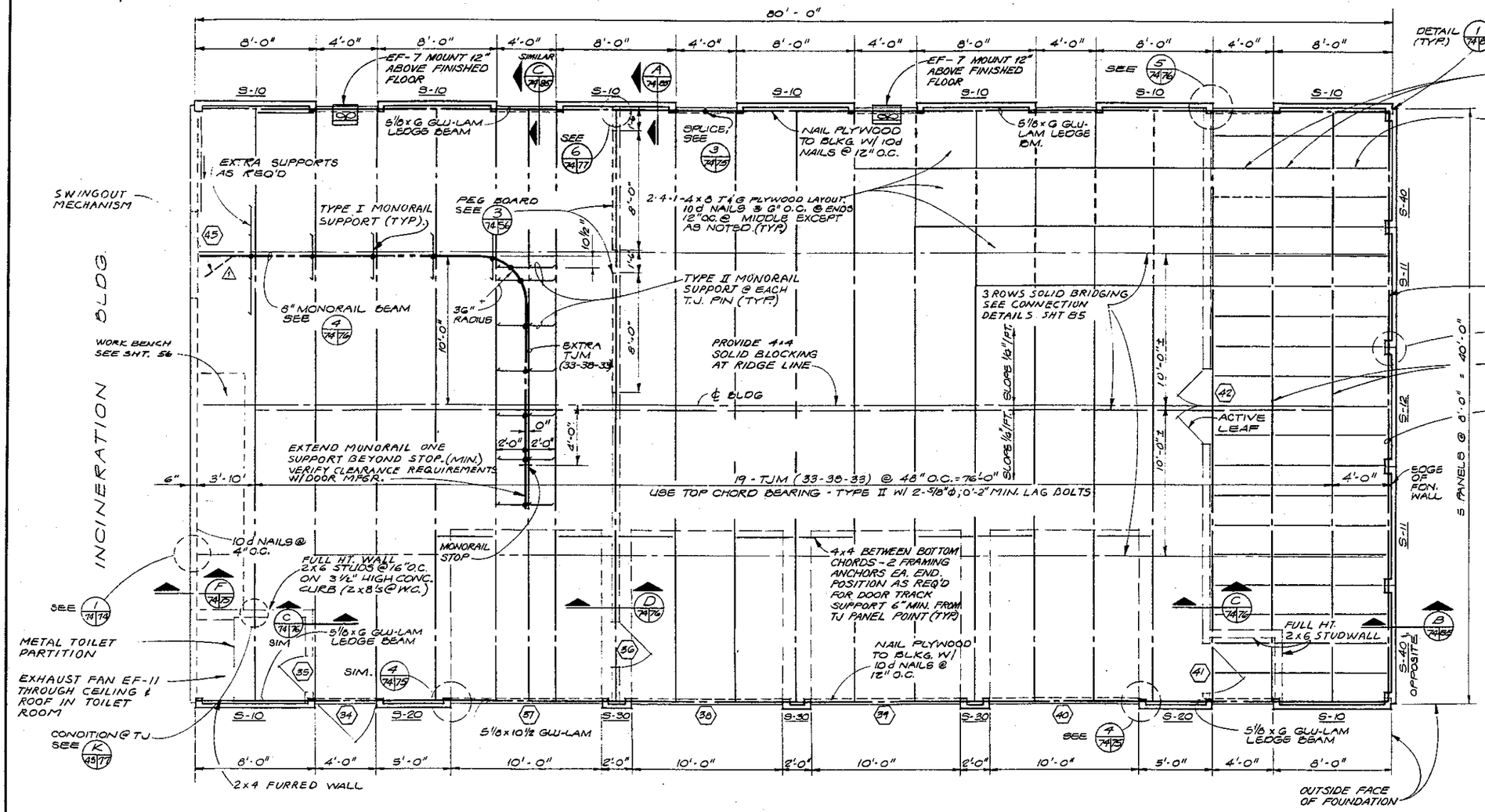

ROOF PLAN

1/4" = 1'-0"

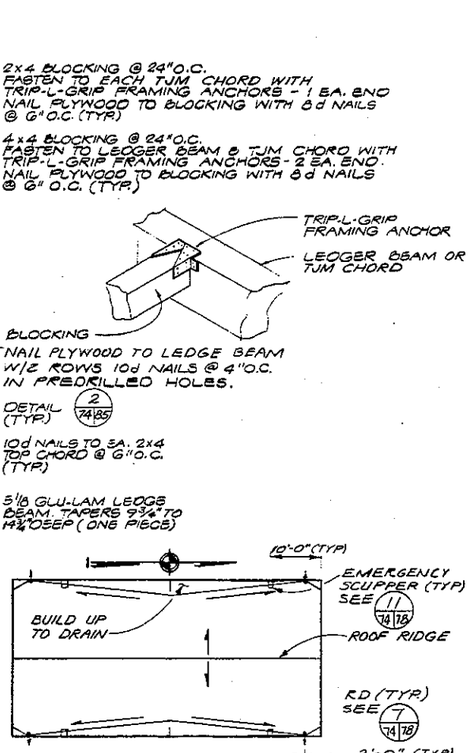

ROOF DRAINAGE PLAN

GENERAL NOTES:

1. ALL PANELS WITH SAME SERIES DESIGNATIONS S-10'S, S-20'S AND S-30'S ARE SIMILAR. SECOND NUMERAL INDICATES INSERT & SLEEVE SCHEDULE I.E. S-20 AND S-21 HAVE DIFFERENT INSERT AND SLEEVE REQUIREMENTS. ADDITIONAL SPECIAL FASTENERS OR INSERTS ARE NOTED ON PANEL SHT.
2. TRUSS DESIGN LOADS
   A. 40 PSF (SNOW + D.L.)
   B. 15 PSF WIND UPLIFT
   C. 4500 POUND TOTAL MONORAIL LOAD (APPLY CONCURRENTLY W/(SNOW + D.L.))
3. BOTTOM CHORDS OF TJM'S @ UNIFORM EL. 28.27±
4. PROVIDE STANDARD PL WASHERS @ ALL BOLTED CONNECTION SURFACES UNLESS OTHERWISE NOTED. 2" O.D. FOR 3/4" Φ BOLTS
5. FASTEN ALL BRIDGING W/BOLTED CONNECTIONS DESIGNED BY MFR. INSTALL CONT. 2x4 @ ENDS OF BOTTOM JOIST CHORDS. SPLICE PER DETAIL 5/S3.5

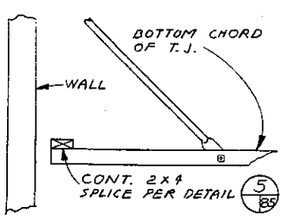

TYP. JOIST SUPPORT @ END

NTS

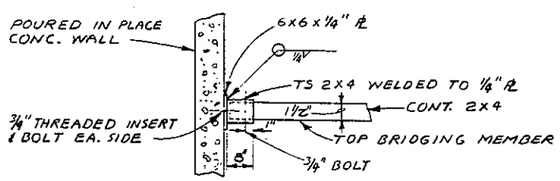

PLAN

BRIDGING CONNECTION DETAIL @ SOUTH END OF SHOP

NTS

NO.	DATE	REVISION	BY	APD.
2		RECORD DRAWINGS	JLS	
1	3/21/78	FIREDOOR OPENING MOD.	RGB	JGG

CH2M HILL — ENGINEERS PLANNERS ECONOMISTS

CORNELL HOWLAND HAYES & MERRYFIELD

CLAIR A. HILL & ASSOCIATES

CITY OF BELLINGHAM, WASHINGTON
POST POINT POLLUTION CONTROL PLANT
SCHEDULE T

SHOP BUILDING -
STRUCTURAL - ROOF PLAN

DES. RCHE
DR. JLF
CK. CAH
IN 56188.1

SHEET 74 OF 113
DATE: APRIL 1972
SCALE: AS SHOWN

C 6196-2

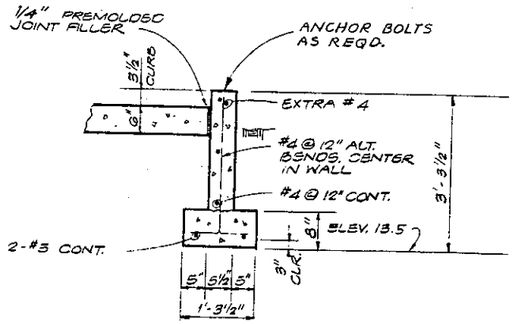

SECTION A (73/75)
3/4" = 1'-0"

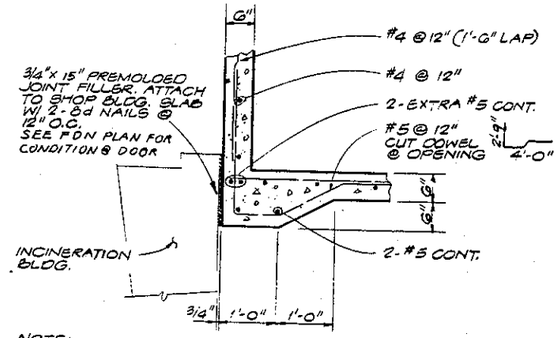

NOTE:
AT DOOR OPENING, PROVIDE 2-#5 x 11'-0" @ TOP, 2-#5 x 13'-0" @ SIDES 2-#4 x 4'-0" DIAG. @ CORNERS. SPLICE EXTRA SIDE BARS TO EXTRA FOOTING REINF.

SECTION D (65/73/75)
3/4" = 1'-0"

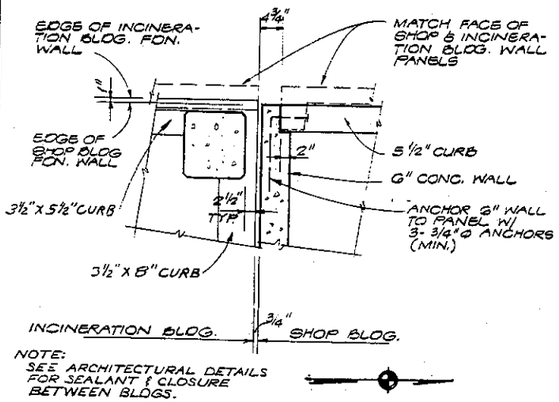

NOTE:
SEE ARCHITECTURAL DETAILS FOR SEALANT & CLOSURE BETWEEN BLDGS.

DETAIL 1 (62/73/75)
3/4" = 1'-0"

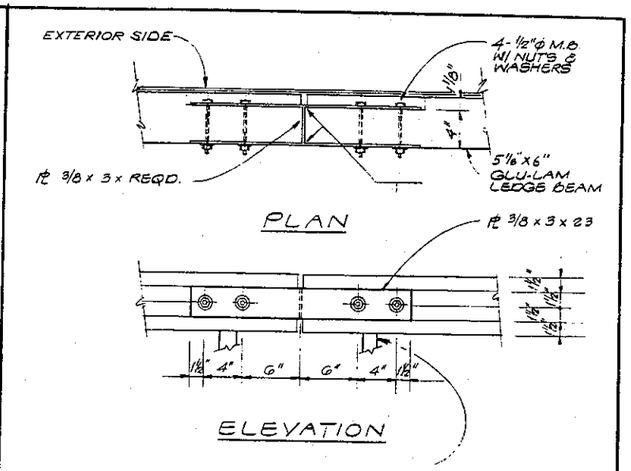

LOCATE EA. SECTION OF G.L. BM. OVER 2 x 4 FULL LENGTH STUD.

DETAIL 3 (17/43/52/74/75)
1 1/2" = 1'-0"

MAXIMUM OF 2 LEDGE BEAM SPLICES FOR ANY LONGITUDINAL WALL. NO SPLICES FOR ENDWALL LEDGE BEAMS.

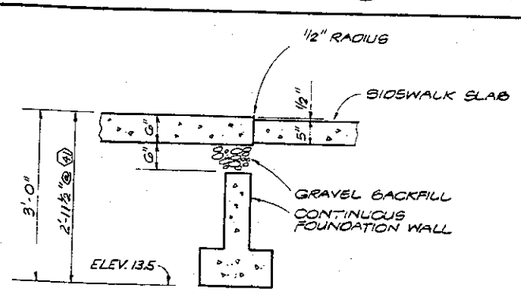

SECTION B (73/75)
3/4" = 1'-0"

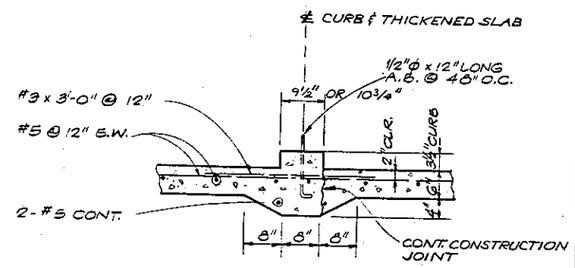

SECTION E (73/75)
3/4" = 1'-0"

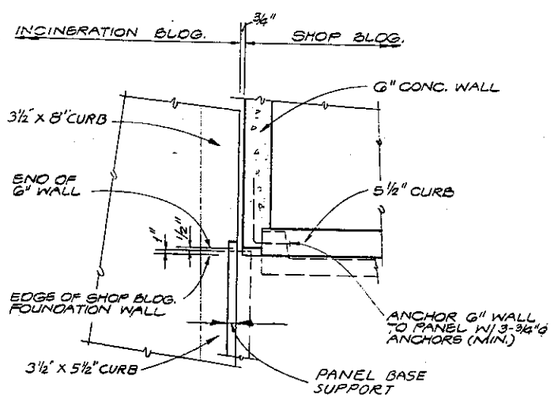

DETAIL 2 (73/75)
3/4" = 1'-0"

NOTE:
SEE ARCHITECTURAL DETAILS FOR SEALANT & CLOSURE BETWEEN BLDGS.

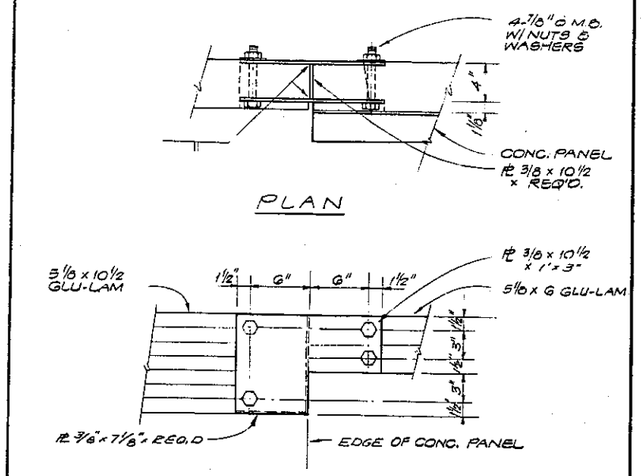

DETAIL 4 (74/75)
1 1/2" = 1'-0"

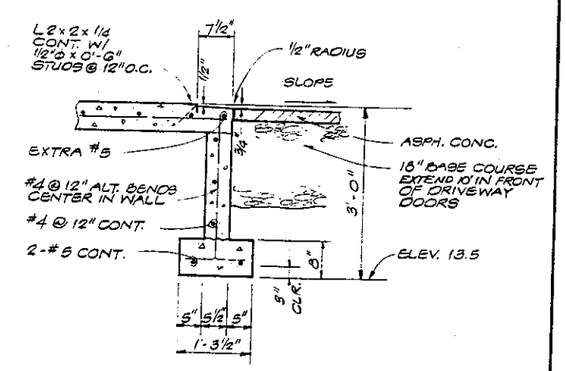

SECTION C (73/75)
3/4" = 1'-0"

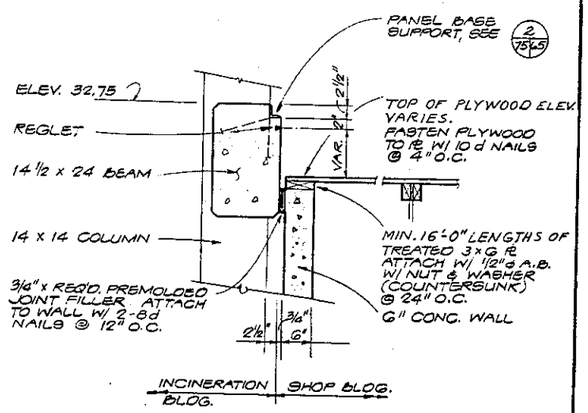

SECTION F (65/74/75)
3/4" = 1'-0"

NO.	DATE	RECORD DRAWINGS / REVISION	JLB / BY	APD.

CH2M HILL — ENGINEERS PLANNERS ECONOMISTS

CORNELL HOWLAND HAYES & MERRYFIELD

CLAIR A. HILL & ASSOCIATES

CITY OF BELLINGHAM, WASHINGTON
POST POINT POLLUTION CONTROL PLANT
SCHEDULE T

SHOP BUILDING -
STRUCTURAL - SECTIONS AND DETAILS

SHEET 75 OF 113
DATE: APRIL 1972
C 6198-2

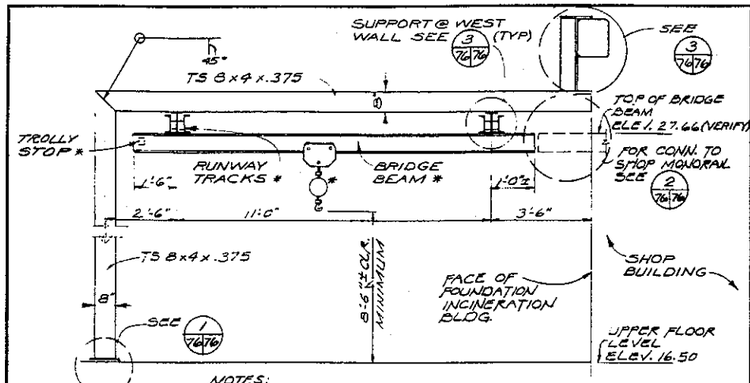

NOTES:
1. PROVIDE STOPS @ ENDS OF RUNWAY TRACKS
2. — * SUPPLIED BY HOIST MFR.

SECTION A 76 76
3/8" = 1'-0"

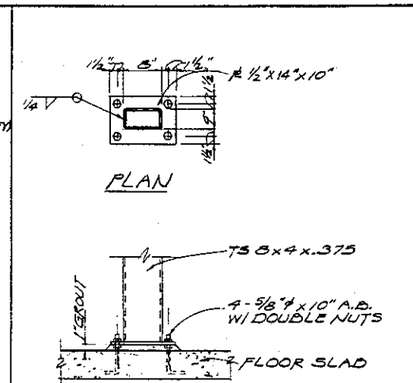

DETAIL 1 76 76
3/4" = 1'-0"

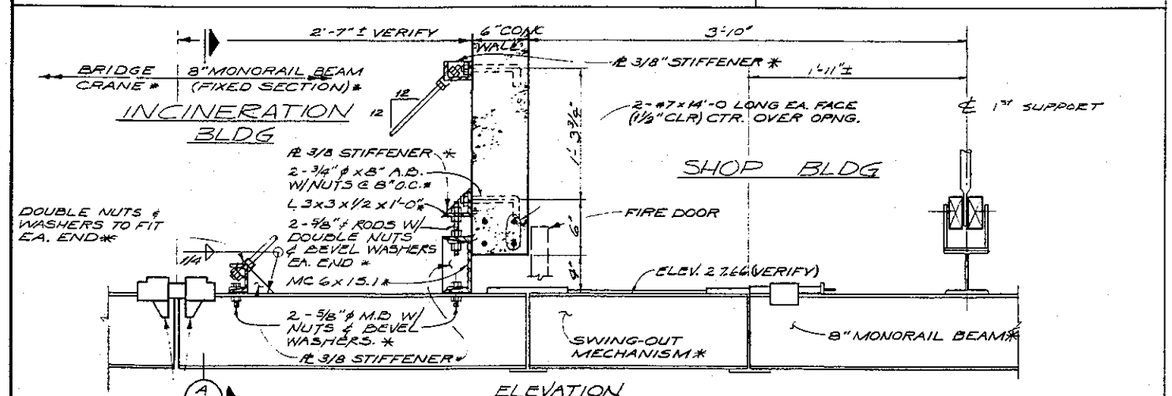

ELEVATION

DETAIL 2 76 76
1½" = 1'-0"

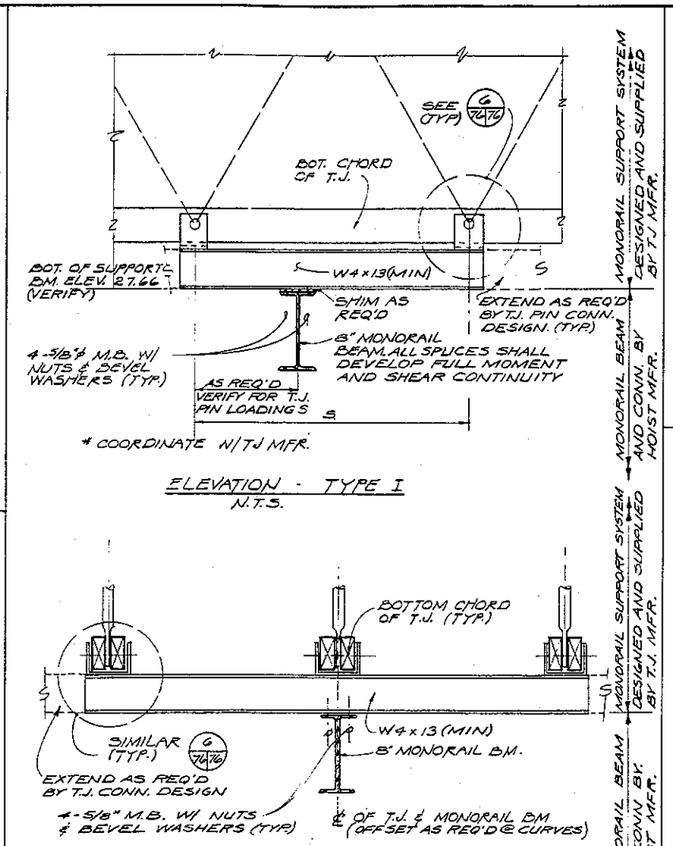

ELEVATION - TYPE I
N.T.S.

ELEVATION - TYPE II
1½" = 1'-0"

MONORAIL BEAM SUPPORT DETAIL 4 74 76

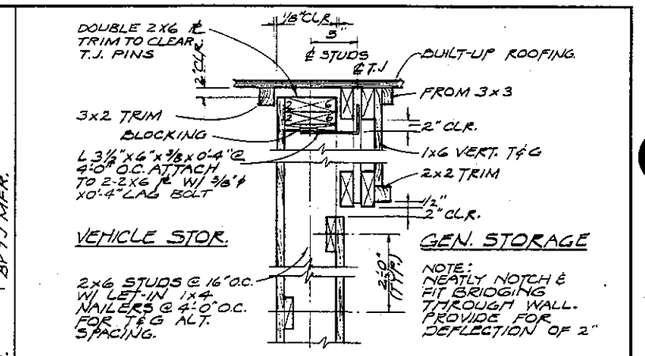

SECTION C 74 76
1½" = 1'-0"

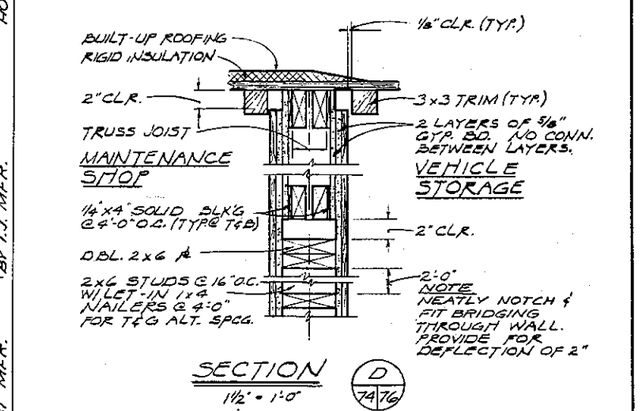

SECTION D 74 76
1½" = 1'-0"

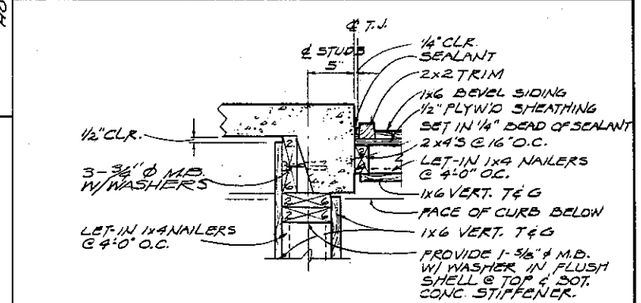

DETAIL 5 73 74 76
1½" = 1'-0"

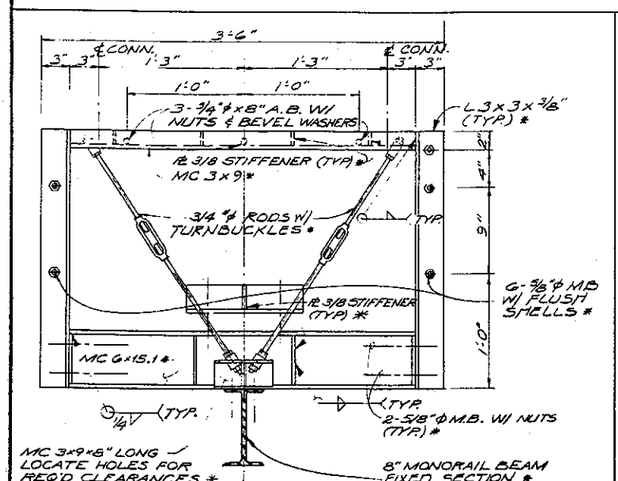

SECTION A 76 76
1½" = 1'-0"

* - SUPPLIED BY HOIST MFR.

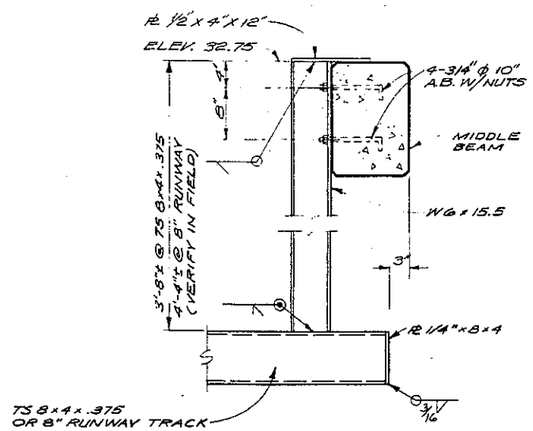

DETAIL 3 63 76 76
1" = 1'-0"

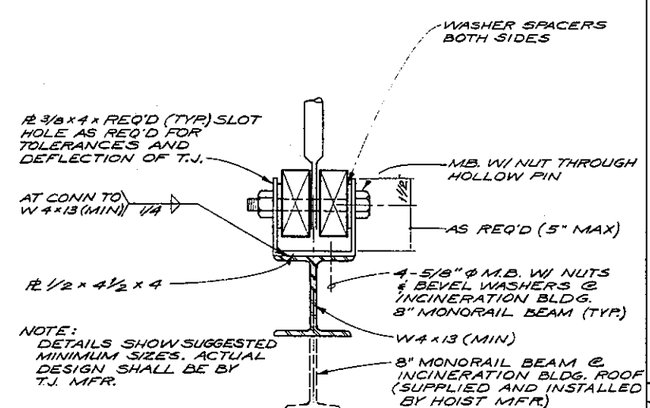

NOTE:
DETAILS SHOW SUGGESTED MINIMUM SIZES. ACTUAL DESIGN SHALL BE BY T.J. MFR.

DETAIL 6 68 76 76
3" = 1'-0"

NO.	DATE	RECORD DRAWINGS / REVISION	JLS / BY	APD.

CH2M HILL — ENGINEERS PLANNERS ECONOMISTS

CORNELL HOWLAND HAYES & MERRYFIELD — CLAIR A. HILL & ASSOCIATES

CITY OF BELLINGHAM, WASHINGTON
POST POINT POLLUTION CONTROL PLANT
SCHEDULE T

SHOP BUILDING -
STRUCTURAL - SECTIONS AND DETAILS

DES. BVE — DR. NW — CK. RGE — RN S6196.1
SHEET 76 OF 113
DATE: APRIL 1972
SCALE: AS SHOWN
DRAWING NO. C 6196-2

CLIMAX STATIONERY & PRINTING CO., PORTLAND, ORE.

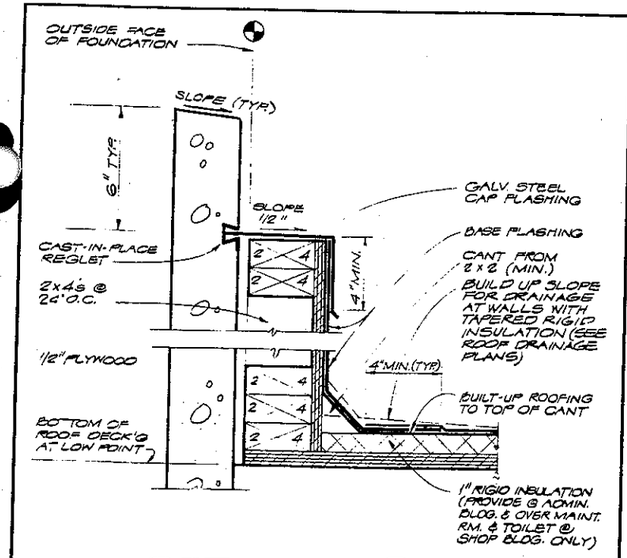

DETAIL 1
3" = 1'-0"
14, 15, 42, 48, 55, 72 | 77

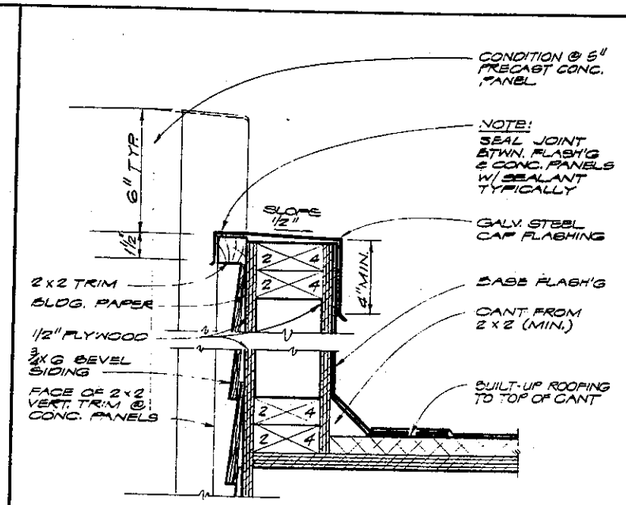

DETAIL 4
3" = 1'-0"
14, 15, 42, 48, 60, 72 | 77

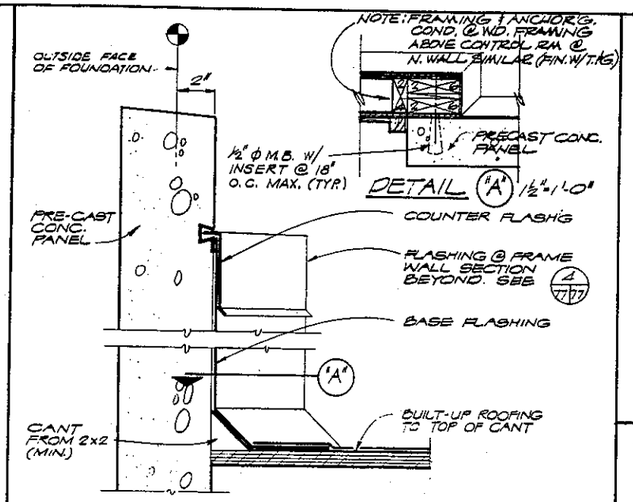

DETAIL "A"
1 1/2" = 1'-0"

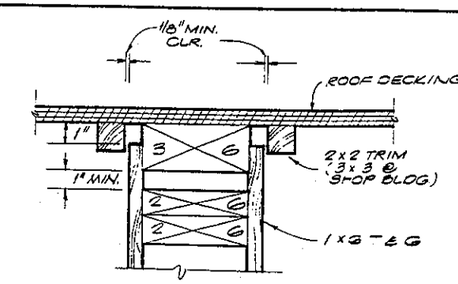

DETAIL 8
3" = 1'-0"
44, 45 | 77

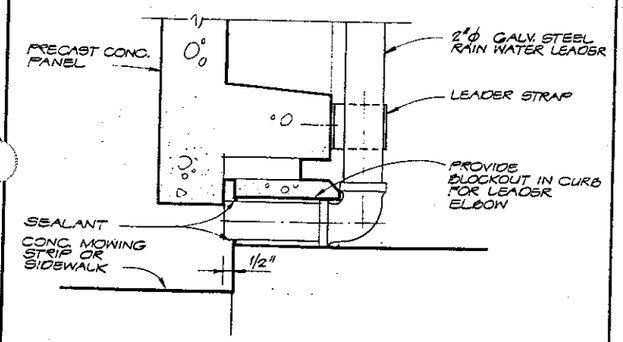

DETAIL 2
3" = 1'-0"
15, 42, 48, 60, 72 | 77

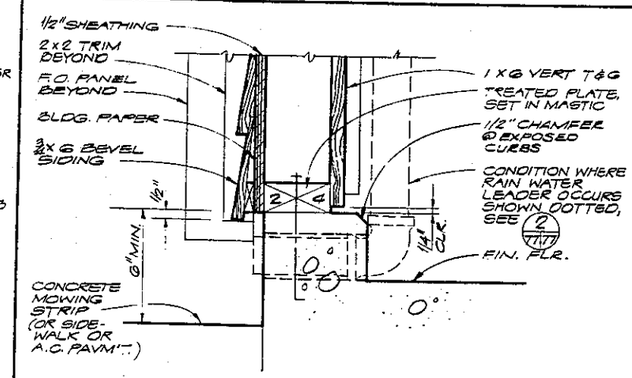

DETAIL 5
3" = 1'-0"
42, 72 | 77

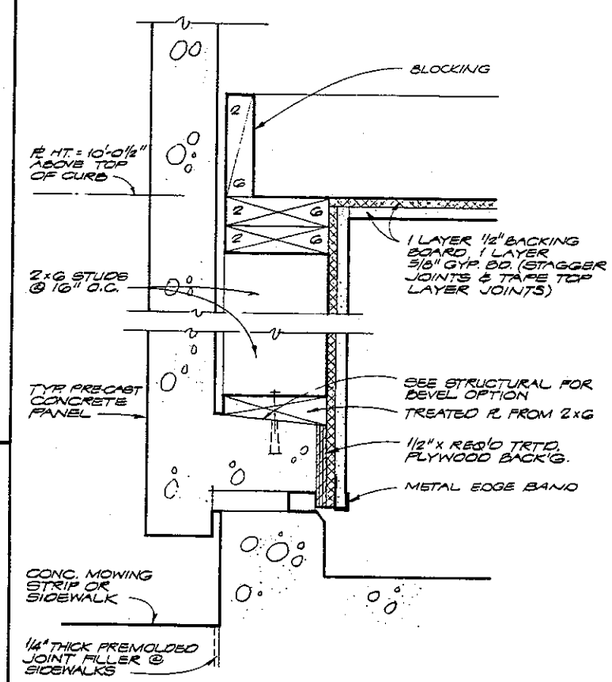

SECTION J
3" = 1'-0"
42, 77

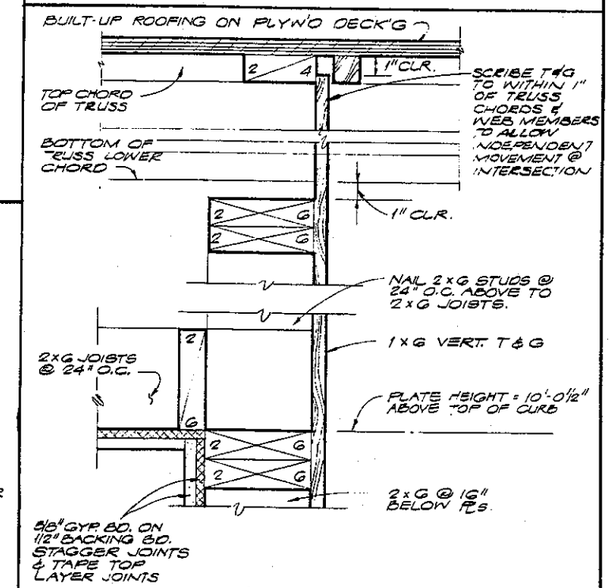

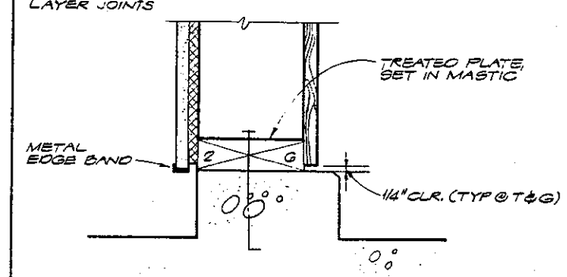

SECTION K
3" = 1'-0"
43, 77

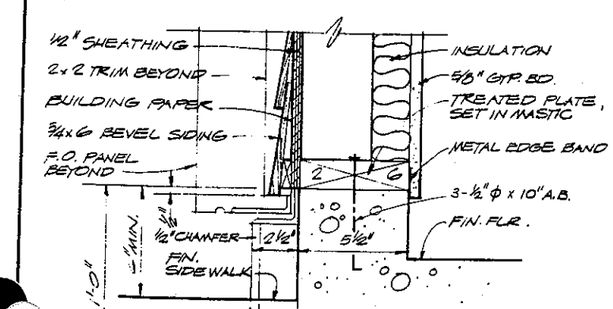

DETAIL 3
3" = 1'-0"
60, 63 | 77

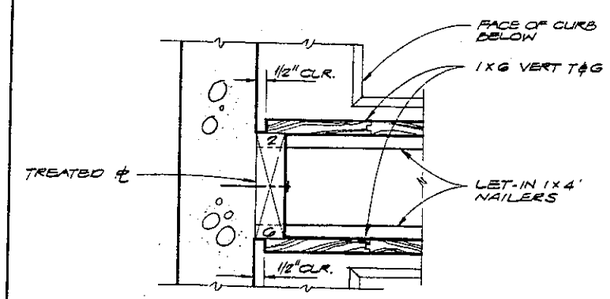

DETAIL 6
3" = 1'-0"
43, 74 | 77

NO.	DATE	REVISION	BY	APD.
1		RECORD DRAWINGS	JLS	

CH2M HILL — ENGINEERS PLANNERS ECONOMISTS

CORNELL HOWLAND HAYES & MERRYFIELD

CLAIR A. HILL & ASSOCIATES

CITY OF BELLINGHAM, WASHINGTON
POST POINT POLLUTION CONTROL PLANT
SCHEDULE T

ARCHITECTURAL DETAILS - MISCELLANEOUS

DES. — DR. — CK. — JOB NO. 56196.1

SHEET 77 OF 113

DATE: APRIL 1972

SCALE: AS SHOWN

DRAWING NO. C 6198-2

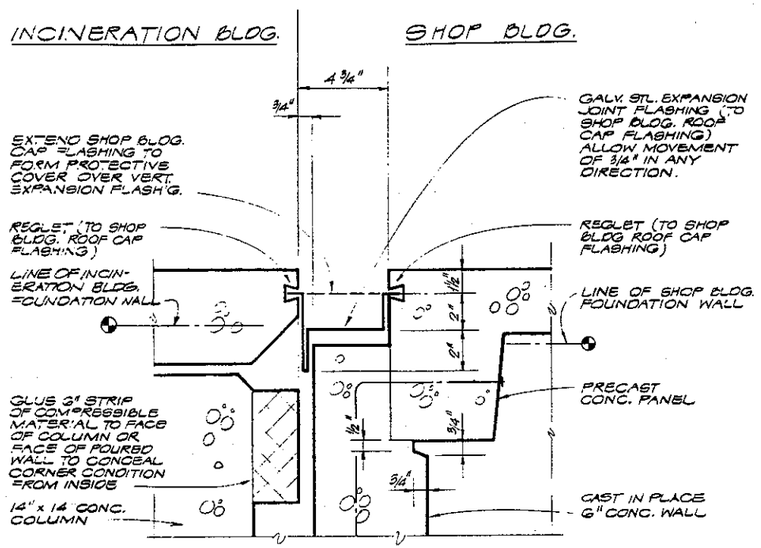

DETAIL 1 (61, 72 | 78)
3" = 1'-0"

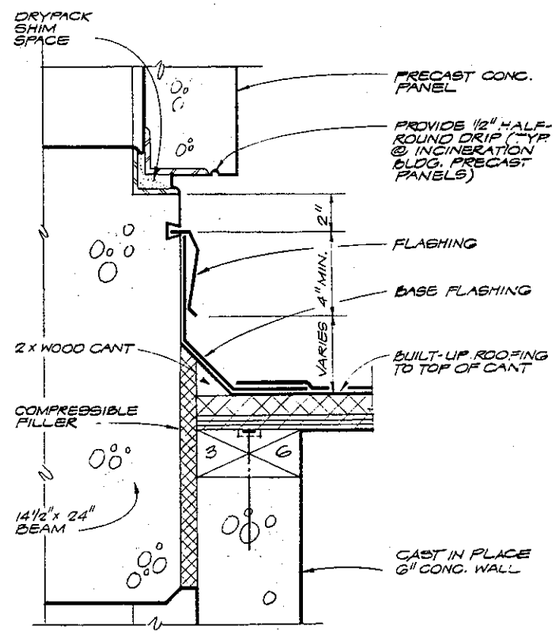

DETAIL 4 (60 | 78)
3" = 1'-0"

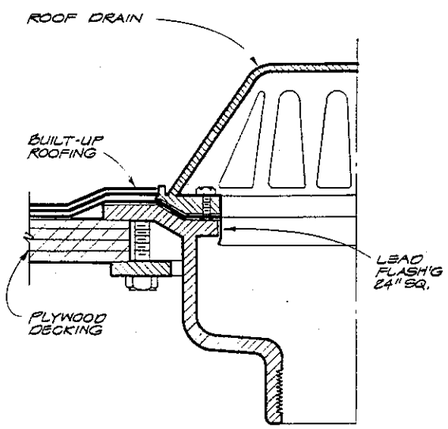

FOR NON-INSULATED ROOFS

DETAIL 7 (17, 43 | 78; 64, 74)
N.T.S.

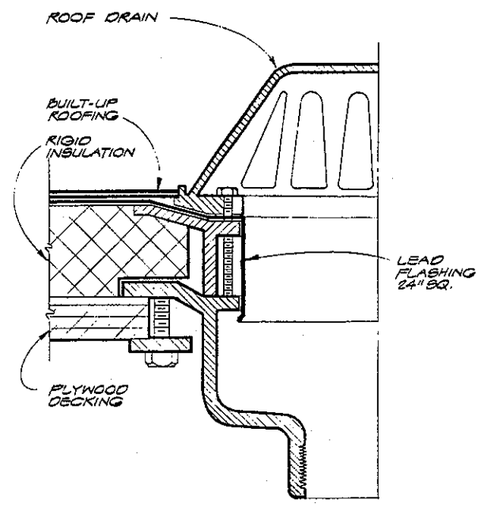

FOR INSULATED ROOFS

DETAIL 10 (82 | 78)
N.T.S.

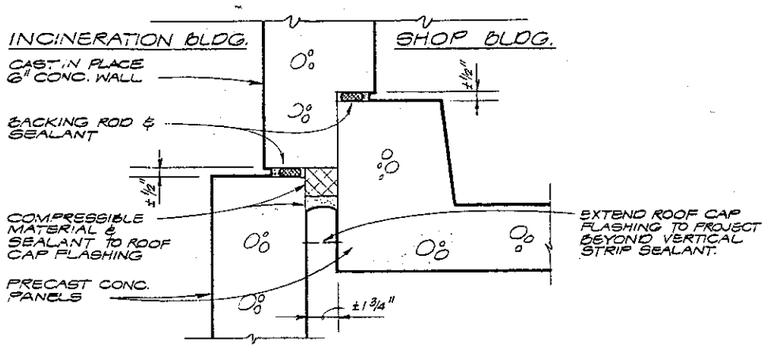

DETAIL 2 (61, 72 | 78)
3" = 1'-0"

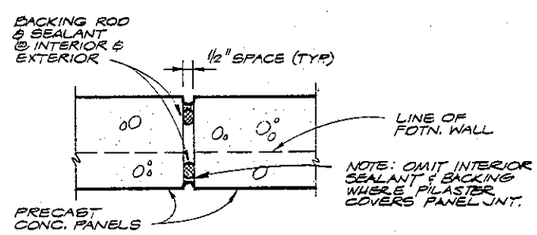

DETAIL 5 (60, 61, 72 | 78)
3" = 1'-0"

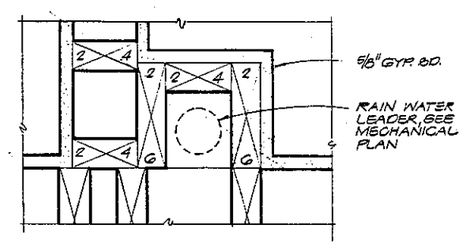

DETAIL 8 (51 | 78)
3" = 1'-0"

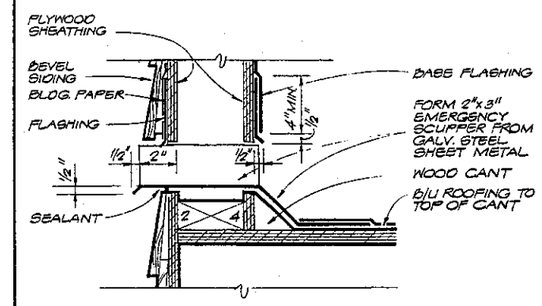

DETAIL 11 (17, 43, 48 | 78; 52, 64, 74)
3" = 1'-0"

NOTE:
EMERGENCY SCUPPER AT NON-INSULATED ROOF SHOWN. DETAILS FOR INSULATED ROOF EMERGENCY SCUPPERS SIMILAR.

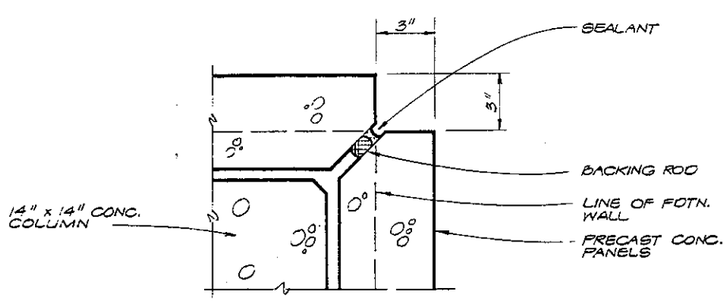

DETAIL 3 (61 | 78)
3" = 1'-0"

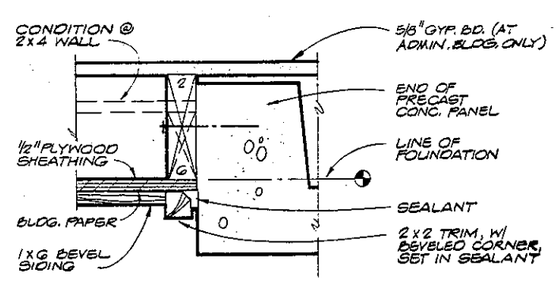

DETAIL 6 (14, 15, 42, 48, 60, 72 | 78)
3" = 1'-0"

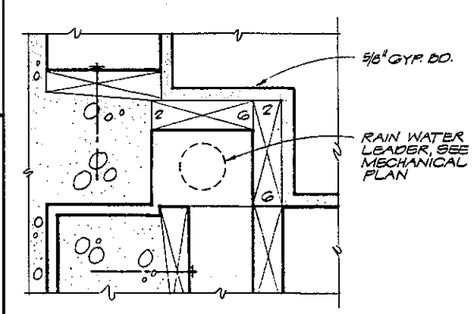

DETAIL 9 (51 | 78)
3" = 1'-0"

NO.	DATE	REVISION	BY	APD.
△		RECORD DRAWINGS	JLS	

CH2M HILL — ENGINEERS PLANNERS ECONOMISTS

CORNELL HOWLAND HAYES & MERRYFIELD

CLAIR A. HILL & ASSOCIATES

CITY OF BELLINGHAM, WASHINGTON
POST POINT POLLUTION CONTROL PLANT
SCHEDULE T

ARCHITECTURAL DETAILS - MISCELLANEOUS

SHEET 78 OF 113
DATE: APRIL 1972
SCALE: AS SHOWN
C 6196-2

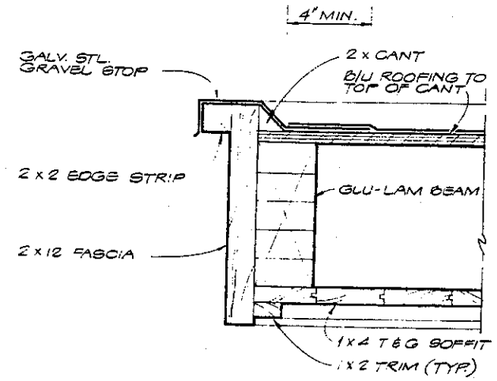

DETAIL (1 / 40,55,79)
3" = 1'-0"

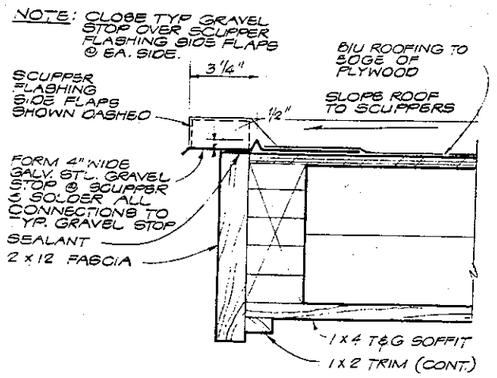

DETAIL (2 / 43,79)
3" = 1'-0"

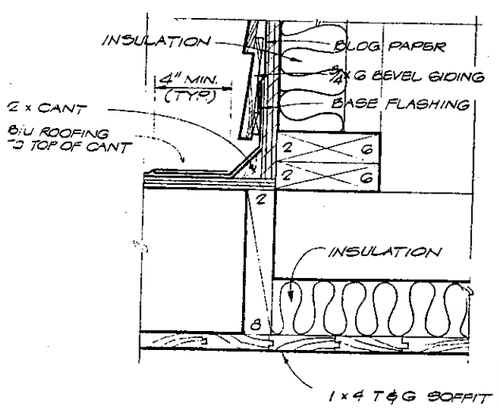

DETAIL (3 / 55,79)
3" = 1'-0"

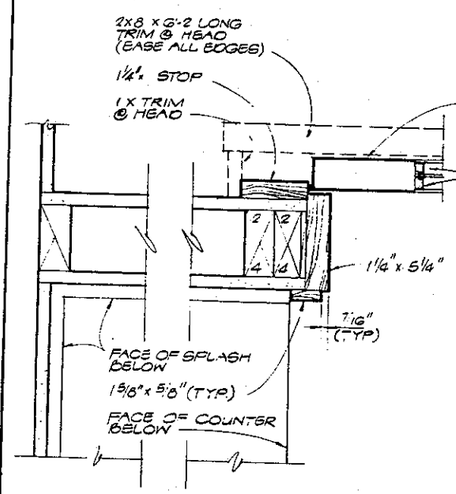

JAMB DETAILS AT DOOR NO. 10 & RELITE

DETAIL (4 / 54,79)
3" = 1'-0"

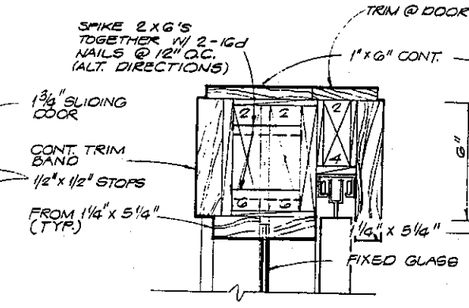

HEAD

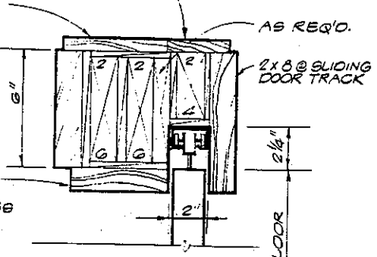

HEAD

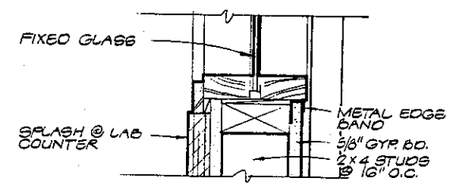

SILL

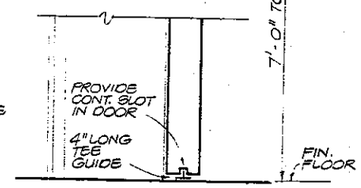

THRESHOLD

AT RELITE

DETAIL (5 / 34,79)
3" = 1'-0"

AT SLIDING DOOR NO. 10

DETAIL (6 / 83,79)
3" = 1'-0"

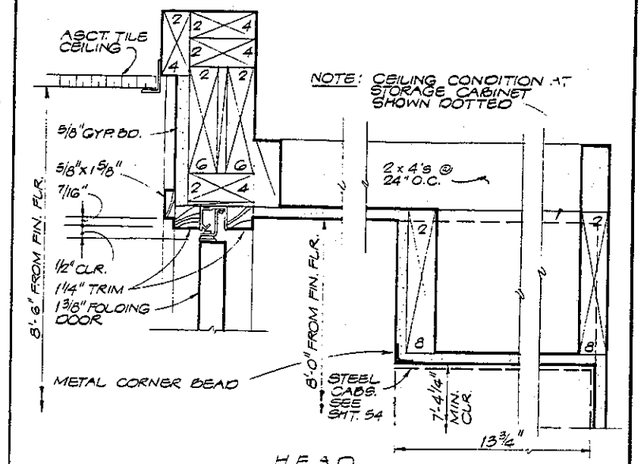

HEAD

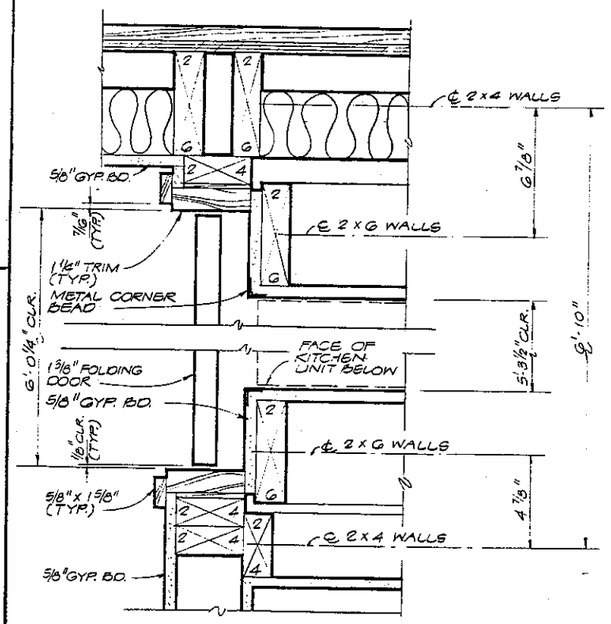

JAMBS

FOLDING DOOR DETAIL (9 / 54,79)
3" = 1'-0"

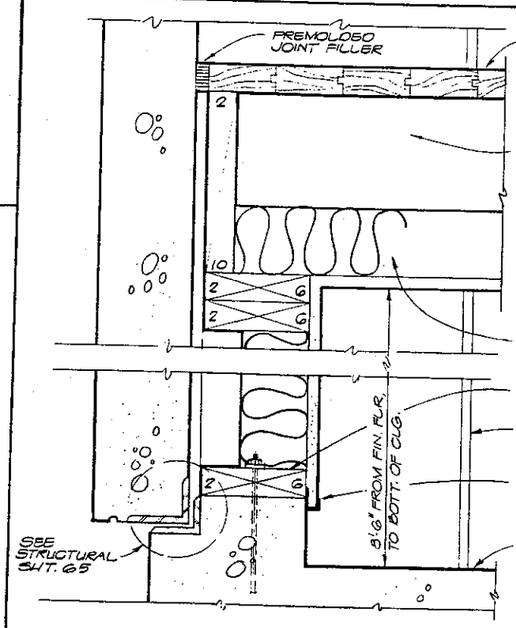

CONTROL RM. @ INCINER. BLDG. (N. & E. WALL)

DETAIL (7 / 60,61,63,79)
3" = 1'-0"

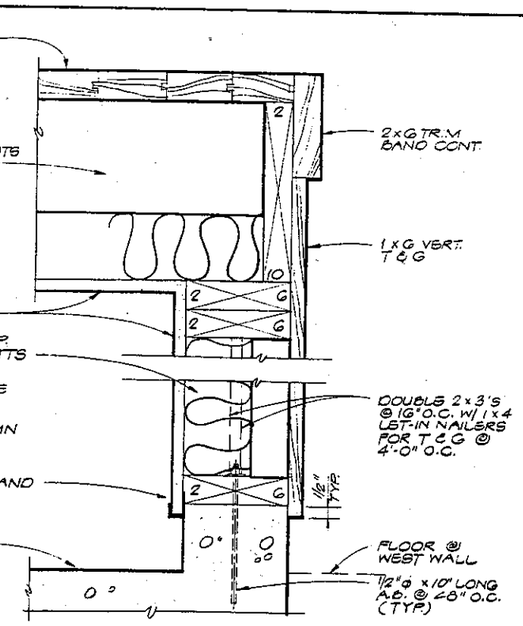

CONTROL RM. @ INCINER. BLDG. (S. WALL)

DETAIL (8 / 63,79)
3" = 1'-0"

NO.	DATE	RECORD DRAWINGS / REVISION	JLS / BY	APD.

CH2M HILL — ENGINEERS PLANNERS ECONOMISTS

CORNELL HOWLAND HAYES & MERRYFIELD

CLAIR A. HILL & ASSOCIATES

CITY OF BELLINGHAM, WASHINGTON
POST POINT POLLUTION CONTROL PLANT
SCHEDULE T

ARCHITECTURAL DETAILS - RELITE AND MISCELLANEOUS

DES — DR. Orf — CK. — APRIL 1972 — 56199.1

SHEET 79 OF 113

C 6198-2

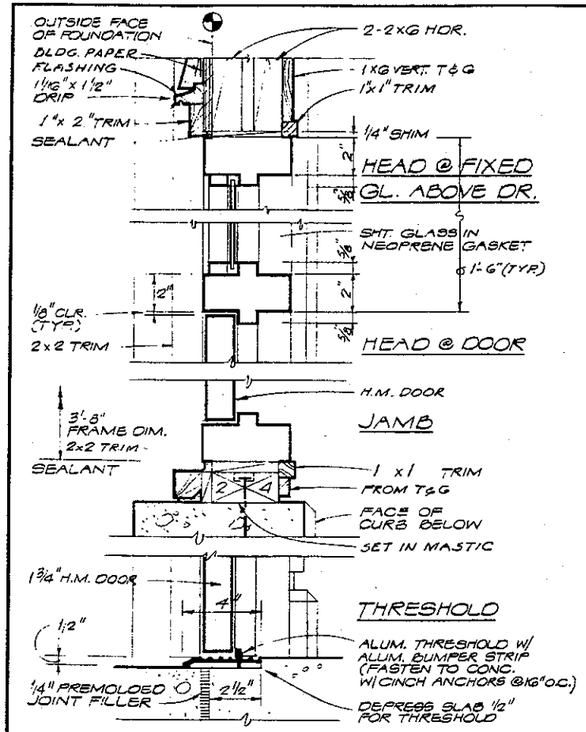

DETAIL 1 (83/80)
3" = 1'-0"

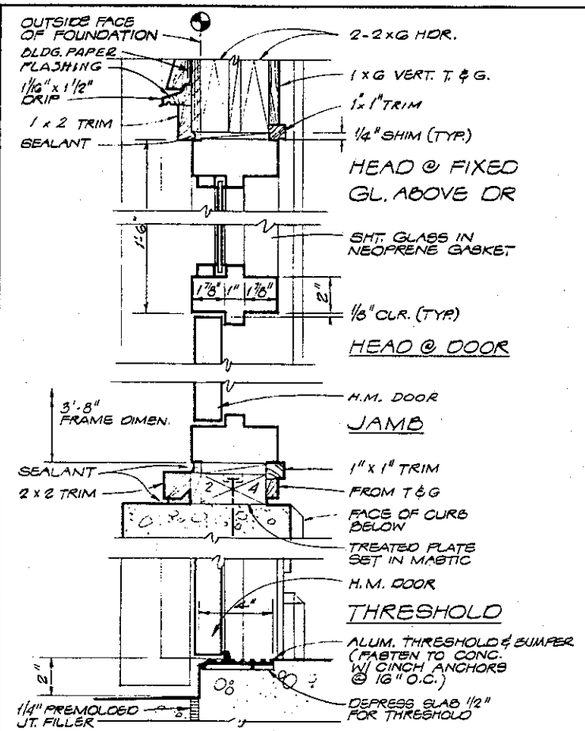

DETAIL 3 (83/80)
3" = 1'-0"

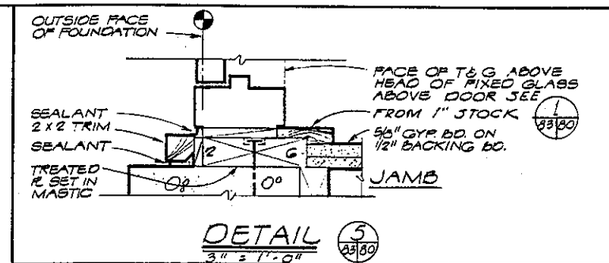

DETAIL 5 (83/80)
3" = 1'-0"

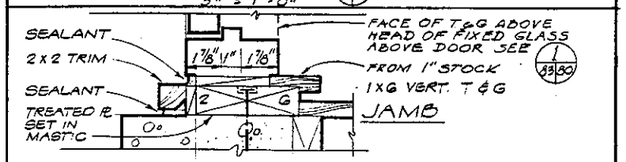

DETAIL 6 (83/80)
3" = 1'-0"

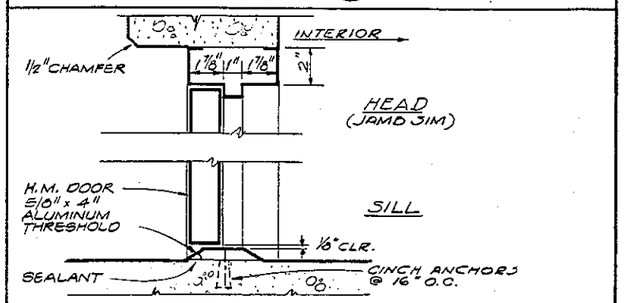

DETAIL 7 (83/80)
3" = 1'-0"

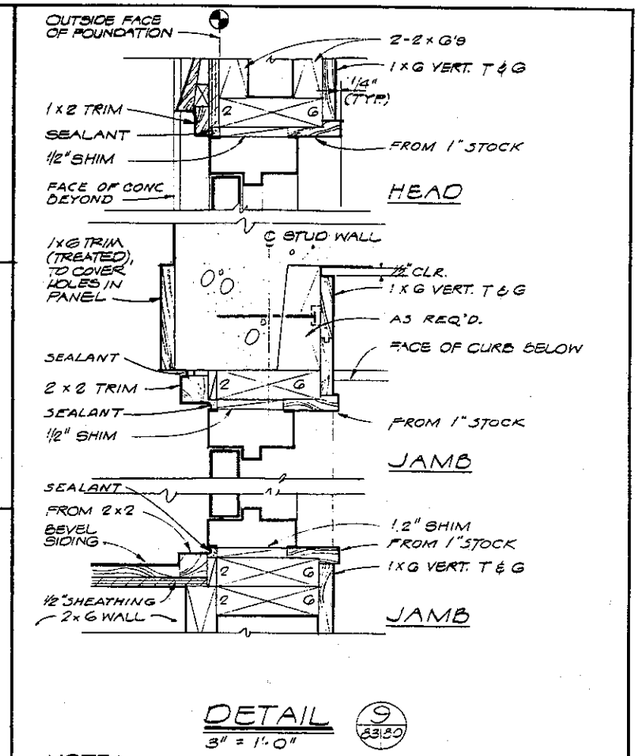

DETAIL 9 (83/80)
3" = 1'-0"

NOTE:
THRESHOLD SIMILAR TO DOOR AT MAINTENANCE FROM EXTERIOR

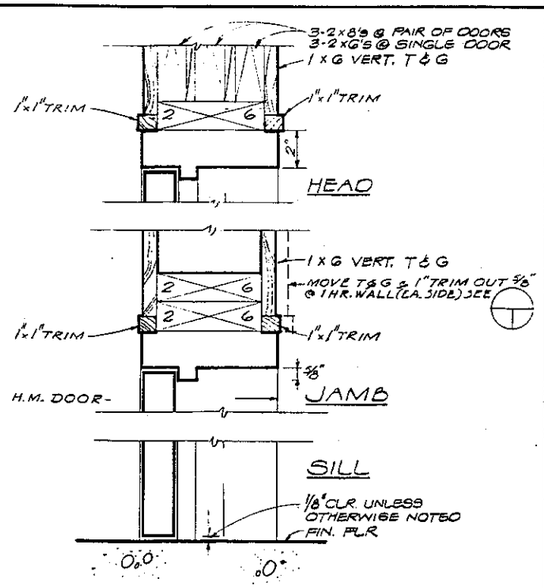

DETAIL 2 (83/80)
3" = 1'-0"

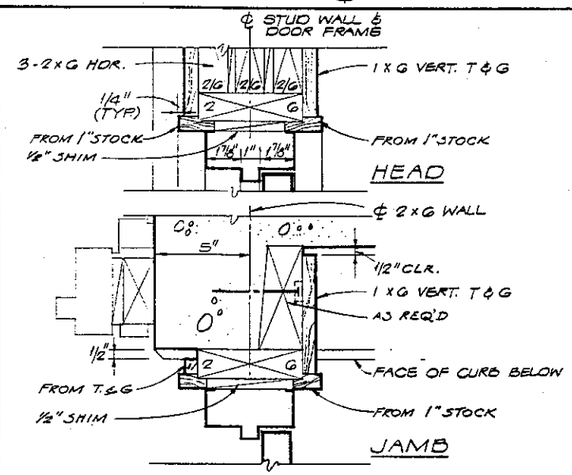

DETAIL 4 (83/80)
3" = 1'-0"

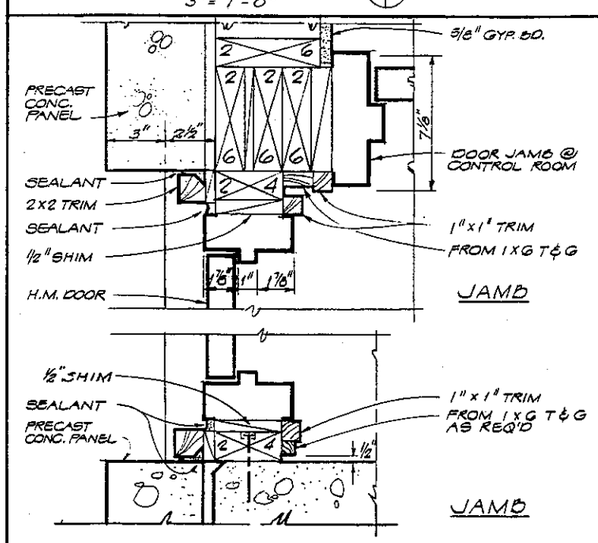

DETAIL 8 (83/80)

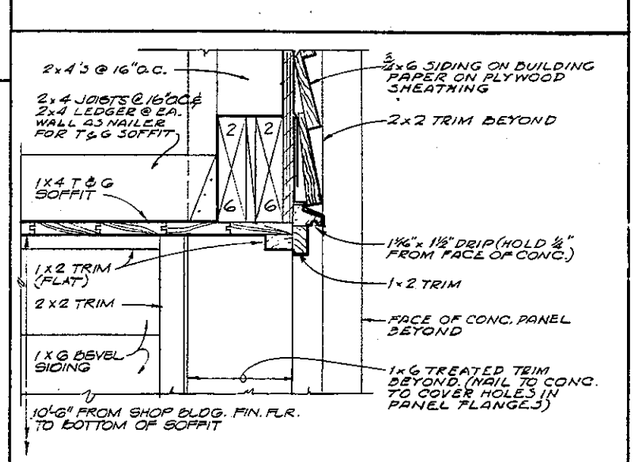

DETAIL 10 (78/83/80)
3" = 1'-0"

NO.	DATE	REVISION	BY	APD.
1		RECORD DRAWINGS	JLS	

CH2M HILL
ENGINEERS PLANNERS ECONOMISTS

CORNELL HOWLAND HAYES & MERRYFIELD
CLAIR A. HILL & ASSOCIATES

CITY OF BELLINGHAM, WASHINGTON
POST POINT POLLUTION CONTROL PLANT
SCHEDULE T

ARCHITECTURAL DETAILS - EXTERIOR DOORS

DWG. NO. C 6198-2
SHEET 80 OF 113
DATE APRIL 1972
SCALE: AS SHOWN

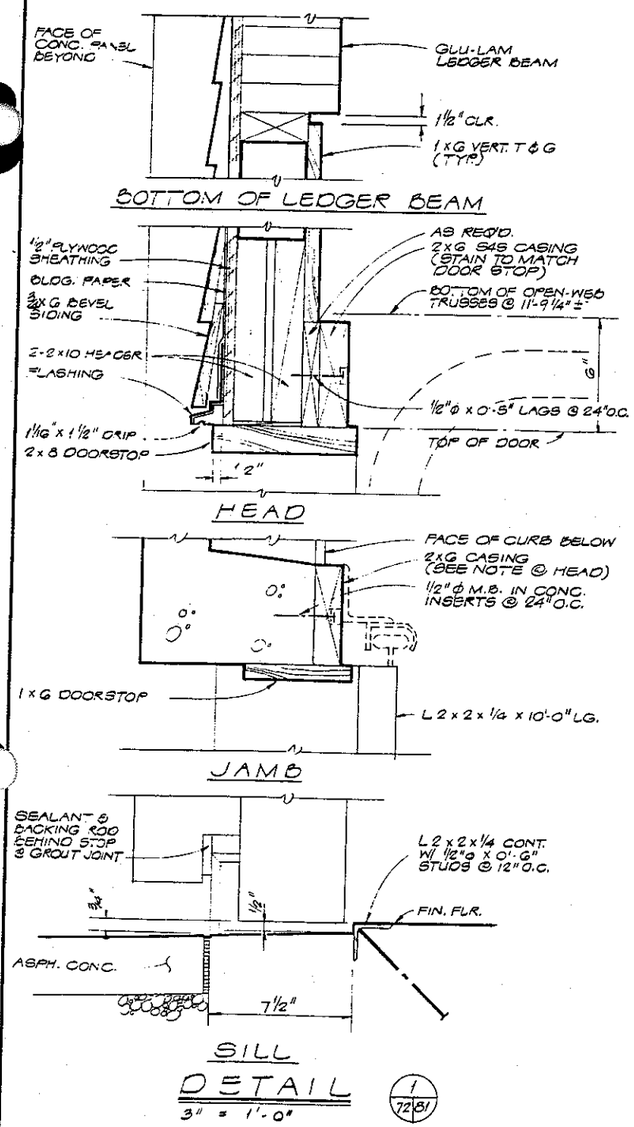

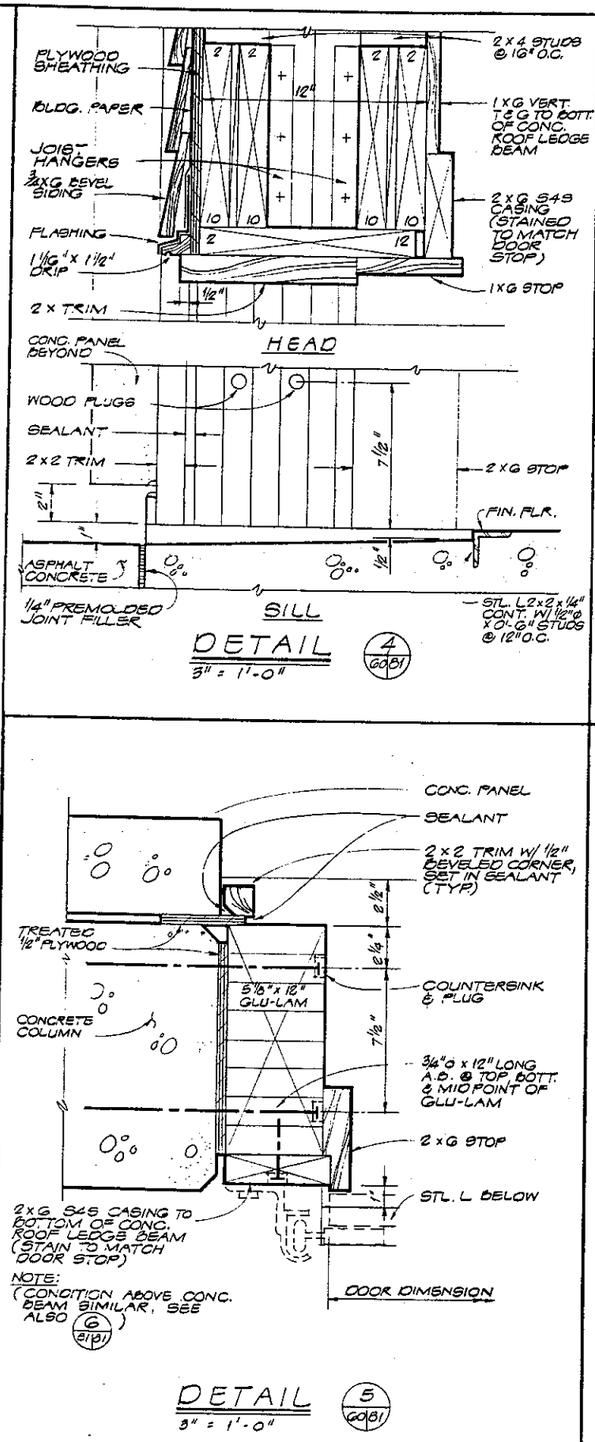

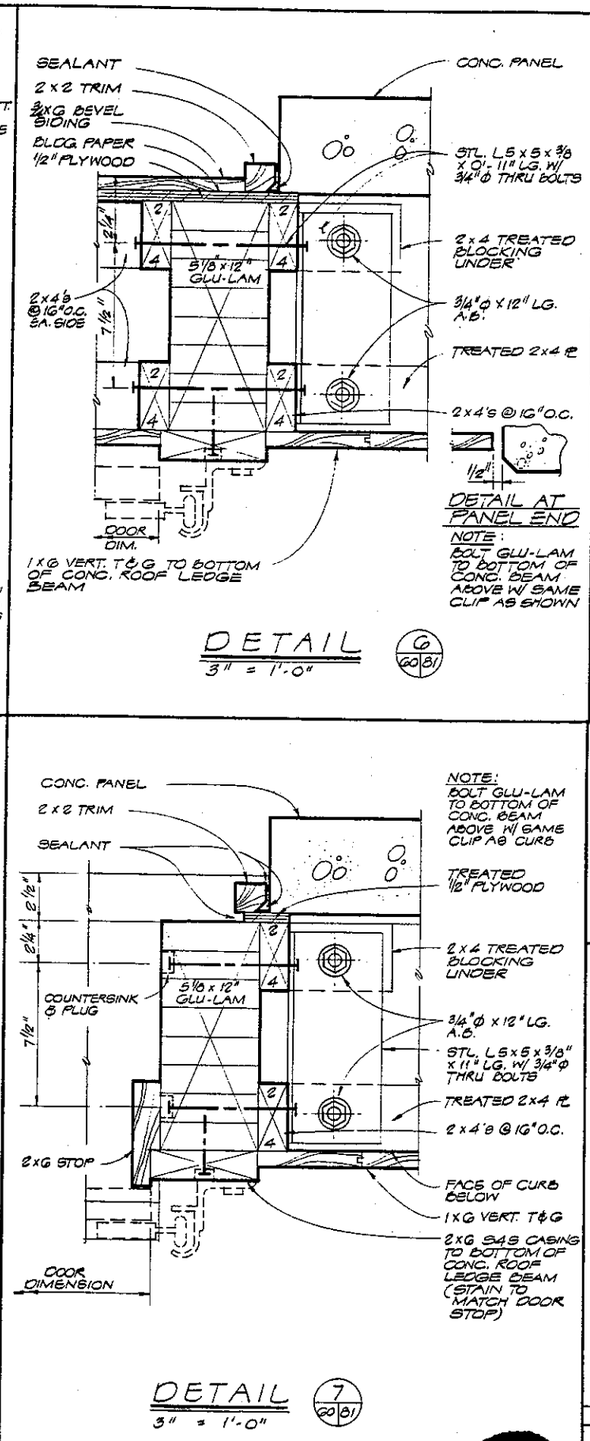

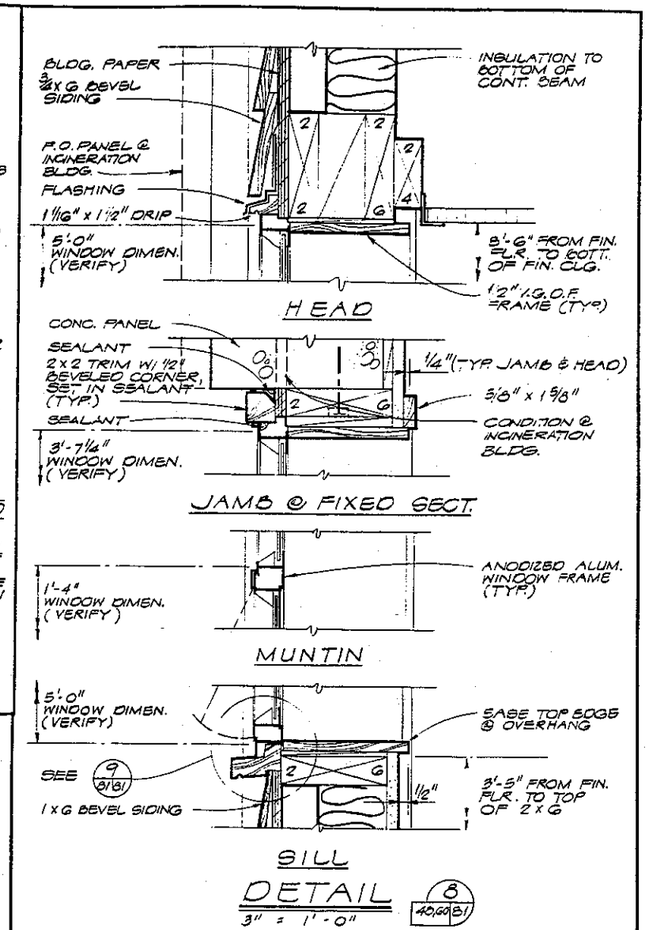

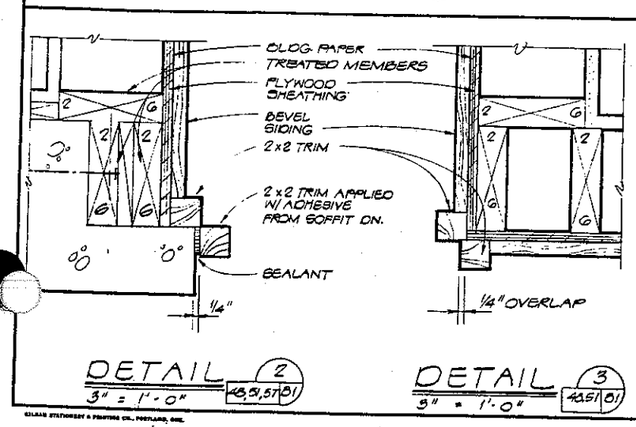

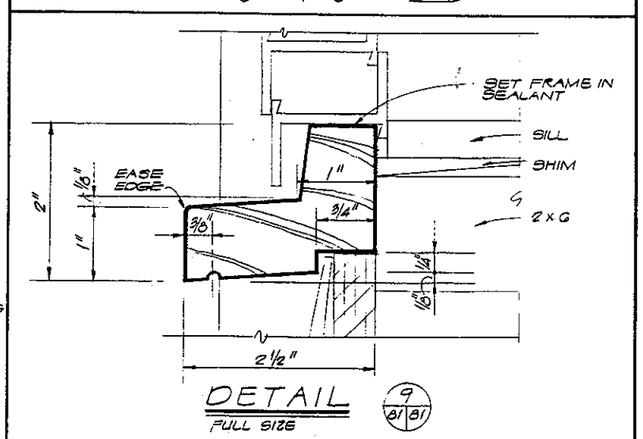

NO.	DATE	RECORD DRAWINGS / REVISION	BY	APD.
			JLS	

CH2M HILL — ENGINEERS PLANNERS ECONOMISTS

CORNELL HOWLAND HAYES & MERRYFIELD

CLAIR A. HILL & ASSOCIATES

CITY OF BELLINGHAM, WASHINGTON
POST POINT POLLUTION CONTROL PLANT
SCHEDULE T

ARCHITECTURAL DETAILS - WINDOWS, OVERHEAD DOORS AND MISCELLANEOUS

SHEET 81 OF 113
DATE: APRIL 1972
SCALE: AS SHOWN
C 6196-2

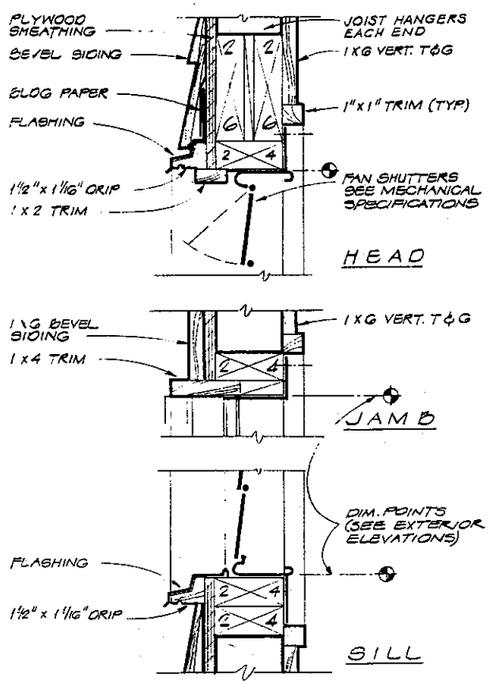

DETAIL 1 (14, 42 | 82 / 72, 60)
3" = 1'-0"

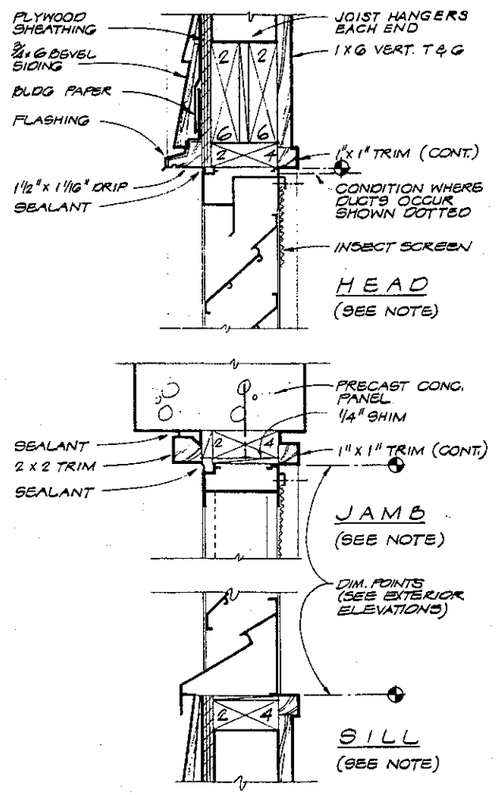

DETAIL 3 (14, 15 | 82 / 42, 48)
3" = 1'-0"

NOTE:
OMIT INTERIOR FINISH & TRIM AT ADMINISTRATION BLDG. 2 x 6 WALL. (EXTERIOR DETAILS REMAIN THE SAME)

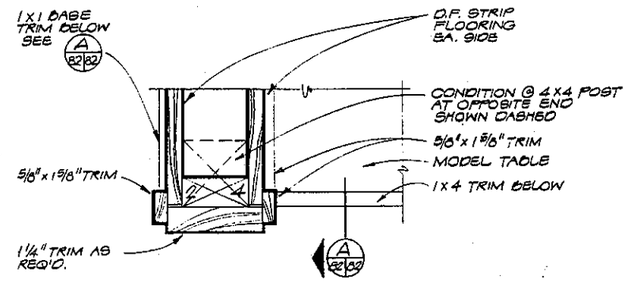

DETAIL 5 (55 | 82)
3" = 1'-0"

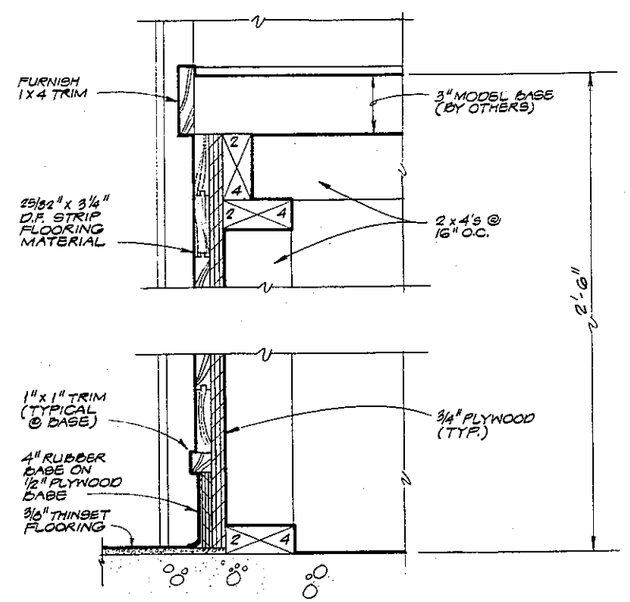

MODEL TABLE DETAILS

SECTION A (55, 82 | 82)
3" = 1'-0"

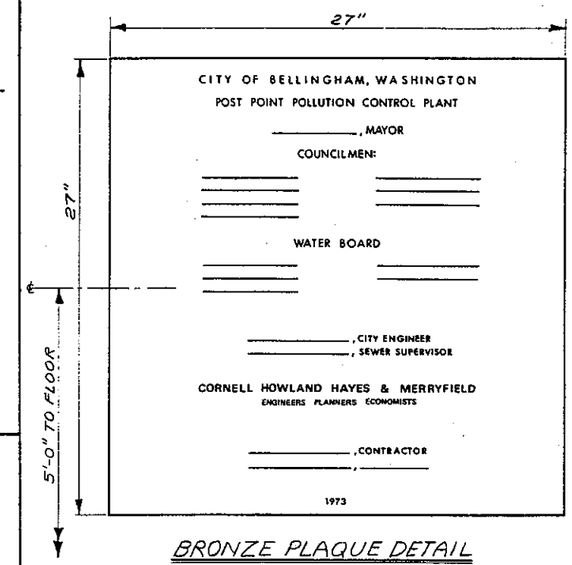

BRONZE PLAQUE DETAIL
N.T.S.

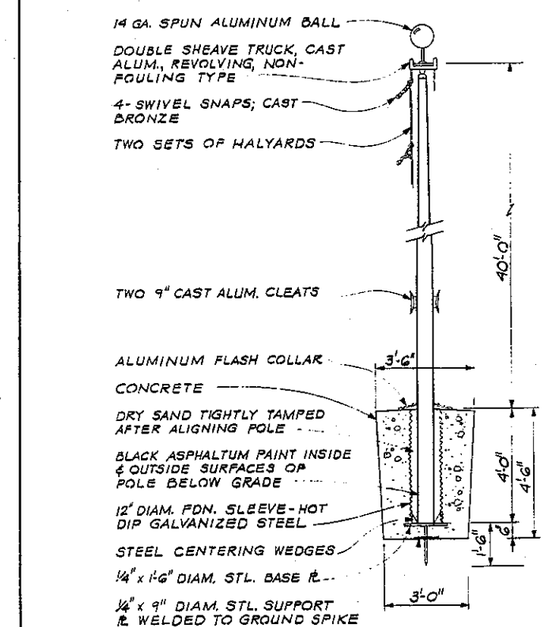

FLAGPOLE DETAIL
3/8" = 1'-0"

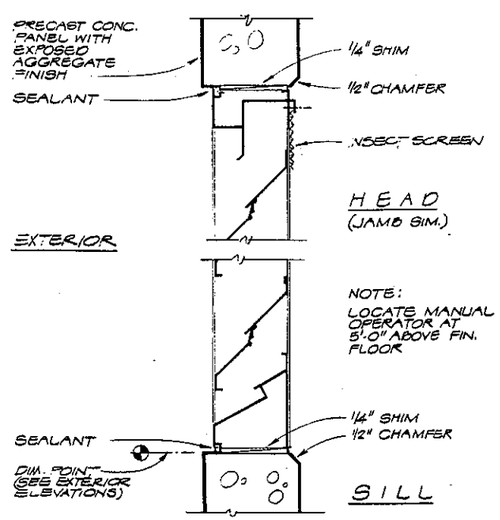

DETAIL 2 (60 | 82)
3" = 1'-0"
(CONDITION AT FIXED LOUVERS SIMILAR)

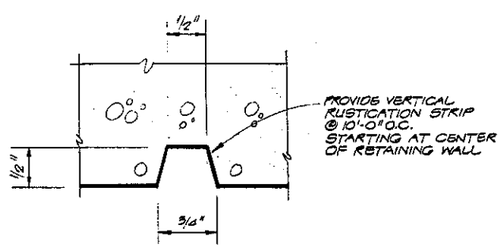

VERTICAL RUSTICATION

DETAIL 4 (15 | 82)
FULL SIZE

NO.	DATE	REVISION	BY	APD.
1		RECORD DRAWINGS	JLS	

CH2M HILL
ENGINEERS PLANNERS ECONOMISTS

CORNELL HOWLAND HAYES & MERRYFIELD

CLAIR A. HILL & ASSOCIATES

CITY OF BELLINGHAM, WASHINGTON
POST POINT POLLUTION CONTROL PLANT
SCHEDULE T

ARCHITECTURAL DETAILS - LOUVERS AND MISCELLANEOUS

DES. Oaf
DR. 36196.1
SHEET 82
OF 113
DATE: APRIL 1972
SCALE: AS SHOWN
DRAWING NO. C 6196-2

DOOR SCHEDULE

(NO)	SIZE & LOCATION	TYPE	MATERIAL	FRAME	HEAD	JAMB	THRESH	GLASS	HDW. NO.	LOUVER AREA	REMARKS (SEE HARDWARE SCHEDULE FOR NOTES)
	ADMINISTRATION BLDG.										
1	(2) 3'0" x 7'0" x 1 3/4"	A	ALUM.	ALUM.	2/83	1/83	2/83	1/4" PLATE	1		
2	2'8" x 7'0" x 1 3/8"	D	H.C. WOOD	WOOD	8/83	4/83	—	3/16" h.s.	2		SEE NOTE 1
3	2'8" x 7'0" x 1 3/8"	D	H.C. WOOD	WOOD	6/83	5/83	—	3/16" h.s.	3		
4	2'8" x 7'0" x 1 3/8"	B	H.C. WOOD	WOOD	6/83	3/83	—		2		
5	2'8" x 7'0" x 1 3/8"	B	H.C. WOOD	WOOD	6/83	3/83	—		2		
6	2'6" x 7'0" x 1 3/8"	B	H.C. WOOD	WOOD	7/83	5/83	—		2		
7	2'8" x 7'0" x 1 3/8"	D	H.C. WOOD	WOOD	6/83	5/83	—	3/16" h.s.	3		UNDERCUT 1"
8	3'0" x 7'0" x 1 3/4"	A	ALUM.	ALUM.	2/83	1/83	2/83	1/4" PLATE	2		
9	2'8" x 7'0" x 1 3/8"	D	H.C. WOOD	WOOD	6/83	5/83	—	3/16" h.s.	1		SEE NOTE 1
10	2'10" x 7'0" x 1 3/8" SLIDING	D	H.C. WOOD	WOOD	6/79	4/79	6/79	3/16" h.s.	2		
11	2'8" x 7'0" x 1 3/4"	C	S.C. WOOD	WOOD	6/83	4/83	—		4		
12	3'0" x 7'0" x 1 3/4"	A	ALUM.	ALUM.	2/83	1/83	2/83	1/4" PLATE	2	1.5 □ MIN. FREE AREA	
13	2'8" x 7'0" x 1 3/4"	B	S.C. WOOD	WOOD	8/83	4/83	—		1		
14	2'8" x 7'0" x 1 3/8"	C	H.C. WOOD	WOOD	8/83	4/83	—		5		UNDERCUT 1"
15	3'0" x 7'0" x 1 3/8"	C	H.C. WOOD	WOOD	7/83	5/83	—		2	.5 □ MIN. FREE AREA	
16	2'8" x 7'0" x 1 3/4"	B	S.C. WOOD	WOOD	6/83	5/83	—		2	1.5 □ MIN. FREE AREA	
17	2'8" x 7'0" x 1 3/4"	B	S.C. WOOD	WOOD	6/83	5/83	—		5		
18	3'0" x 7'0" x 1 3/4"	A	ALUM.	ALUM.	2/83	1/83	2/83	1/4" PLATE	5		UNDERCUT 1"
19	2'8" x 7'0" x 1 3/4"	B	S.C. WOOD	WOOD	6/83	5/83	—		1		UNDERCUT 1"
20	6'1/4" x 8'0" CLR. OPNG.	BI-FOLD	H.C. WOOD	WOOD	9/79	9/79	—		3		SEE NOTE 1
21	8'3/4" x 8'0" CLR. OPNG.	BI-FOLD	H.C. WOOD	WOOD	9/79	9/79	—		6		
22	5'9/16" x 7'0" CLR. OPNG	BI-FOLD	H.C. WOOD	WOOD	9/79	—	—		6		
23	5'7/16" x 7'0" CLR. OPNG	BI-FOLD	H.C. WOOD	WOOD	9/79	—	—		6		
24	2'8" x 7'0" x 1 3/4"	B	S.C. WOOD	WOOD	8/83	4/83	—		6		
	HEADWORKS BLDG.								3		
25	3'0" x 7'0" x 1 3/4"	C	H.M.	H.M.	3/80	3/80	3/80		10	1.5 □ MIN. FREE AREA	ADJUSTABLE DOOR GRILLE
26	3'0" x 7'0" x 1 3/4"	B	H.M.	H.M.	3/80	3/80	3/80		10		
27	3'0" x 7'0" x 1 3/4"	C	H.M.	H.M.	3/80	3/80	3/80		10	1.2 □ MIN FREE AREA	24" x 24" DOOR GRILLE
28	(2) 3'0" x 7'0" x 1 3/4"	C	H.M.	H.M.	7/80	7/80	7/80		8	2.0 □ MIN. FREE AREA	GRILLE @ TOP AND BOTTOM, EACH LEAF
28A	12'0" x 10'0" CURTAIN	ROLL UP	METAL	METAL	SPECS	SPECS	SPECS				ROLLING W/ 3'0" x 6'8" PASS DOOR; SEE NOTE 1
	CHLORINE BLDG.										
29	3'0" x 7'0" x 1 3/4"	C	H.M.	H.M.	SIM. 1/80	5/80	SIM. 1/80		7	1.0 □ MIN. FREE AREA	MANUALLY ADJUSTABLE DOOR GRILLE
30	3'0" x 7'0" x 1 3/4"	B	H.M.	H.M.	SIM. 2/80	SIM. 2/80	SIM. 2/80		11		
31	3'0" x 7'0" x 1 3/4"	C	H.M.	H.M.	SIM. 1/80	6/80	SIM. 1/80		7	3.0 □ MIN. FREE AREA	GRILLE @ TOP AND BOTTOM
32 & 33	(2) 4'0" x 15'1/2" x 1 3/4"	C	H.M.	H.M.	SIM. 2/80	SIM. 2/80	SIM. 2/80		9		VERIFY FRAME HT. TO MATCH TOP OF HANDRAIL
33A	(2) 3'0" x 7'0" x 1 3/4"	C	H.M.	H.M.	SIM. 2/80	SIM. 2/80	SIM. 2/80		8	1.5 □ MIN FREE AREA	
	SHOP BLDG.										
34	3'0" x 7'0" x 1 3/4"	C	H.M.	H.M.	1/80	1/80	1/80		7	2.0 □ MIN. FREE AREA	30" x 30" ADJUSTABLE DOOR GRILLE
35	2'6" x 7'0" x 1 3/4"	C	H.M.	H.M.	4/80	4/80	—		3	1.5 □ MIN. FREE AREA	
36	3'0" x 7'0" x 1 3/4"	B	H.M.	H.M.					3		
37	10'0" x 11'3 1/4" x 1 3/4"	E	WOOD	WOOD	1/81	1/81	1/81	3/16" h.s.			1 1/2 HR. "U" LABEL DOOR & FRAME
38	10'0" x 11'3 1/4" x 1 3/4"	E	WOOD	WOOD	1/81	1/81	1/81	3/16" h.s.			OVERHEAD, SECTIONAL; SEE NOTE 1
39	10'0" x 11'3 1/4" x 1 3/4"	E	WOOD	WOOD	1/81	1/81	1/81	3/16" h.s.			OVERHEAD, SECTIONAL; SEE NOTE 1
40	10'0" x 11'3 1/4" x 1 3/4"	E	WOOD	WOOD	1/81	1/81	1/81	3/16" h.s.			OVERHEAD, SECTIONAL; SEE NOTE 1
41	3'0" x 7'0" x 1 3/4"	C	H.M.	H.M.	9/80	9/80	9/80		7	2.0 □ MIN. FREE AREA	30" x 30" ADJUSTABLE DOOR GRILLE
42	(2) 2'6" x 7'0" x 1 3/4"	B	H.M.	H.M.	2/80	2/80	2/80		8		
	INCINERATION BLDG.										
43	3'0" x 7'0" x 1 3/4"	D	H.M.	H.M.	SIM. 2/80	SIM. 2/80	SIM. 2/80		10	1.5 □ MIN. FREE AREA	
44	3'0" x 7'0" x 1 3/4"	B	H.M.	H.M.	SIM. 1/80	8/80	SIM. 1/80		7		
45	△ 5'0" x 11'6" CLR OPNG	SLIDING	SEE SPECS	H.M.	SPECS	SPECS	SPECS				
46	12'0" x 12'0"	E	WOOD	WOOD	4/81	5&7/81	4/81	3/16" h.s.			1 1/2 HR. LABEL DOOR & FRAME ; SEE NOTE 1
	PRIMARY SLUDGE P.S.										OVERHD. VERT. LIFT W/ 3'0" x 6'8" PASS DOOR; SEE NOTE 1
47	3'0" x 7'0" x 1 3/4"	C	H.M.	H.M.	7/80	7/80	7/80		7	1.5 □ MIN. FREE AREA	

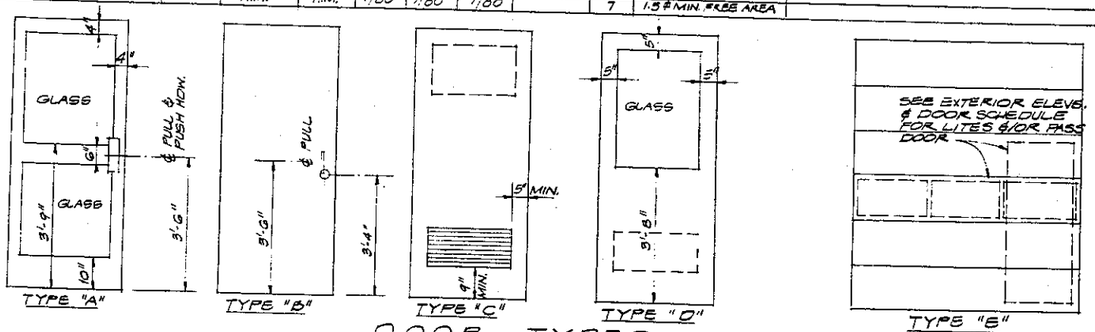

DOOR TYPES

HARDWARE SCHEDULE

HW-1

1 CYLINDER

HW-2

1 1/2 PR. BUTTS	1279 4 1/2 x 4 1/2	US10B	HAGER
1 LOCK	440 MOCO	US10B	RUSSWIN
1 STOP	357 3/4	US10B	RUSSWIN

HW-3

1 1/2 PR. BUTTS	1279 4 1/2 x 4 1/2	US10B	HAGER
1 LATCH	410 MOCO	US10B	RUSSWIN
STOP	357 3/4	US10B	RUSSWIN

HW-4

1 SET SLIDING DOOR HDW		2842	STANLEY
1 PULL	745 (INSIDE)	US10B	RUSSWIN
1 PULL	493 (OUTSIDE)	US10B	RUSSWIN

HW-5

1 1/2 PR. BUTTS	BB1279 4 1/2 x 4 1/2	US10B	HAGER
1 PUSH	8 x 16	US10B	RUSSWIN
1 PULL	748	US10	RUSSWIN
1 CLOSER	2810 LBL		RUSSWIN
1 STOP	357 3/4	US10B	RUSSWIN

HW-6

FOLDING DOOR HDW. 2995 AS REQ'D			STANLEY
1 PULL	44 B4	US10B	STANLEY

HW-7

1 1/2 PR. BUTTS	BB1191 4 1/2 x 4 1/2	US26D	HAGER
1 LOCK	440 MOCO	US26D	RUSSWIN
1 CLOSER	P2810 SBL		RUSSWIN
1 STOP	150 1/2	US26D	RUSSWIN

HW-8

3 PR. BUTTS	BB1168 6 x 4 1/2	US26D	HAGER
1 LOCK	452 MOCO	US26D	RUSSWIN
2 FLUSH BOLTS		19-12"	US26D	RUSSWIN
2 WALL STOPS	357 3/4	US26D	RUSSWIN

HW-9

5 PR. BUTTS	BB1168 6 x 4 1/2	US26D	HAGER
1 CANE BOLT	243 x 5" ARM		BUILDERS BRASS
1 CANE BOLT	244		BUILDERS BRASS

HW-10

1 1/2 PR BUTTS	1279 4 1/2 x 4 1/2	US26D	HAGER
1 LOCK	440 MOCO	US26D	RUSSWIN
1 STOP	357 3/4	US26D	RUSSWIN

HW-11

1 1/2 PR BUTTS	1279 4 1/2 x 4 1/2	US26D	HAGER
1 LATCH	410 MOCO	US26D	RUSSWIN
1 STOP	357 3/4	US26D	RUSSWIN

NOTES:

1. DOOR MFR. TO FURNISH & INSTALL HARDWARE.
2. MANUFACTURERS LISTED ARE TO ESTABLISH TYPE & QUALITY DESIRED. EQUALS IN QUALITY WILL BE ACCEPTED SUBJECT TO APPROVAL BY ENGINEER.

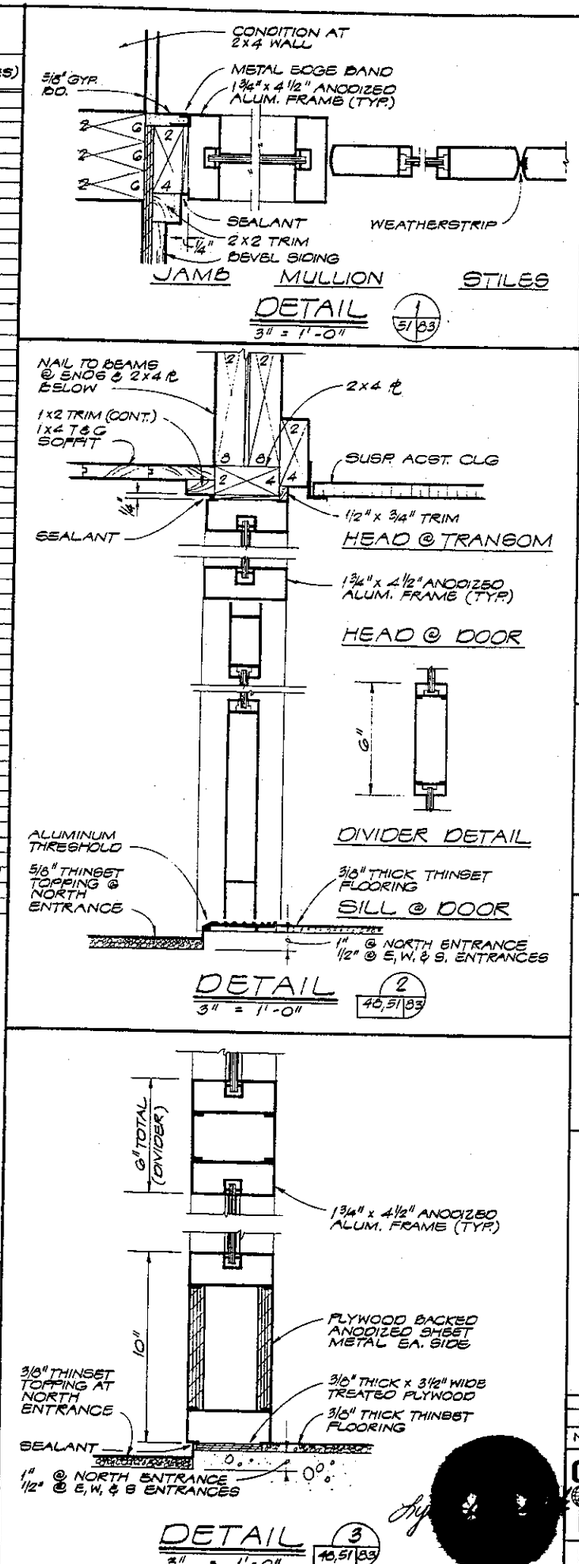

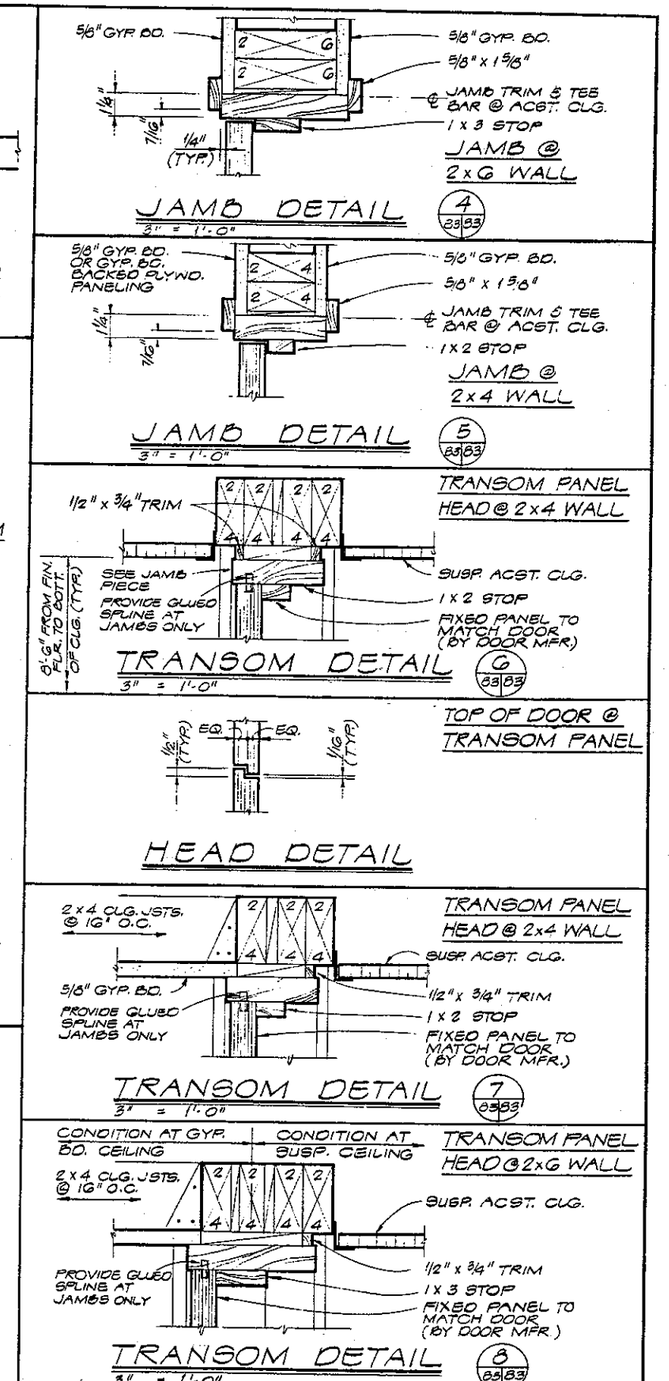

NO.	DATE	REVISION	BY	APD.
△		RECORD DRAWINGS	JLS	
△	3/21/75	FIREDOOR OPENING MOD.	RGB	JGG

CH2M HILL — ENGINEERS PLANNERS ECONOMISTS

CORNELL HOWLAND HAYES & MERRYFIELD

CLAIR A. HILL & ASSOCIATES

CITY OF BELLINGHAM, WASHINGTON
POST POINT POLLUTION CONTROL PLANT
SCHEDULE T

ARCHITECTURAL - DOOR SCHEDULE

DES. — SHEET 83
DR. 04 — OF 113
CK. — DATE APRIL 1972
DW. 36198.1 — SCALE —
DRAWING NO. C 6198-2

SUNDAY STATIONERY & PRINTING CO., PORTLAND, ORE.

ROOM FINISH SCHEDULE

ROOM NO.	BUILDING AND ROOM	FLOOR MATERIAL	FLOOR TREATMENT	FLOOR COLOR	BASE MATERIAL	BASE COLOR	NORTH WALL MATERIAL	NORTH WALL COLOR	SOUTH WALL MATERIAL	SOUTH WALL COLOR	WEST WALL MATERIAL	WEST WALL COLOR	EAST WALL MATERIAL	EAST WALL COLOR	CEILING MATERIAL	CEILING COLOR	DOOR (NO)	DOOR COLOR	FRAME MATERIAL	FRAME COLOR	CABINETS & SHELVES MATERIAL	CABINETS & SHELVES COLOR	REMARKS
	ADMINISTRATION BLDG.																						
A-1	FOYER	CONCRETE	TERRAZZO	A	4" RUBBER	B	ALUM./GLASS	SPECS	5/8 GYP. BD.	O	5/8 GYP. BD	O	5/8 GYP. BD.	O	ACST. TILE	F	1	SPECS	ALUM.	SPECS.	-	-	FOR MODEL TABLE FINISH, SEE COLOR LEGEND NOTES
2	CORRIDOR	CONCRETE	TERRAZZO	A	4" RUBBER	B	5/8 GYP. BD.	O	5/8 GYP. BD.	O	-	-	—	-	ACST. TILE	F	8, 10	SPECS	ALUM.	SPECS.	-	-	
3	SUPERINTENDENT	CONCRETE	TERRAZZO	A	4" RUBBER	B	5/8 GYP. BD.	O	5/8 GYP. BD.	O	5/8 GYP. BD.	O	5/8 GYP. BD.	O	ACST. TILE	F	2, 3	H	WOOD	H	-	-	
4	CONTROL ROOM	CONCRETE	TERRAZZO	A	4" RUBBER	B	5/8 GYP. BD.	O	5/8 GYP. BD.	O	5/8 GYP. BD.	O	5/8 GYP. BD.	O	ACST. TILE	F	4, 5	H	WOOD	H	-	-	
5	PANEL ROOM	CONCRETE	HARDENER	NONE	4" RUBBER	B	5/8 GYP. BD.	O	5/8 GYP. BD.	O	5/8 GYP. BD.	O	5/8 GYP. BD.	O	ACST. TILE	F	6	H	WOOD	H	-	-	
6	OFFICE	CONCRETE	TERRAZZO	A	4" RUBBER	B	5/8 GYP. BD.	O	5/8 GYP. BD.	O	5/8 GYP. BD.	O	5/8 GYP. BD.	O	ACST. TILE	F	7	H	WOOD	H	-	-	
7	LABORATORY	CONCRETE	TERRAZZO	A	4" RUBBER	B	5/8 GYP. BD.	O	5/8 GYP. BD.	O	5/8 GYP. BD.	O	5/8 GYP. BD.	O	ACST. TILE	F	9	H	WOOD	H	PLYWOOD	H	NOTE PLAS. LAM. WAINSCOT AT SHOWER AREA
8	OFFICE	CONCRETE	TERRAZZO	A	4" RUBBER	B	5/8 GYP. BD.	O	5/8 GYP. BD.	O	5/8 GYP. BD.	O	5/8 GYP. BD.	O	ACST. TILE	F	10	H	WOOD	H	PLYWOOD	H	
9	MECHANICAL ROOM	CONCRETE	HARDENER	NONE	4" RUBBER	B	5/8 GYP. BD.	O	5/8 GYP. BD.	O	5/8 GYP. BD.	O	5/8 GYP. BD.	O	5/8 GYP. BD.	O	11	H	WOOD	H	-	-	
10	HALL	CONCRETE	TERRAZZO	A	4" RUBBER	B	-	-	5/8 GYP. BD.	O	5/8 GYP. BD.	O	5/8 GYP. BD.	O	ACST. TILE	F	12	SPECS	ALUM	SPECS	-	-	
11	STORAGE	CONCRETE	HARDENER	NONE	4" RUBBER	B	5/8 GYP. BD.	O	5/8 GYP. BD.	O	5/8 GYP. BD.	O	5/8 GYP. BD.	O	5/8 GYP. BD.	O	14	H	WOOD	H	PLYWOOD	L	
12	VESTIBULE	CONCRETE	TERRAZZO	A	4" RUBBER	B	5/8 GYP. BD.	O	5/8 GYP. BD.	O	5/8 GYP. BD.	O	5/8 GYP. BD.	O	ACST. TILE	F	13	H	WOOD	H	-	-	
13	WET CLOSET	CONCRETE	HARDENER	NONE	—	-	BEVEL SIDING	STAIN	BEVEL SIDING	STAIN	BEVEL SIDING	STAIN	—	-	1x4 T&G	STAIN	-	-	-	-	-	-	SEE EXTERIOR COLORS
14	JANITOR'S CLOSET	CONCRETE	HARDENER	NONE	4" RUBBER	B	5/8 GYP. BD.	O	5/8 GYP. BD.	O	5/8 GYP. BD.	O	5/8 GYP. BD.	O	5/8 GYP. BD.	O	15	H	WOOD	H	PLYWOOD	L	
15	LOCKER ROOM	CONCRETE	TERRAZZO	A	4" RUBBER	B	5/8 GYP. BD.	O	5/8 GYP. BD.	O	5/8 GYP. BD.	O	5/8 GYP. BD.	O	ACST. TILE	F							
16	WOMENS TOILET	CONCRETE	TERRAZZO	A	C.T.	C	W.P. GYP. BD.	O	W.P. GYP. BD.	O	W.P. GYP. BD.	O	W.P. GYP. BD.	O	ACST. TILE	F	16	H	WOOD	H	-	-	C.T. WAINSCOT @ ALL WALLS
17	MEN'S TOILET	CONCRETE	TERRAZZO	A	C.T.	C	W.P. GYP. BD.	O	W.P. GYP. BD.	O	W.P. GYP. BD.	O	W.P. GYP. BD.	O	ACST. TILE	F	—	-	-	-	-	-	
18	DRYING ROOM	CONCRETE	TERRAZZO	A	4" RUBBER	B	W.P. GYP. BD.	O	W.P. GYP. BD.	O	W.P. GYP. BD.	O	W.P. GYP. BD.	O	ACST. TILE	F	NONE	-	-	-	-	-	
19	SHOWER	—	—	-	—	-	FIBER GLASS	-	—	-	FIBER GLASS	-	FIBER GLASS	-	FIBER GLASS	-	NONE	-	-	-	-	-	SEE FIBER GLASS SHOWER UNIT DETAILS & SPECS.
20	SHOWER	—	—	-	—	-	FIBER GLASS	-	—	-	FIBER GLASS	-	FIBER GLASS	-	FIBER GLASS	-	NONE	-	-	-	-	-	SEE FIBER GLASS SHOWER UNIT DETAILS & SPECS.
21	LAVATORY	CONCRETE	TERRAZZO	A	C.T.	C	W.P. GYP. BD.	O	W.P. GYP. BD.	O	W.P. GYP. BD.	O	W.P. GYP. BD.	O	ACST. TILE	F	17	H	WOOD	H	-	-	
22	LUNCH & CONFERENCE	CONCRETE	TERRAZZO	A	4" RUBBER	B	5/8 GYP. BD.	O	5/8 GYP. BD.	O	5/8 GYP. BD.	O	5/8 GYP. BD.	O	ACST. TILE	F	19, 24	H	WOOD	H	PLYWOOD	H	
23	KITCHENETTE	CONCRETE	NONE	-	4" RUBBER	B	5/8 GYP. BD.	O	5/8 GYP. BD.	O	5/8 GYP. BD.	O	5/8 GYP. BD.	O	5/8 GYP. BD.	O	20	H	WOOD	H	-	-	
24	STORAGE	CONCRETE	TERRAZZO	A	4" RUBBER	B	5/8 GYP. BD.	O	5/8 GYP. BD.	O	5/8 GYP. BD.	O	5/8 GYP. BD.	O	5/8 GYP. BD.	O	21	H	WOOD	H	-	-	
25	COAT CLOSET	CONCRETE	TERRAZZO	A	4" RUBBER	B	5/8 GYP. BD.	O	5/8 GYP. BD.	O	-	-	5/8 GYP. BD.	O	5/8 GYP. BD.	O	22	H	WOOD	H	PLYWOOD	L	
26	COAT CLOSET	CONCRETE	TERRAZZO	A	4" RUBBER	B	5/8 GYP. BD.	O	5/8 GYP. BD.	O	-	-	5/8 GYP. BD.	O	5/8 GYP. BD.	O	23	H	WOOD	H	PLYWOOD	L	
	HEADWORKS BLDG.																						
H-1	GRIT SEPARATION RM.	CONCRETE	HARDENER	NONE	NONE	-	T&G/CONC.	E@T&G	CONC.	E	T&G/CONC.	E@T&G	CONCRETE	-	EXPOSED	G	25	I	H.M.	J	-	-	
2	SEWAGE SHREDDER	CONCRETE	HARDENER	NONE	NONE	-	CONC.	-	T&G/CONC.	E@T&G	T&G/CONC.	E@T&G	-	-	EXPOSED	G	26	I	H.M.	J	-	-	
3	GRIT CHAMBER	CONCRETE	HARDENER	NONE	NONE	-	T&G/CONC.	E@T&G	T&G/CONC.	E@T&G	T&G/CONC.	E@T&G	T&G/CONC.	E@T&G	EXPOSED	G	27	I	H.M.	J	-	-	
4	GRIT LOADING RM.	CONCRETE	HARDENER	NONE	NONE	-	CONCRETE	-	CONCRETE	-	CONCRETE	-	CONCRETE	-	EXPOSED	-	28A	I	SPECS.	J	-	-	
5	GRIT PUMP ROOM	CONCRETE	HARDENER	NONE	NONE	-	CONCRETE	-	CONCRETE	-	CONCRETE	-	CONCRETE	-	EXPOSED	-	28	I	H.M.	J	-	-	
	CHLORINE BLDG.																						
C-1	CHLORINATOR RM.	CONCRETE	HARDENER	NONE	NONE	-	T&G/CONC.	E@T&G	T&G/CONC.	E@T&G	T&G/CONC.	E@T&G	T&G/CONC.	E@T&G	EXPOSED	G	31	I	H.M.	J	-	-	1/2" BACKING BD. BEHIND GYP. BD. SEE DETAIL J&K 1-77
2	ANALYZER ROOM	CONCRETE	HARDENER	NONE	NONE	-	5/8 GYP. BD.	O	5/8 GYP. BD.	O	5/8 GYP. BD.	O	5/8 GYP. BD.	O	5/8 GYP. BD.	O	29	I	H.M.	J	-	-	
3	CHLORINE ROOM	CONCRETE	HARDENER	NONE	NONE	-	T&G/CONC.	E@T&G	T&G/CONC.	E@T&G	T&G/CONC.	E@T&G	T&G/CONC.	E@T&G	EXPOSED	G	30	I	H.M.	J	-	-	
4	CHLORINE STORAGE	CONCRETE	HARDENER	NONE	NONE	-	T&G/CONC.	E@T&G	T&G/CONC.	E@T&G	T&G	E	T&G	E	EXPOSED	G	32, 33	I	H.M.	J	-	-	
5	STORE ROOM	CONCRETE	HARDENER	NONE	NONE	-	CONCRETE	-	CONCRETE	-	T&G/CONC.	E@T&G	T&G	E	EXPOSED	G	33A	I	H.M.	J	-	-	
	SHOP BLDG.																						
S-1	MAINTENANCE SHOP	CONCRETE	HARDENER	NONE	NONE	-	T&G	E	T&G/CONC.	E@T&G	T&G/CONC.	E@T&G	T&G/CONC.	E@T&G	EXPOSED	G	34, 36, 37*	I	H.M., WOOD*	J	PLYWOOD	I	1 HR WALL BETWEEN MAINTENANCE & VEHICLE STORAGE.
2	TOILET	CONCRETE	HARDENER	NONE	NONE	-	T&G	E	CONCRETE	-	T&G	E	T&G	E	5/8 GYP. BD.	O	35	I	H.M.	J	-	-	FURR. CEILING DOWN TO 8'-6" ABOVE FIN. FLR. W/2x6's @16"
3	VEHICLE STORAGE	CONCRETE	HARDENER	NONE	NONE	-	T&G	E	T&G	E	T&G/CONC	E@T&G	T&G/CONC.	E@T&G	EXPOSED	G	38, 39, 40, 41	I	WOOD	J	-	-	1 HR WALL BETWEEN VEHICLE STORAGE & MAINTENANCE
4	GENERAL STORAGE	CONCRETE	HARDENER	NONE	NONE	-	CONC.	-	T&G	E	T&G/CONC.	E@T&G	T&G/CONC.	E@T&G	EXPOSED	G	42	I	H.M.	J	-	-	
	INCINERATION BLDG.																						
I-1	CONTROL ROOM	CONCRETE	HARDENER	NONE	NONE	-	5/8 GYP. BD.	O	5/8 GYP. BD.	O	5/8 GYP. BD.	O	5/8 GYP. BD.	O	5/8 GYP. BD.	O	43	I	H.M.	J	PLYWOOD	H	
2	MAIN FLOOR	CONCRETE	HARDENER	NONE	NONE	-	T&G/CONC.	E@T&G	T&G/CONC.	E@T&G	CONCRETE	-	CONCRETE	-	EXPOSED	G	44, 45	I	H.M.	J	-	-	
3	MECH. EQUIP. RM.	CONCRETE	HARDENER	NONE	NONE	-	CONCRETE	O	CONCRETE	O	CONCRETE	O	CONCRETE	O	EXPOSED	O	46	I	WOOD	J	-	-	
	PRIMARY SLUDGE PS.	CONCRETE	HARDENER	NONE	NONE	-	CONCRETE	—	CONCRETE	-	CONCRETE	-	CONCRETE	-	CONCRETE	-	47	I	H.M.	J	-	-	

KEY TO ARCHITECTURAL ABBREVIATIONS

ACST.	ACOUSTICAL	JAN.	JANITOR	SUSP.	SUSPENDED
ALUM.	ALUMINUM	JT.	JOINT		
A.B.	ANCHOR BOLT	JST	JOIST	T.P.G	TEMPERED PLATE GLASS
ASPH.	ASPHALT			T.P.H.	TOILET PAPER HOLDER
		LAB.	LABORATORY	T&G	TONGUE AND GROOVE
BET., BTWN.	BETWEEN	LAV	LAVATORY	TRTD	TREATED
BOTT.	BOTTOM	LG.	LONG	TYP.	TYPICAL
B/U	BUILT-UP				
		M.B.	MACHINE BOLT	VERT.	VERTICAL
CAB.	CABINET	MFR.	MANUFACTURER		
CLG.	CEILING	MAX.	MAXIMUM	W.C.	WATER CLOSET
℄	CENTERLINE	MIN.	MINIMUM	W/	WITH
CTRS.	CENTERS	MECH	MECHANICAL	W.P.	WATERPROOF
CER., C.T.	CERAMIC, CERAMIC TILE				
CLR.	CLEAR	O.C.	ON CENTERS		
CLOS.	CLOSET	OPNG	OPENING		
COL	COLUMN	OPP.	OPPOSITE		
CONC	CONCRETE	O.H.	OPPOSITE HAND		
CONT.	CONTINUOUS	O.F.	OUTSIDE FACE		
		P.T.D.	PAPER TOWEL DISPENSER		
DIM., DIMEN	DIMENSION	P.T.H.	PAPER TOWEL HOLDER		
D.F.	DOUGLAS FIR	PATT.	PATTERN		
DN	DOWN	PLAS. LAM.	PLASTIC LAMINATE		
		PL.	PLATE		
EA.	EACH	P.G.	PLATE GLASS		
ELEV.	ELEVATION	PLYWD.	PLYWOOD		
EQ.	EQUAL				
ENAM.	ENAMEL	RECEP	RECEPTACLE		
F.O.	FACE OF	REINF.	REINFORCING		
FIN.	FINISHED	REQ'D.	REQUIRED		
FLR.	FLOOR	RM.	ROOM		
F.D.	FLOOR DRAIN				
FDTN.	FOUNDATION				
		SCHED	SCHEDULE		
GALV	GALVANIZED	SERV.	SERVICE		
GEN.	GENERAL	SHT.	SHEET		
GL.	GLASS	SIM.	SIMILAR		
GYP. BD.	GYPSUM BOARD	S.D.	SOAP DISPENSER		
		SPECS.	SPECIFICATIONS		
HDR	HEADER	STD	STANDARD		
H.S.	HEAVY SHEET GLASS	STL.	STEEL		
H.M.	HOLLOW METAL	STG.	STORAGE		

COLOR LEGEND

A	FROM GRAY CEMENT TERRAZZO CATALOG
B	BURKE #591 P
C	FONDONA ENCORE #700 SATIN WHITE W/ MATCHING GROUT
D	DUTCH BOY COLOR GALLERY #43/17
E	OLYMPIC "BEIGE GRAY" (SOLID COLOR STAIN)
F	ARMSTRONG MINABOARD - CORTEGA
G	OLYMPIC #700 "SEMI-TRANSPARENT STAIN"
H	OLYMPIC #725 "SEMI-TRANSPARENT STAIN"
I	DUTCH BOY COLOR GALLERY #13/9
J	DUTCH BOY COLOR GALLERY #50/45
K	FORMICA #931 PUTTY GRAY
L	OLYMPIC "CLEAR INTERIOR SATIN" FIN.

NOTES:
1. INTERIOR WOOD TRIM - OLYMPIC #725 "SEMI-TRANSPARENT STAIN" EXCEPT AT MODEL TABLE T&G BOARDS
2. MODEL TABLE T&G BOARDS SHALL BE OLYMPIC #721 "SEMI-TRANSPARENT STAIN"

EXTERIOR COLORS
1. EXPOSED METAL (OTHER THAN ANODIZED) SHALL BE DUTCH BOY COLOR GALLERY #50/45
2. BEVEL SIDING, WOOD TRIM, GLU-LAMS SHALL BE OLYMPIC #700 SEMI-TRANSPARENT STAIN.

FINISH APPLICATION SCHEDULE (INTERIOR)

CONCRETE:
1ST COAT : DUTCH BOY ACRYLIC INTERIOR LATEX 34W14
2ND " : " " " "

WOOD DOORS, FRAMES & TRIM (STAINED)
1ST COAT : OLYMPIC CLEAR SEAL PRIME
2ND " : OLYMPIC SEMI-TRANSPARENT STAIN
3RD " : OLYMPIC CLEAR INTERIOR SATIN

GYP. BD. RM. NOS. A-9, 11, 14, 24 25, 26; C-2; I-1
1ST COAT : DUTCH BOY VINYL SPEED PRIMER 30W10
2ND " : DUTCH BOY ALKYD FLAT WALL 32P10

RM. NOS. A-7, 13, 15, : 6, 17, 18, 21 ; H-6
1ST COAT : DUTCH BOY VINYL SPEED PRIMER 30W10
2ND " : DUTCH BOY NALTHETIC EGGSHELL ENAM. 35P10
3RD " : " " " "

RM. NOS. A-1, 2, 3, 4, 5, 6, 8, 10, 12, 22
1ST COAT : DUTCH BOY ACRYLIC SATIN FIN. ENAM. 36W100
2ND " : " " " "

WOOD SIDING
1ST COAT : BEFORE SIDING INSTALLATION
2ND " : AFTER SIDING INSTALLATION

SHELVING
1ST COAT : DUTCH BOY LUSTRELAC ENAMEL UNDERCOAT 30P15
2ND " : " " NALTHETIC ENAMEL 35P10
3RD " : " " " " "

METAL (SHOP PRIMED)
TOUCH UP W/ DUTCH BOY ANTI-RUST PRIMER 059
1ST COAT : DUTCH BOY EXTERIOR UNDERCOAT 30P06
2ND " : DUTCH BOY MARINA HOUSE & TRIM 31P10

LOCKER ROOM BENCHES
1ST COAT : OLYMPIC CLEAR SEAL PRIME
2ND " : OLYMPIC CLEAR INTERIOR STAIN
3RD " : " " "

EXPOSED ROOF DECKING & EXPOSED STRUCTURAL MEMBERS
1ST COAT : PRIMER SEALER BEFORE INSTALLATION
2ND " : SEMI-TRANSPARENT STAIN AFTER INSTALLATION

WOOD CABINETWORK
EXPOSED SURFACES - WHEN DOORS AND DRAWERS ARE CLOSED : ALL WOOD SURFACES TO RECEIVE ONE COAT PENETRATING STAIN ; 2 COATS VARNISH AND ONE COAT SATIN VARNISH. INCLUDE BOTH FACES AND ALL EDGES OF DOORS & OPEN SHELVING (DUTCH BOY 23-00 SERIES, 37V21, 37V22)

CONCEALED SURFACES - WHEN DOORS AND DRAWERS ARE CLOSED : ONE COAT DUTCH BOY URETHANE CLEAR SEALER, 70-62 .

BACKS AND SIDES AGAINST FLOORS AND WALLS - ONE HEAVY COAT DUTCH BOY URETHANE CLEAR SEALER, 70-62 . (NO SURFACE LEFT WITHOUT SOME TYPE OF FINISH.

FINISH APPLICATION SCHEDULE (EXTERIOR)

BEVEL SIDING, WOOD TRIM & GLU-LAMS
1ST COAT : BEFORE INSTALLATION
2ND " : AFTER INSTALLATION

GALVANIZED STEEL
1ST COAT : DUTCH BOY PRE-TREATMENT WASH PRIMER
2ND " : DUTCH BOY GALV. METAL PRIMER 069
3RD " : DUTCH BOY EXTERIOR UNDERCOAT 30P06
4TH " : DUTCH BOY MARINA HOUSE & TRIM 31P10

METAL (SHOP PRIMED)
TOUCH UP W/ DUTCH BOY ANTI-RUST PRIMER 059
1ST COAT : DUTCH BOY EXTERIOR UNDERCOAT 30P06
2ND " : DUTCH BOY MARINA HOUSE & TRIM 31P10

NOTE:
THE USE OF PROPRIETARY NAMES IN THE SCHEDULES IS NOT INTENDED TO INDICATE PREFERENCE FOR THE SPECIFIC MANUFACTURER'S PRODUCTS ; BUT RATHER TO ESTABLISH QUALITY AND COLOR DESIRED. OTHER MANUFACTURER'S PRODUCTS MAY BE USED UPON APPROVAL BY THE ENGINEER.

NO.	DATE	RECORD DRAWINGS REVISION	JLS BY	APD.

CH2M HILL
ENGINEERS PLANNERS ECONOMISTS

CORNELL HOWLAND HAYES & MERRYFIELD
CLAIR A. HILL & ASSOCIATES

CITY OF BELLINGHAM, WASHINGTON
POST POINT POLLUTION CONTROL PLANT
SCHEDULE T

ARCHITECTURAL - FINISH SCHEDULE

SHEET 84 OF 113
DATE: APRIL 1972
SCALE: NO SCALE
DRAWING NO. C 6198-2

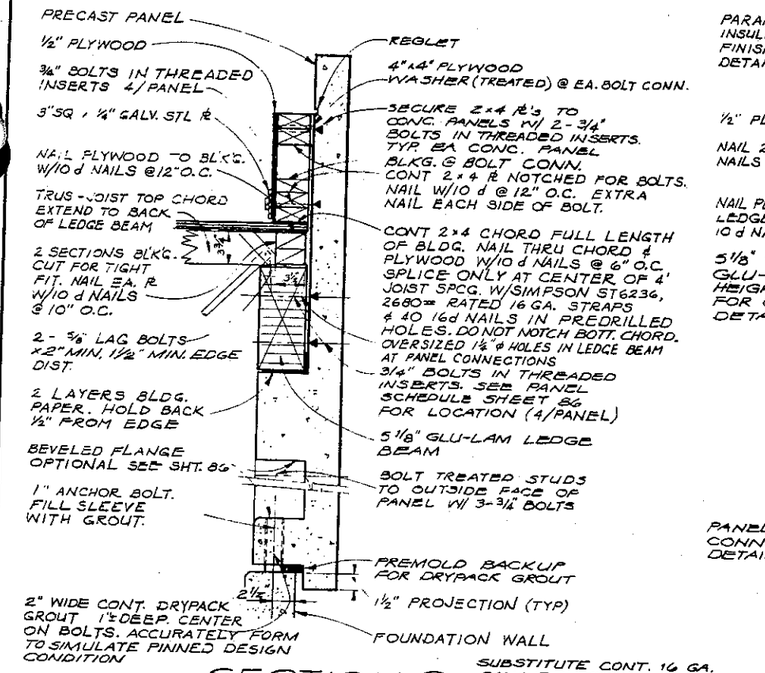

SECTION A (17/74/85)
N.T.S. 17

SUBSTITUTE CONT. 16 GA. GALV. STL. STRAP x 69'-4" FOR 2x4 CHORD BETWEEN GRIT SEPARATION & DETRITOR ROOM IN HEADWORKS BLDG

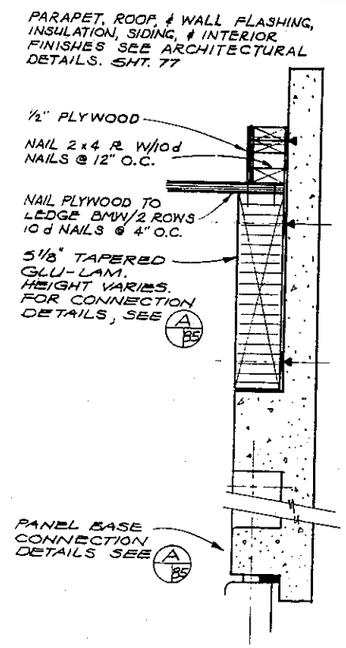

SECTION B (17/74/85)
N.T.S.

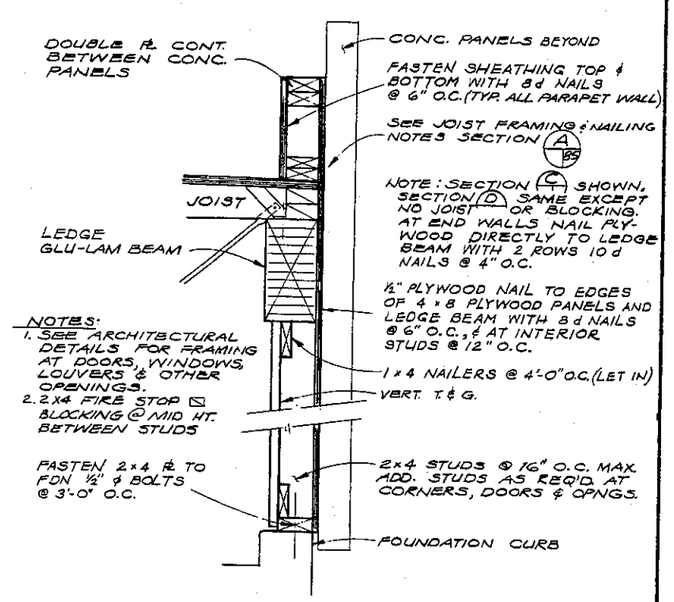

NOTES:
1. SEE ARCHITECTURAL DETAILS FOR FRAMING AT DOORS, WINDOWS, LOUVERS & OTHER OPENINGS.
2. 2x4 FIRE STOP BLOCKING @ MID HT. BETWEEN STUDS

SECTION C (17/74/85) D (17/85)
N.T.S.

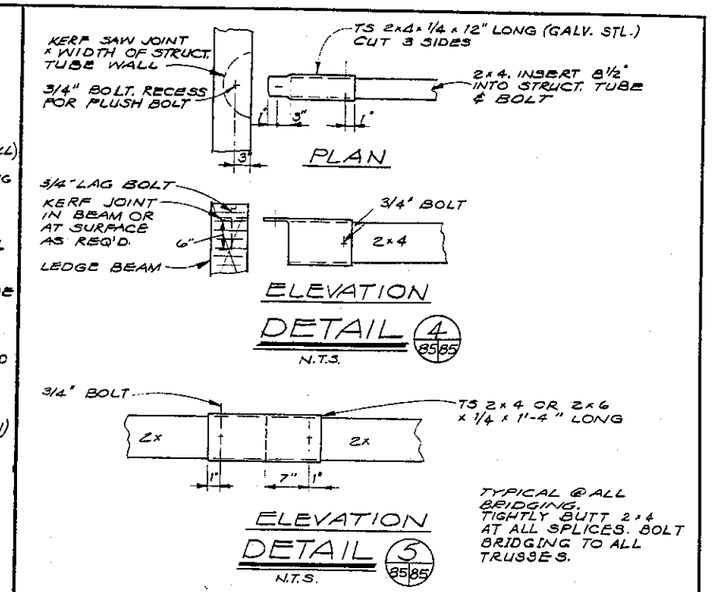

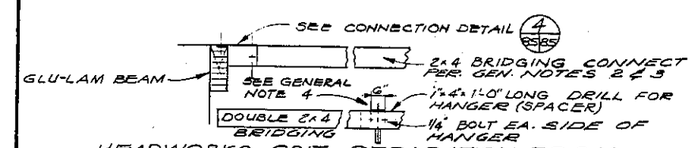

HEADWORKS GRIT SEPARATION ROOM
BRIDGING DETAIL 6 (17/85)
N.T.S.

GENERAL NOTES

1. 'SEALANT' NOTED, SILICONE TYPE. SEALANT JOINT CONFIGURATION, DEPTH = WIDTH.
2. ALL BRIDGING TO JOIST CONNECTIONS W/ BOLTED CLIPS OF GALV. STEEL DRILLED FOR 1/4" BOLTS. CLIPS DESIGNED BY MANUFACTURER.
3. CROSS BRACING AT EVERY FOURTH JOIST. BOLT W/ 1/4" BOLTS. TYPICAL ALL BRIDGING. BRACING DESIGNED & SUPPLIED BY MANUFACTURER.
4. INSTALL THREADED ROD HANGERS W/4"x4"x1/4" PL & SPRING HANGERS
5. BEVELS ON ALL PANEL FLANGES OPTIONAL SEE STANDARD PANEL SHT. 86

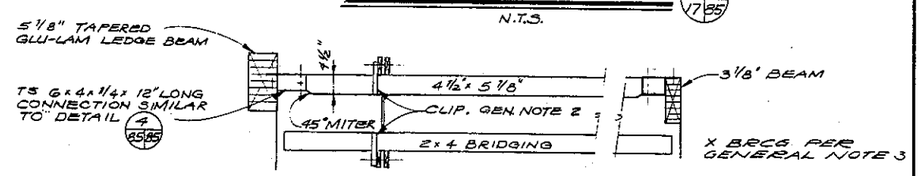

HEADWORKS-SEWAGE SHREDDER BASINS
BRIDGING DETAIL 7 (17/85)
N.T.S.

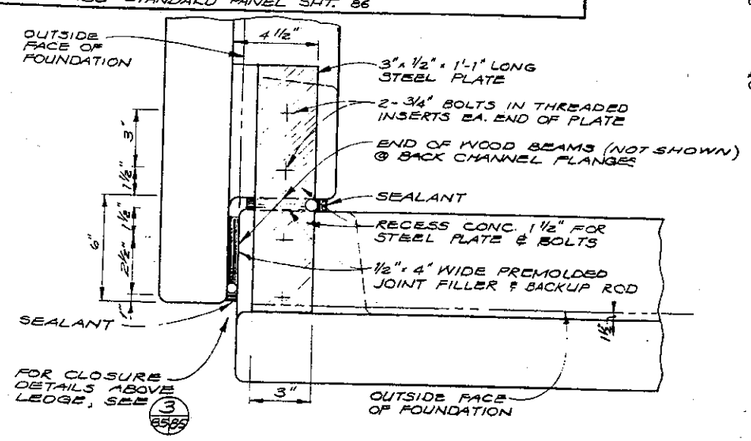

PANEL CORNER DETAIL 1 (17/43/74/52/85)
3" = 1'-0"

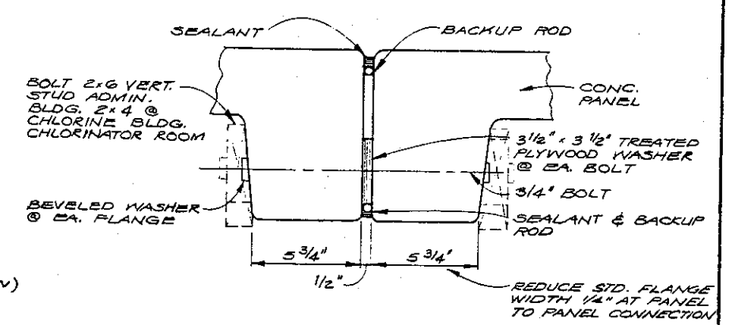

SOLID PANEL
CONNECTION DETAIL 2 (85/74/85)
3" = 1'-0"

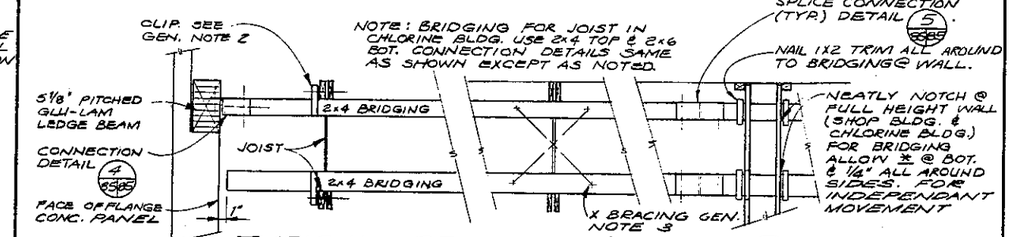

TYPICAL BRIDGING DETAIL 8 (17/85)
N.T.S.
HEADWORKS DETRITOR ZONE, CHLORINE BUILDING, SHOP BLDG.

* 1" CHLORINE BLDG
2" SHOP BLDG

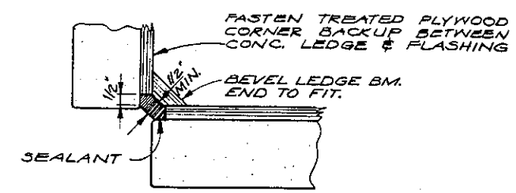

CLOSURE DETAIL 3 (85/85)
3" = 1'-0"

NO.	DATE	REVISION	BY	APD.
△		RECORD DRAWINGS	JLS	

CH2M HILL — ENGINEERS PLANNERS ECONOMISTS

CORNELL HOWLAND HAYES & MERRYFIELD — CLAIR A. HILL & ASSOCIATES

CITY OF BELLINGHAM, WASHINGTON
POST POINT POLLUTION CONTROL PLANT
SCHEDULE T

STRUCTURAL - DETAILS

DR. FGK — SHEET 85
CK. CPC — OF 113
CK. FGE — APRIL 1972
C 6198-2

ELLIS STATIONERY & PRINTING CO., PORTLAND, ORE.

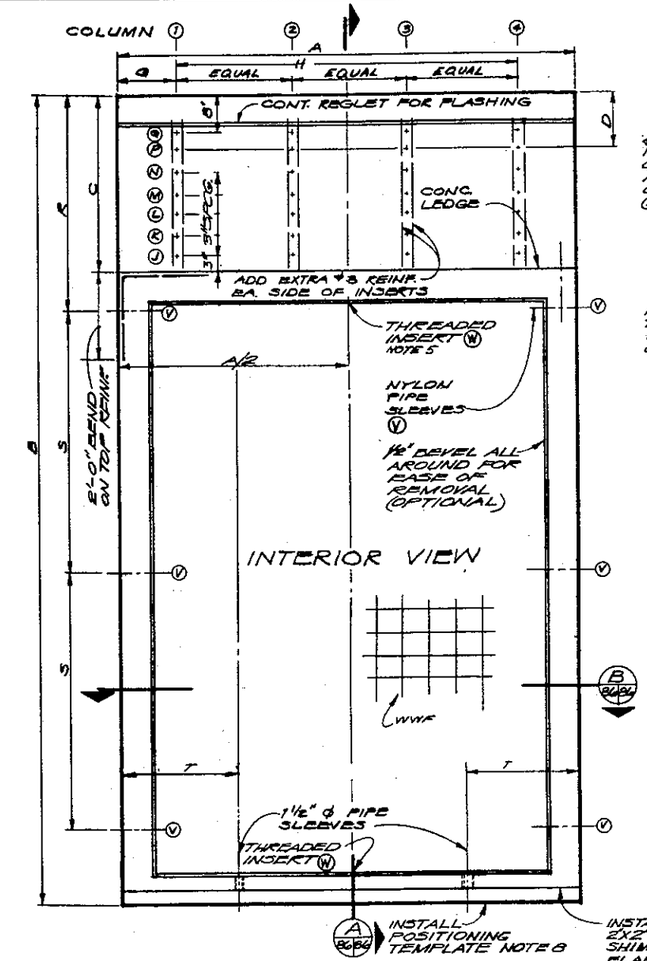

BASIC PANEL

N.T.S.

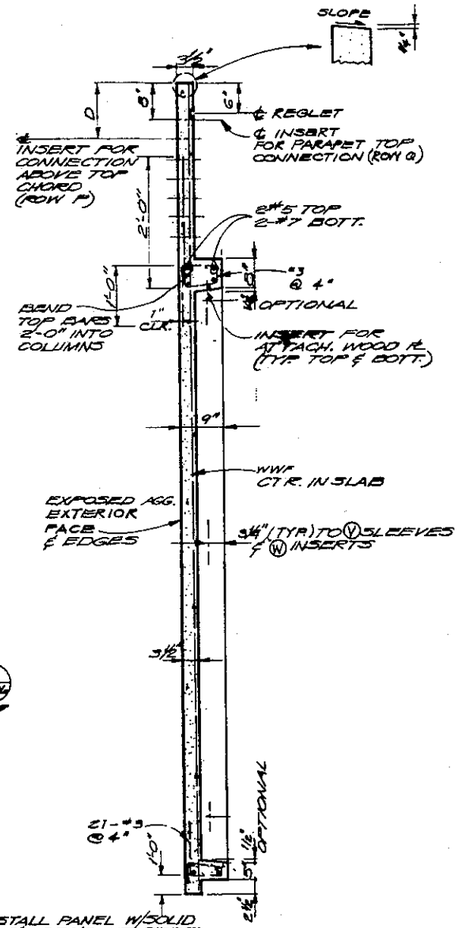

SECTION A

N.T.S.

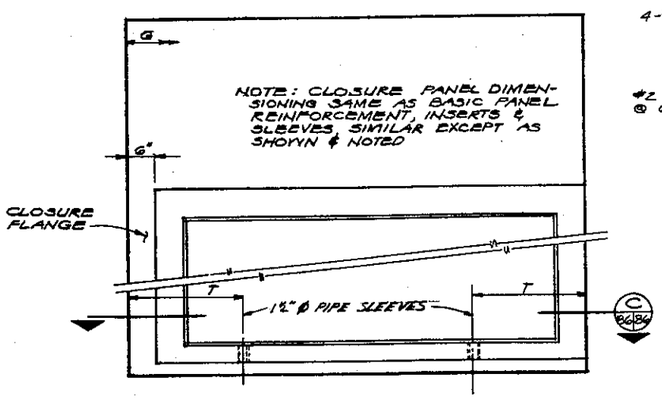

CLOSURE PANEL

N.T.S.

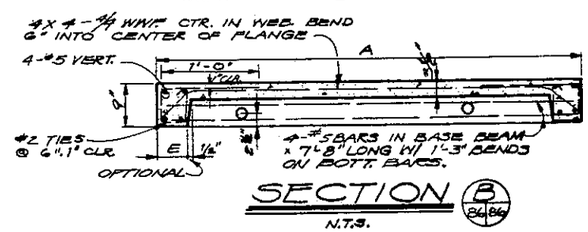

SECTION B

N.T.S.

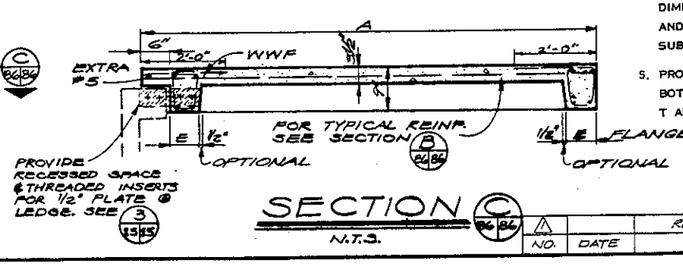

SECTION C

N.T.S.

PANEL SCHEDULE

BUILDING	PANEL DESIG.	PANEL TYPE	A	B	C	E LT	E RT	*D	G	T	H	INSERTS COLUMN LOCATION ①	②	③	④	HORIZ. SLEEVE SPACING R	S	REMARKS
HEADWORKS	H10	BASIC	2'-0"	14'-1 1/2"	3'-0"	6"	6"	24 1/2"	10	8	4	JPQ	-	-	JPQ	4'-9"	4'-0"	NOTE 2
	H20	BASIC	8'-0"					24 1/2"			76	JPQ	JP	JP	JPQ			
	H21	BASIC	8'-0"					-				JLQ	-	-	JLQ			
	H22	BASIC	8'-0"					18 1/2"				JLPQ	P	P	JLPQ			NOTE 2 (4 PANELS)
	H23	BASIC	8'-0"					-				JNQ	-	-	JNQ			
	H30	CLOSURE	8'-0"					-				JKQ	-	-	JKQ			NOTE 2
	H31	CLOSURE	8'-0"					-				JMQ	-	-	JMQ			NOTE 2
ADMINISTRATION BUILDING	A10	CLOSURE	7'-11 3/4"	14'-1 1/2"	3'-0"	6"	5 3/4"	-				JMQ	-	-	JMQ			NOTE 2 NOTE 9
	A20	BASIC	7'-11 3/4"			5 3/4"	6"	-				-	JNQ	-	JNQ			NOTES 9 12
	A21	BASIC	8'-0"			6"	6"	19 1/4"				JPQ	JP	JP	JPQ			NOTE 2 (4 PANELS)
	A11	CLOSURE	8'-0"			6"	6"	19 1/4"				JPQ	JP	JP	JPQ			
CHLORINE BUILDING	C10	CLOSURE	8'-0"	16'-1 1/2"	2'-7"	6"	6"	-		8 & 14		JKQ	-	-	JKQ		5'-0"	NOTE 2
	C11	CLOSURE	7'-11 3/4"			5 3/4"	6"	-		8		JKQ	-	-	JKQ			NOTES 2-9-12
	C20	BASIC	7'-11 3/4"			6"	5 3/4"	-				JLQ	-	-	JLQ			NOTE 9
	C21	BASIC	8'-0"			6"	6"	19"				JPQ	JP	JP	JPQ			NOTE 2 (4PANELS)
SHOP BUILDING	S10	BASIC	8'-0"	16'-1 1/2"	2-7"	6"	6"	18"				JPQ	JP	JP	JPQ			NOTE 2 (2 PANELS)
	S11	BASIC	7'-11 1/2"			5 3/4"	5 3/4"	-				JLQ		-	JLQ			NOTE 9
	S12	BASIC	7'-11 1/2"			5 3/4"	5 3/4"	-				JMQ			JMQ			NOTE 9
	S40	CLOSURE	7'-11 3/4"			6"	5 3/4"	-				-	JLQ	-	JLQ			NOTE 2 NOTE 9
	S30	BASIC	2'-0"			6"	6"	18"			4	JPQ		-	JPQ			
	S20	BASIC	5'-0"			6"	6"	18"			40	JPQ	JP	JP	JPQ			
WALKWAY FENCE PANELS	W1	BASIC	8'-0"	VARIES	-	6"	6"	NOT APPLICABLE										NOTE 10
	W2	BASIC	8'-0"		-			" "										
	W3	BASIC	8'-0"		-			" "										
	W4	BASIC	8'-0"		-													
	W5	BASIC	8 - 0"		-													

* DIMENSION D DETERMINED BY ESTIMATED MATERIALS THICKNESSES ABOVE LEDGE. VERIFY BASED ON ACTUAL MATERIALS DIMENSIONS AND CONSTRUCTION TOLERANCE REQUIRED. DO NOT NOTCH CONTINUOUS CHORD BELOW INSERT ROW P.

GENERAL NOTES

1. PANEL CONNECTIONS (ALL BOLTS 3/4" UNLESS OTHERWISE NOTED)
   A. CONNECT EACH PANEL TO G.L. LEDGEBEAM AS FOLLOWS:
      8' PANEL 4 - BOLTS
      5' PANEL 4 - BOLTS
      2' PANEL 2 - BOLTS
   B. CONNECT EACH PANEL TO PARAPET STUD WALL AS FOLLOWS:
      END WALLS - 8' PANEL 2 - BOLTS TOP
      LONGITUDINAL WALLS - 8' PANEL 2 - BOLTS TOP 4 BOLTS BOTTOM
      5' PANEL 2 - BOLTS TOP 4 BOLTS BOTTOM
      2' PANEL 2 - BOLTS TOP 2 BOLTS BOTTOM
   C. CONNECT EACH PANEL FLANGE TO WOOD STUD OR ADJACENT PANEL FLANGE W/3-BOLTS
   D. ANCHOR EACH PANEL THROUGH BOTTOM FLANGE SLEEVES WITH 2-1" ϕ ANCHOR BOLTS (EXCEPT 4-1" ANCHORBOLTS C-10 PANELS ONLY, ANCHORBOLT EMBEDMENT & CONFIGURATION TO DEVELOP FULL BOLT CAPACITY).
2. TIE CORNER PANELS WITH GALV. STEEL PLATE AT LEDGE. SEE DETAIL REFERENCE THIS SHEET. ELIMINATE SLEEVES AT CORNER FLANGES WITHOUT FURRED WALLS
3. LOCATIONS REQUIRING BOLTS AND INSERTS ARE NOTED BY LETTER ROW UNDER EACH COLUMN (I.E. COLUMN 1 J, M, Q INDICATES BOLTS REQUIRED 3" AND 12" ABOVE LEDGE AND 8" BELOW TOP OF PANEL; BLANKS -- UNDER A COLUMN INDICATE NO INSERTS REQUIRED)
4. LOCATIONS OF INSERTS AND SLEEVES ARE FOR DESIGN CONCEPT. FINAL DIMENSIONS FOR ALL COMPONENT PARTS INCLUDING LEDGE BEAMS, JOISTS AND PANELS FOR PROPER FIT ARE THE RESPONSIBILITY OF THE CONTRACTOR. SUBMIT SHOP DRAWINGS AS SPECIFIED.
5. PROVIDE Ⓦ INSERTS IN ALL ADMINISTRATION BUILDING PANELS TOP AND BOTTOM. INSTALL ADDITIONAL INSERTS IN CONCRETE PANEL TO RECEIVE T AND G FURRING AND CONNECT INTERIOR WALLS
6. USE NYLON OR APPROVED MATERIAL FOR Ⓥ SLEEVES. SIZE FOR SNUG FIT OF 3/4" BOLTS. USE CAST WASHERS WITH THIN NEOPRENE BACKING AT ALL CONCRETE BEARING SURFACES (IF BEVELED PANEL FLANGES ARE USED, SUPPLY CAST BEVEL WASHERS)
7. REFER TO SPECS FOR PANEL STRENGTH, EXPOSED EXTERIOR SURFACE TEXTURE AND SUPPLEMENTAL REINFORCEMENT OR ATTACHMENTS REQUIRED. SUBMIT DATA AS SPECIFIED.
8. MAINTAIN TEMPORARY POSITIONING TEMPLATE UNTIL PANEL BASE IS DRYPACK GROUTED AND BOLTED.
9. INSERT AND SLEEVE DIMENSIONS G AND T ARE FOR 8' MODULES. ACTUAL G AND T DISTANCES VARY BY 1/4" AT SOLID CONNECTION FACES.
10. WALKWAY PANELS
    A. 8' WIDTH TYPICAL
    B. VERTICAL FLANGES (SAME AS BASIC PANEL) ARE FULL HEIGHT
    C. ELIMINATE HORIZONTAL FLANGES
    D. REINFORCEMENT SIMILAR TO BASIC PANEL
    E. UNIFORM TOP OF PANELS = ELEVATION 26.0. BASE EL. VARIES 13.94 TO 15.75. SEE ARCHITECTURAL ELEVATION SHEET 48.
11. PROVIDE 1/4" RADIUS AT ALL INTERIOR EDGES.
12. BOTH FLANGE WIDTHS ARE NOTED IN COLUMN E (I.E. 6" FOR ONE, 5 3/4" FOR OTHER - INTERIOR VIEW)

OPTIONAL DETAILS

13. AT CONTRACTOR OPTION ALL 8' BASIC PANELS MAY BE ADJUSTED TO 7'-11 1/2" (7'-11 3/4" FOR CLOSURE AND BASIC CORNER PANELS) ADJUST ALL STRUCTURAL DIMENSIONS ACCORDINGLY.
14. AT CONTRACTOR OPTION 1 2" BEVEL ON FLANGES MAY BE ELIMINATED.

NO.	DATE	REVISION	BY	APD.
1		RECORD DRAWINGS	JLS	

CH2M HILL — ENGINEERS PLANNERS ECONOMISTS

CORNELL HOWLAND HAYES & MERRYFIELD

CLAIR A. HILL & ASSOCIATES

CITY OF BELLINGHAM, WASHINGTON
POST POINT POLLUTION CONTROL PLANT
SCHEDULE T

PRECAST WALL PANEL DETAILS AND SCHEDULE

DES. EGK | DR. CPC | CK. GRG | SHEET 86 OF 113 | DATE: APRIL 1972 | SCALE: AS SHOWN | DRAWING NO. C 6198-2

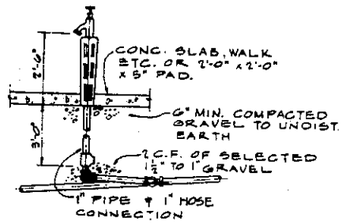

NON-FREEZE POST HYDRANT
TYPE HB-1
NTS

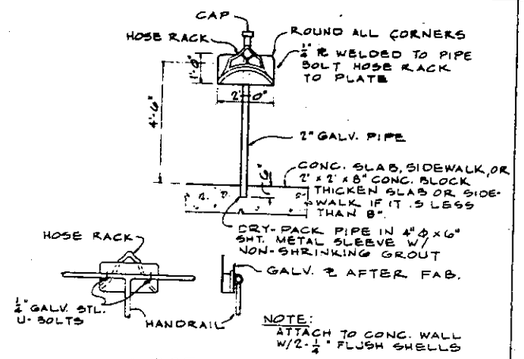

HOSE RACK - DETAIL
NTS.

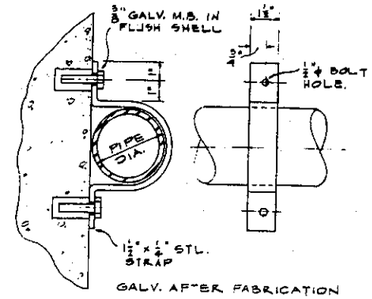

PIPING CLAMP DETAIL
NTS
USE AS REQ'D. TO HOLD PIPES SECURELY IN PLACE

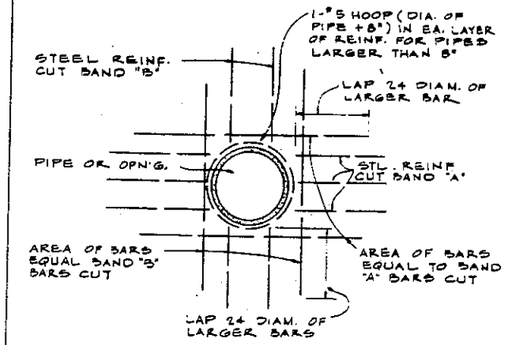

REINF. DETAIL FOR ALL PIPE & OPENINGS IN CONC. STRUCT. MEMBERS
NTS

NOTE: PIPE BLOCKOUT NOT TO BE USED WITHOUT PERMISSION OF ENGR. UNLESS SPECIFICALLY INDICATED ON PLANS.

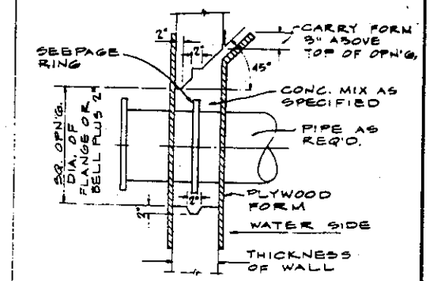

PIPE BLOCKOUT DETAIL
¾" = 1'-0"

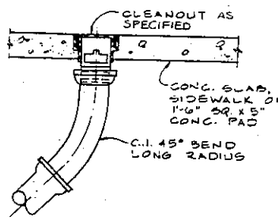

CLEANOUT DETAIL
NTS

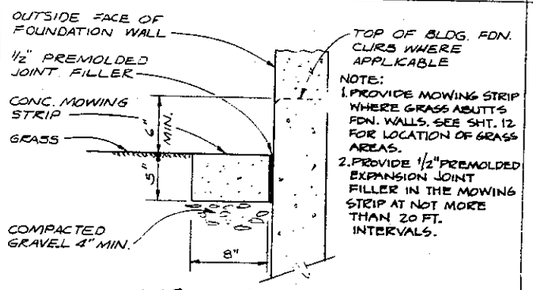

NOTE:
1. PROVIDE MOWING STRIP WHERE GRASS ABUTTS FDN. WALLS. SEE SHT. 12 FOR LOCATION OF GRASS AREAS.
2. PROVIDE ½" PREMOLDED EXPANSION JOINT FILLER IN THE MOWING STRIP AT NOT MORE THAN 20 FT. INTERVALS.

MOWING STRIP
NTS

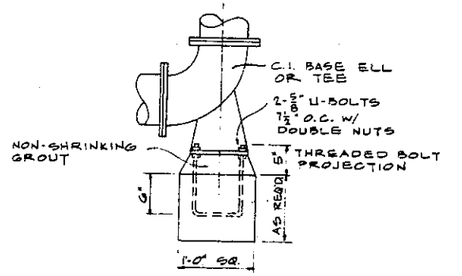

BASE ELBOW, TEE OR CROSS SUPPORT DETAIL
NTS

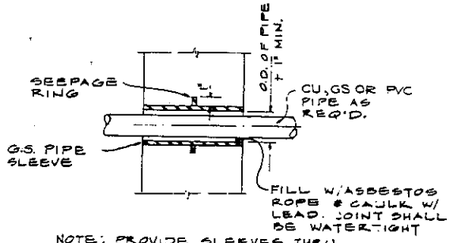

NOTE: PROVIDE SLEEVES THRU SLABS AND ABOVE-GROUND WALLS AND WHERE SHOWN ON PLANS.

PIPE SLEEVE DETAIL

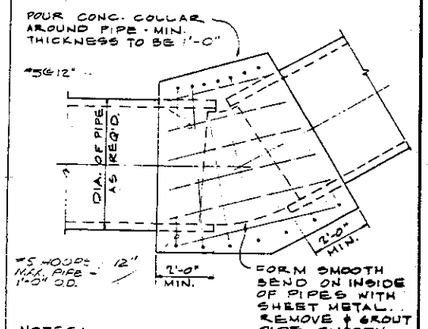

NOTES:
1. PIPE SUPPLIERS SHOP BUILT ELBOWS W/ RUBBER RING JTS. MAY BE USED.
2. FOR BOTH HORIZ. ANGLE CHANGES & VERT. ELEV. CHANGES.

FIELD FABRICATED ELBOW FOR CONC. PIPE
⅜" = 1'-0"

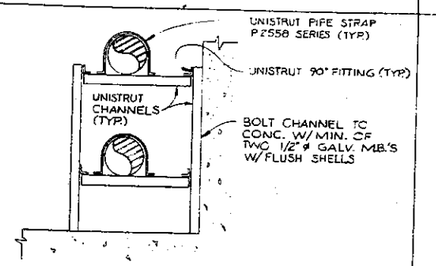

NOTE: 1. HOT DIP GALV. ALL SUPPORT COMPONENTS
2. ALL CHANNELS UNISTRUT P 1000

PIPE WALL SUPPORT DETAIL
NTS.

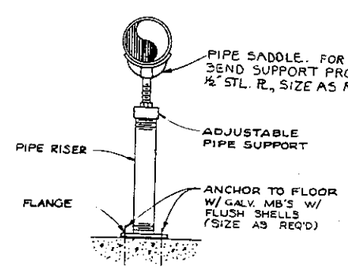

PIPE SUPPORT DETAIL
NTS

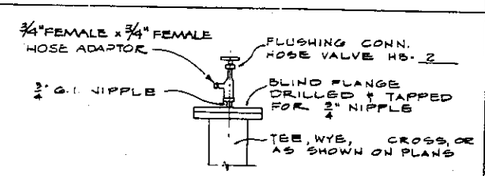

FLUSHING CONN. DETAIL
NTS

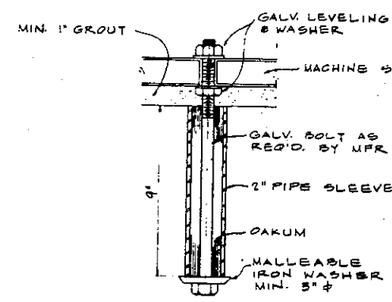

MACHINERY ANCHOR BOLT DETAIL
3" = 1'-0"
APPLIES TO ALL ITEMS OF EQUIP. WITH MOTORS 3HP & OVER

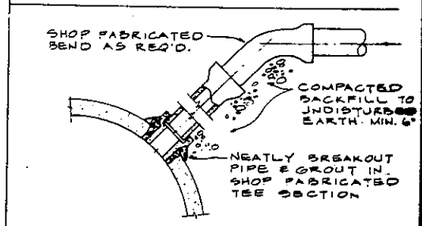

FIELD FABRICATED TEE
8" BRANCH & UNDER
NTS

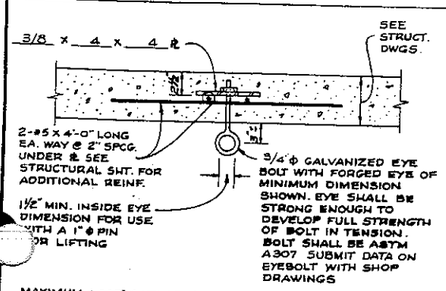

MAXIMUM LOAD RATING FOR LIFTING EYE 2000 LBS.

LIFTING EYE DETAIL
NTS

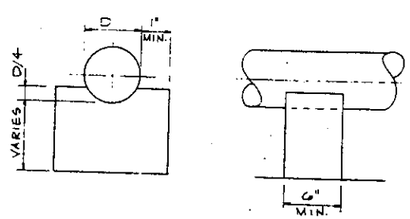

CONCRETE PIPE SUPPORT DETAIL
NTS

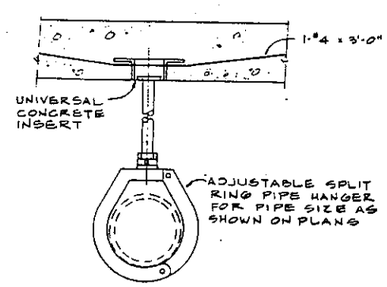

PIPE HANGER DETAIL
NTS

PROVIDE #4 @ 12" EACH WAY, EACH FACE, AND ON TOP (MIN.), 1½" CLEAR. BEND BARS 1'-0" INTO SLAB TYPICAL AT ALL MECHANICAL AND ELECTRICAL CONCRETE EQUIPMENT PADS 6" AND GREATER IN HEIGHT.

EQUIPMENT PAD REINFORCING

NO.	DATE	REVISION	BY	APD.
1		RECORD DRAWINGS	JLS	

CH2M HILL
CORNELL HOWLAND HAYES & MERRYFIELD
CLAIR A. HILL & ASSOCIATES

CITY OF BELLINGHAM, WASHINGTON
POST POINT POLLUTION CONTROL PLANT
SCHEDULE T
MECHANICAL - STANDARD DETAILS

DES. JLS
DR
CK. DB
RN 36196.1
SHEET 87 OF 113
DATE: APRIL 1972
SCALE: AS SHOWN
DRAWING NO. C 6196-2

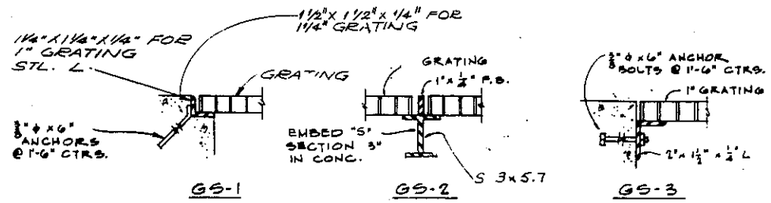

GRATING SUPPORT DETAILS

3" = 1'-0"

HOT DIP GALV. AFTER FABRICATION

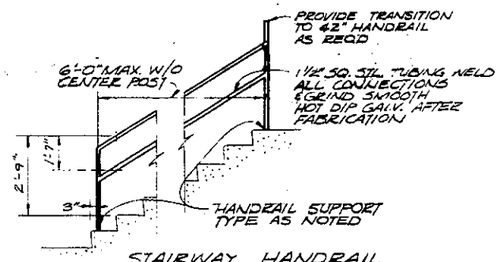

STAIRWAY HANDRAIL

3/8" = 1'-0"

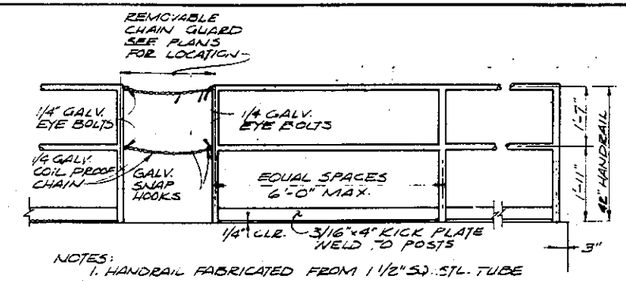

NOTES:
1. HANDRAIL FABRICATED FROM 1½" SQ. STL. TUBE
2. WELD ALL CONNECTIONS AND GRIND SMOOTH
3. ALL HC DIPPED GALV. AFTER FABRICATION

TYPICAL HANDRAIL

½" = 1'-0"

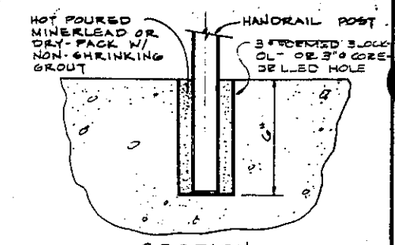

SECTION

HANDRAIL SUPPORT

TYPE "A"

3" = 1'-0"

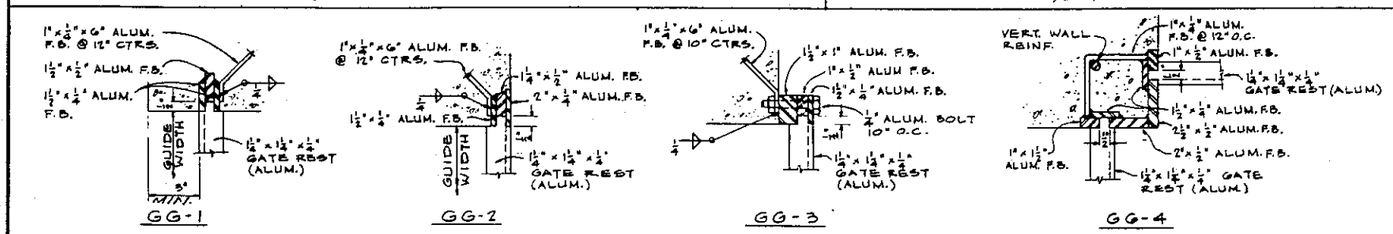

GATE GUIDE DETAIL

3" = 1'-0"

ALL WELDS ¼" FILLETS

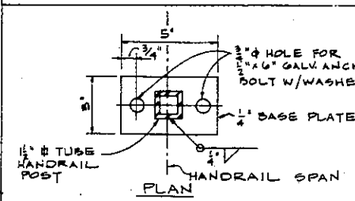

PLAN

HANDRAIL SUPPORT

TYPE "B"

3" = 1'-0"

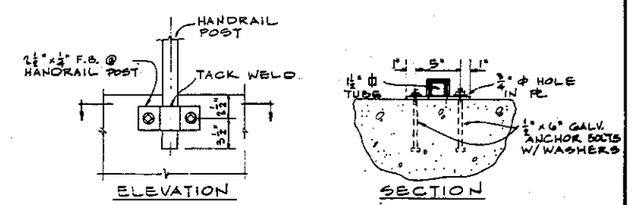

ELEVATION

SECTION

HANDRAIL SUPPORT - TYPE "C"

1½" = 1'-0"

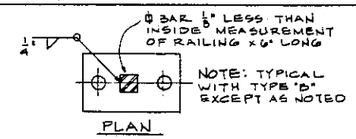

NOTE: TYPICAL WITH TYPE "D" EXCEPT AS NOTED

PLAN

HANDRAIL SUPPORT

TYPE "D"

(FOR REMOVABLE RAILS)

3" = 1'-0"

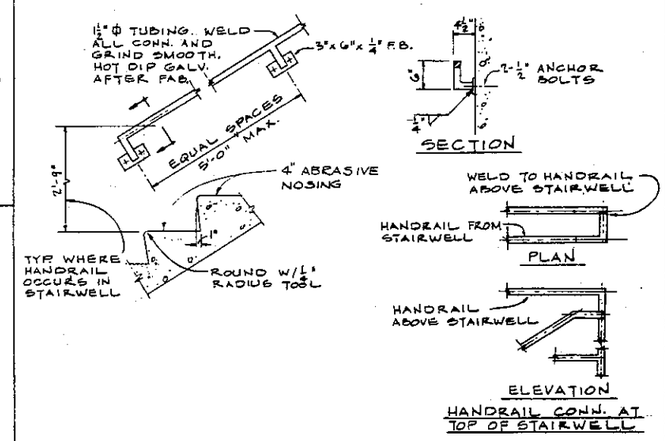

TYPICAL HANDRAIL & CONC. TREAD DETAIL

3" = 1'-0"

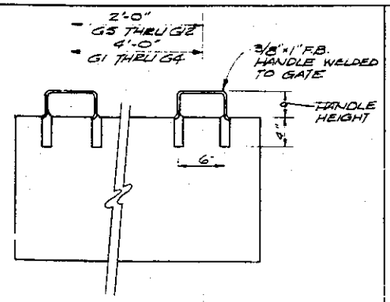

TYPICAL GATE HANDLE

NTS.

GATE & GATE GUIDE NOTES:

1. ALL GUIDES, GATES, ANCHORS & GATE RESTS TO BE ALUMINUM AS SPECIFIED.
2. GUIDES TO BE ASSEMBLED AS A COMPLETE UNIT. AFTER FABRICATION & PRIOR TO SHIPMENT THEY SHALL BE CROSS-BRACED TO ASSURE TRUE ALIGNMENT.
3. GUIDES TO BE CONTINUOUS WELDED TO GATE RESTS.
4. ANCHORS FOR GATE RESTS TO BE SIMILAR TO THOSE FOR GUIDES.
5. GATE GUIDES TO BE FLUSH W/ BOTTOM OF GRATING SUPPORTS.
6. GRATING EXTENDED CONTINUOUSLY OVER GUIDES & GATES
7. GRATING SUPPORTS TO BE NOTCHED AS REQ'D. @ GATES
8. GRATING SPAN ⟷
9. ALL GRATING AND GRATING SUPPORTS TO BE HOT DIPPED GALVANIZED AFTER FABRICATION
10. SHOP DRAWING SHALL BE SUBMITTED TO THE ENGINEER BASED ON FIELD DIMENSIONS PRIOR TO FABRICATION.
11. GRATING OVER GATE SHALL BE 12" WIDE.
12. SEE SHT 23 FOR ADDITIONAL GATE GUIDES.

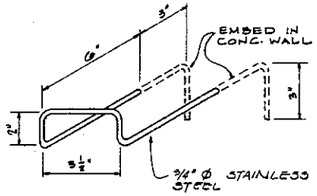

GATE RACK

3" = 1'-0"

2-REQ'D.

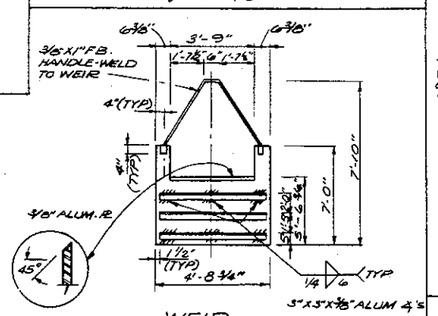

WEIR

1-REQ'D. HEADWORKS

3/8" = 1'-0"

GATE & GUIDE SCHEDULE

GATE NO.	GUIDES NO REQ'D.	GUIDES TYPE	GUIDES WIDTH	GUIDES HEIGHT	GATES NO REQ'D.	GATES WIDTH	GATES HEIGHT	GATES HANDLE HEIGHT	LOCATION
1	4	GG-1	2'-9"	3'-8¼"	2	2'-9¾"	3'-5½"	2"	HDWKS. SHT. 22
2	4	GG-1	2'-9½"	7'-1¾"	2	2-10¼"	4'-10¾"	2'-0"	HDWKS. SHT. 22
3	2	GG-1	4'-0"	8'-0¼"	2	4'-0¾"	6'-0"	1'-10½"	HDWKS. SHT. 23
4	3	GG-1	4'-0"	8'-0¼"	2	4'-0¾"	3'-3"	4'-7½"	HDWKS. SHT. 23
5	1	GG-1	4'-8"	8'-0"	1	4'-8¾"	6'-2"	1'-8"	HDWKS SHT. 23
6	2	GG-1	4'-0"	(1)	2	4'-0¾"	(1)	(1)	HDWKS SHT. 23
GUIDES ONLY	2	GG-1	4'-0"	15'-1¾"	NONE REQ'D				HDWKS SHT. 23

(1) DIMENSION AS REQ'D. BY SEWAGE SHREDDER MFR. NO GATE REST ON GUIDE FOR GATE 5-6. TOP OF GATE 4" BELOW TOP OF GRATING.

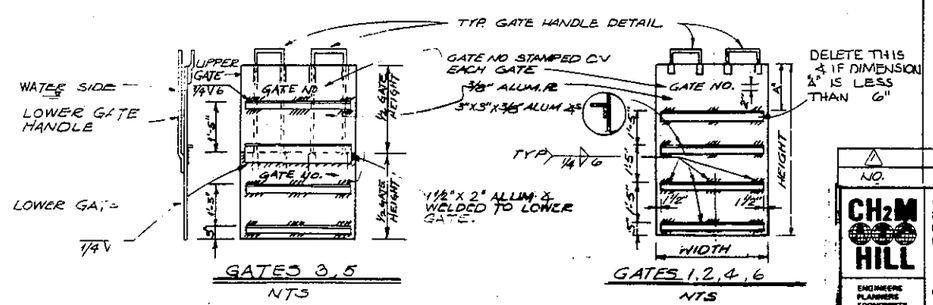

GATES 3, 5

NTS

GATES 1, 2, 4, 6

NTS

NO.	DATE	RECORD DRAWINGS REVISION	JLS BY	APD.

CH2M HILL — ENGINEERS PLANNERS ECONOMISTS

CORNELL HOWLAND HAYES & MERRYFIELD

CLAIR A. HILL & ASSOCIATES

CITY OF BELLINGHAM, WASHINGTON
POST POINT POLLUTION CONTROL PLANT
SCHEDULE T

GATES, GATE GUIDES, GRATING SUPPORT, HANDRAIL AND MISCELLANEOUS DETAILS

DES. WGG
DR. SUB
CK. —
RN 36198.1

SHEET 88 OF 113
DATE: APRIL 1972
SCALE: AS SHOWN
DRAWING NO. C 6198-2

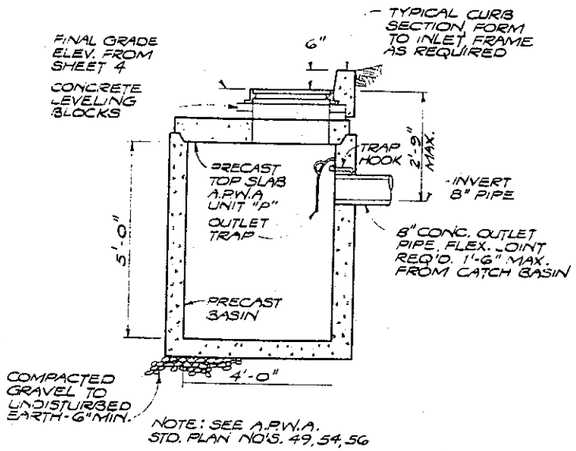

CATCH BASIN DETAIL

N.T.S.

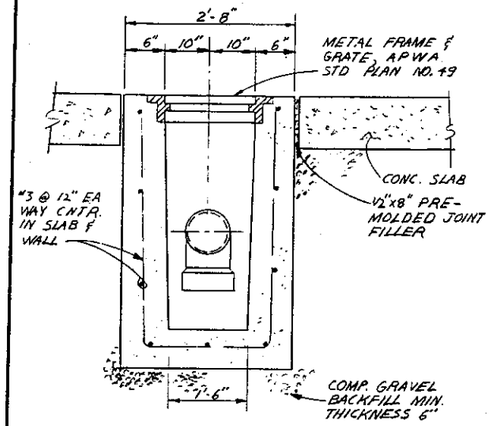

TRANSVERSE SECTION

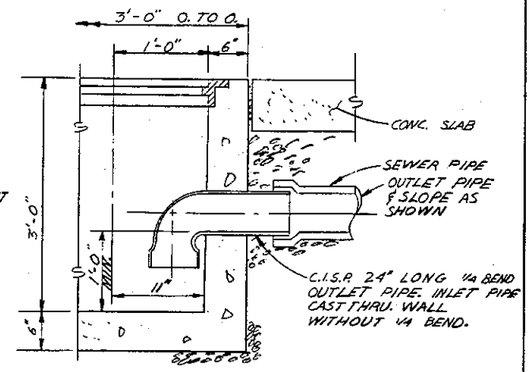

LONGITUDINAL SECTION

AREA DRAIN DETAIL

N.T.S.

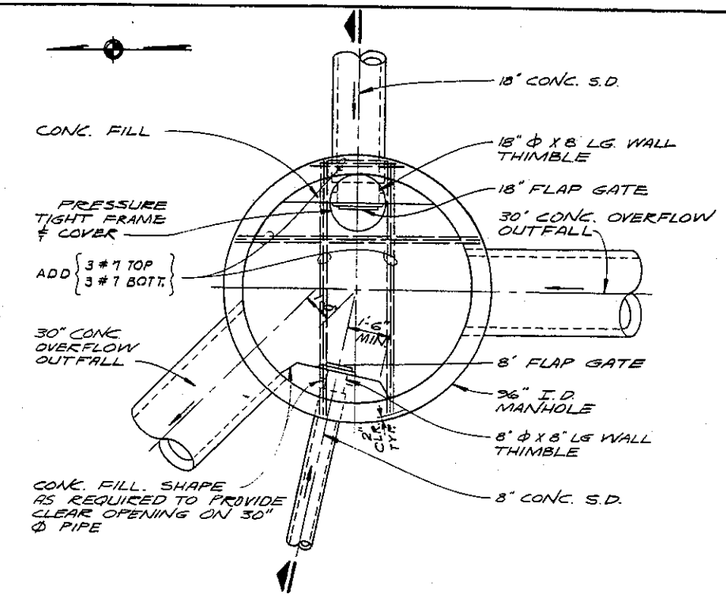

PLAN DETAIL (1/10/89)

3/8" = 1'-0"

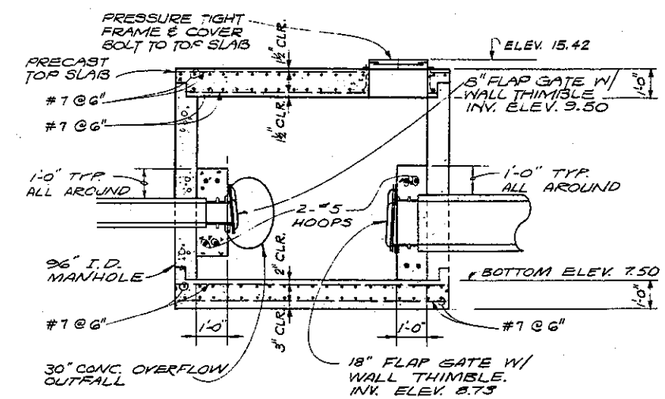

SECTION

3/8" = 1'-0"

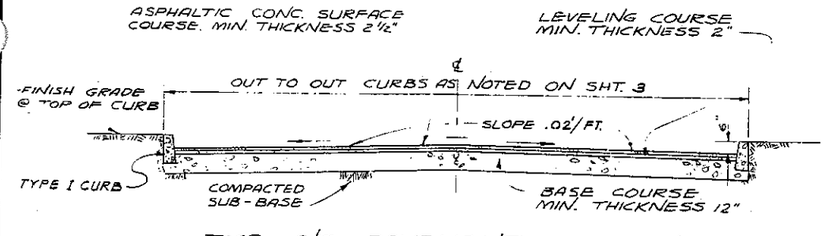

TYP. A/C PAVEMENT SECTION

1/4" = 1'-0"

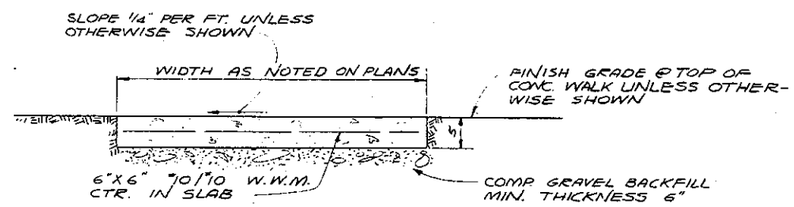

TYP. CONCRETE WALK DETAIL

1" = 1'-0"

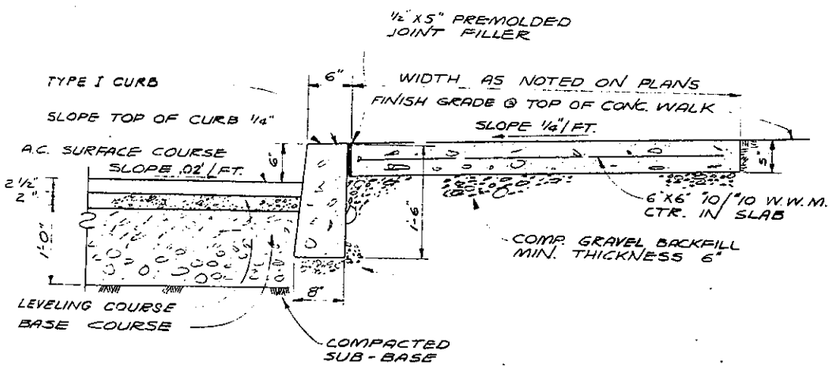

TYPE I CURB & CONCRETE WALK DETAILS

1" = 1'-0"

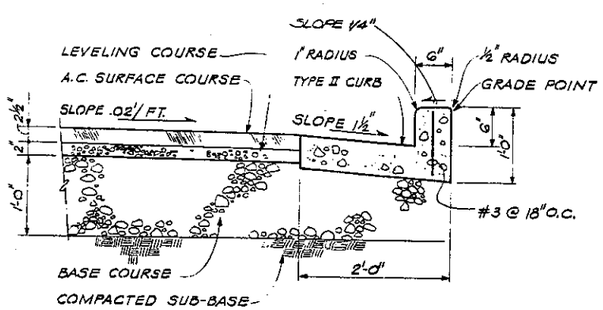

TYPE II CURB DETAIL

1" = 1'-0"

NOTES:

1. PROVIDE 1/2" x 5" PREMOLDED EXPANSION JOINT FILLER:
   a. IN CURB AT EVERY POINT OF TANGENCY AND ALONG CURB LINE AT SPACING NOT GREATER THAN 30'.
   b. BETWEEN CONC. WALKS & ADJOINING BACKS OF CURBS.
   c. BETWEEN THE INTERSECTION OF TWO CONC. WALKS.
   d. BETWEEN CONC. WALKS & ADJOINING STRUCTURES.
   e. AT NOT MORE THAN 40-FOOT INTERVALS IN THE CONC. WALKS UNLESS OTHERWISE INDICATED.
2. DISCONTINUE W.W.M. @ EXPANSION JOINTS.
3. SLOPE PAVED PARKING & WORK AREAS AS INDICATED BY ELEVATIONS ON SHEET 4.
4. CURB SHALL BE TYPE I UNLESS INDICATED OTHERWISE. SEE SHT. 4 FOR LOCATION OF TYPE II CURBS.

NO.	DATE	RECORD DRAWINGS / REVISION	JLS / BY	APD.
			DES	SHEET 89
			DR. RGB	OF 113
			CK.	DATE: APRIL 1972
			FIN. S6198.1	SCALE: AS SHOWN
				DRAWING NO. C 6198-2

CH2M HILL — ENGINEERS PLANNERS ECONOMISTS

CORNELL HOWLAND HAYES & MERRYFIELD — CLAIR A. HILL & ASSOCIATES

CITY OF BELLINGHAM, WASHINGTON
POST POINT POLLUTION CONTROL PLANT
SCHEDULE T

ROAD, CURB, WALK AND DRAINAGE DETAILS

LEGEND

SYMBOL	DESCRIPTION
(1)	ELECTRICAL CONTROL DEVICE — SEE SCHEDULE
◆	CONNECTION POINT TO EQUIPMENT SPECIFIER. FURNISHED AND INSTALLED IN OTHER SECTIONS AND CONNECTED IN THIS SECTION, NOT OTHERWISE SYMBOLIZED IN THIS LEGEND.
G	NAMEPLATE OR LEGEND PLATE - SEE SCHEDULE
[5]	INDICATES RACEWAY NUMBERS, SEE SCHEDULE.
MCC A	MAJOR ELECTRICAL COMPONENT OR DEVICE - NAME OR IDENTIFYING SYMBOL AS SHOWN.
	BRANCH CIRCUIT PANEL
UH-1	UNIT HEATER NO. 1 - SEE SCHEDULE
	TELEPHONE TERMINAL CABINET
(10)	WOUND-ROTOR MOTOR, H.P. INDICATED
(5)	MOTOR, SQUIRREL CAGE INDUCTION - HORSEPOWER INDICATED
(1)	LUMINAIRE - SEE SCHEDULE
2	LUMINAIRE - SEE SCHEDULE
(3)	LUMINAIRE AND POLE - SEE SCHEDULE
(4)	WALL MOUNTED LUMINAIRE - SEE SCHEDULE
(5)	FLOODLIGHTS - AIM IN DIRECTION SHOWN - SEE SCHEDULE
⊗	EXIT LIGHT - SEE SCHEDULE
LA-2	HOME RUN - DESTINATION SHOWN
	EXPOSED CONDUIT AND CONDUCTORS*
	CONCEALED CONDUIT AND CONDUCTORS*
	* NOTE: ALL UNMARKED CONDUIT RUNS CONSIST OF TWO NO. 12 TW CONDUCTORS IN 1/2" CONDUIT. RUNS MARKED WITH CROSSHATCHES INDICATE NUMBER OF NO. 12 TW WIRE. SIZE CONDUIT ACCORDING TO SPECIFICATIONS AND APPLICABLE CODE.
	CROSSHATCHES WITH BAR INDICATE #10 TW WIRE, SIZE CONDUIT AS PER APPLICABLE CODE
	CONDUIT, DOWN
	CONDUIT, UP
	CONDUIT, STUBBED AND CAPPED AS SHOWN
C	CABLE TRAY - SEE SPECIFICATIONS
B	BUS DUCT - SEE SPECIFICATIONS
P	TRENCHING FOR UTILITY COMPANY PRIMARY POWER CIRCUITS
T	TRENCHING FOR TELEPHONE COMPANY CIRCUITS
S	WALL SWITCH: 2 - DOUBLE POLE; 3 - THREE WAY; 4 - FOUR WAY; WP - WEATHERPROOF; P - PILOT LIGHT; X - KEY OPERATED; D - DIMMER
SM	MANUAL MOTOR STARTER SWITCH
S OR	SMALL LETTER SUBSCRIPT ON SWITCH AND LIGHT LUMINAIRE INDICATES SWITCHING.
	CONVENIENCE RECEPTACLE - DUPLEX UNLESS SPECIFIED OTHERWISE; WP - WEATHERPROOF; C - CLOCK HANGER; TL - TWIST LOCK
30	RECEPTACLE - 240V, 1Φ; AMPERAGE INDICATED
30	RECEPTACLE, SPECIAL PURPOSE - AMPERAGE AS INDICATED
	DUPLEX CONVENIENCE RECEPTACLE - FLUSH IN FLOOR
	TELEPHONE RECEPTACLE (OUTLET BOX ONLY) FLUSH IN FLOOR
	TELEPHONE RECEPTACLE (OUTLET BOX ONLY) FLUSH IN WALL
J OR FB	GENERAL ELECTRICAL CONTROL OR WIRING DEVICE, NEMA 1 ENCLOSURE UNLESS INDICATED OTHERWISE. ABBREVIATIONS INDICATE TYPE OF DEVICE
30	NONFUSED DISCONNECT SWITCH, SIZE INDICATED, 3 POLE UNLESS INDICATED OTHERWISE, NEMA 1 ENCLOSURE, WP = WEATHERPROOF (NEMA 3R)
	CONTACTOR, MAGNETIC, NEMA SIZE INDICATED - THREE POLE, NEMA 1 ENCLOSURE UNLESS INDICATED OTHERWISE
30 L	LIGHTING CONTACTOR, CURRENT RATING INDICATED, NEMA 1 ENCLOSURE UNLESS INDICATED OTHERWISE. SEE CONTROL DIAGRAM FOR NUMBER OF POLES.
1	STARTER MAGNETIC NEMA SIZE INDICATED, NEMA 1 ENCLOSURE UNLESS INDICATED OTHERWISE. SEE CONTROL DIAGRAM
	METERING FACILITIES
	FLOW SWITCH, OPEN FOR NO-FLOW CONDITION

LEGEND (cont'd)

SYMBOL	DESCRIPTION
	CONTACT - NORMALLY OPEN WITH NEMA SIZE INDICATED AS APPLICABLE
	CONTACT - NORMALLY CLOSED WITH NEMA SIZE INDICATED AS APPLICABLE
	OVERLOAD HEATER
	MAGNETIC STARTER WITH NEMA SIZE INDICATED
400/3	CIRCUIT BREAKER, TRIP AND POLES INDICATED.
200	CIRCUIT BREAKER WITH CURRENT LIMITING FUSES, TRIP SHOWN, THREE POLE UNLESS INDICATED OTHERWISE
225	FUSED SAFETY SWITCH - FUSE CURRENT RATING INDICATED, THREE POLE UNLESS INDICATED OTHERWISE.
100	SAFETY SWITCH - CURRENT RATING INDICATED, THREE POLE UNLESS INDICATED OTHERWISE.
	FUSE
10	CAPACITOR - KVAR INDICATED
SW, V, 0-600	METER WITH SWITCH - SCALE RANGE SHOWN
120V, 120/240V, 30KVA, T.P.	TRANSFORMER, SECONDARY VOLTAGES, PHASE AND RATING INDICATED AS APPLICABLE
GFR, 25A, 0-1	PICK-UP SETTING; TIME CURRENT CHARACTERISTIC — GROUND FAULT RELAY WITH C.T.
	PUSH BUTTON SWITCH, MOMENTARY CONTACT, NORMALLY OPEN
	PUSH BUTTON SWITCH, MOMENTARY CONTACT, NORMALLY CLOSED
	PUSH BUTTON SWITCH, MAINTAINED CONTACTS WITH MECHANICAL INTERLOCK
	SELECTOR SWITCH MAINTAINED CONTACT
	TIME DELAY RELAY CONTACT NORMALLY OPEN CONTACT
	TIME DELAY RELAY CONTACT NORMALLY CLOSED; TC TIME CLOSE; TO TIME OPEN; INST. INSTANTANEOUS
H. & A.	SELECTOR SWITCH - MAINTAINED CONTACT - CHART DEFINES OPERATION

POS. CKT.	HAND	OFF	AUTO
1	X	O	O
2	O	O	X

X CLOSED CONTACT
O OPEN CONTACT

SYMBOL	DESCRIPTION
	CURRENT TRANSFORMER, NUMBER INDICATED
	INDICATING LIGHT - LETTER INDICATES COLOR; A - AMBER; B - BLUE; C - CLEAR; G - GREEN; R - RED; W - WHITE
	PLUGMOLD 2000, 18" O.C.
	INTERCOM PHONE
	P.A. SYSTEM SPEAKER
M	MOTOR, SQUIRREL CAGE, H.P. NOT INDICATED
M	STARTER COIL
G	CONTACTOR COIL
CR	CONTROL RELAY
TDR	TIME DELAY RELAY
TR	TIMING RELAY
S	START CONTACTOR
R	RUN CONTACTOR
Y	WYE CONTACTOR

ABBREVIATIONS

ABBREVIATION	DESCRIPTION	ABBREVIATION	DESCRIPTION
A	AMMETER	M	MAGNETIC CONTACTOR COIL
B	BELL	MH	MANHOLE
CUH	CABINET UNIT HEATER	MERC.	MERCURY VAPOR
CVLS	CHECK VALVE LIMIT SWITCH	MCC	MOTOR CONTROL CENTER
CKT	CIRCUIT	MS	MOTOR STARTER
CB	CIRCUIT BREAKER	MSP	MOTOR STARTER PANEL
CCC	COAGULANT CONTROL CENTER	N	NEUTRAL
C	CONDUIT	OL	OVERLOAD
CC	CONTROL CABLE	PC	PHOTO CELL
CPT	CONTROL POWER TRANSFORMER	PCP	PLANT CONTROL PANEL
CR	CONTROL RELAY	PIP	PLANT INDICATING PANEL
CT	CURRENT TRANSFORMER	POP	PLANT OPERATIONS PANEL
DO	DISSOLVED OXYGEN	PVC	POLYVINYL CHLORIDE
DOP	DISSOLVED OXYGEN PROBE	PT	POTENTIAL TRANSFORMER
ETM	ELAPSED TIME METER	PS	PRESSURE SWITCH
EF	EXHAUST FAN	PB	PUSH BUTTON SWITCH
FL	FLASHER MOTOR	SV	SOLENOID VALVE
FS	FLOAT SWITCH	SCU	SPEED CONTROL UNIT
FI	FLOW INDICATOR	SW	SWITCH
FM	FLOW METER	TS	AUTOTRANSFORMER TEMPERATURE SWITCH
FT	FLOW TOTALIZER	TB	TERMINAL BLOCK OR BOARD
FLUOR.	FLUORESCENT	TD	THERMAL DETECTOR RELAY
F	FUSE	T	THERMOSTAT
GFR	GROUND FAULT RELAY	TC	TERMINAL CABINET
H	HORN OR HOWLER	TDR	TIME DELAY RELAY
INC.	INCANDESCENT	TR	TIMER - REPEAT CYCLE
J	JUNCTION BOX	TM	TIMING RELAY
LR	LATCHING RELAY	TSP	TWISTED SHIELDED PAIR
L	LIGHTING CONTACTOR	UH	UNIT HEATER
LS	LIMIT SWITCH	VP	VAPOR PROOF
LDR	LOAD RELAY	V	VOLTMETER
LOS	LOCKOUT STOP PUSH BUTTON	WP	WEATHERPROOF
		WH	WATER HEATER
		OTT	OVER TEMPERATURE TRIP

NOTES:

1. THIS IS A STANDARD LEGEND SHEET, THEREFORE SOME SYMBOLS OR ABBREVIATIONS MAY APPEAR ON THIS SHEET AND NOT ON THE PLANS.

NO.	DATE	REVISION	BY	CHK
1	APRIL 75	RECORD DRAWINGS	DLB	GRG

CH2M HILL — ENGINEERS PLANNERS ECONOMISTS

CORNELL HOWLAND HAYES & MERRYFIELD

CLAIR A. HILL & ASSOCIATES

CITY OF BELLINGHAM, WASHINGTON
POST POINT POLLUTION CONTROL PLANT
SCHEDULE T

ELECTRICAL -
NOTES AND LEGEND

DES CVB
DR LAT
CK RSN
JOB 351981.1

SHEET 90 OF 113
DATE: APRIL 1972
SCALE: NO SCALE

DRAWING NO. C 6186-2

EXTERIOR WIRING SCHEDULE

RUN NO. [ ]	CONDUIT NO.	CONDUIT SIZE	CONDUCTORS NO. SIZE	FROM	TO	REMARKS
1	3	3"	9-400MCM, 3-3/0G	PAD MOUNT TRANSFORMER	INCINERATION BLDG.	3-400MCM PER PHASE, 3-400MCM, 1-3/0 EA.CONDUIT
2	1	2"	3-1/0, 1#6G	PAD MOUNT TRANSFORMER	ADMINISTRATION BLDG.	
3	1	2"	3-1/0, 1#6G	PAD MOUNT TRANSFORMER	SHOP BUILDING	
4	1	2"	3-1/0, 1#6G	PAD MOUNT TRANSFORMER	CHLORINE BUILDING	
5	1	2½"	3-1/0, 1#6G	PAD MOUNT TRANSFORMER	PRI. SLUDGE PUMP STA.	
6	1	2"	3-3/0, 1#6G	PAD MOUNT TRANSFORMER	HEADWORKS BUILDING	
7	1	1½"	30#14	INCINERATION BUILDING	ADMIN. BLDG. P.O.P.	30/C CABLE
8	1	1"	4#8	INCINERATION BUILDING	ADMIN. BLDG. PL EB	
9	1	2"	30#22	INCINERATION BUILDING	SHOP BUILDING	TEL. CABLE
10	1	¾"	6#12	INCINERATION BUILDING	SAMPLE PUMPS, FIXTURE 16	
11	2	2"	52#14	HEADWORKS BUILDING	ADMIN. BLDG. P.O.P.	1-26/C CABLE EA.CONDUIT
12	1	1"	4#12	SAMPLER NO. 1 & MCC2/D2; HEADWORKS	SAMPLER CONTROL PANEL, ADMINISTRATION BLDG.	
13	1	¾"	2#12	HEADWORKS BUILDING	AREA LIGHT	CKT LA-9
14	1	¾"	2#12	HEADWORKS BUILDING	INFLUENT SAMPLE PUMP	
15	1	2"	30#22	HEADWORKS BUILDING	PRI. SLUDGE PUMP STA.	TEL. CABLE
16	1	¾"	4#12	SAMPLER NO. 2 & EFF. SAMPLE PUMP STARTER; INCIN. BLDG.	HANDHOLE NO.1	CONTINUE CONDUCTORS TO SAMPLER CONTROL PANEL IN [12]
17	1	2"	30#22	INCINERATION BUILDING	CHLORINE BUILDING	TEL. CABLE
18	1	2"	30#22	ADMINISTRATION BLDG.	SHOP BUILDING	TEL. CABLE
19	1	2"	30#22	CHLORINE BUILDING	PRI. SLUDGE PUMP STA.	TEL. CABLE
20	1	1"	13#12, 1#12G	PRI. SLUDGE PUMP STA.	NORTH CLARIFIER	
21	1	1"	13#12, 1#12G	PRI. SLUDGE PUMP STA.	SOUTH CLARIFIER	
22	1	¾"	2#12	PRI. SLUDGE PUMP STA. SAMPLE PUMP, MCC 3/B3	HANDHOLE NO.6	CONTINUE CONDUCTORS TO SAMPLER CONTROL PANEL IN [12]
23	1	2"	18#14	CHLORINE BUILDING	ADMIN. BLDG. P.O.P.	18/C CABLE
24	1	2"	4-2/C #14 SHIELDED 2-2/C >20 SHIELDED	CHLORINE BUILDING	ADMIN. BLDG. P.O.P.	SEE SHT 104
25	1	2"	NONE	ADMINISTRATION BLDG.		STUBOUT FOR TELCO CABLE
26	1	2"	30#14	PRI. SLUDGE PUMP STA.	ADMIN. BLDG. P.O.P.	30/C CABLE
27	1	4	PRIMARY SERVICE CABLE	SUPPLY POLE	PAD MOUNT TRANSFORMER	GALV. STEEL CONDUIT
28	1	4	NONE	PAD MOUNT TRANSFORMER	AS SHOWN	GALV. STEEL CONDUIT
29	1	¾"	5#12	FLOWMETER	ADMIN. BLDG. P.O.P. & SAMPLER CONTROL PANEL	3#12 TO P.O.P. 2#12 TO SAMPLER PANEL IN [12]
30	1	¾"	4#12	PRI. SLUDGE PUMP STA.	CLARIFIER ALARM LGTS.	
31	1	¾"	2#12	ADMINISTRATION BLDG.	AREA LIGHTS	
32	1	¾"	4#12	ADMINISTRATION BLDG.	AREA LIGHTS & SIGN OUTLET	CKTS LD-12,13
33	1	¾"	2#12	CHLORINE BLDG.	AREA LIGHTS	CKT LC-6
34	1	¾"	2#12	INCINERATION BUILDING	AREA LIGHTS	CKT LG-8
35	1	¾"	2#12	ADMIN. BLDG.	AREA LIGHTS	CKT LD-12
36	1	¾"	2#12	PRI. SLUDGE PUMP STA.	AREA LIGHTS	CKT LB-7
37	1	¼	3#12	PRI. SLUDGE PUMP STA. MCC 3/B4	SCUM PITS 1&2	
38	1	2"	EMPTY	P.O.P. (ADMIN. BLDG.)	HANDHOLE NO.6	SPARE
39	1	2"	EMPTY	P.O.P. (ADMIN. BLDG.)	HANDHOLE NO.6	SPARE
40	1	2"	EMPTY	HANDHOLE NO.6	STUB OUT 5FT., CAP	
41	1	2"	EMPTY	HANDHOLE NO.6	STUB OUT 5FT., CAP	
42	1	4"	EMPTY	HANDHOLE NO.7	STUB OUT 5FT., CAP	GALV. STL. CONDUIT
43	1	2"	EMPTY	HANDHOLE NO.6	STUB OUT 5FT., CAP	
44	1	2"	EMPTY	HANDHOLE NO.3		

UNIT HEATER SCHEDULE

UNIT HEATER NO.	MANUFACTURE	CATALOG NUMBER	KW	VOLTAGE	PHASES	MOUNTING
1	CHROMALOX	LUH-10-15	10	480	3	WALL MOUNT, UP 9'
2	CHROMALOX	LUH-04-06	4	480	3	WALL MOUNT, UP 8'
3	CHROMALOX	LUH-04-06	4	480	3	WALL MOUNT, UP 8'
4	CHROMALOX	LUH-07-08	7.5	480	3	WALL MOUNT, UP 8'
5	CHROMALOX	LUH-07-08	7.5	480	3	WALL MOUNT, UP 8'
6	CHROMALOX	LUH-10-15	10	480	3	WALL MOUNT, UP 9'
7	CHROMALOX	LUH-12-18	12.5	480	3	WALL MOUNT, UP 9'
8	CHROMALOX	LUH-12-18	12.5	480	3	WALL MOUNT, UP 9'
9	CHROMALOX	LUH-04-06	4	480	3	WALL MOUNT, UP 8'
10	CHROMALOX	LUH-05-13	5	480	3	WALL MOUNT, UP 8'
11	CHROMALOX	LUH-15-21	15	480	3	WALL MOUNT, UP 9'
12	CHROMALOX	VUH-30	30	480	3	CEILING MOUNT, UP 9'
13	CHROMALOX	LUH-07-08	7.5	480	3	WALL MOUNT, UP 8'
14	CHROMALOX	LUH-07-08	7.5	480	3	WALL MOUNT, UP 8'
15	CHROMALOX	LUH-10-15	10	480	3	WALL MOUNT, UP 9'
16	CHROMALOX	LUH-10-15	10	480	3	WALL MOUNT, UP 9'
17	CHROMALOX	RF -420	2	208	1	SEE SHT. 103

CONTROL DEVICE SCHEDULE

DEVICE NO.	DEVICE	FUNCTION
1	PRESSURE SWITCHES	SEWAGE PUMP CONTROL & HIGH LEVEL ALARM
2	NOT USED	
3	SWITCH	BY-PASS, INCINERATOR SCRUBBER
4	FLOW SWITCHES	NPW PUMPS #1, #2, & #3 CONTROL
5	SELECTOR SWITCHES	SLUDGE PUMPS, CLASSIFIERS & GRIT PUMPS CONTROL
6	LEVEL SWITCH	P.S.P.S. HIGH WATER ALARM
7	TORQUE OVERLOAD SWITCHES	GRIT COLLECTORS & CLARIFIERS CONTROL
8	PRESSURE SWITCH	LOW CHLORINE GAS PRESSURE ALARM
9	SWITCH	INCINERATION PROCESS MALFUNCTION ALARM
10	SWITCH	VENT ALARM
11	SWITCH	EXPANSION CHAMBER ALARM
12	SWITCH	EVAPORATOR FAILURE ALARM
13	FLOWMETER	FLOW MEASUREMENT

LIGHT FIXTURE SCHEDULE

FIXTURE	MANUFACTURE	CATALOG NO.	LAMPS	REMARKS
1	SMOOT HOLMAN	221-34R-FA-S7	3-40W,CW	"T" BAR CEILING
2	SMOOT HOLMAN	221-44R-FA-S7	4-40W,CW	"T" BAR CEILING
3	SMOOT HOLMAN	ND-24R	2-40W,CW	MOUNT AS STATED ON DWGS.
4	PYLE NATIONAL	LEX 35	300W	SURFACE MOUNT ON TRUSS
5				
6				
7	PYLE NATIONAL	LEX 233	300W	SURFACE MOUNT ON TRUSS
8	HOLOPHANE	C2460	150W	SURFACE
9	HOLOPHANE	408	200W	FLAT BLACK BAKED ENAMEL
10	HOLOPHANE	400	150W	FLAT BLACK BAKED ENAMEL
11	MARCO (LCA)	J2-K40	150W	RECESSED
12	ART METAL	9000	2-75W	
13	PRESCOLITE	39 HF MATTE WHITE	75W R30	RECESSED
14	HOLOPHANE	DLP-372-10-120 C/W PHOTO CELL	175W MERC VAPOR	SEE DETAIL
15	PYLE NATIONAL	BOLB-175	100W	RED GLOBE
16	HOLOPHANE	06345	200W	SEE DETAIL
17	PYLE NATIONAL	ADB-21101	300W	STEM MOUNT 10" UP
18	NOT USED			
19	PYLE NATIONAL	BOCBB-115	100W	RED GLOBE
20	SMOOT HOLMAN	ND 288	2-F96T12 HO,CW	MOUNT AS STATED ON DWG.
21	HOLOPHANE	DLP-371-20-120	250W MERC VAPOR	SEE DETAIL
22	HOLOPHANE	686	500W	SURFACE MOUNT ON TRUSS
23	HOLOPHANE	908-120	H 400 DX33-1 MERC VAPOR	SEE DETAIL

NO.	DATE	REVISION	BY	CHK
2	DEC 75	CHANGED RUN G FROM 1/0 TO 3/0 CONO.	TLS	CLB
1	APRIL 75	RECORD DRAWINGS	DLB	GRS

CH2M HILL
ENGINEERS PLANNERS ECONOMISTS

CORNELL HOWLAND HAYES & MERRYFIELD

CLAIR A. HILL & ASSOCIATES

CITY OF BELLINGHAM, WASHINGTON
POST POINT POLLUTION CONTROL PLANT
SCHEDULE T

ELECTRICAL - SCHEDULES

DES.
DR.
CK.
APR. 1972
SCALE: NO SCALE
DRAWING NO. C 6198-2
SHEET 91 OF 112

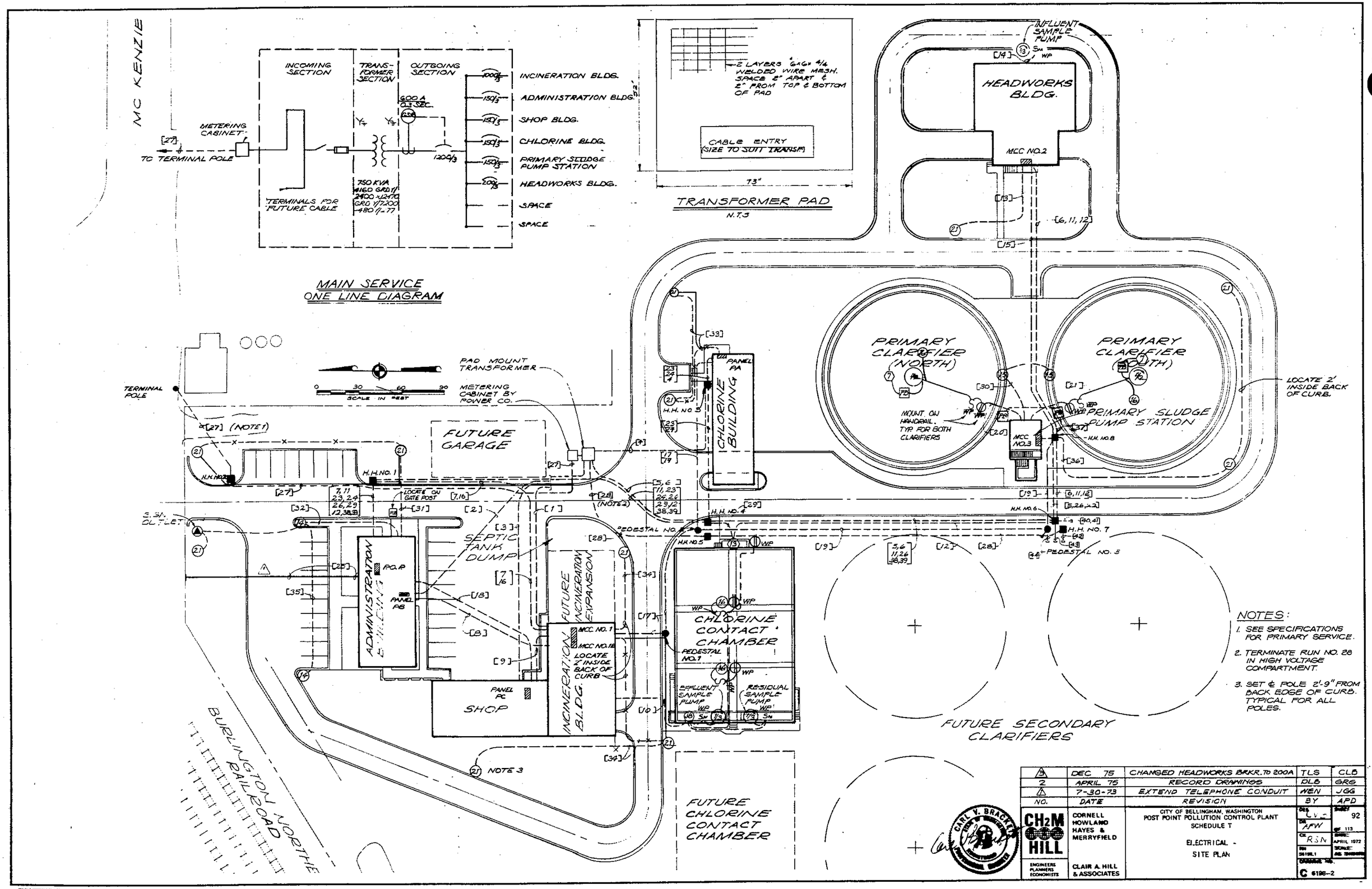
MC KENZIE
INCOMING SECTION
TRANSFORMER SECTION
OUTGOING SECTION
METERING CABINET
TO TERMINAL POLE
TERMINALS FOR FUTURE CABLE
750 KVA
600 A 0.3 SEC.
INCINERATION BLDG.
ADMINISTRATION BLDG.
SHOP BLDG.
CHLORINE BLDG.
PRIMARY SLUDGE PUMP STATION
HEADWORKS BLDG.
SPACE
SPACE
MAIN SERVICE ONE LINE DIAGRAM
2 LAYERS 6x6x4/4 WELDED WIRE MESH. SPACE 8" APART & 2" FROM TOP & BOTTOM OF PAD
CABLE ENTRY (SIZE TO SUIT TRANSF)
TRANSFORMER PAD
N.T.S.
INFLUENT SAMPLE PUMP
HEADWORKS BLDG.
MCC NO.2
PRIMARY CLARIFIER (NORTH)
PRIMARY CLARIFIER (SOUTH)
PRIMARY SLUDGE PUMP STATION
MOUNT ON HANDRAIL TYP. FOR BOTH CLARIFIERS
LOCATE 2' INSIDE BACK OF CURB.
PAD MOUNT TRANSFORMER
METERING CABINET BY POWER CO.
TERMINAL POLE
FUTURE GARAGE
CHLORINE BUILDING
PANEL PA
H.H. NO 3
H.H. NO. 1
H.H. NO. 2
H.H. NO. 4
H.H. NO. 5
H.H. NO. 6
H.H. NO. 7
H.H. NO. 8
PEDESTAL NO. 4
PEDESTAL NO. 5
S.S. OUTLET
SEPTIC TANK DUMP
ADMINISTRATION BUILDING
PANEL PB
PANEL PC
SHOP
FUTURE INCINERATION EXPANSION
INCINERATION BLDG.
MCC NO. 1
MCC NO. 1B
LOCATE 2' INSIDE BACK OF CURB
CHLORINE CONTACT CHAMBER
PEDESTAL NO. 7
EFFLUENT SAMPLE PUMP
RESIDUAL SAMPLE PUMP
FUTURE SECONDARY CLARIFIERS
FUTURE CHLORINE CONTACT CHAMBER
BURLINGTON NORTHERN RAILROAD
NOTE 3
NOTES:
1. SEE SPECIFICATIONS FOR PRIMARY SERVICE.
2. TERMINATE RUN NO. 28 IN HIGH VOLTAGE COMPARTMENT.
3. SET & POLE 2'-9" FROM BACK EDGE OF CURB. TYPICAL FOR ALL POLES.
3 DEC. 75 CHANGED HEADWORKS BRKR. TO 200A TLS CLB
2 APRIL 75 RECORD DRAWINGS DLB GRS
1 7-30-73 EXTEND TELEPHONE CONDUIT WEN JGG
NO. DATE REVISION BY APD
CH2M HILL
ENGINEERS PLANNERS ECONOMISTS
CORNELL HOWLAND HAYES & MERRYFIELD
CLAIR A. HILL & ASSOCIATES
CITY OF BELLINGHAM, WASHINGTON
POST POINT POLLUTION CONTROL PLANT
SCHEDULE T
ELECTRICAL - SITE PLAN
DES. LVE
DR. AFW
CK. RJN
APRIL 1972
SHEET 92 OF 113
C 6198-2

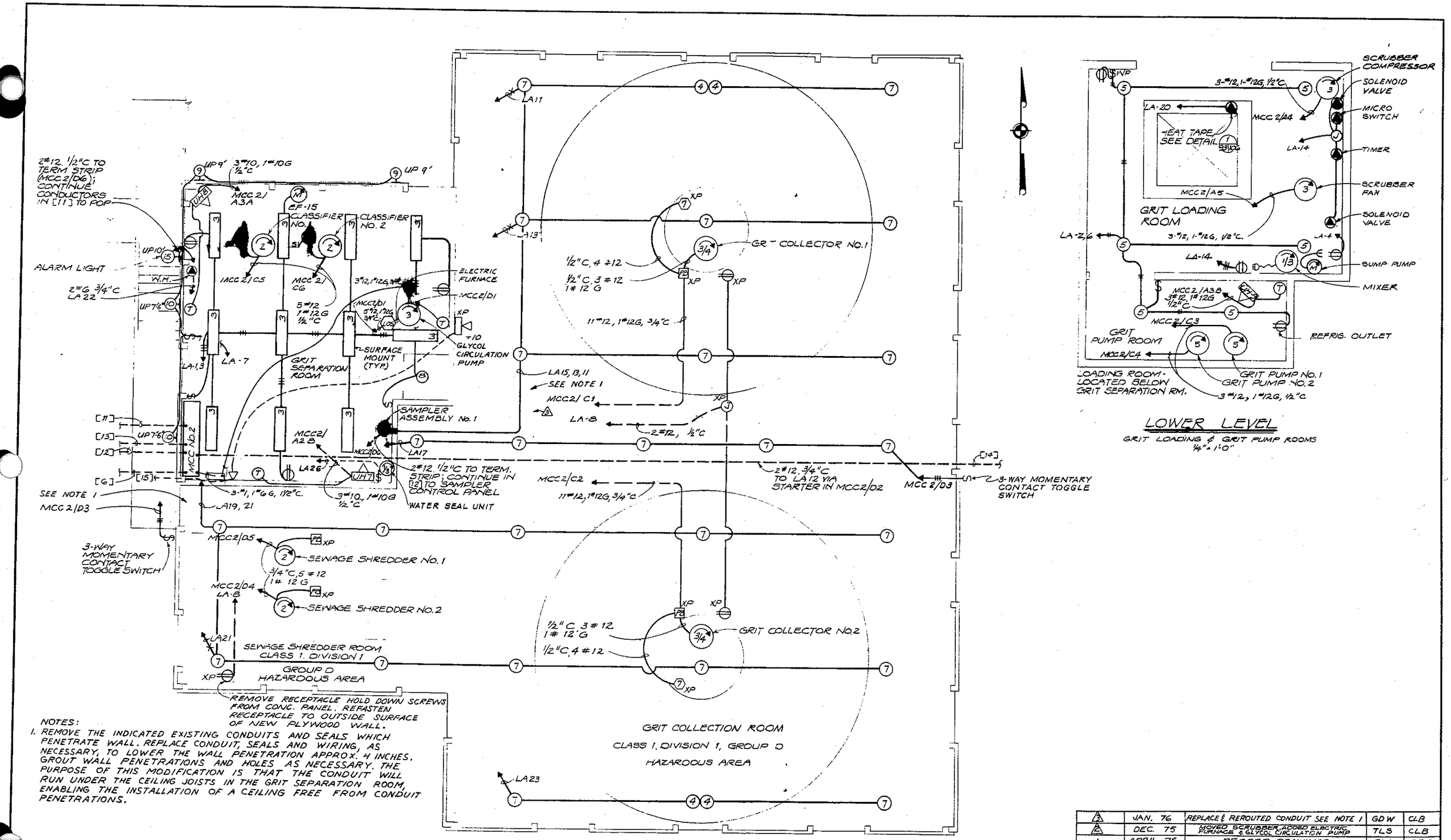

NOTES:

1. REMOVE THE INDICATED EXISTING CONDUITS AND SEALS WHICH PENETRATE WALL. REPLACE CONDUIT, SEALS AND WIRING, AS NECESSARY, TO LOWER THE WALL PENETRATION APPROX. 4 INCHES. GROUT WALL PENETRATIONS AND HOLES AS NECESSARY. THE PURPOSE OF THIS MODIFICATION IS THAT THE CONDUIT WILL RUN UNDER THE CEILING JOISTS IN THE GRIT SEPARATION ROOM, ENABLING THE INSTALLATION OF A CEILING FREE FROM CONDUIT PENETRATIONS.

UPPER LEVEL

GRIT COLLECTION, GRIT SEPARATION & SEWAGE SHREDDER ROOM
1/4 = 1'-0"

LOWER LEVEL

GRIT LOADING & GRIT PUMP ROOMS
1/4" = 1'-0"

NO.	DATE	REVISION	BY	CHK
3	JAN. 76	REPLACE & REROUTED CONDUIT SEE NOTE 1	GDW	CLB
2	DEC. 75	MOVED SCRUBBER, ADDED ELECTRIC FURNACE & GLYCOL CIRCULATION PUMP	TLS	CLB
1	APRIL 75	RECORD DRAWINGS	DLB	GRS

CH2M HILL — ENGINEERS PLANNERS ECONOMISTS

CORNELL HOWLAND HAYES & MERRYFIELD

CLAIR A. HILL & ASSOCIATES

CITY OF BELLINGHAM, WASHINGTON
POST POINT POLLUTION CONTROL PLANT
SCHEDULE T

ELECTRICAL -
HEADWORKS BUILDING -
LIGHTING AND POWER

SHEET 93 OF 113
DATE: APRIL 1972
SCALE: AS SHOWN
DRAWING NO. C 6198-2

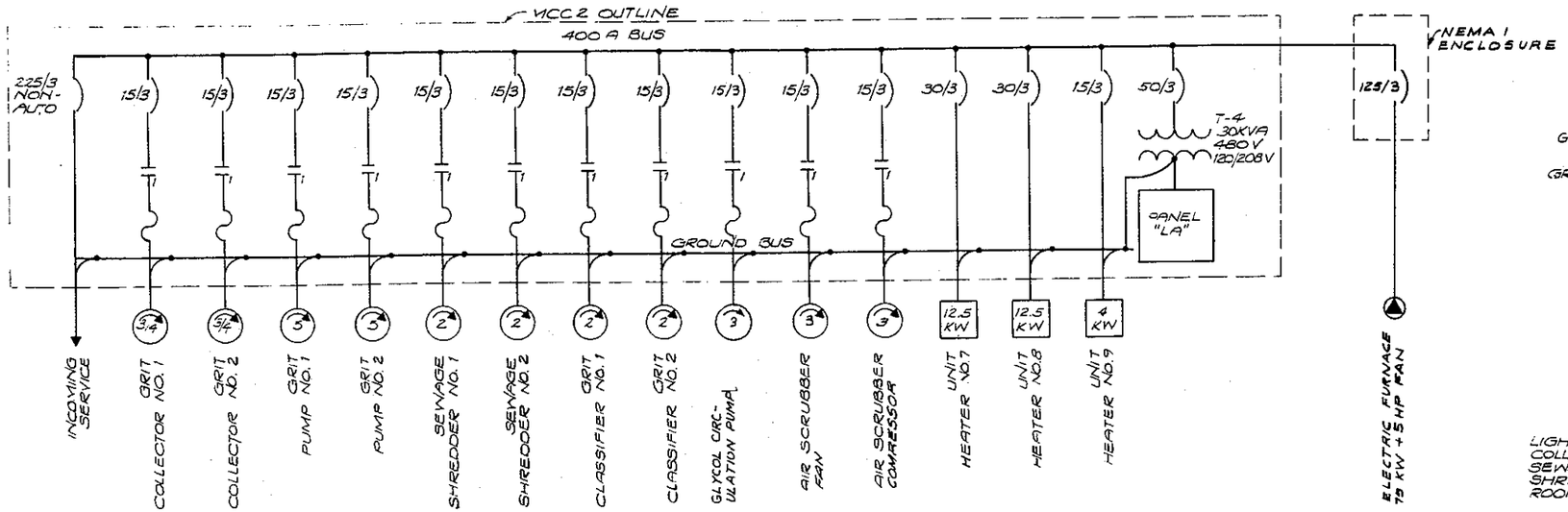

MOTOR CONTROL CENTER NO. 2
ONE LINE DIAGRAM

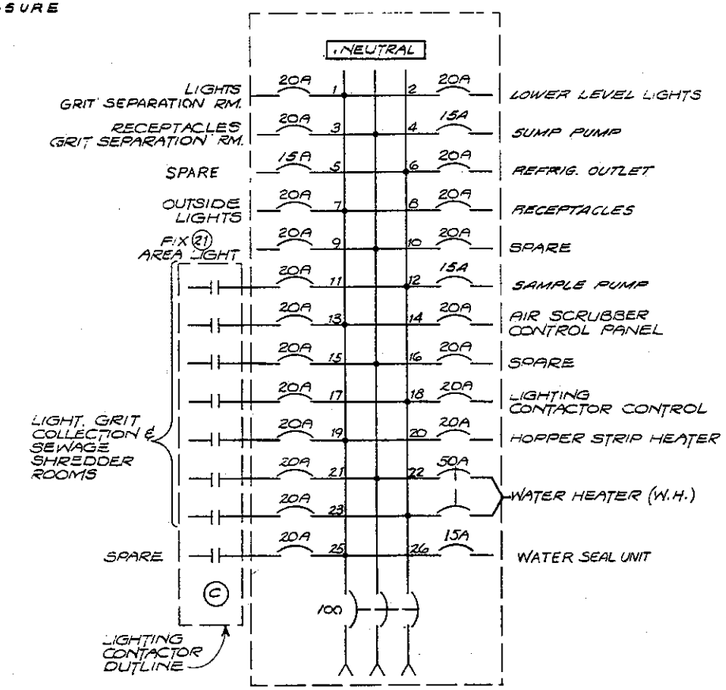

120/208 VOLTS - 100A - 3Φ - 4 WIRE
PANEL "LA"

A		B	C	D
BLANK 1		PANEL "LA"	GRIT COLLECTOR NO. 1 1	GLYCOL CIRCULATION PUMP 1
SPACE 2A	UH-7 2B		GRIT COLLECTOR NO. 2 2	SAMPLE PUMP STR. (120 V) 2
UH-8 3A	UH-9 3B		GRIT PUMP NO. 1 3	LIGHTING CONTACTOR (120 V) 3
AIR SCRUBBER COMPRESSOR 4		TRANSFORMER NO. 4 (T-4)	GRIT PUMP NO. 2 4	SEWAGE SHREDDER NO. 2 4
AIR SCRUBBER FAN 5			GRIT CLASSIFIER NO. 1 5	SEWAGE SHREDDER NO. 1 5
MAIN BREAKER 6		2	GRIT CLASSIFIER NO. 2 6	TERMINAL STRIP 6

SEE CONTROL CKT. SHT. 104

4" CONCRETE PAD

MOTOR CONTROL CENTER NO. 2
3/4" = 1'-0"

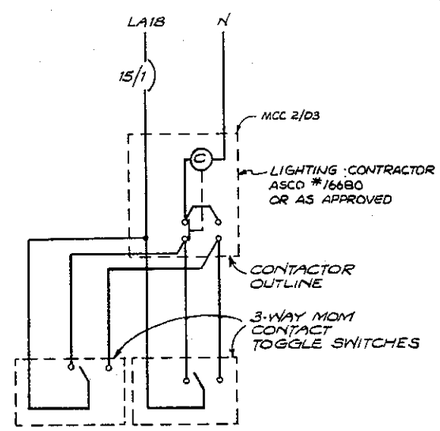

ELEMENTARY DIAGRAM
LIGHTING CONTACTOR

NO.	DATE	REVISION	BY	CHK
2	DEC 75	ADDED ELECTRIC FURNACE AND GLYCOL CIRCULATION PUMP	SDG	CLB
1	APRIL 75	RECORD DRAWINGS	DLB	GRG

CH2M HILL — ENGINEERS PLANNERS ECONOMISTS

CORNELL HOWLAND HAYES & MERRYFIELD

CLAIR A. HILL & ASSOCIATES

CITY OF BELLINGHAM, WASHINGTON
POST POINT POLLUTION CONTROL PLANT
SCHEDULE T

ELECTRICAL -
HEADWORKS BUILDING -
MOTOR CONTROL CENTER NO. 2

DES. C.V.F. — DR. Mla — CK. — RN 56198.1

SHEET 94 OF 113 — DATE: APRIL 1972 — SCALE: AS SHOWN

DRAWING NO. C 6198-2

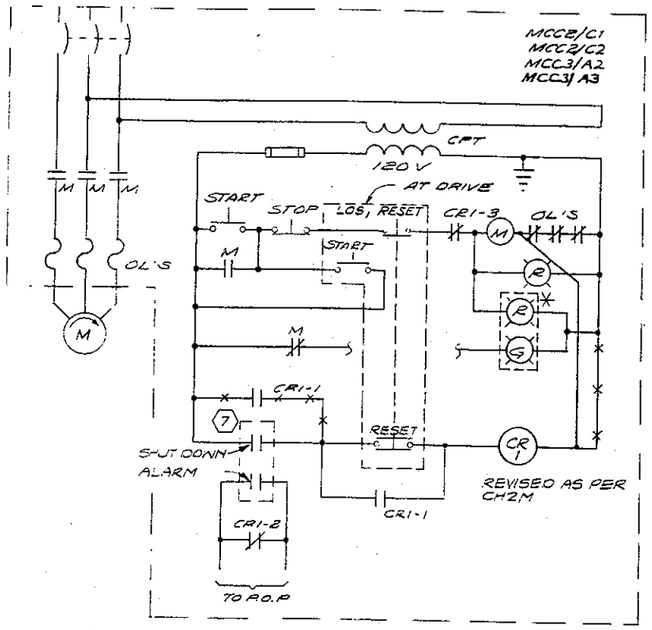

NORTH CLARIFIER, SOUTH CLARIFIER, AND GRIT COLLECTORS NO. 1 & 2

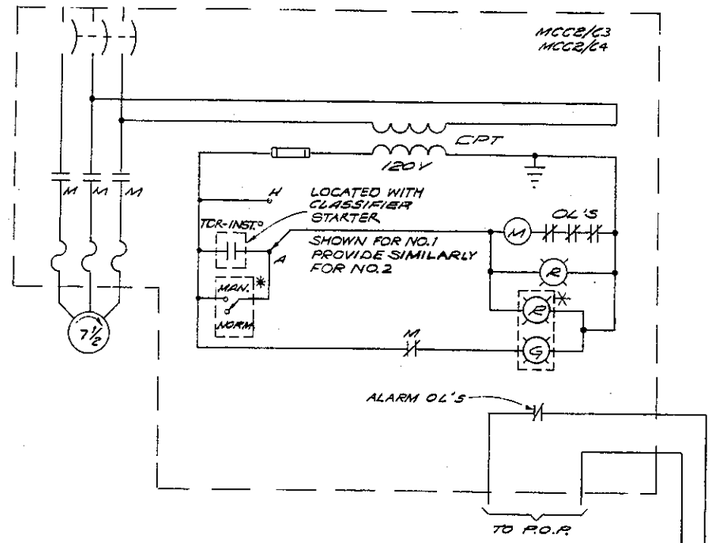

GRIT PUMPS NO. 1 & 2

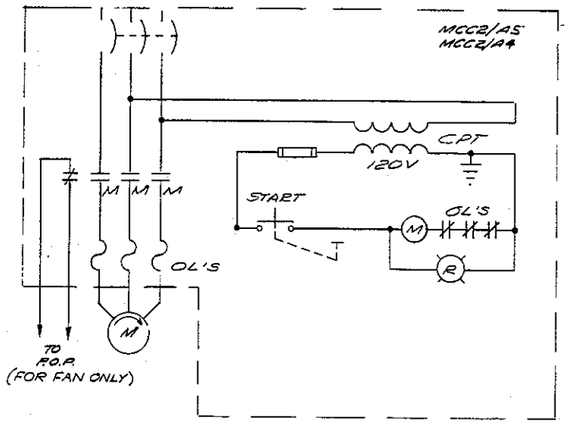

AIR SCRUBBER FAN & AIR SCRUBBER COMPRESSOR

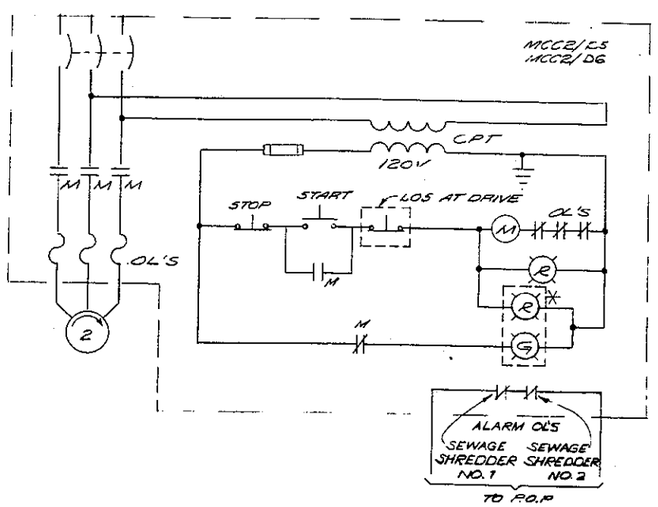

SEWAGE SHREDDERS NO. 1 & 2

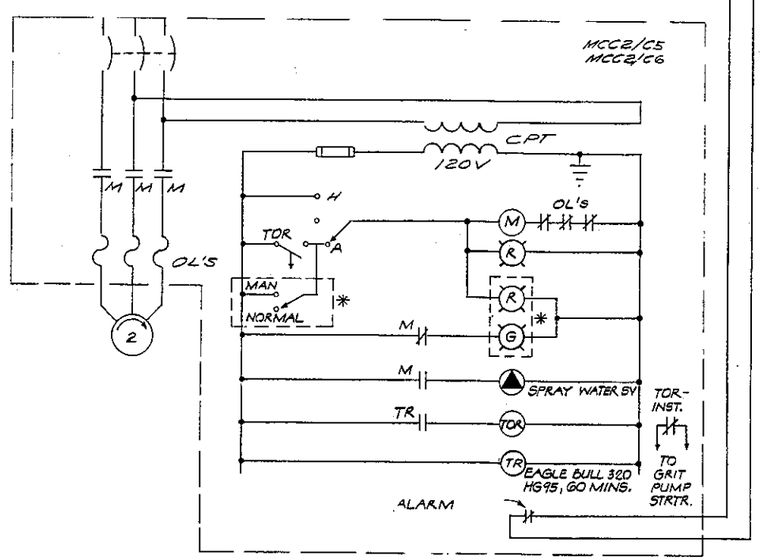

CLASSIFIERS NO. 1 & 2

* LOCATED AT PLANT OPERATIONS PANEL (P.O.P); SPECIFIED IN SECTION T11Q

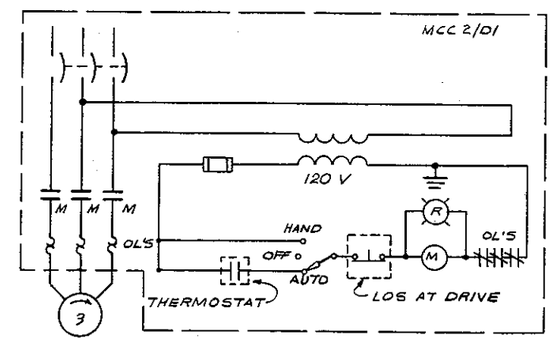

GLYCOL CIRCULATION PUMP

NO.	DATE	REVISION	BY	CHK
2	DEC 75	ADDED GLYCOL CIRCULATION PUMP	SDG	CLB
1	APRIL 75	RECORD DRAWINGS	DLB	GRG

CH2M HILL — ENGINEERS PLANNERS ECONOMISTS

CORNELL HOWLAND HAYES & MERRYFIELD

CLAIR A. HILL & ASSOCIATES

CITY OF BELLINGHAM, WASHINGTON
POST POINT POLLUTION CONTROL PLANT
SCHEDULE T

ELECTRICAL -
HEADWORKS BUILDING -
CONTROL DIAGRAMS

DES CVB
DR EJK
CK RGN
SHEET 95 OF 113
DATE APRIL 1972
SCALE:
DRAWING NO. C 6198-2

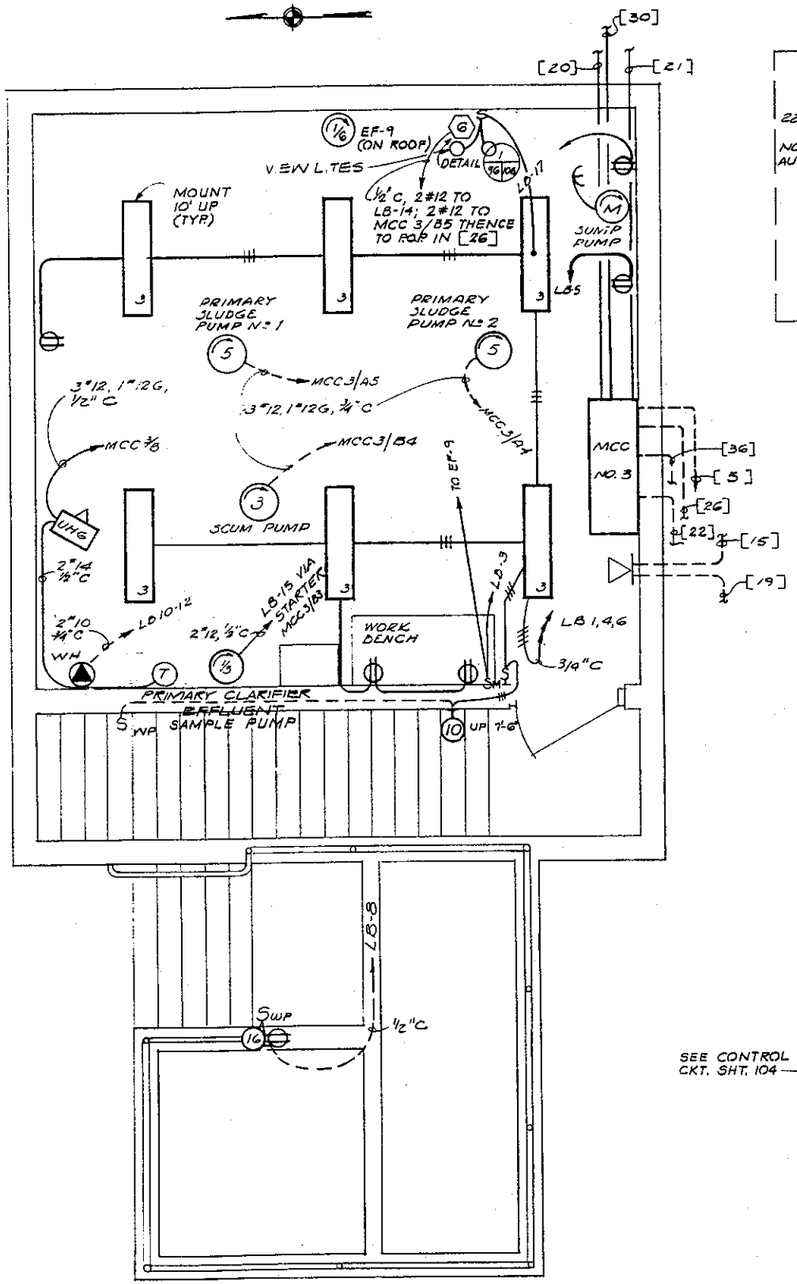

ELECTRICAL PLAN
3/8" = 1'-0"

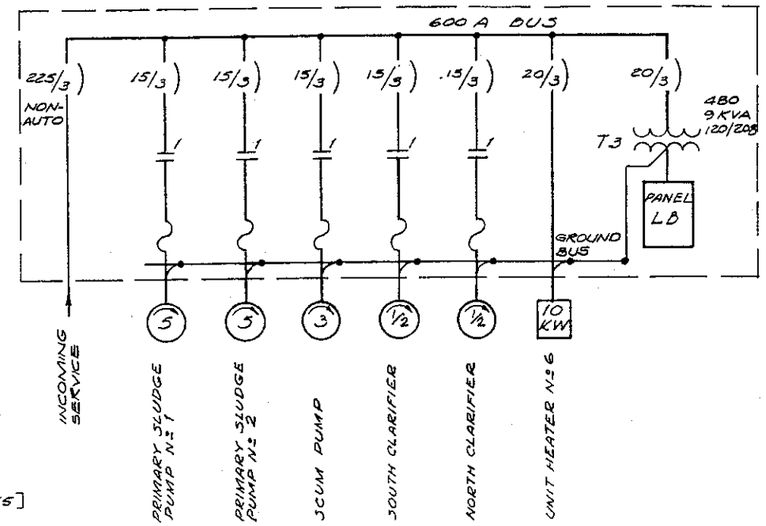

MOTOR CONTROL CENTER No. 3
ONE LINE DIAGRAM

NOTE : SEE SHT. 95 FOR CLARIFIERS' CONTROL DIAGRAM

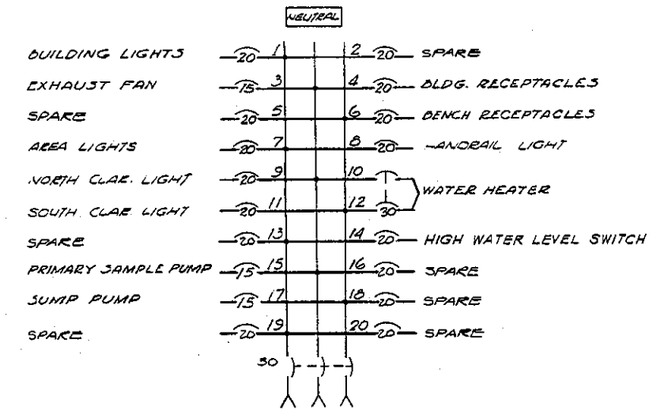

100A, 120/208V, 3ϕ, 4W
PANEL LB

A	B	C
BLANK 1	SPACE 1	PANEL LB 1
NORTH CLARIFIER 2		
SOUTH CLARIFIER 3	UH-G 2A / SPACE 2B	
PRIMARY SLUDGE PUMP No. 2 4	SAMPLE PUMP STARTER (120V) 3	TRANS-FORMER T-3 & CKT. BKR. 2
PRIMARY SLUDGE PUMP No. 1 5	SCUM PUMP 4	
MAIN BREAKER 6	TERMINAL STRIP 5	
4" CONC PAD		

SEE CONTROL CKT. SHT. 104

MOTOR CONTROL CENTER No. 3
3/4" = 1'-0"

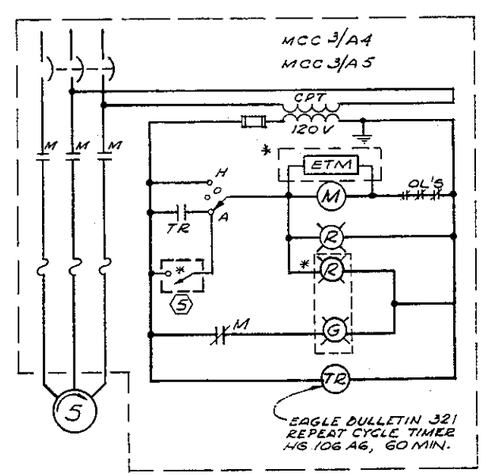

PRIMARY SLUDGE PUMPS Nos 1 & 2

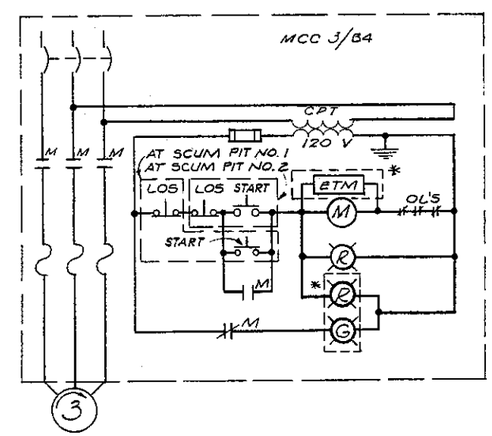

SCUM PUMP

* LOCATED AT PLANT OPERATIONS PANEL (ROP) SPECIFIED IN SECTION T112

NO.	DATE	REVISION	BY	CHK.
1	APRIL 75	RECORD DRAWINGS	DLB	GRG

CH2M HILL
ENGINEERS PLANNERS ECONOMISTS

CORNELL HOWLAND HAYES & MERRYFIELD

CLAIR A. HILL & ASSOCIATES

CITY OF BELLINGHAM, WASHINGTON
POST POINT POLLUTION CONTROL PLANT
SCHEDULE T

ELECTRICAL -
PRIMARY SLUDGE PUMP STATION

DES
DR. DNF
CK.
DATE: APRIL 1972
SCALE: AS SHOWN
SHEET 96
OF 113
DRAWING NO. C 6198-2

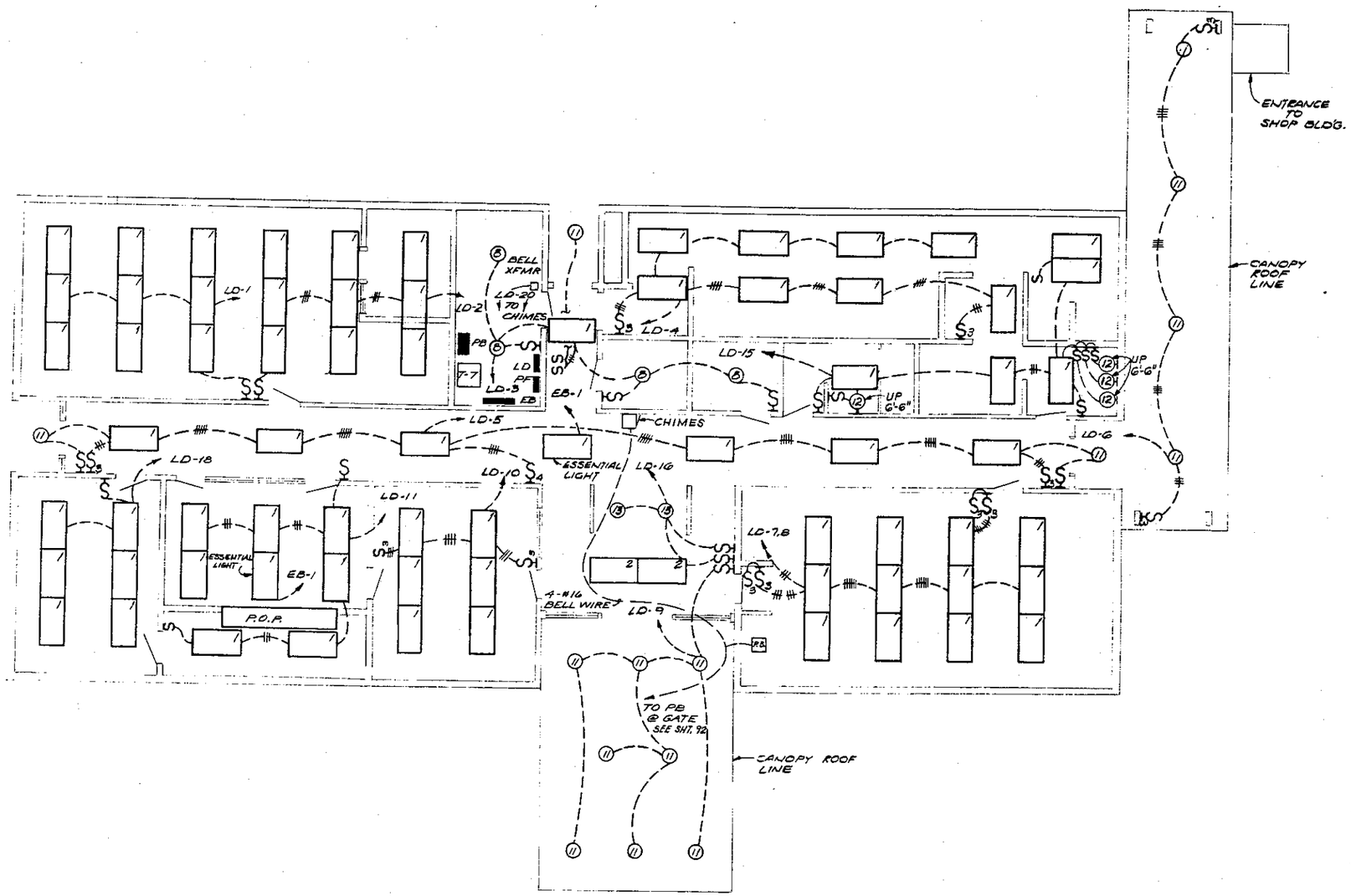

LIGHTING PLAN

3/16" = 1'-0"

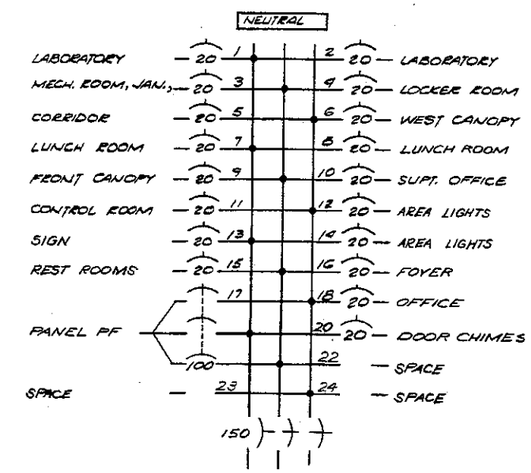

PANEL LD

225A, 120/208, 3Ø, 4W

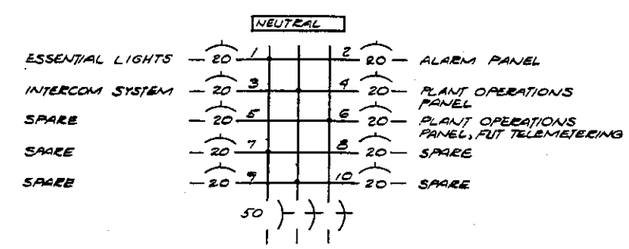

PANEL EB

100A, 120/208, 3Ø, 4W

NO.	DATE	REVISION	BY	CHK.
1	APRIL 75	RECORD DRAWINGS	DLB	GRB

CH2M HILL — ENGINEERS PLANNERS ECONOMISTS

CORNELL HOWLAND HAYES & MERRYFIELD

CLAIR A. HILL & ASSOCIATES

CITY OF BELLINGHAM, WASHINGTON
POST POINT POLLUTION CONTROL PLANT
SCHEDULE T

ELECTRICAL -

ADMINISTRATION BUILDING - LIGHTING

DES. CVB
DR. JRB
CK. RSV
APRIL 1972
SHEET 97 OF 113
C 6198-2

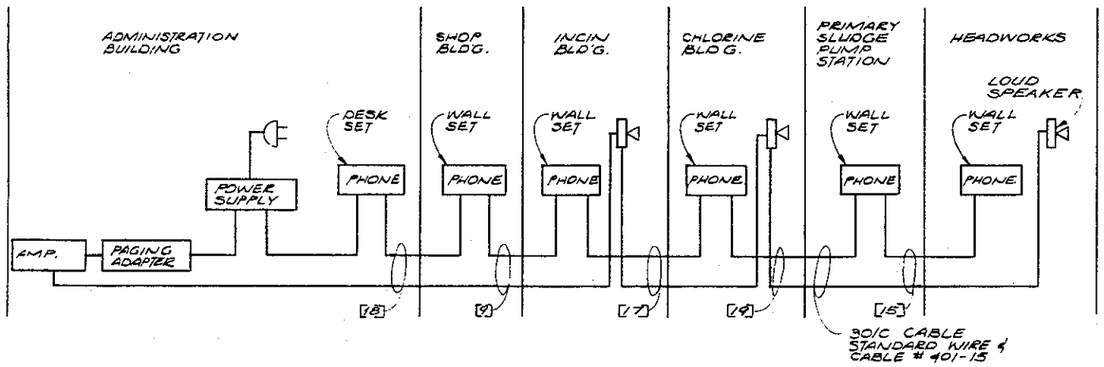

INTERCOM SYSTEM

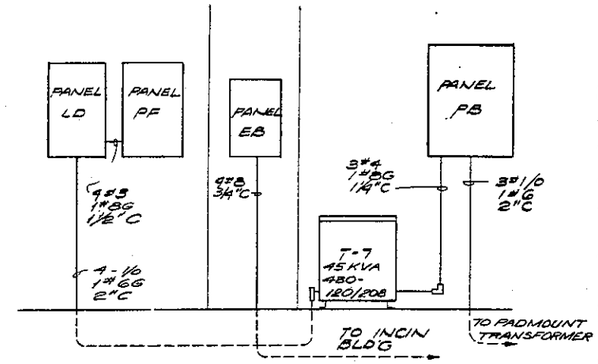

EQUIPMENT LAYOUT

NTS

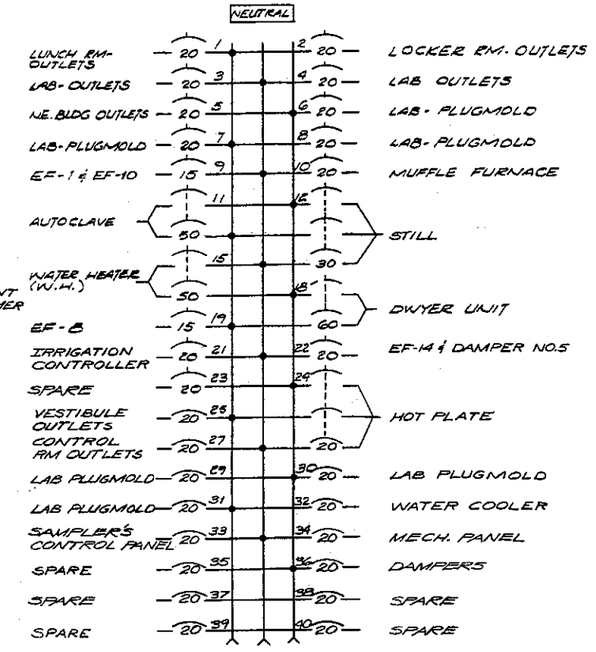

PANEL "PF"

100A, 120/208, 3Φ, 4W

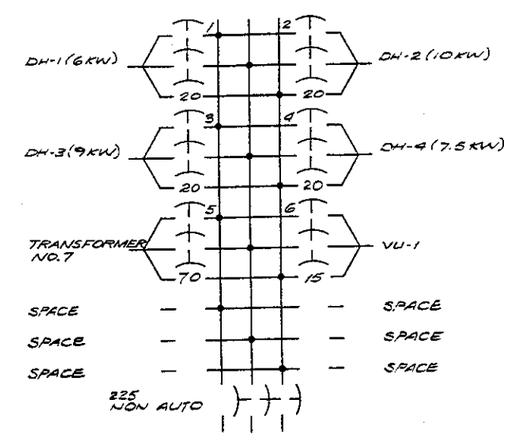

PANEL "PB"

225A, 480V, 3Φ, 4W

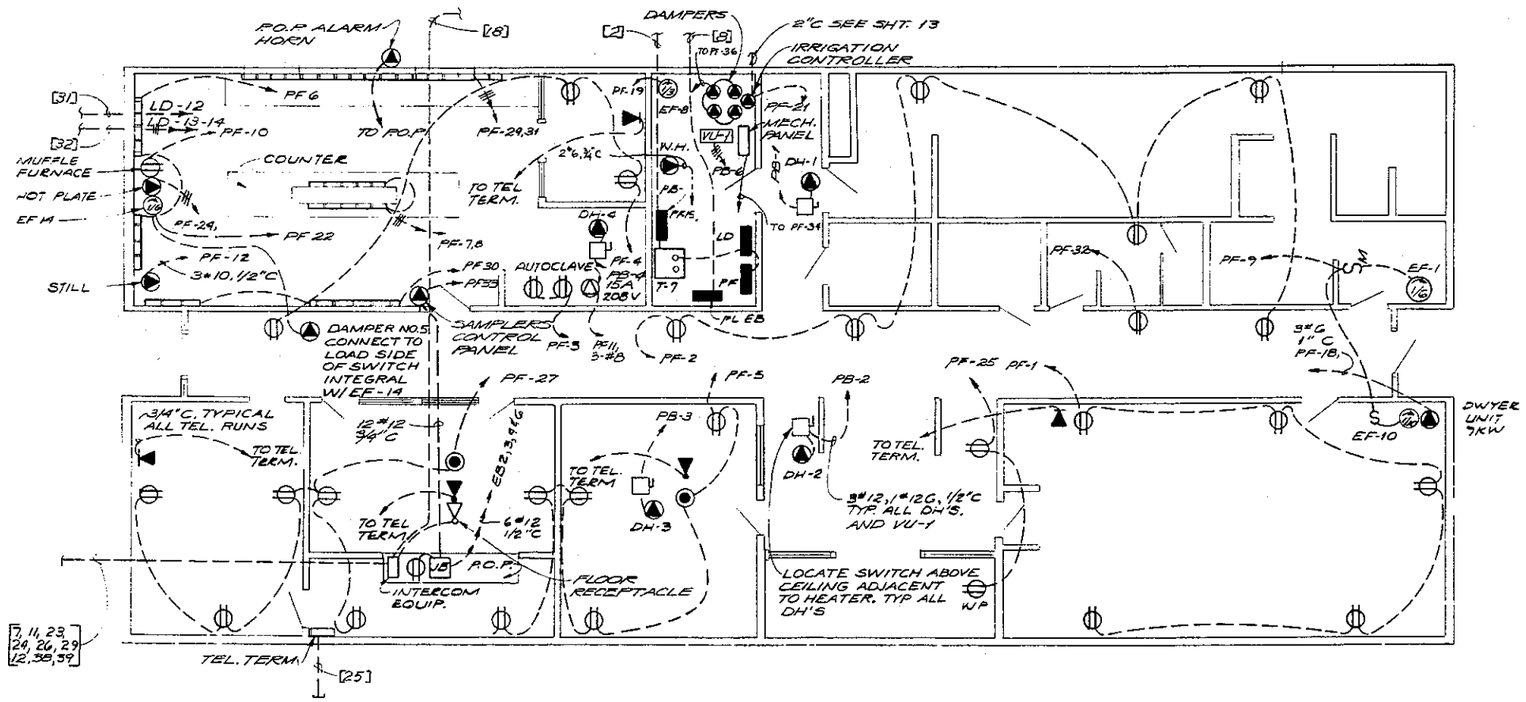

POWER AND COMMUNICATION PLAN

3/16" = 1'-0"

1	APRIL 75	RECORD DRAWINGS	DLB	GRG
NO.	DATE	REVISION	BY	CHK.

CH2M HILL — ENGINEERS PLANNERS ECONOMISTS

CORNELL HOWLAND HAYES & MERRYFIELD

CLAIR A. HILL & ASSOCIATES

CITY OF BELLINGHAM, WASHINGTON
POST POINT POLLUTION CONTROL PLANT
SCHEDULE T

ELECTRICAL -
ADMINISTRATION BUILDING -
POWER AND INTERCOM

DES. CVB
DR. JRB
CK. RSW
DATE: APRIL 1972
DRAWING NO. C 6196-2
SHEET 98 OF 113

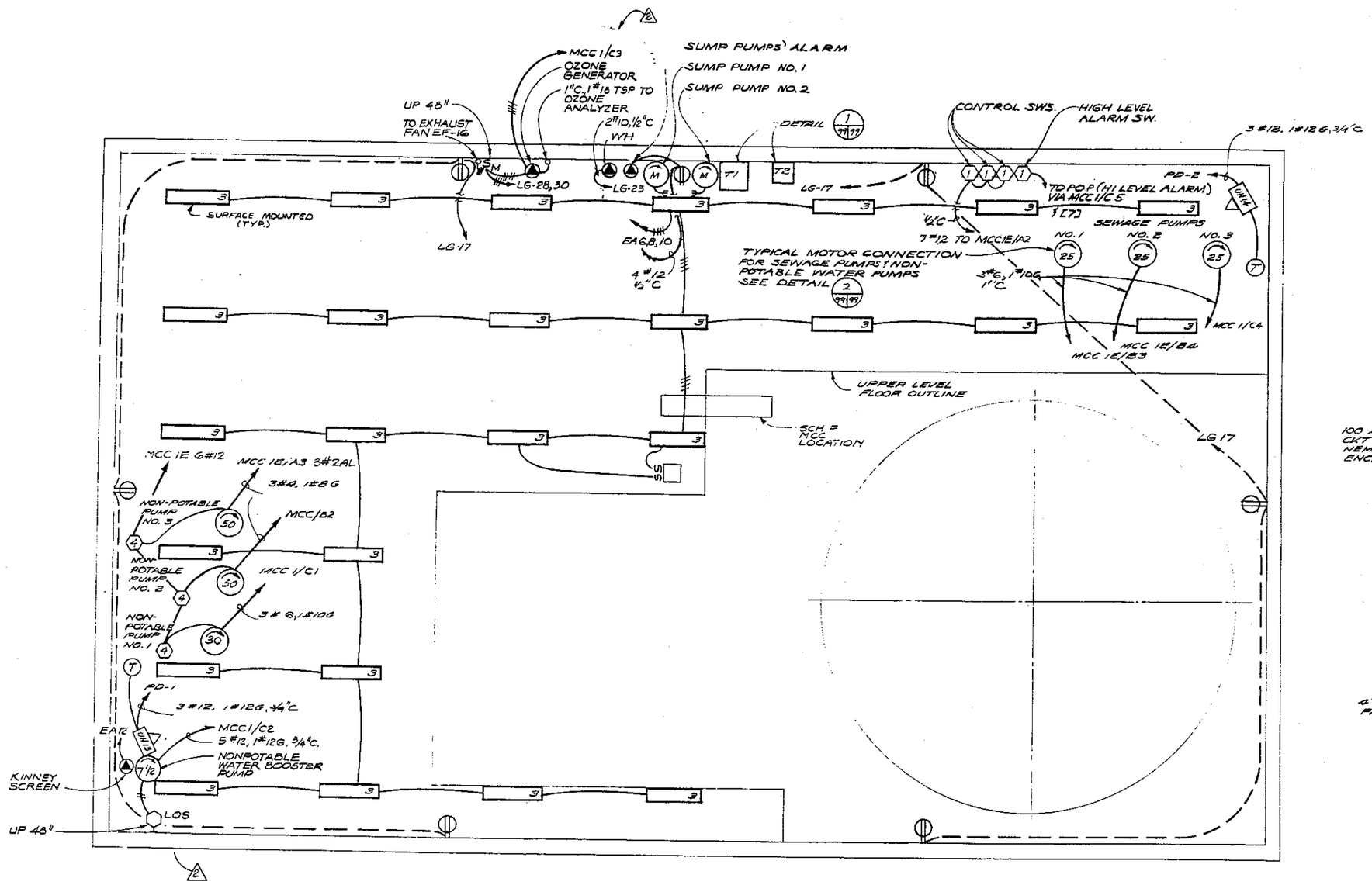

ELECTRICAL PLAN
LOWER LEVEL
1/4" = 1'-0"

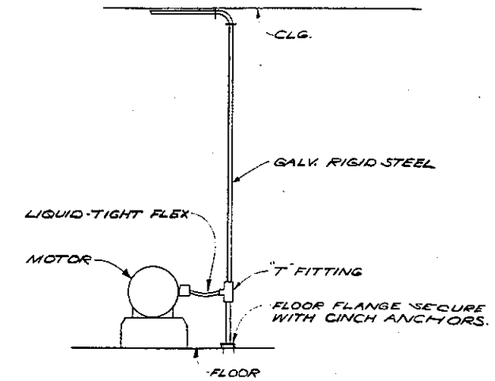

MOTOR CONNECTION DETAIL 2/99/99
NTS

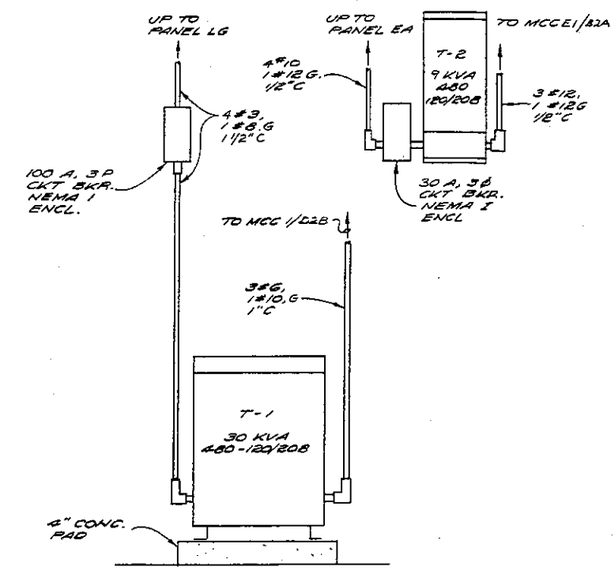

DETAIL 1/99/99
NTS

No.	DATE	REVISION	BY	CHK.
2	DEC 75	REMOVED AIR SCRUBBER, ADDED NON-POTABLE WATER PUMP & OZONE GENERATOR	TLS	CLB
1	APRIL 75	RECORD DRAWINGS	DLB	GRG

CH2M HILL
ENGINEERS PLANNERS ECONOMISTS

CORNELL HOWLAND HAYES & MERRYFIELD
CLAIR A. HILL & ASSOCIATES

CITY OF BELLINGHAM, WASHINGTON
POST POINT POLLUTION CONTROL PLANT
SCHEDULE T
-
ELECTRICAL -
INCINERATION BUILDING -
LOWER LEVEL

DR. NS
DS. -
CK. RSN
DW. 39198.1
SHEET 99 OF 113
DATE: APRIL 1972
SCALE: AS SHOWN
DRAWING NO. C 6198-2

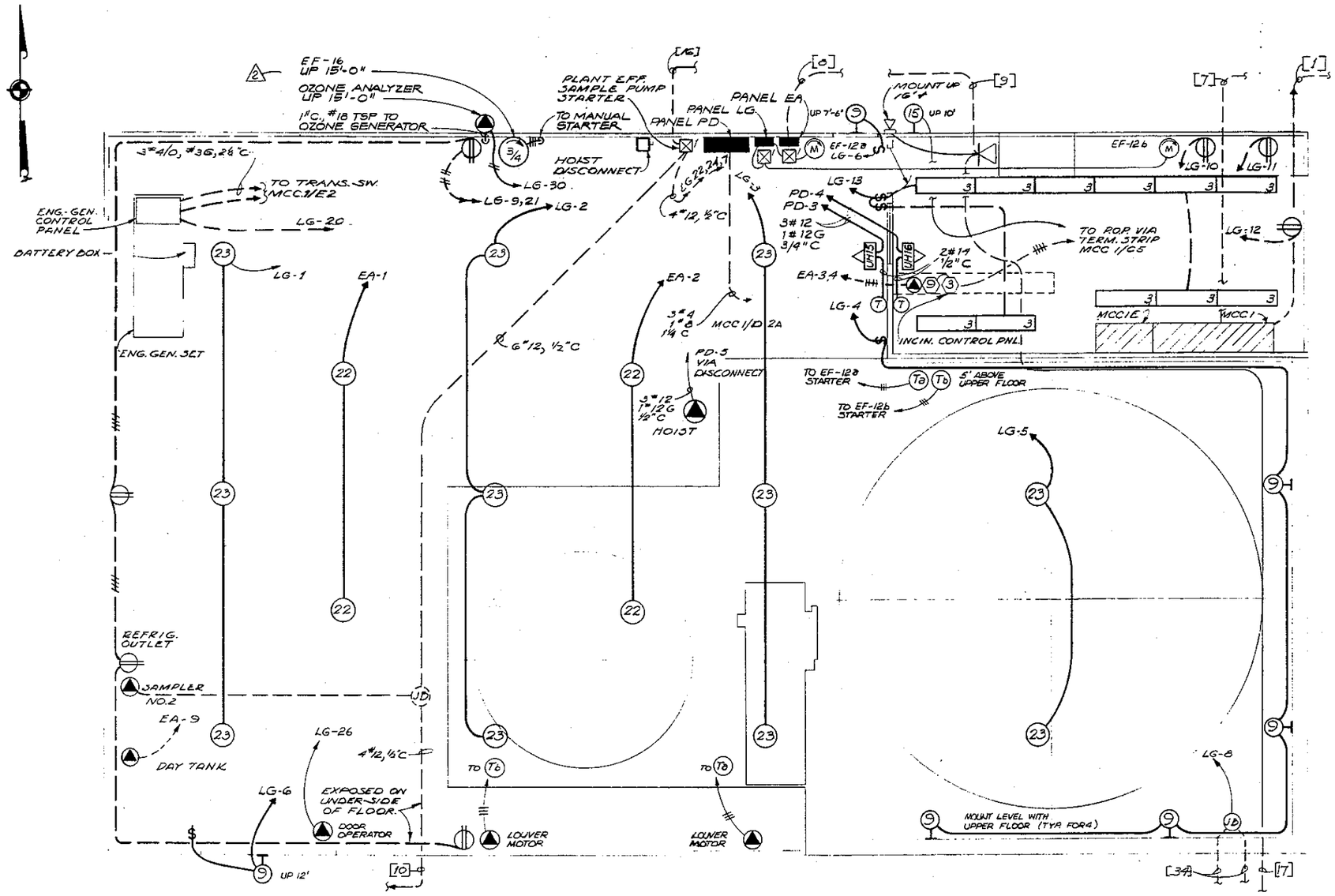

UPPER LEVEL ELECTRICAL PLAN

¼" = 1'-0"

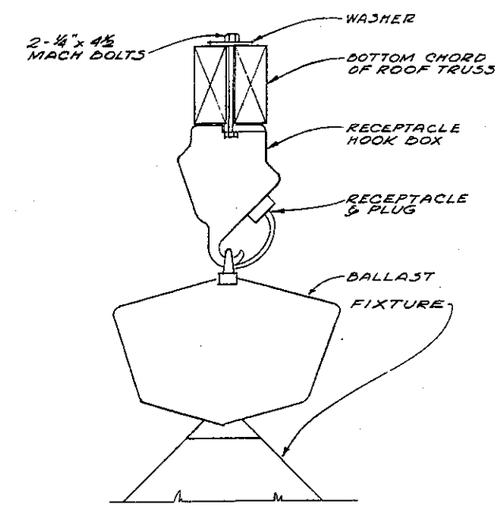

FIXTURE (23) MOUNTING DETAIL

N.T.S.

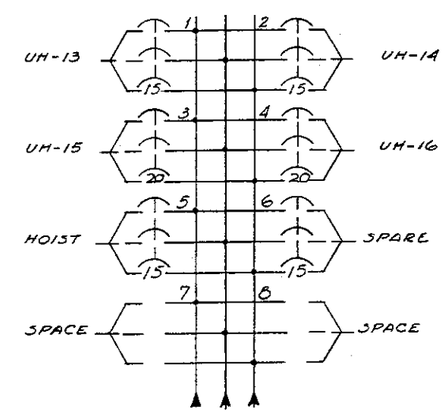

PANEL PD

225A, 480V, 3φ, 3W

NO.	DATE	REVISION	BY	CHK
2	DEC. 75	ADDED OZONE ANALYZER & EXHAUST FAN	TLS	CLB
1	APRIL 75	RECORD DRAWINGS	DLB	GRG

CH2M HILL — ENGINEERS PLANNERS ECONOMISTS

CORNELL HOWLAND HAYES & MERRYFIELD

CLAIR A. HILL & ASSOCIATES

CITY OF BELLINGHAM, WASHINGTON
POST POINT POLLUTION CONTROL PLANT
SCHEDULE T

ELECTRICAL -
INCINERATION BUILDING -
UPPER LEVEL

DR. CVB
DR. Mike
CK. RSN
JOB 5619B.1
SHEET 100
OF 113
DATE: APRIL 1972
SCALE:
DWG. NO. C 6198-2

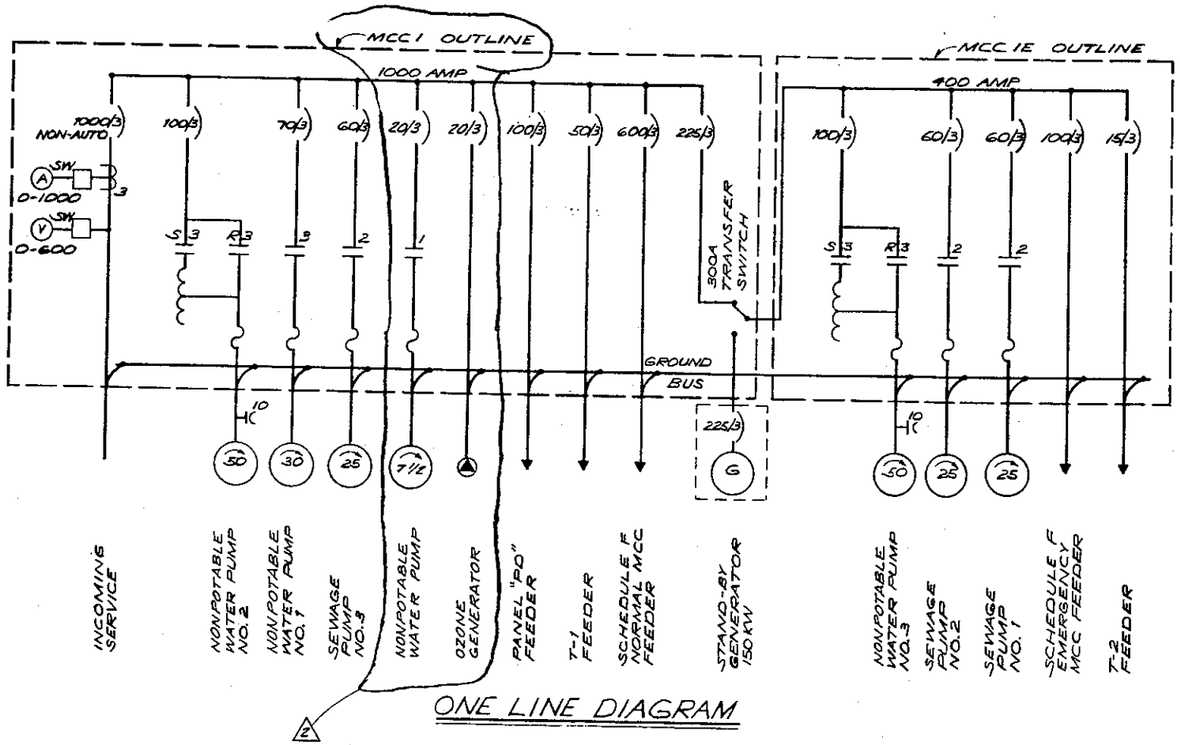

ONE LINE DIAGRAM

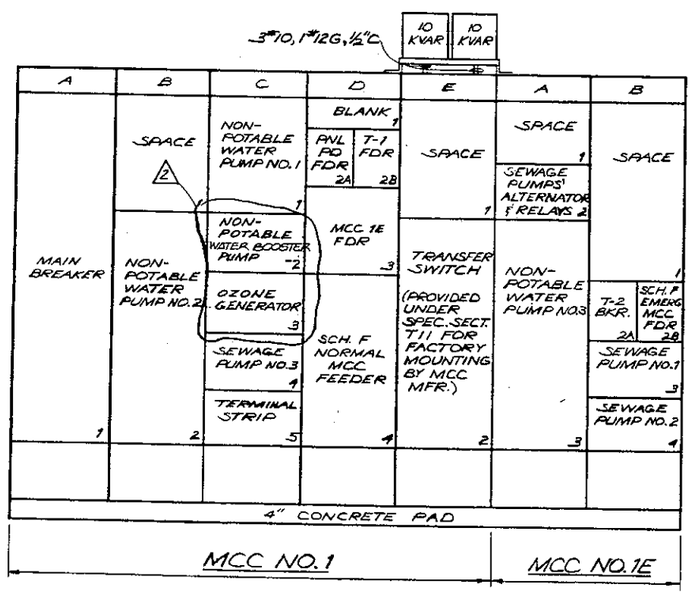

MOTOR CONTROL CENTERS
¾" = 1'-0"

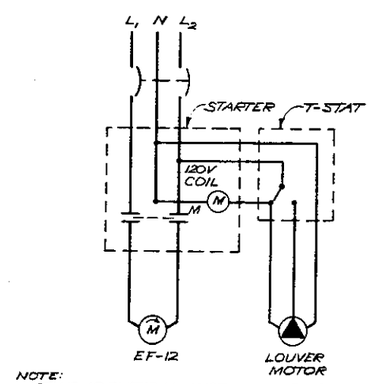

NOTE:
TWO IDENTICAL INSTALLATIONS.

ELEMENTARY DIAGRAM
EF-12 & LOUVER

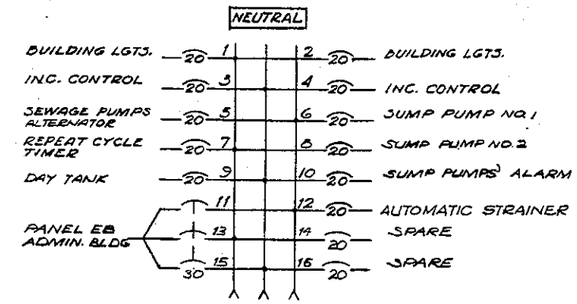

PANEL EA
100A, 120/208, 3φ, 4W

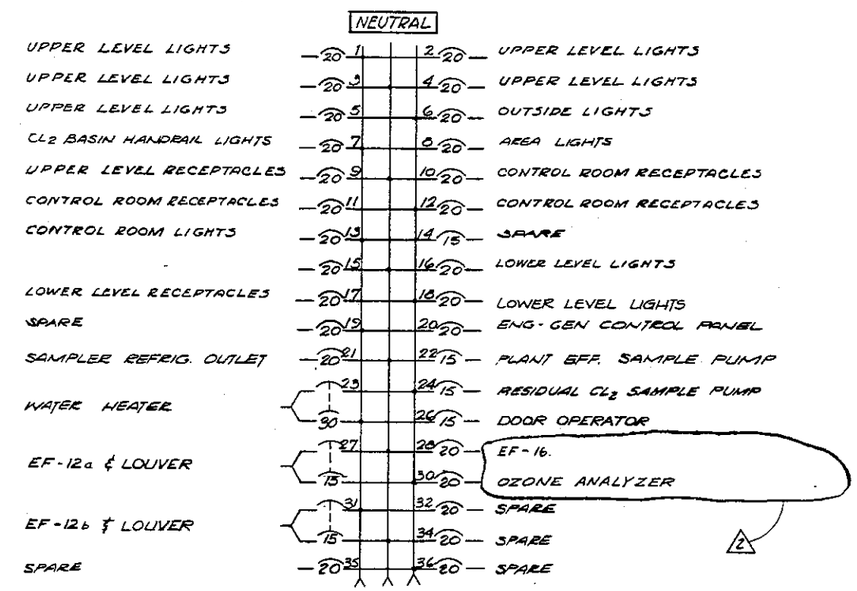

PANEL LG
225A, 120/208, 3φ, 4W

NO.	DATE	REVISION	BY	CHK
2	DEC 75	REMOVED AIR SCRUBBER, ADDED NONPOTABLE WATER BOOSTER PUMP & OZONE GENERATOR	TLS	CLB
1	APRIL 75	RECORD DRAWINGS	MLN	GRG

CH2M HILL — ENGINEERS PLANNERS ECONOMISTS

CORNELL HOWLAND HAYES & MERRYFIELD

CLAIR A. HILL & ASSOCIATES

CITY OF BELLINGHAM, WASHINGTON
POST POINT POLLUTION CONTROL PLANT
SCHEDULE T

ELECTRICAL
INCINERATION BUILDING
MOTOR CONTROL CENTER NO. 1

DES. CVB
DR. WTM
CK. RSN
RN 86198.1
DRAWING NO. C 6198-2
SHEET 101 OF 113
DATE: APRIL 1972
SCALE: AS SHOWN

CARL V. BRACKETT — STATE OF WASHINGTON — REGISTERED PROFESSIONAL ENGINEER

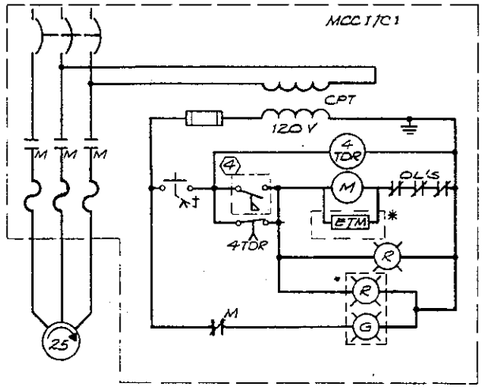

NON-POTABLE PUMP NO. 1

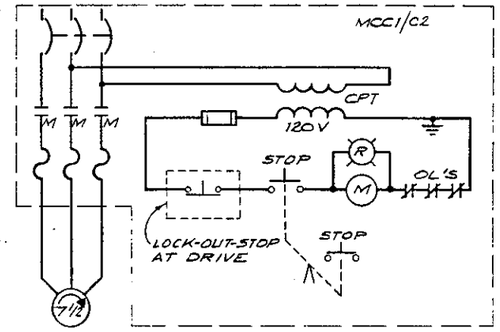

NON-POTABLE WATER BOOSTER PUMP

N.T.S.

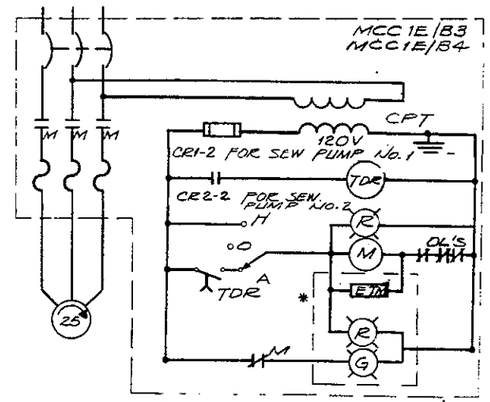

SEWAGE PUMPS NOS. 1 & 2

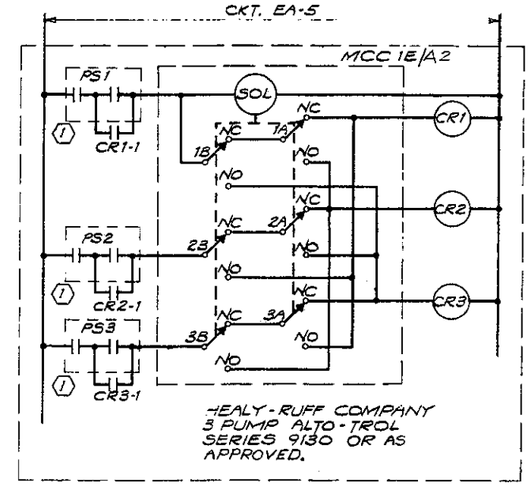

3 PUMP ALTERNATOR

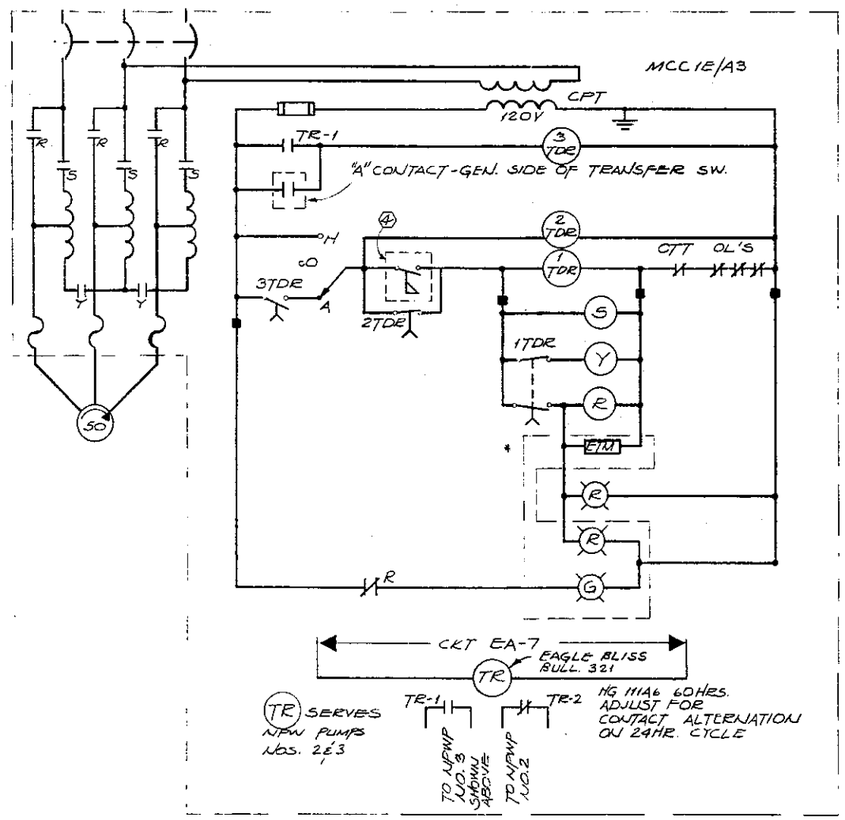

NON-POTABLE WATER PUMP NO. 3

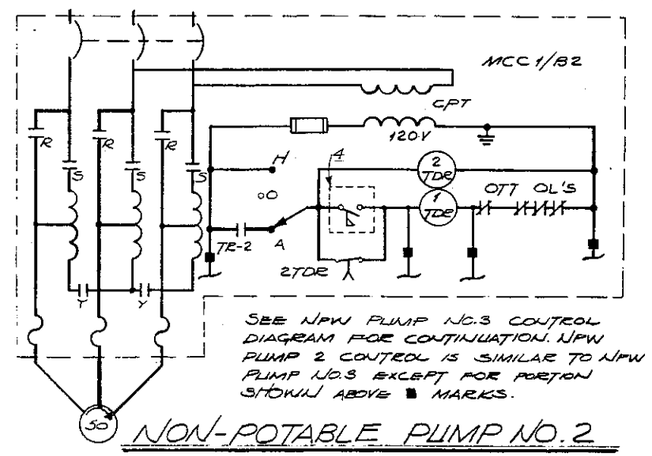

SEE NPW PUMP NO. 3 CONTROL DIAGRAM FOR CONTINUATION. NPW PUMP 2 CONTROL IS SIMILAR TO NPW PUMP NO. 3 EXCEPT FOR PORTION SHOWN ABOVE ■ MARKS.

NON-POTABLE PUMP NO. 2

MICRO-SWITCH OPERATION	POSITION 1	POSITION 2	POSITION 3
1A - NC	X	O	X
1A - NO	O	X	O
2A - NC	X	O	X
2A - NO	O	X	O
3A - NC	X	O	X
3A - NO	O	X	O
1B - NC	X	X	O
1B - NO	O	O	X
2B * - NC	X	X	O
2B - NO	O	O	X
3B - NC	X	X	O
3B - NO	O	O	X

"X" CONTACT CLOSED "O" CONTACT OPEN

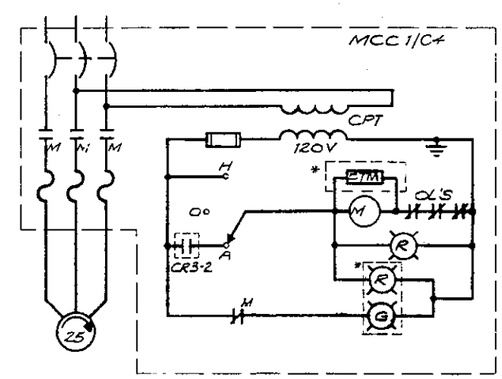

SEWAGE PUMP NO. 3

	PUMPS		
	LEAD	SECOND	THIRD
POSITION 1	1	2	3
POSITION 2	2	3	1
POSITION 3	3	1	2

ALTERNATOR OPERATION

* LOCATED ON PLANT OPERATIONS PANEL SPECIFIED IN SECTION T11Q

NO.	DATE	REVISION	BY	CHK.
2	DEC. 75	ADDED NONPOTABLE WATER BOOSTER PUMP DELETED AIR SCRUBBER	TLS	CLB
1	APRIL 75	RECORD DRAWING	MLN	GRG

CH2M HILL — ENGINEERS PLANNERS ECONOMISTS

CORNELL HOWLAND HAYES & MERRYFIELD

CLAIR A. HILL & ASSOCIATES

CITY OF BELLINGHAM, WASHINGTON
POST POINT POLLUTION CONTROL PLANT
SCHEDULE T

ELECTRICAL -
INCINERATION BUILDING -
CONTROL DIAGRAMS

SHEET NO2 — 113 — APRIL 1972 — C 6198-2

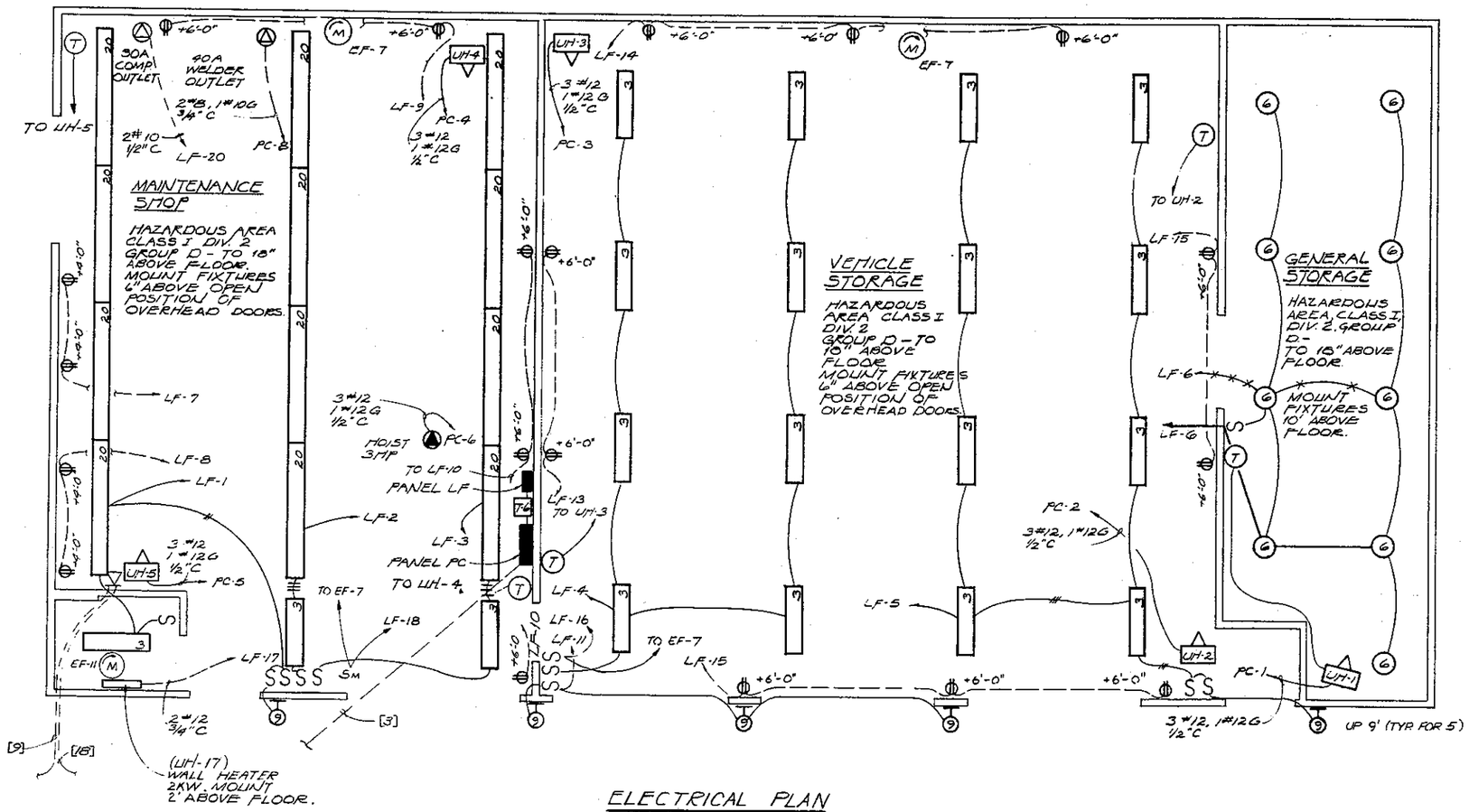

ELECTRICAL PLAN

1/4" = 1'-0"

1	APRIL 75	RECORD DRAWINGS	DLB	GRG
NO.	DATE	REVISION	BY	CHK

CH2M HILL — ENGINEERS PLANNERS ECONOMISTS

CORNELL HOWLAND HAYES & MERRYFIELD

CLAIR A. HILL & ASSOCIATES

CITY OF BELLINGHAM, WASHINGTON
POST POINT POLLUTION CONTROL PLANT
SCHEDULE T

ELECTRICAL -
SHOP BUILDING

DES. CVB
DR. AFW
CK. RSW
DWG. 56198.1

SHEET 103 OF 113
DATE: APRIL 1972
SCALE: AS SHOWN

DRAWING NO. C 6198-2

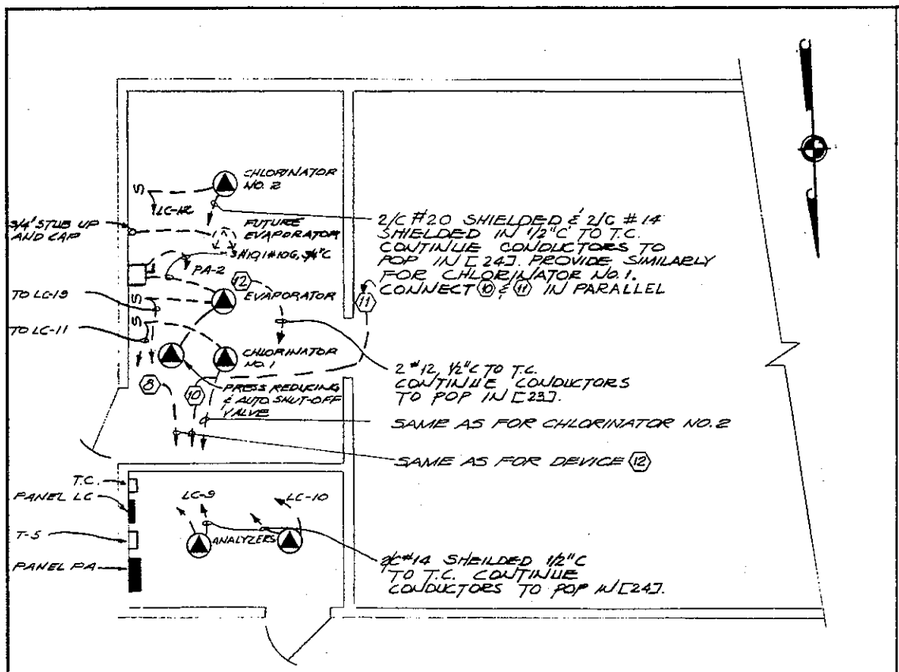

CHLORINATION EQUIPMENT ELECTRICAL PLAN

1/4" = 1'-0"

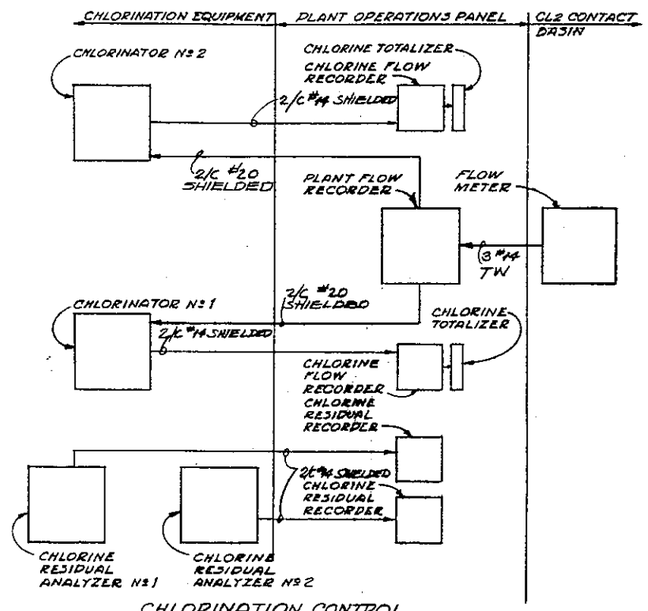

CHLORINATION CONTROL BLOCK DIAGRAM

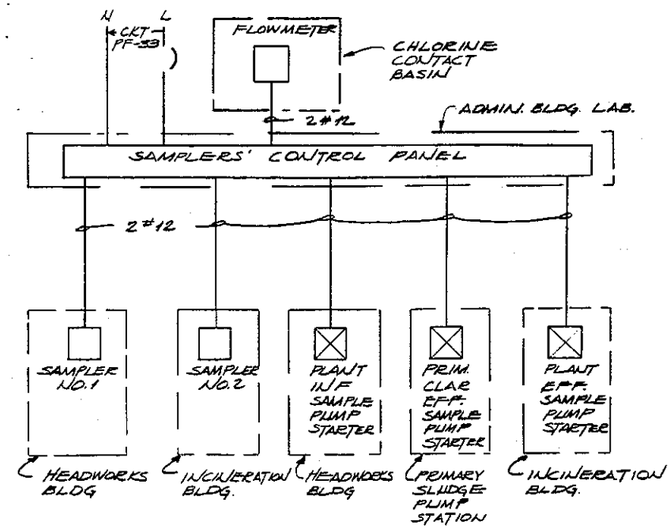

SAMPLING CONTROL BLOCK DIAGRAM

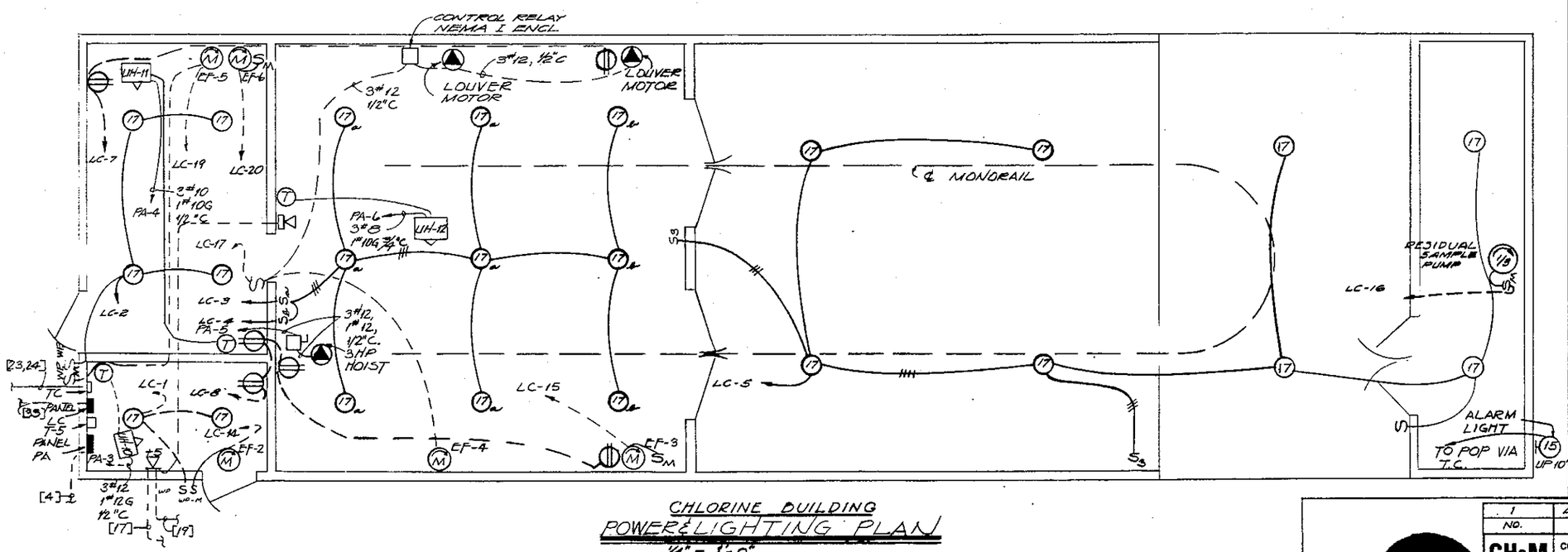

CHLORINE BUILDING POWER & LIGHTING PLAN

1/4" = 1'-0"

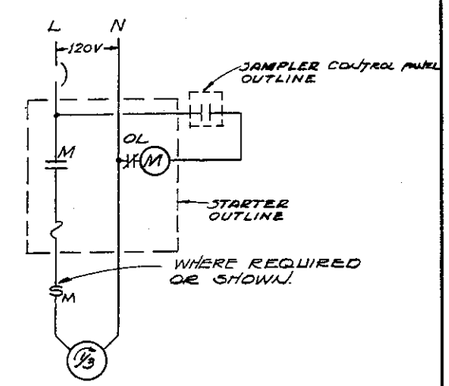

CONTROL DIAGRAM
SAMPLE PUMPS
PLANT EFFLUENT
PLANT INFLUENT
PRIMARY CLARIFIER EFFLUENT

NO.	DATE	REVISION	BY	CHK
1	APRIL 75	RECORD DRAWING	MLN	GRG

CH2M HILL — ENGINEERS PLANNERS ECONOMISTS

CORNELL HOWLAND HAYES & MERRYFIELD

CLAIR A. HILL & ASSOCIATES

CITY OF BELLINGHAM, WASHINGTON
POST POINT POLLUTION CONTROL PLANT
SCHEDULE T

ELECTRICAL -
CHLORINE BUILDING

DR. CVB
DM. DML
CK. RSN
DR. NO. 6188.1
SHEET 104
SCALE 113
DATE APRIL 1972
C 6188-2

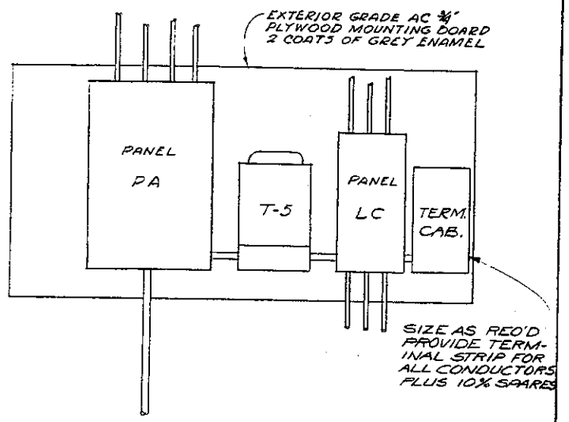

CL2 BLDG. SERVICE EQUIPMENT

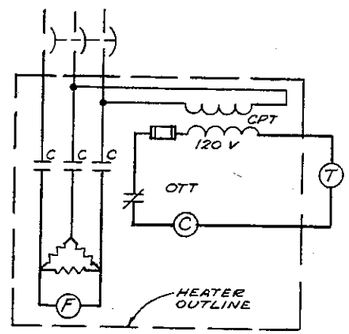

UNIT HEATERS

TYPICAL FOR ALL U.H.'S

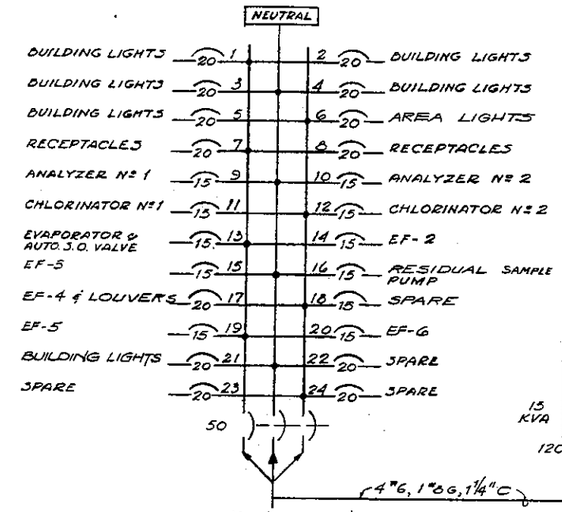

100A, 120/208V, 3φ, 4W

PANEL LC

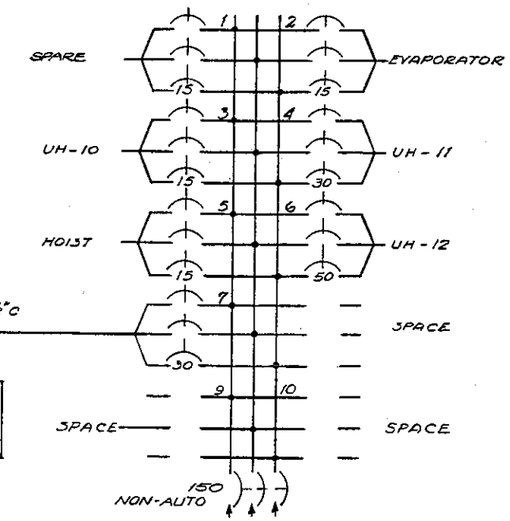

225A, 480 V 3φ, 4W

PANEL PA

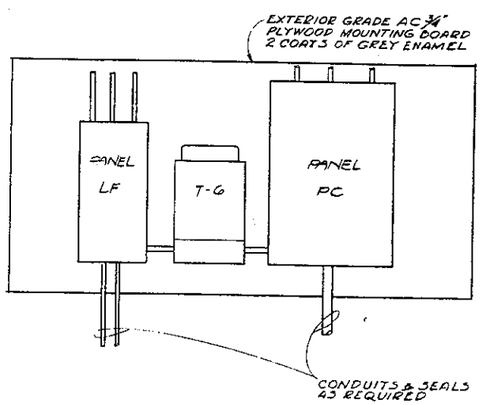

SHOP SERVICE EQUIPMENT

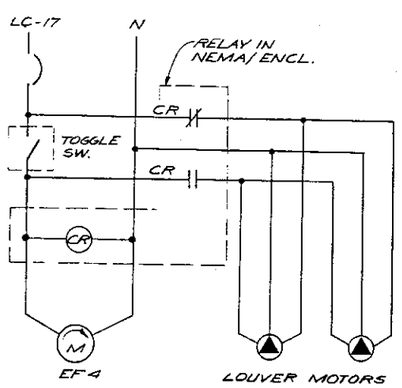

CL2 BLDG. EF-4 & LOUVERS ELEMENTARY DIAGRAM

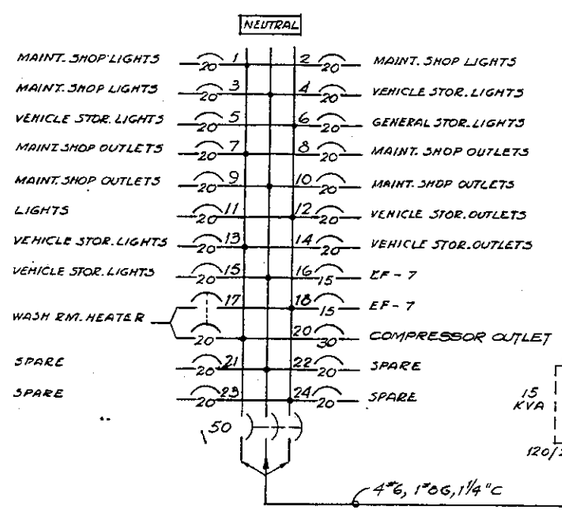

100A, 120/208V, 3φ, 4W

PANEL LF

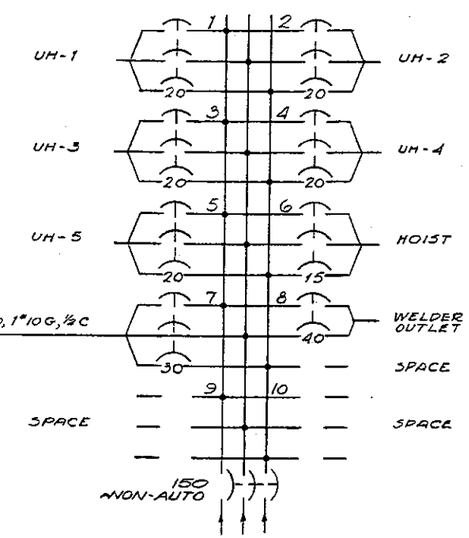

225A, 480 V 3φ, 4W

PANEL PC

1	APRIL 75	RECORD DRAWINGS	DLB	GRG
NO.	DATE	REVISION	BY	CHK.

CH2M HILL — ENGINEERS. PLANNERS ECONOMISTS

CORNELL HOWLAND HAYES & MERRYFIELD — CLAIR A. HILL & ASSOCIATES

CITY OF BELLINGHAM, WASHINGTON
POST POINT POLLUTION CONTROL PLANT
SCHEDULE T

ELECTRICAL -
SHOP AND CHLORINE BUILDING - DETAILS

DR. CVB
DES. CVO
CK. RSN
JOB 96196.1
DRAWING NO. C 6196-2
SHEET 105 OF 113
DATE APRIL 1972
SCALE AS SHOWN

ELMAR STATIONERY & PRINTING CO., PORTLAND, ORE.

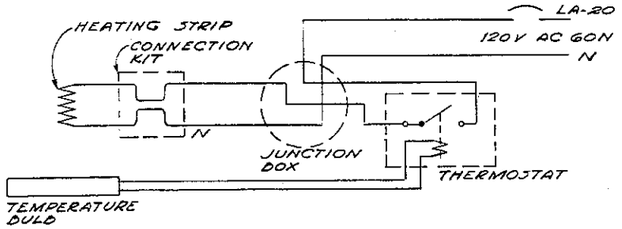

HEATING STRIP CONTROL CIRCUIT

NOTES:

1. PLASTIC FOAM SHALL BE DOW "THURONE" PLASTIC FOAM OR AS APPROVED.
2. PROVIDE 6.75 FEET OF "ELECTROWRAP" AS MANUFACTURED BY ELECTRO-TRACE CORP. HEATING STRIP RATED 120V AC 60~ MIN. 16 WATTS PER FOOT. STRIP SHALL BE COMPLETE WITH SINGLE CIRCUIT CONNECTION KIT AND DEAD END SEAL AND HAVE ADHESIVE BACKING.
3. PROVIDE ROBERTSHAW THERMOSTAT 120V AC 60~ 20 AMP NEMA 3 ENCLOSURE SCALE 30°-230°F COMPLETE WITH NICKEL-PLATED LONG SMALL DIAMETER COPPER BULB AND 10 FEET CAPILLARY
4. MOUNT TEMPERATURE SENSING BULB TO TOUCH HEATING STRIP USING ELECTROWRAP Nº 35 CLAMP KIT MOUNTED ON WEB OF CHANNEL IRON UNDER PLASTIC FOAM.

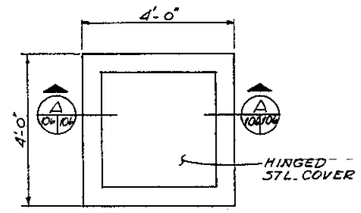

PLAN

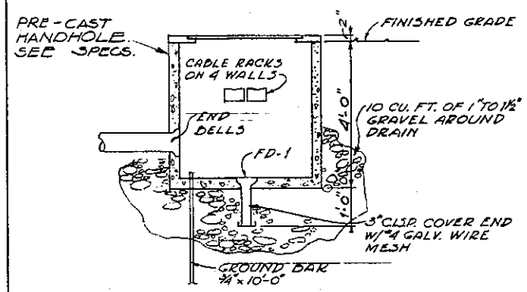

SECTION A 104/106

HANDHOLE DETAILS
N.T.S.

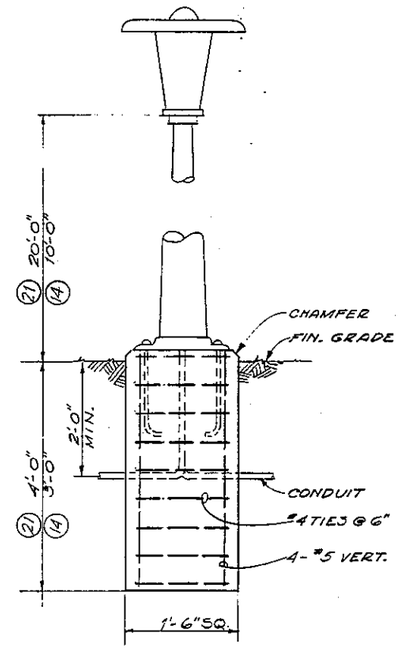

AREA LIGHTS 21 & 14
N.T.S.

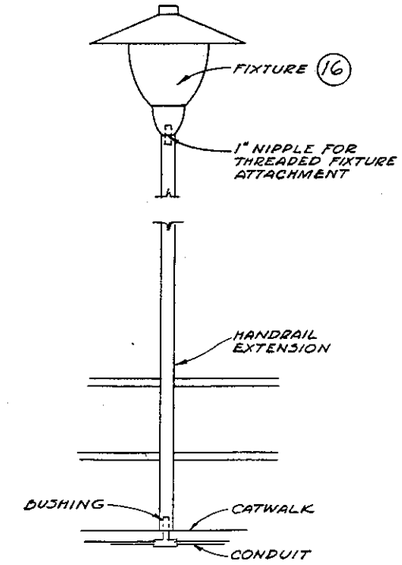

FIXTURE 16
INSTALLATION DETAIL
N.T.S.

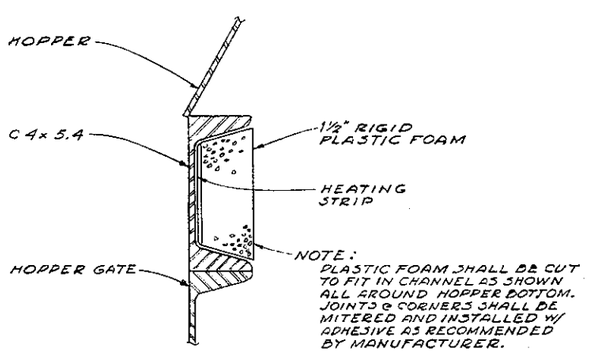

HEATSTRIP DETAIL

HEADWORKS BUILDING
HOPPER HEATING DETAIL 1 93/106
N.T.S.

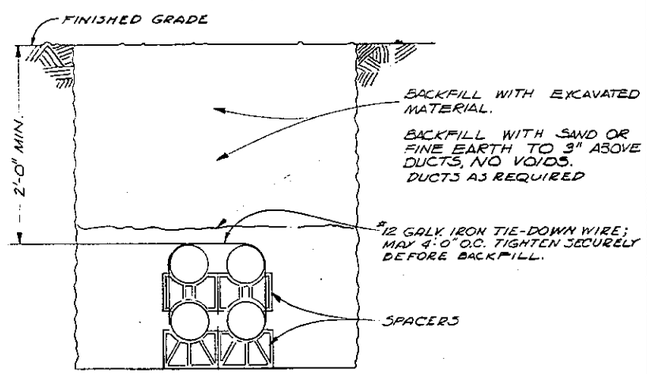

SAMPLE TRENCH & DUCT DETAILS
½" = 1'-0"

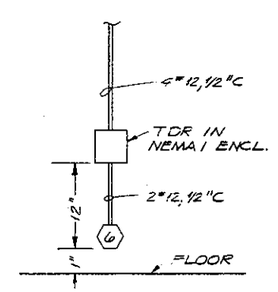

INSTALLATION DETAIL

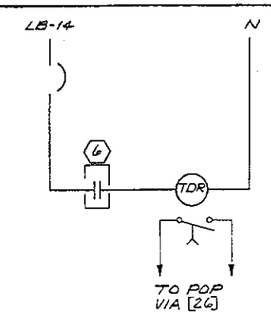

CONTROL DIAGRAM

HIGH WATER LEVEL SWITCH DETAIL 1 96/106

NO	DATE	REVISION	BY	CHK
1	APRIL 75	RECORD DRAWING	MLN	GEG

CH2M HILL — ENGINEERS PLANNERS ECONOMISTS

CORNELL HOWLAND HAYES & MERRYFIELD

CLAIR A. HILL & ASSOCIATES

CITY OF BELLINGHAM, WASHINGTON
POST POINT POLLUTION CONTROL PLANT
SCHEDULE T

ELECTRICAL - MISCELLANEOUS DETAILS

SHEET 106 OF 113
DATE: APRIL 1972
SCALE: AS SHOWN
DRAWING NO. C 6196-2

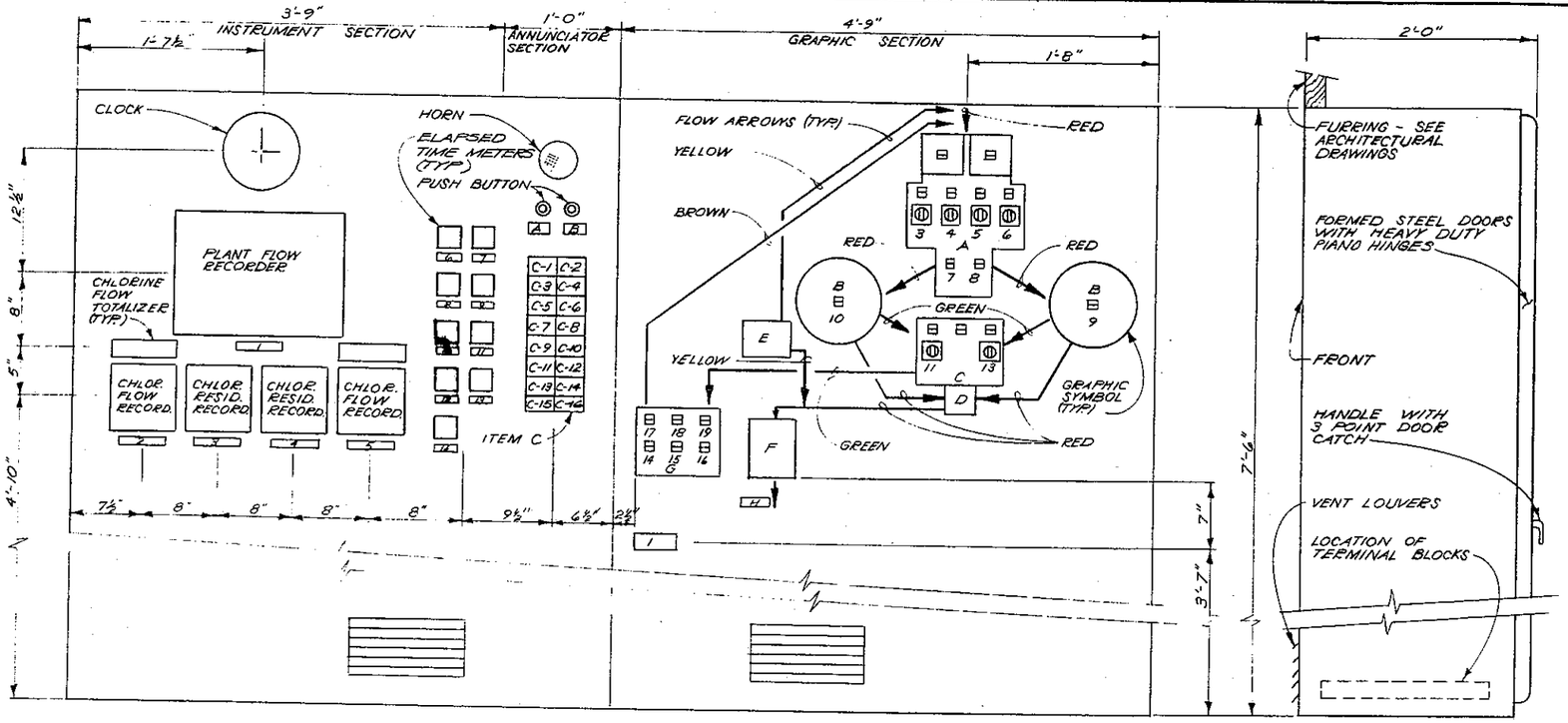

FRONT VIEW

END VIEW

PLANT OPERATIONS PANEL

1½" = 1'0"

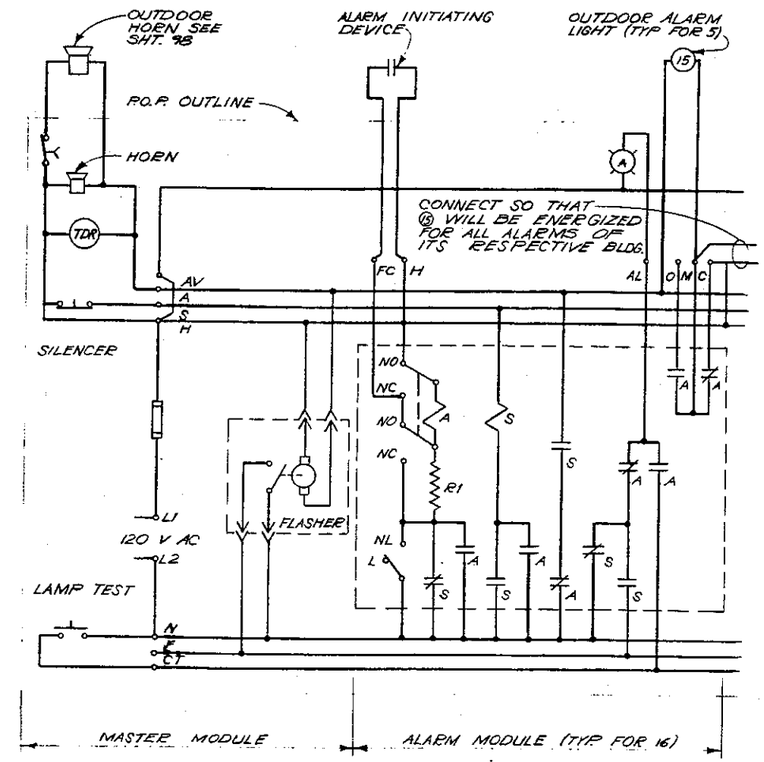

SCHEMATIC DIAGRAM
MASTER MODULE & TYPICAL ALARM

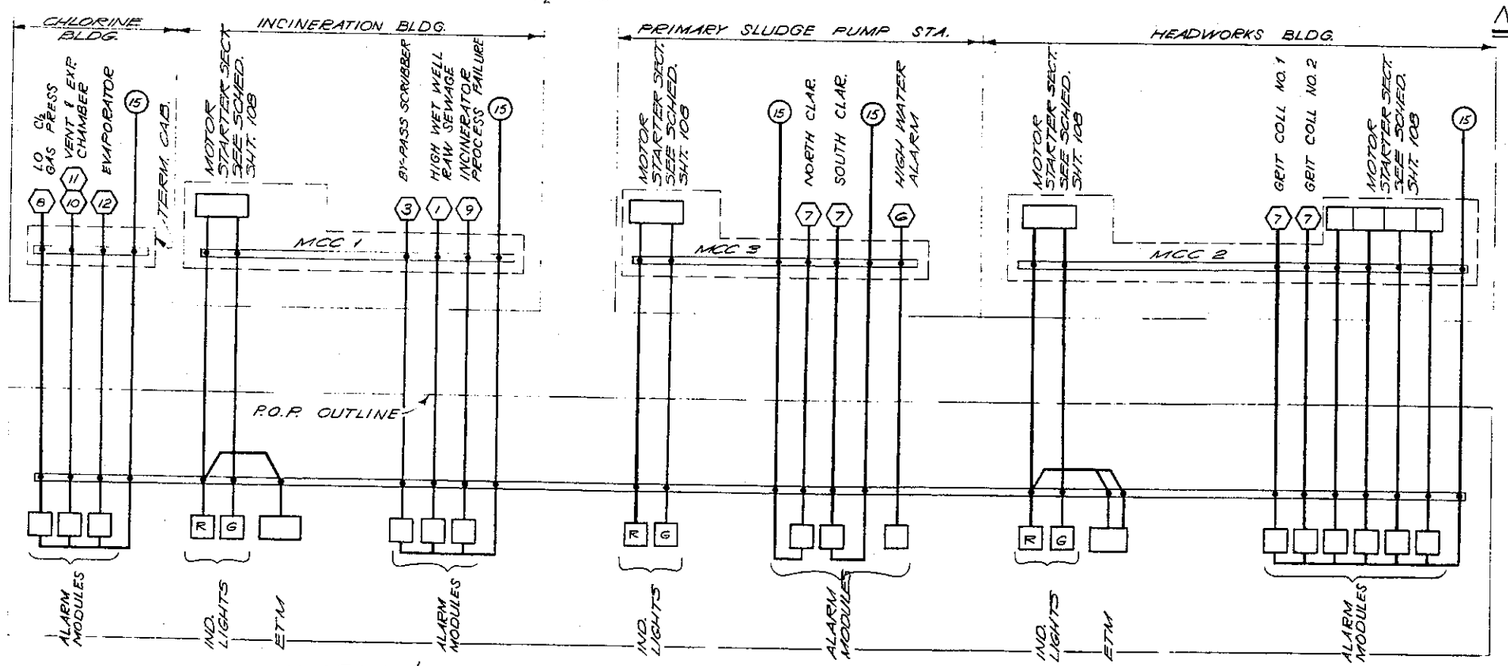

ALARM & ANNUNCIATOR BLOCK DIAGRAM

NO.	DATE	REVISION	BY	CHK
1	APRIL 75	RECORD DRAWINGS	MLN	GRG

CH2M HILL
ENGINEERS PLANNERS ECONOMISTS

CORNELL HOWLAND HAYES & MERRYFIELD
CLAIR A. HILL & ASSOCIATES

CITY OF BELLINGHAM, WASHINGTON
POST POINT POLLUTION CONTROL PLANT
SCHEDULE T
INSTRUMENTATION AND CONTROL -
PLANT OPERATIONS PANEL

DES. CVB
DR. GDG
CK. HCR
DATE: APRIL 1972
SHEET 107 OF 113
C 6188-2

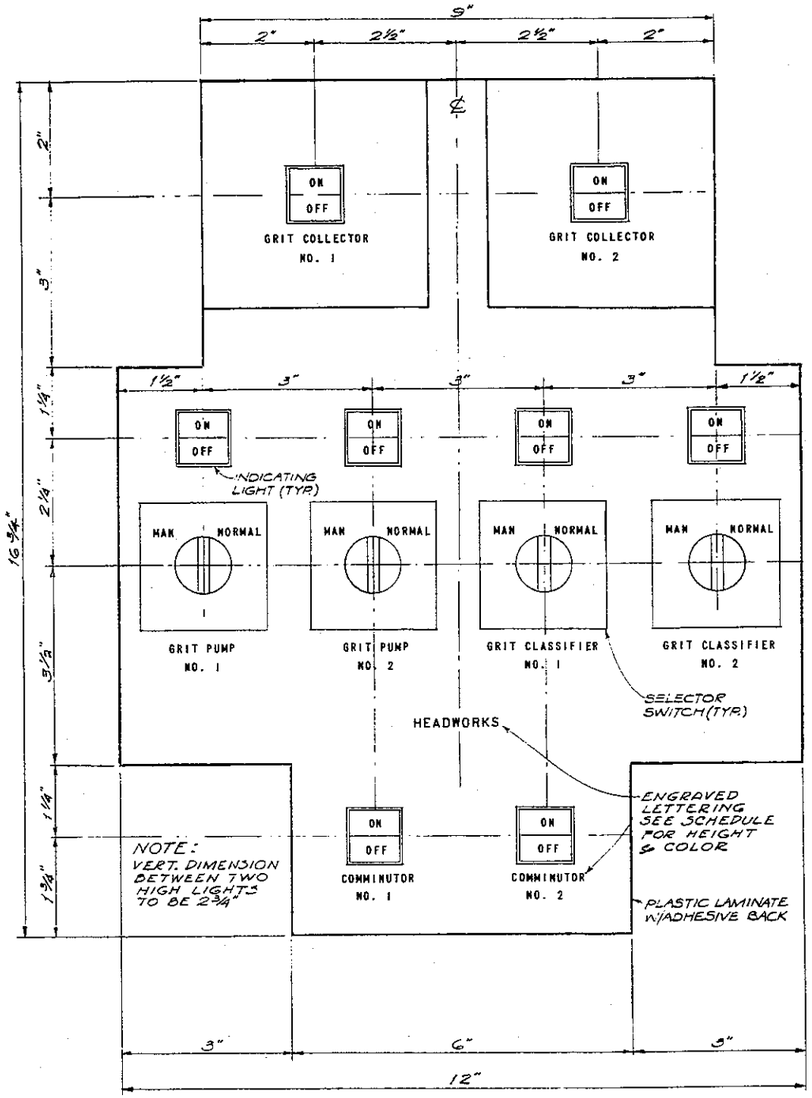

HEADWORKS GRAPHIC SYMBOL

3/4" = 1'-0"

ANNUNCIATOR SCHEDULE

ITEM	DEVICE	INSCRIPTION
A	ENGRAVED NAMEPLATE	ALARM ACKNOWLEDGE - HORN SILENCERS (LETTERS TO BE 3/16"-BLACK)
B	ENGRAVED NAMEPLATE	ALARM LIGHTS - TEST (LETTER TO BE 3/16"-BLACK)
C	ANNUNCIATOR	
C-1	ALARM WINDOW	OVERLOAD GRIT COLLECTOR NO. 1
C-2	ALARM WINDOW	OVERLOAD GRIT COLLECTOR NO. 2
C-3	ALARM WINDOW	OVERLOAD GRIT PUMP NO. 1 OR CLASSIFIER NO. 1
C-4	ALARM WINDOW	OVERLOAD GRIT PUMP NO. 2 OR CLASSIFIER NO. 2
C-5	ALARM WINDOW	OVERLOAD COMMINUTOR NO. 1 OR NO. 2
C-6	ALARM WINDOW	FAN FAILURE HEADWORKS AIR SCRUBBER
C-7	ALARM WINDOW	OVERLOAD NORTH PRIMARY CLARIFIER
C-8	ALARM WINDOW	OVERLOAD SOUTH PRIMARY CLARIFIER
C-9	ALARM WINDOW	LOW PRESSURE CHLORINE
C-10	ALARM WINDOW	HIGH PRESSURE CHLORINE VENT OR EXPANSION CHAMBER
C-11	ALARM WINDOW	MALFUNCTION CHLORINE EVAPORATOR
C-12	ALARM WINDOW	FAILURE INCINERATOR PROCESS
C-13	ALARM WINDOW	BYPASS INCINERATOR SCRUBBER
C-14	ALARM WINDOW	HIGH LEVEL RAW SEWAGE WET WELL
C-15	ALARM WINDOW	HIGH WATER PRIMARY SLUDGE PUMP STATION
C-16	ALARM WINDOW	SPARE

GRAPHIC SYMBOL SCHEDULE

ITEM	DEVICE(S)	ENGRAVED INSCRIPTION	LETTER HEIGHT AND COLOR
A	GRAPHIC SYMBOL	(SEE HEADWORKS GRAPHIC SYMBOL THIS SHEET)	1/2" - BLACK
1	INDICATING LIGHTS	GRIT COLLECTOR NO. 1	3/16" - BLACK
2	INDICATING LIGHTS	GRIT COLLECTOR NO. 2	3/16" - BLACK
3	INDICATING LIGHTS AND SELECTOR SWITCH	GRIT PUMP NO. 1	3/16" - BLACK
4	INDICATING LIGHTS AND SELECTOR SWITCH	GRIT PUMP NO. 2	3/16" - BLACK
5	INDICATING LIGHTS AND SELECTOR SWITCH	GRIT CLASSIFIER NO. 1	3/16" - BLACK
6	INDICATING LIGHTS AND SELECTOR SWITCH	GRIT CLASSIFIER NO. 2	3/16" - BLACK
7	INDICATING LIGHTS	COMMINUTOR NO. 1	3/16" - BLACK
8	INDICATING LIGHTS	COMMINUTOR NO. 2	3/16" - BLACK
8	GRAPHIC SYMBOL (9" DIAMETER)	(NONE)	
9	INDICATING LIGHTS	SOUTH PRIMARY CLARIFIER DRIVE	1/2" - BLACK
10	INDICATING LIGHTS	NORTH PRIMARY CLARIFIER DRIVE	1/2" - BLACK
C	GRAPHIC SYMBOL (12"W x 7"H)	PRIMARY SLUDGE PUMP STATION	1/2" - BLACK
11	INDICATING LIGHTS AND SELECTOR SWITCH	PRIMARY SLUDGE PUMP NO. 1	3/16" - BLACK
12	INDICATING LIGHTS	SCUM PUMP	3/16" - BLACK
13	INDICATING LIGHTS AND SELECTOR SWITCH	PRIMARY SLUDGE PUMP NO. 2	3/16" - BLACK
D	GRAPHIC SYMBOL (3"W x 3"H)	(NONE)	
E	GRAPHIC SYMBOL (5"W x 4"H)	CHLORINE BUILDING	1/2" - BLACK
F	GRAPHIC SYMBOL (5"W x 6"H)	CHLORINE CONTACT CHAMBER	1/2" - BLACK
G	GRAPHIC SYMBOL (9"W x 7"H)	INCINERATION BUILDING	1/2" - BLACK
14	INDICATING LIGHTS	NONPOTABLE WATER PUMP NO. 1	3/16" - BLACK
15	INDICATING LIGHTS	NONPOTABLE WATER PUMP NO. 2	3/16" - BLACK
16	INDICATING LIGHTS	NONPOTABLE WATER PUMP NO. 3	3/16" - BLACK
17	INDICATING LIGHTS	SEWAGE PUMP NO. 1	3/16" - BLACK
18	INDICATING LIGHTS	SEWAGE PUMP NO. 2	3/16" - BLACK
19	INDICATING LIGHTS	SEWAGE PUMP NO. 3	3/16" - BLACK
H	GRAPHIC SYMBOL (3"W x 1"H)	PLANT EFFLUENT TO BELLINGHAM BAY	1/2" - BLACK
I	GRAPHIC SYMBOL	(SEE LEGEND GRAPHIC SYMBOL THIS SHEET)	1/2" - BLACK

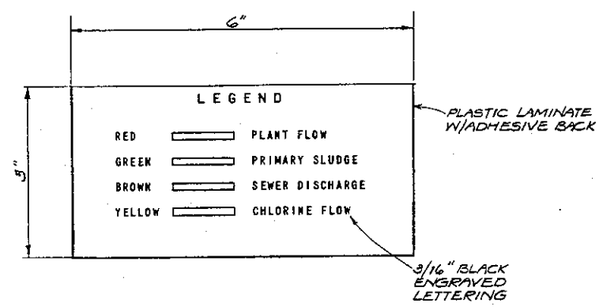

LEGEND GRAPHIC SYMBOL

3/4" = 1'-0"

INSTRUMENT SECTION NAMEPLATE SCHEDULE

ITEM	ENGRAVED INSCRIPTION	LETTER HEIGHT AND COLOR
1	PLANT FLOW	3/16" - BLACK
2	CHLORINE FLOW - PRETREATMENT	3/16" - BLACK
3	CHLORINE RESIDUAL - FIVE MINUTE	3/16" - BLACK
4	CHLORINE RESIDUAL - PLANT EFFLUENT	3/16" - BLACK
5	CHLORINE FLOW - POST TREATMENT	3/16" - BLACK
6	PRIMARY SLUDGE PUMP NO. 1	3/16" - BLACK
7	PRIMARY SLUDGE PUMP NO. 2	3/16" - BLACK
8	SCUM PUMP	3/16" - BLACK
9	NONPOTABLE WATER PUMP NO. 1	3/16" - BLACK
10	NONPOTABLE WATER PUMP NO. 2	3/16" - BLACK
11	NONPOTABLE WATER PUMP NO. 3	3/16" - BLACK
12	SEWAGE PUMP NO. 1	3/16" - BLACK
13	SEWAGE PUMP NO. 2	3/16" - BLACK
14	SEWAGE PUMP NO. 3	3/16" - BLACK

NOTES:

1. INDICATING LIGHTS SHALL BE MICRO SWITCH TYPE PN - PUSH TO TEST - TWO SECTIONS - 4 LAMPS -
2. SELECTOR SWITCHES SHALL BE MICRO SWITCH TYPE PT - 3 POSITION WITH ENGRAVING AS SHOWN.

NO.	DATE	REVISION	BY	CHK
1	APRIL 75	RECORD DRAWINGS	MLN	GRG

CH2M HILL
ENGINEERS PLANNERS ECONOMISTS

CORNELL HOWLAND HAYES & MERRYFIELD
CLAIR A. HILL & ASSOCIATES

CITY OF BELLINGHAM, WASHINGTON
POST POINT POLLUTION CONTROL PLANT
SCHEDULE T

INSTRUMENTATION AND CONTROL - PLANT OPERATIONS PANEL SCHEDULE

DES G.V.S.
DR. - -
CK. R.T.
PN 54198.1
SHEET 108 OF 113
DATE: APRIL 1972
SCALE: AS SHOWN
DRAWING NO. C 6196-2

EILMAN STATIONERY & PRINTING CO., PORTLAND, ORE.

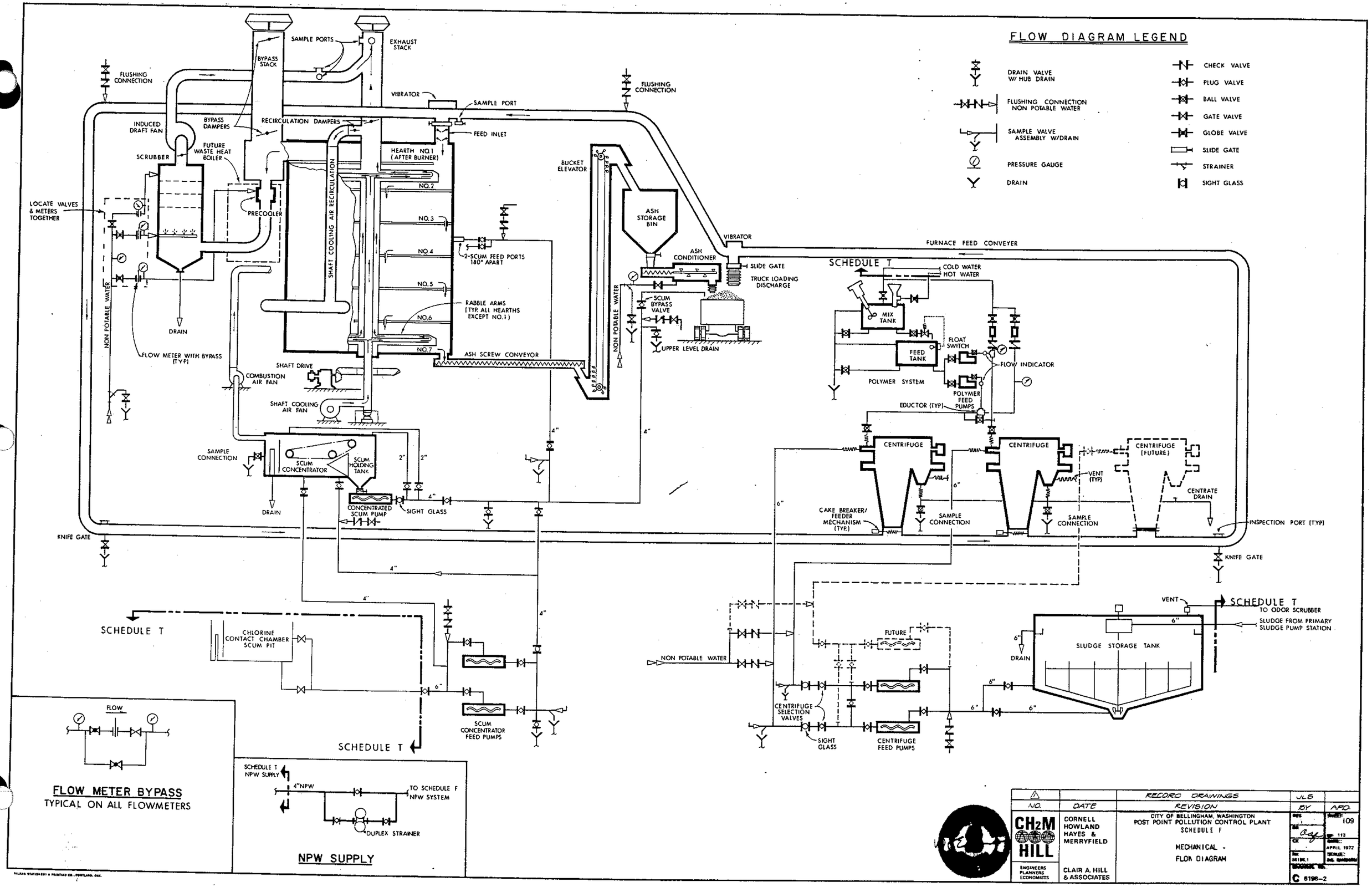
FLOW DIAGRAM LEGEND
DRAIN VALVE W/ HUB DRAIN
FLUSHING CONNECTION NON POTABLE WATER
SAMPLE VALVE ASSEMBLY W/DRAIN
PRESSURE GAUGE
DRAIN
CHECK VALVE
PLUG VALVE
BALL VALVE
GATE VALVE
GLOBE VALVE
SLIDE GATE
STRAINER
SIGHT GLASS
SAMPLE PORTS
EXHAUST STACK
BYPASS STACK
FLUSHING CONNECTION
VIBRATOR
SAMPLE PORT
INDUCED DRAFT FAN
BYPASS DAMPERS
RECIRCULATION DAMPERS
FEED INLET
SCRUBBER
FUTURE WASTE HEAT BOILER
HEARTH NO.1 (AFTER BURNER)
BUCKET ELEVATOR
LOCATE VALVES & METERS TOGETHER
PRECOOLER
SHAFT COOLING AIR RECIRCULATION
NO.2
NO.3
NO.4
NO.5
NO.6
NO.7
ASH STORAGE BIN
VIBRATOR
FURNACE FEED CONVEYER
ASH CONDITIONER
SLIDE GATE
TRUCK LOADING DISCHARGE
2-SCUM FEED PORTS 180° APART
RABBLE ARMS (TYP. ALL HEARTHS EXCEPT NO.1)
SCUM BYPASS VALVE
UPPER LEVEL DRAIN
NON POTABLE WATER
DRAIN
FLOW METER WITH BYPASS (TYP)
ASH SCREW CONVEYOR
SHAFT DRIVE
COMBUSTION AIR FAN
SHAFT COOLING AIR FAN
SCHEDULE T
COLD WATER
HOT WATER
MIX TANK
FEED TANK
FLOAT SWITCH
FLOW INDICATOR
POLYMER SYSTEM
POLYMER FEED PUMPS
EDUCTOR (TYP)
SAMPLE CONNECTION
SCUM CONCENTRATOR
SCUM HOLDING TANK
CONCENTRATED SCUM PUMP
SIGHT GLASS
CENTRIFUGE
CENTRIFUGE
CENTRIFUGE (FUTURE)
VENT (TYP)
CENTRATE DRAIN
CAKE BREAKER/ FEEDER MECHANISM (TYP.)
SAMPLE CONNECTION
SAMPLE CONNECTION
INSPECTION PORT (TYP)
KNIFE GATE
KNIFE GATE
SCHEDULE T
CHLORINE CONTACT CHAMBER SCUM PIT
SCUM CONCENTRATOR FEED PUMPS
SCHEDULE T
NON POTABLE WATER
FUTURE
CENTRIFUGE SELECTION VALVES
SIGHT GLASS
CENTRIFUGE FEED PUMPS
VENT
SCHEDULE T TO ODOR SCRUBBER
SLUDGE FROM PRIMARY SLUDGE PUMP STATION
SLUDGE STORAGE TANK
DRAIN
FLOW
FLOW METER BYPASS
TYPICAL ON ALL FLOWMETERS
SCHEDULE T NPW SUPPLY
4"NPW
TO SCHEDULE F NPW SYSTEM
DUPLEX STRAINER
NPW SUPPLY
RECORD DRAWINGS
NO.
DATE
REVISION
BY
APD.
CH2M HILL
ENGINEERS PLANNERS ECONOMISTS
CORNELL HOWLAND HAYES & MERRYFIELD
CLAIR A. HILL & ASSOCIATES
CITY OF BELLINGHAM, WASHINGTON
POST POINT POLLUTION CONTROL PLANT
SCHEDULE F
MECHANICAL -
FLOW DIAGRAM
APRIL 1972
SHEET 109
C 6198-2

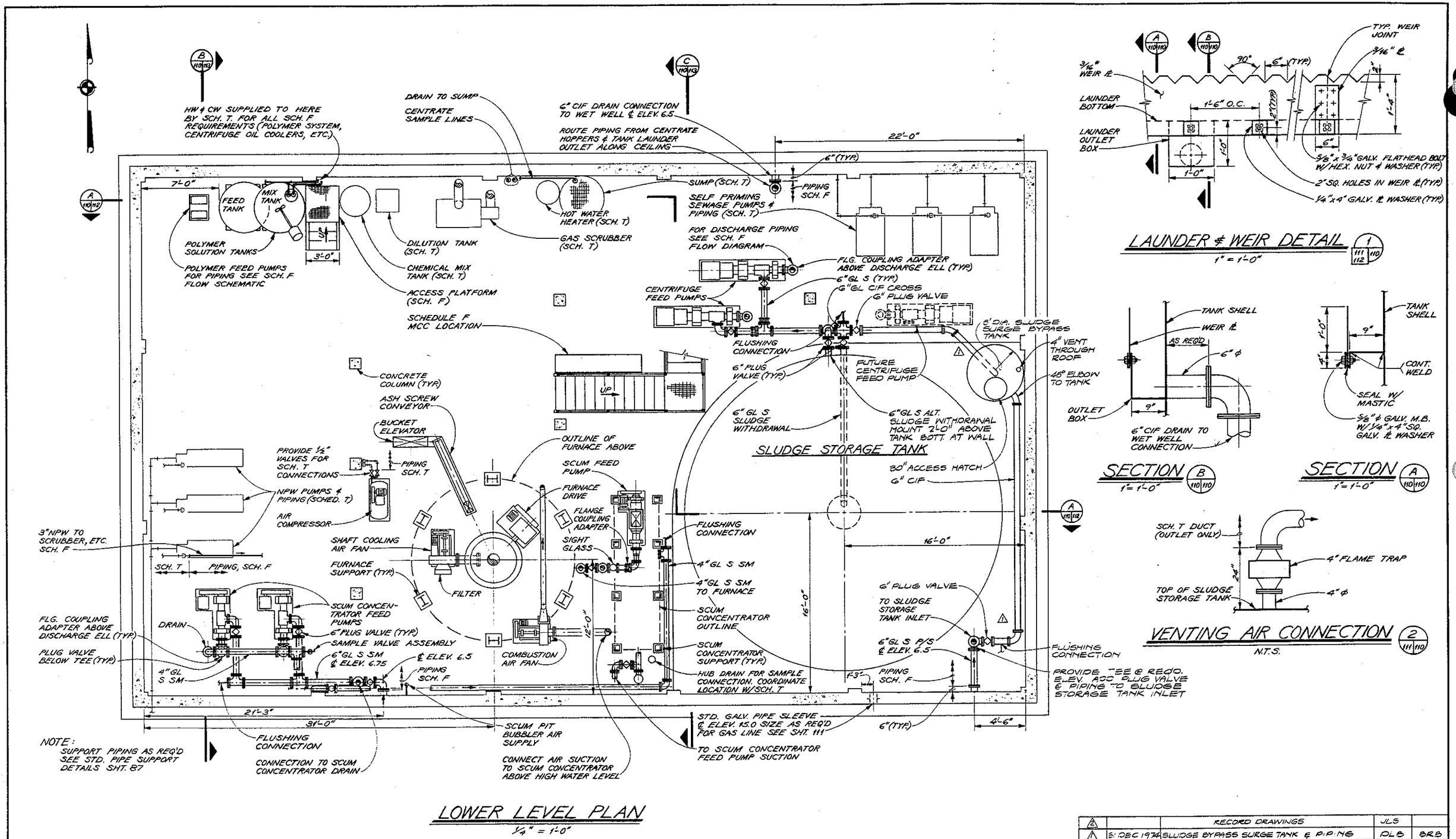

NO.	DATE	REVISION	BY	CHK.
2		RECORD DRAWINGS	JLS	
1	5 DEC 1974	SLUDGE BYPASS SURGE TANK & PIPING	DLB	BRB

CH2M HILL — ENGINEERS PLANNERS ECONOMISTS

CORNELL HOWLAND HAYES & MERRYFIELD — CLAIR A. HILL & ASSOCIATES

CITY OF BELLINGHAM, WASHINGTON
POST POINT POLLUTION CONTROL PLANT
SCHEDULE F
MECHANICAL -
LOWER LEVEL FLOOR PLAN

DES. HHS — DR. RAH — CK. LG — DWG. 56196.1

SHEET 110 OF 113 — DATE: APRIL 1972 — SCALE: AS SHOWN

C 6196-2

BIRAD STATIONERY & PRINTING CO., PORTLAND, ORE.

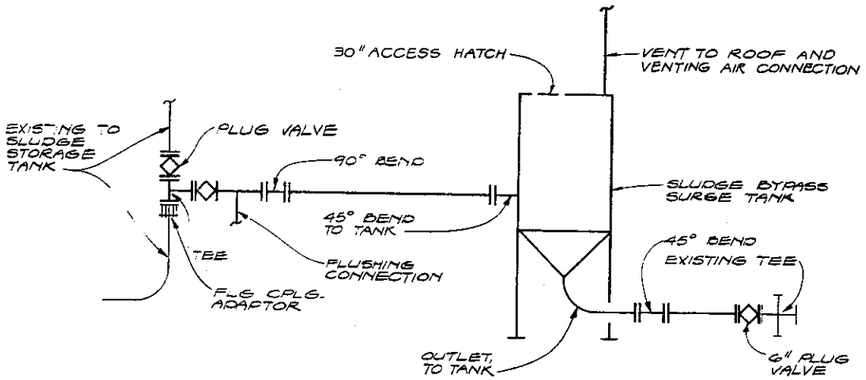

SLUDGE STORAGE TANK BYPASS SCHEMATIC

N.T.S.

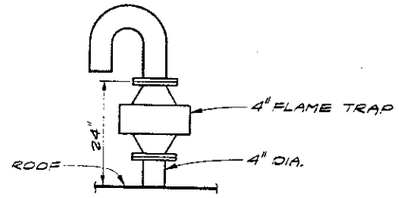

VENTING AIR CONNECTION

N.T.S.

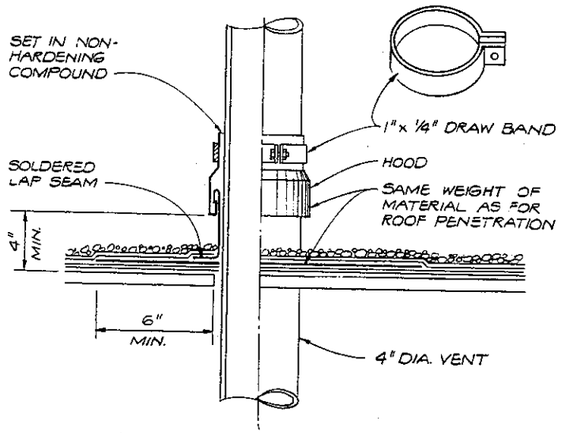

VENT THRU ROOF

N.T.S.

NO.	DATE	REVISION	BY	APD.
1		RECORD DRAWINGS	JLS	

CH2M HILL

CORNELL HOWLAND HAYES & MERRYFIELD

CLAIR A. HILL & ASSOCIATES

CITY OF BELLINGHAM, WASHINGTON
POST POINT POLLUTION CONTROL PLANT
SCHEDULE F

MECHANICAL -

SLUDGE STORAGE TANK BYPASS

DES BKB
DR
CK GRG
No. 6198.2
SHEET 110A OF
DATE JAN. 1975
SCALE AS SHOWN
DRAWING NO C 6198-2

L & H PRINTING CO — SEATTLE

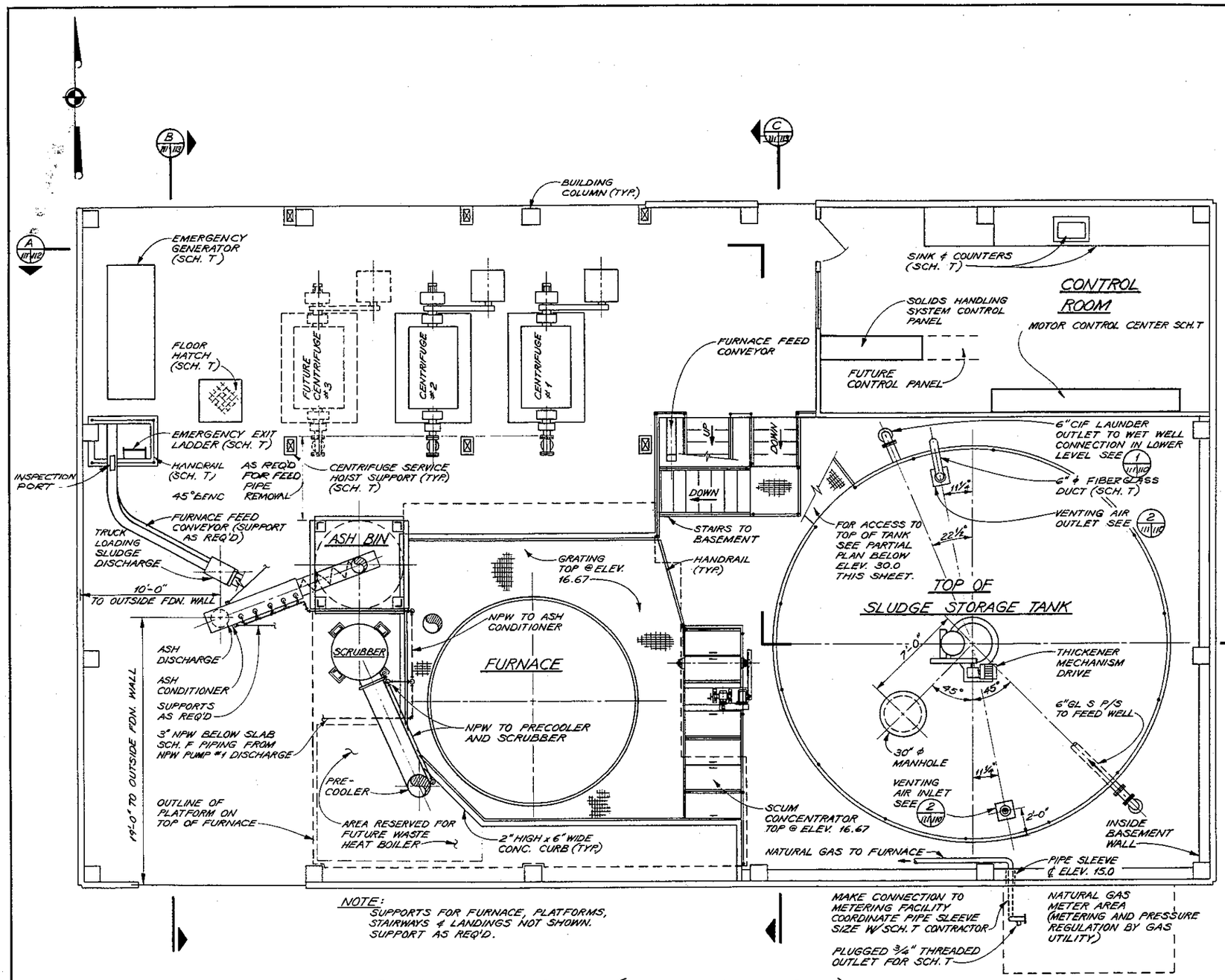

NOTE:
SUPPORTS FOR FURNACE, PLATFORMS, STAIRWAYS & LANDINGS NOT SHOWN. SUPPORT AS REQ'D.

UPPER LEVEL PLAN (BELOW ELEV. 24.0)

1/4" = 1'-0"

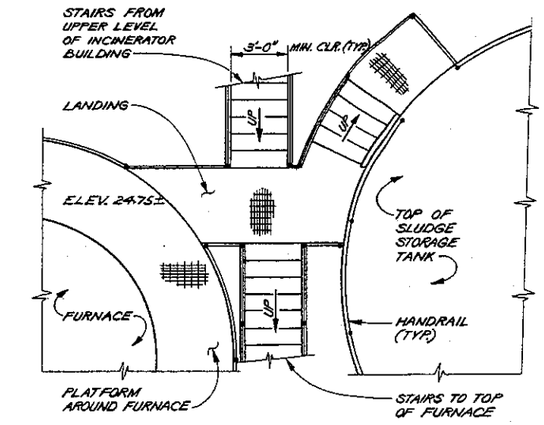

PARTIAL PLAN BELOW ELEV. 30.0

1/4" = 1'-0"

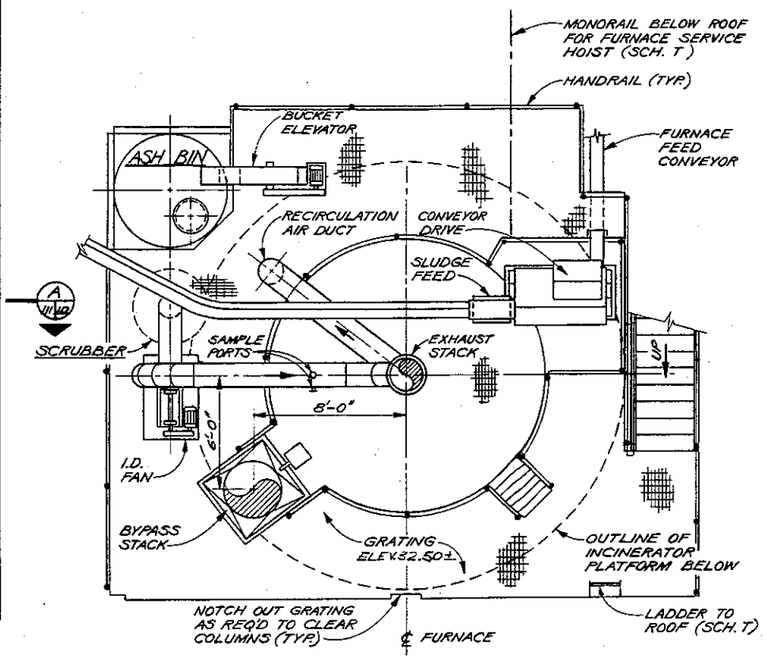

TOP OF FURNACE – PLAN

1/4" = 1'-0"

NO.	DATE	REVISION	BY	APD
		RECORD DRAWINGS	JLS	

CH2M HILL — ENGINEERS PLANNERS ECONOMISTS

CORNELL HOWLAND HAYES & MERRYFIELD

CLAIR A. HILL & ASSOCIATES

CITY OF BELLINGHAM, WASHINGTON
POST POINT POLLUTION CONTROL PLANT
SCHEDULE F

MECHANICAL -
UPPER LEVEL FLOOR PLAN

DES. HHS
DR. RAH
CK. LGH
DATE: APRIL 1972
SCALE: 1/4" = 1'-0"
SHEET 111 OF 113
C 6196-2

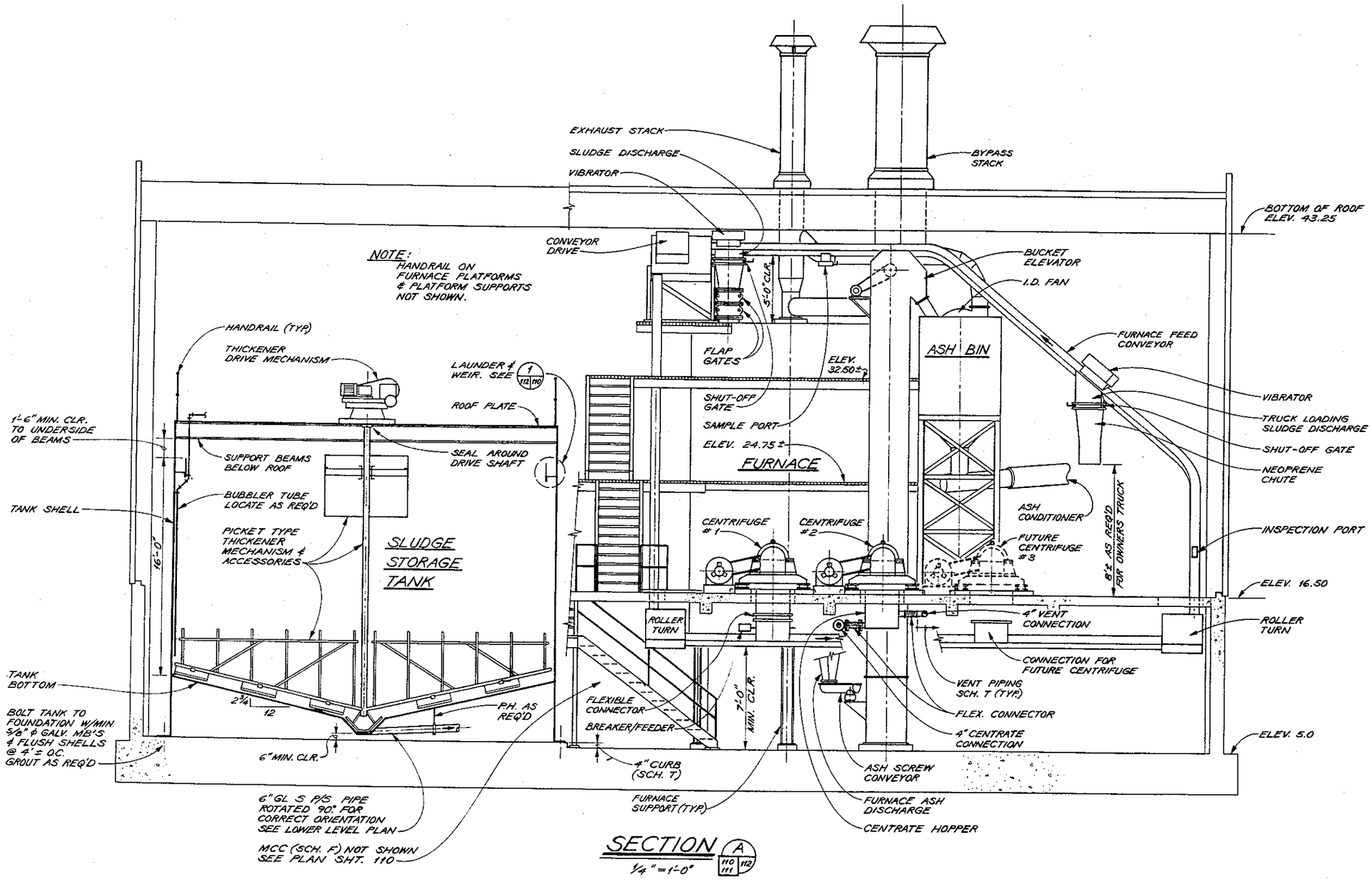

SECTION A 110 111 112

1/4" = 1'-0"

NO.	DATE	REVISION	BY	APD.
1		RECORD DRAWINGS	JLS	

CH2M HILL — ENGINEERS PLANNERS ECONOMISTS

CORNELL HOWLAND HAYES & MERRYFIELD

CLAIR A. HILL & ASSOCIATES

CITY OF BELLINGHAM, WASHINGTON
POST POINT POLLUTION CONTROL PLANT
SCHEDULE F

MECHANICAL - SECTIONS

DR. HHS
CK. RAH
DR. LGS
DATE: APRIL 1972
SHEET 112 OF 113
C 6198-2

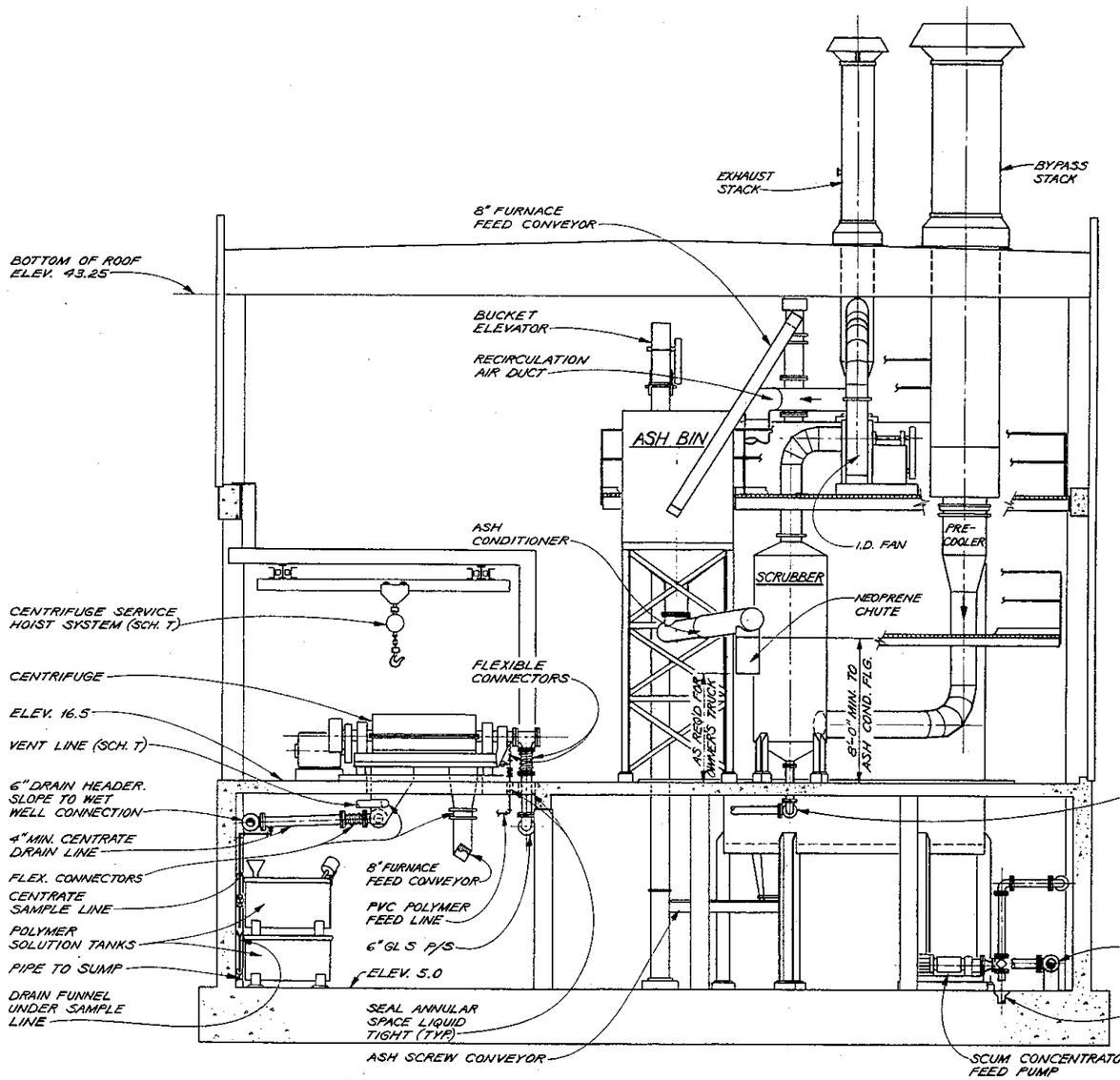

SECTION B
1/4" = 1'-0"
110 111 113

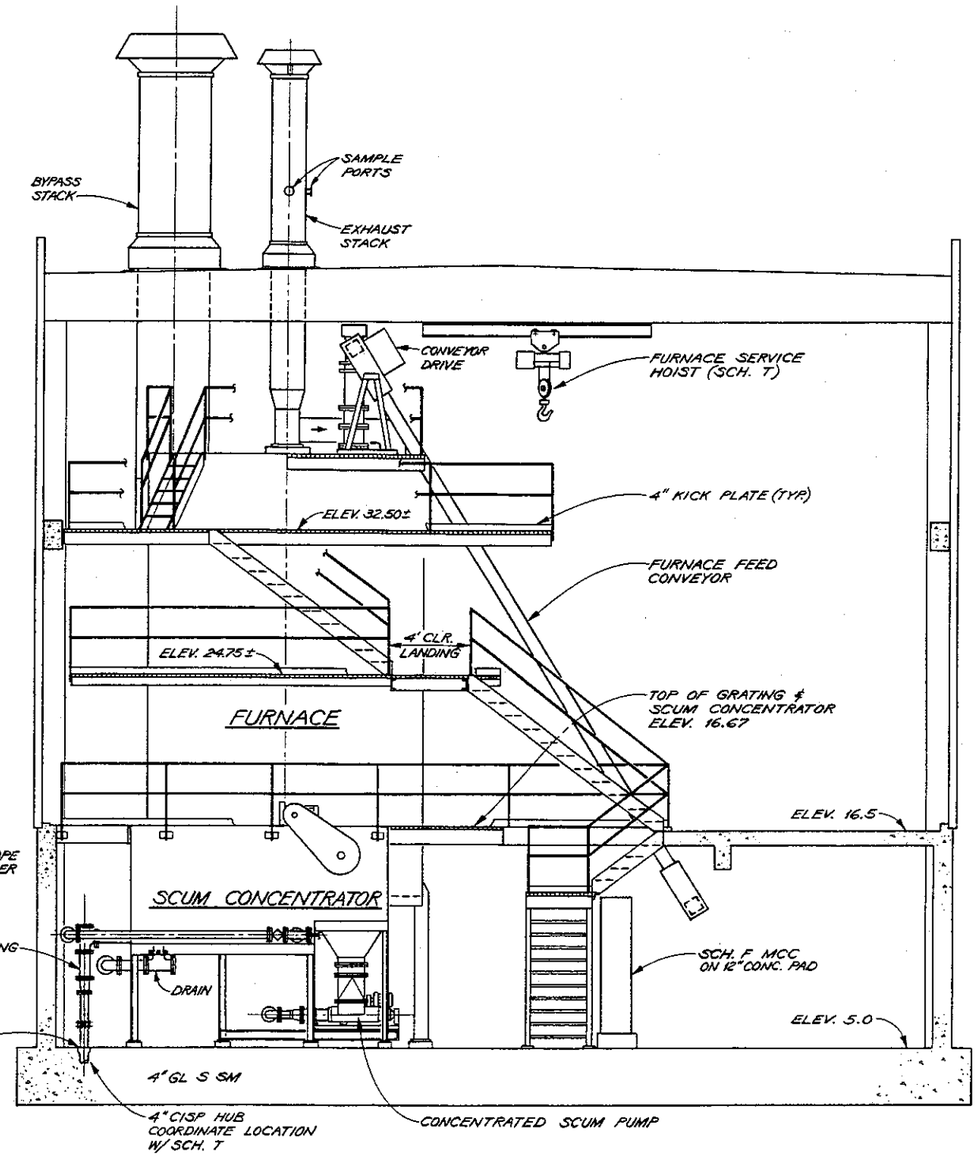

SECTION C
1/4" = 1'-0"
110 111 113

NOTE:
SUPPORTS FOR FURNACE PLATFORMS, STAIRWAYS & LANDINGS NOT SHOWN. SUPPORT AS REQ'D.

NO.	DATE	REVISION	BY	APD.
1		RECORD DRAWINGS	JLS	

CH2M HILL
ENGINEERS PLANNERS ECONOMISTS

CORNELL HOWLAND HAYES & MERRYFIELD

CLAIR A. HILL & ASSOCIATES

CITY OF BELLINGHAM, WASHINGTON
POST POINT POLLUTION CONTROL PLANT
SCHEDULE F

MECHANICAL - SECTIONS

DES. HHS
DR. RAH
CK. LGS
DATE: APRIL 1972
SHEET 113 OF 113
DRAWING NO. C 6196-2

PIECE MARK	NO. REQ'D	MATERIAL	DESCRIPTION/REMARKS	TOTAL WEIGHT

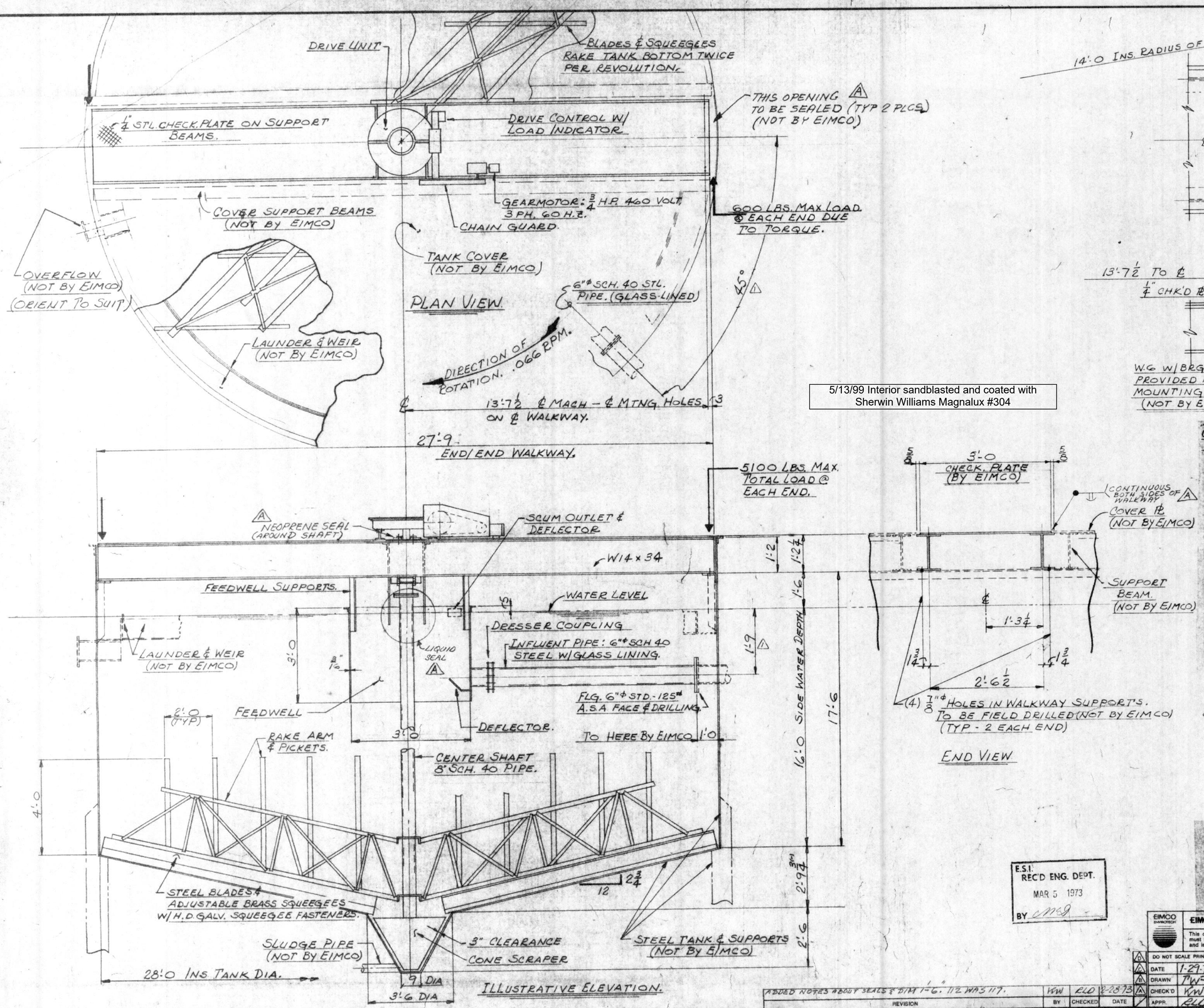

5/13/99 Interior sandblasted and coated with Sherwin Williams Magnalux #304

"WALKWAY MOUNTING DETAIL."

NOTES:

1. ASTERISK (*) DENOTES VARIANCE FROM CONTRACT DOCUMENTS AND SHOULD BE PARTICULARLY NOTED.
2. THE FOLLOWING DEFINES THE RESPONSIBILITY OF THE EIMCO PROCESSING MACHINERY DIVISION OF ENVIROTECH CORPORATION (EIMCO), WITH REGARD TO THE INFORMATION AND DIMENSIONS SHOWN ON THIS DRAWING. (A) DIMENSIONS, LOADS, AND OTHER INFORMATION ARE PROVIDED TO ACCOMMODATE THE EQUIPMENT TO THE STRUCTURE AS SHOWN. (B) THE CUSTOMER IS TO PROVIDE REINFORCING STEEL AND DESIGN FOR CONCRETE STRUCTURES AND IS TO DETERMINE SIZES TO SUIT LOCAL CONDITIONS. (C) THIS DRAWING IS NOT TO BE USED FOR CONSTRUCTION OR INSTALLATION PURPOSES UNLESS IT BEARS THE APPROVAL OF THE OWNER, THE ENGINEER OR THEIR AUTHORIZED REPRESENTATIVE. (D) THE MECHANISM SHOWN IS DESIGNED FOR DIRECTION OF ROTATION AS INDICATED. EIMCO DOES NOT ASSUME RESPONSIBILITY FOR DAMAGE IF OPERATED IN THE OPPOSITE DIRECTION. (E) CHARGES FOR MODIFICATIONS, ADDITIONS OR CORRECTIONS TO THE EQUIPMENT WILL NOT BE ACCEPTED BY EIMCO UNLESS PRIOR APPROVAL IS OBTAINED IN WRITING FROM AN AUTHORIZED EIMCO REPRESENTATIVE.
3. EIMCO DOES NOT FURNISH ELECTRICAL WIRING, CONDUIT OR ELECTRICAL EQUIPMENT, PIPING, VALVES OR FITTINGS, LUBRICATING OIL OR GREASE, FIELD PAINTING, FIELD WELDING OR ERECTION, (EXCEPT AS SPECIFICALLY NOTED).
4. SHOP PRIMER PAINT IS INTENDED TO SERVE ONLY AS A BONDING COAT BETWEEN METAL SURFACE AND PROTECTIVE FINISH OR SEALING COATS. AS SUCH IT AFFORDS THE METAL ONLY MINIMAL PROTECTION AGAINST THE ELEMENTS. EIMCO CANNOT BE RESPONSIBLE FOR DETERIORATION OF SHOP-PRIMED EQUIPMENT DURING TRANSIT, JOB STORAGE OR OTHER EXPOSURE TO THE ELEMENTS PRIOR TO APPLICATION OF FINISH COATS.
5. SURFACE PREPARATION TO CONSIST OF: POWER WIRE BRUSH ON DRIVE NONE ON STEEL BY EIMCO
6. SHOP PAINTING TO CONSIST OF: ONE COAT PINEMEC #77 ON DRIVE NONE ON STEEL BY EIMCO
7. FOR ADDITIONAL DETAILS, REFER TO DRAWINGS:
   73575B2: DRIVE CONTROL WIRING DIAGRAM.
   73575B3: MOTOR DRIVE WIRING DIAGRAM.
   ENG. SPECS. & PLANS. SHT. 110, 111, & 112
8. EIMCO WILL FURNISH (1) MACH. AS SHOWN & NOTED W/ 1/4" MIN. STL. THICKNESS. U.N.

ENVIROTECH - BSP CERTIFIED AS BUILT FEB 1 1978

REVISED FOR FINAL RECORD

E.S.I. REC'D ENG. DEPT. MAR 5 1973 BY cmg

THIS DRAWING IS CERTIFIED FOR

CUSTOMER ENVIROTECH SYSTEMS, INC
CUSTOMER ORDER NUMBER 1014-5792
EIMCO ORDER NUMBER 73575-01
PROJECT SEWAGE TREATMENT PLANT
PROJECT LOCATION BELLINGHAM, WASH.
CONSULTING ENGINEER CH2M & HILL
BY RL DOWNARD DATE 1-29-73 EIMCO

EIMCO ENVIROTECH — EIMCO PROCESSING MACHINERY DIVISION - ENVIROTECH CORPORATION - Salt Lake City, Utah

This drawing and all information thereon is the property of Eimco and is confidential and must not be made public or copied. This drawing is loaned subject to return upon demand and is not to be used directly or indirectly in any way detrimental to our interests.

HOLD FRACTIONAL MACHINED DIMENSIONS TO ± 1/64"

DO NOT SCALE PRINTS	
DATE	1-29-73
DRAWN	TWP
CHECK'D	KW
APPR.	RLD

SLUDGE THICKENER
TYPE: BST. 28'-0 DIA.
GENERAL ARRANGEMENT.

01 — MAR 1 1973 — DWG. NO. 73575D1 — REV.

REVISION	BY	CHECKED	DATE
ADDED NOTES ABOUT SEALS & DIM 1'-6". 112 WAS 117.	KW	RLD	2-28-73

BELLINGHAM.

116

CITY OF BELLINGHAM, WASHINGTON
POST POINT WASTEWATER TREATMENT PLANT UPGRADE

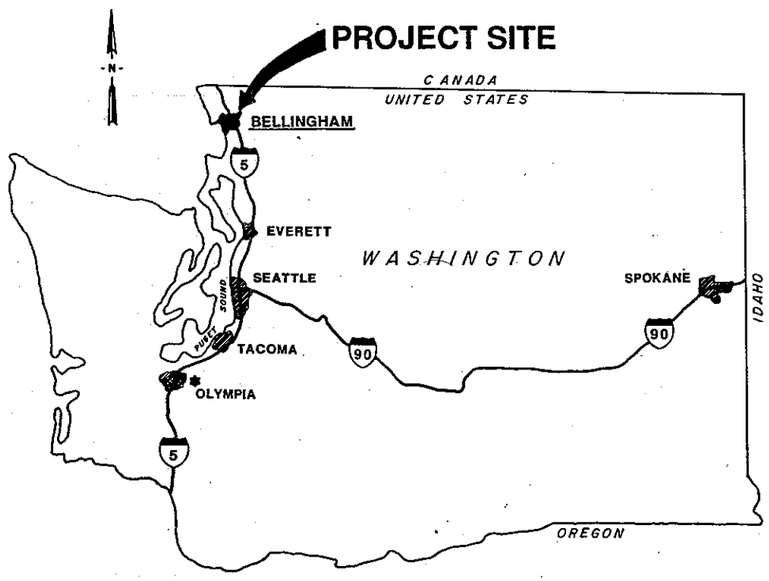

VICINITY MAP
NTS

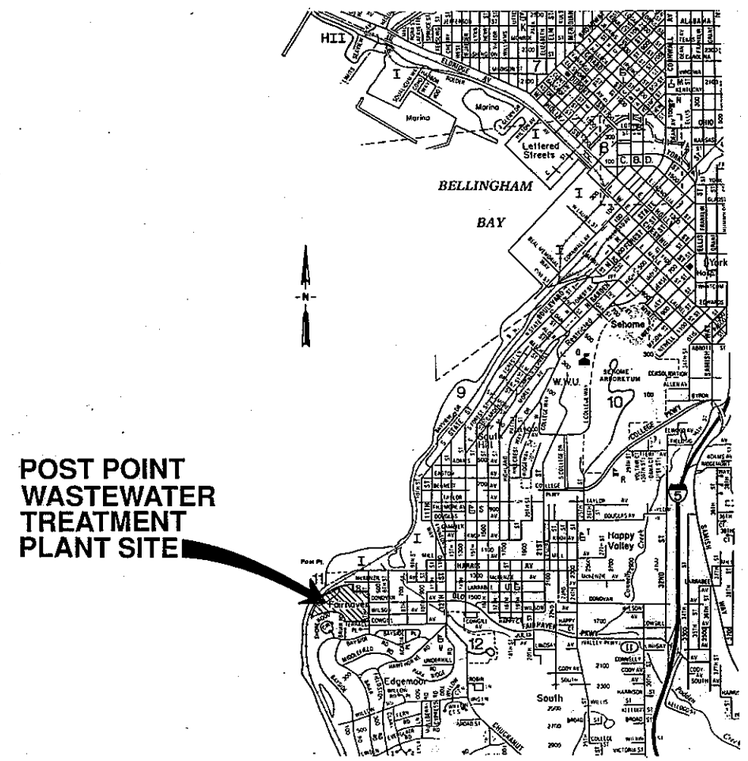

LOCATION MAP
NTS

DSGN	L. KORBUS					
DR	J. PIERONI					
CHK	J.GAUTHIER					
APVD	J.GAUTHIER	NO.	DATE	REVISION	BY	APVD

CH2M HILL

REUSE OF DOCUMENTS
THIS DOCUMENT, AND THE IDEAS AND DESIGNS INCORPORATED HEREIN, AS AN INSTRUMENT OF PROFESSIONAL SERVICE, IS THE PROPERTY OF CH2M HILL AND IS NOT TO BE USED, IN WHOLE OR IN PART, FOR ANY OTHER PROJECT WITHOUT THE WRITTEN AUTHORIZATION OF CH2M HILL.
© CH2M HILL

VERIFY SCALES
BAR IS ONE INCH ON ORIGINAL DRAWING.
0 1"
IF NOT ONE INCH ON THIS SHEET, ADJUST SCALES ACCORDINGLY.

CITY OF BELLINGHAM, WASHINGTON
POST POINT WASTEWATER TREATMENT PLANT UPGRADE

GENERAL DRAWINGS
TITLE SHEET

DWG NO. 10-G-1
DATE AUG 1990
PROJ NO. SEA22462.C1

DATE: 8-27-90
DRAWN BY: M. MOORE DESIGNED BY: J. GAUTHIER
DGN NAME: H:/PROJ2/BELLINGH/BL010G-B.DGN

DRAWINGS INDEX

VOLUME 6

DRAWING NO.	*DRAWING TITLE*
10 GENERAL DRAWINGS	
10-G-1	TITLE SHEET
10-G-2	DRAWING INDEX SHEET NO. 1
10-G-3	DRAWING INDEX SHEET NO. 2
10-G-4	DRAWING INDEX SHEET NO. 3
10-G-5	ABBREVIATIONS AND FLOW STREAM IDENTIFICATION
10-G-6	MISCELLANEOUS LEGENDS
10-G-7	MECHANICAL LEGEND
10-G-8	DESIGN CRITERIA SHEET NO. 1
10-G-9	DESIGN CRITERIA SHEET NO. 2
10-G-10	LIQUID PROCESS FLOW DIAGRAM
10-G-11	SOLIDS PROCESS FLOW DIAGRAM
10-G-12	HYDRAULIC PROFILE
30 SITE WORK	
30-C-1	GENERAL SITE PLAN
30-C-2	KEY PLAN
30-C-3	CIVIL/SITE WORK - DIMENSIONAL LAYOUT
30-C-4	CIVIL/SITE WORK - DIMENSIONAL LAYOUT
30-C-5	CIVIL/SITE WORK - DIMENSIONAL LAYOUT
30-C-6	CIVIL/SITE WORK - DIMENSIONAL LAYOUT
30-C-7	CIVIL/SITE WORK - DIMENSIONAL LAYOUT
30-C-8	CIVIL/SITE WORK - DIMENSIONAL LAYOUT
30-C-9	CIVIL/SITE WORK - DIMENSIONAL LAYOUT
30-C-10	CIVIL/SITE WORK - SITE WORK
30-C-11	CIVIL/SITE WORK - SITE WORK
30-C-12	CIVIL/SITE WORK - SITE WORK
30-C-13	CIVIL/SITE WORK - SITE WORK
30-C-14	CIVIL/SITE WORK - SITE WORK
30-C-15	CIVIL/SITE WORK - SITE WORK
30-C-16	CIVIL/SITE WORK - SITE WORK
30-C-17	CIVIL/SITE WORK - PROCESS PIPING PLAN
30-C-18	(NOT USED)
30-C-19	CIVIL/SITE WORK - PROCESS PIPING PLAN
30-C-20	CIVIL/SITE WORK - PROCESS PIPING PLAN
30-C-21	CIVIL/SITE WORK - PROCESS PIPING PLAN
30-C-22	CIVIL/SITE WORK - PROCESS PIPING PLAN
30-C-23	CIVIL/SITE WORK - PROCESS PIPING PLAN
30-C-24	PROCESS PIPING DETAILS
30-C-25	PROCESS PIPING DETAILS
30-C-26	SITE CROSS SECTION LOCATIONS
30-C-27	SITE CROSS SECTION
30-C-28	SITE CROSS SECTIONS
30-C-29	SITE CROSS SECTIONS
30-C-30	MISCELLANEOUS SITE WORK DETAILS
30-C-31	MISCELLANEOUS SITE WORK DETAILS
30-C-32	ROADWAY PROFILES
30-C-33	ROADWAY PROFILES
40 PLANT SCREENING MITIGATION	
40-C-1	PLANTING PLAN
40-C-2	PLANTING PLAN
40-C-3	PLANTING DETAILS
40-C-4	IRRIGATION SYSTEM PLAN
40-C-5	IRRIGATION SYSTEM PLAN
40-C-6	IRRIGATION SYSTEM DETAILS
40-C-7	TRAIL PLAN
50 PIPE GALLERY	
50-S-1	STRUCTURAL PLAN
50-S-2	STRUCTURAL PARTIAL PLAN & SECTION
50-S-3	STRUCTURAL SECTIONS
50-S-4	STRUCTURAL PARTIAL PLAN & SECTIONS
50-S-5	STRUCTURAL PARTIAL PLAN & SECTIONS
50-S-6	STRUCTURAL - STAIR ENCLOSURE PLANS AND ELEVATIONS
50-S-7	STRUCTURAL SECTIONS AND DETAILS
50-S-8	STRUCTURAL SECTIONS AND DETAILS
50-S-9	STRUCTURAL PARTIAL PLANS AND SECTIONS
50-S-10	STRUCTURAL SECTIONS AND DETAILS
50-S-11	STRUCTURAL - UTILIDOR PLAN AND DETAILS
50-S-12	STRUCTURAL - UTILIDOR SECTIONS
50-M-1	MECHANICAL - SITE PLAN
50-M-2	MECHANICAL - RAW SEWAGE & INPLANT PUMP STATIONS PLANS & SECTIONS
50-M-3	MECHANICAL - SECTIONS AND DETAILS
50-M-4	MECHANICAL - PLANS AND SECTIONS
50-M-5	MECHANICAL/HVAC/PLUMBING - W3 & W4 WATER PUMP STATION - PLAN & SECTIONS
50-M-6	MECHANICAL - PRIMARY SLUDGE PUMP STATION PLAN & SECTIONS
50-M-7	MECHANICAL - EXISTING PRIMARY SLUDGE PUMP STATION - MODIFICATIONS
50-M-8	MECHANICAL - PLANS AND SECTIONS
50-M-9	MECHANICAL - PLANS AND SECTIONS
50-M-10	MECHANICAL - PLAN AND SECTIONS
50-M-11	MECHANICAL - PLANS AND SECTIONS
50-M-12	MECHANICAL - SECTIONS AND DETAILS
50-M-13	MECHANICAL - UTILIDOR PLAN AND PROFILES
50-M-14	MECHANICAL - UTILIDOR SECTIONS AND DETAILS
50-P-1	PLUMBING - SUMP PUMP DETAILS

SD 800 ASBUILT LID REPAIR

DRAWING NO.	*DRAWING TITLE*
110 SCREENINGS FACILITY	
110-A-1	ARCHITECTURAL ELEVATIONS
110-A-2	ARCHITECTURAL ROOF PLAN
110-A-3	ARCHITECTURAL SECTIONS AND DETAILS
110-A-4	ARCHITECTURAL SECTIONS AND DETAILS
110-S-1	STRUCTURAL FOUNDATION PLAN
110-S-2	STRUCTURAL GROUND LEVEL FRAMING PLAN
110-S-3	STRUCTURAL UPPER LEVEL PLAN
110-S-4	STRUCTURAL ROOF FRAMING PLAN
110-S-5	STRUCTURAL SECTIONS
110-S-6	STRUCTURAL SECTIONS
110-S-7	STRUCTURAL SECTIONS AND DETAILS
110-S-8	STRUCTURAL SECTIONS AND DETAILS
110-S-9	STRUCTURAL DETAILS
110-S-10	STRUCTURAL DETAILS
110-S-11	STRUCTURAL FAN ROOM SECTIONS
110-S-12	STRUCTURAL FAN ROOM SECTIONS
110-M-1	MECHANICAL LOWER LEVEL PLAN AND SECTIONS
110-M-2	MECHANICAL GROUND LEVEL PLAN
110-M-3	MECHANICAL SECTIONS
110-M-4	MECHANICAL SECTIONS AND DETAILS
110-M-5	MECHANICAL SECTIONS AND DETAILS
110-M-6	MECHANICAL MANUAL BAR SCREEN DETAILS
110-H-1	HVAC AND PLUMBING LOWER LEVEL PLAN
110-H-2	HVAC AND PLUMBING GROUND LEVEL PLAN
110-H-3	HVAC AND PLUMBING MEZZANINE LEVEL PLAN AND SECTIONS
120 HEADWORKS MODIFICATIONS	
120-M-1	DEMOLITION PLAN
120-M-2	DEMOLITION SECTIONS
120-M-3	DEMOLITION SECTIONS
120-M-4	MECHANICAL AND HVAC LOWER LEVEL PLAN
120-M-5	MECHANICAL AND HVAC UPPER LEVEL PLAN
120-M-6	MECHANICAL & HVAC FAN ROOM PLAN & SECTIONS
130 PRELIMINARY TREATMENT ODOR CONTROL	
130-A-1	ARCHITECTURAL ELEVATIONS, SECTION, AND ROOF PLAN
130-S-1	STRUCTURAL FOUNDATION PLAN AND DETAILS
130-S-2	STRUCTURAL GROUND LEVEL FLOOR PLAN
130-S-3	STRUCTURAL ROOF FRAMING PLAN AND DETAILS
130-S-4	STRUCTURAL SECTIONS AND DETAILS
130-M-1	MECHANICAL LOWER LEVEL PLAN
130-M-2	MECHANICAL GROUND LEVEL PLAN
130-M-3	MECHANICAL SECTIONS
130-M-4	MECHANICAL DETAILS - CHEMICAL TANKS & DETAILS
130-M-5	MECHANICAL DETAILS - SCRUBBERS
130-H-1	HVAC AND PLUMBING LOWER LEVEL PLAN
130-H-2	HVAC AND PLUMBING GROUND LEVEL PLAN
220 PRIMARY EFFLUENT PUMP STATION	
220-A-1	ARCHITECTURAL ELEVATIONS
220-A-2	ARCHITECTURAL ROOF PLAN AND DETAILS
220-S-1	STRUCTURAL FOUNDATION PLAN
220-S-2	STRUCTURAL GROUND LEVEL FRAMING PLAN
220-S-3	STRUCTURAL ROOF FRAMING PLAN
220-S-4	STRUCTURAL SECTIONS AND DETAILS
220-S-5	STRUCTURAL SECTIONS AND DETAILS
220-S-6	STRUCTURAL SECTIONS
220-S-7	STRUCTURAL SECTIONS
220-S-8	STRUCTURAL SECTIONS AND DETAILS
220-M-1	MECHANICAL LOWER LEVEL PLAN
220-M-2	MECHANICAL GROUND LEVEL PLAN
220-M-3	MECHANICAL UPPER LEVEL PLAN
220-M-4	MECHANICAL SECTIONS
220-H-1	HVAC AND PLUMBING LOWER LEVEL PLAN
220-H-2	HVAC AND PLUMBING GROUND LEVEL PLAN
310 OXYGEN ACTIVATED SLUDGE BASINS	
310-A-1	ARCHITECTURAL ELEVATIONS
310-S-1	STRUCTURAL FOUNDATION PLAN
310-S-2	STRUCTURAL PARTIAL FOUNDATION PLAN
310-S-3	STRUCTURAL PARTIAL FOUNDATION PLAN
310-S-4	STRUCTURAL DECK PLAN
310-S-5	STRUCTURAL PARTIAL DECK PLAN
310-S-6	STRUCTURAL PARTIAL DECK PLAN
310-S-7	STRUCTURAL SECTIONS
310-S-8	STRUCTURAL SECTIONS
310-S-9	STRUCTURAL SECTIONS AND DETAILS
310-M-1	MECHANICAL DECK PLAN
310-M-2	MECHANICAL DETAILS
310-M-3	MECHANICAL DETAILS
310-M-4	MECHANICAL SECTIONS AND DETAILS
310-M-5	MECHANICAL LIQUID OXYGEN STORAGE TANK PLAN, SECTIONS, & DETAILS

DRAWING NO.	*DRAWING TITLE*
320 OXYGEN GENERATION FACILITY	
320-A-1	ARCHITECTURAL ELEVATIONS AND ROOF PLAN
320-A-2	ARCHITECTURAL INTERIOR ELEVATIONS AND DETAILS
320-S-1	STRUCTURAL FOUNDATION/FLOOR PLAN
320-S-2	STRUCTURAL ROOF FRAMING PLAN
320-S-3	STRUCTURAL SECTIONS AND DETAILS
320-S-4	STRUCTURAL SECTIONS AND DETAILS
320-M-1	MECHANICAL PLAN
320-M-2	MECHANICAL SECTIONS AND DETAILS
320-M-3	MECHANICAL SECTIONS AND DETAILS
320-H-1	HVAC AND PLUMBING PLAN
330 SECONDARY CLARIFIERS	
330-S-1	STRUCTURAL CLARIFIER PLAN
330-S-2	STRUCTURAL PLANS AND SECTIONS
330-S-3	STRUCTURAL SECTION
330-S-4	STRUCTURAL SECTIONS AND DETAILS
330-S-5	STRUCTURAL SECTIONS AND DETAILS
330-S-6	FLOW SPLITTER BOX - STRUCTURAL PLANS AND SECTIONS
330-S-7	FLOW SPLITTER BOX - STRUCTURAL SECTIONS
330-S-8	MIXING CHAMBER - PLANS, SECTIONS, & ELEVATIONS
330-S-9	MIXING CHAMBER - SECTIONS & DETAILS
330-M-1	MECHANICAL YARD PIPING PLAN
330-M-2	MECHANICAL PLAN AND DETAILS
330-M-3	MECHANICAL COMPOSITE SECTION
330-M-4	MECHANICAL PARTIAL PLANS AND DETAILS
330-M-5	FLOW SPLITTER BOX - MECHANICAL PLANS AND SECTIONS
340 SECONDARY SLUDGE PUMP STATION	
340-A-1	ARCHITECTURAL ELEVATIONS
340-A-2	ARCHITECTURAL ROOF PLAN
340-S-1	STRUCTURAL FOUNDATION PLAN
340-S-2	STRUCTURAL GROUND LEVEL FRAMING PLAN
340-S-3	STRUCTURAL ROOF FRAMING PLAN
340-S-4	STRUCTURAL SECTIONS AND DETAILS
340-S-5	STRUCTURAL SECTIONS AND DETAILS
340-M-1	MECHANICAL LOWER LEVEL PLAN
340-M-2	MECHANICAL GROUND LEVEL PLAN
340-M-3	MECHANICAL SECTIONS
340-H-1	HVAC AND PLUMBING LOWER LEVEL PLAN
340-H-2	HVAC AND PLUMBING GROUND LEVEL PLAN
410 CHLORINE CONTACT BASIN MODIFICATIONS	
410-S-1	STRUCTURAL AND MECHANICAL PLAN
410-S-2	STRUCTURAL AND MECHANICAL SECTIONS AND DETAILS
410-S-3	STRUCTURAL AND MECHANICAL SECTIONS AND DETAILS
410-S-4	STRUCTURAL AND MECHANICAL SECTIONS AND DETAILS
410-S-5	STRUCTURAL AND MECHANICAL SECTIONS AND DETAILS
420 CHLORINE BUILDING MODIFICATIONS	
420-A-1	ARCHITECTURAL - EXISTING BUILDING FLOOR & ROOF PLANS
420-A-2	ARCHITECTURAL - EXISTING BUILDING DETAILS
420-A-3	SCRUBBER BUILDING ARCHITECTURAL ELEVATIONS & ROOF PLAN
420-S-1	SCRUBBER BUILDING - STRUCTURAL PLANS
420-S-2	SCRUBBER BUILDING - STRUCTURAL SECTIONS & DETAILS
420-M-1	MECHANICAL EXISTING CHLORINE BUILDING AND SCRUBBER BUILDING PLAN
420-M-2	MECHANICAL SCRUBBER BUILDING LOWER LEVEL PLAN & SECTIONS
420-H-1	HVAC & PLUMBING LOWER LEVEL PLAN & DETAILS
420-H-2	HVAC & PLUMBING GROUND LEVEL PLAN
510 SOLIDS HANDLING FACILITY MODIFICATIONS	
510-A-1	ARCHITECTURAL ELEVATIONS
510-A-2	ARCHITECTURAL PLAN @ ELEVATION 5.00
510-A-3	ARCHITECTURAL PLAN @ ELEVATION 16.50
510-A-4	ARCHITECTURAL PLAN @ ELEVATION 29.00
510-A-5	ARCHITECTURAL ROOF PLAN
510-A-6	ARCHITECTURAL DETAILS
510-A-7	LONGITUDINAL SECTION AND SOUTH ELEVATION
510-A-8	ARCHITECTURAL MISCELLANEOUS DETAILS
510-S-1	STRUCTURAL FOUNDATION PLAN
510-S-2	STRUCTURAL GROUND LEVEL PLAN
510-S-3	STRUCTURAL SECTIONS & DETAILS
510-S-4	STRUCTURAL DETAILS
510-M-1	MECHANICAL LOWER LEVEL PLAN
510-M-2	MECHANICAL GROUND LEVEL PLAN
510-M-3	MECHANICAL SECTION AND DETAILS
510-M-4	MECHANICAL DETAILS
510-M-5	MECHANICAL DETAILS
510-H-1	HVAC AND PLUMBING LOWER LEVEL MODIFICATIONS
510-H-2	HVAC AND PLUMBING GROUND LEVEL MODIFICATIONS
510-H-3	HVAC AND PLUMBING ELEV. 29.00 MODIFICATIONS

JOSEPH A. GAUTHIER, STATE OF WASHINGTON, REGISTERED PROFESSIONAL ENGINEER

CH2M HILL

DSGN J. GAUTHIER
DR A. MCRILL
CHK S. DUNIGAN
APVD J. GAUTHIER

NO.	DATE	REVISION	BY	APVD

REUSE OF DOCUMENTS
THIS DOCUMENT, AND THE IDEAS AND DESIGNS INCORPORATED HEREIN, AS AN INSTRUMENT OF PROFESSIONAL SERVICE, IS THE PROPERTY OF CH2M HILL AND IS NOT TO BE USED, IN WHOLE OR IN PART, FOR ANY OTHER PROJECT WITHOUT THE WRITTEN AUTHORIZATION OF CH2M HILL.
©CH2M HILL

BAR IS ONE INCH ON ORIGINAL DRAWING. 0 1"
IF NOT ONE INCH ON THIS SHEET, ADJUST SCALES ACCORDINGLY.

CITY OF BELLINGHAM, WASHINGTON
POST POINT WASTEWATER TREATMENT PLANT UPGRADE

GENERAL DRAWINGS
DRAWING INDEX
SHEET NO. 1

DWG NO. 10-G-2
DATE AUG. 1990
PROJ NO. SEA22462.C1

DRAWINGS INDEX

DRAWING NO.	DRAWING TITLE
520 SOLIDS HANDLING FACILITY - WEST ADDITION	
520-S-1	STRUCTURAL FOUNDATION PLAN
520-S-2	STRUCTURAL GROUND LEVEL FRAMING PLAN
520-S-3	STRUCTURAL ROOF FRAMING PLAN
520-S-4	STRUCTURAL SECTIONS
520-S-5	STRUCTURAL SECTIONS
520-S-6	STRUCTURAL BEAM AND COLUMN SCHEDULES
520-S-7	STRUCTURAL ASH LOADING AREA PLANS
520-S-8	STRUCTURAL ASH LOADING AREA SECTION AND DETAILS
520-S-9	STRUCTURAL SECTION AND DETAILS
520-S-10	STRUCTURAL SECTION AND DETAILS
520-M-1	MECHANICAL LOWER LEVEL POLYMER PIPING ISOMETRICS
520-M-2	MECHANICAL GROUND LEVEL PLAN AND SECTION
520-M-3	MECHANICAL MEZZANINE PLAN AND PARTIAL PLAN
520-M-4	MECHANICAL ROOF PLAN
520-H-1	HVAC AND PLUMBING LOWER LEVEL PLAN
520-H-2	HVAC AND PLUMBING GROUND LEVEL PLAN
520-H-3	HVAC AND PLUMBING ELEV. 25.0 PLAN
530 SOLIDS HANDLING FACILITY - EAST ADDITION	
530-S-1	STRUCTURAL FOUNDATION PLAN
530-S-2	STRUCTURAL GROUND LEVEL FRAMING PLAN
530-S-3	STRUCTURAL UPPER LEVEL FRAMING PLAN
530-S-4	STRUCTURAL ROOF FRAMING PLAN
530-S-5	STRUCTURAL SECTIONS
530-S-6	STRUCTURAL SECTIONS
530-S-7	STRUCTURAL SECTIONS
530-S-8	STRUCTURAL BEAM SCHEDULE
530-S-9	STRUCTURAL COLUMN SCHEDULE AND DETAILS
530-S-10	STRUCTURAL ROOF AND PANEL DETAILS
530-S-11	STRUCTURAL BRIDGE CRANE DETAILS
530-S-12	STRUCTURAL DETAILS
530-M-1	MECHANICAL LOWER LEVEL PLAN
530-M-2	MECHANICAL GROUND LEVEL PLAN
530-M-3	MECHANICAL UPPER LEVEL PLAN
530-M-4	MECHANICAL SECTION
530-M-5	MECHANICAL SECTIONS AND DETAILS
530-M-6	MECHANICAL SECTIONS AND DETAILS
530-M-7	MECHANICAL PIPING ISOMETRIC
530-H-1	HVAC AND PLUMBING LOWER LEVEL PLAN
530-H-2	HVAC AND PLUMBING GROUND LEVEL PLAN
530-H-3	HVAC AND PLUMBING UPPER LEVEL PLAN AND SECTIONS
710 ADMINISTRATION/LABORATORY BUILDING	
710-A-1	ARCHITECTURAL ELEVATIONS
710-A-2	ARCHITECTURAL EXISTING BUILDING MODIFICATIONS FLOOR PLAN
710-A-3	ARCHITECTURAL WEST ADDITION FLOOR PLAN
710-A-4	ARCHITECTURAL ROOF PLAN AND DETAILS
710-A-5	ARCHITECTURAL WALL SECTIONS
710-A-6	ARCHITECTURAL WALL SECTIONS & DETAILS
710-A-7	ARCHITECTURAL WALL SECTIONS
710-A-8	EXISTING BLDG. REFLECTED CEILING PLAN
710-A-9	WEST ADDITION REFLECTED CEILING PLAN
710-A-10	ARCHITECTURAL INTERIOR ELEVATIONS
710-A-11	ARCHITECTURAL INTERIOR ELEVATIONS - LABORATORY
710-A-12	ARCHITECTURAL INTERIOR ELEVATIONS - LABORATORY
710-A-13	ARCHITECTURAL MISCELLANEOUS DETAILS
710-A-14	ARCHITECTURAL MISCELLANEOUS DETAILS
710-S-1	SCTRUCTURAL WEST ADDITION FOUNDATION PLAN AND DETAILS
710-S-2	STRUCTURAL WEST ADDITION ROOF FRAMING PLAN
710-S-3	STRUCTURAL WEST ADDITION SECTIONS
710-S-4	STRUCTURAL WEST ADDITION DETAILS
710-H-1	HVAC EXISTING BUILDING MODIFICATIONS FLOOR PLAN
710-H-2	HVAC WEST ADDITION FLOOR PLAN
710-H-3	HVAC SECTIONS AND DETAILS
710-P-1	PLUMBING EXISTING BLDG. MODIFICATIONS DRAIN AND VENT
710-P-2	PLUMBING EXISTING BUILDING MODIFICATIONS - WI AND HOT WATER
710-P-3	PLUMBING WEST ADDITION DRAIN AND VENT PLAN
710-P-4	PLUMBING WEST ADDITION - WI AND HOT WATER
720 SHOP BUILDING MODIFICATIONS	
720-A-1	ARCHITECTURAL FLOOR PLAN
720-S-1	STRUCTURAL SECTIONS AND DETAILS
720-H-1	HVAC PLAN
720-P-1	PLUMBING PLAN
730 STORAGE BUILDING	
730-A-1	ARCHITECTURAL ELEVATIONS, SECTION, AND ROOF PLAN
730-S-1	STRUCTURAL FOUNDATION/FLOOR PLAN
730-S-2	STRUCTURAL ROOF FRAMING PLAN AND DETAILS
730-S-3	STRUCTURAL SECTIONS AND DETAILS
730-H-1	HVAC AND PLUMBING PLAN

DRAWING NO.	DRAWING TITLE
740 EMERGENCY GENERATOR BUILDING	
740-A-1	ARCHITECTURAL ELEVATIONS AND ROOF PLAN
740-S-1	STRUCTURAL FOUNDATION/FLOOR PLAN
740-S-2	STRUCTURAL ROOF FRAMING PLAN
740-S-3	STRUCTURAL SECTIONS AND DETAILS
740-M-1	MECHANICAL/HVAC/PLUMBING PLAN
740-M-2	MECHANICAL SECTIONS AND DETAILS
800 STANDARD DETAILS	
800-A-1	ARCHITECTURAL ROOF DETAILS
800-A-2	ARCHITECTURAL DOOR DETAILS
800-A-3	ARCHITECTURAL DOOR DETAILS
800-A-4	ARCHITECTURAL DOOR DETAILS
800-A-5	ARCHITECTURAL DOOR DETAILS
800-A-6	ARCHITECTURAL DOOR AND WINDOW DETAILS
800-A-7	ARCHITECTURAL DOOR AND WINDOW DETAILS
800-A-8	ARCHITECTURAL LOUVER DETAILS
800-A-9	ARCHITECTURAL LOUVER DETAILS
800-A-10	ARCHITECTURAL LOUVER DETAILS
800-A-11	ARCHITECTURAL DOOR AND LOUVER DETAILS
800-A-12	ARCHITECTURAL DOOR, WINDOW AND LOUVER DETAILS
800-A-13	ARCHITECTURAL INTERIOR DETAILS
800-A-14	ARCHITECTURAL MISCELLANEOUS DETAILS
800-S-1	STRUCTURAL STANDARD DETAILS
800-S-2	STRUCTURAL STANDARD DETAILS
800-S-3	STRUCTURAL STANDARD DETAILS
800-S-4	STRUCTURAL STANDARD DETAILS
800-S-5	STRUCTURAL STANDARD DETAILS
800-S-6	STRUCTURAL STANDARD DETAILS
800-S-7	STRUCTURAL STANDARD DETAILS
800-S-8	STRUCTURAL STANDARD DETAILS
800-S-9	STRUCTURAL STANDARD DETAILS
800-S-10	STRUCTURAL STANDARD DETAILS
800-S-11	STRUCTURAL STANDARD DETAILS
800-S-12	STRUCTURAL STANDARD DETAILS
800-S-13	STRUCTURAL STANDARD DETAILS
800-M-1	PIPING AND VALVE SCHEDULE
800-M-2	PIPING AND VALVE SCHEDULE
800-M-3	GATE SCHEDULE
800-M-4	MECHANICAL STANDARD DETAILS
800-M-5	MECHANICAL STANDARD DETAILS
800-M-6	MECHANICAL STANDARD DETAILS
800-M-7	MECHANICAL STANDARD DETAILS
800-M-8	MECHANICAL STANDARD DETAILS
800-M-9	MECHANICAL STANDARD DETAILS
800-M-10	MECHANICAL STANDARD DETAILS
800-M-11	MECHANICAL STANDARD DETAILS
800-M-12	MECHANICAL STANDARD DETAILS
800-H-1	HVAC STANDARD DETAILS
800-H-2	HVAC STANDARD DETAILS
800-P-1	PLUMBING STANDARD DETAILS
VOLUME 7	
900 INSTRUMENTATION AND CONTROL	
900-N-1	ABBREVIATIONS AND INSTRUMENT IDENTIFICATION
900-N-2	LEGEND
900-N-3	P&ID - RAW SEWAGE PUMP STATION/SEPTAGE PUMPING
900-N-4	P&ID - SCREENINGS FACILITY
900-N-5	P&ID - GRIT REMOVAL
900-N-6	P&ID - PRIMARY CLARIFIERS/PRIMARY SLUDGE PUMPING
900-N-7	P&ID - PRIMARY EFFLUENT PUMP STATION
900-N-8	P&ID - OXYGEN ACTIVATED SLUDGE BASINS
900-N-9	P&ID - OXYGEN GENERATION FACILITY
900-N-10	P&ID - PSA COMPRESSORS
900-N-11	P&ID - SECONDARY CLAIFIERS/R.A.S. PUMPING
900-N-12	P&ID - W.A.S. PUMPING/SECONDARY SCUM PUMPING
900-N-13	P&ID - CHLORINE CONTACT BASIN
900-N-14	P&ID - CHLORINE FEED SYSTEM
900-N-15	P&ID - PRIMARY SLUDGE STORAGE
900-N-16	P&ID - W.A.S. THICKENING
900-N-17	P&ID - POLYMER FEED SYSTEM - THICKENING
900-N-18	P&ID - T.W.A.S. STORAGE
900-N-19	P&ID - SLUDGE BLENDING SYSTEM
900-N-20	P&ID - SLUDGE DEWATERING
900-N-21	P&ID - POLYMER FEED SYSTEM - DEWATERING
900-N-22	P&ID - SCUM CONCENTRATION/DISPOSAL
900-N-23	P&ID - EXISTING INCINERATOR SYSTEM
900-N-24	P&ID - SLUDGE INCINERATION - COMBUSTION SYSTEM
900-N-25	P&ID - SLUDGE INCINERATION - EMISSION CONTROL SYSTEM
900-N-26	P&ID - GRIT FEED SYSTEM/ASH HANDLING SYSTEM
900-N-27	P&ID - PRELIMINARY TREATMENT ODOR CONTROL
900-N-28	P&ID - SOLIDS HANDLING ODOR CONTROL
900-N-29	P&ID - CHEMICAL FEED SYSTEM

DRAWING NO.	DRAWING TITLE
900 INSTRUMENTATION AND CONTROL (CONTINUED)	
900-N-30	P&ID - W2 WATER SYSTEM
900-N-31	P&ID - W3 & W4 WATER SYSTEM
900-N-32	P&ID - IN-PLANT PUMPING/SUMP PUMPING
900-N-33	P&ID - COMPRESSED AIR SYSTEM/CHANNEL AERATION BLOWERS
900-N-34	P&ID - CHLORINE SCRUBBER SYSTEM/ENGINE GENERATOR
900-N-35	CONTROL SYSTEM BLOCK DIAGRAM
900-N-36	AREA CONTROL PANEL ACP-11000 ELEVATION
900-N-37	AREA CONTROL PANEL ACP-11000 SCHEDULE
900-N-38	AREA CONTROL PANEL ACP-11000 ELEMENTARY
900-N-39	AREA CONTROL PANEL ACP-11000 ELEMENTARY
900-N-40	AREA CONTROL PANEL ACP-11000 ELEMENTARY
900-N-41	AREA CONTROL PANEL ACP-11000 ELEMENTARY
900-N-42	AREA CONTROL PANEL ACP-11000 ELEMENTARY
900-N-43	AREA CONTROL PANEL ACP-11000 ELEMENTARY
900-N-44	AREA CONTROL PANEL ACP-11000 ELEMENTARY
900-N-45	AREA CONTROL PANEL ACP-11000 ELEMENTARY
900-N-46	AREA CONTROL PANEL ACP-11000 ELEMENTARY
900-N-47	AREA CONTROL PANEL ACP-34000 ELEVATION
900-N-48	AREA CONTROL PANEL ACP-34000 SCHEDULE
900-N-49	AREA CONTROL PANEL ACP-34000 ELEMENTARY
900-N-50	AREA CONTROL PANEL ACP-34000 ELEMENTARY
900-N-51	AREA CONTROL PANEL ACP-34000 ELEMENTARY
900-N-52	AREA CONTROL PANEL ACP-34000 ELEMENTARY
900-N-53	AREA CONTROL PANEL ACP-34000 ELEMENTARY
900-N-54	AREA CONTROL PANEL ACP-34000 ELEMENTARY
900-N-55	AREA CONTROL PANEL ACP-34000 ELEMENTARY
900-N-56	AREA CONTROL PANEL ACP-34000 ELEMENTARY
900-N-57	AREA CONTROL PANEL ACP-34000 ELEMENTARY
900-N-58	AREA CONTROL PANEL ACP-34000 ELEMENTARY
900-N-59	AREA CONTROL PANEL ACP-34000 ELEMENTARY
900-N-60	AREA CONTROL PANEL ACP-34000 ELEMENTARY
900-N-61	AREA CONTROL PANEL ACP-51000 ELEVATION
900-N-62	AREA CONTROL PANEL ACP-51000 SCHEDULE
900-N-63	AREA CONTROL PANEL ACP-51000 ELEMENTARY
900-N-64	AREA CONTROL PANEL ACP-51000 ELEMENTARY
900-N-65	AREA CONTROL PANEL ACP-51000 ELEMENTARY
900-N-66	AREA CONTROL PANEL ACP-51000 ELEMENTARY
900-N-67	AREA CONTROL PANEL ACP-51000 ELEMENTARY
900-N-68	AREA CONTROL PANEL ACP-51000 ELEMENTARY
900-N-69	AREA CONTROL PANEL ACP-51000 ELEMENTARY
900-N-70	AREA CONTROL PANEL ACP-51000 ELEMENTARY
900-N-71	AREA CONTROL PANEL ACP-51000 ELEMENTARY
900-N-72	AREA CONTROL PANEL ACP-51000 ELEMENTARY
900-N-73	LCP-05010 ELEVATION AND ELEMENTARY
900-N-74	LCP-05020 ELEVATION AND ELEMENTARY
900-N-75	LCP-1101X, LCP-13020 ELEVATION AND ELEMENTARY
900-N-76	LCP-13010 ELEVATION
900-N-77	LCP-13010 ELEMENTARY
900-N-78	LCP-13010 ELEMENTARY
900-N-79	LCP-13010 ELEMENTARY
900-N-80	LCP-22010 ELEVATION
900-N-81	LCP-22010 ELEMENTARY
900-N-82	LCP-22010 ELEMENTARY
900-N-83	LCP-22010 ELEMENTARY
900-N-84	LCP-22010 ELEMENTARY
900-N-85	LCP-42010 ELEMENTARY
900-N-86	LCP-42010 ELEMENTARY
900-N-87	LCP-42010 ELEMENTARY
900-N-88	LCP-42010 ELEMENTARY
900-N-89	LCP-42010 ELEMENTARY
900-N-90	LCP-42030, LCP-51010 ELEVATION AND ELEMENTARY
900-N-91	LCP-51020 ELEVATION AND ELEMENTARY
900-N-92	LCP-51020, LCP-53060 ELEVATION AND ELEMENTARY
900-N-93	LCP-53010 ELEVATION
900-N-94	LCP-53010 SCHEDULE AND ELEMENTARY
900-N-95	LCP-53010 ELEMENTARY
900-N-96	LCP-53020 ELEVATION
900-N-97	LCP-53020 ELEMENTARY
900-N-98	LCP-53020 ELEMENTARY
900-N-99	LCP-53020 ELEMENTARY
900-N-100	LCP-53020 ELEMENTARY
900-N-101	LCP-53020 ELEMENTARY
900-N-102	LCP-53020 ELEMENTARY
900-N-103	LCP-53020 ELEMENTARY
900-N-104	LCP-53020 ELEMENTARY
900-N-105	LCP-53040 ELEVATION
900-N-106	LCP-53040 ELEMENTARY
900-N-107	LCP-53040 ELEMENTARY
900-N-108	INSTRUMENTATION AND CONTROL STANDARD DETAILS
900-N-109	INSTRUMENTATION AND CONTROL STANDARD DETAILS
900-N-110	INSTRUMENTATION AND CONTROL STANDARD DETAILS
900-N-111	INSTRUMENTATION AND CONTROL STANDARD DETAILS

JOSEPH A. GAUTHIER STATE OF WASHINGTON REGISTERED PROFESSIONAL ENGINEER

CH2M HILL

DSGN	J. GAUTHIER
DR	A. MCRILL
CHK	S. DUNIGAN
APVD	J. GAUTHIER

NO.	DATE	REVISION	BY	APVD

REUSE OF DOCUMENTS
THIS DOCUMENT, AND THE IDEAS AND DESIGNS INCORPORATED HEREIN, AS AN INSTRUMENT OF PROFESSIONAL SERVICE, IS THE PROPERTY OF CH2M HILL AND IS NOT TO BE USED, IN WHOLE OR IN PART, FOR ANY OTHER PROJECT WITHOUT THE WRITTEN AUTHORIZATION OF CH2M HILL.
©CH2M HILL

BAR IS ONE INCH ON ORIGINAL DRAWING.
0 1"
IF NOT ONE INCH ON THIS SHEET, ADJUST SCALES ACCORDINGLY.

CITY OF BELLINGHAM, WASHINGTON
POST POINT WASTEWATER TREATMENT PLANT UPGRADE

GENERAL DRAWINGS
DRAWING INDEX
SHEET NO. 2

DWG NO. 10-G-3
DATE AUG. 1990
PROJ. NO. SEA22462.C1

DRAWN BY: M. MOORE DESIGNED BY: J. GAUTHIER
DGN NAME: H:/PROJ2/BELLINGH/BL010G-N.DGN

DRAWINGS INDEX

DRAWING NO.	DRAWING TITLE
910 ELECTRICAL	
910-E-1	LEGEND
910-E-2	OVERALL SITE PLAN
910-E-3	PARTIAL SITE PLAN
910-E-4	PARTIAL SITE PLAN
910-E-5	PARTIAL SITE PLAN
910-E-6	PARTIAL SITE PLAN
910-E-7	PARTIAL SITE PLAN
910-E-8	PARTIAL SITE PLAN
910-E-9	PARTIAL SITE PLAN
910-E-10	PLANT ONE LINE DIAGRAM
910-E-11	ONE LINE DIAGRAM
910-E-12	ONE LINE DIAGRAM
910-E-13	ONE LINE DIAGRAM
910-E-14	ONE LINE DIAGRAM
910-E-15	ONE LINE DIAGRAM
910-E-16	ONE LINE DIAGRAM
910-E-17	ONE LINE DIAGRAM
910-E-18	ONE LINE DIAGRAM
910-E-19	EQUIPMENT ELEVATIONS
910-E-20	EQUIPMENT ELEVATIONS
910-E-21	EQUIPMENT ELEVATIONS
910-E-22	EQUIPMENT ELEVATIONS
910-E-23	PIPE GALLERY NORTH FACILITY PLAN
910-E-24	PIPE GALLERY SOUTH FACILITY PLAN
910-E-25	PIPE GALLERY NORTH PROCESS PLAN
910-E-26	PIPE GALLERY SOUTH PROCESS PLAN
910-E-27	PIPE GALLERY PARTIAL PROCESS PLANS
910-E-28	PIPE GALLERY PARTIAL PROCESS PLANS
910-E-29	PIPE GALLERY PARTIAL PROCESS PLANS
910-E-30	SCREENINGS FACILITY GROUND LEVEL FACILITY PLAN
910-E-31	SCREENINGS FACILITY GROUND LEVEL PROCESS PLAN
910-E-32	SCREENINGS FACILITY PARTIAL FACILITY PLANS
910-E-33	SCREENINGS FACILITY LOWER LEVEL PROCESS PLAN
910-E-34	HEADWORKS MODIFICATIONS PROCESS PLAN
910-E-35	PRELIMINARY TREATMENT ODOR CONTROL LOWER LEVEL FACILITY PLAN
910-E-36	PRELIMINARY TREATMENT ODOR CONTROL LOWER LEVEL PROCESS PLAN
910-E-37	PRELIMINARY TREATMENT ODOR CONTROL GROUND LEVEL FACILITY PLAN
910-E-38	PRELIMINARY TREATMENT ODOR CONTROL GROUND LEVEL PROCESS PLAN
910-E-39	PRIMARY EFFLUENT PUMP STATION LOWER LEVEL FACILITY PLAN
910-E-40	PRIMARY EFFLUENT PUMP STATION LOWER LEVEL PROCESS PLAN
910-E-41	PRIMARY EFFLUENT PUMP STATION GROUND LEVEL FACILITY PLAN
910-E-42	PRIMARY EFFLUENT PUMP STATION GROUND LEVEL PROCESS PLAN
910-E-43	PRIMARY EFFLUENT PUMP STATION UPPER LEVEL PLAN
910-E-44	OXYGEN ACTIVATED SLUDGE BASINS FACILITY PLAN
910-E-45	OXYGEN ACTIVATED SLUDGE BASINS PROCESS PLAN
910-E-46	OXYGEN GENERATION FACILITY FACILITY PLAN
910-E-47	OXYGEN GENERATION FACILITY PARTIAL FACILITY PLANS
910-E-48	OXYGEN GENERATION FACILITY PROCESS PLAN
910-E-49	SECONDARY CLARIFIERS PARTIAL PLAN
910-E-50	SECONDARY CLARIFIERS PARTIAL PLANS
910-E-51	SECONDARY SLUDGE PUMP STATION LOWER LEVEL FACILITY PLAN
910-E-52	SECONDARY SLUDGE PUMP STATION LOWER LEVEL PROCESS PLAN
910-E-53	SECONDARY SLUDGE PUMP STATION GROUND LEVEL FACILITY PLAN
910-E-54	SECONDARY SLUDGE PUMP STATION GROUND LEVEL PROCESS PLAN
910-E-55	CHLORINE CONTACT BASIN MODIFICATIONS PLAN
910-E-56	CHLORINE BUILIDING MODIFICATIONS PARTIAL PLANS
910-E-57	SOLIDS HANDLING FACILITY MODIFICATIONS LOWER LEVEL PLAN
910-E-58	SOLIDS HANDLING FACILITY MODIFICATIONS GROUND LEVEL PLAN
910-E-59	SOLIDS HANDLING FACILITY MODIFICATIONS EL. 29.0 PLAN
910-E-60	SOLIDS HANDLING FACILITY - WEST ADDITION LOWER LEVEL FACILITY PLAN
910-E-61	SOLIDS HANDLING FACILITY - WEST ADDITION LOWER LEVEL PROCESS PLAN
910-E-62	SOLIDS HANDLING FACILITY - WEST ADDITION GROUND LEVEL FACILITY PLAN
910-E-63	SOLIDS HANDLING FACILITY - WEST ADDITION GROUND LEVEL PROCESS PLAN
910-E-64	SOLIDS HANDLING FACILITY - WEST ADDITION MEZZANINE PLAN
910-E-65	SOLIDS HANDLING FACILITY - WEST ADDITION ASH LOADING PLANS
910-E-66	SOLIDS HANDLING FACILITY - EAST ADDITION LOWER LEVEL FACILITY PLAN
910-E-67	SOLIDS HANDLING FACILITY - EAST ADDITION LOWER LEVEL PROCESS PLAN
910-E-68	SOLIDS HANDLING FACILITY - EAST ADDITION GROUND LEVEL FACILITY PLAN
910-E-69	SOLIDS HANDLING FACILITY - EAST ADDITION GROUND LEVEL PROCESS PLAN
910-E-70	SOLIDS HANDLING FACILITY - EAST ADDITION UPPER LEVEL FACILITY PLAN
910-E-71	SOLIDS HANDLING FACILITY - EAST ADDITION UPPER LEVEL PROCESS PLAN
910-E-72	ADMIN/LAB EXISTING BUILDING MODIFICATIONS LIGHTING PLAN
910-E-73	ADMIN/LAB EXISTING BUILDING MODIFICATIONS POWER PLAN
910-E-74	ADMINISTRATION/LABORATORY WEST ADDITION LIGHTING PLAN
910-E-75	ADMINISTRATION/LABORATORY WEST ADDITION POWER PLAN
910-E-76	ADMINISTRATION/LABORATORY WEST ADDITION SPECIAL SYSTEMS PLAN
910-E-77	SHOP BUILDING MODIFICATIONS PLAN
910-E-78	STORAGE BUILDING LIGHTING PLAN
910-E-79	STORAGE BUILDING POWER PLAN
910-E-80	EMERGENCY GENERATOR BUILDING FACILITY PLAN
910-E-81	EMERGENCY GENERATOR BUILDING PROCESS PLAN
910-E-82	LUMINAIRE SCHEDULE
910-E-83	LUMINAIRE SCHEDULE
910-E-84	ELEMENTARY DIAGRAMS
910-E-85	ELEMENTARY DIAGRAMS
910-E-86	ELEMENTARY DIAGRAMS
910-E-87	ELEMENTARY DIAGRAMS
910-E-88	ELEMENTARY DIAGRAMS
910-E-89	ELEMENTARY DIAGRAMS
910-E-90	ELEMENTARY DIAGRAMS
910-E-91	ELEMENTARY DIAGRAMS
910-E-92	ELEMENTARY DIAGRAMS
910-E-93	ELEMENTARY DIAGRAMS
910-E-94	COMMUNICATION SYSTEM RISER DIAGRAM
910-E-95	FIRE ALARM SYSTEM RISER DIAGRAM
910-E-96	I&C LAN/RBC RISER DIAGRAM
910-E-97	SCHEDULES AND DETAILS
910-E-98	DETAILS
910-E-99	DETAILS
910-E-100	DETAILS
910-E-101	DETAILS
910-E-102	DETAILS
910-E-103	DETAILS
910-E-104	DETAILS
910-E-105	DETAILS
910-E-106	STANDARD DETAILS
910-E-107	STANDARD DETAILS
910-E-108	STANDARD DETAILS
910-E-109	STANDARD DETAILS

REFERENCE DRAWINGS

(RECORD DRAWINGS FOR THE EXISTING POST POINT POLLUTION CONTROL PLANT ARE INCLUDED IN VOLUME 7 FOLLOWING THE ELECTRICAL DRAWINGS)

JOSEPH A. GAUTHIER STATE OF WASHINGTON REGISTERED PROFESSIONAL ENGINEER

CH2M HILL

DSGN J. GAUTHIER
DR D CLARK
CHK S. DUNIGAN
APVD J. GAUTHIER

NO.	DATE	REVISION	BY	APVD

REUSE OF DOCUMENTS
THIS DOCUMENT, AND THE IDEAS AND DESIGNS INCORPORATED HEREIN, AS AN INSTRUMENT OF PROFESSIONAL SERVICE, IS THE PROPERTY OF CH2M HILL AND IS NOT TO BE USED, IN WHOLE OR IN PART, FOR ANY OTHER PROJECT WITHOUT THE WRITTEN AUTHORIZATION OF CH2M HILL.
©CH2M HILL

BAR IS ONE INCH ON ORIGINAL DRAWING.
0 1"
IF NOT ONE INCH ON THIS SHEET, ADJUST SCALES ACCORDINGLY.

CITY OF BELLINGHAM, WASHINGTON
POST POINT WASTEWATER TREATMENT PLANT UPGRADE

GENERAL DRAWINGS
DRAWING INDEX
SHEET NO. 3

DWG NO. 10-G-4
DATE AUG. 1990
PROJ NO. SEA22462.C1

DATE: 8-25-90 DLC
DRAWN BY: C. HOWELL DESIGNED BY: J. GAUTHIER
DGN NAME: H:/PROJ2/BELLINGH/BL010G-D.GDN

ABBREVIATIONS

@	AT
A/B	AERATION BASIN
AB	ANCHOR BOLT
ABDN	ABANDONED
ACT	ACOUSTICAL TILE
ACI	AMERICAN CONCRETE INSTITUTE
ACST	ACOUSTICAL
AD	AREA DRAIN
ADDL	ADDITIONAL
ADJ	ADJACENT
ADWF	AVERAGE DRY WEATHER FLOW
AFL	ABOVE FLOOR LINE
AHR	ANCHOR
AISC	AMERICAN INSTITUTE OF STEEL CONSTRUCTION
AL	ALUMINUM
ALTN	ALTERNATE
ANOD	ANODIZED
APPROX	APPROXIMATE
APVD	APPROVED
ARCH	ARCHITECTURAL
ASSY	ASSEMBLY
ASU	AIR SUPPLY UNIT
AUTO	AUTOMATIC
AUX	AUXILIARY
AVG	AVERAGE
B & B	BALLED CD BURLAP
BD	BOARD
BETW	BETWEEN
BF	BOTTOM FACE
BLDG	BUILDING
BM	BEAM, BENCH MARK
BO	BOILER
BOD	BOTTOM OF DUCT
BOD_5	BIOCHEMICAL OXYGEN DEMAND (5 DAY TEST)
BOL	BOTTOM OF LINE
BOP	BOTTOM OF PIPE
BOT	BOTTOM
BRG	BEARING
℄ CL	CENTER LINE
C TO C	CENTER TO CENTER
CAB.	CABINET
CAL	CALIPER
CD	CEILING DIFFUSER
CFM	CUBIC FEET PER MINUTE
CG	CEILING GRILLE
CHEM	CHEMICAL
CHKD	CHECKERED
CHW	CHILLED WATER
CI	CAST IRON
CIP	CAST IN PLACE
CJ	CONSTRUCTION JOINT
CL_2	CHLORINE
CLG	CEILING
CLR	CLEAR, CLEARANCE
CMP	CORRUGATED METAL PIPE
CMU	CONCRETE MASONRY UNITS
CO	CLEANOUT
COL	COLUMN
COMB	COMBUSTION
CON	CONCENTRIC
CONC	CONCRETE
COND	CONDENSATE
CONN	CONNECTION
CONST	CONSTRUCTION
CONT	CONTINUOUS
COORD	COORDINATE
COR	CORNER
CPLG	COUPLING
CPVC	CHLORINATED POLYVINYL CHLORIDE
CT	CERAMIC TILE
CTR	CENTER
CTRD	CENTERED
CU	CONDENSING UNIT
CU FT	CUBIC FEET
CU IN.	CUBIC INCH
CU YD	CUBIC YARD
Δ	CENTRAL ANGLE
DBA	DEFORMED BAR ANCHOR
DBL	DOUBLE
DET	DETAIL
DF	DOUGLAS FIR, DRINKING FOUNTAIN
DH	DUCT HEATER
DI	DUCTILE IRON
DHU	DEHUMIDIFIER UNIT
DIA	DIAMETER
DIAG	DIAGONAL
DIM	DIMENSION
DIR	DIRECTION
DISCH	DISCHARGE
DN	DOWN
DRWR	DRAWER
DWG	DRAWING
DWL	DOWEL
E	EAST
E	EXTERNAL
EA	EACH
ECC	ECCENTRIC
ECP	ENVIRONMENTAL CONTROL PANEL
EE	EMERGENCY EYEWASH
EF	EACH FACE, EXHAUST FAN
EFL	EFFLUENT
EL	ELEVATION
ELL	ELBOW
ELEC	ELECTRICAL
EQL	EQUAL
EQL SP	EQUALLY SPACED
EQPT	EQUIPMENT
EW	EACH WAY
EXH	EXHAUST
EXP	EXPOSED
EXP JT	EXPANSION JOINT
EXT	EXTERIOR
EXST	EXISTING
FAB	FABRICATION
FCO	FLOOR CLEANOUT
FEXT	FIRE EXTINGUISHER
FD	FLOOR DRAIN, FIRE DAMPER
FDN	FOUNDATION
FG	FINISH GRADE
FIG.	FIGURE
FIN	FINISH
FLL	FLOW LINE ELEVATION
FLEX	FLEXIBLE
FLG	FLANGE
FL	FLOOR
FRP	FIBERGLASS REINFORCED PLASTIC, FIBERGLASS
FT	FOOT OR FEET
FTG	FOOTING
FW	FLASK WASHER
GA	GAUGE
GAL	GALLON CAN
GALV	GALVANIZED (HOT DIP)
GALVS	GALVANIZED STEEL
GB	GRAB BAR
GBU	GLASS BLOCK UNITS
GCB	GYPSUM CEILING BOARD
GCMU	GLAZED CMU
GE	GROOVED END
GPD	GALLONS PER DAY
GPH	GALLONS PER HOUR
GPM	GALLONS PER MINUTE
GVL	GRAVEL
GW	GLASS WASHER
GWB	GYPSUM WALLBOARD
H.A.S	HEADED ANCHOR STUD
HD	HUB DRAIN
HDNR	HARDNER
HDR	HEADER
HDW	HARDWARE
HGT	HEIGHT
HORIZ	HORIZONTAL
HM	HOLLOW METAL
HR	HOUR
HT	HEIGHT, HEATER
HW	HOT WATER
HWS	HEATING WATER SUPPLY
HWR	HEATING WATER RETURN
I&C	INSTRUMENTATION AND CONTROL
ID	INSIDE DIAMETER
IE	INVERT ELEVATION
I.F.	INSIDE FACE
IN.	INCH
INFL	INFLUENT
INSUL	INSULATION
INVT	INVERT
JT	JOINT
KIP	THOUSAND POUNDS
KSK	KITCHEN SINK
L	LENGTH OF CURVE
LAB	LABORATORY
LAV	LAVATORY
LB	POUNDS
LB/D	POUNDS PER DAY
LEW	LAB EYE WASH
LF	LINEAR FEET
LLV	LONG LEG VERTICAL
LNTL	LINTEL
LONG	LONGITUDINAL
LP	LAB PLUMBING FIXTURE
LR	LONG RADIUS
LSK	LABORATORY SINK
LSS	LAB SAFETY SHOWER
LT	LIGHT
MATL	MATERIAL
MAX	MAXIMUM
MB	MACHINE BOLT
MBS	MODIFIED BITUMEN SHEET ROOFING
MCC	MOTOR CONTROL CENTER
MD	MOTORIZED DAMPER
MECH	MECHANICAL
MFR	MANUFACTURER
MGD	MILLION GALLONS PER DAY
MG/L	MILLIGRAMS PER LITRE
MH	MANHOLE
MIN	MINIMIM
MISC	MISCELLANEOUS
MJ	MECHANICAL JOINT
MLSS	MIXED LIQUOR SUSPENDED SOLIDS
MLVSS	MIXED LIQUOR VOLATILE SUSPENDED SOLIDS
MO	MONTH
MO	MASONRY OPENING
MON	MONUMENT
MTG	MOUNTING
MET	METAL
N	NORTH
NIC	NOT IN CONTRACT
NO.	NUMBER
NOM	NOMINAL
NORM	NORMAL
NTS	NOT TO SCALE
OC	ON CENTER
OD	OUTSIDE DIAMETER, OVERFLOW DRAIN
O.F.	OUTSIDE FACE
O/H	OVERHEAD
O TO O	OUT TO OUT
OPNG	OPENING
OPP	OPPOSITE
P	PILASTER, PUMP
PC	POINT OF CURVATURE
P/C	PRECAST
PCG	PERFORATED CEILING GRILLE
PE	PLAIN END
PI	POINT OF INTERSECTION
P&ID	PROCESS AND INSTRUMENTATION DIAGRAM
PJ	PUSH-ON JOINT
PJF	PREMOLDED JOINT FILLER
PL	PLATE
PLAM	PLASTIC LAMINATE
PLYWD	PLYWOOD
POC	POINT ON CURVE
POT	POINT ON TANGENT
PR	PAIR
PS	PUMP STATION
PSF	POUNDS PER SQUARE FOOT
PSI	POUNDS PER SQUARE INCH
PT	POINT OF TANGENCY
PVC	POLYVINYL CHLORIDE
PVMT	PAVEMENT
R	R-VALUE (INSULATION)
R OR RAD	RADIUS
R	RISER
RA	RETURN AIR
RC	REINFORCED CONCRETE
RD	ROOF DRAIN
RDCR	REDUCER
REINF	REINFORCE
REQD	REQUIRED
RESIL	RESILIENT
RJ	RESTRAINED JOINT
RM	ROOM
RO	ROUGH OPENING
RST	REINFORCING STEEL
R/W	RIGHT-OF-WAY
S	SOUTH
SB	SERVICE BASIN
SCFM	STANDARD CUBIC FEET PER MINUTE
SCHED	SCHEDULE
SDMH	STORM DRAIN MANHOLE
SECT	SECTION
SF	SUPPLY FAN
SG	SAFETY GLASS
SH	SHEET, SHOWER
SIM	SIMILAR
SLV	SHORT LEG VERTICAL
SPECS	SPECIFICATIONS
SMLS	SEAMLESS
SPG	SPACING
SP	SPREAD
SQ	SQUARE
SSH	SAFETY SHOWER
SSK	SERVICE SINK
SST	STAINLESS STEEL
STA	STATION
STD	STANDARD
STIF	STIFFENER
STOR	STORAGE
STR	STRAIGHT
STRUCT	STRUCTURAL
STL	STEEL
SUSP	SUSPEND
SYMM	SYMMETRICAL
T	TINTED
T	TANGENT LENGTH
T&B	TOP AND BOTTOM
TC	TOP OF CONCRETE
TCU	TERMINAL CONTROL UNIT
TEMP	TEMPERED, TEMPERATURE
TF	TOP FACE
TG	TEMPERED GLASS
THK	THICK
THRD	THREADED
T.O.	TOP OF
TOC	TOP OF CONCRETE
TOS	TOP OF STEEL
TPD	TONS PER DAY
TRANSV	TRANSVERSE
TRD	TREAD
TS	TUBULAR STEEL
TSS	TOTAL SUSPENDED SOLIDS
TST	TOP OF STEEL
T-STAT	THERMOSTAT
TW	TOP OF WALL
TYP	TYPICAL
UH	UNIT HEATER
UR	URINAL
V	VENT
VAV	VARIABLE AIR VOLUME
VCT	VINYL COMPOSITION TILE
VERT	VERTICAL
VTR	VENT THRU ROOF
VWC	VINYL WALL COVERING
W	WEST
W/	WITH
WC	WATER CLOSET
WCO	WALL CLEANOUT
WD	WOOD
WG	WIRE GLASS
WH	WATER HEATER
WK	WEEK
WRG	WALL RETURN GRILLE
WR GWB	WATER RESISTANT GYPSUM WALLBOARD
WS	WATER STOP, WATERSURFACE
WSG	WALL SUPPLY GRILLE
WSR	WALL SUPPLY REGISTER
WWF	WELDED WIRE FABRIC
XFMR	TRANSFORMER
YR	YEAR

NOTES:

1. FOR ELECTRICAL AND INSTRUMENTATION ABBREVIATIONS, SEE ELECTRICAL AND INSTRUMENTATION DRAWINGS.
2. FOR ABBREVIATIONS NOT LISTED, SEE "ABBREVIATIONS FOR USE ON DRAWINGS AND TEXT", PUBLISHED BY THE AMERICAN NATIONAL STANDARDS INSTITUTE INC. (ANSI)
3. SEE ARCHITECTURAL DOOR AND FINISH SCHEDULES IN THE SPECIFICATIONS FOR ADDITIONAL ABBREVIATIONS.

FLOW STREAM IDENTIFICATION

LEGEND	SERVICE
—ACID—	SULFURIC ACID
—AHP—	AIR, HIGH PRESSURE PROCESS
—AI—	AIR, INSTRUMENT
—ALB—	AIR, LABORATORY
—ALP—	AIR, LOW PRESSURE PROCESS
—AP—	AIR, PURGE
—AS—	AIR, SERVICE
—ASH—	ASH INCINERATOR
—BS—	BLENDED SLUDGE
—CG—	CHLORINE GAS, PRESSURE
—CGV—	CHLORINE GAS, VACUUM
—CGE—	CHLORINE GAS, EXHAUST
—COND—	CONCENSATE
—CRD—	CHEMICAL RESISTANT DRAIN
—CRV—	CHEMICAL RESISTANT VENT
—CS1—	CHLORINE SOLUTION TO POST CHLORINATION
—CS2—	CHLORINE SOLUTION TO PRE CHLORINATION
—CS3—	CHLORINE SOLUTION TO RAS BULKING CONTROL
—CS4—	CHLORINE SOLUTION TO W3 WATER SUPPLY
—CS5—	CHLORINE SOLUTION TO SEC. CLAR. WEIRS
—CSM—	CHLORINE SCUM
—CWR—	COLD WATER RETURN
—CWS—	COLD WATER SUPPLY
—D—	DRAIN, PLUMBING
—DIW—	DEIONIZED WATER
—DS—	DEWATERED SLUDGE
—EE—	ENGINE EXHAUST
—EI—	EXHAUST, INCINERATOR
—FOR—	FUEL OIL RETURN
—FOS—	FUEL OIL SUPPLY
—FS—	FIRE SPRINKLER
—FW—	FIRE WATER
—G—	GRIT
—GOX—	GASEOUS OXYGEN
—HOR—	HYDRAULIC OIL RETURN
—HOS—	HYDRAULIC OIL SUPPLY
—HP—	HYDROGEN PEROXIDE
—HW—	HOT WATER, POTABLE
—HWR—	HEATING WATER RETURN
—HWS—	HEATING WATER SUPPLY
—LOR—	LUBE OIL RETURN
—LOS—	LUBE OIL SUPPLY
—LOX—	LIQUID OXYGEN
—L,S—	REFRIGERANT PIPING LIQUID/ SUCTION LINE SET
—ML—	MIXED LIQUOR
—N—	NITROGEN GAS
—NG—	NATURAL GAS
—OA—	ODOROUS AIR
—OO—	OVERFLOW OUTFALL
—PD—	PROCESS DRAIN
—PE—	PRIMARY EFFLUENT
—PED—	PRIMARY EFFLUENT DIVERSION
—PI—	PRIMARY INFLUENT
—PO1—	POLYMER SOLUTION (THICKENING)
—PO2—	POLYMER SOLUTION (DEWATERING)
—PO3—	POLYMER, DRY
—PO4—	POLYMER, NEAT LIQUID
—PS—	PRIMARY SLUDGE
—PSM—	PRIMARY SCUM
—RAS—	RETURN ACTIVATED SLUDGE
—RD—	ROOF DRAIN
—RS—	RAW SEWAGE
—SA—	SAMPLE
—SBD—	SCRUBBER BLOWDOWN
—SD—	STORM DRAIN
—SE—	SECONDARY EFFLUENT
—SEP—	SEPTAGE
—SG—	SANITARY SEWER (GRAVITY)
—SH—	SODIUM HYDROXIDE
—SM—	SCUM (COMBINED)
—SPD—	SUMP PUMP DISCHARGE
—SR—	SCRUBBER RECIRCULATION
—SSM—	SECONDARY SCUM
—TWAS—	THICKENED WASTE ACTIVATED SLUDGE
—VAC—	VACUUM
—V—	VENT, PLUMBING
—W1—	WATER, CITY POTABLE
—W2—	WATER, CITY NON POTABLE
—W3—	WATER, PLANT EFFLUENT LOW PRESSURE
—W4—	WATER, PLANT EFFLUENT HIGH PRESSURE
—W5—	WATER, PLANT EFFLUENT BELT WASH
—WAS—	WASTE ACTIVATED SLUDGE
—XSM—	CONCENTRATED SCUM

RECORD DRAWINGS
Revisions Drawn By JG Date 3/25/94

CH2M HILL

DSGN	J. BROWN
DR	C. HOWELL
CHK	J. GAUTHIER
APVD	J. GAUTHIER

NO.	DATE	REVISION	BY	APVD

THESE RECORD DRAWINGS HAVE BEEN PREPARED, IN PART, ON THE BASIS OF INFORMATION COMPILED BY OTHERS. THEY ARE NOT INTENDED TO REPRESENT IN DETAIL THE EXACT LOCATION, TYPE OF COMPONENT NOR MANNER OF CONSTRUCTION. THE ENGINEER WILL NOT BE RESPONSIBLE FOR ANY ERRORS OR OMISSIONS WHICH HAVE BEEN INCORPORATED INTO THE RECORD DRAWINGS.

REUSE OF DOCUMENTS
THIS DOCUMENT, AND THE IDEAS AND DESIGNS INCORPORATED HEREIN, AS AN INSTRUMENT OF PROFESSIONAL SERVICE, IS THE PROPERTY OF CH2M HILL AND IS NOT TO BE USED, IN WHOLE OR IN PART, FOR ANY OTHER PROJECT WITHOUT THE WRITTEN AUTHORIZATION OF CH2M HILL.
©CH2M HILL

BAR IS ONE INCH ON ORIGINAL DRAWING.
0 1"
IF NOT ONE INCH ON THIS SHEET, ADJUST SCALES ACCORDINGLY.

CITY OF BELLINGHAM, WASHINGTON
POST POINT WASTEWATER TREATMENT PLANT UPGRADE

GENERAL DRAWINGS
ABBREVIATIONS AND FLOW STREAM IDENTIFICATION

SHEET
DWG NO. 10-G-5
DATE AUG. 1990
PROJ NO. SEA22462.C1

DATE: 8-24-90 DLC
DRAWN BY: C. HOWELL DESIGNED BY: J. GAUTHIER
DGN NAME: H:/PROJ2/BELLINGH/BL010G-F.DGN

CIVIL LEGEND

NEW		EXISTING
96.5	CONTOUR LINE	15
93.6 OR 93.6	SPOT ELEVATION (OR FINISH GRADE)	x 23.2
	CULVERT	
CB	CATCH BASIN, STORMWATER INLET	
	MANHOLE	
	SURVEY CONTROL POINT	
	STRUCTURE LOCATION POINT	
	DRAINAGE WAY OR DITCH	
	DRAWING MATCH LINE	
	CENTERLINE, BUILDING, ROAD, ETC.	
	FENCE	
	GATE	
	CONCRETE WALK	
	UTILITY OR TELEPHONE POLE	
	UTILITY OR TELEPHONE POLE WITH GUY SUPPORT	
	PROPERTY LINE/RIGHT OF WAY	
PI	PI (POINT OF INTERSECTION)	
R	RADIUS	
Δ	DELTA	
L	LENGTH	
T	TANGENT	
	AREA LIGHT	
	FIRE HYDRANT	
SD	STORM DRAIN	SD

NOTES:

1. EXISTING FEATURES ARE SHOWN SCREENED.

MATERIAL SYMBOLS

- CONCRETE
- CMU PLAN
- CMU SECTION
- STUD WALL PLAN
- GYPSUM WALLBOARD
- RIGID INSULATION
- RIGID INSULATION
- BATT INSULATION
- PLYWOOD
- WOOD, ROUGH CONTINUOUS
- WOOD, ROUGH NON-CONTINUOUS
- WOOD, FINISHED
- STEEL
- ACOUSTICAL TILE
- CARPET

ARCHITECTURAL LEGEND

SYMBOL	LEGEND
ACTIVE / INACTIVE	INDICATES PAIR OF DOORS
3 — ELEVATION NUMBER / DIRECTION SHOWN	INTERIOR WALL ELEVATION
STRUCTURE NO. / 60-16 ROOM NO.	ROOM DESIGNATION
60 / 26A — STRUCTURE NO. / DOOR NO.	DOOR DESIGNATION
530-L1	LOUVER DESIGNATION
W-1	WINDOW DESIGNATION
FEXT-2	(FEXT) FIRE EXTINGUISHER
HINGE SIDE	DOOR, HATCH, OR WINDOW HINGE LOCATION
X-1	SIGN DESIGNATION

DETAIL AND SECTION DESIGNATION

SECTION (LETTER) OR DETAIL (NUMERAL) DESIGNATION

A
1-M-2

DRAWING NUMBER (REPLACED WITH A LINE IF TAKEN AND SHOWN ON THE SAME SHEET)

ON DRAWING WHERE SECTION OR DETAIL IS TAKEN: DRAWING NUMBER WHERE SHOWN

ON DRAWING WHERE SECTION OR DETAIL IS SHOWN: DRAWING NUMBER(S) WHERE TAKEN

STANDARD DETAIL DESIGNATION

12 — STANDARD DETAIL AS INDICATED

HEATING, VENTILATING, AND AIR CONDITIONING SYMBOLS

- WALL REGISTER OR GRILLE (SUPPLY) WSR, WSG
- CEILING DIFFUSER (SUPPLY) CD
- CEILING REGISTER OR GRILLE (RETURN AND EXHAUST) CR, CG
- WALL REGISTER OR GRILLE (RETURN AND EXHAUST) WR, WG
- TURNING VANES
- SOUND ATTENUATED DUCT (SEE SPECIFICATIONS)
- FD — FIRE DAMPER
- MANUAL OPPOSED-BLADE DAMPER
- MANUAL BUTTERFLY DAMPER
- M — MOTORIZED DAMPER
- FLEXIBLE CONNECTION
- R — INCLINED RISE IN DUCT
- D — INCLINED DROP IN DUCT
- SUPPLY DUCT (SECTION)
- INTAKE, RETURN, OR EXHAUST DUCT (SECTION)
- THERMOSTAT
- ECP — ENVIRONMENTAL CONTROL PANEL
- (200) — 200 CFM

DRAIN AND CLEANOUT SYMBOLS

HD	HUB DRAIN	
FD-X	FLOOR DRAIN	(X - NO. IN SPECS)
RD-X	ROOF DRAIN	(X - NO. IN SPECS)
OD-X	OVERFLOW DRAIN	(X - NO. IN SPECS)
CO	CLEANOUT	
FCO	FLOOR CLEANOUT	

RECORD DRAWINGS

Revisions Drawn By JG Date 3/25/94

CH2M HILL

DSGN J. BROWN
DR C. HOWELL
CHK J GAUTHIER
APVD J. GAUTHIER

NO.	DATE	REVISION	BY	APVD

THESE RECORD DRAWINGS HAVE BEEN PREPARED, IN PART, ON THE BASIS OF INFORMATION COMPILED BY OTHERS. THEY ARE NOT INTENDED TO REPRESENT IN DETAIL THE EXACT LOCATION, TYPE OF COMPONENT NOR MANNER OF CONSTRUCTION. THE ENGINEER WILL NOT BE RESPONSIBLE FOR ANY ERRORS OR OMISSIONS WHICH HAVE BEEN INCORPORATED INTO THE RECORD DRAWINGS.

REUSE OF DOCUMENTS
THIS DOCUMENT, AND THE IDEAS AND DESIGNS INCORPORATED HEREIN, AS AN INSTRUMENT OF PROFESSIONAL SERVICE, IS THE PROPERTY OF CH2M HILL AND IS NOT TO BE USED, IN WHOLE OR IN PART, FOR ANY OTHER PROJECT WITHOUT THE WRITTEN AUTHORIZATION OF CH2M HILL.
© CH2M HILL

BAR IS ONE INCH ON ORIGINAL DRAWING.
0 1"
IF NOT ONE INCH ON THIS SHEET, ADJUST SCALES ACCORDINGLY.

CITY OF BELLINGHAM, WASHINGTON
POST POINT WASTEWATER TREATMENT PLANT UPGRADE

GENERAL DRAWINGS
MISCELLANEOUS LEGENDS

SHEET
DWG NO. 10-G-6
DATE AUG. 1990
PROJ NO. SEA22462.C1

DATE: 8-3-90 J.PIERONI A. MCRILL
DRAWN BY: C. HOWELL DESIGNED BY: J. GAUTHIER
DGN NAME: H:/PROJ2/BELLINGH/BL010G-G.DGN

MECHANICAL LEGEND AND NOTES

GENERAL NOTES

1. LAY PIPE TO UNIFORM GRADE BETWEEN INDICATED ELEVATION POINTS.
2. SIZE OF FITTINGS SHOWN ON PLANS SHALL CORRESPOND TO ADJACENT STRAIGHT RUN OF PIPE, UNLESS OTHERWISE INDICATED. TYPE OF JOINT AND FITTING MATERIAL SHALL BE THE SAME AS SHOWN FOR ADJACENT STRAIGHT RUN OF PIPE.
3. STANDARD PIPE HANGERS AND PIPE SUPPORTS ARE NOT SHOWN ON THE DRAWINGS. CONTRACTOR SHALL DESIGN AND INSTALL STANDARD REQUIRED PIPE SUPPORT SYSTEMS IN ACCORDANCE WITH THE SPECIFICATIONS.
4. ALL JOINTS SHALL BE WATERTIGHT. WALL PIPES SHALL BE USED WHEREVER PIPING PASSES FROM A STRUCTURE TO BACKFILL.
5. ALL FLEXIBLE CONNECTORS OR FLANGED COUPLING ADAPTERS SHALL BE PROVIDED WITH THRUST TIES, BLOCKS, OR ANCHORS, UNLESS OTHERWISE NOTED. THRUST PROTECTION SHALL BE ADEQUATE FOR TEST PRESSURES SPECIFIED.
6. SYMBOLS, LEGENDS, AND PIPE USE IDENTIFICATIONS SHOWN SHALL BE FOLLOWED THROUGHOUT THE PLANS, WHEREVER APPLICABLE. NOT ALL OF THE VARIOUS PIPING COMPONENTS ARE NECESSARILY USED IN THE PROJECT.
7. ALL BURIED PIPING SPECIFIED TO BE PRESSURE TESTED, EXCEPT FLANGED, WELDED, OR SCREWED PIPING, SHALL BE PROVIDED WITH CONCRETE THRUST BLOCKS AT ALL DIRECTION CHANGES, UNLESS OTHERWISE NOTED. SEE THRUST DETAILS AND NOTES ON DRAWING NO. 30-C-25.
8. NUMBER AND LOCATION OF UNIONS SHOWN ON PLANS IS ONLY APPROXIMATE. PROVIDE ALL UNIONS NECESSARY TO FACILITATE CONVENIENT REMOVAL OF VALVES AND MECHANICAL EQUIPMENT.
9. WHERE A GROOVED END COUPLING IS SHOWN, IT SHALL BE THE RIGID JOINT TYPE, UNLESS OTHERWISE SPECIFIED. WHERE A FLANGED COUPLING ADAPTER IS SHOWN, A STANDARD FLANGE SHALL BE JOINED TO THE COUPLING ADAPTER.
10. EXISTING PIPING AND EQUIPMENT IS SHOWN LIGHT-LINED AND/OR SCREENED. NEW PIPING AND EQUIPMENT IS SHOWN HEAVY-LINED.
11. DIMENSIONS OR ELEVATIONS SHOWN WITH A SINGLE ASTERISK (*) ARE TO BE COORDINATED WITH THE EQUIPMENT MANUFACTURER.
12. CONTROL PANELS SHOWN WITH A ⊕ SHALL BE FURNISHED BY THE EQUIPMENT MANUFACTURER PER THE SPECIFICATIONS.

PIPING DESIGNATION

EXAMPLE:

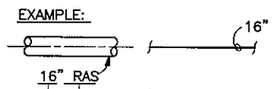

PIPE USE IDENTIFICATION LEGEND
NOMINAL PIPE DIAMETER (INCHES)

PIPE AND FITTING END PATTERNS

B	BELL	PE	PLAIN END
S	SPIGOT	GE	GROOVED END
F	FLANGE	MJ	MECHANICAL JOINT

EXAMPLE:

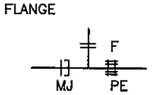

PIPE AND FITTING SYMBOLS

DOUBLE LINE SINGLE LINE

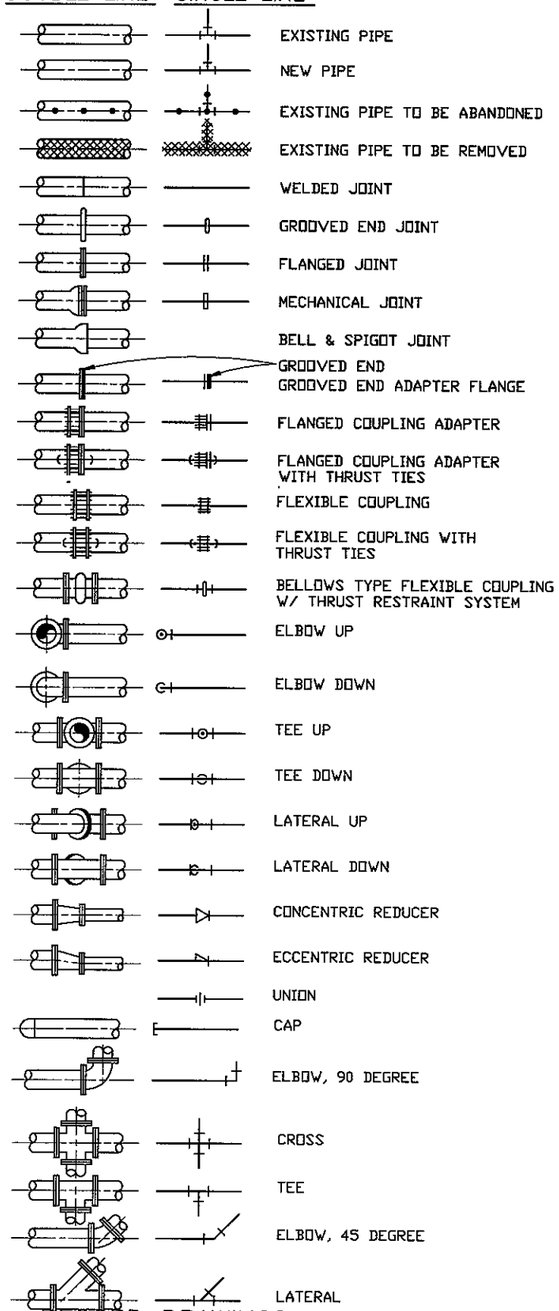

VALVE SYMBOLS

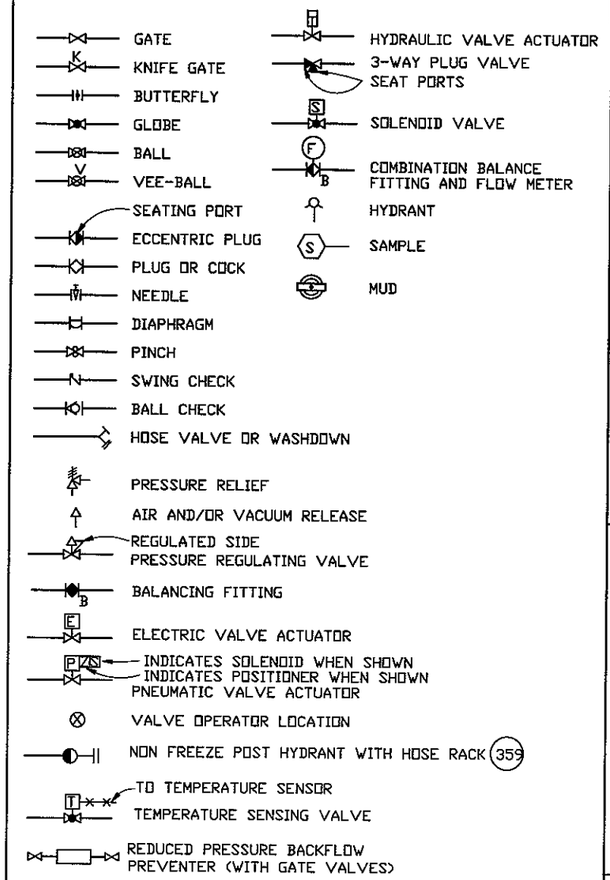

VALVE DESIGNATIONS

CONTROL VALVES

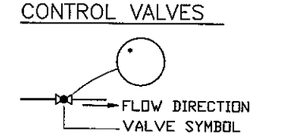

* BUBBLE WITH XV OR XCV DESIGNATION SHOWN ON P&ID WHERE X = PROCESS VARIABLE

MANUAL VALVES AND CHECK VALVES

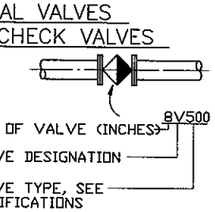

MISCELLANEOUS PIPING SYMBOLS

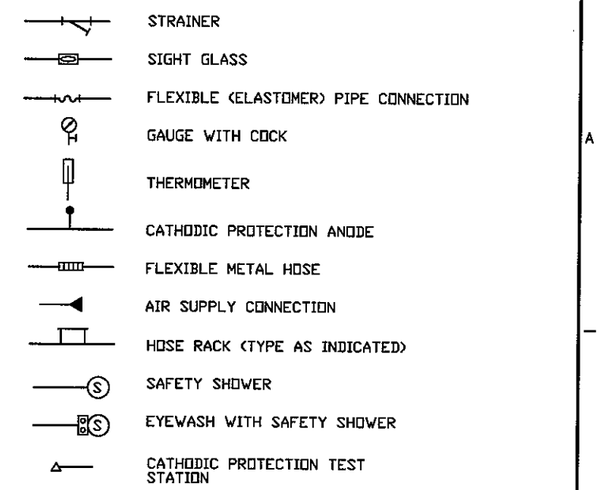

GATE SYMBOLS

EL. VIEW PLAN VIEW

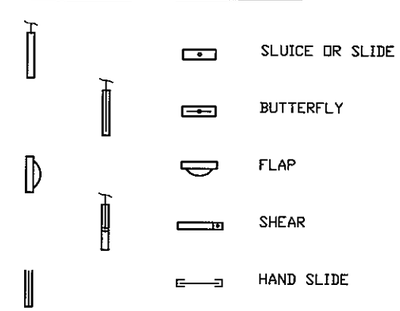

RECORD DRAWINGS

Revisions Drawn By JG Date 3/25/94

CH2M HILL

DSGN	J. BROWN
DR	A. MCRILL
CHK	J. GAUTHIER
APVD	J. GAUTHIER

NO.	DATE	REVISION	BY	APVD

THESE RECORD DRAWINGS HAVE BEEN PREPARED, IN PART, ON THE BASIS OF INFORMATION COMPILED BY OTHERS. THEY ARE NOT INTENDED TO REPRESENT IN DETAIL THE EXACT LOCATION, TYPE OF COMPONENT NOR MANNER OF CONSTRUCTION. THE ENGINEER WILL NOT BE RESPONSIBLE FOR ANY ERRORS OR OMISSIONS WHICH HAVE BEEN INCORPORATED INTO THE RECORD DRAWINGS.

REUSE OF DOCUMENTS
THIS DOCUMENT, AND THE IDEAS AND DESIGNS INCORPORATED HEREIN, AS AN INSTRUMENT OF PROFESSIONAL SERVICE, IS THE PROPERTY OF CH2M HILL AND IS NOT TO BE USED, IN WHOLE OR IN PART, FOR ANY OTHER PROJECT WITHOUT THE WRITTEN AUTHORIZATION OF CH2M HILL.
©CH2M HILL

BAR IS ONE INCH ON ORIGINAL DRAWING.
0 1"
IF NOT ONE INCH ON THIS SHEET, ADJUST SCALES ACCORDINGLY.

CITY OF BELLINGHAM, WASHINGTON
POST POINT WASTEWATER TREATMENT PLANT UPGRADE

GENERAL DRAWINGS
MECHANICAL LEGEND

SHEET
DWG NO. 10-G-7
DATE AUG. 1990
PROJ NO. SEA22462.C1

DATE: 8-27-90
DRAWN BY: JIM WODRICH DESIGNED BY:JOE GAUTHIER
DGN NAME: H:/PROJ2/BELLINGH/BL010G-I.DGN

DESIGN CRITERIA SUMMARY

SCREENS

MECHANICALLY CLEANED BAR SCREENS	
NUMBER OF UNITS	3
WIDTH, EACH	6.0 FT
CAPACITY, EACH	30 MGD
CLEAR OPENING SCREEN WIDTH	5/8 IN
MANUALLY CLEANED BAR SCREENS	
NUMBER OF UNITS	2
WIDTH	8 FT
CAPACITY	20.0 MGD
CLEAR OPENING SCREEN WIDTH	1 IN
FLOW MEASUREMENT	
TYPE	PARSHALL FLUME
NUMBER	5
SIZE	2 @ 3'-0", 3 @ 2'-0"
CAPACITY-NORMAL FLOW MODE, EACH	1.0 MGD TO 21.4 MGD (MAX)
BYPASS, EACH	1.5 MGD TO 32.6 MGD (MAX)
SCREENINGS CONVEYOR	
TYPE	SHAFTLESS SCREW
NUMBER OF UNITS	1
SCREW DIAMETER	12 IN
SCREENINGS PRESS	
TYPE	HYDRAULIC RAM
NUMBER	2
SIZE	10 IN.
CAPACITY, EACH	27.5 CU FT/HR

SEPTAGE RECEIVING

SEPTAGE RECEIVING TANKS	
NUMBER OF UNITS	2
CAPACITY, EACH	23,600 GAL
SEPTAGE PUMPS	
NUMBER OF UNITS	2
CAPACITY, EACH	100 GPM @ 12 FT TDH
TYPE	RECESSED IMPELLER
SEPTAGE GRINDER	
NUMBER OF UNITS	2
TYPE	IN-LINE
SIZE	6 IN

HEADWORKS

GRIT CYCLONES	
NUMBER	2
TYPE	HYDRAULIC SEPARATOR
SIZE	10 IN
CAPACITY	220 GPM
INLET PRESSURE	5 PSI
UNDERFLOW	15 GPM
VORTEX FINDER	4 IN
GRIT CLASSIFIERS	
NUMBER OF UNITS	2
TYPE	FULL FLARE INCLINE SCREW
SIZE	12 IN

CHANNEL AERATION

AERATION RATE	4 CFM/LF
BLOWERS	
NUMBER OF UNITS	2
TYPE	POSITIVE DISPLACEMENT
CAPACITY, EACH	510 SCFM @ 4.5 PSIG
CONTROL	CONSTANT SPEED

PRIMARY CLARIFICATION

CLARIFIERS (EXISTING)	
NUMBER OF UNITS	2
DIAMETER	120 FT
SIDEWATER DEPTH (AVERAGE)	10 FT
OVERFLOW RATE (DESIGN YEAR)(TWO BASINS IN SERVICE)	
AVERAGE ANNUAL FLOW	710 GAL/SF/DAY
MAXIMUM MONTH WET WEATHER FLOW	880 GAL/SQ FT/DAY
PEAK FLOW	2,650 GAL/SQ FT/DAY
DETENTION TIME (TWO BASINS IN SERVICE)	
AVERAGE ANNUAL FLOW	2.5 HOURS
MAXIMUM MONTH WET WEATHER FLOW	1.7 HOURS
PERFORMANCE (ESTIMATED)	
BOD REMOVAL (AVERAGE MONTH)	30 PERCENT
TSS REMOVAL	60 PERCENT
PRIMARY SLUDGE PUMPS	
NUMBER OF UNITS	2
CAPACITY (EACH)	10-100 GPM
TYPE	AIR-OPERATED DIAPHRAGM
PRIMARY SCUM PUMP	
NUMBER OF UNITS	1
CAPACITY (EACH)	10-100 GPM
TYPE	AIR-OPERATED DIAPHRAGM

PRIMARY EFFLUENT PUMPING

NUMBER OF UNITS	5
CAPACITY, EACH	11,500 GPM
TYPE	NON-CLOG CENTRIFUGAL
CONTROL	VARIABLE SPEED

SECONDARY PROCESS

OXYGEN ACTIVATED SLUDGE BASINS	
NUMBER OF BASINS	2
STAGES PER BASINS	3
VOLUME EACH BASINS	841,600 GAL
SIDEWATER DEPTH	15 FT
DETENTION TIME (DESIGN YEAR, NEGLECTING RAS)	
AVERAGE DRY WEATHER FLOW (2 BASINS)	3.2 HOURS
MAXIMUM MONTH WET WEATHER FLOW (2 BASINS)	2.0 HOURS
PEAK FLOW (2 BASINS)	1.1 HOURS
MLVSS	
AVERAGE MONTH	1,550 MG/L
MAXIMUM MONTH	1,940 MG/L
F/M RATIO	
AVERAGE MONTH BOD	0.61 LB BOD_5 /LB MLVSS - DAY
MAXIMUM WEEK BOD	0.77 LB BOD_5 /LB MLVSS - DAY
AERATION EQUIPMENT	
OXYGEN SUPPLY RATE (DESIGN YEAR W/ 90% UTILIZATION)	
AVERAGE ANNUAL	7.3 TONS/DAY
MAXIMUM MONTH	9.7 TONS/DAY
MAXIMUM WEEK (LIQUID OXYGEN REQUIRED)	10.4 TONS/DAY
OXYGEN GENERATION EQUIPMENT	
TYPE	PRESSURE SWING ADSORPTION
NUMBER OF UNITS	1
CAPACITY	10.0 TONS/DAY
LIQUID OXYGEN STORAGE	6,000 GAL
MIXING EQUIPMENT	
TYPE	SURFACE/SUBMERGED TURBINE
NUMBER OF UNITS (TOTAL)	6
HP, EACH	IST STAGE 40, 2ND AND 3RD STAGE 30
SECONDARY CLARIFIERS	
NUMBER OF UNITS	3
DIAMETER	120 FT
SIDEWATER DEPTH	15 FT
OVERFLOW RATE (DESIGN YEAR) (3 UNITS)	
AVERAGE DRY WEATHER FLOW	408 GAL/SQ FT/DAY
MAXIMUM MONTH WET WEATHER FLOW	590 GAL/SQ FT/DAY
PEAK FLOW	1,091 GAL/SQFT/DAY

SECONDARY PROCESS (continued)

SOLIDS LOADING RATE (DESIGN YEAR) (3 UNITS)	
AVERAGE DRY WEATHER	13.4 LBS/SQ FT/DAY
MAXIMUM WET WEATHER	19.4 LBS/SQ FT/DAY
PEAK	35.8 LBS/SQFT/DAY
WAS PUMPS	
NUMBER OF UNITS	2
CAPACITY	200-400 GPM
TYPE	NON-CLOG CENTRIFUGAL
CONTROL	VARIABLE SPEED
SCUM PUMP	
NUMBER OF UNITS	2
CAPACITY	100 GPM & 10-100 GPM
TYPE	RECESSED IMPELLER & AIR-OPERATED DIAPHRAGM
RAS PUMPS	
NUMBER OF UNITS	4
CAPACITY, EACH (MAXIMUM)	1750-3475 GPM
TYPE	NON-CLOG CENTRIFUGAL
CONTROL	VARIABLE SPEED

CHLORINATION

CHLORINE CONTACT BASINS (EXISTING)	
NUMBER OF UNITS	2
VOLUME, EACH (PEAK FLOW)	50,140 CU FT
SIDEWATER DEPTH (AVERAGE DRY WEATHER FLOW)	10.9 FT
CHLORINE CONTACT CHANNELS (NEW)	
NUMBER OF UNITS	2
VOLUME, EACH (PEAK FLOW)	5,995 CU FT
SIDEWATER DEPTH (AVERAGE DRY WEATHER FLOW)	10.9 FT
TOTAL DETENTION TIME (DESIGN YEAR, TOTAL)	
AVERAGE DRY WEATHER FLOW	1.5 HOURS
MAXIMUM MONTH WET WEATHER FLOW	1.0 HOURS
PEAK	20 MINUTES
FLOW PATH L/W RATIO	13
CHLORINE DOSAGE (ESTIMATED)	
POST CHLORINATION	
SECONDARY EFFLUENT	4.0 MG/L
PRIMARY EFFLUENT (EXCESS BEYOND SECONDARY CAPACITY)	9 MG/L
COMBINED PRIMARY AND SECONDARY EFFLUENT (PEAK FLOW)	6 MG/L
INTERMEDIATE CHLORINATION (INTERMITTENT USAGE)	
SECONDARY CLARIFIER WEIRS	0.7 MG/L
RETURN ACTIVATED SLUDGE	4 MG/L
W3 AND W4 PUMPS (ADDITIONAL TO EFFLUENT DOSAGE)	4 MG/L
PRE-CHLORINATION (INTERMITTENT USAGE)	
MAXIMUM	9 MG/L
CHLORINE USAGE	
POST CHLORINATION	
AVERAGE DRY WEATHER FLOW	550 LBS/DAY
MAXIMUM MONTH WET WEATHER FLOW	680 LBS/DAY
PEAK	2,870 LBS/DAY
INTERMEDIATE CHLORINATION (INTERMITTENT USAGE)	
SECONDARY CLARIFIER WEIRS	230 LBS/DAY MAX
RETURN ACTIVATED SLUDGE	460 LBS/DAY MAX
W3 AND W4 PUMPS	88 LBS/DAY MAX
PRE-CHLORINATION	
AVERAGE DRY WEATHER FLOW	1,000 LBS/DAY
CHLORINE MIXER (NEW)	
TYPE	TURBINE
NUMBER OF UNITS	1
HORSEPOWER	10 HP
CHLORINATORS	
NUMBER OF AUTOMATIC UNITS (NEW)	2
CAPACITY (EACH)	1 @ 2,000 LBS/DAY, 1 @ 1,000 LBS/DAY
NUMBER OF MANUAL UNITS (NEW)	3
CAPACITY (EACH)	1 @ 1,000 LBS/DAY, 2 @ 500 LBS/DAY

RECORD DRAWINGS

Revisions Drawn By JG Date 3/25/94

CH2M HILL

DSGN	JV WODRICH
DR	JV WODRICH
CHK	J. GAUTHIER
APVD	J. GAUTHIER

NO.	DATE	REVISION	BY	APVD

THESE RECORD DRAWINGS HAVE BEEN PREPARED, IN PART, ON THE BASIS OF INFORMATION COMPILED BY OTHERS. THEY ARE NOT INTENDED TO REPRESENT IN DETAIL THE EXACT LOCATION, TYPE OF COMPONENT NOR MANNER OF CONSTRUCTION. THE ENGINEER WILL NOT BE RESPONSIBLE FOR ANY ERRORS OR OMISSIONS WHICH HAVE BEEN INCORPORATED INTO THE RECORD DRAWINGS.

REUSE OF DOCUMENTS
THIS DOCUMENT, AND THE IDEAS AND DESIGNS INCORPORATED HEREIN, AS AN INSTRUMENT OF PROFESSIONAL SERVICE, IS THE PROPERTY OF CH2M HILL AND IS NOT TO BE USED, IN WHOLE OR IN PART, FOR ANY OTHER PROJECT WITHOUT THE WRITTEN AUTHORIZATION OF CH2M HILL.
©CH2M HILL

BAR IS ONE INCH ON ORIGINAL DRAWING.
0 1"
IF NOT ONE INCH ON THIS SHEET, ADJUST SCALES ACCORDINGLY.

CITY OF BELLINGHAM, WASHINGTON
POST POINT WASTEWATER TREATMENT PLANT UPGRADE

GENERAL DRAWINGS
DESIGN CRITERA
SHEET NO. 1

DWG NO. 10-G-8
DATE AUG. 1990
PROJ NO. SEA22462.C1

DRAWN BY: JIM WODRICH DESIGNED BY: JOE GAUTHIER
DGN NAME: H:/PROJ2/BELLINGH/BL010G-J.DGN

CHLORINATION (CONTINUED)

CHLORINE INJECTORS (NEW)	
NUMBER OF FIXED UNITS	2
CAPACITY (EACH)	2 @ 600 LBS/DAY
NUMBER OF ADJUSTABLE UNITS	3
CAPACITY (EACH)	1 @ 2,000 LBS/DAY, 2 @ 1,000 LBS/DAY
CHLORINE CYLINDER STORAGE	
NUMBER OF CYLINDERS	14 (IN USE), 14 (RESERVE)

EMERGENCY CHLORINE SCRUBBER

VENTILATION RATE	6,300 CFM
TYPE	PACKED TOWER, WET SCRUBBER
SPILL CAPACITY	2,300 LB CHLORINE

SLUDGE THICKENING (WAS)

SLUDGE THICKENERS	
TYPE	GRAVITY BELT
NUMBER OF UNITS	2
SIZE (NOMINAL)	2-METER
SLUDE FEED CONCENTRATION	0.75 PERCENT
SOLIDS LOADING (MAX WEEK)	1,480 LBS DRY SOLIDS/HR
HYDRAULIC LOADING (MAX)	500 GPM
POLYMER USAGE	7 LBS/DRY TON
THICKENED WAS SLUDGE PUMPS	
NUMBER OF UNITS	4
TYPE	PROGRESSIVE CAVITY, VARIABLE SPEED
CAPACITY (EACH)	100 GPM
PUMP SOLIDS CONCENTRATION	4 TO 8 PERCENT

SLUDGE BLENDING - PRIMARY SLUDGE FEED PUMP

NUMBER OF UNITS	1
TYPE	PROGRESSIVE CAVITY, VARIABLE SPEED
CAPACITY	100 GPM
PUMPED SOLIDS CONCENTRATION	2 TO 8 PERCENT

SLUDGE BLENDING

TYPE	MECHANICAL MIXER IN TANK
NUMBER OF UNITS	1
MIXER HORSEPOWER	2 HP
BLENDING TANK (EXISTING)	
VOLUME	1500 GALLONS
DIAMETER (VERTICAL STEEL TYPE)	4.75 FT

SLUDGE DEWATERING

TYPE	CENTRIFUGE
NUMBER OF UNITS	3
FEED SLUDGE CONCENTRATION	2 TO 6 PERCENT
SOLIDS LOADING (MAX)	2,000 LBS/HR
HYDRAULIC LOADING (MAX)	100 GPM/UNIT
POLYMER USAGE	15 LBS/DRY TON
DISCHARGE SOLIDS CONCENTRATION	28 PERCENT
CENTRIFUGE FEED PUMPS	
NUMBER OF UNITS	3
TYPE	PROGRESSIVE CAVITY, VARIABLE SPEED
CAPACITY EACH	120 GPM
PUMPED SOLIDS CONCENTRATION	2 TO 8 PERCENT

INCINERATOR FEED PUMPS

NUMBER OF UNITS	2
TYPE	PISTON WITH HYDRAULICALLY CONTROLLED VARIABLE SPEED
CAPACITY (EACH)	7 TO 26 GPM
PUMPED SOLIDS CONCENTRATION	20 TO 30 PERCENT

SLUDGE INCINERATION

TYPE	MULTIPLE HEARTH
NUMBER OF UNITS	1 EXISTING, 1 NEW
NO. OF HEARTHS (EXISTING)	6 ACTIVE + AFTERBURNER
NO. OF HEARTHS (NEW)	7 ACTIVE + AFTERBURNER
HEARTH DIAMETER	14'-3" (OUTSIDE)
DESIGN SLUDGE CAPACITY (EXISTING)	1050 DRY LB/HR @ 70% VOL SOLIDS
DESIGN SLUDGE CAPACITY (NEW)	1350 DRY LB/HR @ 25% DRY SOL., 78% VOL SOLIDS
FEED CAKE SOLIDS CONTENT	20 - 30% DRY SOLIDS
FEED CAKE VOLATILE SOLIDS CONTENT	72 - 80% DRY SOLIDS
FEED CAKE HEAT CONTENT	9,000 - 11,000 BTU/LB VOL SOLIDS
SUPPLEMENTARY FUEL	NATURAL GAS
STACK HEIGHT (ABOVE GROUND)	65 FEET
MAXIMUM COMBUSTIBLE SOLIDS IN ASH	5% BY WEIGHT

DEWATERING PUMPS

PRIMARY CLARIFIERS	
NUMBER	1
TYPE	CENTRIFUGAL
CAPACITY	2,200 GPM
OXYGEN ACTIVATED SLUDGE BASINS	
NUMBER	1
TYPE	CENTRIFUGAL
CAPACITY	2,200 GPM
CHLORINE CONTACT BASINS	
NUMBER	1
TYPE	CENTRIFUGAL
CAPACITY	2,200 GPM

PRELIMINARY TREATMENT ODOR CONTROL (HEADWORKS AND SCREENINGS BUILDING)

VENTILATION RATE	44,000 CFM
TYPE	SINGLE STAGE WET SCRUBBER
DESIGN REMOVAL PERCENT H2S	98 PERCENT
PACKED TOWER	
NUMBER OF UNITS	2
DIAMETER	10 FT
HEIGHT OF PACKING	10 FT
GAS/LIQUID RATIO, MAXIMUM	400

SOLIDS HANDLING ODOR CONTROL (SOLIDS HANDLING FACILITY)

VENTILATION RATE	7,800 CFM
TYPE	TWO STAGE, WET SCRUBBER
AMMONIA SCRUBBING	
INLET CONCENTRATION, NH3	500 PPM
DESIGN REMOVAL PERCENT	95 PERCENT
PACKED TOWERS	
NUMBER OF UNITS	1
DIAMETER	6 FT
HEIGHT OF PACKING	11 FT
GAS/LIQUID, MAXIMUM	550
HYDROGEN SULFIDE SCRUBBING	
INLET CONCENTRATION, H2S	25 PPM
DESIGN REMOVAL PERCENT, H2S	98 PERCENT
PACKED TOWERS	
NUMBER OF UNITS	1
DIAMETER	6 FT
HEIGHT OF PACKING	11 FT
GAS/LIQUID, MAXIMUM	400

ODOR CONTROL SYSTEM CHEMICAL STORAGE

HYDROGEN PEROXIDE STORAGE (50%) TANK	
CAPACITY (40 DAY STORAGE)	5000 GAL
DIAMETER (HORIZONTAL ALUMINUM CONSTRUCTION)	9 FT
SODIUM HYDROXIDE (20%) TANK	
CAPACITY (19 DAY STORAGE)	3,000 GAL
DIAMETER (FRP VERTICAL TYPE)	8 FT
SULFURIC ACID (93%) TANK	
CAPACITY (23 DAY STORAGE)	1,000 GAL
DIAMETER (PVDF-LINED FRP VERTICAL TANK)	5 FT

ODOR CONTROL SYSTEM PUMPS

PRELIMINARY AIR SCRUBBER PUMPS	
NUMBER	3
CAPACITY EACH	500 GPM
TYPE	END SUCTION CENTRIFUGAL
SOLIDS AIR SCRUBBER PUMPS	
NUMBER	4
CAPACITY (EACH)	200 GPM
TYPE	END SUCTION CENTRIFUGAL
HYDROGEN PEROXIDE (50%) FEED PUMPS	
NUMBER	3
CAPACITY EACH	0.4 TO 4.4 GPH
TYPE	HYDRAULICALLY OPERATED DIAPHRAGM
SODIUM HYDROXIDE (20%) FEED PUMPS	
NUMBER	3
CAPACITY EACH	1 TO 8 GPH
TYPE	HYDRAULICALLY OPERATED DIAPHRAGM
SULFURIC ACID (93%) FEED PUMPS	
NUMBER	2
CAPACITY EACH	0.2 TO 2 GPH
TYPE	HYDRAULICALLY OPERATED DIAPHRAGM

NON POTABLE WATER

W2 WATER SYSTEM	
NUMBER OF HYDROPNEUMATIC TANKS	3
STORAGE CAPACITY PER TANK, NOMINAL	500 GAL
SYSTEM PRESSURE	100 TO 120 PSIG
NUMBER OF PUMPS	4 @ 130 GPM
SYSTEM CAPACITY	375 GPM
W3 WATER SYSTEM	
SYSTEM PRESSURE	80-100 PSIG
NUMBER OF PUMPS	2
PUMP CAPACITY, EACH	1200 GPM
TYPE	IN-LINE
W4 WATER SYSTEM	
SYSTEM PRESSURE	100-120 PSIG
NUMBER OF PUMPS	2
PUMP CAPACITY, EACH	200 GPM
TYPE	IN-LINE

IN-PLANT PUMP STATION

NUMBER OF PUMPS	3
CAPACITY, EACH	900 GPM
TYPE	SUBMERSIBLE
CONTROL	VARIABLE SPEED

RAW SEWAGE PUMP STATION

NUMBER OF PUMPS	3
CAPACITY, EACH	750 GPM
TYPE	SUBMERSIBLE
CONTROL	VARIABLE SPEED

PLANT AIR

COMPRESSED AIR SYSTEM	
NUMBER OF UNITS	3
CAPACITY, EACH	360 SCFM @ 100 PSIG
TYPE	ROTARY SCREW

EMERGENCY ENGINE GENERATOR

NUMBER OF UNITS	2 (PARALLEL OPERATION)
PEAK OUTPUT CAPACITY	1,250 KW, 1,800 RPM
MAX. BMEP	257 PSI
COOLING SYSTEM	AIR-COOLED RADIATOR
FUEL SYSTEM/TANK CAPACITY	DIESEL/4,000 GAL
FUEL USAGE RATE PER UNIT (@FULL LOAD)	95 GPH

JOSEPH A. GAUTHIER STATE OF WASHINGTON REGISTERED PROFESSIONAL ENGINEER

CH2M HILL

DSGN	JV WODRICH					
DR	JV WODRICH					
CHK	J. GAUTHIER					
APVD	J. GAUTHIER	NO.	DATE	REVISION	BY	APVD

REUSE OF DOCUMENTS
THIS DOCUMENT, AND THE IDEAS AND DESIGNS INCORPORATED HEREIN, AS AN INSTRUMENT OF PROFESSIONAL SERVICE, IS THE PROPERTY OF CH2M HILL AND IS NOT TO BE USED, IN WHOLE OR IN PART, FOR ANY OTHER PROJECT WITHOUT THE WRITTEN AUTHORIZATION OF CH2M HILL.
©CH2M HILL

BAR IS ONE INCH ON ORIGINAL DRAWING.
0 1"
IF NOT ONE INCH ON THIS SHEET, ADJUST SCALES ACCORDINGLY.

CITY OF BELLINGHAM, WASHINGTON
POST POINT WASTEWATER TREATMENT PLANT UPGRADE

GENERAL DRAWINGS
DESIGN CRITERIA
SHEET NO.2

DWG NO. 10-G-9
DATE AUG. 1990
PROJ. NO. SEA22462.C1

DATE: 9/21/90
DRAWN BY: C. HOWELL DESIGNED BY: J. VALDES
DGN NAME: H:/PROJ2/BELLINGH/BL010G-K.DGN

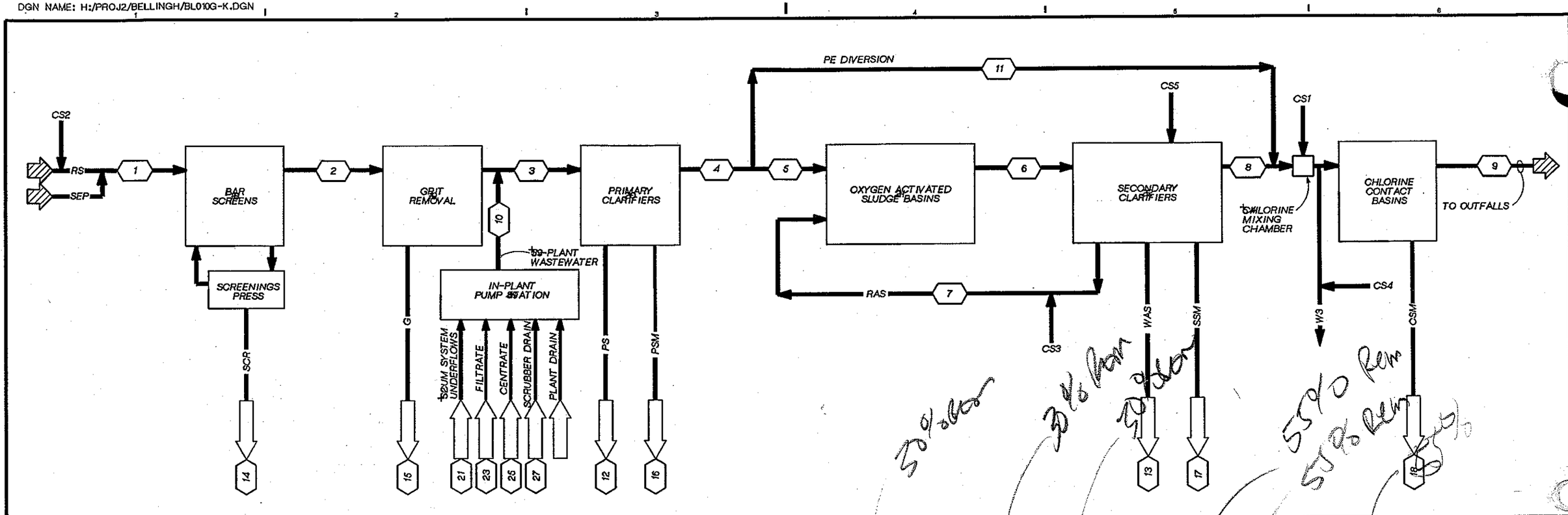

LIQUID BALANCE																						
STREAM IDENTIFICATION	FLOW RATE (MGD)										BOD (LBS/DAY)						TSS (LBS/DAY)					
	MINIMUM (INITIAL)	MINIMUM (DESIGN)	AVERAGE ANNUAL (INITIAL)	AVERAGE ANNUAL (DESIGN)	MAX[1] MONTH (INITIAL)	MAX[1] MONTH (DESIGN)	MAX 7 DAYS (INITIAL)	MAX 7 DAYS (DESIGN)	PEAK HOUR (INITIAL)	PEAK HOUR (DESIGN)	AVERAGE ANNUAL (INITIAL)	AVERAGE ANNUAL (DESIGN)	MAX MONTH (INITIAL)	MAX[2] MONTH (DESIGN)	MAX 7 DAYS (INITIAL)	MAX 7 DAYS (DESIGN)	AVERAGE ANNUAL (INITIAL)	AVERAGE ANNUAL (DESIGN)	MAX[2] MONTH (INITIAL)	MAX[2] MONTH (DESIGN)	MAX 7 DAYS (INITIAL)	MAX 7 DAYS (DESIGN)
1. RAW SEWAGE	-	-	12.1	16.1	15.9	20.0	24.8	31.2	50.7	60.0	13,700	19,800	17,640	25,530	21,810	31,560	13,780	19,770	18,880	27,100	26,780	38,430
2. GRIT BASIN INFLUENT	-	-	12.1	16.1	15.9	20.0	24.8	31.2	50.7	60.0	13,700	19,800	17,640	25,530	21,810	31,560	13,780	19,770	18,880	27,100	26,780	38,430
3. PRIMARY INFLUENT	-	-	13.8	17.8	17.6	21.7	27.5	33.9	53.4	62.7	14,530	21,020	18,730	27,140	23,150	33,560	16,010	23,020	21,810	31,410	30,440	43,850
4. PRIMARY EFFLUENT	-	-	13.8	17.8	17.6	21.7	27.5	33.9	53.4	62.7	10,170	14,710	13,110	19,000	16,210	23,490	7,200	10,360	9,810	14,140	13,700	19,730
5. AERATION BASIN INFLUENT (EXCL RAS)	-	-	13.8	17.8	17.6	21.7	27.5	33.9	37.0	37.0	10,170	14,710	13,110	19,000	16,210	23,490	7,200	10,360	9,810	14,140	13,700	19,730
6. AERATION BASIN EFFLUENT (INCL RAS)	-	-	20.5	26.7	26.3	32.7	41.1	51.1	57.0	57.0	-	-	-	-	-	-	-	-	-	-	-	-
7. RETURN ACTIVATED SLUDGE	-	-	6.7	8.9	8.7	11.0	13.6	17.2	20.0	20.0	-	-	-	-	-	-	-	-	-	-	-	-
8. SECONDARY EFFLUENT	-	-	13.8	17.8	17.6	21.7	27.5	33.9	37.0	37.0	-	-	-	-	-	-	-	-	-	-	-	-
9. PLANT EFFLUENT	-	-	12.1	16.1	15.9	20.0	24.8	31.2	50.7	60.0	3,030	4,030	3,960	5,000	6,200	7,810	3,030	4,030	3,960	5,000	6,200	7,810
10. IN-PLANT WASTEWATER	-	-	1.7	1.7	1.7	1.7	2.7	2.7	2.7	2.7	830	1,220	1,090	1,610	1,340	2,000	2,230	3,250	2,930	4,310	3,660	5,420
11. PE DIVERSION	0	0	0	0	0	0	0	0	16.4	25.7	0	0	0	0	0	0	0	0	0	0	0	0

NOTES:
1. WET WEATHER MAXIMUM MONTH
2. DRY WEATHER MAXIMUM MONTH

JOSEPH A. GAUTHIER, STATE OF WASHINGTON, REGISTERED PROFESSIONAL ENGINEER

CH2M HILL

DSGN	J. ARCHER				
DR	K.L. MCCOY				
CHK	J GAUTHIER				
APVD	J GAUTHIER	NO.	DATE	REVISION	BY	APVD

REUSE OF DOCUMENTS
THIS DOCUMENT, AND THE IDEAS AND DESIGNS INCORPORATED HEREIN, AS AN INSTRUMENT OF PROFESSIONAL SERVICE, IS THE PROPERTY OF CH2M HILL AND IS NOT TO BE USED, IN WHOLE OR IN PART, FOR ANY OTHER PROJECT WITHOUT THE WRITTEN AUTHORIZATION OF CH2M HILL.
©CH2M HILL

VERIFY SCALE
BAR IS ONE INCH ON ORIGINAL DRAWING.
0 1"
IF NOT ONE INCH ON THIS SHEET, ADJUST SCALES ACCORDINGLY.

CITY OF BELLINGHAM, WASHINGTON
POST POINT WASTEWATER TREATMENT PLANT UPGRADE

GENERAL DRAWINGS
LIQUID PROCESS FLOW DIAGRAM

DWG NO. 10-G-10
DATE AUG. 1990
PROJ NO. SEA22462.C1

DRAWN: C.S.HOWELL DESIGN BY: J. VALDES
DGN: H:/PROJ2/BELLINGH/BL010G-L.DGN

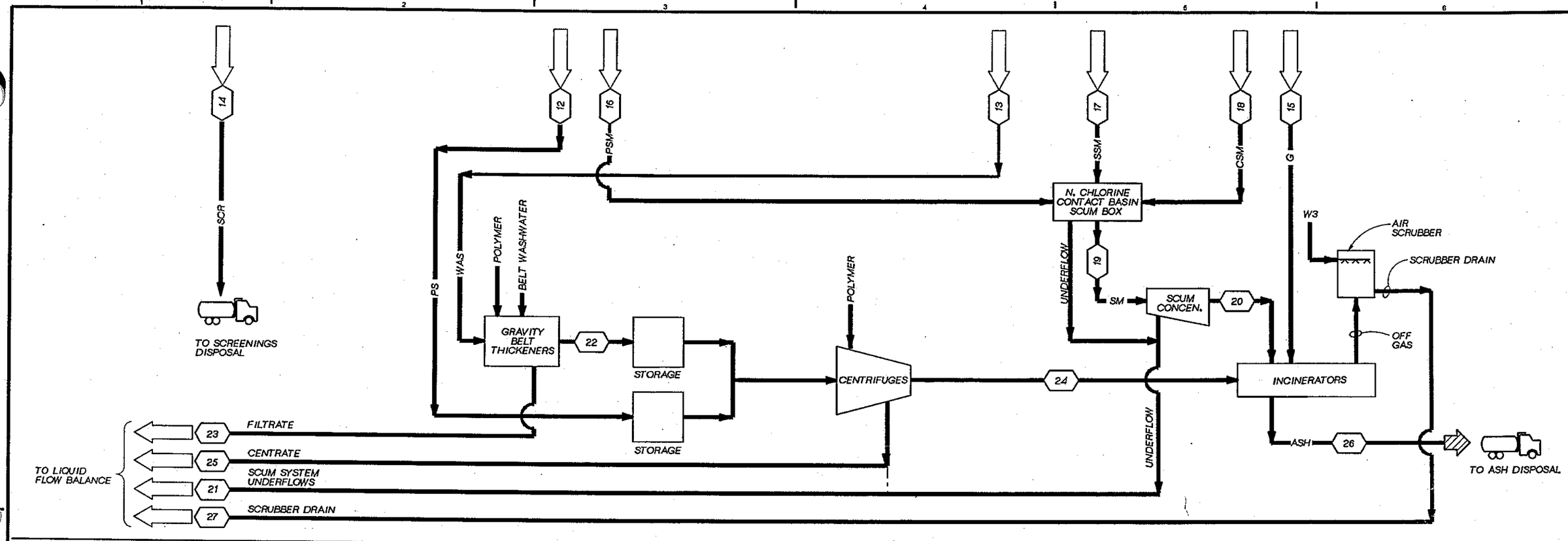

SOLIDS BALANCE

STREAM IDENTIFICATION	DRY SOLIDS (PERCENT)		FLOW RATE (GPM)						TSS (LBS/DAY)					
	AVERAGE	RANGE	MINIMUM (INITIAL)	AVERAGE ANNUAL (INITIAL)	AVERAGE ANNUAL (DESIGN)	MAX MONTH (INITIAL)	MAX MONTH (DESIGN)	PEAK HOUR (DESIGN)	AVERAGE ANNUAL (INITIAL)	AVERAGE ANNUAL (DESIGN)	MAX MONTH (INITIAL)	MAX MONTH (DESIGN)	MAX 7 DAYS (INITIAL)	MAX 7 DAYS (DESIGN)
12. PRIMARY SLUDGE	5	4-8	-	15	21	20	29	40	8,800	12,660	11,990	17,280	16,740	24,120
13. WASTE ACTIVATED SLUDGE [2]	1	0.7-1.5	-	600	600	600	600	600	6,520	9,620	8,370	12,530	9,660	14,630
14. SCREENINGS (PRESSED) [1]	-	-	-	10	13	13	16	-	-	-	-	-	-	-
15. GRIT [1]	30	-	-	12	19	18	25	-	-	-	-	-	-	-
16. PRIMARY SCUM	0.05	0.01-0.5	1	1	1	1	1	4	-	-	-	-	-	-
17. SECONDARY SCUM	0.05	0.01-0.5	1	1	1	1	1	2	-	-	-	-	-	-
18. CHLORINE SCUM	0.05	0.01-0.5	0	0	1	1	1	2	-	-	-	-	-	-
19. SCUM (COMBINED)	0.3	-	2	2	3	3	3	8	-	-	-	-	-	-
20. CONCENTRATED SCUM	1	-	1	1	1	1	2	4	-	-	-	-	-	-
21. SCUM SYSTEM UNDERFLOWS	-	-	3	3	4	4	5	15	-	-	-	-	-	-
22. THICKENED WASTE ACTIVATED SLUDGE [3]	5	4-8	-	-	-	-	-	-	5,870	8,660	7,530	11,280	8,690	13,170
23. THICKENER FILTRATE/WASHWATER [2]	-	-	565	565	565	565	565	565	650	960	840	1,250	970	1,460
24. CENTRIFUGE CAKE	25	20-30	-	-	-	-	-	-	13,940	20,260	18,550	27,130	24,160	35,420
25. CENTRIFUGE CENTRATE [3]	-	-	120	120	120	120	120	270	730	1,070	980	1,430	1,270	1,860
26. ASH DISPOSAL	-	-	-	-	-	-	-	-	3,690	5,360	4,920	7,190	6,430	9,420
27. SCRUBBER DRAIN [4]	-	-	450	450	450	450	450	900	470	680	630	910	810	1,190

NOTES:

1. SCREENINGS AND GRIT QUANTITIES SHOWN IN CUBIC FEET.
2. FLOW BASED ON HYDRAULIC LOADING RATE FOR TWO BELT THICKENERS, EXCEPT MINIMUM WHICH IS BASED ON ONE THICKENER.
3. FLOW BASED ON HYDRAULIC LOADING RATE OF ONE CENTRIFUGE, EXCEPT PEAK HOUR FLOW WHICH IS BASED ON TWO CENTRIFUGES.
4. FLOW BASED ON ONE INCINERATOR OPERATING EXCEPT PEAK HOUR WHICH IS BASED ON TWO INCINERATORS.

JOSEPH A. GAUTHIER STATE OF WASHINGTON REGISTERED PROFESSIONAL ENGINEER

CH2M HILL

DSGN J. ARCHER
DR R.K. LATTA
CHK J GAUTHIER
APVD J GAUTHIER

NO.	DATE	REVISION	BY	APVD

REUSE OF DOCUMENTS
THIS DOCUMENT, AND THE IDEAS AND DESIGNS INCORPORATED HEREIN, AS AN INSTRUMENT OF PROFESSIONAL SERVICE, IS THE PROPERTY OF CH2M HILL AND IS NOT TO BE USED, IN WHOLE OR IN PART, FOR ANY OTHER PROJECT WITHOUT THE WRITTEN AUTHORIZATION OF CH2M HILL.
©CH2M HILL

VERIFY SCALE
BAR IS ONE INCH ON ORIGINAL DRAWING.
0 1"
IF NOT ONE INCH ON THIS SHEET, ADJUST SCALES ACCORDINGLY.

CITY OF BELLINGHAM, WASHINGTON
POST POINT WASTEWATER TREATMENT PLANT UPGRADE

GENERAL DRAWINGS
SOLIDS PROCESS FLOW DIAGRAM

DWG NO. 10-G-11
DATE AUG. 1990
PROJ NO. SEA22462.C1

DATE: 8-8-90
DRAWN: MARVIN MOORE DESIGNED BY MARVIN MOORE
DGN NAME: H:/PROJ2/BELLINGH/BL010G-M.DGN

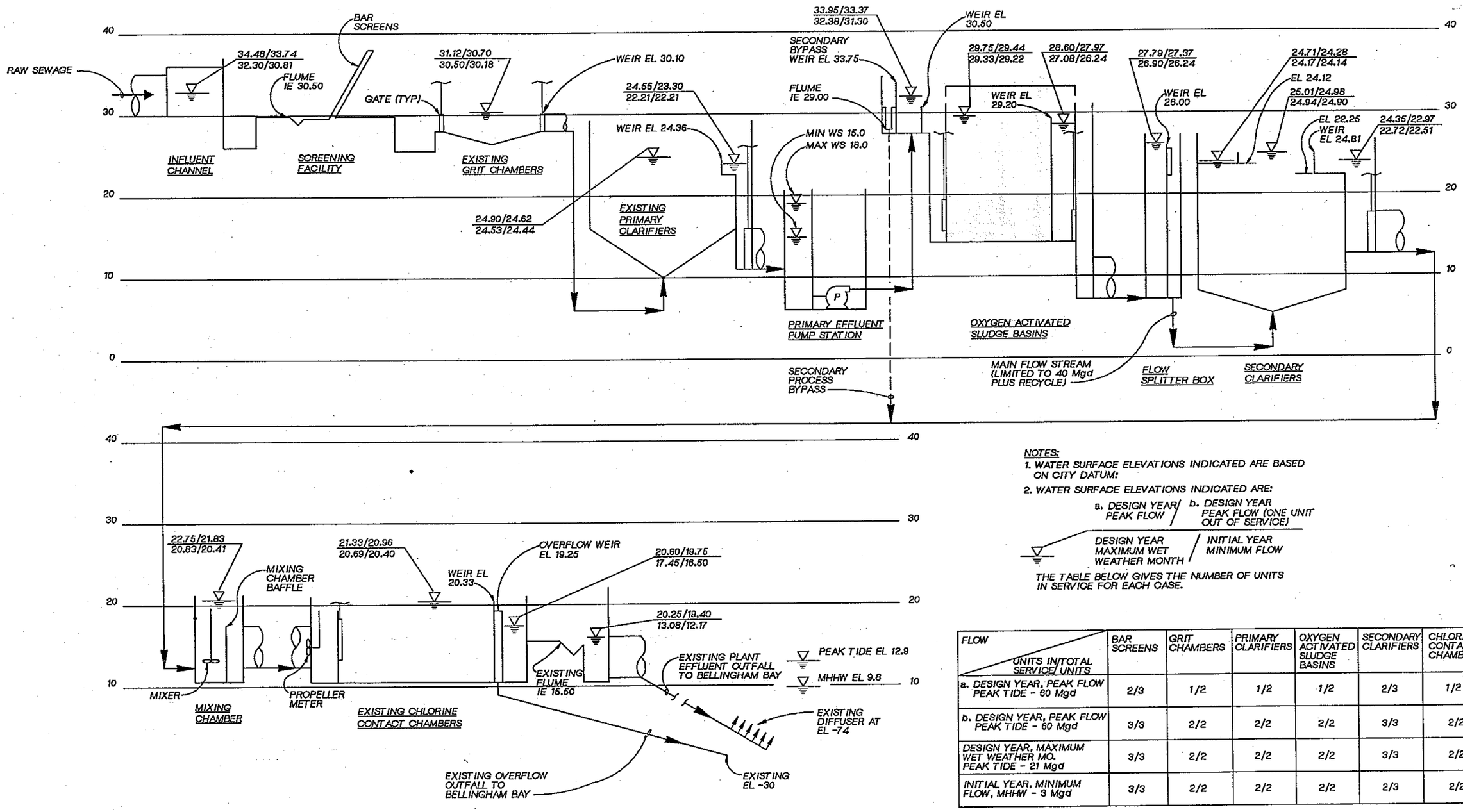

NOTES:
1. WATER SURFACE ELEVATIONS INDICATED ARE BASED ON CITY DATUM:
2. WATER SURFACE ELEVATIONS INDICATED ARE:

a. DESIGN YEAR/ PEAK FLOW / b. DESIGN YEAR PEAK FLOW (ONE UNIT OUT OF SERVICE)

DESIGN YEAR MAXIMUM WET WEATHER MONTH / INITIAL YEAR MINIMUM FLOW

THE TABLE BELOW GIVES THE NUMBER OF UNITS IN SERVICE FOR EACH CASE.

FLOW / UNITS IN/TOTAL SERVICE/ UNITS	BAR SCREENS	GRIT CHAMBERS	PRIMARY CLARIFIERS	OXYGEN ACTIVATED SLUDGE BASINS	SECONDARY CLARIFIERS	CHLORINE CONTACT CHAMBERS
a. DESIGN YEAR, PEAK FLOW PEAK TIDE - 60 Mgd	2/3	1/2	1/2	1/2	2/3	1/2
b. DESIGN YEAR, PEAK FLOW PEAK TIDE - 60 Mgd	3/3	2/2	2/2	2/2	3/3	2/2
DESIGN YEAR, MAXIMUM WET WEATHER MO. PEAK TIDE - 21 Mgd	3/3	2/2	2/2	2/2	3/3	2/2
INITIAL YEAR, MINIMUM FLOW, MHHW - 3 Mgd	3/3	2/2	2/2	2/2	2/3	2/2

JOSEPH A. GAUTHIER
STATE OF WASHINGTON
REGISTERED PROFESSIONAL ENGINEER

CH2M HILL

DSGN	M. MOORE				
DR	M. MOORE				
CHK	J. GAUTHIER				
APVD	J GAUTHIER	NO.	DATE	REVISION	BY	APVD

REUSE OF DOCUMENTS
THIS DOCUMENT, AND THE IDEAS AND DESIGNS INCORPORATED HEREIN, AS AN INSTRUMENT OF PROFESSIONAL SERVICE, IS THE PROPERTY OF CH2M HILL AND IS NOT TO BE USED, IN WHOLE OR IN PART, FOR ANY OTHER PROJECT WITHOUT THE WRITTEN AUTHORIZATION OF CH2M HILL.
©CH2M HILL

BAR IS ONE INCH ON ORIGINAL DRAWING.
0 1"
IF NOT ONE INCH ON THIS SHEET, ADJUST SCALES ACCORDINGLY.

CITY OF BELLINGHAM, WASHINGTON
POST POINT WASTEWATER TREATMENT PLANT UPGRADE

GENERAL DRAWINGS
HYDRAULIC PROFILE

DWG NO. 10-G-12
DATE AUG. 1990
PROJ NO. SEA22462.C1

DATE: 10-10-90 CJB
DRAWN BY: J. MYER DESIGNED BY: C. COSBY
DGN NAME: H:/PROJ2/BELLINGH/BL030C-A.DGN

SCALE: 1"= 50'

NOTES:

1. CONTROL MONUMENTS ARE LOCATED IN 4th STREET ON THE EASTERN BOUNDARY OF THE PLANT SITE.

MONUMENT #1–FOUND MONUMENT AT CENTERLINE INTERSECTION OF 4th STREET AND COWGILL AVENUE.
N 630,432.032, E 1,595,168.35, EL. 80.65

MONUMENT #2–FOUND MONUMENT IN CENTERLINE OF 4th STREET AT INTERSECTION WITH MEANDER LINE, APPROXIMATELY 4.5' NORTH OF CENTERLINE DONOVAN AVENUE.
N 631,046.770, E 1,595,181.070, EL. 56.06

HORIZONTAL AND VERTICAL DATUM ARE CITY OF BELLINGHAM.

2. EXISTING CONTOURS ONLY SHOWN ON PLAN. SEE SITE WORK DRAWINGS FOR FINISH GRADES.

3. DOE REFERENCE ONLY: DISTANCE FROM NEAREST HOUSE TO NEAREST TREATMENT PLANT BUILDING IS 235' FROM SCREENINGS FACILITY TO HOUSE ACROSS 4TH STREET.

4. TEMPORARY FACILITIES SHALL BE CONFINED TO THE EXISTING CLEARED AREA OF THE TREATMENT PLANT SITE. MAINTAIN 10' MIN AREA BETWEEN TEMPORARY FACILITIES AND EDGE OF CLEARING FOR PUBLIC ACCESS.

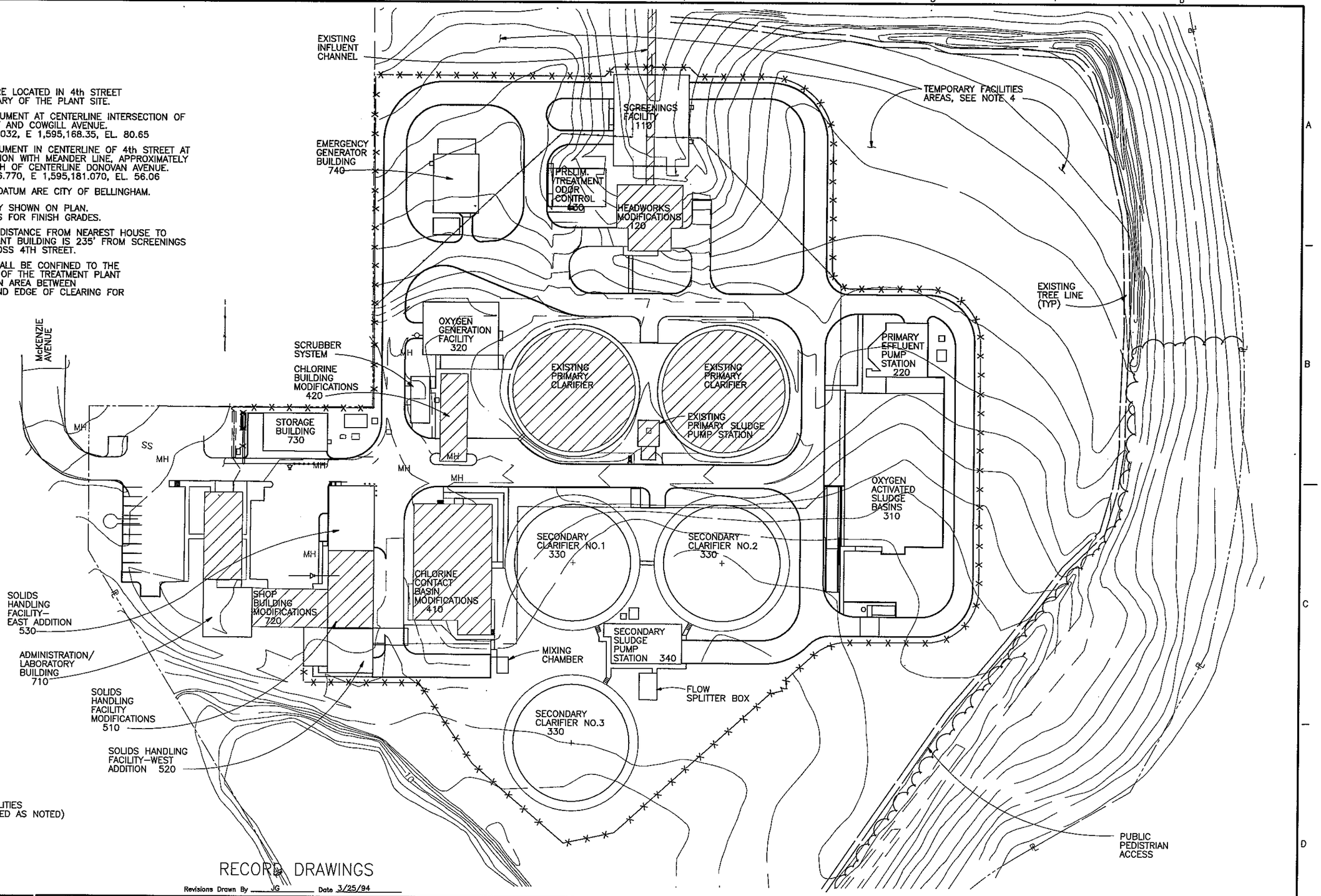

LEGEND:

EXISTING PLANT FACILITIES (SOME TO BE MODIFIED AS NOTED)

RECORD DRAWINGS

Revisions Drawn By JG Date 3/25/94

CH2M HILL

DSGN	C. COSBY
DR	J. MYER
CHK	J. GAUTHIER
APVD	J. GAUTHIER

NO.	DATE	REVISION	BY	APVD
			JV	JAG
			JV	JAG

THESE RECORD DRAWINGS HAVE BEEN PREPARED, IN PART, ON THE BASIS OF INFORMATION COMPILED BY OTHERS. THEY ARE NOT INTENDED TO REPRESENT IN DETAIL THE EXACT LOCATION, TYPE OF COMPONENT NOR MANNER OF CONSTRUCTION. THE ENGINEER WILL NOT BE RESPONSIBLE FOR ANY ERRORS OR OMISSIONS WHICH HAVE BEEN INCORPORATED INTO THE RECORD DRAWINGS.

REUSE OF DOCUMENTS
THIS DOCUMENT, AND THE IDEAS AND DESIGNS INCORPORATED HEREIN, AS AN INSTRUMENT OF PROFESSIONAL SERVICE, IS THE PROPERTY OF CH2M HILL AND IS NOT TO BE USED, IN WHOLE OR IN PART, FOR ANY OTHER PROJECT WITHOUT THE WRITTEN AUTHORIZATION OF CH2M HILL.
© CH2M HILL

VERIFY SCALE
BAR IS ONE INCH ON ORIGINAL DRAWING.
0 1"
IF NOT ONE INCH ON THIS SHEET, ADJUST SCALES ACCORDINGLY.

CITY OF BELLINGHAM, WASHINGTON
POST POINT WASTEWATER TREATMENT PLANT UPGRADE

SITE WORK
GENERAL SITE PLAN

SHEET
DWG NO. 30-C-1
DATE AUG. 1990
PROJ NO. SEA22462.C1

DATE: 10-17-90 DLC
DRAWN BY:J.PIERONI DESIGNED BY:C.COSBY
DGN NAME: H:/PROJ2/BELLINGH/BL030C-B.DGN

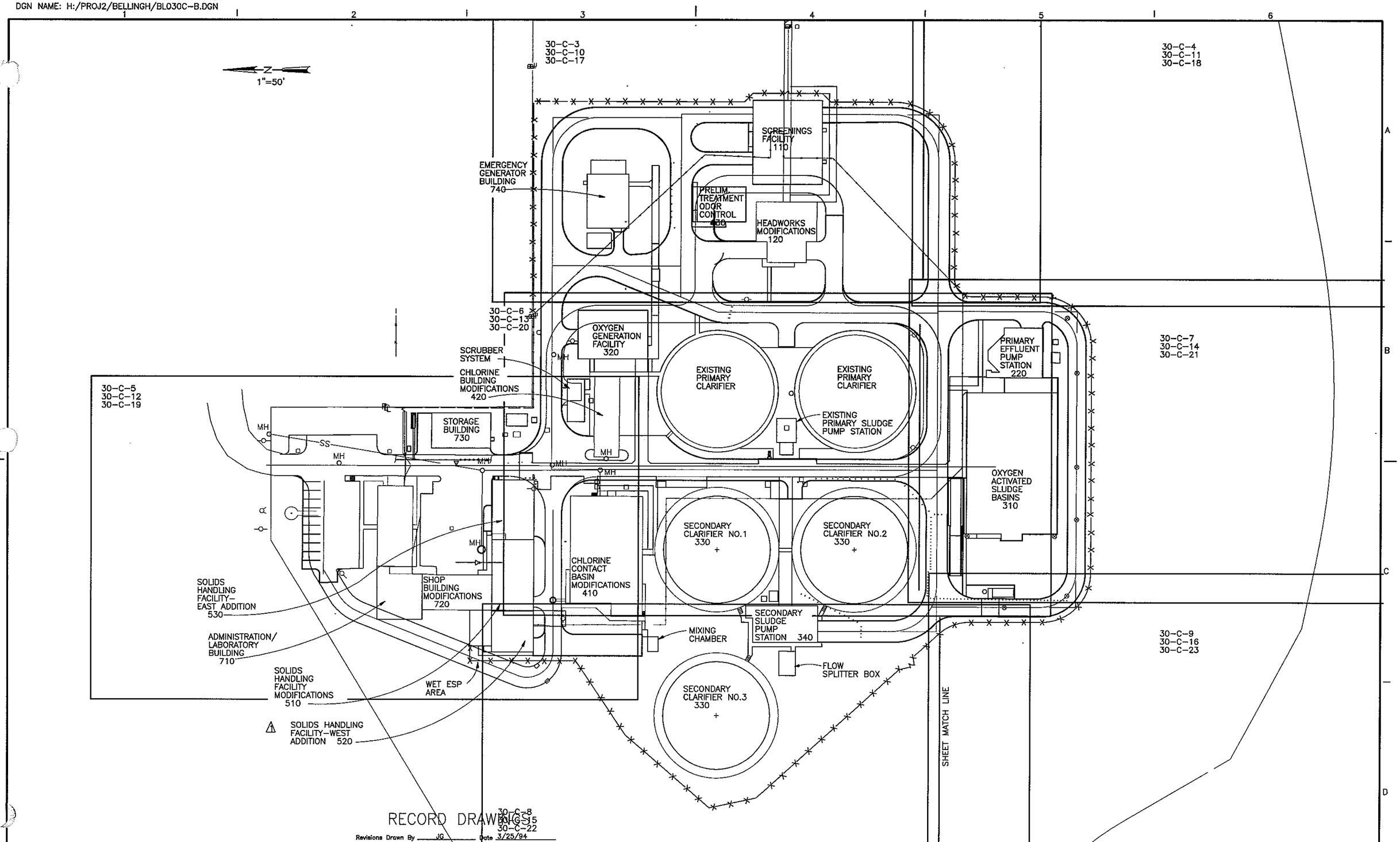

RECORD DRAWINGS

Revisions Drawn By JG Date 3/25/94

NO.	DATE	REVISION	BY	APVD
3	10/19/94	THESE RECORD DRAWINGS HAVE BEEN PREPARED, IN PART, ON THE BASIS OF INFORMATION COMPILED BY OTHERS. THEY ARE NOT INTENDED TO REPRESENT IN DETAIL THE EXACT LOCATION, TYPE OF COMPONENT NOR MANNER OF CONSTRUCTION. THE ENGINEER WILL NOT BE RESPONSIBLE FOR ANY ERRORS OR OMISSIONS, WHICH HAVE BEEN INCORPORATED INTO THE RECORD DRAWINGS.	JV	JAG

CH2M HILL

DSGN C.COSBY
DR J.PIERONI
CHK J GAUTHIER
APVD J. GAUTHIER

REUSE OF DOCUMENTS
THIS DOCUMENT, AND THE IDEAS AND DESIGNS INCORPORATED HEREIN, AS AN INSTRUMENT OF PROFESSIONAL SERVICE, IS THE PROPERTY OF CH2M HILL AND IS NOT TO BE USED, IN WHOLE OR IN PART, FOR ANY OTHER PROJECT WITHOUT THE WRITTEN AUTHORIZATION OF CH2M HILL.
©CH2M HILL

BAR IS ONE INCH ON ORIGINAL DRAWING.
0 1"
IF NOT ONE INCH ON THIS SHEET, ADJUST SCALES ACCORDINGLY.

CITY OF BELLINGHAM, WASHINGTON
POST POINT WASTEWATER TREATMENT PLANT UPGRADE

SITE WORK
KEY PLAN

DWG NO. 30-C-2
DATE AUG. X1990
PROJ NO. SEA22462.C1

OVERLAY SCREEN
PROJD FILE

DRAWN BY: J.PIERONI DESIGNED BY: C. COSBY
DGN NAME: H:/PROJ2/BELLINGH/BL030C-D.DGN

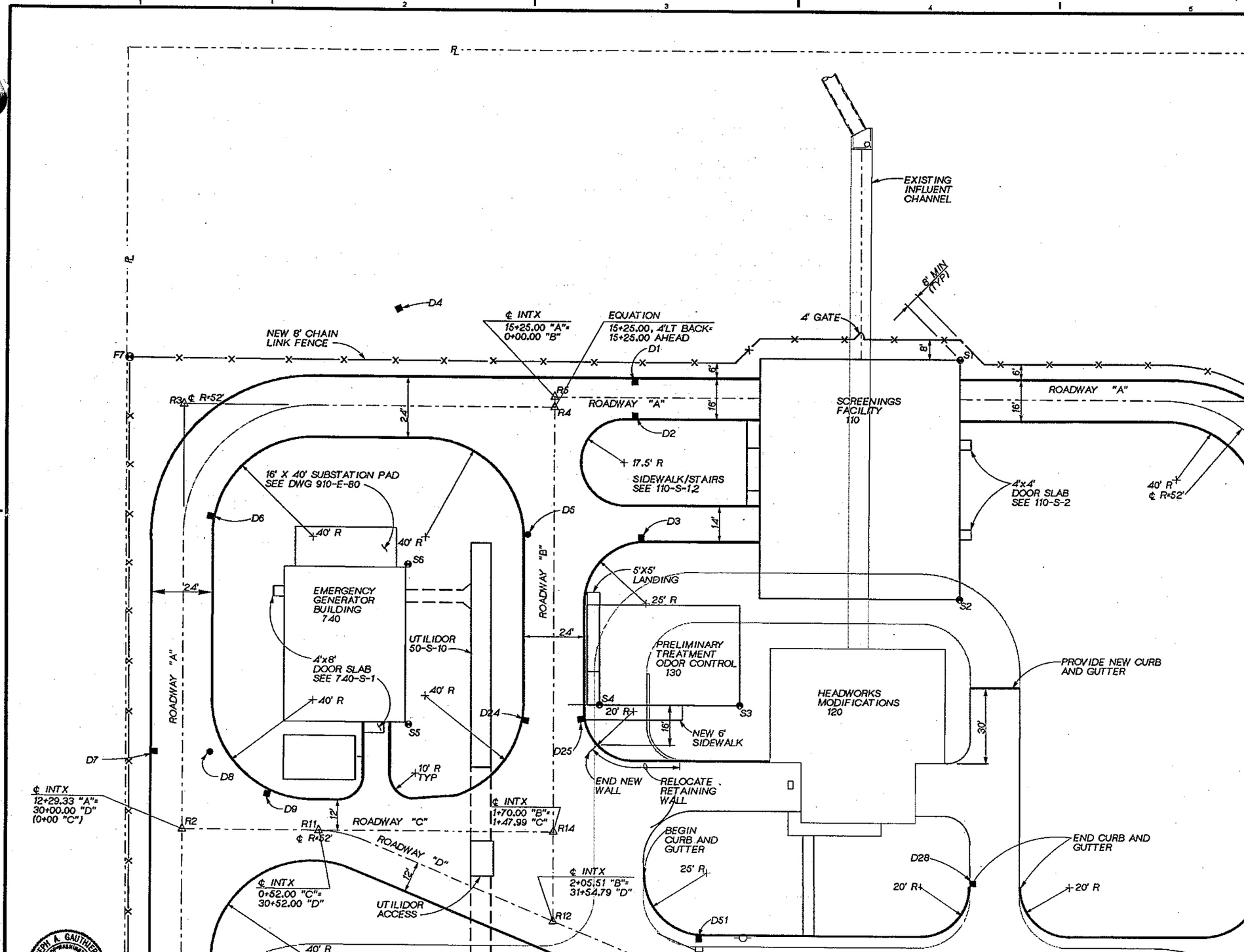

Z
1"=20'

NUMBER	COORDINATE: (N)	(E)
S1	630,974.80	1,595,006.92
S2	630,977.03	1,594,910.95
S3	631,065.60	1,594,870.00
S4	631,121.59	1,594,871.30
S5	631,200.15	1,594,865.46
S6	631,198.71	1,594,927.45
R2	631,269.13	1,594,824.19
R3	631,285.18	1,594,994.14
R4	631,137.23	1,594,990.70
R5	631,137.14	1,594,994.70
R11	631,226.80	1,594,822.74
R12	631,142.01	1,594,785.25
R14	631,141.19	1,594,820.75
F7	631,307	1,595,013
D1	631,104.72	1,594,997.94
D2	631,105.10	1,594,981.95
D3	631,103.46	1,594,936.90
D4	631,199.33	1,595,030.16
D5	631,149.42	1,594,939.77
D6	631,273.69	1,594,948.45
D7	631,300.42	1,594,855.13
D8	631,277.42	1,594,854.59
D9	631,253.47	1,594,839.01
D24	631,152.14	1,594,866.01
D25	631,128.14	1,594,865.45
D28	630,874.80	1,594,794.21
D51	631,080.92	1,594,778.00

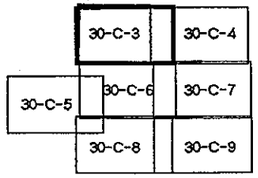

JOSEPH A. GAUTHIER STATE OF WASHINGTON REGISTERED PROFESSIONAL ENGINEER

CH2M HILL

DSGN	C.COSBY
DR	J.PIERONI
CHK	J GAUTHIER
APVD	J. GAUTHIER

NO.	DATE	REVISION	BY	APVD

REUSE OF DOCUMENTS
THIS DOCUMENT, AND THE IDEAS AND DESIGNS INCORPORATED HEREIN, AS AN INSTRUMENT OF PROFESSIONAL SERVICE, IS THE PROPERTY OF CH2M HILL AND IS NOT TO BE USED, IN WHOLE OR IN PART, FOR ANY OTHER PROJECT WITHOUT THE WRITTEN AUTHORIZATION OF CH2M HILL.
©CH2M HILL

VERIFY SCALE
BAR IS ONE INCH ON ORIGINAL DRAWING.
0 1"
IF NOT ONE INCH ON THIS SHEET, ADJUST SCALES ACCORDINGLY.

CITY OF BELLINGHAM, WASHINGTON
POST POINT WASTEWATER TREATMENT PLANT UPGRADE

SITE WORK
CIVIL/SITE WORK
DIMENSIONAL LAYOUT

DWG NO. 30-C-3
DATE AUG. 1990
PROJ NO. SEA22452.C1

DGN NAME: H:/PROJ2/BELLINGH/BL030C-E.DGN

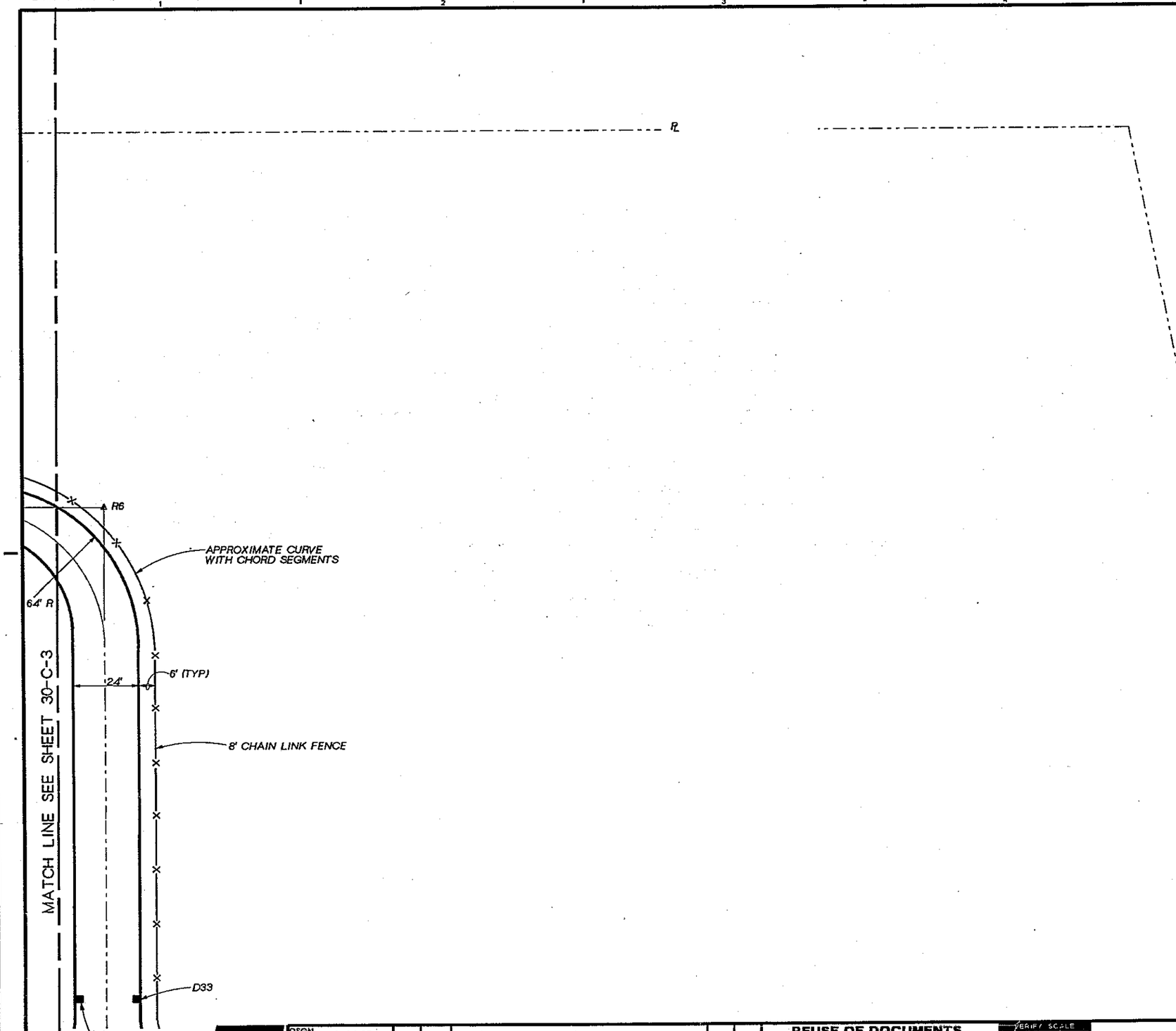

1"=20'

NUMBER	COORDINATE: (N)	(E)
R6	630,841.20	1,594,987.81
D32	630,857.45	1,594,805.34
D33	630,833.46	1,594,804.78

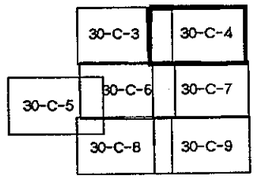

JOSEPH A. GAUTHIER STATE OF WASHINGTON REGISTERED PROFESSIONAL ENGINEER

CH2M HILL

DSGN	C.COSBY
DR	J.PIERONI
CHK	J GAUTHIER
APVD	J. GAUTHIER

NO.	DATE	REVISION	BY	APVD

REUSE OF DOCUMENTS

THIS DOCUMENT, AND THE IDEAS AND DESIGNS INCORPORATED HEREIN, AS AN INSTRUMENT OF PROFESSIONAL SERVICE, IS THE PROPERTY OF CH2M HILL AND IS NOT TO BE USED, IN WHOLE OR IN PART, FOR ANY OTHER PROJECT WITHOUT THE WRITTEN AUTHORIZATION OF CH2M HILL.

©CH2M HILL

VERIFY SCALE

BAR IS ONE INCH ON ORIGINAL DRAWING.

0 1"

IF NOT ONE INCH ON THIS SHEET, ADJUST SCALES ACCORDINGLY.

CITY OF BELLINGHAM, WASHINGTON
POST POINT WASTEWATER TREATMENT PLANT UPGRADE

SITE WORK

CIVIL/SITE WORK DIMENSIONAL LAYOUT

DWG NO. 30-C-4

DATE AUG. 1990

PROJ. NO. SEA22462.C1

DGN NAME: H:/PROJ2/BELLINGH/BL030C-F.DGN

1"=20'

NUMBER	COORDINATE: (N)	(E)
S7	631,431.86	1,594,618.12
S8	631,363.88	1,594,616.54
R1	SEE 30-C-6	
F1	SEE 30-C-8	
F2	SEE 30-C-8	
D16	631,356.00	1,594,619.72
D17	631,356.33	1,594,608.73
D18	631,376.64	1,594,598.53
D19	631,357.04	1,594,584.74
D20	631,406.63	1,594,599.23
D21	631,526.58	1,594,602.81
D22	631,530.17	1,594,482.86
D23	VERIFY IN FIELD	

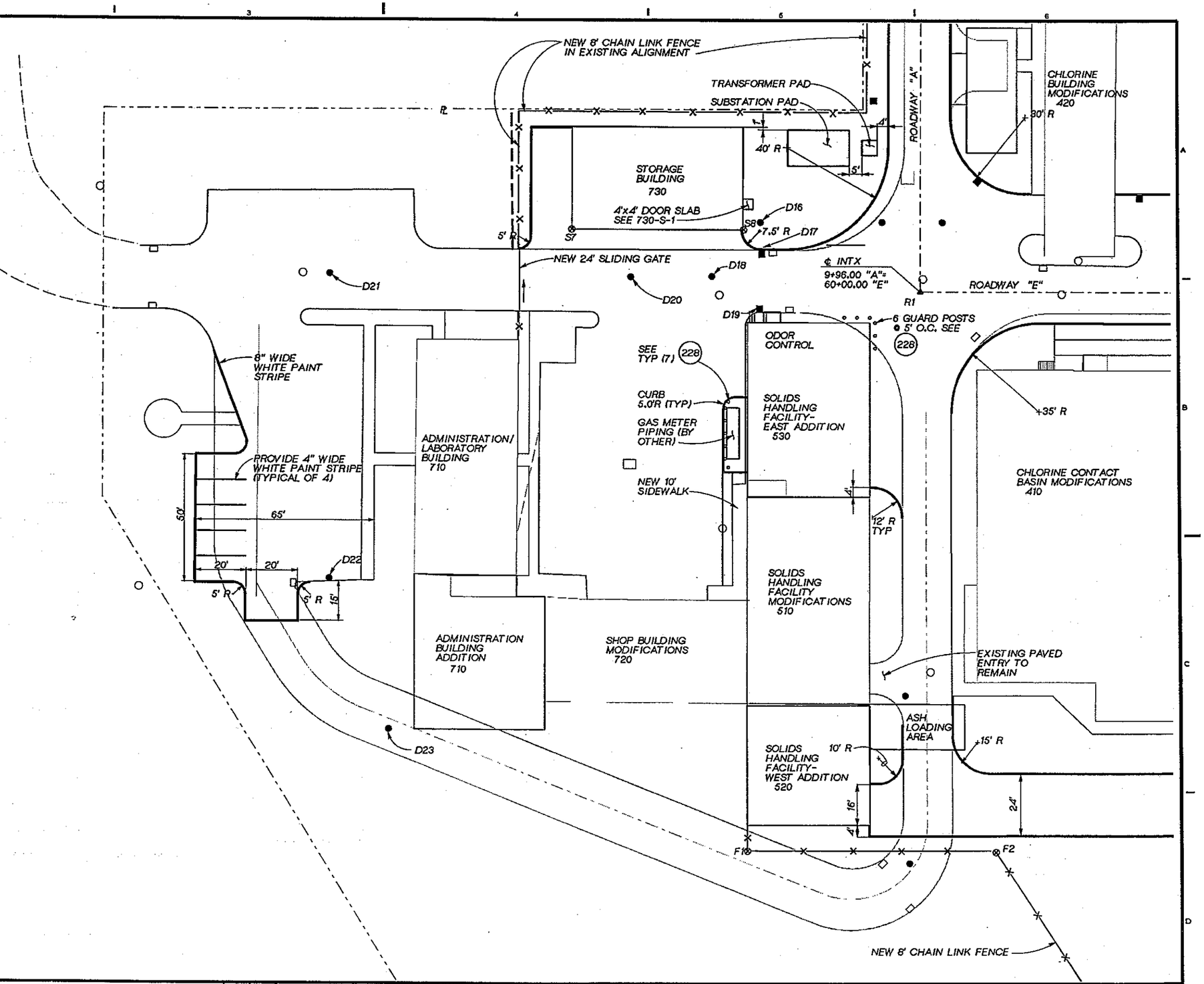

NOTES:

1. CHEMICAL FEED PITS NOT SHOWN ON SOLIDS HANDLING ADDITION. SEE STRUCTURAL PLANS.
2. ADDITIONS TO ADMINISTRATION BUILDING AND SOLIDS HANDLING FACILITY ARE LOCATED RELATIVE TO EXISTING FOUNDATION. SEE STRUCTURAL PLANS FOR LOCATING DIMENSIONS.
3. EQUIPMENT PADS FOR HVAC CONDENSING UNITS NOT SHOWN. SEE HVAC PLANS FOR LOCATIONS.

30-C-3	30-C-4
30-C-5 / 30-C-6	30-C-7
30-C-8	30-C-9

JOSEPH A. GAUTHIER STATE OF WASHINGTON REGISTERED PROFESSIONAL ENGINEER

CH2M HILL

DSGN	C.COSBY
DR	J.PIERONI
CHK	J GAUTHIER
APVD	J. GAUTHIER

NO.	DATE	REVISION	BY	APVD

REUSE OF DOCUMENTS

THIS DOCUMENT, AND THE IDEAS AND DESIGNS INCORPORATED HEREIN, AS AN INSTRUMENT OF PROFESSIONAL SERVICE, IS THE PROPERTY OF CH2M HILL AND IS NOT TO BE USED, IN WHOLE OR IN PART, FOR ANY OTHER PROJECT WITHOUT THE WRITTEN AUTHORIZATION OF CH2M HILL.

©CH2M HILL

VERIFY SCALE

BAR IS ONE INCH ON ORIGINAL DRAWING.
0 1"

IF NOT ONE INCH ON THIS SHEET, ADJUST SCALES ACCORDINGLY.

CITY OF BELLINGHAM, WASHINGTON
POST POINT WASTEWATER TREATMENT PLANT UPGRADE

SITE WORK

CIVIL/SITE WORK DIMENSIONAL LAYOUT

DWG NO. 30-C-5
DATE AUG. 1990
PROJ NO. SEA22462.C1

DRAWN BY: J.PIERONI DESIGNED BY: C. COSBY
DGN NAME: H:/PROJ2/BELLINGH/BL030C-G.DGN

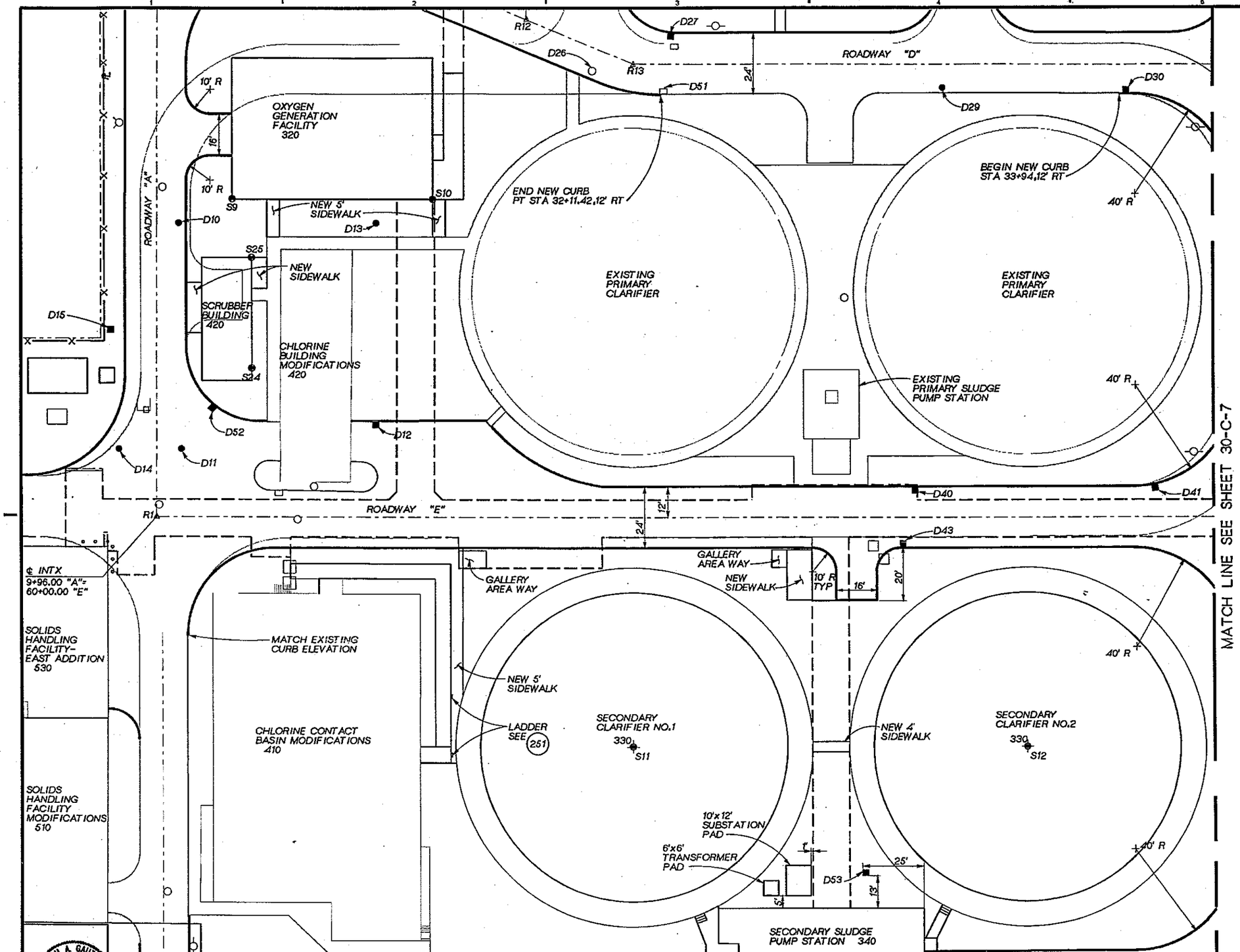

Z
1"=20'

NUMBER	COORDINATE: (N)	(E)
S9	631,261.13	1,594,716.67
S10	631,181.15	1,594,714.81
S11	631,105.74	1,594,495.00
S12	630,947.79	1,594,491.32
S24	631,255.17	1,594,644.34
S25	631,254.03	1,594,693.32
R1	631,294.56	1,594,590.92
R12	631,142.01	1,594,785.25
R13	631,099.45	1,594,766.43
D10	631,281.84	1,594,707.65
D11	631,283.94	1,594,617.68
D12	631,205.61	1,594,630.86
D13	631,203.86	1,594,705.84
D14	631,308.93	1,594,618.26
D15	REPLACE	EXISTING CB
D26	EXISTING CB	
D27	631,084.26	1,594,778.30
D29	630,975.80	1,594,752.55
D30	630,900.82	1,594,750.80
D40	630,990.37	1,594,595.84
D41	630,894.38	1,594,594.42
D43	630,994.92	1,594,571.94
D52	631,272.30	1,594,636.81
D51	EXISTING CB	
D53	SEE DIMENSIONS ON PLAN	

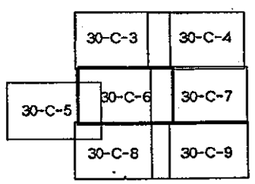

DESIGNED BY
DRAWN BY
CHECKED BY
COMPOSITE
OVERLAY SCREEN
OVERLAY IDENTIFICATION
PROJID
FILE

JOSEPH A. GAUTHIER STATE OF WASHINGTON REGISTERED PROFESSIONAL ENGINEER

CH2M HILL

DSGN	C.COSBY
DR	J.PIERONI
CHK	J GAUTHIER
APVD	J. GAUTHIER

NO.	DATE	REVISION	BY	APVD

REUSE OF DOCUMENTS
THIS DOCUMENT, AND THE IDEAS AND DESIGNS INCORPORATED HEREIN, AS AN INSTRUMENT OF PROFESSIONAL SERVICE, IS THE PROPERTY OF CH2M HILL AND IS NOT TO BE USED, IN WHOLE OR IN PART, FOR ANY OTHER PROJECT WITHOUT THE WRITTEN AUTHORIZATION OF CH2M HILL.
©CH2M HILL

VERIFY SCALE
BAR IS ONE INCH ON ORIGINAL DRAWING.
0 1"
IF NOT ONE INCH ON THIS SHEET, ADJUST SCALES ACCORDINGLY.

CITY OF BELLINGHAM, WASHINGTON
POST POINT WASTEWATER TREATMENT PLANT UPGRADE

SITE WORK
CIVIL/SITE WORK DIMENSIONAL LAYOUT

DWG NO. 30-C-6
DATE AUG. 1990
PROJ NO. SEA22462.C1

DGN NAME: H:/PROJ2/BELLINGH/BL030C-H.DGN

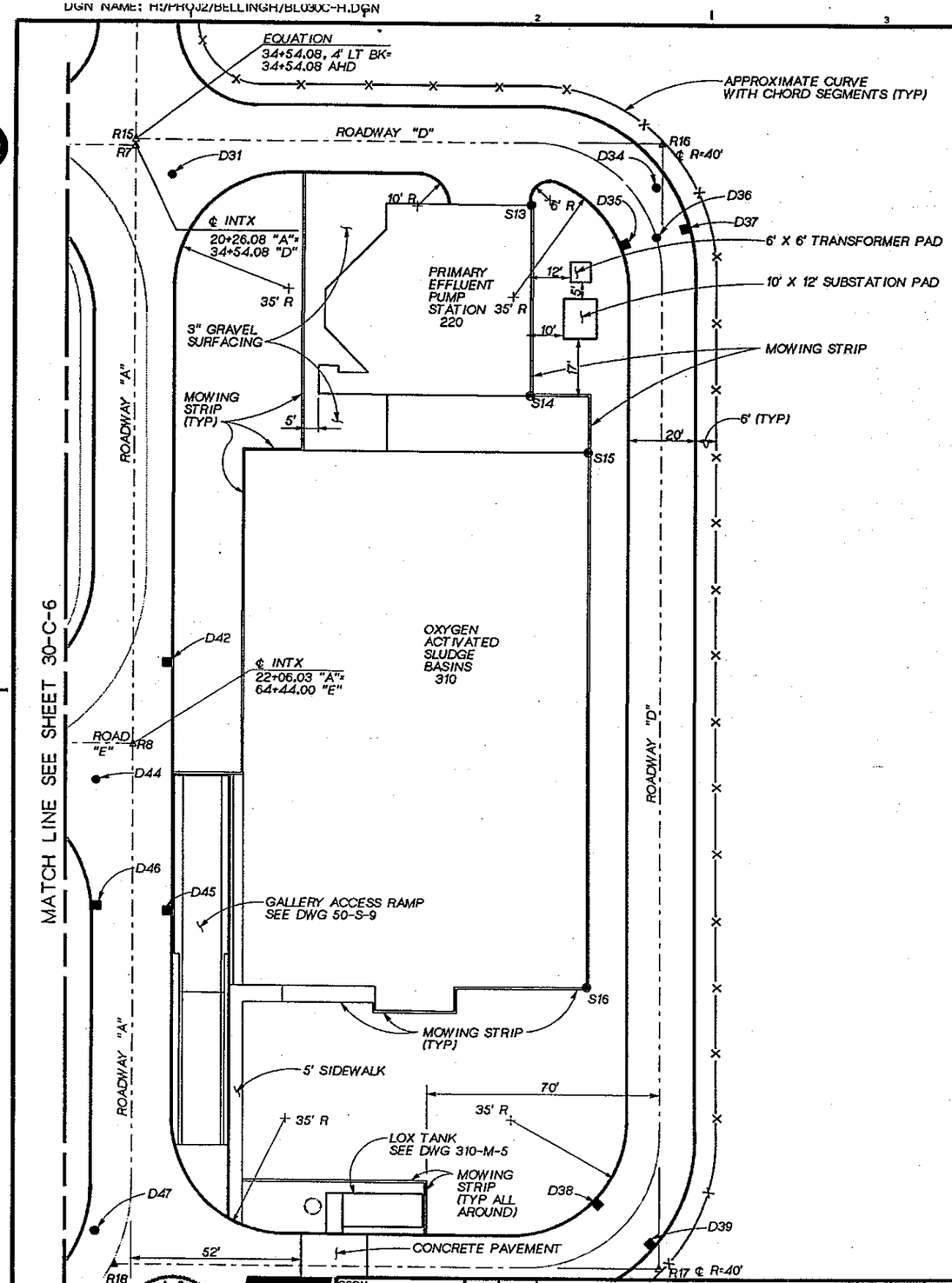

1"=20'

NUMBER	COORDINATE: (N)	(E)
S13	630,726.42	1,594,740.99
S14	630,727.75	1,594,683.75
S15	630,710.65	1,594,666.35
S16	630,714.40	1,594,505.06
R7	630,846.49	1,594,760.54
R8	630,850.68	1,594,580.59
R15	630,846.45	1,594,762.54
R16	630,686.49	1,594,758.82
R17	630,694.37	1,594,420.24
R18	630,859.29	1,594,424.08
D31	630,835.75	1,594,749.29
D34	630,688.79	1,594,745.86
D35	630,700.46	1,594,727.35
D36	630,688.91	1,594,730.60
D37	630,677.36	1,594,733.86
D38	630,713.11	1,594,441.90
D39	630,695.69	1,594,425.38
D42	630,838.12	1,594,604.73
D44	630,861.94	1,594,569.85
D45	630,839.79	1,594,532.75
D46	630,864.03	1,594,533.32
D47	630,865.09	1,594,434.22

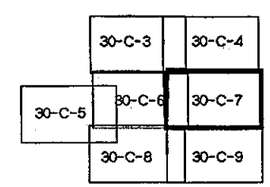

JOSEPH A. GAUTHIER STATE OF WASHINGTON REGISTERED PROFESSIONAL ENGINEER

CH2M HILL

DSGN	C.COSBY
DR	J.PIERONI
CHK	J GAUTHIER
APVD	J. GAUTHIER

NO.	DATE	REVISION	BY	APVD

REUSE OF DOCUMENTS

THIS DOCUMENT, AND THE IDEAS AND DESIGNS INCORPORATED HEREIN, AS AN INSTRUMENT OF PROFESSIONAL SERVICE, IS THE PROPERTY OF CH2M HILL AND IS NOT TO BE USED, IN WHOLE OR IN PART, FOR ANY OTHER PROJECT WITHOUT THE WRITTEN AUTHORIZATION OF CH2M HILL.

©CH2M HILL

VERIFY SCALE
BAR IS ONE INCH ON ORIGINAL DRAWING.
0 1"
IF NOT ONE INCH ON THIS SHEET, ADJUST SCALES ACCORDINGLY.

CITY OF BELLINGHAM, WASHINGTON
POST POINT WASTEWATER TREATMENT PLANT UPGRADE

SITE WORK

CIVIL/SITE WORK DIMENSIONAL LAYOUT

DWG NO. 30-C-7
DATE AUG. 1990
PROJ NO. SEA22462.C1

DGN NAME: H:/PROJ2/BELLINGH/BL030C-1.DGN

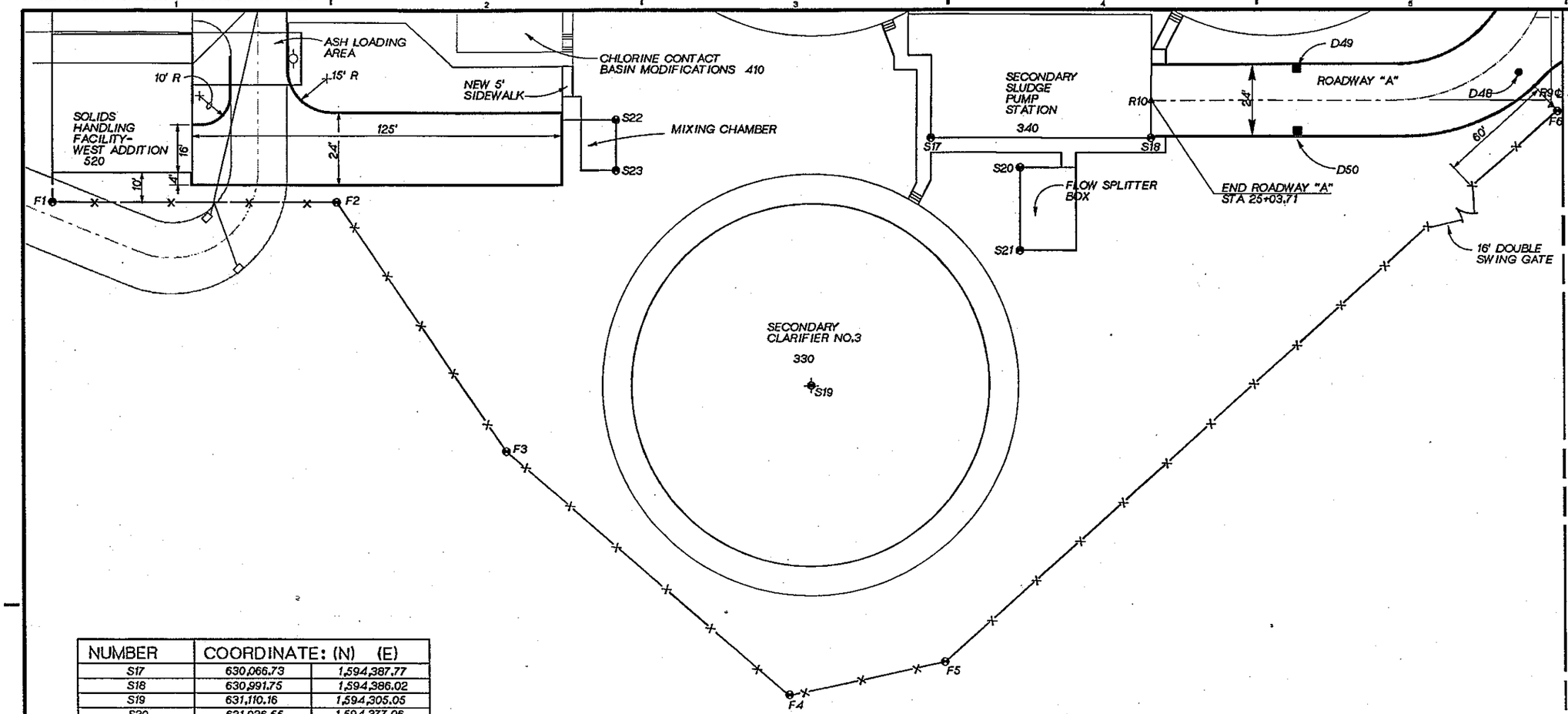

NUMBER	COORDINATE: (N)	(E)
S17	630,066.73	1,594,387.77
S18	630,991.75	1,594,386.02
S19	631,110.16	1,594,305.05
S20	631,036.55	1,594,377.06
S21	631,037.20	1,594,349.07
S22	631,174.99	1,594,396.29
S23	631,175.39	1,594,379.29
R9	630,854.95	1,594,397.14
R10	630,991.42	1,594,400.31
F1	631,367	1,594,373
F2	631,270	1,594,371
F3	631,215	1,594,285
F4	631,120	1,594,200
F5	631,066	1,594,210
F6	630,853	1,594,392
D48	630,865.69	1,594,408.39
D49	630,942.44	1,594,411.18
D50	630,943.00	1,594,387.18

NOTES:

1. FACILITY STAIRS NOT SHOWN FOR MIXING CHAMBER AND FLOW SPLITTER BOX.
2. SIDEWALK OPENING AT SOUTHWEST CORNER OF SOLIDS HANDLING FACILITY WEST ADDITION IS NOT SHOWN.

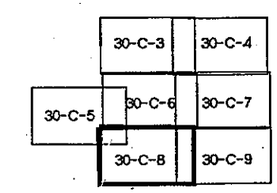

JOSEPH A. GAUTHIER STATE OF WASHINGTON REGISTERED PROFESSIONAL ENGINEER

CH2M HILL

DSGN	C.COSBY
DR	J.PIERONI
CHK	J GAUTHIER
APVD	J. GAUTHIER

NO.	DATE	REVISION	BY	APVD

REUSE OF DOCUMENTS
THIS DOCUMENT, AND THE IDEAS AND DESIGNS INCORPORATED HEREIN, AS AN INSTRUMENT OF PROFESSIONAL SERVICE, IS THE PROPERTY OF CH2M HILL AND IS NOT TO BE USED, IN WHOLE OR IN PART, FOR ANY OTHER PROJECT WITHOUT THE WRITTEN AUTHORIZATION OF CH2M HILL.
©CH2M HILL

VERIFY SCALE
BAR IS ONE INCH ON ORIGINAL DRAWING.
0 1"
IF NOT ONE INCH ON THIS SHEET, ADJUST SCALES ACCORDINGLY.

CITY OF BELLINGHAM, WASHINGTON
POST POINT WASTEWATER TREATMENT PLANT UPGRADE

SITE WORK
CIVIL/SITE WORK
DIMENSIONAL LAYOUT

DWG NO. 30-C-8
DATE AUG. 1990
PROJ NO. SEA22462.C1

OVERLAY IDENTIFICATION: COMPOSITE, OVERLAY, SCREEN, PROJID, FILE

DRAWN BY: J.PIERONI DESIGNED BY: C. COSBY
DGN NAME: H:/PROJ2/BELLINGH/BL030C-J.DGN

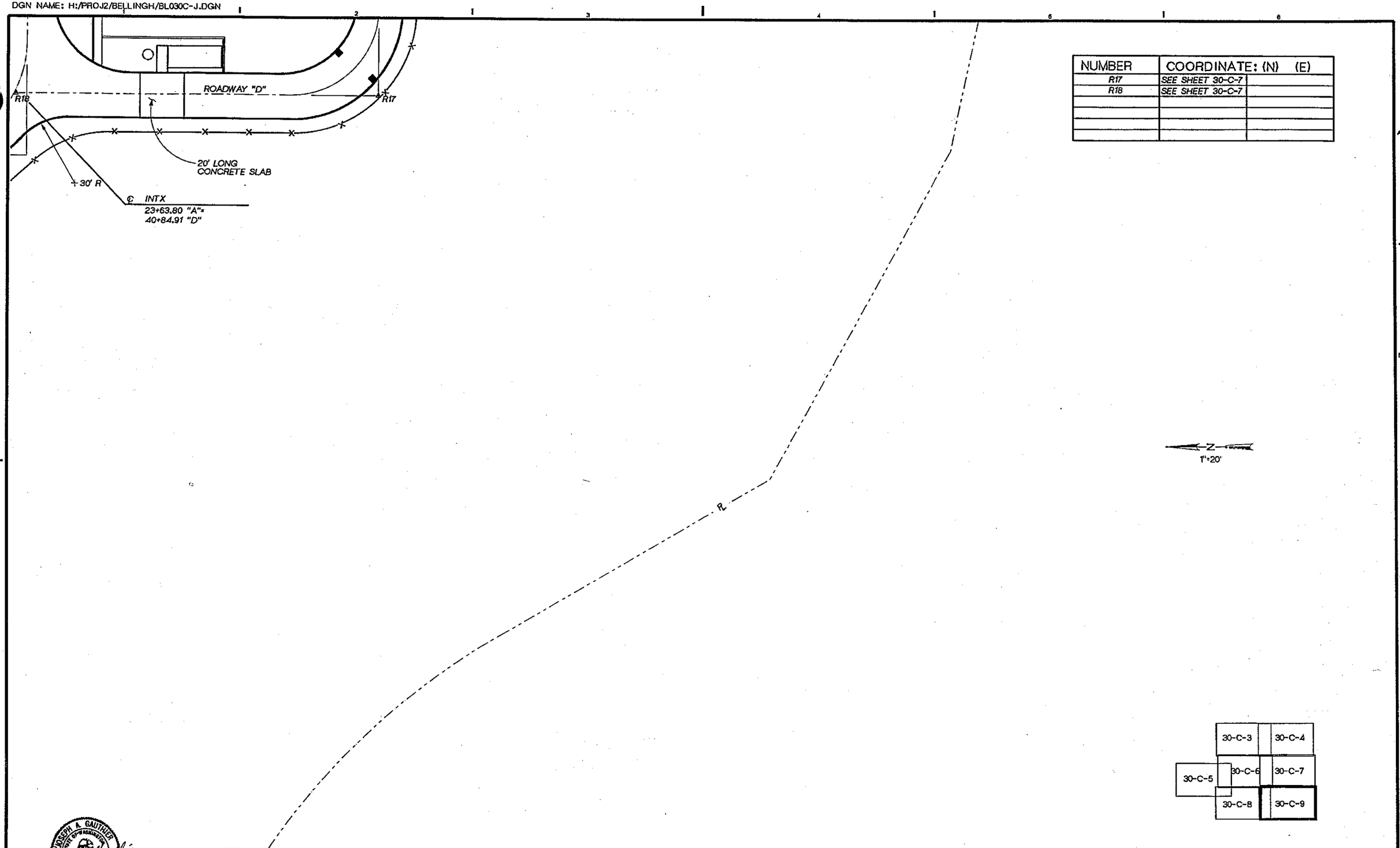

NUMBER	COORDINATE: (N) (E)	
R17	SEE SHEET 30-C-7	
R18	SEE SHEET 30-C-7	

30-C-3	30-C-4
30-C-5	30-C-6
	30-C-7
	30-C-8
	30-C-9

JOSEPH A. GAUTHIER STATE OF WASHINGTON REGISTERED PROFESSIONAL ENGINEER

CH2M HILL

DSGN	C.COSBY
DR	J.PIERONI
CHK	J GAUTHIER
APVD	J. GAUTHIER

NO.	DATE	REVISION	BY	APVD

REUSE OF DOCUMENTS
THIS DOCUMENT, AND THE IDEAS AND DESIGNS INCORPORATED HEREIN, AS AN INSTRUMENT OF PROFESSIONAL SERVICE, IS THE PROPERTY OF CH2M HILL AND IS NOT TO BE USED, IN WHOLE OR IN PART, FOR ANY OTHER PROJECT WITHOUT THE WRITTEN AUTHORIZATION OF CH2M HILL.
©CH2M HILL

VERIFY SCALE
BAR IS ONE INCH ON ORIGINAL DRAWING.
0 1"
IF NOT ONE INCH ON THIS SHEET, ADJUST SCALES ACCORDINGLY.

CITY OF BELLINGHAM, WASHINGTON
POST POINT WASTEWATER TREATMENT PLANT UPGRADE

SITE WORK
CIVIL/SITE WORK
DIMENSIONAL LAYOUT

DWG NO. 30-C-9
DATE AUG. 1990
PROJ NO. SEA22462.C1

OVERLAY IDENTIFICATION: COMPOSITE, PROJID, OVERLAY, FILE, GREEN

DRAWN BY: J.PIERONI DESIGNED BY: C. COSBY
DGN NAME: H:/PROJ2/BELLINGH/BL030C-K.DGN

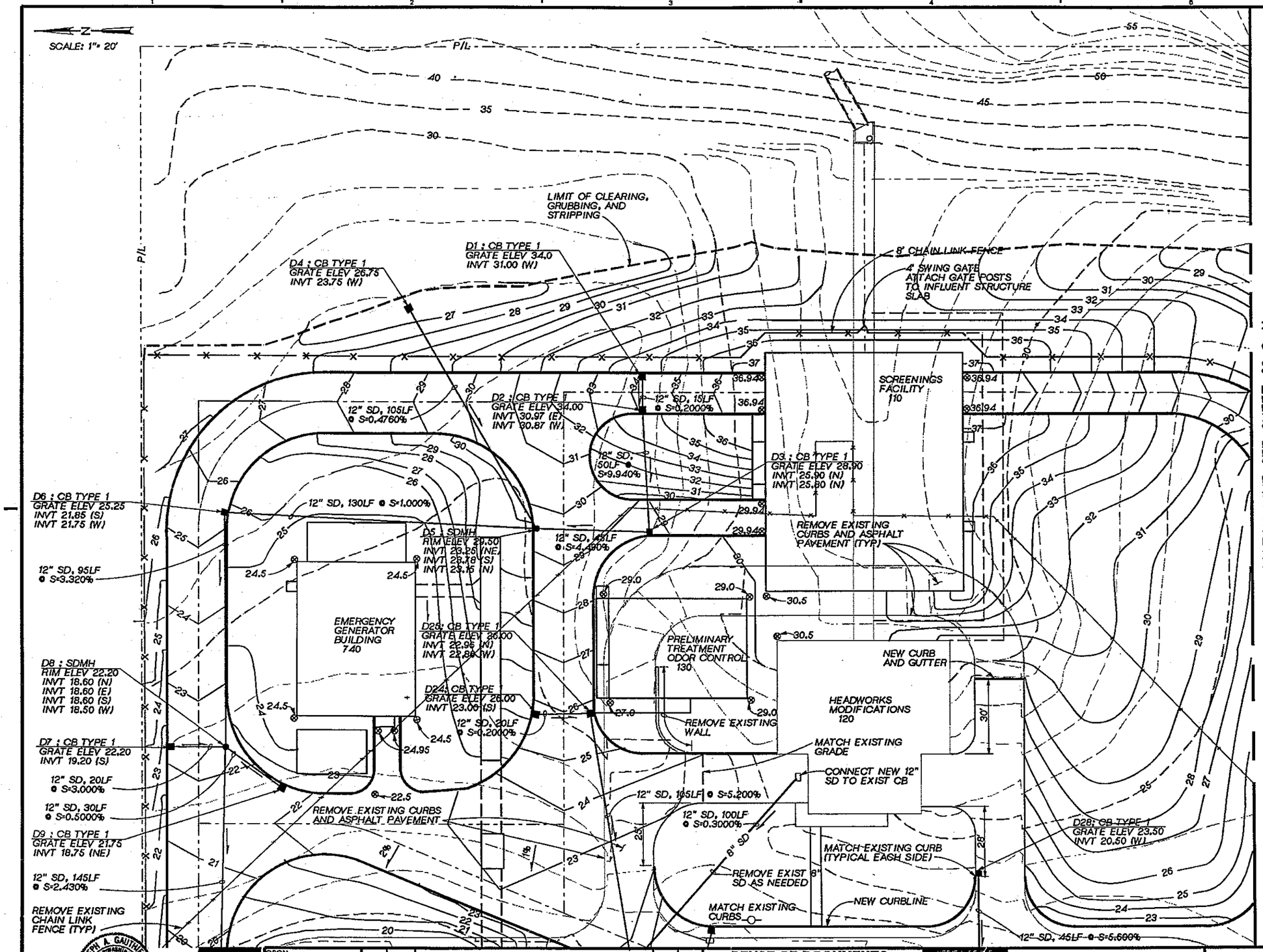

GRADING NOTES:

1. SLOPE UNIFORMLY BETWEEN SPOT ELEVATIONS SHOWN.
2. SEE DWG NO. 30-C-32 AND 30-C-33 FOR ROADWAY PROFILES.
3. MAXIMUM STEEPNESS FOR FILL SLOPES SHALL BE 3:1. MAXIMUM STEEPNESS FOR CUT SLOPES SHALL BE 3:1.
4. PROVIDE STANDARD CROWN SECTION ON ALL ROADWAYS UNLESS SHOWN OTHERWISE. PROVIDE FLAT SECTION WHERE PAVEMENT ABUTS FACE(S) OF BUILDINGS, DEVELOPING TYPICAL CROWN WITHIN 25' OF BUILDING FACE.
5. LIMIT OF CLEARING, GRUBBING, AND STRIPPING IS AT PROPERTY LINE OR AS SHOWN ON DRAWING.
6. PROVIDE MOW STRIP WHERE GRASS ABUTS FDN WALLS OR SHRUB BEDS. SEE DWG 40-C-1, 2 FOR LOCATION OF GRASS AREAS AND SHRUB BEDS.

30-C-10	30-C-11
30-C-12	30-C-13
	30-C-14
30-C-15	30-C-16

OVERLAY IDENTIFICATION: COMPOSITE, OVERLAY, SCREEN
PROJ ID
FILE

JOSEPH A. GAUTHIER, STATE OF WASHINGTON, REGISTERED PROFESSIONAL ENGINEER

CH2M HILL

DSGN	C. COSBY				
DR	J.PIERONI				
CHK	J GAUTHIER				
APVD	J GAUTHIER	NO.	DATE	REVISION	BY	APVD

REUSE OF DOCUMENTS
THIS DOCUMENT, AND THE IDEAS AND DESIGNS INCORPORATED HEREIN, AS AN INSTRUMENT OF PROFESSIONAL SERVICE, IS THE PROPERTY OF CH2M HILL AND IS NOT TO BE USED, IN WHOLE OR IN PART, FOR ANY OTHER PROJECT WITHOUT THE WRITTEN AUTHORIZATION OF CH2M HILL.
©CH2M HILL

VERIFY SCALE
BAR IS ONE INCH ON ORIGINAL DRAWING.
0 1"
IF NOT ONE INCH ON THIS SHEET, ADJUST SCALES ACCORDINGLY.

CITY OF BELLINGHAM, WASHINGTON
POST POINT WASTEWATER TREATMENT PLANT UPGRADE

SITE WORK
CIVIL/SITE WORK
SITE WORK

DWG NO. 30-C-10
DATE AUG. 1990
PROJ NO. SEA22462.C1

DRAWN BY: J.PIERONI DESIGNED BY: C. COSBY
DGN NAME: H:/PROJ2/BELLINGH/BL030C-L.DGN

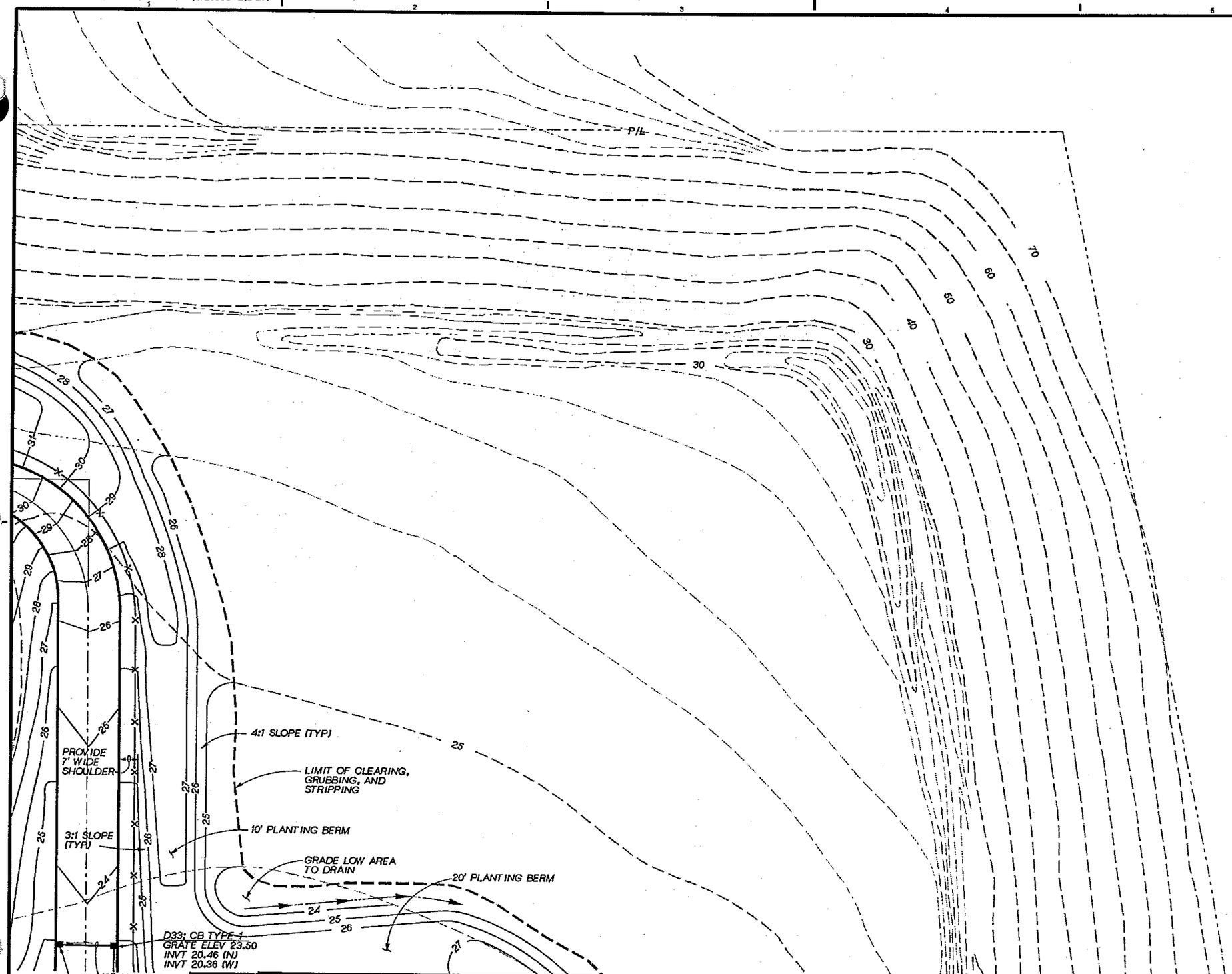

GRADING NOTES:

1. SLOPE UNIFORMLY BETWEEN SPOT ELEVATIONS SHOWN.
2. SEE DWG NO. 30-C-32 AND 30-C-33 FOR ROADWAY PROFILES.
3. MAXIMUM STEEPNESS FOR FILL SLOPES SHALL BE 3:1. MAXIMUM STEEPNESS FOR CUT SLOPES SHALL BE 3:1.
4. PROVIDE STANDARD CROWN SECTION ON ALL ROADWAYS UNLESS SHOWN OTHERWISE. PROVIDE FLAT SECTION WHERE PAVEMENT ABUTS FACE(S) OF BUILDINGS, DEVELOPING TYPICAL CROWN WITHIN 25' OF BUILDING FACE.
6. PROVIDE MOWING STRIP WHERE GRASS ABUTS FDN WALLS OR SHRUB BEDS. SEE DWG 40-C-1, 2 FOR LOCATION OF GRASS AREAS AND SHRUB BEDS.

JOSEPH A. GAUTHIER, STATE OF WASHINGTON, REGISTERED PROFESSIONAL ENGINEER

30-C-10	30-C-11
30-C-12	30-C-13
	30-C-14
30-C-15	30-C-16

DSGN	C. COSBY
DR	J.PIERONI
CHK	J GAUTHIER
APVD	J. GAUTHIER

CH2M HILL

NO.	DATE	REVISION	BY	APVD

REUSE OF DOCUMENTS
THIS DOCUMENT, AND THE IDEAS AND DESIGNS INCORPORATED HEREIN, AS AN INSTRUMENT OF PROFESSIONAL SERVICE, IS THE PROPERTY OF CH2M HILL AND IS NOT TO BE USED, IN WHOLE OR IN PART, FOR ANY OTHER PROJECT WITHOUT THE WRITTEN AUTHORIZATION OF CH2M HILL.
©CH2M HILL

VERIFY SCALE
BAR IS ONE INCH ON ORIGINAL DRAWING.
0 1"
IF NOT ONE INCH ON THIS SHEET, ADJUST SCALES ACCORDINGLY.

CITY OF BELLINGHAM, WASHINGTON
POST POINT WASTEWATER TREATMENT PLANT UPGRADE

SITE WORK
CIVIL/SITE WORK
SITE WORK

DWG NO. 30-C-11
DATE AUG. 1990
PROJ NO. SEA22462.C1

OVERLAY IDENTIFICATION: COMPOSITE, OTLAY, REEN, PROJID, FILE

[redacted]ERONI DESIGNED BY: C. COSBY
[redacted]ME: H:/PROJ2/BELLINGH/BL030C-M.DGN

SCALE: 1" = 20'

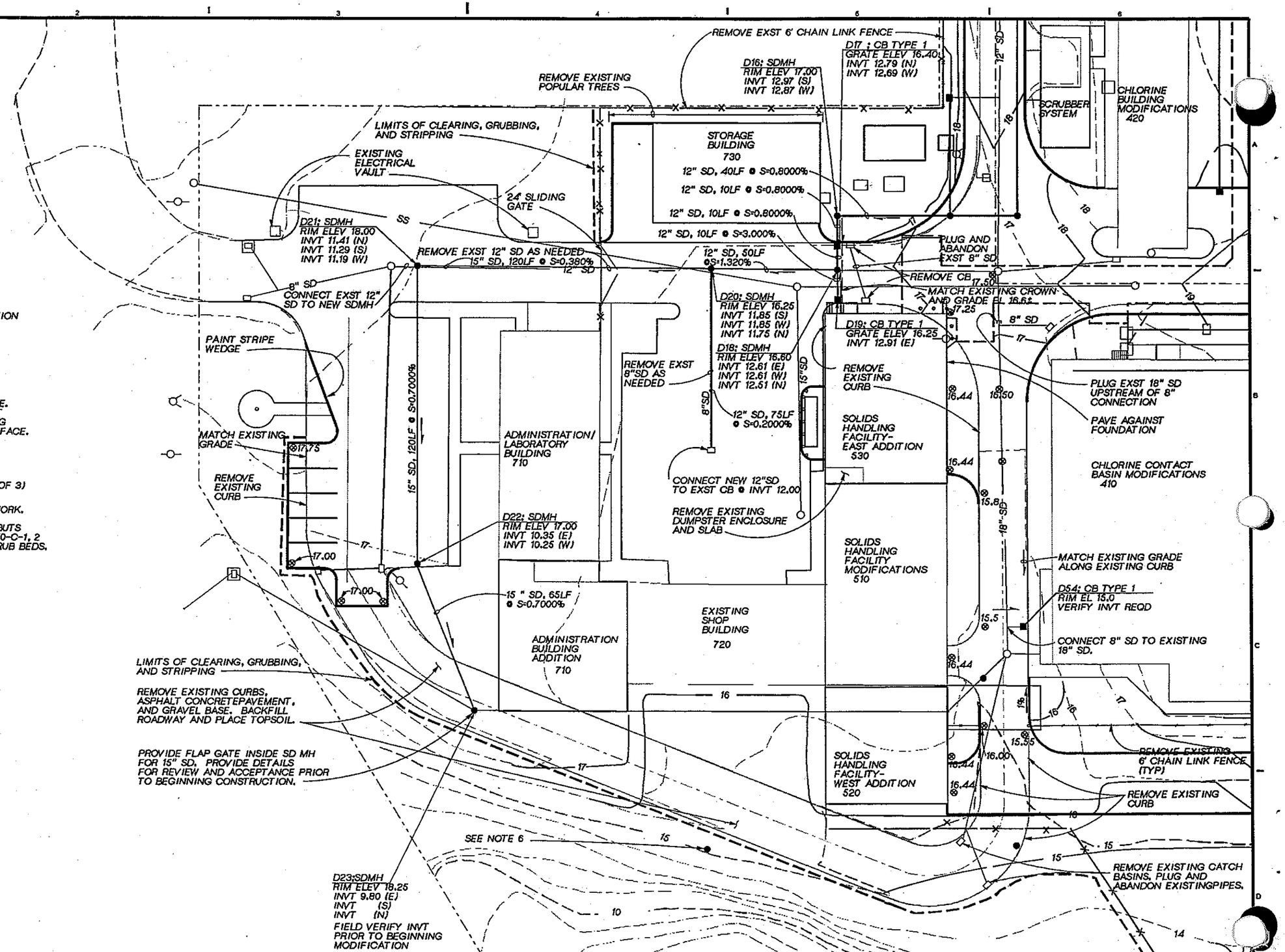

GRADING NOTES:

1. SLOPE UNIFORMLY BETWEEN SPOT ELEVATION SHOWN.
2. SEE DWG 30-C-32 AND 30-C-33 FOR ROADWAY PROFILES.
3. MAXIMUM STEEPNESS FOR FILL SLOPES SHALL BE 3:1. MAXIMUM STEEPNESS FOR CUT SLOPES SHALL BE 3:1.
4. PROVIDE STANDARD CROWN SECTION ON ALL ROADWAYS UNLESS SHOWN OTHERWISE. PROVIDE FLAT SECTION WHERE PAVEMENT ABUTS FACE(S) OF BUILDINGS, DEVELOPING TYPICAL CROWN WITHIN 25' OF BUILDING FACE.
5. LIMIT OF CLEARING, GRUBBING AND STRIPPING IS AT PROPERTY LINE OR AS SHOWN ON DRAWING.
6. SANITARY OVERFLOW MANHOLE (TYPICAL OF 3) SEE DWG 30-C-19.
7. SEE DWG 30-C-19 FOR PROCESS PIPING WORK.
8. PROVIDE MOWING STRIP WHERE GRASS ABUTS FDN WALLS OR SHRUB BEDS. SEE DWG 40-C-1, 2 FOR LOCATION OF GRASS AREAS AND SHRUB BEDS.

30-C-10	30-C-11
30-C-13	30-C-14
30-C-12	
30-C-15	30-C-16

JOSEPH A. GAUTHIER — STATE OF WASHINGTON — REGISTERED PROFESSIONAL ENGINEER

CH2M HILL

DSGN	C. COSBY
DR	J. PIERONI
CHK	J GAUTHIER
APVD	J GAUTHIER

NO.	DATE	REVISION	BY	APVD

REUSE OF DOCUMENTS

THIS DOCUMENT, AND THE IDEAS AND DESIGNS INCORPORATED HEREIN, AS AN INSTRUMENT OF PROFESSIONAL SERVICE, IS THE PROPERTY OF CH2M HILL AND IS NOT TO BE USED, IN WHOLE OR IN PART, FOR ANY OTHER PROJECT WITHOUT THE WRITTEN AUTHORIZATION OF CH2M HILL.
©CH2M HILL

VERIFY SCALE
BAR IS ONE INCH ON ORIGINAL DRAWING.
0 1"
IF NOT ONE INCH ON THIS SHEET, ADJUST SCALES ACCORDINGLY.

CITY OF BELLINGHAM, WASHINGTON
POST POINT WASTEWATER TREATMENT PLANT UPGRADE

SITE WORK
CIVIL/SITE WORK
SITE WORK

DWG NO. 30-C-12
DATE AUG. 1990
PROJ NO. SEA22462.C1

COMPOSITE
OVERLAY SCREEN
OVERLAY IDENTIFICATION
PROJID
FILE

DRAWN BY: J.PIERONI DESIGNED BY: C. COSBY
DGN NAME: H:/PROJ2/BELLINGH/BL030C-N.DGN

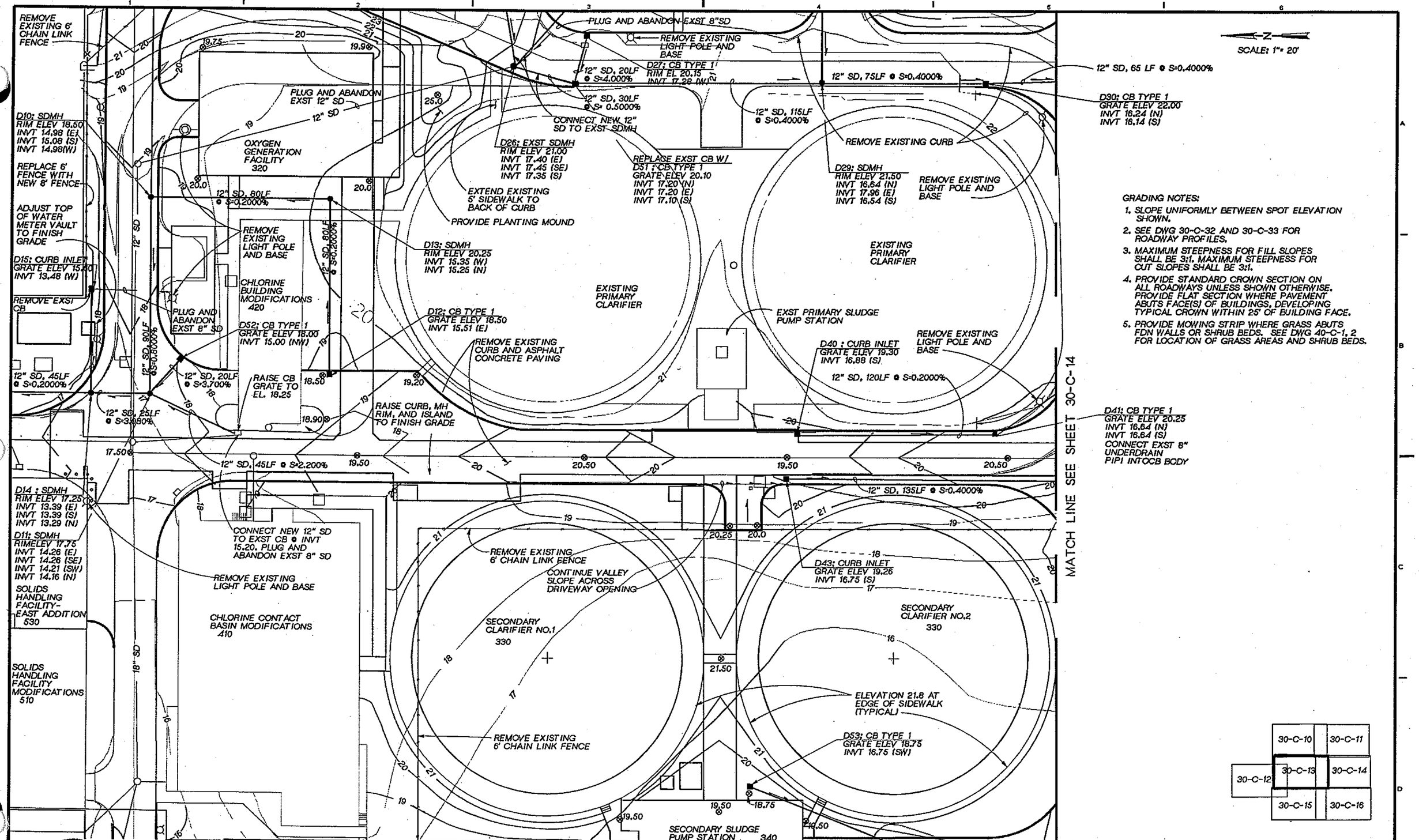

GRADING NOTES:

1. SLOPE UNIFORMLY BETWEEN SPOT ELEVATION SHOWN.
2. SEE DWG 30-C-32 AND 30-C-33 FOR ROADWAY PROFILES.
3. MAXIMUM STEEPNESS FOR FILL SLOPES SHALL BE 3:1. MAXIMUM STEEPNESS FOR CUT SLOPES SHALL BE 3:1.
4. PROVIDE STANDARD CROWN SECTION ON ALL ROADWAYS UNLESS SHOWN OTHERWISE. PROVIDE FLAT SECTION WHERE PAVEMENT ABUTS FACE(S) OF BUILDINGS, DEVELOPING TYPICAL CROWN WITHIN 25' OF BUILDING FACE.
5. PROVIDE MOWING STRIP WHERE GRASS ABUTS FDN WALLS OR SHRUB BEDS. SEE DWG 40-C-1, 2 FOR LOCATION OF GRASS AREAS AND SHRUB BEDS.

DSGN	C. COSBY
DR	J.PIERONI
CHK	J GAUTHIER
APVD	J GAUTHIER

NO.	DATE	REVISION	BY	APVD

REUSE OF DOCUMENTS

THIS DOCUMENT, AND THE IDEAS AND DESIGNS INCORPORATED HEREIN, AS AN INSTRUMENT OF PROFESSIONAL SERVICE, IS THE PROPERTY OF CH2M HILL AND IS NOT TO BE USED, IN WHOLE OR IN PART, FOR ANY OTHER PROJECT WITHOUT THE WRITTEN AUTHORIZATION OF CH2M HILL.

©CH2M HILL

VERIFY SCALE
BAR IS ONE INCH ON ORIGINAL DRAWING.
0 1"
IF NOT ONE INCH ON THIS SHEET, ADJUST SCALES ACCORDINGLY.

CITY OF BELLINGHAM, WASHINGTON
POST POINT WASTEWATER TREATMENT PLANT UPGRADE

SITE WORK

CIVIL/SITE WORK
SITE WORK

DWG NO. 30-C-13
DATE AUG. 1990
PROJ. NO. SEA22462.C1

DGN NAME: H:/PROJ2/BELLINGH/BL030C-O.DGN

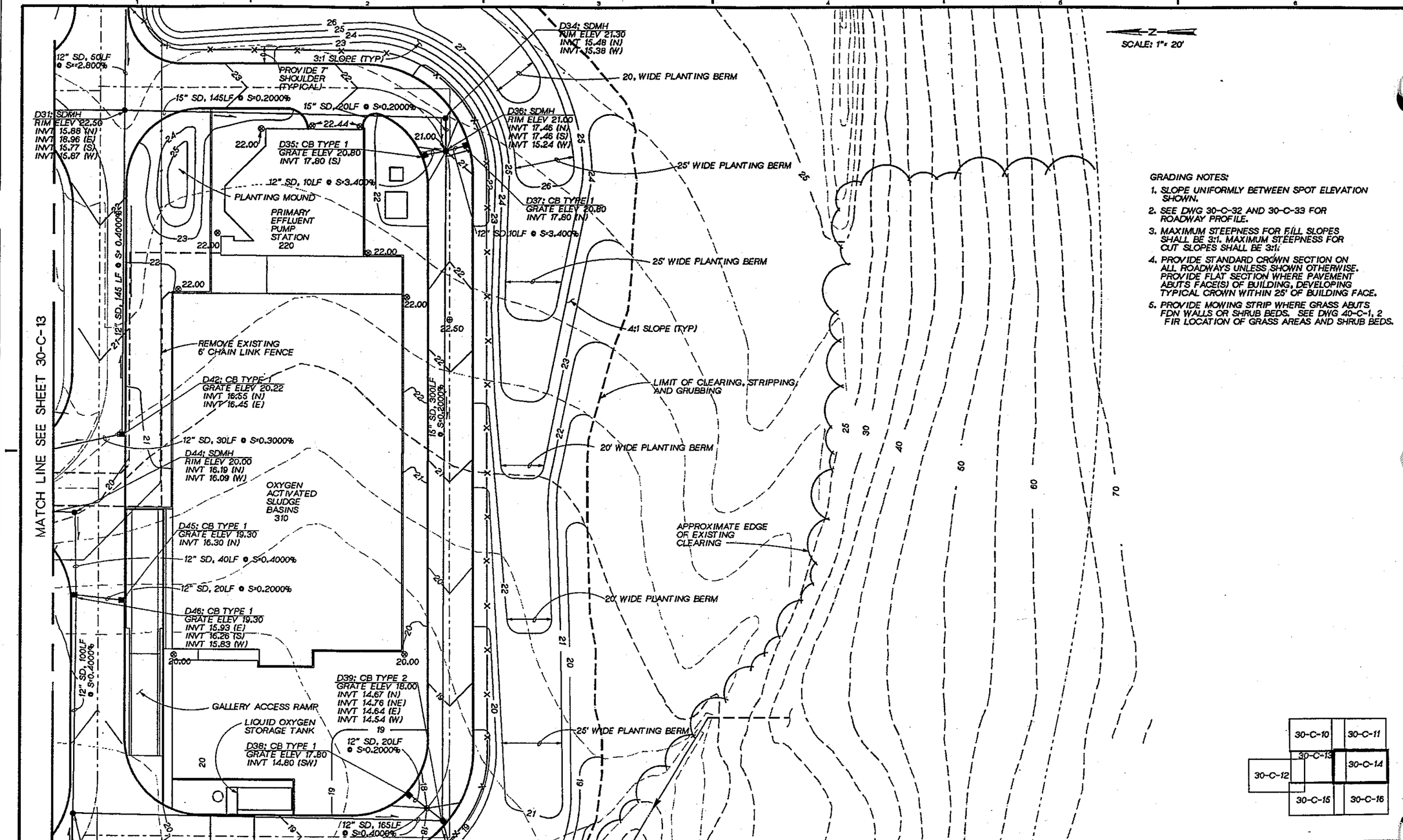

GRADING NOTES:

1. SLOPE UNIFORMLY BETWEEN SPOT ELEVATION SHOWN.
2. SEE DWG 30-C-32 AND 30-C-33 FOR ROADWAY PROFILE.
3. MAXIMUM STEEPNESS FOR FILL SLOPES SHALL BE 3:1. MAXIMUM STEEPNESS FOR CUT SLOPES SHALL BE 3:1.
4. PROVIDE STANDARD CROWN SECTION ON ALL ROADWAYS UNLESS SHOWN OTHERWISE. PROVIDE FLAT SECTION WHERE PAVEMENT ABUTS FACE(S) OF BUILDING, DEVELOPING TYPICAL CROWN WITHIN 25' OF BUILDING FACE.
5. PROVIDE MOWING STRIP WHERE GRASS ABUTS FDN WALLS OR SHRUB BEDS. SEE DWG 40-C-1, 2 FOR LOCATION OF GRASS AREAS AND SHRUB BEDS.

DSGN	C. COSBY			
DR	J.PIERONI			
CHK	J GAUTHIER			
APVD	J GAUTHIER	NO.	DATE	REVISION

BY | APVD

CH2M HILL

REUSE OF DOCUMENTS

THIS DOCUMENT, AND THE IDEAS AND DESIGNS INCORPORATED HEREIN, AS AN INSTRUMENT OF PROFESSIONAL SERVICE, IS THE PROPERTY OF CH2M HILL AND IS NOT TO BE USED, IN WHOLE OR IN PART, FOR ANY OTHER PROJECT WITHOUT THE WRITTEN AUTHORIZATION OF CH2M HILL.

©CH2M HILL

BAR IS ONE INCH ON ORIGINAL DRAWING. 0 1"

IF NOT ONE INCH ON THIS SHEET, ADJUST SCALES ACCORDINGLY.

CITY OF BELLINGHAM, WASHINGTON
POST POINT WASTEWATER TREATMENT PLANT UPGRADE

SITE WORK

CIVIL/SITE WORK
SITE WORK

DWG NO. 30-C-14
DATE AUG. 1990
PROJ NO. SEA22462.C1

OVERLAY IDENTIFICATION: COMPOSITE, OVERLAY, SCREEN
PROJID
FILE

DGN NAME: H:/PROJ2/BELLINGH/BL030C-P.DGN

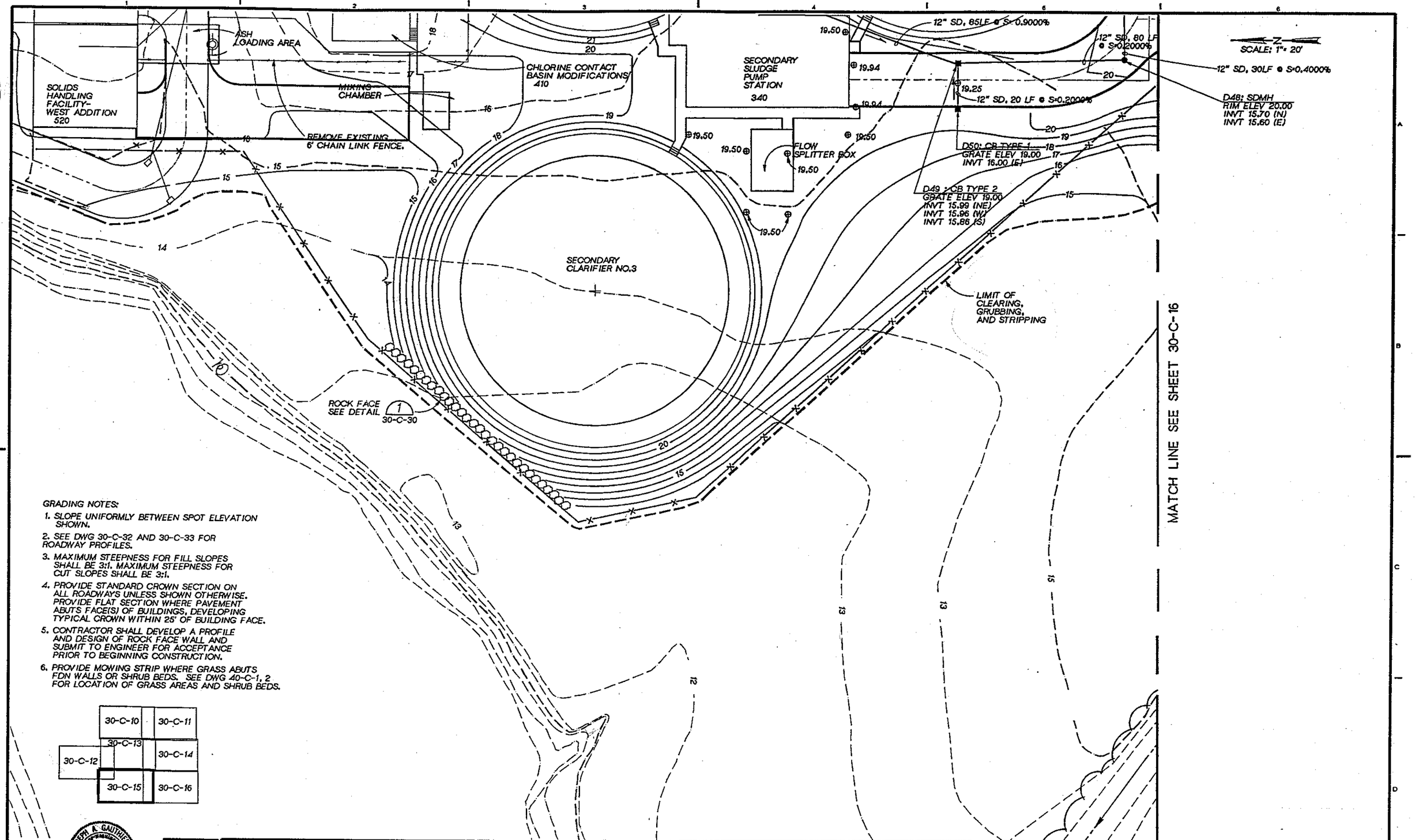

GRADING NOTES:

1. SLOPE UNIFORMLY BETWEEN SPOT ELEVATION SHOWN.
2. SEE DWG 30-C-32 AND 30-C-33 FOR ROADWAY PROFILES.
3. MAXIMUM STEEPNESS FOR FILL SLOPES SHALL BE 3:1. MAXIMUM STEEPNESS FOR CUT SLOPES SHALL BE 3:1.
4. PROVIDE STANDARD CROWN SECTION ON ALL ROADWAYS UNLESS SHOWN OTHERWISE. PROVIDE FLAT SECTION WHERE PAVEMENT ABUTS FACE(S) OF BUILDINGS, DEVELOPING TYPICAL CROWN WITHIN 25' OF BUILDING FACE.
5. CONTRACTOR SHALL DEVELOP A PROFILE AND DESIGN OF ROCK FACE WALL AND SUBMIT TO ENGINEER FOR ACCEPTANCE PRIOR TO BEGINNING CONSTRUCTION.
6. PROVIDE MOWING STRIP WHERE GRASS ABUTS FDN WALLS OR SHRUB BEDS. SEE DWG 40-C-1, 2 FOR LOCATION OF GRASS AREAS AND SHRUB BEDS.

30-C-10	30-C-11
30-C-13	30-C-14
30-C-12	
30-C-15	30-C-16

JOSEPH A. GAUTHIER PROFESSIONAL ENGINEER

CH2M HILL

DSGN	C. COSBY
DR	J.PIERONI
CHK	J GAUTHIER
APVD	J GAUTHIER

NO.	DATE	REVISION	BY	APVD

REUSE OF DOCUMENTS

THIS DOCUMENT, AND THE IDEAS AND DESIGNS INCORPORATED HEREIN, AS AN INSTRUMENT OF PROFESSIONAL SERVICE, IS THE PROPERTY OF CH2M HILL AND IS NOT TO BE USED, IN WHOLE OR IN PART, FOR ANY OTHER PROJECT WITHOUT THE WRITTEN AUTHORIZATION OF CH2M HILL.

©CH2M HILL

BAR IS ONE INCH ON ORIGINAL DRAWING. 0 1"

IF NOT ONE INCH ON THIS SHEET, ADJUST SCALES ACCORDINGLY.

CITY OF BELLINGHAM, WASHINGTON
POST POINT WASTEWATER TREATMENT PLANT UPGRADE

SITE WORK

CIVIL/SITE WORK
SITE WORK

DWG NO. 30-C-15
DATE AUG. 1990
PROJ NO. SEA22462.C1

DRAWN BY: J.PIERONI DESIGNED BY: C. COSBY
DGN NAME: H:/PROJ2/BELLINGH/BL030C-Q.DGN

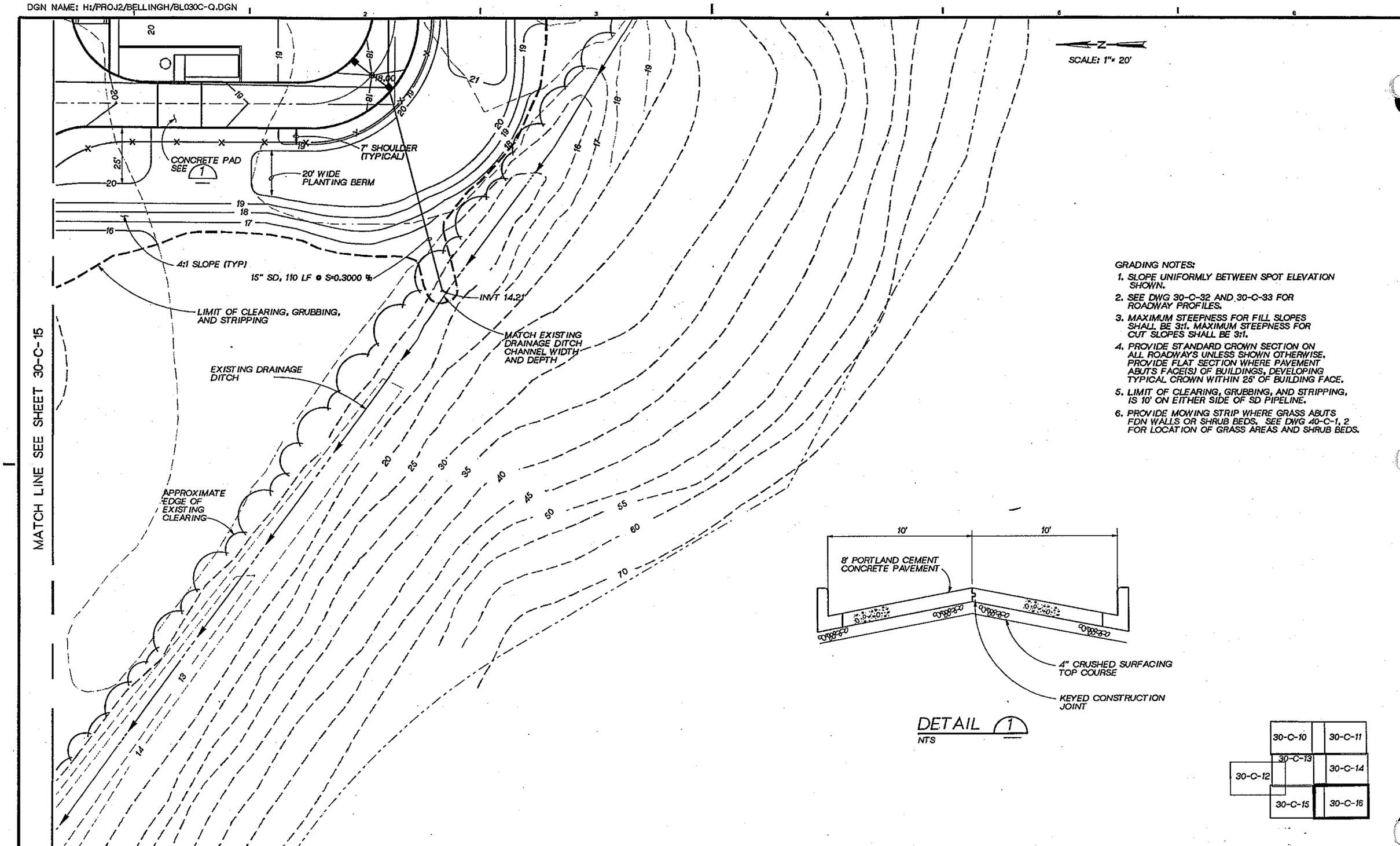

GRADING NOTES:

1. SLOPE UNIFORMLY BETWEEN SPOT ELEVATION SHOWN.
2. SEE DWG 30-C-32 AND 30-C-33 FOR ROADWAY PROFILES.
3. MAXIMUM STEEPNESS FOR FILL SLOPES SHALL BE 3:1. MAXIMUM STEEPNESS FOR CUT SLOPES SHALL BE 3:1.
4. PROVIDE STANDARD CROWN SECTION ON ALL ROADWAYS UNLESS SHOWN OTHERWISE. PROVIDE FLAT SECTION WHERE PAVEMENT ABUTS FACE(S) OF BUILDINGS, DEVELOPING TYPICAL CROWN WITHIN 25' OF BUILDING FACE.
5. LIMIT OF CLEARING, GRUBBING, AND STRIPPING, IS 10' ON EITHER SIDE OF SD PIPELINE.
6. PROVIDE MOWING STRIP WHERE GRASS ABUTS FDN WALLS OR SHRUB BEDS. SEE DWG 40-C-1, 2 FOR LOCATION OF GRASS AREAS AND SHRUB BEDS.

OVERLAY IDENTIFICATION: COMPOSITE, OVERLAY, SCREEN, PROJID, FILE

JOSEPH A. GAUTHIER, STATE OF WASHINGTON, REGISTERED PROFESSIONAL ENGINEER

CH2M HILL

DSGN	C. COSBY
DR	J.PIERONI
CHK	J GAUTHIER
APVD	J GAUTHIER

NO.	DATE	REVISION	BY	APVD

REUSE OF DOCUMENTS
THIS DOCUMENT, AND THE IDEAS AND DESIGNS INCORPORATED HEREIN, AS AN INSTRUMENT OF PROFESSIONAL SERVICE, IS THE PROPERTY OF CH2M HILL AND IS NOT TO BE USED, IN WHOLE OR IN PART, FOR ANY OTHER PROJECT WITHOUT THE WRITTEN AUTHORIZATION OF CH2M HILL.
©CH2M HILL

VERIFY SCALE
BAR IS ONE INCH ON ORIGINAL DRAWING.
0 1"
IF NOT ONE INCH ON THIS SHEET, ADJUST SCALES ACCORDINGLY.

CITY OF BELLINGHAM, WASHINGTON
POST POINT WASTEWATER TREATMENT PLANT UPGRADE

SITE WORK
CIVIL/SITE WORK
SITE WORK

DWG NO. 30-C-16
DATE AUG. 1990
PROJ NO. SEA22462.C1

DRAWN BY: B. CARR DESIGNED BY: E. RONSHAUGEN
DGN NAME: H:/PROJ2/BELLINGH/BL030C-R.DGN

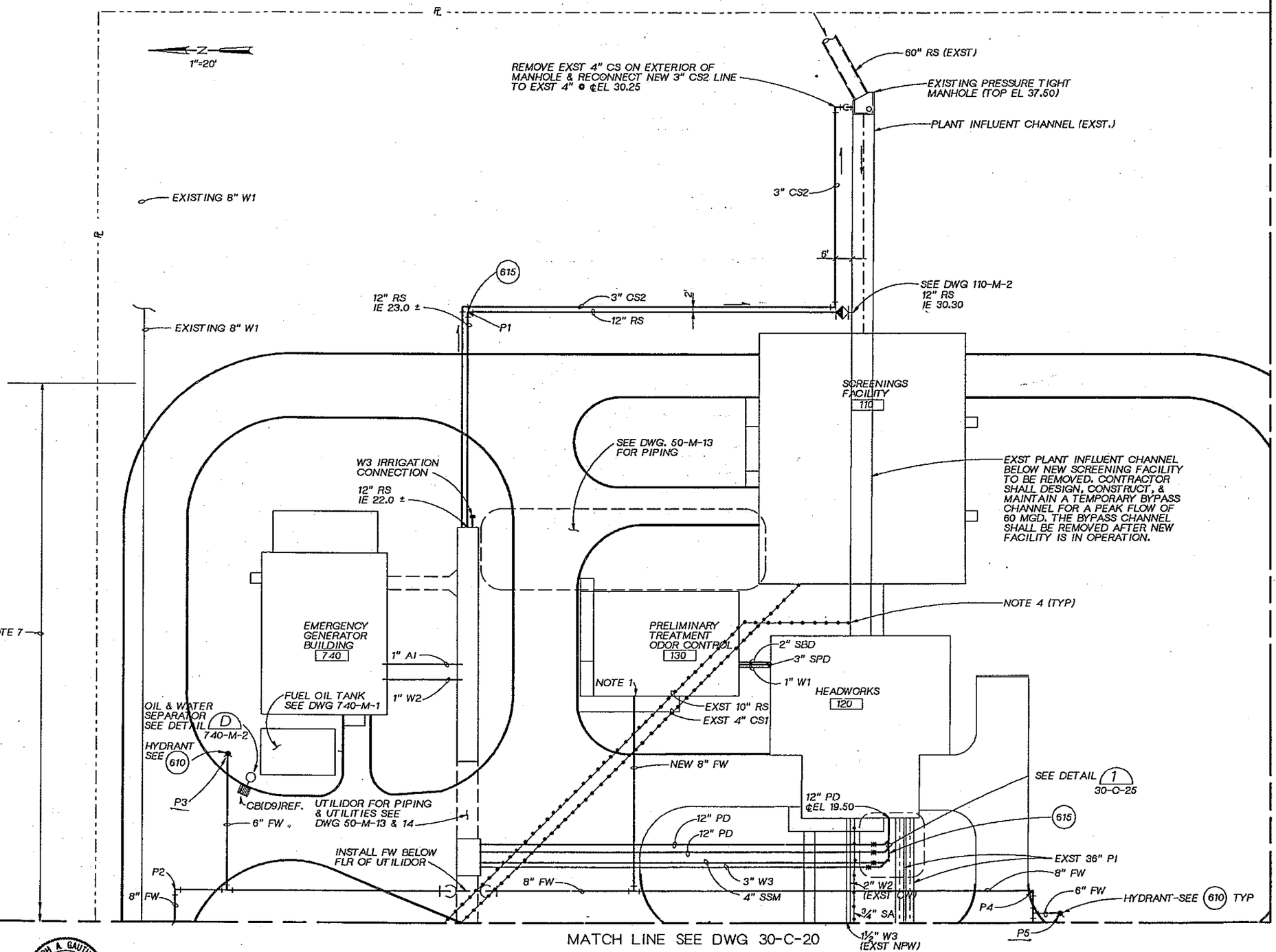

NUMBER	COORDINATE: (N)	(E)
P1	631166.43	1595019.27
P2	631282.06	1594800.27
P3	631261.18	1594851.95
P4	630953.54	1594793.09
P5	630943.47	1594784.13

NOTES

1. SEE BLDG. 130 PLANS AND SPECIFICATIONS FOR FW INDICATING VALVE LOCATION.
2. THRUST BLOCKING OF PIPING SHALL BE AS AS SPECIFIED AND AS INDICATED ON DWG. 30-C-25.
3. SEE DWG. 40-C-4 & 5 FOR IRRIGATION PIPING.
4. ABANDONED PIPING SHALL BE PLUGGED AT STRUCTURES. PIPE 12" IN DIAMETER AND SMALLER SHALL BE PLUGGED W/ NON-SHRINK GROUT TO A DEPTH OF 18" FROM INSIDE WALL. PIPE LARGER THAN 12" DIAMETER - SEE DETAIL 613
5. SEE ELECTRICAL PLANS AND DWG. 910-E-3 FOR ELECTRICAL INSTALLATIONS IN THIS AREA.
6. THE CONTRACTOR SHALL PROVIDE COORDINATION AS SPECIFIED IN SECTION 01040 AND TEMPORARY FACILITIES AND CONTROLS AS SPECIFIED IN SECTION 01500.
7. THE CONTRACTOR SHALL LOWER THE EXISTING 8" W1 TO PROVIDE A MINIMUM 4 FEET OF COVER FROM NEW ROAD SURFACE TO CROWN OF PIPE. SEE DWG 30-C-32 FOR ROAD PROFILE. PROVIDE TEMPORARY WATER SERVICE TO PLANT DURING CONSTRUCTION.
8. LAY PIPE AT UNIFORM SLOPE BETWEEN ELEVATIONS SHOWN.
9. SEE 800-M-1 & 800-M-2 FOR PIPING AND VALVE SCHEDULE.
10. FOR TYPICAL PIPE TRENCH SEE DETAIL 609
11. SEE DWG 10-G-7 - GENERAL NOTES

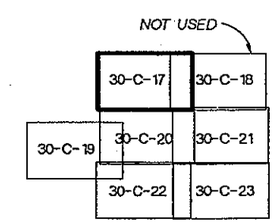

JOSEPH A. GAUTHIER STATE OF WASHINGTON REGISTERED PROFESSIONAL ENGINEER

CH2M HILL

DSGN	E.RONSHAUGEN
DR	J.PIERONI
CHK	J GAUTHIER
APVD	J GAUTHIER

NO.	DATE	REVISION	BY	APVD

REUSE OF DOCUMENTS
THIS DOCUMENT, AND THE IDEAS AND DESIGNS INCORPORATED HEREIN, AS AN INSTRUMENT OF PROFESSIONAL SERVICE, IS THE PROPERTY OF CH2M HILL AND IS NOT TO BE USED, IN WHOLE OR IN PART, FOR ANY OTHER PROJECT WITHOUT THE WRITTEN AUTHORIZATION OF CH2M HILL.
© CH2M HILL

BAR IS ONE INCH ON ORIGINAL DRAWING. 0 1"
IF NOT ONE INCH ON THIS SHEET, ADJUST SCALES ACCORDINGLY.

CITY OF BELLINGHAM, WASHINGTON
POST POINT WASTEWATER TREATMENT PLANT UPGRADE

SITE WORK
CIVIL/SITE WORK
PROCESS PIPING PLAN

DWG NO. 30-C-17
DATE AUG. 1990
PROJ NO. SEA22452.C1

DRAWN BY: B. CARR DESIGNED BY: E. RONSHAUGEN
DGN NAME: H:/PROJ2/BELLINGH/BL030C-T.DGN

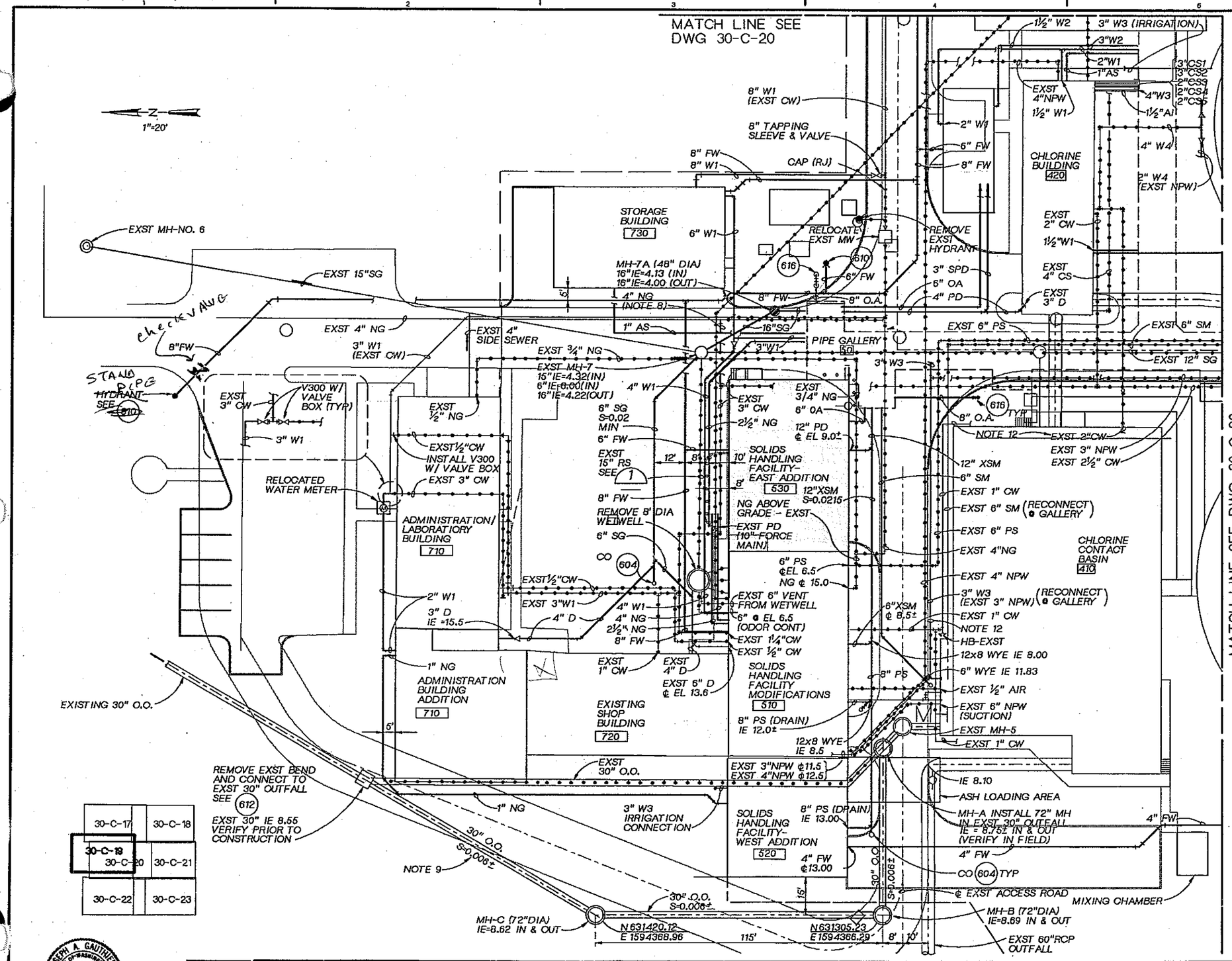

NOTES:

1. SEE DWG 10-G-7 GENERAL NOTES.
2. SEE DWG 800-M-1 & 800-M-2 FOR PIPING AND VALVE SCHEDULE.
3. SEE DETAIL 609 FOR TYPICAL TRENCH SECTION.
4. THE CONTRACTOR SHALL PROVIDE COORDINATION AS SPECIFIED IN SECTION 01040 AND TEMPORARY FACILITIES AND CONTROLS AS SPECIFIED IN SECTION 01500.
5. SEE DWG 40-C-4 & 40-C-5 FOR IRRIGATION PIPING.
6. LAY PIPE AT UNIFORM SLOPE BETWEEN ELEVATIONS SHOWN.
7. THE EXISTING PIPING SHOWN HAS BEEN TAKEN FROM EXISTING RECORD DRAWINGS WHICH ARE INCLUDED IN VOLUME 7 OF THE CONTRACT DOCUMENTS.
8. CONNECTIONS TO AND EXTENSION OF NATURAL GAS SERVICE TO THE GAS COMPANY METER AND REGULATOR SHALL BE BY THE GAS COMPANY. SEE DETAIL 1
9. 30" OVERFLOW OUTFALL SHALL BE INSTALLED AT UNIFORM SLOPE BETWEEN MH-A AND CONNECTION WITH EXISTING PIPE NEAR NW CORNER BLDG. 710.
10. SEE DWG 910-E-5 & 6 AND ELECTRICAL PLANS FOR ELECTRICAL WORK IN THIS AREA.
11. SEE DWG 30-C-12, 13, & 15 FOR SITEWORK IN THIS AREA.
12. ROUTE W3 & W4 AT CHLORINE CONTACT BASIN AS INDICATED ON DWG 410-S-1.

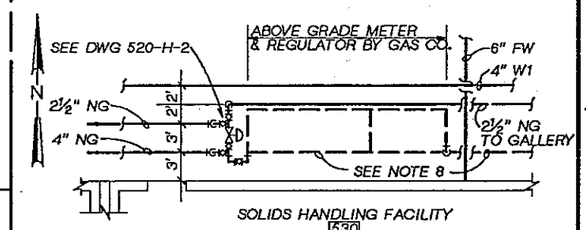

DETAIL 1
⅛"=1'-0"

DSGN E.RONSHAUGEN					
DR J.PIERONI					
CHK J GAUTHIER					
APVD J GAUTHIER	NO.	DATE	REVISION	BY	APVD

CH2M-HILL

REUSE OF DOCUMENTS
THIS DOCUMENT, AND THE IDEAS AND DESIGNS INCORPORATED HEREIN, AS AN INSTRUMENT OF PROFESSIONAL SERVICE, IS THE PROPERTY OF CH2M HILL AND IS NOT TO BE USED, IN WHOLE OR IN PART, FOR ANY OTHER PROJECT WITHOUT THE WRITTEN AUTHORIZATION OF CH2M HILL.
©CH2M HILL

SCALE BAR IS ONE INCH ON ORIGINAL DRAWING. 0 — 1"
IF NOT ONE INCH ON THIS SHEET, ADJUST SCALES ACCORDINGLY.

CITY OF BELLINGHAM, WASHINGTON
POST POINT WASTEWATER TREATMENT PLANT UPGRADE

SITE WORK
CIVIL/SITE WORK
PROCESS PIPING PLAN

DWG NO. 30-C-19
DATE AUG. 1990
PROJ NO. SEA22462.C1

OVERLAY IDENTIFICATION: COMPOSITE, PROJID, FILE, DELAY, SIN

DRAWN BY: D. CAHY DESIGNED BY: E.RONSHAUGEN
DGN NAME: H:/PROJ2/BELLINGH/BL030C-U.DGN

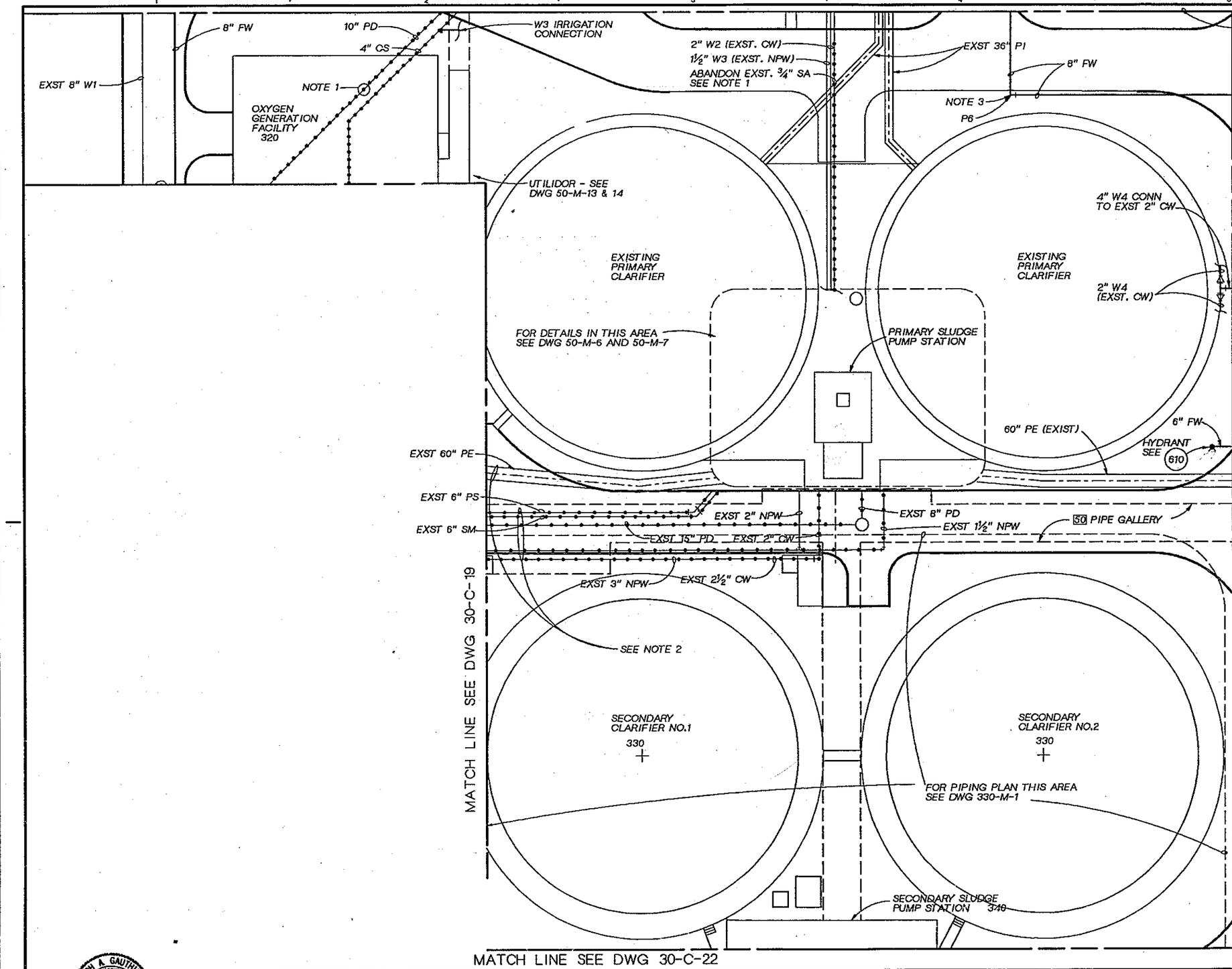

MATCH LINE SEE DWG 30-C-17

1"=20'

NUMBER	COORDINATE: (N)	(E)
P6	630954.48	1594749.97

NOTES

1. ABANDONED PIPING SHALL BE PLUGGED AT STRUCTURES. PIPE 12" DIAMETER AND SMALLER SHALL BE PLUGGED W/ NON-SHRINK GROUT TO A DEPTH OF 18 INCHES FROM INSIDE WALL OR OTHER PERMANENT WATER TIGHT PLUG. PIPE LARGER THAN 12" DIAMETER SHALL BE PLUGGED PER DETAIL 613.
2. THE CONTRACTOR SHALL PROVIDE COORDINATION AS SPECIFIED IN SECTION 01040 AND TEMPORARY FACILITIES AND CONTROLS AS SPECIFIED IN SECTION 01500.
3. THRUST BLOCKING OF PIPING SHALL BE AS SPECIFIED AND AS INDICATED ON DWG 30-C-25.
4. SEE ELECTRICAL PLANS AND DWG 910-E-6 FOR ELECTRICAL INSTALLATIONS IN THIS AREA.
5. SEE DWG 800-M-1 & 800-M-2 FOR PIPING AND VALVE SCHEDULE.
6. SEE DETAIL 609 FOR TYPICAL PIPE TRENCH.
7. SEE DWG 10-G-7 GENERAL NOTES.

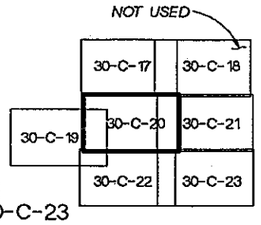

JOSEPH A. GAUTHIER STATE OF WASHINGTON REGISTERED PROFESSIONAL ENGINEER

CH2M HILL

DSGN	E.RONSHAUGEN
DR	J.PIERONI
CHK	J GAUTHIER
APVD	J GAUTHIER

NO.	DATE	REVISION	BY	APVD

REUSE OF DOCUMENTS
THIS DOCUMENT, AND THE IDEAS AND DESIGNS INCORPORATED HEREIN, AS AN INSTRUMENT OF PROFESSIONAL SERVICE, IS THE PROPERTY OF CH2M HILL AND IS NOT TO BE USED, IN WHOLE OR IN PART, FOR ANY OTHER PROJECT WITHOUT THE WRITTEN AUTHORIZATION OF CH2M HILL.
©CH2M HILL

BAR IS ONE INCH ON ORIGINAL DRAWING. 0 1"
IF NOT ONE INCH ON THIS SHEET, ADJUST SCALES ACCORDINGLY.

CITY OF BELLINGHAM, WASHINGTON
POST POINT WASTEWATER TREATMENT PLANT UPGRADE

SITE WORK
CIVIL/SITE WORK
PROCESS PIPING PLAN

DWG NO. 30-C-20
DATE AUG. 1990
PROJ NO. SEA22462.C1

DRAWN BY: J.PIERONI DESIGNED BY: E. RONSHAUGEN
DGN NAME: H:/PROJ2/BELLINGH/BL030C-V.DGN

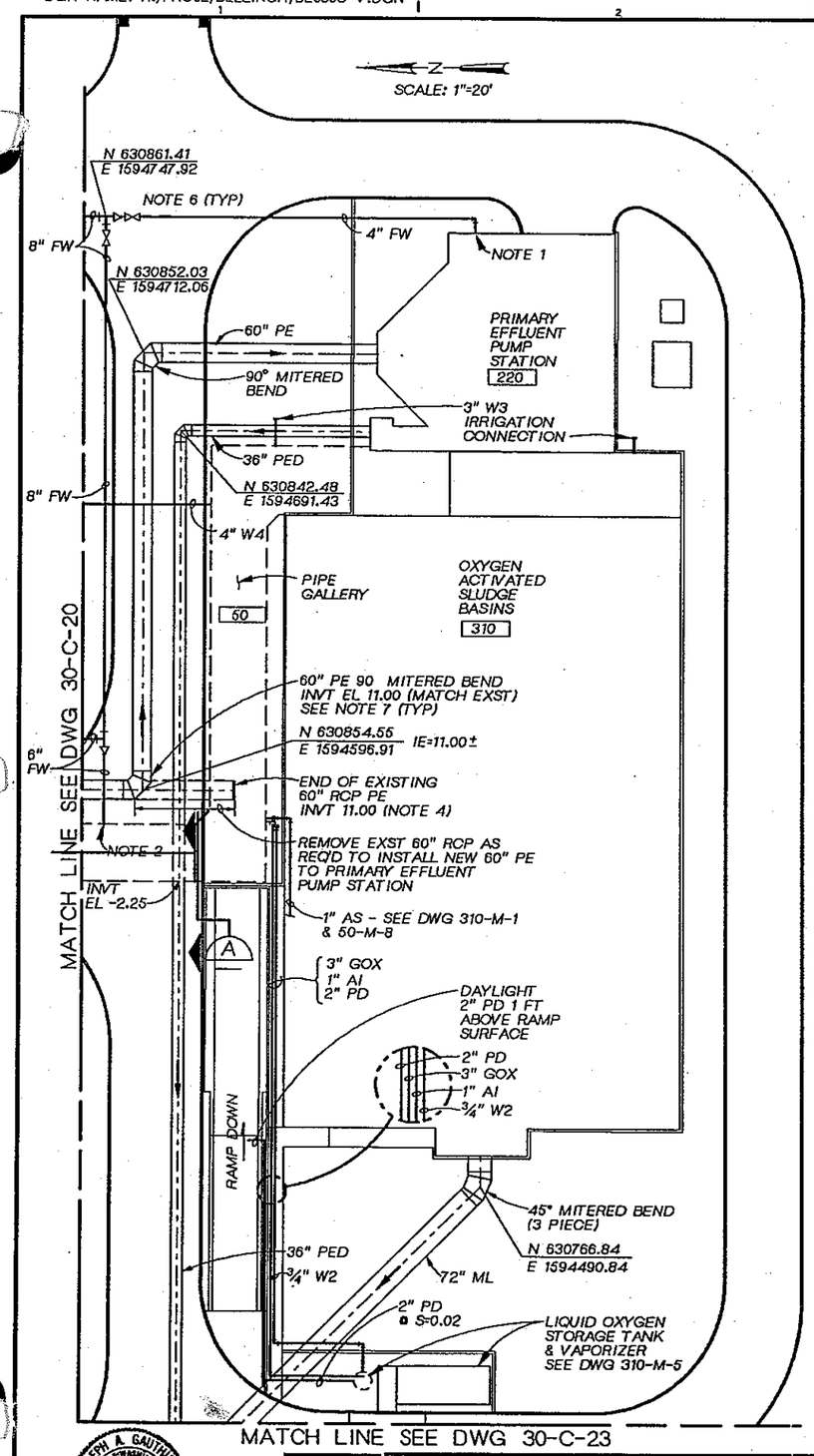

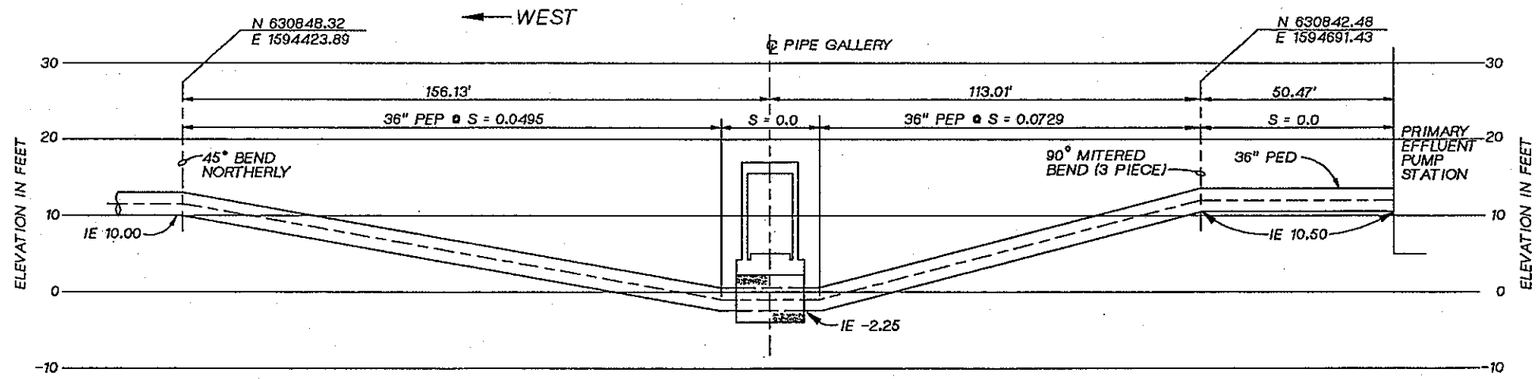

36" PED PARTIAL PROFILE

HORIZ 1"=20'
VERT 1"=10'

NOTES:

1. SEE BLDG 220 PLAN AND SPECIFICATIONS FOR FW INDICATING VALVE.
2. SEE DWG 50-M-8 AND SPECIFICATIONS FOR FW INDICATING VALVES.
3. SEE ELECTRICAL PLANS AND DWG 910-E-7 FOR ELECTRICAL INSTALLATIONS IN THIS IN THIS AREA.
4. REMOVE AND DISPOSE OF EXCESS PIPE.
5. SEE DWG 40-C-4 & 5 FOR IRRIGATION PIPING.
6. THRUST BLOCKING OF PIPING SHALL BE AS SPECIFIED AND AS INDICATED ON DWG 30-C-25.
7. MITERED BENDS SHALL BE FABRICATED AS SPECIFIED.
8. SEE DWG 800-M-1 & 2 FOR PIPING AND VALVE SCHEDULE.
9. SEE DETAIL (609) FOR TYPICAL PIPE TRENCH.
10. SEE DWG 10-G-7 FOR GENERAL NOTES.

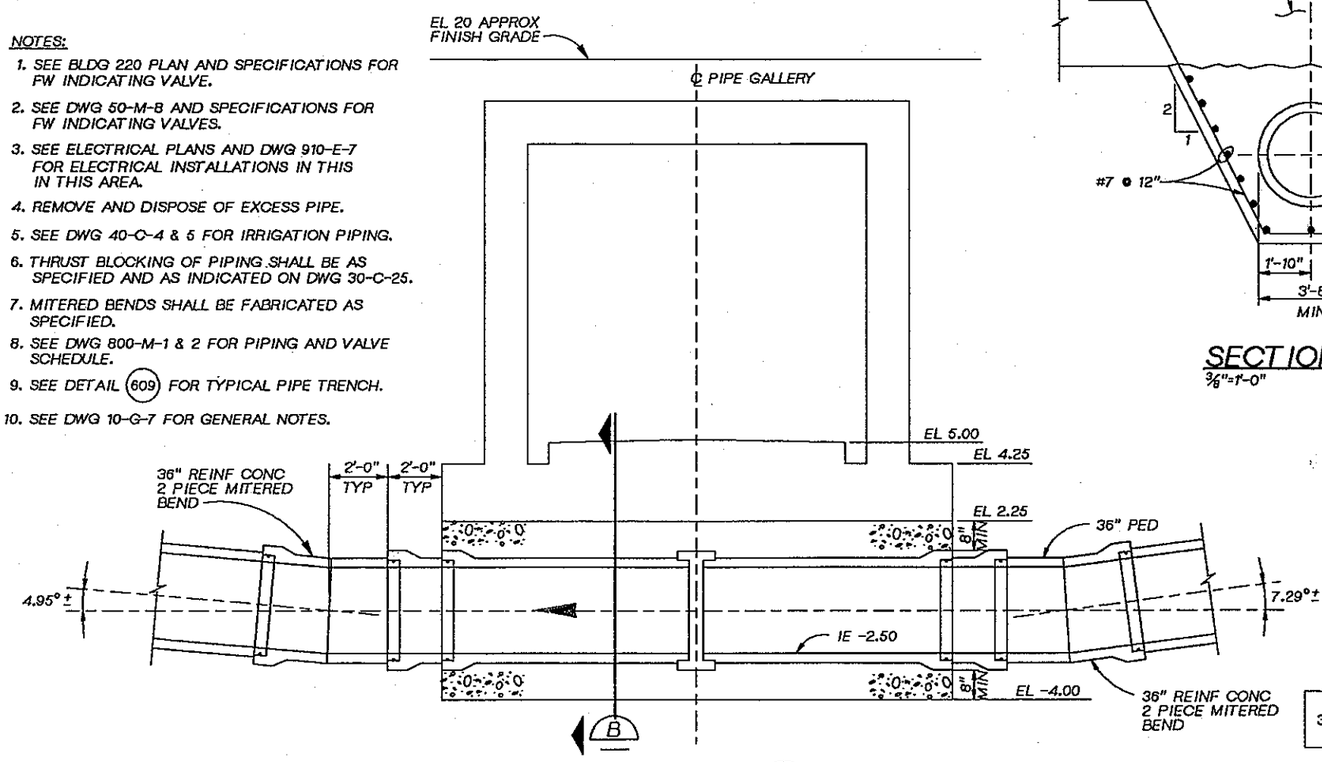

SECTION A

3/8"=1'-0"

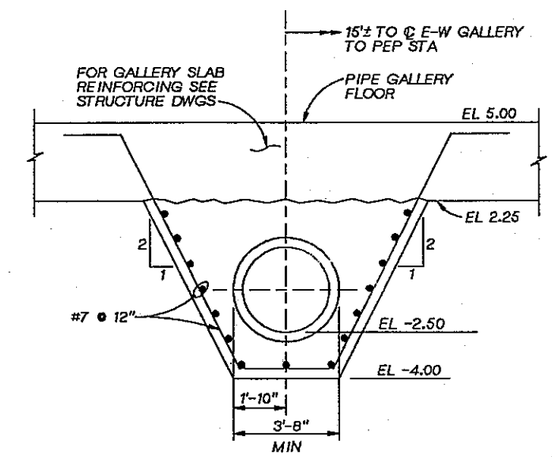

SECTION B

3/8"=1'-0"

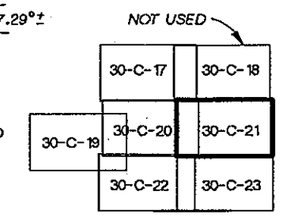

OVERLAY IDENTIFICATION: COMPOSITE
PROJID
PLAY
FILE

JOSEPH A. GAUTHIER
STATE OF WASHINGTON
REGISTERED PROFESSIONAL ENGINEER

CH2M HILL

DSGN	E.RONSHAUGEN
DR	J.PIERONI
CHK	J GAUTHIER
APVD	J GAUTHIER

NO.	DATE	REVISION	BY	APVD

REUSE OF DOCUMENTS
THIS DOCUMENT, AND THE IDEAS AND DESIGNS INCORPORATED HEREIN, AS AN INSTRUMENT OF PROFESSIONAL SERVICE, IS THE PROPERTY OF CH2M HILL AND IS NOT TO BE USED, IN WHOLE OR IN PART, FOR ANY OTHER PROJECT WITHOUT THE WRITTEN AUTHORIZATION OF CH2M HILL.
©CH2M HILL

BAR IS ONE INCH ON ORIGINAL DRAWING.
0 1"
IF NOT ONE INCH ON THIS SHEET, ADJUST SCALES ACCORDINGLY.

CITY OF BELLINGHAM, WASHINGTON
POST POINT WASTEWATER TREATMENT PLANT UPGRADE

SITE WORK
CIVIL/SITE WORK
PROCESS PIPING PLAN

DWG NO. 30-C-21
DATE AUG. 1990
PROJ NO. SEA22452.C1

DGN NAME: H:/PROJ2/BELLINGH/BL030C-W.DGN

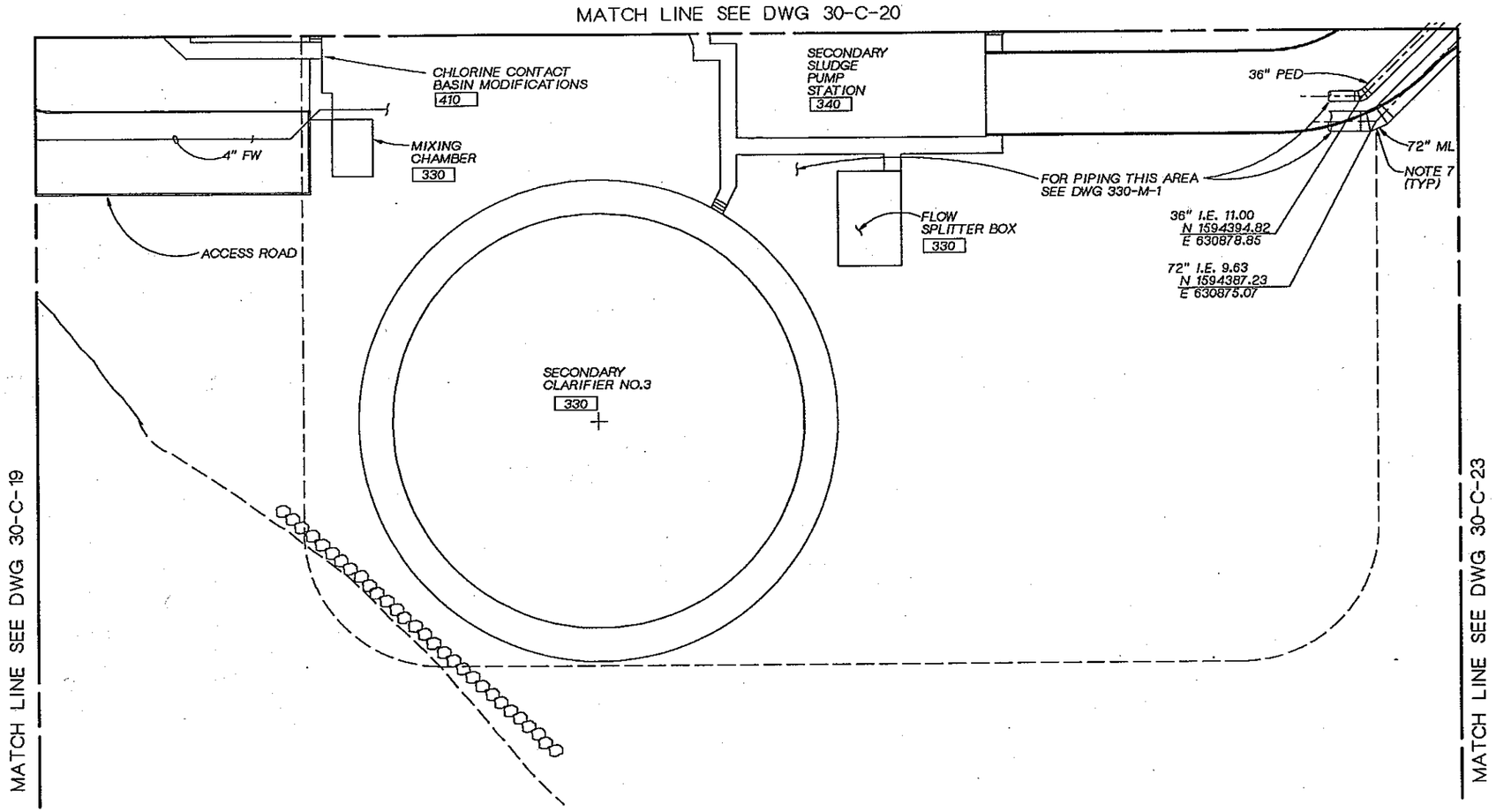

NOTES:

1. SEE DWG 10-G-7 GENERAL NOTES.
2. SEE DWG 800-M-1 & 800-M-2 FOR PIPING AND VALVE SCHEDULE.
3. SEE DETAIL (609) FOR TYPICAL TRENCH SECTION.
4. THE CONTRACTOR SHALL PROVIDE COORDINATION AS SPECIFIED IN SECTION 01040 AND TEMPORARY FACILITIES AND CONTROLS AS SPECIFIED IN SECTION 01500.
5. SEE DWG 40-C-4 AND 40-C-5 FOR FOR IRRIGATION PIPING.
6. LAY PIPE AT UNIFORM SLOPE BETWEEN ELEVATIONS SHOWN.
7. MITERED BENDS SHALL BE FABRICATED AS SPECIFIED.

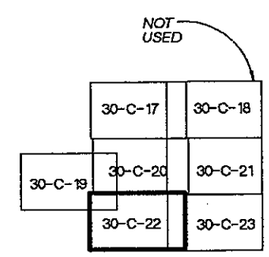

JOSEPH A. GAUTHIER
STATE OF WASHINGTON
REGISTERED PROFESSIONAL ENGINEER

CH2M HILL

DSGN	E.RONSHAUGEN
DR	J.PIERONI
CHK	J GAUTHIER
APVD	J GAUTHIER

NO.	DATE	REVISION	BY	APVD

REUSE OF DOCUMENTS
THIS DOCUMENT, AND THE IDEAS AND DESIGNS INCORPORATED HEREIN, AS AN INSTRUMENT OF PROFESSIONAL SERVICE, IS THE PROPERTY OF CH2M-HILL AND IS NOT TO BE USED, IN WHOLE OR IN PART, FOR ANY OTHER PROJECT WITHOUT THE WRITTEN AUTHORIZATION OF CH2M HILL.
©CH2M HILL

BAR IS ONE INCH ON ORIGINAL DRAWING.
0 1"
IF NOT ONE INCH ON THIS SHEET, ADJUST SCALES ACCORDINGLY.

CITY OF BELLINGHAM, WASHINGTON
POST POINT WASTEWATER TREATMENT PLANT UPGRADE

SITE WORK
CIVIL/SITE WORK
PROCESS PIPING PLAN

DWG NO. 30-C-22
DATE AUG. 1990
PROJ NO. SEA22462.C1

DRAWN BY: J.PIERONI DESIGNED BY: E. RONSHAUGEN
DGN NAME: H:/PROJ2/BELLINGH/BL030C-X.DGN

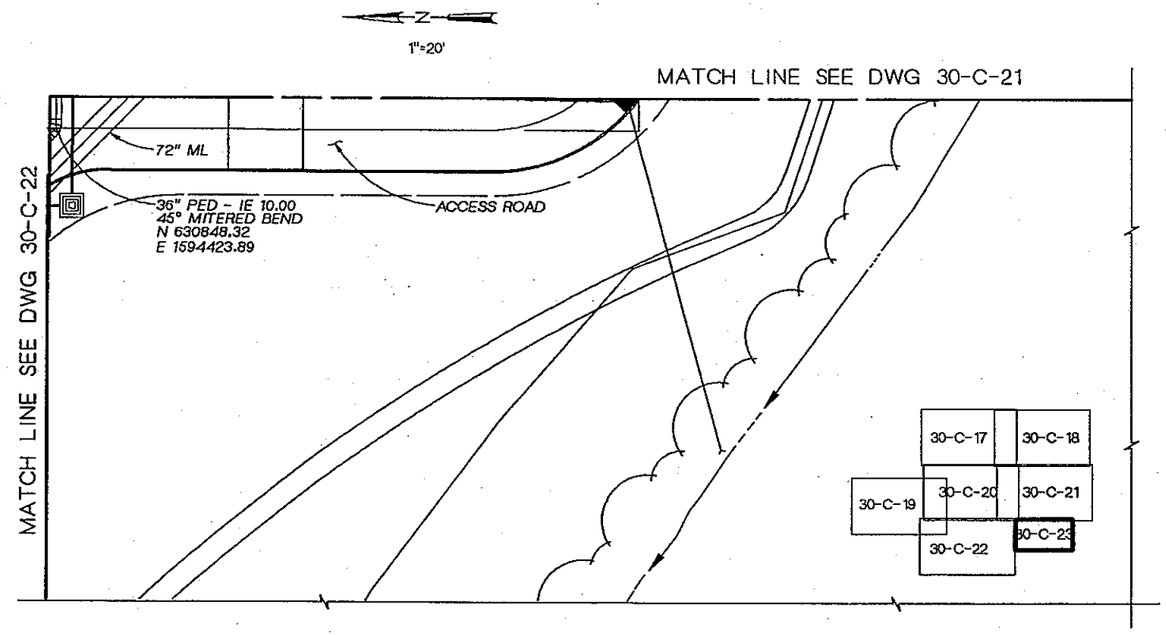

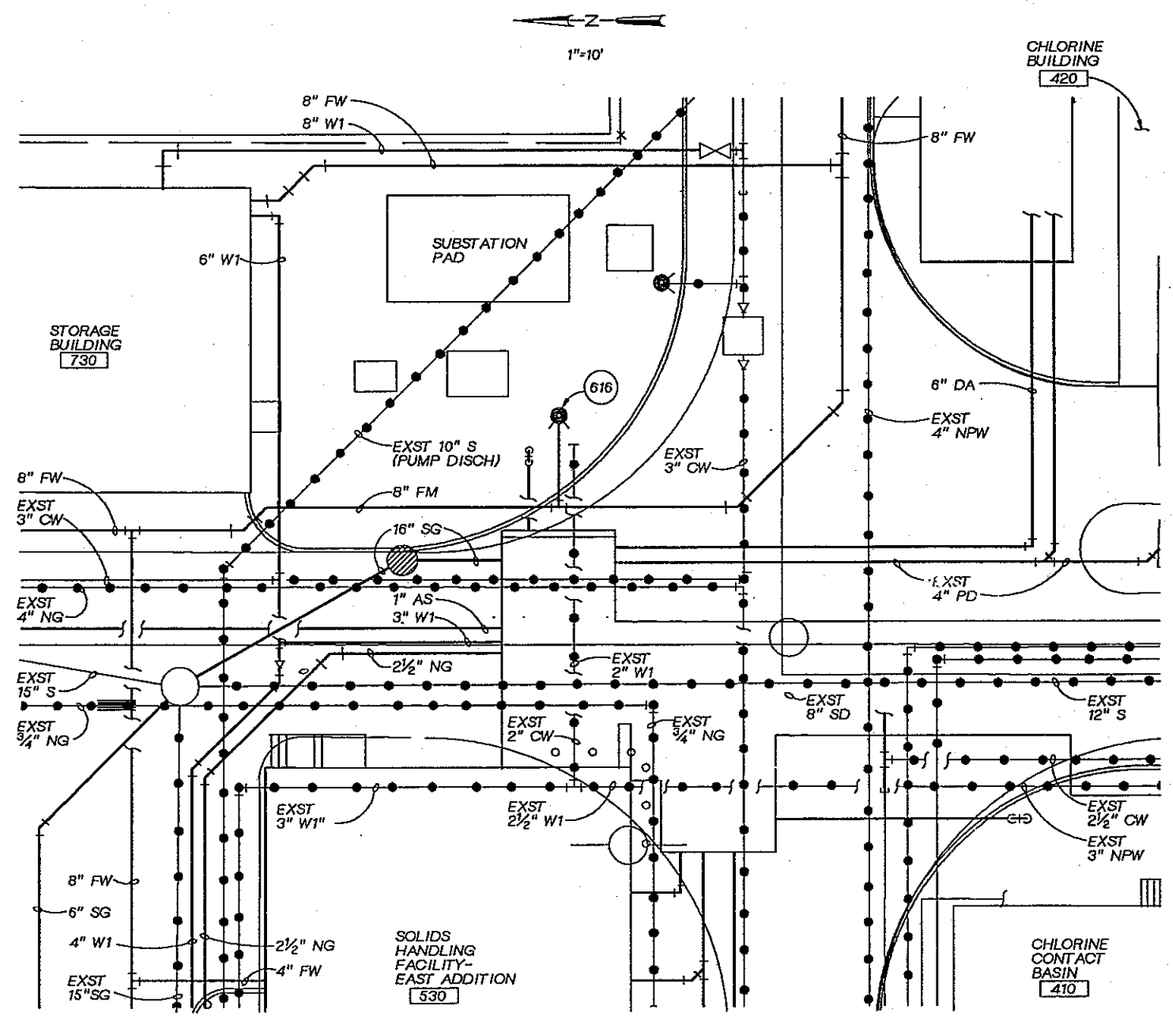

(SEE DWG 30-C-19)

NOTE:
FOR STORM DRAINAGE SYSTEM SEE DWG 30-C-13.

PARTIAL ENLARGED PLAN

1"=10'

OVERLAY IDENTIFICATION | COMPOSITE
PROJID | OVERLAY
FILE | GEN

JOSEPH A. GAUTHIER STATE OF WASHINGTON REGISTERED PROFESSIONAL ENGINEER

CH2M HILL

DSGN	E.RONSHAUGEN				
DR	J.PIERONI				
CHK	J. GAUTHIER				
APVD	J. GAUTHIER	NO.	DATE	REVISION	BY	APVD

REUSE OF DOCUMENTS
THIS DOCUMENT, AND THE IDEAS AND DESIGNS INCORPORATED HEREIN, AS AN INSTRUMENT OF PROFESSIONAL SERVICE, IS THE PROPERTY OF CH2M HILL AND IS NOT TO BE USED, IN WHOLE OR IN PART, FOR ANY OTHER PROJECT WITHOUT THE WRITTEN AUTHORIZATION OF CH2M HILL.
©CH2M HILL

BAR IS ONE INCH ON ORIGINAL DRAWING.
0 1"
IF NOT ONE INCH ON THIS SHEET, ADJUST SCALES ACCORDINGLY.

CITY OF BELLINGHAM, WASHINGTON
POST POINT WASTEWATER TREATMENT PLANT UPGRADE

SITE WORK
CIVIL/SITE WORK
PROCESS PIPING PLAN

DWG NO. 30-C-23
DATE AUG. 1990
PROJ. NO. SEA22462.C1

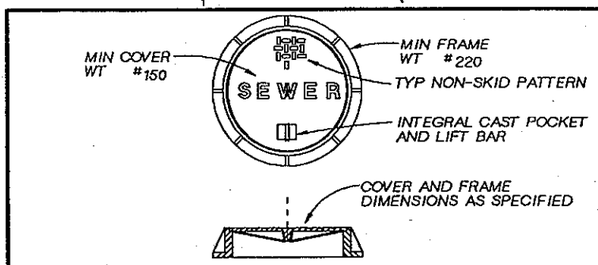

STANDARD MANHOLE FRAME AND COVER (601)

NTS

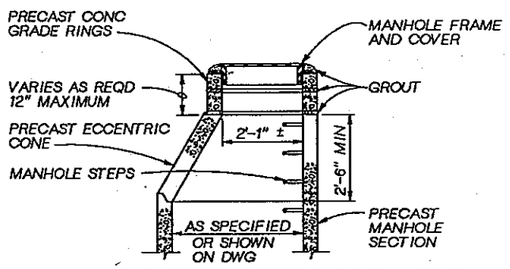

MANHOLE TOP SECTION WITH RING EXTENSION (602)

NTS

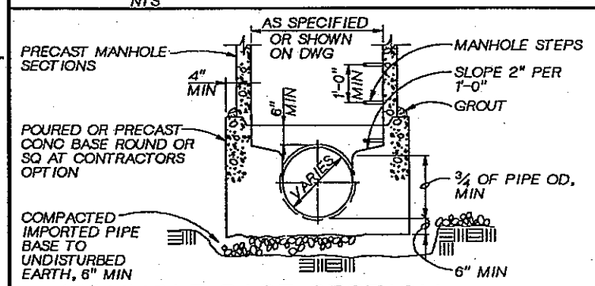

MANHOLE BASE SECTION 24" TO 36" PIPE (603)

NTS

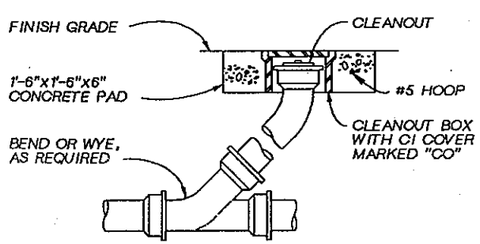

EXTERIOR CLEANOUT DETAIL (604)

NTS

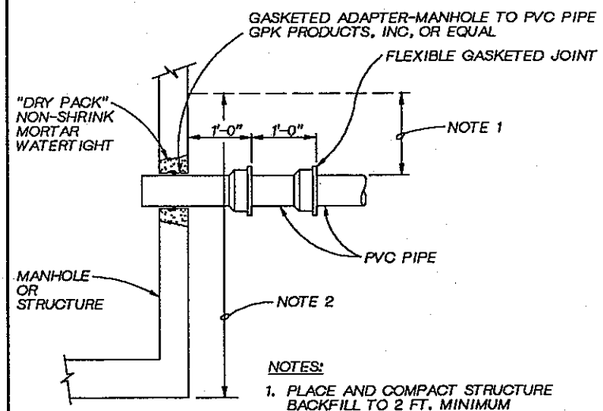

NOTES:

1. PLACE AND COMPACT STRUCTURE BACKFILL TO 2 FT. MINIMUM ABOVE TOP OF PIPE BEFORE INSTALLING PIPE. INSTALL PIPE IN TRENCH EXCAVATED IN COMPACTED BACKFILL.
2. PARTICULAR CARE SHOULD BE TAKEN IN PLACING AND COMPACTING BACKFILL ADJACENT TO THE MANHOLE OR STRUCTURE AND BENEATH PIPE TRENCHES IN THE COMPACTED BACKFILL.

TYPICAL PVC PIPE ENTRY (608)

NTS

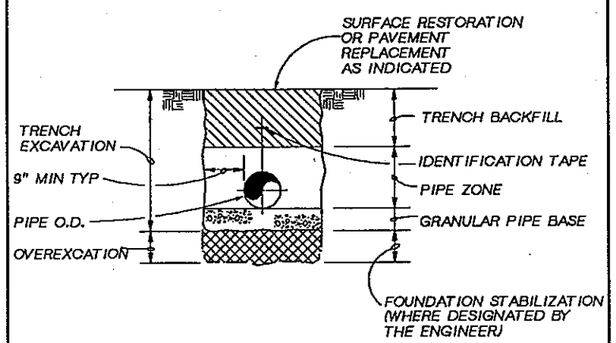

TRENCH TERMINOLOGY (609)

NTS (REFER TO SECTION "EARTHWORK" IN SPECIFICATIONS.)

NOTES:

1. A THRUST BLOCK 2 FT. SQUARE ALL BE PLACED AT THE BACK OF THE HYDRANT SHOE FROM THE DITCH BOTTOM TO A POINT HALF WAY BETWEEN THE CENTER AND TOP OF SHOE. THRUST BLOCKING SHALL NOT OBSTRUCT BOLTS OR DRAIN HOLES. SEE (615) SIM
2. VERIFY OUTLET THREAD PATTERN W/ OWNER

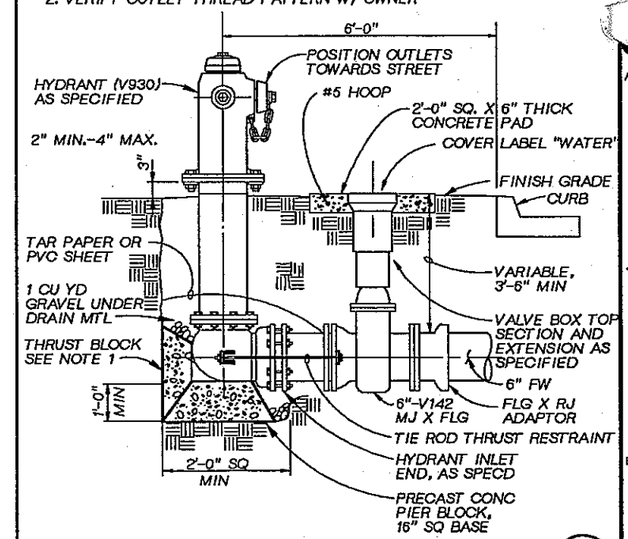

HYDRANT DETAIL (610)

NTS

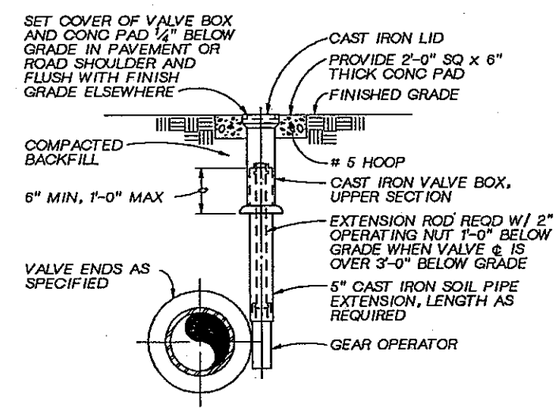

BURIED BUTTERFLY VALVE BOX (611)

NTS

JOSEPH A. GAUTHIER STATE OF WASHINGTON REGISTERED PROFESSIONAL ENGINEER

CH2M HILL

DSGN	E. RONSHAUGEN		
DR	C.S. HOWELL		
CHK	J.MILLER		
APVD	J GAUTHIER		

NO.	DATE	REVISION	BY	APVD

REUSE OF DOCUMENTS

THIS DOCUMENT, AND THE IDEAS AND DESIGNS INCORPORATED HEREIN, AS AN INSTRUMENT OF PROFESSIONAL SERVICE, IS THE PROPERTY OF CH2M HILL AND IS NOT TO BE USED, IN WHOLE OR IN PART, FOR ANY OTHER PROJECT WITHOUT THE WRITTEN AUTHORIZATION OF CH2M HILL.

©CH2M HILL

BAR IS ONE INCH ON ORIGINAL DRAWING. 0 1"
IF NOT ONE INCH ON THIS SHEET, ADJUST SCALES ACCORDINGLY.

CITY OF BELLINGHAM, WASHINGTON
POST POINT WASTEWATER TREATMENT PLANT UPGRADE

SITE WORK
PROCESS PIPING DETAILS

DWG NO. 30-C-24
DATE AUG. 1990
PROJ NO. SEA22462.C1

DRAWN BY: RK LATTA DESIGNED BY: MAT HIGHTREE
DGN NAME: H:/PROJ2/BELLINGH/BL030CAK.DGN

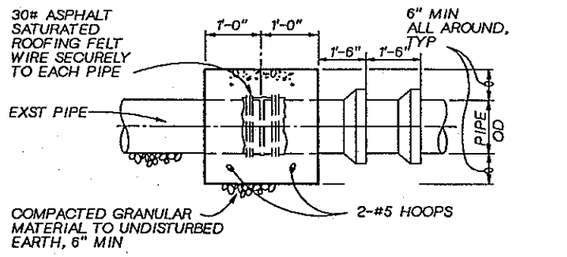

CONCRETE CLOSURE COLLAR (612)

NTS

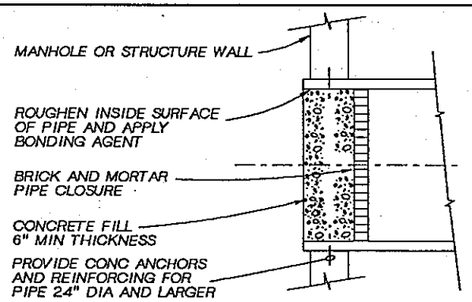

CONCRETE PIPE PLUG (613)

NTS

THRUST BLOCK DETAIL

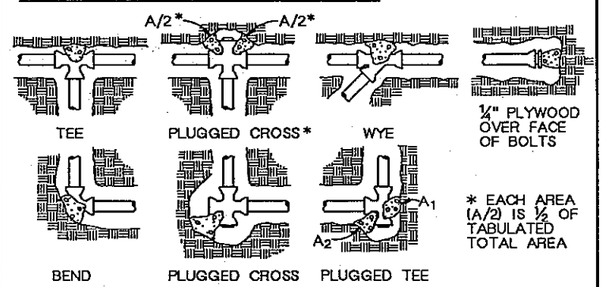

PLAN

NTS

TABLE A

BEARING AREA OF THRUST BLOCKS IN SQ. FT. (HORIZONTAL BENDS)							
FITTING SIZE	TEE, WYE, PLUG, OR CAP	90° BEND PLUGGED CROSS	TEE PLUGGED RUN		BEND ANGLE		
			A_1	A_2	45°	22½°	11¼°
4	1.0	1.4	1.9	1.4	1.0	-	-
6	2.1	3.0	4.3	3.0	1.6	1.0	-
8	3.8	5.3	7.6	5.4	2.9	1.5	1.0
10	5.9	8.4	11.8	8.4	4.6	2.4	1.2
12	8.5	12.0	17.0	12.0	6.5	3.4	1.7
14	11.6	16.3	23.0	16.3	8.9	4.6	2.3
16	15.0	21.3	30.0	21.3	11.5	6.0	3.0
18	19.0	27.0	38.0	27.0	14.6	7.6	3.8
20	23.5	33.3	47.0	33.3	18.1	9.4	4.7
24	34.0	48.0	68.0	48.0	26.2	13.6	6.8

TABLE B

VOLUME OF THRUST BLOCK IN CUBIC YARDS (VERTICAL BENDS)			
FITTING SIZE	BEND ANGLE		
	45°	22½°	11¼°
4	1.1	0.4	0.2
6	2.7	1.0	0.4
8	4.0	1.6	0.6
10	6.0	2.3	0.9
12	8.5	3.2	1.3
14	11.5	4.3	1.8
16	14.8	5.6	2.3

FITTING SIZE	ROD SIZE	EMBEDDMENT
12" AND LESS	#6	30"
14"-16"	#8	36"

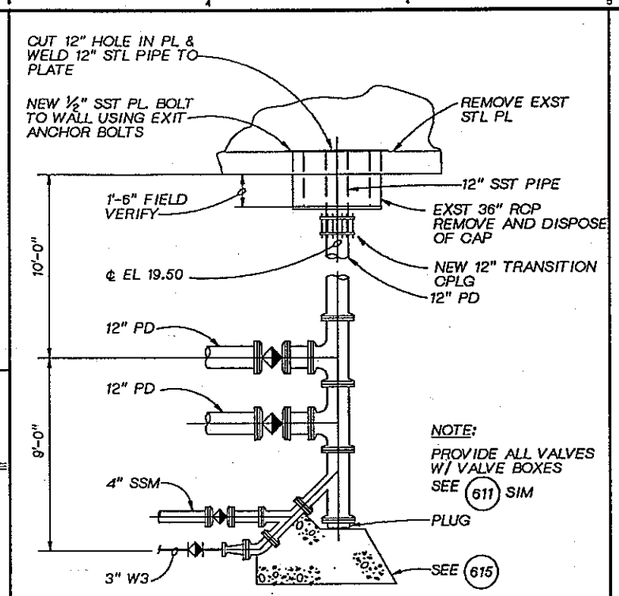

DETAIL (1)

NTS 30-C-17

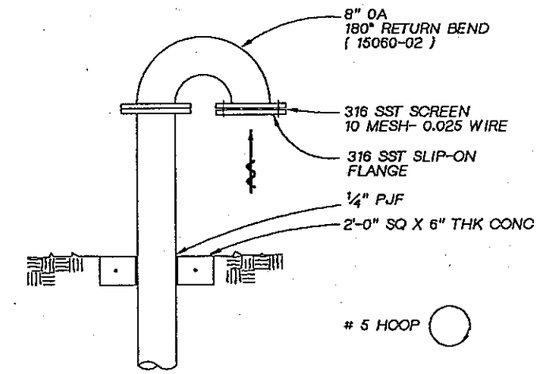

VENT DETAIL (616)

NTS

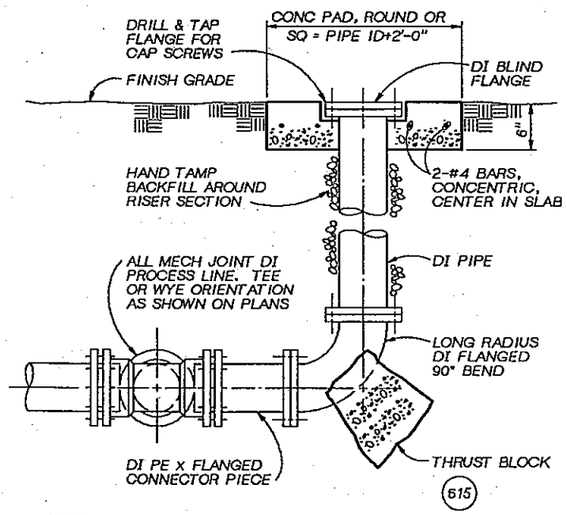

NOTE:
RISER SECTION AND ELBOW SAME SIZE AS PROCESS LINE, UNLESS NOTED OTHERWISE.

PROCESS LINE CLEAN-OUT SETTING (614)

NTS

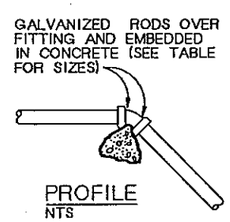

PROFILE

NTS

(615)

THRUST BLOCK NOTES AND DETAILS

THRUST BLOCK NOTES

1. KEEP CONCRETE CLEAR OF JOINT AND JOINT ACCESSORIES.
2. CONCRETE THRUST BLOCKING SHALL BE POURED AGAINST UNDISTURBED EARTH.
3. REQUIRED VOLUMES OR BEARING AREAS AT FITTINGS SHALL BE AS INDICATED BELOW, ADJUSTED, IF NECESSARY, TO CONFORM TO THE TEST PRESSURE(S) AND ALLOWABLE SOIL BEARING STRESS(ES) OF 1900 LBS/SQ.FT.
4. THRUST BLOCK VOLUMES FOR VERTICAL BENDS HAVING UPWARD RESULTANT THRUSTS ARE BASED ON TEST PRESSURE OF 150 PSIG AND THE WEIGHT OF CONCRETE = 4050 LBS/CU YD. TO COMPUTE VOLUMES FOR DIFFERENT TEST PRESSURES, USE THE FOLLOWING EQUATION: VOLUME = (TEST PRESS./150) x (TABLE VALUE).
5. BEARING AREAS FOR HORIZONTAL BEND THRUST BLOCKS ARE BASED ON TEST PRESSURE OF 150 PSIG AND AN ALLOWABLE SOIL BEARING STRESS OF 2000 LBS/SQ FT. TO COMPUTE BEARING AREAS FOR DIFFERENT TEST PRESSURES AND SOIL BEARING STRESSES, MULTIPLY TABLE VALUES BY THE FACTOR (13.33)(P'/S'$_b$). WHERE: P' =ACTUAL TEST PRESSURE, PSIG
   S'$_b$=ACTUAL SOIL BEARING PRESSURE, PSF.
6. THRUST BLOCKS FOR VERTICAL BENDS HAVING DOWNWARD RESULTANT THRUSTS SHALL BE THE SAME AS FOR HORIZONTAL BENDS.
7. BEARING AREAS, VOLUMES, AND SPECIAL BLOCKING DETAILS SHOWN ON PLANS TAKE PRECEDENCE OVER THIS STANDARD
8. BEARING AREA OF THRUST BLOCK SHALL NOT BE LESS THAN 1.0 SQ FT.
9. VERTICAL BENDS THAT REQUIRE A THRUST BLOCK VOLUME EXCEEDING 5 CUBIC YARDS REQUIRE SPECIAL BLOCKING DETAILS. SEE PLANS FOR VOLUMES SHOWN TO LEFT OF SOLID LINE IN TABLE.
10. TEST PRESSURES ARE SHOWN IN THE PIPING SCHEDULE.

JOSEPH A. GAUTHIER STATE OF WASHINGTON REGISTERED PROFESSIONAL ENGINEER

CH2M HILL

DSGN	M HIGHTREE
DR	RK LATTA
CHK	J MILLER
APVD	J GAUTHIER

NO.	DATE	REVISION	BY	APVD

REUSE OF DOCUMENTS
THIS DOCUMENT, AND THE IDEAS AND DESIGNS INCORPORATED HEREIN, AS AN INSTRUMENT OF PROFESSIONAL SERVICE, IS THE PROPERTY OF CH2M HILL, AND IS NOT TO BE USED, IN WHOLE OR IN PART, FOR ANY OTHER PROJECT WITHOUT THE WRITTEN AUTHORIZATION OF CH2M HILL.
©CH2M HILL

BAR IS ONE INCH ON ORIGINAL DRAWING.
0 1"
IF NOT ONE INCH ON THIS SHEET, ADJUST SCALES ACCORDINGLY.

CITY OF BELLINGHAM, WASHINGTON
POST POINT WASTEWATER TREATMENT PLANT UPGRADE

SITE WORK
PROCESS PIPING DETAILS

DWG NO. 30-C-25
DATE AUG. 1990
PROJ NO. SEA22462.C1

OVERLAY IDENTIFICATION | COMPOSITE | OVERLAY SCREEN | PROJID | FILE

DRAWN BY:J.PIERONI DESIGNED BY:C.COSBY
DGN NAME: H:/PROJ2/BELLINGH/BL030CAH.DGN

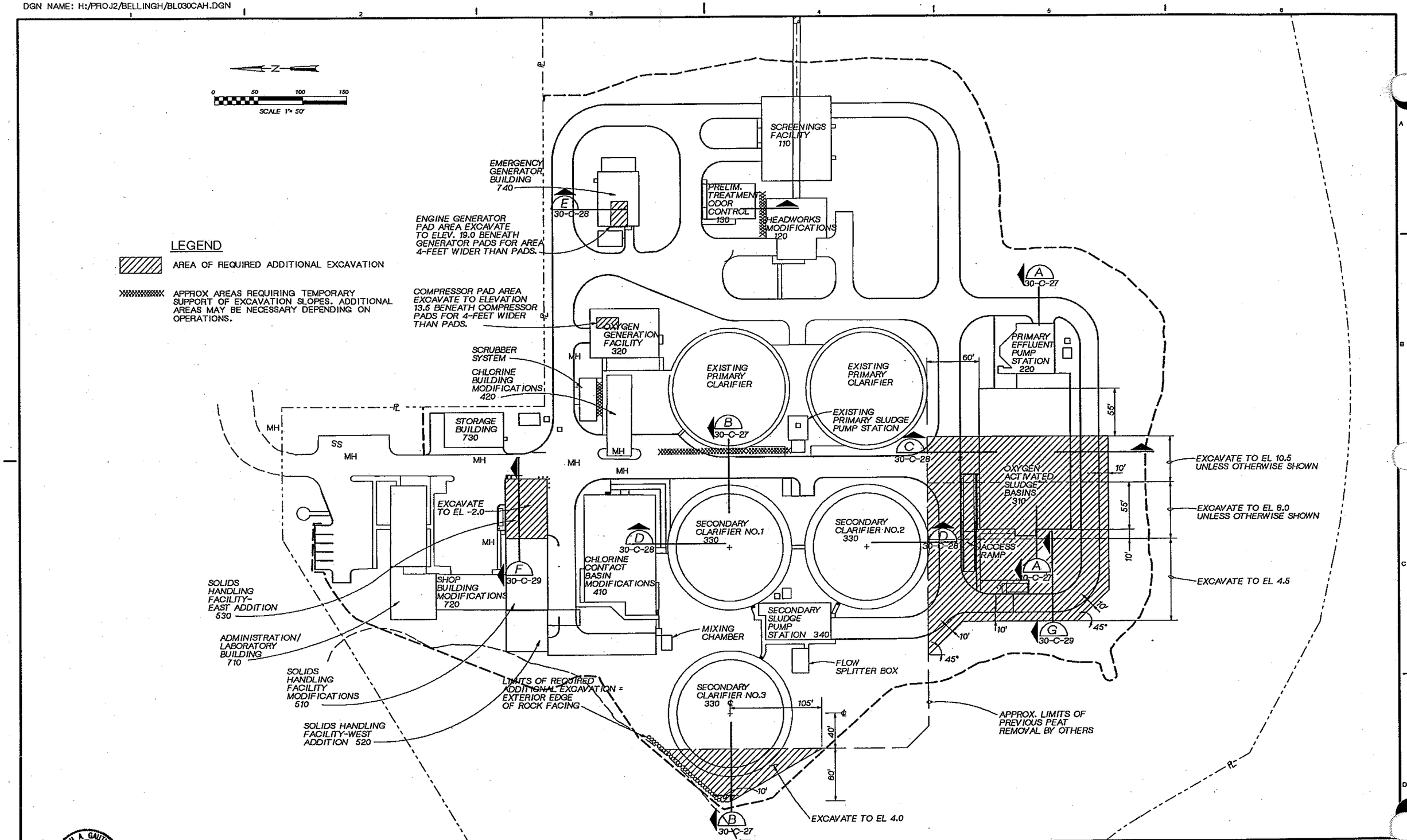

JOSEPH A. GAUTHIER STATE OF WASHINGTON REGISTERED PROFESSIONAL ENGINEER

CH2M HILL

DSGN	C.COSBY
DR	J.PIERONI
CHK	J GAUTHIER
APVD	J. GAUTHIER

NO.	DATE	REVISION	BY	APVD

REUSE OF DOCUMENTS
THIS DOCUMENT, AND THE IDEAS AND DESIGNS INCORPORATED HEREIN, AS AN INSTRUMENT OF PROFESSIONAL SERVICE, IS THE PROPERTY OF CH2M HILL AND IS NOT TO BE USED, IN WHOLE OR IN PART, FOR ANY OTHER PROJECT WITHOUT THE WRITTEN AUTHORIZATION OF CH2M HILL.
©CH2M HILL

BAR IS ONE INCH ON ORIGINAL DRAWING.
0 1"
IF NOT ONE INCH ON THIS SHEET, ADJUST SCALES ACCORDINGLY.

CITY OF BELLINGHAM, WASHINGTON
POST POINT WASTEWATER TREATMENT PLANT UPGRADE

SITE WORK
SITE CROSS SECTION LOCATIONS

DWG NO. 30-C-26
DATE AUG. 1990
PROJ NO. SEA22452.C1

LAYOUT IDENTIFICATION: COMPOSITE, OVERLAY, SCREEN, PROJ, FILE

DGN NAME: H:/PROJ2/BELLINGH/BL030C-Y.DGN

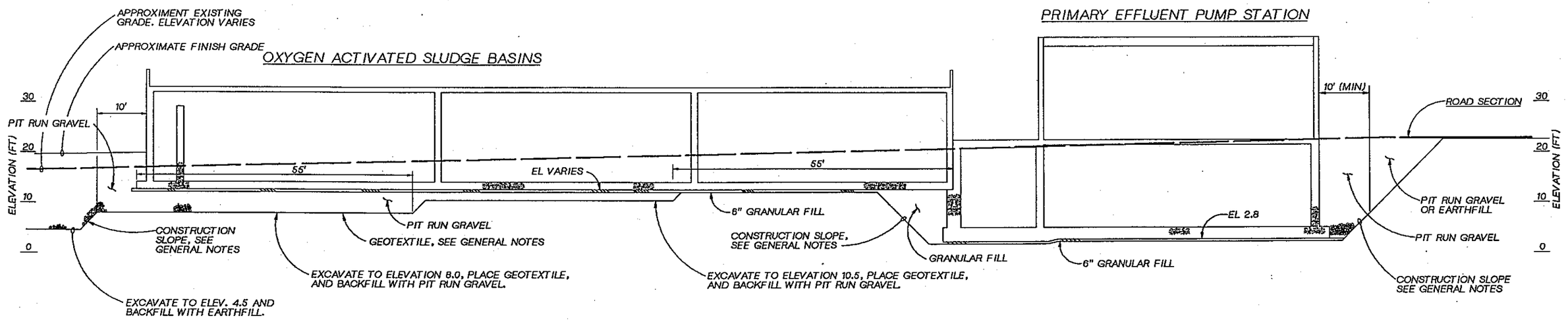

SECTION (A) 30-C-26
1"=10' HORIZONTAL
1"=10' VERTICAL

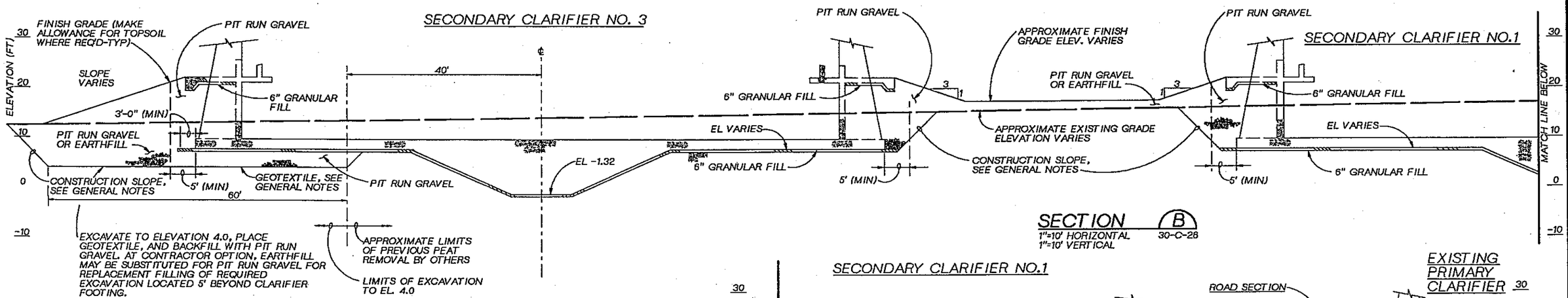

SECTION (B) 30-C-28
1"=10' HORIZONTAL
1"=10' VERTICAL

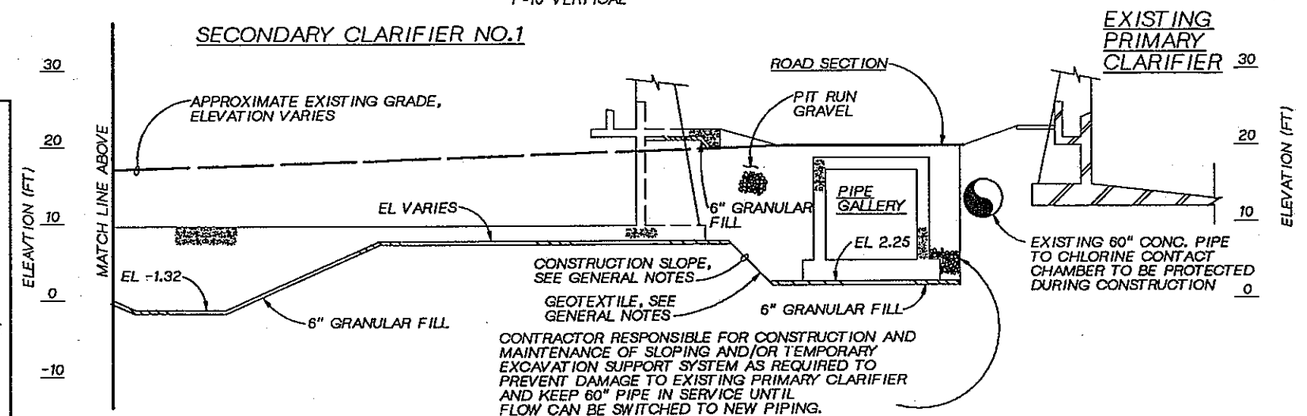

GENERAL NOTES

1. THE INFORMATION CONTAINED ON THIS DRAWING IS INTENDED TO PROVIDE SIMPLIFIED CROSS SECTIONS OF THE PROJECT SITE, FOR THE PURPOSES OF ILLUSTRATING GENERAL EXCAVATION AND BACKFILL REQUIREMENTS. FOR REASONS OF CLARITY, MANY STRUCTURAL AND SITE GRADING DETAILS ARE NOT SHOWN. THE OUTLINE OF STRUCTURES SHOULD BE REGRADED AS GENERAL AND APPROXIMATE. THE EXCAVATION SUBGRADE SHOWN SHOULD ALSO BE REGARDED AS GENERAL AND MAY NOT REFLECT ALL EXCAVATION THAT WILL BE NEEDED FOR FOUNDATION CONSTRUCTION. REFER TO APPROPRIATE STRUCTURAL AND PIPING DRAWINGS FOR ALL FOUNDATION DETAILS AND INFORMATION NECESSARY TO DETERMINE MINIMUM EXCAVATION SUBGRADES. REFER TO SITE GRADING DRAWINGS FOR FINISH GRADES. SHOULD CONFLICTS ARISE BETWEEN THIS DRAWING AND APPLICABLE STURCTURAL, PIPING OR SITE GRADING DETAILS, THE APPLICABLE DETAILS SHALL GOVERN.

2. EXCAVATION SIDE SLOPES ARE SHOWN SOLELY FOR THE PURPOSE OF ILLUSTRATING BACKFILL REQUIREMENTS. BY SHOWING SUCH SLOPES, THE ENGINEER DOES NOT INTEND TO IMPLY ANY PARTICULAR SLOPE IS TO BE USED OR WOULD BE STABLE. THE CONTRACTOR IS RESPONSIBLE FOR SELECTING AND MAINTAINING SAFE TEMPORARY EXCAVATION SLOPES.

3. PIPING, PLUMBING, ELECTRICAL CONDUITS AND OTHER APPURTENANCES ARE NOT SHOWN ON THIS DRAWING.

4. PLACE GEOTEXTILE BENEATH PIT RUN GRAVEL. ALSO PLACE GEOTEXTILE AS A SEPARATION LAYER IN ALL LOCATIONS WHERE PIT RUN GRAVEL IS IN DIRECT CONTACT WITH NATIVE SOIL, EARTHFILL, SAND, TOPSOIL, OR PLANT SOIL MIXTURES USED IN LANDSCAPING.

JOSEPH A. GAUTHIER — STATE OF WASHINGTON — REGISTERED PROFESSIONAL ENGINEER

CH2M HILL

DSGN	D.MYERS
DR	J.PIERONI
CHK	J GAUTHIER
APVD	J GAUTHIER

NO.	DATE	REVISION	BY	APVD

REUSE OF DOCUMENTS
THIS DOCUMENT, AND THE IDEAS AND DESIGNS INCORPORATED HEREIN, AS AN INSTRUMENT OF PROFESSIONAL SERVICE, IS THE PROPERTY OF CH2M HILL AND IS NOT TO BE USED, IN WHOLE OR IN PART, FOR ANY OTHER PROJECT WITHOUT THE WRITTEN AUTHORIZATION OF CH2M HILL.
©CH2M HILL

BAR IS ONE INCH ON ORIGINAL DRAWING.
0 1"
IF NOT ONE INCH ON THIS SHEET, ADJUST SCALES ACCORDINGLY.

CITY OF BELLINGHAM, WASHINGTON
POST POINT WASTEWATER TREATMENT PLANT UPGRADE

SITE WORK
SITE CROSS SECTION

DWG NO. 30-C-27
DATE AUG. 1990
PROJ. NO. SEA22462.C1

OVERLAY IDENTIFICATION: COMPOSITE, PROJECT, OVERLAY, FOLDER, FILE

DGN NAME: H:/PROJ2/BELLINGH/BL030C-Z.DGN

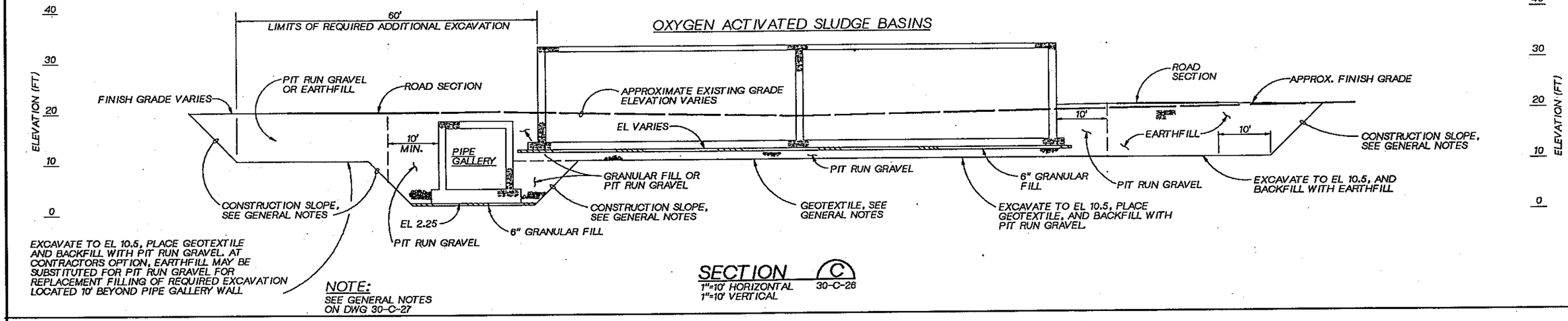

NOTE:
SEE GENERAL NOTES ON DWG 30-C-27

SECTION C 30-C-26
1"=10' HORIZONTAL
1"=10' VERTICAL

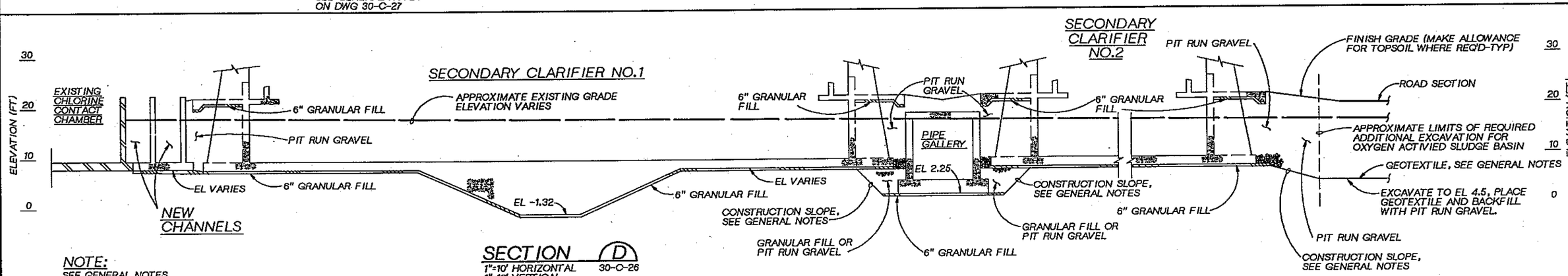

NOTE:
SEE GENERAL NOTES ON DWG 30-C-27

SECTION D 30-C-26
1"=10' HORIZONTAL
1"=10' VERTICAL

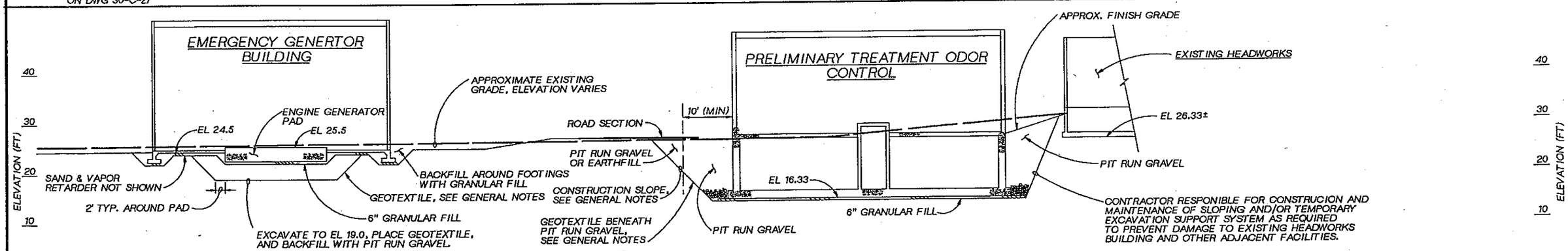

NOTE:
SEE GENERAL NOTES ON DWG 30-C-27

SECTION E 30-C-26
1"=10' HORIZONTAL
1"=10' VERTICAL

JOSEPH A. GAUTHIER STATE OF WASHINGTON REGISTERED PROFESSIONAL ENGINEER

CH2M HILL

DSGN	D.MYERS					
DR	J.PIERONI					
CHK	J GAUTHIER					
APVD	J GAUTHIER	NO.	DATE	REVISION	BY	APVD

REUSE OF DOCUMENTS
THIS DOCUMENT, AND THE IDEAS AND DESIGNS INCORPORATED HEREIN, AS AN INSTRUMENT OF PROFESSIONAL SERVICE, IS THE PROPERTY OF CH2M HILL AND IS NOT TO BE USED, IN WHOLE OR IN PART, FOR ANY OTHER PROJECT WITHOUT THE WRITTEN AUTHORIZATION OF CH2M HILL.
©CH2M HILL

BAR IS ONE INCH ON ORIGINAL DRAWING. 0 1"
IF NOT ONE INCH ON THIS SHEET, ADJUST SCALES ACCORDINGLY.

CITY OF BELLINGHAM, WASHINGTON
POST POINT WASTEWATER TREATMENT PLANT UPGRADE

SITE WORK
SITE CROSS SECTIONS

DWG NO. 30-C-28
DATE AUG. 1990
PROJ NO. SEA22452.C1

OVERLAY IDENTIFICATION: COMPOSITE, OVERLAY SCREEN, PROJ, FILE

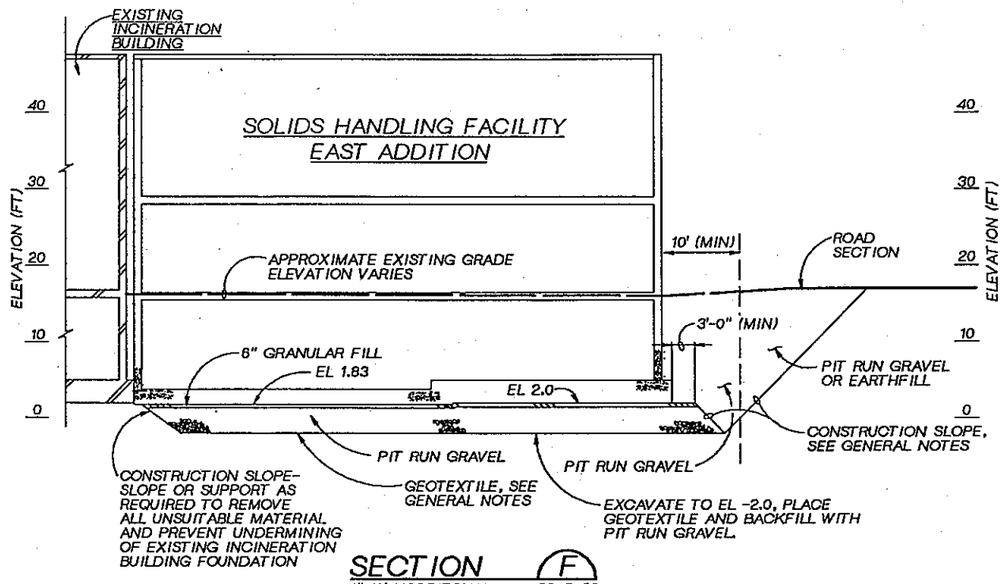

SECTION F 30-C-26
1"=10' HORRIZONAL
1"=10' VERTICAL

NOTE:
SEE GENERAL NOTES ON DWG 30-C-27

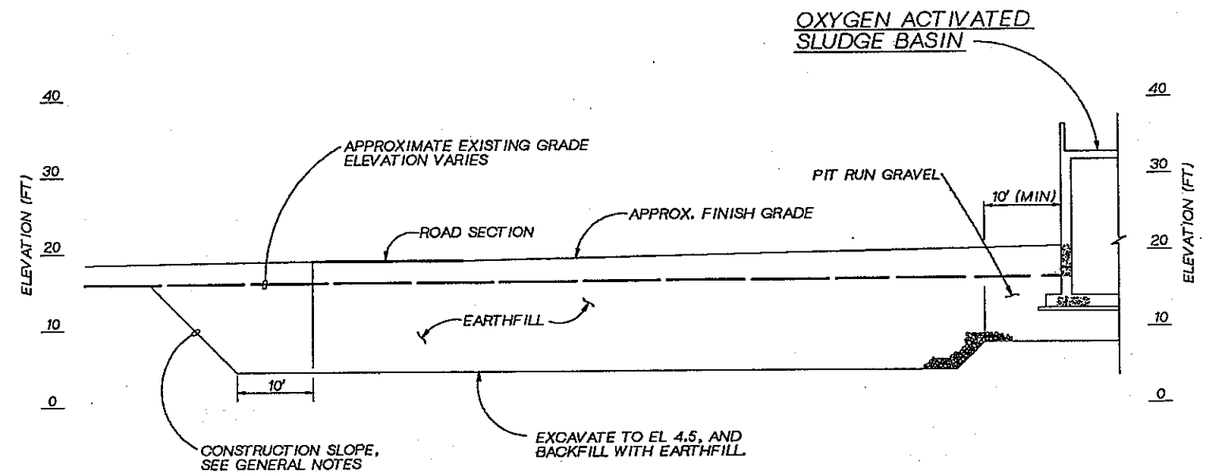

SECTION G 30-C-26
1"=10' HORIZONTAL
1"=10' VERTICAL

NOTE:
SEE GENERAL NOTES ON DWG 30-C-27

DSGN	D.MYERS					
DR	J.PIERONI					
CHK	J GAUTHIER					
APVD	J GAUTHIER	NO.	DATE	REVISION	BY	APVD

CH2M HILL

REUSE OF DOCUMENTS
THIS DOCUMENT, AND THE IDEAS AND DESIGNS INCORPORATED HEREIN, AS AN INSTRUMENT OF PROFESSIONAL SERVICE, IS THE PROPERTY OF CH2M HILL AND IS NOT TO BE USED, IN WHOLE OR IN PART, FOR ANY OTHER PROJECT WITHOUT THE WRITTEN AUTHORIZATION OF CH2M HILL.
©CH2M HILL

BAR IS ONE INCH ON ORIGINAL DRAWING.
0 1"
IF NOT ONE INCH ON THIS SHEET, ADJUST SCALES ACCORDINGLY.

CITY OF BELLINGHAM, WASHINGTON
POST POINT WASTEWATER TREATMENT PLANT UPGRADE

SITE WORK
SITE CROSS SECTIONS

DWG NO. 30-C-29
DATE AUG. 1990
PROJ NO. SEA22462.C1

OVERLAY IDENTIFICATION | COMPOSITE | OVERLAY | SCREEN | PROJID | FILE

DRAWN BY: J. MYER DESIGNED BY: C. COSBY
DGN NAME: H:/PROJ2/BELLINGH/BL030CAC.DGN

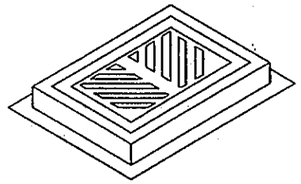

FRAME AND GRATE

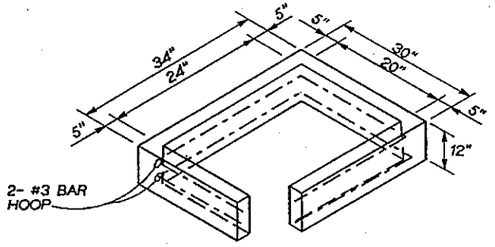

12" RISER SECTION

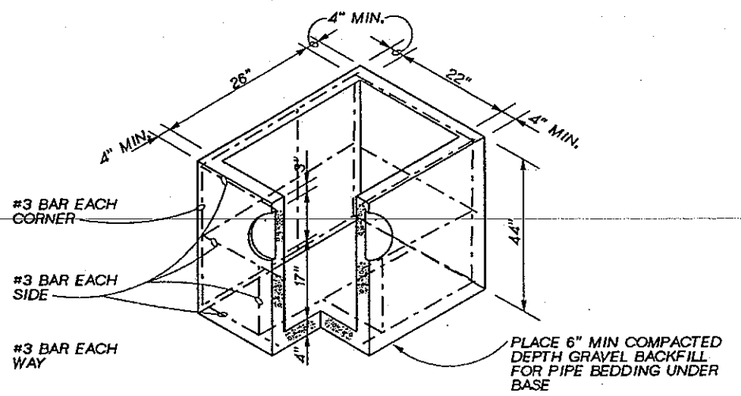

PRECAST BASE SECTION

CATCH BASIN TYPE 1
NTS

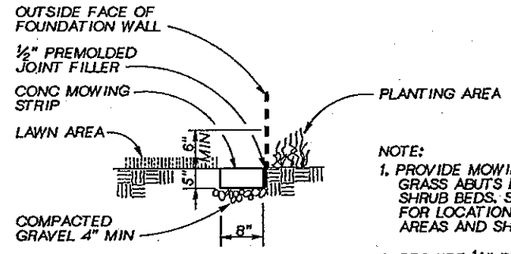

NOTE:
1. PROVIDE MOWING STRIP WHERE GRASS ABUTS FDN WALLS OR SHRUB BEDS. SEE DWG 40-C-1,2 FOR LOCATION OF GRASS AREAS AND SHRUB BEDS
2. PROVIDE ½" PREMOLDED EXPANSION JOINT FILLER IN THE MOWING STRIP AT NOT MORE THAN 20 FEET INTERVALS.

MOWING STRIP
NTS

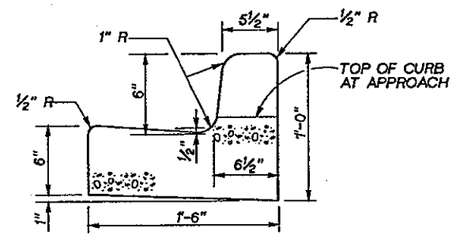

CEMENT CONCRETE CURB AND GUTTER
NTS

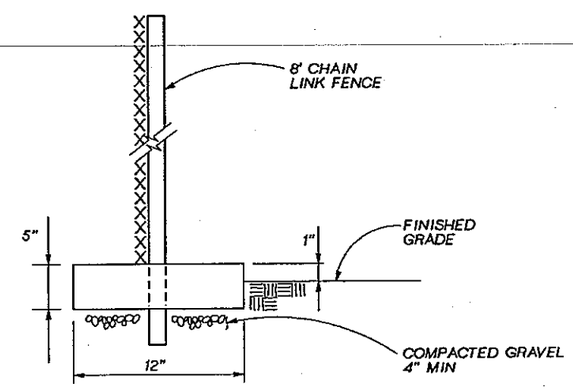

NOTE:
PROVIDE ½" PREMOLDED EXPANSION JOINT FILLER IN THE MOWING STRIP AT NOT MORE THAN 20 FOOT INTERVALS.

FENCE MOWING STRIP
NTS

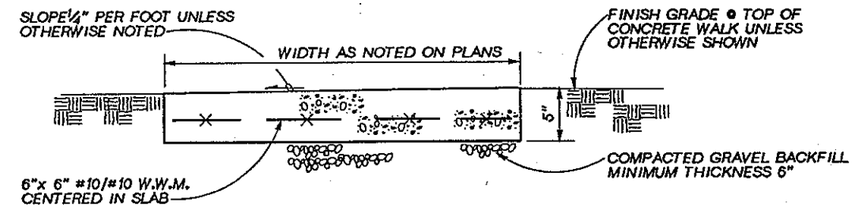

NOTE:
PROVIDE ½" PREMOLDED JOINT FILLER BETWEEN SIDEWALK AND BUILDINGS OR FACILITIES.

TYPICAL CONCRETE WALK DETAIL
NTS

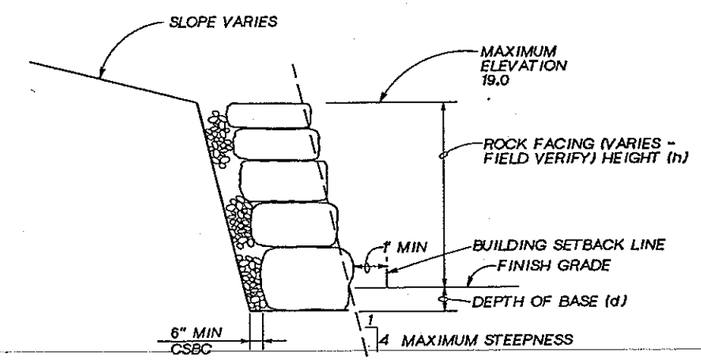

(h)	(d)	MINIMUM ROCK SIZE (BASE)	(TOP)
2 FEET	3 INCHES	2-MAN	1-MAN
4 FEET	6 INCHES	3-MAN	2-MAN
6 FEET	9 INCHES	4-MAN	2-MAN

ROCK FACE WALL

NOTE:
CONTRACTOR SHALL DEVELOP A PROFILE AND DESIGN OF ROCK FACE WALL AND SUBMIT TO ENGINEER FOR ACCEPTANCE PRIOR TO BEGINNING CONSTRUCTION.

DETAIL 1
NTS 30-C-15

JOSEPH A. GAUTHIER STATE OF WASHINGTON REGISTERED PROFESSIONAL ENGINEER

CH2M HILL

DSGN	C. COSBY
DR	J. MYER
CHK	J GAUTHIER
APVD	J. GAUTHIER

NO.	DATE	REVISION	BY	APVD

REUSE OF DOCUMENTS
THIS DOCUMENT, AND THE IDEAS AND DESIGNS INCORPORATED HEREIN, AS AN INSTRUMENT OF PROFESSIONAL SERVICE, IS THE PROPERTY OF CH2M HILL AND IS NOT TO BE USED, IN WHOLE OR IN PART, FOR ANY OTHER PROJECT WITHOUT THE WRITTEN AUTHORIZATION OF CH2M HILL.
©CH2M HILL

VERIFY SCALE
BAR IS ONE INCH ON ORIGINAL DRAWING.
0 1"
IF NOT ONE INCH ON THIS SHEET, ADJUST SCALES ACCORDINGLY.

CITY OF BELLINGHAM, WASHINGTON
POST POINT WASTEWATER TREATMENT PLANT UPGRADE

SITE WORK
MISCELLANEOUS SITE WORK DETAILS

DWG NO. 30-C-30
DATE AUG. 1990
PROJ NO. SEA22462.C1

OVERLAY IDENTIFICATION: PROJ ID / FILE — COMPOSITE / OVERLAY / SCREEN

DRAWN BY:J.PIERONI DESIGNED BY:C.COSBY
DGN NAME: H:/PROJ2/BELLINGH/BL030CAD.DGN

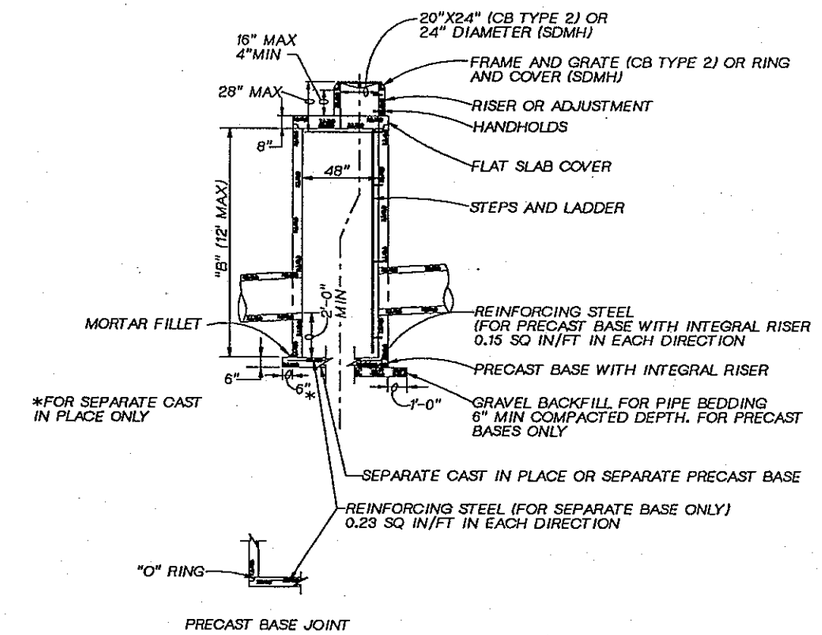

CATCH BASIN TYPE 2 (OR SDMH)

NO SCALE

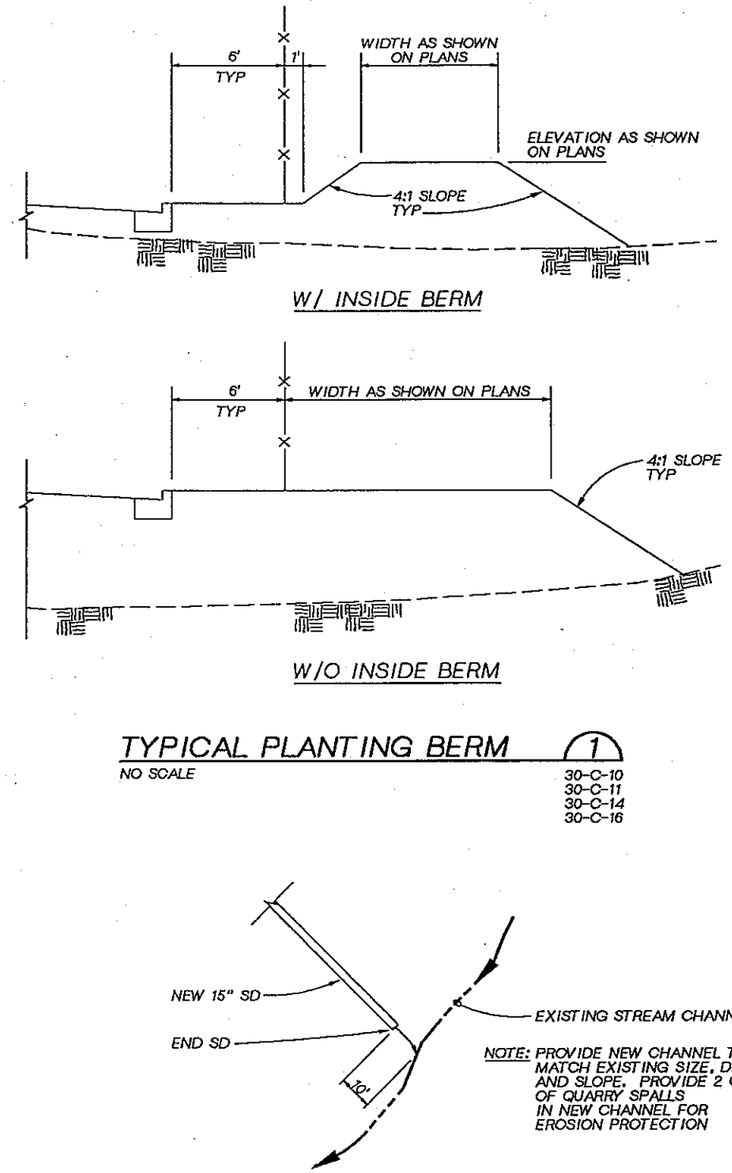

TYPICAL PLANTING BERM (1)

NO SCALE

30-C-10
30-C-11
30-C-14
30-C-16

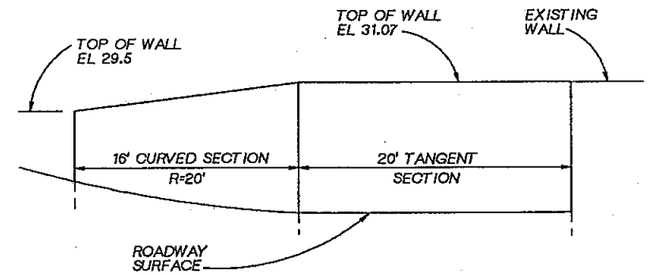

ELEVATION

NTS

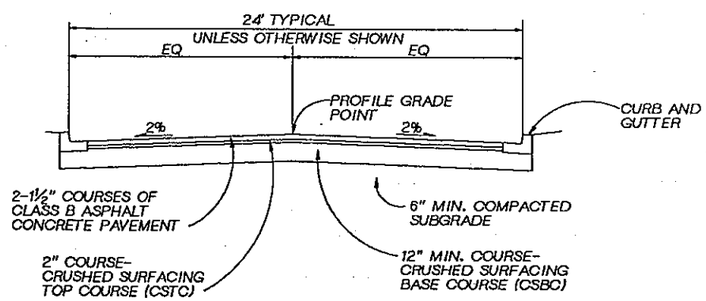

TYPICAL ROADWAY SECTION

STORM DRAIN OUTLET DETAIL (2)

NO SCALE

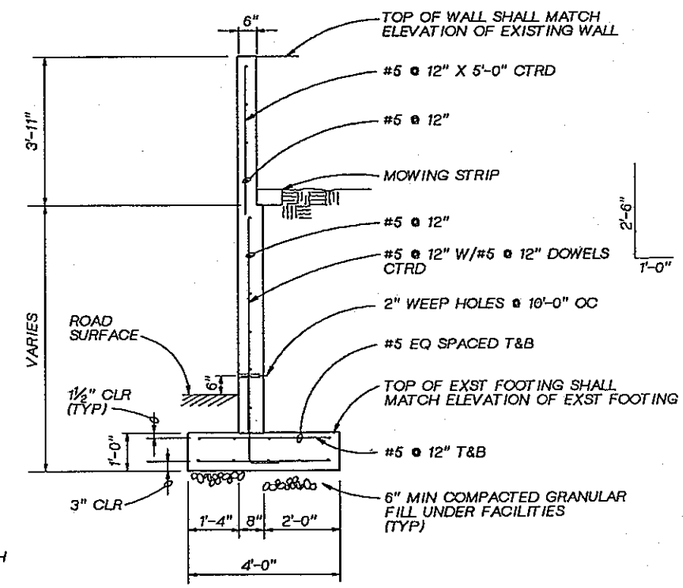

SECTION

½"=1'-0"

HEADWORKS WALL DETAIL (3)

30-C-3

DSGN C. COSBY						
DR J. PIERONI						
CHK J GAUTHIER						
APVD J. GAUTHIER	NO.	DATE	REVISION	BY	APVD	

CH2M HILL

REUSE OF DOCUMENTS
THIS DOCUMENT, AND THE IDEAS AND DESIGNS INCORPORATED HEREIN, AS AN INSTRUMENT OF PROFESSIONAL SERVICE, IS THE PROPERTY OF CH2M HILL AND IS NOT TO BE USED, IN WHOLE OR IN PART, FOR ANY OTHER PROJECT WITHOUT THE WRITTEN AUTHORIZATION OF CH2M HILL.
©CH2M HILL

BAR IS ONE INCH ON ORIGINAL DRAWING. 0 1"
IF NOT ONE INCH ON THIS SHEET, ADJUST SCALES ACCORDINGLY.

CITY OF BELLINGHAM, WASHINGTON
POST POINT WASTEWATER TREATMENT PLANT UPGRADE

CIVIL/SITEWORK
MISCELLANEOUS SITE WORK DETAILS

DWG NO. 30-C-31
DATE AUG. 1990
PROJ NO. SEA22462.C1

OVERLAY IDENTIFICATION COMPOSITE PROJD PLAY FILE

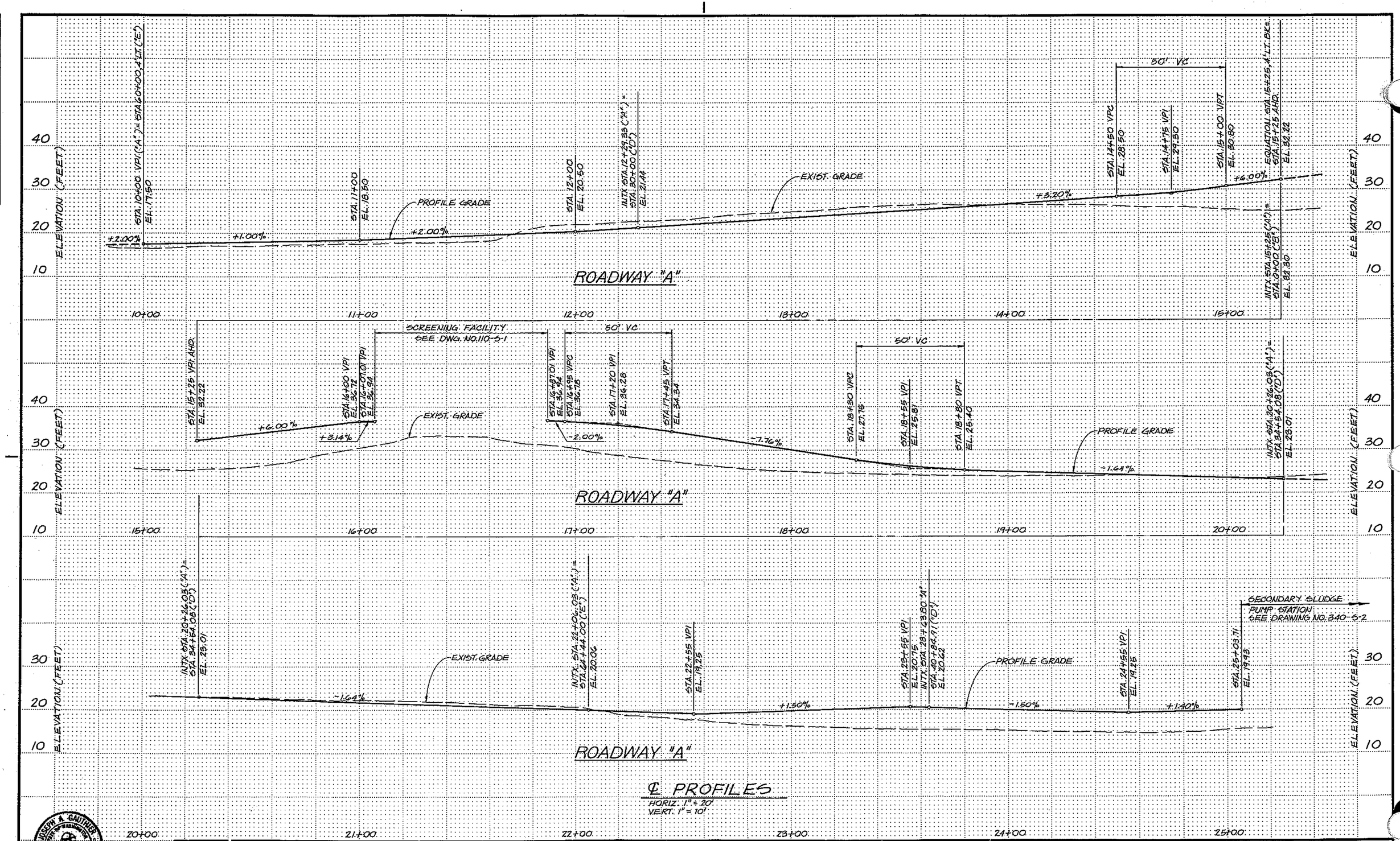

℄ PROFILES

HORIZ: 1" = 20'
VERT: 1" = 10'

JOSEPH A. GAUTHIER — STATE OF WASHINGTON — REGISTERED PROFESSIONAL ENGINEER

CH2M HILL

DSGN	C. COSBY
DR	M. MERCIER
CHK	J. GAUTHIER
APVD	J. GAUTHIER

NO.	DATE	REVISION	BY	APVD

REUSE OF DOCUMENTS

THIS DOCUMENT, AND THE IDEAS AND DESIGNS INCORPORATED HEREIN, AS AN INSTRUMENT OF PROFESSIONAL SERVICE, IS THE PROPERTY OF CH2M HILL AND IS NOT TO BE USED, IN WHOLE OR IN PART, FOR ANY OTHER PROJECT WITHOUT THE WRITTEN AUTHORIZATION OF CH2M HILL.

©CH2M HILL

VERIFY SCALES

BAR IS ONE INCH ON ORIGINAL DRAWING.
0 1"
IF NOT ONE INCH ON THIS SHEET, ADJUST SCALES ACCORDINGLY.

CITY OF BELLINGHAM, WASHINGTON
POST POINT WASTEWATER TREATMENT PLANT UPGRADE

SITE WORK

ROADWAY PROFILES

DWG NO. 30-C-32
DATE AUG 1990
PROJ NO. SEA22462.C1

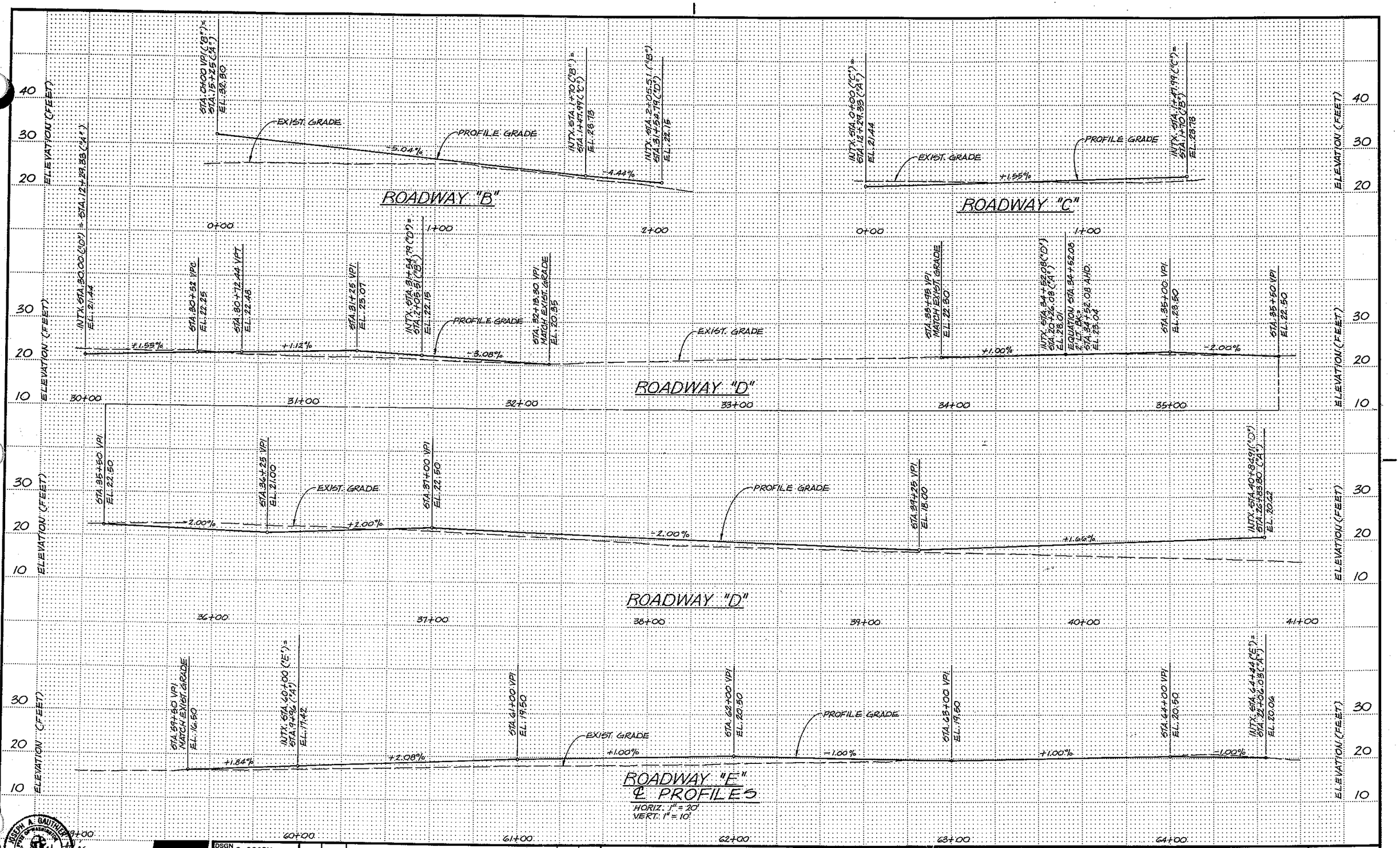

ROADWAY "E"
℄ PROFILES

HORIZ: 1" = 20'
VERT: 1" = 10'

JOSEPH A. GAUTHIER
STATE OF WASHINGTON
REGISTERED
PROFESSIONAL ENGINEER

CH2M HILL

DSGN	C. COSBY
DR	M. MERCIER
CHK	J. GAUTHIER
APVD	J. GAUTHIER

NO.	DATE	REVISION	BY	APVD

REUSE OF DOCUMENTS

THIS DOCUMENT, AND THE IDEAS AND DESIGNS INCORPORATED HEREIN, AS AN INSTRUMENT OF PROFESSIONAL SERVICE, IS THE PROPERTY OF CH2M HILL AND IS NOT TO BE USED, IN WHOLE OR IN PART, FOR ANY OTHER PROJECT WITHOUT THE WRITTEN AUTHORIZATION OF CH2M HILL.

©CH2M HILL

VERIFY SCALES

BAR IS ONE INCH ON ORIGINAL DRAWING.
0 1"
IF NOT ONE INCH ON THIS SHEET, ADJUST SCALES ACCORDINGLY.

CITY OF BELLINGHAM, WASHINGTON
POST POINT WASTEWATER TREATMENT PLANT UPGRADE

SITE WORK

ROADWAY PROFILES

DWG NO. 30-C-33
DATE AUG 1990
PROJ NO. SEA22462.C1

DATE: 8-26-90 DLC
DRAWN BY:J.PIERONI DESIGNED BY: J. IRISH
DGN NAME: H:/PROJ2/BELLINGH/BL040C-A.DGN

SCALE: 1"= 40'

NOTES:
1) PLANT LIST AND LEGEND IS ON DRAWING 40-C-2.
2) SEE PLANTING DETAILS ON DRAWING 40-C-3.
3) INTERMIX DIFFERENT SIZE SHORE PINE AND QUAKING ASPEN.
4) FENCELINE IS LIMIT FOR LAWN. HYDROSEED ALL DISTURBED AREAS OUTSIDE FENCE, NOT IN PLANTING BEDS, WITH FIELDGRASS.
5) GRAVEL AREAS SHALL HAVE A 3" DEPTH OF ¾" MINUS CRUSHED ROCK UNDERLAIN BY A BLACK PLASTIC WEED BARRIER, SEE SPECIFICATIONS.
6) FINISH GRADING:
LAWN AREAS - 2" SAND
2" PEAT
4" TOPSOIL

FIELDGRASS - 2" SAND
2" TOPSOIL

PLANTING BEDS - 18" PLANTING SOIL MIX

SPREAD PLANTING SOIL 4" ABOVE PROPOSED FINISHED GRADES INSIDE PERIMETER FENCE.

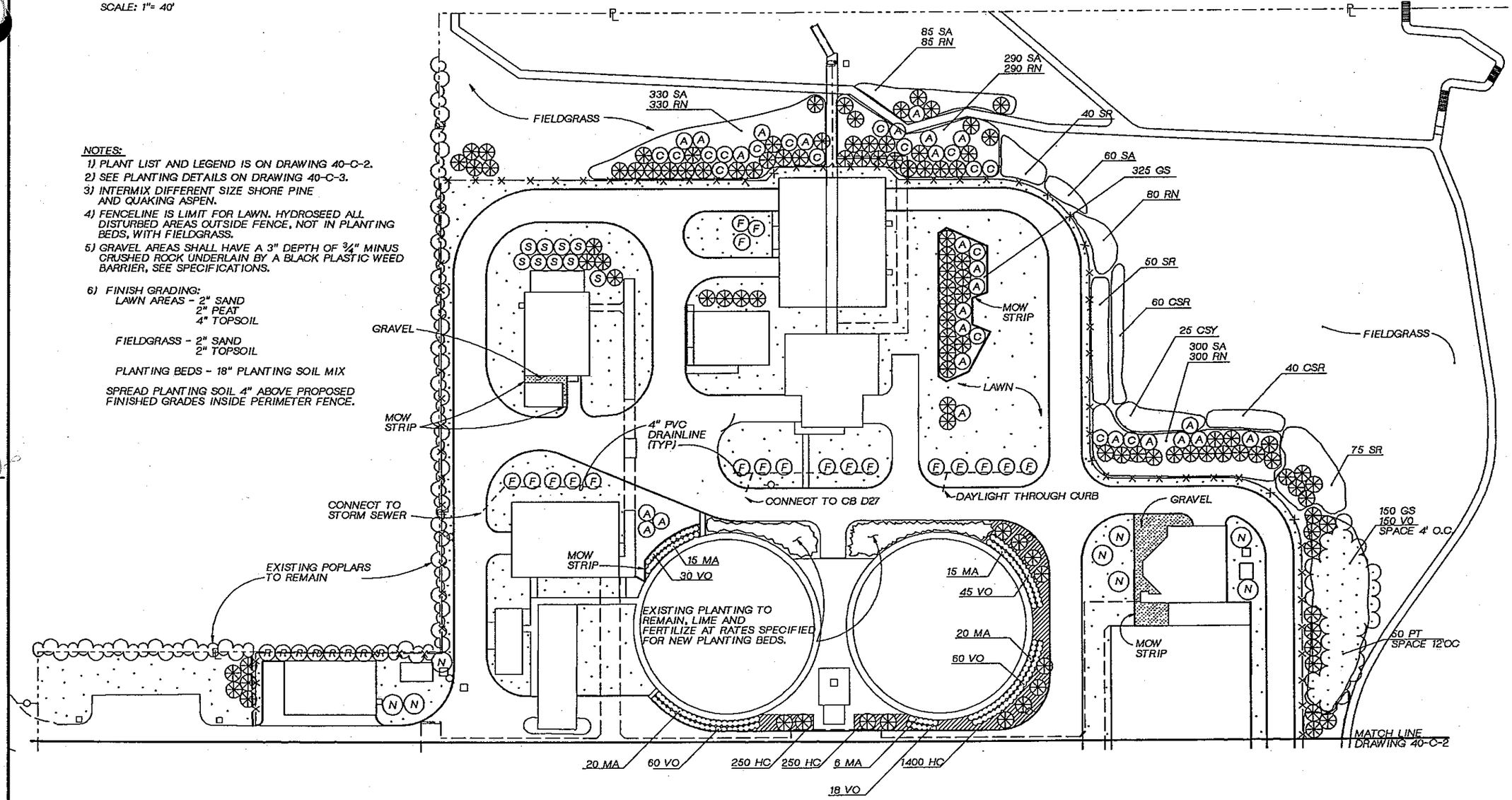

DSGN J. IRISH					
DR J.PIERONI					
CHK J GAUTHIER					
APVD J. GAUTHIER	NO.	DATE	REVISION	BY	APVD

CH2M HILL

JOSEPH A. GAUTHIER STATE OF WASHINGTON REGISTERED PROFESSIONAL ENGINEER

REUSE OF DOCUMENTS
THIS DOCUMENT, AND THE IDEAS AND DESIGNS INCORPORATED HEREIN, AS AN INSTRUMENT OF PROFESSIONAL SERVICE, IS THE PROPERTY OF CH2M HILL AND IS NOT TO BE USED, IN WHOLE OR IN PART, FOR ANY OTHER PROJECT WITHOUT THE WRITTEN AUTHORIZATION OF CH2M HILL.
©CH2M HILL

BAR IS ONE INCH ON ORIGINAL DRAWING.
0 1"
IF NOT ONE INCH ON THIS SHEET, ADJUST SCALES ACCORDINGLY.

CITY OF BELLINGHAM, WASHINGTON
POST POINT WASTEWATER TREATMENT PLANT UPGRADE

PLANT SCREENING MITIGATION
PLANTING PLAN

DWG NO. 40-C-1
DATE AUG. 1990
PROJ NO. SEA22462.C1

OVERLAY IDENTIFICATION: COMPOSITE
PROJID: PLAN
FILE: N

DRAWN BY: J.PIERONI DESIGNED BY: J. IRISH
DGN NAME: H:/PROJ2/BELLINGH/BL040C-G

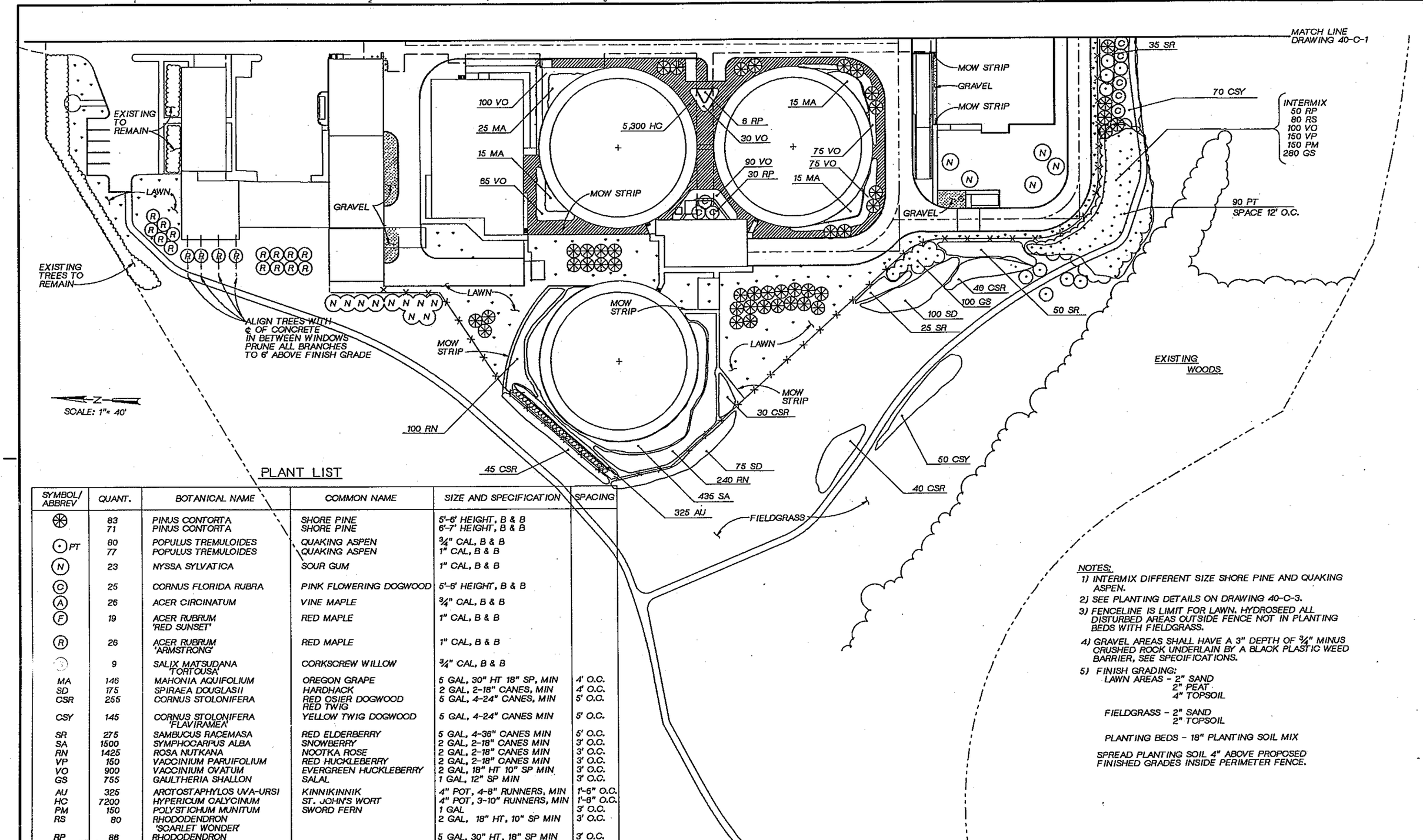

PLANT LIST

SYMBOL/ ABBREV	QUANT.	BOTANICAL NAME	COMMON NAME	SIZE AND SPECIFICATION	SPACING
⊛	83	PINUS CONTORTA	SHORE PINE	5'-6' HEIGHT, B & B	
	71	PINUS CONTORTA	SHORE PINE	6'-7' HEIGHT, B & B	
⊙ PT	80	POPULUS TREMULOIDES	QUAKING ASPEN	¾" CAL, B & B	
	77	POPULUS TREMULOIDES	QUAKING ASPEN	1" CAL, B & B	
N	23	NYSSA SYLVATICA	SOUR GUM	1" CAL, B & B	
C	25	CORNUS FLORIDA RUBRA	PINK FLOWERING DOGWOOD	5'-6' HEIGHT, B & B	
A	26	ACER CIRCINATUM	VINE MAPLE	¾" CAL, B & B	
F	19	ACER RUBRUM 'RED SUNSET'	RED MAPLE	1" CAL, B & B	
R	26	ACER RUBRUM 'ARMSTRONG'	RED MAPLE	1" CAL, B & B	
	9	SALIX MATSUDANA 'TORTOUSA'	CORKSCREW WILLOW	¾" CAL, B & B	
MA	146	MAHONIA AQUIFOLIUM	OREGON GRAPE	5 GAL, 30" HT 18" SP, MIN	4' O.C.
SD	175	SPIRAEA DOUGLASII	HARDHACK	2 GAL, 2-18" CANES, MIN	4' O.C.
CSR	255	CORNUS STOLONIFERA	RED OSIER DOGWOOD RED TWIG	5 GAL, 4-24" CANES, MIN	5' O.C.
CSY	145	CORNUS STOLONIFERA 'FLAVIRAMEA'	YELLOW TWIG DOGWOOD	5 GAL, 4-24" CANES MIN	5' O.C.
SR	275	SAMBUCUS RACEMASA	RED ELDERBERRY	5 GAL, 4-36" CANES MIN	5' O.C.
SA	1500	SYMPHOCARPUS ALBA	SNOWBERRY	2 GAL, 2-18" CANES MIN	3' O.C.
RN	1425	ROSA NUTKANA	NOOTKA ROSE	2 GAL, 2-18" CANES MIN	3' O.C.
VP	150	VACCINIUM PARUIFOLIUM	RED HUCKLEBERRY	2 GAL, 2-18" CANES MIN	3' O.C.
VO	900	VACCINIUM OVATUM	EVERGREEN HUCKLEBERRY	2 GAL, 18" HT 10" SP MIN	3' O.C.
GS	755	GAULTHERIA SHALLON	SALAL	1 GAL, 12" SP MIN	3' O.C.
AU	325	ARCTOSTAPHYLOS UVA-URSI	KINNIKINNIK	4" POT, 4-8" RUNNERS, MIN	1'-6" O.C.
HC	7200	HYPERICUM CALYCINUM	ST. JOHN'S WORT	4" POT, 3-10" RUNNERS, MIN	1'-6" O.C.
PM	150	POLYSTICHUM MUNITUM	SWORD FERN	1 GAL	3' O.C.
RS	80	RHODODENDRON 'SCARLET WONDER'		2 GAL, 18" HT, 10" SP MIN	3' O.C.
RP	86	RHODODENDRON 'PINK CAMEO'		5 GAL, 30" HT, 18" SP MIN	3' O.C.

NOTES:

1) INTERMIX DIFFERENT SIZE SHORE PINE AND QUAKING ASPEN.
2) SEE PLANTING DETAILS ON DRAWING 40-C-3.
3) FENCELINE IS LIMIT FOR LAWN. HYDROSEED ALL DISTURBED AREAS OUTSIDE FENCE NOT IN PLANTING BEDS WITH FIELDGRASS.
4) GRAVEL AREAS SHALL HAVE A 3" DEPTH OF ¾" MINUS CRUSHED ROCK UNDERLAIN BY A BLACK PLASTIC WEED BARRIER, SEE SPECIFICATIONS.
5) FINISH GRADING:
   LAWN AREAS - 2" SAND
   2" PEAT
   4" TOPSOIL

   FIELDGRASS - 2" SAND
   2" TOPSOIL

   PLANTING BEDS - 18" PLANTING SOIL MIX

   SPREAD PLANTING SOIL 4" ABOVE PROPOSED FINISHED GRADES INSIDE PERIMETER FENCE.

JOSEPH A. GAUTHIER REGISTERED PROFESSIONAL ENGINEER

CH2M HILL

DSGN	J.IRISH
DR	J.PIERONI
CHK	J GAUTHIER
APVD	J. GAUTHIER

NO.	DATE	REVISION	BY	APVD

REUSE OF DOCUMENTS
THIS DOCUMENT, AND THE IDEAS AND DESIGNS INCORPORATED HEREIN, AS AN INSTRUMENT OF PROFESSIONAL SERVICE, IS THE PROPERTY OF CH2M HILL AND IS NOT TO BE USED, IN WHOLE OR IN PART, FOR ANY OTHER PROJECT WITHOUT THE WRITTEN AUTHORIZATION OF CH2M HILL.
©CH2M HILL

BAR IS ONE INCH ON ORIGINAL DRAWING. 0 1"
IF NOT ONE INCH ON THIS SHEET, ADJUST SCALES ACCORDINGLY.

CITY OF BELLINGHAM, WASHINGTON
POST POINT WASTEWATER TREATMENT PLANT UPGRADE

PLANT SCREENING MITIGATION
PLANTING PLAN

DWG NO. 40-C-2
DATE AUG. 1990
PROJ. NO. SEA22462.C1

DATE: 4-22-90
DRAWN BY: DL CHRISINGER DESIGNED BY: J IRISH
DGN NAME: H:/PROJ2/BELLINGH/BL040C-B.DGN

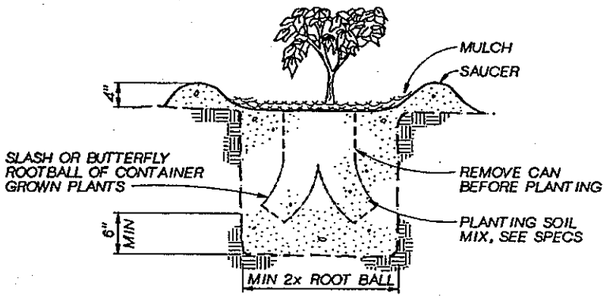

PLANTING SHRUBS FROM CONTAINER
NTS

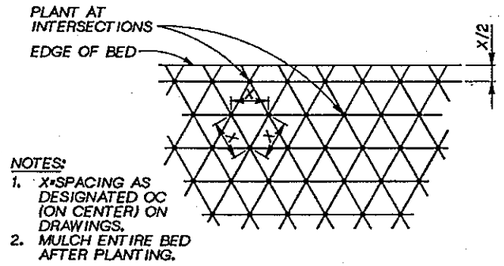

NOTES:
1. X=SPACING AS DESIGNATED OC (ON CENTER) ON DRAWINGS.
2. MULCH ENTIRE BED AFTER PLANTING.

PLANT SPACING
NTS

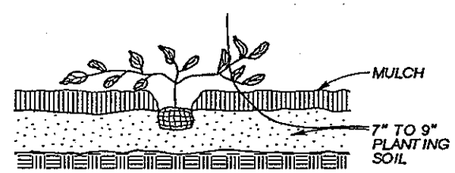

GROUND COVER PLANTING
NTS

NOTES:
1. IN SHRUB BEDS, PLANTING SOIL SHALL BE 100% PLANTING SOIL MIX AS SPECIFIED.
2. OUTSIDE SHRUB BEDS, PLANTING SOIL SHALL BE 50/50 PLANTING SOIL MIX AND NATIVE SOIL.

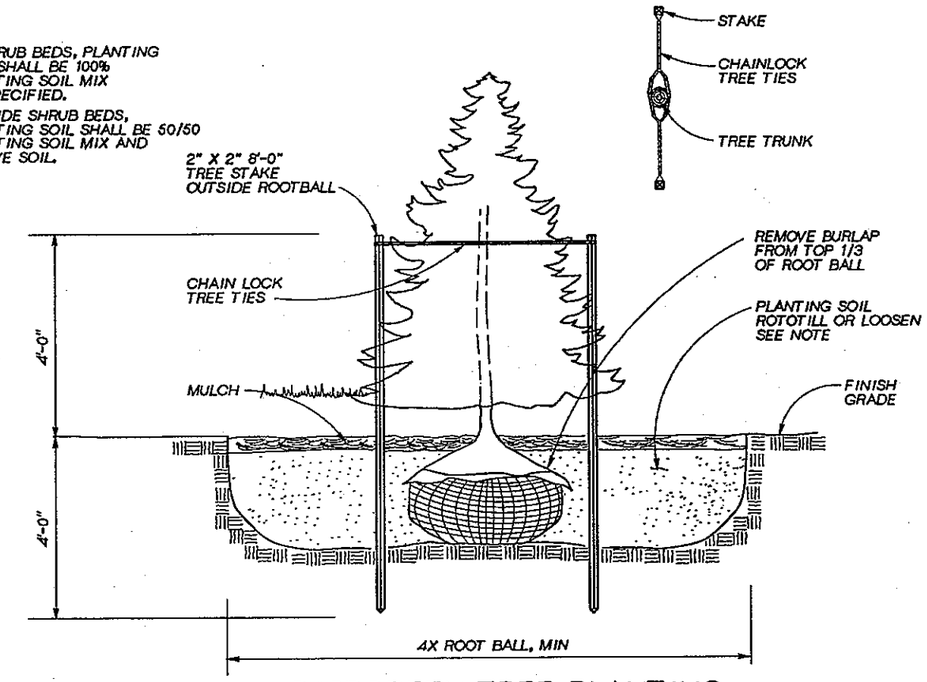

EVERGREEN TREE PLANTING
NTS

NOTES:
1. IN SHRUB BEDS, PLANTING SOIL SHALL BE 100% PLANTING SOIL MIX AS SPECIFIED.
2. OUTSIDE SHRUB BEDS, PLANTING SOIL SHALL BE 50/50 PLANTING SOIL MIX AND NATIVE SOIL.
3. TREE SHALL BEAR SAME RELATION TO FINISH GRADE AS IT BORE TO PREVIOUS GRADE.

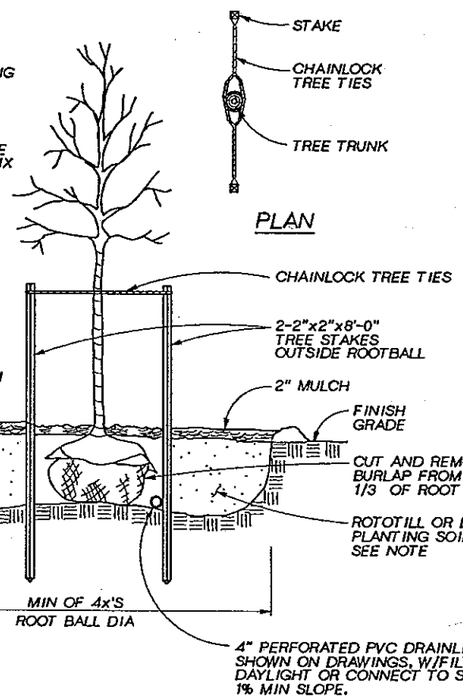

TREE PLANTING AND STAKING
NTS

JOSEPH A. GAUTHIER — STATE OF WASHINGTON — REGISTERED PROFESSIONAL ENGINEER

CH2M HILL

DSGN	J IRISH					
DR	DLC					
CHK	XXXX					
APVD	J. GAUTHIER	NO.	DATE	REVISION	BY	APVD

REUSE OF DOCUMENTS
THIS DOCUMENT, AND THE IDEAS AND DESIGNS INCORPORATED HEREIN, AS AN INSTRUMENT OF PROFESSIONAL SERVICE, IS THE PROPERTY OF CH2M HILL AND IS NOT TO BE USED, IN WHOLE OR IN PART, FOR ANY OTHER PROJECT WITHOUT THE WRITTEN AUTHORIZATION OF CH2M HILL.
©CH2M HILL

VERIFY SCALE
BAR IS ONE INCH ON ORIGINAL DRAWING.
0 1"
IF NOT ONE INCH ON THIS SHEET, ADJUST SCALES ACCORDINGLY.

CITY OF BELLINGHAM, WASHINGTON
POST POINT WASTEWATER TREATMENT PLANT UPGRADE

PLANT SCREENING MITIGATION
PLANTING DETAILS

DWG NO. 40-C-3
DATE AUG. 1990
PROJ NO. SEA22462.C1

DATE: 8-26-90 DLC
DRAWN BY: J. PIERONI DESIGNED BY: J. IRISH
DGN NAME: H:/PROJ2/BELLINGH/BL040C-H.DGN

NOTES:

1. LOCATE MANUAL DRAIN VALVE AT LOW POINT OF EACH LATERAL LINE.
2. SEE IRRIGATION SCHEDULE ON DRAWING 40-C-5.
3. SEE IRRIGATION DETAILS ON DRAWING 40-C-6.
4. ALL PIPE UNDER PAVEMENT SHALL BE IN A SLEEVE.
5. ELECTRICAL WIRING FROM ZONE VALVES TO CONTROLLER SHALL BE LOCATED IN CONDUIT WITHIN PIPE GALLERIES. SEE DETAIL 327 FOR CONDUIT PENETRATION OF GALLERY WALL.
6. LOCATE VALVE BOXES IN SHRUB OR TREE BEDS WHERE PRACTICAL.
7. PLACE METALLIC IDENTIFICATION TAPE ON TOP OF ALL MAINLINE PIPE AS SPECIFIED.

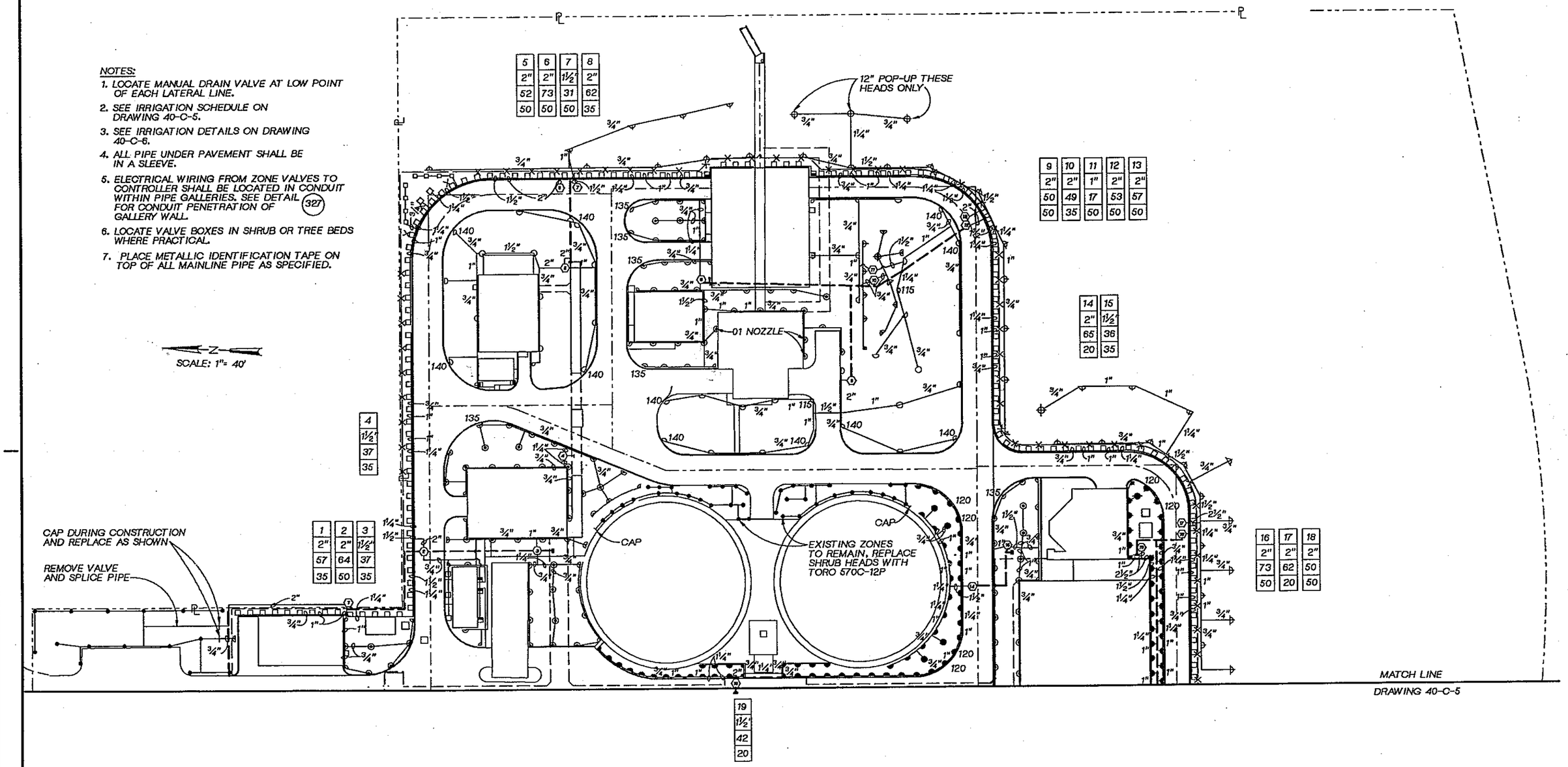

5	6	7	8
2"	2"	1½"	2"
52	73	31	62
50	50	50	35

9	10	11	12	13
2"	2"	1"	2"	2"
50	49	17	53	57
50	35	50	50	50

14	15
2"	1½"
65	36
20	35

4
1½"
37
35

1	2	3
2"	2"	1½"
57	64	37
35	50	35

16	17	18
2"	2"	2"
73	62	50
50	20	50

19
1½"
42
20

JOSEPH A. GAUTHIER REGISTERED PROFESSIONAL ENGINEER

CH2M HILL

DSGN	J.IRISH
DR	J.PIERONI
CHK	J GAUTHIER
APVD	J. GAUTHIER

NO.	DATE	REVISION	BY	APVD

REUSE OF DOCUMENTS

THIS DOCUMENT, AND THE IDEAS AND DESIGNS INCORPORATED HEREIN, AS AN INSTRUMENT OF PROFESSIONAL SERVICE, IS THE PROPERTY OF CH2M HILL AND IS NOT TO BE USED, IN WHOLE OR IN PART, FOR ANY OTHER PROJECT WITHOUT THE WRITTEN AUTHORIZATION OF CH2M HILL.

©CH2M HILL

BAR IS ONE INCH ON ORIGINAL DRAWING.
0 1"
IF NOT ONE INCH ON THIS SHEET, ADJUST SCALES ACCORDINGLY.

CITY OF BELLINGHAM, WASHINGTON
POST POINT WASTEWATER TREATMENT PLANT UPGRADE

PLANT SCREENING MITIGATION

IRRIGATION SYSTEM PLAN

DWG NO. 40-C-4
DATE AUG. 1990
PROJ NO. SEA22462.C1

DRAWN BY:J.PIERONI DESIGNED BY: J. IRISH
DGN NAME: H:/PROJ2/BELLINGH/BL040C-C.DGN

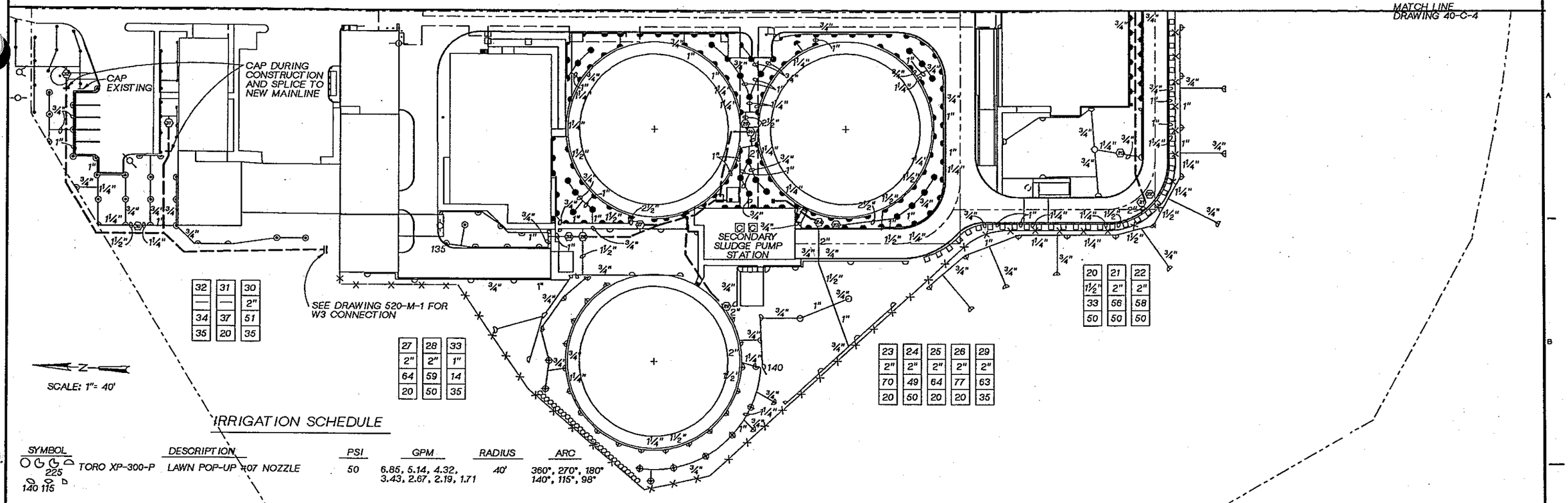

IRRIGATION SCHEDULE

SYMBOL	DESCRIPTION		PSI	GPM	RADIUS	ARC
225 140 115	TORO XP-300-P	LAWN POP-UP #07 NOZZLE	50	6.85, 5.14, 4.32, 3.43, 2.67, 2.19, 1.71	40'	360°, 270°, 180° 140°, 115°, 98°
	TORO XP-300-S	SHRUB- #07 NOZZLE ON 4' RISER	50	6.85, 3.43, 1.71	40'	360°, 180°, 90°
135	TORO 300P	LAWN POP-UP #02 NOZZLE	35	2.88, 2.16, 1.44 1.08, .72	21'	360°, 270°, 180° 135°, 90°
	TORO 300HP	12" HI-POP #02 NOZZLE	35	2.88, 1.44, .72	21'	360°, 180°, 90°
120	TORO 570C-4P	4" LAWN POP-UP 15' SERIES	20	3.4, 2.5, 1.7 1.2, .8	12'	360°, 270°, 180° 120°, 90°
120	TORO 570C-12P	12" SHRUBS POP-UP 15' SERIES	20	3.4, 2.5, 1.7 1.2, .8	12'	360°, 270°, 180° 120°, 90°
	TORO 570C-4P	4" LAWN POP-UP 9SST, 4-EST	50	1.55, .80	—	10X22, 6X20

- EXISTING SPRINKERS TO REMAIN-SEE RECORD DRAWINGS (ATTACHED)
- TORO 140-06-18 H300 SERIES 18 STATION CONTROLLER
- TORO 216-26 SERIES ELECTRIC ZONE VALVE - SIZE AS SHOWN WITH WILKENS MODEL 70DM PRESSURE REGULATING VALVE - SAME SIZE AS ZONE VALVE
- LATERAL LINE-PVC CLASS 200 IPS PIPE
- 2½"MAIN LINE-PVC SCHEDULE 40 IPS PIPE
- POINT OF CONNECTION TO W3 WATER LINE-SEE DRAWINGS 50-M-6 THROUGH 50-M-13 AVAILABLE PRESSURE IS 80 PSI, FLOW IS 80 GPM.

— VALVE NUMBER
— VALVE SIZE
— ZONE GPM
— ZONE PSI

NOTES:

1. LOCATE MANUAL DRAIN VALVE AT LOW POINT OF EACH LATERAL LINE.
2. EXISTING VALVES 31 AND 32 TO REMAIN.
3. LOCATE TWO CONTROLLERS IN SECONDARY SLUDGE PUMP STATION AS PER DETAIL ON DRAWING 40-C-6.
4. ELECTRICAL WIRING FROM ZONE VALVES TO CONTROLLER SHALL BE LOCATED IN CONDUIT WITHIN PIPE GALLERIES SEE DETAIL (327) FOR CONDUIT PENETRATION OF GALLERY WALL. CONDUIT FROM GALLERY TO SECONDARY SLUDGE PUMP STATION SHALL BE PROVIDED BY OTHERS.
5. ALL PIPE UNDER PAVEMENT SHALL BE IN A SLEEVE.
6. SEE IRRIGATION DETAILS ON DRAWING 40-C-6.
7. LOCATE VALVE BOXES IN SHRUB AND TREE BEDS WHERE PRACTICAL.
8. PLACE METALLIC PIPE IDENTIFICATION TAPE ON TOP OF ALL MAILINE PIPE AS SPECIFED

JOSEPH A. GAUTHIER STATE OF WASHINGTON REGISTERED PROFESSIONAL ENGINEER

CH2M HILL

DSGN	J. IRISH
DR	J.PIERONI
CHK	J GAUTHIER
APVD	J. GAUTHIER

NO.	DATE	REVISION	BY	APVD

REUSE OF DOCUMENTS
THIS DOCUMENT, AND THE IDEAS AND DESIGNS INCORPORATED HEREIN, AS AN INSTRUMENT OF PROFESSIONAL SERVICE, IS THE PROPERTY OF CH2M HILL AND IS NOT TO BE USED, IN WHOLE OR IN PART, FOR ANY OTHER PROJECT WITHOUT THE WRITTEN AUTHORIZATION OF CH2M HILL.
©CH2M HILL

BAR IS ONE INCH ON ORIGINAL DRAWING.
0 1"
IF NOT ONE INCH ON THIS SHEET, ADJUST SCALES ACCORDINGLY.

CITY OF BELLINGHAM, WASHINGTON
POST POINT WASTEWATER TREATMENT PLANT UPGRADE

PLANT SCREENING MITIGATION
IRRIGATION SYSTEM PLAN

DWG NO. 40-C-5
DATE AUG. 1990
PROJ NO. SEA22462.C1

OVERLAY IDENTIFICATION | COMPOSITE | PROJID | PLAY | FILE | EN

DATE: 4-24-90
DRAWN BY: DL CHRISINGER DESIGNED BY: J IRISH
DGN NAME: H:/PROJ2/BELLINGH/BL040C-D.DGN

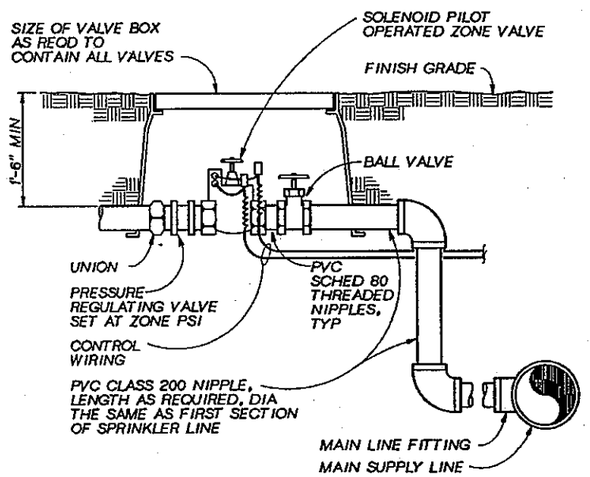

NOTES:
1. ALL PVC FITTINGS-SCHED 40, UNLESS OTHERWISE NOTED.
2. ALL WIRE TO BE INSTALLED AS PER LOCAL CODE.
3. TAPE AND BUNDLE WIRE EVERY TWENTY FEET.
4. PROVIDE EXPANSION COILS AT EACH WIRE CONNECTION IN VALVE BOX.
5. COMPACT SOIL AROUND VALVE BOX TO SAME DENSITY AS UNDISTURBED ADJACENT SOIL.

TYPICAL IRRIGATION VALVES & VALVE BOX INSTALLATIONS
NTS

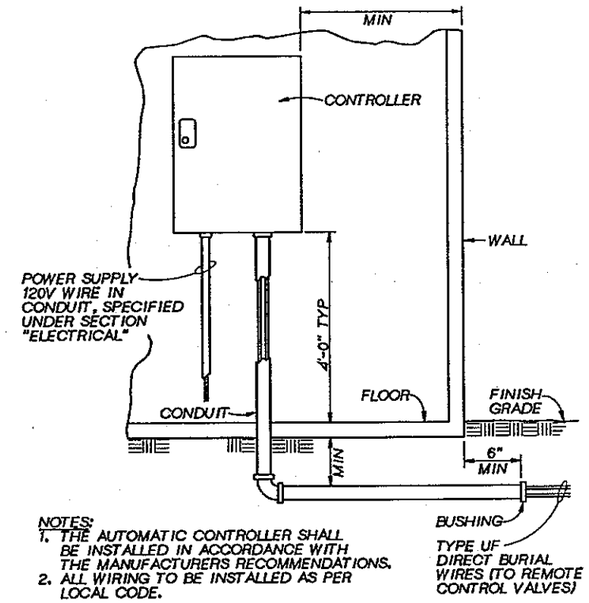

NOTES:
1. THE AUTOMATIC CONTROLLER SHALL BE INSTALLED IN ACCORDANCE WITH THE MANUFACTURERS RECOMMENDATIONS.
2. ALL WIRING TO BE INSTALLED AS PER LOCAL CODE.

AUTOMATIC CONTROLLER INTERIOR INSTALLATION
NTS

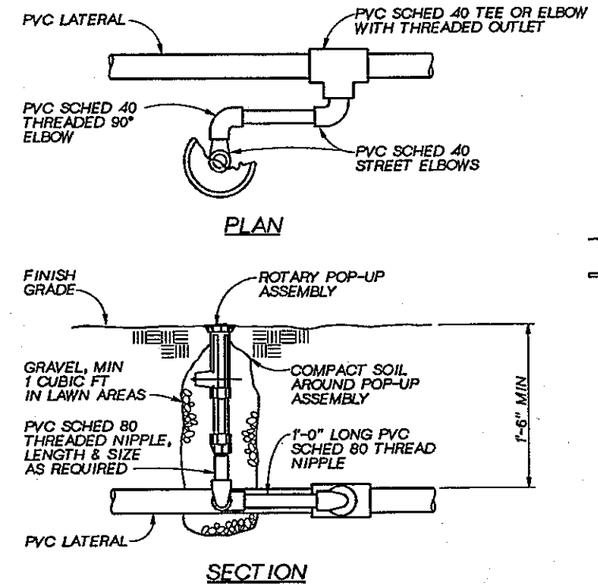

POP-UP SPRINKLER INSTALLATION
NTS

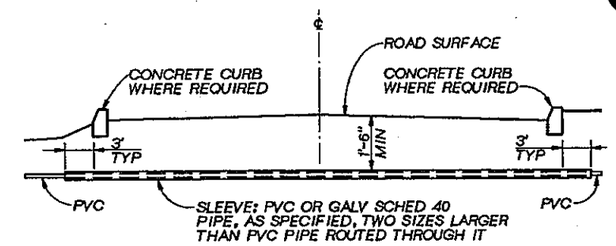

ROAD UNDERCROSSING
NTS

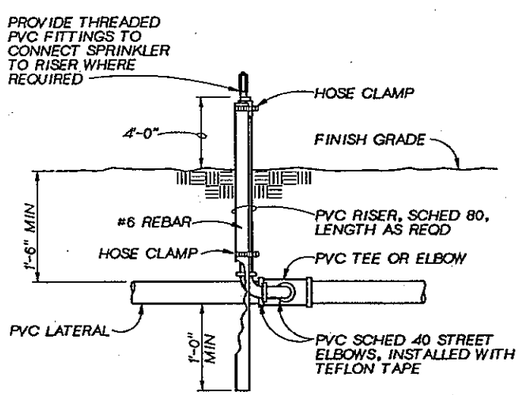

NOTE:
COMPACT SOIL AROUND ASSEMBLY SO RISER DOES NOT VIBRATE WHEN SPRINKLER IS IN OPERATION.

SPRAY HEAD INSTALLATION
NTS

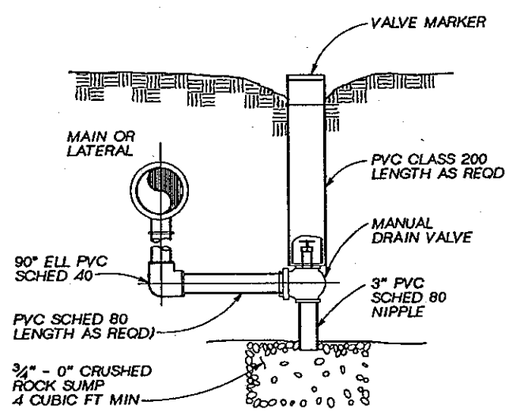

NOTE:
LOCATE VALVE AT LOW POINT ON MAIN AND LATERAL LINES

MANUAL DRAIN VALVE ASSEMBLY DETAIL
NTS

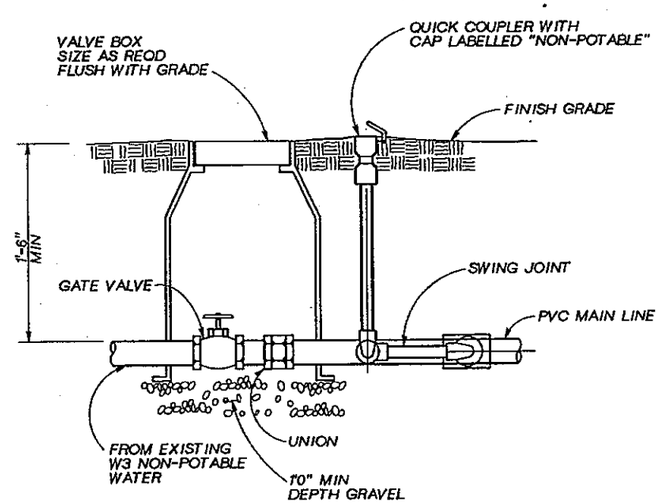

POINT OF CONNECTION
NTS

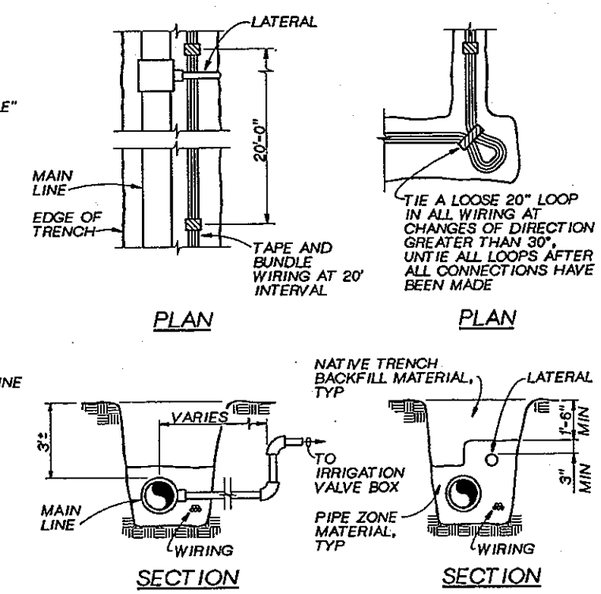

NOTE:
LATERALS TO HAVE 3 INCHES MINIMUM OF PIPE ZONE MATERIAL ALL AROUND.

TRENCHING DETAILS
NTS

DSGN J. IRISH						
DR DL CHRISINGER						
CHK J GAUTHIER						
APVD J. GAUTHIER	NO.	DATE	REVISION	BY	APVD	

CH2M HILL

REUSE OF DOCUMENTS
THIS DOCUMENT, AND THE IDEAS AND DESIGNS INCORPORATED HEREIN, AS AN INSTRUMENT OF PROFESSIONAL SERVICE, IS THE PROPERTY OF CH2M HILL AND IS NOT TO BE USED, IN WHOLE OR IN PART, FOR ANY OTHER PROJECT WITHOUT THE WRITTEN AUTHORIZATION OF CH2M HILL.
©CH2M HILL

VERIFY SCALE
BAR IS ONE INCH ON ORIGINAL DRAWING.
0 1
IF NOT ONE INCH ON THIS SHEET, ADJUST SCALES ACCORDINGLY.

CITY OF BELLINGHAM, WASHINGTON
POST POINT WASTEWATER TREATMENT PLANT UPGRADE

PLANT SCREENING MITIGATION
IRRIGATION SYSTEM DETAILS

DWG NO. 40-C-5
DATE AUG. 1990
PROJ. NO. SEA22462.C1

OVERLAY IDENTIFICATION: COMPOSITE, OVERLAY, SCREEN, PROJID, FILE

DGN NAME: H:/PROJ2/BELLINGH/BL040C-E.DGN

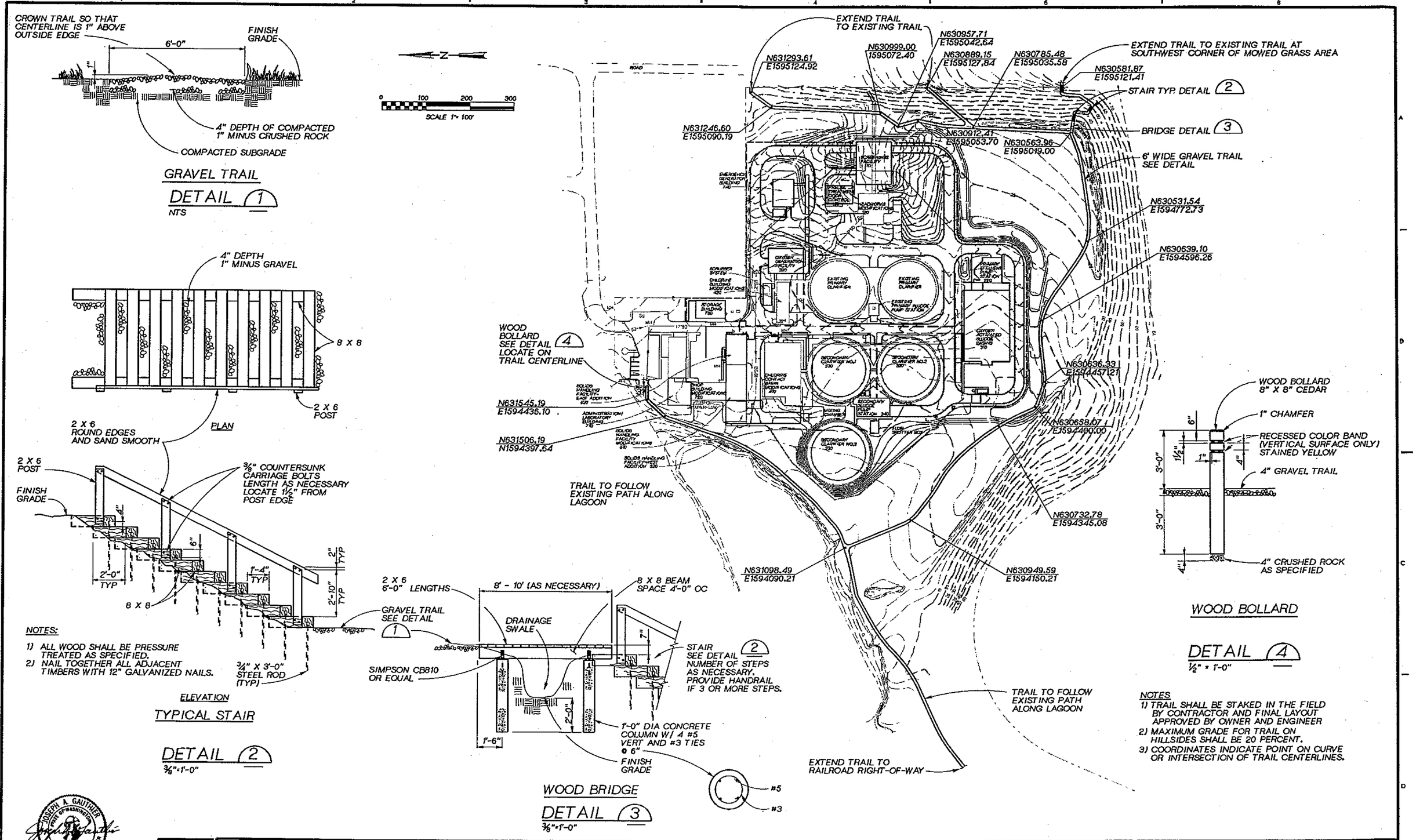

JOSEPH A. GAUTHIER STATE OF WASHINGTON REGISTERED PROFESSIONAL ENGINEER

CH2M HILL

DSGN	J.IRISH				
DR	J.PIERONI				
CHK	J GAUTHIER				
APVD	J. GAUTHIER	NO.	DATE	REVISION	BY	APVD

REUSE OF DOCUMENTS
THIS DOCUMENT, AND THE IDEAS AND DESIGNS INCORPORATED HEREIN, AS AN INSTRUMENT OF PROFESSIONAL SERVICE, IS THE PROPERTY OF CH2M HILL AND IS NOT TO BE USED, IN WHOLE OR IN PART, FOR ANY OTHER PROJECT WITHOUT THE WRITTEN AUTHORIZATION OF CH2M HILL.
©CH2M HILL

VERIFY SCALE
BAR IS ONE INCH ON ORIGINAL DRAWING.
0 1"
IF NOT ONE INCH ON THIS SHEET, ADJUST SCALES ACCORDINGLY.

CITY OF BELLINGHAM, WASHINGTON
POST POINT WASTEWATER TREATMENT PLANT UPGRADE

PLANT SCREENING MITIGATION
TRAIL PLAN

DWG NO. 40-C-7
DATE AUG. 1990
PROJ. NO. SEA22462.C1

DATE: 8-26-90
DRAWN BY: BBL DESIGNED BY: LMK
DGN NAME: H:/PROJ2/BELLINGH/BL050S-A.DGN

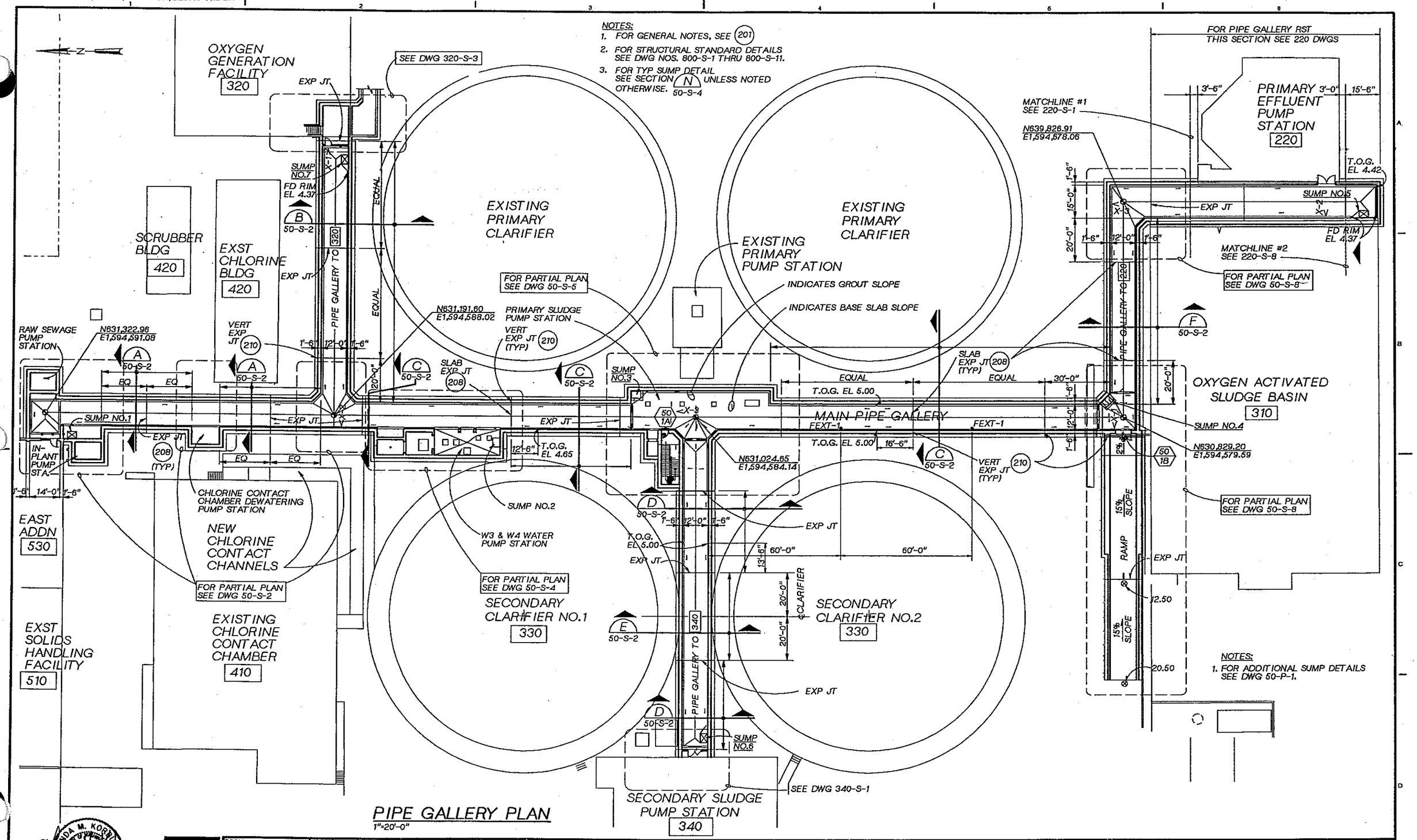

PIPE GALLERY PLAN
1"=20'-0"

DSGN	L. KORBUS				
DR	B. LAZARO				
CHK	W.BENNETT				
APVD	J GAUTHIER	NO.	DATE	REVISION	BY	APVD

REUSE OF DOCUMENTS
THIS DOCUMENT, AND THE IDEAS AND DESIGNS INCORPORATED HEREIN, AS AN INSTRUMENT OF PROFESSIONAL SERVICE, IS THE PROPERTY OF CH2M HILL AND IS NOT TO BE USED, IN WHOLE OR IN PART, FOR ANY OTHER PROJECT WITHOUT THE WRITTEN AUTHORIZATION OF CH2M HILL.
©CH2M HILL

BAR IS ONE INCH ON ORIGINAL DRAWING. 0 1"
IF NOT ONE INCH ON THIS SHEET, ADJUST SCALES ACCORDINGLY.

CITY OF BELLINGHAM, WASHINGTON
POST POINT WASTEWATER TREATMENT PLANT UPGRADE

PIPE GALLERY
STRUCTURAL PLAN

DWG NO. 60-S-1
DATE AUG. 1990
PROJ NO. SEA22462.C1

OVERLAY IDENTIFICATION | COMPOSITE | OVERLAY | PROJID | FILE

DATE: 8-25-90
DRAWN BY: BBL DESIGNED BY: D. WERMCRANTZ
DGN NAME: H:/PROJ2/BELLINGH/BL050S-B.DGN

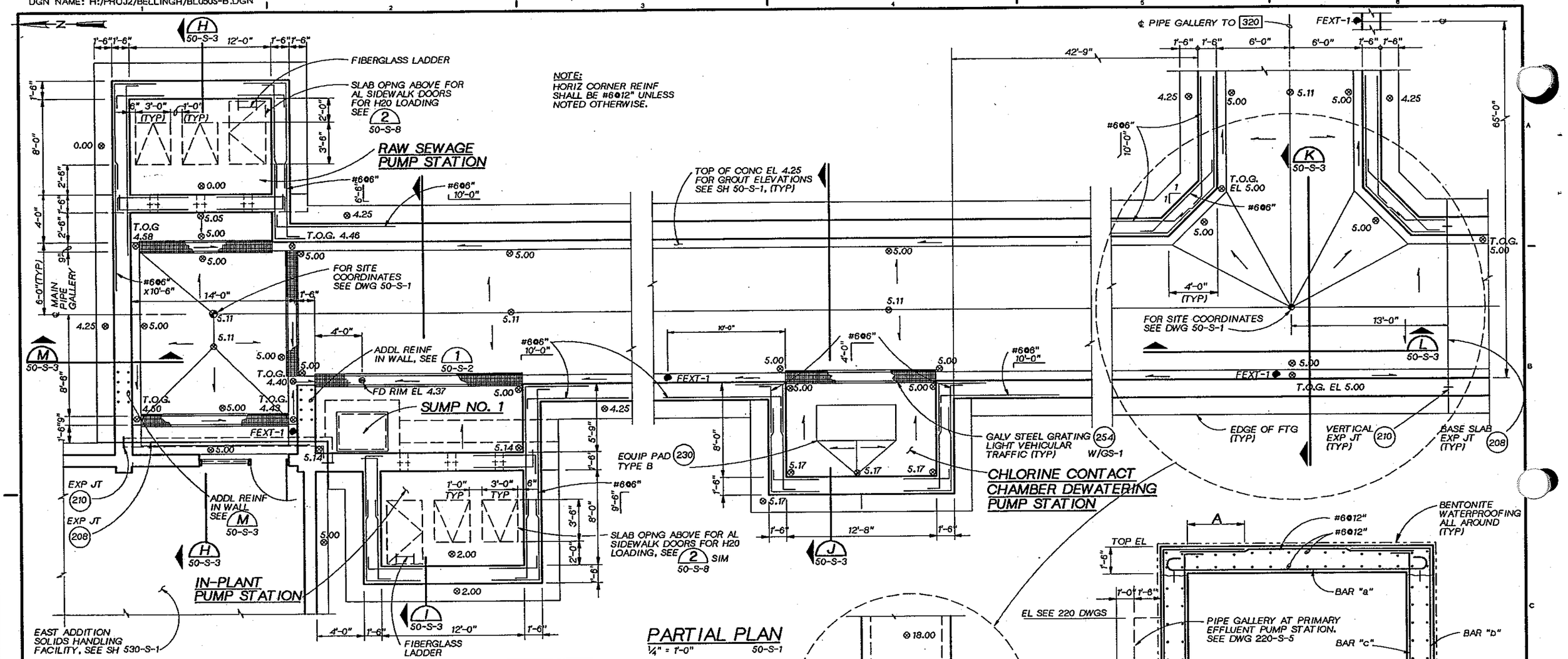

PIPE GALLERY - TYPICAL SECTION TABLE

SECTION	TOP EL	H.P. EL	W	DIMENSIONS A	B	C	D	REINFORCING BARS a	b	c	d	e	f
A	16.50	5.11	12'-0"	3'-6"	3'-6"	3'-3"	2'-6"	#6@6"	#8@12"	#6@12"	#9@12"	#6@12"	#6@6"
B	18.00	5.11	12'-0"	3'-6"	3'-6"	3'-9"	2'-6"	#6@6"	#8@12"	#6@12"	#6@6"	#8@12"	#6@6"
C	16.50	5.11	12'-0"	3'-6"	3'-6"	3'-9"	2'-6"	#6@6"	#8@12"	#6@12"	#9@12"	#6@12"	#9@12"
D	16.50	5.11	12'-0"	3'-6"	3'-6"	3'-9"	2'-6"	#8@12"	#8@12"	#6@12"	#9@12"	#8@12"	#8@12"
E	16.50	5.11	12'-0"	3'-6"	3'-6"	3'-9"	3'-0"	#8@12"	#8@12"	#7@12"	#7@6"	#7@12"	#8@12"
F	16.50	5.11	12'-0"	3'-6"	3'-6"	3'-9"	3'-0"	#8@12"	#6@6"	#7@12"	#7@6"	#7@12"	#8@12"

CHRISTINA M. KORDUNER STATE OF WASHINGTON 22262 REGISTERED PROFESSIONAL ENGINEER

CH2M HILL

DSGN D.WERMCRANTZ
DR B.LAZARO
CHK W.BENNETT
APVD J GAUTHIER

NO.	DATE	REVISION	BY	APVD

REUSE OF DOCUMENTS
THIS DOCUMENT, AND THE IDEAS AND DESIGNS INCORPORATED HEREIN, AS AN INSTRUMENT OF PROFESSIONAL SERVICE, IS THE PROPERTY OF CH2M HILL AND IS NOT TO BE USED, IN WHOLE OR IN PART, FOR ANY OTHER PROJECT WITHOUT THE WRITTEN AUTHORIZATION OF CH2M HILL.
©CH2M HILL

BAR IS ONE INCH ON ORIGINAL DRAWING. 0 1"
IF NOT ONE INCH ON THIS SHEET, ADJUST SCALES ACCORDINGLY.

CITY OF BELLINGHAM, WASHINGTON
POST POINT WASTEWATER TREATMENT PLANT UPGRADE

PIPE GALLERY
STRUCTURAL
PARTIAL PLAN AND SECTION

DWG NO. 50-S-2
DATE AUG. 1990
PROJ NO. SEA22462.C1

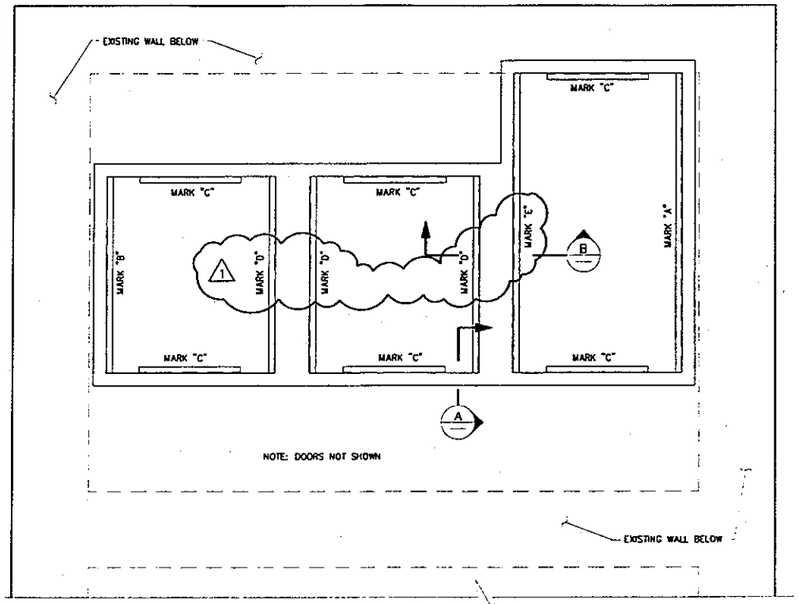

RAW SEWAGE/INPLANT PUMP STATIONS
3/4" = 1'-0" (2 SIMILAR INSTALLATIONS)

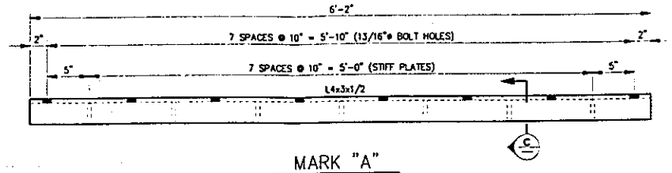

MARK "A"
2 REQUIRED - ALUMINUM

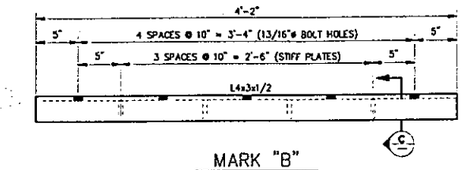

MARK "B"
2 REQUIRED - ALUMINUM

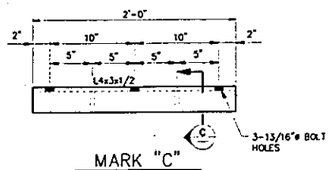

MARK "C"
12 REQUIRED - ALUMINUM

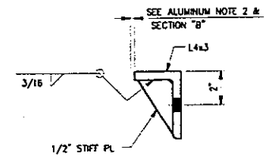

SECTION
SCALE: 3"=1'-0"

GENERAL NOTES

1. THE CONTRACTOR SHALL VERIFY ALL DIMENSIONS AND ELEVATIONS WHERE NOTED ON THE DRAWINGS BEFORE STARTING WORK AND SHALL NOTIFY THE OWNER'S REPRESENTATIVE OF ANY DISCREPANCIES.
2. DO NOT SCALE THE DRAWINGS FOR DIMENSIONS, SIZES OR LOCATIONS.
3. THE CONTRACTOR SHALL DESIGN, CONSTRUCT AND MAINTAIN ALL SAFETY DEVICES INCLUDING, BUT NOT LIMITED TO SHORING, BRACING AND FALL PROTECTION. THE CONTRACTOR SHALL BE SOLELY RESPONSIBLE FOR CONFORMING TO ALL LOCAL, STATE, FEDERAL SAFETY AND HEALTH STANDARDS LAWS AND REGULATIONS.
4. THE CONTRACTOR SHALL BE RESPONSIBLE FOR THE CORRECT INSTALLATION OF ALL ITEMS ACCORDING TO THE PLANS AND SPECIFICATIONS. NO MODIFICATIONS SHALL BE MADE WITHOUT THE WRITTEN APPROVAL OF THE OWNERS REPRESENTATIVE.
5. IN THE EVENT OF CONFLICT BETWEEN THE GENERAL NOTES, DETAILS OR SPECIFICATIONS AND SPECIFIC DETAILS ON THE DESIGN DRAWINGS, THE SPECIFIC DETAILS SHALL PREVAIL. IN THE EVENT OF CONFLICT BETWEEN LOCAL, STATE OR FEDERAL SPECIFICATIONS AND THE CLIENTS STANDARDS, THE MORE STRINGENT STANDARD SHALL PREVAIL.

STRUCTURAL ALUMINUM NOTES:

1. ALL STRUCTURAL SHAPES & PLATES SHALL BE 6061-T6 ALUMINUM-AMERICAN STANDARD, UNO.
2. TRIM THE ANGLE BACK 1/4" TO ALLOW ADEQUATE SPACE FOR A 3/8" FILLET WELD.
3. ALL WELDING AND WELDER CERTIFICATIONS SHALL BE IN ACCORDANCE WITH THE CURRENT ADDITION OF THE AWS D1.2 "STRUCTURAL WELDING CODE - ALUMINUM".

GROUT AND ANCHOR NOTES

A. ANCHORS

1. ALL CONCRETE ANCHORS SHALL BE "HILTI" HVA ADHESIVE SYSTEM, HAS 304 SS ROD, WITH A MINIMUM EMBEDMENT LENGTH OF 10".
2. BOLTS, NUTS AND WASHERS SHALL BE 304 STAINLESS STEEL CONFORMING TO ASTM F593, F594 & ANSI B18.22.11.

B. GROUT

1. GROUT SHALL BE NON-SHRINK EPOXY GROUT CHOCKFAST GRAY SUPPLIED BY PHILADELPHIA RESINS CORPORATION, OR FIVE STAR HF EPOXY GROUT SUPPLIED BY U.S. GROUT CORPORATION, OR APPROVED EQUAL, UNO.
2. 3/4" GROUT HOLES @ 18" ON CENTER WITH A 1'-0" MINIMUM GROUT PIPE SHALL BE USED WHILE PUMPING GROUT. DO NOT GROUT SIMULTANEOUSLY FROM TWO ADJACENT PIPES. GROUT SHALL BE FILLED TO THE TOP OF GROUT PIPES & AFTER THE GROUT HAS CURED, THE GROUT PIPES ARE TO BE REMOVED FLUSH WITH THE TOP OF BASE FRAME.
3. THE OWNERS REPRESENTATIVE SHALL BE NOTIFIED 24 HOURS PRIOR TO EACH PLACEMENT OF GROUT FOR GROUT TESTING AND INSPECTION.

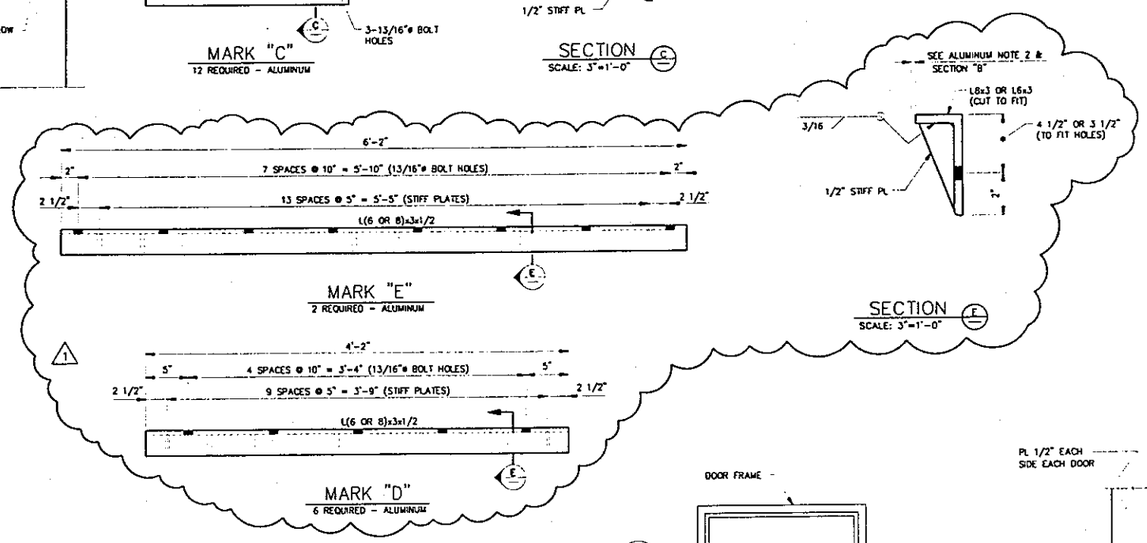

MARK "E"
2 REQUIRED - ALUMINUM

MARK "D"
6 REQUIRED - ALUMINUM

SECTION
SCALE: 3"=1'-0"

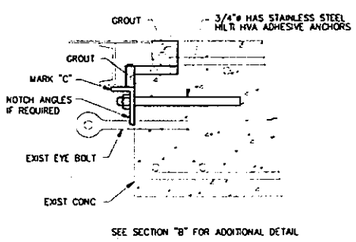

SECTION
SCALE: 1 1/2"=1'-0"

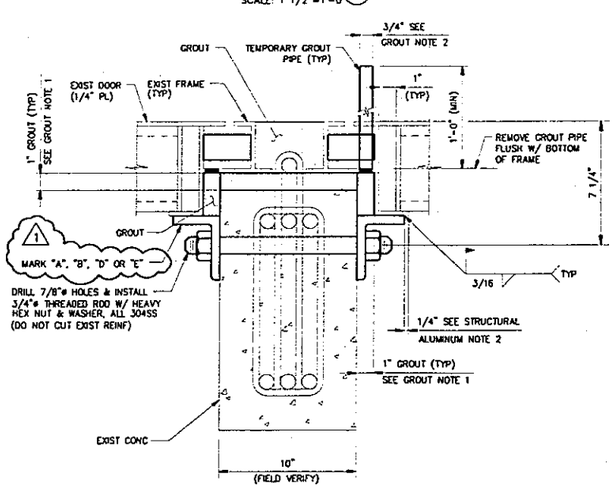

SECTION
SCALE: 3"=1'-0"

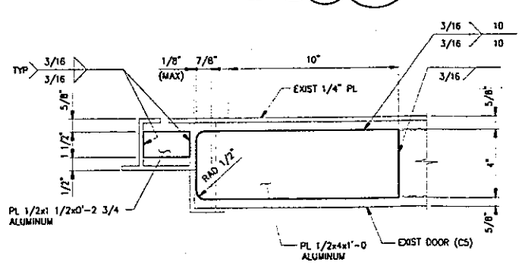

SECTION
SCALE: 1 1/2"=1'-0"

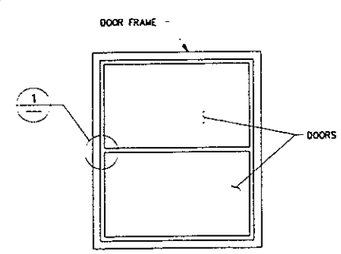

TYPICAL DOOR & FRAME MODIFICATIONS
3/8"=1'-0"

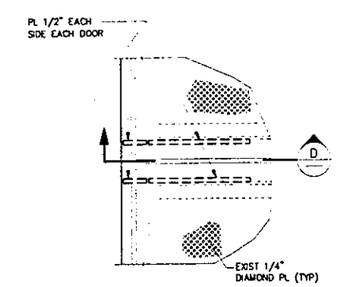

DETAIL
SCALE: 1 1/2"=1'-0"

REV.	DATE	DESCRIPTION	BY	CHKD	ENGR	CLIENT	DWG. NO.	REFERENCE DRAWINGS
1	2/97	MODIFIED ANGLE SUPPORTS	RKT	JFS	SAW			
0	7/96	ISSUED FOR CONSTRUCTION	RKT	JFS				

ENGINEERING CONTRACTOR
ANVIL CORPORATION
BELLINGHAM, WA
Anvil project: BE6210
AutoCAD file: SD-800
Last edit:02/05/97 08:53

ANVIL CORPORATION
1675 W. BAKERVIEW RD.
BELLINGHAM, WA. 98226
(206) 671-1450

CITY OF BELLINGHAM-POST POINT
MODIFICATIONS TO RAW SEWAGE/IN-PLANT PUMP STATION
SIDEWALK ACCESS DOOR

SCALE	JOB NO.	ACCT. CODE	AREA	DRAWING NO.	REV.
3/8"=1'-0"	BE6210			SD-800	1

DRAWN BY: BBL DESIGNED BY: D. WERMCRANTZ
DGN NAME: H:/PROJ2/BELLINGH/BL050S-D.DGN

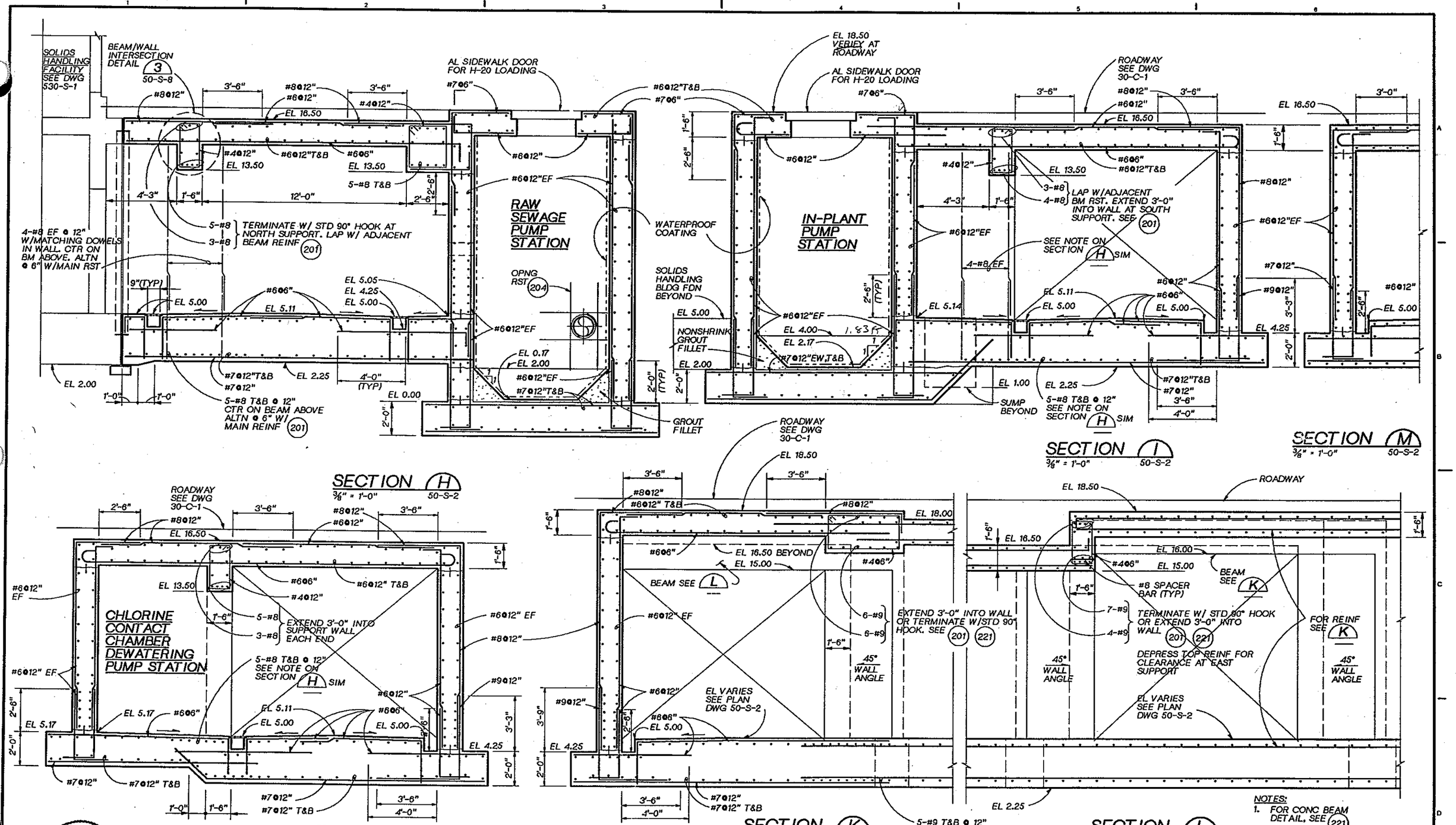

NOTES:
1. FOR CONC BEAM DETAIL, SEE 221

DSGN D.WERMCRANTZ					
DR B.LAZARO					
CHK W. BENNETT					
APVD J. GAUTHIER	NO.	DATE	REVISION	BY	APVD

CH2M HILL

REUSE OF DOCUMENTS
THIS DOCUMENT, AND THE IDEAS AND DESIGNS INCORPORATED HEREIN, AS AN INSTRUMENT OF PROFESSIONAL SERVICE, IS THE PROPERTY OF CH2M HILL AND IS NOT TO BE USED, IN WHOLE OR IN PART, FOR ANY OTHER PROJECT WITHOUT THE WRITTEN AUTHORIZATION OF CH2M HILL.
©CH2M HILL

BAR IS ONE INCH ON ORIGINAL DRAWING. 0 1"
IF NOT ONE INCH ON THIS SHEET, ADJUST SCALES ACCORDINGLY.

CITY OF BELLINGHAM, WASHINGTON
POST POINT WASTEWATER TREATMENT PLANT UPGRADE

PIPE GALLERY
STRUCTURAL SECTIONS

DWG NO. 50-S-3
DATE AUG. 1990
PROJ NO. SEA22462.C1

DATE: 6 20 90
DRAWN BY: BBL DESIGNED BY: D. WERMCRANTZ
DGN NAME: H:/PROJ2/BELLINGH/BL050S-G.DGN

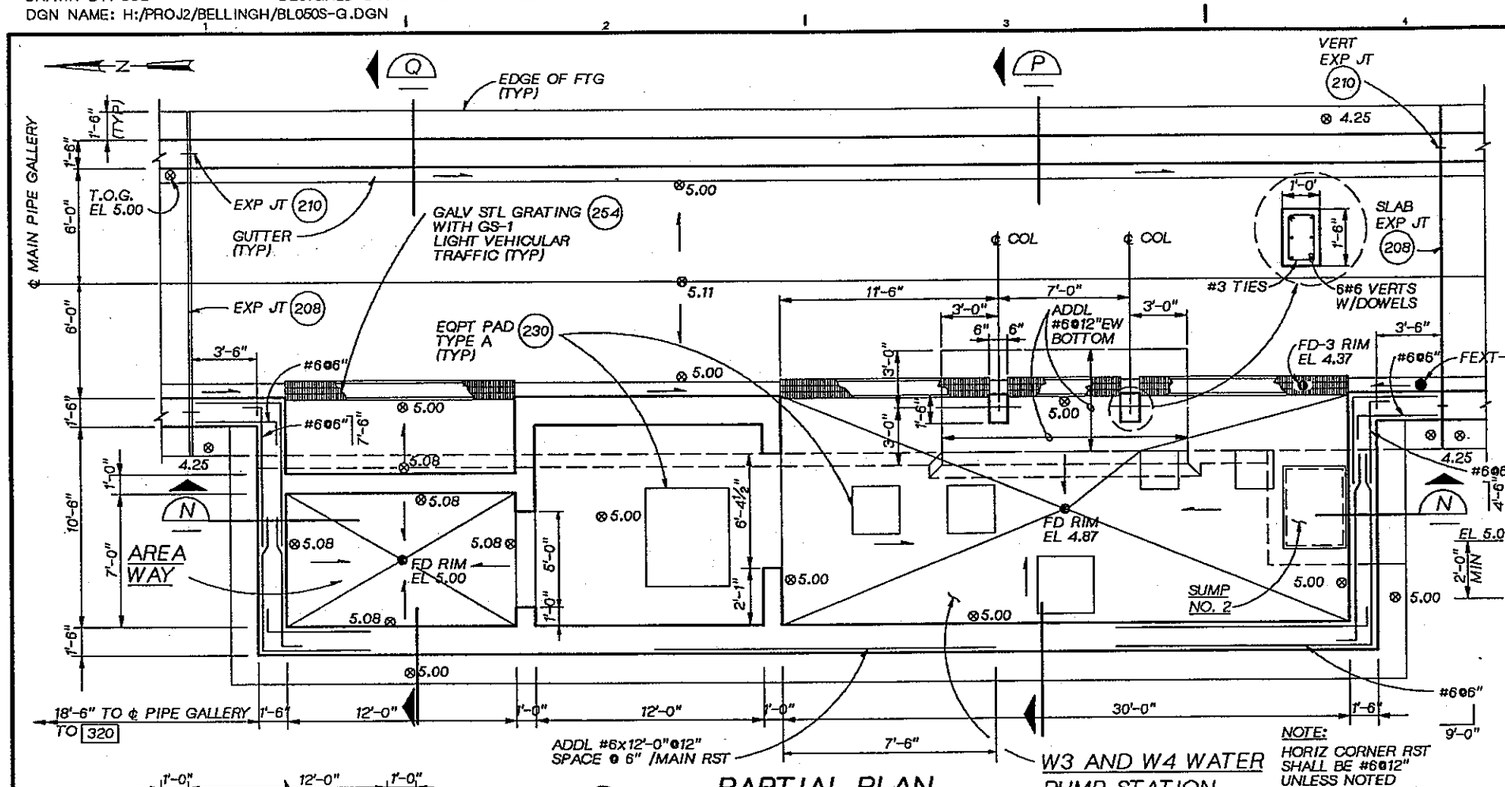

PARTIAL PLAN
1/4" = 1'-0" 50-S-1

NOTE:
HORIZ CORNER RST SHALL BE #6@12" UNLESS NOTED OTHERWISE.

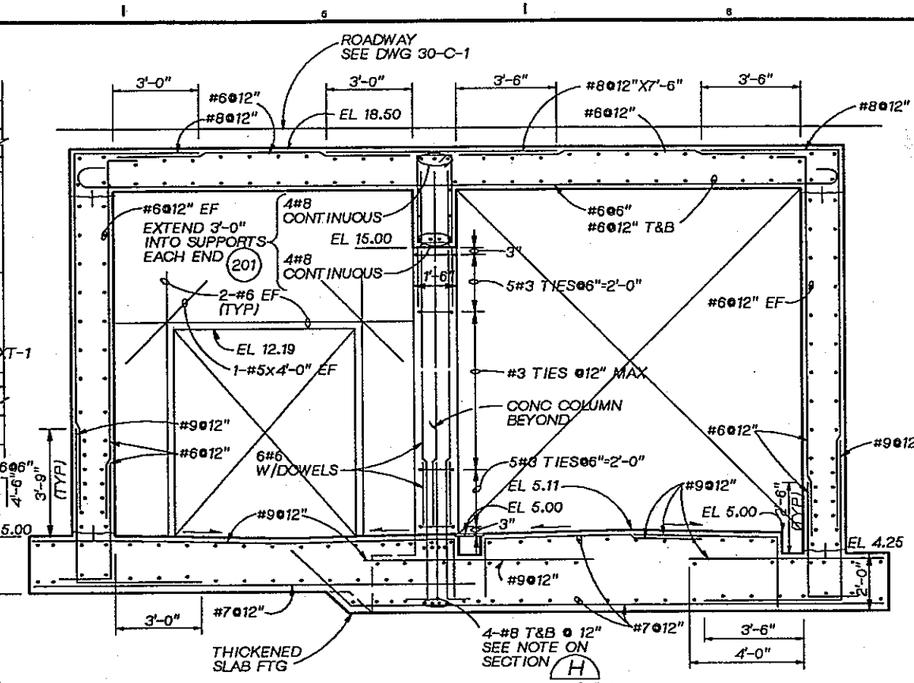

SECTION P
3/8" = 1'-0"

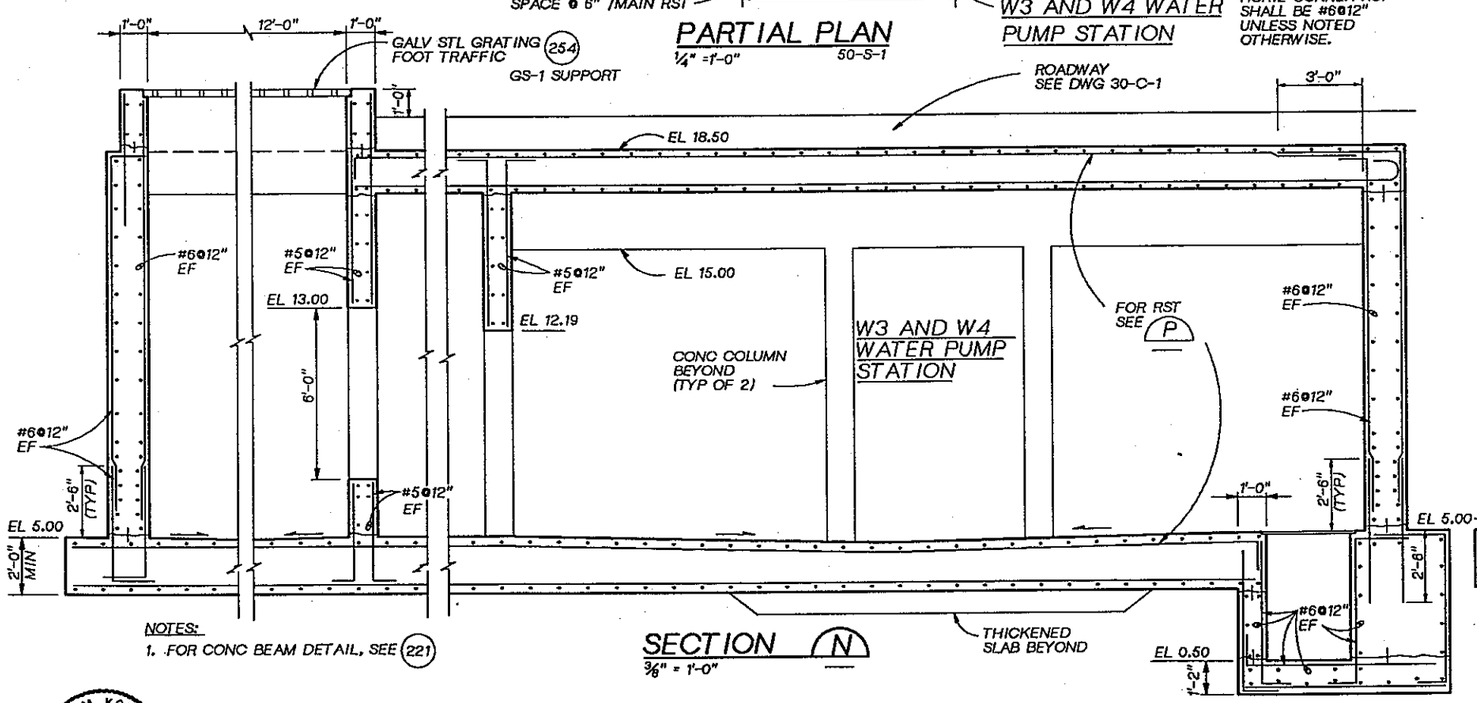

NOTES:
1. FOR CONC BEAM DETAIL, SEE 221

SECTION N
3/8" = 1'-0"

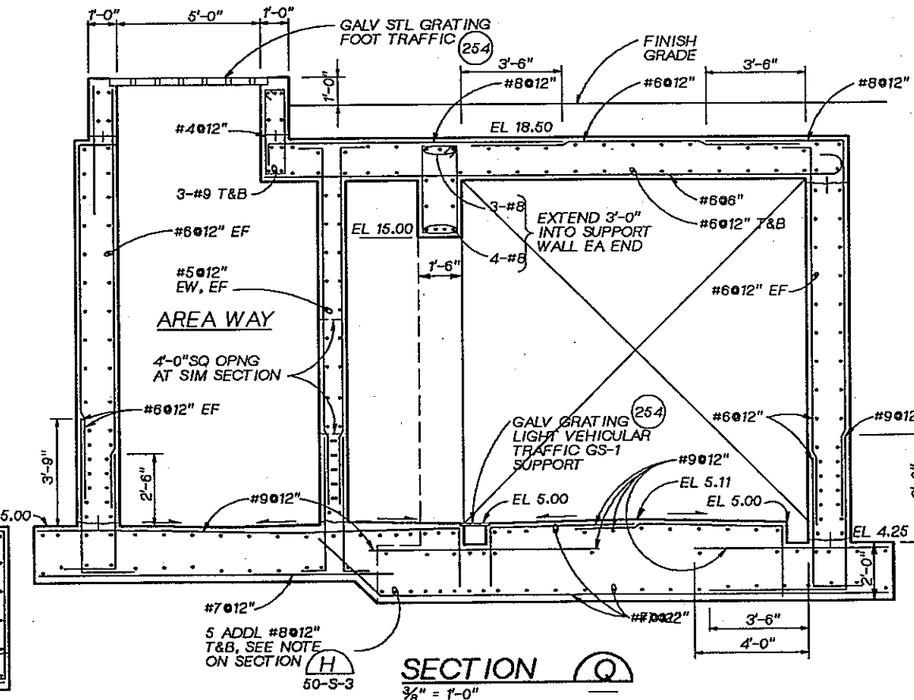

SECTION Q
3/8" = 1'-0"

DSGN	D. WERMCRANTZ
DR	B. LAZARO
CHK	W. BENNETT
APVD	J GAUTHIER

CH2M HILL

NO.	DATE	REVISION	BY	APVD

REUSE OF DOCUMENTS
THIS DOCUMENT, AND THE IDEAS AND DESIGNS INCORPORATED HEREIN, AS AN INSTRUMENT OF PROFESSIONAL SERVICE, IS THE PROPERTY OF CH2M HILL AND IS NOT TO BE USED, IN WHOLE OR IN PART, FOR ANY OTHER PROJECT WITHOUT THE WRITTEN AUTHORIZATION OF CH2M HILL.
©CH2M HILL

BAR IS ONE INCH ON ORIGINAL DRAWING. 0 1"
IF NOT ONE INCH ON THIS SHEET, ADJUST SCALES ACCORDINGLY.

CITY OF BELLINGHAM, WASHINGTON
POST POINT WASTEWATER TREATMENT PLANT UPGRADE

PIPE GALLERY
STRUCTURAL
PARTIAL PLAN AND SECTIONS

DWG NO. 50-S-4
DATE AUG. 1990
PROJ. NO. SEA22462.C1

DRAWN BY: BBL DESIGNED BY: D. WERMCRANTZ
DGN NAME: H:/PROJ2/BELLINGH/BL050S-F.DGN

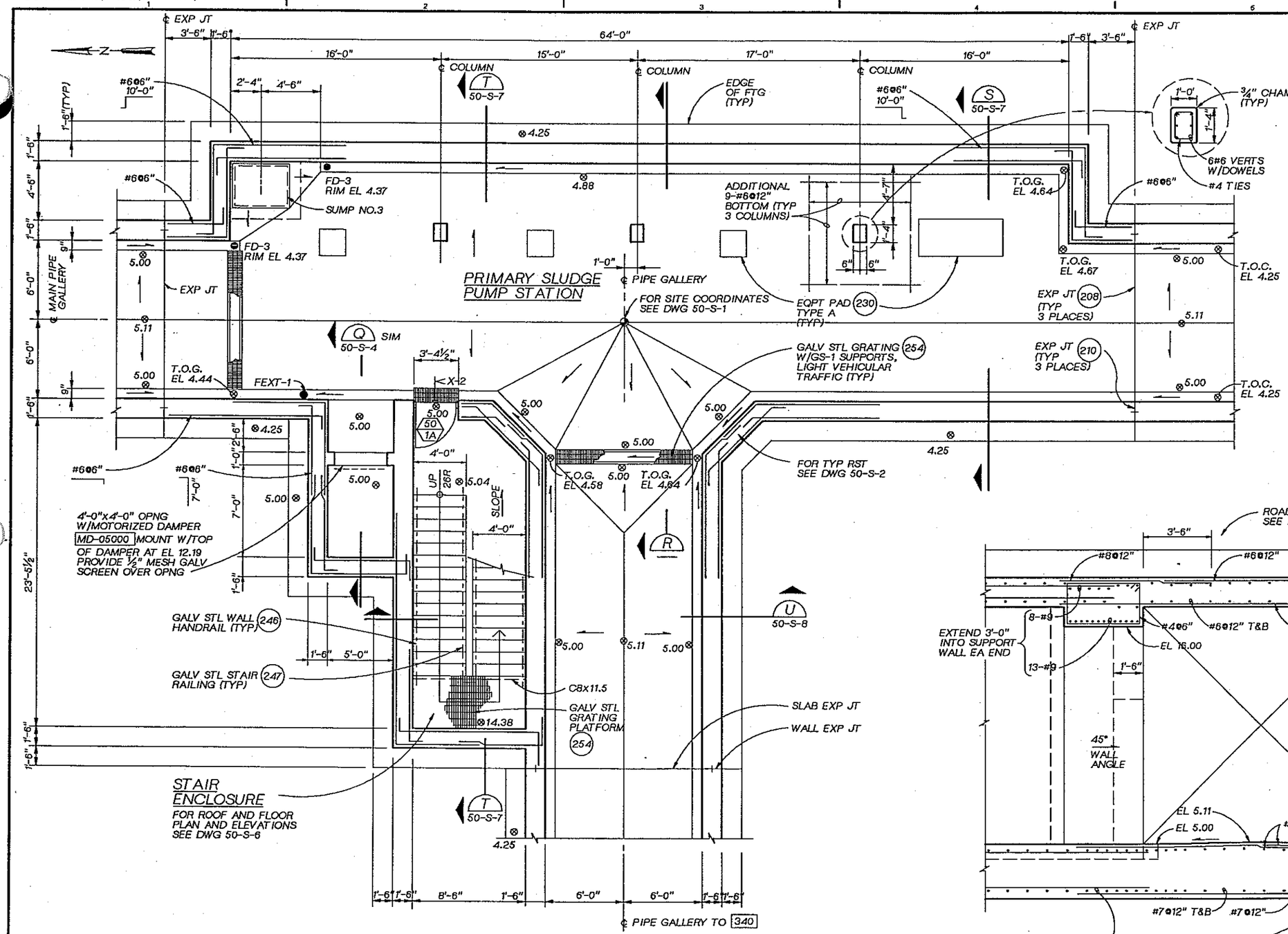

PARTIAL PLAN
1/4" = 1'-0" 50-S-1

NOTES:
1. FOR CONC BEAM DETAIL, SEE 221
2. HORIZ CORNER RST SHALL BE #6@12" UNLESS NOTED OTHERWISE.

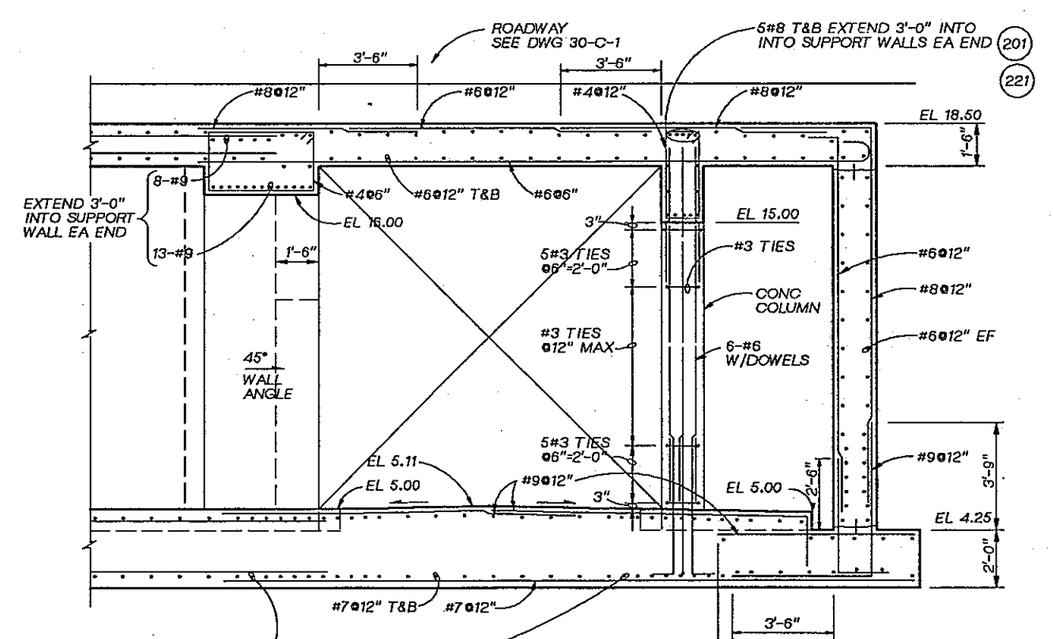

SECTION R
3/8" =1'-0"

DSGN	D WERMCRANTZ
DR	B LAZARO
CHK	W BENNETT
APVD	J GAUTHIER

NO.	DATE	REVISION	BY	APVD

REUSE OF DOCUMENTS
THIS DOCUMENT, AND THE IDEAS AND DESIGNS INCORPORATED HEREIN, AS AN INSTRUMENT OF PROFESSIONAL SERVICE, IS THE PROPERTY OF CH2M HILL AND IS NOT TO BE USED, IN WHOLE OR IN PART, FOR ANY OTHER PROJECT WITHOUT THE WRITTEN AUTHORIZATION OF CH2M HILL.
©CH2M HILL

BAR IS ONE INCH ON ORIGINAL DRAWING.
0 1"
IF NOT ONE INCH ON THIS SHEET, ADJUST SCALES ACCORDINGLY.

CITY OF BELLINGHAM, WASHINGTON
POST POINT WASTEWATER TREATMENT PLANT UPGRADE

PIPE GALLERY
STRUCTURAL
PARTIAL PLAN AND SECTIONS

DWG NO. 50-S-6
DATE AUG. 1990
PROJ NO. SEA22462.C1

DRAWN BY: O A FRIAL DESIGNED BY:
DGN NAME: H:/PROJ2/BELLINGH/BL050S-J.DGN

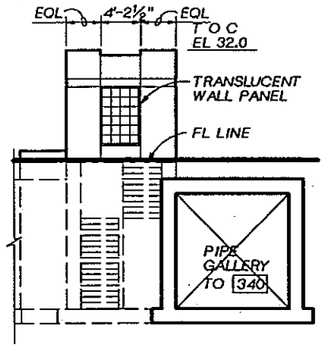

WEST ELEVATION
⅛"=1'-0"

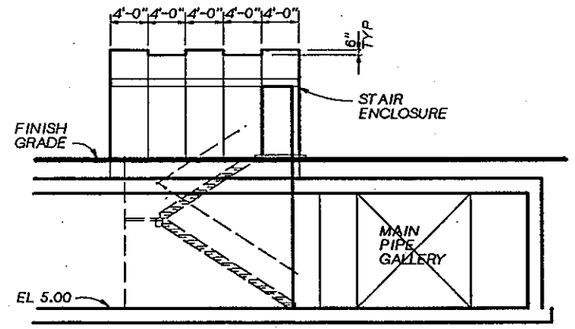

SOUTH ELEVATION
⅛"=1'-0"

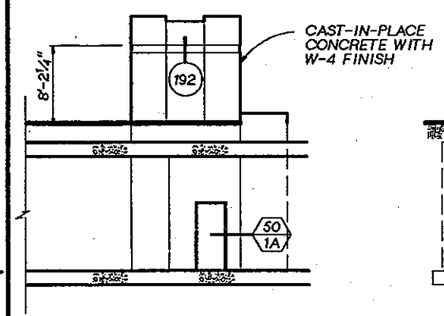

EAST ELEVATION
⅛"= 1'-0"

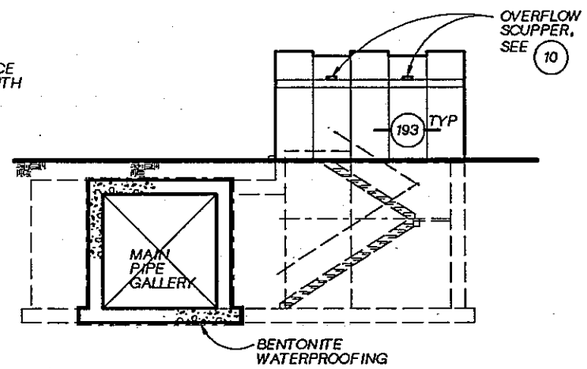

NORTH ELEVATION
⅛"= 1'-0"

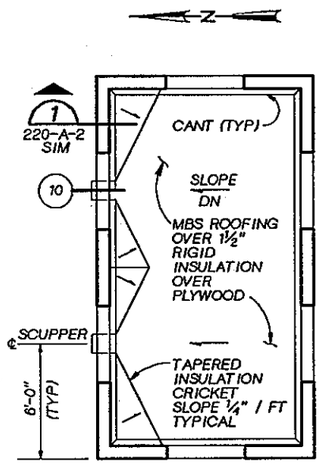

ROOF PLAN

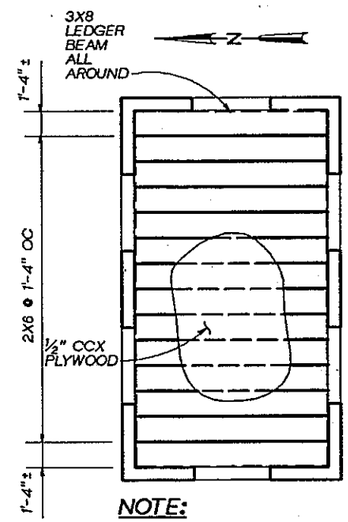

NOTE:
FOR FRAMING DETAILS SEE DETAIL 1 / 50-S-7

ROOF FRAMING PLAN

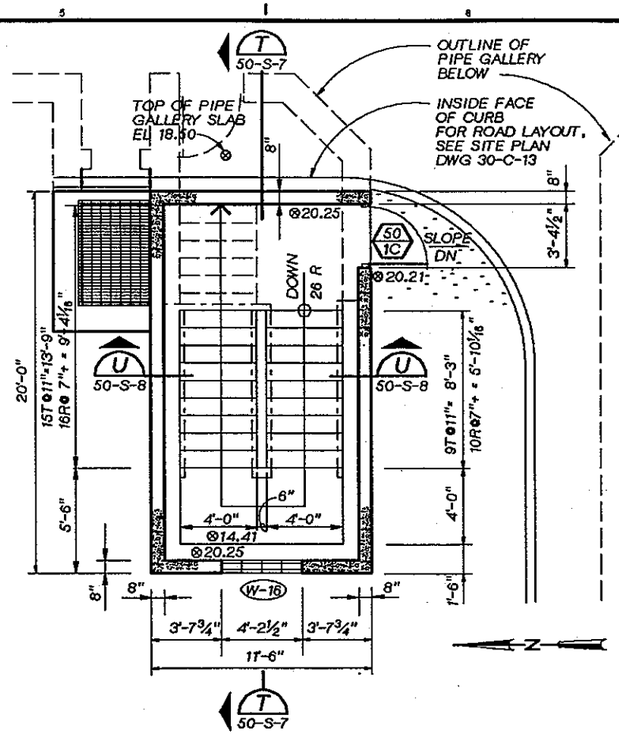

GROUND FLOOR PLAN

STAIR ENCLOSURE
¼" = 1'-0" 50-S-5

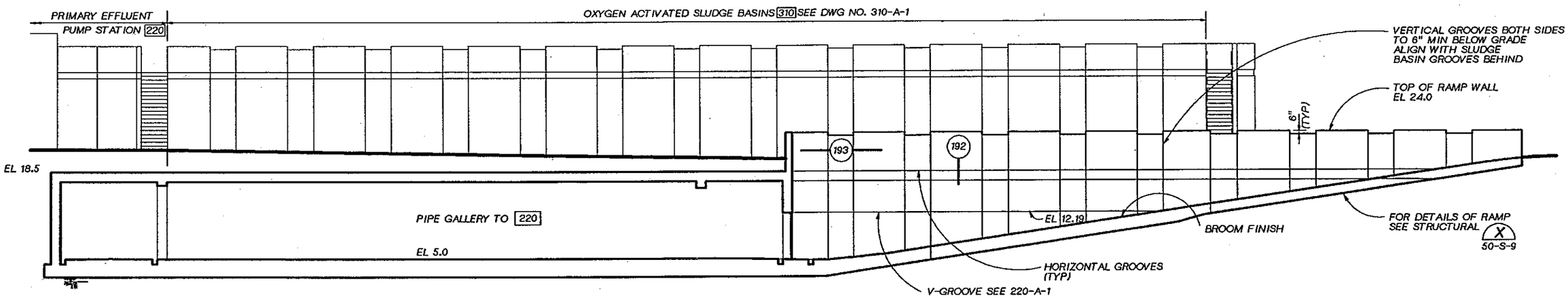

SECTION LOOKING SOUTH
⅛"= 1'-0"

DSGN	G. BOWER					
DR	O. FRIAL					
CHK	R. WHITE					
APVD	J. GAUTHIER	NO.	DATE	REVISION	BY	APVD

CH2M HILL

REUSE OF DOCUMENTS
THIS DOCUMENT, AND THE IDEAS AND DESIGNS INCORPORATED HEREIN, AS AN INSTRUMENT OF PROFESSIONAL SERVICE, IS THE PROPERTY OF CH2M HILL AND IS NOT TO BE USED, IN WHOLE OR IN PART, FOR ANY OTHER PROJECT WITHOUT THE WRITTEN AUTHORIZATION OF CH2M HILL.
©CH2M HILL

BAR IS ONE INCH ON ORIGINAL DRAWING.
0 1"
IF NOT ONE INCH ON THIS SHEET, ADJUST SCALES ACCORDINGLY.

CITY OF BELLINGHAM, WASHINGTON
POST POINT WASTEWATER TREATMENT PLANT UPGRADE

PIPE GALLERY
STRUCTURAL-STAIR ENCLOSURE
PLANS & ELEVATIONS

DWG NO. 50-S-6
DATE AUG. 1990
PROJ NO. SEA22462.C1

DRAWN BY: BBL DESIGNED BY: D. WERMCRANTZ
DGN NAME: H:/PROJ2/BELLINGH/BL050S-E.DGN

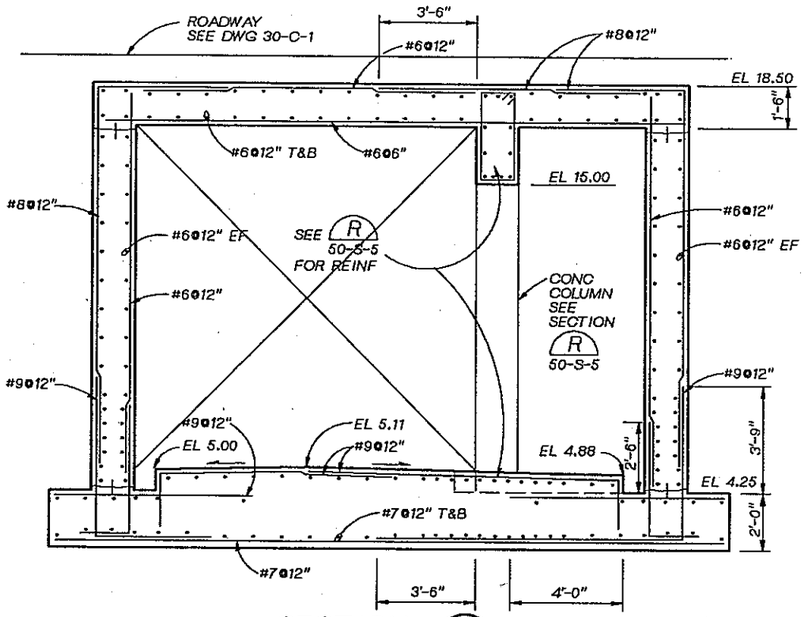

SECTION S
3/8" =1'-0" 50-S-5

NOTE:

1. FOR CONCRETE BEAM DETAIL SEE 221

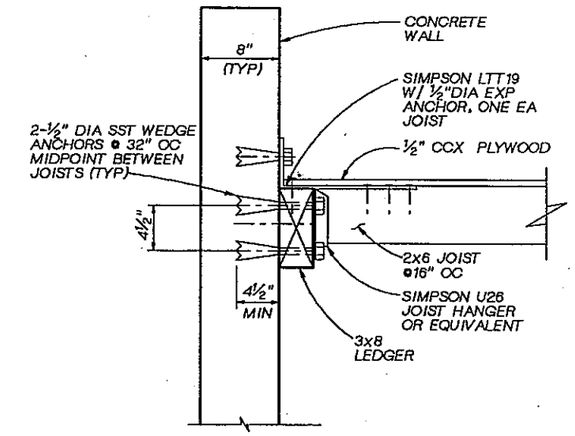

DETAIL 1
1 1/2" = 1'-0"

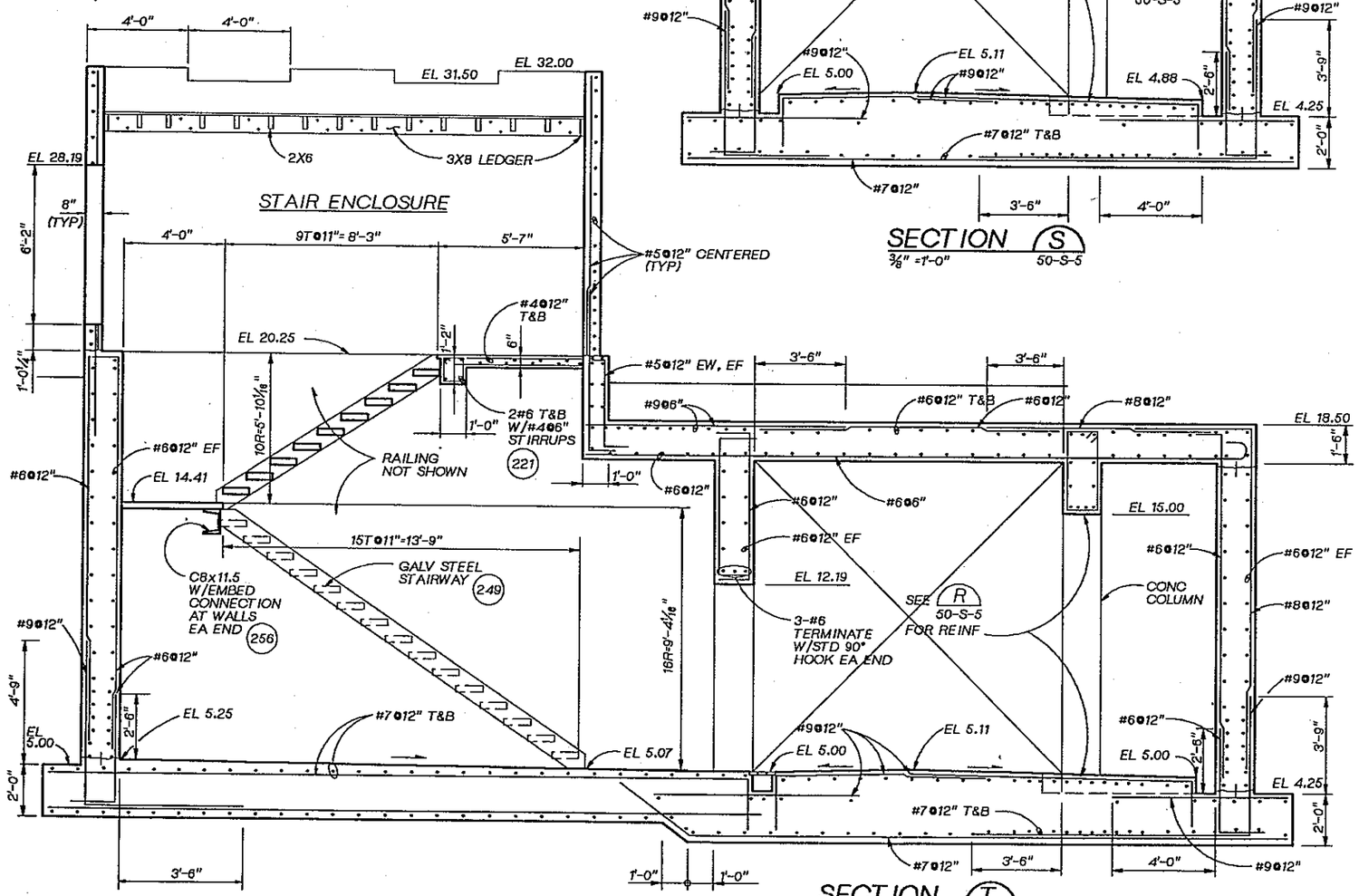

SECTION T
3/8" =1'-0" 50-S-5

DSGN D.WERMCRANTZ					
DR B.LAZARO					
CHK W. BENNETT					
APVD J. GAUTHIER	NO.	DATE	REVISION	BY	APVD

CH2M HILL

REUSE OF DOCUMENTS
THIS DOCUMENT, AND THE IDEAS AND DESIGNS INCORPORATED HEREIN, AS AN INSTRUMENT OF PROFESSIONAL SERVICE, IS THE PROPERTY OF CH2M HILL AND IS NOT TO BE USED, IN WHOLE OR IN PART, FOR ANY OTHER PROJECT WITHOUT THE WRITTEN AUTHORIZATION OF CH2M HILL.
©CH2M HILL

BAR IS ONE INCH ON ORIGINAL DRAWING.
0 1"
IF NOT ONE INCH ON THIS SHEET, ADJUST SCALES ACCORDINGLY.

CITY OF BELLINGHAM, WASHINGTON
POST POINT WASTEWATER TREATMENT PLANT UPGRADE

PIPE GALLERY
STRUCTURAL
SECTIONS AND DETAILS

DWG NO. 50-S-7
DATE AUG. 1990
PROJ NO. SEA22462.C1

OVERLAY IDENTIFICATION | COMPOSITE | OVERLAY | PROJID | FILE

DRAWN BY: D. MILLER DESIGNED BY: D. WERMCRANTZ
DGN NAME: H:/PROJ2/BELLINGH/BL050S-M.DGN

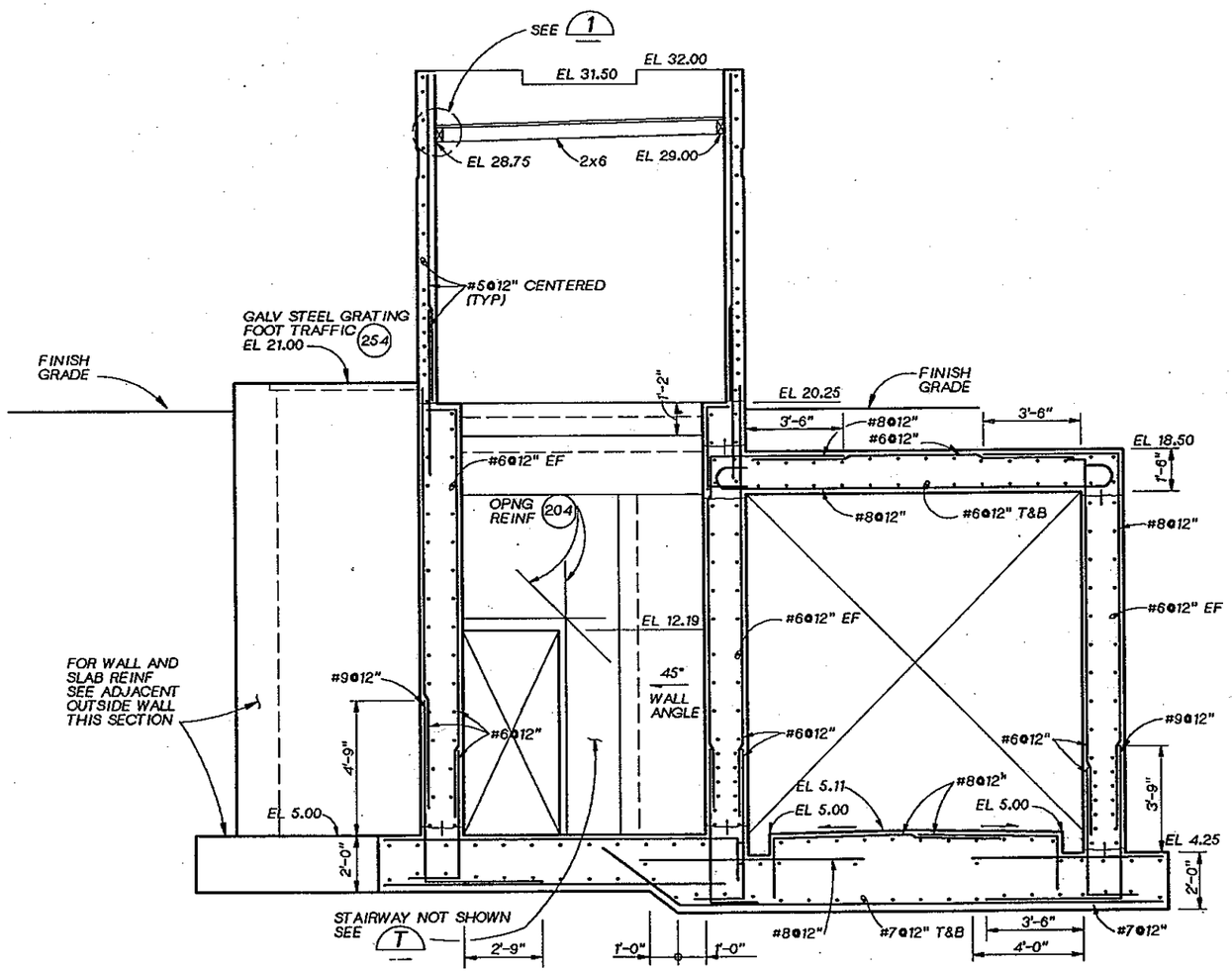

SECTION U
3/8" = 1'-0"
50-S-5

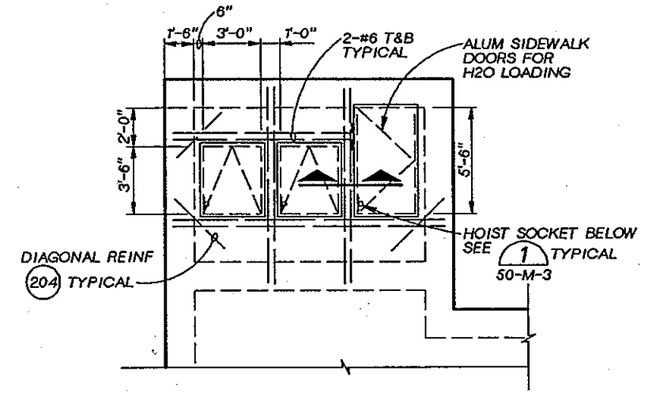

TOP PLAN
1/4" = 1'-0"

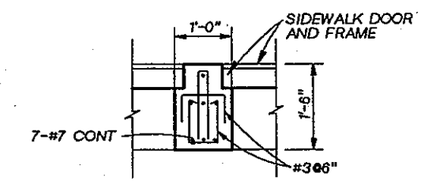

SECTION
3/4" = 1'-0"

RAW SEWAGE PUMP STATION

DETAIL 2
50-S-2

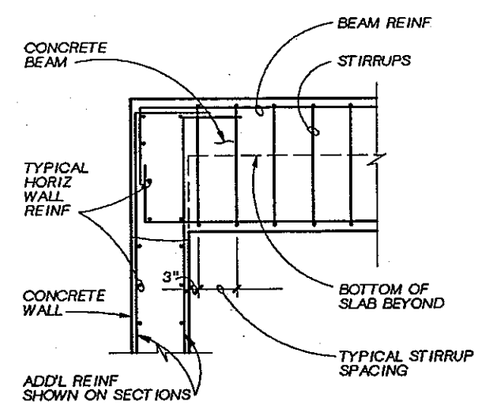

DETAIL 3
1/2"=1'-0"
50-S-3

CH2M HILL

DSGN D. WERMCRANTZ
DR D. MILLER
CHK W. BENNETT
APVD J. GAUTHIER

NO.	DATE	REVISION	BY	APVD

REUSE OF DOCUMENTS
THIS DOCUMENT, AND THE IDEAS AND DESIGNS INCORPORATED HEREIN, AS AN INSTRUMENT OF PROFESSIONAL SERVICE, IS THE PROPERTY OF CH2M HILL AND IS NOT TO BE USED, IN WHOLE OR IN PART, FOR ANY OTHER PROJECT WITHOUT THE WRITTEN AUTHORIZATION OF CH2M HILL.
©CH2M HILL

BAR IS ONE INCH ON ORIGINAL DRAWING.
0 1"
IF NOT ONE INCH ON THIS SHEET, ADJUST SCALES ACCORDINGLY.

CITY OF BELLINGHAM, WASHINGTON
POST POINT WASTEWATER TREATMENT PLANT UPGRADE

PIPE GALLERY
STRUCTURAL
SECTIONS AND DETAILS

DWG NO. 50-S-8
DATE AUG. 1990
PROJ NO. SEA22462.C1

OVERLAY SCREEN
PROJD FILE

DATE: 8-25-90
DRAWN BY: BBL DESIGNED BY: D. WERMCRANTZ
DGN NAME: H:/PROJ2/BELLINGH/BL050S-C.DGN

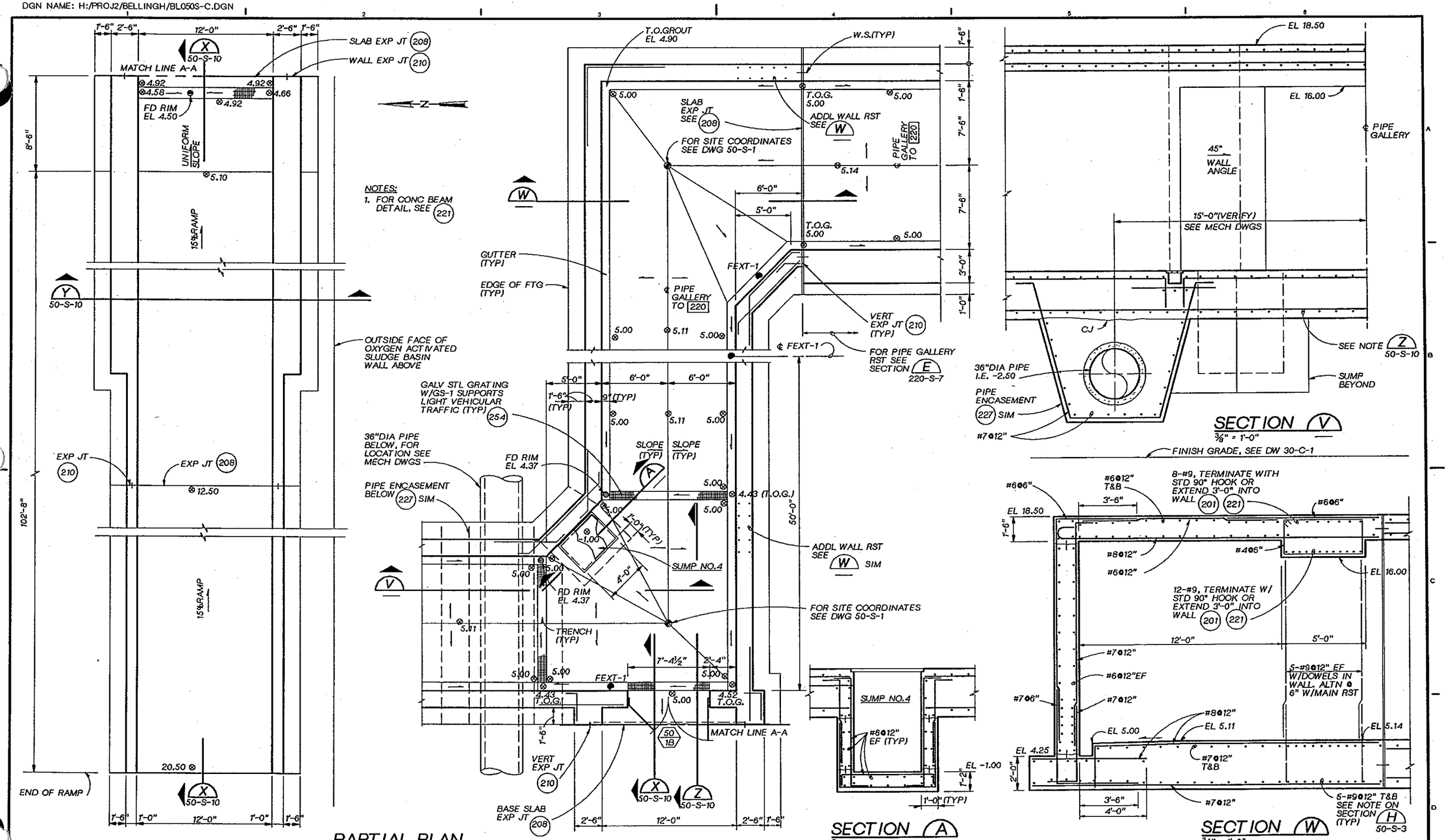

PARTIAL PLAN
¼" = 1'-0" 50-S-1

SECTION A
⅜" = 1'-0"

SECTION V
⅜" = 1'-0"

SECTION W
⅜" = 1'-0"

DSGN D. WERMCRANTZ					
DR B. LAZARO					
CHK W. BENNETT					
APVD J GAUTHIER	NO.	DATE	REVISION	BY	APVD

CH2M HILL

REUSE OF DOCUMENTS
THIS DOCUMENT, AND THE IDEAS AND DESIGNS INCORPORATED HEREIN, AS AN INSTRUMENT OF PROFESSIONAL SERVICE, IS THE PROPERTY OF CH2M HILL AND IS NOT TO BE USED, IN WHOLE OR IN PART, FOR ANY OTHER PROJECT WITHOUT THE WRITTEN AUTHORIZATION OF CH2M HILL.
©CH2M HILL

BAR IS ONE INCH ON ORIGINAL DRAWING. 0 1"
IF NOT ONE INCH ON THIS SHEET, ADJUST SCALES ACCORDINGLY.

CITY OF BELLINGHAM, WASHINGTON
POST POINT WASTEWATER TREATMENT PLANT UPGRADE

PIPE GALLERY
STRUCTURAL
PARTIAL PLANS AND SECTIONS

DWG NO. 50-S-9
DATE AUG. 1990
PROJ NO. SEA22462.C1

OVERLAY IDENTIFICATION COMPOSITE
PROJ/D
PLAY
FILE

DGN NAME: H:/PROJ2/BELLINGH/BL050S-H.DGN

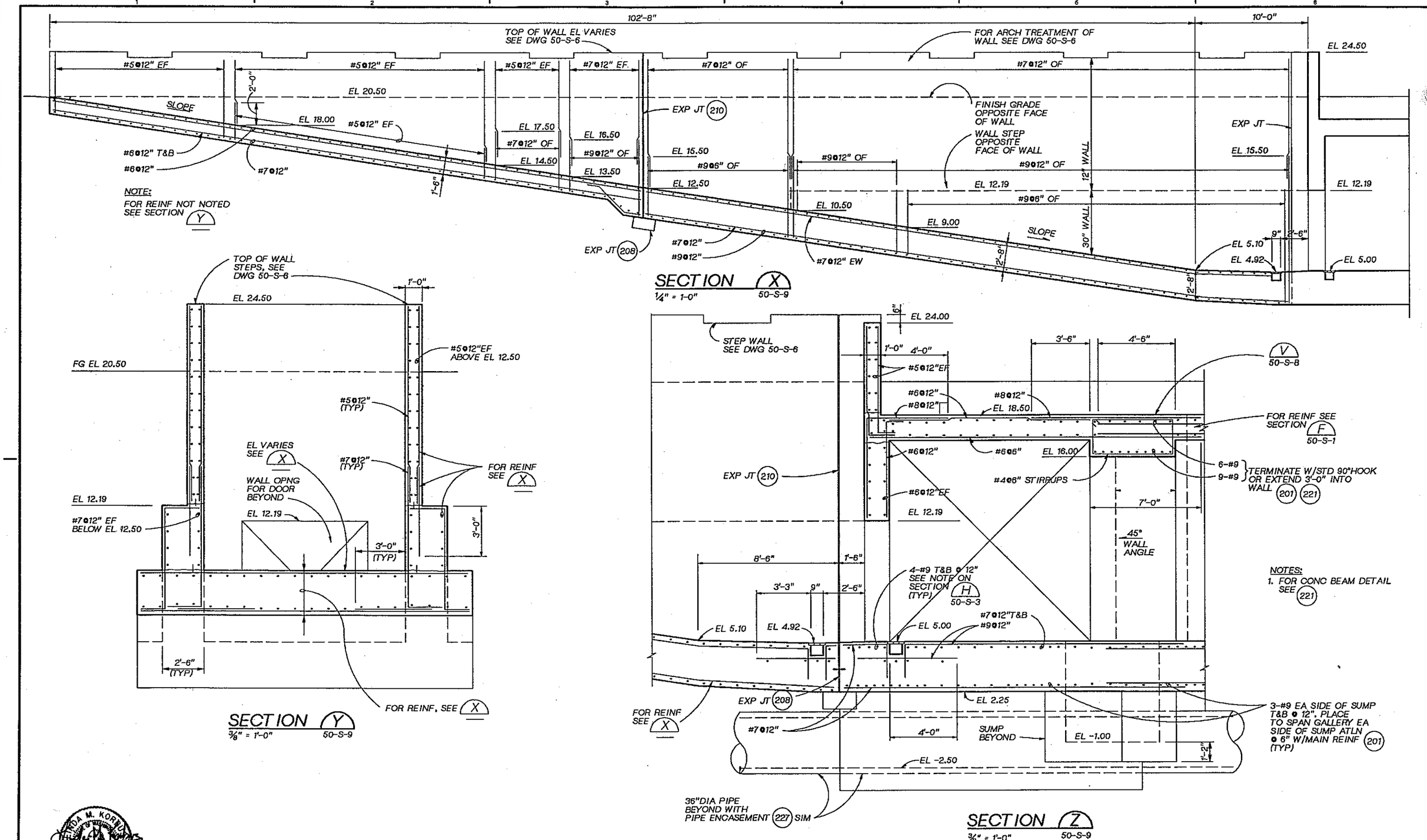

CH2M HILL

DSGN	D.WERMCRANTZ			
DR	B.LAZARO			
CHK	W.BENNETT			
APVD	J. GAUTHIER	NO.	DATE	REVISION	BY	APVD

REUSE OF DOCUMENTS

THIS DOCUMENT, AND THE IDEAS AND DESIGNS INCORPORATED HEREIN, AS AN INSTRUMENT OF PROFESSIONAL SERVICE, IS THE PROPERTY OF CH2M HILL AND IS NOT TO BE USED, IN WHOLE OR IN PART, FOR ANY OTHER PROJECT WITHOUT THE WRITTEN AUTHORIZATION OF CH2M HILL.

©CH2M HILL

BAR IS ONE INCH ON ORIGINAL DRAWING. 0 1"
IF NOT ONE INCH ON THIS SHEET, ADJUST SCALES ACCORDINGLY.

CITY OF BELLINGHAM, WASHINGTON
POST POINT WASTEWATER TREATMENT PLANT UPGRADE

PIPE GALLERY
STRUCTURAL SECTIONS AND DETAILS

DWG NO. 50-S-10
DATE AUG. 1990
PROJ NO. SEA22462.C1

DRAWN BY: BBL DESIGNED BY: D. WERMCRANTZ
DGN NAME: H:/PROJ2/BELLINGH/BL050S-K.DGN

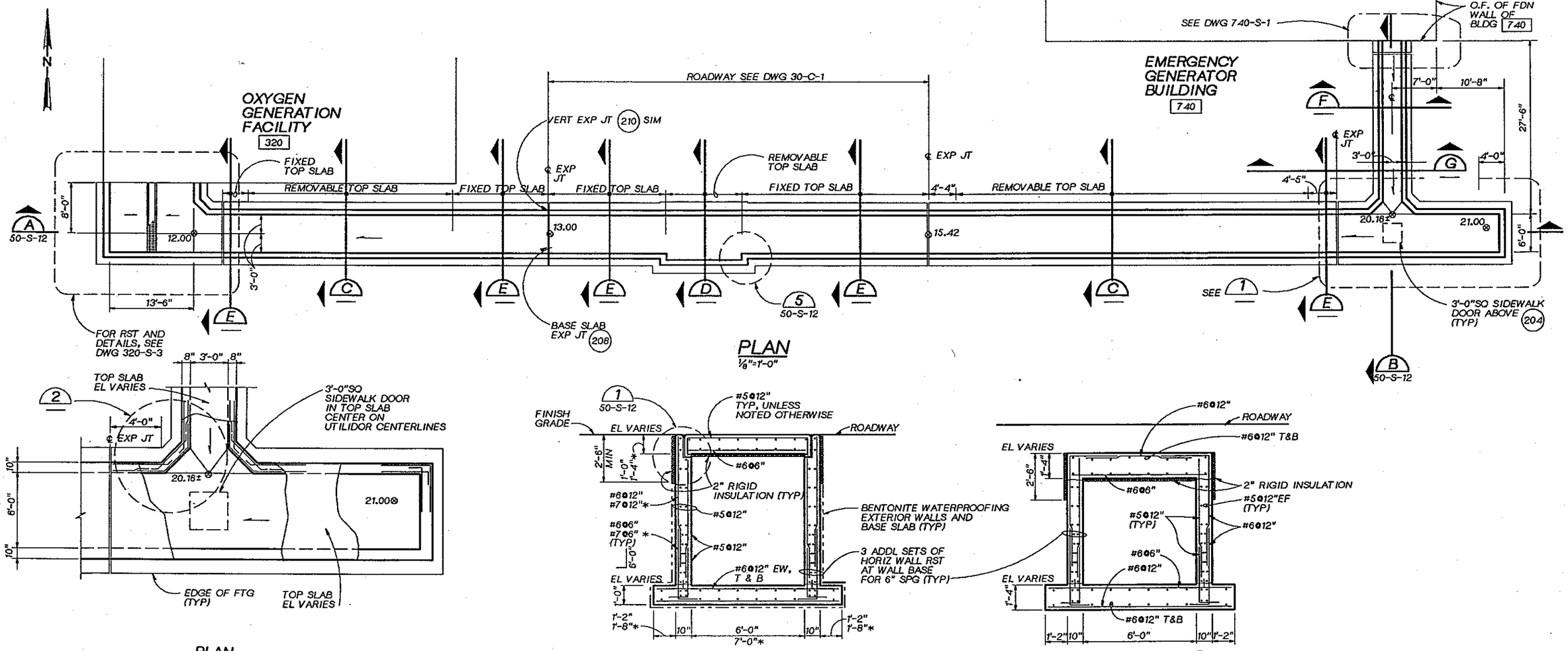

PLAN
1/8"=1'-0"

PLAN

DETAIL 1
1/4" =1'-0"

SECTION C D*
3/8" =1'-0"

SECTION E
3/8" =1'-0"

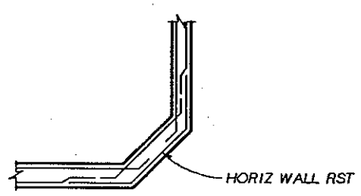

DETAIL 2
1/4" =1'-0"

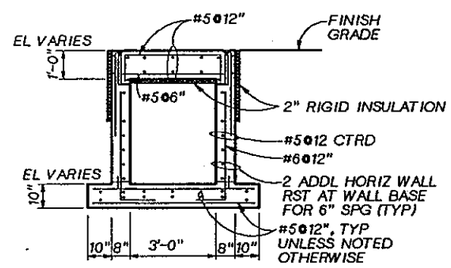

SECTION F
3/8" =1'-0"

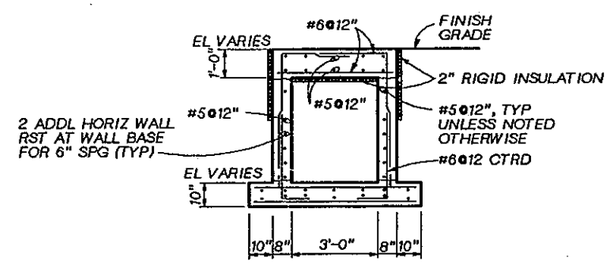

SECTION G
3/8" =1'-0"

DSGN D WERMCRANTZ					
DR B LAZARO					
CHK W BENNETT					
APVD J. GAUTHIER	NO.	DATE	REVISION	BY	APVD

CH2M HILL

REUSE OF DOCUMENTS
THIS DOCUMENT, AND THE IDEAS AND DESIGNS INCORPORATED HEREIN, AS AN INSTRUMENT OF PROFESSIONAL SERVICE, IS THE PROPERTY OF CH2M HILL AND IS NOT TO BE USED, IN WHOLE OR IN PART, FOR ANY OTHER PROJECT WITHOUT THE WRITTEN AUTHORIZATION OF CH2M HILL.
©CH2M HILL

BAR IS ONE INCH ON ORIGINAL DRAWING.
0 1"
IF NOT ONE INCH ON THIS SHEET, ADJUST SCALES ACCORDINGLY.

CITY OF BELLINGHAM, WASHINGTON
POST POINT WASTEWATER TREATMENT PLANT UPGRADE

PIPE GALLERY
STRUCTURAL
UTILIDOR PLAN AND DETAILS

DWG NO. 50-S-11
DATE AUG. 1990
PROJ. NO. SEA22462.C1

OVERLAY IDENTIFICATION: COMPOSITE, PLAN, PROJID, FILE

DGN NAME: H:/PROJ2/BELLINGH/BL050S-L.DGN

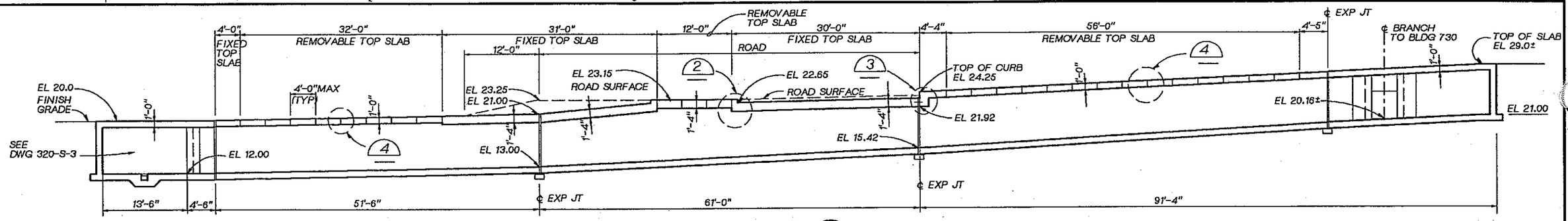

SECTION A 50-S-11
1/8"=1'-0"

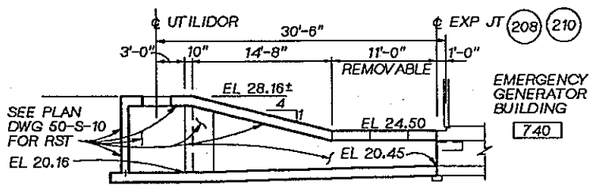

SECTION B 50-S-11
1/8"=1'-0"

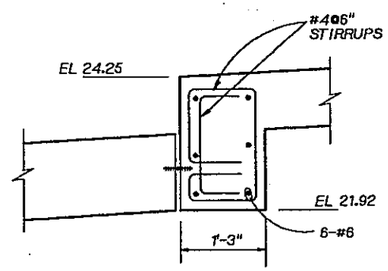

DETAIL 3
3/4" = 1'-0"

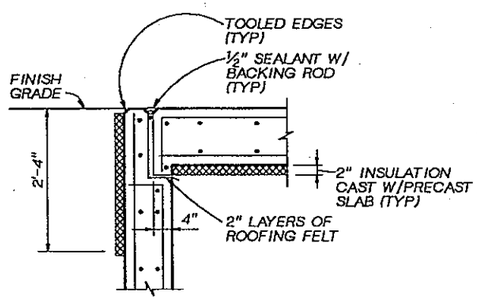

DETAIL 1
1/2" = 1'-0"

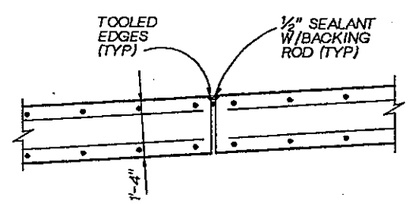

DETAIL 4
3/4" = 1'-0"

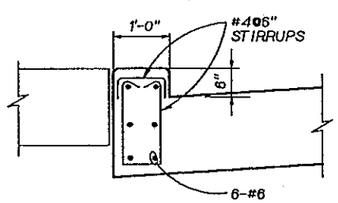

DETAIL 2
3/4" = 1'-0"

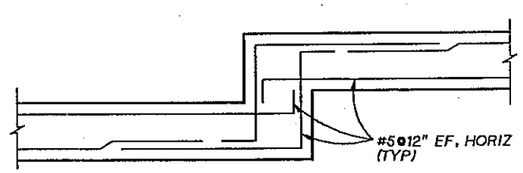

DETAIL 5
3/4" = 1'-0"
50-S-11

DSGN D. WERMCRANTZ					
DR B. LAZARO					
CHK W. BENNETT					
APVD J. GAUTHIER	NO.	DATE	REVISION	BY	APVD

CH2M HILL

REUSE OF DOCUMENTS
THIS DOCUMENT, AND THE IDEAS AND DESIGNS INCORPORATED HEREIN, AS AN INSTRUMENT OF PROFESSIONAL SERVICE, IS THE PROPERTY OF CH2M HILL AND IS NOT TO BE USED, IN WHOLE OR IN PART, FOR ANY OTHER PROJECT WITHOUT THE WRITTEN AUTHORIZATION OF CH2M HILL.
©CH2M HILL

BAR IS ONE INCH ON ORIGINAL DRAWING.
0 1"
IF NOT ONE INCH ON THIS SHEET, ADJUST SCALES ACCORDINGLY.

CITY OF BELLINGHAM, WASHINGTON
POST POINT WASTEWATER TREATMENT PLANT UPGRADE

PIPE GALLERY
STRUCTURAL
UTILIDOR SECTIONS

DWG NO. 50-S-12
DATE AUG. 1990
PROJ NO. SEA22462.C1

DRAWN BY: MC VEACH DESIGNED BY: E. RONSHAUGEN
DGN NAME: H:/PROJ2/BELLINGH/BL050M-A.DGN

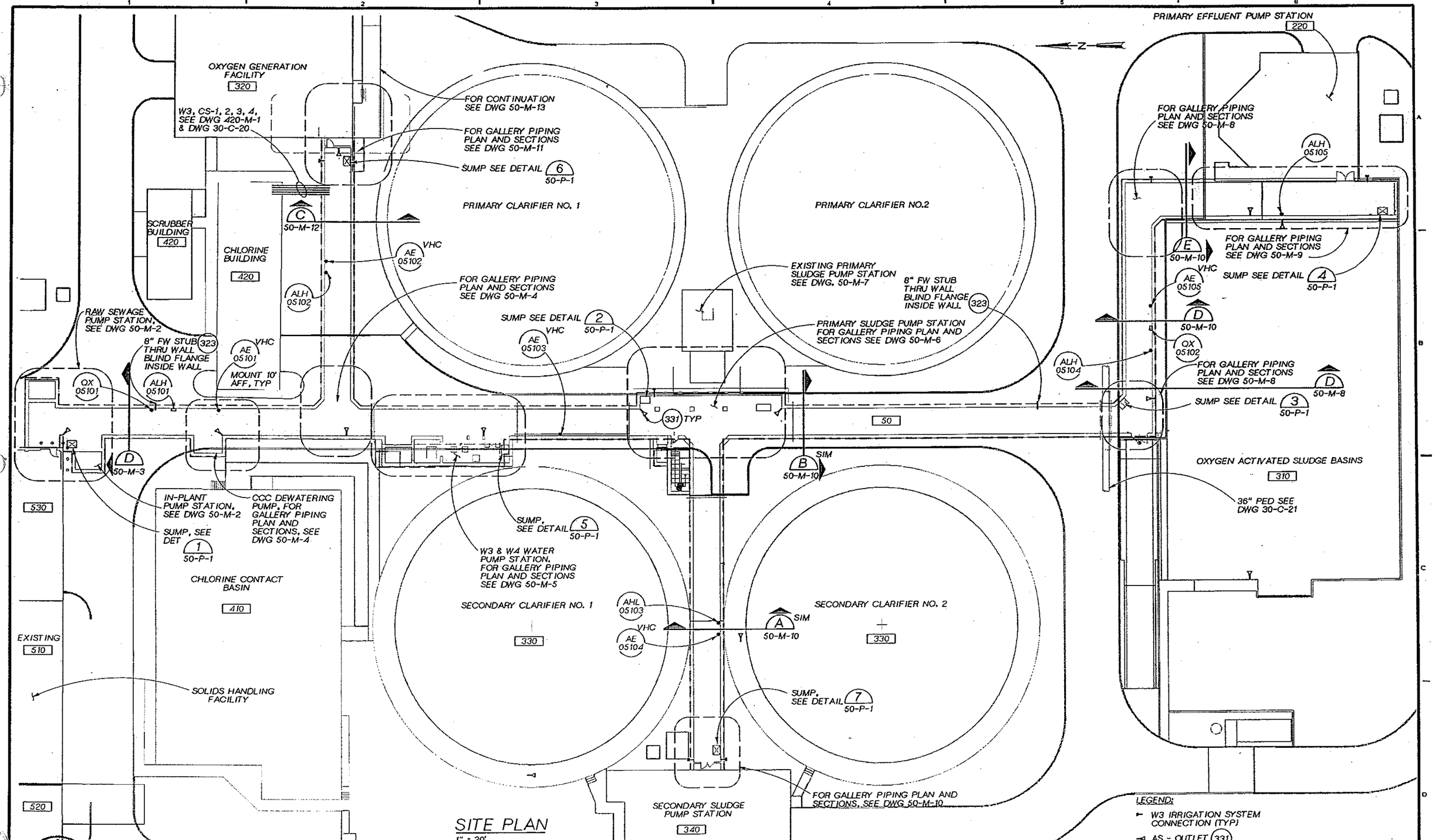

SITE PLAN
1" = 20'

JOSEPH A. GAUTHIER STATE OF WASHINGTON REGISTERED PROFESSIONAL ENGINEER

CH2M HILL

DSGN	E. RONSHAUGEN
DR	MC VEACH
CHK	XXXX
APVD	XXXX GAUTHIER

NO.	DATE	REVISION	BY	APVD

REUSE OF DOCUMENTS
THIS DOCUMENT, AND THE IDEAS AND DESIGNS INCORPORATED HEREIN, AS AN INSTRUMENT OF PROFESSIONAL SERVICE, IS THE PROPERTY OF CH2M HILL AND IS NOT TO BE USED, IN WHOLE OR IN PART, FOR ANY OTHER PROJECT WITHOUT THE WRITTEN AUTHORIZATION OF CH2M HILL.
© CH2M HILL

VERIFY SCALE
BAR IS ONE INCH ON ORIGINAL DRAWING.
0 1"
IF NOT ONE INCH ON THIS SHEET, ADJUST SCALES ACCORDINGLY.

CITY OF BELLINGHAM, WASHINGTON
POST POINT WASTEWATER TREATMENT PLANT UPGRADE

PIPE GALLERY
MECHANICAL SITE PLAN

DWG NO. 50-M-1
DATE AUG. 1990
PROJ. NO. SEA22462.C1

OVERLAY IDENTIFICATION: COMPOSITE, PROJ/D, FILE
PLAY, REEN

DGN NAME: H:/PROJ2/BELLINGH/BL050M-K.DGN

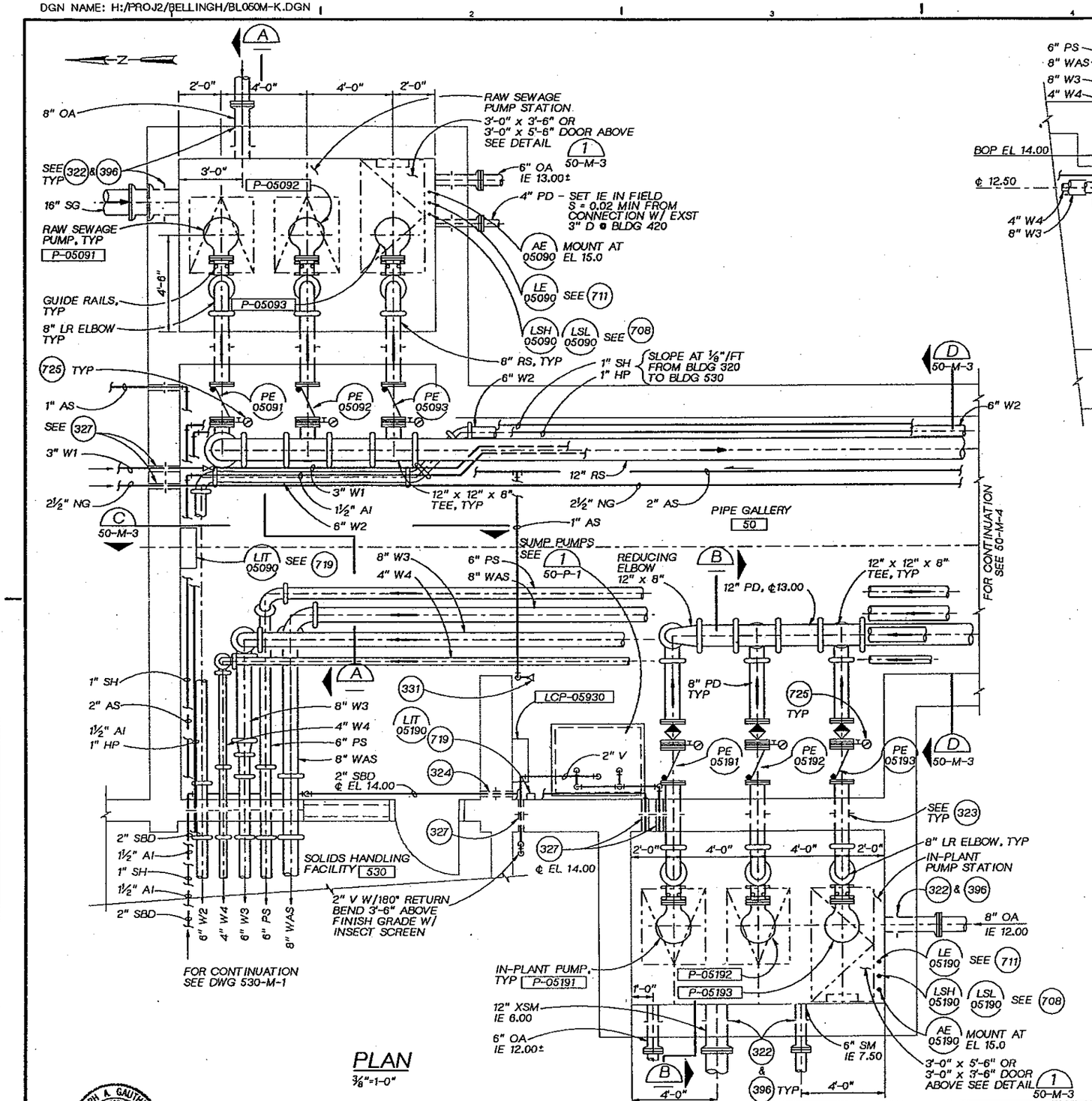

PLAN
⅜"=1-0"

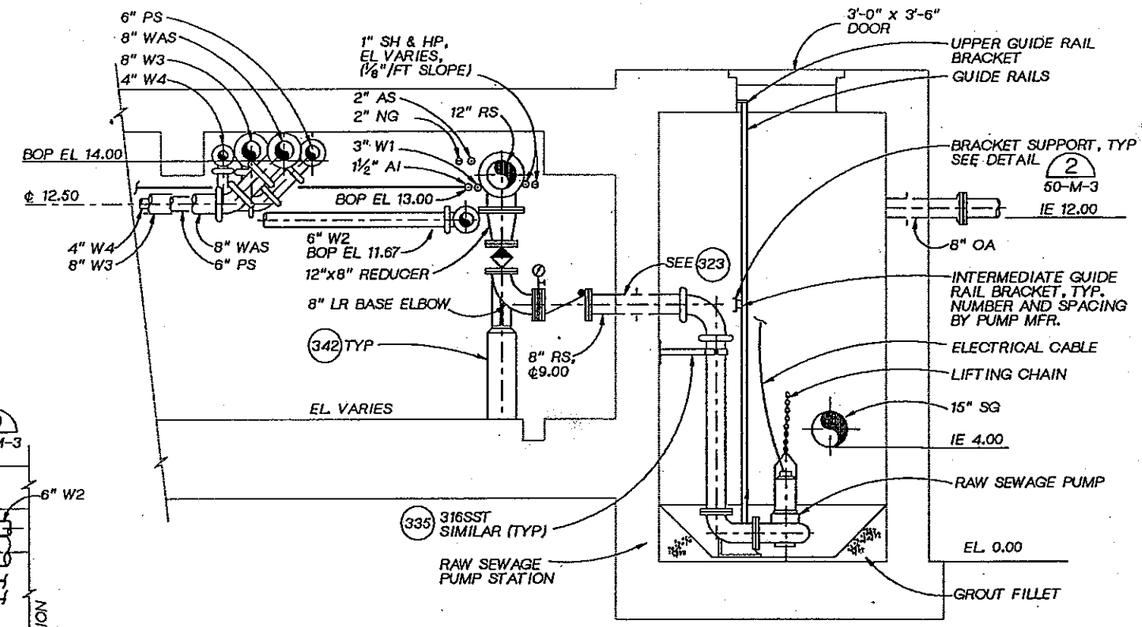

SECTION A
⅜"=1-0"

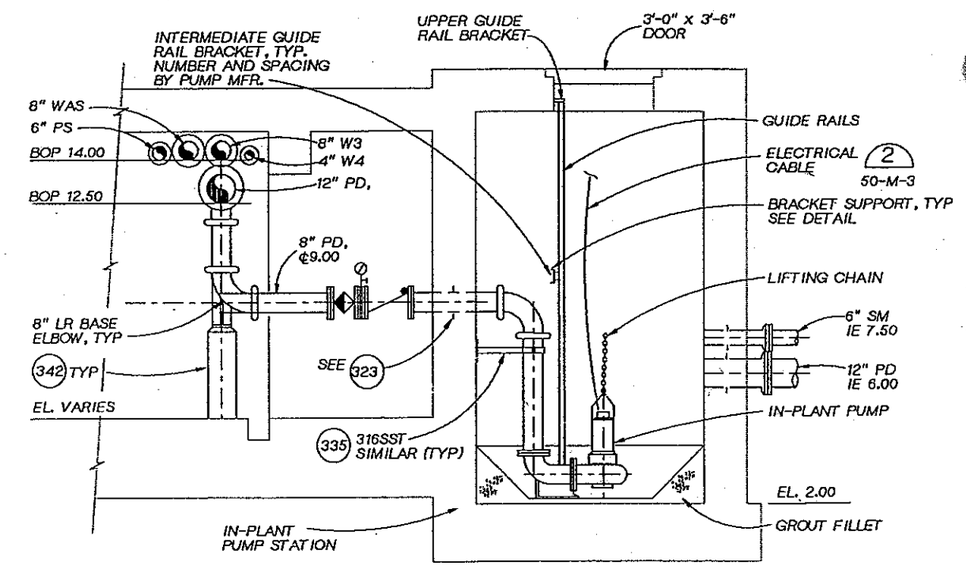

SECTION B
⅜"=1-0"

JOSEPH A. GAUTHIER STATE OF WASHINGTON REGISTERED PROFESSIONAL ENGINEER

CH2M HILL

DSGN	E RONSHAUGEN				
DR	MC VEACH				
CHK	J GAUTHIER				
APVD	J GAUTHIER	NO.	DATE	REVISION	BY	APVD

REUSE OF DOCUMENTS
THIS DOCUMENT, AND THE IDEAS AND DESIGNS INCORPORATED HEREIN, AS AN INSTRUMENT OF PROFESSIONAL SERVICE, IS THE PROPERTY OF CH2M HILL AND IS NOT TO BE USED, IN WHOLE OR IN PART, FOR ANY OTHER PROJECT WITHOUT THE WRITTEN AUTHORIZATION OF CH2M HILL.
©CH2M HILL

BAR IS ONE INCH ON ORIGINAL DRAWING. 0 1"
IF NOT ONE INCH ON THIS SHEET, ADJUST SCALES ACCORDINGLY.

CITY OF BELLINGHAM, WASHINGTON
POST POINT WASTEWATER TREATMENT PLANT UPGRADE

PIPE GALLERY
MECHANICAL
RAW SEWAGE AND IN-PLANT PUMP STATIONS PLANS & SECTIONS

DWG NO. 50-M-2
DATE AUG. 1990
PROJ NO. SEA22462.C1

DATE: 8/22/90
DRAWN BY: B. CARR DESIGNED BY: E RONSHAUGEN
DGN NAME: H:/PROJ2/BELLINGH/BL050M-G.DGN

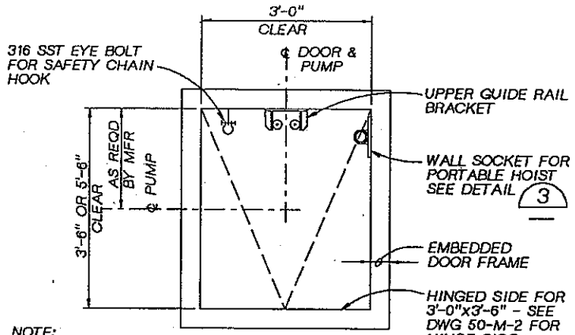

NOTE:
1. VERIFY DIMENSIONS AND LOCATIONS OF OPENING WITH PUMP MFR PRIOR TO ORDERING AND CASTING IN SIDEWALK DOOR.
2. FOR ITEMS TO BE PROVIDED BY PUMP MFR, SEE THE SPECIFICATIONS

TYPICAL PLAN AT DOORS OVER RS AND IN-PLANT PUMPS

DETAIL 1

3/4"=1'-0" 50-M-2

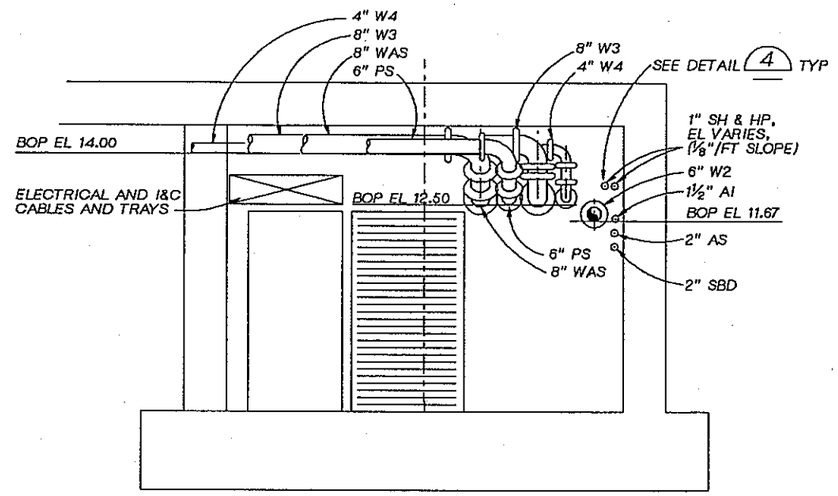

SECTION C

3/8"=1'-0" 50-M-2

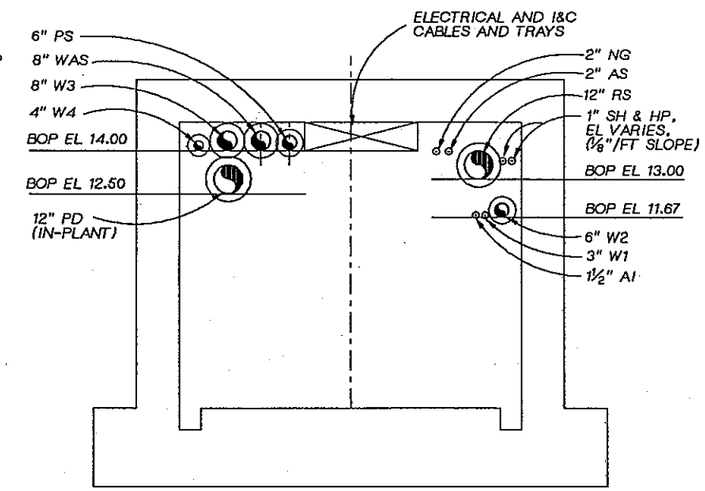

SECTION D

3/8"=1'-0" 50-M-2

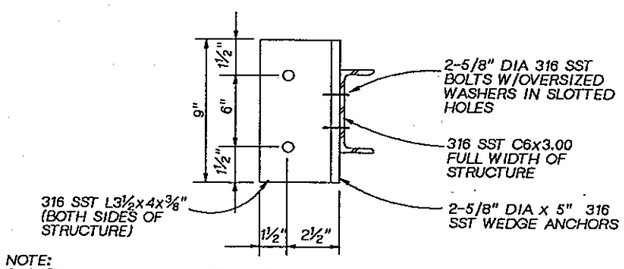

NOTE:
SECURE INTERMEDIATE GUIDE BAR BRACKET TO BRACKET SUPPORT W/ 316 SST HARDWARE

BRACKET SUPPORT 2

NTS 50-M-2

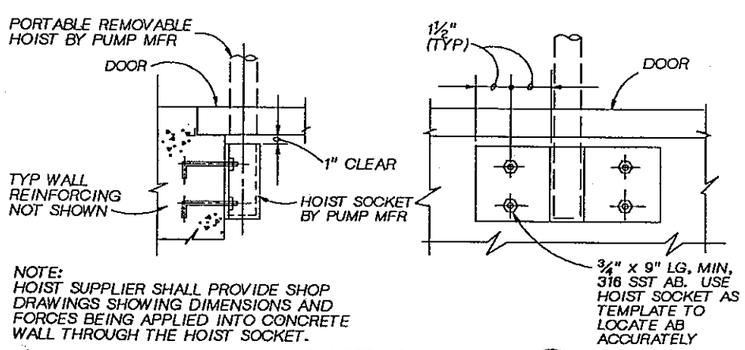

NOTE:
HOIST SUPPLIER SHALL PROVIDE SHOP DRAWINGS SHOWING DIMENSIONS AND FORCES BEING APPLIED INTO CONCRETE WALL THROUGH THE HOIST SOCKET.

HOIST SOCKET 3

NTS

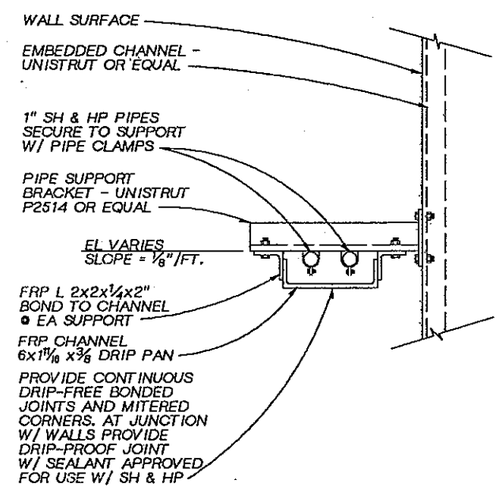

DETAIL 4

NTS
(TYPICAL SH & HP SUPPORT / DRIP PAN)
50-M-2
50-M-4
50-M-11
50-M-12
50-M-13 (UTILIDOR)

JOSEPH A. GAUTHIER STATE OF WASHINGTON REGISTERED PROFESSIONAL ENGINEER

CH2M HILL

DSGN	E RONSHAUGEN				
DR	MC VEACH				
CHK	J GAUTHIER				
APVD	J GAUTHIER	NO.	DATE	REVISION	BY	APVD

REUSE OF DOCUMENTS
THIS DOCUMENT, AND THE IDEAS AND DESIGNS INCORPORATED HEREIN, AS AN INSTRUMENT OF PROFESSIONAL SERVICE, IS THE PROPERTY OF CH2M HILL AND IS NOT TO BE USED, IN WHOLE OR IN PART, FOR ANY OTHER PROJECT WITHOUT THE WRITTEN AUTHORIZATION OF CH2M HILL.
©CH2M HILL

BAR IS ONE INCH ON ORIGINAL DRAWING.
0 1"
IF NOT ONE INCH ON THIS SHEET, ADJUST SCALES ACCORDINGLY.

CITY OF BELLINGHAM, WASHINGTON
POST POINT WASTEWATER TREATMENT PLANT UPGRADE

PIPING GALLERY
MECHANICAL
SECTIONS AND DETAILS

DWG NO. 50-M-3
DATE AUG. 1990
PROJ NO. SEA22462.C1

OVERLAY IDENTIFICATION | COMPOSITE | OVERLAY | PROJID | FILE

DATE: 8/22/90
DRAWN BY: B. CARR DESIGNED BY: E RONSHAUGEN
DGN NAME: H:/PROJ2/BELLINGH/BL050M-B.DGN

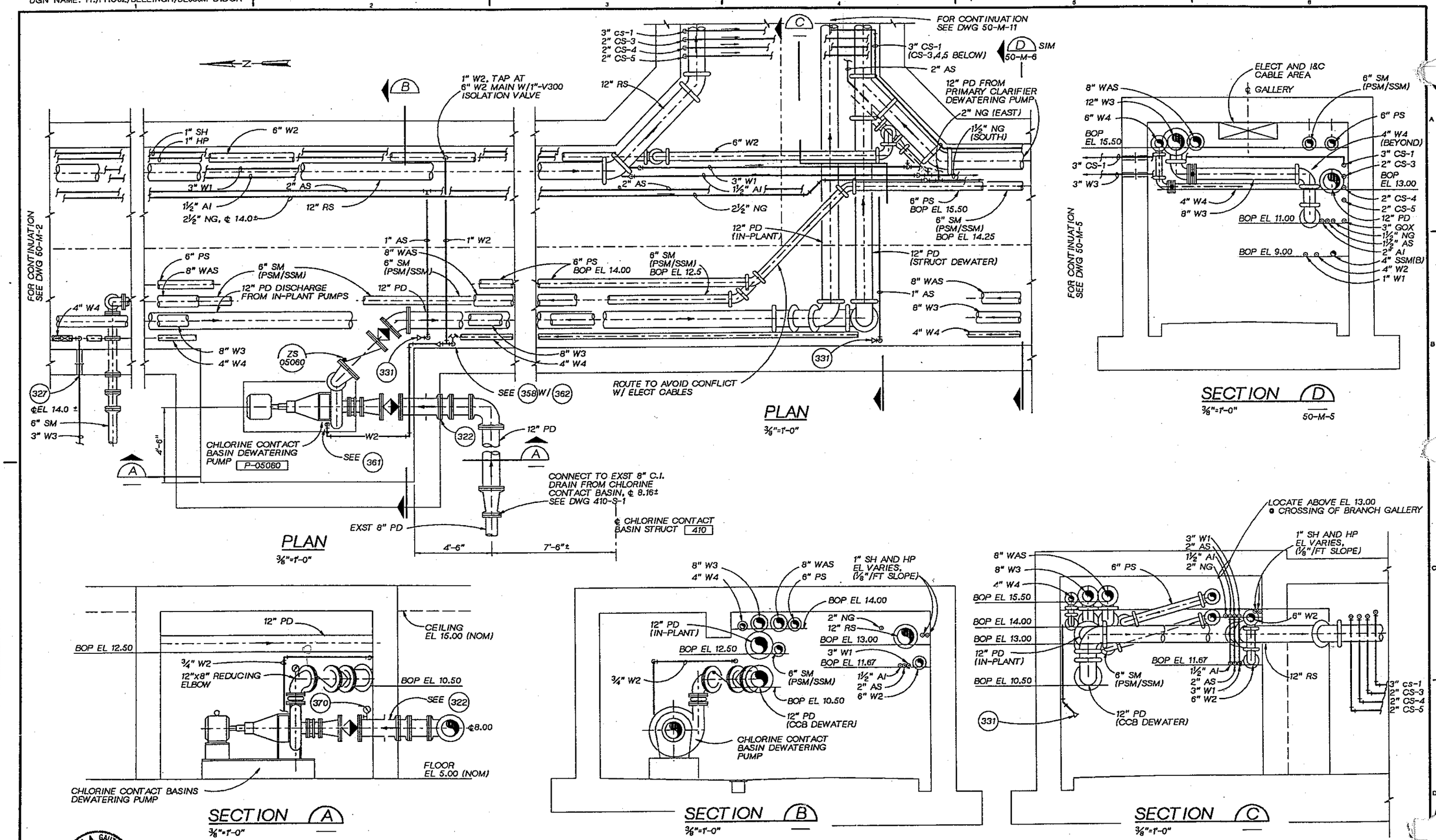

JOSEPH A. GAUTHIER
STATE OF WASHINGTON
REGISTERED PROFESSIONAL ENGINEER

CH2M HILL

DSGN	E RONSHAUGEN
DR	MC VEACH
CHK	J GAUTHIER
APVD	J GAUTHIER

NO.	DATE	REVISION	BY	APVD

REUSE OF DOCUMENTS
THIS DOCUMENT, AND THE IDEAS AND DESIGNS INCORPORATED HEREIN, AS AN INSTRUMENT OF PROFESSIONAL SERVICE, IS THE PROPERTY OF CH2M HILL AND IS NOT TO BE USED, IN WHOLE OR IN PART, FOR ANY OTHER PROJECT WITHOUT THE WRITTEN AUTHORIZATION OF CH2M HILL.
©CH2M HILL

BAR IS ONE INCH ON ORIGINAL DRAWING. 0 1" IF NOT ONE INCH ON THIS SHEET, ADJUST SCALES ACCORDINGLY.

CITY OF BELLINGHAM, WASHINGTON
POST POINT WASTEWATER TREATMENT PLANT UPGRADE

PIPE GALLERY
MECHANICAL
PLANS AND SECTIONS

DWG NO. 50-M-4
DATE AUG. 1990
PROJ NO. SEA22462.C1

DRAWN BY: B. CARR DESIGNED BY: E. RONSHAUGEN
DGN NAME: H:/PROJ2/BELLINGH/BL050M-J.DGN

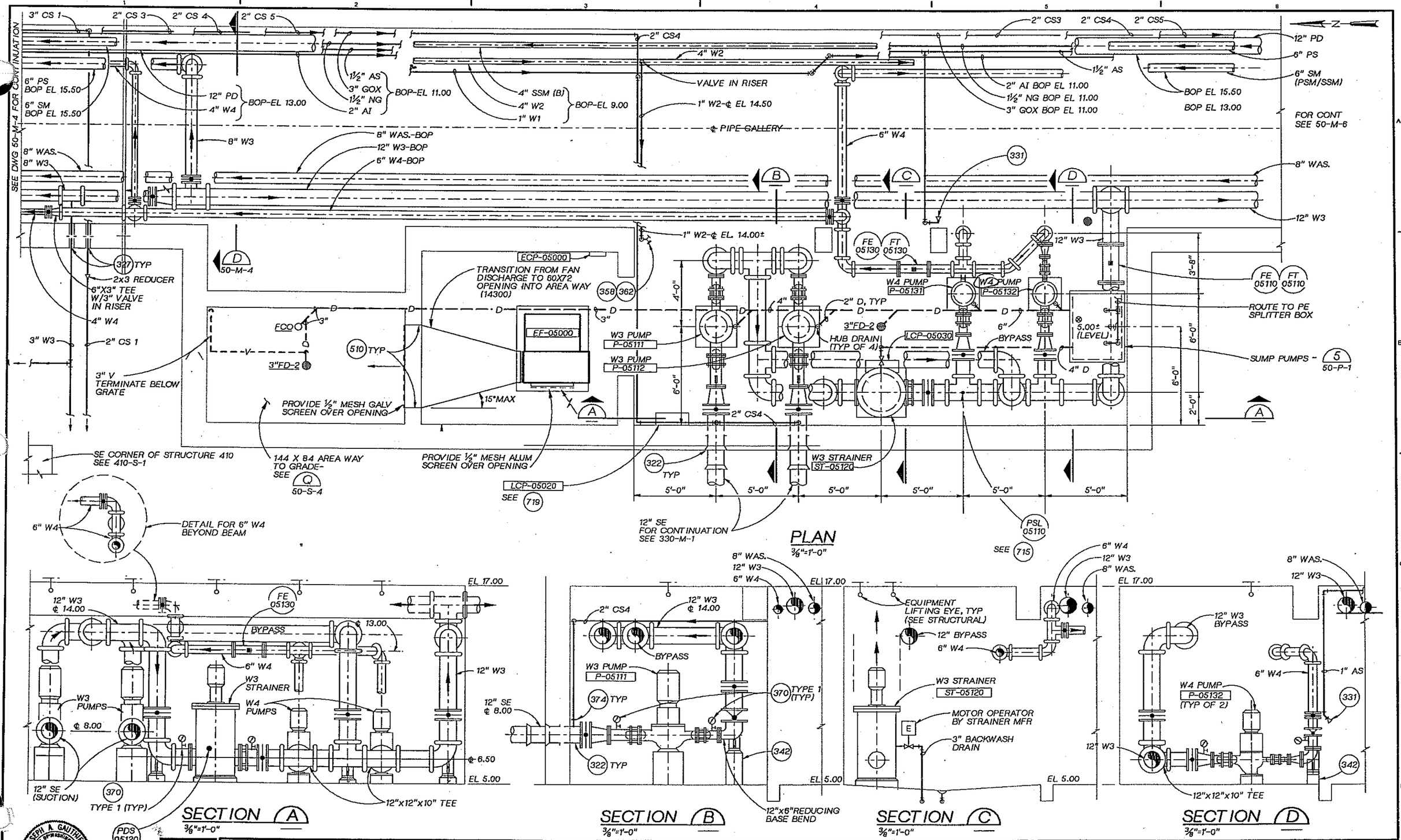

JOSEPH A. GAUTHIER — STATE OF WASHINGTON — REGISTERED PROFESSIONAL ENGINEER

CH2M HILL

DSGN	E. RONSHAUGEN
DR	C. BROWN
CHK	J. GAUTHIER
APVD	J. GAUTHIER

NO.	DATE	REVISION	BY	APVD

REUSE OF DOCUMENTS
THIS DOCUMENT, AND THE IDEAS AND DESIGNS INCORPORATED HEREIN, AS AN INSTRUMENT OF PROFESSIONAL SERVICE, IS THE PROPERTY OF CH2M HILL AND IS NOT TO BE USED, IN WHOLE OR IN PART, FOR ANY OTHER PROJECT WITHOUT THE WRITTEN AUTHORIZATION OF CH2M HILL.
©CH2M HILL

BAR IS ONE INCH ON ORIGINAL DRAWING. 0 — 1"
IF NOT ONE INCH ON THIS SHEET, ADJUST SCALES ACCORDINGLY.

CITY OF BELLINGHAM, WASHINGTON
POST POINT WASTEWATER TREATMENT PLANT UPGRADE

PIPE GALLERY
MECHANICAL/HVAC/PLUMBING
W3 AND W4 WATER PUMP STATION
PLAN AND SECTIONS

DWG NO. 50-M-5
DATE AUG. 1990
PROJ NO. SEA22462.C1

DGN NAME: H:/PROJ2/BELLINGH/BL050M-1.DGN

NOTES:

1. SAW CUT EXST 60" PIPE 12" FROM WALL AND REMOVE 60" PIPE WEST OF CUT. REMOVE GATE STEM AND OPERATOR AND ABANDON CLOSED SLUICE GATE IN PLACE. INSTALL GROUT PLUG AS INDICATED IN DETAIL 3 / 50-M-12
2. ABANDON EXST SLUICE GATE IN CLOSED POSITION. REMOVE GATE STEM AND OPERATOR. INSTALL GROUT PLUG AS INDICATED IN DETAIL.
3. EXST 60" PIPE NORTH TO BE ABANDONED AFTER USE DURING CONSTRUCTION.
4. AFTER PLANT FLOW IS PERMANENTLY DIVERTED, FILL 7'-2" SO BOX W/COMPACTED GRAVEL TO 6" BELOW TOP (EL 24.5±). INSTALL REINFORCED CONCRETE SLAB OVER GRAVEL FILL. 6" NOMINAL THICKNESS W/#4@12" OC EW AND SLOPE SURFACE TO DRAIN TO CHANNEL.
5. HEAT TRACE AND INSULATE ALL SERVICE LINES FOR SSK-1

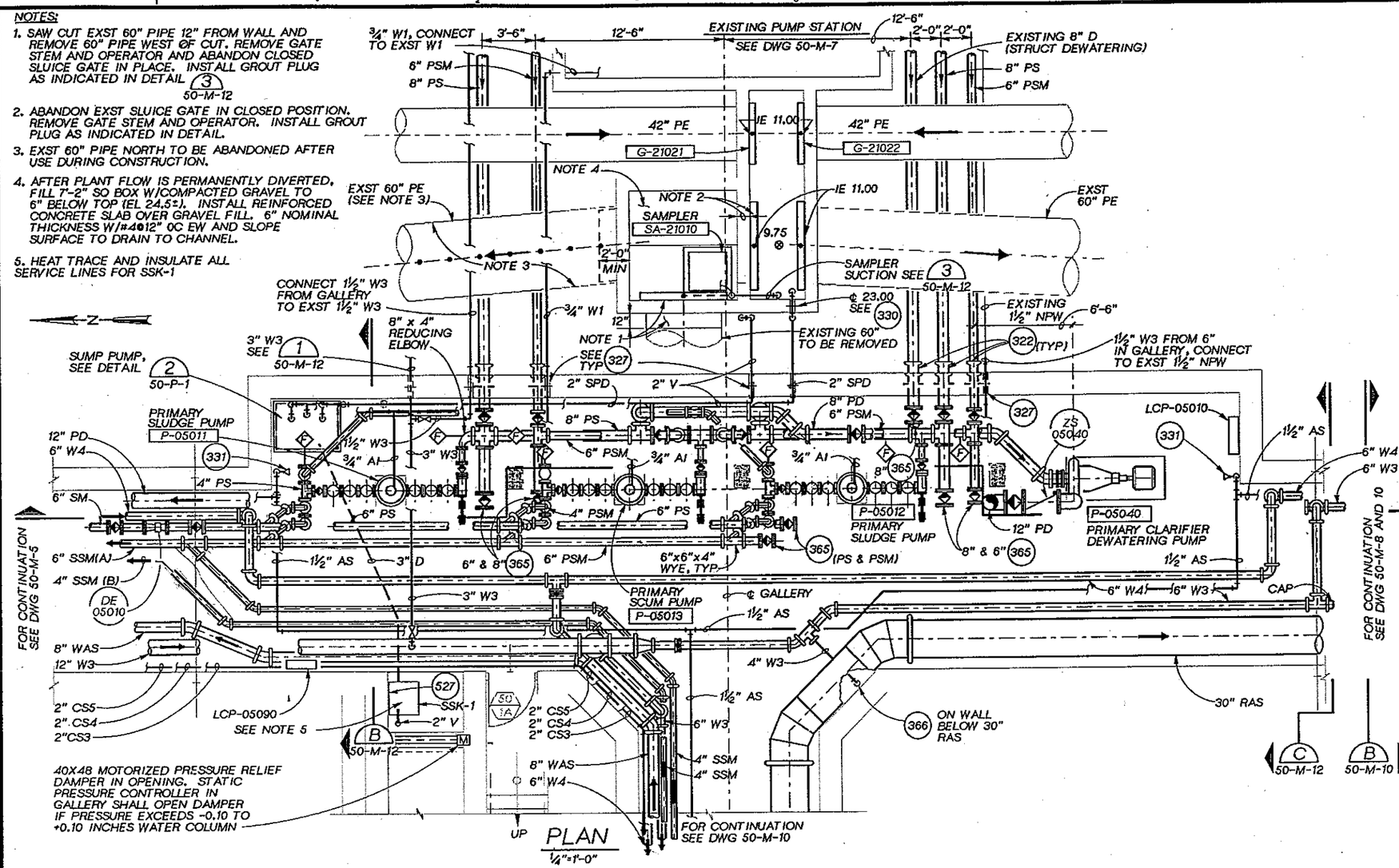

PLAN
¼"=1'-0"

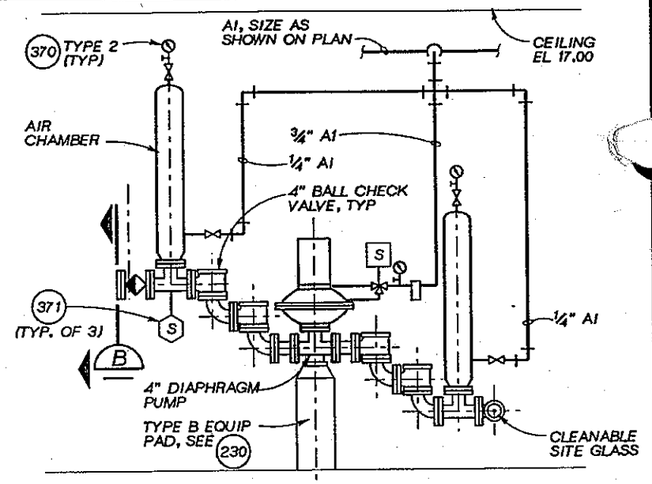

TYPICAL DIAPHRAGM PUMP INSTALLATION

DETAIL 1
½"=1'-0"

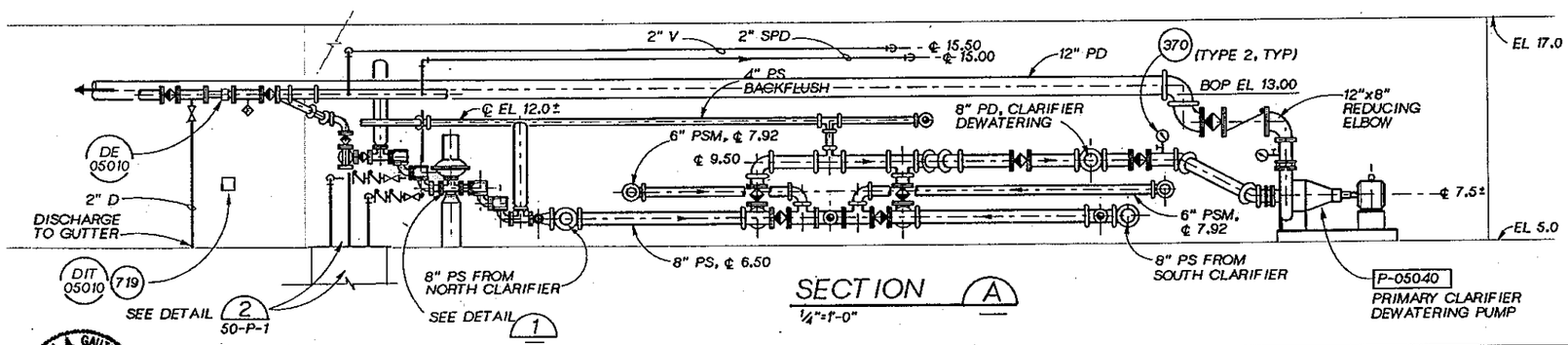

SECTION A
¼"=1'-0"

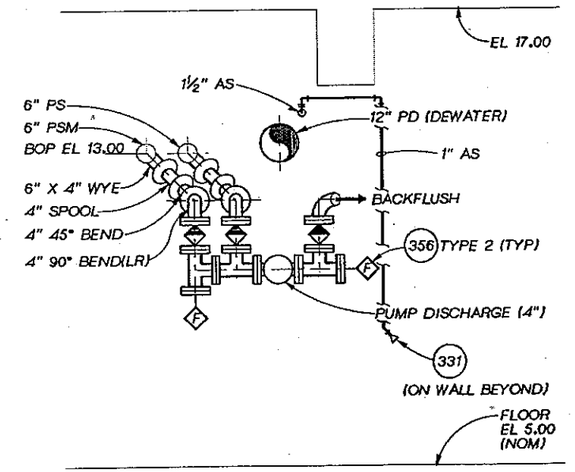

SECTION B
½" = 1'-0"

DSGN E RONSHAUGEN					
DR CS HOWELL					
CHK J GAUTHIER					
APVD J. GAUTHIER	NO.	DATE	REVISION	BY	APVD

CH2M HILL

JOSEPH A. GAUTHIER, STATE OF WASHINGTON, REGISTERED PROFESSIONAL ENGINEER

REUSE OF DOCUMENTS
THIS DOCUMENT, AND THE IDEAS AND DESIGNS INCORPORATED HEREIN, AS AN INSTRUMENT OF PROFESSIONAL SERVICE, IS THE PROPERTY OF CH2M HILL AND IS NOT TO BE USED, IN WHOLE OR IN PART, FOR ANY OTHER PROJECT WITHOUT THE WRITTEN AUTHORIZATION OF CH2M HILL.
©CH2M HILL

VERIFY SCALE
BAR IS ONE INCH ON ORIGINAL DRAWING.
0 1"
IF NOT ONE INCH ON THIS SHEET, ADJUST SCALES ACCORDINGLY.

CITY OF BELLINGHAM, WASHINGTON
POST POINT WASTEWATER TREATMENT PLANT UPGRADE

PIPE GALLERY
MECHANICAL
PRIMARY SLUDGE PUMP STATION
PLAN AND SECTIONS

DWG NO. 50-M-6
DATE AUG. 1990
PROJ NO. SEA22462.C1

COMPOSITE | OVERLAY | SCREEN
OVERLAY IDENTIFICATION | PROJ/D | FILE

DRAWN BY: C.S.HOWELL DESIGNED BY: E.RONSHAUGEN
DGN NAME: H:/PROJ2/BELLINGH/BL050M-H.DGN

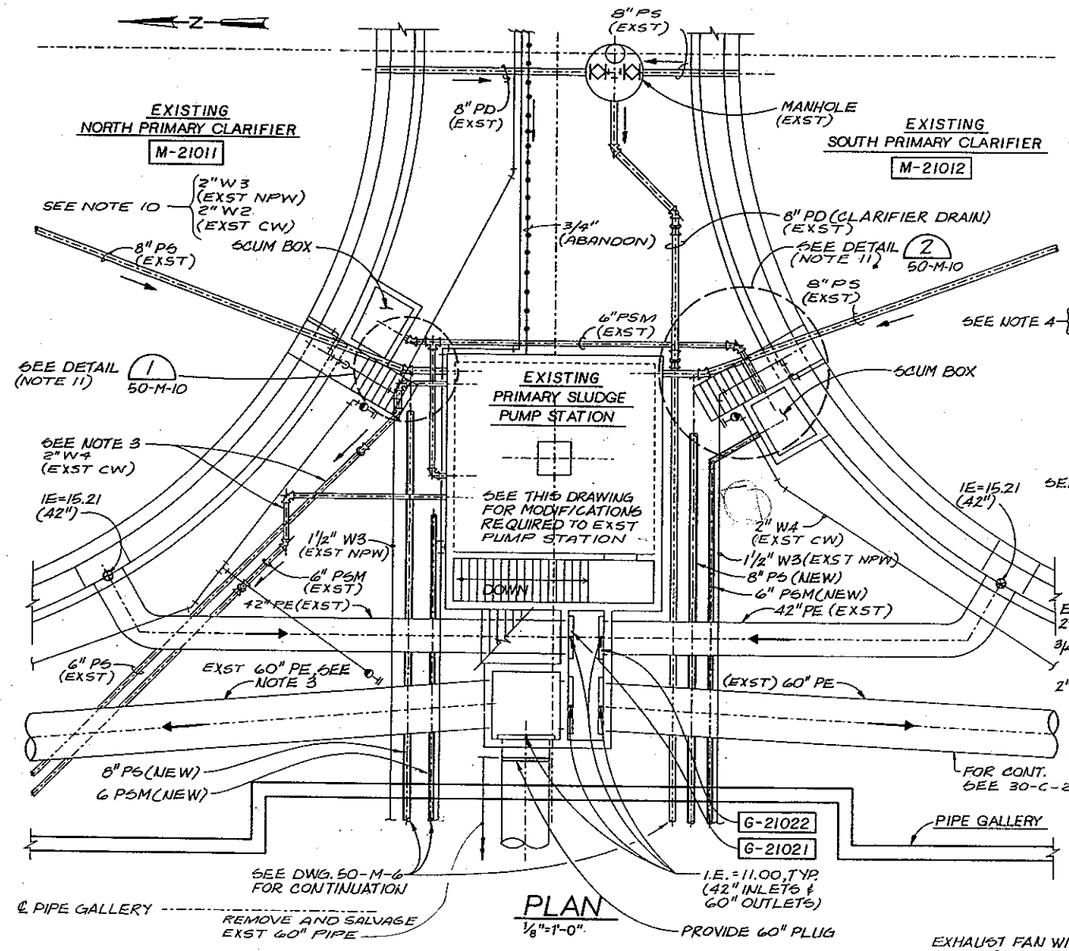

PLAN
1/8"=1'-0"

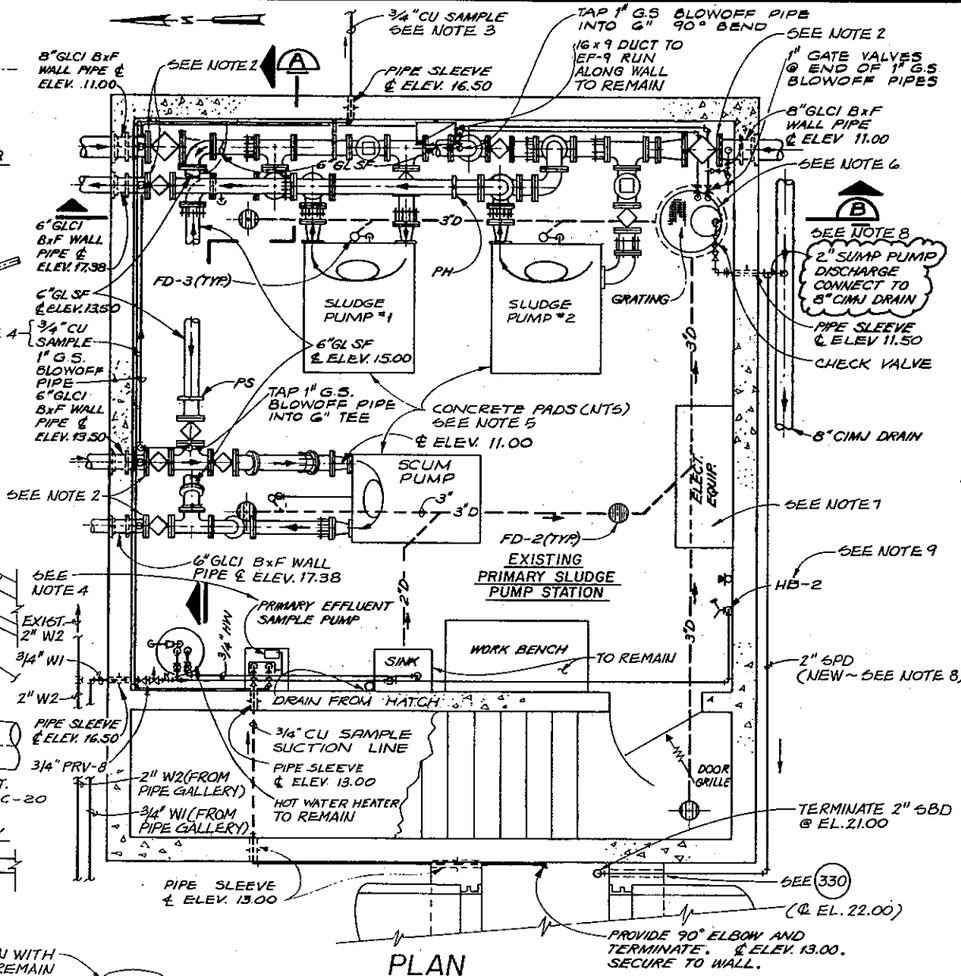

PLAN
3/8"=1'-0"

NOTES:

1. THE CONTRACTOR SHALL REMOVE ALL PIPING, PUMPS AND EQUIPMENT FROM THE EXIST. PUMP STATION EXCEPT AS NOTED.
2. INSTALL BLIND FLANGE AT WALL PIPES. JOINTS SHALL BE WATERTIGHT.
3. MAINTAIN IN OPERATION DURING CONSTRUCTION. ABANDON WHEN NEW SYSTEM IS OPERATIONAL.
4. REMOVE EXIST. PRIMARY EFFLUENT SAMPLER COMPLETE, INCLUDING SAMPLE SUCTION LINE. CAP PIPE AT WALLS.
5. REMOVE PUMPS AND DELIVER TO OWNER DESIGNATED LOCATION ON SITE. REMOVE PUMP FOUNDATIONS. PATCH FLOOR.
6. SUMP PUMPS AND PIPING SHALL REMAIN IN PLACE.
7. FOR ELECTRICAL MODIFICATIONS, SEE ELECTRICAL DRAWINGS.
8. DISCONNECT EXIST. 2" SUMP PUMP DISCHARGE AT 8" DRAIN AND INSTALL PLUG IN 8" DRAIN. EXTEND NEW 2" GPD AS INDICATED.
9. INSTALL ATMOSPHERIC VACUUM BREAKER AT EXIST. HOSE BIBB.
10. EXISTING PIPING CONVERTED TO NEW SERVICE AS INDICATED.
11. EXISTING 6" PSM BETWEEN NORTH AND SOUTH CLARIFIER SCUM BOXES MAY BE ABANDONED IN PLACE.

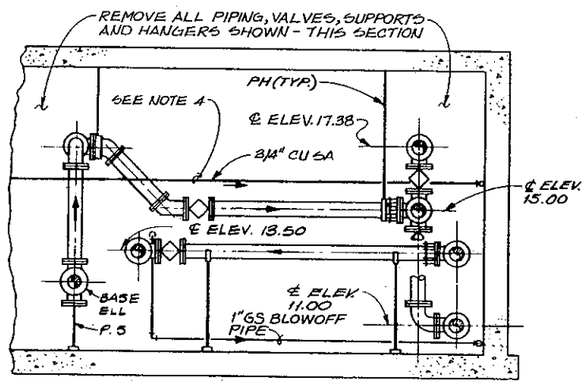

SECTION A
3/8"=1'-0"

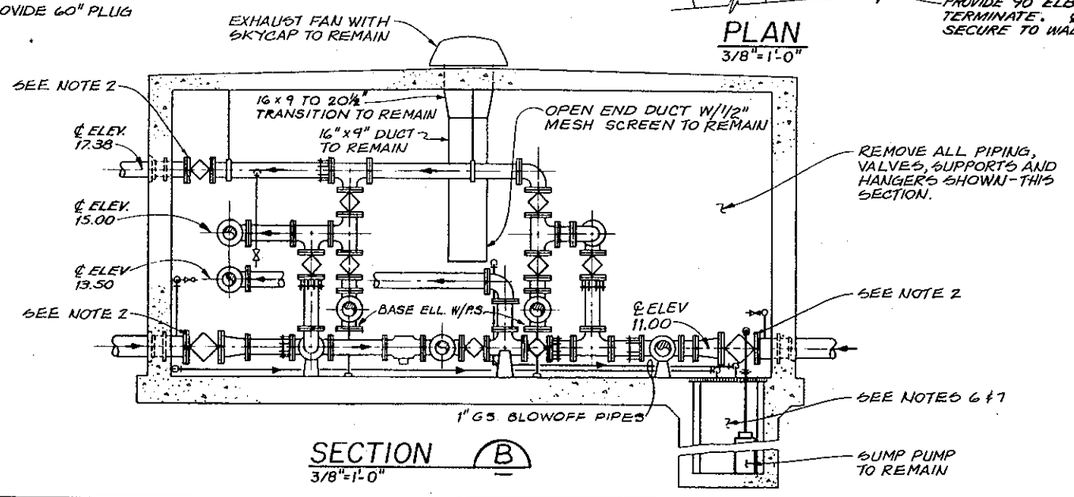

SECTION B
3/8"=1'-0"

DSG E. RONSHAUGEN					
DR C. HOWELL					
CHK J. GAUTHIER					
APVD J. GAUTHIER	NO.	DATE	REVISION	BY	APVD

CH2M HILL

REUSE OF DOCUMENTS
THIS DOCUMENT, AND THE IDEAS AND DESIGNS INCORPORATED HEREIN, AS AN INSTRUMENT OF PROFESSIONAL SERVICE, IS THE PROPERTY OF CH2M HILL AND IS NOT TO BE USED, IN WHOLE OR IN PART, FOR ANY OTHER PROJECT WITHOUT THE WRITTEN AUTHORIZATION OF CH2M HILL.
©CH2M HILL

BAR IS ONE INCH ON ORIGINAL DRAWING.
0 1"
IF NOT ONE INCH ON THIS SHEET, ADJUST SCALES ACCORDINGLY.

CITY OF BELLINGHAM, WASHINGTON
POST POINT WASTEWATER TREATMENT PLANT UPGRADE

PIPE GALLERY
MECHANICAL
EXISTING PRIMARY SLUDGE PUMP STATION-MODIFICATIONS

DWG NO. 50-M-7
DATE AUG 1990
PROJ NO. SEA22462.C1

JOSEPH A. GAUTHIER — STATE OF WASHINGTON — REGISTERED PROFESSIONAL ENGINEER

OVERLAY IDENTIFIER | COMPOSITE | OVERLAY | SCREEN | PROJID | FILE

DATE: 8/22/90
DRAWN BY: B. CARR DESIGNED BY: E RONSHAUGEN
DGN NAME: H:/PROJ2/BELLINGH/BL050M-F.DGN

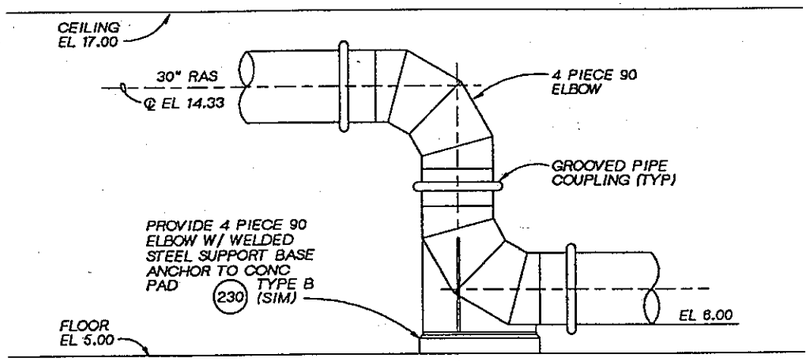

SECTION A
3/8"=1'-0"

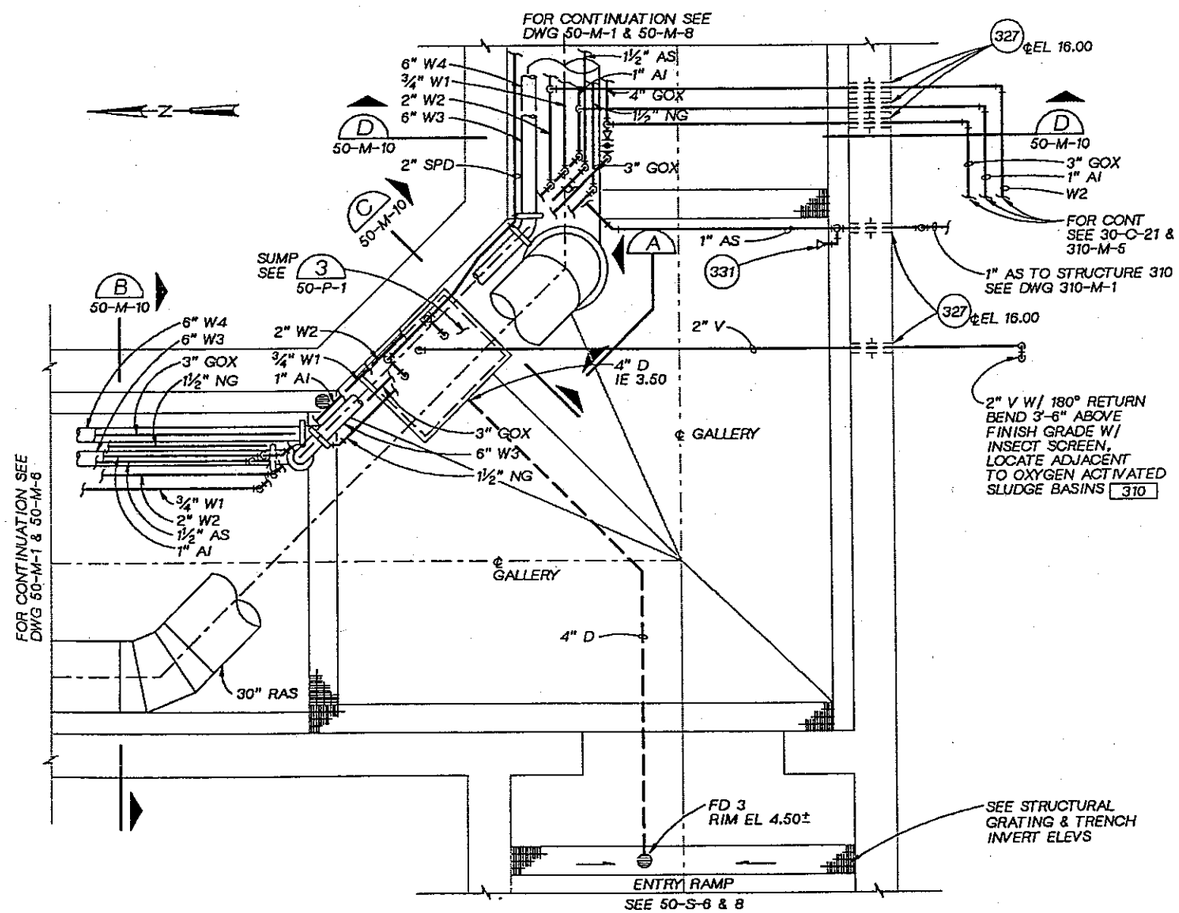

PLAN
3/8"=1'-0"

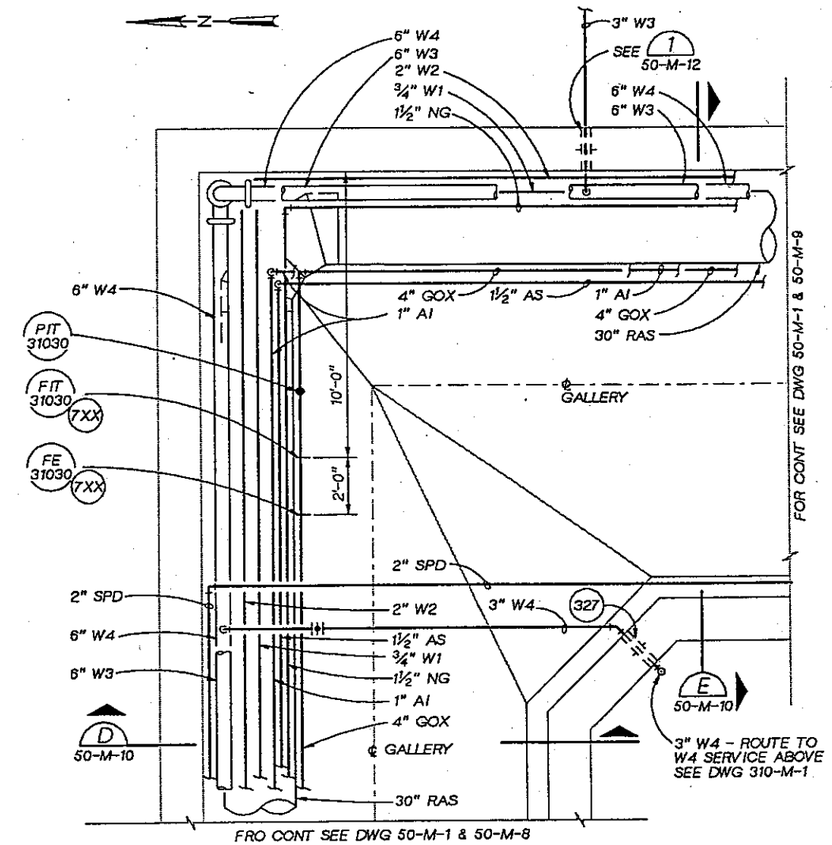

PLAN
3/8"=1'-0"

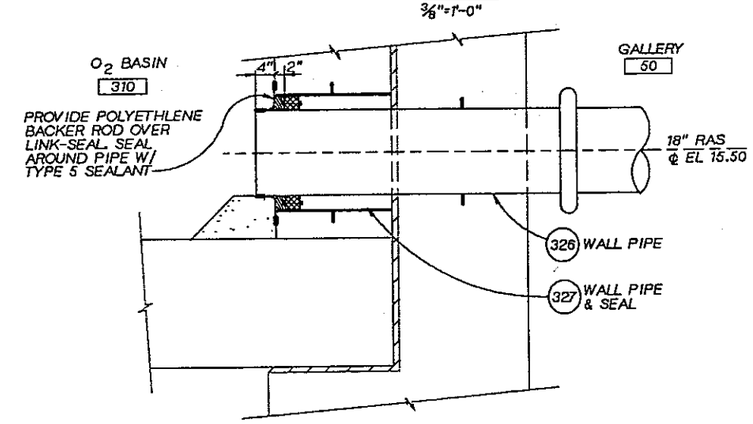

DETAIL 1
NTS 50-M-9

JOSEPH A. GAUTHIER
STATE OF WASHINGTON
REGISTERED
PROFESSIONAL ENGINEER

CH2M HILL

DSGN	E RONSHAUGEN
DR	MC VEACH
CHK	J GAUTHIER
APVD	J GAUTHIER

NO.	DATE	REVISION	BY	APVD

REUSE OF DOCUMENTS
THIS DOCUMENT, AND THE IDEAS AND DESIGNS INCORPORATED HEREIN, AS AN INSTRUMENT OF PROFESSIONAL SERVICE, IS THE PROPERTY OF CH2M HILL AND IS NOT TO BE USED, IN WHOLE OR IN PART, FOR ANY OTHER PROJECT WITHOUT THE WRITTEN AUTHORIZATION OF CH2M HILL.
©CH2M HILL

BAR IS ONE INCH ON ORIGINAL DRAWING.
0 1"
IF NOT ONE INCH ON THIS SHEET, ADJUST SCALES ACCORDINGLY.

CITY OF BELLINGHAM, WASHINGTON
POST POINT WASTEWATER TREATMENT PLANT UPGRADE

PIPE GALLERY
MECHANICAL
PLANS AND SECTIONS

DWG NO. 50-M-8
DATE AUG. 1990
PROJ NO. SEA22452.C1

OVERLAY SCREEN
PROJ FILE

DGN NAME: H:/PROJ2/BELLINGH/BL050M-D.DGN

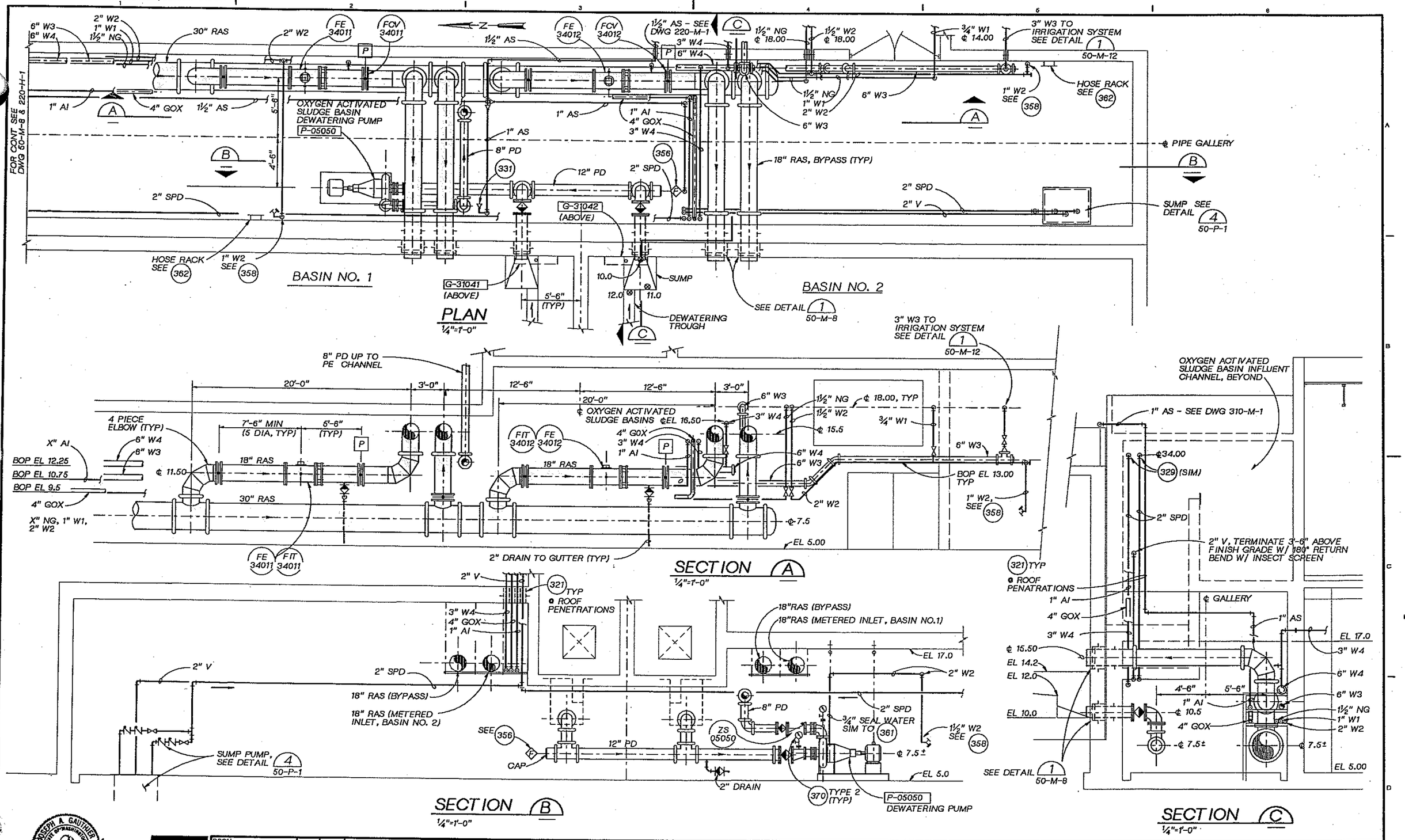

DSGN	E RONSHAUGEN
DR	CS HOWELL
CHK	J GAUTHIER
APVD	J GAUTHIER

CH2M HILL

NO.	DATE	REVISION	BY	APVD

REUSE OF DOCUMENTS

THIS DOCUMENT, AND THE IDEAS AND DESIGNS INCORPORATED HEREIN, AS AN INSTRUMENT OF PROFESSIONAL SERVICE, IS THE PROPERTY OF CH2M HILL AND IS NOT TO BE USED, IN WHOLE OR IN PART, FOR ANY OTHER PROJECT WITHOUT THE WRITTEN AUTHORIZATION OF CH2M HILL.

©CH2M HILL

BAR IS ONE INCH ON ORIGINAL DRAWING. 0 1"

IF NOT ONE INCH ON THIS SHEET, ADJUST SCALES ACCORDINGLY.

CITY OF BELLINGHAM, WASHINGTON
POST POINT WASTEWATER TREATMENT PLANT UPGRADE

PIPE GALLERY

MECHANICAL PLANS AND SECTIONS

DWG NO. 50-M-9
DATE AUG. 1990
PROJ NO. SEA22452.C1

OVERLAY IDENTIFICATION | COMPOSITE | OVERLAY | SCREEN
PROJID | FILE

DRAWN BY: B. CARR DESIGNED BY: E RONSHAUGEN
DGN NAME: H:/PROJ2/BELLINGH/BL050M-E.DGN

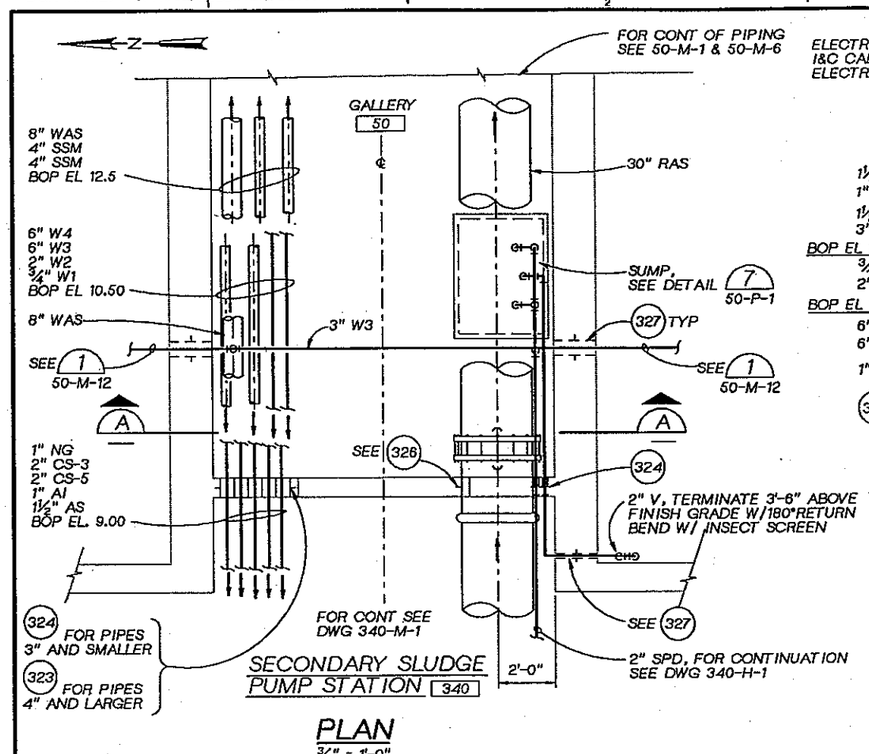

SECONDARY SLUDGE PUMP STATION 340

PLAN
3/8" = 1'-0"

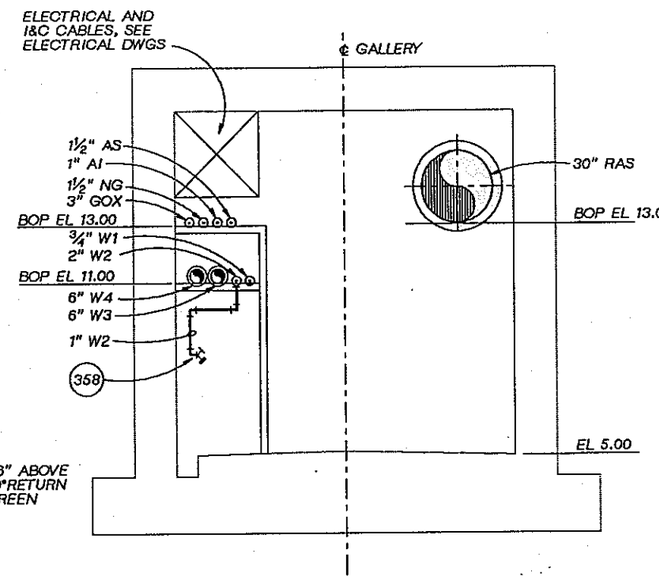

SECTION B
3/8"=1'-0"
50-M-1
50-M-6
50-M-8

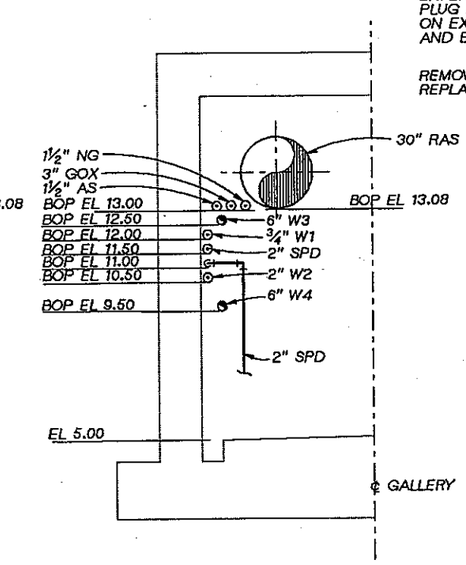

SECTION C
3/8"=1'-0"
50-M-1
50-M-8

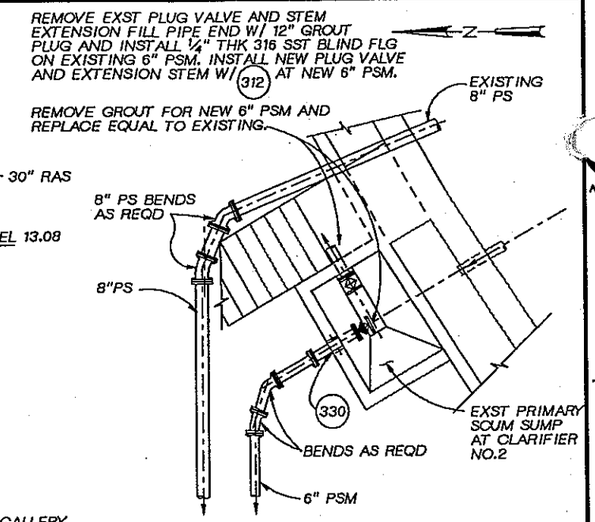

DETAIL 2
NTS
50-M-7

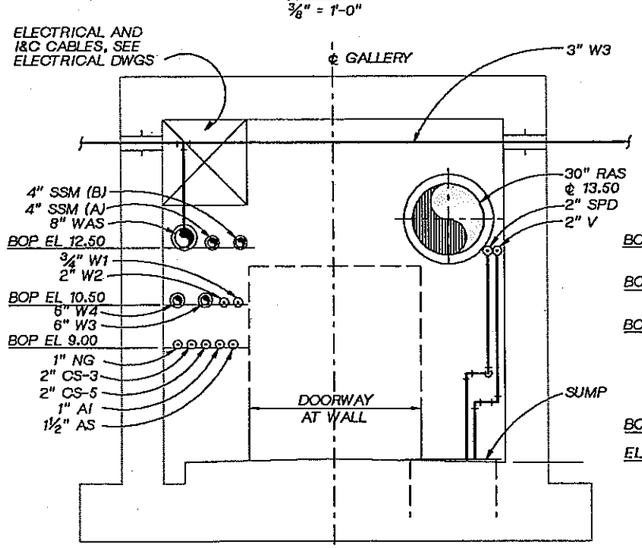

SECTION A
3/8"=1'-0"
50-M-1
340-M-1

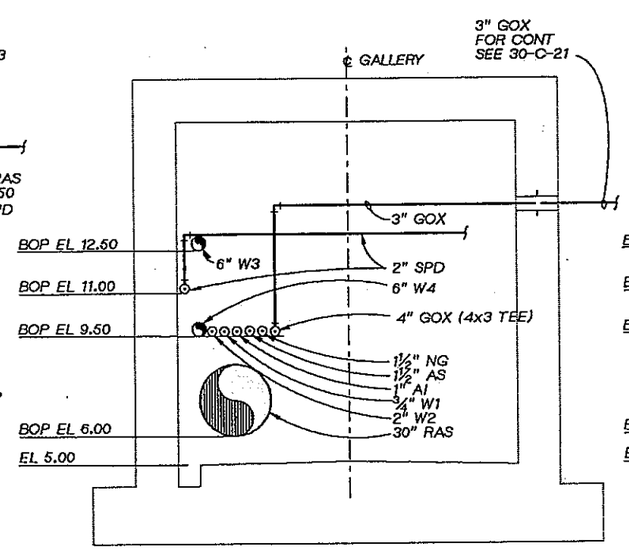

SECTION D
3/8"=1'-0"
50-M-1
50-M-8

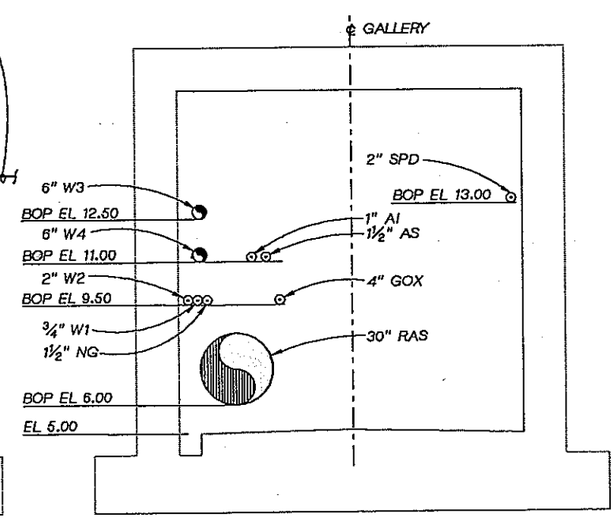

SECTION E
3/8"=1'-0"
50-M-1
50-M-8

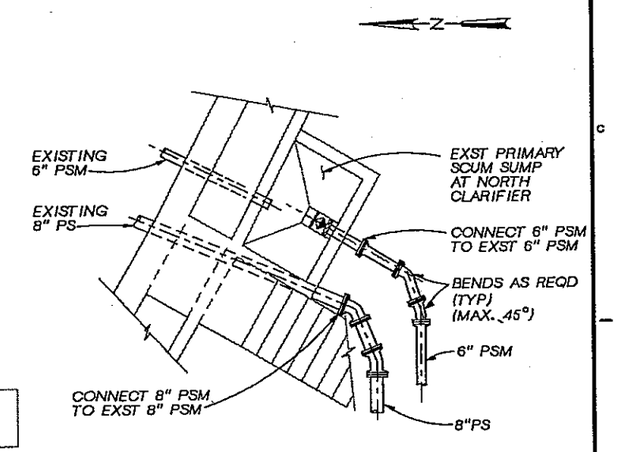

DETAIL 1
NTS
50-M-7

JOSEPH A. GAUTHIER STATE OF WASHINGTON REGISTERED PROFESSIONAL ENGINEER

CH2M HILL

DSGN	E RONSHAUGEN
DR	MC VEACH
CHK	J GAUTHIER
APVD	J GAUTHIER

NO.	DATE	REVISION	BY	APVD

REUSE OF DOCUMENTS
THIS DOCUMENT, AND THE IDEAS AND DESIGNS INCORPORATED HEREIN, AS AN INSTRUMENT OF PROFESSIONAL SERVICE, IS THE PROPERTY OF CH2M HILL AND IS NOT TO BE USED, IN WHOLE OR IN PART, FOR ANY OTHER PROJECT WITHOUT THE WRITTEN AUTHORIZATION OF CH2M HILL.
©CH2M HILL

BAR IS ONE INCH ON ORIGINAL DRAWING. 0 1"
IF NOT ONE INCH ON THIS SHEET, ADJUST SCALES ACCORDINGLY.

CITY OF BELLINGHAM, WASHINGTON
POST POINT WASTEWATER TREATMENT PLANT UPGRADE

PIPE GALLERY
MECHANICAL
PLAN AND SECTIONS

DWG NO. 50-M-10
DATE AUG. 1990
PROJ NO. SEA22462.C1

DGN NAME: H:/PROJ2/BELLINGH/BL050M-C.DGN

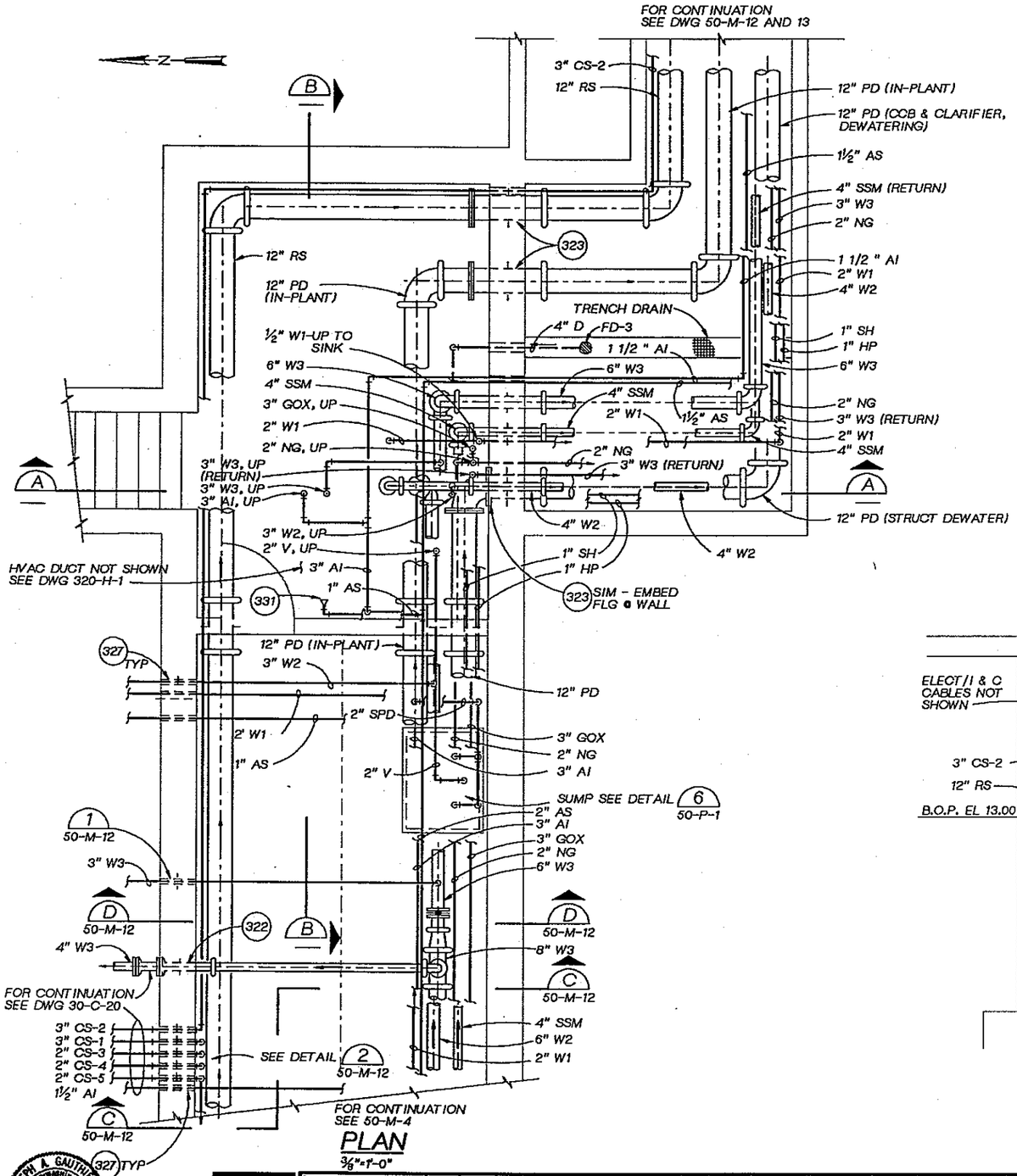

PLAN

3/8"=1'-0"

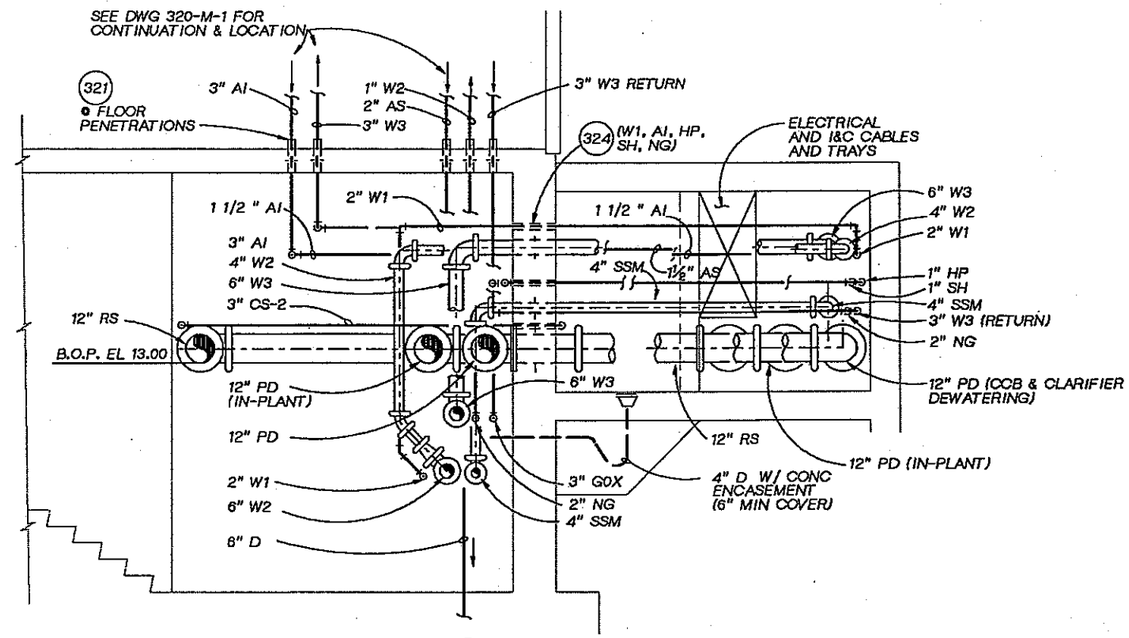

SECTION A

3/8"=1'-0"

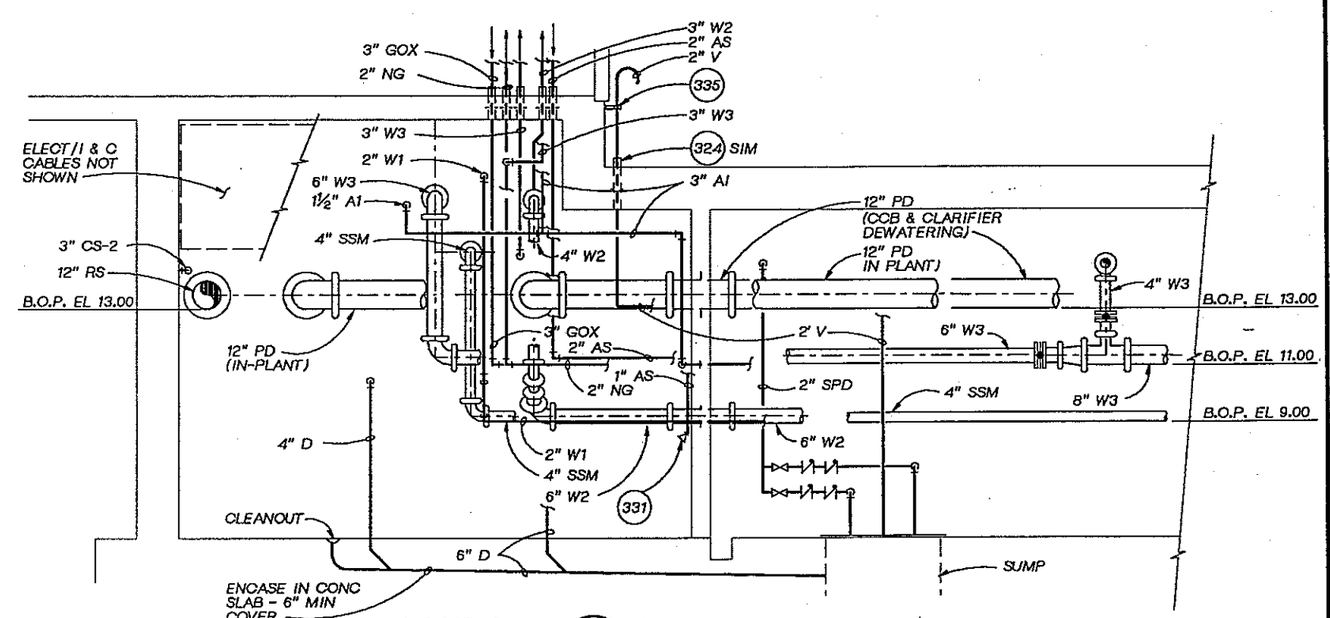

SECTION B

3/8"=1'-0"

DSGN E RONSHAUGEN					
DR MC VEACH					
CHK J GAUTHIER					
APVD J GAUTHIER	NO.	DATE	REVISION	BY	APVD

CH2M HILL

REUSE OF DOCUMENTS
THIS DOCUMENT, AND THE IDEAS AND DESIGNS INCORPORATED HEREIN, AS AN INSTRUMENT OF PROFESSIONAL SERVICE, IS THE PROPERTY OF CH2M HILL AND IS NOT TO BE USED, IN WHOLE OR IN PART, FOR ANY OTHER PROJECT WITHOUT THE WRITTEN AUTHORIZATION OF CH2M HILL.
©CH2M HILL

BAR IS ONE INCH ON ORIGINAL DRAWING. 0 1"
IF NOT ONE INCH ON THIS SHEET, ADJUST SCALES ACCORDINGLY.

CITY OF BELLINGHAM, WASHINGTON
POST POINT WASTEWATER TREATMENT PLANT UPGRADE

PIPE GALLERY
MECHANICAL
PLANS AND SECTIONS

DWG NO. 50-M-11
DATE AUG. 1990
PROJ NO. SEA22462.C1

OVERLAY IDENTIFICATION: COMPOSITE, OVERLAY SCREEN, PROJ/D, FILE

DRAWN BY: B. CARR DESIGNED BY: E RONSHAUGEN
DGN NAME: H:/PROJ2/BELLINGH/BL050M-L.DGN

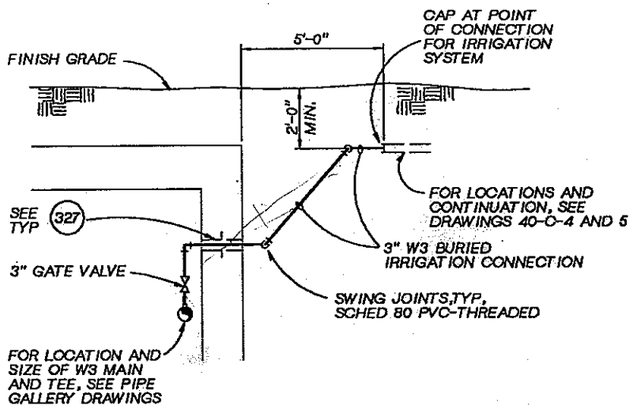

TYPICAL W3 SERVICE TO IRRIGATION SYSTEM

DETAIL 1
NTS
30-C-19
50-M-6
50-M-8
50-M-9
50-M-10
50-M-11
50-M-13

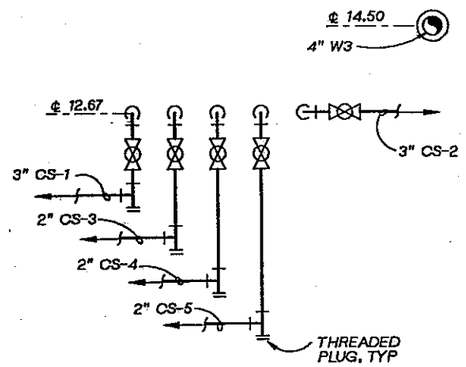

DETAIL 2
NTS
50-M-11

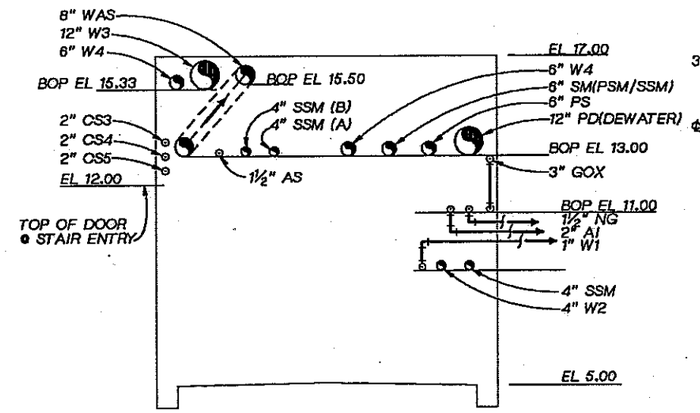

SECTION B
3/8"=1'-0"
50-M-6

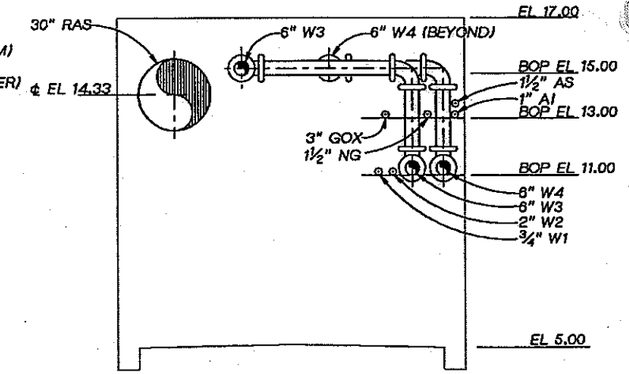

SECTION C
3/8"=1'-0"
50-M-6

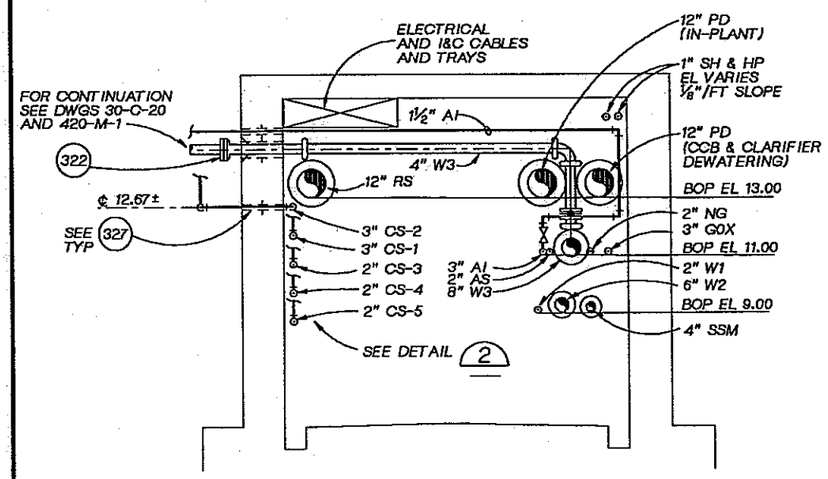

SECTION C
3/8"=1'-0"
50-M-11
50-M-1

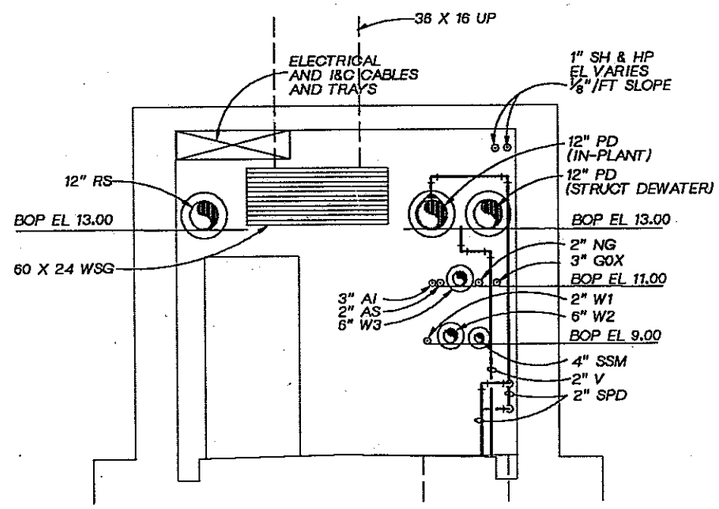

SECTION D
3/8"=1'-0"
50-M-11

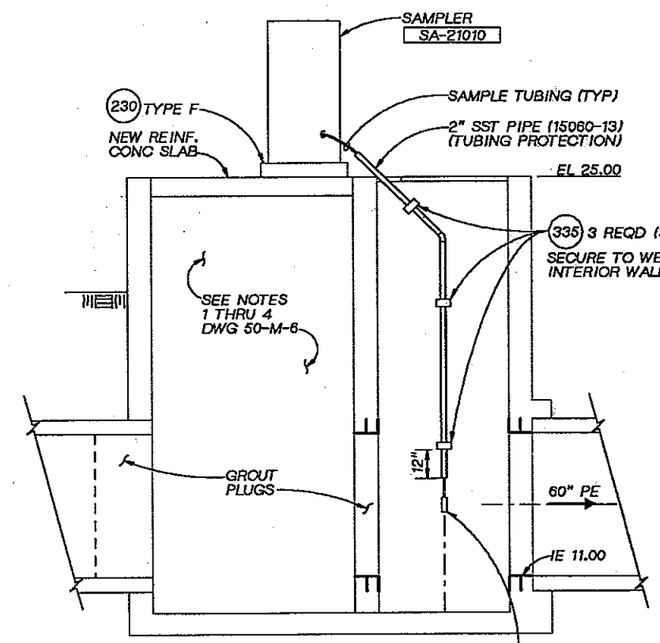

(VIEW FACING EAST)

DETAIL 3
3/8" = 1'-0"
50-M-6

JOSEPH A. GAUTHIER — STATE OF WASHINGTON — REGISTERED PROFESSIONAL ENGINEER

CH2M HILL

DSGN	E RONSHAUGEN
DR	MC VEACH
CHK	J GAUTHIER
APVD	J GAUTHIER

NO.	DATE	REVISION	BY	APVD

REUSE OF DOCUMENTS
THIS DOCUMENT, AND THE IDEAS AND DESIGNS INCORPORATED HEREIN, AS AN INSTRUMENT OF PROFESSIONAL SERVICE, IS THE PROPERTY OF CH2M HILL AND IS NOT TO BE USED, IN WHOLE OR IN PART, FOR ANY OTHER PROJECT WITHOUT THE WRITTEN AUTHORIZATION OF CH2M HILL.
©CH2M HILL

BAR IS ONE INCH ON ORIGINAL DRAWING. 0 1"
IF NOT ONE INCH ON THIS SHEET, ADJUST SCALES ACCORDINGLY.

CITY OF BELLINGHAM, WASHINGTON
POST POINT WASTEWATER TREATMENT PLANT UPGRADE

PIPE GALLERY
MECHANICAL
SECTIONS AND DETAILS

DWG NO. 50-M-12
DATE AUG. 1990
PROJ NO. SEA22462.C1

OVERLAY SCREEN
PROJECT FILE

DATE: 8/21/90
DRAWN BY: B. CARR DESIGNED BY: E RONSHAUGEN
DGN NAME: H:/PROJ2/BELLINGH/BL050M-M.DGN

NOTES:
1. SEE DWG 50-S-10 & 11 FOR UTILIDOR STRUCTURAL DIMENSIONS.
2. SEE DWG 50-M-13 FOR GENERAL LOCATION OF PIPING AND ELECTRICAL CABLES IN UTILIDORS.
3. MOUNT CONVECTION HEATER WITH TOP AT 2'-0" ABOVE FLOOR OF UTILIDOR. INSTALL WALL MOUNTED THERMOSTAT TO ONE SIDE OF HEATER AT 1'-6" ABOVE FLOOR OF UTILIDOR.

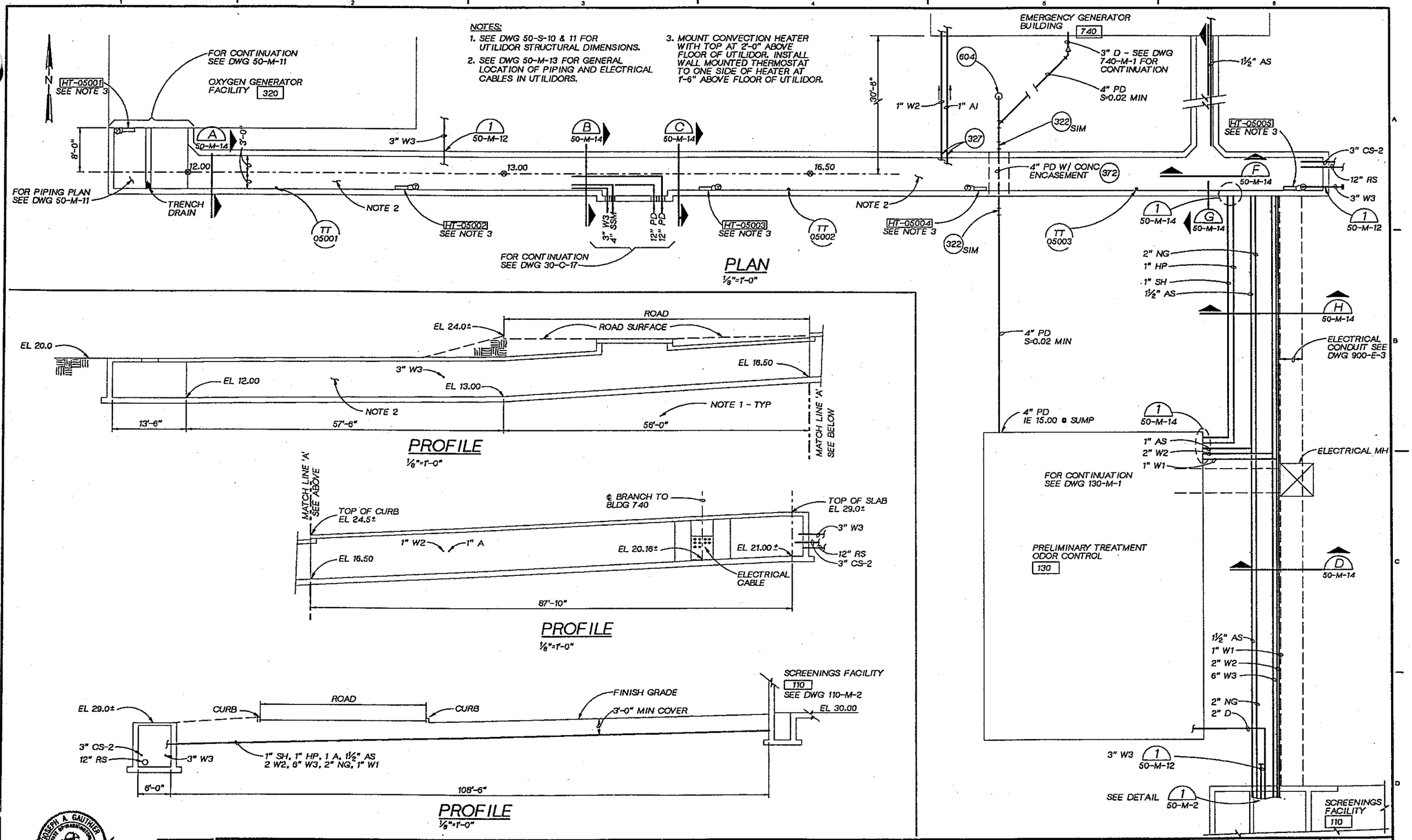

JOSEPH A. GAUTHIER STATE OF WASHINGTON REGISTERED PROFESSIONAL ENGINEER

CH2M HILL

DSGN	E RONSHAUGEN
DR	MC VEACH
CHK	J GAUTHIER
APVD	J GAUTHIER

NO.	DATE	REVISION	BY	APVD

REUSE OF DOCUMENTS
THIS DOCUMENT, AND THE IDEAS AND DESIGNS INCORPORATED HEREIN, AS AN INSTRUMENT OF PROFESSIONAL SERVICE, IS THE PROPERTY OF CH2M HILL AND IS NOT TO BE USED, IN WHOLE OR IN PART, FOR ANY OTHER PROJECT WITHOUT THE WRITTEN AUTHORIZATION OF CH2M HILL.
©CH2M HILL

BAR IS ONE INCH ON ORIGINAL DRAWING.
0 1"
IF NOT ONE INCH ON THIS SHEET, ADJUST SCALES ACCORDINGLY.

CITY OF BELLINGHAM, WASHINGTON
POST POINT WASTEWATER TREATMENT PLANT UPGRADE

PIPE GALLERY
MECHANICAL
UTILIDOR - PLAN AND PROFILES

DWG NO. 50-M-13
DATE AUG. 1990
PROJ NO. SEA22462.C1

OVERLAY IDENTIFICATION: COMPOSITE
PROJID
FILE

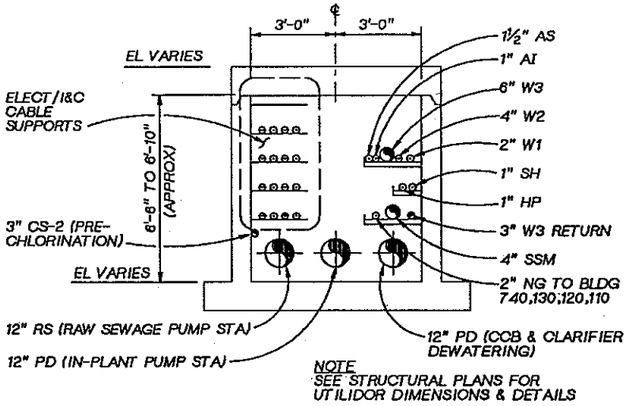

NOTE
SEE STRUCTURAL PLANS FOR UTILIDOR DIMENSIONS & DETAILS

SECTION A 50-M-13
3/8"=1'-0"

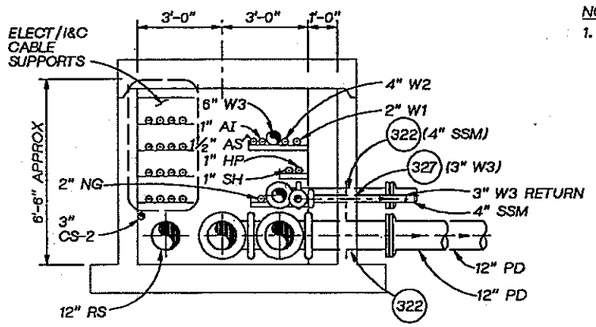

SECTION @ PIPE EXIT TO HEADWORKS

SECTION B 50-M-13
3/8"=1'-0"

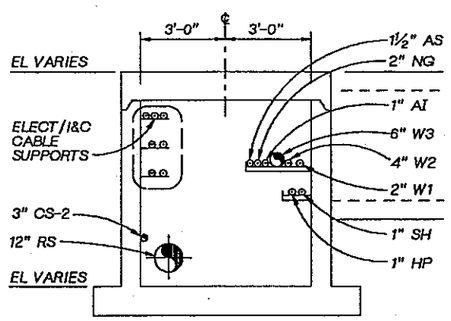

SECTION C 50-M-13
3/8"=1'-0"

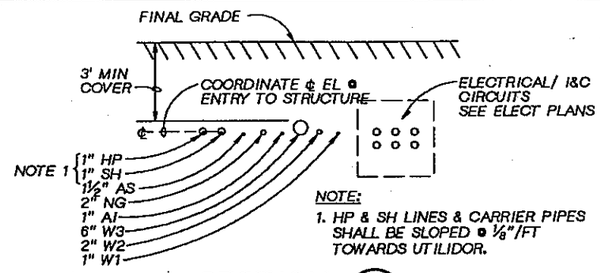

NOTE:
1. HP & SH LINES & CARRIER PIPES SHALL BE SLOPED @ ⅛"/FT TOWARDS UTILIDOR.

SECTION H
NTS 50-M-13

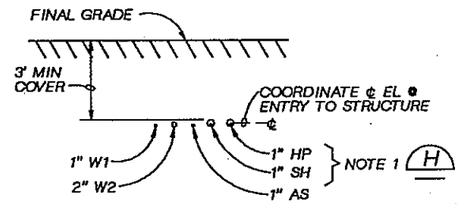

NOTE:
1. HP & SH LINES & CARRIER PIPES SHALL BE SLOPED @ ⅛"/FT TOWARDS UTILIDORS.

SECTION E
NTS 50-M-13

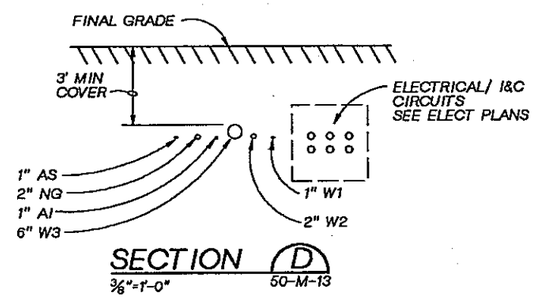

SECTION D 50-M-13
3/8"=1'-0"

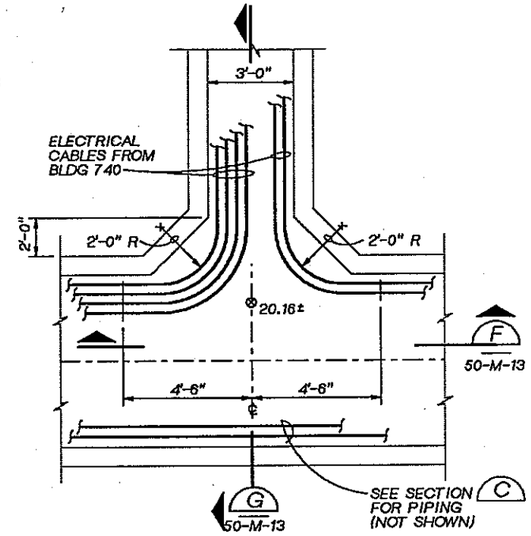

PLAN

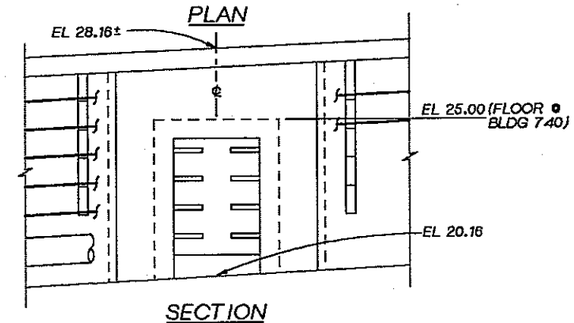

SECTION

SECTION F 50-M-13
3/8"=1'-0"

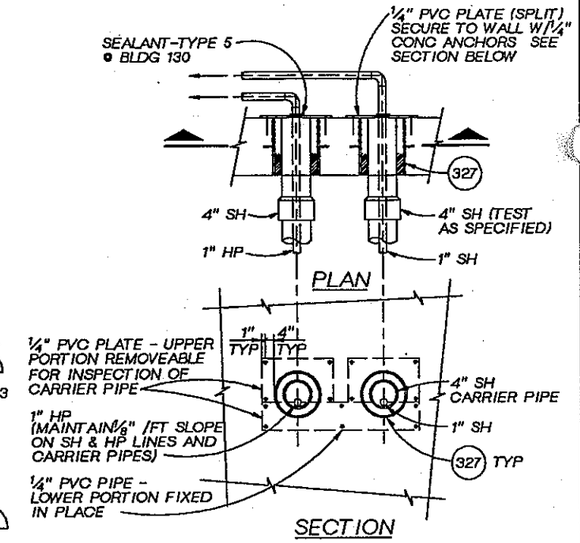

DETAIL 1 50-M-13
NTS

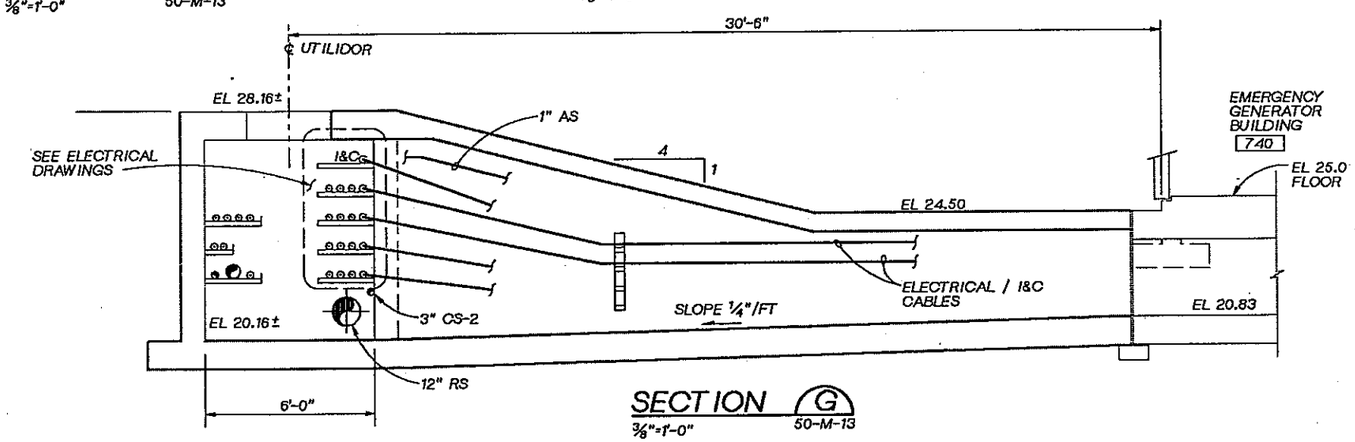

SECTION G 50-M-13
3/8"=1'-0"

DSGN	E RONSHAUGEN					
DR	MC VEACH					
CHK	J GAUTHIER					
APVD	J GAUTHIER	NO.	DATE	REVISION	BY	APVD

CH2M HILL

REUSE OF DOCUMENTS
THIS DOCUMENT, AND THE IDEAS AND DESIGNS INCORPORATED HEREIN, AS AN INSTRUMENT OF PROFESSIONAL SERVICE, IS THE PROPERTY OF CH2M HILL AND IS NOT TO BE USED, IN WHOLE OR IN PART, FOR ANY OTHER PROJECT WITHOUT THE WRITTEN AUTHORIZATION OF CH2M HILL.
©CH2M HILL

BAR IS ONE INCH ON ORIGINAL DRAWING. 0 1"
IF NOT ONE INCH ON THIS SHEET, ADJUST SCALES ACCORDINGLY.

CITY OF BELLINGHAM, WASHINGTON
POST POINT WASTEWATER TREATMENT PLANT UPGRADE

PIPE GALLERY
MECHANICAL
UTILIDOR - SECTIONS AND DETAILS

DWG NO. 50-M-14
DATE AUG. 1990
PROJ NO. SEA22462.C1

DGN NAME: H:/PROJ2/BELLINGH/BL060P-A.DGN

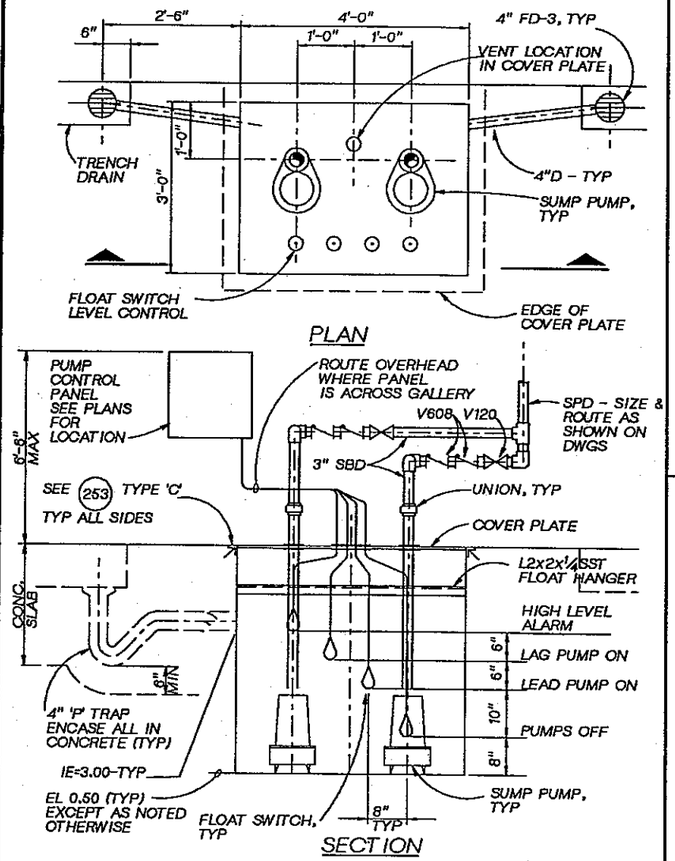

SUMP PUMP DETAIL 10

3/4"=1'-0"

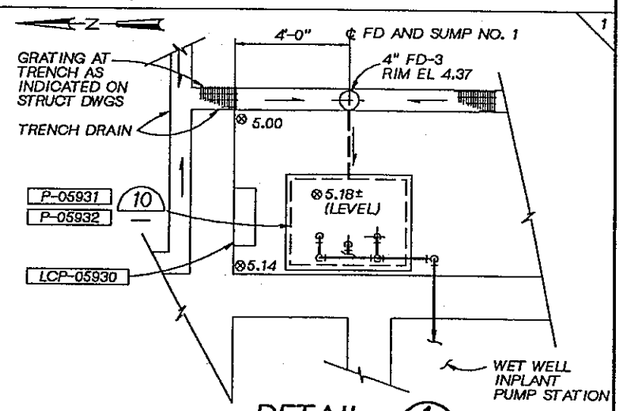

DETAIL 1

3/8"=1'-0"

(AT SOLIDS HANDLING BUILDING)

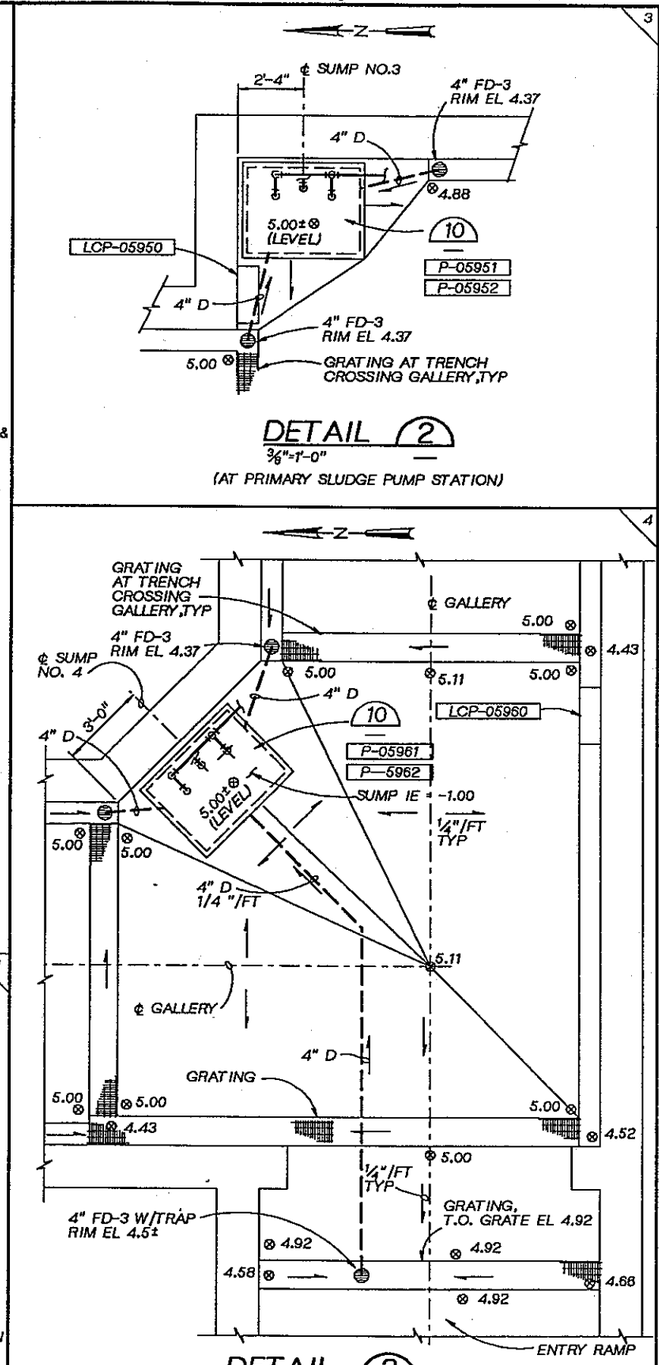

DETAIL 3

3/8"=1'-0"

(AT RAMP ENTRY)

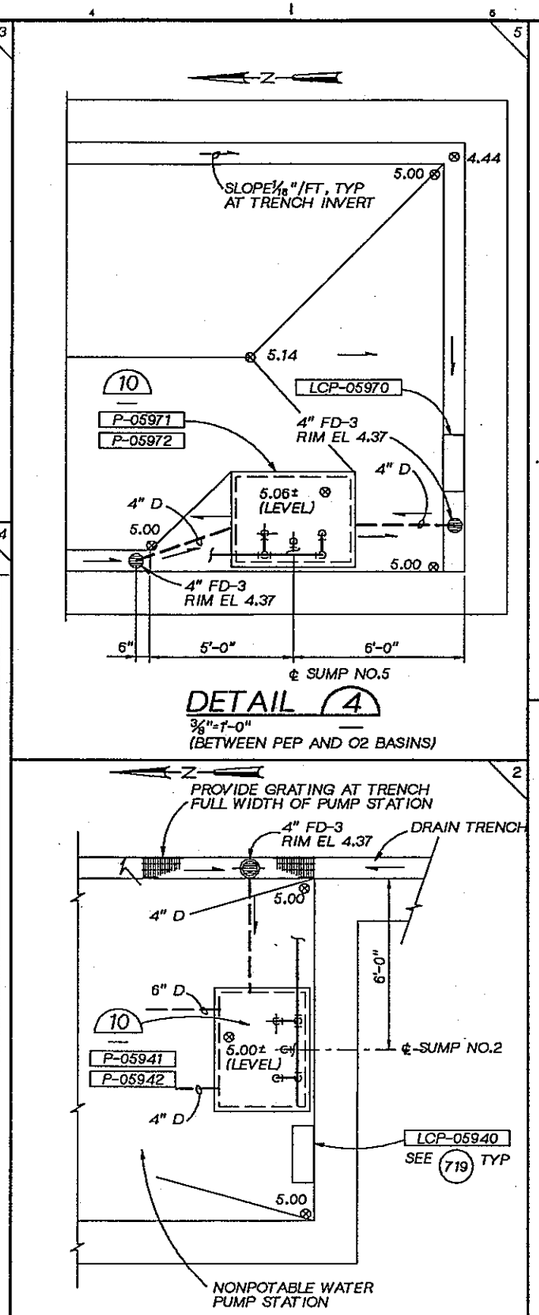

DETAIL 4

3/8"=1'-0"

(BETWEEN PEP AND O2 BASINS)

DETAIL 5

3/8"=1'-0"

(AT W3 AND W4 WATER PUMP STATION)

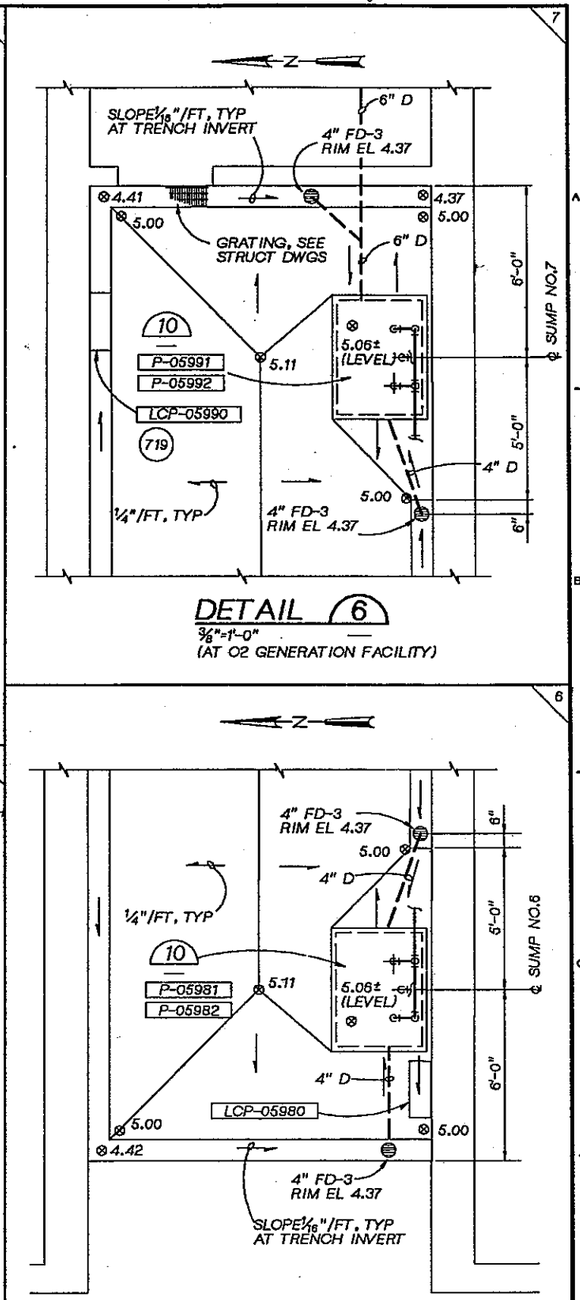

DETAIL 6

3/8"=1'-0"

(AT O2 GENERATION FACILITY)

DETAIL 7

3/8"=1'-0"

(AT SECONDARY SLUDGE PUMP STATION)

JOSEPH A. GAUTHIER — STATE OF WASHINGTON — REGISTERED PROFESSIONAL ENGINEER

CH2M HILL

DSGN	E RONSHAUGEN
DR	MC VEACH
CHK	J GAUTHIER
APVD	J GAUTHIER

NO.	DATE	REVISION	BY	APVD

REUSE OF DOCUMENTS

THIS DOCUMENT, AND THE IDEAS AND DESIGNS INCORPORATED HEREIN, AS AN INSTRUMENT OF PROFESSIONAL SERVICE, IS THE PROPERTY OF CH2M HILL AND IS NOT TO BE USED, IN WHOLE OR IN PART, FOR ANY OTHER PROJECT WITHOUT THE WRITTEN AUTHORIZATION OF CH2M HILL.

©CH2M HILL

BAR IS ONE INCH ON ORIGINAL DRAWING. 0 1"

IF NOT ONE INCH ON THIS SHEET, ADJUST SCALES ACCORDINGLY.

CITY OF BELLINGHAM, WASHINGTON
POST POINT WASTEWATER TREATMENT PLANT UPGRADE

PIPE GALLERY
PLUMBING
SUMP PUMP DETAILS

DWG NO. 50-P-1
DATE AUG. 1990
PROJ NO. SEA22462.C1

COMPOSITE | OVERLAY | OVERLAY IDENTIFICATION | PROJID | FILE

DATE: 8/27/90
DRAWN BY: GH BURLEY DESIGNED BY:
DGN NAME: H:/PROJ2/BELLINGH/BL110A-A.DGN

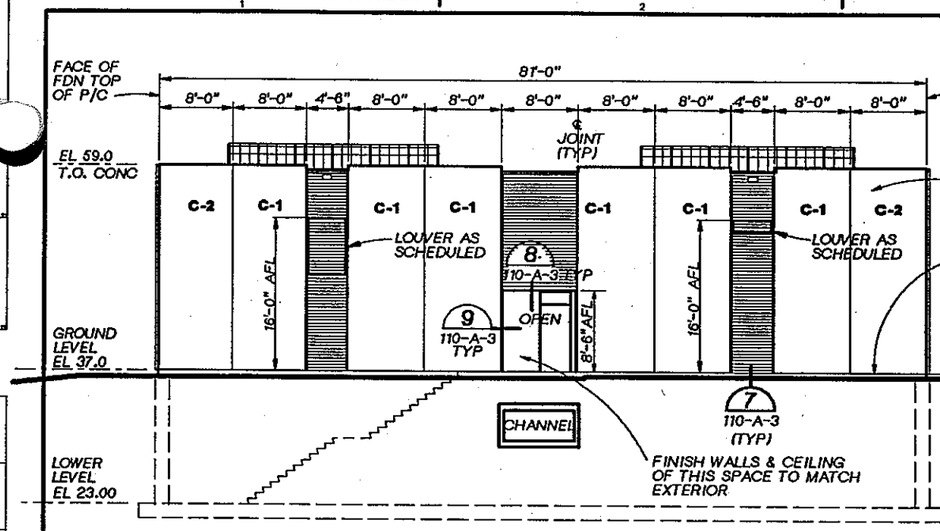

EAST ELEVATION
1/8"=1'-0"

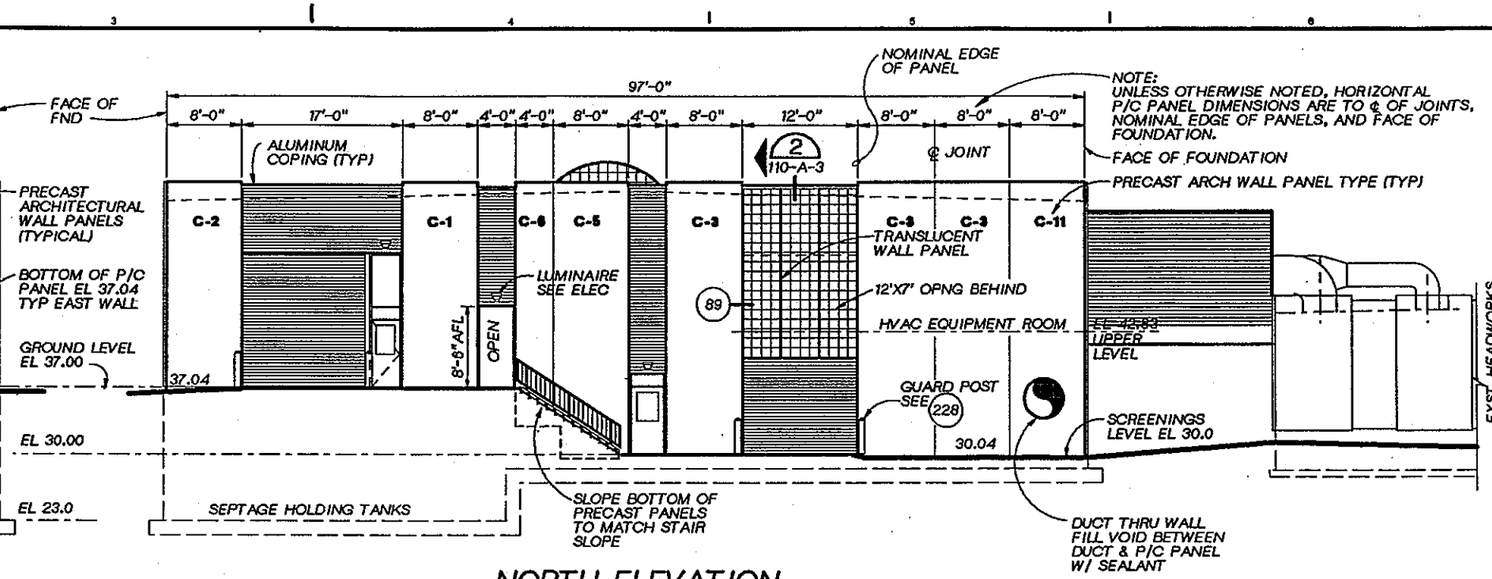

NORTH ELEVATION
1/8"=1'-0"

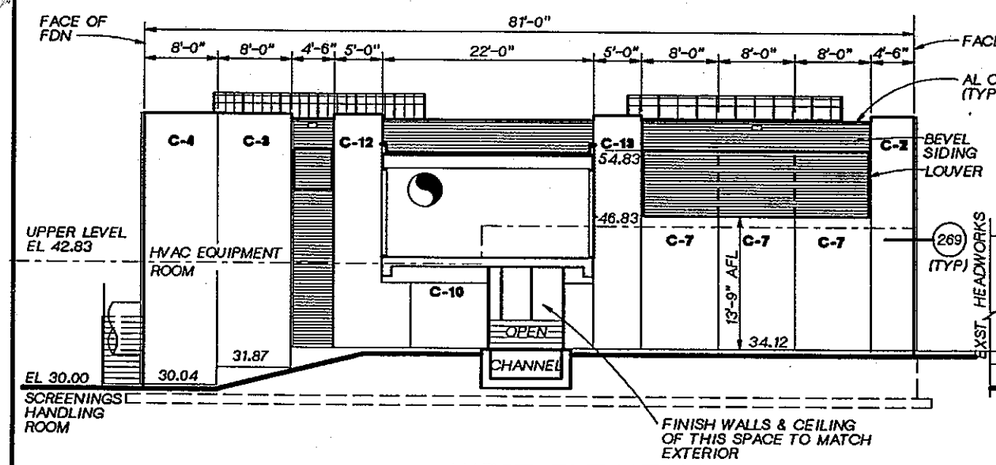

WEST ELEVATION
1/8"=1'-0"

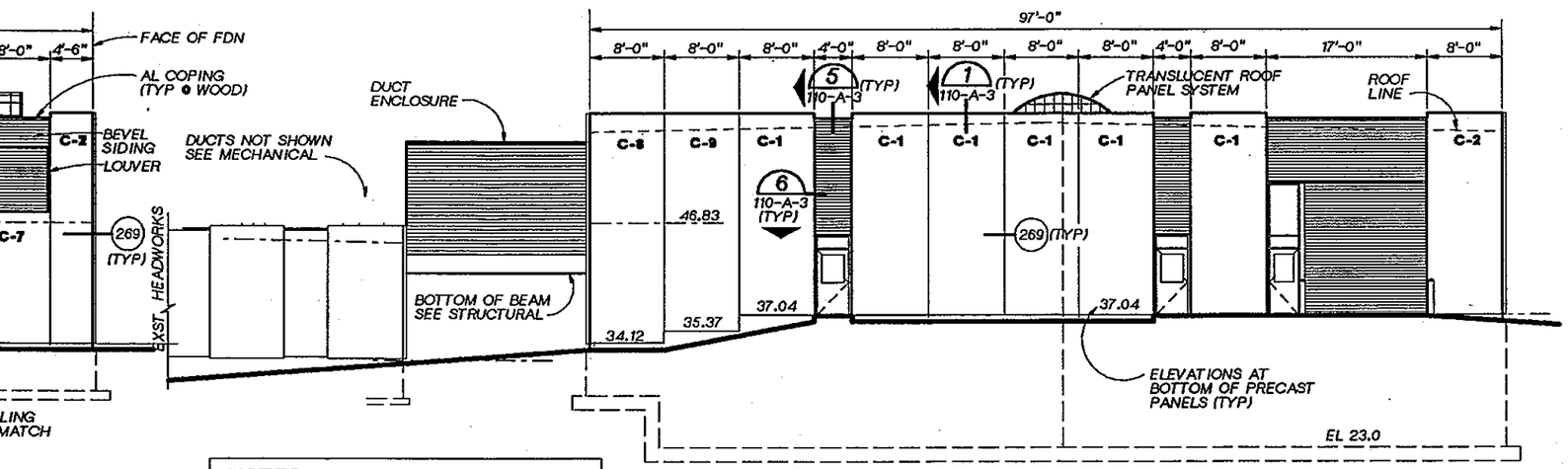

SOUTH ELEVATION
1/8"=1'-0"

NOTES

1. FOR PRECAST ARCHITECTURAL WALL PANEL SCHEDULE SEE DWG 800-S-12.
2. FOR STANDARD DETAILS SEE THE "800" SECTION OF THE DWGS.
3. FOR LOUVER SIZES AND TYPES, SEE SPECIFICATION SECTION 10200.
4. FOR EXTERIOR COLORS & FINISHES, SEE SPECIFICATION SECTION 09000.

REGISTERED ARCHITECT JOHN WEEKS STATE OF WASHINGTON

CH2M HILL

DSGN	G BOWER				
DR	G BOWER				
CHK	R WHITE				
APVD	J. GAUTHIER	NO.	DATE	REVISION	BY	APVD

REUSE OF DOCUMENTS
THIS DOCUMENT, AND THE IDEAS AND DESIGNS INCORPORATED HEREIN, AS AN INSTRUMENT OF PROFESSIONAL SERVICE, IS THE PROPERTY OF CH2M HILL. AND IS NOT TO BE USED, IN WHOLE OR IN PART, FOR ANY OTHER PROJECT WITHOUT THE WRITTEN AUTHORIZATION OF CH2M HILL.
©CH2M HILL

BAR IS ONE INCH ON ORIGINAL DRAWING. 0 1"
IF NOT ONE INCH ON THIS SHEET, ADJUST SCALES ACCORDINGLY.

CITY OF BELLINGHAM, WASHINGTON
POST POINT WASTEWATER TREATMENT PLANT UPGRADE

SCREENINGS FACILITY
ARCHITECTURAL ELEVATIONS

DWG NO. 110-A-1
DATE AUG. 1990
PROJ NO. SEA22462.C1

OVERLAY IDENTIFICATION | COMPOSITE | PROJID | PLAY | FILE

DATE: 5/30/90
DRAWN BY: OA FRIAL DESIGNED BY:
DGN NAME: H:/PROJ2/BELLINGH/BL110A-B.DGN

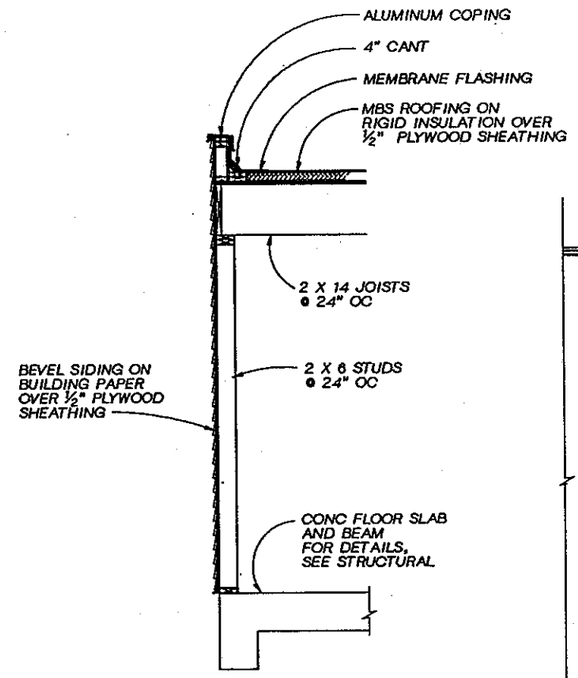

SECTION A
½" = 1'-0"

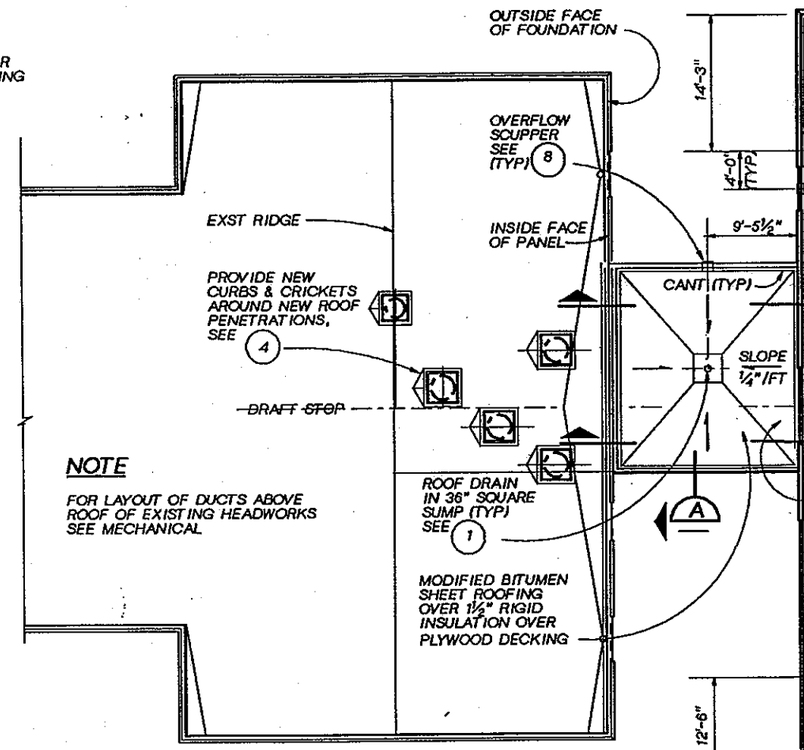

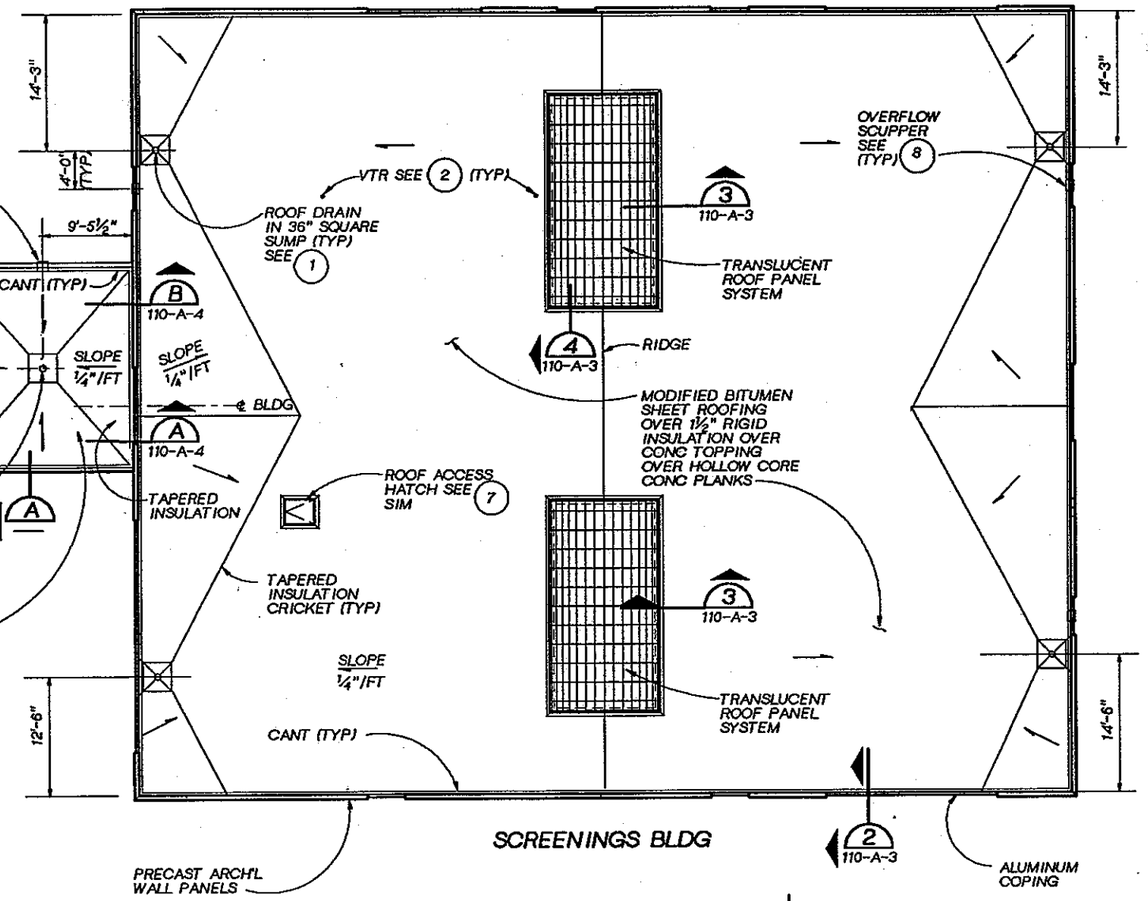

ROOF PLAN
⅛" = 1'-0"

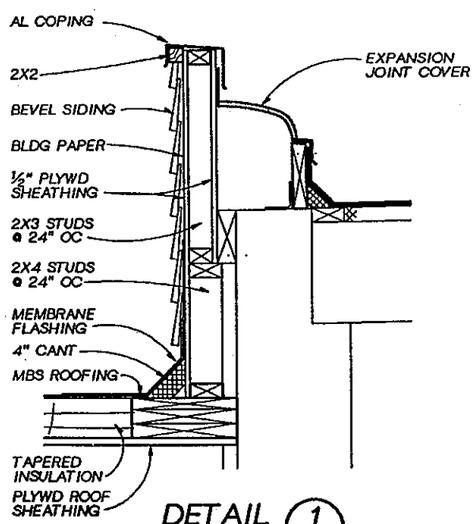

DETAIL 1
3"=1'-0" 110A-4

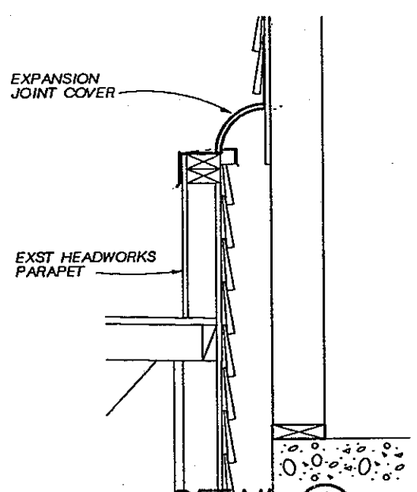

DETAIL 2
3"=1'-0" 110A-4

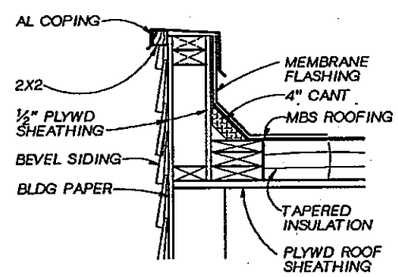

DETAIL 3
3"=1'-0" 110A-4

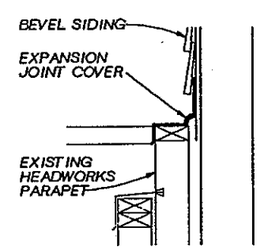

DETAIL 4
3"=1'-0" 110A-4

REGISTERED ARCHITECT
STATE OF WASHINGTON

CH2M HILL

DSGN	OA FRIAL				
DR	OA FRIAL				
CHK	R WHITE				
APVD	J. GAUTHIER	NO.	DATE	REVISION	BY	APVD

REUSE OF DOCUMENTS
THIS DOCUMENT, AND THE IDEAS AND DESIGNS INCORPORATED HEREIN, AS AN INSTRUMENT OF PROFESSIONAL SERVICE, IS THE PROPERTY OF CH2M HILL AND IS NOT TO BE USED, IN WHOLE OR IN PART, FOR ANY OTHER PROJECT WITHOUT THE WRITTEN AUTHORIZATION OF CH2M HILL.
©CH2M HILL

BAR IS ONE INCH ON ORIGINAL DRAWING.
0 1"
IF NOT ONE INCH ON THIS SHEET, ADJUST SCALES ACCORDINGLY.

CITY OF BELLINGHAM, WASHINGTON
POST POINT WASTEWATER TREATMENT PLANT UPGRADE

SCREENINGS FACILITY
ARCHITECTURAL ROOF PLAN

DWG NO. 110-A-2
DATE AUG. 1990
PROJ NO. SEA22462.C1

OVERLAY (DGN FILE LOCATION) COMPOSITE OVERLAY SCREEN
PROJ ID
FILE

DATE: 8/26/90
DRAWN BY: OA FRIAL DESIGNED BY:
DGN NAME: H:/PROJ2/BELLINGH/BL110A-C.DGN

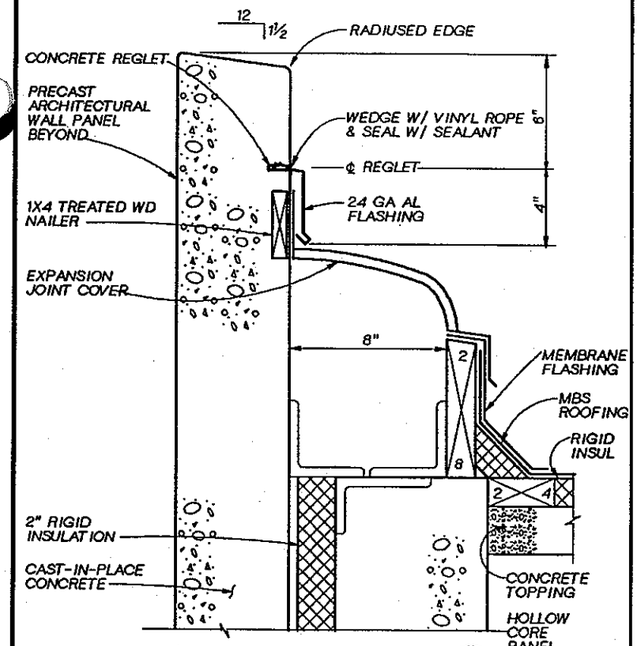

COPING DETAIL (1)
3"=1'-0" 110-A-1, 110-A-2

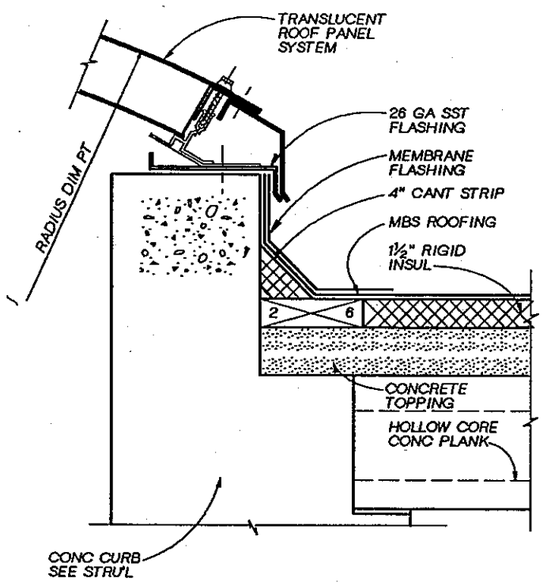

CURB DETAIL (3)
3"=1'-0" 110-A-2

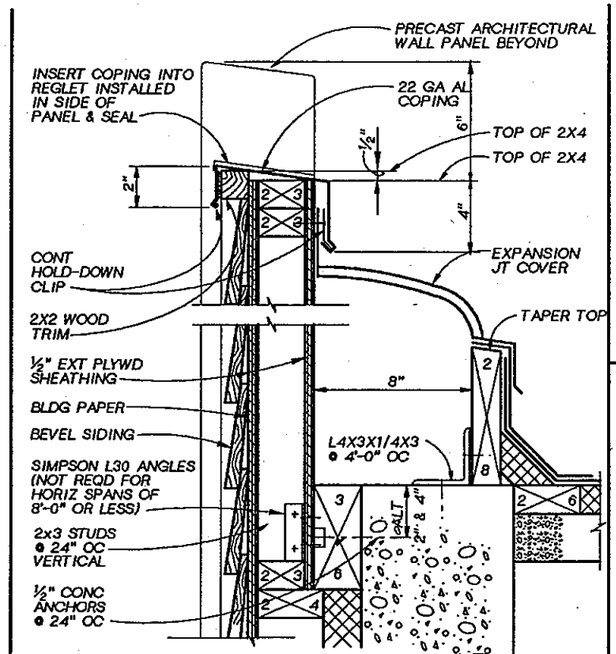

TYP WOOD PANEL @ ROOF (5)
3"=1'-0" 110-A-1, 110-A-2

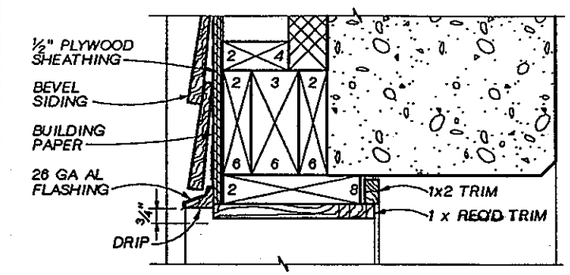

OPENING HEAD (8)
3"=1'-0" 110-A-1

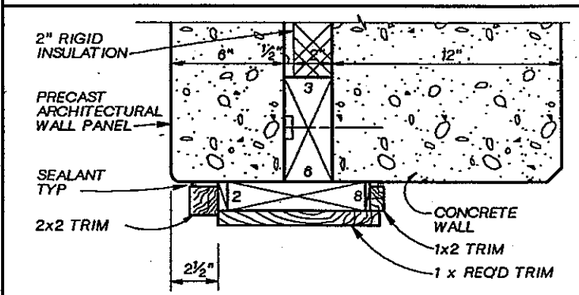

OPENING JAMB (9)
3"=1'-0" 110-A-1

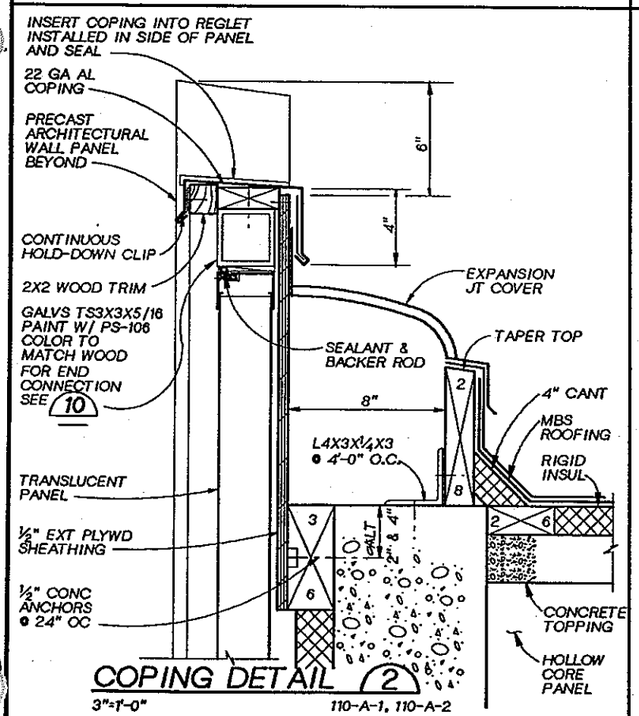

COPING DETAIL (2)
3"=1'-0" 110-A-1, 110-A-2

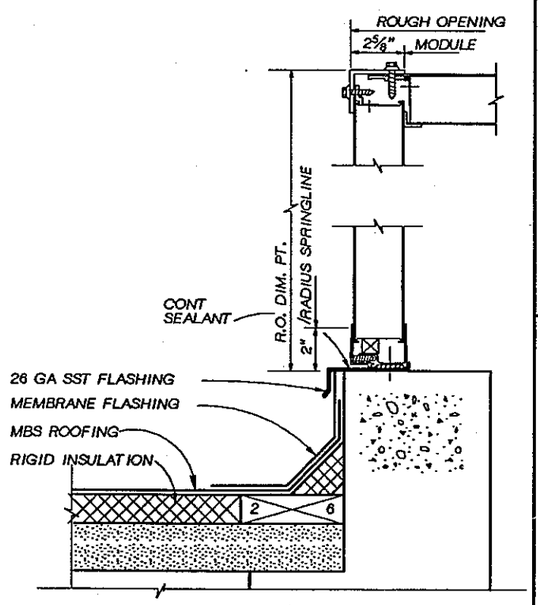

END CURB DETAIL (4)
3"=1'-0" 110-A-2

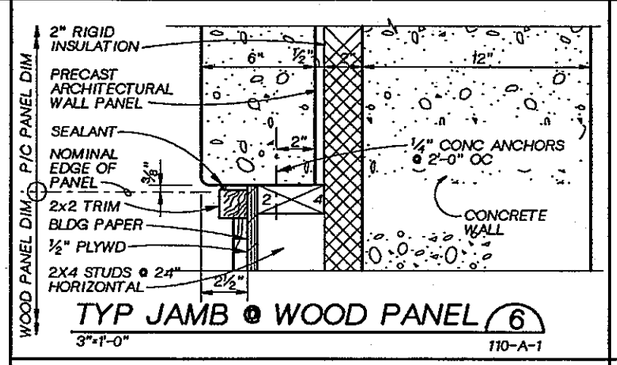

TYP JAMB @ WOOD PANEL (6)
3"=1'-0" 110-A-1

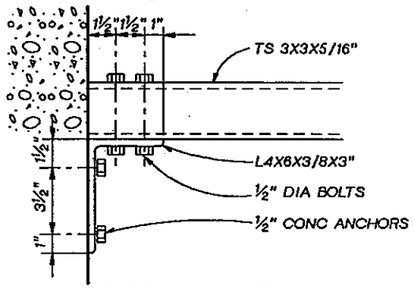

DETAIL (10)
3"=1'-0" 110-A-3

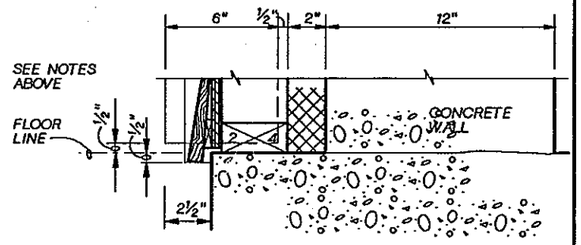

TYP WOOD PANEL @ FLOOR (7)
3"=1'-0" 110-A-1

REGISTERED ARCHITECT
STATE OF WASHINGTON

CH2M HILL

DSGN	G BOWER
DR	O FRIAL
CHK	R WHITE
APVD	J. GAUTHIER

NO.	DATE	REVISION	BY	APVD

REUSE OF DOCUMENTS
THIS DOCUMENT, AND THE IDEAS AND DESIGNS INCORPORATED HEREIN, AS AN INSTRUMENT OF PROFESSIONAL SERVICE, IS THE PROPERTY OF CH2M HILL AND IS NOT TO BE USED, IN WHOLE OR IN PART, FOR ANY OTHER PROJECT WITHOUT THE WRITTEN AUTHORIZATION OF CH2M HILL.
©CH2M HILL

BAR IS ONE INCH ON ORIGINAL DRAWING.
0 1"
IF NOT ONE INCH ON THIS SHEET, ADJUST SCALES ACCORDINGLY.

CITY OF BELLINGHAM, WASHINGTON
POST POINT WASTEWATER TREATMENT PLANT UPGRADE

SCREENINGS FACILITY
ARCHITECTURAL SECTIONS AND DETAILS

DWG NO. 110-A-3
DATE AUG. 1990
PROJ. NO. SEA22462.C1

OVERLAY IDENTIFICATION: COMPOSITE DISPLAY PROJID FILE

DATE: 8-23-90
DRAWN BY: O A FRIAL DESIGNED BY: O A FRIAL
DGN NAME: H:/PROJ2/BELLINGH/BL110A-D.DGN

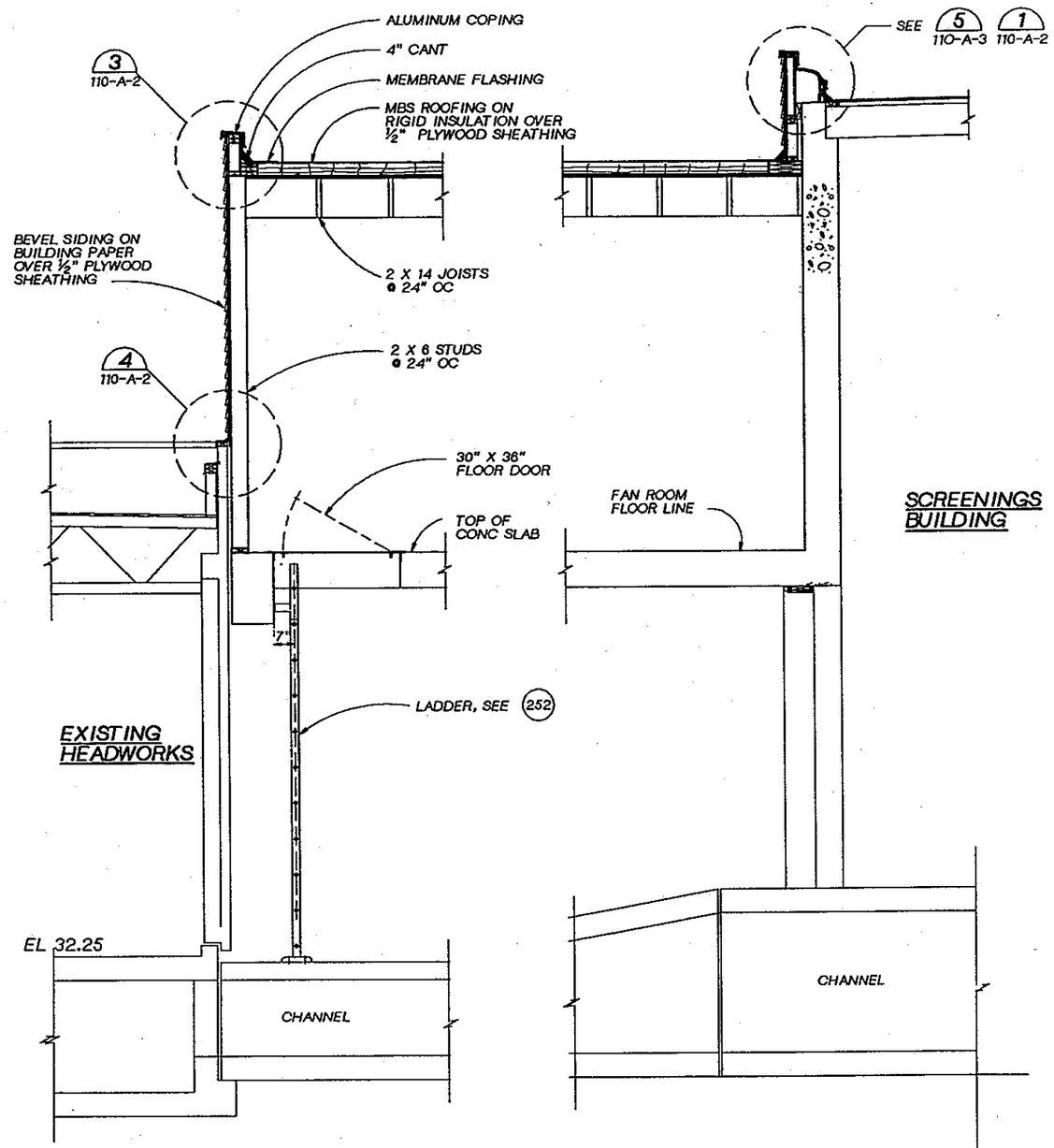

SECTION A
½" = 1'-0" 110-A-2

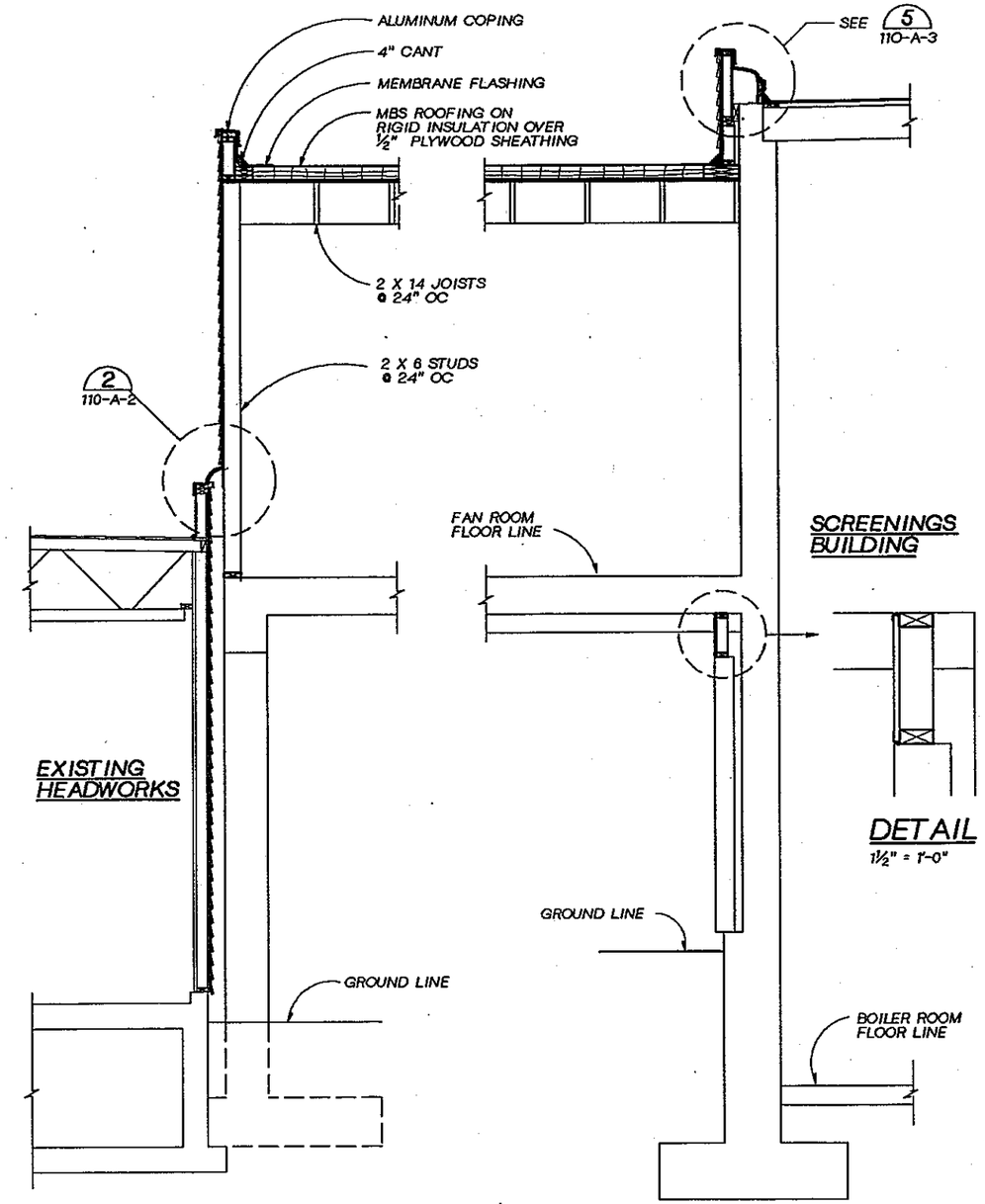

DETAIL
1½" = 1'-0"

SECTION B
½" = 1'-0" 110-A-2

REGISTERED ARCHITECT JOHN L. PEURS STATE OF WASHINGTON

CH2M HILL

DSGN	O A FRIAL				
DR	O A FRIAL				
CHK	R WHITE				
APVD	J. GAUTHIER	NO.	DATE	REVISION	BY	APVD

REUSE OF DOCUMENTS
THIS DOCUMENT, AND THE IDEAS AND DESIGNS INCORPORATED HEREIN, AS AN INSTRUMENT OF PROFESSIONAL SERVICE, IS THE PROPERTY OF CH2M HILL AND IS NOT TO BE USED, IN WHOLE OR IN PART, FOR ANY OTHER PROJECT WITHOUT THE WRITTEN AUTHORIZATION OF CH2M HILL.
©CH2M HILL

BAR IS ONE INCH ON ORIGINAL DRAWING.
0 1"
IF NOT ONE INCH ON THIS SHEET, ADJUST SCALES ACCORDINGLY.

CITY OF BELLINGHAM, WASHINGTON
POST POINT WASTEWATER TREATMENT PLANT UPGRADE

SCREENINGS FACILITY
ARCHITECTURAL
ROOF PLAN & DETAILS

DWG NO. 110-A-4
DATE AUG. 1990
PROJ NO. SEA22462.C1

DATE: 8-15-90
DRAWN BY: BBL
DESIGNED BY: K. KORNHER
DGN NAME: H:/PROJ2/BELLINGH/BL110S-A.DGN

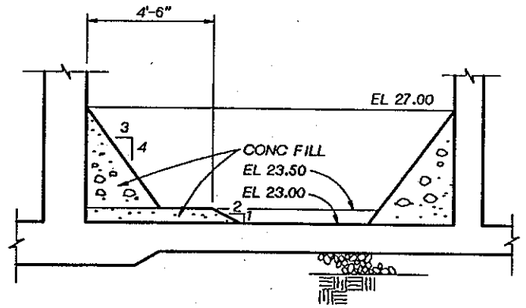

SECTION A
3/8"=1'-0"

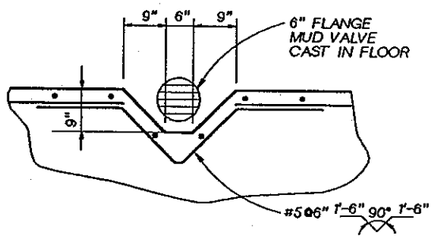

DETAIL 1
3/4" = 1'-0"
110-S-2

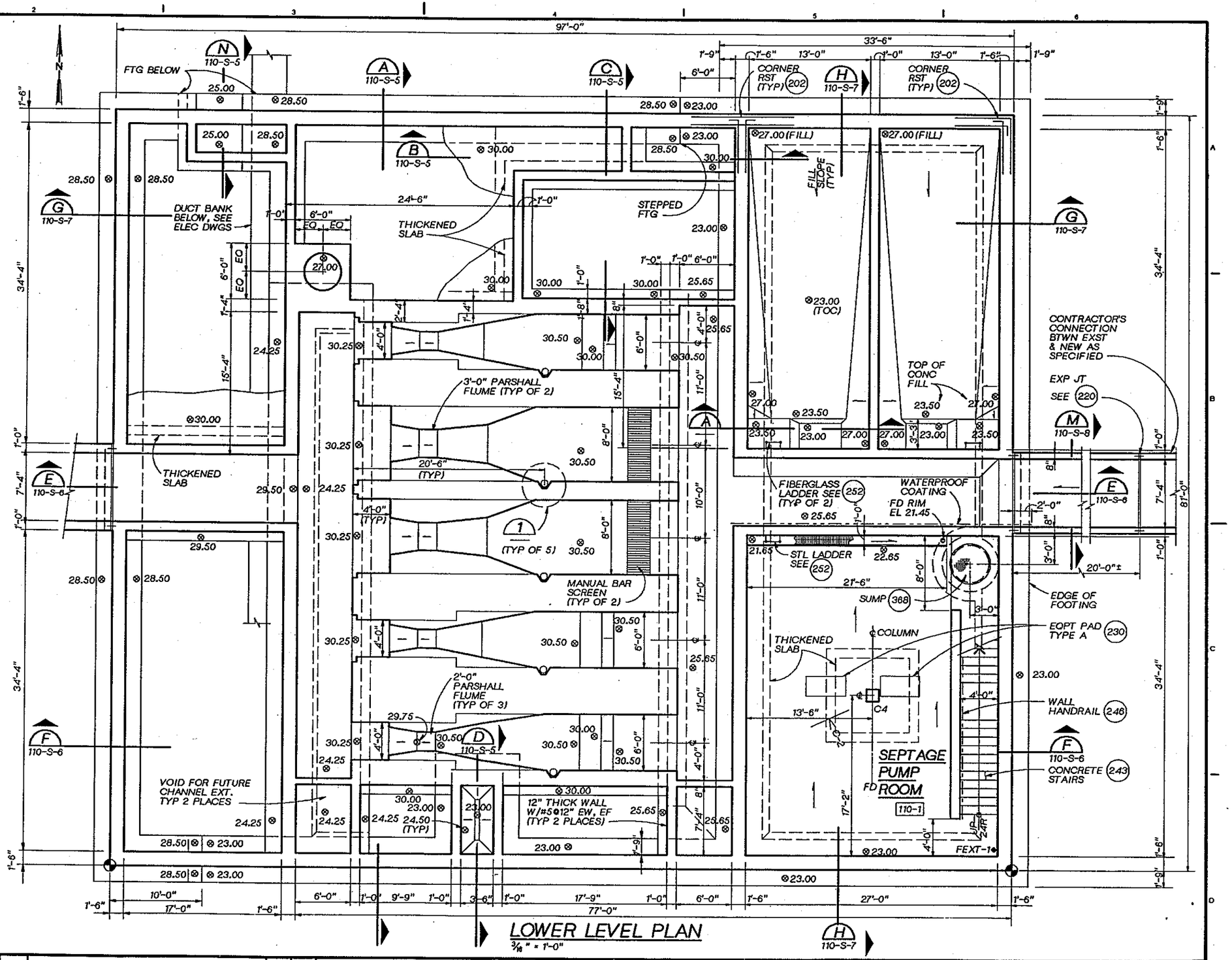

LOWER LEVEL PLAN
3/16" = 1'-0"

GENERAL STRUCTURAL NOTES

1. FOR GENERAL NOTES, SEE 201
2. FOR CORNER REINFORCEMENT, SEE 202
3. FOR OPENING REINFORCEMENT, SEE 204
4. FOR COLUMN SCHEDULE SEE DWG. 110-S-8.
5. FOR COORDINATES SEE DWG 30-C-3.
6. FOR DESIGN LOADS, SEE DWG 110-S-2.

DSGN	K. KORNHER				
DR	B. LAZARO				
CHK	W. BENNETT				
APVD	J GAUTHIER	NO.	DATE	REVISION	BY / APVD

CH2M HILL

REUSE OF DOCUMENTS
THIS DOCUMENT, AND THE IDEAS AND DESIGNS INCORPORATED HEREIN, AS AN INSTRUMENT OF PROFESSIONAL SERVICE, IS THE PROPERTY OF CH2M HILL AND IS NOT TO BE USED, IN WHOLE OR IN PART, FOR ANY OTHER PROJECT WITHOUT THE WRITTEN AUTHORIZATION OF CH2M HILL.
©CH2M HILL

BAR IS ONE INCH ON ORIGINAL DRAWING.
0 1"
IF NOT ONE INCH ON THIS SHEET, ADJUST SCALES ACCORDINGLY.

CITY OF BELLINGHAM, WASHINGTON
POST POINT WASTEWATER TREATMENT PLANT UPGRADE

SCREENINGS FACILITY
STRUCTURAL FOUNDATION PLAN

DWG NO. 110-S-1
DATE AUG. 1990
PROJ. NO. SEA22462.C1

DATE: 8-17-90
DRAWN BY: BBL-CSH DESIGNED BY: K. KORNHER
DGN NAME: H:/PROJ2/BELLINGH/BL110S-B.DGN

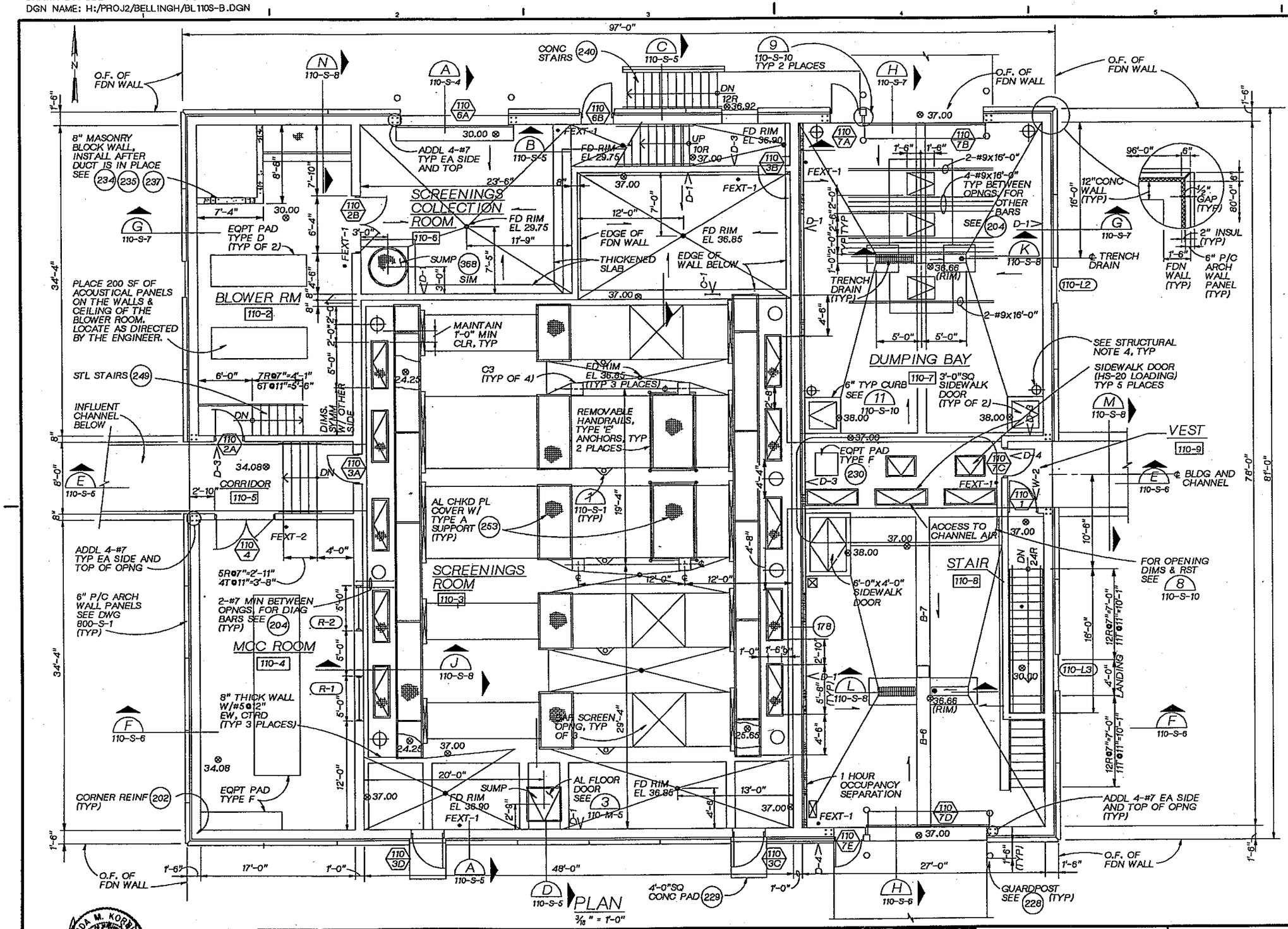

ARCHITECTURAL NOTES:

1. FOR "GENERAL NOTES," SEE DWG. NO. 800-A-1.
2. FOR "INTERIOR FINISH SCHEDULE" SEE SPECIFICATION SECTION 09000.
3. FOR "DOOR AND HARDWARE SCHEDULE" SEE SPECIFICATION SECTION 08001.
4. FOR PRECAST ARCHITECTURAL PANEL AND OPENING DIMENSIONS, SEE ARCITECTURAL EXTERIOR ELEVATIONS.
5. FOR LOUVER SIZES AND DETAILS, SEE SPECIFICATION SECTION 10200.

BUILDING CODE NOTES:

APPLICABLE CODES: 1988 UBC
1988 UFC

1. TYPE OF OCCUPANCY
   - o DUMPING AREA: B-1
   - o SCREENINGS BUILDING: B-2
   - o EXST HEADWORKS BLDG: B-2
2. TYPE OF CONSTRUCTION
   - o SCREENINGS BUILDING: V-N
   - o EXST HEADWORKS BLDG: V-N
3. NUMBER OF STORIES
   ACTUAL: TWO
   ALLOWED: TWO
4. ACTUAL FLOOR AREA
   SCREENINGS BUILDING
   - o LOWER LEVEL: 918sf
   - o GROUND LEVEL
     - DUMPING BAY: 2105sf
     - ALL OTHER: 5148sf
   - o UPPER LEVEL: 1761sf

   EXISTING HEADWORKS
   - o LOWER LEVEL: 621sf
   - o GROUND LEVEL: 4199sf
   - o INFLUENT CHANNEL: 107sf

   ALLOWABLE FLOOR AREA:
   16,000sf
5. SPRINKLER SYSTEM NOT REQD
6. OCCUPANT LOAD
   - o LOWER LEVEL: 918/300 = 2
   - o GROUND LEVEL: 7253/300 = 24
   - o UPPER LEVEL: 1761/300 = 6
7. ONE HOUR OCCUPANCY SEPARATION REQUIRED BETWEEN DUMPING BAY AND REST

STRUCTURAL NOTES:

1. DESIGN LOADS:
   SLABS EXCEPT MCC LL = 200 PSF
   MCC SLAB LL = 300 PSF
   STAIRWAYS LL = 100 PSF
   WIND LOAD: 1988 UBC, 80 MPH, EXP C
   SEISMIC: 1988 UBC, ZONE 3
2. FOR ADDL NOTES SEE DWG 110-S-1.
3. FOR EQPT PAD DETAILS SEE 230
4. FOR SIZE OF MECH AND HVAC PENETRATIONS AND LOCATIONS SEE M & H DWGS.
5. FOR BEAM SCHEDULE SEE DWG 110-S-8.

DSGN	K KORNHER				
DR	B LAZARO				
CHK	R WHITE				
APVD	J. GAUTHIER	NO.	DATE	REVISION	BY / APVD

CH2M HILL

REUSE OF DOCUMENTS
THIS DOCUMENT, AND THE IDEAS AND DESIGNS INCORPORATED HEREIN, AS AN INSTRUMENT OF PROFESSIONAL SERVICE, IS THE PROPERTY OF CH2M HILL AND IS NOT TO BE USED, IN WHOLE OR IN PART, FOR ANY OTHER PROJECT WITHOUT THE WRITTEN AUTHORIZATION OF CH2M HILL.
©CH2M HILL

BAR IS ONE INCH ON ORIGINAL DRAWING.
0 1"
IF NOT ONE INCH ON THIS SHEET, ADJUST SCALES ACCORDINGLY.

CITY OF BELLINGHAM, WASHINGTON
POST POINT WASTEWATER TREATMENT PLANT UPGRADE

SCREENINGS FACILITY
STRUCTURAL
GROUND LEVEL FRAMING PLAN

DWG NO. 110-S-2
DATE AUG. 1990
PROJ NO. SEA22462.C1

DATE: 8-24-90
DRAWN BY: BBL DESIGNED BY: K. KORNHER
DGN NAME: H:/PROJ2/BELLINGH/BL110S-J.DGN

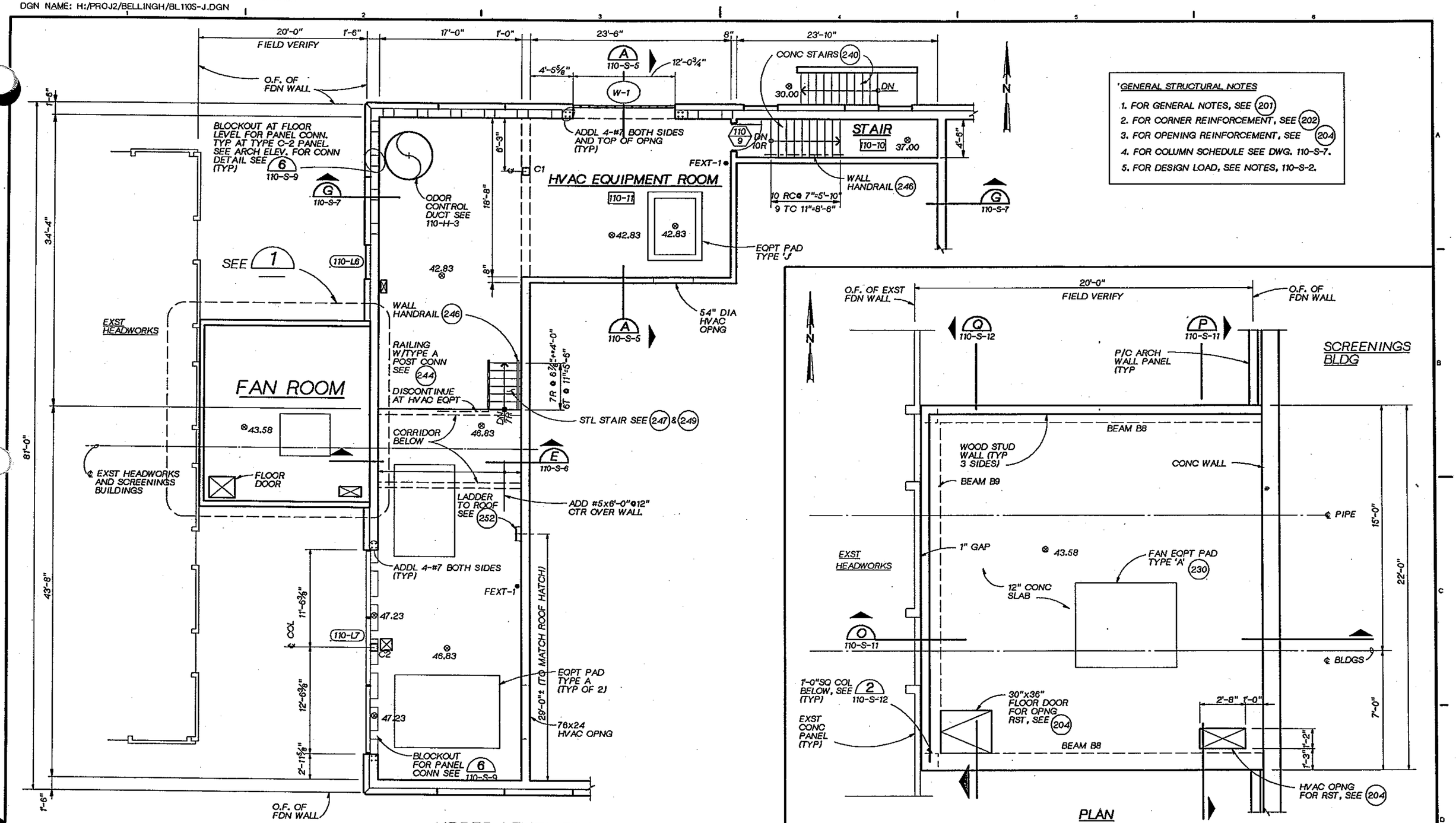

UPPER LEVEL PLAN
3/16" = 1'-0"

PLAN
DETAIL 1
3/8" = 1'-0"

DSGN	K. KORNHER				
DR	B. LAZARO				
CHK	W.BENNETT				
APVD	J. GAUTHIER	NO.	DATE	REVISION	BY	APVD

CH2M HILL

REUSE OF DOCUMENTS
THIS DOCUMENT, AND THE IDEAS AND DESIGNS INCORPORATED HEREIN, AS AN INSTRUMENT OF PROFESSIONAL SERVICE, IS THE PROPERTY OF CH2M HILL AND IS NOT TO BE USED, IN WHOLE OR IN PART, FOR ANY OTHER PROJECT WITHOUT THE WRITTEN AUTHORIZATION OF CH2M HILL.
©CH2M HILL

BAR IS ONE INCH ON ORIGINAL DRAWING.
0 1"
IF NOT ONE INCH ON THIS SHEET, ADJUST SCALES ACCORDINGLY.

CITY OF BELLINGHAM, WASHINGTON
POST POINT WASTEWATER TREATMENT PLANT UPGRADE

SCREENINGS FACILITY
STRUCTURAL
UPPER LEVEL PLAN

DWG NO. 110-S-3
DATE AUG. 1990
PROJ. NO. SEA22462.C1

DATE: 8-17-90
DRAWN BY: BBL DESIGNED BY: KK
DGN NAME: H:/PROJ2/BELLINGH/BL110S-C.DGN

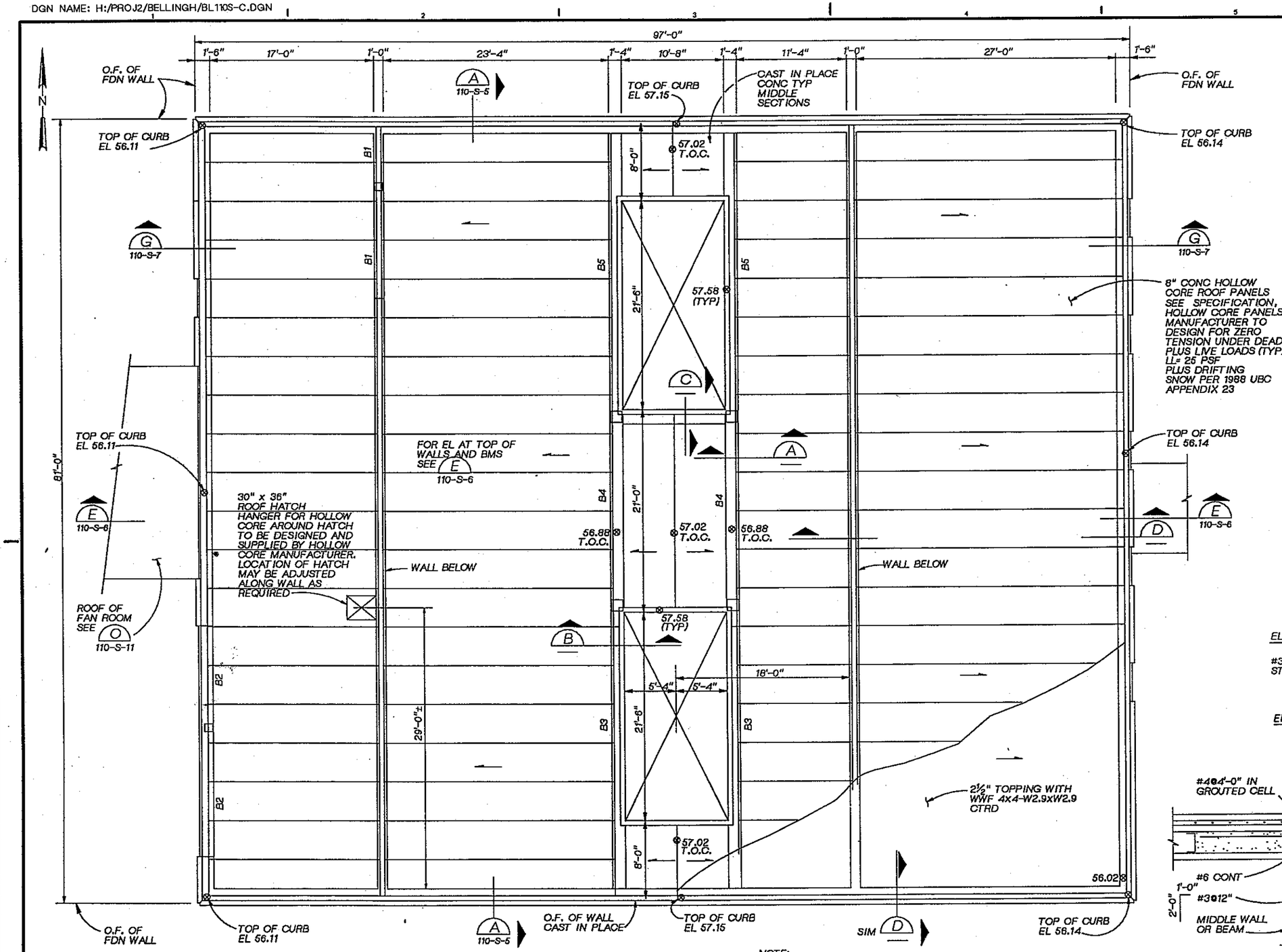

ROOF PLAN
3/16" = 1'-0"

NOTE:
FOR BEAM SCHEDULE SEE 110-S-8.

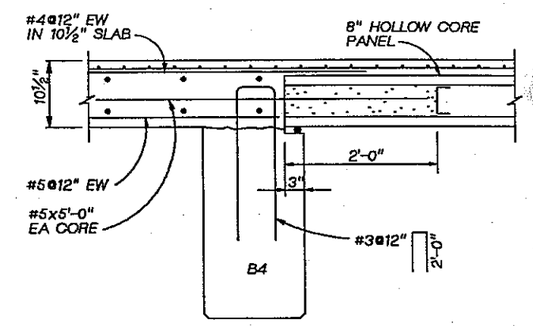

SECTION A
1" = 1'-0"
110-S-6

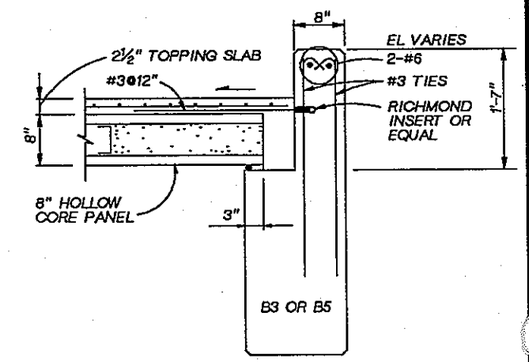

SECTION B
1" = 1'-0"
110-S-7

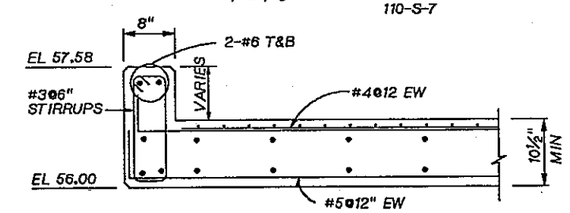

SECTION C
1" = 1'-0"
5 110-S-9

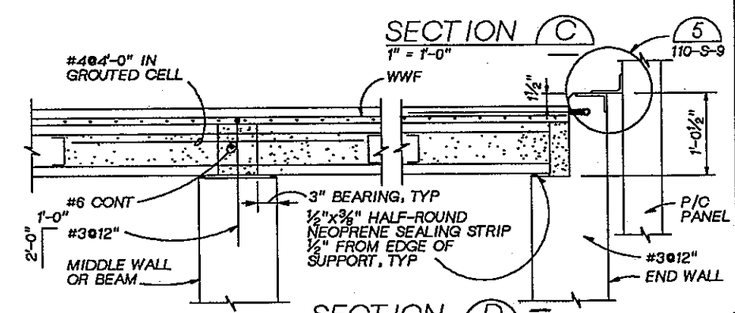

SECTION D
1" = 1'-0"
110-S-6
110-S-7

CH2M HILL

DSGN	K. KORNHER				
DR	B. LAZARO				
CHK	W. BENNETT				
APVD	J. GAUTHIER	NO.	DATE	REVISION	BY / APVD

REUSE OF DOCUMENTS
THIS DOCUMENT, AND THE IDEAS AND DESIGNS INCORPORATED HEREIN, AS AN INSTRUMENT OF PROFESSIONAL SERVICE, IS THE PROPERTY OF CH2M HILL AND IS NOT TO BE USED, IN WHOLE OR IN PART, FOR ANY OTHER PROJECT WITHOUT THE WRITTEN AUTHORIZATION OF CH2M HILL.
©CH2M HILL

BAR IS ONE INCH ON ORIGINAL DRAWING. 0 1"
IF NOT ONE INCH ON THIS SHEET, ADJUST SCALES ACCORDINGLY.

CITY OF BELLINGHAM, WASHINGTON
POST POINT WASTEWATER TREATMENT PLANT UPGRADE

SCREENINGS FACILITY
STRUCTURAL
ROOF FRAMING PLAN

DWG NO. 110-S-4
DATE AUG. 1990
PROJ. NO. SEA22462.C1

DATE: 8-26-90
DRAWN BY: BBL DESIGNED BY: K. KORNHER
DGN NAME: H:/PROJ2/BELLINGH/BL110S-D.DGN

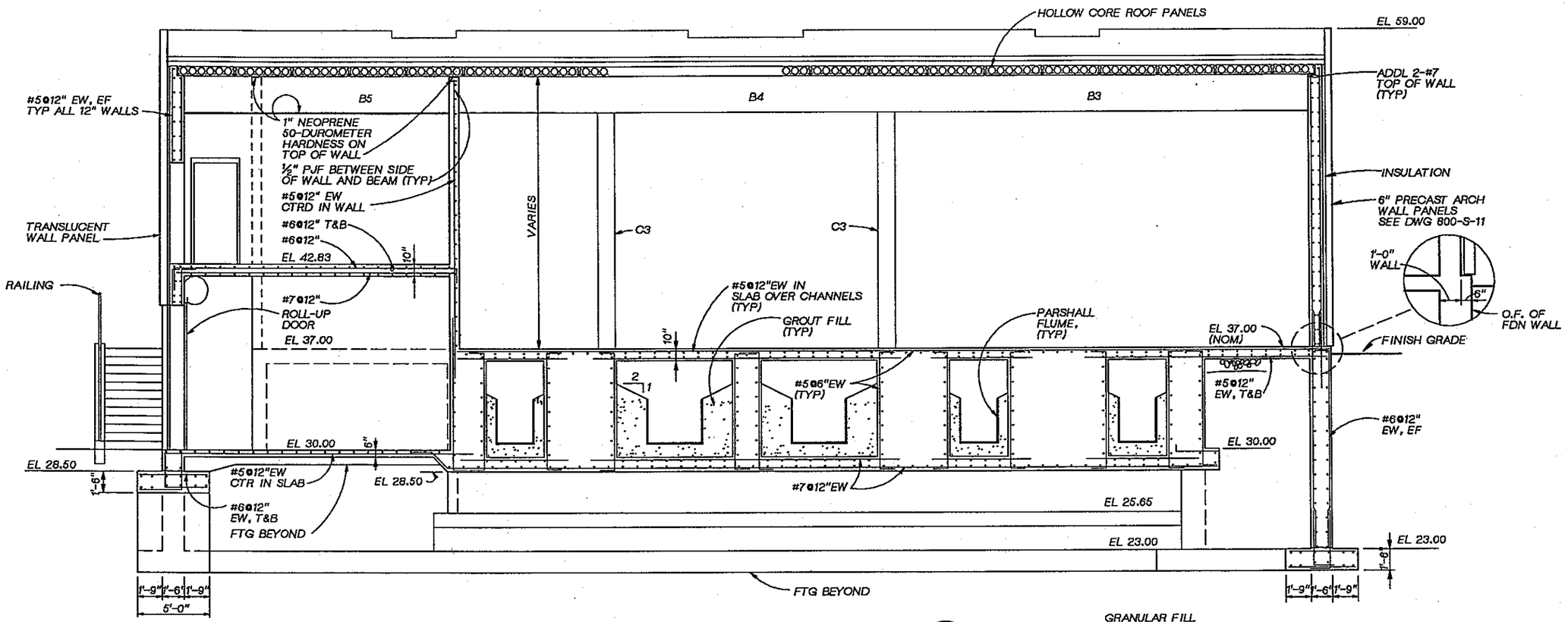

SECTION A
¼" = 1'-0"
110-S-1
110-S-2
110-S-3
110-S-4

GRANULAR FILL UNDER FACILITY (TYP)

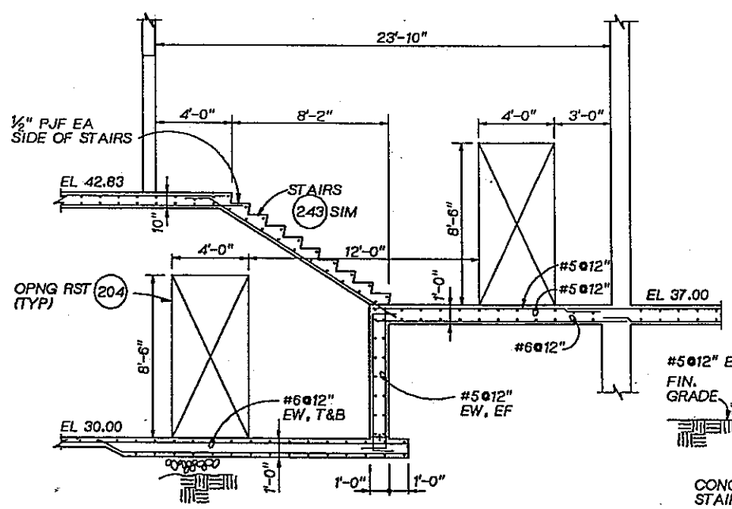

SECTION B
¼" = 1'-0"
110-S-1
110-S-2

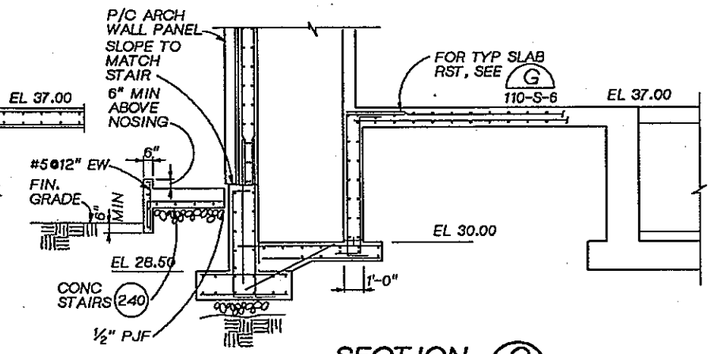

SECTION C
¼" = 1'-0"
110-S-1
110-S-2

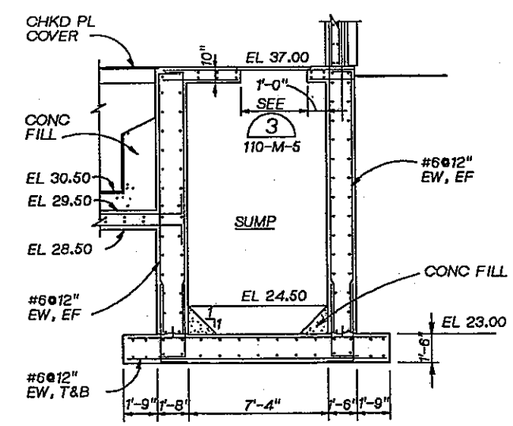

SECTION D
¼" = 1'-0"
110-S-1
110-S-2

CHRISTINA M. KORNHER PROFESSIONAL ENGINEER

DSGN K. KORNHER					
DR B. LAZARO					
CHK W. BENNETT					
APVD J. GAUTHIER	NO.	DATE	REVISION	BY	APVD

CH2M HILL

REUSE OF DOCUMENTS
THIS DOCUMENT, AND THE IDEAS AND DESIGNS INCORPORATED HEREIN, AS AN INSTRUMENT OF PROFESSIONAL SERVICE, IS THE PROPERTY OF CH2M HILL AND IS NOT TO BE USED, IN WHOLE OR IN PART, FOR ANY OTHER PROJECT WITHOUT THE WRITTEN AUTHORIZATION OF CH2M HILL.
©CH2M HILL

BAR IS ONE INCH ON ORIGINAL DRAWING.
0 1"
IF NOT ONE INCH ON THIS SHEET, ADJUST SCALES ACCORDINGLY.

CITY OF BELLINGHAM, WASHINGTON
POST POINT WASTEWATER TREATMENT PLANT UPGRADE

SCREENINGS FACILITY
STRUCTURAL SECTIONS

DWG NO. 110-S-5
DATE AUG. 1990
PROJ NO. SEA22462.C1

DATE: 8-24-90
DRAWN BY: BBL DESIGNED BY: K. KORNHER
DGN NAME: H:/PROJ2/BELLINGH/BL110S-E.DGN

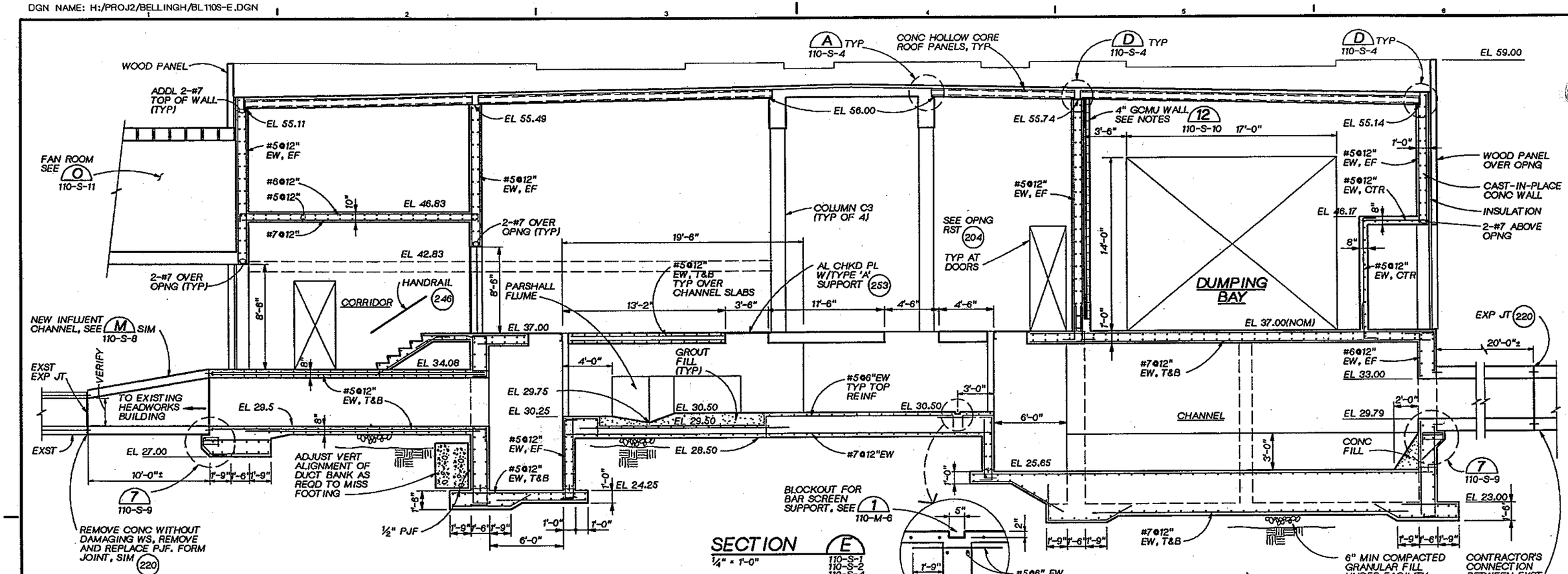

SECTION E
¼" = 1'-0"
110-S-1
110-S-2
110-S-4

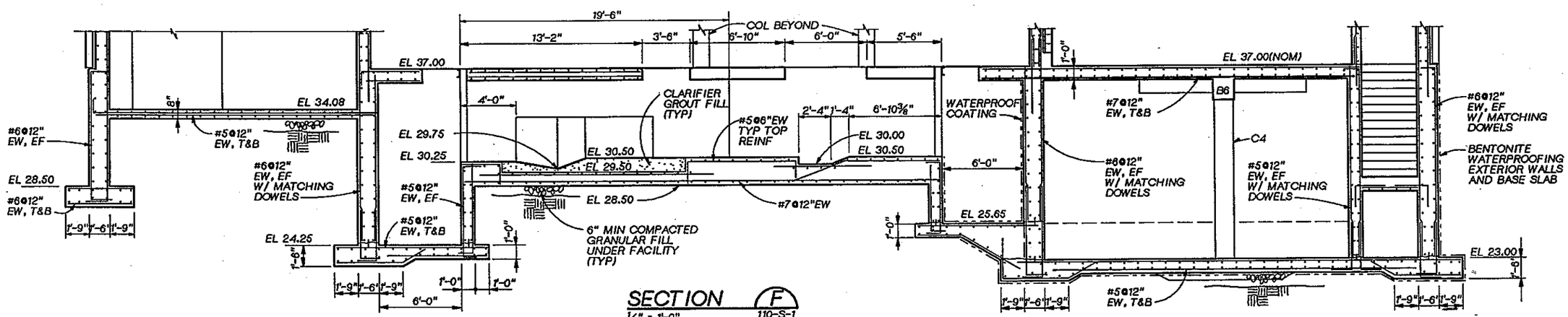

SECTION F
¼" = 1'-0"
110-S-1
110-S-2
110-S-4

CH2M HILL

DSGN	K. KORNHER				
DR	B. LAZARO				
CHK	W. BENNETT				
APVD	J GAUTHIER	NO.	DATE	REVISION	BY / APVD

REUSE OF DOCUMENTS
THIS DOCUMENT, AND THE IDEAS AND DESIGNS INCORPORATED HEREIN, AS AN INSTRUMENT OF PROFESSIONAL SERVICE, IS THE PROPERTY OF CH2M HILL AND IS NOT TO BE USED, IN WHOLE OR IN PART, FOR ANY OTHER PROJECT WITHOUT THE WRITTEN AUTHORIZATION OF CH2M HILL.
©CH2M HILL

BAR IS ONE INCH ON ORIGINAL DRAWING.
0 1"
IF NOT ONE INCH ON THIS SHEET, ADJUST SCALES ACCORDINGLY.

CITY OF BELLINGHAM, WASHINGTON
POST POINT WASTEWATER TREATMENT PLANT UPGRADE

SCREENINGS FACILITY
STRUCTURAL SECTIONS

DWG NO. 110-S-6
DATE AUG. 1990
PROJ NO. SEA22462.C1

DATE: 8-25-90
DRAWN BY: BBL
DGN NAME: H:/PROJ2/BELLINGH/BL110S-F.DGN
DESIGNED BY: K. KORNHER

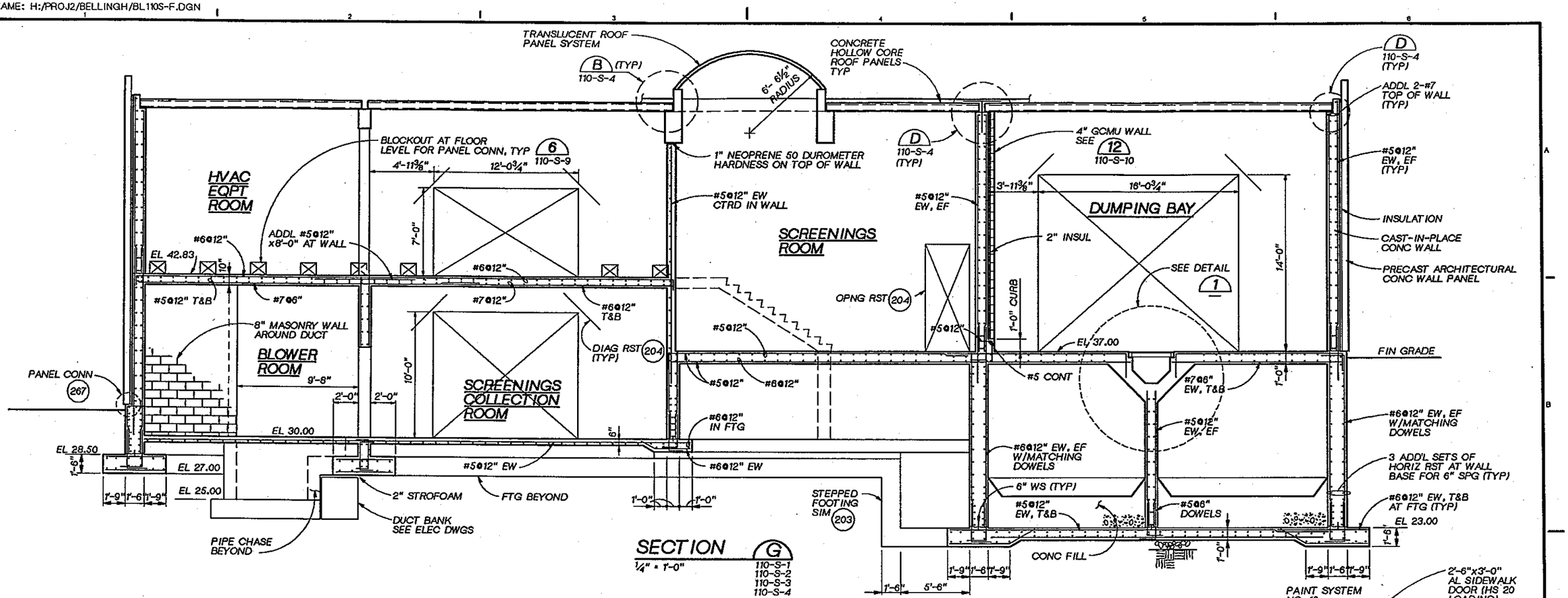

SECTION G
¼" = 1'-0"
110-S-1
110-S-2
110-S-3
110-S-4

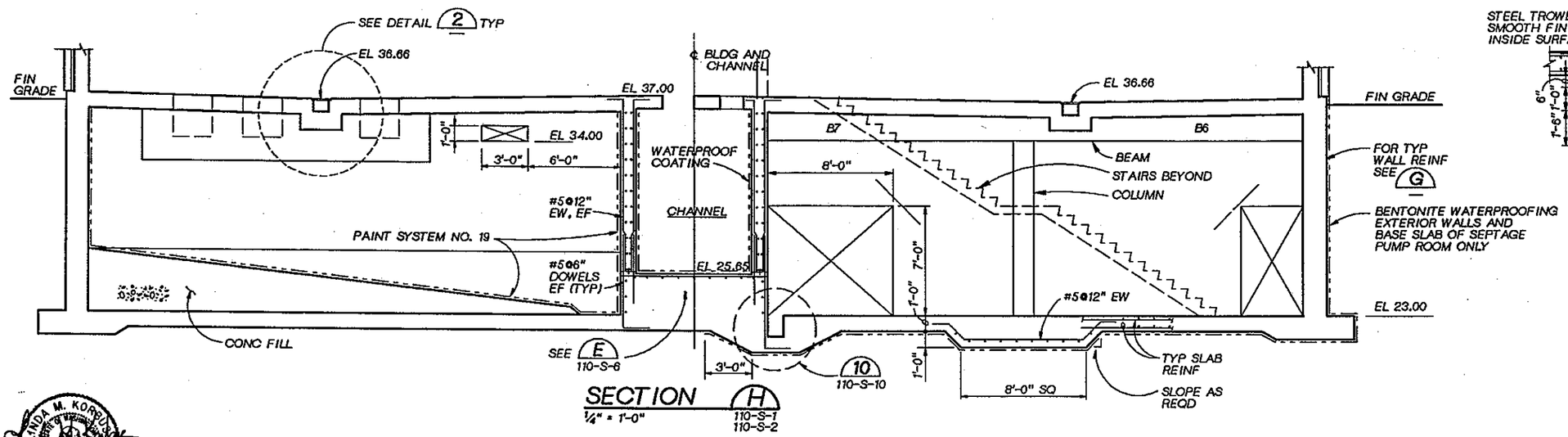

SECTION H
¼" = 1'-0"
110-S-1
110-S-2

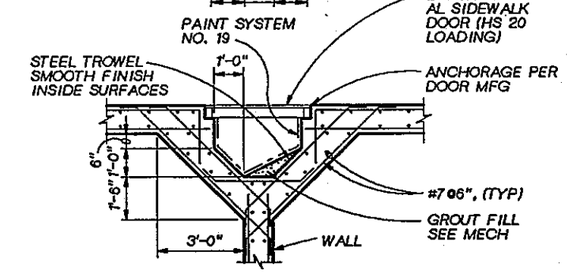

DETAIL 1
⅜" = 1'-0"

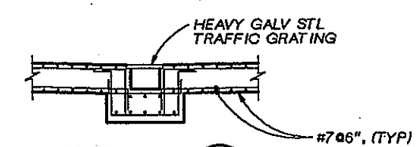

DETAIL 2
⅜" = 1'-0"

LINDA M. KORNER STATE OF WASHINGTON 19384 REGISTERED PROFESSIONAL ENGINEER

CH2M HILL

DSGN	K. KORNHER
DR	B. LAZARO
CHK	W. BENNETT
APVD	J. GAUTHIER

NO.	DATE	REVISION	BY	APVD

REUSE OF DOCUMENTS
THIS DOCUMENT, AND THE IDEAS AND DESIGNS INCORPORATED HEREIN, AS AN INSTRUMENT OF PROFESSIONAL SERVICE, IS THE PROPERTY OF CH2M HILL AND IS NOT TO BE USED, IN WHOLE OR IN PART, FOR ANY OTHER PROJECT WITHOUT THE WRITTEN AUTHORIZATION OF CH2M HILL.
©CH2M HILL

BAR IS ONE INCH ON ORIGINAL DRAWING.
0 1"
IF NOT ONE INCH ON THIS SHEET, ADJUST SCALES ACCORDINGLY.

CITY OF BELLINGHAM, WASHINGTON
POST POINT WASTEWATER TREATMENT PLANT UPGRADE

SCREENINGS FACILTITY
STRUCTURAL
SECTIONS AND DETAILS

DWG NO. 110-S-7
DATE AUG. 1990
PROJ NO. SEA22462.C1

DATE: 8-25-90
DRAWN BY: BBL DESIGNED BY: K. KORNHER
DGN NAME: H:/PROJ2/BELLINGH/BL110S-G.DGN

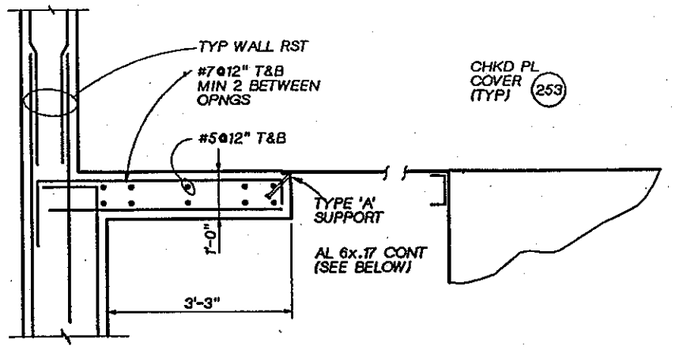

TYP SECTION NOT AT HINGED OPNGS

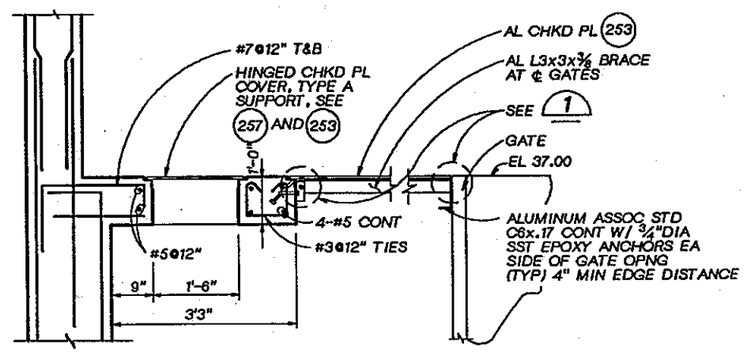

TYP SECTION AT HINGED OPNGS

SECTION J
3/4" = 1'-0" 110-S-2

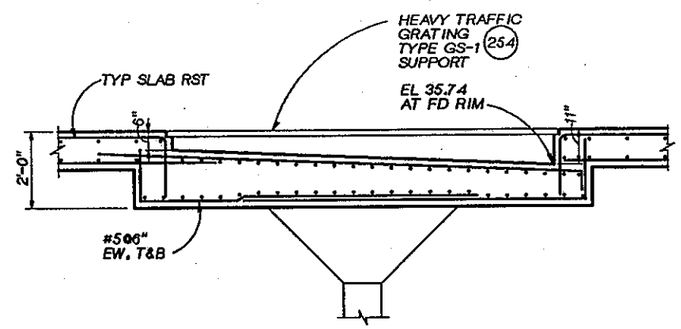

SECTION K
1/2" = 1'-0" 110-S-2

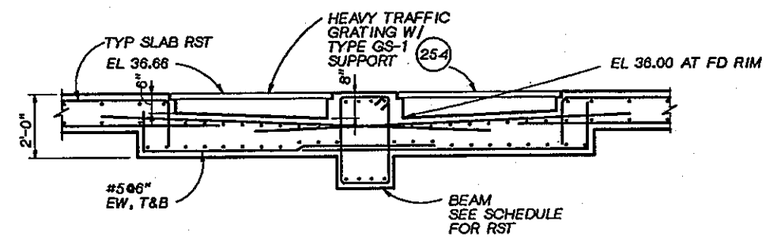

SECTION L
1/2" = 1'-0" 110-S-2

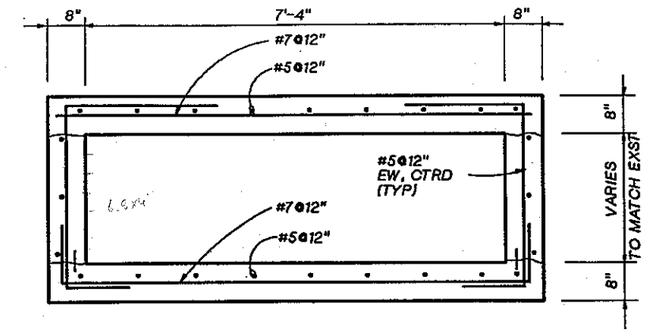

SECTION M
3/4" = 1'-0" 110-S-1 110-S-2 110-S-6

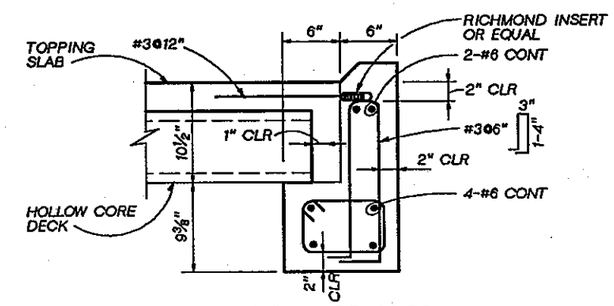

SECTION - BEAM B2

DETAIL 4
1 1/2" = 1'-0"

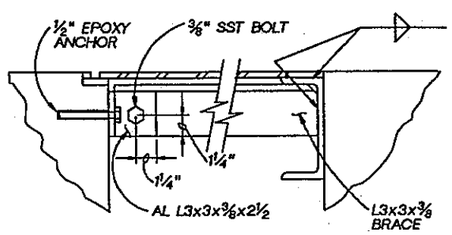

DETAIL 1
NTS

BEAM SCHEDULE

SEE 221 FOR TYPICAL DETAILS

BEAM NO. (SEE PLANS)	SIZE		TOP REINF AT LEFT SUPPORT		BOTTOM REINF		* TOP REINF AT RIGHT SUPPORT		SHEAR REINF		REMARKS
	W	D	T	TC	B	BC	T	TC	NO. SIZE	SPACING FROM LEFT SUPPORT	
B1	12"	18"		3-#6		3-#6		3-#6	#3	6" TYP	
B2											SEE DETAIL 4
B3	16"	30"		2-#9	2-#9	3-#9	2-#9	2-#9	#4	12" TYP	
B4	16"	30"		4-#9		5-#9		4-#9	#4	12" TYP	
B5	16"	30"	2-#9	2-#9	2-#9	3-#9		2-#9	#4	12" TYP	
B6	18"	30"		2-#10	3-#10	2-#10	2-#10	2-#10	#4	17@3",8@6",17@3"	SEE DETAIL 8 110-S-10
B7	18"	30"	2-#10	2-#10	3-#10	2-#10		2-#10	#4	17@3",8@6",17@3"	SEE DETAIL 8 110-S-10
B8	12"	18"		3-#7		3-#6		3-#7	#3	12" TYP	
B9	14"	28"	2-#7	2-#7		4-#7	2-#7	2-#7	#4	12" TYP	7'-6" LG HORIZ LEG FOR T BARS

COLUMN SCHEDULE

COLUMN NO. (SEE PLANS)	SIZE		REINFORCING		REMARKS
	A	B	LONG	TIES	
C1	12"	12"	4-#6	#3@12"	2 1/2" COVER
C2	12"	12"	4-#6	#3@12"	2 1/2" COVER
C3	14"	14"	4-#7	#3@12"	
C4	16"	16"	4-#8	#3@6"	

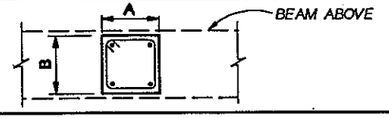

LINDA M. KORBUS STATE OF WASHINGTON 22854 REGISTERED PROFESSIONAL ENGINEER

CH2M HILL

DSGN	K. KORNHER
DR	B. LAZARO
CHK	W. BENNETT
APVD	J GAUTHIER

NO.	DATE	REVISION	BY	APVD

REUSE OF DOCUMENTS
THIS DOCUMENT, AND THE IDEAS AND DESIGNS INCORPORATED HEREIN, AS AN INSTRUMENT OF PROFESSIONAL SERVICE, IS THE PROPERTY OF CH2M HILL AND IS NOT TO BE USED, IN WHOLE OR IN PART, FOR ANY OTHER PROJECT WITHOUT THE WRITTEN AUTHORIZATION OF CH2M HILL.
©CH2M HILL

BAR IS ONE INCH ON ORIGINAL DRAWING.
0 1"
IF NOT ONE INCH ON THIS SHEET, ADJUST SCALES ACCORDINGLY.

CITY OF BELLINGHAM, WASHINGTON
POST POINT WASTEWATER TREATMENT PLANT UPGRADE

SCREENINGS FACILITY
STRUCTURAL SECTIONS AND DETAILS

DWG NO. 110-S-8
DATE AUG. 1990
PROJ NO. SEA22462.C1

DATE: 8-25-90
DRAWN BY: BBL DESIGNED BY: K. KORNHER
DGN NAME: H:/PROJ2/BELLINGH/BL110S-H.DGN

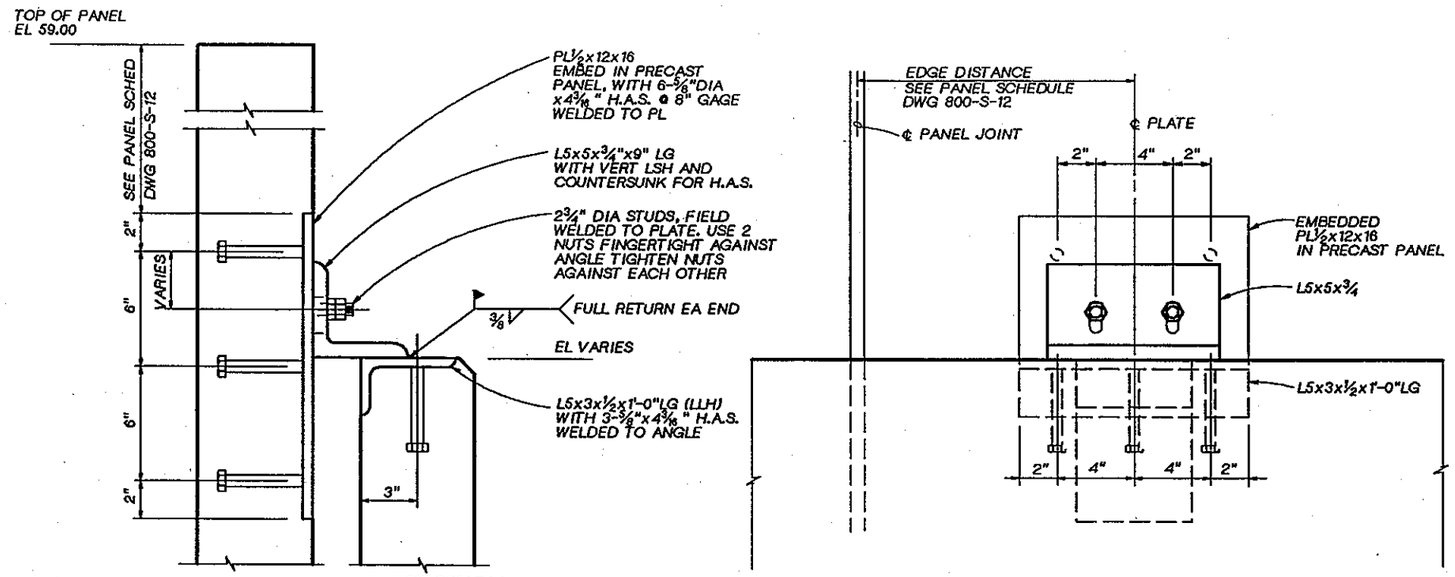

SECTION

ELEVATION

PANEL CONN AT ROOF

DETAIL 5
3" = 1'-0" 110-S-4

9

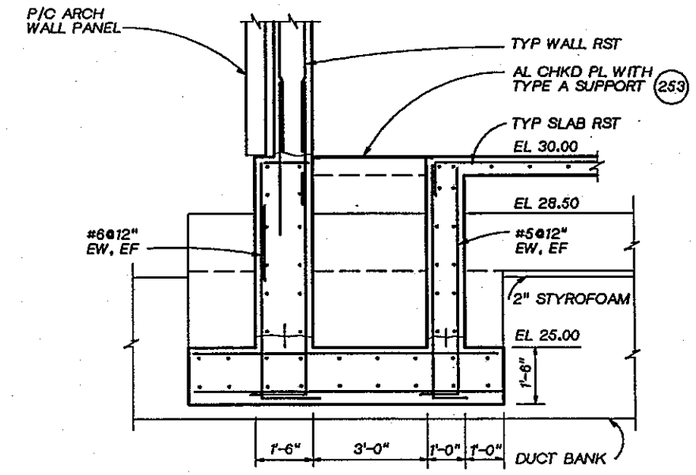

SECTION N
½" = 1'-0" 110-S-1
110-S-2

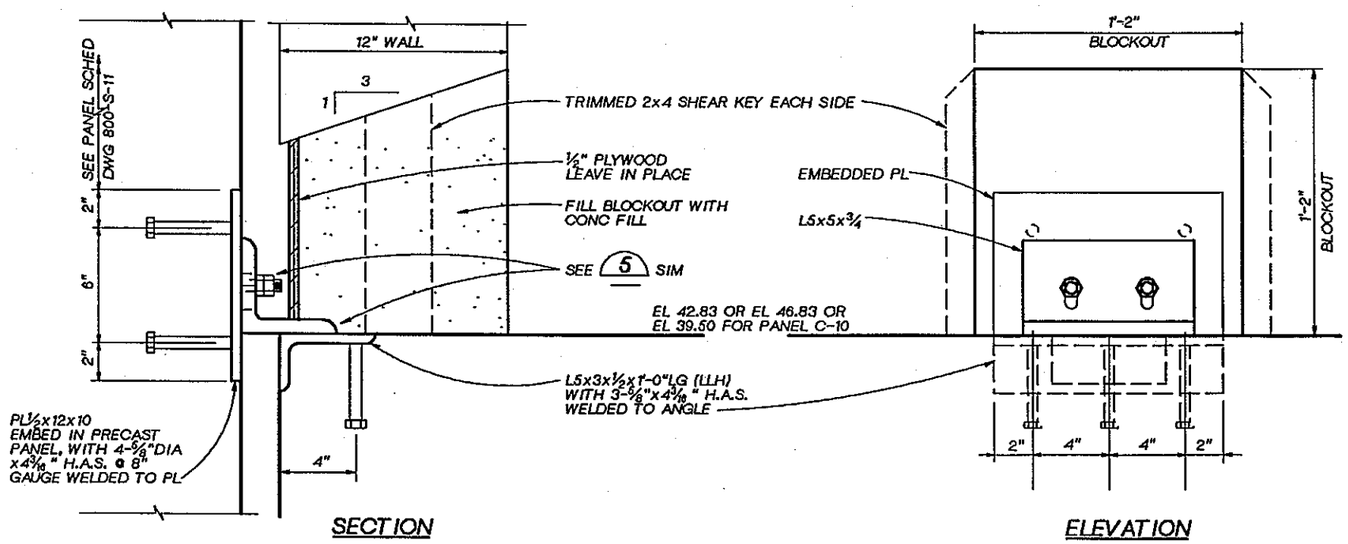

SECTION

ELEVATION

PANEL CONN AT MID-LEVEL

DETAIL 6
3" = 1'-0" 110-S-3
110-S-7

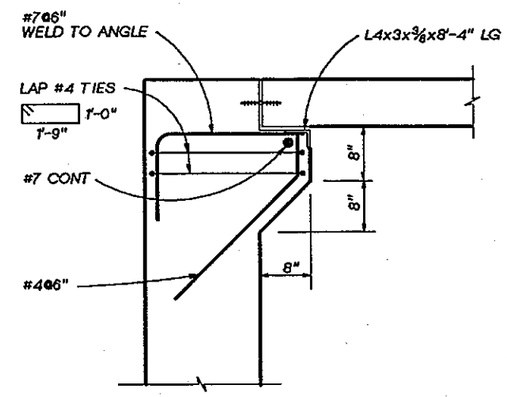

DETAIL 7
1" = 1'-0" 110-S-6

DSGN	K. KORNHER				
DR	B. LAZARO				
CHK	W. BENNETT				
APVD	J. GAUTHIER	NO.	DATE	REVISION	BY / APVD

CH2M HILL

REUSE OF DOCUMENTS
THIS DOCUMENT, AND THE IDEAS AND DESIGNS INCORPORATED HEREIN, AS AN INSTRUMENT OF PROFESSIONAL SERVICE, IS THE PROPERTY OF CH2M HILL AND IS NOT TO BE USED, IN WHOLE OR IN PART, FOR ANY OTHER PROJECT WITHOUT THE WRITTEN AUTHORIZATION OF CH2M HILL.
©CH2M HILL

BAR IS ONE INCH ON ORIGINAL DRAWING.
0 1"
IF NOT ONE INCH ON THIS SHEET, ADJUST SCALES ACCORDINGLY.

CITY OF BELLINGHAM, WASHINGTON
POST POINT WASTEWATER TREATMENT PLANT UPGRADE

SCREENINGS FACILITY
STRUCTURAL DETAILS

DWG NO. 110-S-9
DATE AUG. 1990
PROJ. NO. SEA22462.C1

DATE: 8-26-90
DRAWN BY: BBL DESIGNED BY: K.KORNHER
DGN NAME: H:/PROJ2/BELLINGH/BL110S-M.DGN

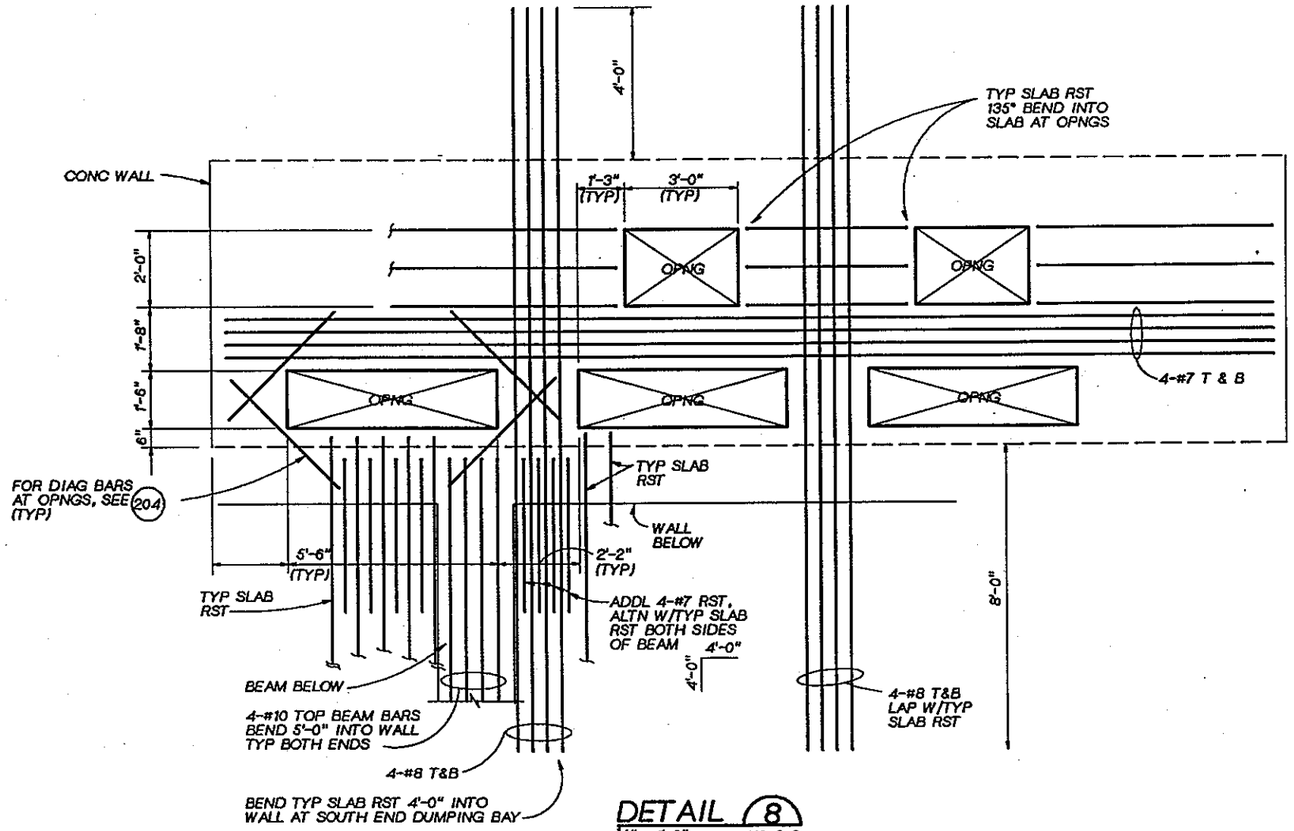

DETAIL 8
½" = 1'-0" 110-S-2 110-S-8

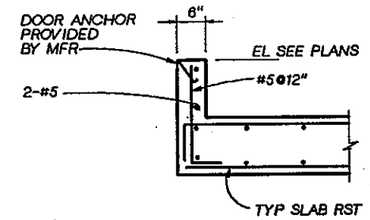

SECTION THRU CURB DUMPING BAY

DETAIL 11
¾" = 1'-0" 110-S-2

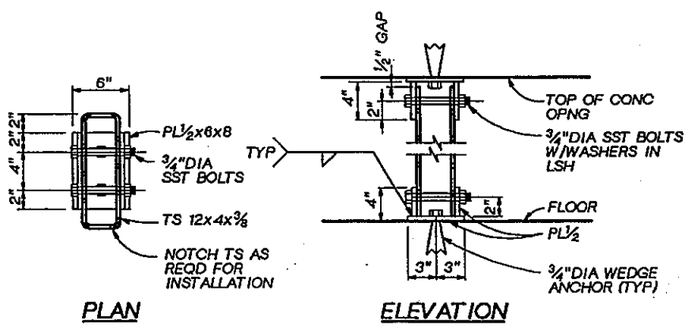

DETAIL 9
3"=1'-0" 110-S-2 800-A-3

NOTE:
FOR OTHER DETAILS SEE 34 37 39

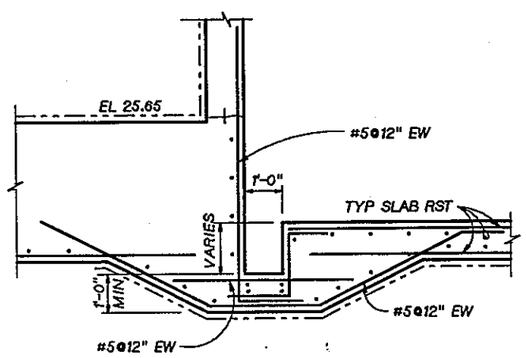

DETAIL 10
½"=1'-0" 110-S-7

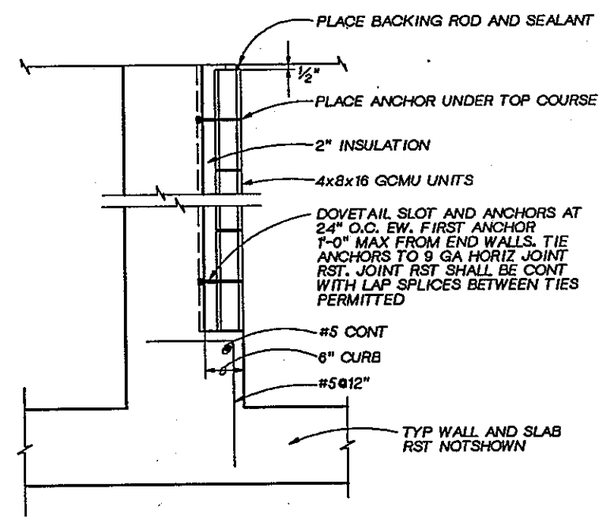

DETAIL 12
1"=1'-0" 110-S-6 110-S-6

DSGN	K. KORNHER				
DR	B. LAZARO				
CHK	W. BENNETT				
APVD	J. GAUTHIER	NO.	DATE	REVISION	BY / APVD

CH2M HILL

REUSE OF DOCUMENTS
THIS DOCUMENT, AND THE IDEAS AND DESIGNS INCORPORATED HEREIN, AS AN INSTRUMENT OF PROFESSIONAL SERVICE, IS THE PROPERTY OF CH2M HILL AND IS NOT TO BE USED, IN WHOLE OR IN PART, FOR ANY OTHER PROJECT WITHOUT THE WRITTEN AUTHORIZATION OF CH2M HILL.
©CH2M HILL

BAR IS ONE INCH ON ORIGINAL DRAWING.
0 1"
IF NOT ONE INCH ON THIS SHEET, ADJUST SCALES ACCORDINGLY.

CITY OF BELLINGHAM, WASHINGTON
POST POINT WASTEWATER TREATMENT PLANT UPGRADE

SCREENINGS FACILITY
STRUCTURAL DETAILS

DWG NO. 110-S-10
DATE AUG. 1990
PROJ NO. SEA22462.C1

DATE: 8-26-90
DRAWN BY: BBL DESIGNED BY: K. KORNHER
DGN NAME: H:/PROJ2/BELLINGH/BL110S-K.DGN

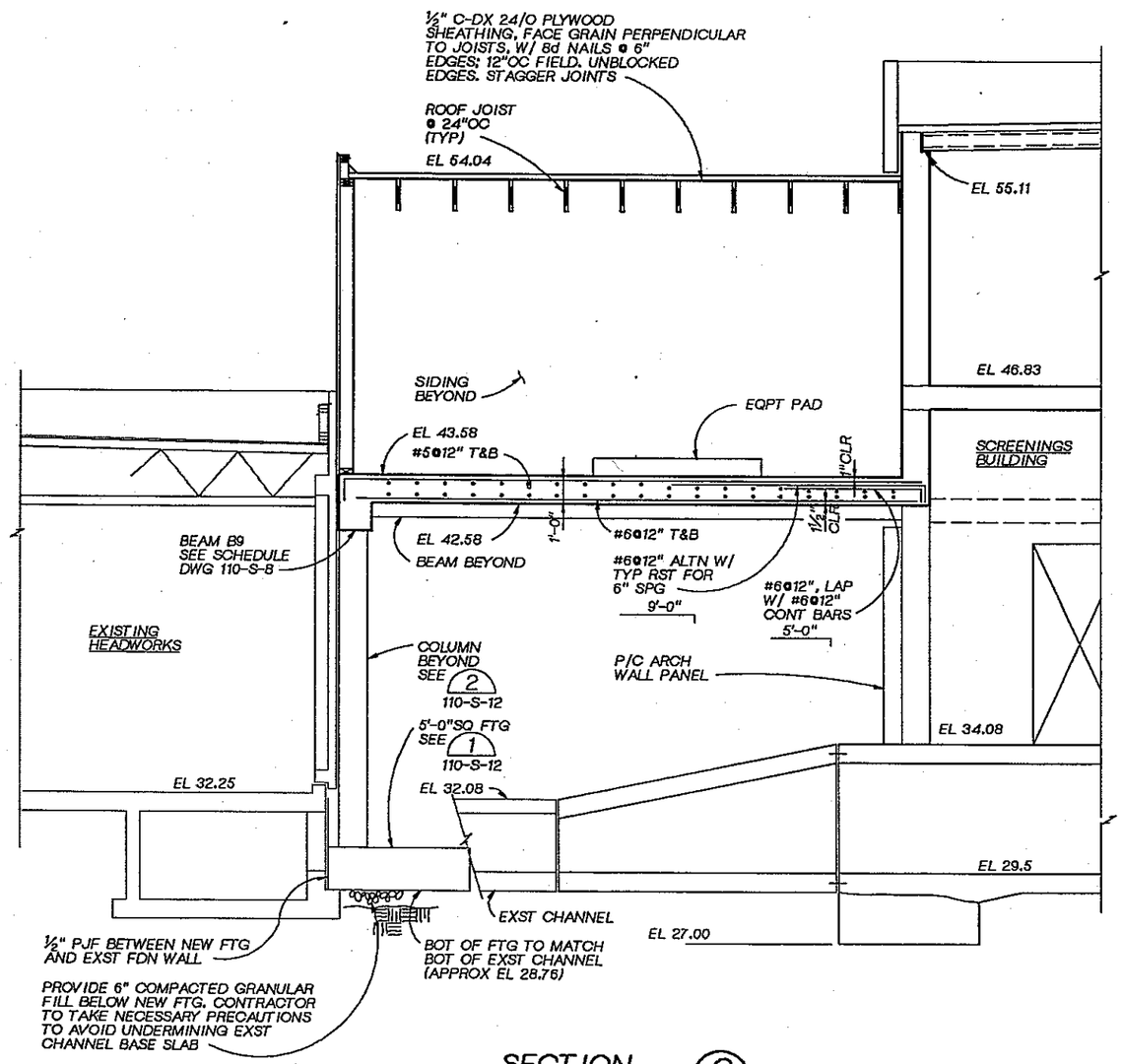

SECTION O
3/8" = 1'-0" 110-S-3

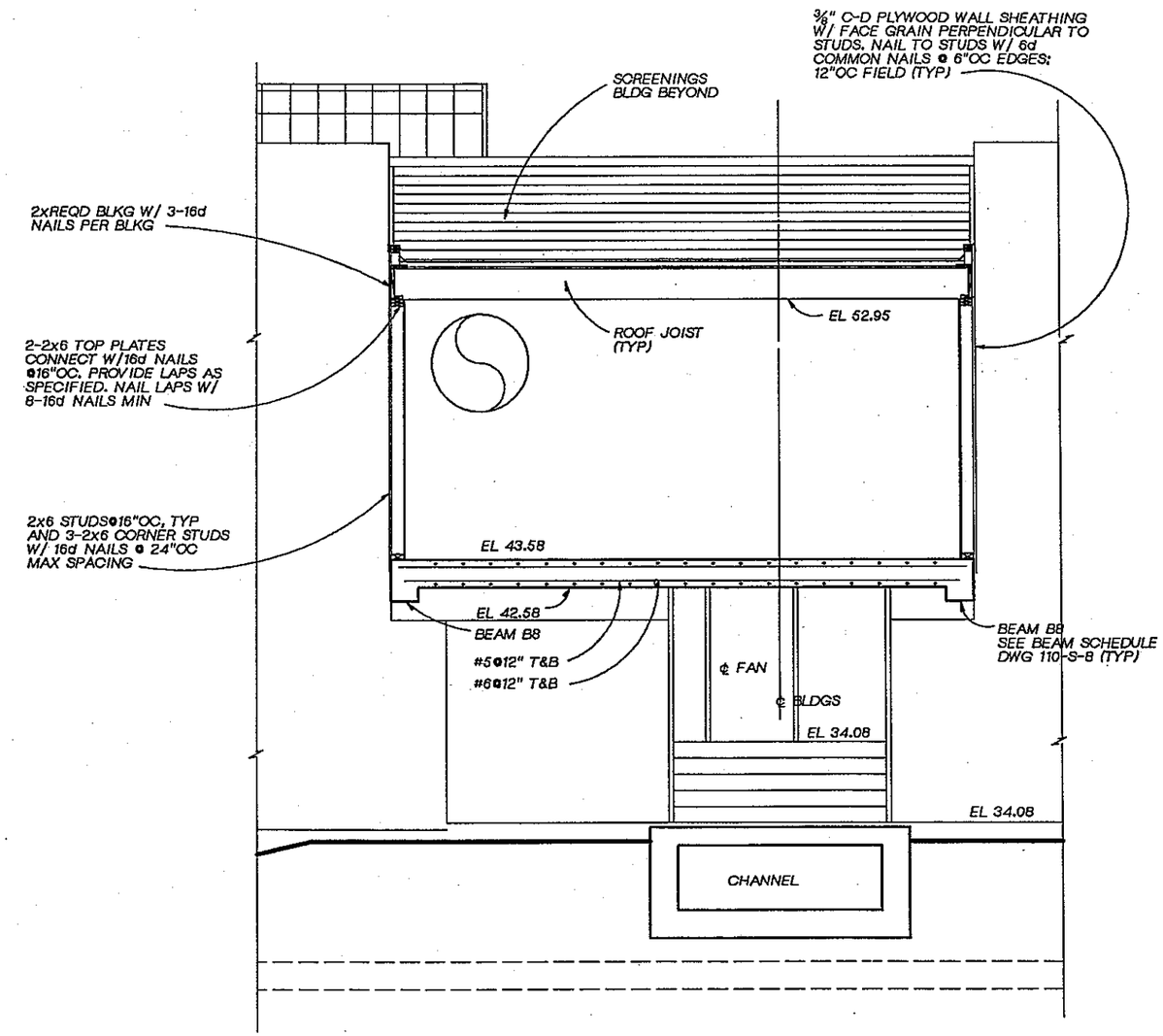

SECTION P
3/8" = 1'-0" 110-S-3

DSGN B. STEIN						
DR B. LAZARO						
CHK W.BENNETT						
APVD J. GAUTHIER	NO.	DATE	REVISION	BY	APVD	

CH2M HILL

REUSE OF DOCUMENTS
THIS DOCUMENT, AND THE IDEAS AND DESIGNS INCORPORATED HEREIN, AS AN INSTRUMENT OF PROFESSIONAL SERVICE, IS THE PROPERTY OF CH2M HILL AND IS NOT TO BE USED, IN WHOLE OR IN PART, FOR ANY OTHER PROJECT WITHOUT THE WRITTEN AUTHORIZATION OF CH2M HILL.
©CH2M HILL

BAR IS ONE INCH ON ORIGINAL DRAWING.
0 1"
IF NOT ONE INCH ON THIS SHEET, ADJUST SCALES ACCORDINGLY.

CITY OF BELLINGHAM, WASHINGTON
POST POINT WASTEWATER TREATMENT PLANT UPGRADE

SCREENINGS FACILITY
STRUCTURAL
FAN ROOM SECTIONS

DWG NO. 110-S-11
DATE AUG. 1990
PROJ NO. SEA22462.C1

DATE: 8-26-90
DRAWN BY: BBL DESIGNED BY: K. KORNHER
DGN NAME: H:/PROJ2/BELLINGH/BL110S-L.DGN

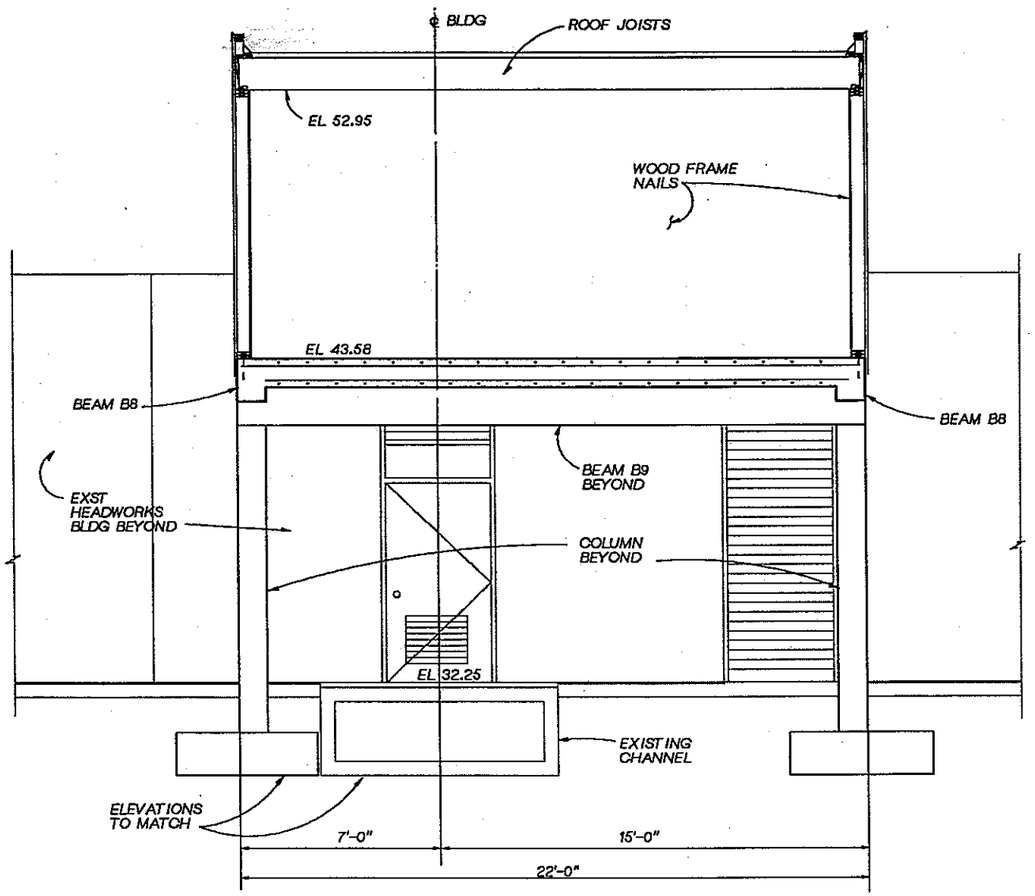

SECTION X
3/8" = 1'-0" XXX

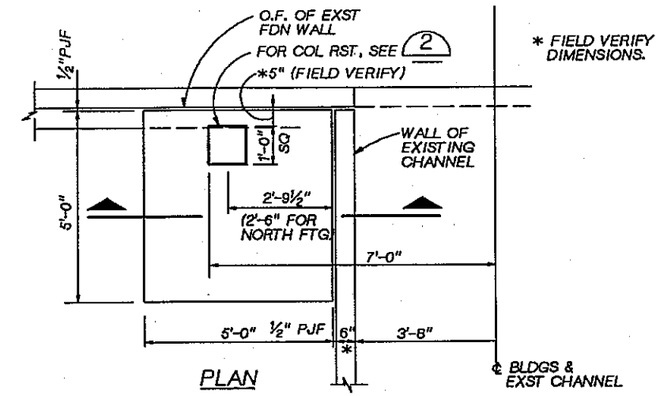

* FIELD VERIFY DIMENSIONS.

PLAN

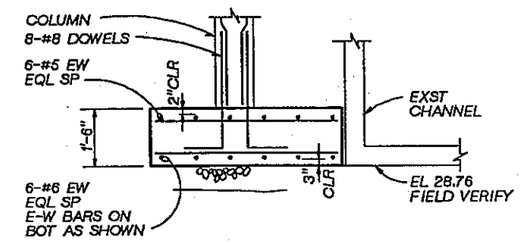

SECTION

NOTE:
SOUTH FOOTING SHOWN.
NORTH FOOTING SIMILAR.

FOOTING DETAIL 1
1/2" = 1'-0" 110-S-11

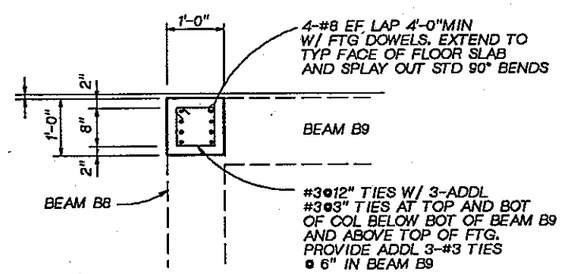

COLUMN DETAIL 2
3/4" = 1'-0" 110-S-3
110-S-11
110-S-12

CH2M HILL

DSGN	B. STEIN				
DR	B. LAZARO				
CHK	W. BENNETT				
APVD	J. GAUTHIER	NO.	DATE	REVISION	BY / APVD

REUSE OF DOCUMENTS
THIS DOCUMENT, AND THE IDEAS AND DESIGNS INCORPORATED HEREIN, AS AN INSTRUMENT OF PROFESSIONAL SERVICE, IS THE PROPERTY OF CH2M HILL AND IS NOT TO BE USED, IN WHOLE OR IN PART, FOR ANY OTHER PROJECT WITHOUT THE WRITTEN AUTHORIZATION OF CH2M HILL.
©CH2M HILL

BAR IS ONE INCH ON ORIGINAL DRAWING.
0 1"
IF NOT ONE INCH ON THIS SHEET, ADJUST SCALES ACCORDINGLY.

CITY OF BELLINGHAM, WASHINGTON
POST POINT WASTEWATER TREATMENT PLANT UPGRADE

SCREENINGS FACILITY
STRUCTURAL
FAN ROOM SECTIONS

DWG NO. 110-S-12
DATE AUG. 1990
PROJ NO. SEA22462.C1

DATE: 8-25-90 DLC
DRAWN BY: B. CARR DESIGNED: E.RONSHAUGEN
DGN NAME: H:/PROJ2/BELLINGH/BL110M-A.DGN

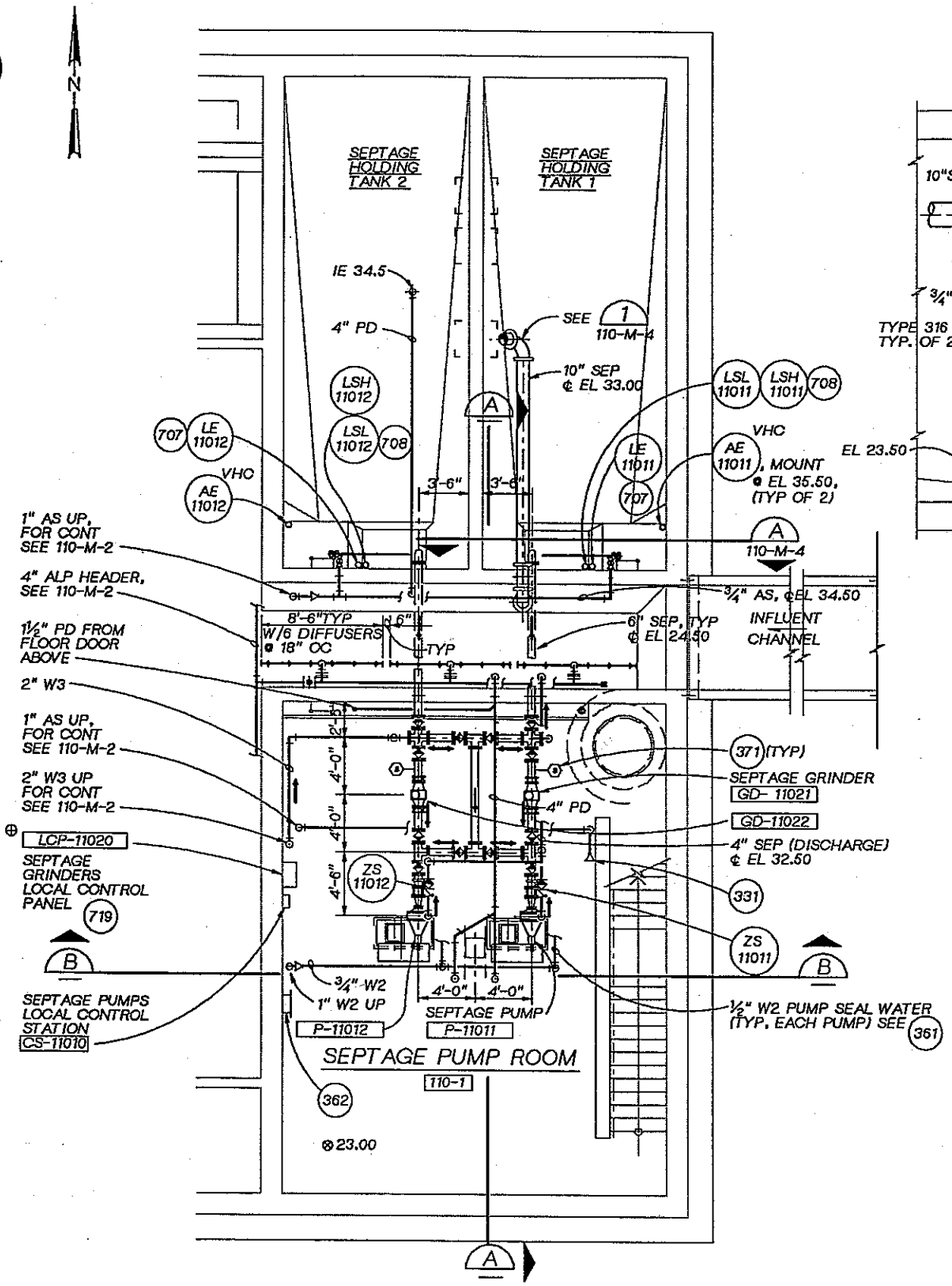

LOWER LEVEL PLAN
3/16"=1'-0"

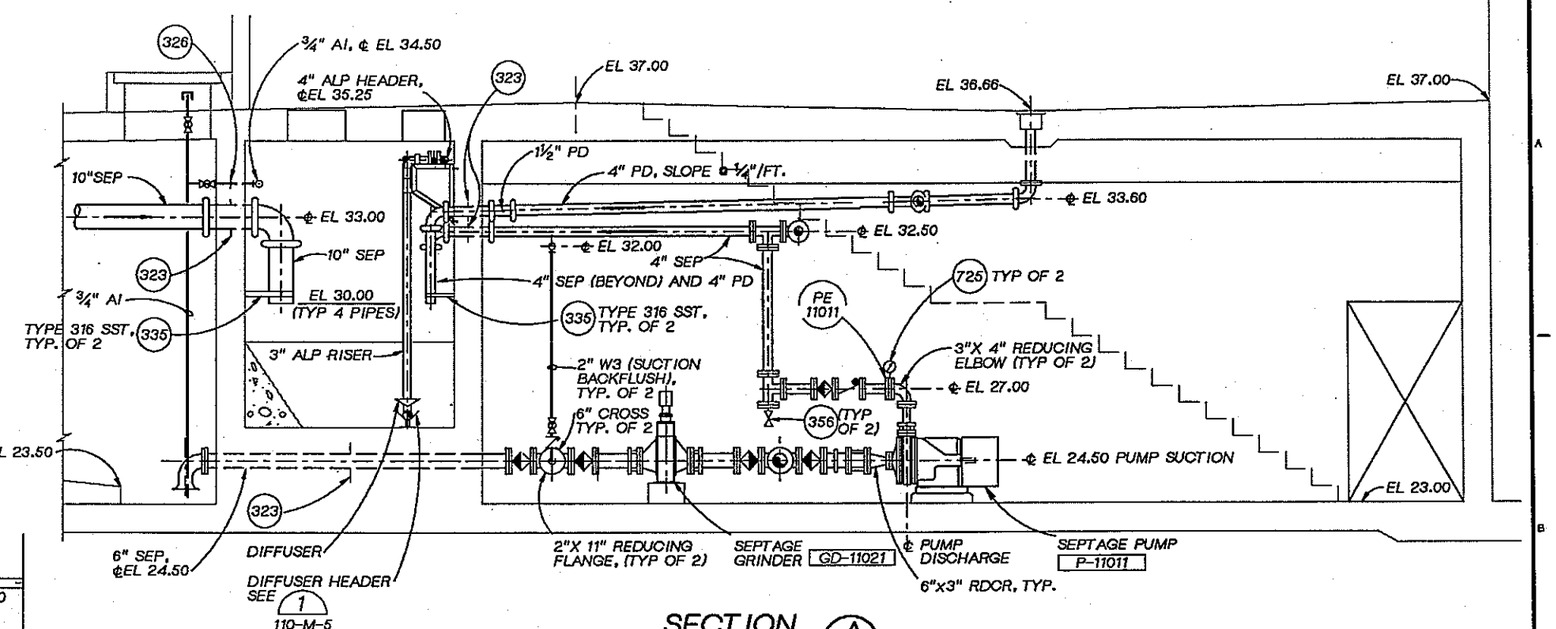

SECTION A
3/8"=1'-0"

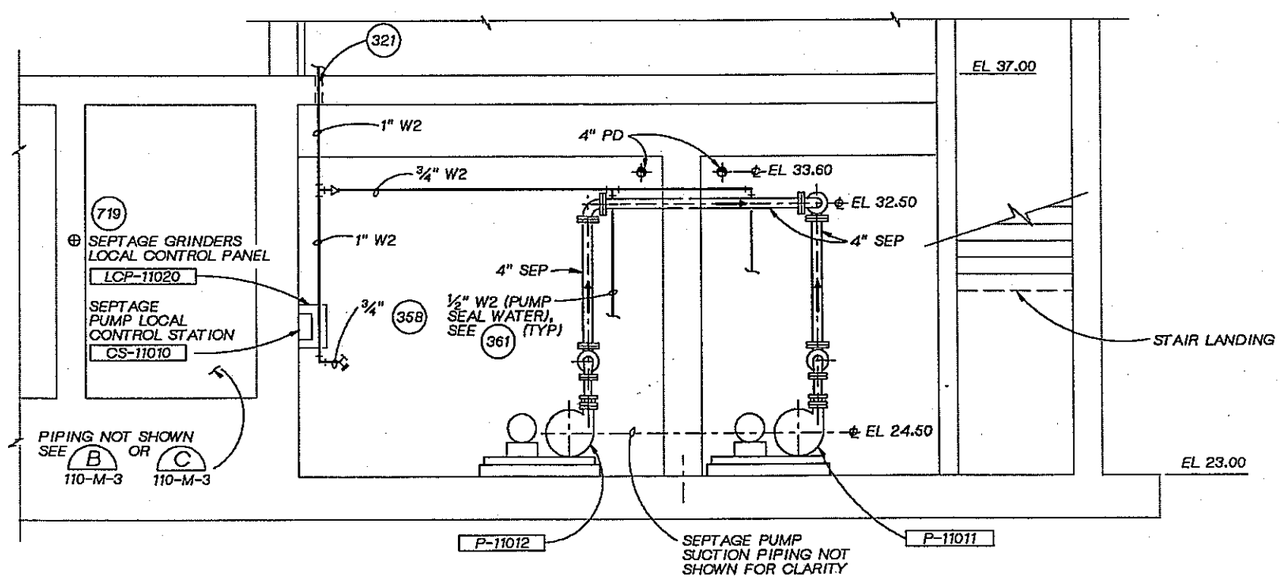

SECTION B
3/8"=1'-0"

JOSEPH A. GAUTHIER, STATE OF WASHINGTON, REGISTERED PROFESSIONAL ENGINEER

CH2M HILL

DSGN	E. RONSHAUGEN
DR	C. HOWELL
CHK	J GAUTHIER
APVD	J. GAUTHIER

NO.	DATE	REVISION	BY	APVD

REUSE OF DOCUMENTS
THIS DOCUMENT, AND THE IDEAS AND DESIGNS INCORPORATED HEREIN, AS AN INSTRUMENT OF PROFESSIONAL SERVICE, IS THE PROPERTY OF CH2M HILL AND IS NOT TO BE USED, IN WHOLE OR IN PART, FOR ANY OTHER PROJECT WITHOUT THE WRITTEN AUTHORIZATION OF CH2M HILL.
©CH2M HILL

BAR IS ONE INCH ON ORIGINAL DRAWING. 0 1"
IF NOT ONE INCH ON THIS SHEET, ADJUST SCALES ACCORDINGLY.

CITY OF BELLINGHAM, WASHINGTON
POST POINT WASTEWATER TREATMENT PLANT UPGRADE

SCREENING FACILITY
MECHANICAL
LOWER LEVEL
PLAN AND SECTIONS

DWG NO. 110-M-1
DATE AUG. 1990
PROJ NO. SEA22462.C1

DRAWN BY: B. CARR DESIGNED BY: E.RONSHAUGEN
DGN NAME: H:/PROJ2/BELLINGH/BL110M-B.DGN

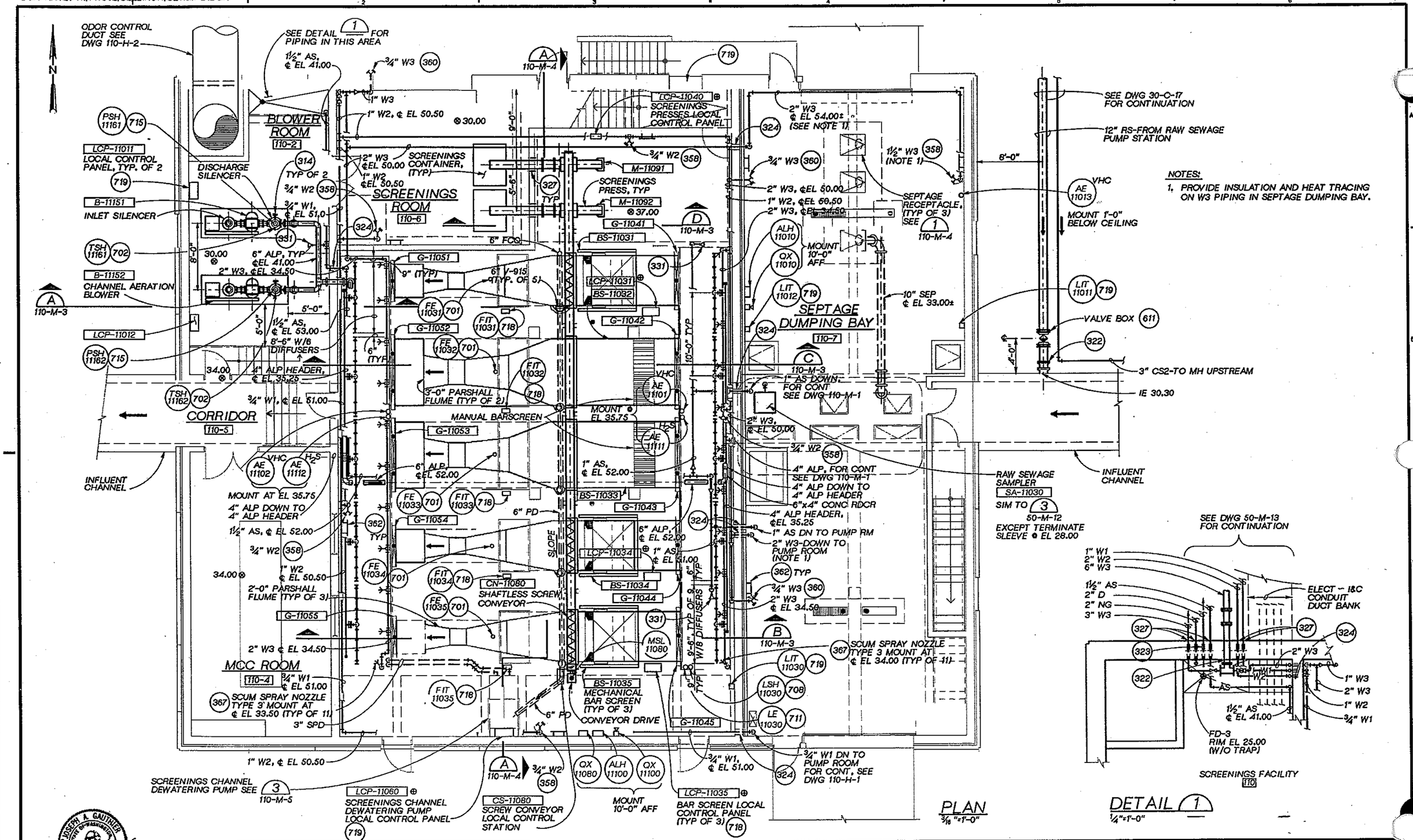

DSGN J. VALDES					
DR C. BROWN					
CHK J GAUTHIER					
APVD J. GAUTHIER	NO.	DATE	REVISION	BY	APVD

CH2M HILL

REUSE OF DOCUMENTS
THIS DOCUMENT, AND THE IDEAS AND DESIGNS INCORPORATED HEREIN, AS AN INSTRUMENT OF PROFESSIONAL SERVICE, IS THE PROPERTY OF CH2M HILL AND IS NOT TO BE USED, IN WHOLE OR IN PART, FOR ANY OTHER PROJECT WITHOUT THE WRITTEN AUTHORIZATION OF CH2M HILL.
©CH2M HILL

VERIFY SCALE
BAR IS ONE INCH ON ORIGINAL DRAWING.
0 1"
IF NOT ONE INCH ON THIS SHEET, ADJUST SCALES ACCORDINGLY.

CITY OF BELLINGHAM, WASHINGTON
POST POINT WASTEWATER TREATMENT PLANT UPGRADE

SCREENINGS FACILITY
MECHANICAL GROUND LEVEL PLAN

DWG NO. 110-M-2
DATE AUG. 1990
PROJ. NO. SEA22462.C1

COMPOSITE
OVERLAY SCREEN
OVERLAY IDENTIFICATION
PROJID
FILE

DATE: 8/25/90
DRAWN BY: B. CARR DESIGNED BY: E.RONSHAUGEN
DGN NAME: H:/PROJ2/BELLINGH/BL110M-C.DGN

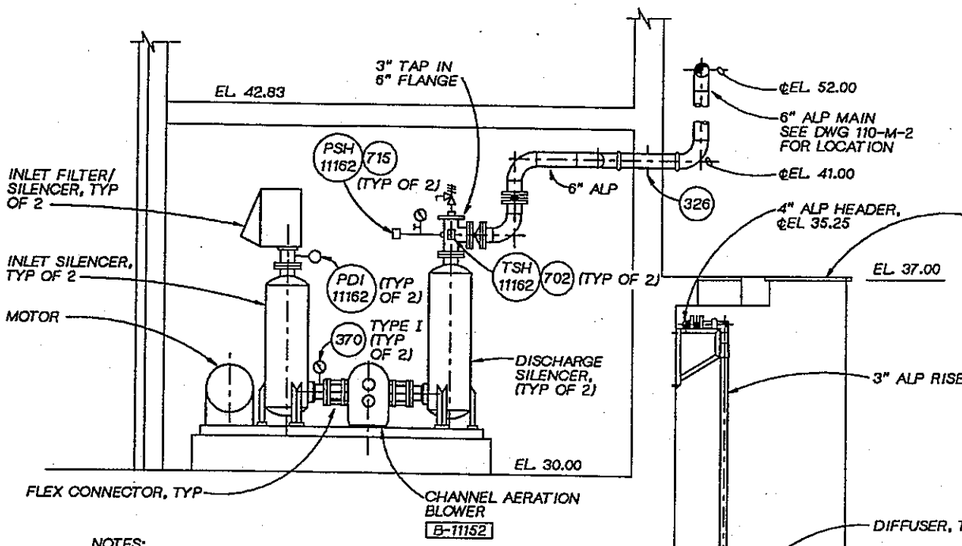

NOTES:

1. LOCAL CONTROL PANEL NOT SHOWN, SEE DWG 110-M-2 FOR LOCATION (TYP 2 CHANNEL AERATION BLOWERS).
2. INSULATE ALL CHANNEL AERATION BLOWER PIPING FROM DISCHARGE FLANGE OF BLOWERS TO END OF PIPING SYSTEM, INCLUDING ALL PIPING, VALVES, VENT SILENCERS, AND APPURTENANCES, UNLESS INDICATED OTHERWISE.
3. CONTRACTOR SHALL COORDINATE SIZE, LOCATION, AND ELEVATION OF EQUIPMENT PADS TO ACHIEVE THE PIPING ARRANGEMENT SHOWN.

SECTION A
3/8"=1'-0" 110-M-2

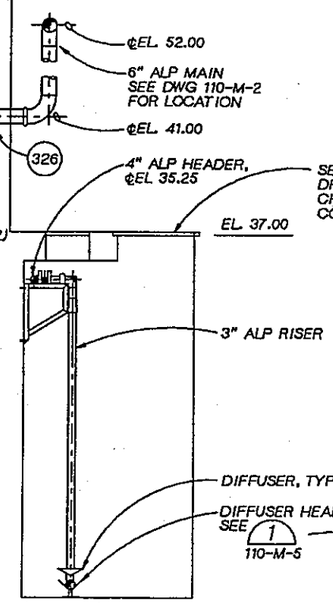

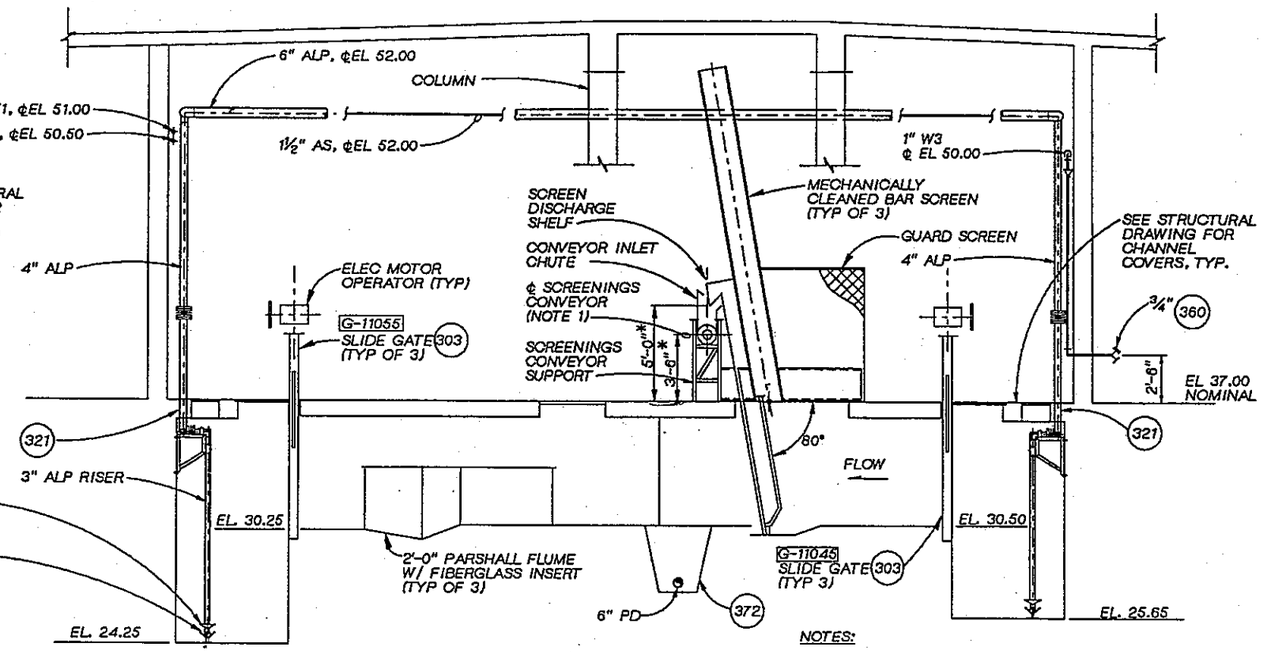

NOTES:

1. CONTRACTOR SHALL COORDINATE INSTALLATION OF BAR SCREENS, CONVEYOR AND SCREENINGS PRESS TO PROVIDE PROPER ALIGNMENT AND LOCATION OF ALL SYSTEM COMPONENTS.

SECTION B
1/4"=1'-0" 110-M-2

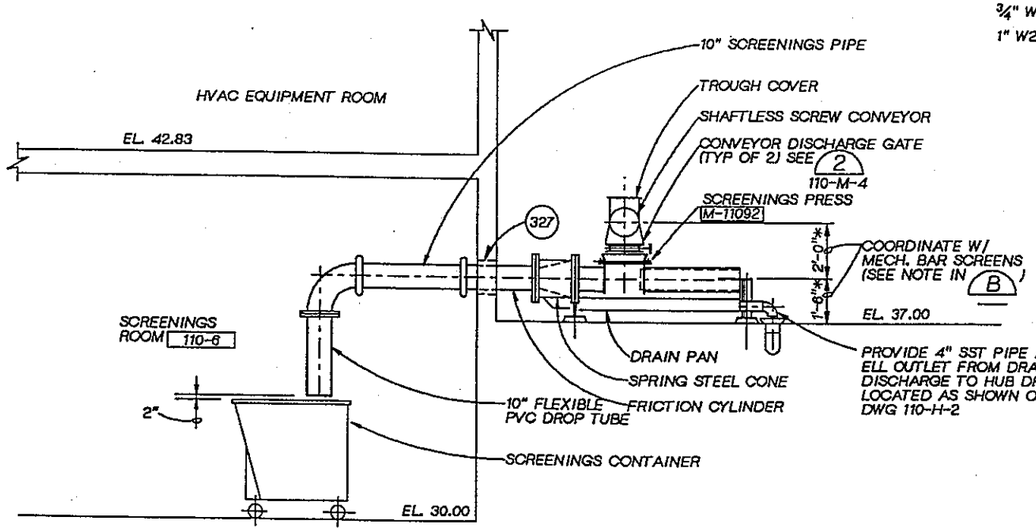

SECTION D
3/8"=1'-0" 110-M-2

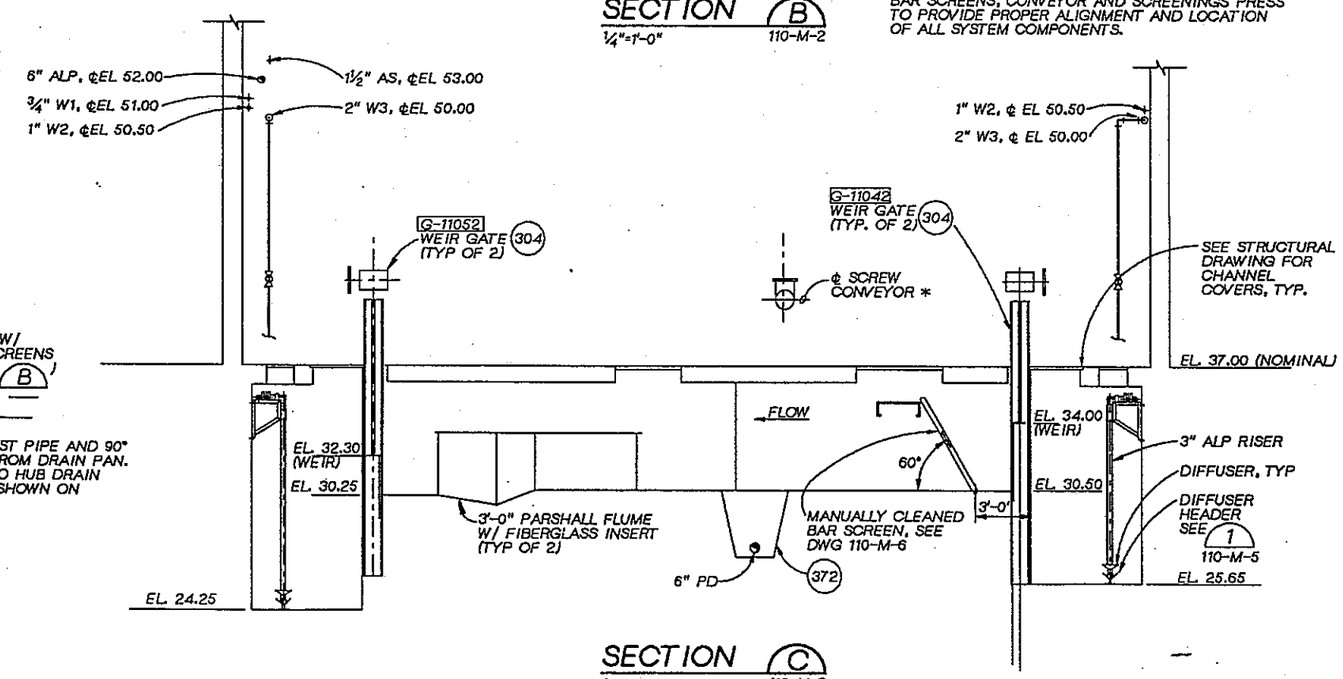

SECTION C
1/4"=1'-0" 110-M-2

JOSEPH A. GAUTHIER STATE OF WASHINGTON REGISTERED PROFESSIONAL ENGINEER

CH2M HILL

DSGN	J.VALDES E. RONSHAUGEN
DR	M. TO
CHK	J GAUTHIER
APVD	J. GAUTHIER

NO.	DATE	REVISION	BY	APVD

REUSE OF DOCUMENTS
THIS DOCUMENT, AND THE IDEAS AND DESIGNS INCORPORATED HEREIN, AS AN INSTRUMENT OF PROFESSIONAL SERVICE, IS THE PROPERTY OF CH2M HILL AND IS NOT TO BE USED, IN WHOLE OR IN PART, FOR ANY OTHER PROJECT WITHOUT THE WRITTEN AUTHORIZATION OF CH2M HILL.
©CH2M HILL

BAR IS ONE INCH ON ORIGINAL DRAWING. 0 1"
IF NOT ONE INCH ON THIS SHEET, ADJUST SCALES ACCORDINGLY.

CITY OF BELLINGHAM, WASHINGTON
POST POINT WASTEWATER TREATMENT PLANT UPGRADE

SCREENINGS FACILITY
MECHANICAL SECTIONS

DWG NO. 110-M-3
DATE AUG. 1990
PROJ NO. SEA22462.C1

DATE: 8/26/90
DRAWN BY: B. CARR DESIGNED BY: E. RONSHAUGEN
DGN NAME: H:/PROJ2/BELLINGH/BL110M-D.DGN

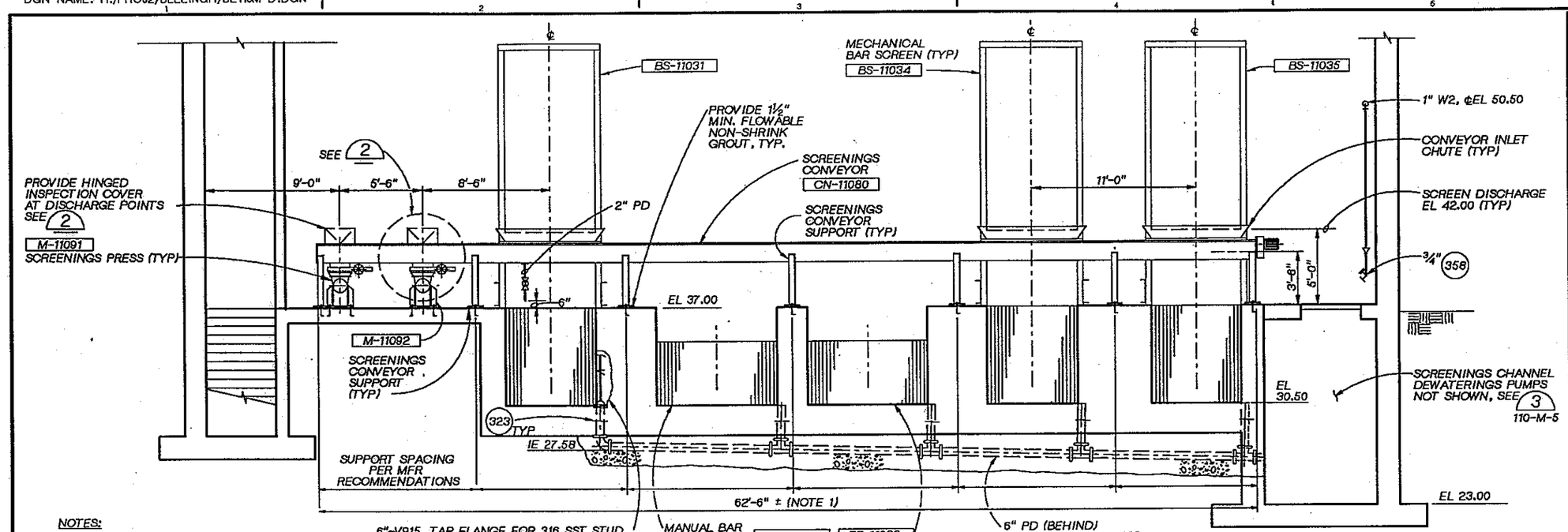

NOTES:

1. THE CONTRACTOR SHALL COORDINATE CONVEYOR LENGTH WITH MECHANICAL BAR SCREENS AND SCREENINGS PRESSES AS LOCATED TO ASSURE COMPATIBILITY.

SECTION A
¼" = 1'-0" 110-M-2

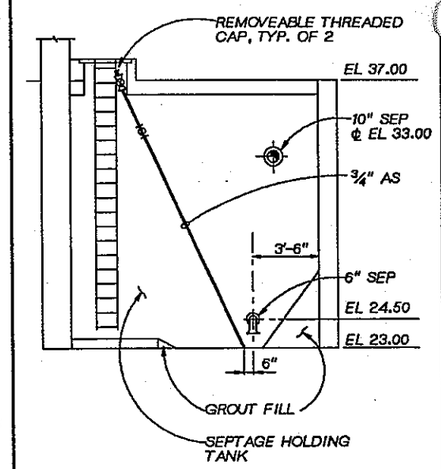

SECTION A
¼"=1'-0" 110-M-1

NOTES:

1. PIPING IN SEPTAGE HOLDING TANK NO. 2 IS MIRROR IMAGE.

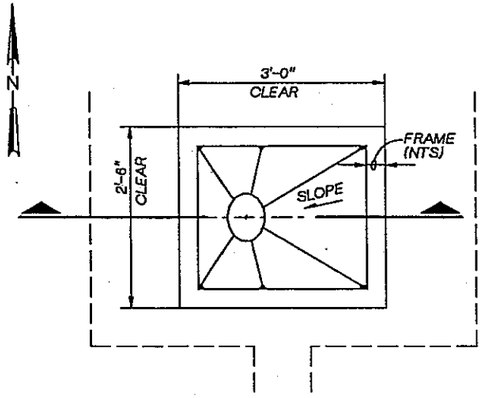

PLAN

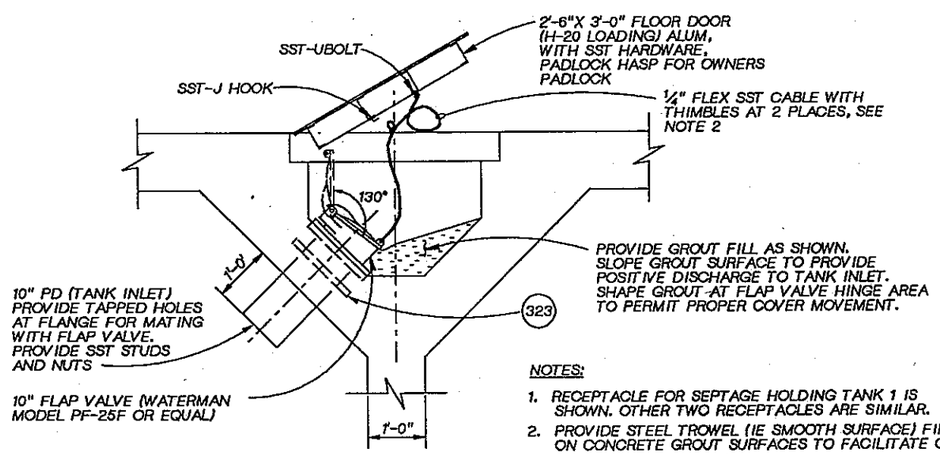

SECTION

NOTES:

1. RECEPTACLE FOR SEPTAGE HOLDING TANK 1 IS SHOWN. OTHER TWO RECEPTACLES ARE SIMILAR.
2. PROVIDE STEEL TROWEL (IE SMOOTH SURFACE) FINISH ON CONCRETE GROUT SURFACES TO FACILITATE CLEANING.
3. SECURE UPPER THIMBLE TO UNDERSIDE OF DOOR. SECURE LOWER THIMBLE AT POINT ON CABLE TO SECURE FLAP VALVE IN OPEN POSITION WITH DOOR OPEN.

SEPTAGE RECEPTACLE

DETAIL 1
¾"= 1'-0" 110-M-1 110-M-2

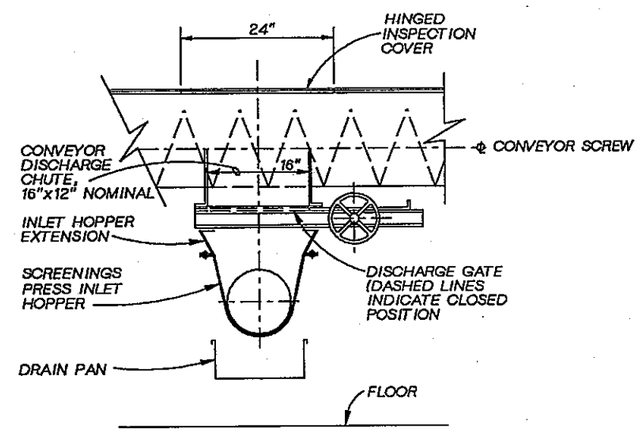

DETAIL 2
NTS 110-M-3

JOSEPH A. GAUTHIER STATE OF WASHINGTON REGISTERED PROFESSIONAL ENGINEER

CH2M HILL

DSGN	J. VALDES E. RONSHAUGEN					
DR	C. BROWN					
CHK	J. GAUTHIER					
APVD	J. GAUTHIER	NO.	DATE	REVISION	BY	APVD

REUSE OF DOCUMENTS
THIS DOCUMENT, AND THE IDEAS AND DESIGNS INCORPORATED HEREIN, AS AN INSTRUMENT OF PROFESSIONAL SERVICE, IS THE PROPERTY OF CH2M HILL AND IS NOT TO BE USED, IN WHOLE OR IN PART, FOR ANY OTHER PROJECT WITHOUT THE WRITTEN AUTHORIZATION OF CH2M HILL.
©CH2M HILL

BAR IS ONE INCH ON ORIGINAL DRAWING.
0 1"
IF NOT ONE INCH ON THIS SHEET, ADJUST SCALES ACCORDINGLY.

CITY OF BELLINGHAM, WASHINGTON
POST POINT WASTEWATER TREATMENT PLANT UPGRADE

SCREENINGS FACILITY
MECHANICAL SECTIONS AND DETAILS

DWG NO. 110-M-4
DATE AUG. 1990
PROJ NO. SEA22462.C1

DATE: 8/24/90 ERR
DRAWN BY: B. CARR DESIGNED BY: J.VALDES
DGN NAME: H:/PROJ2/BELLINGH/BL110M-F.DGN

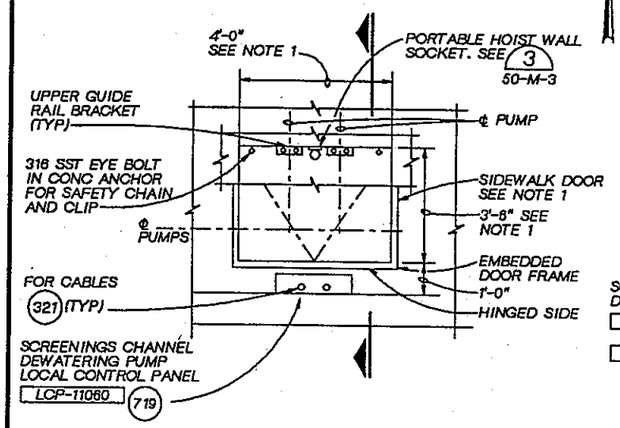

UPPER PLAN

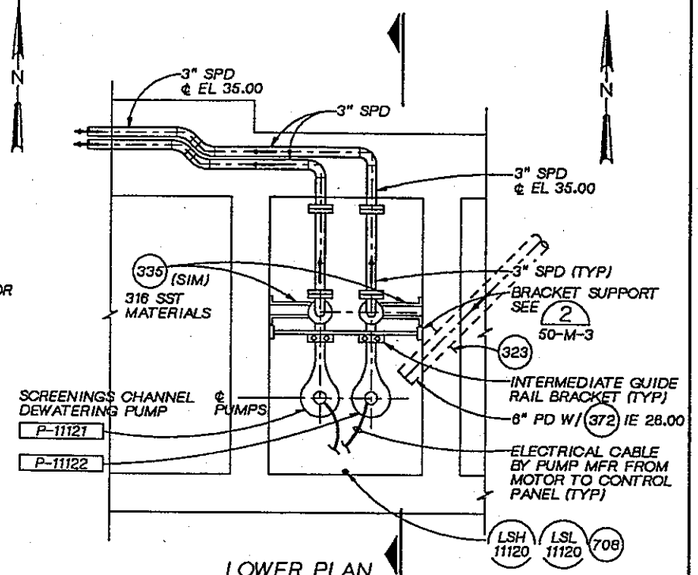

LOWER PLAN

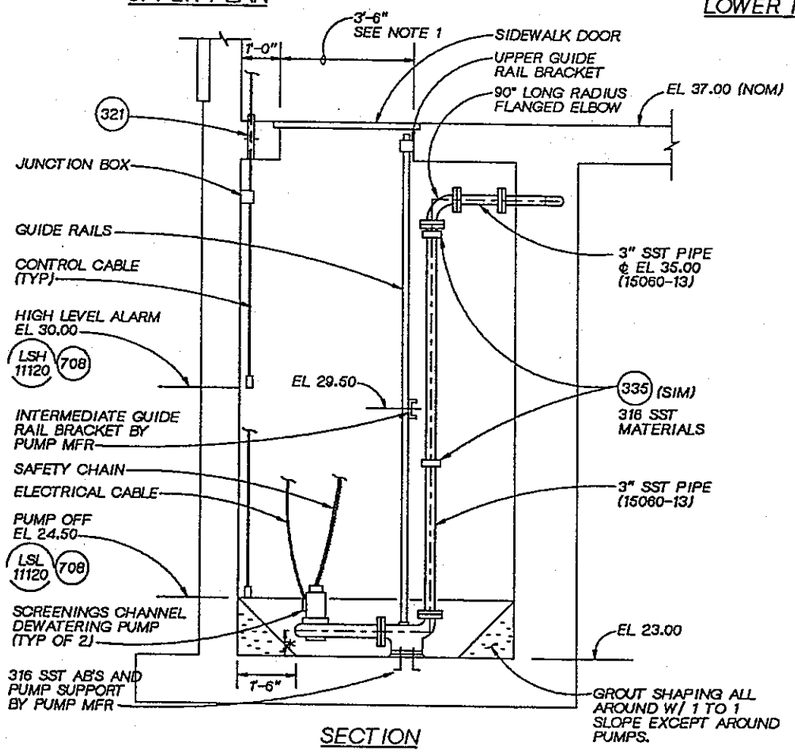

SECTION

NOTES:
1. VERIFY DIMENSIONS AND LOCATION OF OPENING WITH PUMP MFR PRIOR TO ORDERING AND CASTING SIDEWALK DOOR.
2. FOR ITEMS TO BE PROVIDED BY PUMP MFR, SEE THE SPECIFICATIONS.

SCREENINGS CHANNEL DEWATERING PUMP 3

½" = 1'-0"

110-S-2
110-S-4
110-M-2
110-M-4

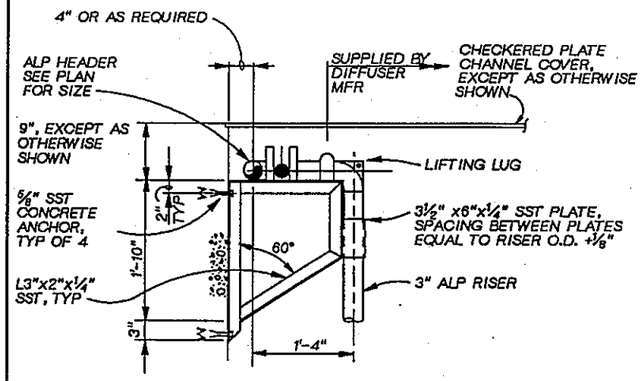

SIDE ELEVATION

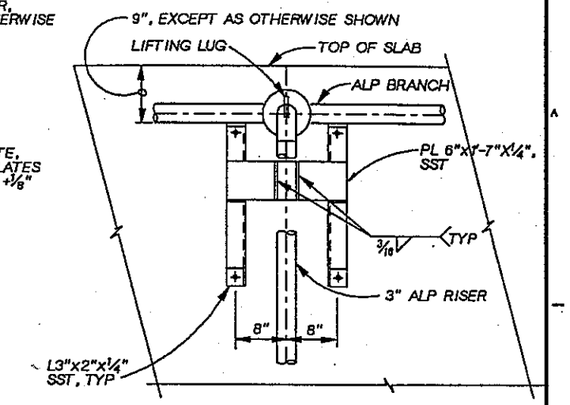

FRONT ELEVATION

RISER SUPPORT AND CONNECTION DETAIL 2

1"=1'-0"

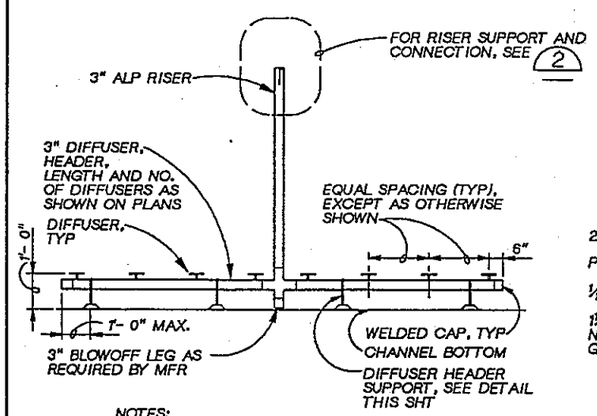

NOTES:
1. ALL MATERIAL FOR THE ASSEMBLY SHALL BE 316 SST.
2. PROVIDE FOUR DIFFUSER HEADER SUPPORTS ON HEADERS 8 FT IN LENGTH AND GREATER. PROVIDE 3 SUPPORTS ON HEADERS LESS THAN 8 FT. DIFFUSER SUPPORTS SHALL BE EQUALLY SPACED ALONG HEADER.

DIFFUSER HEADER DETAIL

½"=1'-0"

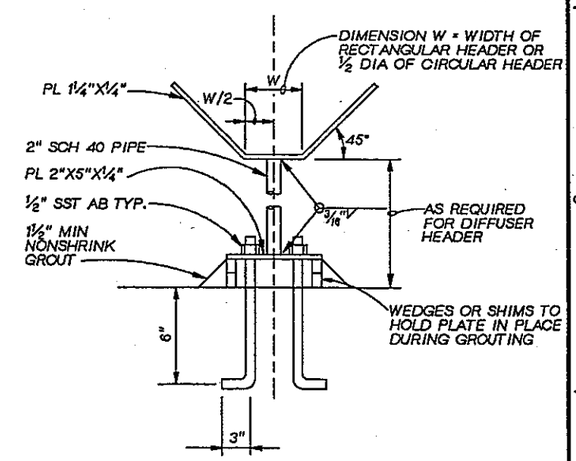

HEADER SUPPORT DETAIL

NTS

CHANNEL AERATION ASSEMBLY DETAIL 1

SCALE AS NOTED

110-M-1
110-M-3

JOSEPH A. GAUTHIER STATE OF WASHINGTON REGISTERED PROFESSIONAL ENGINEER

CH2M HILL

DSGN	J. VALDES
DR	C. HOWELL
CHK	J GAUTHIER
APVD	J GAUTHIER

NO.	DATE	REVISION	BY	APVD

REUSE OF DOCUMENTS
THIS DOCUMENT, AND THE IDEAS AND DESIGNS INCORPORATED HEREIN, AS AN INSTRUMENT OF PROFESSIONAL SERVICE, IS THE PROPERTY OF CH2M HILL AND IS NOT TO BE USED, IN WHOLE OR IN PART, FOR ANY OTHER PROJECT WITHOUT THE WRITTEN AUTHORIZATION OF CH2M HILL.
©CH2M HILL

BAR IS ONE INCH ON ORIGINAL DRAWING.
0 1"
IF NOT ONE INCH ON THIS SHEET, ADJUST SCALES ACCORDINGLY.

CITY OF BELLINGHAM, WASHINGTON
POST POINT WASTEWATER TREATMENT PLANT UPGRADE

SCREENINGS FACILITY
MECHANICAL
SECTIONS AND DETAILS

DWG NO. 110-M-5
DATE AUG. 1990
PROJ NO. SEA22462.C1

OVERLAY
PROJ/O FILE

DATE: 8/24/90 EHR
DRAWN BY: B. CARR DESIGNED BY: E. RONSHAUGEN
DGN NAME: H:/PROJ2/BELLINGH/BL110M-E.DGN

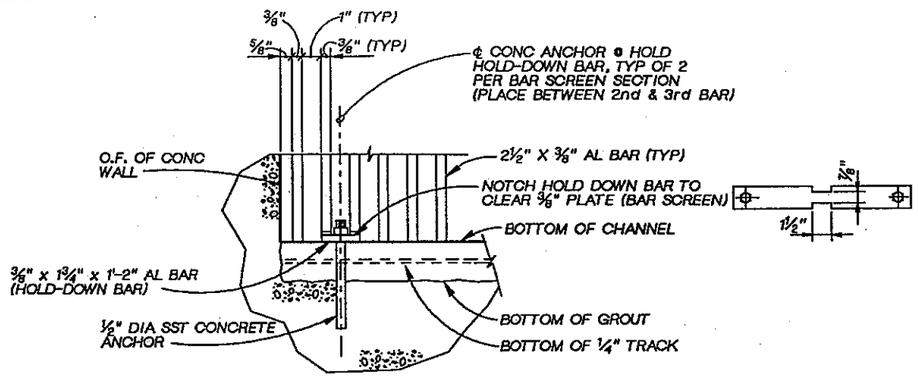

ELEVATION SECTION (A)

3"=1'-0"

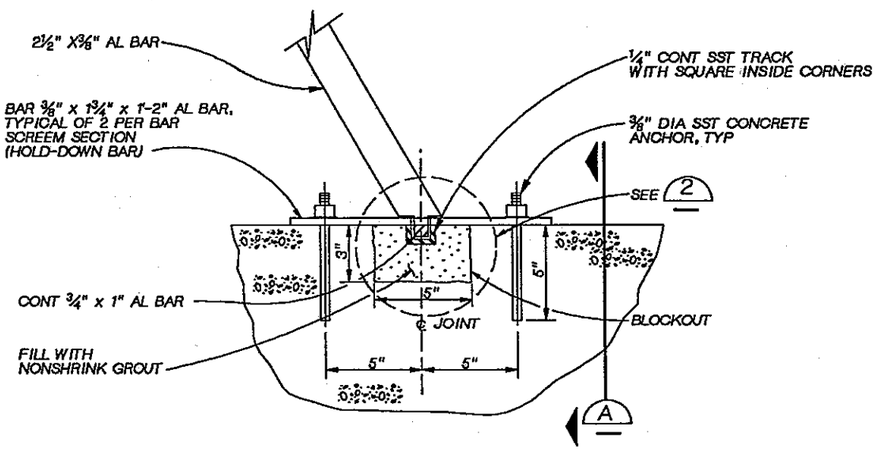

BAR SCREEN SUPPORT DETAIL (1)

3"=1'-0"

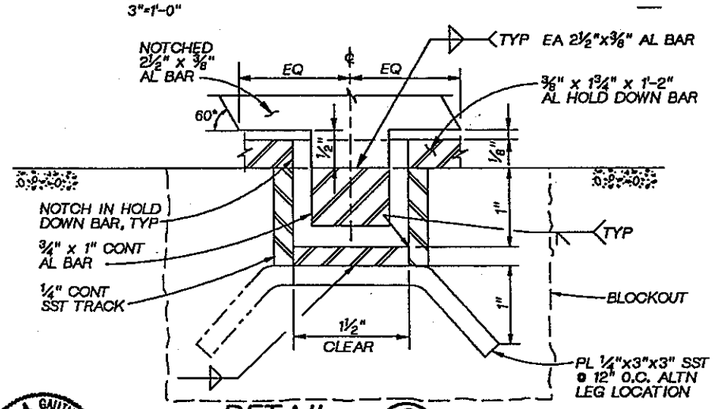

DETAIL (2)

FULL SCALE

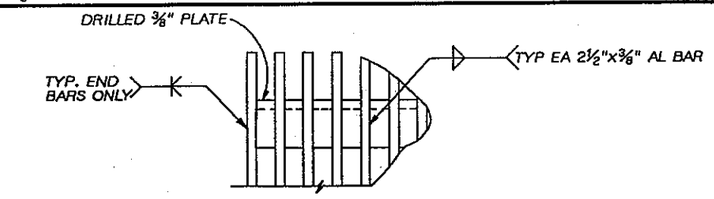

SECTION (B)

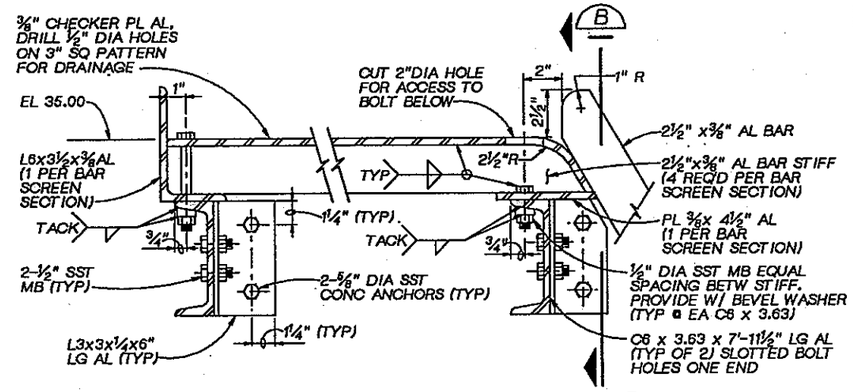

BAR SCREEN SUPPORT DETAIL (3)

3"=1'-0"

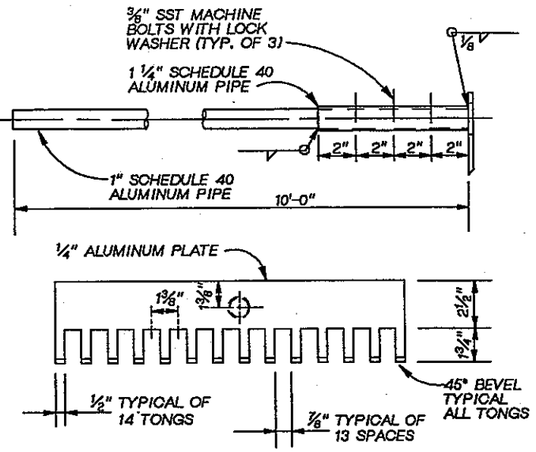

NOTES:
1. ONE RAKE REQUIRED.
2. GRIND ALL EDGES SMOOTH EXCEPT WHERE SHOWN.

SCREEN RAKE DETAIL (4)

3"=1'-0"

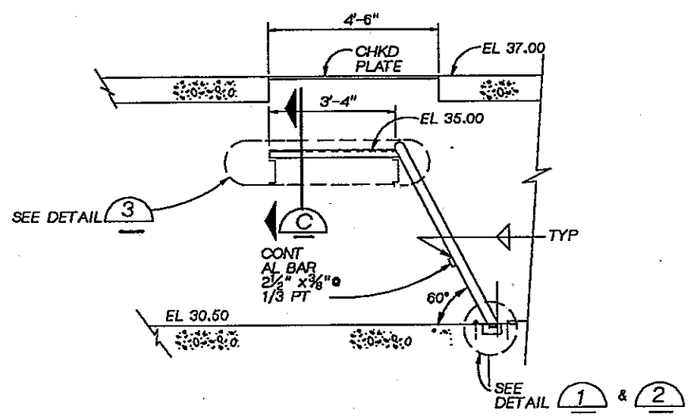

NOTES:
1. PROVIDE 3 REMOVABLE BAR SCREEN SECTIONS; SIDE SECTIONS SHALL BE 23 EQUAL SPACED BARS WITH 1" CLEAR OPENINGS =2'-6⅝"; CENTER SECTION SHALL BE 24 EQUAL SPACED BARS WITH 1" CLEAR OPENINGS = 2'-8". SEE SECTION (C)
2. FOR SCREEN RAKE, SEE (4)

MANUAL BAR SCREEN SECTION, TYP

½"=1'-0"

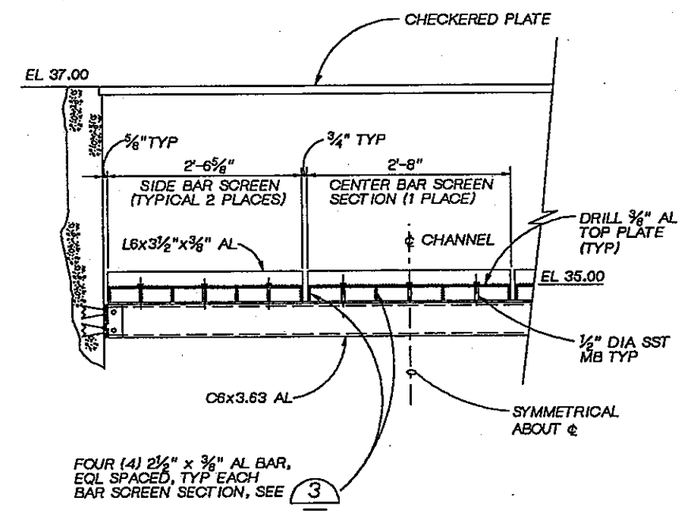

SECTION (C)

1"=1'-0"

JOSEPH A. GAUTHIER, STATE OF WASHINGTON, REGISTERED PROFESSIONAL ENGINEER

CH2M HILL

DSGN	E. RONSHAUGEN
DR	C. HOWELL
CHK	J VALDES
APVD	J GAUTHIER

NO.	DATE	REVISION	BY	APVD

REUSE OF DOCUMENTS
THIS DOCUMENT, AND THE IDEAS AND DESIGNS INCORPORATED HEREIN, AS AN INSTRUMENT OF PROFESSIONAL SERVICE, IS THE PROPERTY OF CH2M HILL AND IS NOT TO BE USED, IN WHOLE OR IN PART, FOR ANY OTHER PROJECT WITHOUT THE WRITTEN AUTHORIZATION OF CH2M HILL.
©CH2M HILL

BAR IS ONE INCH ON ORIGINAL DRAWING.
0 1"
IF NOT ONE INCH ON THIS SHEET, ADJUST SCALES ACCORDINGLY.

CITY OF BELLINGHAM, WASHINGTON
POST POINT WASTEWATER TREATMENT PLANT UPGRADE

SCREENINGS FACILITY
MECHANICAL
MANUAL BAR SCREEN DETAILS

DWG NO. 110-M-6
DATE AUG. 1990
PROJ NO. SEA22462.C1

DRAWN BY: SD GUNDY DESIGNED BY: S GUNDY/G FLOOD
DGN NAME: H:/PROJ2/BELLINGH/BL110H-A.DGN

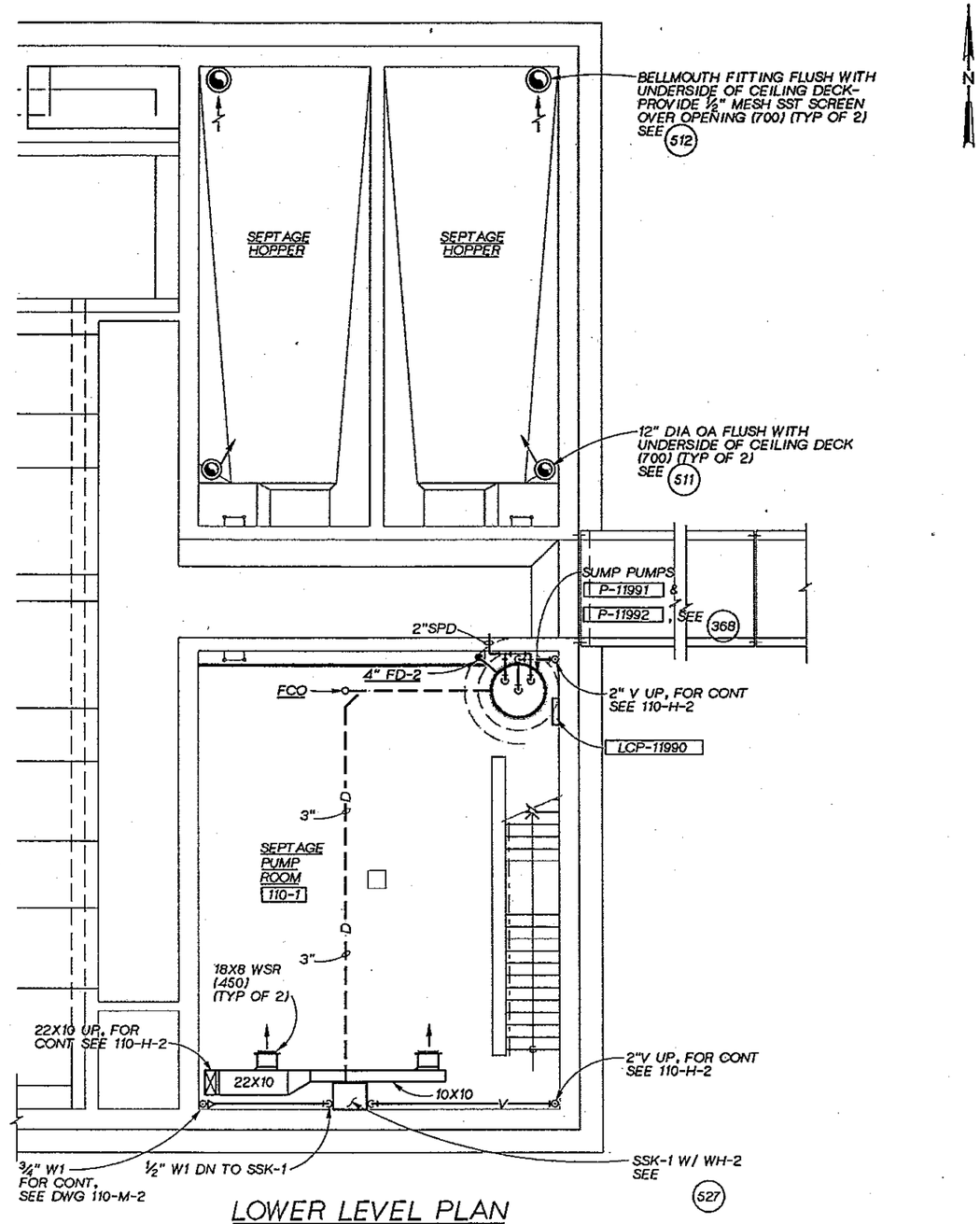

LOWER LEVEL PLAN

3/16"=1'-0"

DSGN	G. FLOOD				
DR	S.D.GUNDY				
CHK	J.A.SIEMENS				
APVD	J. GAUTHIER	NO.	DATE	REVISION	BY	APVD

CH2M HILL

REUSE OF DOCUMENTS
THIS DOCUMENT, AND THE IDEAS AND DESIGNS INCORPORATED HEREIN, AS AN INSTRUMENT OF PROFESSIONAL SERVICE, IS THE PROPERTY OF CH2M HILL AND IS NOT TO BE USED, IN WHOLE OR IN PART, FOR ANY OTHER PROJECT WITHOUT THE WRITTEN AUTHORIZATION OF CH2M HILL.
©CH2M HILL

VERIFY SCALE
BAR IS ONE INCH ON ORIGINAL DRAWING.
0 1"
IF NOT ONE INCH ON THIS SHEET, ADJUST SCALES ACCORDINGLY.

CITY OF BELLINGHAM, WASHINGTON
POST POINT WASTEWATER TREATMENT PLANT UPGRADE

SCREENINGS FACILITY
HVAC AND PLUMBING
LOWER LEVEL PLAN

DWG NO. 110-H-1
DATE AUG. 1990
PROJ NO. SEA22462.C1

OVERLAY IDENTIFICATION: COMPOSITE, OVERLAY, REV, PROJID, FILE

DRAWN BY: SD GUNDY DESIGNED BY: S GUNDY/G FLOOD
DGN NAME: H:/PROJ2/BELLINGH/BL110H-B.DGN

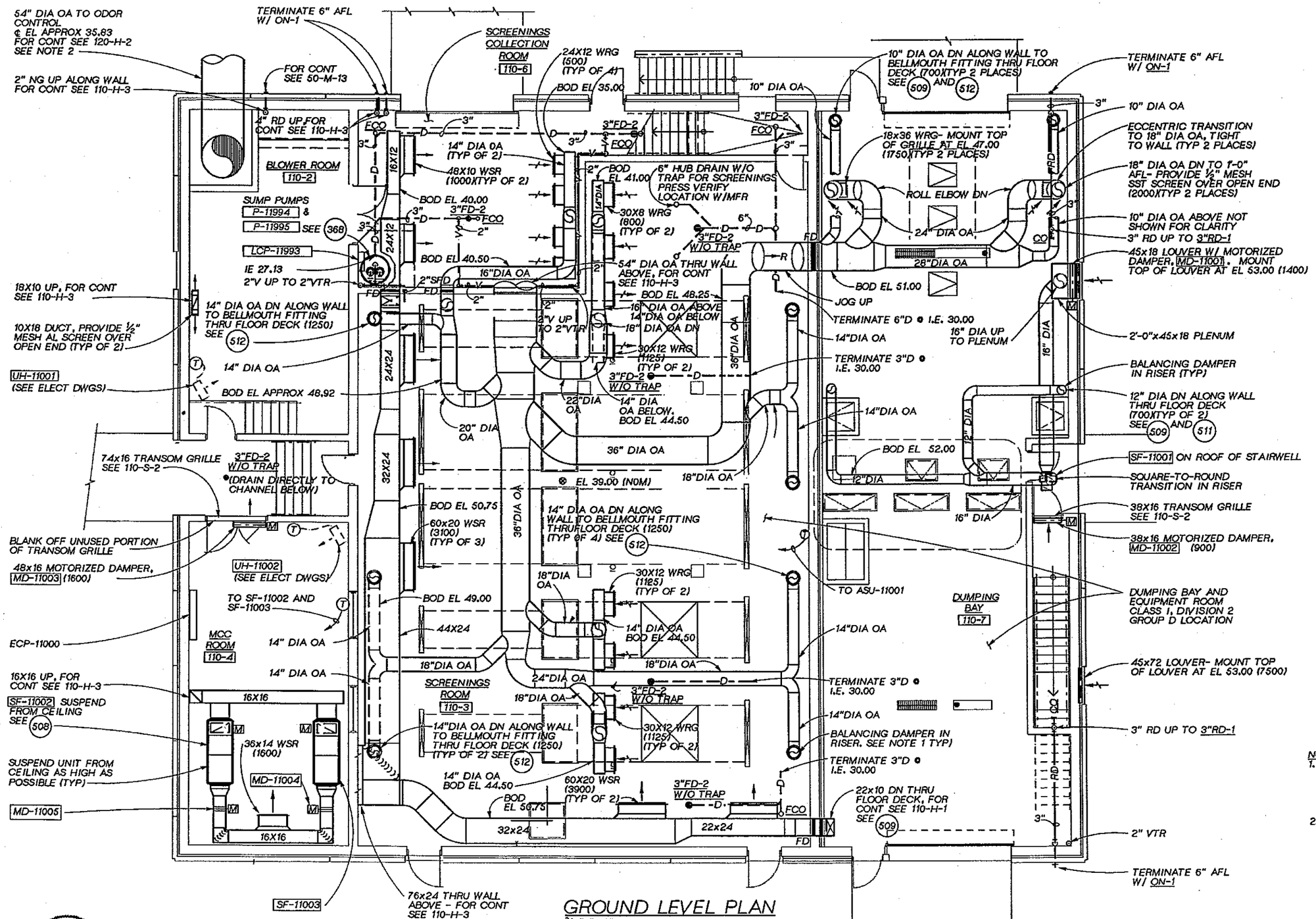

GROUND LEVEL PLAN

3/16" = 1'- 0"

NOTES:
1. PROVIDE BLAST GATE BALANCING DAMPER AT EACH ODOR CONTROL INLET FITTING. BUTTERFLY TYPE. BALANCING DAMPERS SHALL NOT BE USED.
2. FOR TREATMENT AT INTERIOR OF DUCT PENETRATION, SEE 510 SIM.

JOSEPH A. GAUTHIER — STATE OF WASHINGTON — REGISTERED PROFESSIONAL ENGINEER

CH2M HILL

DSGN	G.FLOOD
DR	S.D.GUNDY
CHK	J.A.SIEMENS
APVD	J. GAUTHIER

NO.	DATE	REVISION	BY	APVD

REUSE OF DOCUMENTS
THIS DOCUMENT, AND THE IDEAS AND DESIGNS INCORPORATED HEREIN, AS AN INSTRUMENT OF PROFESSIONAL SERVICE, IS THE PROPERTY OF CH2M HILL AND IS NOT TO BE USED, IN WHOLE OR IN PART, FOR ANY OTHER PROJECT WITHOUT THE WRITTEN AUTHORIZATION OF CH2M HILL.
©CH2M HILL

VERIFY SCALE
BAR IS ONE INCH ON ORIGINAL DRAWING.
0 1"
IF NOT ONE INCH ON THIS SHEET, ADJUST SCALES ACCORDINGLY.

CITY OF BELLINGHAM, WASHINGTON
POST POINT WASTEWATER TREATMENT PLANT UPGRADE

SCREENINGS FACILITY
HVAC AND PLUMBING
GROUND LEVEL PLAN

DWG NO. 110-H-2
DATE AUG. 1990
PROJ NO. SEA22462.C1

OVERLAY IDENTIFICATION: COMPOSITE, OVERLAY, SCREEN
PROJID
FILE

DRAWN BY: SD GUNDY DESIGNED BY: S GUNDY/G FLOOD
DGN NAME: H:/PROJ2/BELLINGH/BL110H-C.DGN

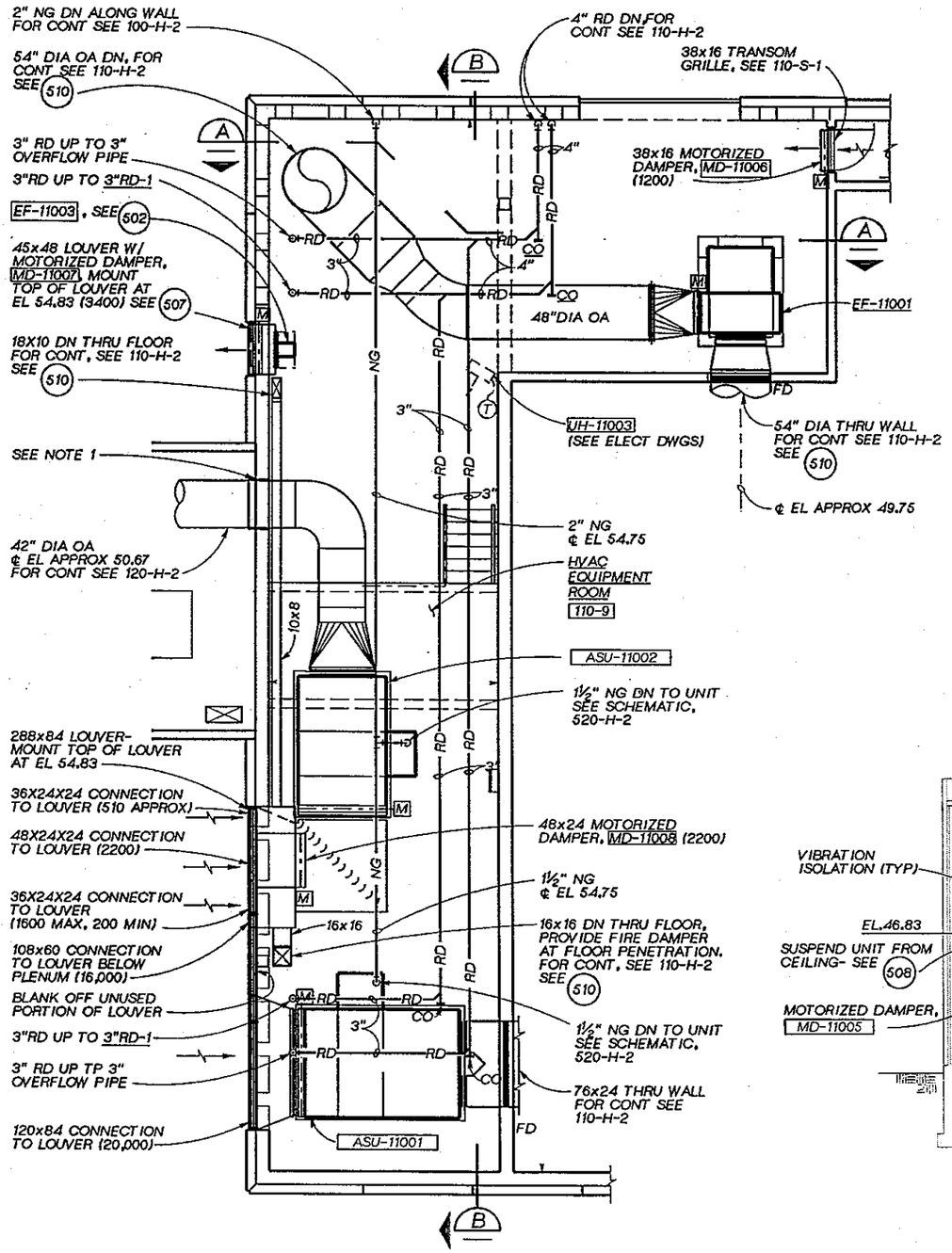

MEZZANINE LEVEL PLAN
3/16" = 1'- 0"

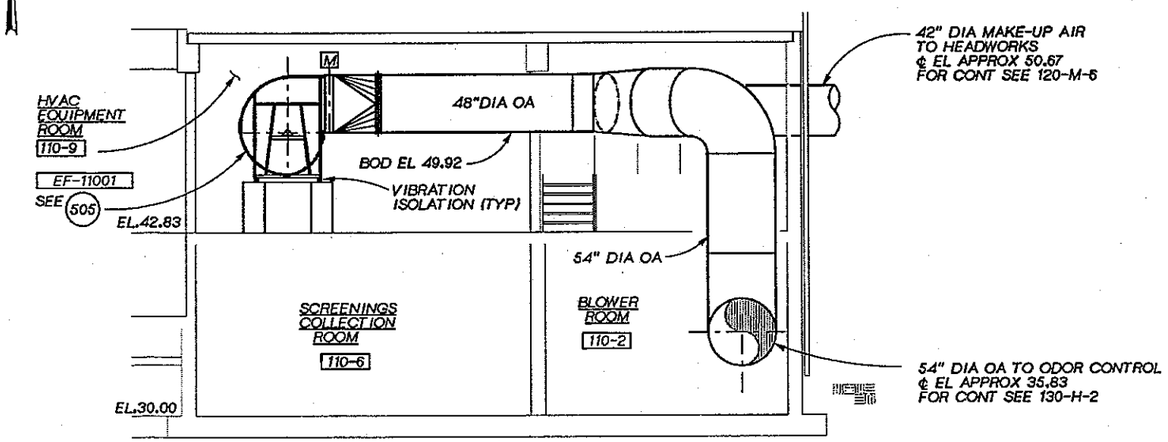

SECTION A
3/16" = 1'- 0"

NOTE:
1. FOR TREATMENT AT INTERIOR SIDE OF DUCT PENETRATION, SEE 510 SIM.

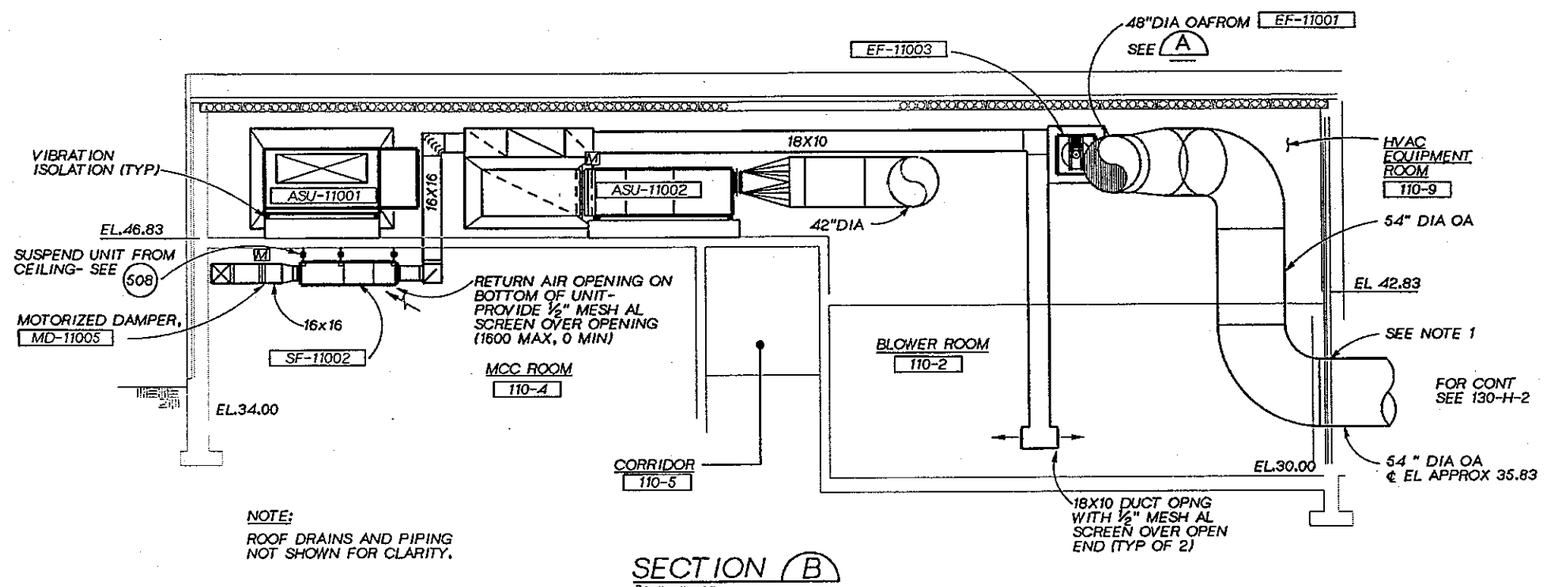

NOTE:
ROOF DRAINS AND PIPING NOT SHOWN FOR CLARITY.

SECTION B
3/16" = 1'- 0"

JOSEPH A. GAUTHIER PIPE DESIGN DIVISION REGISTERED PROFESSIONAL ENGINEER

CH2M HILL

DSGN G.FLOOD					
DR S.D.GUNDY					
CHK J.A.SIEMENS					
APVD J. GAUTHIER	NO.	DATE	REVISION	BY	APVD

REUSE OF DOCUMENTS
THIS DOCUMENT, AND THE IDEAS AND DESIGNS INCORPORATED HEREIN, AS AN INSTRUMENT OF PROFESSIONAL SERVICE, IS THE PROPERTY OF CH2M HILL AND IS NOT TO BE USED, IN WHOLE OR IN PART, FOR ANY OTHER PROJECT WITHOUT THE WRITTEN AUTHORIZATION OF CH2M HILL.
©CH2M HILL

VERIFY SCALE
BAR IS ONE INCH ON ORIGINAL DRAWING.
0 1"
IF NOT ONE INCH ON THIS SHEET, ADJUST SCALES ACCORDINGLY.

CITY OF BELLINGHAM, WASHINGTON
POST POINT WASTEWATER TREATMENT PLANT UPGRADE

SCREENINGS FACILITY
HVAC AND PLUMBING
MEZZANINE LEVEL PLAN
AND SECTIONS

DWG NO. 110-H-3
DATE AUG. 1990
PROJ NO. SEA22462.C1

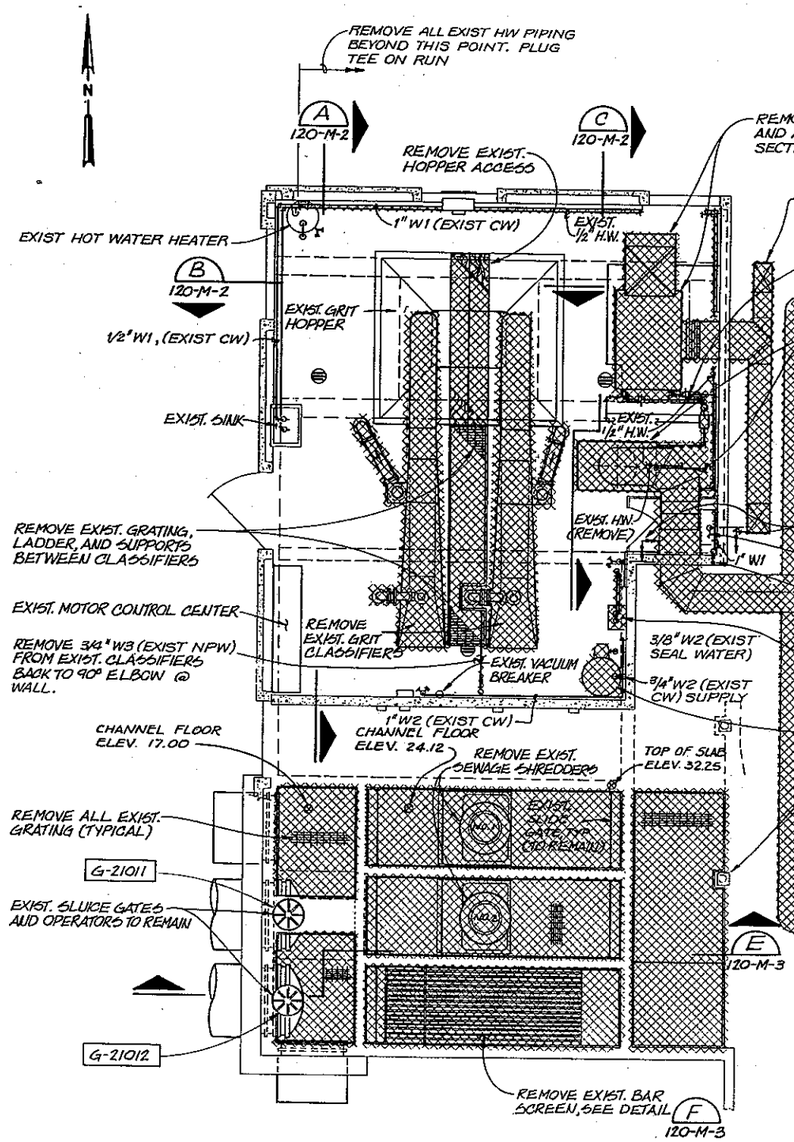

UPPER LEVEL PLAN

GRIT SEPARATION ROOM & SEWAGE SHREDDER BASIN

NTS

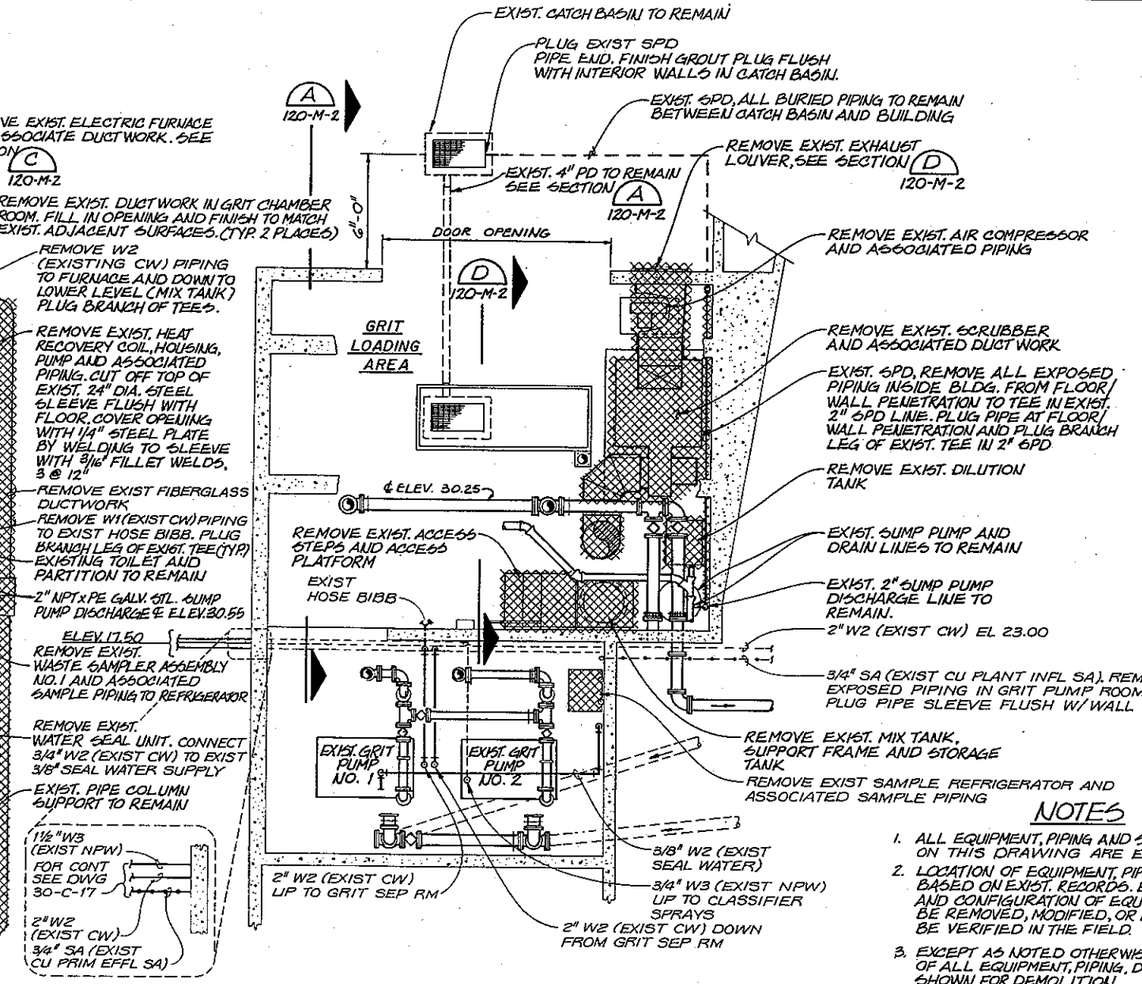

GRIT LOADING & PUMP ROOMS

NTS

NOTES

1. ALL EQUIPMENT, PIPING AND STRUCTURES SHOWN ON THIS DRAWING ARE EXISTING
2. LOCATION OF EQUIPMENT, PIPING, ETC. SHOWN IS BASED ON EXIST. RECORDS. EXACT LOCATION, SIZE, AND CONFIGURATION OF EQUIPMENT, PIPING, ETC. TO BE REMOVED, MODIFIED, OR DEMOLISHED SHALL BE VERIFIED IN THE FIELD.
3. EXCEPT AS NOTED OTHERWISE REMOVE AND DISPOSE OF ALL EQUIPMENT, PIPING, DUCTWORK AND GRATING SHOWN FOR DEMOLITION.
4. SEE SPECIFICATION SECTION 01040 FOR SPECIFIC CONSTRAINTS ASSOCIATED WITH SCHEDULING OF DEMOLITION WORK IN THIS BUILDING
5. CONTRACTOR TO DISPOSE OF ALL DEMOLISHED MATERIAL OFF SITE.
6. WALL PIPES FOR UPPER LEVEL DRAIN PIPING NOT SHOWN.

LEGEND

INDICATES ITEMS INCLUDED IN THE DEMOLITION, EXCEPT AS OTHERWISE NOTED.

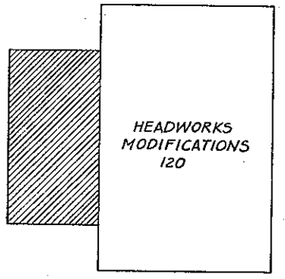

KEY PLAN

JOSEPH A. GAUTHIER STATE OF WASHINGTON REGISTERED PROFESSIONAL ENGINEER

CH2M HILL

DSGN J. WODRICH					
DR P. BAKER					
CHK J. GAUTHIER					
APVD J. GAUTHIER	NO.	DATE	REVISION	BY	APVD

REUSE OF DOCUMENTS
THIS DOCUMENT, AND THE IDEAS AND DESIGNS INCORPORATED HEREIN, AS AN INSTRUMENT OF PROFESSIONAL SERVICE, IS THE PROPERTY OF CH2M HILL AND IS NOT TO BE USED, IN WHOLE OR IN PART, FOR ANY OTHER PROJECT WITHOUT THE WRITTEN AUTHORIZATION OF CH2M HILL.
©CH2M HILL

VERIFY SCALES
BAR IS ONE INCH ON ORIGINAL DRAWING.
0 1"
IF NOT ONE INCH ON THIS SHEET, ADJUST SCALES ACCORDINGLY.

CITY OF BELLINGHAM, WASHINGTON
POST POINT WASTEWATER TREATMENT PLANT UPGRADE

HEADWORKS MODIFICATIONS

DEMOLITION PLAN

DWG NO. 120-M-1
DATE AUG 1990
PROJ NO. SEA22462.C1

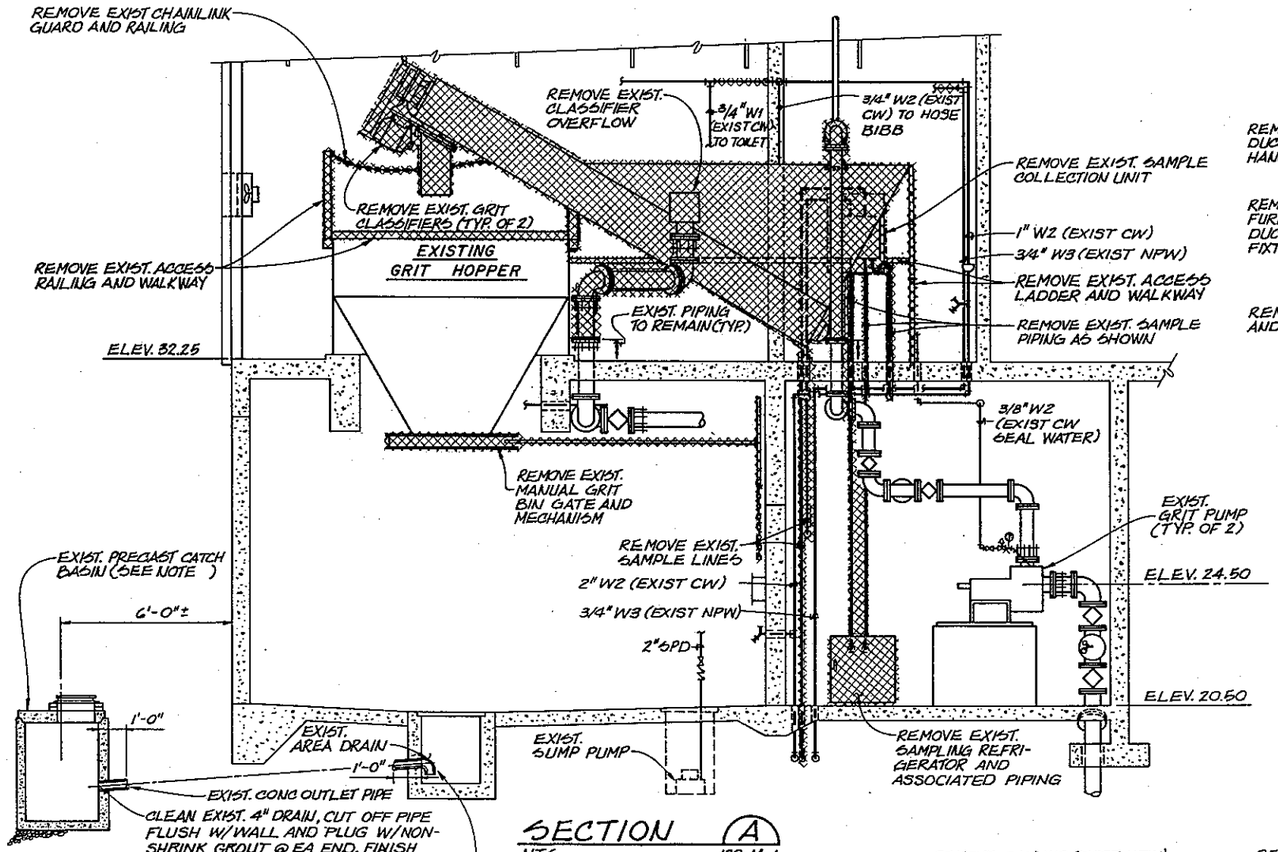

SECTION (A) 120-M-1
NTS

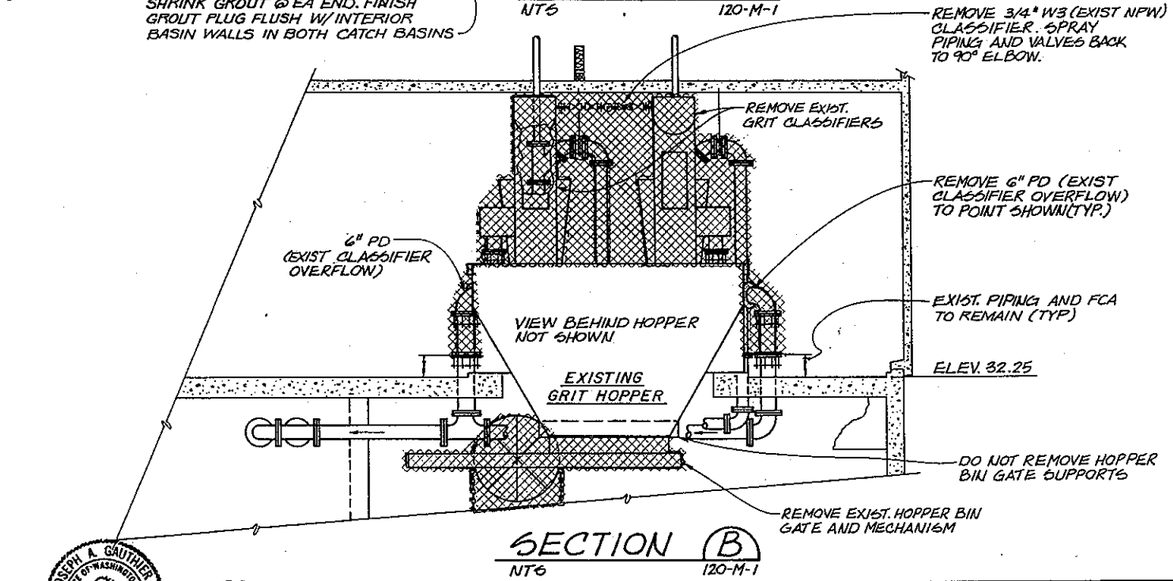

SECTION (B) 120-M-1
NTS

LEGEND

INDICATES ITEMS INCLUDED IN THE DEMOLITION EXCEPT AS OTHERWISE NOTED.

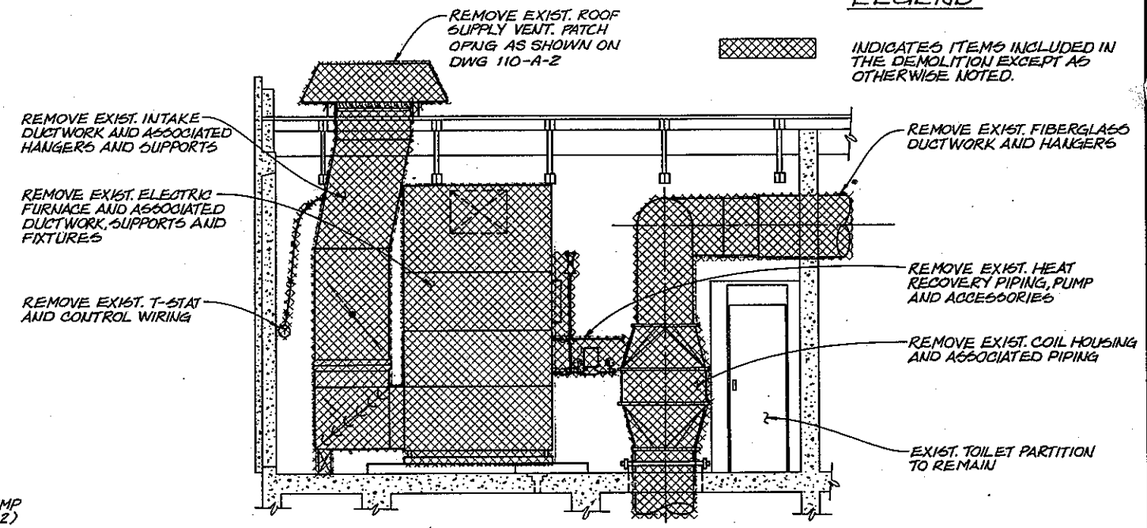

SECTION (C) 120-M-1
NTS

NOTES:

1. ALL EQUIPMENT PIPING AND STRUCTURES SHOWN ON THIS DRAWING ARE EXISTING.
2. REMOVE ELECTRICAL WIRING FOR ALL EQUIPMENT REMOVED BACK TO PANEL. MARK CORRESPONDING CIRCUIT BREAKER AS "NOT USED".
3. REMOVE EXISTING SUMP PUMPS AND ASSOCIATED PIPING FROM INSIDE EXISTING PRECAST CATCH BASIN
4. SEE SPECIFICATION SECTION 01040 FOR SPECIFIC CONSTRAINTS ASSOCIATED WITH SCHEDULING OF DEMOLITION WORK IN THIS BUILDING.

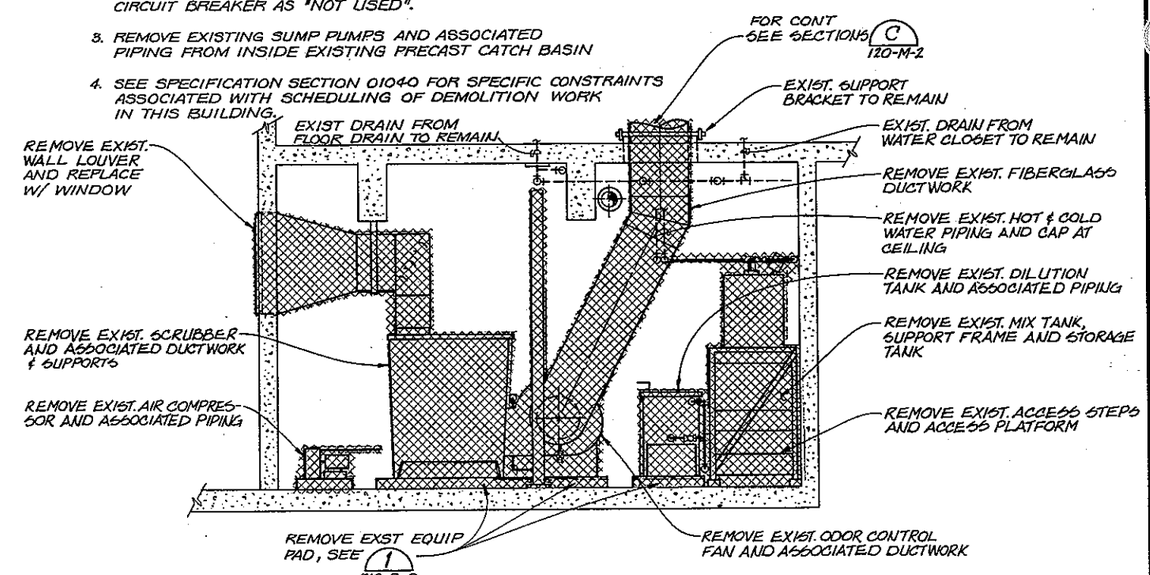

SECTION (D) 120-M-1
NTS

JOSEPH A. GAUTHIER STATE OF WASHINGTON REGISTERED PROFESSIONAL ENGINEER

CH2M HILL

DSGN	J. WODRICH				
DR	M. MERCIER				
CHK	J. GAUTHIER				
APVD	J. GAUTHIER	NO.	DATE	REVISION	BY / APVD

REUSE OF DOCUMENTS
THIS DOCUMENT, AND THE IDEAS AND DESIGNS INCORPORATED HEREIN, AS AN INSTRUMENT OF PROFESSIONAL SERVICE, IS THE PROPERTY OF CH2M HILL AND IS NOT TO BE USED, IN WHOLE OR IN PART, FOR ANY OTHER PROJECT WITHOUT THE WRITTEN AUTHORIZATION OF CH2M HILL.
©CH2M HILL

VERIFY SCALES
BAR IS ONE INCH ON ORIGINAL DRAWING.
0 ——— 1"
IF NOT ONE INCH ON THIS SHEET, ADJUST SCALES ACCORDINGLY.

CITY OF BELLINGHAM, WASHINGTON
POST POINT WASTEWATER TREATMENT PLANT UPGRADE

HEADWORKS MODIFICATIONS
DEMOLITION SECTIONS

DWG NO. 120-M-2
DATE AUG 1990
PROJ NO. SEA22462.C1

NOTES

1. ALL EQUIPMENT, PIPING, AND STRUCTURES SHOWN ON THIS DRAWING ARE EXISTING.
2. SEE SPECIFICATION SECTION 01040 FOR SPECIFIC CONTRAINTS ASSOCIATED WITH SCHEDULING OF DEMOLITION WORK IN THIS BUILDING.

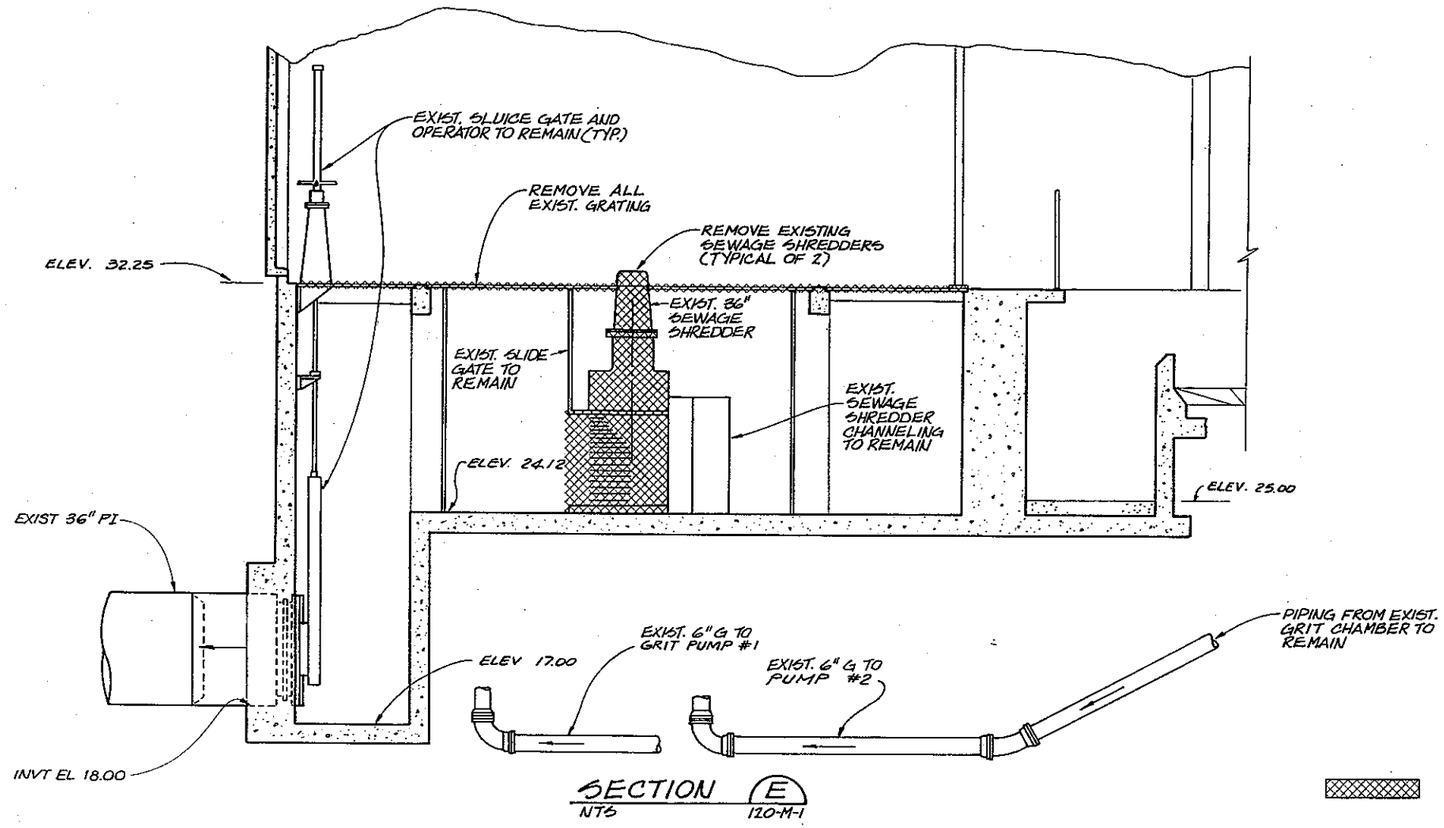

SECTION (E)
NTS 120-M-1

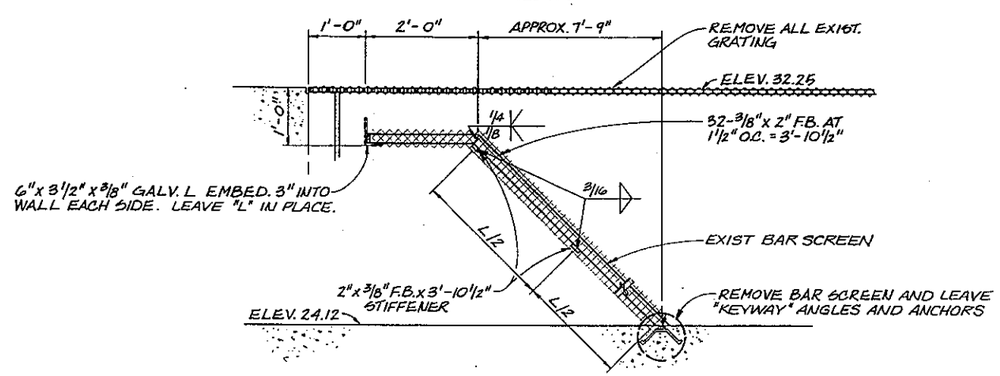

DETAIL (F)
NTS 120-M-1

LEGEND

INDICATES ITEMS INCLUDED IN THE DEMOLITION EXCEPT AS OTHERWISE NOTED.

JOSEPH A. GAUTHIER, STATE OF WASHINGTON, REGISTERED PROFESSIONAL ENGINEER

CH2M HILL

DSGN	J. WODRICH					
DR	P. BAKER					
CHK	J. GAUTHIER					
APVD	J. GAUTHIER	NO.	DATE	REVISION	BY	APVD

REUSE OF DOCUMENTS
THIS DOCUMENT, AND THE IDEAS AND DESIGNS INCORPORATED HEREIN, AS AN INSTRUMENT OF PROFESSIONAL SERVICE, IS THE PROPERTY OF CH2M HILL AND IS NOT TO BE USED, IN WHOLE OR IN PART, FOR ANY OTHER PROJECT WITHOUT THE WRITTEN AUTHORIZATION OF CH2M HILL.
© CH2M HILL

VERIFY SCALES
BAR IS ONE INCH ON ORIGINAL DRAWING.
0 1"
IF NOT ONE INCH ON THIS SHEET, ADJUST SCALES ACCORDINGLY.

CITY OF BELLINGHAM, WASHINGTON
POST POINT WASTEWATER TREATMENT PLANT UPGRADE

HEADWORKS MODIFICATIONS

DEMOLITION SECTIONS

DWG NO. 120-M-3
DATE AUG 1990
PROJ NO. SEA22462.C1

CONTRACT SCREEN

DATE: 6/26/90
DRAWN BY:B. CARR DESIGNED BY:JV WODRICH, G FLOOD
DGN NAME: H:/PROJ2/BELLINGH/BL120M-A.DGN

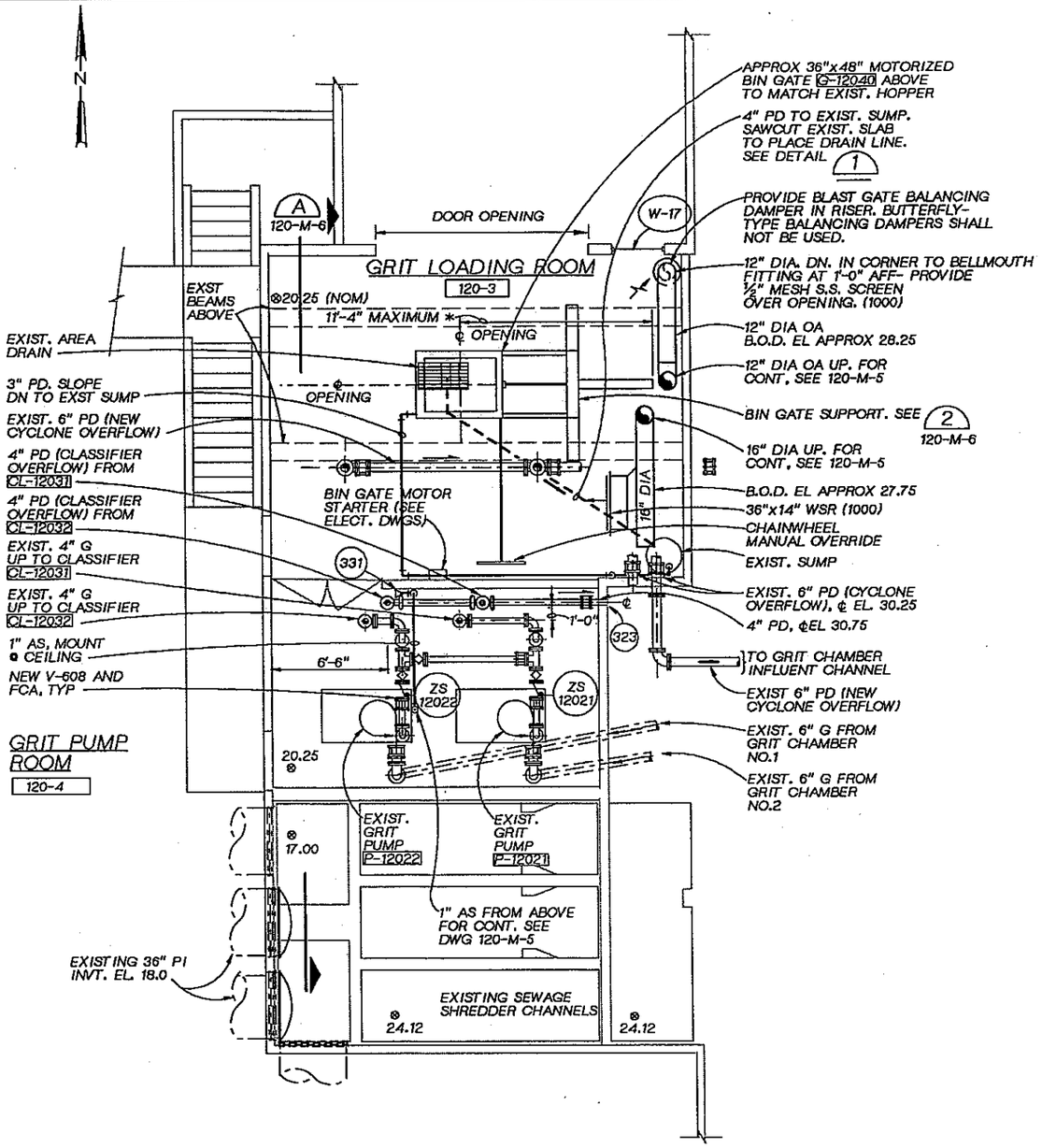

FLOOR PLAN

¼"= 1'-0"

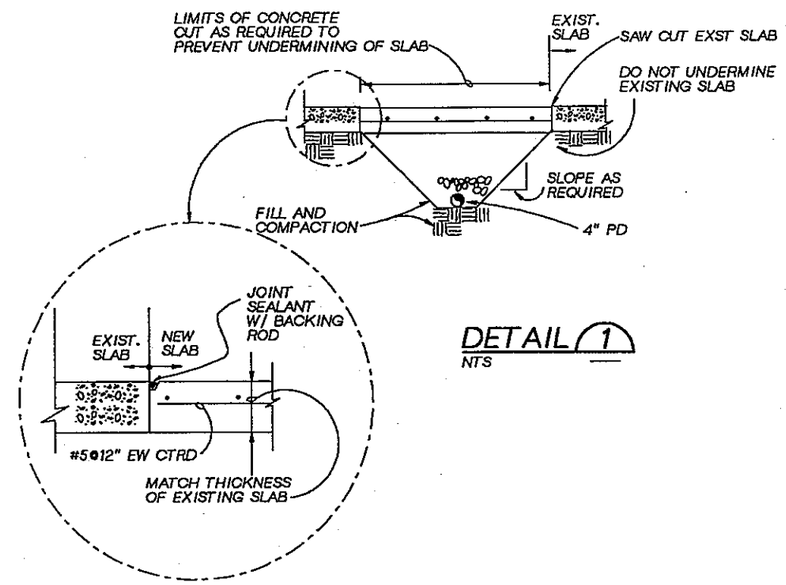

DETAIL 1

NTS

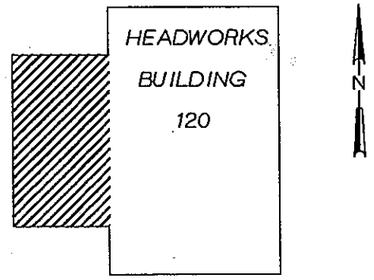

KEY PLAN

DSGN	J. VALDES					
DR	J. WODRICH					
CHK	J. GAUTHIER					
APVD	J. GAUTHIER	NO.	DATE	REVISION	BY	APVD

CH2M HILL

REUSE OF DOCUMENTS
THIS DOCUMENT, AND THE IDEAS AND DESIGNS INCORPORATED HEREIN, AS AN INSTRUMENT OF PROFESSIONAL SERVICE, IS THE PROPERTY OF CH2M HILL AND IS NOT TO BE USED, IN WHOLE OR IN PART, FOR ANY OTHER PROJECT WITHOUT THE WRITTEN AUTHORIZATION OF CH2M HILL.
©CH2M HILL

BAR IS ONE INCH ON ORIGINAL DRAWING.
0 1"
IF NOT ONE INCH ON THIS SHEET, ADJUST SCALES ACCORDINGLY.

CITY OF BELLINGHAM, WASHINGTON
POST POINT WASTEWATER TREATMENT PLANT UPGRADE

HEADWORKS MODIFICATIONS
MECHANICAL AND HVAC
LOWER LEVEL PLAN

DWG NO. 120-M-4
DATE AUG. 1990
PROJ NO. SEA22462.C1

DATE: 8/27/90
DRAWN BY: B. CARR DESIGNED BY:JV WODRICH,G.FLOOD
DGN NAME: H:/PROJ2/BELLINGH/BL120M-B.DGN

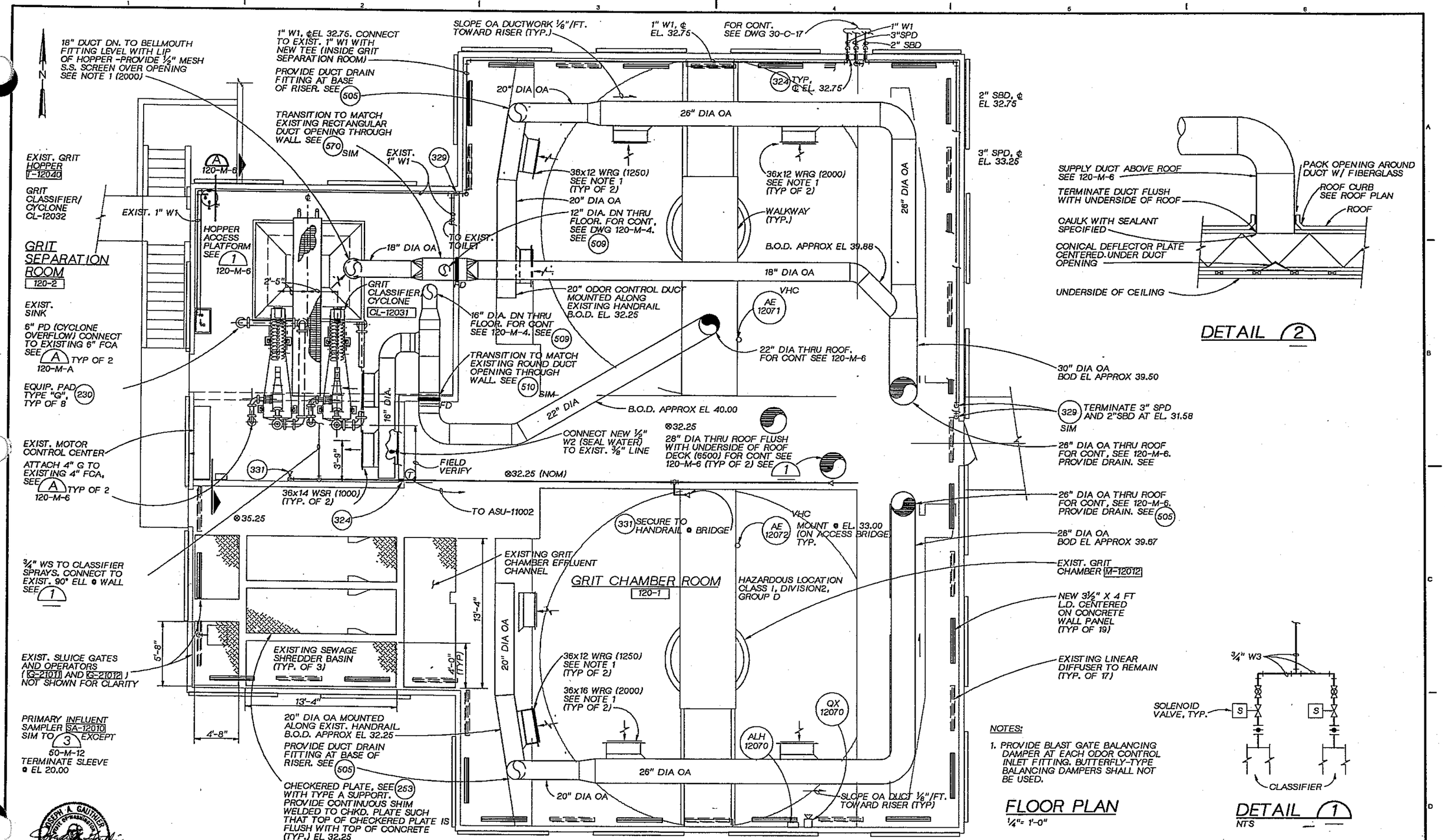

JOSEPH A. GAUTHIER STATE OF WASHINGTON REGISTERED PROFESSIONAL ENGINEER

CH2M HILL

DSGN	J. VALDES, G. FLOOD
DR	J. WODRICH
CHK	J. GAUTHIER
APVD	J. GAUTHIER

NO.	DATE	REVISION	BY	APVD

REUSE OF DOCUMENTS
THIS DOCUMENT, AND THE IDEAS AND DESIGNS INCORPORATED HEREIN, AS AN INSTRUMENT OF PROFESSIONAL SERVICE, IS THE PROPERTY OF CH2M HILL AND IS NOT TO BE USED, IN WHOLE OR IN PART, FOR ANY OTHER PROJECT WITHOUT THE WRITTEN AUTHORIZATION OF CH2M HILL.
©CH2M HILL

BAR IS ONE INCH ON ORIGINAL DRAWING. 0 1"
IF NOT ONE INCH ON THIS SHEET, ADJUST SCALES ACCORDINGLY.

CITY OF BELLINGHAM, WASHINGTON
POST POINT WASTEWATER TREATMENT PLANT UPGRADE

HEADWORKS MODIFICATIONS
MECHANICAL AND HVAC UPPER LEVEL PLAN

DWG NO. 120-M-5
DATE AUG. 1990
PROJ NO. SEA22462.C1

DATE: 8/27/90
DRAWN BY: B. CARR DESIGNED BY: JV WODRICH
DGN NAME: H:/PROJ2/BELLINGH/BL120M-C.DGN

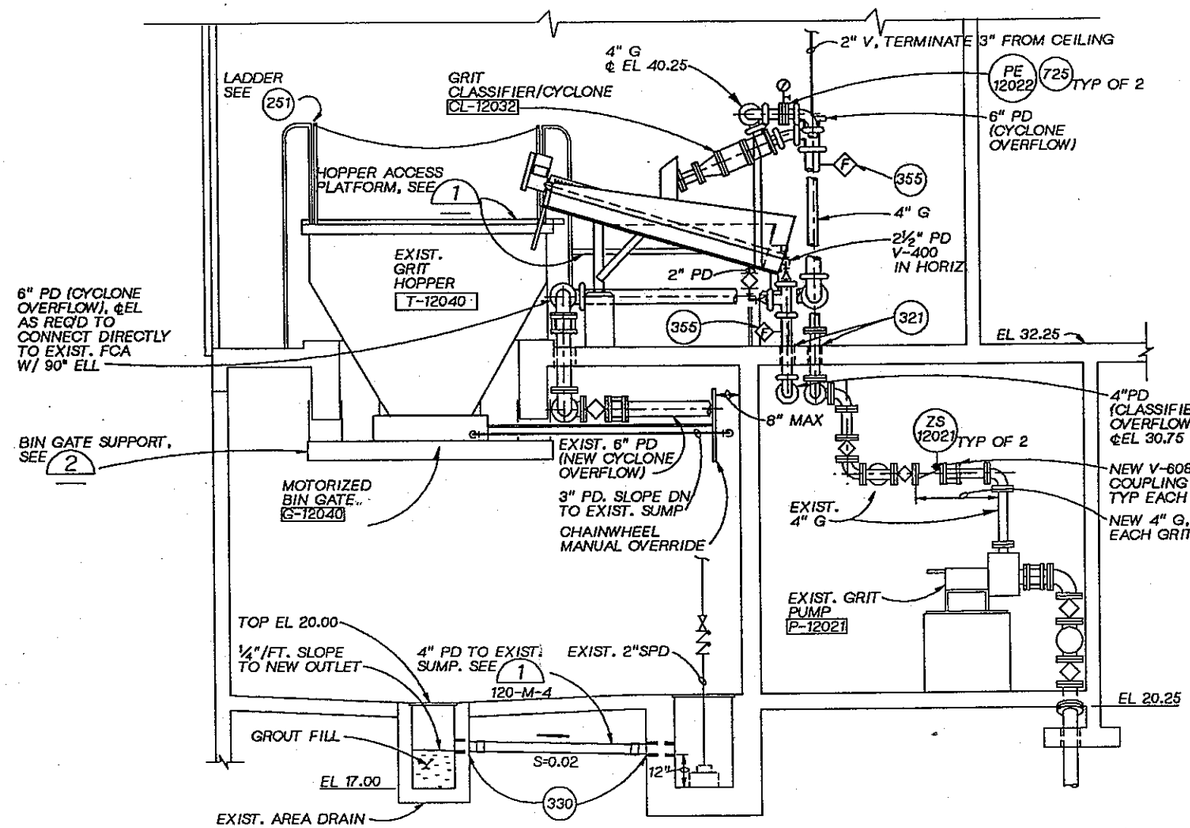

SECTION A
3/8"=1'-0" 120-M-4

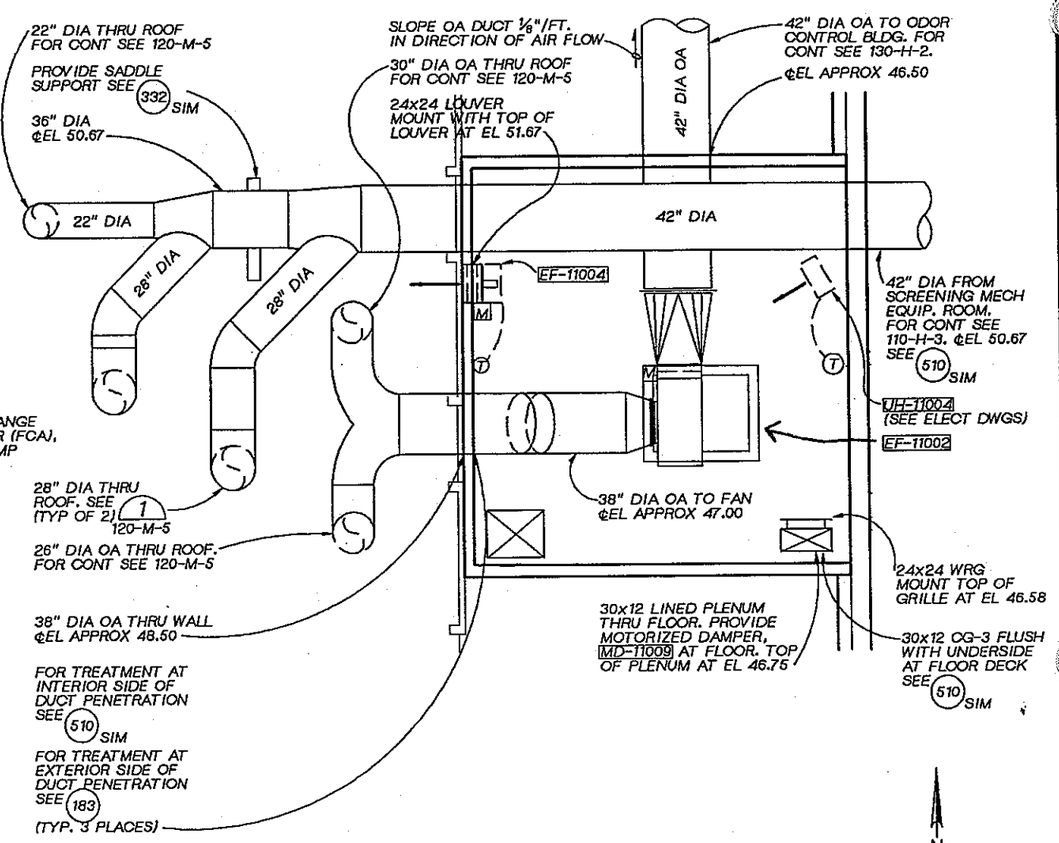

SCREENINGS FAN ROOM
¼"=1'-0"

JOSEPH A. GAUTHIER STATE OF WASHINGTON REGISTERED PROFESSIONAL ENGINEER

CH2M HILL

DSGN	J. VALDES G. FLOOD				
DR	J. WODRICH				
CHK	J. GAUTHIER				
APVD	J. GAUTHIER	NO.	DATE	REVISION	BY	APVD

REUSE OF DOCUMENTS
THIS DOCUMENT, AND THE IDEAS AND DESIGNS INCORPORATED HEREIN, AS AN INSTRUMENT OF PROFESSIONAL SERVICE, IS THE PROPERTY OF CH2M HILL AND IS NOT TO BE USED, IN WHOLE OR IN PART, FOR ANY OTHER PROJECT WITHOUT THE WRITTEN AUTHORIZATION OF CH2M HILL.
©CH2M HILL

BAR IS ONE INCH ON ORIGINAL DRAWING. 0 1"
IF NOT ONE INCH ON THIS SHEET, ADJUST SCALES ACCORDINGLY.

CITY OF BELLINGHAM, WASHINGTON
POST POINT WASTEWATER TREATMENT PLANT UPGRADE

HEADWORKS MODIFICATIONS
MECHANICAL AND HVAC
FAN ROOM PLAN AND SECTIONS

DWG NO. 120-M-6
DATE AUG. 1990
PROJ NO. SEA22462.C1

DATE: 8-26-90
DRAWN BY: GH BURLEY DESIGNED BY:GE BOWER
DGN NAME: H:/PROJ2/BELLINGH/BL130A-A.DGN

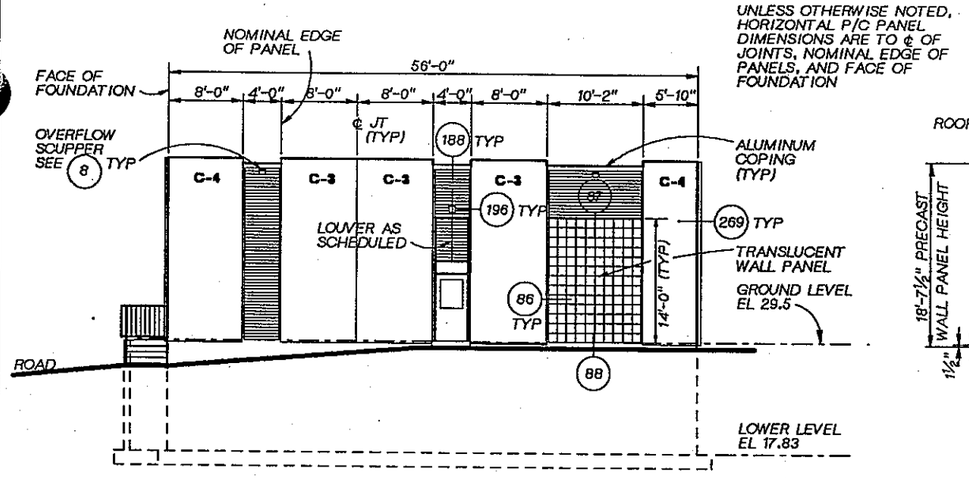

UNLESS OTHERWISE NOTED, HORIZONTAL P/C PANEL DIMENSIONS ARE TO ℄ OF JOINTS, NOMINAL EDGE OF PANELS, AND FACE OF FOUNDATION

WEST ELEVATION

1/8"=1'-0"

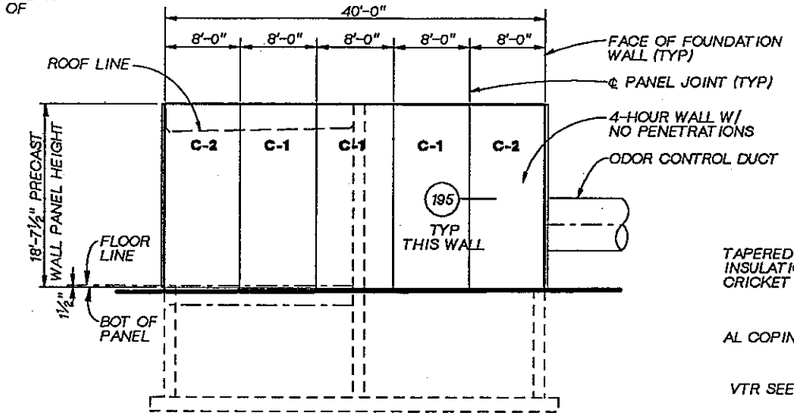

SOUTH ELEVATION

1/8"=1'-0"

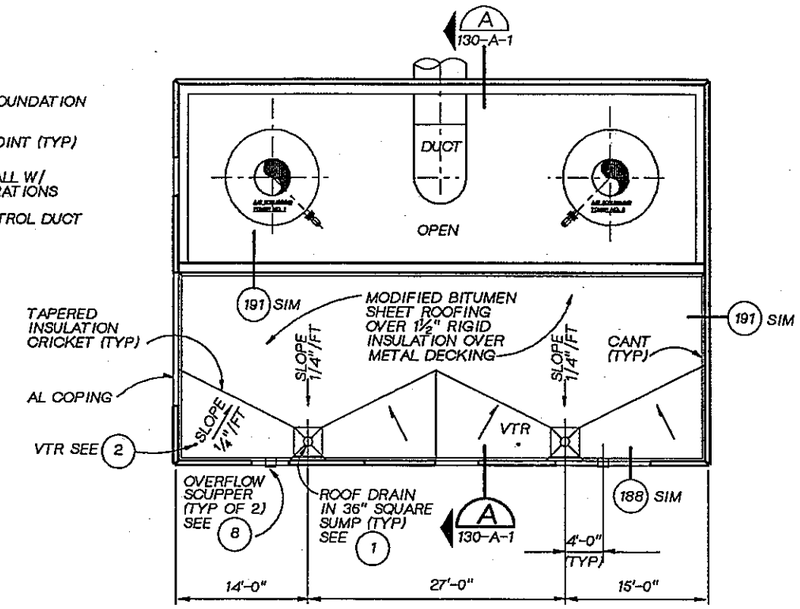

ROOF PLAN

1/8"=1'-0"

Z

NOTES

1. FOR PRECAST ARCHITECTURAL WALL PANEL SCHEDULE SEE DWG. NO. 800-S-12.
2. FOR STANDARD DETAILS ◯ SEE THE "800" SECTION OF THE DWGS.
3. FOR LOUVER SIZES AND TYPES, SEE SPECIFICATION SECTION 10200.
4. FOR EXTERIOR COLORS & FINISHES, SEE SPECIFICATION SECTION 09000.

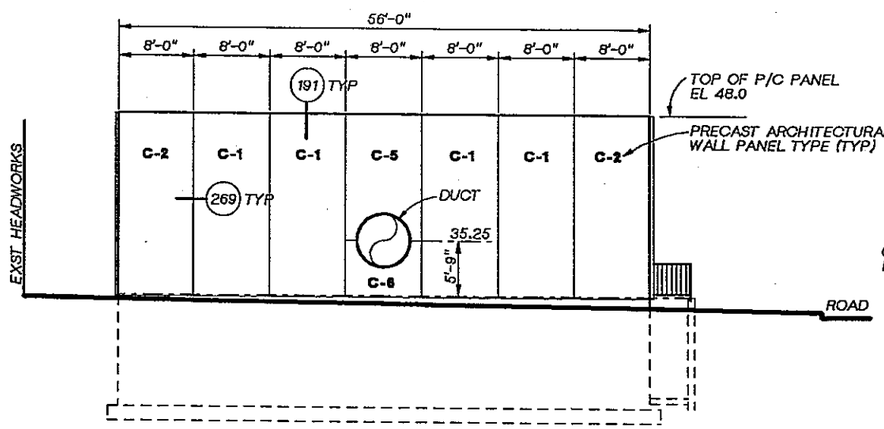

EAST ELEVATION

1/8"=1'-0"

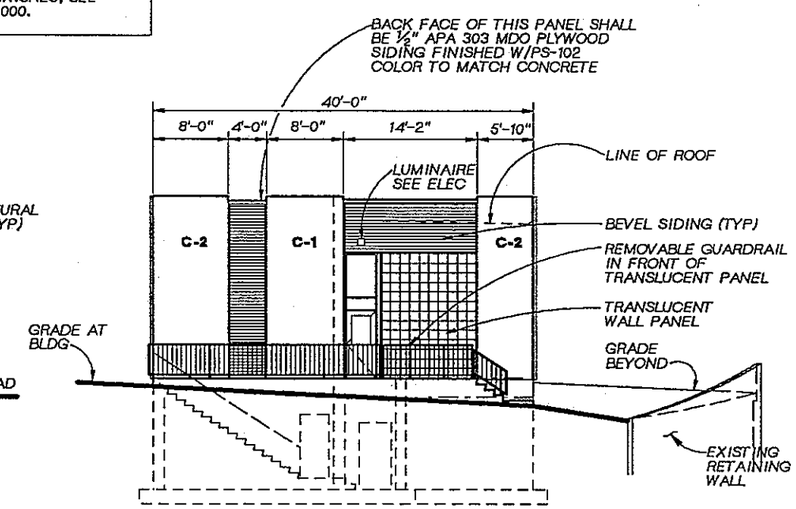

NORTH ELEVATION

1/8"=1'-0"

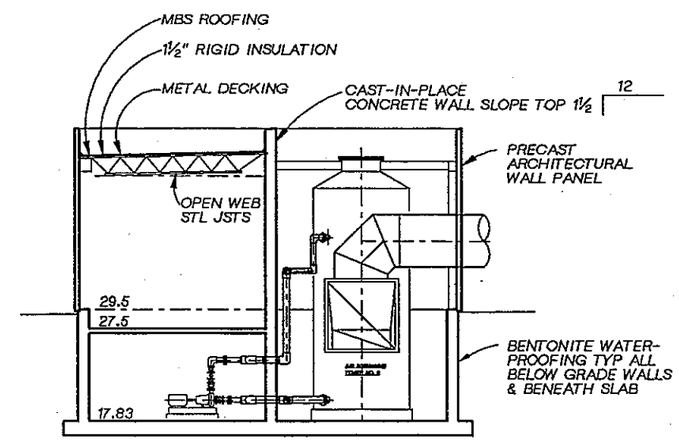

CROSS SECTION A

1/8"=1'-0"

REGISTERED ARCHITECT JOHN L. ROSS STATE OF WASHINGTON

CH2M HILL	DSGN G BOWER				
	DR G BOWER				
	CHK R WHITE				
	APVD J. GAUTHIER	NO.	DATE	REVISION	BY / APVD

REUSE OF DOCUMENTS
THIS DOCUMENT, AND THE IDEAS AND DESIGNS INCORPORATED HEREIN, AS AN INSTRUMENT OF PROFESSIONAL SERVICE, IS THE PROPERTY OF CH2M HILL AND IS NOT TO BE USED, IN WHOLE OR IN PART, FOR ANY OTHER PROJECT WITHOUT THE WRITTEN AUTHORIZATION OF CH2M HILL.
©CH2M HILL

BAR IS ONE INCH ON ORIGINAL DRAWING. 0 1"
IF NOT ONE INCH ON THIS SHEET, ADJUST SCALES ACCORDINGLY.

CITY OF BELLINGHAM, WASHINGTON
POST POINT WASTEWATER TREATMENT PLANT UPGRADE

PRELIMINARY TREATMENT ODOR CONTROL
ARCHITECTURAL
ELEVATIONS, SECTION & ROOF PLAN

DWG NO. 130-A-1
DATE AUG. 1990
PROJ NO. SEA22462.C1

DATE: 8-24-90
DRAWN BY: BBL DESIGNED BY: P. GUENTHER
DGN NAME: H:/PROJ2/BELLINGH/BL130S-A.DGN

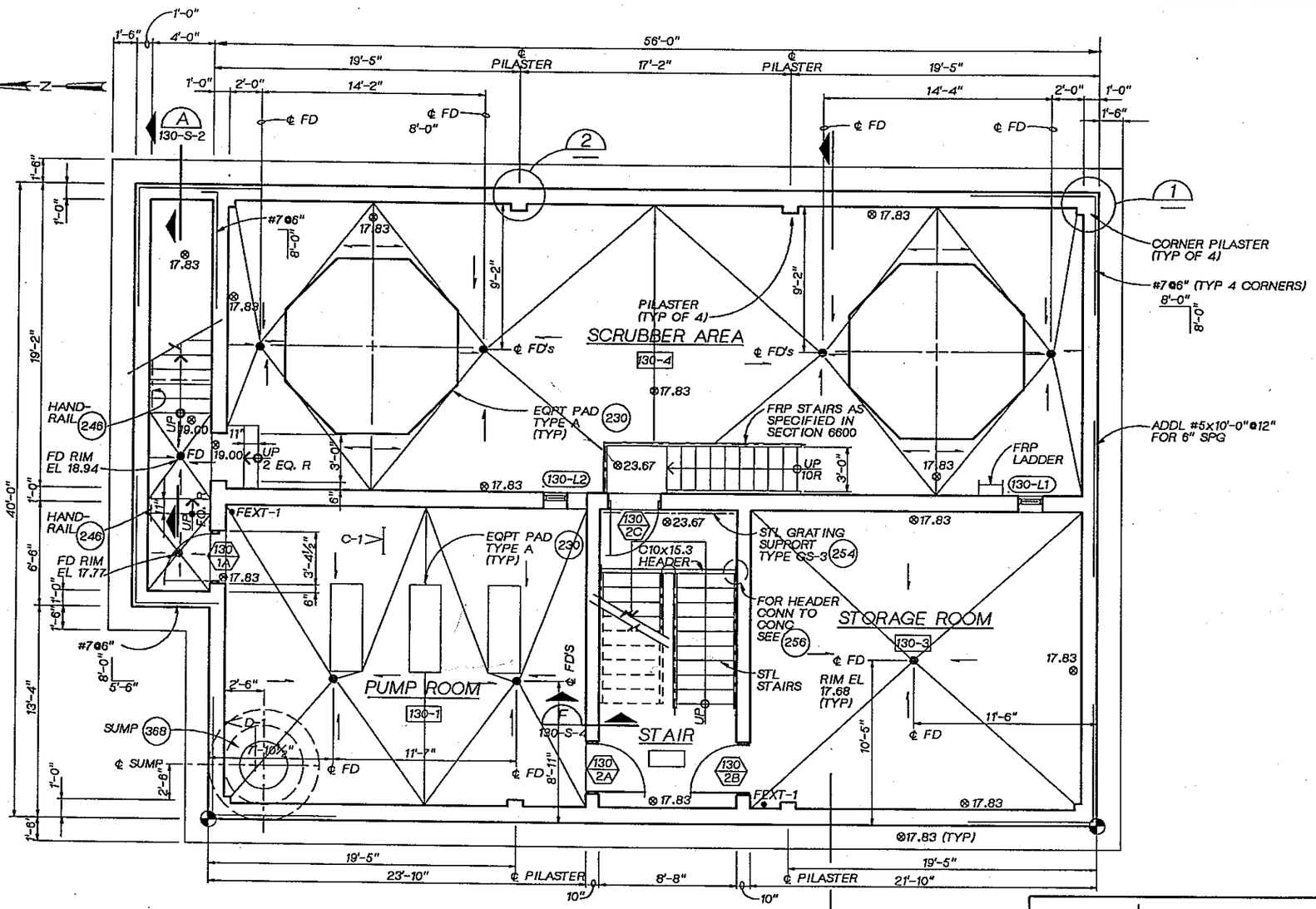

FOUNDATION PLAN

1/4" = 1'-0"

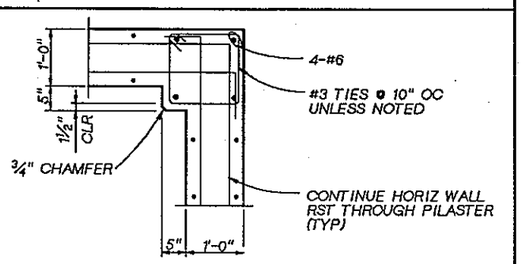

CORNER PILASTER DETAIL 1

3/4"=1'-0"

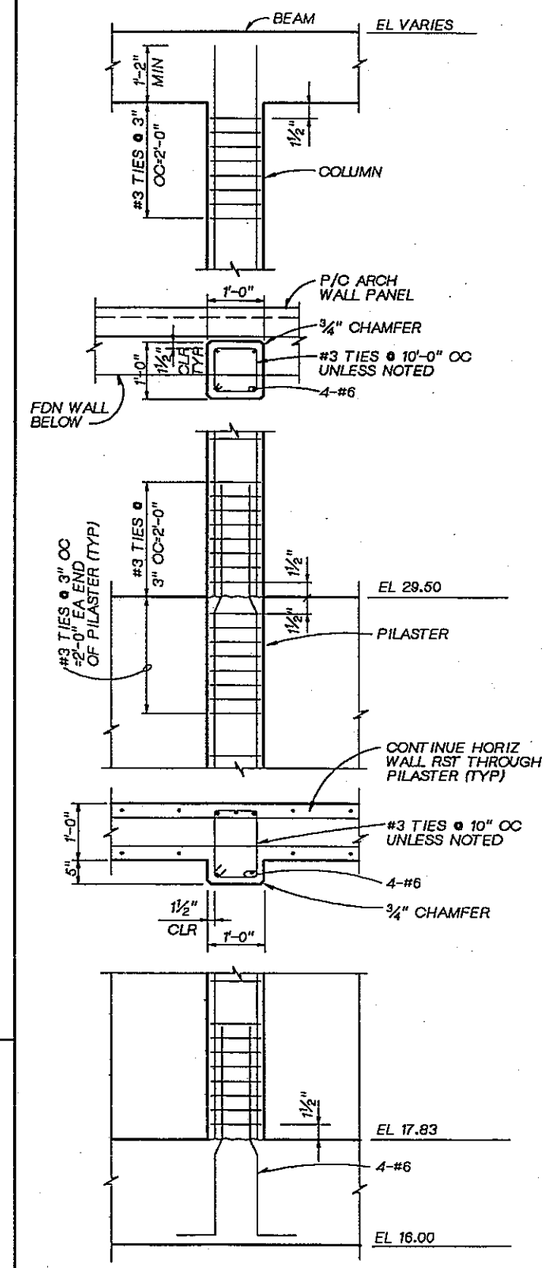

COLUMN/PILASTER DETAIL 2

3/4"=1'-0"

130-S-1
130-S-2

STRUCTURAL NOTES:

1. DESIGN LOADS:
   GROUND FLOOR LL - 100 PSF PLUS
   STORAGE TANK LOADS:-
   A. HYDROGEN PEROXIDE TANK - 52 KIP (FILLED)
   B. SODIUM HYDROXIDE TANK - 35 KIP (FILLED)
2. FOR GENERAL STRUCTURAL NOTES SEE 201
3. FOR CORNER REINF SEE 202
4. FOR TYP HORIZ REINF, SEE BLDG SECTIONS.
5. FOR ADDL REINF REQD AT SLAB AND WALL PENETRATIONS AND OPENINGS, SEE 204
6. DESIGN AND FABRICATION OF ALL FIBERGLASS (FRP) LADDERS, STAIRS, AND ELEVATED WALKWAYS SHALL BE AS SPECIFIED.
7. FOR STL STAIR DETAILS NOT SHOWN, SEE 249
8. FOR COORDINATES, SEEDWG 30-C-3.

LINDA M. KORBUS — STATE OF WASHINGTON — 22364 — REGISTERED PROFESSIONAL ENGINEER

CH2M HILL

DSGN	P GUENTHER				
DR	B LAZARO				
CHK	W BENNETT				
APVD	J GAUTHIER	NO.	DATE	REVISION	BY / APVD

REUSE OF DOCUMENTS
THIS DOCUMENT, AND THE IDEAS AND DESIGNS INCORPORATED HEREIN, AS AN INSTRUMENT OF PROFESSIONAL SERVICE, IS THE PROPERTY OF CH2M HILL AND IS NOT TO BE USED, IN WHOLE OR IN PART, FOR ANY OTHER PROJECT WITHOUT THE WRITTEN AUTHORIZATION OF CH2M HILL.
©CH2M HILL

BAR IS ONE INCH ON ORIGINAL DRAWING. 0 1"
IF NOT ONE INCH ON THIS SHEET, ADJUST SCALES ACCORDINGLY.

CITY OF BELLINGHAM, WASHINGTON
POST POINT WASTEWATER TREATMENT PLANT UPGRADE

PRELIMINARY TREATMENT ODOR CONTROL
STRUCTURAL
FOUNDATION PLAN AND DETAILS

DWG NO. 130-S-1
DATE AUG. 1990
PROJ NO. SEA22452.C1

DATE: 8-24-90
DRAWN BY: BBL DESIGNED BY: P GUENTHER
DGN NAME: H:/PROJ2/BELLINGH/BL130S-B.DGN

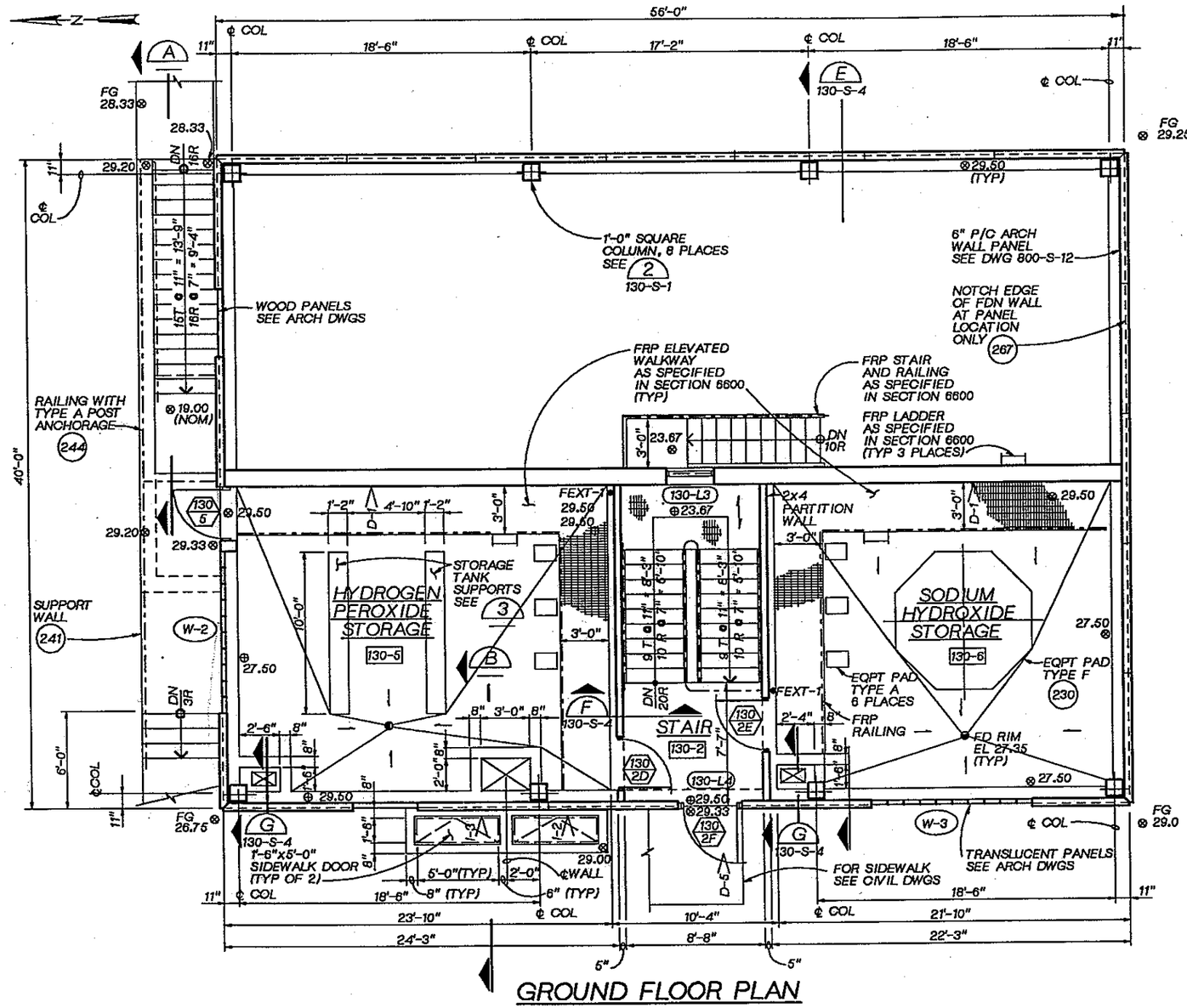

GROUND FLOOR PLAN
1/4" =1'-0"

ARCHITECTURAL NOTES:

1. FOR "GENERAL NOTES," SEE DWG. NO. 800-A-1.
2. FOR "INTERIOR FINISH SCHEDULE" SEE SPECIFICATION SECTION 09000.
3. FOR "DOOR AND HARDWARE SCHEDULE" SEE SPECIFICATION SECTION 08001.
4. FOR PRECAST CONCRETE WALL PANEL AND OPENING DIMENSIONS, SEE ARCITECTURAL EXTERIOR ELEVATIONS.
5. FOR LOUVER SIZES AND DETAILS, SEE SPECIFICATION SECTION 10200.

BUILDING CODE NOTES:

APPLICABLE CODES: 1988 UBC
1988 UFC

1. TYPE OF OCCUPANCY: H-3, H-7
2. TYPE OF CONSTRUCTION: VN
3. NUMBER OF STORIES
   ACTUAL: ONE + BASEMENT
   ALLOWED: ONE
4. ACTUAL FLOOR AREA
   - LOWER LEVEL: 1002sf
   - GROUND LEVEL: 1095sf
   - OUTSIDE SCRUBBERS: 966sf

   ALLOWABLE FLOOR AREA: 5,000sf
5. SPRINKLER SYSTEM REQUIRED INTERIOR OF BOTH LEVELS
6. OCCUPANT LOAD
   - LOWER LEVEL: 1002/300 = 3
   - GROUND LEVEL: 1095/300 = 4
   - OUTSIDE SCRUBBERS: 966/300 = 3

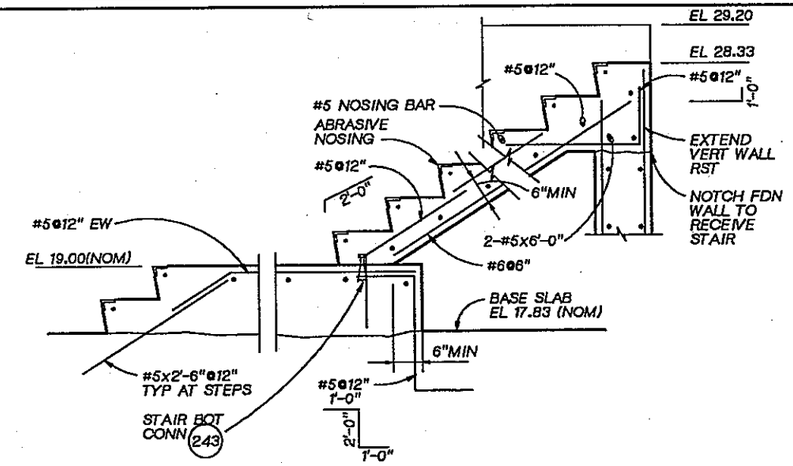

SECTION A
3/4"=1'-0"
130-S-1
130-S-2

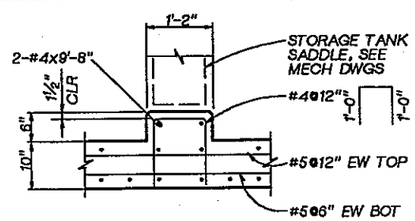

SECTION

NOTE:
TANK SADDLE AND CONN BY TANK MFR.

DETAIL 3
3/4"=1'-0"

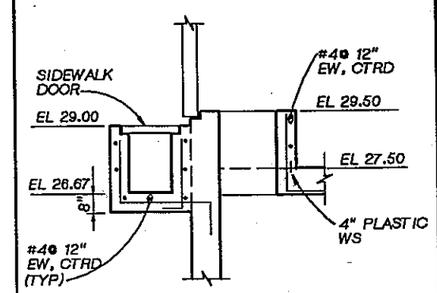

SECTION B
3/8"=1'-0"

REUSE OF DOCUMENTS
THIS DOCUMENT, AND THE IDEAS AND DESIGNS INCORPORATED HEREIN, AS AN INSTRUMENT OF PROFESSIONAL SERVICE, IS THE PROPERTY OF CH2M HILL AND IS NOT TO BE USED, IN WHOLE OR IN PART, FOR ANY OTHER PROJECT WITHOUT THE WRITTEN AUTHORIZATION OF CH2M HILL.
©CH2M HILL

BAR IS ONE INCH ON ORIGINAL DRAWING.
0 1"
IF NOT ONE INCH ON THIS SHEET, ADJUST SCALES ACCORDINGLY.

DSGN	P GUENTHER				
DR	B LAZARO				
CHK	R WHITE				
APVD	J GAUTHIER	NO.	DATE	REVISION	BY	APVD

CH2M HILL

CITY OF BELLINGHAM, WASHINGTON
POST POINT WASTEWATER TREATMENT PLANT UPGRADE

PRELIMINARY TREATMENT ODOR CONTROL
STRUCTURAL
GROUND LEVEL FLOOR PLAN

DWG NO. 130-S-2
DATE AUG. 1990
PROJ NO. SEA22462.C1

DATE: 8-25-90
DRAWN BY: BBL DESIGNED BY: PG
DGN NAME: H:/PROJ2/BELLINGH/BL130S-C.DGN

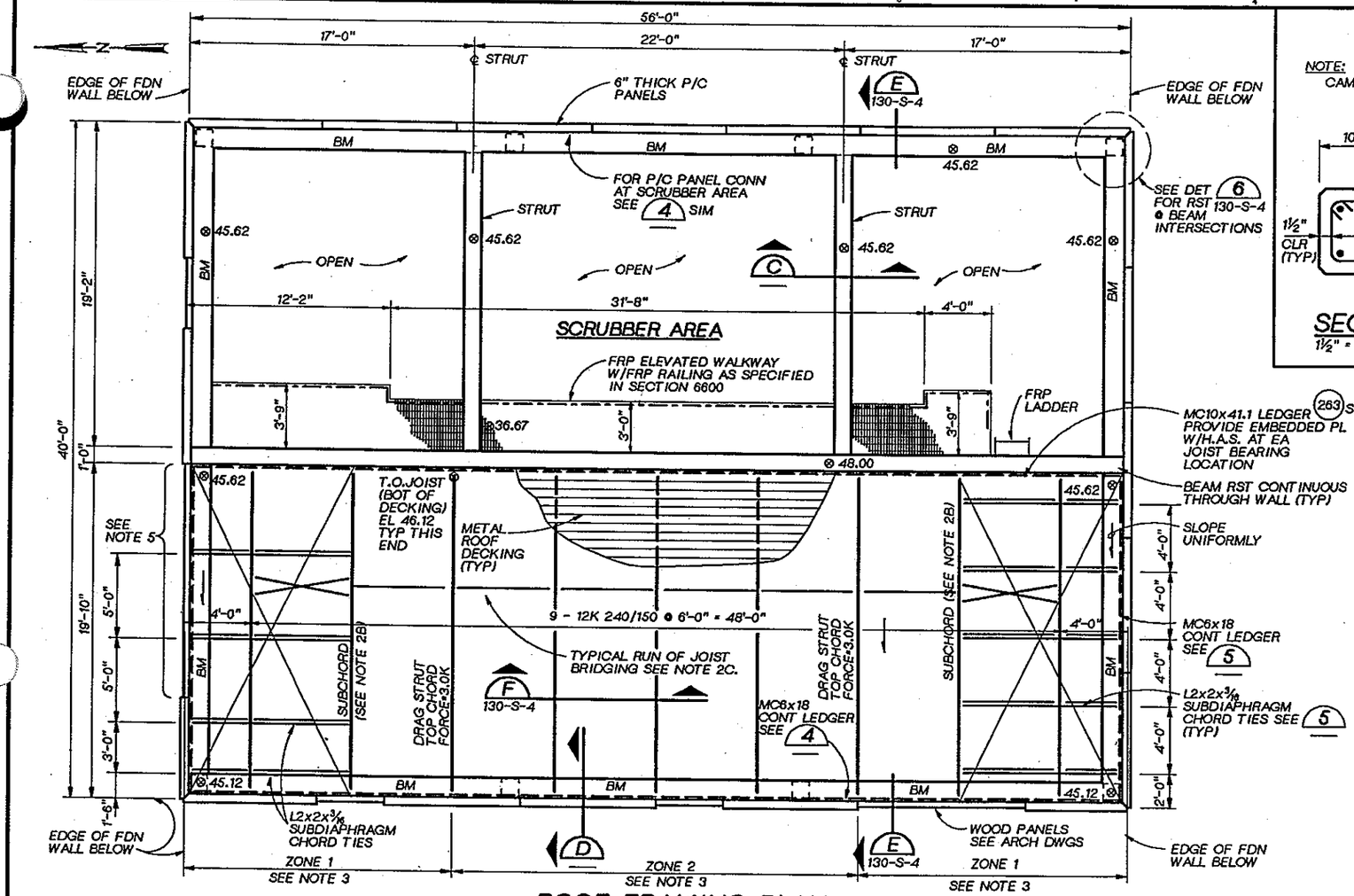

ROOF FRAMING PLAN

1/4" = 1'-0"

NOTE:
CAMBER STRUTS 1/2" @ MIDSPAN

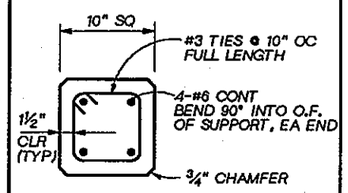

SECTION C

1 1/2" = 1'-0"

ROOF PLAN NOTES

1. ROOF DESIGN LOADS:

   DEAD LOAD: 20 PSF
   LIVE LOAD: 25 PSF
   UPLIFT (NET): 15 PSF

2. OPEN WEB STEEL JOISTS:

   A. JOIST MANUFACTURER SHALL DESIGN ALL JOISTS TO SUPPORT A 500 POUND CONCENTRATED LOAD LOCATED AT ANY POINT ALONG THE BOTTOM CHORD. THIS LOAD IS IN ADDITION TO THE DESIGN LOADS AS SHOWN.

   B. STEEL JOISTS SHALL BE DESIGNED FOR THE FOLLOWING ADDITIONAL LOADS APPLIED CONCURRENTLY WITH THE ROOF DESIGN LOADS:

   SUBCHORDS:
   JOISTS DESIGNATED AS SUBCHORDS SHALL BE DESIGNED FOR AN ADDITIONAL TOP CHORD FORCE OF 1.5 KIP (TENSION OR COMPRESSION) DUE TO WIND OR SEISMIC FORCES.

   JOIST BEARING SEATS:
   MANUFACTURER SHALL DESIGN JOIST BEARING SEATS FOR THE LOADS GIVEN IN DETAIL 261. DESIGN FORCE 'V' SHALL BE 4.5 KIPS.

   C. NUMBER OF ROWS AND SPACING OF BRIDGING AS REQD BY JOIST MANUFACTURERS. BRIDGING SHALL NOT BE CONNECTED TO PRECAST ARCH WALL PANELS OR WOOD PANELS.

3. METAL ROOF DECKING:

   METAL ROOF DECKING SHALL BE 1-1/2" - 18 GAGE GALVANIZED STEEL, VERCO HSB-36 OR EQUIVALENT. MINIMUM SECTION PROPERTIES SHALL BE: I_+=.302 in^4, $+S_+$=.322 in^3, AND $-S_+$=.335 in^3. CONNECTION OF ROOF DECKING SHALL BE AS FOLLOWS:

   ZONE 1: (7) -5/8" PUDDLE WELDS TO SUPPORTS PER 36" SHEET. BUTTON PUNCH SIDE LAP CONNECTION AT 2'-0" OC, UNLESS OTHERWISE NOTED. MIN LATERAL SHEAR CAPACITY= 740 LB/FT

   ZONE 2: (5) -5/8" PUDDLE WELDS TO SUPPORTS PER 36" SHEET. BUTTON PUNCH SIDE LAP CONNECTION AT 2'-0" OC, UNLESS OTHERWISE NOTED. MIN LATERAL SHEAR CAPACITY= 530 LB/FT

4. CAMBER BEAMS PER DETAIL 221

5. CONNECT CONTINUOUS LEDGER CHANNEL TO BEAM AS SHOWN IN DETAIL 4. PROVEDE 4 CONNECTIONS @ EQUAL SPA IN REGION SHOWN.

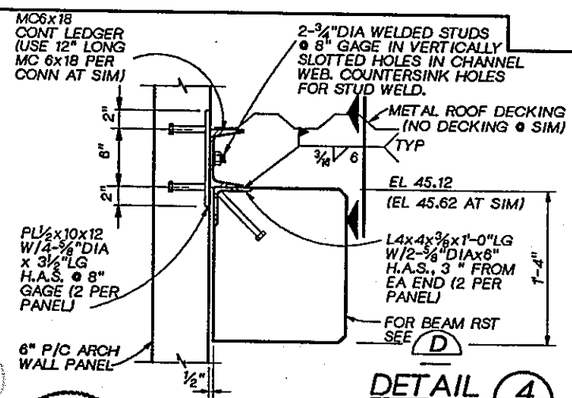

DETAIL 4

1 1/2" = 1'-0"

SECTION

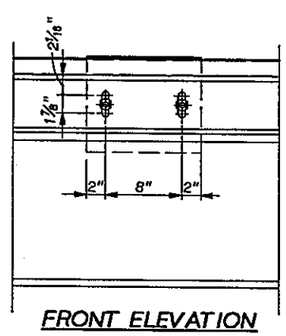

FRONT ELEVATION

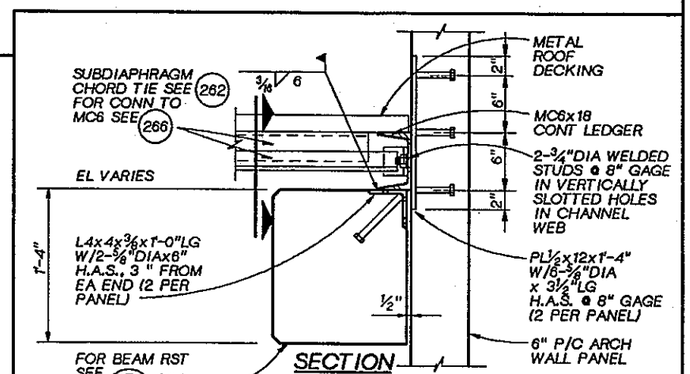

SECTION

DETAIL 5

1 1/2" = 1'-0"

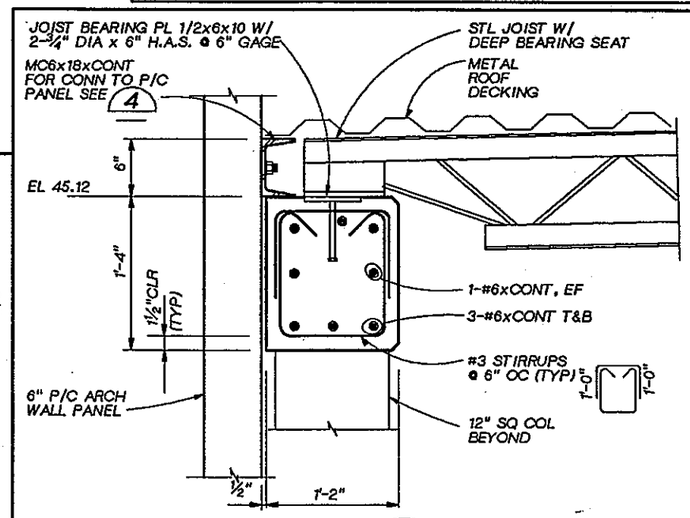

SECTION D

1 1/2" = 1'-0" 130-S-4

DSGN P. GUENTHER					
DR R. FRIBERG					
CHK W. BENNETT					
APVD J GAUTHIER	NO.	DATE	REVISION	BY	APVD

CH2M HILL

REUSE OF DOCUMENTS
THIS DOCUMENT, AND THE IDEAS AND DESIGNS INCORPORATED HEREIN, AS AN INSTRUMENT OF PROFESSIONAL SERVICE, IS THE PROPERTY OF CH2M HILL AND IS NOT TO BE USED, IN WHOLE OR IN PART, FOR ANY OTHER PROJECT WITHOUT THE WRITTEN AUTHORIZATION OF CH2M HILL.
©CH2M HILL

BAR IS ONE INCH ON ORIGINAL DRAWING.
0 1"
IF NOT ONE INCH ON THIS SHEET, ADJUST SCALES ACCORDINGLY.

CITY OF BELLINGHAM, WASHINGTON
POST POINT WASTEWATER TREATMENT PLANT UPGRADE

PRELIMINARY TREATMENT ODOR CONTROL
STRUCTURAL
ROOF FRAMING PLAN & DETAILS

DWG NO. 130-S-3
DATE AUG. 1990
PROJ NO. SEA22462.C1

DATE: 8-26-90
DRAWN BY: BBL DESIGNED BY: P. GUENTHER
DGN NAME: H:/PROJ2/BELLINGH/BL130S-D.DGN

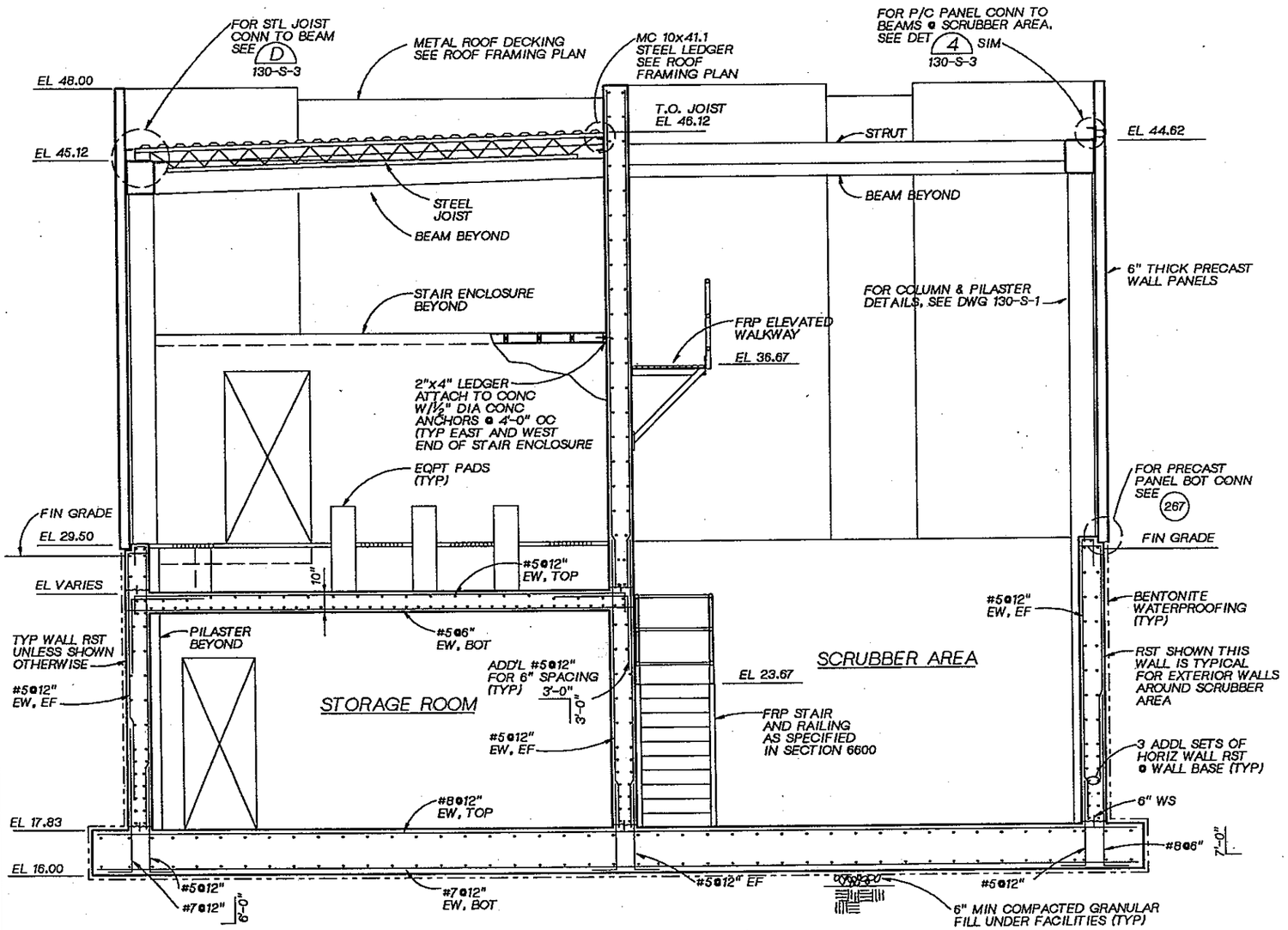

SECTION E
3/8" = 1'-0"
130-S-1
130-S-2
130-S-3

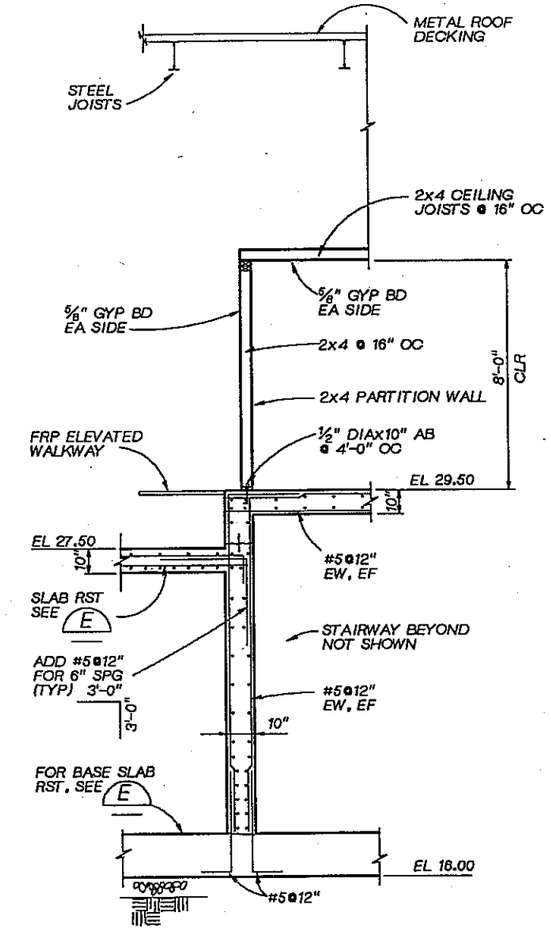

SECTION F
3/8" = 1'-0"
130-S-1
130-S-2
130-S-3

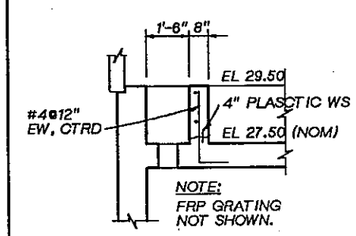

SECTION G
3/8" =1'-0"
130-S-2

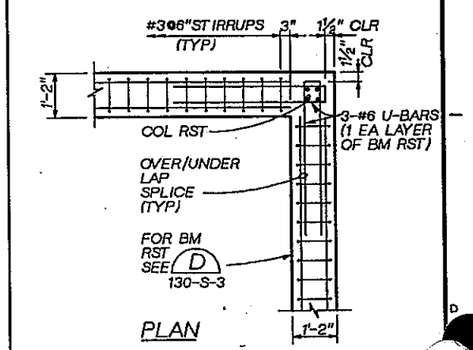

PLAN
DETAIL 6
½" = 1'-0"
130-S-3

CH2M HILL

DSGN	P GUENTHER
DR	B LAZARO
CHK	W BENNETT
APVD	J. GAUTHIER

NO.	DATE	REVISION	BY	APVD

REUSE OF DOCUMENTS
THIS DOCUMENT, AND THE IDEAS AND DESIGNS INCORPORATED HEREIN, AS AN INSTRUMENT OF PROFESSIONAL SERVICE, IS THE PROPERTY OF CH2M HILL AND IS NOT TO BE USED, IN WHOLE OR IN PART, FOR ANY OTHER PROJECT WITHOUT THE WRITTEN AUTHORIZATION OF CH2M HILL.
©CH2M HILL

BAR IS ONE INCH ON ORIGINAL DRAWING.
0 1"
IF NOT ONE INCH ON THIS SHEET, ADJUST SCALES ACCORDINGLY.

CITY OF BELLINGHAM, WASHINGTON
POST POINT WASTEWATER TREATMENT PLANT UPGRADE

PRELIMINARY TREATMENT ODOR CONTROL
STRUCTURAL
SECTIONS AND DETAILS

DWG NO. 130-S-4
DATE AUG. 1990
PROJ. NO. SEA22462.C1

DRAWN BY: M. MOORE DESIGNED BY: M. MOORE
DGN NAME: H:/PROJ2/BELLINGH/BL130M-A.DGN

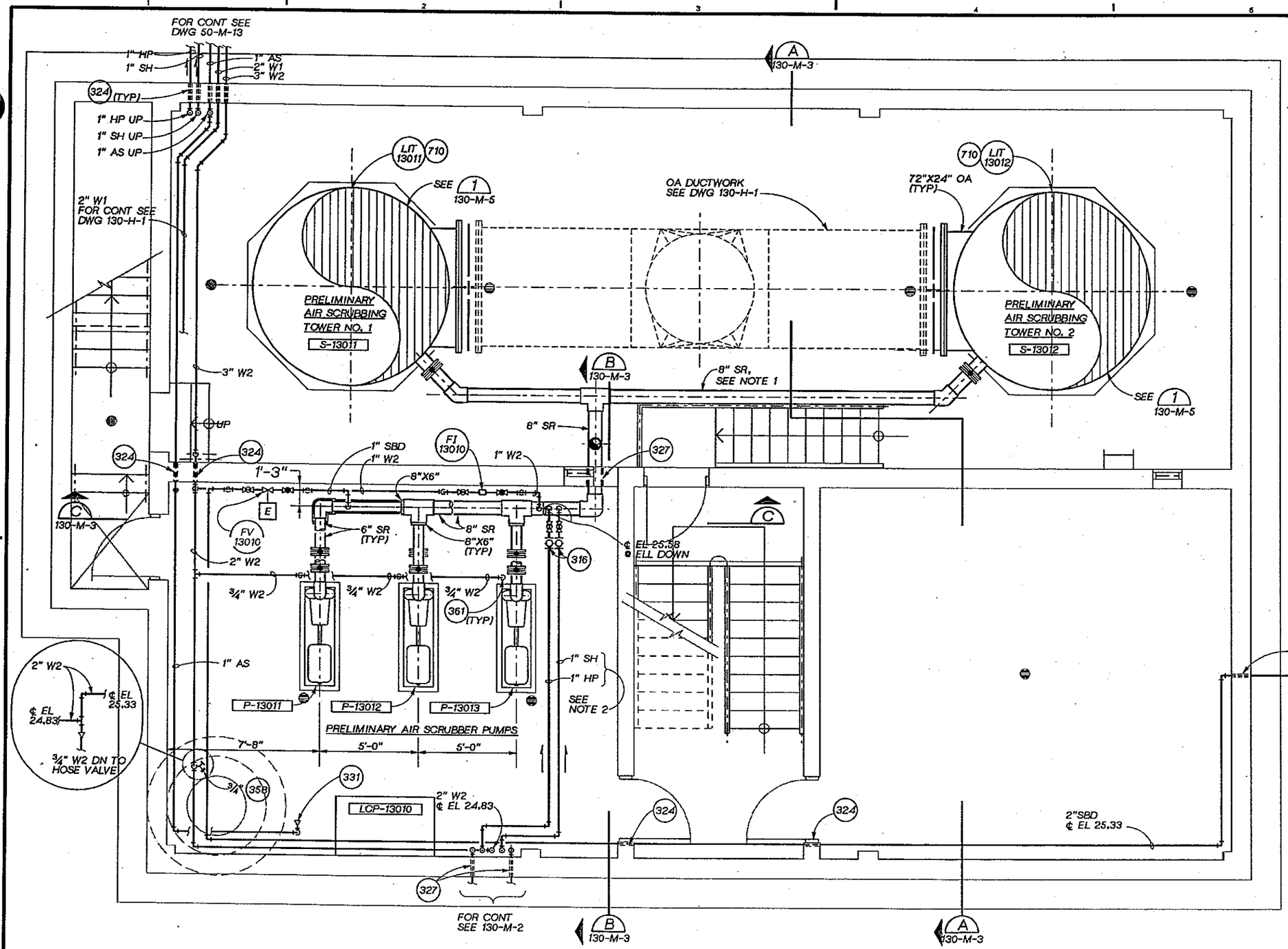

LOWER LEVEL PLAN

3/8" = 1'-0"

NOTES:

1. INSULATE AND HEAT TRACE OUTDOOR PIPING AS NOTED IN PIPING & VALVE SCHEDULE.
2. SLOPE HP AND SH PIPES DOWN AT MINIMUM 1/8" PER FOOT IN DIRECTION OF ARROW.

JOSEPH A. GAUTHIER, STATE OF WASHINGTON, REGISTERED PROFESSIONAL ENGINEER

CH2M HILL

DSGN	M. HIGHTREE				
DR	M. MOORE				
CHK	J. MACKEY				
APVD	J. GAUTHIER	NO.	DATE	REVISION	BY	APVD

REUSE OF DOCUMENTS
THIS DOCUMENT, AND THE IDEAS AND DESIGNS INCORPORATED HEREIN, AS AN INSTRUMENT OF PROFESSIONAL SERVICE, IS THE PROPERTY OF CH2M HILL AND IS NOT TO BE USED, IN WHOLE OR IN PART, FOR ANY OTHER PROJECT WITHOUT THE WRITTEN AUTHORIZATION OF CH2M HILL.
©CH2M HILL

VERIFY SCALE
BAR IS ONE INCH ON ORIGINAL DRAWING.
0 1"
IF NOT ONE INCH ON THIS SHEET, ADJUST SCALES ACCORDINGLY.

CITY OF BELLINGHAM, WASHINGTON
POST POINT WASTEWATER TREATMENT PLANT UPGRADE

PRELIMINARY TREATMENT ODOR CONTROL
MECHANICAL
LOWER LEVEL PLAN

DWG NO. 130-M-1
DATE AUG. 1990
PROJ NO. SEA22462.C1

OVERLAY IDENTIFICATION: COMPOSITE, OVERLAY, PROJID, FILE, GEN

DRAWN BY: M. MOORE DESIGNED BY: M. MOORE
DGN NAME: H:/PROJ2/BELLINGH/BL130M-B.DGN

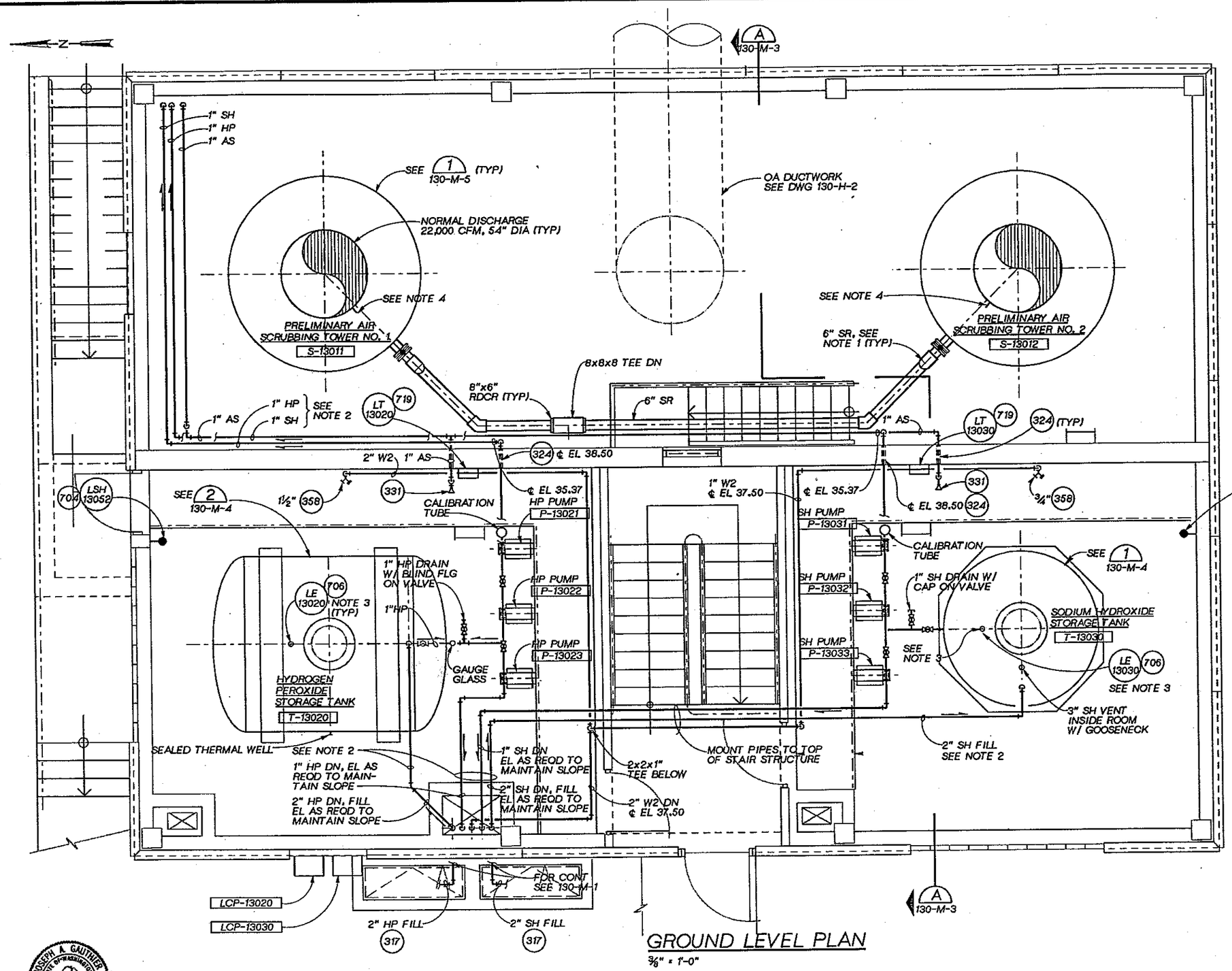

GROUND LEVEL PLAN

3/8" = 1'-0"

NOTES:

1. INSULATE AND HEAT TRACE OUTDOOR PIPING AS NOTED IN PIPING & VALVE SCHEDULE.
2. SLOPE HP AND SH PIPES DOWN AT MINIMUM 1/8" PER FOOT IN DIRECTION OF ARROW. FOR CONT SEE DWG 130-M-1
3. MOUNT INSTRUMENT WITH 316 SST HARDWARE.
4. AIR QUALITY SAMPLE POINT. MOUNT 1/4" V335 TO SIDE OF DUCT USING THREAD-O-LET.

JOSEPH A. GAUTHIER STATE OF WASHINGTON REGISTERED PROFESSIONAL ENGINEER

CH2M HILL

DSGN	M. HIGHTREE					
DR	M. MOORE					
CHK	J. MACKEY					
APVD	J. GAUTHIER	NO.	DATE	REVISION	BY	APVD

REUSE OF DOCUMENTS
THIS DOCUMENT, AND THE IDEAS AND DESIGNS INCORPORATED HEREIN, AS AN INSTRUMENT OF PROFESSIONAL SERVICE, IS THE PROPERTY OF CH2M HILL AND IS NOT TO BE USED, IN WHOLE OR IN PART, FOR ANY OTHER PROJECT WITHOUT THE WRITTEN AUTHORIZATION OF CH2M HILL.
©CH2M HILL

VERIFY SCALE
BAR IS ONE INCH ON ORIGINAL DRAWING.
0 1"
IF NOT ONE INCH ON THIS SHEET, ADJUST SCALES ACCORDINGLY.

CITY OF BELLINGHAM, WASHINGTON
POST POINT WASTEWATER TREATMENT PLANT UPGRADE

PRELIMINARY TREATMENT ODOR CONTROL
MECHANICAL
GROUND LEVEL PLAN

DWG NO. 130-M-2
DATE AUG. 1990
PROJ. NO. SEA22462.C1

DRAWN BY: M. MOORE DESIGNED BY: M. MOORE
DGN NAME: H:/PROJ2/BELLINGH/BL130M-C.DGN

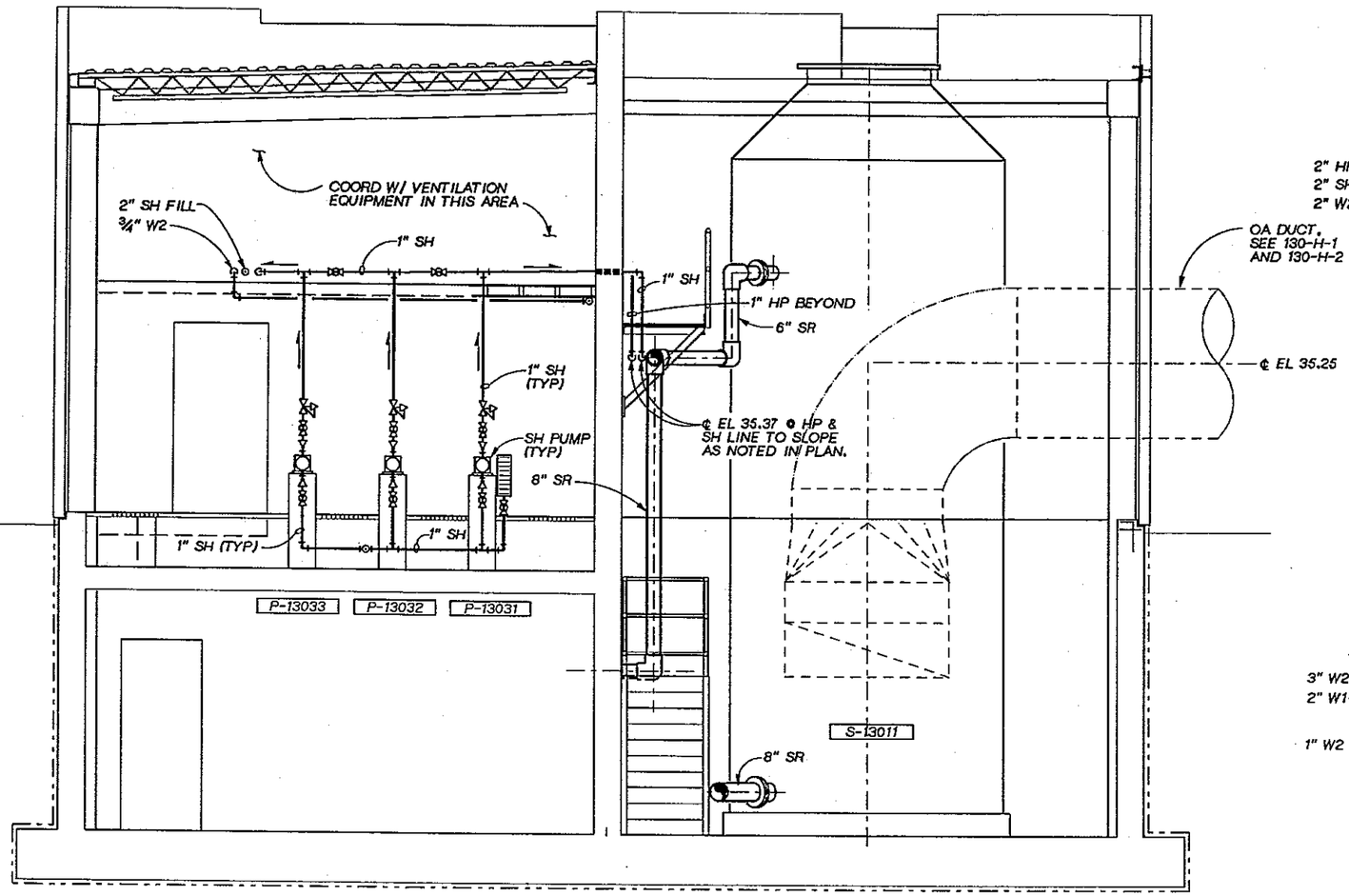

SECTION A
3/8" = 1'-0"
130-M-1
130-M-2

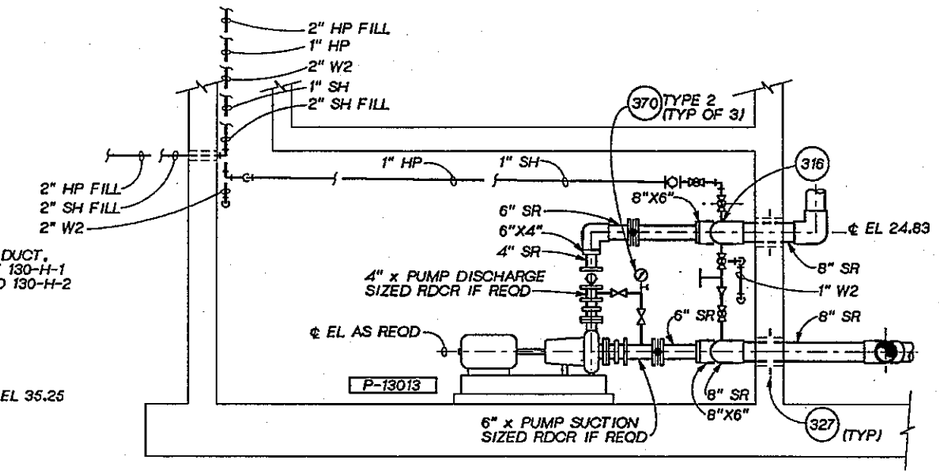

SECTION B
3/8" = 1'-0"
130-M-1

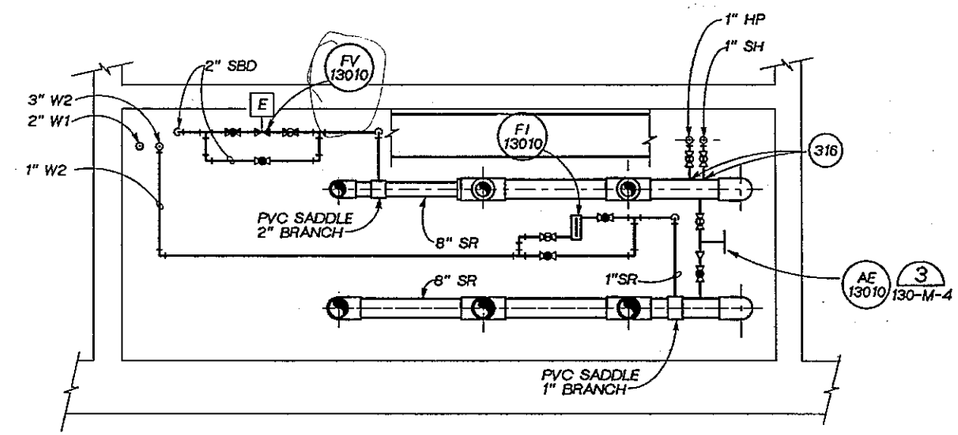

SECTION C
3/8" = 1'-0"
130-M-1

JOSEPH A. GAUTHIER STATE OF WASHINGTON REGISTERED PROFESSIONAL ENGINEER

CH2M HILL

DSGN	M. HIGHTREE				
DR	M. MOORE				
CHK	J. MACKEY				
APVD	J. GAUTHIER	NO.	DATE	REVISION	BY / APVD

REUSE OF DOCUMENTS
THIS DOCUMENT, AND THE IDEAS AND DESIGNS INCORPORATED HEREIN, AS AN INSTRUMENT OF PROFESSIONAL SERVICE, IS THE PROPERTY OF CH2M HILL AND IS NOT TO BE USED, IN WHOLE OR IN PART, FOR ANY OTHER PROJECT WITHOUT THE WRITTEN AUTHORIZATION OF CH2M HILL.
©CH2M HILL

VERIFY SCALE
BAR IS ONE INCH ON ORIGINAL DRAWING.
0 1"
IF NOT ONE INCH ON THIS SHEET, ADJUST SCALES ACCORDINGLY.

CITY OF BELLINGHAM, WASHINGTON
POST POINT WASTEWATER TREATMENT PLANT UPGRADE

PRELIMINARY TREATMENT ODOR CONTROL
MECHANICAL SECTIONS

DWG NO. 130-M-3
DATE AUG. 1990
PROJ NO. SEA22462.C1

OVERLAY IDENTIFICATION: COMPOSITE
PRQUID
FILE

DRAWN BY: MARVIN MOORE DESIGNED BY: M. HIGHTREE
DGN NAME: H:/PROJ2/BELLINGH/BL130M-F.DGN

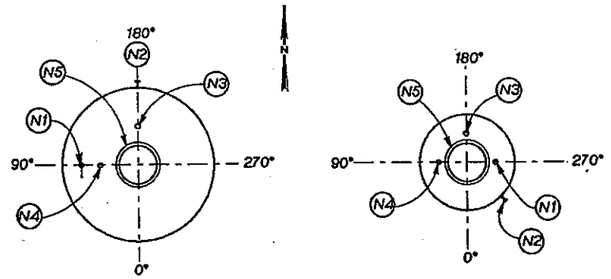

PLANS

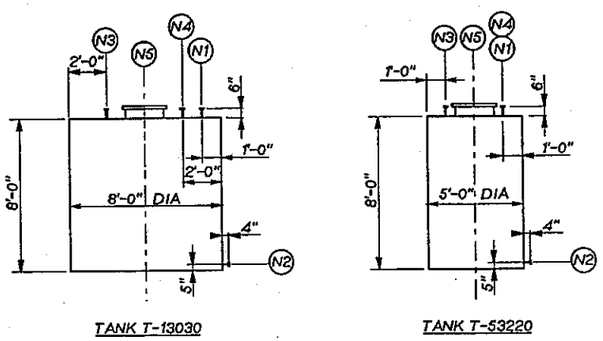

COMPOSITE SECTIONS

NOTE:

TANK COMPOSITE SECTION VIEWS DO NOT SHOW RADIAL NOZZLE ORIENTATION. SEE PLAN VIEWS.

SULFURIC ACID TANK T-53220 / SODIUM HYDROXIDE TANK T-13030					
ITEM	MARK	NO.	SIZE	NOTES	TYPE
INLET	N1	1	2"		150# FF FLG
OUTLET	N2	1	1"		150# FF FLG
INSTRUMENT	N3	1	4"	LEVEL TRANSMITTER	150# FF FLG
VENT	N4	1	3"	GOOSENECK	150# FF FLG
MANHOLE	N5	1	24"	W/COVER	150# FF FLG

SULFURIC ACID TANK AND SODIUM HYDROXIDE TANK (1) 130-M-2 530-M-2

¼"=1'-0"

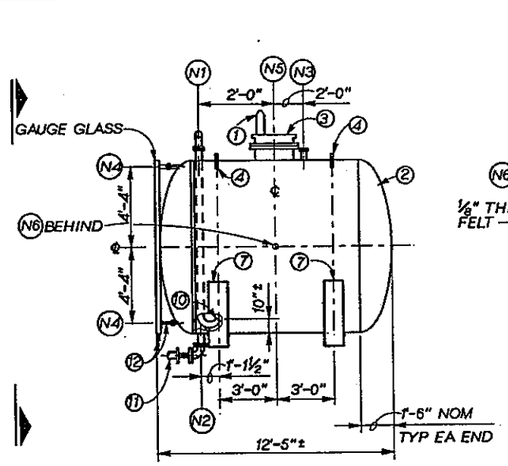

ELEVATION

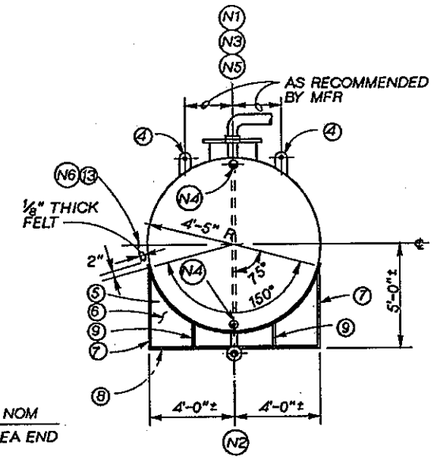

END VIEW

NOTES (KEYNOTES DESIGNATED BY ⓧ AS SHOWN ON THIS SHEET):

1. ALUMINUM VENT FILTER. FILTER ELEMENT BY FILTROS INC. OR EQUAL. MOUNT ON MANHOLE COVER.
2. ALUMINUM TANK BY FMC, DUPONT CO. OR EQUAL.
3. ALUMINUM FLOATING RELIEF TYPE MANHOLE COVER WITH HANDLES.
4. ALUMINUM LIFTING LUG.
5. SADDLE PLATE. 304 STAINLESS STEEL.
6. WEB PLATE. 304 STAINLESS STEEL.
7. END PLATE. 304 STAINLESS STEEL.
8. BASE PLATE. 304 STAINLESS STEEL.
9. GUSSET PLATE. 304 STAINLESS STEEL.
10. 2-INCH DIP TUBE (INLET). ALUMINUM.
11. FIELD MOUNT ELBOW AND LINE-SIZE V-337.
12. ISOLATION VALVES SUPPLIED WITH TANK.
13. TANK PROVIDED WITH ALUMINUM THERMAL WELL AND CAP.

HYDROGEN PEROXIDE TANK T-13020					
ITEM	MARK	NO.	SIZE	NOTES	TYPES
INLET	N1	1	2"		150# FF FLG
OUTLET	N2	1	1"		150# FF FLG
INSTRUMENT	N3	1	4"	LEVEL TRANSMITTER	150# FF FLG
GAUGE GLASS	N4	2	¾"		150# FF FLG
MANHOLE	N5	1	22"	W/COVER	150# FF FLG
INSTRUMENT	N6	1	¾"	THERMAL WELL	FEMALE NPT

HYDROGEN PEROXIDE TANK (2) 130-M-2

¼" =1'-0"

NOTE: INSTALLATION SIMILAR FOR (AE 53200) AND (AE 53210)

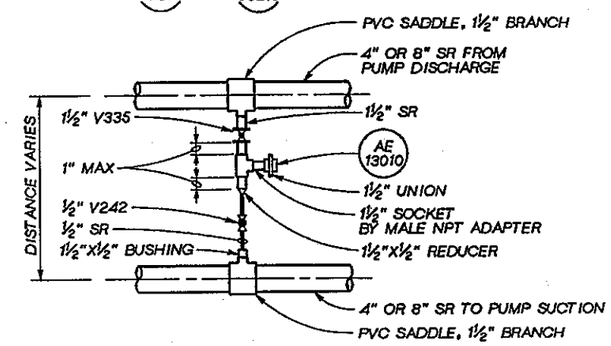

DETAIL (3) 130-M-3 530-M-1

NTS

JOSEPH A. GAUTHIER STATE OF WASHINGTON REGISTERED PROFESSIONAL ENGINEER

CH2M HILL

DSGN	M. HIGHTREE
DR	M. MOORE
CHK	J. MACKEY
APVD	J GAUTHIER

NO.	DATE	REVISION	BY	APVD

REUSE OF DOCUMENTS
THIS DOCUMENT, AND THE IDEAS AND DESIGNS INCORPORATED HEREIN, AS AN INSTRUMENT OF PROFESSIONAL SERVICE, IS THE PROPERTY OF CH2M HILL AND IS NOT TO BE USED, IN WHOLE OR IN PART, FOR ANY OTHER PROJECT WITHOUT THE WRITTEN AUTHORIZATION OF CH2M HILL.
©CH2M HILL

VERIFY SCALE
BAR IS ONE INCH ON ORIGINAL DRAWING.
0 1"
IF NOT ONE INCH ON THIS SHEET, ADJUST SCALES ACCORDINGLY.

CITY OF BELLINGHAM, WASHINGTON
POST POINT WASTEWATER TREATMENT PLANT UPGRADE

PRELIMINARY TREATMENT ODOR CONTROL
MECHANICAL DETAILS
CHEMICAL TANKS AND DETAILS

DWG NO. 130-M-4
DATE AUG. 1990
PROJ. NO. SEA22462.C1

OVERLAY IDENTIFICATION: COMPOSITE, OVERLAY, SCREEN, PROJID, FILE

DRAWN BY: MARVIN MOORE DESIGNED BY:
DGN NAME: H:/PROJ2/BELLINGH/BL130M-E.DGN

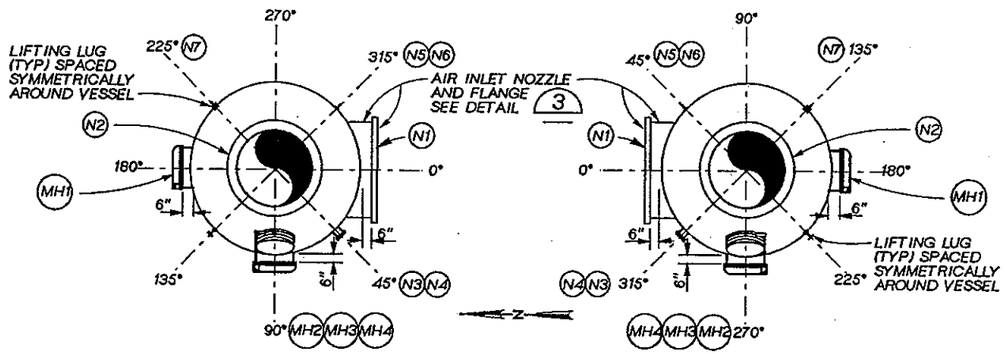

SCRUBBER S-13011 SCRUBBER S-13012

PLAN

NOTES:

1. REINFORCE AIR INLET AS REQUIRED FOR STRUCTURAL STRENGTH.
2. SCRUBBER COMPOSITE ELEVATION VIEWS DO NOT SHOW NOZZLE ORIENTATION CORRECTLY, SEE PLAN VIEWS.
3. FLANGE BOLT HOLES SHALL STRADDLE SCRUBBER CENTERLINE.
4. FURNISH ALL GASKETS AND FASTENERS.
5. FOR ANCHOR AND LIFTING LUGS, SEE SPECS.
6. ALL NOZZLE FLANGES ANSI 150 LB FF UNLESS OTHERWISE NOTED.
7. ACTUAL PIPE CONFIGURATION USED TO DISCHARGE LIQUID INTO THE INLET DISTRIBUTOR SHALL BE AS RECOMMENDED BY DISTRIBUTOR MANUFACTURER.
8. PROVIDE 3" V336 CLOSE COUPLED TO DRAIN NOZZLES. VALVES SHALL BE FLANGED
9. PROVIDE AND FIELD INSTALL 90° BEND, AND PIPE OVERFLOW TO 2" ABOVE EQUIPMENT PAD. PIPE AS SPECIFIED FOR SR SERVICE.

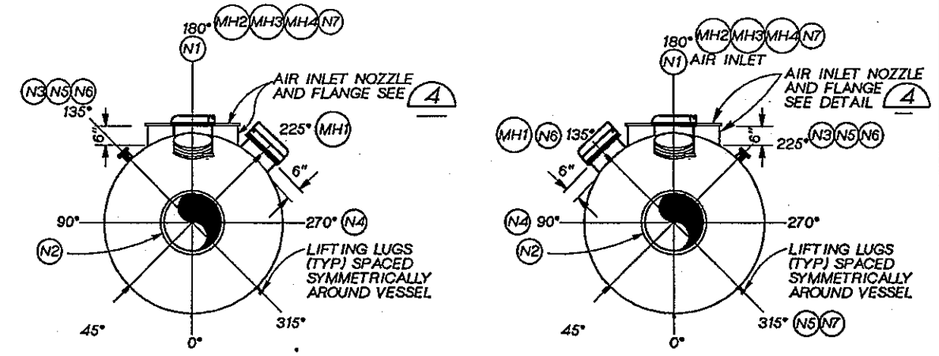

SCRUBBER S-53210 SCRUBBER S-53200

PLAN

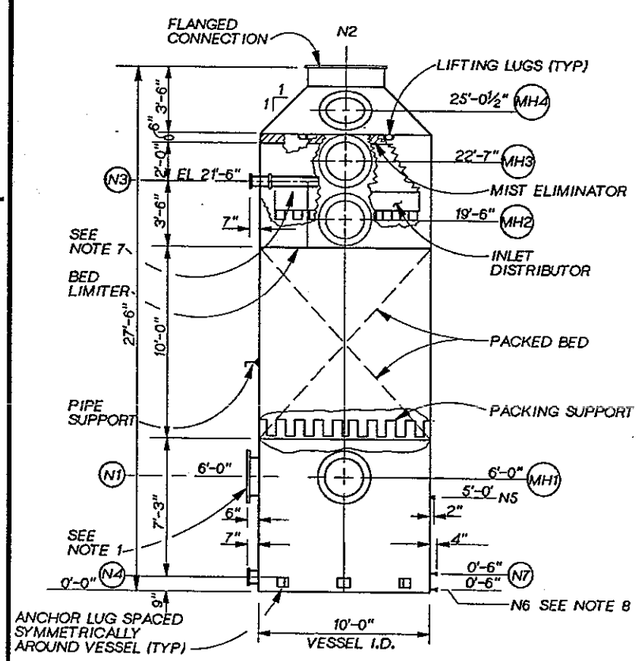

COMPOSITE ELEVATION

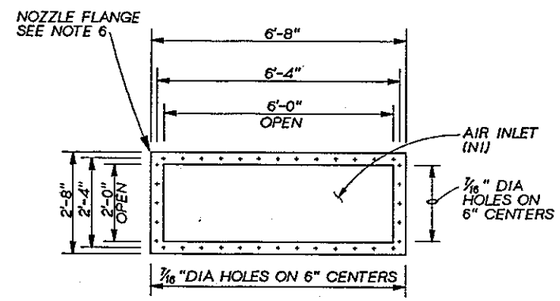

DETAIL 3
½"=1'-0"

ITEM	MARK	NO.	SIZE	TYPE
AIR INLET	N1	1	24"x72"	25#FF FLG
AIR OUTLET	N2	1	54"	25#FF FLG
RECIRCULATION IN	N3	1	6"	150#FF FLG
RECIRCULATION OUT	N4	1	8"	150#FF FLG
OVERFLOW (SEE NOTE 9)	N5	1	1"	FEMALE NPT
DRAIN (SIDE / BOTTOM)	N6	1	3"	150#FF FLG
LEVEL	N7	1	3"	150#FF FLG
MANWAY (CLEAR / PVC)	MH1 THRU MH4	4	24"	150#FF FLG

SCRUBBERS S-13011 AND S-13012 DETAIL 1
NTS
130-M-1

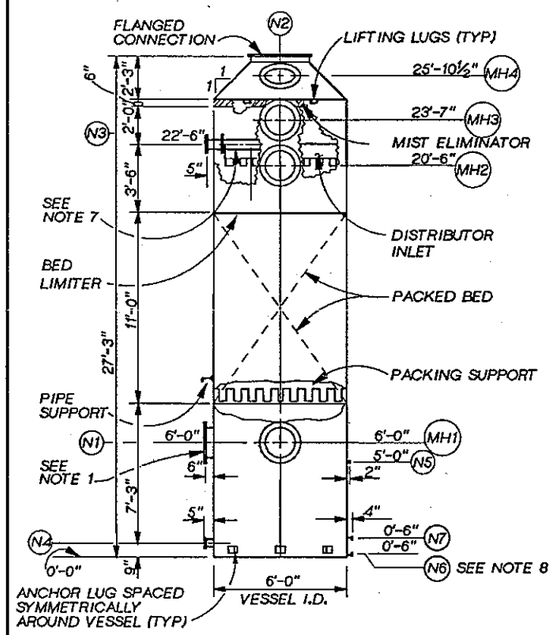

COMPOSITE ELEVATION

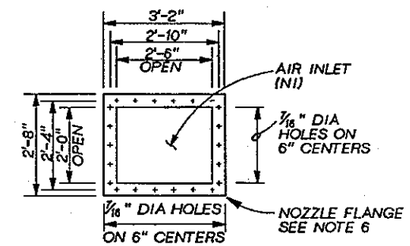

DETAIL 4
½"=1'-0"

ITEM	MARK	NO.	SIZE	TYPE
AIR INLET	N1	1	24"X30"	150#FF FLG
AIR OUTLET	N2	1	30"	150#FF FLG
RECIRCULATION IN	N3	1	4"	150#FF FLG
RECIRCULATION OUT	N4	1	4"	150#FF FLG
OVERFLOW (SEE NOTE 9)	N5	1	1"	FEMALE NPT
DRAIN (SIDE / BOTTOM)	N6	1	3"	150#FF FLG
LEVEL	N7	1	3"	150#FF FLG
MANWAY (CLEAR / PVC)	MH1 THRU MH4	4	24"	150#FF FLG

SCRUBBERS S-53200 AND S-53210 DETAIL 2
NTS
530-M-2
530-M-3

JOSEPH A. GAUTHIER STATE OF WASHINGTON REGISTERED PROFESSIONAL ENGINEER

CH2M HILL

DSGN	M. HIGHTREE
DR	M. MOORE
CHK	J. MACKEY
APVD	J GAUTHIER

NO.	DATE	REVISION	BY	APVD

REUSE OF DOCUMENTS
THIS DOCUMENT, AND THE IDEAS AND DESIGNS INCORPORATED HEREIN, AS AN INSTRUMENT OF PROFESSIONAL SERVICE, IS THE PROPERTY OF CH2M HILL AND IS NOT TO BE USED, IN WHOLE OR IN PART, FOR ANY OTHER PROJECT WITHOUT THE WRITTEN AUTHORIZATION OF CH2M HILL.
©CH2M HILL

VERIFY SCALE
BAR IS ONE INCH ON ORIGINAL DRAWING.
0 1"
IF NOT ONE INCH ON THIS SHEET, ADJUST SCALES ACCORDINGLY.

CITY OF BELLINGHAM, WASHINGTON
POST POINT WASTEWATER TREATMENT PLANT UPGRADE

PRELIMINARY TREATMENT ODOR CONTROL
MECHANICAL DETAILS
SCRUBBERS

DWG NO. 130-M-5
DATE AUG. 1990
PROJ NO. SEA22462.C1

OVERLAY IDENTIFICATION: COMPOSITE, PROJID, RELAY, FILE, GEN

DATE: 8/27/90
DRAWN BY: M. MOORE
DGN NAME: H:/PROJ2/BELLINGH/BL130P-A.DGN
DESIGNED BY: SD GUNDY/G FLOOD

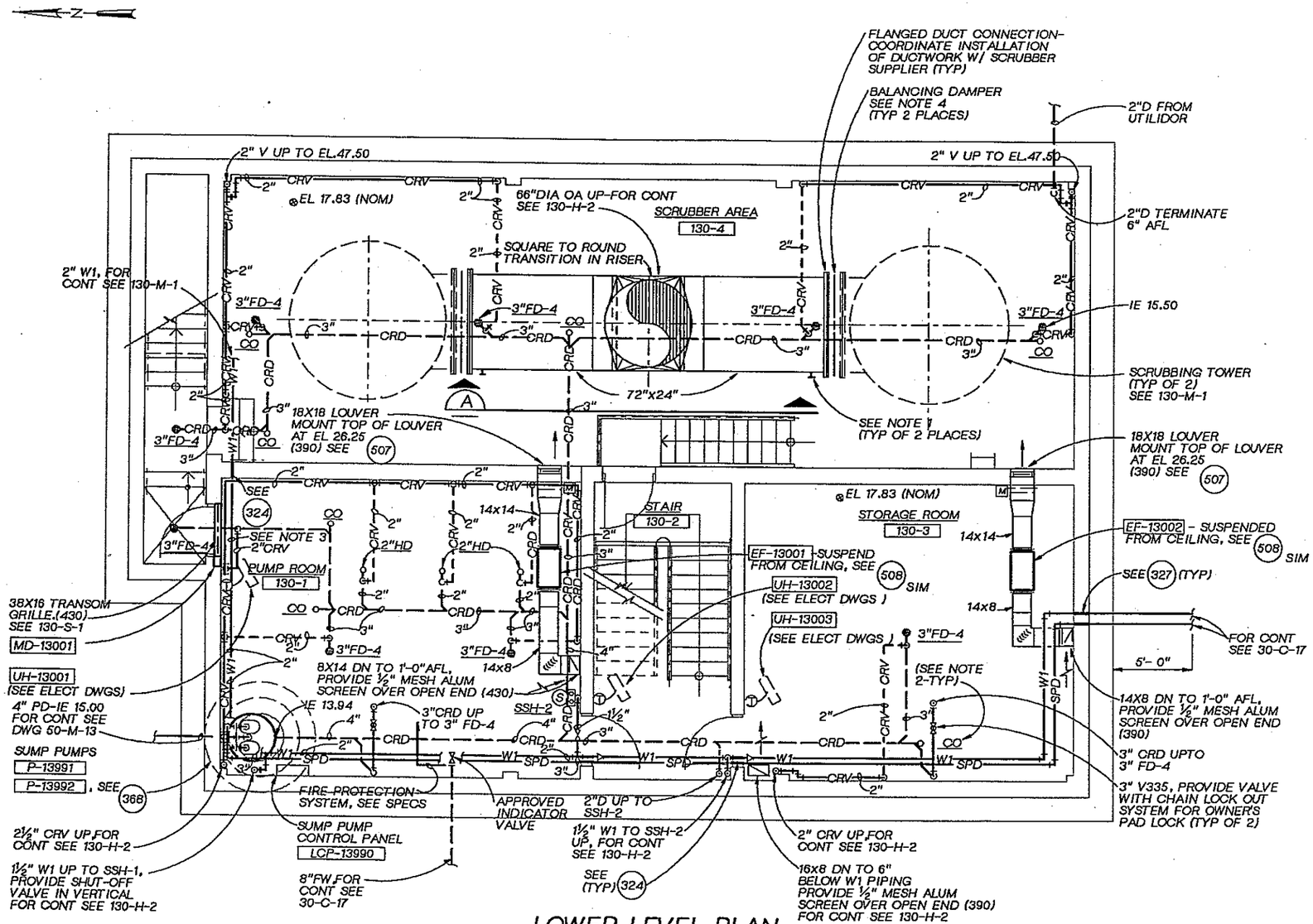

LOWER LEVEL PLAN

¼" = 1'-0"

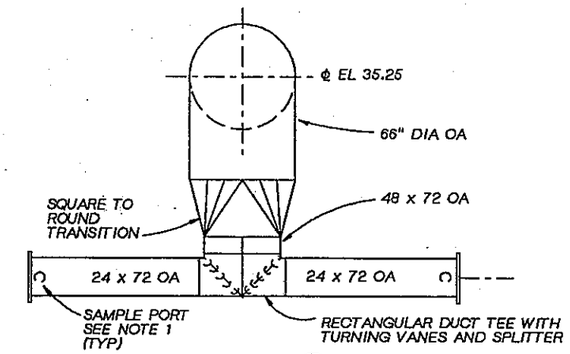

SECTION A

¼"=1'- 0"

130-H-1
130-H-2

NOTES:

1. AIR QUALITY SAMPLE PORT. MOUNT ¼" V335 TO SIDE OF DUCT USING THREAD-O-LET.
2. CLEANOUTS FOR "CRD" PIPING-USE CLEANOUT BOX J.R. SMITH FIG. 4890, JOSAM SERIES 58670, OR EQUAL. PROVIDE THREADED PLUG IN PIPE W/ CLEANOUT BOX.
3. HEAT TRACE AND INSULATE PER SPECIFICATION ADJACENT TO DOORWAY
4. PROVIDE BLAST GATE BALANCING DAMPER AT INLET TO SCRUBBER. BUTTERFLY TYPE BALANCING DAMPER SHALL NOT BE USED.

JOSEPH A. GAUTHIER — STATE OF WASHINGTON — REGISTERED PROFESSIONAL ENGINEER

CH2M HILL

DSGN	G.FLOOD
DR	S.D.GUNDY
CHK	J.A. SIEMENS
APVD	J. GAUTHIER

NO.	DATE	REVISION	BY	APVD

REUSE OF DOCUMENTS
THIS DOCUMENT, AND THE IDEAS AND DESIGNS INCORPORATED HEREIN, AS AN INSTRUMENT OF PROFESSIONAL SERVICE, IS THE PROPERTY OF CH2M HILL AND IS NOT TO BE USED, IN WHOLE OR IN PART, FOR ANY OTHER PROJECT WITHOUT THE WRITTEN AUTHORIZATION OF CH2M HILL.
©CH2M HILL

BAR IS ONE INCH ON ORIGINAL DRAWING. 0 1"
IF NOT ONE INCH ON THIS SHEET, ADJUST SCALES ACCORDINGLY.

CITY OF BELLINGHAM, WASHINGTON
POST POINT WASTEWATER TREATMENT PLANT UPGRADE

PRELIMINARY TREATMENT ODOR CONTROL
HVAC AND PLUMBING
LOWER LEVEL PLAN

DWG NO. 130-H-1
DATE AUG. 1990
PROJ. NO. SEA22462.C1

DATE: 8/26/90
DRAWN BY: M. MOORE DESIGNED BY: S GUNDY/G FLOOD
DGN NAME: H:/PROJ2/BELLINGH/BL130H-A.DGN

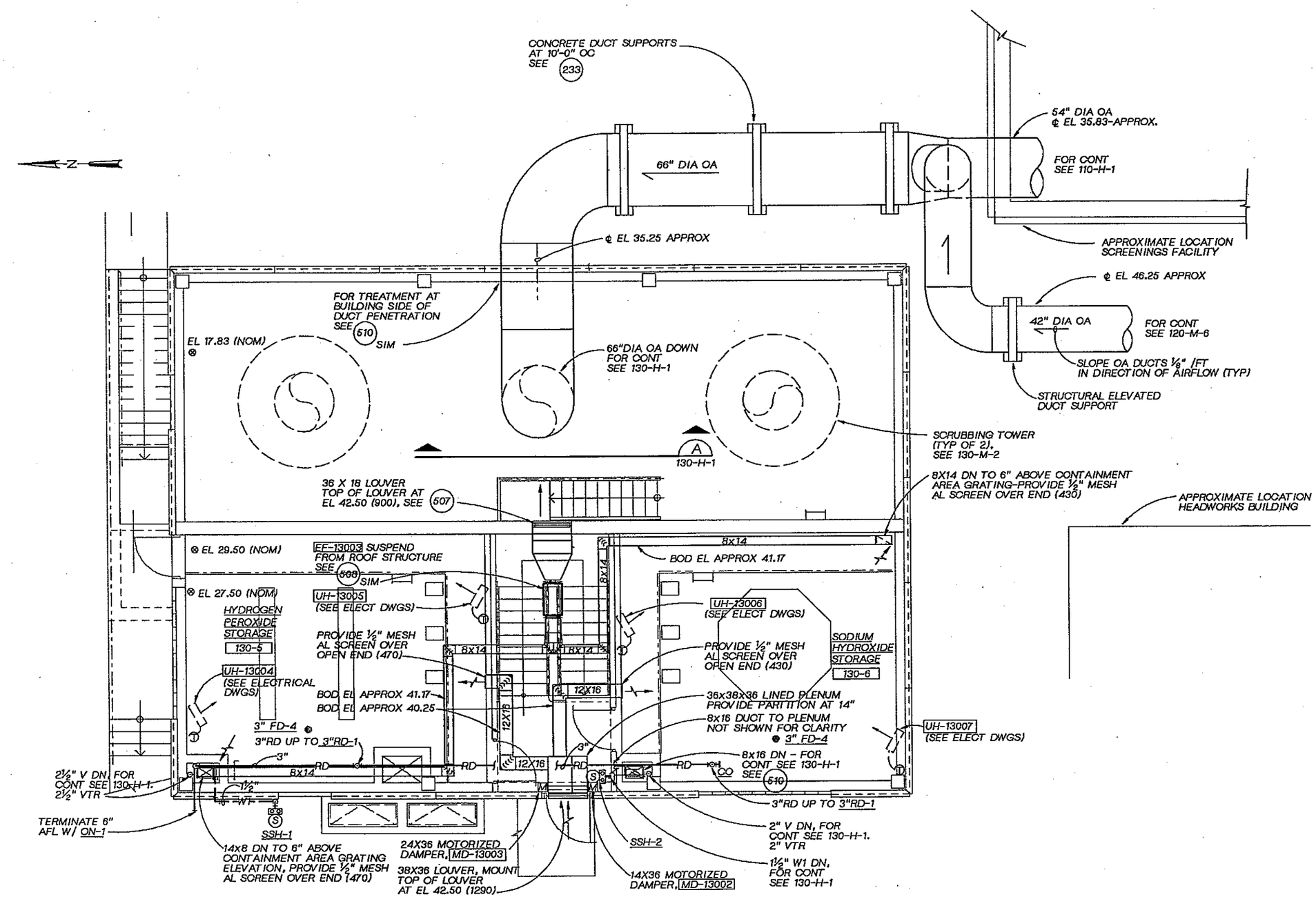

GROUND LEVEL PLAN

1/4"=1'-0"

JOSEPH A. GAUTHIER STATE OF WASHINGTON REGISTERED PROFESSIONAL ENGINEER

CH2M HILL

DSGN	G.FLOOD
DR	S.D.GUNDY
CHK	J.A. SIEMENS
APVD	J. GAUTHIER

NO.	DATE	REVISION	BY	APVD

REUSE OF DOCUMENTS
THIS DOCUMENT, AND THE IDEAS AND DESIGNS INCORPORATED HEREIN, AS AN INSTRUMENT OF PROFESSIONAL SERVICE, IS THE PROPERTY OF CH2M HILL AND IS NOT TO BE USED, IN WHOLE OR IN PART, FOR ANY OTHER PROJECT WITHOUT THE WRITTEN AUTHORIZATION OF CH2M HILL.
©CH2M HILL

BAR IS ONE INCH ON ORIGINAL DRAWING. 0 1"
IF NOT ONE INCH ON THIS SHEET, ADJUST SCALES ACCORDINGLY.

CITY OF BELLINGHAM, WASHINGTON
POST POINT WASTEWATER TREATMENT PLANT UPGRADE

PRELIMINARY TREATMENT ODOR CONTROL
HVAC AND PLUMBING
GROUND LEVEL PLAN

DWG NO. 130-H-2
DATE AUG. 1990
PROJ NO. SEA22452.C1

DATE: 8-25-90
DRAWN BY: OSCAR A. FRIAL DESIGNED BY: GRETCHEN BOWER
DGN NAME: H:/PROJ2/BELLINGH/BL220A-A.DGN

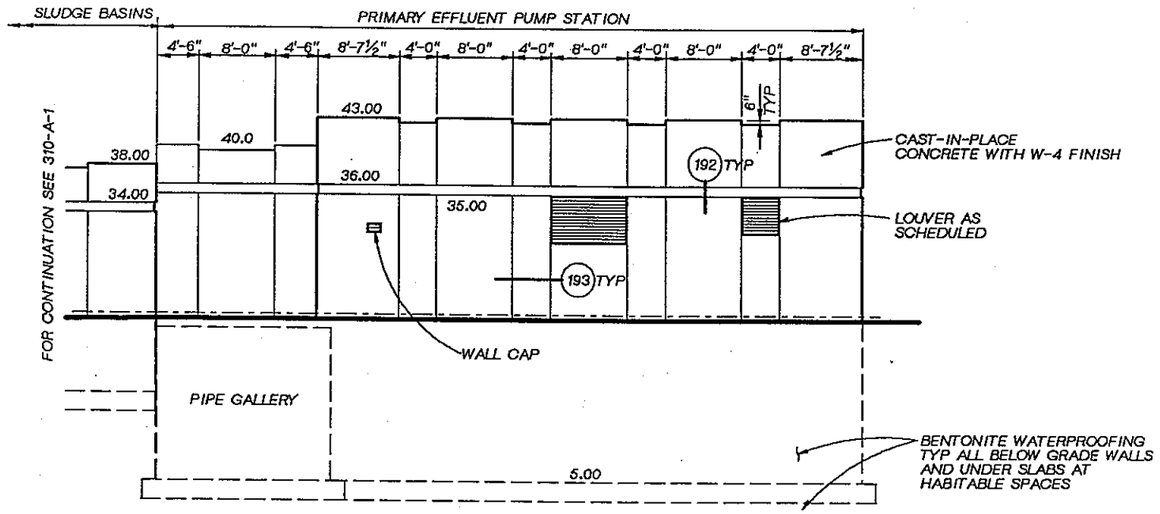

SOUTH ELEVATION

⅛" = 1'-0"

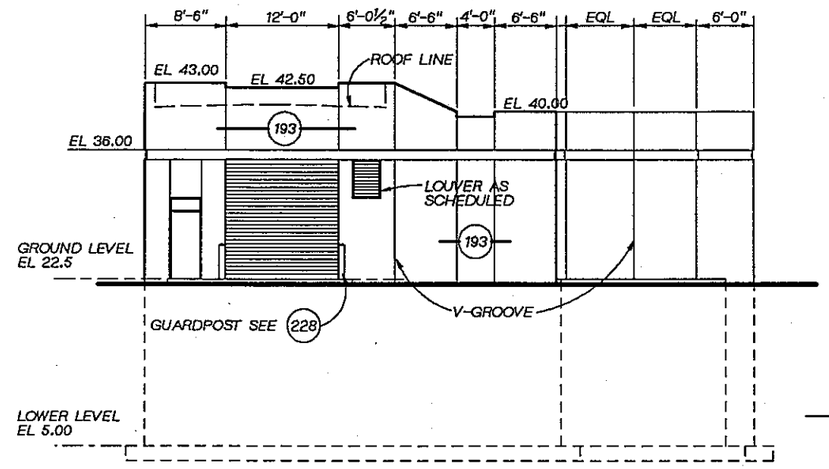

EAST ELEVATION

⅛" = 1'-0"

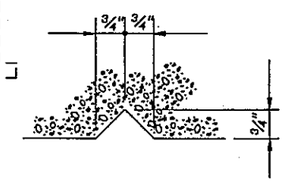

V-GROOVE

NOTES

1. FOR STANDARD DETAILS SEE THE "800" SECTION OF THE DWGS.
2. FOR LOUVER SIZES AND TYPES, SEE SPECIFICATION SECTION 10200.
3. FOR EXTERIOR COLORS & FINISHES, SEE SPECIFICATION SECTION 09000.

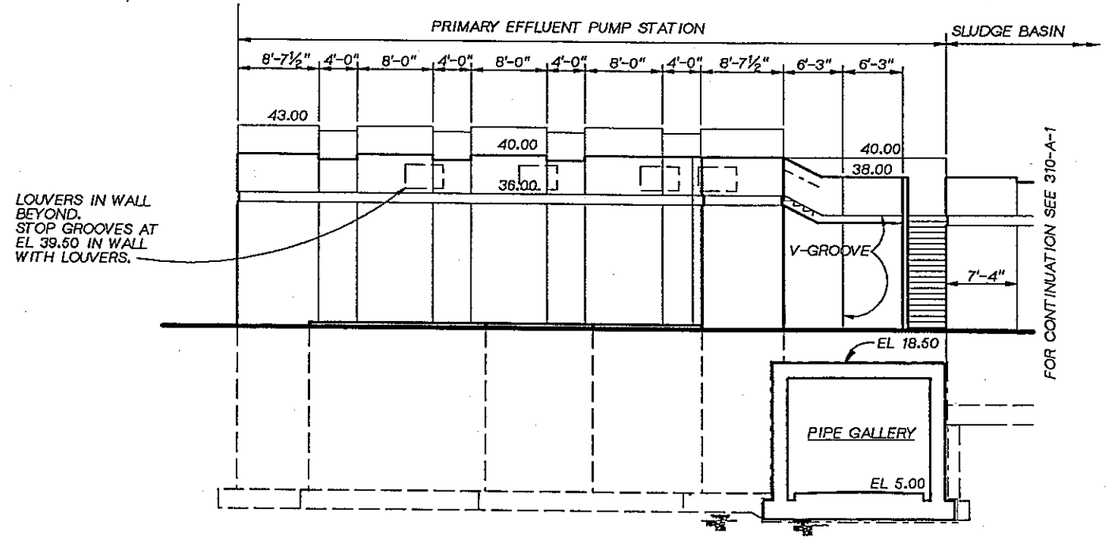

NORTH ELEVATION

⅛" = 1'-0"

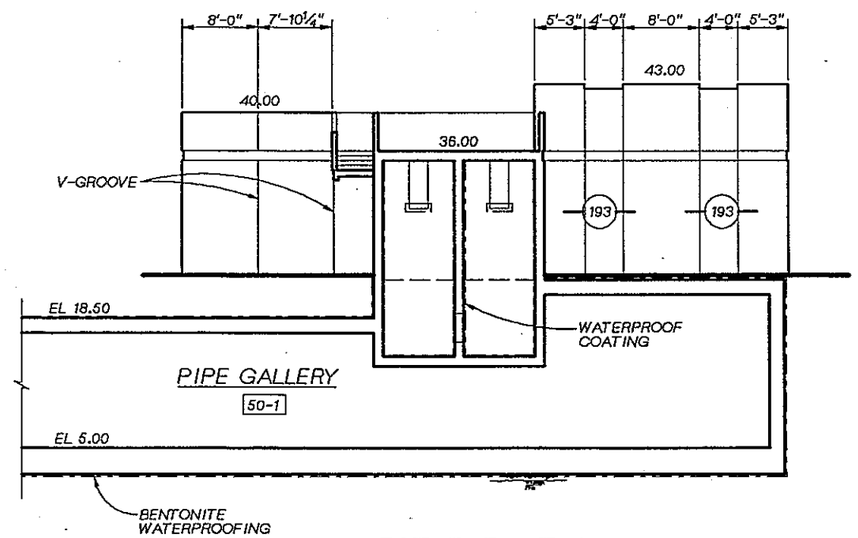

WEST ELEVATION

⅛" = 1'-0"

REGISTERED ARCHITECT JOHN J. PRUSS STATE OF WASHINGTON

CH2M HILL

DSGN	GE BOWER				
DR	GE BOWER				
CHK	R WHITE				
APVD	J GAUTHIER	NO.	DATE	REVISION	BY	APVD

REUSE OF DOCUMENTS
THIS DOCUMENT, AND THE IDEAS AND DESIGNS INCORPORATED HEREIN, AS AN INSTRUMENT OF PROFESSIONAL SERVICE, IS THE PROPERTY OF CH2M HILL AND IS NOT TO BE USED, IN WHOLE OR IN PART, FOR ANY OTHER PROJECT WITHOUT THE WRITTEN AUTHORIZATION OF CH2M HILL.
©CH2M HILL

BAR IS ONE INCH ON ORIGINAL DRAWING.
0 1"
IF NOT ONE INCH ON THIS SHEET, ADJUST SCALES ACCORDINGLY.

CITY OF BELLINGHAM, WASHINGTON
POST POINT WASTEWATER TREATMENT PLANT UPGRADE

PRIMARY EFFLUENT PUMP STATION
ARCHITECTURAL ELEVATIONS

DWG NO. 220-A-1
DATE AUG. 1990
PROJ NO. SEA22462.C1

DATE: 8/25/90
DRAWN BY: OA FRIAL DESIGNED BY: GE BOWER
DGN NAME: H:/PROJ2/BELLINGH/BL220A-B.DGN

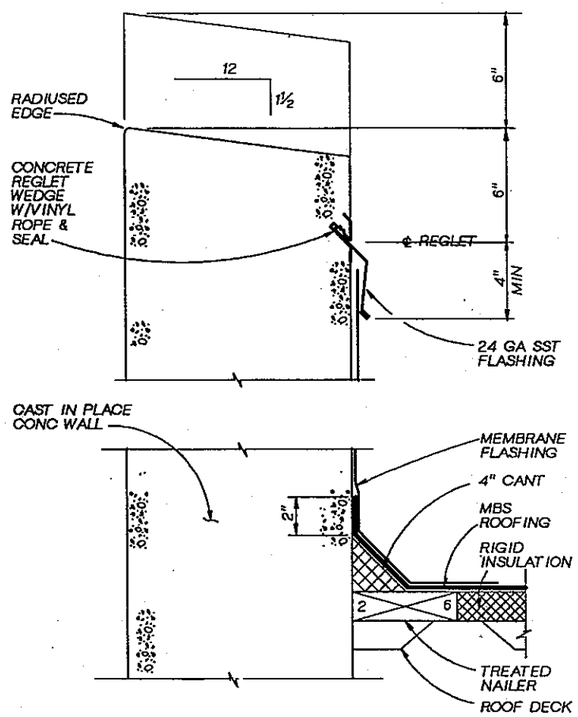

COPING DETAIL 1
3"=1'-0"

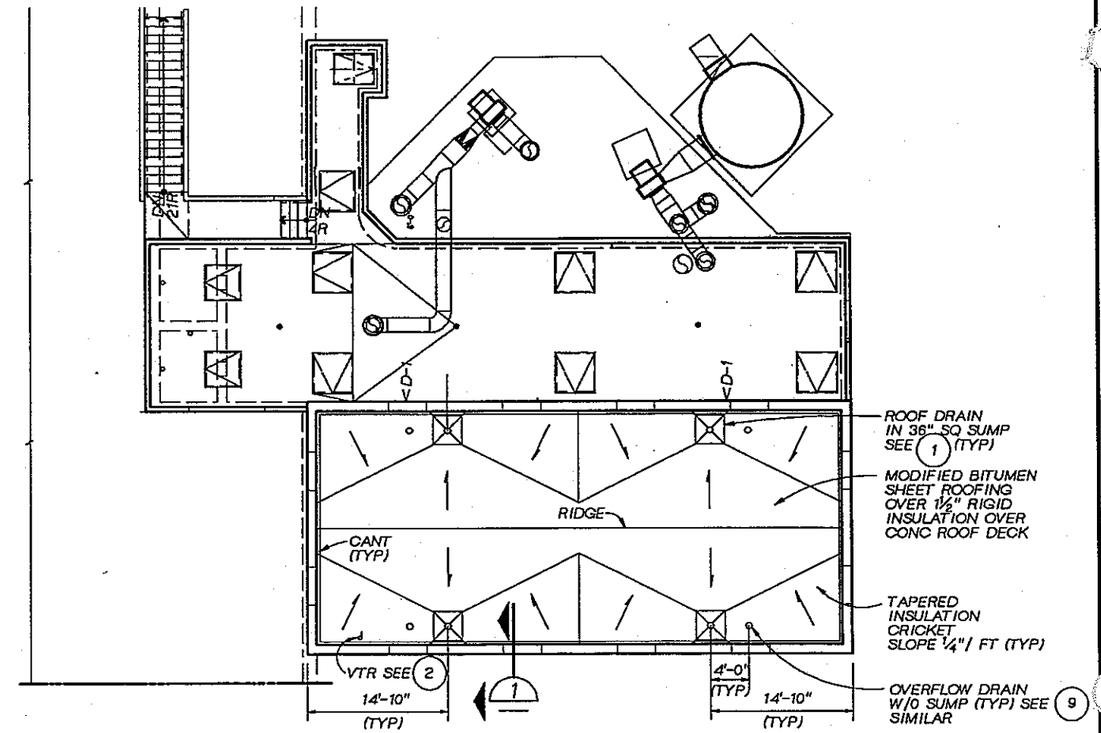

ROOF PLAN
⅛"=1'-0"

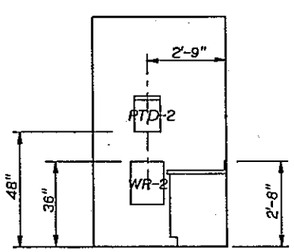

EAST WALL

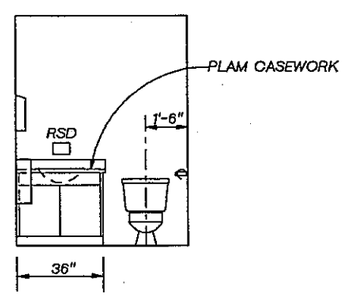

SOUTH WALL

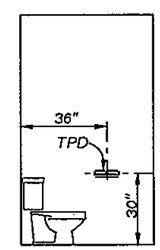

WEST WALL

LAV 220-3
⅜" = 1'-0"

REGISTERED ARCHITECT JOHN L. PRIES STATE OF WASHINGTON

CH2M HILL

DSGN	G BOWER				
DR	O FRIAL				
CHK	R WHITE				
APVD	J GAUTHIER	NO.	DATE	REVISION	BY	APVD

REUSE OF DOCUMENTS
THIS DOCUMENT, AND THE IDEAS AND DESIGNS INCORPORATED HEREIN, AS AN INSTRUMENT OF PROFESSIONAL SERVICE, IS THE PROPERTY OF CH2M HILL AND IS NOT TO BE USED, IN WHOLE OR IN PART, FOR ANY OTHER PROJECT WITHOUT THE WRITTEN AUTHORIZATION OF CH2M HILL.
©CH2M HILL

BAR IS ONE INCH ON ORIGINAL DRAWING.
0 1"
IF NOT ONE INCH ON THIS SHEET, ADJUST SCALES ACCORDINGLY.

CITY OF BELLINGHAM, WASHINGTON
POST POINT WASTEWATER TREATMENT PLANT UPGRADE

PRIMARY EFFLUENT PUMP STATION
ARCHITECTURAL
ROOF PLAN AND DETAILS

DWG NO. 220-A-2
DATE AUG. 1990
PROJ. NO. SEA22462.C1

OVERLAY SCREEN
PROJID
FILE

DATE: 8-23-90
DRAWN BY: RSF DESIGNED BY: KK
DGN NAME: H:/PROJ2/BELLINGH/BL220S-A.DGN

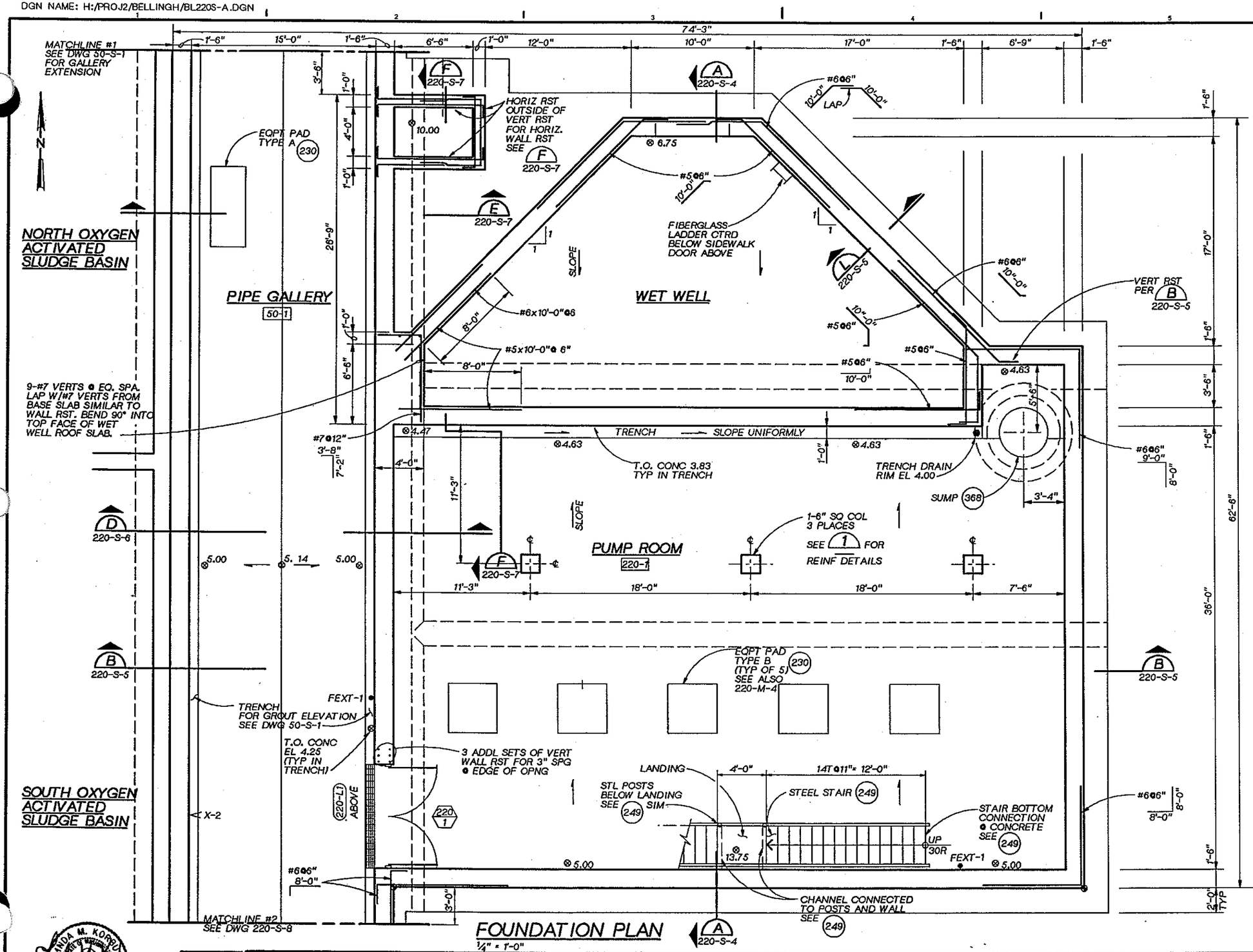

FOUNDATION PLAN

1/4" = 1'-0"

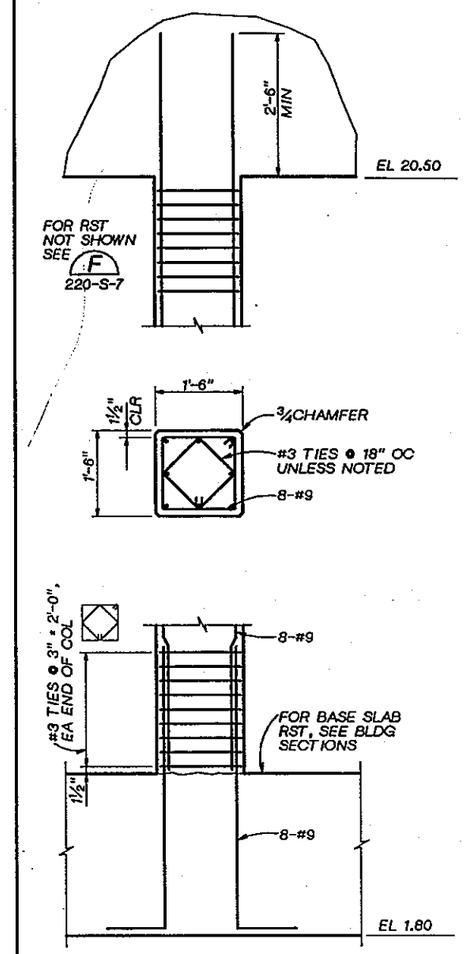

COLUMN DETAIL 1

3/4"=1'-0"

STRUCTURAL NOTES:

1. DESIGN LOADS:
   FLOOR LL - 200 PSF
2. FOR GENERAL STRUCTURAL NOTES SEE 201 AND 202
3. FOR TYPICAL HORIZONTAL REINFORCING, SEE BUILDING SECTIONS.
4. FOR ADDITIONAL REINFORCEMENT REQUIRED AT SLAB AND WALL PENETRATIONS AND OPENINGS, SEE 204
5. SEE DWG 30-C-7 FOR COORDINATES.

DSGN	P. GUENTHER				
DR	R. FRIBERG				
CHK	W. BENNETT				
APVD	J GAUTHIER	NO.	DATE	REVISION	BY / APVD

CH2M HILL

REUSE OF DOCUMENTS
THIS DOCUMENT, AND THE IDEAS AND DESIGNS INCORPORATED HEREIN, AS AN INSTRUMENT OF PROFESSIONAL SERVICE, IS THE PROPERTY OF CH2M HILL AND IS NOT TO BE USED, IN WHOLE OR IN PART, FOR ANY OTHER PROJECT WITHOUT THE WRITTEN AUTHORIZATION OF CH2M HILL.
©CH2M HILL

BAR IS ONE INCH ON ORIGINAL DRAWING. 0 — 1"
IF NOT ONE INCH ON THIS SHEET, ADJUST SCALES ACCORDINGLY.

CITY OF BELLINGHAM, WASHINGTON
POST POINT WASTEWATER TREATMENT PLANT UPGRADE

PRIMARY EFFLUENT PUMP STATION
STRUCTURAL FOUNDATION PLAN

DWG NO. 220-S-1
DATE AUG. 1990
PROJ NO. SEA22462.C1

DATE: 8-23-90
DRAWN BY: RSF-CSH DESIGNED BY: KK
DGN NAME: H:/PROJ2/BELLINGH/BL220S-B.DGN

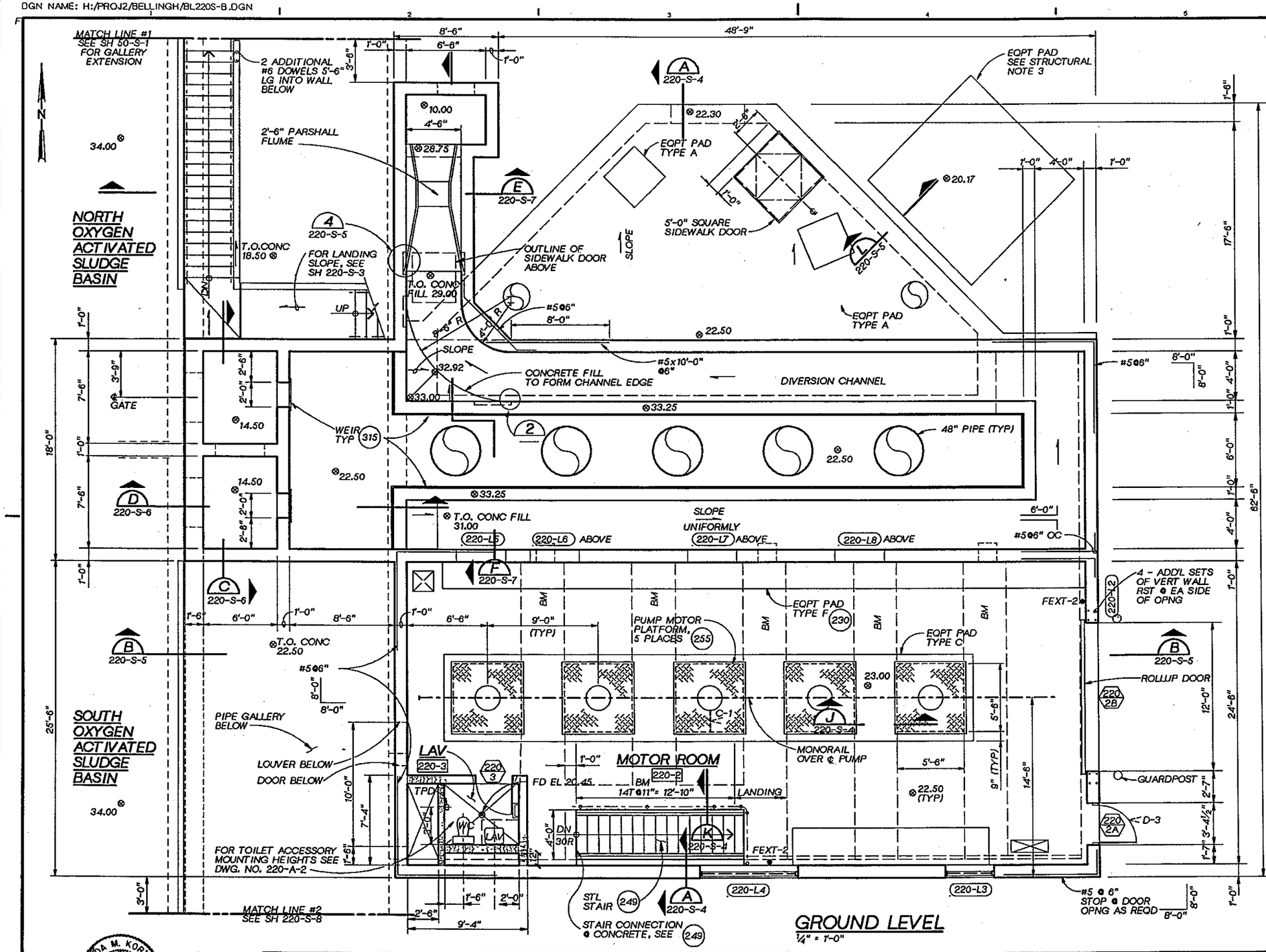

ARCHITECTURAL NOTES:

1. FOR "GENERAL NOTES," SEE DWG. N0. 800-A-1.
2. FOR "INTERIOR FINISH SCHEDULE" SEE SPECIFICATION SECTION 09000.
3. FOR "DOOR AND HARDWARE SCHEDULE" SEE SPECIFICATION SECTION 08000.
4. FOR PRECAST CONCRETE WALL PANEL AND OPENING DIMENSIONS, SEE ARCITECTURAL EXTERIOR ELEVATIONS.
5. FOR LOUVER SIZES AND DETAILS, SEE SPECIFICATION SECTION 10200.

BUILDING CODE NOTES:

APPLICABLE CODES: 1988 UBC
1988 UFC

1. TYPE OF OCCUPANCY: B-4
2. TYPE OF CONSTRUCTION: V-N
3. NUMBER OF STORIES
   ACTUAL: ONE + BASEMENT
   ALLOWED: TWO
4. ACTUAL FLOOR AREA
   o LOWER LEVEL: 2460sf
   o GROUND LEVEL: 1200sf
   ALLOWABLE FLOOR AREA:
   12,000sf
5. SPRINKLER SYSTEM REQD
   BASEMENT ONLY
6. OCCUPANT LOAD
   o LOWER LEVEL: 2460/300 = 8
   o GROUND LEVEL: 1200/300 = 4
7. TWO HOUR AREA SEPARATION REQUIRED BETWEEN PUMP ROOM AND GALLERY

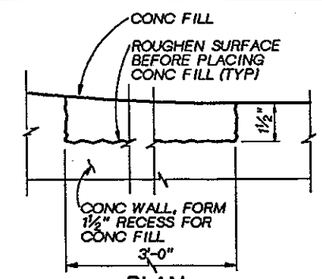

PLAN
DETAIL 2
NTS

STRUCTURAL NOTES

1. DESIGN LOADS:
   MOTOR ROOM LL-200 PSF PLUS EQPT.
   WET WELL ROOF SLAB LL-100 PSF.
2. FOR TYPICAL HORIZONTAL REINFORCING, SEE BUILDING SECTIONS.
3. PROVIDE 12'-0"x12'-0"x1'-0" THICK PAD CTRD BELOW ODOR CONTROL VESSEL. REINFORCE PAD WITH #5 BARS @ 12" OC EACH WAY, EACH FACE. VERIFY ANCHOR BOLT SIZE AND LOCATIONS PRIOR TO PLACING PAD.
4. FOR OPENING REINFORCING NOT SHOWN, SEE (204).

DSGN	P GUENTHER					
DR	R FRIBERG					
CHK	W BENNETT					
APVD	J GAUTHIER	NO.	DATE	REVISION	BY	APVD

CHM HILL

REUSE OF DOCUMENTS
THIS DOCUMENT, AND THE IDEAS AND DESIGNS INCORPORATED HEREIN, AS AN INSTRUMENT OF PROFESSIONAL SERVICE, IS THE PROPERTY OF CH2M HILL AND IS NOT TO BE USED, IN WHOLE OR IN PART, FOR ANY OTHER PROJECT WITHOUT THE WRITTEN AUTHORIZATION OF CH2M HILL.
©CH2M HILL

BAR IS ONE INCH ON ORIGINAL DRAWING.
0 1"
IF NOT ONE INCH ON THIS SHEET, ADJUST SCALES ACCORDINGLY.

CITY OF BELLINGHAM, WASHINGTON
POST POINT WASTEWATER TREATMENT PLANT UPGRADE

PRIMARY EFFLUENT PUMP STATION
STRUCTURAL GROUND LEVEL FRAMING PLAN

DWG NO. 220-S-2
DATE AUG. 1990
PROJ NO. SEA22462.C1

DATE: 8-24-90
DRAWN BY: RSF DESIGNED BY: KK
DGN NAME: H:/PROJ2/BELLINGH/BL220S-C.DGN

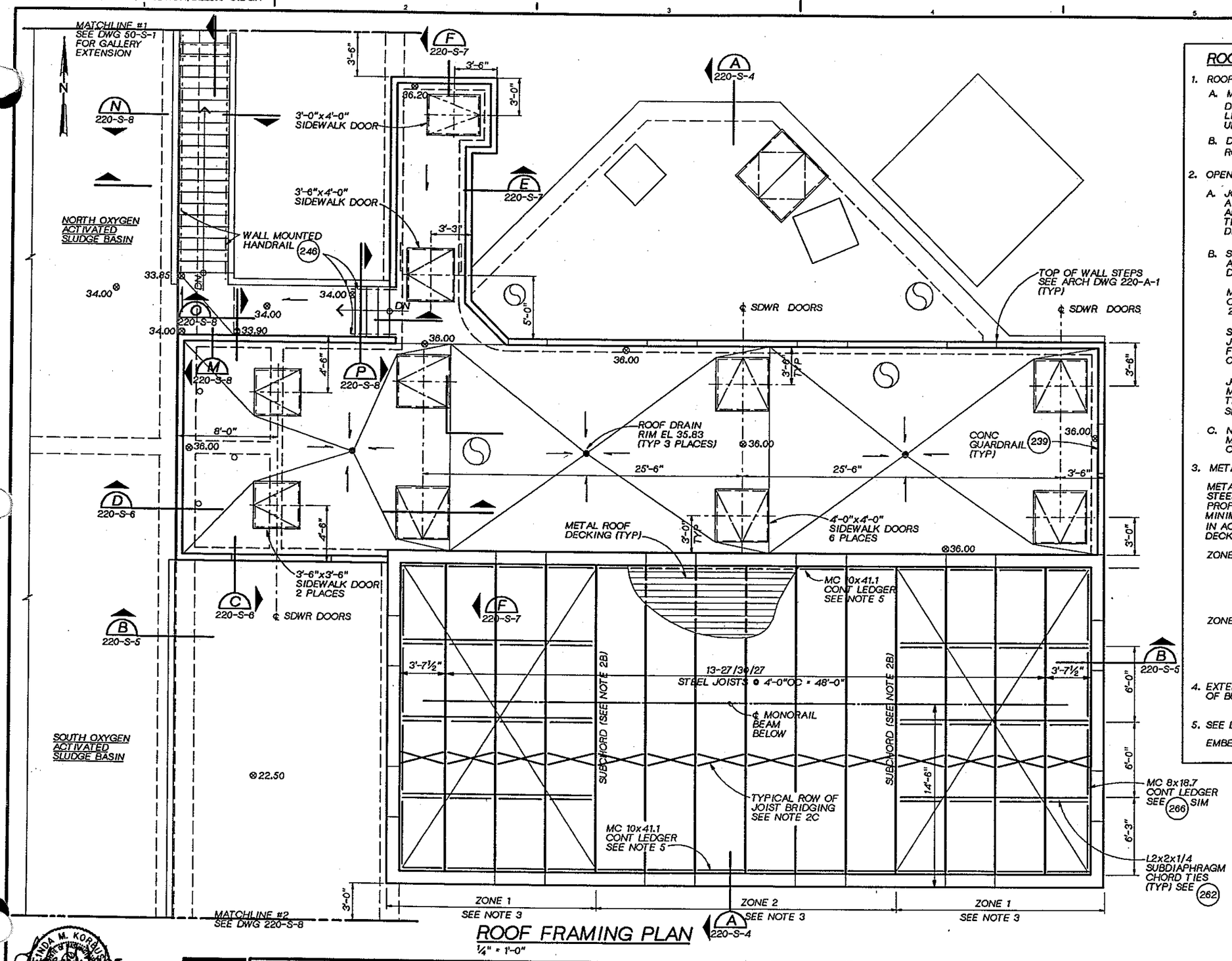

ROOF FRAMING PLAN

¼" = 1'-0"

ROOF PLAN NOTES

1. ROOF DESIGN LOADS:
   A. MOTOR ROOM
      DEAD LOAD: 15 PSF
      LIVE LOAD: 25 PSF
      UPLIFT (NET): 15 PSF
   B. DIVERSION CHANNEL
      ROOF LL = 100 PSF
2. OPEN WEB STEEL JOISTS:
   A. JOIST MANUFACTURER SHALL DESIGN ALL JOISTS TO SUPPORT A 750 POUND CONCENTRATED LOAD LOCATED AT ANY POINT ALONG THE BOTTOM CHORD. THIS LOAD IS IN ADDITION TO THE CONCENTRATED LOAD DUE TO THE MONORAIL AND THE DESIGN LOADS SHOWN.
   B. STEEL JOISTS SHALL BE DESIGNED FOR THE FOLLOWING ADDITIONAL LOADS APPLIED CONCURRENTLY WITH THE ROOF DESIGN LOADS AND CONCENTRATED LOADS:

      MONORAIL HOIST LOAD:
      CONCENTRATED MONORAIL POINT LOAD OF 12 KIP (INCLUDES 25% IMPACT AND HOIST WEIGHT). SEE PLANS FOR LOCATIONS.

      SUBCHORDS:
      JOISTS DESIGNATED AS SUBCHORDS SHALL BE DESIGNED FOR AND ADDITIONAL TOP CHORD FORCE OF 1.8 KIP (TENSION OR COMPRESSION) DUE TO WIND OR SEISMIC FORCES.

      JOIST BEARING SEATS:
      MANUFACTURER SHALL DESIGN JOIST BEARING SEATS FOR THE LOADS GIVEN IN DETAIL 261. DESIGN FORCE "V" SHALL BE 6 K.
   C. NUMBER OF ROWS AND SPACING OF BRIDGING AS REQD BY MANUFACTURERS. BRIDGING MAY BE CONNECTED TO CAST-IN-PLACE WALLS.
3. METAL ROOF DECKING:

   METAL ROOF DECKING SHALL BE 1-1/2" - 20 GAGE GALVANIZED STEEL, VERCO HSB-36 ACOUSTICAL OR EQUIVALENT. MINIMUM SECTION PROPERTIES SHALL BE: I=.216in4, +S=.235in3, AND -S=.248in3. MINIMUM NOISE REDUCTION COEFFICIENT OF .75 AS TESTED IN ACCORDANCE WITH ASTM C423. CONNECTION OF ROOF DECKING SHALL BE AS FOLLOWS:

   ZONE 1: (7) -5/8" PUDDLE WELDS TO SUPPORTS PER 36" SHEET. BUTTON PUNCH SIDE LAP CONNECTION AT 1'-0" OC, UNLESS OTHERWISE NOTED. MIN LATERIAL SHEAR CAPACITY= 490 LBS/FT.

   ZONE 2: (5) -5/8" PUDDLE WELDS TO SUPPORTS PER 36" SHEET. BUTTON PUNCH SIDE LAP CONNECTION AT 2'-0" OC, UNLESS OTHERWISE NOTED. MIN LATERIAL SHEAR CAPACITY= 380 LBS/FT.
4. EXTEND MONORAIL BEAM 1'-6" BEYOND LAST STEEL JOIST, EA END OF BUILDING. SEE DETAIL 259 FOR MONORAIL BEAM DETAILS.
5. SEE DETAIL 263 SIM FOR LEDGER AND CONNECTION DETAILS. PROVIDE EMBEDDED PLATE AS SHOWN BELOW EACH JOIST BEARING LOCATION.

LINDA M. KORBUS
STATE OF WASHINGTON
22864
REGISTERED
PROFESSIONAL ENGINEER
10/15/90

CH2M HILL

DSGN	P GUENTHER
DR	R. FRIBERG
CHK	W. BENNETT
APVD	J GAUTHIER

NO.	DATE	REVISION	BY	APVD

REUSE OF DOCUMENTS
THIS DOCUMENT, AND THE IDEAS AND DESIGNS INCORPORATED HEREIN, AS AN INSTRUMENT OF PROFESSIONAL SERVICE, IS THE PROPERTY OF CH2M HILL AND IS NOT TO BE USED, IN WHOLE OR IN PART, FOR ANY OTHER PROJECT WITHOUT THE WRITTEN AUTHORIZATION OF CH2M HILL.
©CH2M HILL

BAR IS ONE INCH ON ORIGINAL DRAWING.
0 1"
IF NOT ONE INCH ON THIS SHEET, ADJUST SCALES ACCORDINGLY.

CITY OF BELLINGHAM, WASHINGTON
POST POINT WASTEWATER TREATMENT PLANT UPGRADE

PRIMARY EFFLUENT PUMP STATION
STRUCTURAL
ROOF FRAMING PLAN

DWG NO. 220-S-3
DATE AUG. 1990
PROJ. NO. SEA22462.C1

DRAWN BY: R. FRIBERG DESIGNED BY: K. KORNHER
DGN NAME: H:/PROJ2/BELLINGH/BL220S-D.DGN

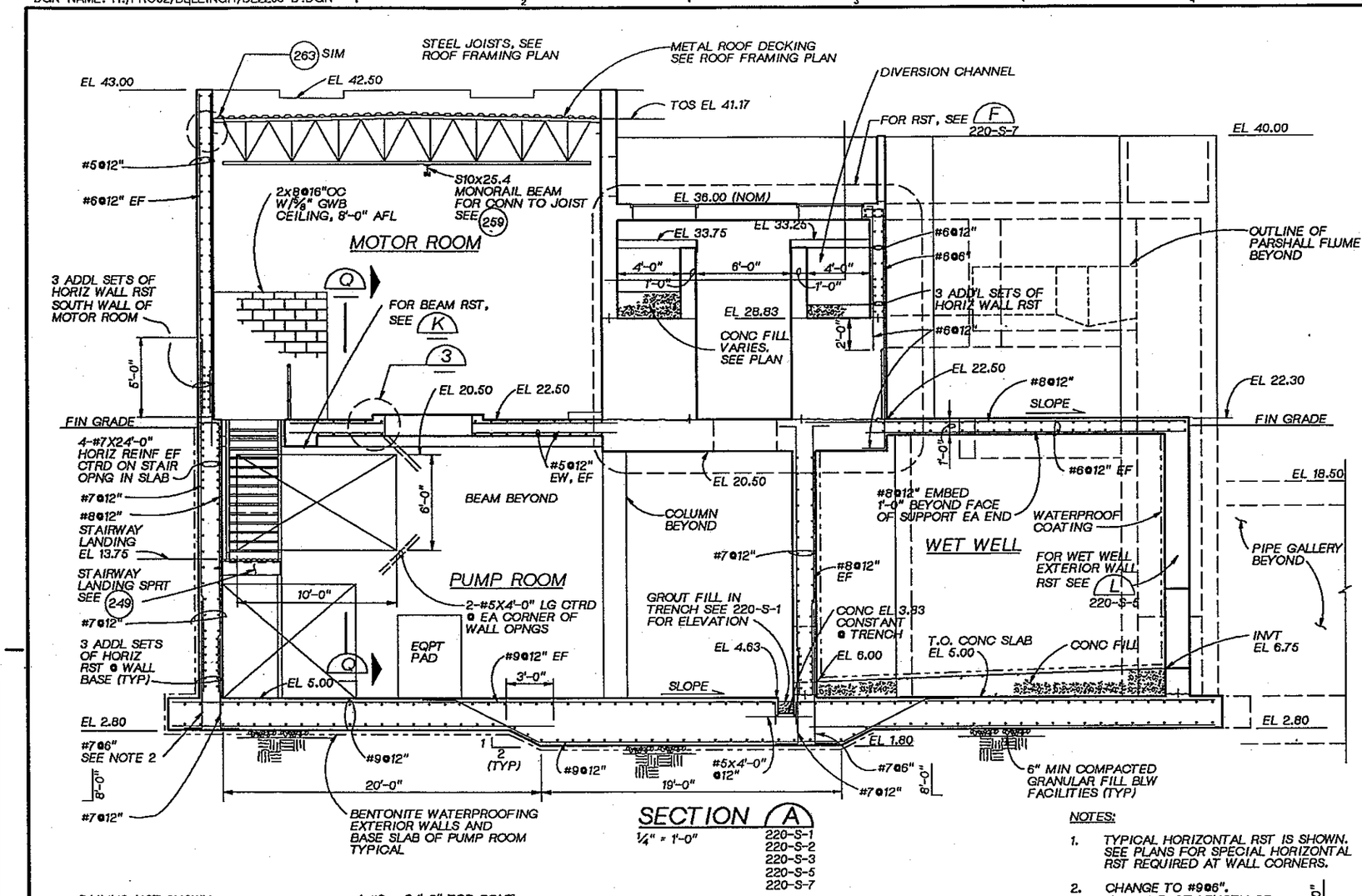

SECTION A

1/4" = 1'-0"

220-S-1
220-S-2
220-S-3
220-S-5
220-S-7

NOTES:

1. TYPICAL HORIZONTAL RST IS SHOWN. SEE PLANS FOR SPECIAL HORIZONTAL RST REQUIRED AT WALL CORNERS.
2. CHANGE TO #9@6". FOR 14-FOOT LENGTH OF WALL @ STAIR OPNG IN SLAB ABOVE. 10'-0"

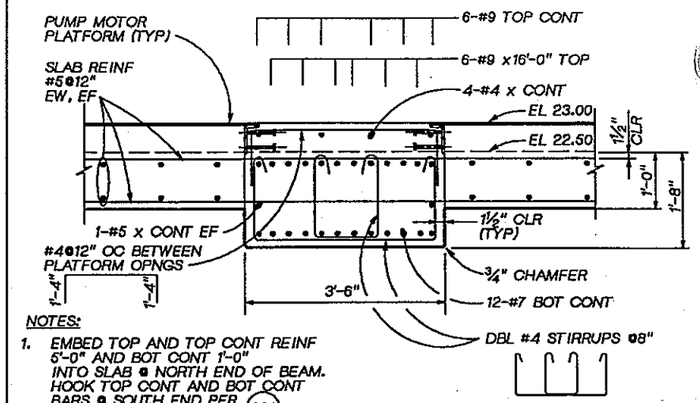

NOTES:

1. EMBED TOP AND TOP CONT REINF 6'-0" AND BOT CONT 1'-0" INTO SLAB @ NORTH END OF BEAM. HOOK TOP CONT AND BOT CONT BARS @ SOUTH END PER 221.
2. FOR BEAM DETAILS NOT SHOWN, SEE 221.

BEAM SECTION J

3/4"=1'-0"

220-S-2
220-S-4
220-S-5

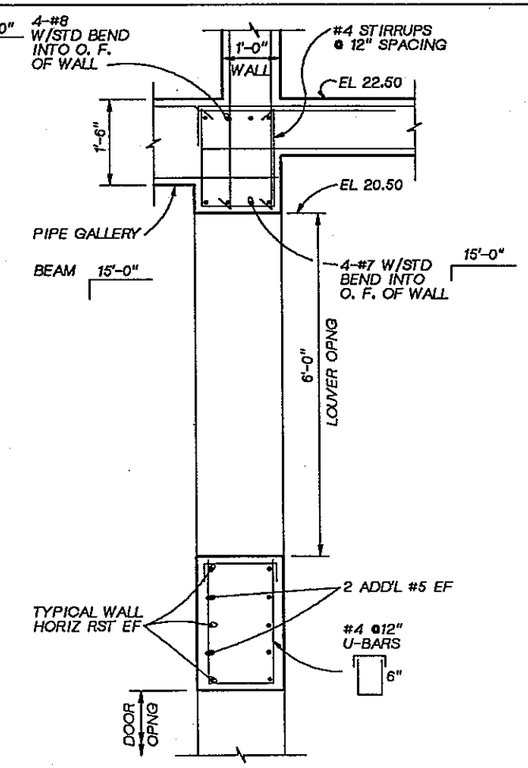

SECTION Q

3/4"=1'-0"

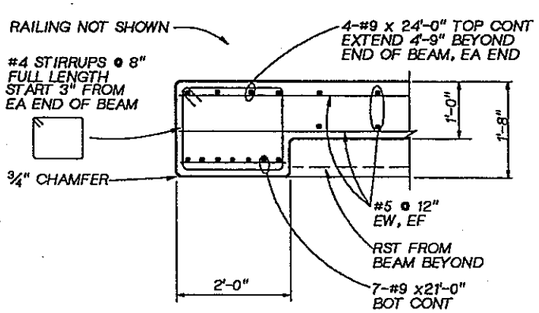

BEAM SECTION K

3/4"=1'-0"

220-S-2
220-S-4

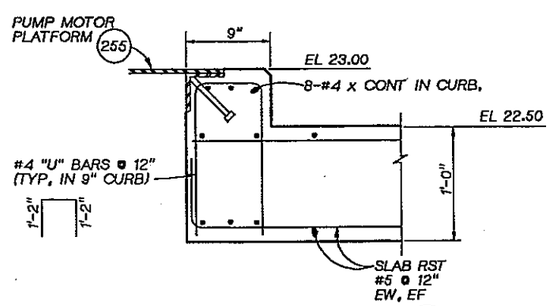

DETAIL 3

1 1/2"=1'-0"

DSGN	P. GUENTHER					
DR	R. FRIBERG					
CHK	W. BENNETT					
APVD	J. GAUTHIER	NO.	DATE	REVISION	BY	APVD

CH2M HILL

REUSE OF DOCUMENTS
THIS DOCUMENT, AND THE IDEAS AND DESIGNS INCORPORATED HEREIN, AS AN INSTRUMENT OF PROFESSIONAL SERVICE, IS THE PROPERTY OF CH2M HILL AND IS NOT TO BE USED, IN WHOLE OR IN PART, FOR ANY OTHER PROJECT WITHOUT THE WRITTEN AUTHORIZATION OF CH2M HILL.
©CH2M HILL

BAR IS ONE INCH ON ORIGINAL DRAWING. 0 1"
IF NOT ONE INCH ON THIS SHEET, ADJUST SCALES ACCORDINGLY.

CITY OF BELLINGHAM, WASHINGTON
POST POINT WASTEWATER TREATMENT PLANT UPGRADE

PRIMARY EFFLUENT PUMP STATION
STRUCTURAL SECTIONS & DETAILS

DWG NO. 220-S-4
DATE AUG. 1990
PROJ. NO. SEA22462.C1

DATE: 8-23-90
DRAWN BY: RSF DESIGNED BY: P. GUENTHER
DGN NAME: H:/PROJ2/BELLINGH/BL220S-E.DGN

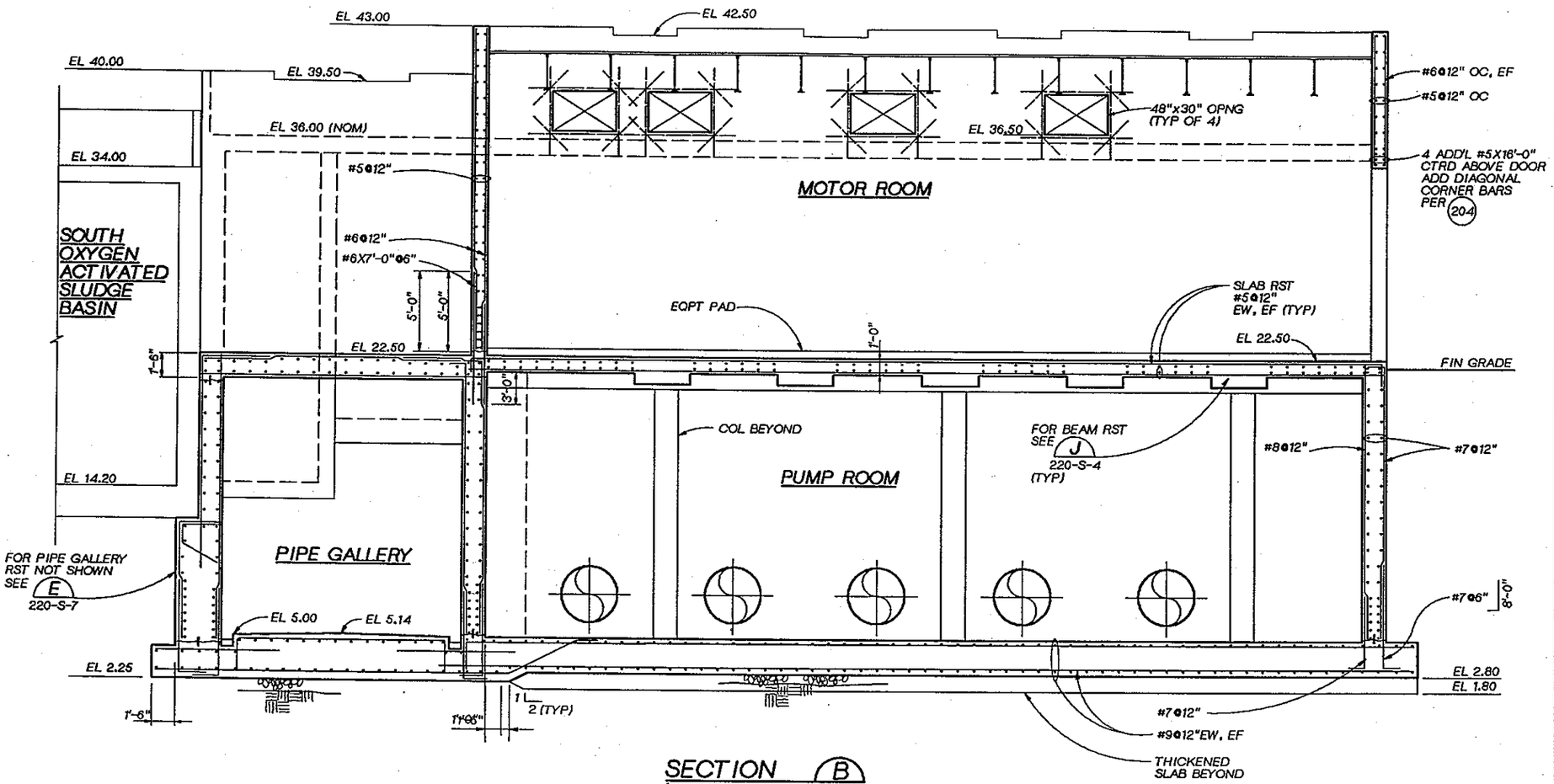

SECTION B
1/4" = 1'-0"
220-S-1
220-S-2
220-S-3
220-S-6
220-S-7

NOTES:

1. TYPICAL WALL RST IS SHOWN. SEE PLANS FOR SPECIAL HORIZONTAL RST REQUIRED @ WALL CORNERS.

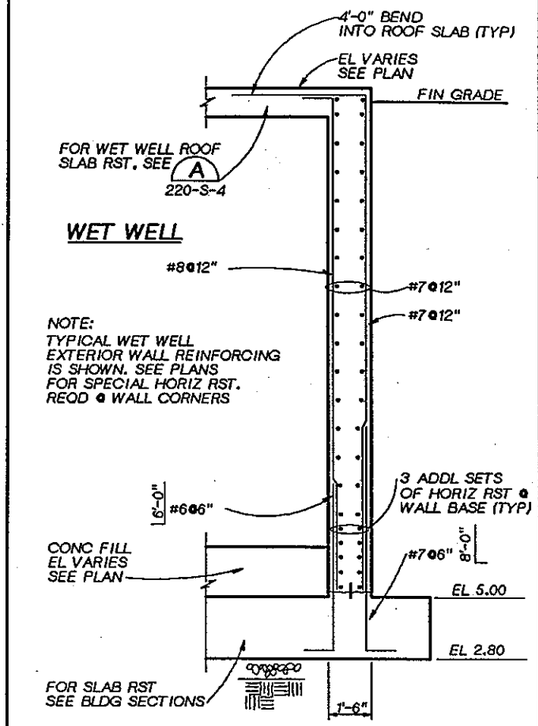

WALL SECTION L
3/8"=1'-0"
220-S-1
220-S-2
220-S-4
220-S-7

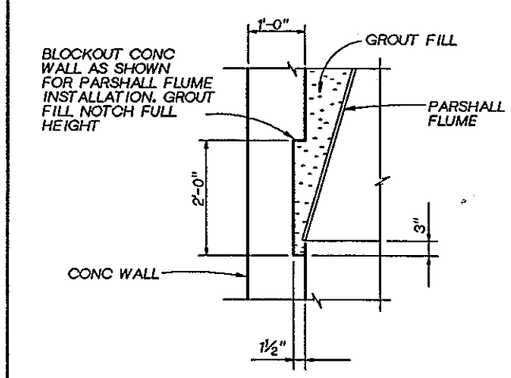

PLAN

DETAIL 4
3/4"=1'-0"
220-S-2
220-S-7

DSGN	P. GUENTHER				
DR	R. FRIBERG				
CHK	W. BENNETT				
APVD	J GAUTHIER	NO.	DATE	REVISION	BY / APVD

CH2M HILL

REUSE OF DOCUMENTS
THIS DOCUMENT, AND THE IDEAS AND DESIGNS INCORPORATED HEREIN, AS AN INSTRUMENT OF PROFESSIONAL SERVICE, IS THE PROPERTY OF CH2M HILL AND IS NOT TO BE USED, IN WHOLE OR IN PART, FOR ANY OTHER PROJECT WITHOUT THE WRITTEN AUTHORIZATION OF CH2M HILL.
©CH2M HILL

BAR IS ONE INCH ON ORIGINAL DRAWING.
0 1"
IF NOT ONE INCH ON THIS SHEET, ADJUST SCALES ACCORDINGLY.

CITY OF BELLINGHAM, WASHINGTON
POST POINT WASTEWATER TREATMENT PLANT UPGRADE

PRIMARY EFFLUENT PUMP STATION
STRUCTURAL SECTIONS & DETAILS

DWG NO. 220-S-5
DATE AUG. 1990
PROJ. NO. SEA22462.C1

DATE: 8-23-90
DRAWN BY: RSF DESIGNED BY: P. GUENTHER
DGN NAME: H:/PROJ2/BELLINGH/BL220S-F.DGN

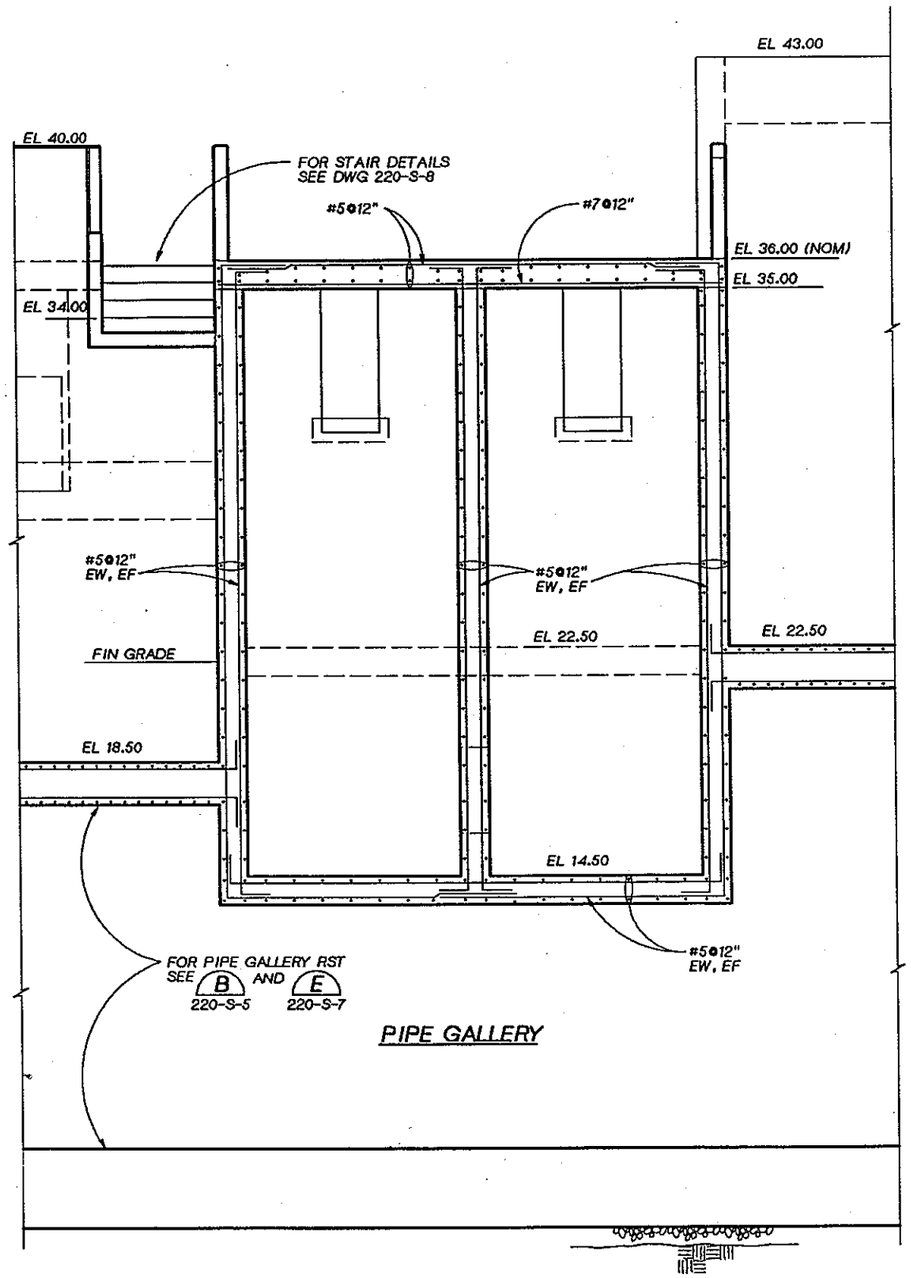

SECTION C
3/8" = 1'-0"
220-S-2
220-S-3

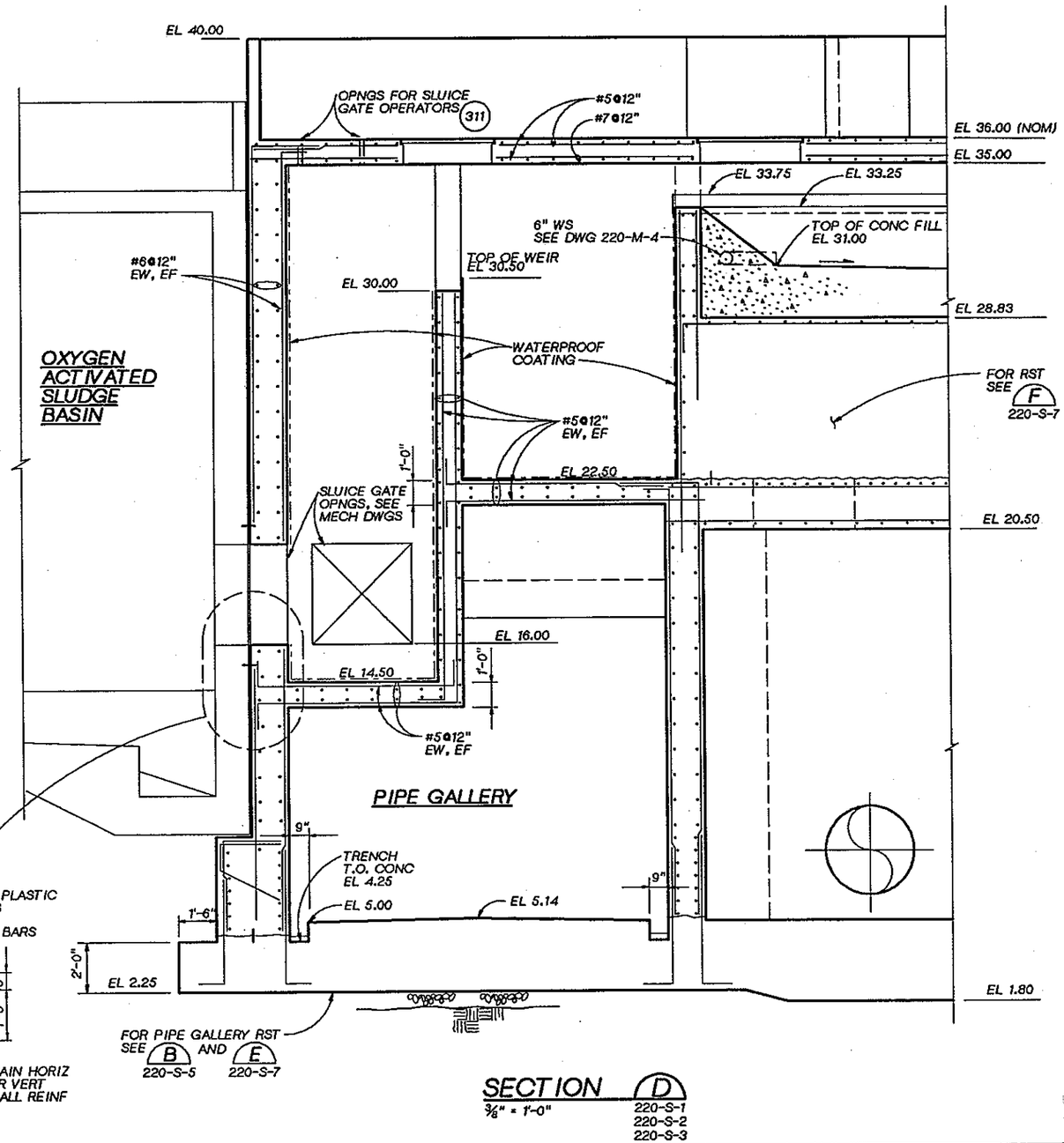

SECTION D
3/8" = 1'-0"
220-S-1
220-S-2
220-S-3

DSGN P. GUENTHER					
DR R. FRIBERG					
CHK W. BENNETT					
APVD J GAUTHIER	NO.	DATE	REVISION	BY	APVD

CH2M HILL

REUSE OF DOCUMENTS
THIS DOCUMENT, AND THE IDEAS AND DESIGNS INCORPORATED HEREIN, AS AN INSTRUMENT OF PROFESSIONAL SERVICE, IS THE PROPERTY OF CH2M HILL AND IS NOT TO BE USED, IN WHOLE OR IN PART, FOR ANY OTHER PROJECT WITHOUT THE WRITTEN AUTHORIZATION OF CH2M HILL.
©CH2M HILL

BAR IS ONE INCH ON ORIGINAL DRAWING.
0 1"
IF NOT ONE INCH ON THIS SHEET, ADJUST SCALES ACCORDINGLY.

CITY OF BELLINGHAM, WASHINGTON
POST POINT WASTEWATER TREATMENT PLANT UPGRADE

PRIMARY EFFLUENT PUMP STATION
STRUCTURAL SECTIONS

DWG NO. 220-S-6
DATE AUG. 1990
PROJ. NO. SEA22462.C1

DATE: 8-23-90
DRAWN BY: RSF DESIGNED BY: P. GUENTHER
DGN NAME: H:/PROJ2/BELLINGH/BL220S-H.DGN

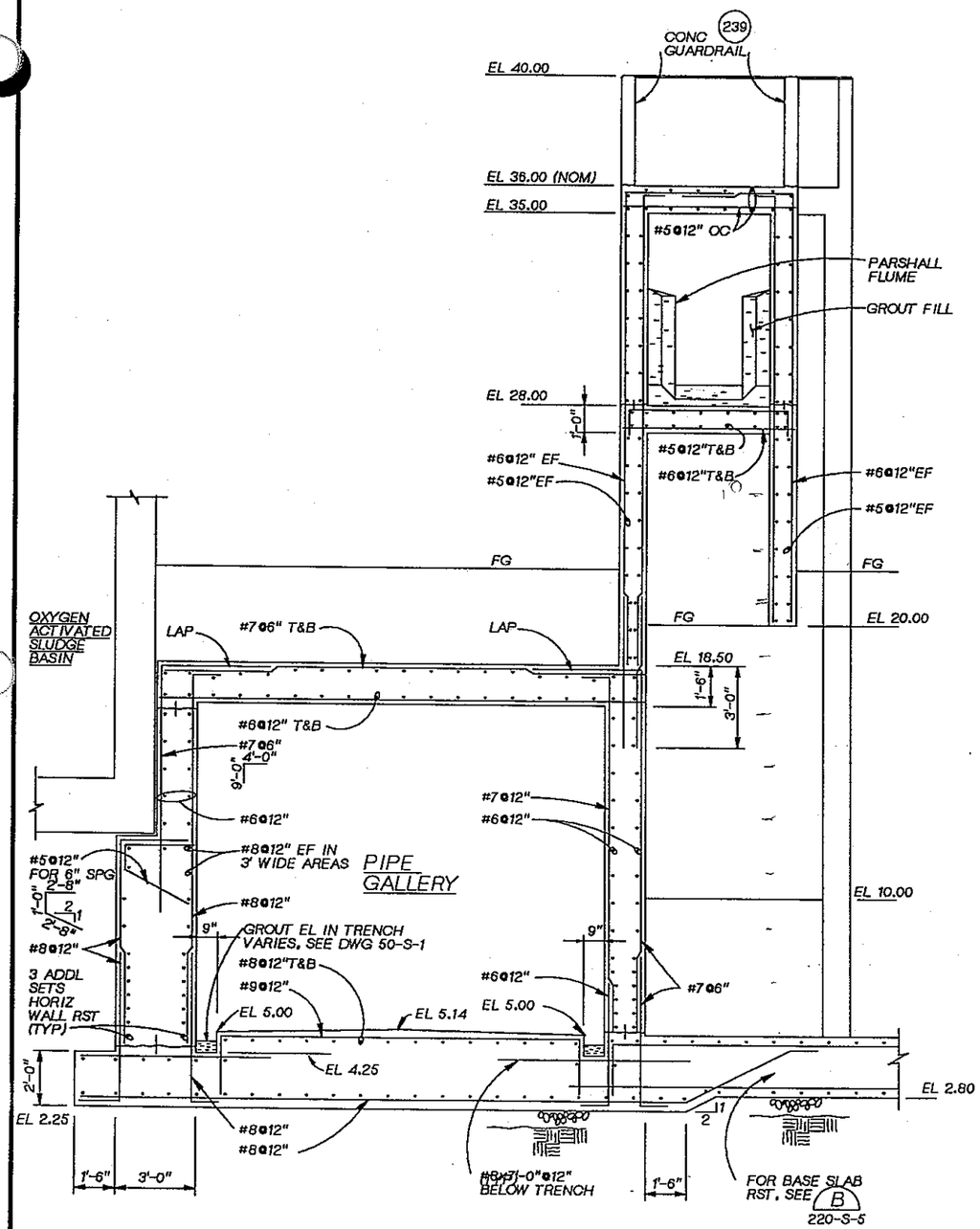

SECTION (E)
3/8" = 1'-0"
220-S-1
220-S-2
220-S-3
220-S-5
220-S-6

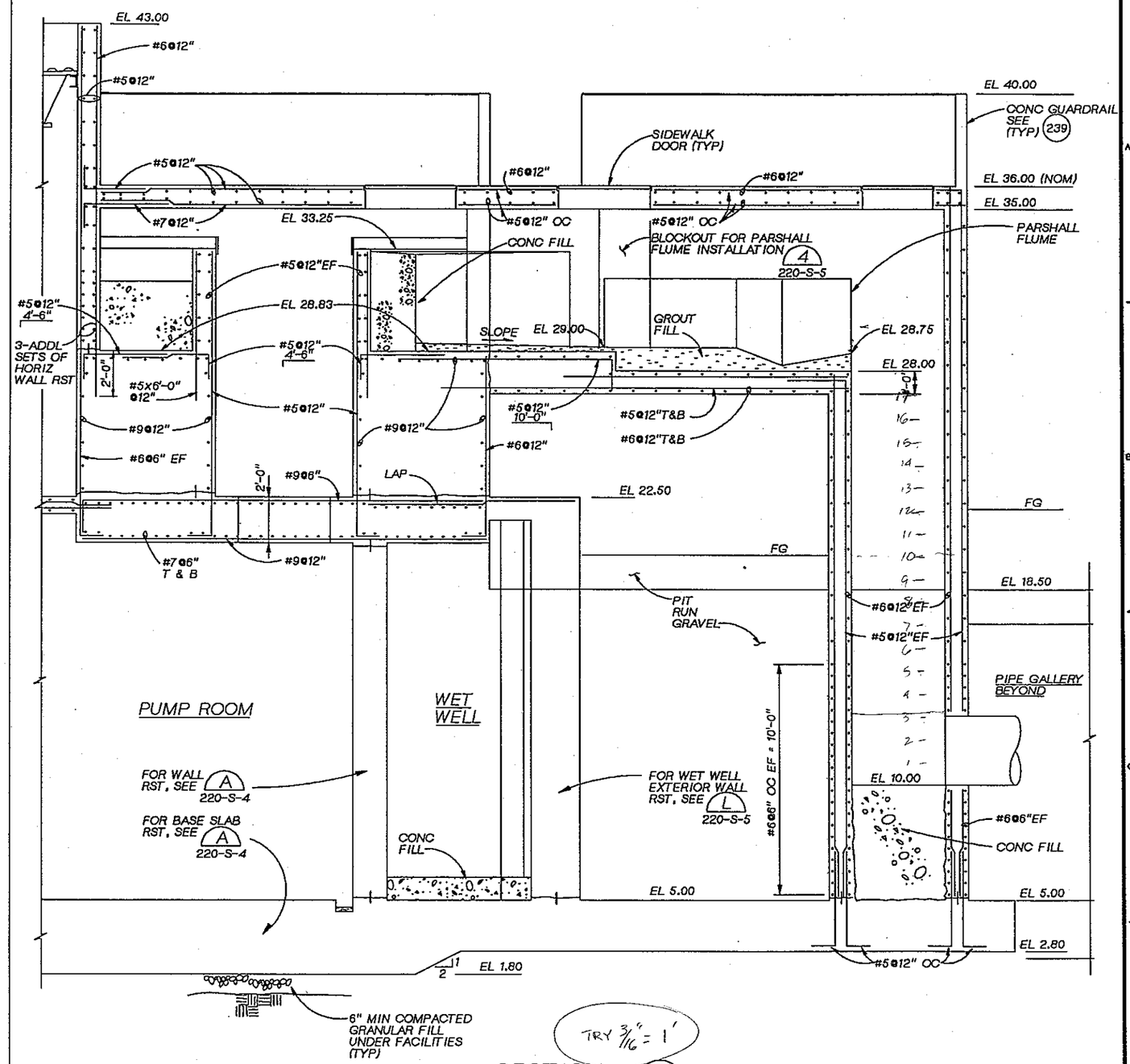

TRY 3/16" = 1'

SECTION (F)
3/8" = 1'-0"
220-S-1
220-S-2
220-S-3
220-S-4
220-S-6

LINDA M. KORBUS
STATE OF WASHINGTON
22464
REGISTERED PROFESSIONAL ENGINEER

CH2M HILL

DSGN	P. GUENTHER
DR	R. FRIBERG
CHK	W. BENNETT
APVD	J GAUTHIER

NO.	DATE	REVISION	BY	APVD

REUSE OF DOCUMENTS
THIS DOCUMENT, AND THE IDEAS AND DESIGNS INCORPORATED HEREIN, AS AN INSTRUMENT OF PROFESSIONAL SERVICE, IS THE PROPERTY OF CH2M HILL AND IS NOT TO BE USED, IN WHOLE OR IN PART, FOR ANY OTHER PROJECT WITHOUT THE WRITTEN AUTHORIZATION OF CH2M HILL.
©CH2M HILL

BAR IS ONE INCH ON ORIGINAL DRAWING.
0 1"
IF NOT ONE INCH ON THIS SHEET, ADJUST SCALES ACCORDINGLY.

CITY OF BELLINGHAM, WASHINGTON
POST POINT WASTEWATER TREATMENT PLANT UPGRADE

PRIMARY EFFLUENT PUMP STATION
STRUCTURAL SECTIONS

DWG NO. 220-S-7
DATE AUG. 1990
PROJ. NO. SEA22462.C1

DATE: 8-24-90
DRAWN BY: R. FRIBERG DESIGNED BY: P. GUENTHER
DGN NAME: H:/PROJ2/BELLINGH/BL220S-G.DGN

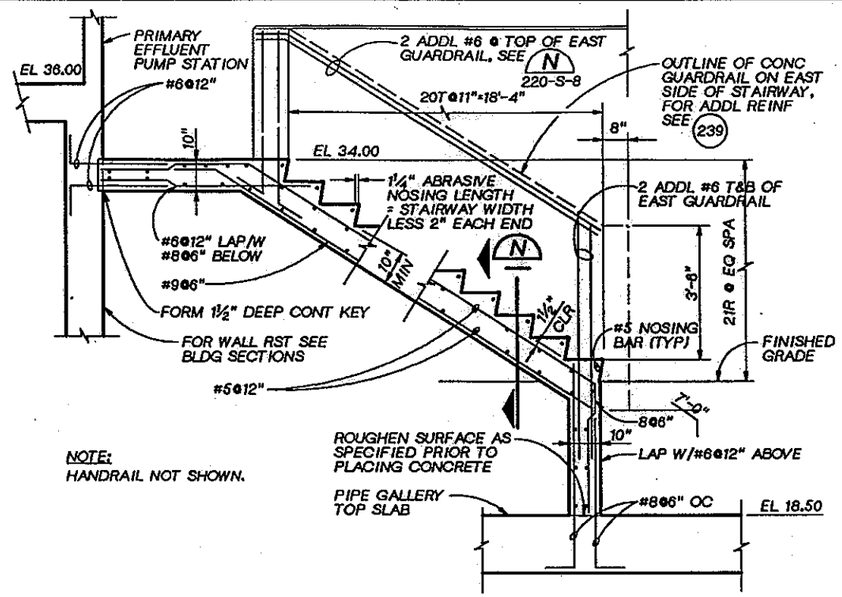

NOTE:
HANDRAIL NOT SHOWN.

STAIR SECTION M
½"=1'-0" 220-S-3

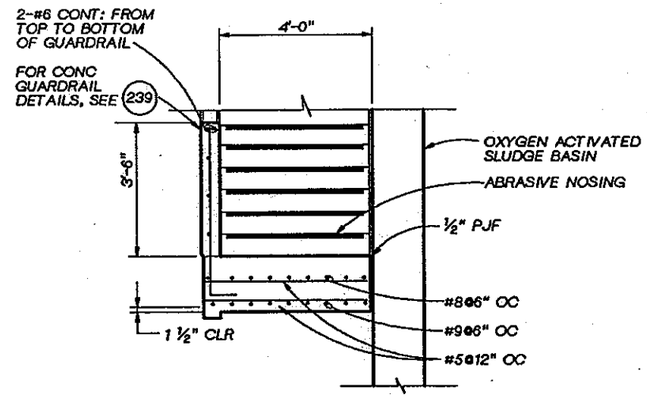

NOTE:
HANDRAIL NOT SHOWN.

SECTION N
½"=1'-0" 220-S-3 220-S-8

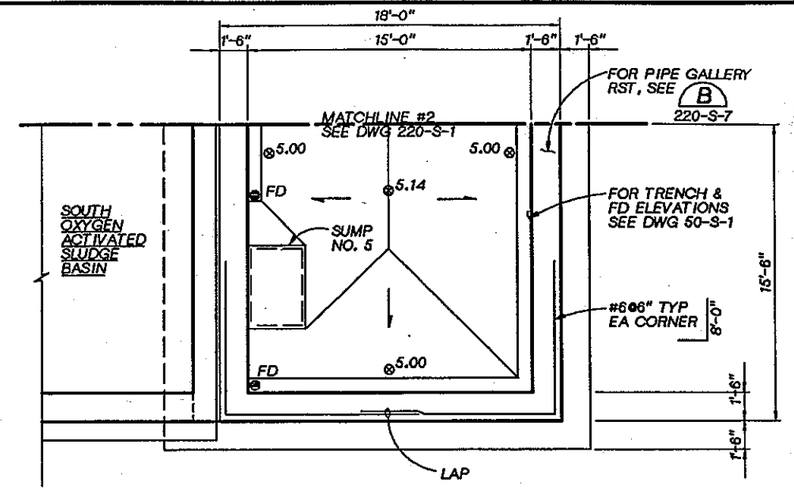

PARTIAL FOUNDATION PLAN
¼" = 1'-0"

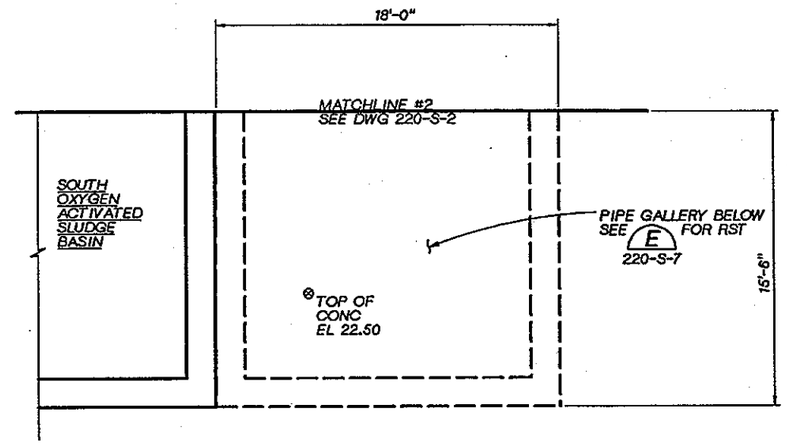

PARTIAL GROUND LEVEL PLAN
¼" = 1'-0"

NOTE:
HANDRAIL NOT SHOWN.

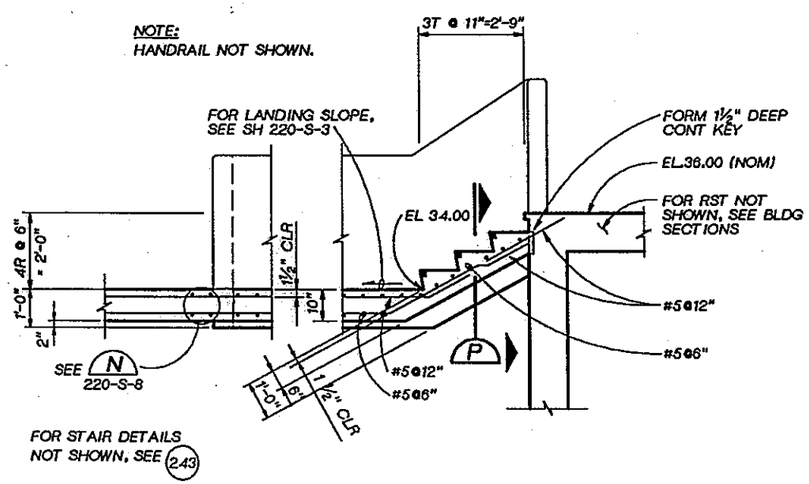

STAIR SECTION O
½"=1'-0" 220-S-3

NOTE:
HANDRAIL NOT SHOWN.

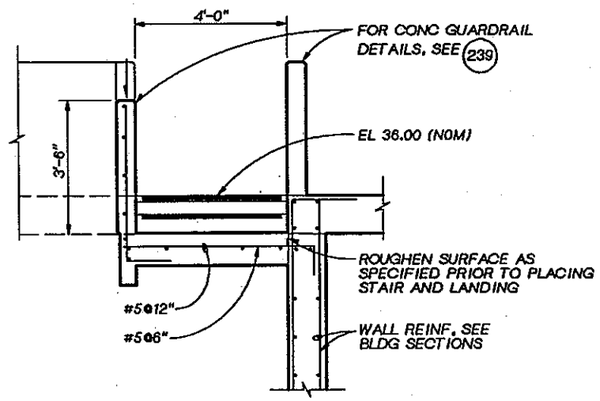

SECTION P
½"=1'-0" 220-S-3 220-S-8

DSGN P. GUENTHER						
DR R. FRIBERG						
CHK W. BENNETT						
APVD J GAUTHIER	NO.	DATE	REVISION	BY	APVD	

CH2M HILL

REUSE OF DOCUMENTS
THIS DOCUMENT, AND THE IDEAS AND DESIGNS INCORPORATED HEREIN, AS AN INSTRUMENT OF PROFESSIONAL SERVICE, IS THE PROPERTY OF CH2M HILL AND IS NOT TO BE USED, IN WHOLE OR IN PART, FOR ANY OTHER PROJECT WITHOUT THE WRITTEN AUTHORIZATION OF CH2M HILL.
©CH2M HILL

BAR IS ONE INCH ON ORIGINAL DRAWING.
0 1"
IF NOT ONE INCH ON THIS SHEET, ADJUST SCALES ACCORDINGLY.

CITY OF BELLINGHAM, WASHINGTON
POST POINT WASTEWATER TREATMENT PLANT UPGRADE

PRIMARY EFFLUENT PUMP STATION
STRUCTURAL SECTIONS AND DETAILS

DWG NO. 220-S-8
DATE AUG. 1990
PROJ NO. SEA22462.C1

DRAWN BY: M. MOORE DESIGNED BY: JRM
DGN NAME: H:/PROJ2/BELLINGH/BL220M-A.DGN

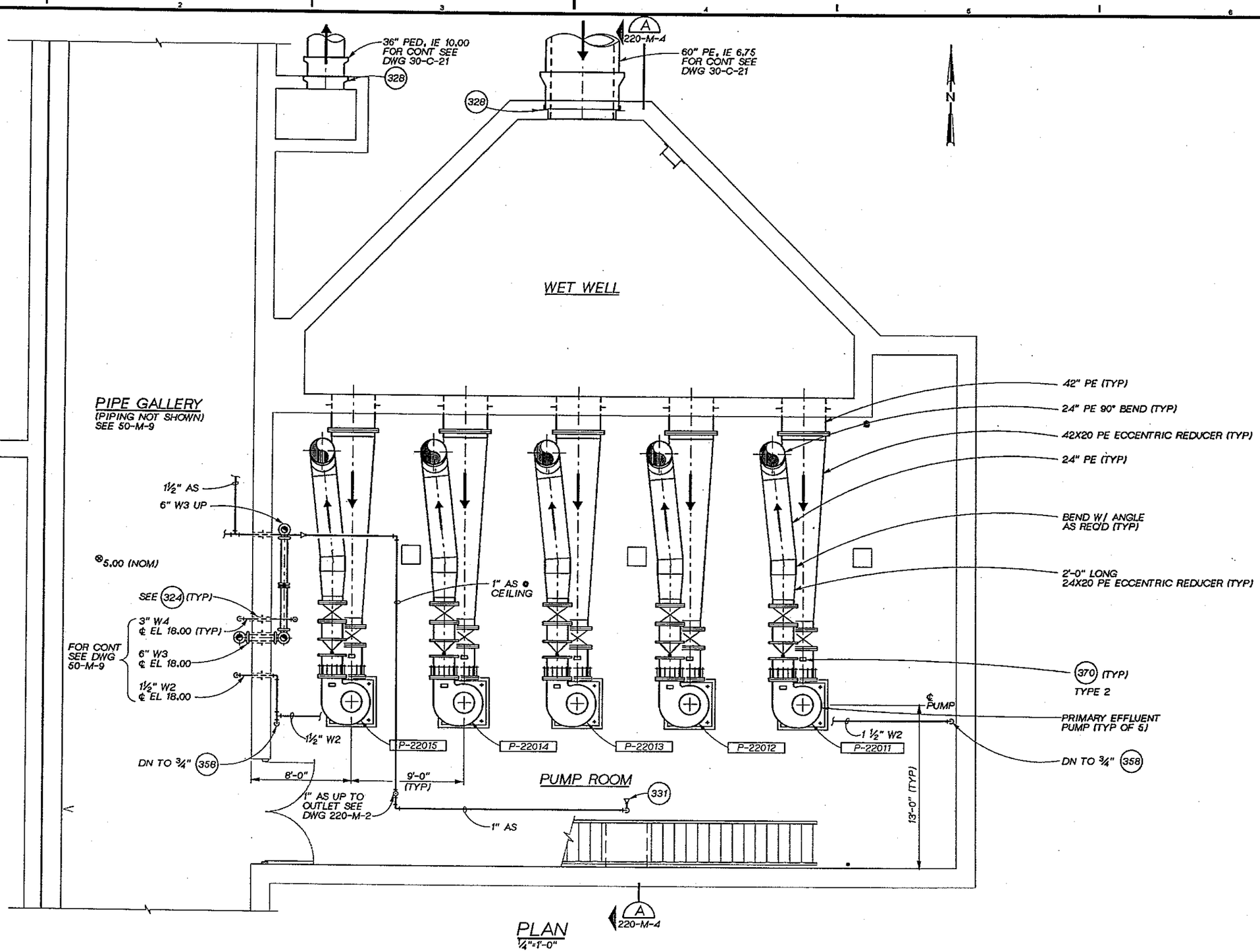

PLAN
¼"=1'-0"

DSGN J. MILLER					
DR A. MCRILL					
CHK M. BRACKEN					
APVD J GAUTHIER	NO.	DATE	REVISION	BY	APVD

CH2M HILL

REUSE OF DOCUMENTS
THIS DOCUMENT, AND THE IDEAS AND DESIGNS INCORPORATED HEREIN, AS AN INSTRUMENT OF PROFESSIONAL SERVICE, IS THE PROPERTY OF CH2M HILL AND IS NOT TO BE USED, IN WHOLE OR IN PART, FOR ANY OTHER PROJECT WITHOUT THE WRITTEN AUTHORIZATION OF CH2M HILL.
©CH2M HILL

VERIFY SCALE
BAR IS ONE INCH ON ORIGINAL DRAWING.
0 1"
IF NOT ONE INCH ON THIS SHEET, ADJUST SCALES ACCORDINGLY.

CITY OF BELLINGHAM, WASHINGTON
POST POINT WASTEWATER TREATMENT PLANT UPGRADE

PRIMARY EFFLUENT PUMP STATION
MECHANICAL
LOWER LEVEL PLAN

DWG NO. 220-M-1
DATE AUG. 1990
PROJ NO. SEA22462.C1

OVERLAY IDENTIFICATION | COMPOSITE | GRAY | GREEN | PROJ'D | FILE

DRAWN BY: M. MOORE DESIGNED BY: JRM
DGN NAME: H:/PROJ2/BELLINGH/BL220M-B.DGN

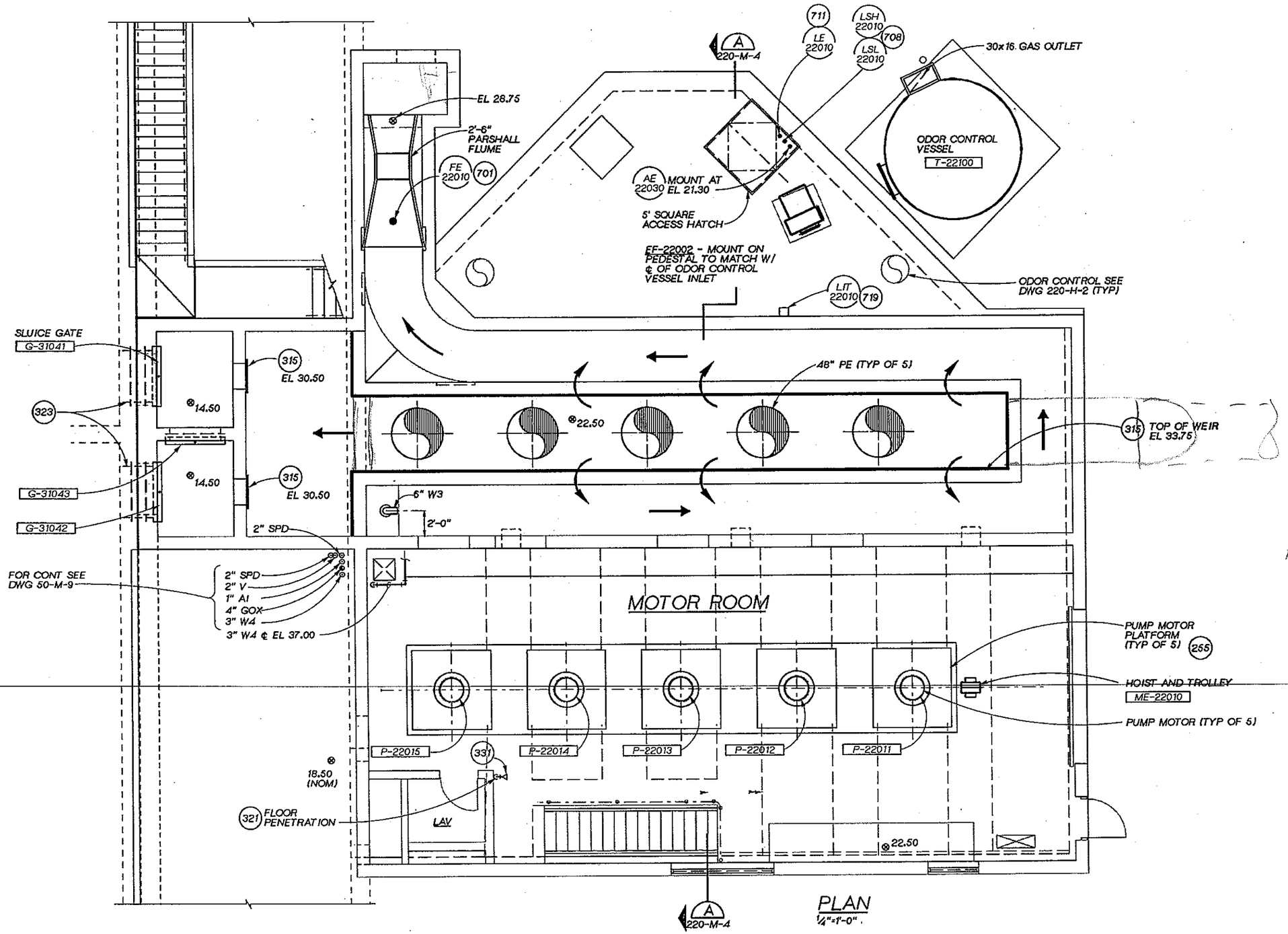

PLAN
1/4"=1'-0".

JOSEPH A. GAUTHIER
STATE OF WASHINGTON
REGISTERED PROFESSIONAL ENGINEER

CH2M HILL

DSGN	JRMILLER
DR	M.MOORE
CHK	M. BRACKEN
APVD	J GAUTHIER

NO.	DATE	REVISION	BY	APVD

REUSE OF DOCUMENTS
THIS DOCUMENT, AND THE IDEAS AND DESIGNS INCORPORATED HEREIN, AS AN INSTRUMENT OF PROFESSIONAL SERVICE, IS THE PROPERTY OF CH2M HILL AND IS NOT TO BE USED, IN WHOLE OR IN PART, FOR ANY OTHER PROJECT WITHOUT THE WRITTEN AUTHORIZATION OF CH2M HILL.
©CH2M HILL

VERIFY SCALE
BAR IS ONE INCH ON ORIGINAL DRAWING.
0 1"
IF NOT ONE INCH ON THIS SHEET, ADJUST SCALES ACCORDINGLY.

CITY OF BELLINGHAM, WASHINGTON
POST POINT WASTEWATER TREATMENT PLANT UPGRADE

PRIMARY EFFLUENT PUMP STATION
MECHANICAL
GROUND LEVEL PLAN

DWG NO. 220-M-2
DATE AUG. 1990
PROJ NO. SEA22462.C1

OVERLAY IDENTIFICATION: COMPOSITE, OVERLAY, SCREEN
PROJID
FILE

DRAWN BY: M. MOORE DESIGNED BY: JRM
DGN NAME: H:/PROJ2/BELLINGH/BL220M-A.DGN

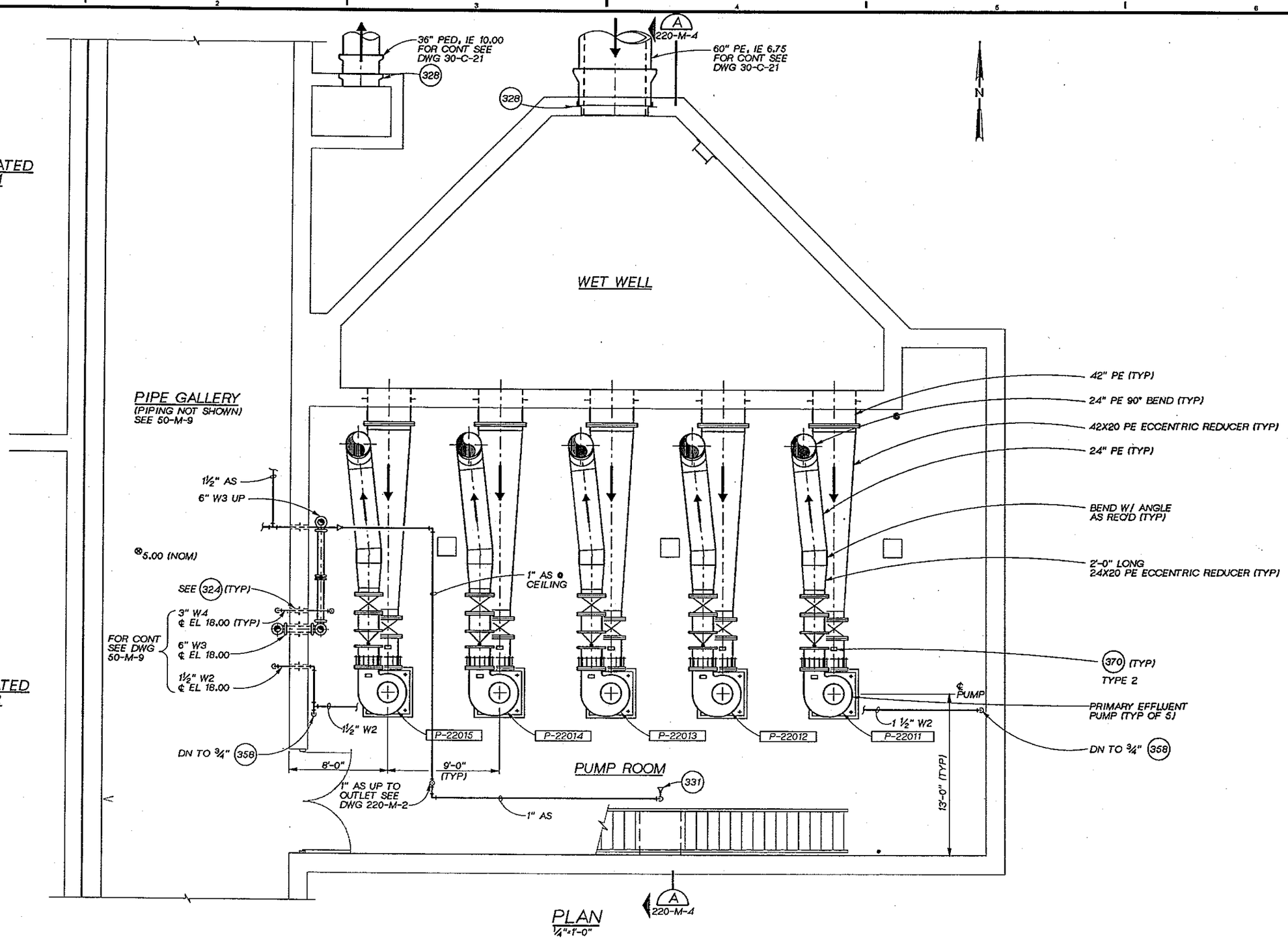

PLAN
¼"=1'-0"

DSGN J. MILLER					
DR A. MCRILL					
CHK M. BRACKEN					
APVD J GAUTHIER	NO.	DATE	REVISION	BY	APVD

CH2M HILL

REUSE OF DOCUMENTS
THIS DOCUMENT, AND THE IDEAS AND DESIGNS INCORPORATED HEREIN, AS AN INSTRUMENT OF PROFESSIONAL SERVICE, IS THE PROPERTY OF CH2M HILL AND IS NOT TO BE USED, IN WHOLE OR IN PART, FOR ANY OTHER PROJECT WITHOUT THE WRITTEN AUTHORIZATION OF CH2M HILL.
©CH2M HILL

VERIFY SCALE
BAR IS ONE INCH ON ORIGINAL DRAWING.
0 1"
IF NOT ONE INCH ON THIS SHEET, ADJUST SCALES ACCORDINGLY.

CITY OF BELLINGHAM, WASHINGTON
POST POINT WASTEWATER TREATMENT PLANT UPGRADE

PRIMARY EFFLUENT PUMP STATION
MECHANICAL
LOWER LEVEL PLAN

DWG NO. 220-M-1
DATE AUG. 1990
PROJ NO. SEA22462.C1

OVERLAY IDENTIFICATION COMPOSITE
PROJID
FILE

DRAWN BY: M. MOORE DESIGNED BY: JRM
DGN NAME: H:/PROJ2/BELLINGH/BL220M-B.DGN

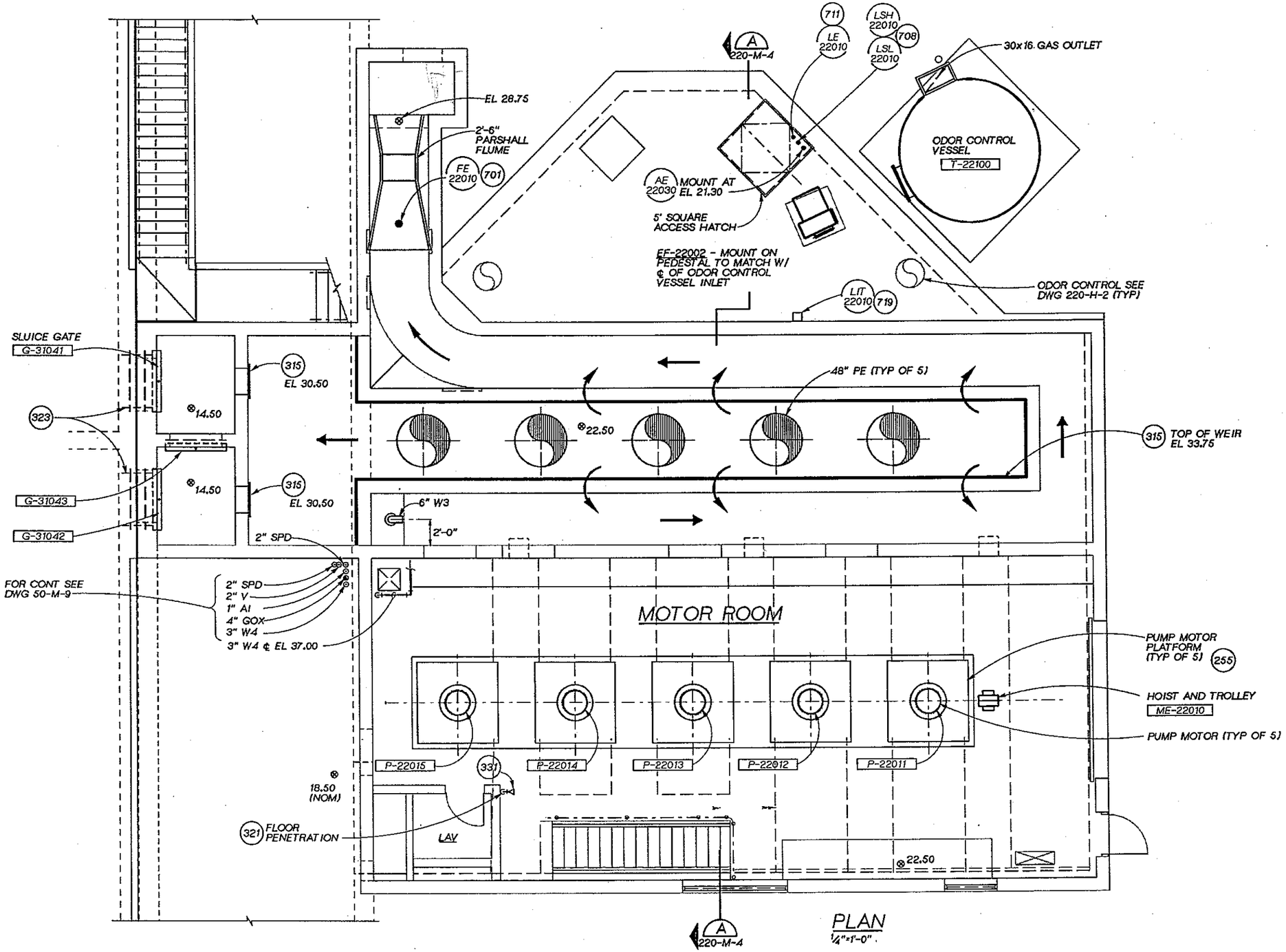

PLAN
1/4"=1'-0".

DSGN	JRMILLER					
DR	M.MOORE					
CHK	M. BRACKEN					
APVD	J. GAUTHIER	NO.	DATE	REVISION	BY	APVD

CH2M HILL

REUSE OF DOCUMENTS
THIS DOCUMENT, AND THE IDEAS AND DESIGNS INCORPORATED HEREIN, AS AN INSTRUMENT OF PROFESSIONAL SERVICE, IS THE PROPERTY OF CH2M HILL AND IS NOT TO BE USED, IN WHOLE OR IN PART, FOR ANY OTHER PROJECT WITHOUT THE WRITTEN AUTHORIZATION OF CH2M HILL.
©CH2M HILL

VERIFY SCALE
BAR IS ONE INCH ON ORIGINAL DRAWING.
0 1"
IF NOT ONE INCH ON THIS SHEET, ADJUST SCALES ACCORDINGLY.

CITY OF BELLINGHAM, WASHINGTON
POST POINT WASTEWATER TREATMENT PLANT UPGRADE

PRIMARY EFFLUENT PUMP STATION
MECHANICAL
GROUND LEVEL PLAN

DWG NO. 220-M-2
DATE AUG. 1990
PROJ NO. SEA22462.C1

COMPOSITE
OVERLAY SCREEN
OVERLAY IDENTIFICATION
PROJID
FILE

DRAWN BY: M. MOORE DESIGNED BY: JRMILLER
DGN NAME: H:/PROJ2/BELLINGH/BL220M-D.DGN

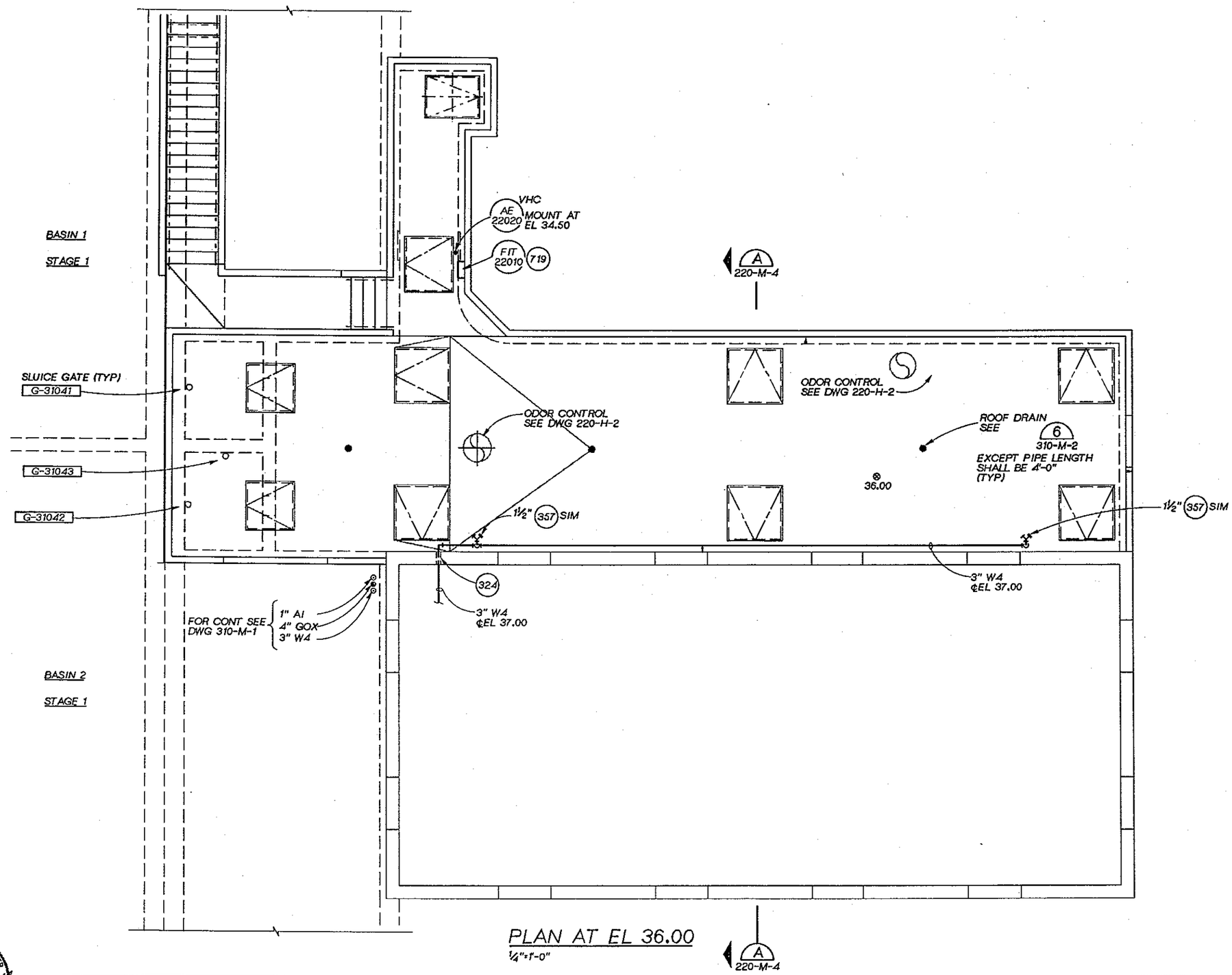

PLAN AT EL 36.00
¼"=1'-0"

A
220-M-4

JOSEPH A. GAUTHIER
STATE OF WASHINGTON
REGISTERED PROFESSIONAL ENGINEER

CH2M HILL

DSGN	J. MILLER
DR	J.PIERONI
CHK	M. BRACKEN
APVD	J GAUTHIER

NO.	DATE	REVISION	BY	APVD

REUSE OF DOCUMENTS
THIS DOCUMENT, AND THE IDEAS AND DESIGNS INCORPORATED HEREIN, AS AN INSTRUMENT OF PROFESSIONAL SERVICE, IS THE PROPERTY OF CH2M HILL AND IS NOT TO BE USED, IN WHOLE OR IN PART, FOR ANY OTHER PROJECT WITHOUT THE WRITTEN AUTHORIZATION OF CH2M HILL.
©CH2M HILL

VERIFY SCALE
BAR IS ONE INCH ON ORIGINAL DRAWING.
0 1"
IF NOT ONE INCH ON THIS SHEET, ADJUST SCALES ACCORDINGLY.

CITY OF BELLINGHAM, WASHINGTON
POST POINT WASTEWATER TREATMENT PLANT UPGRADE

PRIMARY EFFLUENT PUMP STATION
MECHANICAL
UPPER LEVEL PLAN

DWG NO. 220-M-3
DATE AUG. 1990
PROJ NO. SEA22462.C1

OVERLAY IDENTIFICATION: COMPOSITE, OVERLAY, SCREEN
PROJID
FILE

DRAWN BY: M. MOORE DESIGNED BY: JR MILLER
DGN NAME: H:/PROJ2/BELLINGH/BL220M-C.DGN

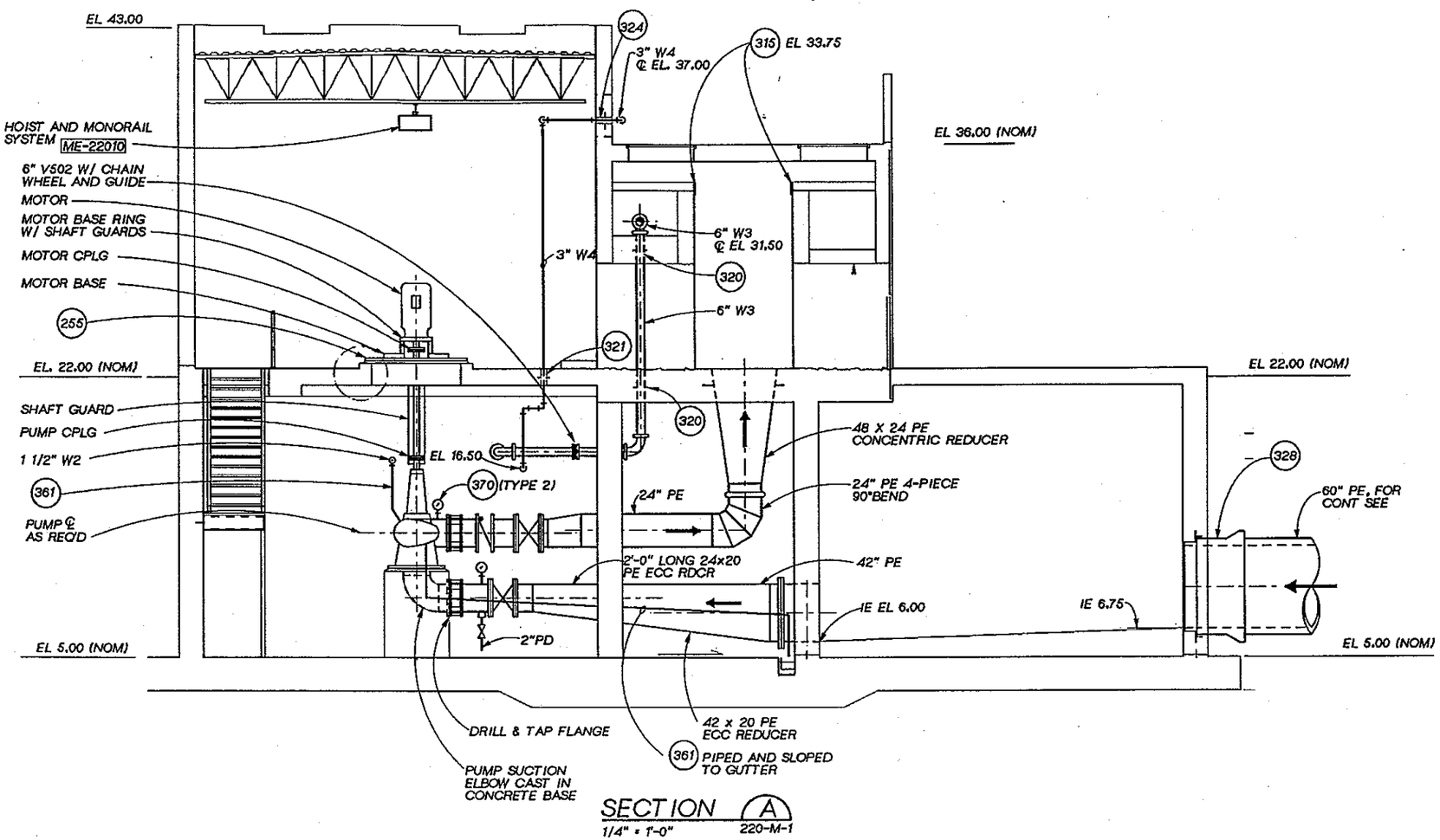

SECTION A 220-M-1
1/4" = 1'-0"

JOSEPH A. GAUTHIER STATE OF WASHINGTON REGISTERED PROFESSIONAL ENGINEER

CH2M HILL

DSGN J. MILLER						
DR A. MCRILL						
CHK M. BRACKEN						
APVD J GAUTHIER	NO.	DATE	REVISION	BY	APVD	

REUSE OF DOCUMENTS
THIS DOCUMENT, AND THE IDEAS AND DESIGNS INCORPORATED HEREIN, AS AN INSTRUMENT OF PROFESSIONAL SERVICE, IS THE PROPERTY OF CH2M HILL AND IS NOT TO BE USED, IN WHOLE OR IN PART, FOR ANY OTHER PROJECT WITHOUT THE WRITTEN AUTHORIZATION OF CH2M HILL.
©CH2M HILL

VERIFY SCALE
BAR IS ONE INCH ON ORIGINAL DRAWING.
0 1"
IF NOT ONE INCH ON THIS SHEET, ADJUST SCALES ACCORDINGLY.

CITY OF BELLINGHAM, WASHINGTON
POST POINT WASTEWATER TREATMENT PLANT UPGRADE

PRIMARY EFFLUENT PUMP STATION
MECHANICAL SECTIONS

DWG NO. 220-M-4
DATE AUG. 1990
PROJ NO. SEA22462.C1

OVERLAY IDENTIFICATION: COMPOSITE, OVERLAY, SCREEN; PROJ/D, FILE

DRAWN BY: M. MOORE DESIGNED BY: JRMILLER
DGN NAME: H:/PROJ2/BELLINGH/BL220M-D.DGN

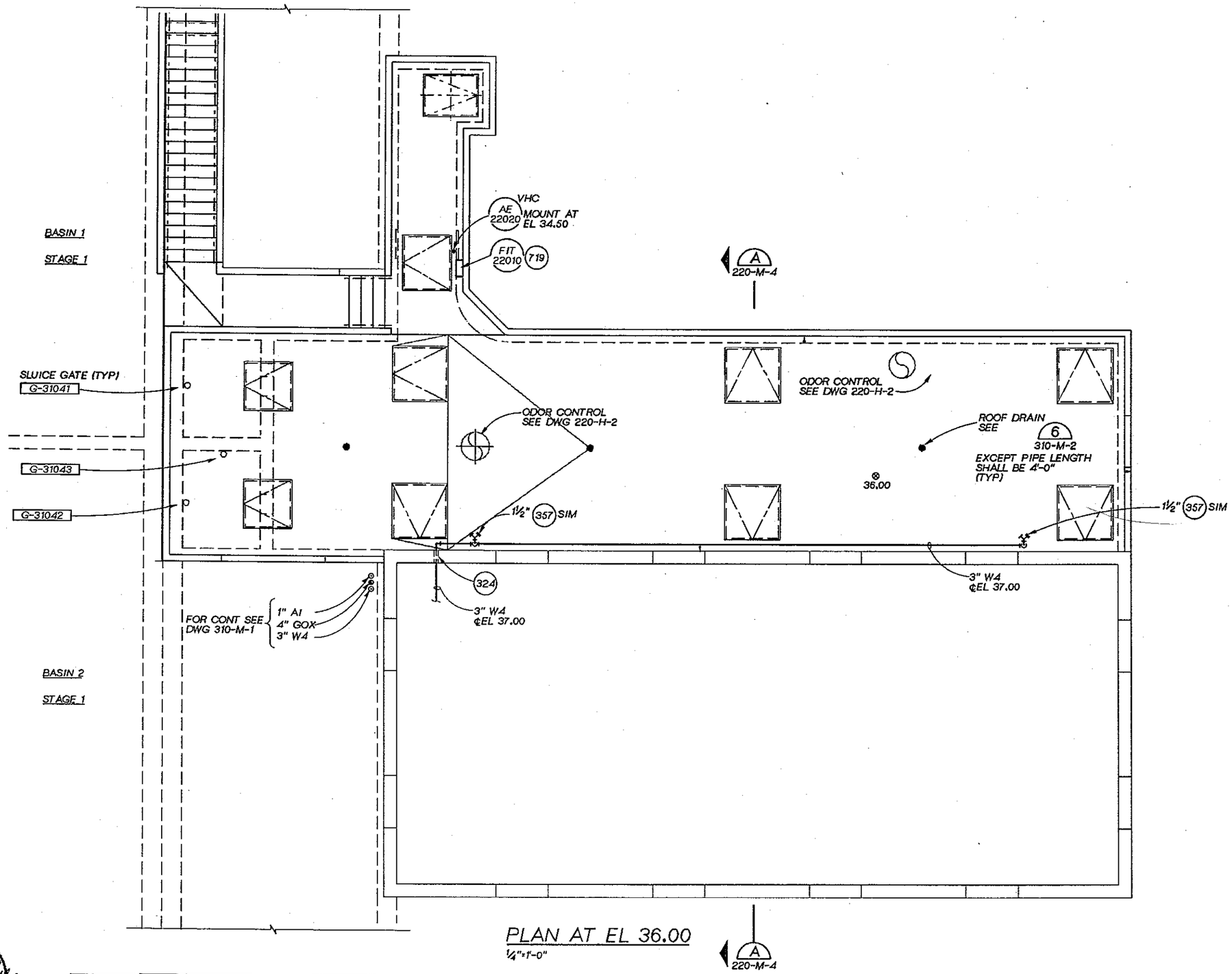

PLAN AT EL 36.00
¼"=1'-0"

A
220-M-4

DSGN J. MILLER					
DR J.PIERONI					
CHK M. BRACKEN					
APVD J GAUTHIER	NO.	DATE	REVISION	BY	APVD

REUSE OF DOCUMENTS
THIS DOCUMENT, AND THE IDEAS AND DESIGNS INCORPORATED HEREIN, AS AN INSTRUMENT OF PROFESSIONAL SERVICE, IS THE PROPERTY OF CH2M HILL AND IS NOT TO BE USED, IN WHOLE OR IN PART, FOR ANY OTHER PROJECT WITHOUT THE WRITTEN AUTHORIZATION OF CH2M HILL.
©CH2M HILL

VERIFY SCALE
BAR IS ONE INCH ON ORIGINAL DRAWING.
0 1"
IF NOT ONE INCH ON THIS SHEET, ADJUST SCALES ACCORDINGLY.

CITY OF BELLINGHAM, WASHINGTON
POST POINT WASTEWATER TREATMENT PLANT UPGRADE

PRIMARY EFFLUENT PUMP STATION
MECHANICAL
UPPER LEVEL PLAN

DWG NO. 220-M-3
DATE AUG. 1990
PROJ NO. SEA22462.C1

OVERLAY IDENTIFICATION: COMPOSITE, PROJID, OVERLAY, FILE, GREEN

DRAWN BY: M. MOORE DESIGNED BY: JR MILLER
DGN NAME: H:/PROJ2/BELLINGH/BL220M-C.DGN

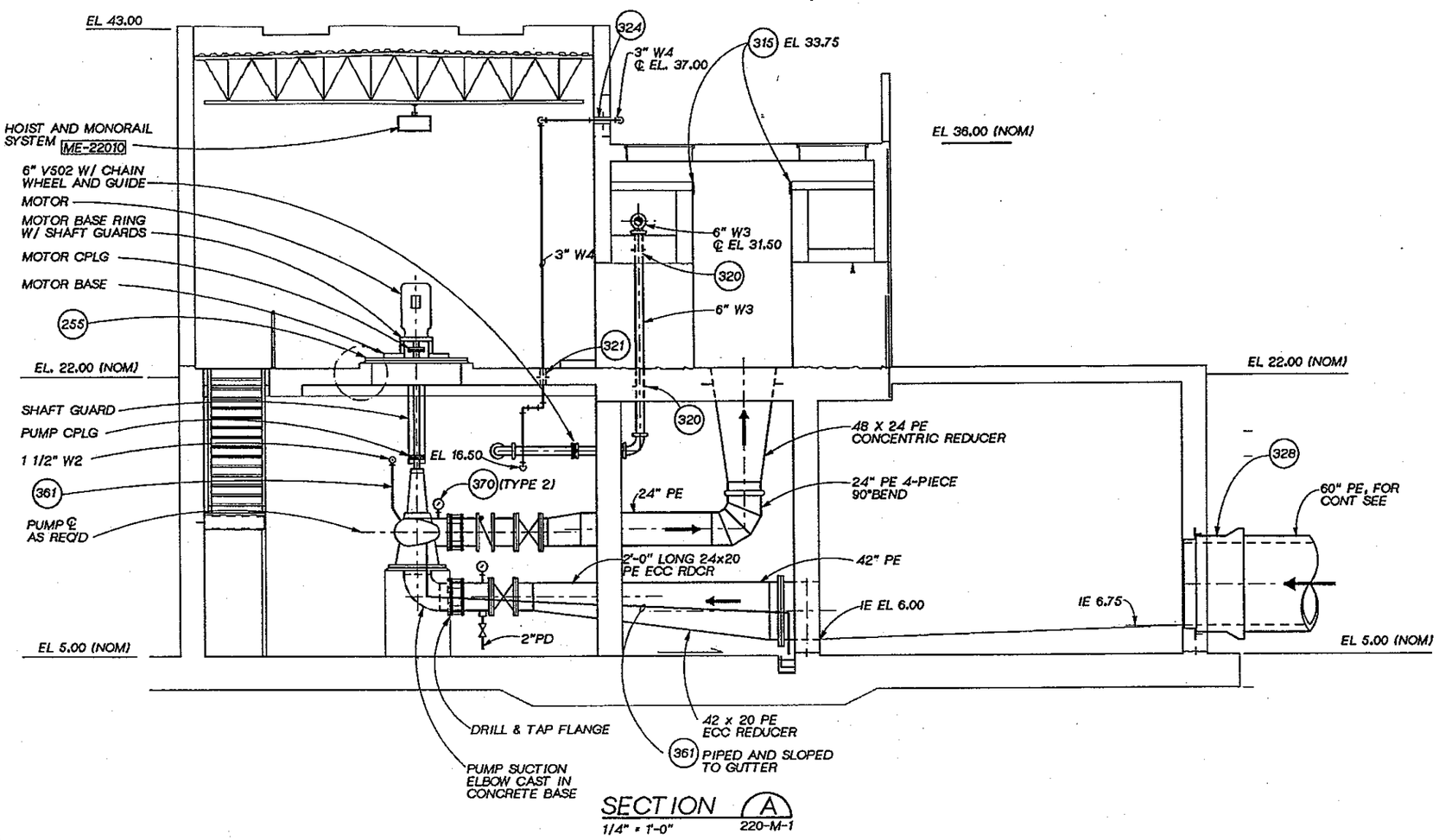

SECTION A 220-M-1
1/4" = 1'-0"

JOSEPH A. GAUTHIER STATE OF WASHINGTON REGISTERED PROFESSIONAL ENGINEER

CH2M HILL

DSGN	J. MILLER				
DR	A. MCRILL				
CHK	M. BRACKEN				
APVD	J GAUTHIER	NO.	DATE	REVISION	BY	APVD

REUSE OF DOCUMENTS
THIS DOCUMENT, AND THE IDEAS AND DESIGNS INCORPORATED HEREIN, AS AN INSTRUMENT OF PROFESSIONAL SERVICE, IS THE PROPERTY OF CH2M HILL AND IS NOT TO BE USED, IN WHOLE OR IN PART, FOR ANY OTHER PROJECT WITHOUT THE WRITTEN AUTHORIZATION OF CH2M HILL.
©CH2M HILL

VERIFY SCALES
BAR IS ONE INCH ON ORIGINAL DRAWING.
0 1"
IF NOT ONE INCH ON THIS SHEET, ADJUST SCALES ACCORDINGLY.

CITY OF BELLINGHAM, WASHINGTON
POST POINT WASTEWATER TREATMENT PLANT UPGRADE

PRIMARY EFFLUENT PUMP STATION
MECHANICAL SECTIONS

DWG NO. 220-M-4
DATE AUG. 1990
PROJ NO. SEA22462.C1

OVERLAY IDENTIFICATION: COMPOSITE, PROJID, OVERLAY, FILE, SCREEN

DRAWN BY: B. CARR DESIGNED BY: S GUNDY/G FLOOD
DGN NAME: H:/PROJ2/BELLINGH/BL220H-A.DGN

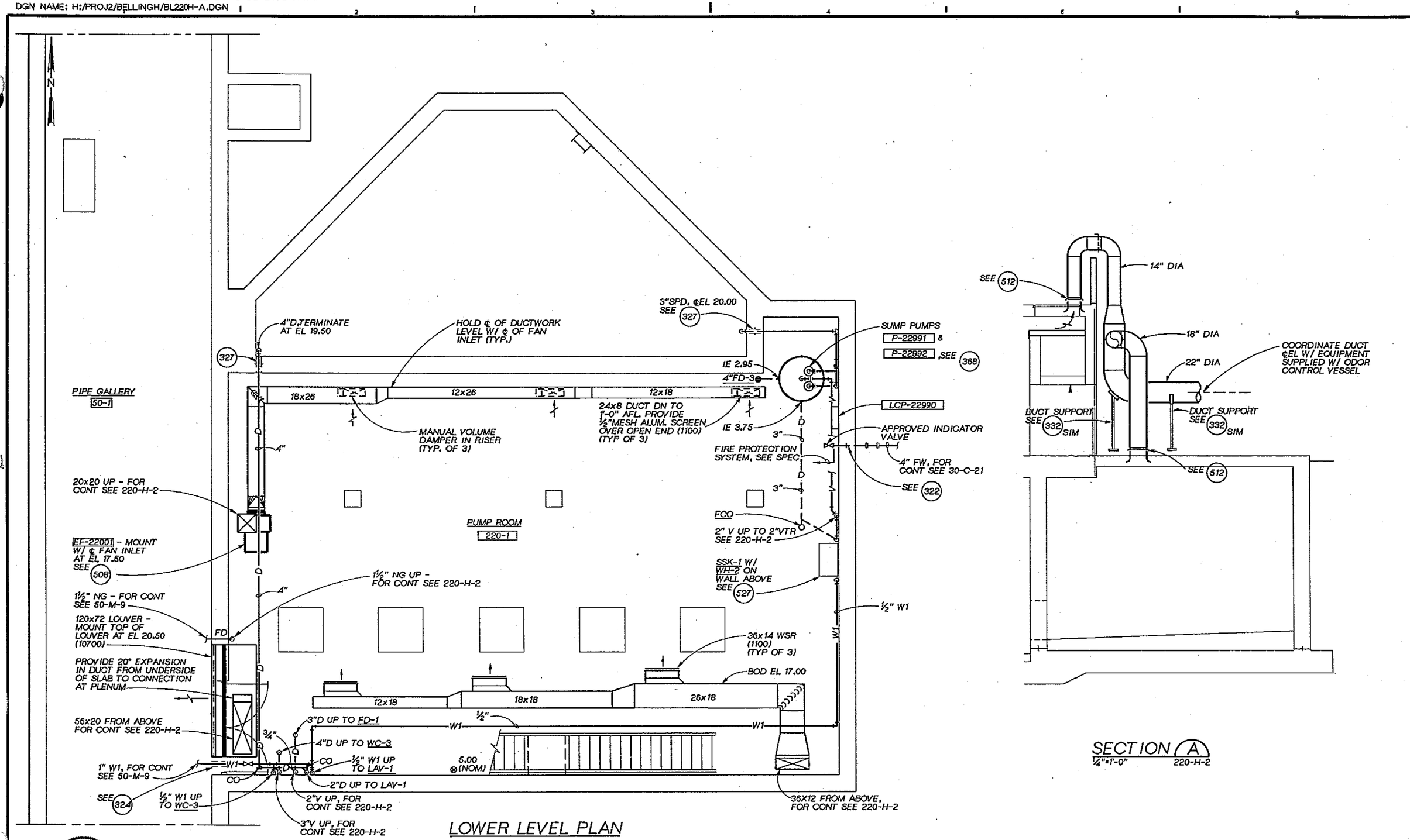

JOSEPH A. GAUTHIER REGISTERED PROFESSIONAL ENGINEER

CH2M HILL

DSGN	S GUNDY/G FLOOD				
DR	S.D.GUNDY				
CHK	J.SIEMEMS				
APVD	J. GAUTHIER	NO.	DATE	REVISION	BY	APVD

REUSE OF DOCUMENTS
THIS DOCUMENT, AND THE IDEAS AND DESIGNS INCORPORATED HEREIN, AS AN INSTRUMENT OF PROFESSIONAL SERVICE, IS THE PROPERTY OF CH2M HILL AND IS NOT TO BE USED, IN WHOLE OR IN PART, FOR ANY OTHER PROJECT WITHOUT THE WRITTEN AUTHORIZATION OF CH2M HILL.
©CH2M HILL

VERIFY SCALE
BAR IS ONE INCH ON ORIGINAL DRAWING.
0 1"
IF NOT ONE INCH ON THIS SHEET, ADJUST SCALES ACCORDINGLY.

CITY OF BELLINGHAM, WASHINGTON
POST POINT WASTEWATER TREATMENT PLANT UPGRADE

PRIMARY EFFLUENT PUMP STATION
HVAC AND PLUMBING
LOWER LEVEL PLAN

DWG NO. 220-H-1
DATE AUG. 1990
PROJ NO. SEA22462.C1

OVERLAY IDENTIFICATION: COMPOSITE, OVERLAY, PROJID, FILE

DRAWN BY: B. CARR DESIGNED BY: S GUNDY/G FLOOD
DGN NAME: H:/PROJ2/BELLINGH/BL220H-B.DGN

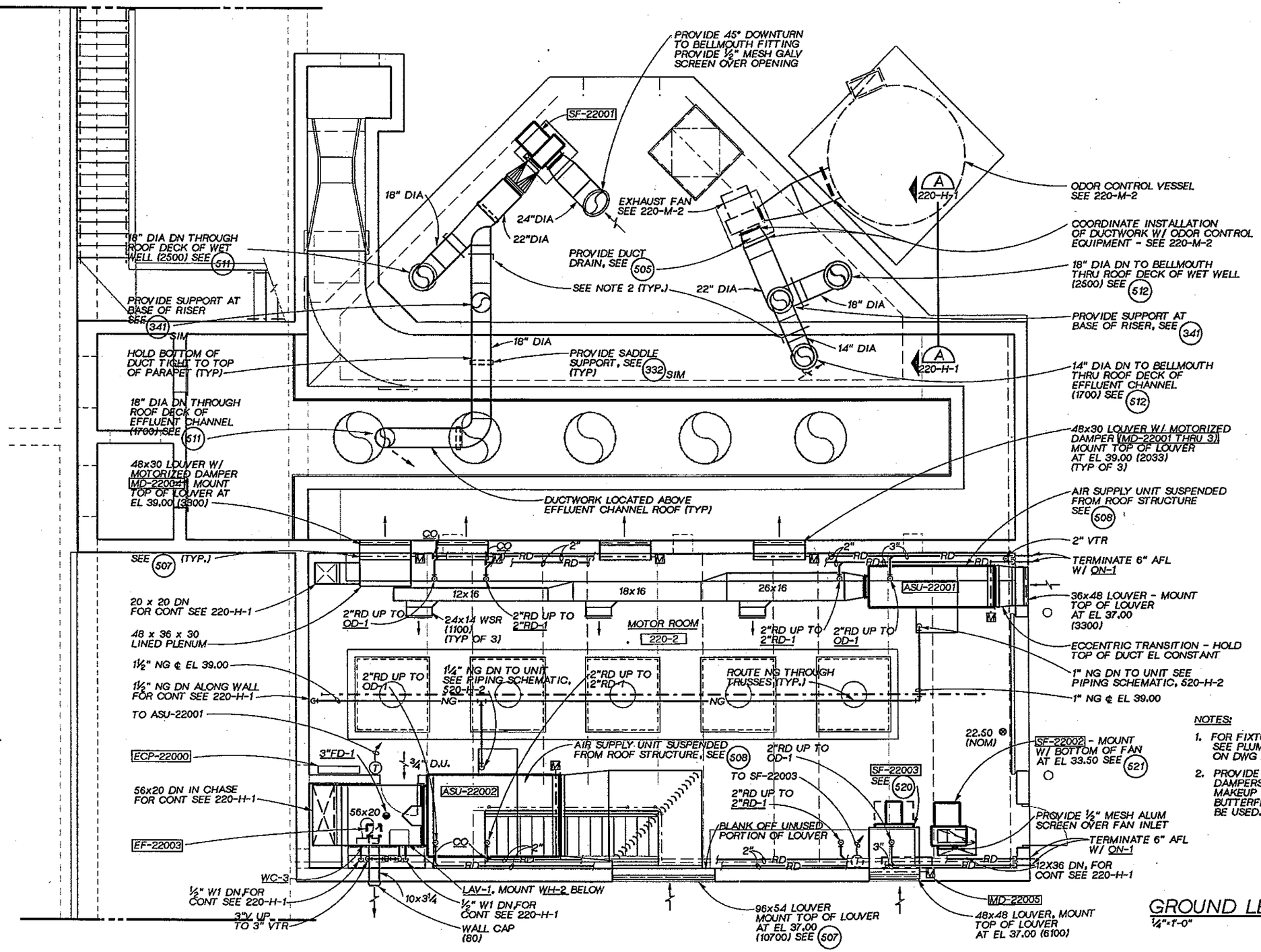

NOTES:

1. FOR FIXTURE CONNECTION SIZES, SEE PLUMBING FIXTURE SCHEDULE ON DWG NO. 800-P-1
2. PROVIDE BLAST GATE BALANCING DAMPERS ON ALL ODOR CONTROL MAKEUP AIR & EXHAUST SYSTEMS. BUTTERFLY DAMPERS SHALL NOT BE USED.

GROUND LEVEL PLAN

¼"=1'-0"

DSGN G.SAKAGAWA					
DR S.D.GUNDY					
CHK J.SIEMENS					
APVD J. GAUTHIER	NO.	DATE	REVISION	BY	APVD

CH2M HILL

REUSE OF DOCUMENTS
THIS DOCUMENT, AND THE IDEAS AND DESIGNS INCORPORATED HEREIN, AS AN INSTRUMENT OF PROFESSIONAL SERVICE, IS THE PROPERTY OF CH2M HILL AND IS NOT TO BE USED, IN WHOLE OR IN PART, FOR ANY OTHER PROJECT WITHOUT THE WRITTEN AUTHORIZATION OF CH2M HILL.
©CH2M HILL

VERIFY SCALE
BAR IS ONE INCH ON ORIGINAL DRAWING.
0 1"
IF NOT ONE INCH ON THIS SHEET, ADJUST SCALES ACCORDINGLY.

CITY OF BELLINGHAM, WASHINGTON
POST POINT WASTEWATER TREATMENT PLANT UPGRADE

PRIMARY EFFLUENT PUMP STATION
HVAC AND PLUMBING
GROUND LEVEL PLAN

DWG NO. 220-H-2
DATE AUG. 1990
PROJ NO. SEA22462.C1

COMPOSITE
OVERLAY SCREEN
OVERLAY IDENTIFICATION
PROJID
FILE

DRAWN BY: B. CARR DESIGNED BY: S GUNDY/G FLOOD
DGN NAME: H:/PROJ2/BELLINGH/BL220H-A.DGN

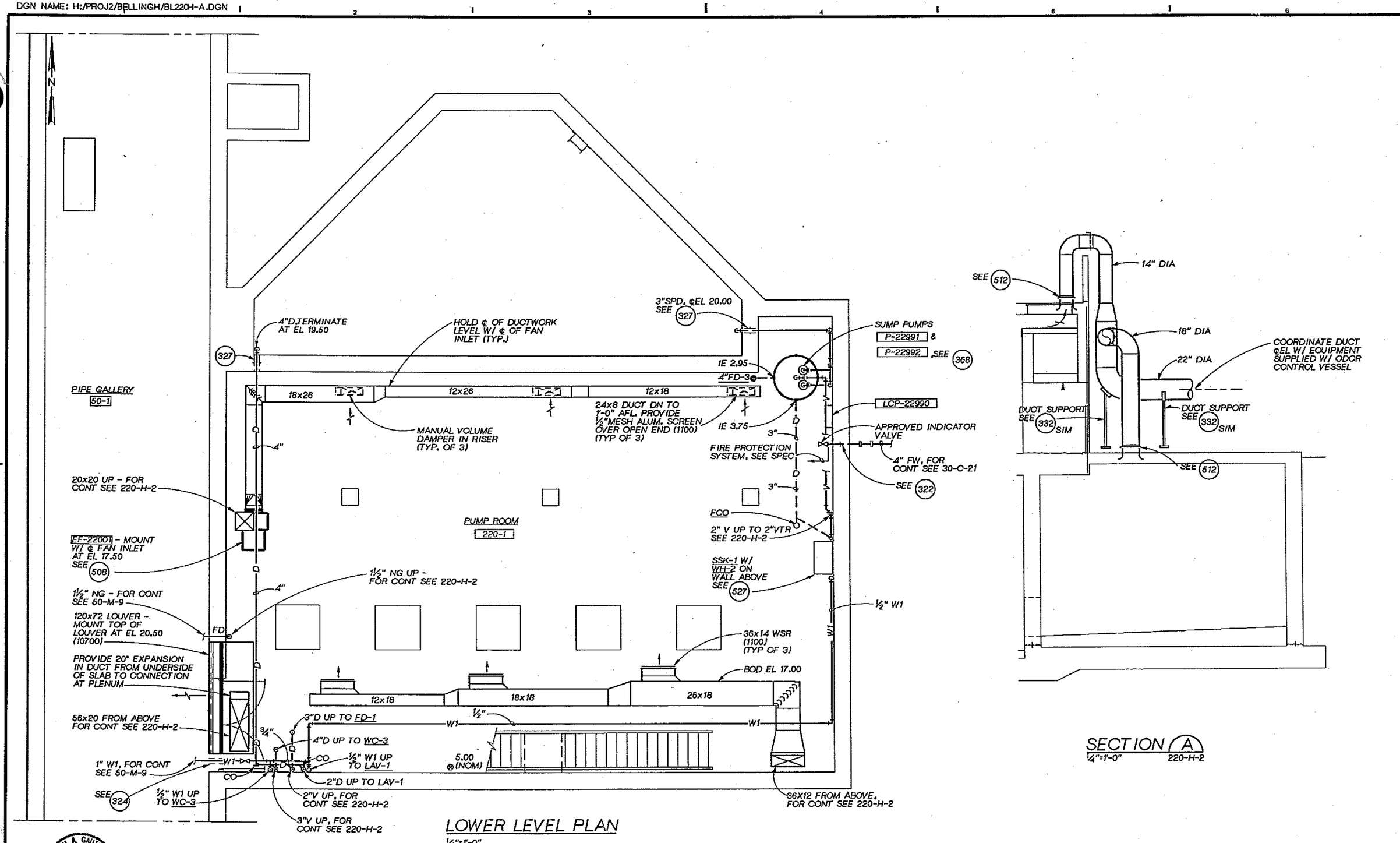

JOSEPH A. GAUTHIER REGISTERED PROFESSIONAL ENGINEER

CH2M HILL

DSGN	S GUNDY/G FLOOD
DR	S.D.GUNDY
CHK	J.SIEMEMS
APVD	J. GAUTHIER

NO.	DATE	REVISION	BY	APVD

REUSE OF DOCUMENTS
THIS DOCUMENT, AND THE IDEAS AND DESIGNS INCORPORATED HEREIN, AS AN INSTRUMENT OF PROFESSIONAL SERVICE, IS THE PROPERTY OF CH2M HILL AND IS NOT TO BE USED, IN WHOLE OR IN PART, FOR ANY OTHER PROJECT WITHOUT THE WRITTEN AUTHORIZATION OF CH2M HILL.
©CH2M HILL

VERIFY SCALE
BAR IS ONE INCH ON ORIGINAL DRAWING.
0 1"
IF NOT ONE INCH ON THIS SHEET, ADJUST SCALES ACCORDINGLY.

CITY OF BELLINGHAM, WASHINGTON
POST POINT WASTEWATER TREATMENT PLANT UPGRADE

PRIMARY EFFLUENT PUMP STATION
HVAC AND PLUMBING
LOWER LEVEL PLAN

DWG NO. 220-H-1
DATE AUG. 1990
PROJ NO. SEA22462.C1

OVERLAY IDENTIFICATION: COMPOSITE, DISPLAY, GEN
PROJID
FILE

DRAWN BY: B. CARR DESIGNED BY: S GUNDY/G FLOOD
DGN NAME: H:/PROJ2/BELLINGH/BL220H-B.DGN

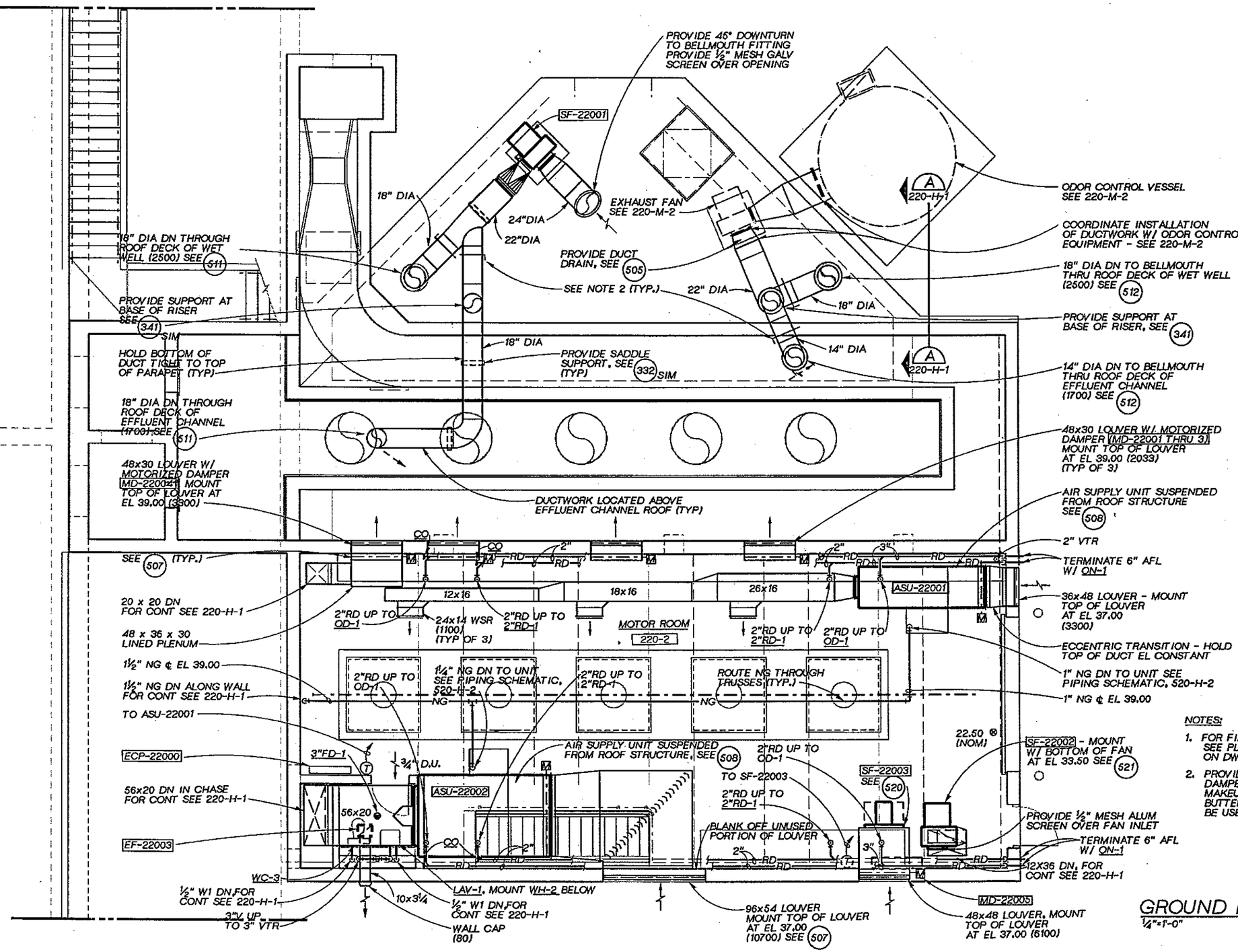

NOTES:

1. FOR FIXTURE CONNECTION SIZES, SEE PLUMBING FIXTURE SCHEDULE ON DWG NO. 800-P-1
2. PROVIDE BLAST GATE BALANCING DAMPERS ON ALL ODOR CONTROL MAKEUP AIR & EXHAUST SYSTEMS. BUTTERFLY DAMPERS SHALL NOT BE USED.

GROUND LEVEL PLAN

¼"=1'-0"

DSGN	G.SAKAGAWA				
DR	S.D.GUNDY				
CHK	J.SIEMENS				
APVD	J. GAUTHIER	NO.	DATE	REVISION	BY	APVD

CH2M HILL

REUSE OF DOCUMENTS
THIS DOCUMENT, AND THE IDEAS AND DESIGNS INCORPORATED HEREIN, AS AN INSTRUMENT OF PROFESSIONAL SERVICE, IS THE PROPERTY OF CH2M HILL AND IS NOT TO BE USED, IN WHOLE OR IN PART, FOR ANY OTHER PROJECT WITHOUT THE WRITTEN AUTHORIZATION OF CH2M HILL.
©CH2M HILL

VERIFY SCALE
BAR IS ONE INCH ON ORIGINAL DRAWING.
0 1"
IF NOT ONE INCH ON THIS SHEET, ADJUST SCALES ACCORDINGLY.

CITY OF BELLINGHAM, WASHINGTON
POST POINT WASTEWATER TREATMENT PLANT UPGRADE

PRIMARY EFFLUENT PUMP STATION
HVAC AND PLUMBING
GROUND LEVEL PLAN

DWG NO. 220-H-2
DATE AUG. 1990
PROJ NO. SEA22462.C1

JOSEPH A. GAUTHIER STATE OF WASHINGTON REGISTERED PROFESSIONAL ENGINEER

OVERLAY IDENTIFICATION: COMPOSITE, OVERLAY, SCREEN
OVERLAY PROJID FILE

DATE: 8-26-90
DRAWN BY: GH BURLEY DESIGNED BY:
DGN NAME: H:/PROJ2/BELLINGH/BL310A-A.DGN

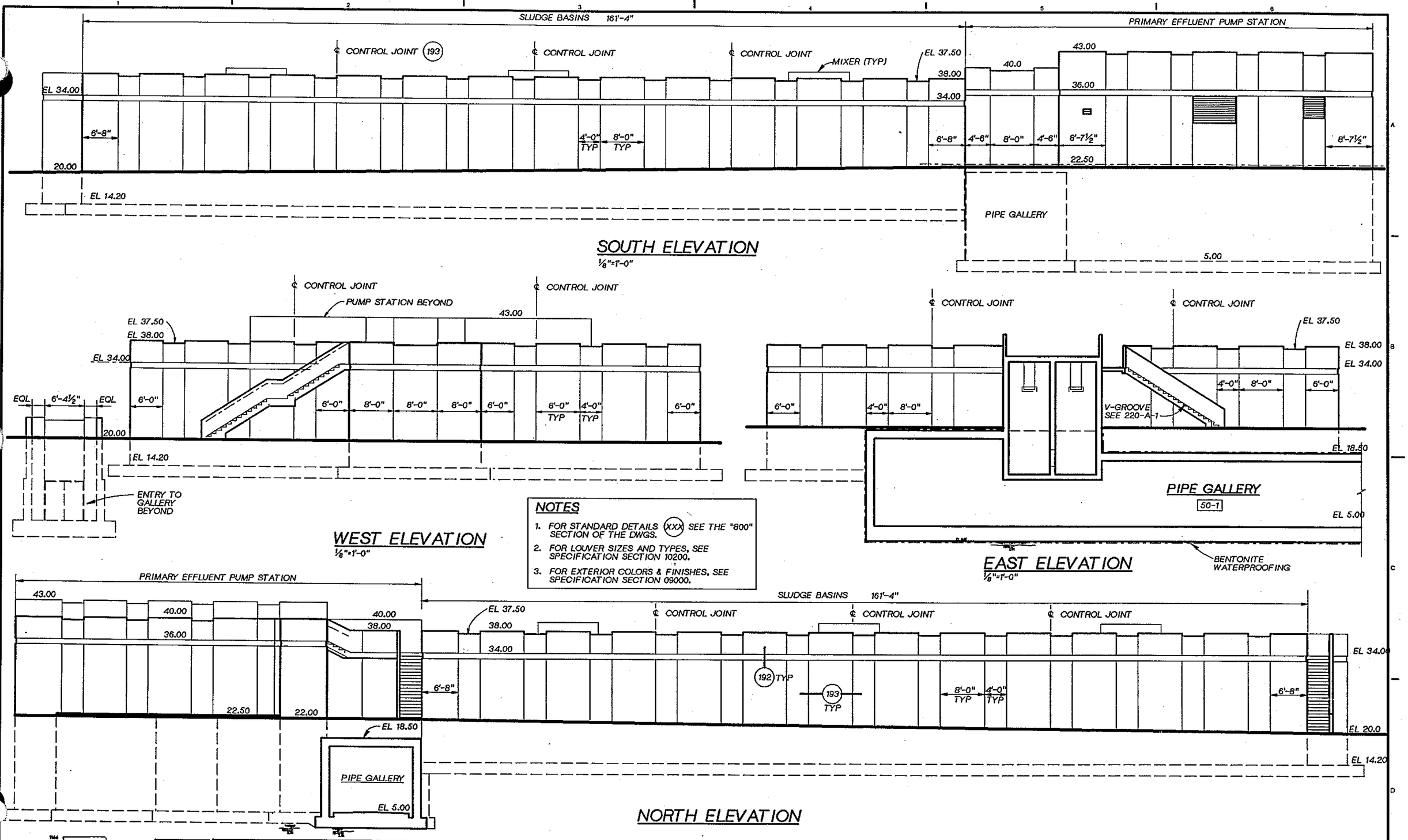

NOTES

1. FOR STANDARD DETAILS (XXX) SEE THE "800" SECTION OF THE DWGS.
2. FOR LOUVER SIZES AND TYPES, SEE SPECIFICATION SECTION 10200.
3. FOR EXTERIOR COLORS & FINISHES, SEE SPECIFICATION SECTION 09000.

REGISTERED ARCHITECT JOHN A. PRUSS STATE OF WASHINGTON

CH2M HILL

DSGN	G BOWER
DR	G BOWER
CHK	R WHITE
APVD	J. GAUTHIER

NO.	DATE	REVISION	BY	APVD

REUSE OF DOCUMENTS
THIS DOCUMENT, AND THE IDEAS AND DESIGNS INCORPORATED HEREIN, AS AN INSTRUMENT OF PROFESSIONAL SERVICE, IS THE PROPERTY OF CH2M HILL AND IS NOT TO BE USED, IN WHOLE OR IN PART, FOR ANY OTHER PROJECT WITHOUT THE WRITTEN AUTHORIZATION OF CH2M HILL.
©CH2M HILL

BAR IS ONE INCH ON ORIGINAL DRAWING. 0 1"
IF NOT ONE INCH ON THIS SHEET, ADJUST SCALES ACCORDINGLY.

CITY OF BELLINGHAM, WASHINGTON
POST POINT WASTEWATER TREATMENT PLANT UPGRADE

OXYGEN ACTIVATED SLUDGE BASINS
ARCHITECTURAL ELEVATIONS

DWG NO. 310-A-1
DATE AUG. 1990
PROJ NO. SEA22462.C1

DATE: 8-26-90
DRAWN BY: BBL DESIGNED BY: KK
DGN NAME: H:/PROJ2/BELLINGH/BL310S-A.DGN

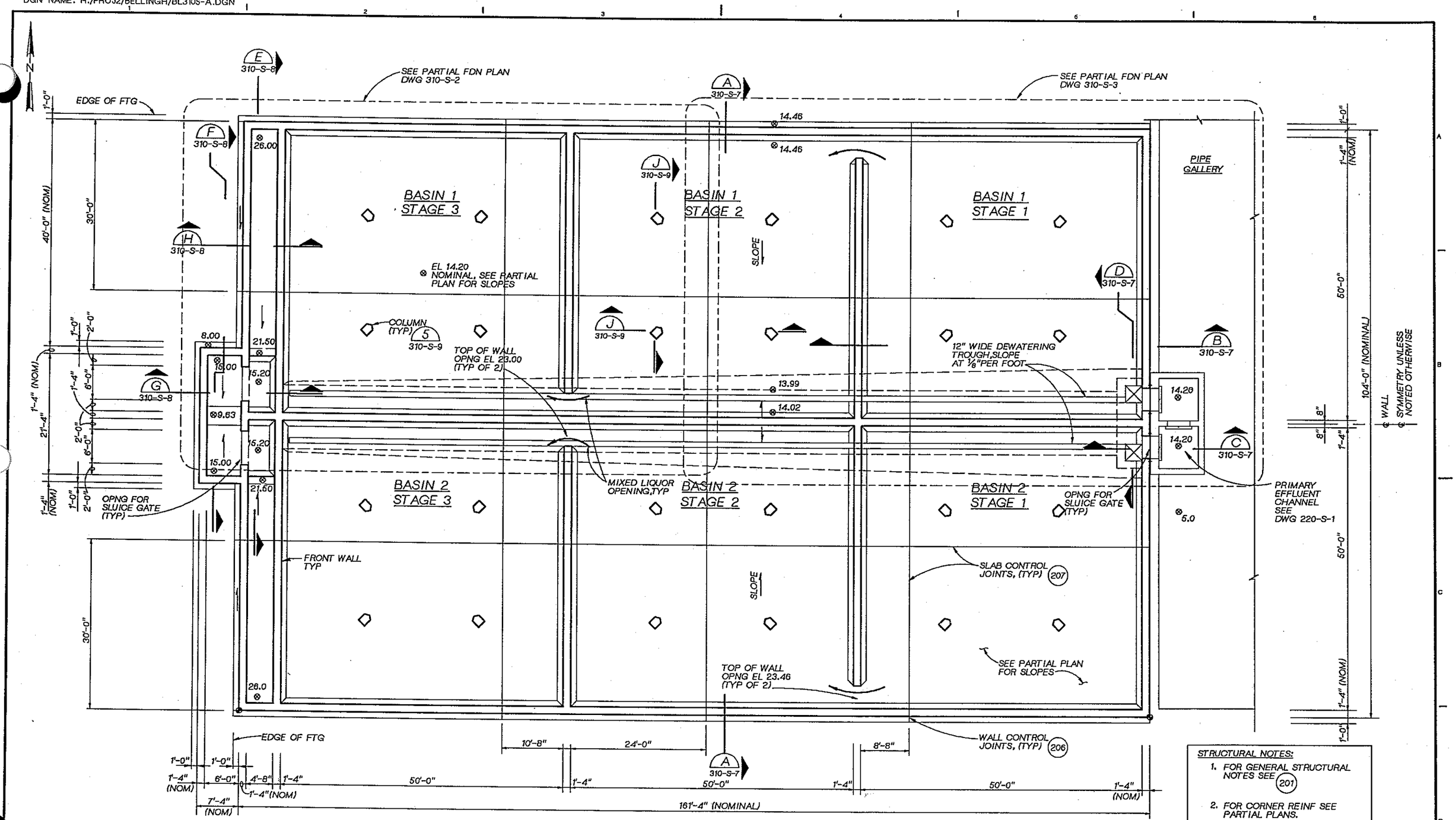

FOUNDATION PLAN

1/8" = 1'-0"

STRUCTURAL NOTES:

1. FOR GENERAL STRUCTURAL NOTES SEE 201
2. FOR CORNER REINF SEE PARTIAL PLANS.
3. FOR OPENING REINF SEE 204
4. FOR ARCHITECTURAL WALL TREATMENTS SEE ARCH DWGS.

CH2M HILL	OSGN K. KORNHER				
	DR B. LAZARO				
	CHK W. BENNETT				
	APVD J. GAUTHIER	NO.	DATE	REVISION	BY / APVD

REUSE OF DOCUMENTS
THIS DOCUMENT, AND THE IDEAS AND DESIGNS INCORPORATED HEREIN, AS AN INSTRUMENT OF PROFESSIONAL SERVICE, IS THE PROPERTY OF CH2M HILL AND IS NOT TO BE USED, IN WHOLE OR IN PART, FOR ANY OTHER PROJECT WITHOUT THE WRITTEN AUTHORIZATION OF CH2M HILL.
©CH2M HILL

BAR IS ONE INCH ON ORIGINAL DRAWING. 0 — 1"
IF NOT ONE INCH ON THIS SHEET, ADJUST SCALES ACCORDINGLY.

CITY OF BELLINGHAM, WASHINGTON
POST POINT WASTEWATER TREATMENT PLANT UPGRADE

OXYGEN ACTIVATED SLUDGE BASINS
STRUCTURAL FOUNDATION PLAN

DWG NO. 310-S-1
DATE AUG. 1990
PROJ NO. SEA22462.C1

DATE: 8-26-90
DRAWN BY: BBL
DESIGNED BY: KK
DGN NAME: H:/PROJ2/BELLINGH/BL310S-B.DGN

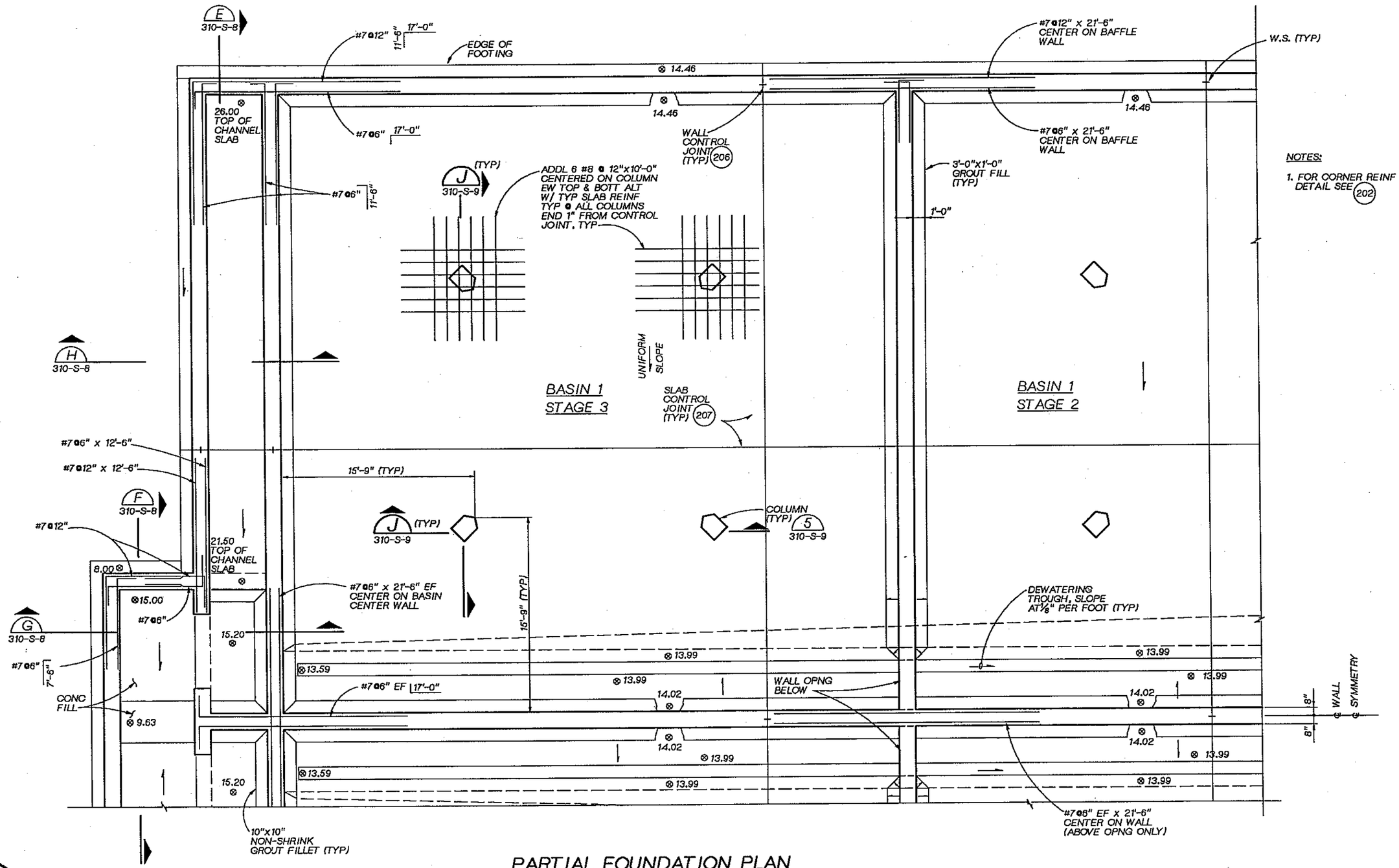

PARTIAL FOUNDATION PLAN

1/4" = 1'-0" 310-S-1

DSGN K. KORNHER					
DR B. LAZARO					
CHK W. BENNETT					
APVD J. GAUTHIER	NO.	DATE	REVISION	BY	APVD

CH2M HILL

REUSE OF DOCUMENTS
THIS DOCUMENT, AND THE IDEAS AND DESIGNS INCORPORATED HEREIN, AS AN INSTRUMENT OF PROFESSIONAL SERVICE, IS THE PROPERTY OF CH2M HILL AND IS NOT TO BE USED, IN WHOLE OR IN PART, FOR ANY OTHER PROJECT WITHOUT THE WRITTEN AUTHORIZATION OF CH2M HILL.
©CH2M HILL

BAR IS ONE INCH ON ORIGINAL DRAWING.
0 1"
IF NOT ONE INCH ON THIS SHEET, ADJUST SCALES ACCORDINGLY.

CITY OF BELLINGHAM, WASHINGTON
POST POINT WASTEWATER TREATMENT PLANT UPGRADE

OXYGEN ACTIVATED SLUDGE BASINS
STRUCTURAL
PARTIAL FOUNDATION PLAN

DWG NO. 310-S-2
DATE AUG. 1990
PROJ. NO. SEA22462.C1

DRAWN BY: BBL DESIGNED BY: KK
DGN NAME: H:/PROJ2/BELLINGH/BL310S-C.DGN

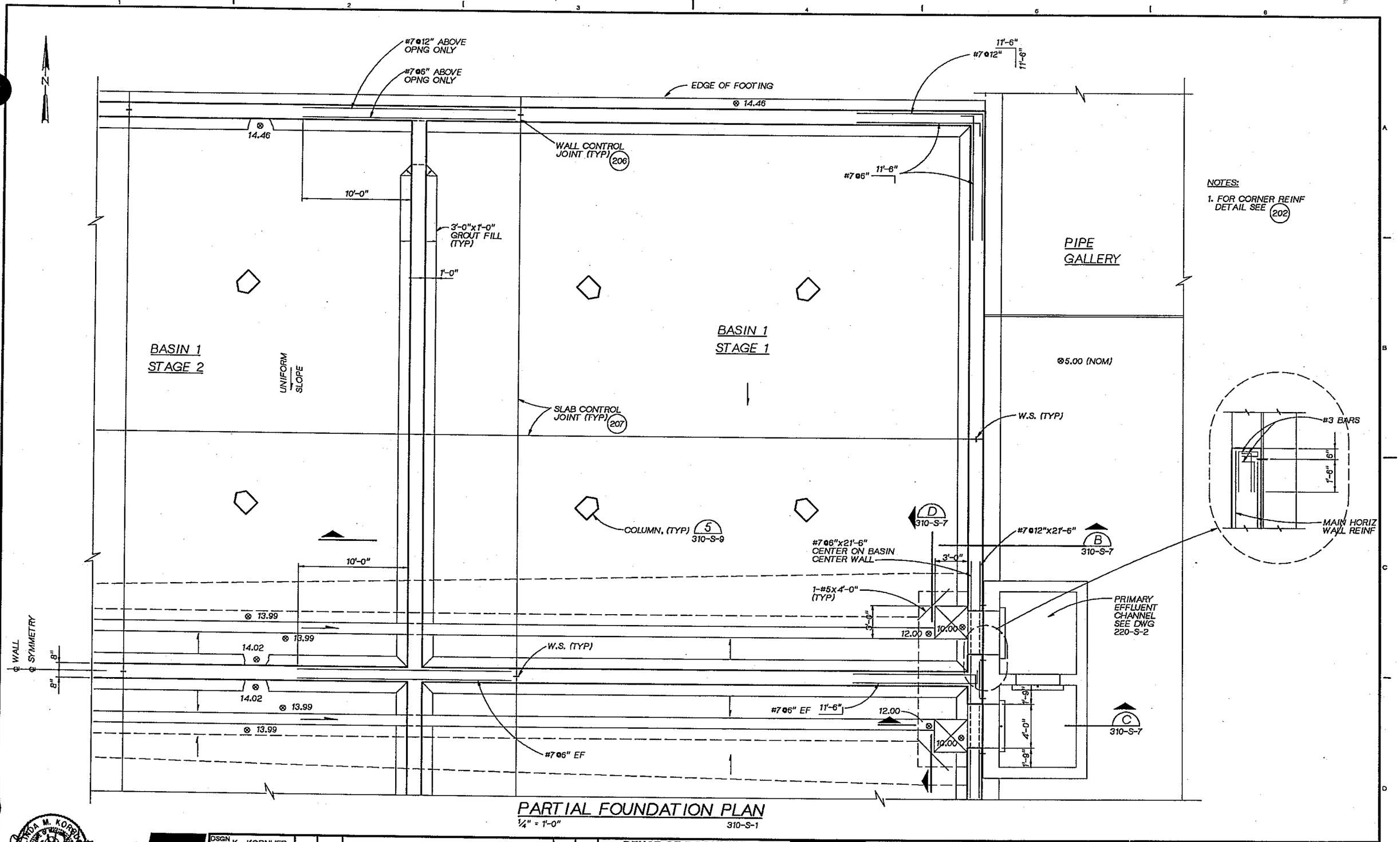

NOTES:

1. FOR CORNER REINF DETAIL SEE 202

PARTIAL FOUNDATION PLAN

1/4" = 1'-0" 310-S-1

DSGN K. KORNHER					
DR B. LAZARO					
CHK W. BENNETT					
APVD J GAUTHIER	NO.	DATE	REVISION	BY	APVD

CH2M HILL

REUSE OF DOCUMENTS
THIS DOCUMENT, AND THE IDEAS AND DESIGNS INCORPORATED HEREIN, AS AN INSTRUMENT OF PROFESSIONAL SERVICE, IS THE PROPERTY OF CH2M HILL AND IS NOT TO BE USED, IN WHOLE OR IN PART, FOR ANY OTHER PROJECT WITHOUT THE WRITTEN AUTHORIZATION OF CH2M HILL.
©CH2M HILL

BAR IS ONE INCH ON ORIGINAL DRAWING.
0 1"
IF NOT ONE INCH ON THIS SHEET, ADJUST SCALES ACCORDINGLY.

CITY OF BELLINGHAM, WASHINGTON
POST POINT WASTEWATER TREATMENT PLANT UPGRADE

OXYGEN ACTIVATED SLUDGE BASINS
STRUCTURAL
PARTIAL FOUNDATION PLAN

DWG NO. 310-S-3
DATE AUG. 1990
PROJ NO. SEA22452.C1

DATE: 8-26-90
DRAWN BY: B. LAZARO DESIGNED BY: K. KORNHER
DGN NAME: H:/PROJ2/BELLINGH/BL310S-D.DGN

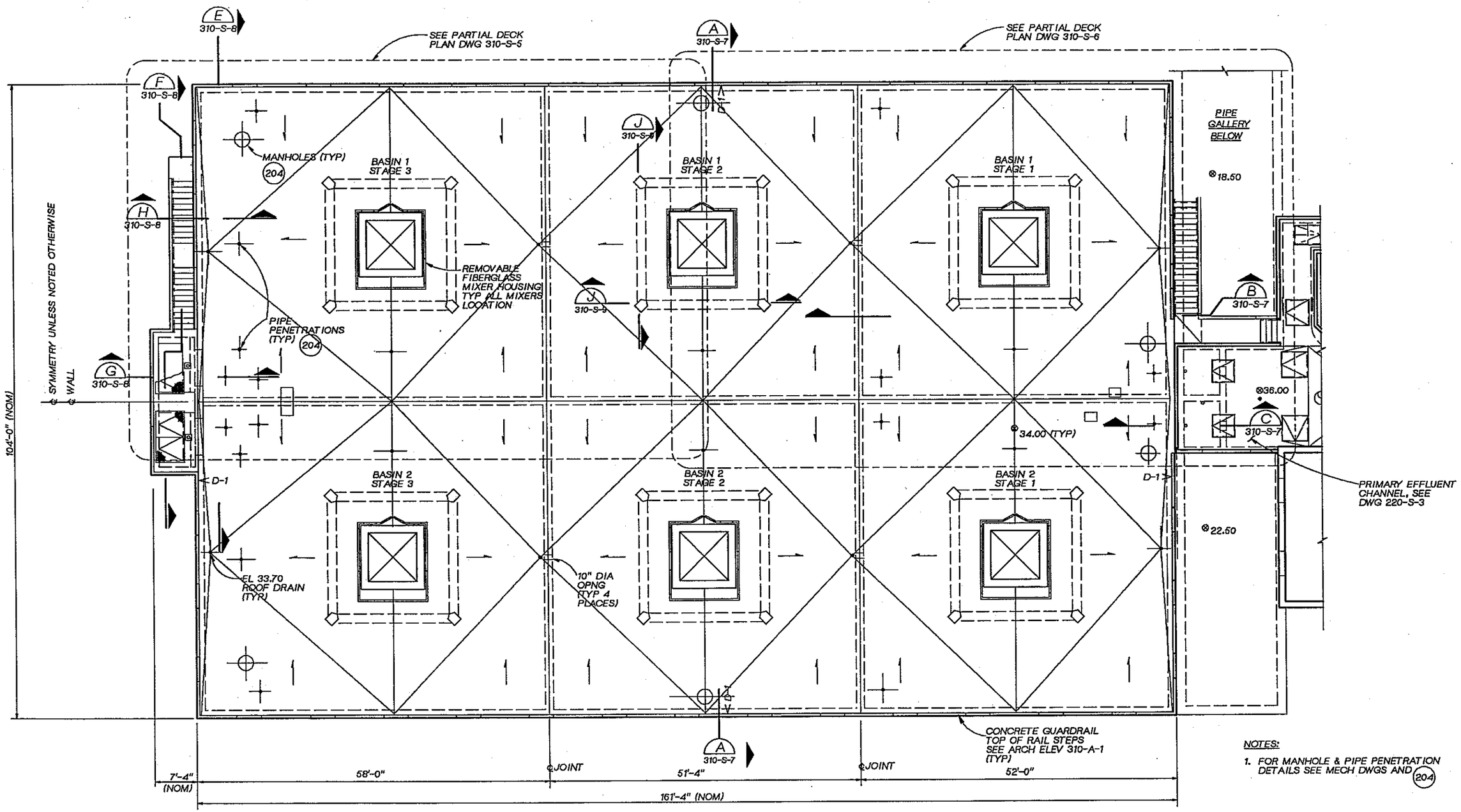

NOTES:

1. FOR MANHOLE & PIPE PENETRATION DETAILS SEE MECH DWGS AND 204

DECK PLAN

1/8" = 1'-0"

DSGN K. KORNHER						
DR B. LAZARO						
CHK W. BENNETT						
APVD J. GAUTHIER	NO.	DATE	REVISION	BY	APVD	

CH2M HILL

REUSE OF DOCUMENTS
THIS DOCUMENT, AND THE IDEAS AND DESIGNS INCORPORATED HEREIN, AS AN INSTRUMENT OF PROFESSIONAL SERVICE, IS THE PROPERTY OF CH2M HILL AND IS NOT TO BE USED, IN WHOLE OR IN PART, FOR ANY OTHER PROJECT WITHOUT THE WRITTEN AUTHORIZATION OF CH2M HILL.
©CH2M HILL

BAR IS ONE INCH ON ORIGINAL DRAWING.
0 1"
IF NOT ONE INCH ON THIS SHEET, ADJUST SCALES ACCORDINGLY.

CITY OF BELLINGHAM, WASHINGTON
POST POINT WASTEWATER TREATMENT PLANT UPGRADE

OXYGEN ACTIVATED SLUDGE BASINS
STRUCTURAL
DECK PLAN

DWG NO. 310-S-4
DATE AUG. 1990
PROJ NO. SEA22462.C1

DATE: 8-26-90
DRAWN BY: GH BURLEY DESIGNED BY:
DGN NAME: H:/PROJ2/BELLINGH/BL310A-A.DGN

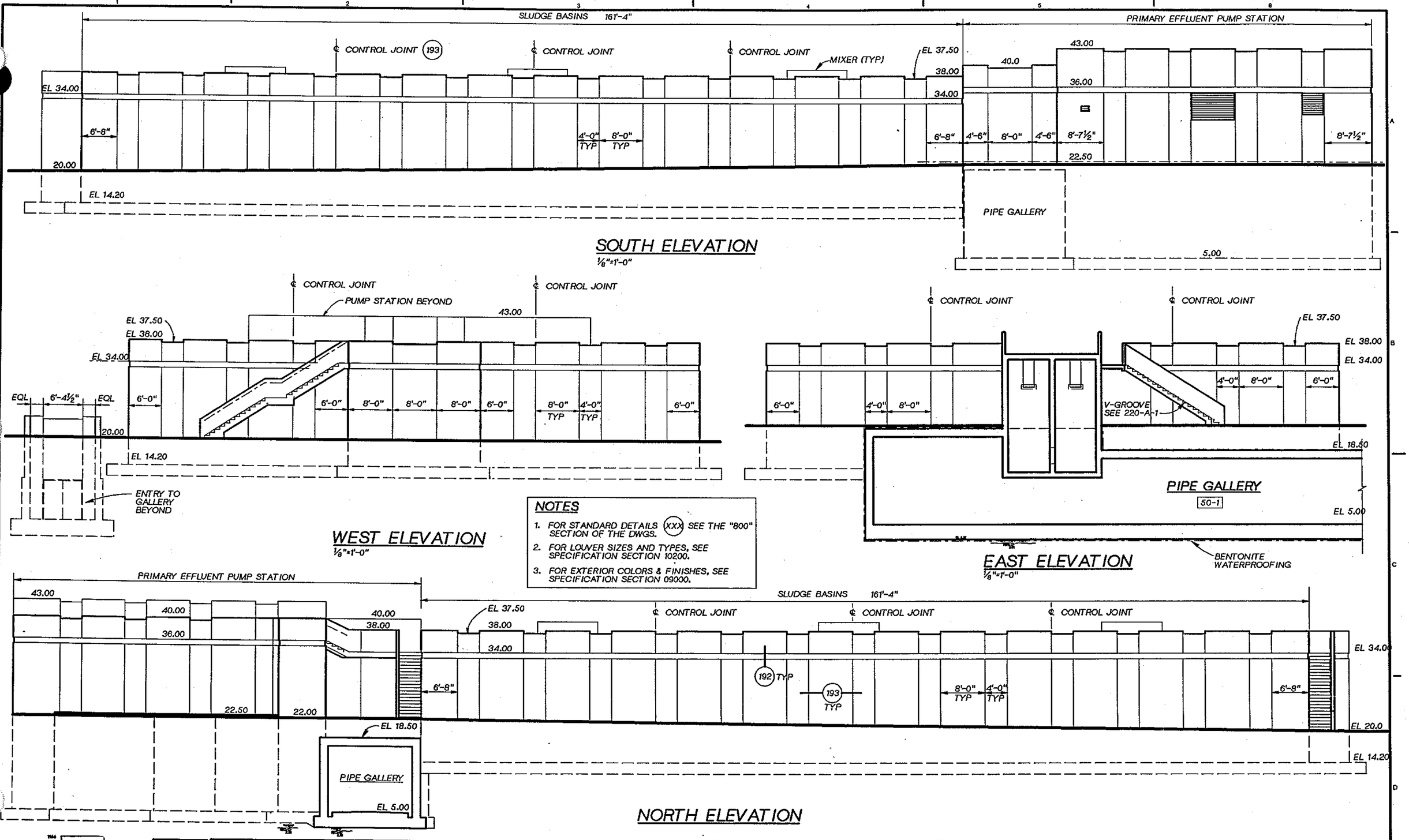

NOTES

1. FOR STANDARD DETAILS (XXX) SEE THE "800" SECTION OF THE DWGS.
2. FOR LOUVER SIZES AND TYPES, SEE SPECIFICATION SECTION 10200.
3. FOR EXTERIOR COLORS & FINISHES, SEE SPECIFICATION SECTION 09000.

REGISTERED ARCHITECT JOHN ZAHAS STATE OF WASHINGTON

CH2M HILL

DSGN	G BOWER
DR	G BOWER
CHK	R WHITE
APVD	J. GAUTHIER

NO.	DATE	REVISION	BY	APVD

REUSE OF DOCUMENTS

THIS DOCUMENT, AND THE IDEAS AND DESIGNS INCORPORATED HEREIN, AS AN INSTRUMENT OF PROFESSIONAL SERVICE, IS THE PROPERTY OF CH2M HILL AND IS NOT TO BE USED, IN WHOLE OR IN PART, FOR ANY OTHER PROJECT WITHOUT THE WRITTEN AUTHORIZATION OF CH2M HILL.

©CH2M HILL

BAR IS ONE INCH ON ORIGINAL DRAWING.
0 1"
IF NOT ONE INCH ON THIS SHEET, ADJUST SCALES ACCORDINGLY.

CITY OF BELLINGHAM, WASHINGTON
POST POINT WASTEWATER TREATMENT PLANT UPGRADE

OXYGEN ACTIVATED SLUDGE BASINS

ARCHITECTURAL ELEVATIONS

DWG NO. 310-A-1
DATE AUG. 1990
PROJ. NO. SEA22462.C1

DATE: 8-26-90
DRAWN BY: BBL DESIGNED BY: KK
DGN NAME: H:/PROJ2/BELLINGH/BL310S-A.DGN

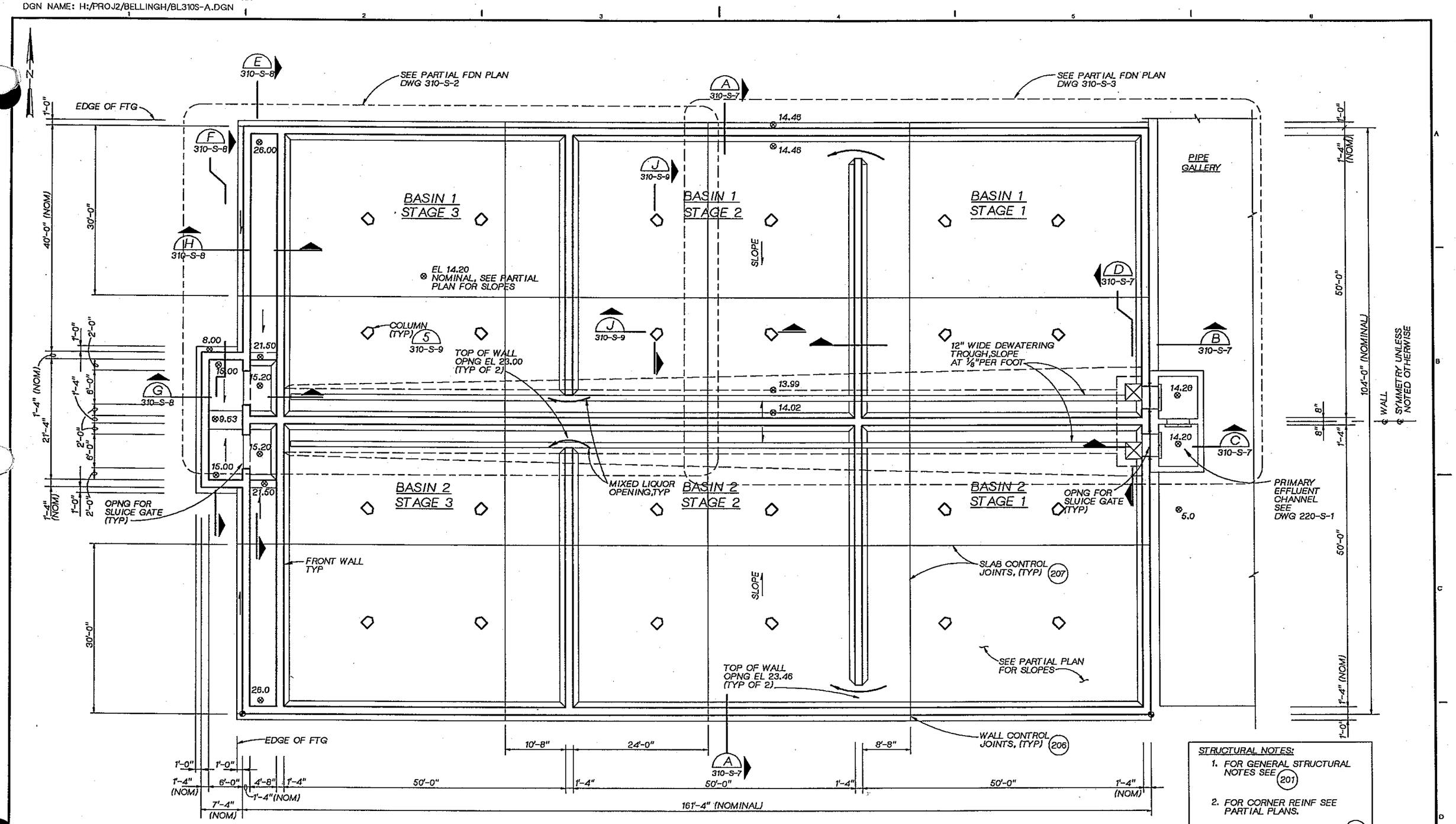

FOUNDATION PLAN

1/8" = 1'-0"

STRUCTURAL NOTES:

1. FOR GENERAL STRUCTURAL NOTES SEE 201
2. FOR CORNER REINF SEE PARTIAL PLANS.
3. FOR OPENING REINF SEE 204
4. FOR ARCHITECTURAL WALL TREATMENTS SEE ARCH DWGS.

LINDA M. KORNER STATE OF WASHINGTON REGISTERED PROFESSIONAL ENGINEER

CH2M HILL

DSGN	K. KORNHER
DR	B. LAZARO
CHK	W. BENNETT
APVD	J. GAUTHIER

NO.	DATE	REVISION	BY	APVD

REUSE OF DOCUMENTS
THIS DOCUMENT, AND THE IDEAS AND DESIGNS INCORPORATED HEREIN, AS AN INSTRUMENT OF PROFESSIONAL SERVICE, IS THE PROPERTY OF CH2M HILL AND IS NOT TO BE USED, IN WHOLE OR IN PART, FOR ANY OTHER PROJECT WITHOUT THE WRITTEN AUTHORIZATION OF CH2M HILL.
©CH2M HILL

BAR IS ONE INCH ON ORIGINAL DRAWING. 0 1"
IF NOT ONE INCH ON THIS SHEET, ADJUST SCALES ACCORDINGLY.

CITY OF BELLINGHAM, WASHINGTON
POST POINT WASTEWATER TREATMENT PLANT UPGRADE

OXYGEN ACTIVATED SLUDGE BASINS
STRUCTURAL FOUNDATION PLAN

DWG NO. 310-S-1
DATE AUG. 1990
PROJ NO. SEA22462.C1

DATE: 8-26-90
DRAWN BY: BBL DESIGNED BY: KK
DGN NAME: H:/PROJ2/BELLINGH/BL310S-B.DGN

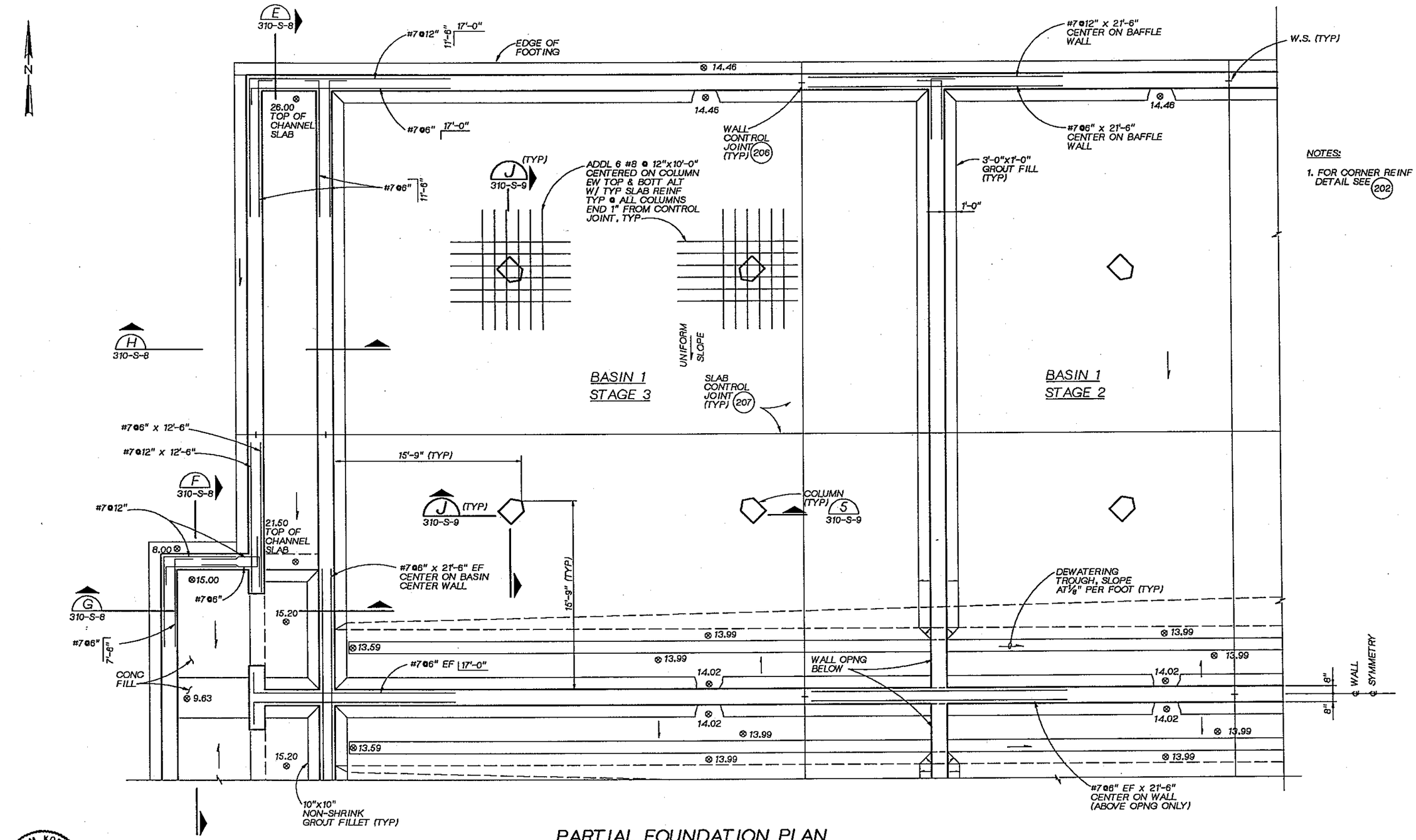

PARTIAL FOUNDATION PLAN

1/4" = 1'-0" 310-S-1

LINDA M. KORNHER STATE OF WASHINGTON 22864 REGISTERED PROFESSIONAL ENGINEER

CH2M HILL

DSGN	K. KORNHER
DR	B. LAZARO
CHK	W. BENNETT
APVD	J. GAUTHIER

NO.	DATE	REVISION	BY	APVD

REUSE OF DOCUMENTS
THIS DOCUMENT, AND THE IDEAS AND DESIGNS INCORPORATED HEREIN, AS AN INSTRUMENT OF PROFESSIONAL SERVICE, IS THE PROPERTY OF CH2M HILL AND IS NOT TO BE USED, IN WHOLE OR IN PART, FOR ANY OTHER PROJECT WITHOUT THE WRITTEN AUTHORIZATION OF CH2M HILL.
©CH2M HILL

BAR IS ONE INCH ON ORIGINAL DRAWING. 0 1"
IF NOT ONE INCH ON THIS SHEET, ADJUST SCALES ACCORDINGLY.

CITY OF BELLINGHAM, WASHINGTON
POST POINT WASTEWATER TREATMENT PLANT UPGRADE

OXYGEN ACTIVATED SLUDGE BASINS
STRUCTURAL
PARTIAL FOUNDATION PLAN

DWG NO. 310-S-2
DATE AUG. 1990
PROJ NO. SEA22452.C1

DRAWN BY: BBL DESIGNED BY: KK
DGN NAME: H:/PROJ2/BELLINGH/BL310S-C.DGN

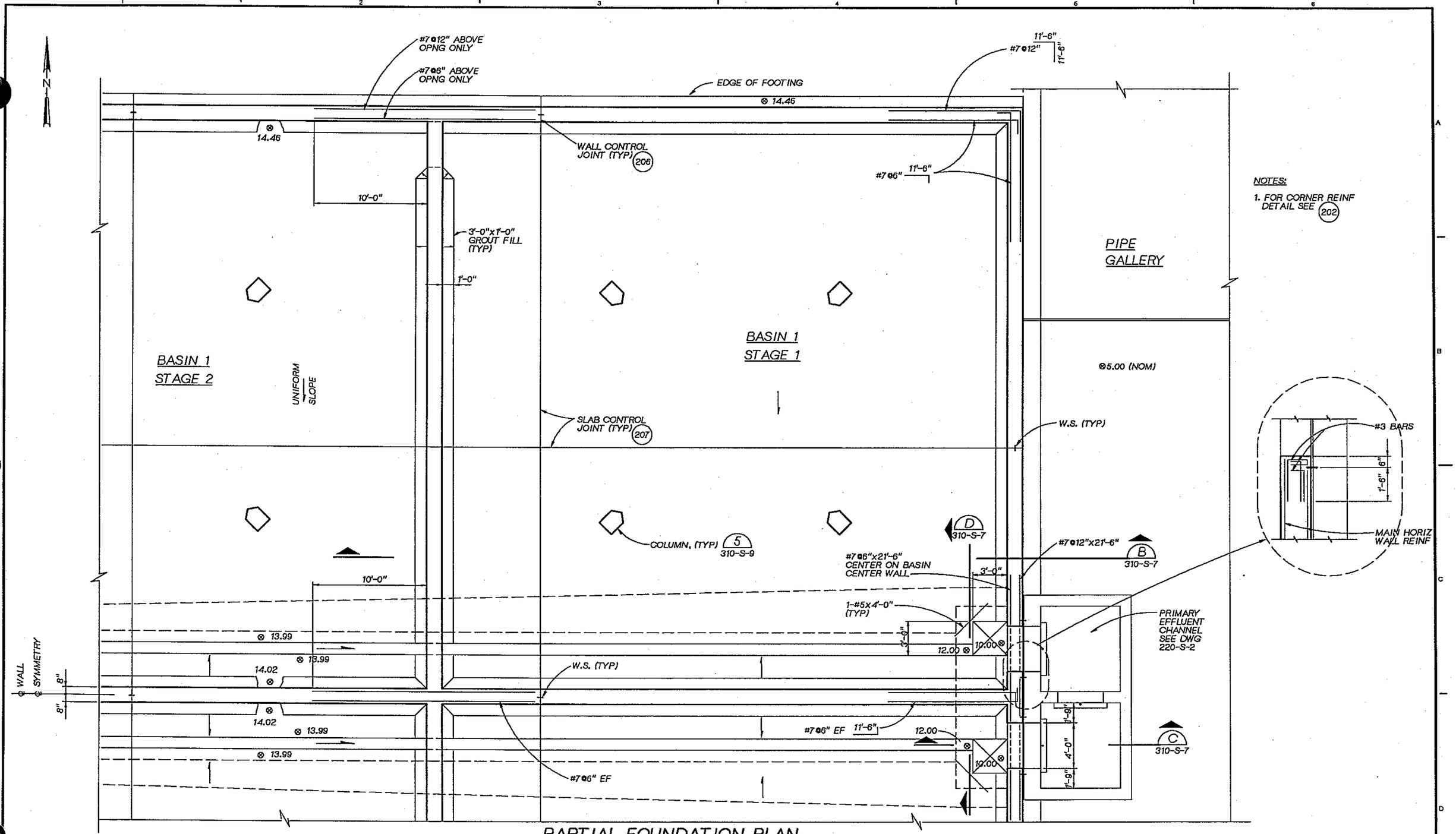

PARTIAL FOUNDATION PLAN

1/4" = 1'-0" 310-S-1

DSGN K. KORNHER					
DR B. LAZARO					
CHK W. BENNETT					
APVD J GAUTHIER	NO.	DATE	REVISION	BY	APVD

CH2M HILL

REUSE OF DOCUMENTS
THIS DOCUMENT, AND THE IDEAS AND DESIGNS INCORPORATED HEREIN, AS AN INSTRUMENT OF PROFESSIONAL SERVICE, IS THE PROPERTY OF CH2M HILL AND IS NOT TO BE USED, IN WHOLE OR IN PART, FOR ANY OTHER PROJECT WITHOUT THE WRITTEN AUTHORIZATION OF CH2M HILL.
©CH2M HILL

BAR IS ONE INCH ON ORIGINAL DRAWING. 0 1"
IF NOT ONE INCH ON THIS SHEET, ADJUST SCALES ACCORDINGLY.

CITY OF BELLINGHAM, WASHINGTON
POST POINT WASTEWATER TREATMENT PLANT UPGRADE

OXYGEN ACTIVATED SLUDGE BASINS
STRUCTURAL
PARTIAL FOUNDATION PLAN

DWG NO. 310-S-3
DATE AUG. 1990
PROJ NO. SEA22462.C1

DATE: 8-26-90
DRAWN BY: B. LAZARO DESIGNED BY: K. KORNHER
DGN NAME: H:/PROJ2/BELLINGH/BL310S-D.DGN

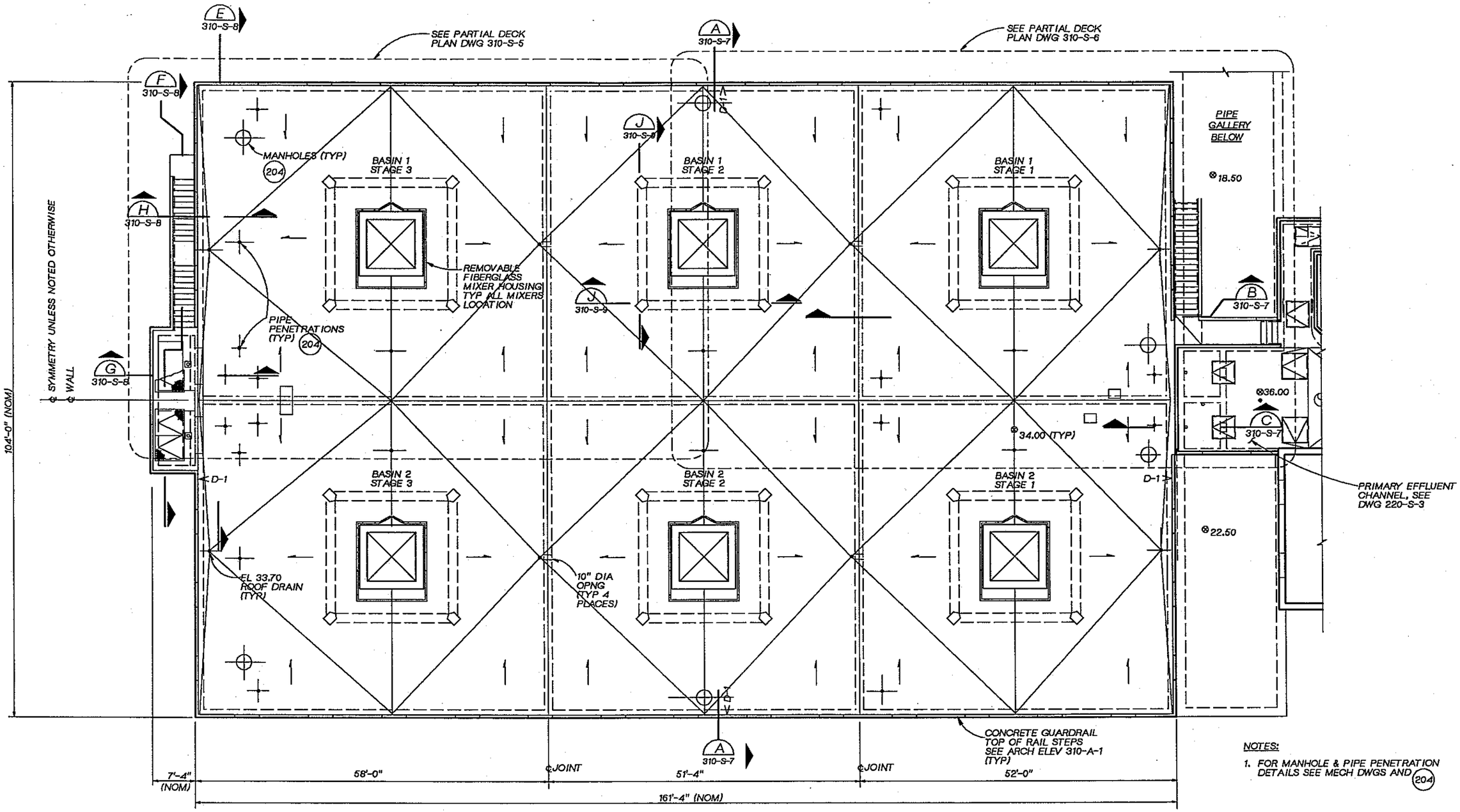

NOTES:

1. FOR MANHOLE & PIPE PENETRATION DETAILS SEE MECH DWGS AND 204

DECK PLAN

1/8" = 1'-0"

DSGN K. KORNHER						
DR B. LAZARO						
CHK W. BENNETT						
APVD J. GAUTHIER	NO.	DATE	REVISION	BY	APVD	

CH2M HILL

REUSE OF DOCUMENTS
THIS DOCUMENT, AND THE IDEAS AND DESIGNS INCORPORATED HEREIN, AS AN INSTRUMENT OF PROFESSIONAL SERVICE, IS THE PROPERTY OF CH2M HILL AND IS NOT TO BE USED, IN WHOLE OR IN PART, FOR ANY OTHER PROJECT WITHOUT THE WRITTEN AUTHORIZATION OF CH2M HILL.
©CH2M HILL

BAR IS ONE INCH ON ORIGINAL DRAWING.
0 1"
IF NOT ONE INCH ON THIS SHEET, ADJUST SCALES ACCORDINGLY.

CITY OF BELLINGHAM, WASHINGTON
POST POINT WASTEWATER TREATMENT PLANT UPGRADE

OXYGEN ACTIVATED SLUDGE BASINS
STRUCTURAL DECK PLAN

DWG NO. 310-S-4
DATE AUG. 1990
PROJ NO. SEA22462.C1

DATE: 8-26-90
DRAWN BY: B. LAZARO DESIGNED BY: K. KORNHER
DGN NAME: H:/PROJ2/BELLINGH/BL310S-E.DGN

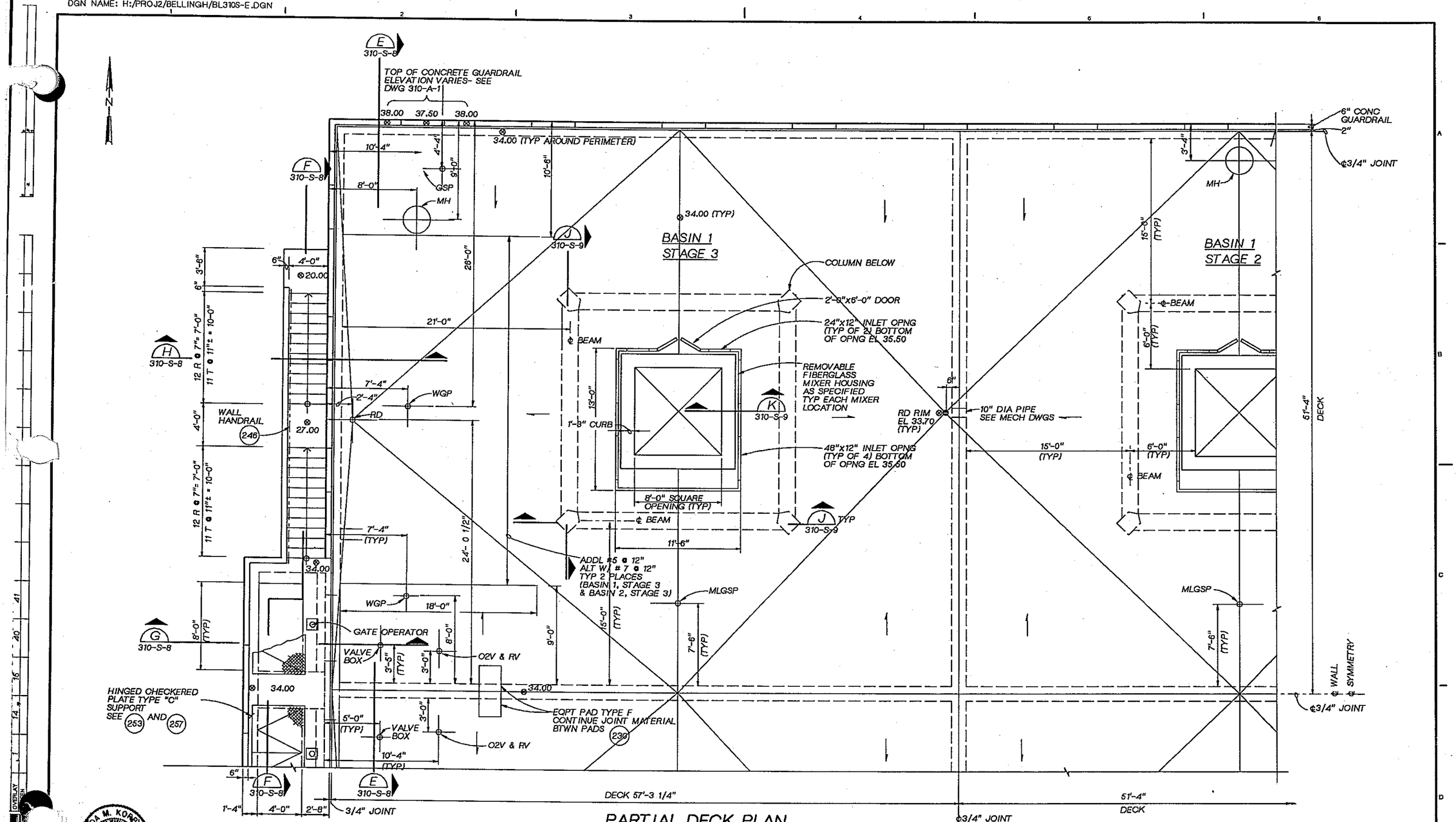

PARTIAL DECK PLAN

1/4" = 1'-0" 310-S-4

CH2M HILL	DSGN K. KORNHER					
	DR B. LAZARO					
	CHK W. BENNETT					
	APVD J. GAUTHIER	NO.	DATE	REVISION	BY	APVD

REUSE OF DOCUMENTS
THIS DOCUMENT, AND THE IDEAS AND DESIGNS INCORPORATED HEREIN, AS AN INSTRUMENT OF PROFESSIONAL SERVICE, IS THE PROPERTY OF CH2M HILL AND IS NOT TO BE USED, IN WHOLE OR IN PART, FOR ANY OTHER PROJECT WITHOUT THE WRITTEN AUTHORIZATION OF CH2M HILL.
©CH2M HILL

BAR IS ONE INCH ON ORIGINAL DRAWING. 0 1"
IF NOT ONE INCH ON THIS SHEET, ADJUST SCALES ACCORDINGLY.

CITY OF BELLINGHAM, WASHINGTON
POST POINT WASTEWATER TREATMENT PLANT UPGRADE

OXYGEN ACTIVATED SLUDGE BASINS
STRUCTURAL
PARTIAL DECK PLAN

DWG NO. 310-S-5
DATE AUG. 1990
PROJ. NO. SEA22452.C1

DRAWN BY: B. LAZARO DESIGNED BY: K. KORNHER
DGN NAME: H:/PROJ2/BELLINGH/BL310S-F.DGN

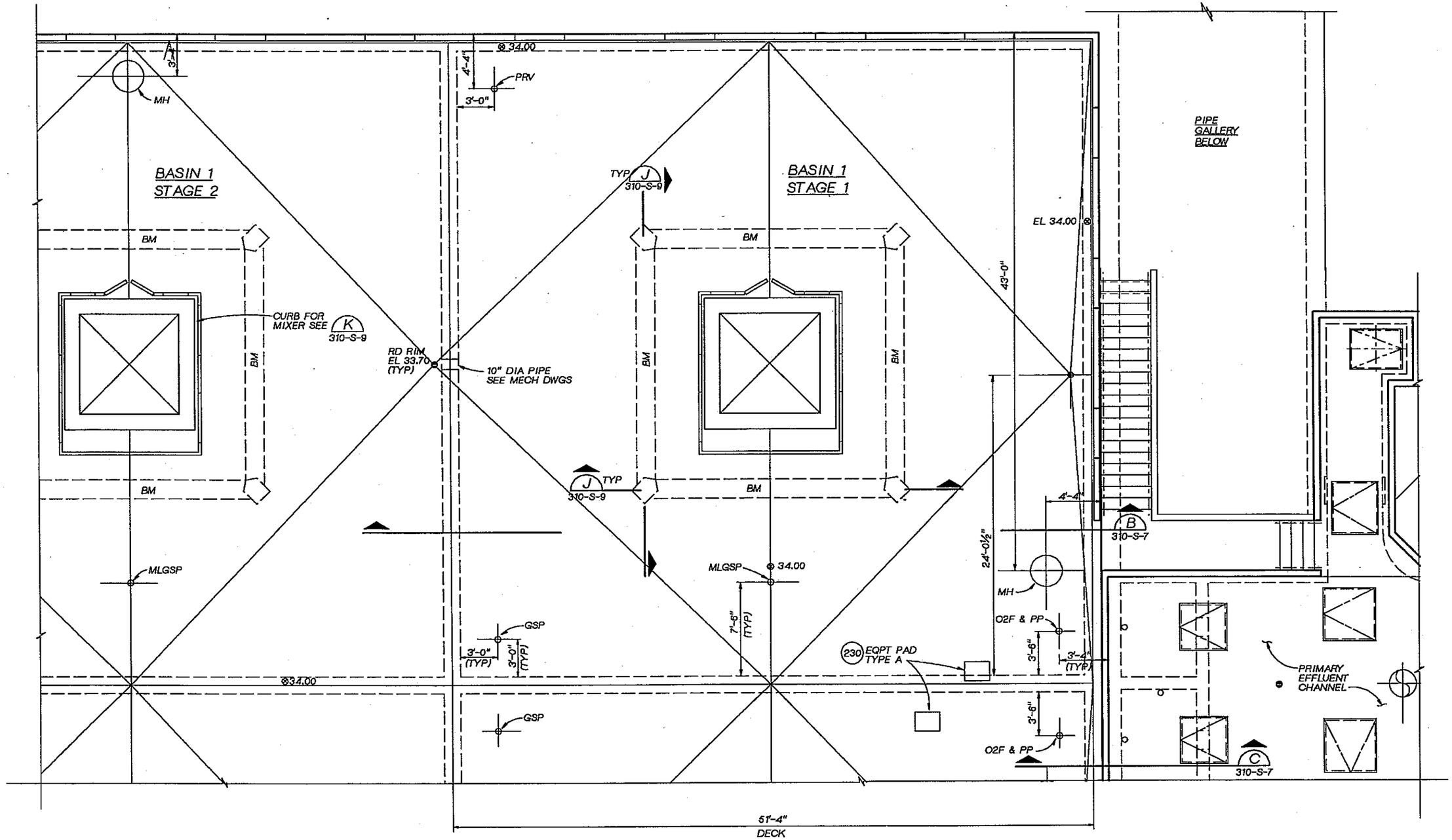

PARTIAL DECK PLAN

¼" = 1'-0" 310-S-4

DSGN K. KORNHER					
DR B. LAZARO					
CHK W. BENNETT					
APVD J GAUTHIER	NO.	DATE	REVISION	BY	APVD

CH2M HILL

REUSE OF DOCUMENTS
THIS DOCUMENT, AND THE IDEAS AND DESIGNS INCORPORATED HEREIN, AS AN INSTRUMENT OF PROFESSIONAL SERVICE, IS THE PROPERTY OF CH2M HILL AND IS NOT TO BE USED, IN WHOLE OR IN PART, FOR ANY OTHER PROJECT WITHOUT THE WRITTEN AUTHORIZATION OF CH2M HILL.
©CH2M HILL

BAR IS ONE INCH ON ORIGINAL DRAWING.
0 1"
IF NOT ONE INCH ON THIS SHEET, ADJUST SCALES ACCORDINGLY.

CITY OF BELLINGHAM, WASHINGTON
POST POINT WASTEWATER TREATMENT PLANT UPGRADE

OXYGEN ACTIVATED SLUDGE BASINS
STRUCTURAL
PARTIAL DECK PLAN

DWG NO. 310-S-6
DATE AUG. 1990
PROJ NO. SEA22462.C1

DATE: 8-26-90
DRAWN BY: BBL DESIGNED BY: K. KORNHER
DGN NAME: H:/PROJ2/BELLINGH/BL310S-G.DGN

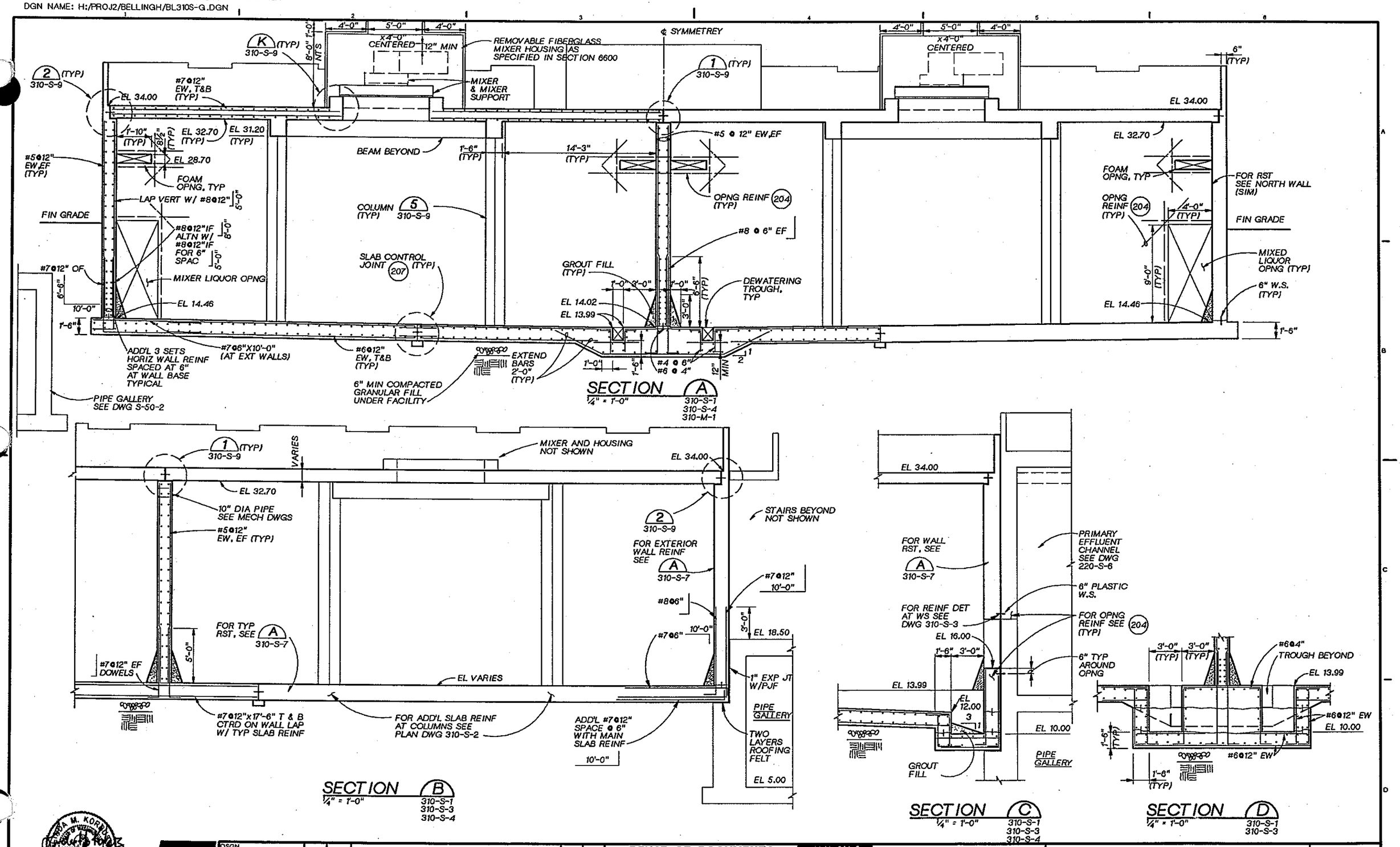

DSGN K. KORNHER					
DR B. LAZARO					
CHK W. BENNETT					
APVD J. GAUTHIER	NO.	DATE	REVISION	BY	APVD

CH2M HILL

REUSE OF DOCUMENTS
THIS DOCUMENT, AND THE IDEAS AND DESIGNS INCORPORATED HEREIN, AS AN INSTRUMENT OF PROFESSIONAL SERVICE, IS THE PROPERTY OF CH2M HILL AND IS NOT TO BE USED, IN WHOLE OR IN PART, FOR ANY OTHER PROJECT WITHOUT THE WRITTEN AUTHORIZATION OF CH2M HILL.
©CH2M HILL

BAR IS ONE INCH ON ORIGINAL DRAWING.
0 1"
IF NOT ONE INCH ON THIS SHEET, ADJUST SCALES ACCORDINGLY.

CITY OF BELLINGHAM, WASHINGTON
POST POINT WASTEWATER TREATMENT PLANT UPGRADE

OXYGEN ACTIVATED SLUDGE BASINS
STRUCTURAL SECTIONS

DWG NO. 310-S-7
DATE AUG. 1990
PROJ. NO. SEA22462.C1

DATE: 8-26-90
DRAWN BY: C. BROWN DESIGNED BY: K. KORNHER
DGN NAME: H:/PROJ2/BELLINGH/BL310S-H.DGN

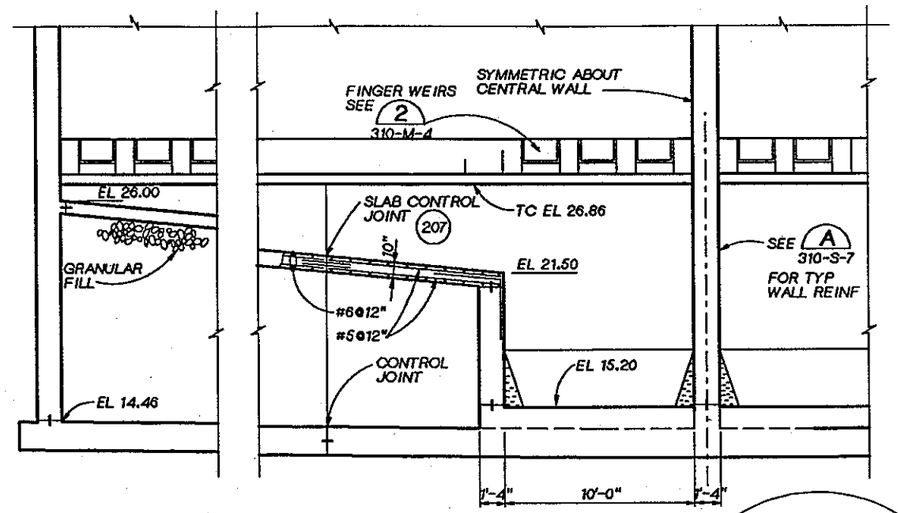

SECTION E
1/4"= 1'-0"
310-S-1
310-S-2
310-S-4
310-S-5

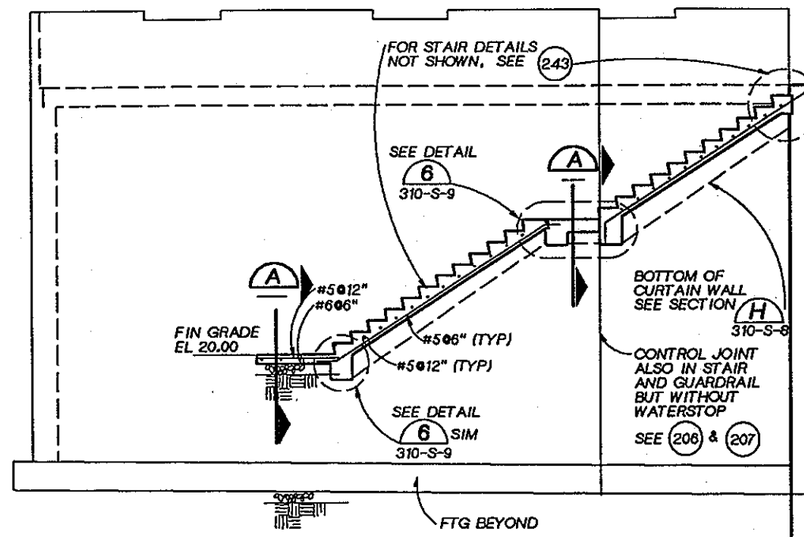

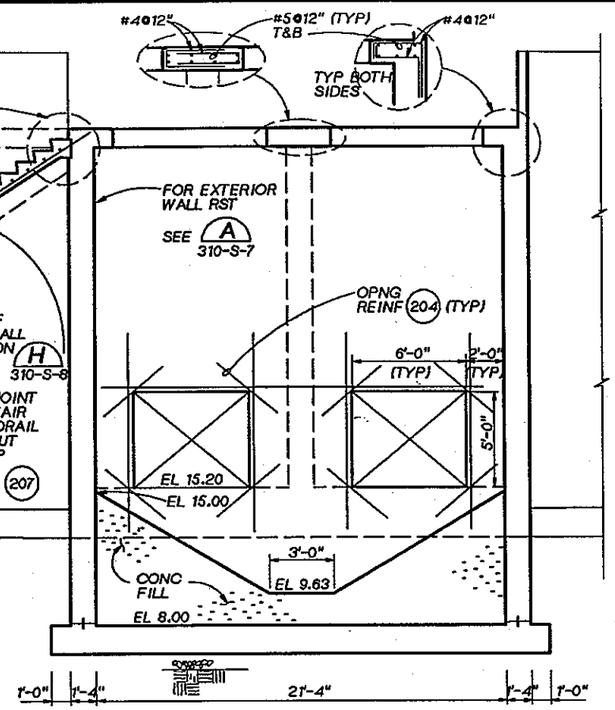

SECTION F
1/4"= 1'-0"
310-S-1
310-S-2
310-S-4
310-S-5

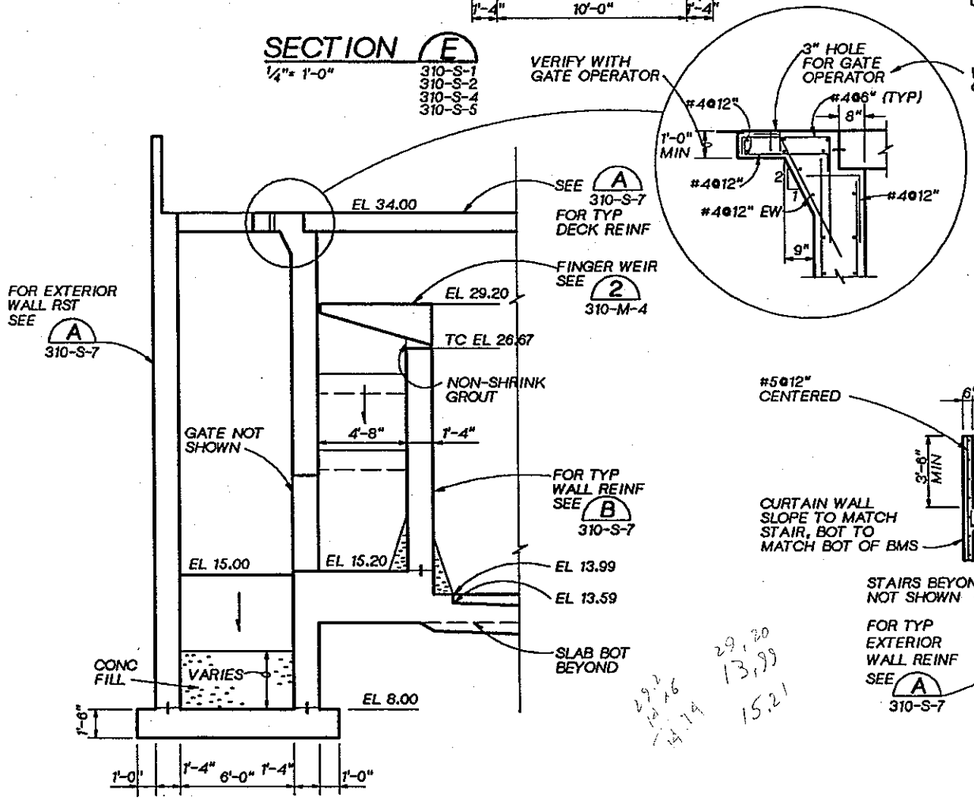

SECTION G
1/4"= 1'-0"
310-S-1
310-S-2
310-S-4
310-S-5

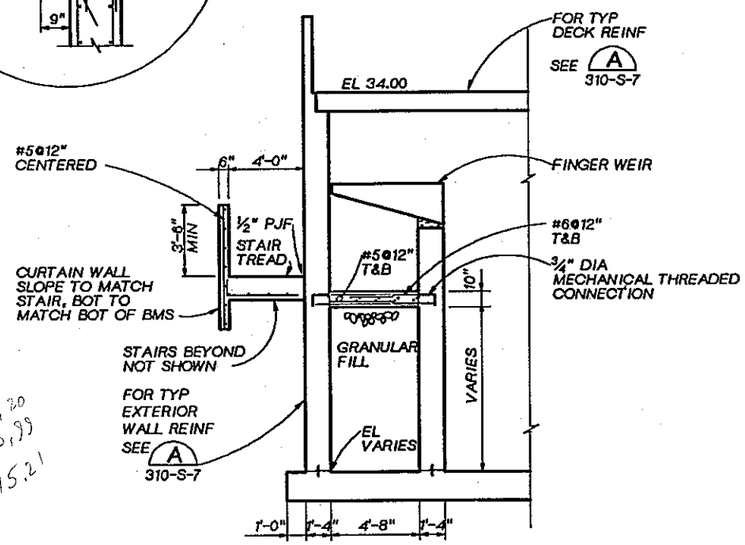

SECTION H
1/4"= 1'-0"
310-S-1
310-S-2
310-S-4
310-S-5

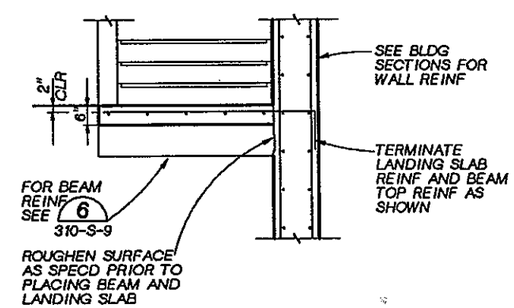

SECTION A
1/2"= 1'-0"

29.20
13.99
15.21
29.26
14.14

LINDA M. KORNHER STATE OF WASHINGTON 22864 REGISTERED PROFESSIONAL ENGINEER

CH2M HILL

DSGN	K. KORNHER				
DR	C. BROWN				
CHK	W. BENNETT				
APVD	J. GAUTHIER	NO.	DATE	REVISION	BY / APVD

REUSE OF DOCUMENTS
THIS DOCUMENT, AND THE IDEAS AND DESIGNS INCORPORATED HEREIN, AS AN INSTRUMENT OF PROFESSIONAL SERVICE, IS THE PROPERTY OF CH2M HILL AND IS NOT TO BE USED, IN WHOLE OR IN PART, FOR ANY OTHER PROJECT WITHOUT THE WRITTEN AUTHORIZATION OF CH2M HILL.
©CH2M HILL

BAR IS ONE INCH ON ORIGINAL DRAWING. 0 1"
IF NOT ONE INCH ON THIS SHEET, ADJUST SCALES ACCORDINGLY.

CITY OF BELLINGHAM, WASHINGTON
POST POINT WASTEWATER TREATMENT PLANT UPGRADE

OXYGEN ACTIVATED SLUDGE BASINS
STRUCTURAL SECTIONS

DWG NO. 310-S-8
DATE AUG. 1990
PROJ NO. SEA22462.C1

DATE: 8-26-90
DRAWN BY: C. BROWN DESIGNED BY: K. KORNHER
DGN NAME: H:/PROJ2/BELLINGH/BL310S-1.DGN

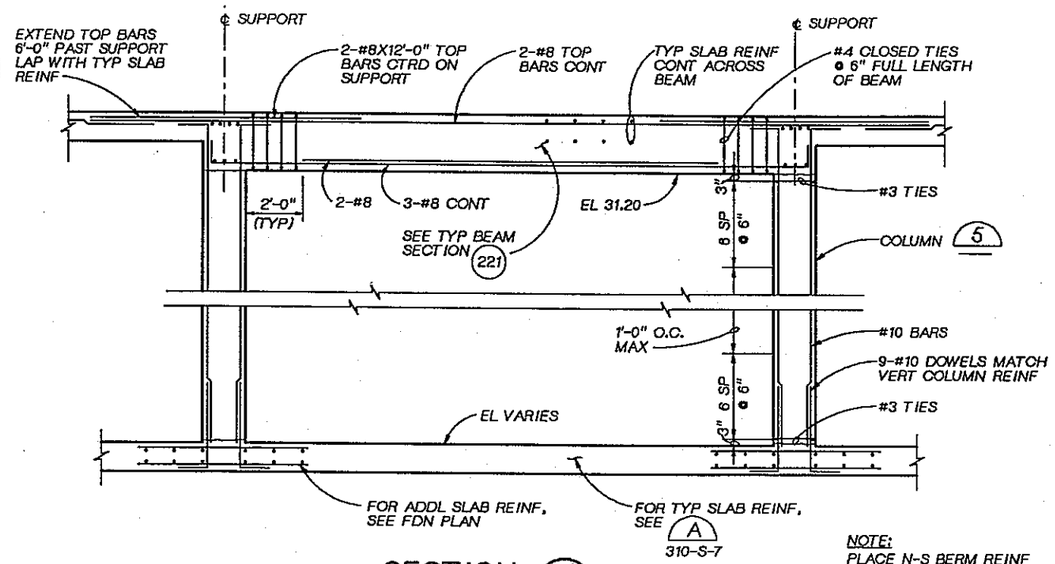

NOTE:
PLACE N-S BERM REINF OUTSIDE E-W BERM REINF

SECTION J
3/8"= 1'-0"
310-S-1
310-S-2
310-S-4
310-S-5
310-S-6

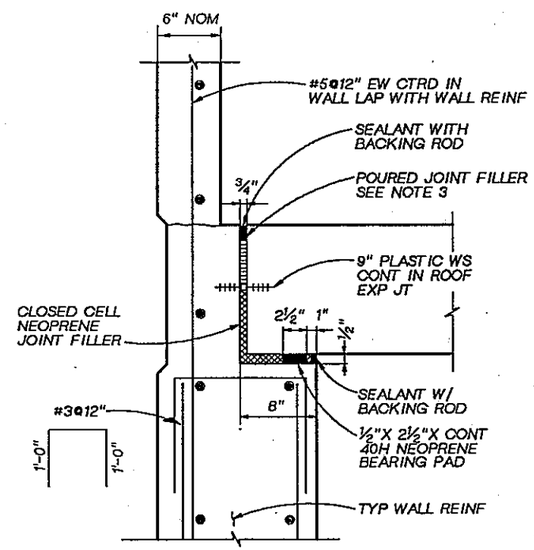

NOTE: FOR ADDL NOTES SEE DETAIL 1

DETAIL 2
1½"= 1'-0"
310-S-7

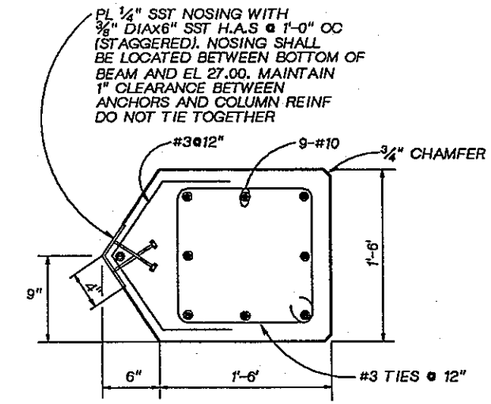

COLUMN 5
1½"=1'-0"
310-S-1
310-S-2
310-S-3
310-S-7
310-S-9

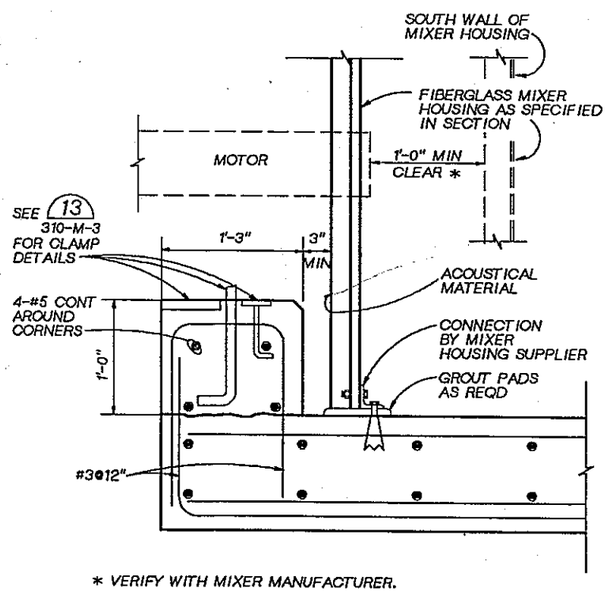

* VERIFY WITH MIXER MANUFACTURER.

SECTION K
1½"= 1'-0"
310-S-5
310-S-7

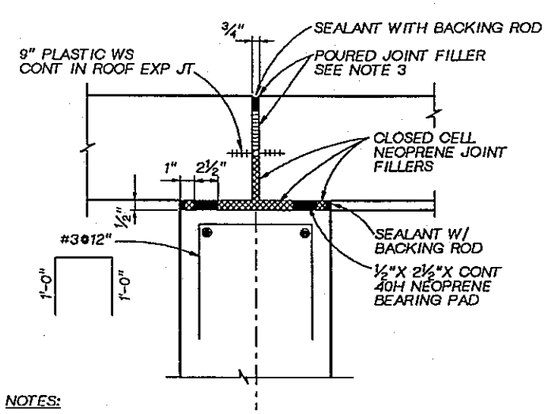

NOTES:

1. THE TOP SURFACE OF THE LEDGE AT THE ROOF EXPANSION JOINT SHALL BE A SMOOTH, LEVEL, HARD TROWELED SURFACE.
2. POUR JOINT FILLER TO 1¼" FROM TOP OF SLAB. ROUND EDGES WITH SHORT RADIUS TOOL. POUR JOINT FILLER AFTER BASINS HAVE BEEN FILLED WITH WATER.

DETAIL 1
1½"= 1'-0"
310-S-7

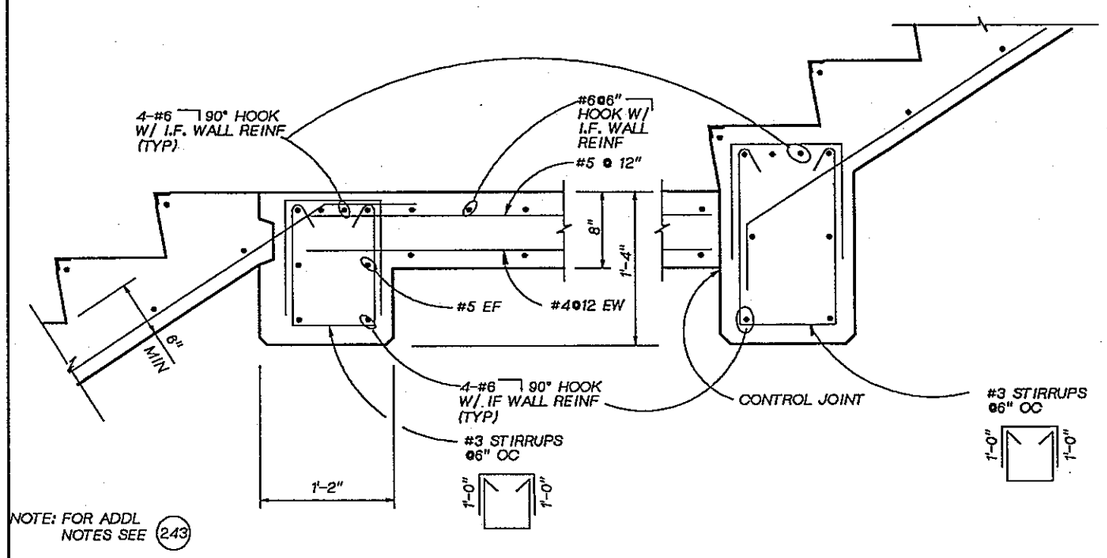

NOTE: FOR ADDL NOTES SEE 243

DETAIL 6
1½" = 1'-0"
310-S-8

DSGN	K. KORNHER				
DR	C. BROWN				
CHK	W. BENNETT				
APVD	J. GAUTHIER	NO.	DATE	REVISION	BY	APVD

CH2M HILL

REUSE OF DOCUMENTS
THIS DOCUMENT, AND THE IDEAS AND DESIGNS INCORPORATED HEREIN, AS AN INSTRUMENT OF PROFESSIONAL SERVICE, IS THE PROPERTY OF CH2M HILL AND IS NOT TO BE USED, IN WHOLE OR IN PART, FOR ANY OTHER PROJECT WITHOUT THE WRITTEN AUTHORIZATION OF CH2M HILL.
©CH2M HILL

BAR IS ONE INCH ON ORIGINAL DRAWING.
0 1"
IF NOT ONE INCH ON THIS SHEET, ADJUST SCALES ACCORDINGLY.

CITY OF BELLINGHAM, WASHINGTON
POST POINT WASTEWATER TREATMENT PLANT UPGRADE

OXYGEN ACTIVATED SLUDGE BASINS
STRUCTURAL SECTIONS AND DETAILS

DWG NO. 310-S-9
DATE AUG. 1990
PROJ. NO. SEA22462.C1

DRAWN BY: M. MOORE DESIGNED BY: J. MILLER
DGN NAME: H:/PROJ2/BELLINGH/BL310M-B.DGN

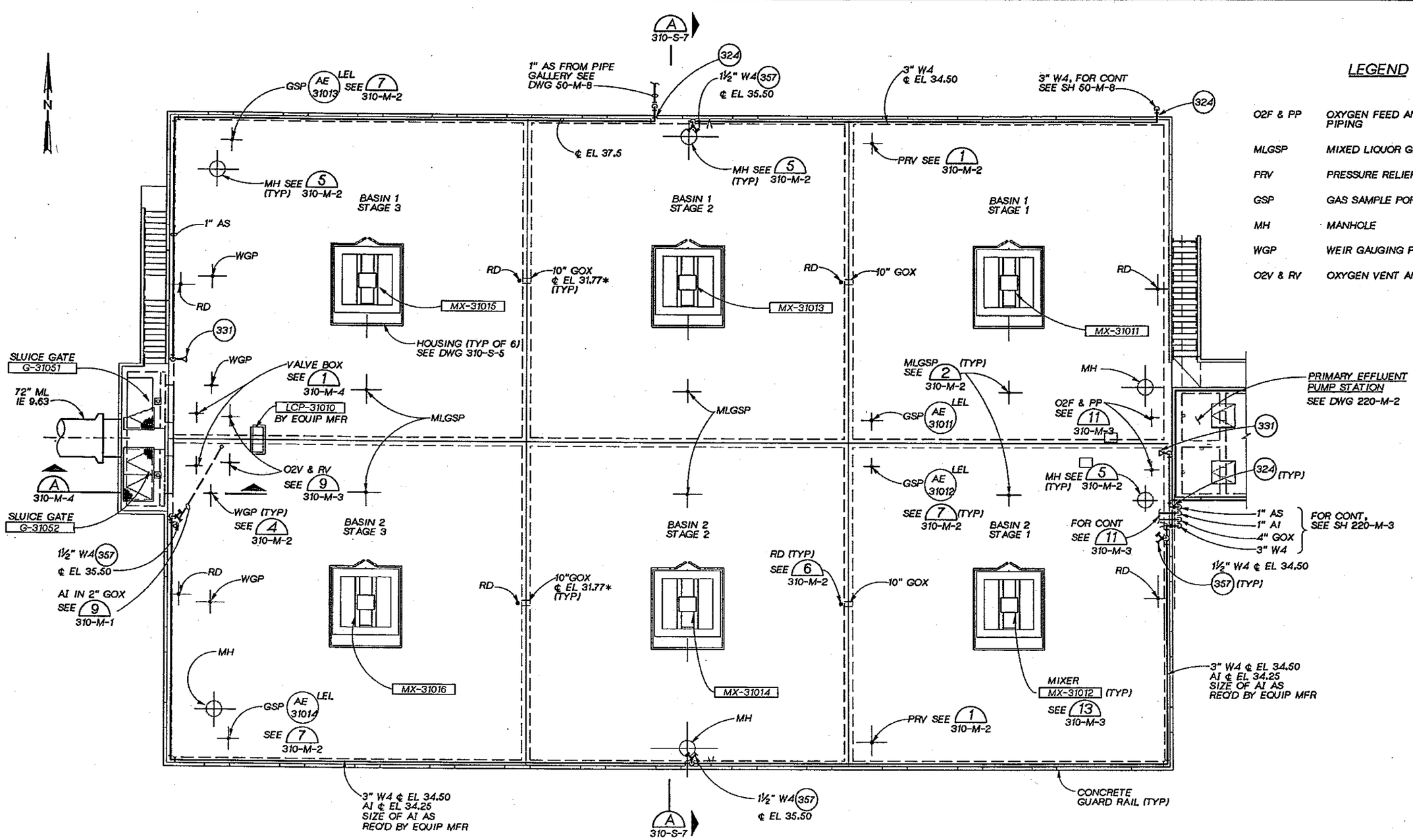

LEGEND

O2F & PP	OXYGEN FEED AND PURGE BLOWER PIPING
MLGSP	MIXED LIQUOR GRAB SAMPLE PORT
PRV	PRESSURE RELIEF VALVE
GSP	GAS SAMPLE PORT
MH	MANHOLE
WGP	WEIR GAUGING PORT
O2V & RV	OXYGEN VENT AND RELIEF VALVE

DECK PLAN

⅛"=1'-0"

JOSEPH A. GAUTHIER STATE OF WASHINGTON REGISTERED PROFESSIONAL ENGINEER

CH2M HILL

DSGN	J. MILLER				
DR	A. MCRILL				
CHK	M. BRACKEN				
APVD	J GAUTHIER	NO.	DATE	REVISION	BY	APVD

REUSE OF DOCUMENTS
THIS DOCUMENT, AND THE IDEAS AND DESIGNS INCORPORATED HEREIN, AS AN INSTRUMENT OF PROFESSIONAL SERVICE, IS THE PROPERTY OF CH2M HILL AND IS NOT TO BE USED, IN WHOLE OR IN PART, FOR ANY OTHER PROJECT WITHOUT THE WRITTEN AUTHORIZATION OF CH2M HILL.
©CH2M HILL

VERIFY SCALE
BAR IS ONE INCH ON ORIGINAL DRAWING.
0 1"
IF NOT ONE INCH ON THIS SHEET, ADJUST SCALES ACCORDINGLY.

CITY OF BELLINGHAM, WASHINGTON
POST POINT WASTEWATER TREATMENT PLANT UPGRADE

OXYGEN ACTIVATED SLUDGE BASINS
MECHANICAL DECK PLAN

DWG NO. 310-M-1
DATE AUG. 1990
PROJ NO. SEA22462.C1

DRAWN BY: M MOORE DESIGNED BY: J MILLER
DGN NAME: H:/PROJ2/BELLINGH/BL310M-C.DGN

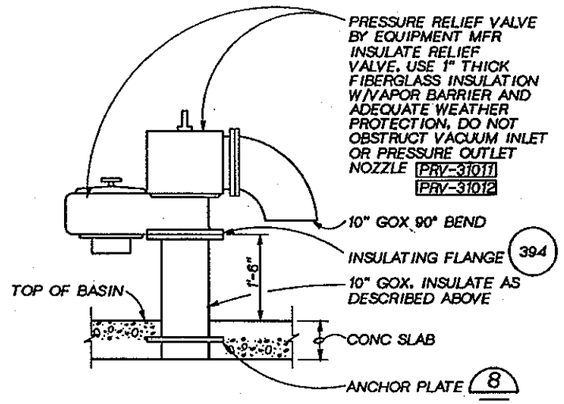

(PRV)

RELIEF VALVE 1

NTS 310-M-1

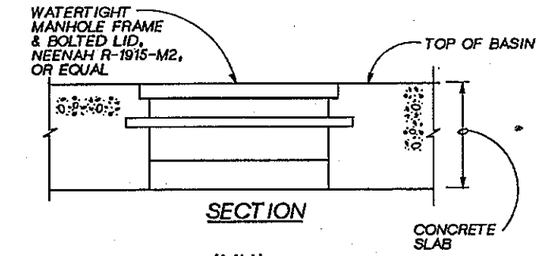

(MH)

MANHOLE 5

NTS 310-M-1

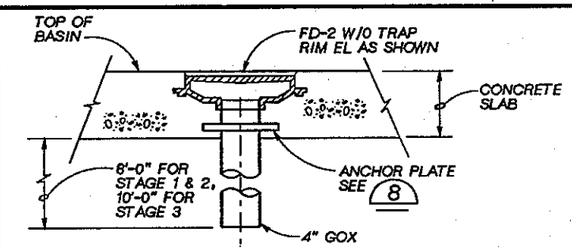

(RD)

ROOF DRAIN 6

NTS 310-M-1

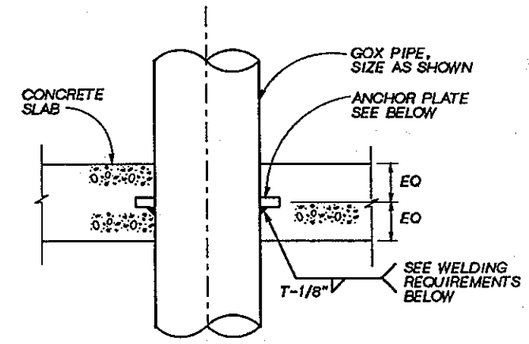

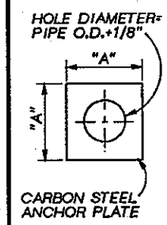

ANCHOR PLATE SIZE

PIPE SIZE NOMINAL	A	PLATE THICKNESS	PIPE SIZE NOMINAL	A	PLATE THICKNESS
2"	9"	¼"	12"	20"	½"
3"	10"	¼"	14"	21"	½"
4"	12"	½"	16"	23"	½"
5"	14"	½"	18"	25"	½"
6"	15"	½"	20"	27"	½"
8"	16"	½"	24"	31"	½"
10"	18"	½"	30"	37"	½"

WELDING REQUIREMENTS

1. "TIG" PROCESS MUST BE USED FOR MAKING THE ROOT PASS FOR ALL WELD CONFIGURATIONS IN ALL PIPE SIZES.
2. "TIG" REQUIRED FOR ALL PIPE SIZES UNDER 4 INCHES OR WHERE CIRCUMSTANCES DICTATE.
3. "TIG" OR "SMA" PROCESS MAY BE USED FOR STRING PASSES IN PIPING SIZES GREATER THAN 4 INCHES.
4. THE FOLLOWING FILLER METALS SHALL BE USED:

METAL OR ALLOY	WELDING PROCESS	FILLER METAL AND ELECTRODE
STAINLESS STEEL TO STAINLESS STEEL	TIG-ROOT PASS, NO BACKING RING, SMA	ER-308L FILLER ROD E-308L ELECTRODE
CARBON STEEL TO STAINLESS STEEL	TIG-ROOT PASS, NO BACKING RING, SMA	ER-309 FILLER ROD E-309 ELECTRODE
CARBON STEEL TO CARBON STEEL	TIG-ROOT PASS, NO BACKING RING, SMA	E-70S-2 FILLER ROD E-5010 ELECTRODE

ANCHOR PLATE 8

NTS 310-M-2 310-M-3

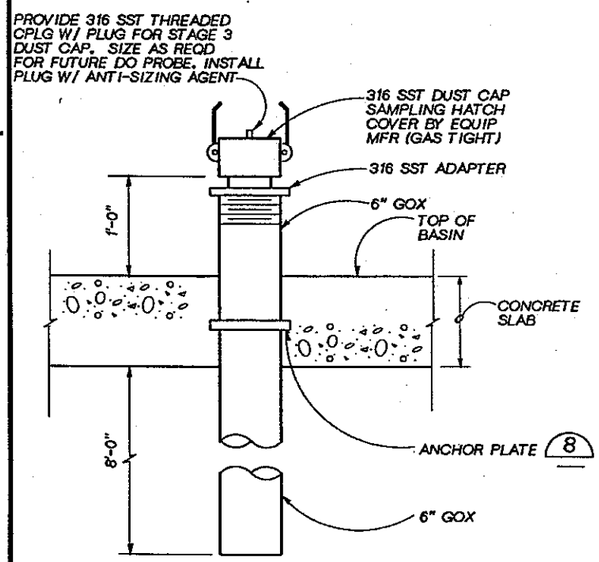

SECTION

(MLGSP)

MIXED LIQUOR GRAB SAMPLE PORT 2

NTS 310-M-1

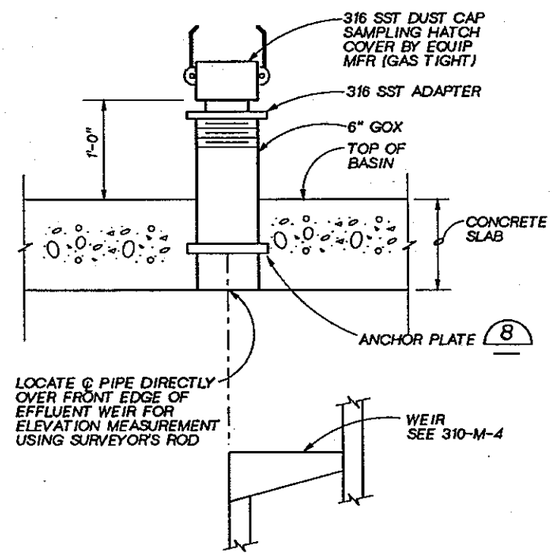

SECTION

(WGP)

WEIR GAUGING PORT 4

NTS 310-M-1

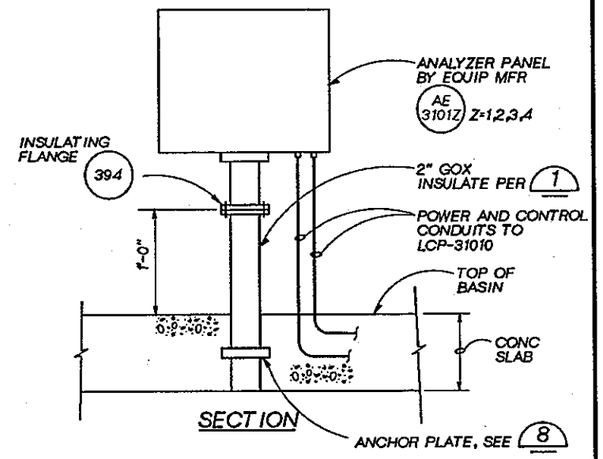

(GSP)

GAS SAMPLE PORT 7

NTS 310-M-1

JOSEPH A. GAUTHIER — REGISTERED PROFESSIONAL ENGINEER

CH2M HILL

DSGN	J MILLER
DR	K ANDERSEN
CHK	M BRACKEN
APVD	J GAUTHIER

NO.	DATE	REVISION	BY	APVD

REUSE OF DOCUMENTS
THIS DOCUMENT, AND THE IDEAS AND DESIGNS INCORPORATED HEREIN, AS AN INSTRUMENT OF PROFESSIONAL SERVICE, IS THE PROPERTY OF CH2M HILL AND IS NOT TO BE USED, IN WHOLE OR IN PART, FOR ANY OTHER PROJECT WITHOUT THE WRITTEN AUTHORIZATION OF CH2M HILL.
©CH2M HILL

VERIFY SCALE
BAR IS ONE INCH ON ORIGINAL DRAWING.
0 1"
IF NOT ONE INCH ON THIS SHEET, ADJUST SCALES ACCORDINGLY.

CITY OF BELLINGHAM, WASHINGTON
POST POINT WASTEWATER TREATMENT PLANT UPGRADE

OXYGEN ACTIVATED SLUDGE BASINS
MECHANICAL DETAILS

DWG NO. 310-M-2
DATE AUG. 1990
PROJ NO. SEA22462.C1

OVERLAY IDENTIFICATION: COMPOSITE, OVERLAY, SCREEN; PROJID; FILE

DRAWN BY: M. MOORE DESIGNED BY: J MILLER
DGN NAME: H:/PROJ2/BELLINGH/BL310M-D.DGN

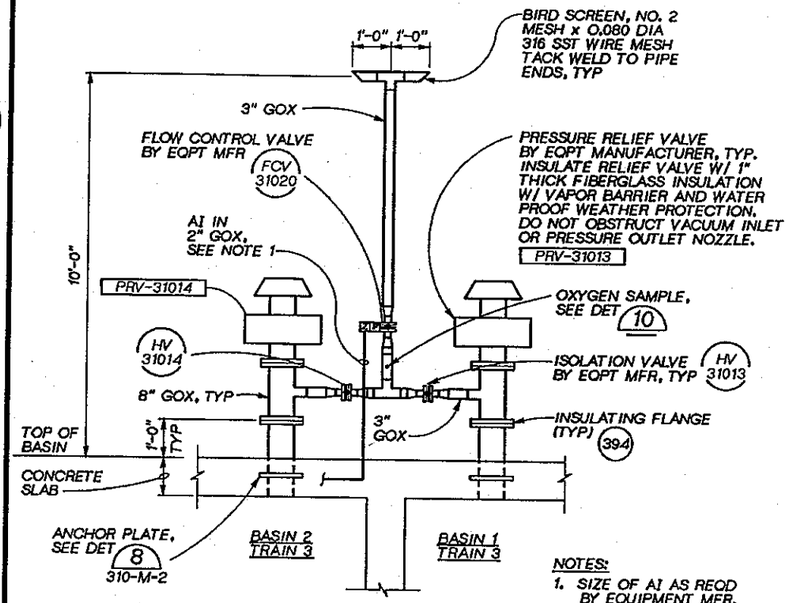

NOTES:
1. SIZE OF AI AS REQD BY EQUIPMENT MFR.
2. INSULATE ALL PIPE AS DESCRIBED FOR PRV.

SECTION

(O2V & RV)

OXYGEN VENT & RELIEF VALVE DETAIL 9

NTS 310-M-1

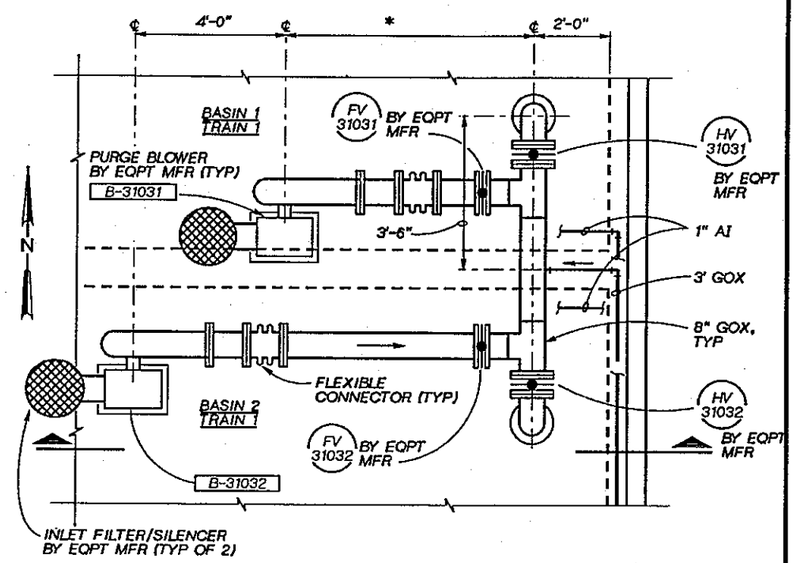

PLAN

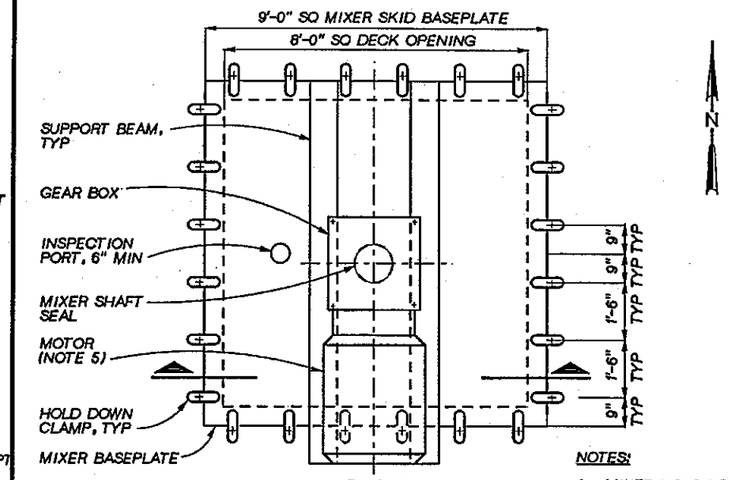

PLAN

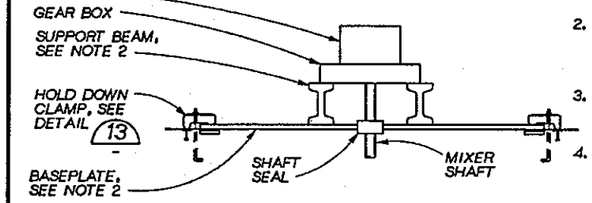

SECTION

NOTES:
1. MIXER HOUSING NOT SHOWN, SEE DWG 310-S-5.
2. DESIGN AND SUPPLY OF BASEPLATE AND SUPPORT BEAMS SHALL BE BY EQPT MFR. SEE SPEC SECTION 11340.
3. MIXER, BASEPLATE, CLAMPS & GASKET FURNISHED BY EQPT MFR.
4. UNDERSIDE OF MIXER BASEPLATE SHALL BE CLEANED AND COATED AS SPECIFIED.
5. ALL MOTORS SHALL BE ON SOUTH SIDE.

MIXER BASE PLATE 12

NTS 310-M-1

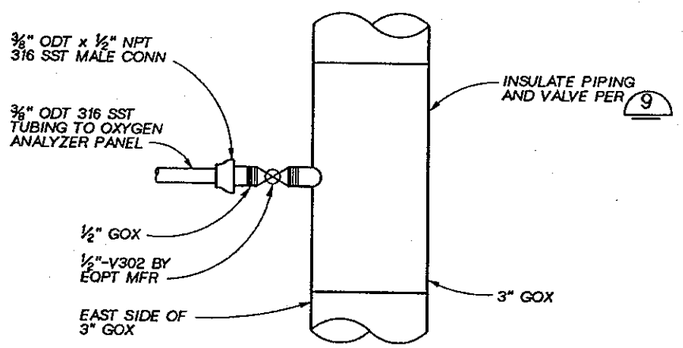

SECTION

OXYGEN SAMPLE 10

NTS

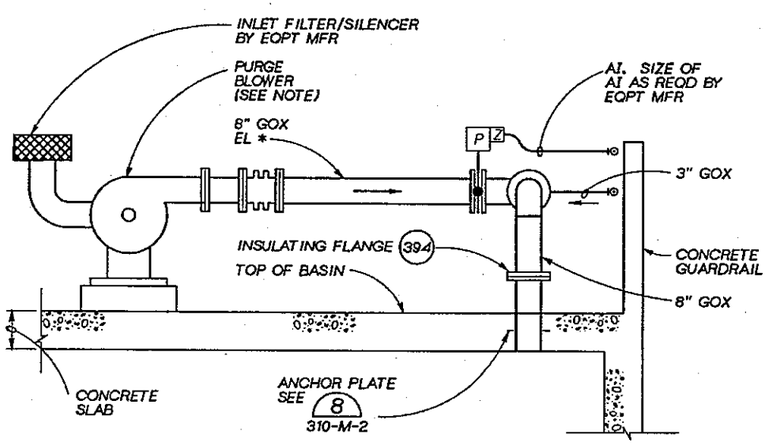

SECTION

(O2F & PP)

OXYGEN FEED & PURGE BLOWER PIPING 11

NTS 310-M-1

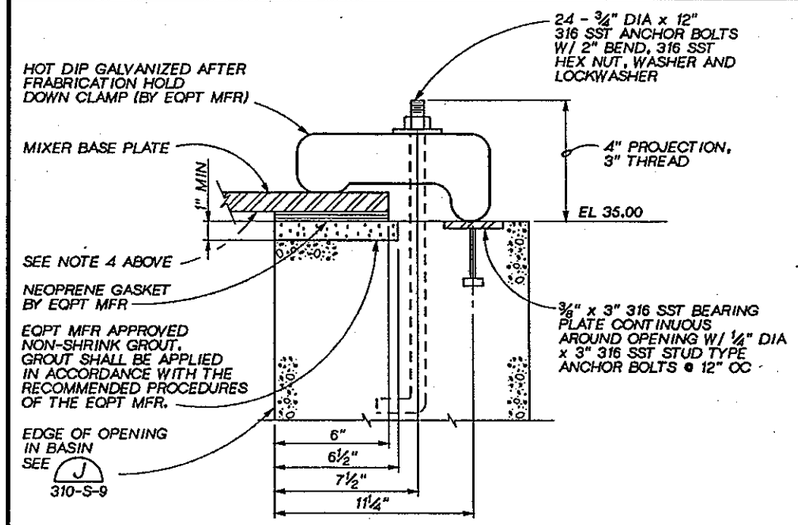

HOLD DOWN CLAMP 13

NTS

JOSEPH A. GAUTHIER STATE OF WASHINGTON REGISTERED PROFESSIONAL ENGINEER

CH2M HILL

DSGN	J MILLER
DR	KL MCCOY
CHK	M. BRACKEN
APVD	J GAUTHIER

NO.	DATE	REVISION	BY	APVD

REUSE OF DOCUMENTS
THIS DOCUMENT, AND THE IDEAS AND DESIGNS INCORPORATED HEREIN, AS AN INSTRUMENT OF PROFESSIONAL SERVICE, IS THE PROPERTY OF CH2M HILL AND IS NOT TO BE USED, IN WHOLE OR IN PART, FOR ANY OTHER PROJECT WITHOUT THE WRITTEN AUTHORIZATION OF CH2M HILL.
©CH2M HILL

VERIFY SCALE
BAR IS ONE INCH ON ORIGINAL DRAWING.
0 1"
IF NOT ONE INCH ON THIS SHEET, ADJUST SCALES ACCORDINGLY.

CITY OF BELLINGHAM, WASHINGTON
POST POINT WASTEWATER TREATMENT PLANT UPGRADE

OXYGEN ACTIVATED SLUDGE BASINS
MECHANICAL DETAILS

DWG NO. 310-M-3
DATE AUG. 1990
PROJ NO. SEA22462.C1

DRAWN BY: M. MOORE DESIGNED BY: J MILLER
DGN NAME: H:/PROJ2/BELLINGH/BL310M-E.DGN

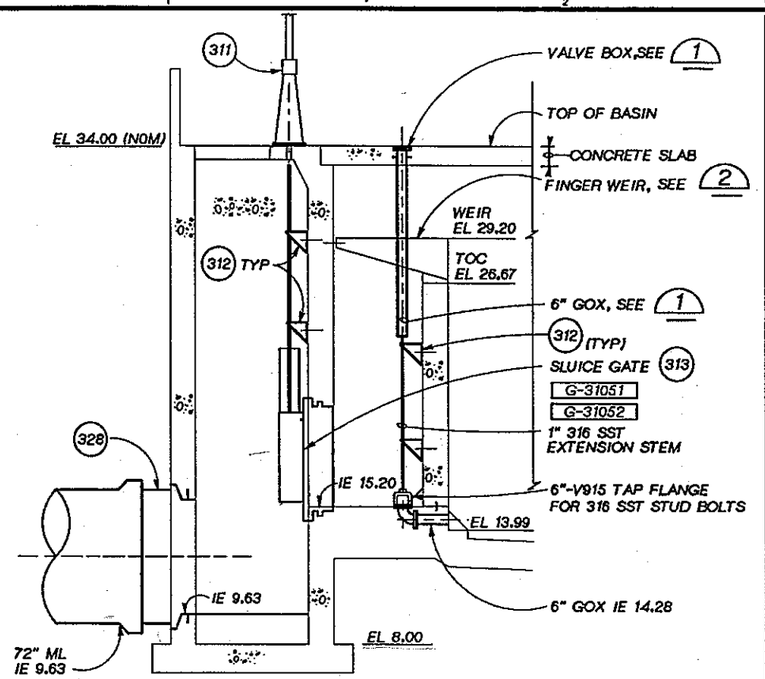

SECTION A
1/4" = 1'-0" 310-M-1

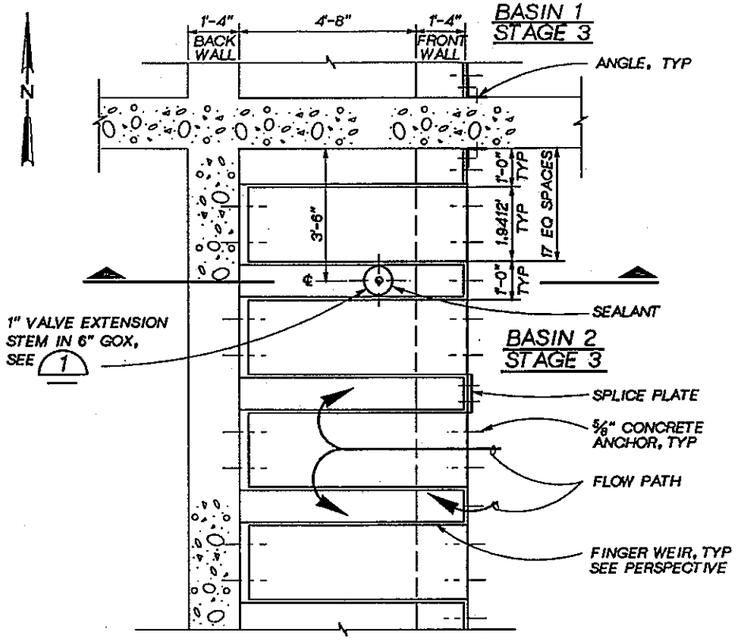

PLAN

NOTES:

1. FOR FINGER WEIR SPECIFICATIONS, SEE SECTION 06600.
2. ALL FINGER WEIRS AND PLATES SHALL BE FIBERGLASS. ALL ASSOCIATED HARDWARE SHALL BE 316 STAINLESS STEEL

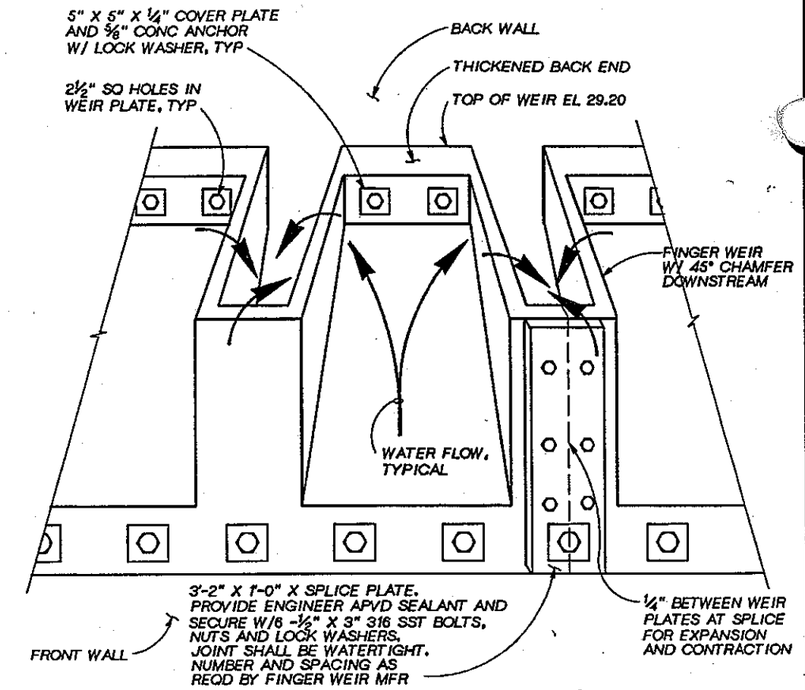

FINGER WEIR PERSPECTIVE
NTS

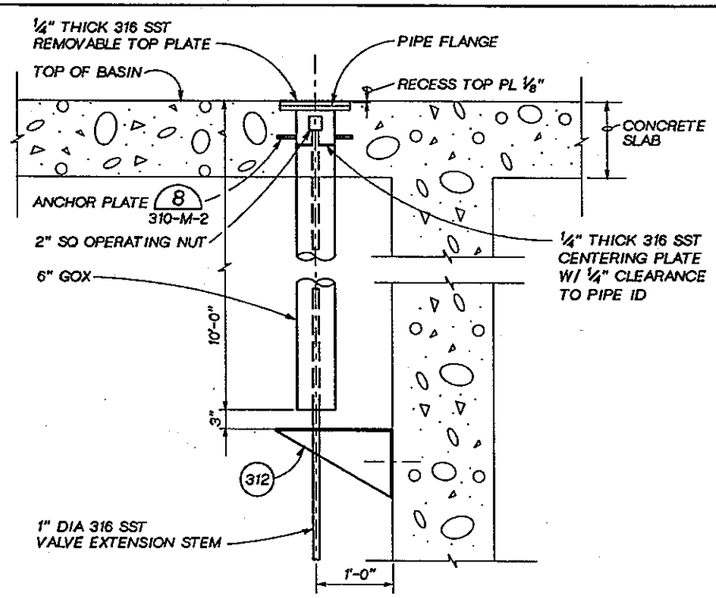

VALVE BOX 1
1" = 1'-0" 310-M-1

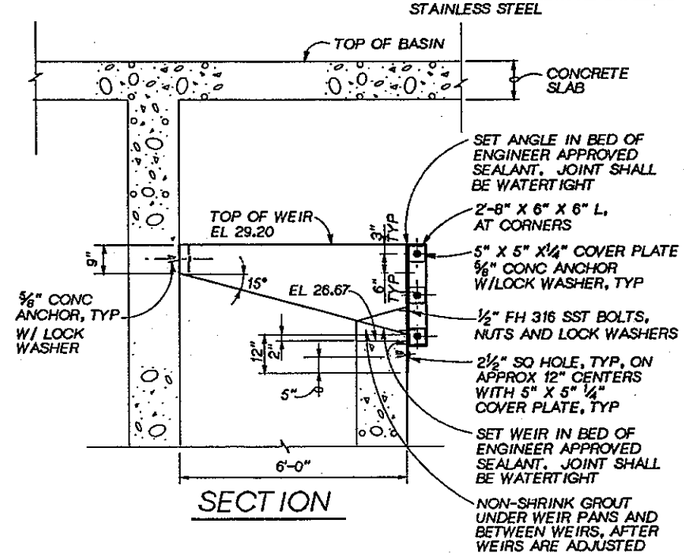

SECTION

FINGER WEIR 2
1/2" = 1'-0" 310-S-8

JOSEPH A. GAUTHIER STATE OF WASHINGTON REGISTERED PROFESSIONAL ENGINEER

CH2M HILL

DSGN	J. MILLER
DR	C.S.HOWELL
CHK	M. BRACKEN
APVD	J GAUTHIER

NO.	DATE	REVISION	BY	APVD

REUSE OF DOCUMENTS
THIS DOCUMENT, AND THE IDEAS AND DESIGNS INCORPORATED HEREIN, AS AN INSTRUMENT OF PROFESSIONAL SERVICE, IS THE PROPERTY OF CH2M HILL AND IS NOT TO BE USED, IN WHOLE OR IN PART, FOR ANY OTHER PROJECT WITHOUT THE WRITTEN AUTHORIZATION OF CH2M HILL.
©CH2M HILL

VERIFY SCALE
BAR IS ONE INCH ON ORIGINAL DRAWING.
0 1"
IF NOT ONE INCH ON THIS SHEET, ADJUST SCALES ACCORDINGLY.

CITY OF BELLINGHAM, WASHINGTON
POST POINT WASTEWATER TREATMENT PLANT UPGRADE

OXYGEN ACTIVATED SLUDGE BASIN
MECHANICAL SECTIONS AND DETAILS

DWG NO. 310-M-4
DATE AUG. 1990
PROJ NO. SEA22462.C1

OVERLAY IDENTIFICATION PROJD FILE
COMPOSITE OVERLAY SCREEN

DATE: 8-27-90
DRAWN BY: M. MOORE DESIGNED BY: J. VALDES
DGN NAME: H:/PROJ2/BELLINGH/BL310M-G.DGN

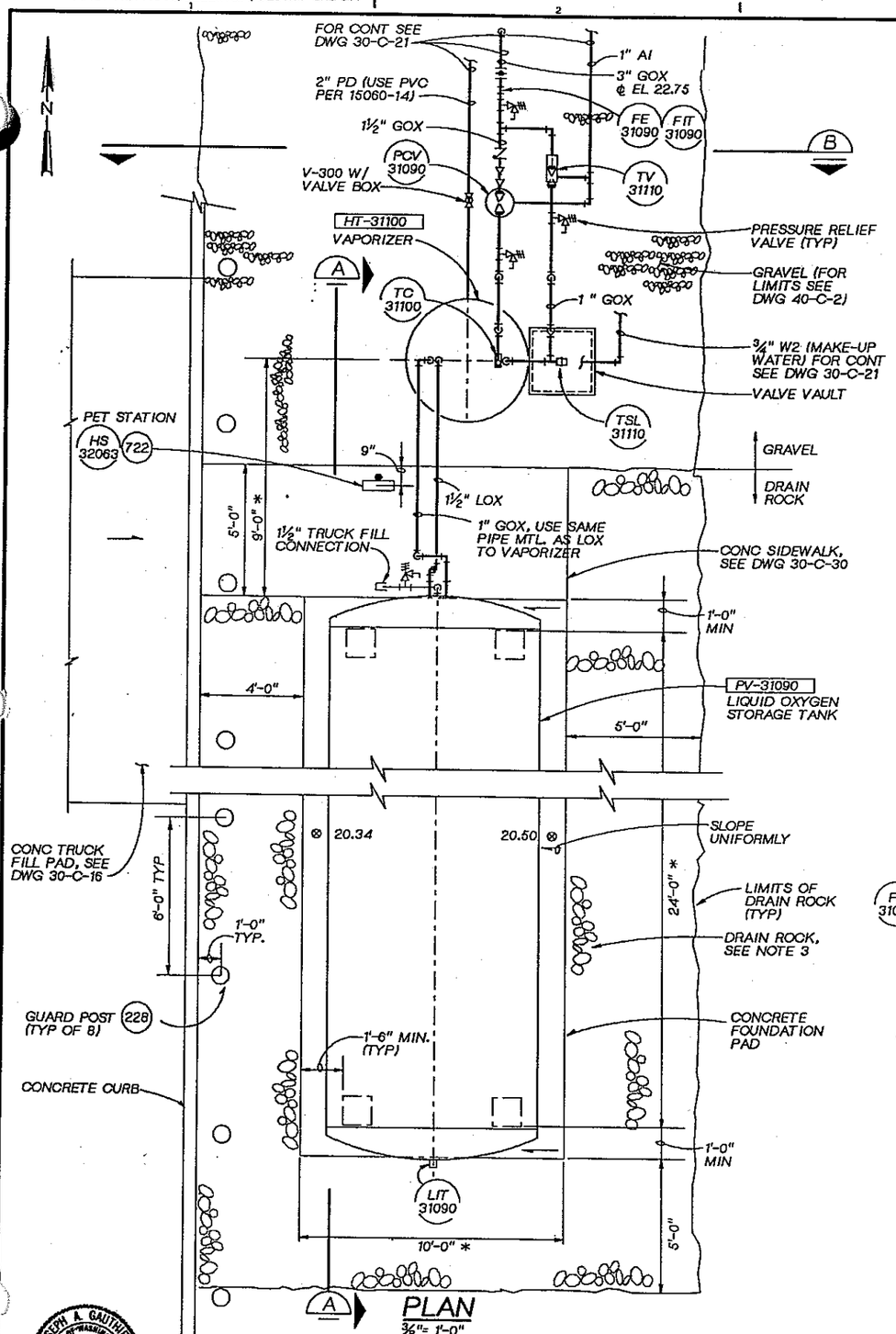

PLAN
3/8"= 1'-0"

NOTES:

1. ALL VALVES IN LIQUID AND GASEOUS OXYGEN SERVICE, INCLUDING ALL CONTROL VALVES, MAJOR PROCESS VALVES, PRESSURE REGULATING VALVES, PRESSURE RELIEF VALVES, AND ISOLATION VALVES SHALL BE PROVIDED BY THE OXYGEN GENERATION SYSTEM SUPPLIER AS PART OF THE SYSTEM.
2. DESIGN LIQUID OXYGEN PIPING PER OXYGEN SYSTEM SUPPLIER'S RECOMMENDATIONS TO PROVIDE AN ADEQUATELY SUPPORTED PIPING SYSTEM ALLOWING FOR THERMAL EXPANSION AND CONTRACTION.
3. PROVIDE 12" DEEP DRAIN ROCK WITHIN THE LIMITS SHOWN. USE RIVER ROCK PER SPECIFICATION SECTION 02200.
4. PREPARE FIRM BEDDING SURFACE AT THE BOTTOM OF THE EXCAVATION TO SUPPORT THE VAPORIZER TANK IN ACCORDANCE WITH THE OXYGEN GENERATION SYSTEM SUPPLIER'S RECOMMENDATIONS.
5. UTILITY VAULT CO. NO. 3030-LA WITH COVER NO. 3030-T, OR EQUAL. GLUE 2" STYROFOAM INSULATION TO UNDERSIDE OF COVER.

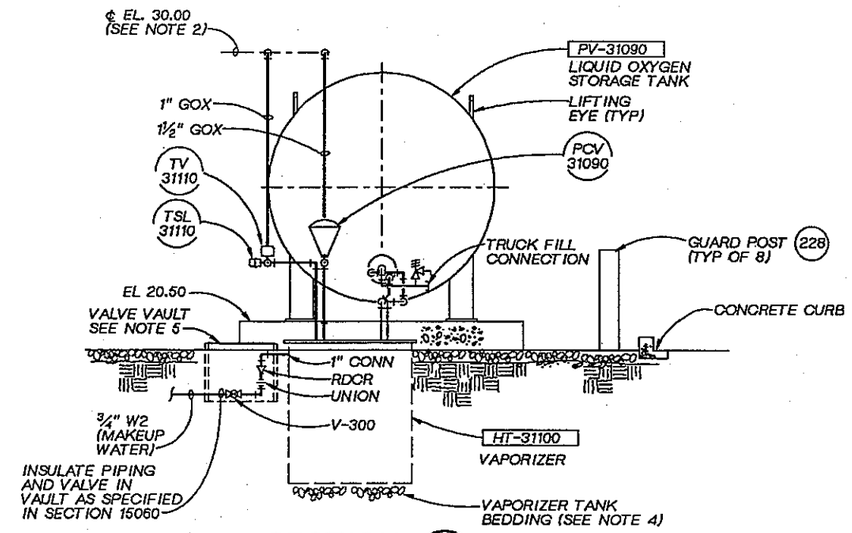

SECTION B
3/8"= 1'-0"

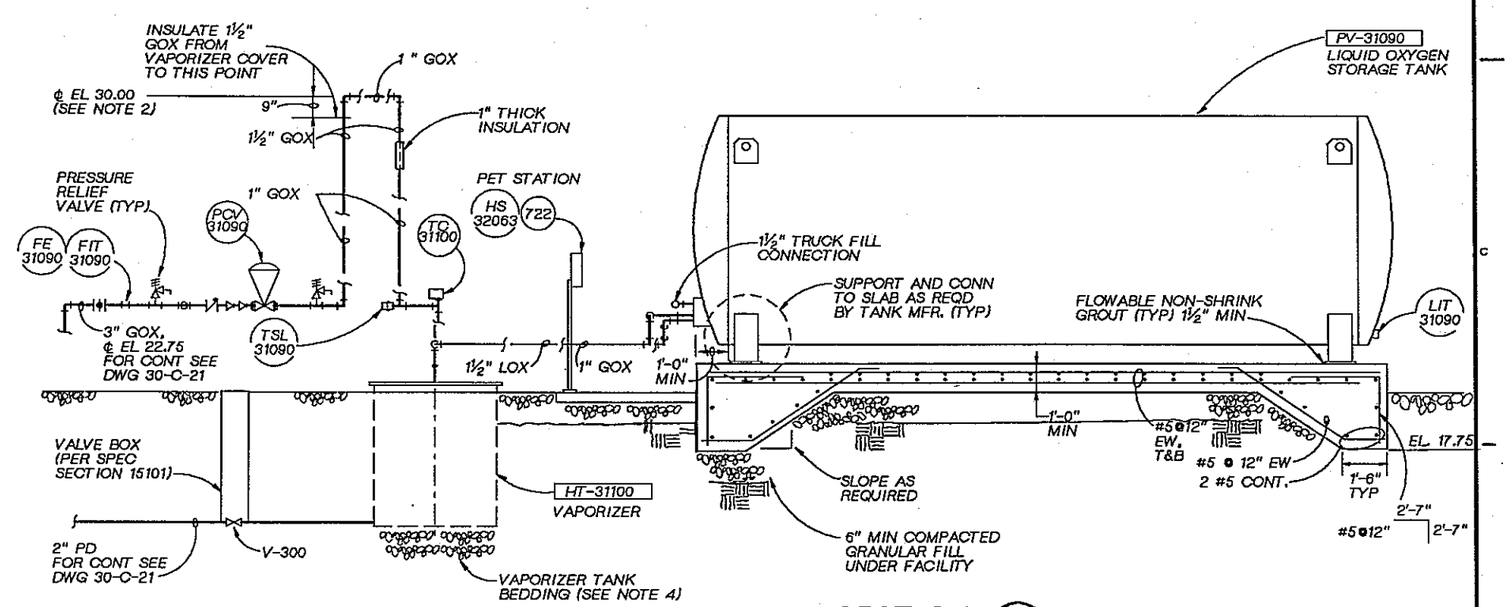

SECTION A
3/8"= 1'-0"

JOSEPH A. GAUTHIER, STATE OF WASHINGTON, REGISTERED PROFESSIONAL ENGINEER

CH2M HILL

DSGN	J. VALDES				
DR	C. BROWN				
CHK	M. BRACKEN				
APVD	J. GAUTHIER	NO.	DATE	REVISION	BY / APVD

REUSE OF DOCUMENTS
THIS DOCUMENT, AND THE IDEAS AND DESIGNS INCORPORATED HEREIN, AS AN INSTRUMENT OF PROFESSIONAL SERVICE, IS THE PROPERTY OF CH2M HILL AND IS NOT TO BE USED, IN WHOLE OR IN PART, FOR ANY OTHER PROJECT WITHOUT THE WRITTEN AUTHORIZATION OF CH2M HILL.
©CH2M HILL

BAR IS ONE INCH ON ORIGINAL DRAWING. 0 1"
IF NOT ONE INCH ON THIS SHEET, ADJUST SCALES ACCORDINGLY.

CITY OF BELLINGHAM, WASHINGTON
POST POINT WASTEWATER TREATMENT PLANT UPGRADE

OXYGEN ACTIVATED SLUDGE BASINS
MECHANICAL
LIQUID OXYGEN STORAGE TANK
PLAN, SECTIONS, AND DETAILS

DWG NO. 310-M-5
DATE AUG. 1990
PROJ NO. SEA22462.C1

DATE: 8/26/90
DRAWN BY: GH BURLEY DESIGNED BY:
DGN NAME: H:/PROJ2/BELLINGH/BL320A-A.DGN

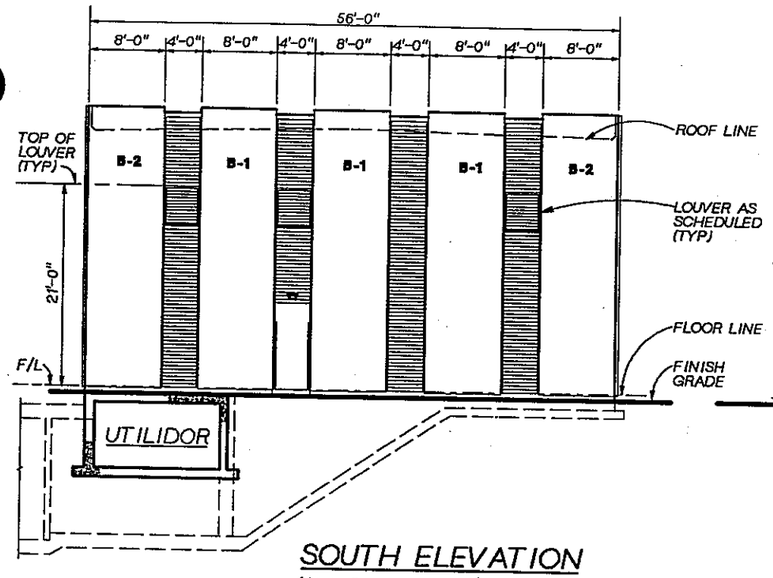

SOUTH ELEVATION
1/8"=1'-0"

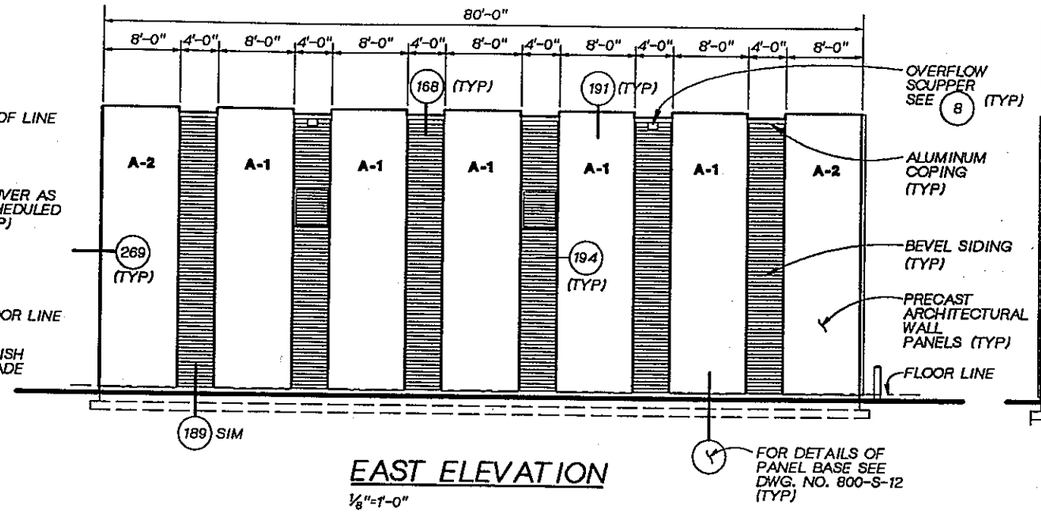

EAST ELEVATION
1/8"=1'-0"

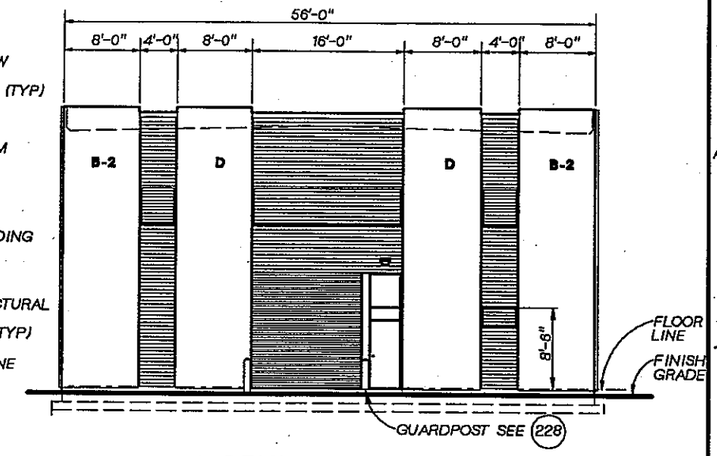

NORTH ELEVATION
1/8"=1'-0"

NOTES

1. FOR ARCHITECTURAL WALL PANEL SCHEDULE SEE DWG. NO. 800-S-12.
2. FOR STANDARD DETAILS SEE THE "800" SECTION OF THE DWGS.
3. FOR LOUVER SIZES AND TYPES, SEE SPECIFICATION SECTION 10200.
4. FOR EXTERIOR COLORS & FINISHES, SEE SPECIFICATION SECTION 09000.

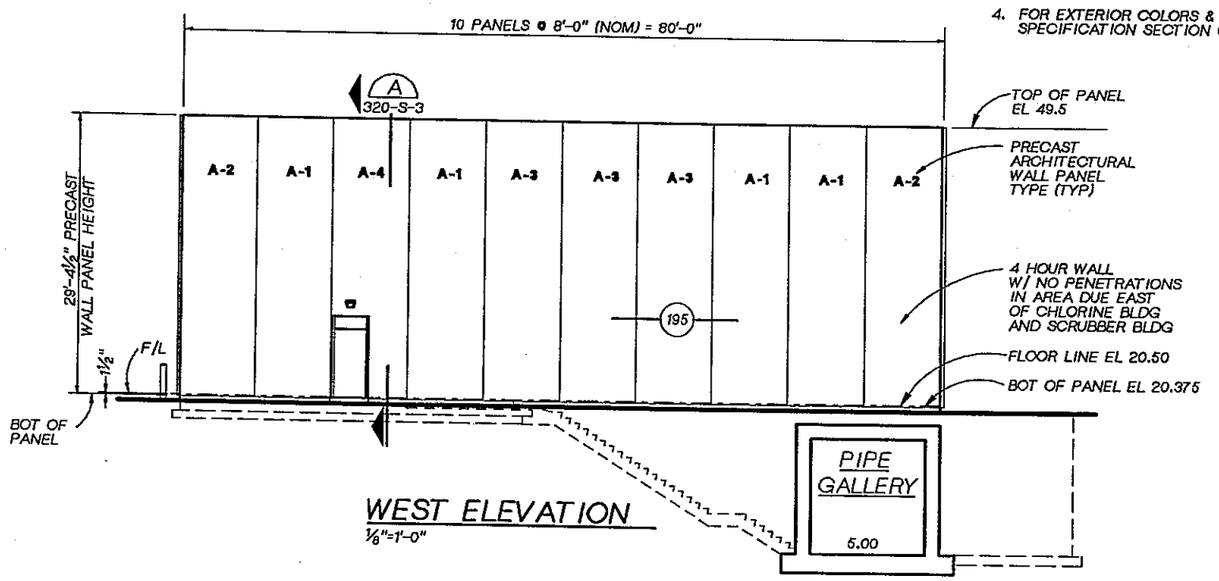

WEST ELEVATION
1/8"=1'-0"

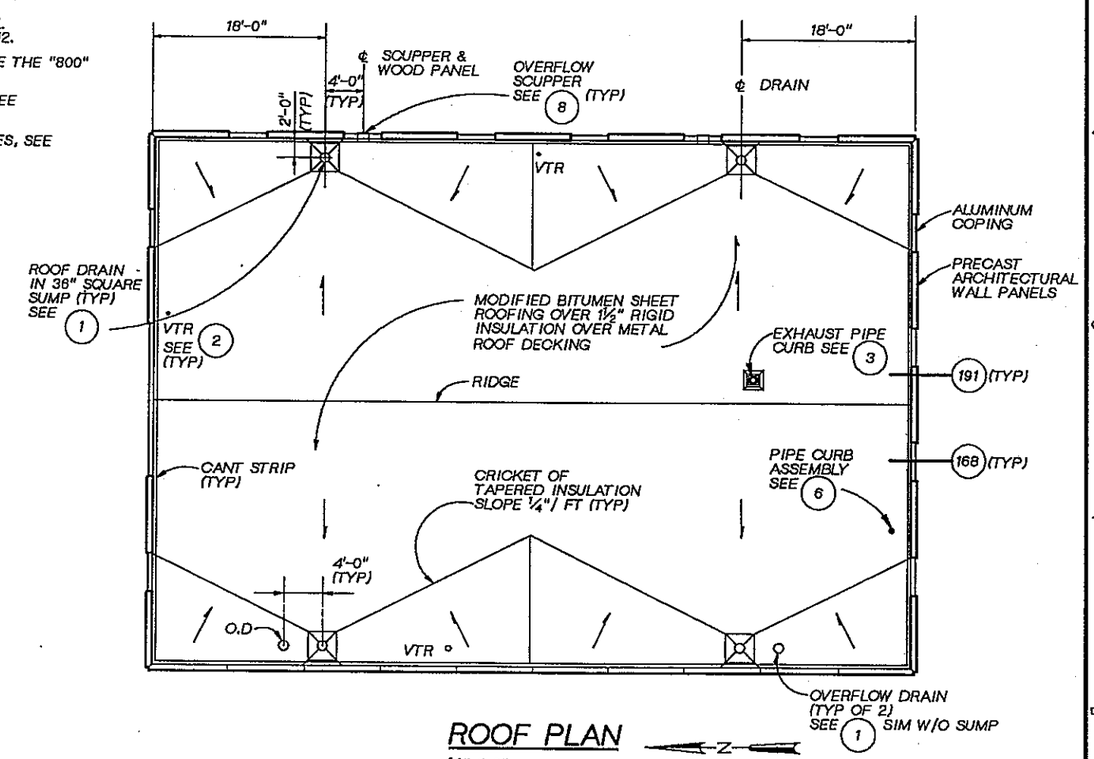

ROOF PLAN
1/8"=1'-0"

REGISTERED ARCHITECT JOHN L. PRESS STATE OF WASHINGTON

CH2M HILL

DSGN	G BOWER				
DR	G BOWER				
CHK	R WHITE				
APVD	J. CAWTHHEER	NO.	DATE	REVISION	BY / APVD

REUSE OF DOCUMENTS
THIS DOCUMENT, AND THE IDEAS AND DESIGNS INCORPORATED HEREIN, AS AN INSTRUMENT OF PROFESSIONAL SERVICE, IS THE PROPERTY OF CH2M HILL AND IS NOT TO BE USED, IN WHOLE OR IN PART, FOR ANY OTHER PROJECT WITHOUT THE WRITTEN AUTHORIZATION OF CH2M HILL.
©CH2M HILL

BAR IS ONE INCH ON ORIGINAL DRAWING. 0 1"
IF NOT ONE INCH ON THIS SHEET, ADJUST SCALES ACCORDINGLY.

CITY OF BELLINGHAM, WASHINGTON
POST POINT WASTEWATER TREATMENT PLANT UPGRADE

OXYGEN GENERATION FACILITY
ARCHITECTURAL
ELEVATIONS AND ROOF PLAN

DWG NO. 320-A-1
DATE AUG. 1990
PROJ NO. SEA22462.C1

DATE: 8/25/90
DRAWN BY: D KHADEM-GHAEINI DESIGNED BY: G BOWER
DGN NAME: H:/PROJ2/BELLINGH/BL320A-B.DGN

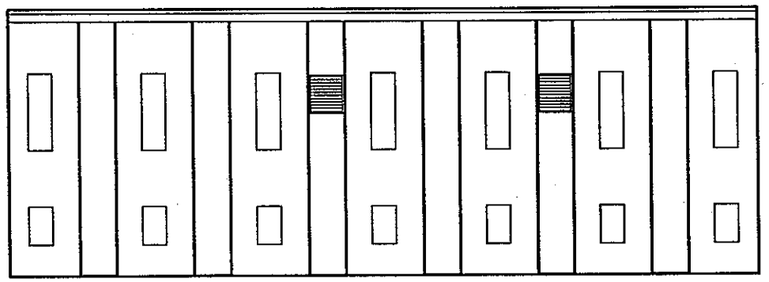

EAST ELEVATION
1/8"=1'-0"

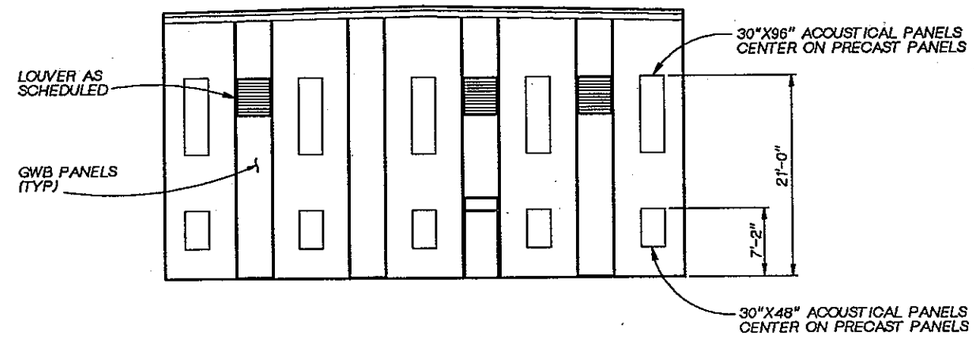

SOUTH ELEVATION
1/8"=1'-0"

NOTE:
WHERE ACOUSTICAL PANEL LOCATIONS CONFLICT WITH OTHER WALL MOUNTED EQUIPMENT, RELOCATE AS INSTRUCTED BY THE ENGINEER.

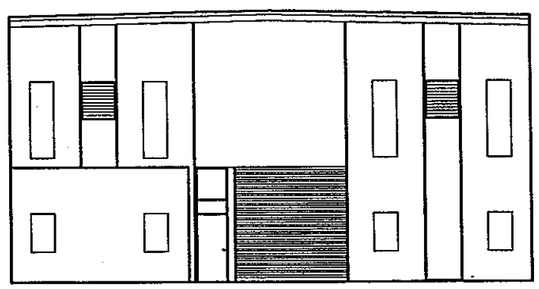

NORTH ELEVATION
1/8"=1'-0"

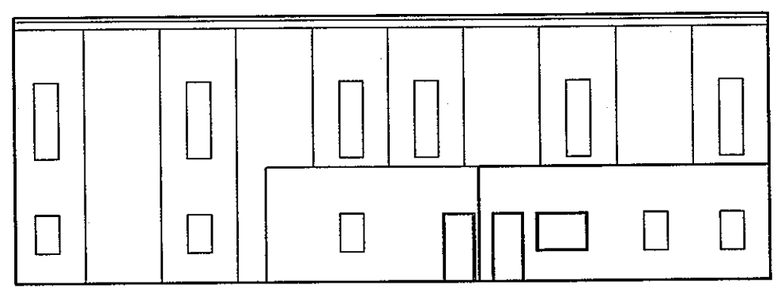

WEST ELEVATION
1/8"=1'-0"

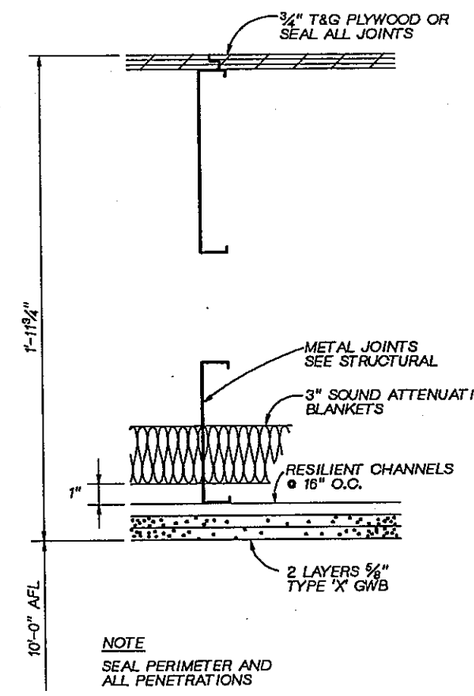

NOTE
SEAL PERIMETER AND ALL PENETRATIONS

OCF • MCC RM CLG (1) 320-S-3
3" = 1'-0"

REGISTERED ARCHITECT JOHN E. HESS STATE OF WASHINGTON

CH2M HILL

DSGN	G BOWER				
DR	D KHADEM				
CHK	R WHITE				
APVD	J GAUTHIER	NO.	DATE	REVISION	BY / APVD

REUSE OF DOCUMENTS
THIS DOCUMENT, AND THE IDEAS AND DESIGNS INCORPORATED HEREIN, AS AN INSTRUMENT OF PROFESSIONAL SERVICE, IS THE PROPERTY OF CH2M HILL AND IS NOT TO BE USED, IN WHOLE OR IN PART, FOR ANY OTHER PROJECT WITHOUT THE WRITTEN AUTHORIZATION OF CH2M HILL.
©CH2M HILL

BAR IS ONE INCH ON ORIGINAL DRAWING. 0 — 1"
IF NOT ONE INCH ON THIS SHEET, ADJUST SCALES ACCORDINGLY.

CITY OF BELLINGHAM, WASHINGTON
POST POINT WASTEWATER TREATMENT PLANT UPGRADE

OXYGEN GENERATION FACILITY
ARCHITECTURAL
INTERIOR ELEVATIONS AND DETAILS

DWG NO. 320-A-2
DATE AUG. 1990
PROJ NO. SEA22462.C1

OVERLAY SCREEN
PROJID FILE

DATE: 8-26-90
DRAWN BY: BBL-CSH DESIGNED BY: L. KORBUS
DGN NAME: H:/PROJ2/BELLINGH/BL320S-A.DGN

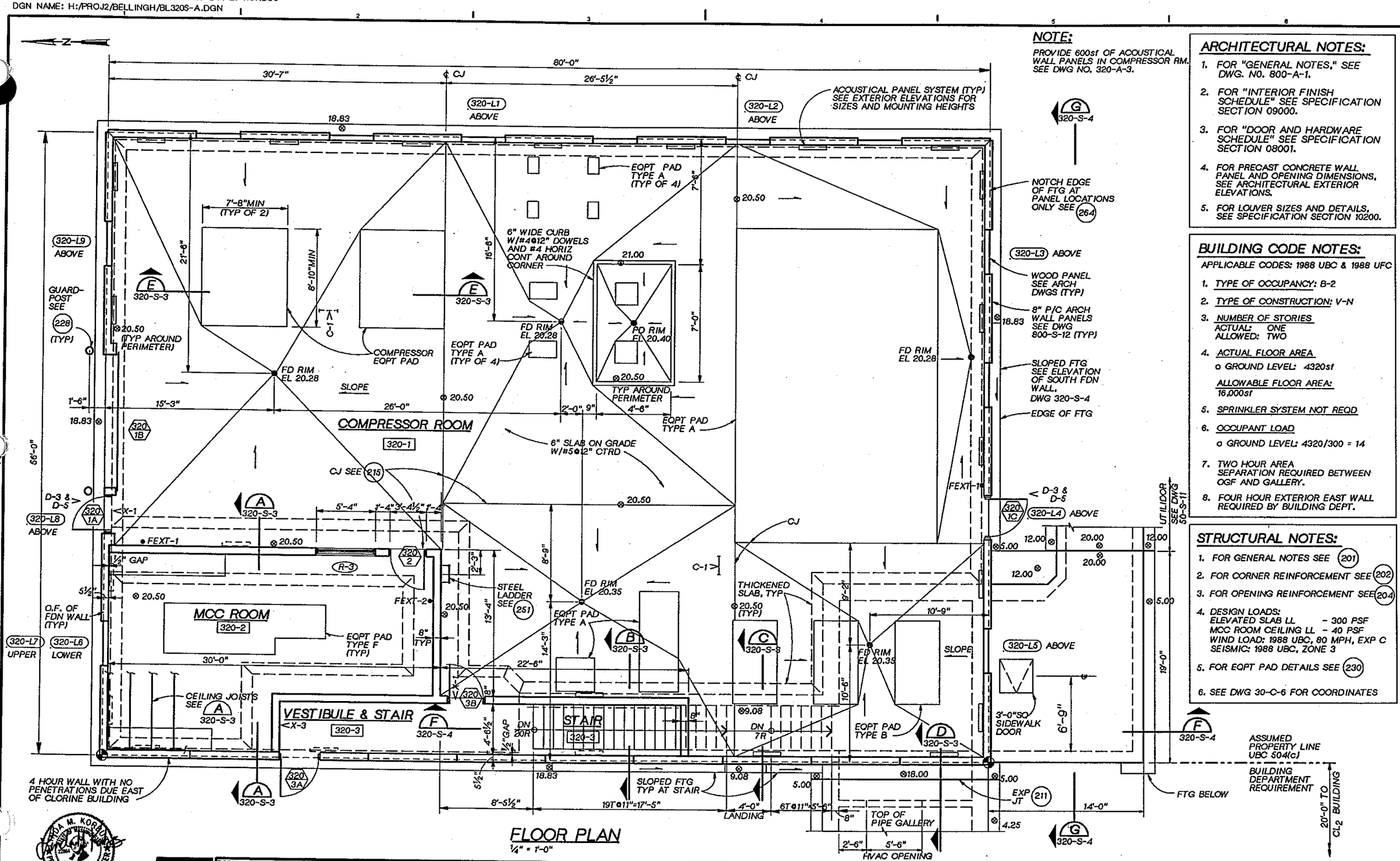

FLOOR PLAN

¼" = 1'-0"

NOTE:

PROVIDE 600sf OF ACOUSTICAL WALL PANELS IN COMPRESSOR RM. SEE DWG NO. 320-A-3.

ARCHITECTURAL NOTES:

1. FOR "GENERAL NOTES," SEE DWG. NO. 800-A-1.
2. FOR "INTERIOR FINISH SCHEDULE" SEE SPECIFICATION SECTION 09000.
3. FOR "DOOR AND HARDWARE SCHEDULE" SEE SPECIFICATION SECTION 08001.
4. FOR PRECAST CONCRETE WALL PANEL AND OPENING DIMENSIONS, SEE ARCHITECTURAL EXTERIOR ELEVATIONS.
5. FOR LOUVER SIZES AND DETAILS, SEE SPECIFICATION SECTION 10200.

BUILDING CODE NOTES:

APPLICABLE CODES: 1988 UBC & 1988 UFC

1. TYPE OF OCCUPANCY: B-2
2. TYPE OF CONSTRUCTION: V-N
3. NUMBER OF STORIES
   ACTUAL: ONE
   ALLOWED: TWO
4. ACTUAL FLOOR AREA
   o GROUND LEVEL: 4320sf
   ALLOWABLE FLOOR AREA: 16,000sf
5. SPRINKLER SYSTEM NOT REQD
6. OCCUPANT LOAD
   o GROUND LEVEL: 4320/300 = 14
7. TWO HOUR AREA SEPARATION REQUIRED BETWEEN OGF AND GALLERY.
8. FOUR HOUR EXTERIOR EAST WALL REQUIRED BY BUILDING DEPT.

STRUCTURAL NOTES:

1. FOR GENERAL NOTES SEE 201
2. FOR CORNER REINFORCEMENT SEE 202
3. FOR OPENING REINFORCEMENT SEE 204
4. DESIGN LOADS:
   ELEVATED SLAB LL - 300 PSF
   MCC ROOM CEILING LL - 40 PSF
   WIND LOAD: 1988 UBC, 80 MPH, EXP C
   SEISMIC: 1988 UBC, ZONE 3
5. FOR EQPT PAD DETAILS SEE 230
6. SEE DWG 30-C-6 FOR COORDINATES

DSGN C. KEEL					
DR B. LAZARO					
CHK W. BENNETT					
APVD J. GAUTHIER	NO.	DATE	REVISION	BY	APVD

CH2M HILL

REUSE OF DOCUMENTS
THIS DOCUMENT, AND THE IDEAS AND DESIGNS INCORPORATED HEREIN, AS AN INSTRUMENT OF PROFESSIONAL SERVICE, IS THE PROPERTY OF CH2M HILL AND IS NOT TO BE USED, IN WHOLE OR IN PART, FOR ANY OTHER PROJECT WITHOUT THE WRITTEN AUTHORIZATION OF CH2M HILL.
©CH2M HILL

BAR IS ONE INCH ON ORIGINAL DRAWING.
0 1"
IF NOT ONE INCH ON THIS SHEET, ADJUST SCALES ACCORDINGLY.

CITY OF BELLINGHAM, WASHINGTON
POST POINT WASTEWATER TREATMENT PLANT UPGRADE

OXYGEN GENERATION FACILITY
STRUCTURAL
FOUNDATION / FLOOR PLAN

DWG NO. 320-S-1
DATE AUG. 1990
PROJ NO. SEA22462.C1

DATE: 8-26-90
DRAWN BY: R. FRIBERG DESIGNED BY: C. KEEL
DGN NAME: H:/PROJ2/BELLINGH/BL320S-B.DGN

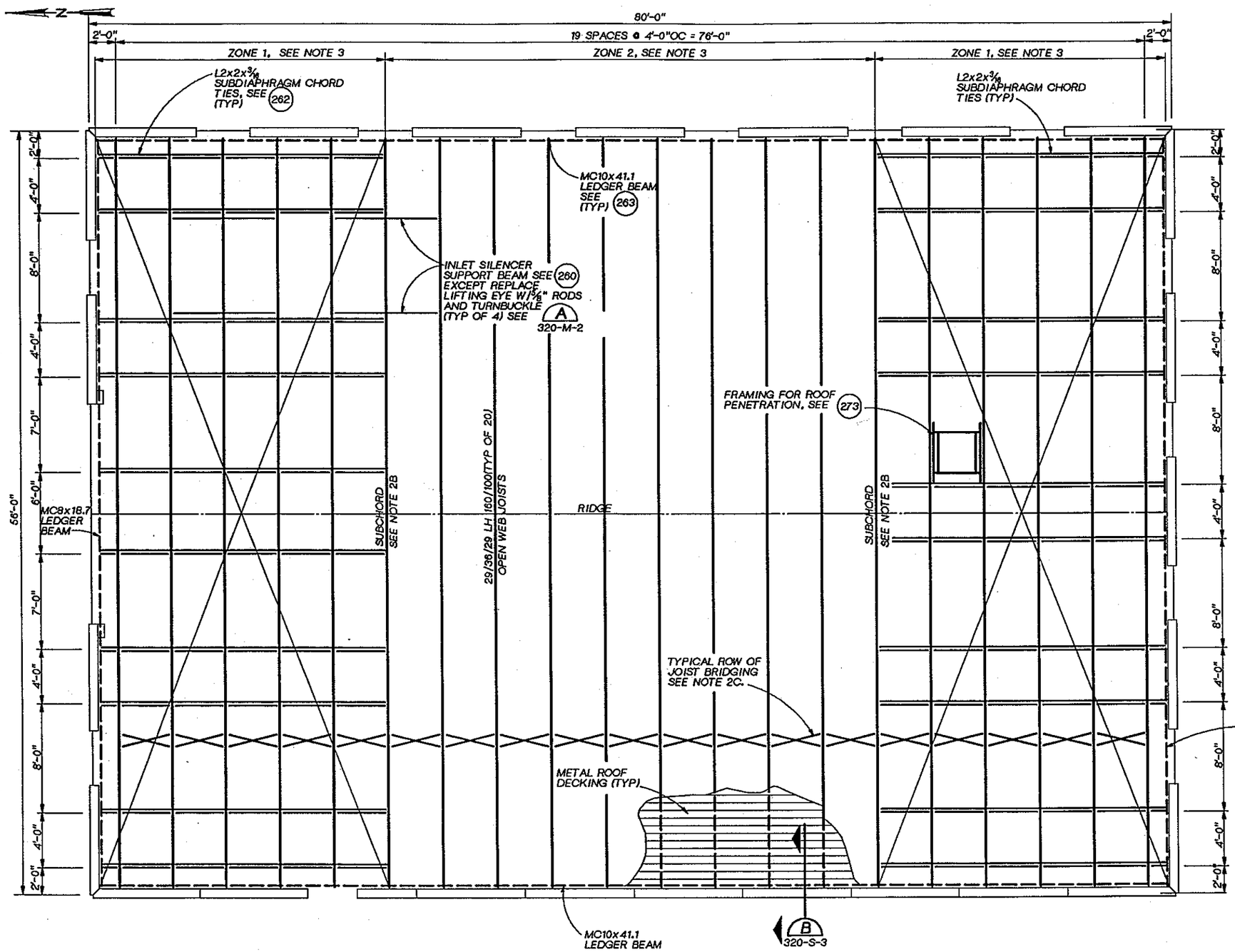

ROOF FRAMING PLAN

1/4" = 1'-0"

ROOF PLAN NOTES

1. ROOF DESIGN LOADS:

   DEAD LOAD: 15 PSF
   LIVE LOAD: 25 PSF
   UPLIFT (NET): 15 PSF

2. OPEN WEB STEEL JOISTS:

   A. JOIST MANUFACTURER SHALL DESIGN ALL JOISTS TO SUPPORT A 1000 POUND CONCENTRATED LOAD LOCATED AT ANY POINT ALONG THE BOTTOM CHORD. THIS LOAD IS IN ADDITION TO THE DESIGN LOADS AS SHOWN.

   B. STEEL JOISTS SHALL BE DESIGNED FOR THE FOLLOWING ADDITIONAL LOADS APPLIED CONCURRENTLY WITH THE ROOF DESIGN LOADS AND CONCENTRATED LOADS:

      SUBCHORDS:
      JOISTS DESIGNATED AS SUBCHORDS SHALL BE DESIGNED FOR AN ADDITIONAL TOP CHORD FORCE OF 4.6 KIP (TENSION OR COMPRESSION) DUE TO WIND OR SEISMIC FORCES.

      JOIST BEARING SEATS:
      MANUFACTURER SHALL DESIGN JOIST BEARING SEATS FOR THE LOADS GIVEN IN DETAIL 261

   C. NUMBER OF ROWS AND SPACING OF BRIDGING AS REQD BY JOIST MANUFACTURERS. BRIDGING SHALL NOT BE CONNECTED TO PRECAST ARCH WALL PANELS OR WOOD PANELS.

3. METAL ROOF DECKING:

   METAL ROOF DECKING SHALL BE 1-1/2" - 20 GAGE GALVANIZED STEEL, VERCO HSB-36 ACOUSTICAL OR EQUIVALENT. MINIMUM SECTION PROPERTIES SHALL BE: $I=.216\ in^4$, $+S=.235\ in^3$, AND $-S=.248\ in^3$. MINIMUM NOISE REDUCTION COEFFICIENT OF .75 AS TESTED IN ACCORDANCE WITH ASTM C423. CONNECTION OF ROOF DECKING SHALL BE AS FOLLOWS:

   ZONE 1: (5) -5/8" PUDDLE WELDS TO SUPPORTS PER 36" SHEET. BUTTON PUNCH SIDE LAP CONNECTION AT 2'-0" OC, UNLESS OTHERWISE NOTED. MIN LATERAL SHEAR CAPACITY= 380 P/FT

   ZONE 2: (5) -5/8" PUDDLE WELDS TO SUPPORTS PER 36" SHEET. BUTTON PUNCH SIDE LAP CONNECTION AT 2'-0" OC, UNLESS OTHERWISE NOTED. MIN LATERAL SHEAR CAPACITY= 380 P/FT

LINDA M. KORBUS
PROFESSIONAL ENGINEER

CH2M HILL

DSGN	C. KEEL
DR	R. FRIBERG
CHK	W. BENNETT
APVD	J. GAUTHIER

NO.	DATE	REVISION	BY	APVD

REUSE OF DOCUMENTS
THIS DOCUMENT, AND THE IDEAS AND DESIGNS INCORPORATED HEREIN, AS AN INSTRUMENT OF PROFESSIONAL SERVICE, IS THE PROPERTY OF CH2M HILL AND IS NOT TO BE USED, IN WHOLE OR IN PART, FOR ANY OTHER PROJECT WITHOUT THE WRITTEN AUTHORIZATION OF CH2M HILL.
©CH2M HILL

BAR IS ONE INCH ON ORIGINAL DRAWING.
0 1"
IF NOT ONE INCH ON THIS SHEET, ADJUST SCALES ACCORDINGLY.

CITY OF BELLINGHAM, WASHINGTON
POST POINT WASTEWATER TREATMENT PLANT UPGRADE

OXYGEN GENERATION FACILITY
STRUCTURAL
ROOF FRAMING PLAN

DWG NO. 320-S-2
DATE AUG. 1990
PROJ NO. SEA22462.C1

DATE: 8-26-90
DRAWN BY: BBL DESIGNED BY: L. KORBUS
DGN NAME: H:/PROJ2/BELLINGH/BL320S-C.DGN

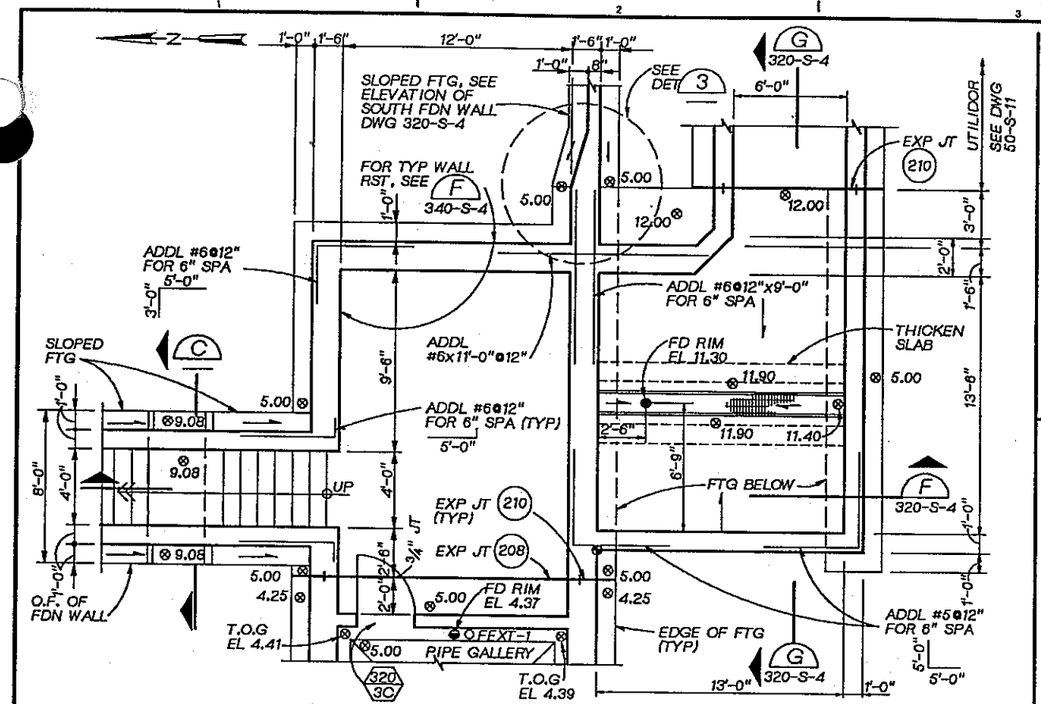

PARTIAL FOUNDATION PLAN ABOVE EL 5.00
1/4" = 1'-0"

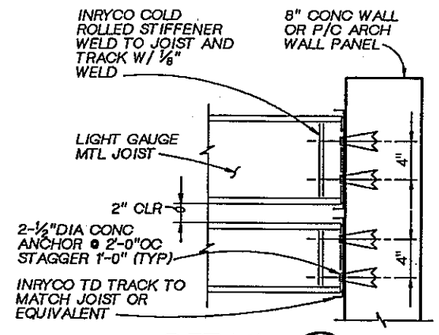

DETAIL 1
1 1/2" = 1'-0"

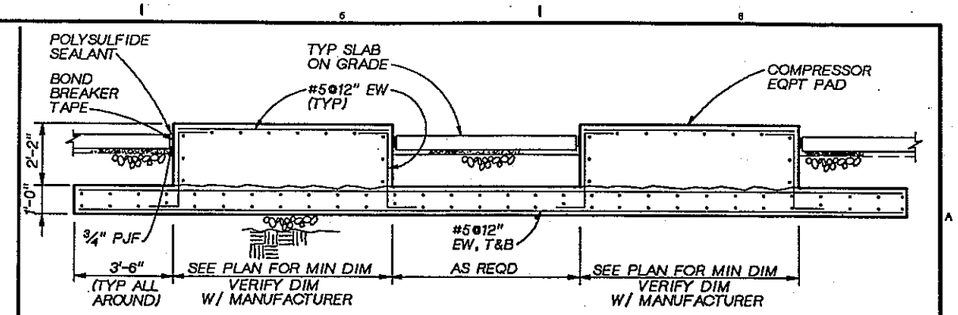

NOTE: FOR ADDL EQPT PAD DETAIL SEE TYPE D 230

SECTION E
3/8" = 1'-0" 320-S-1

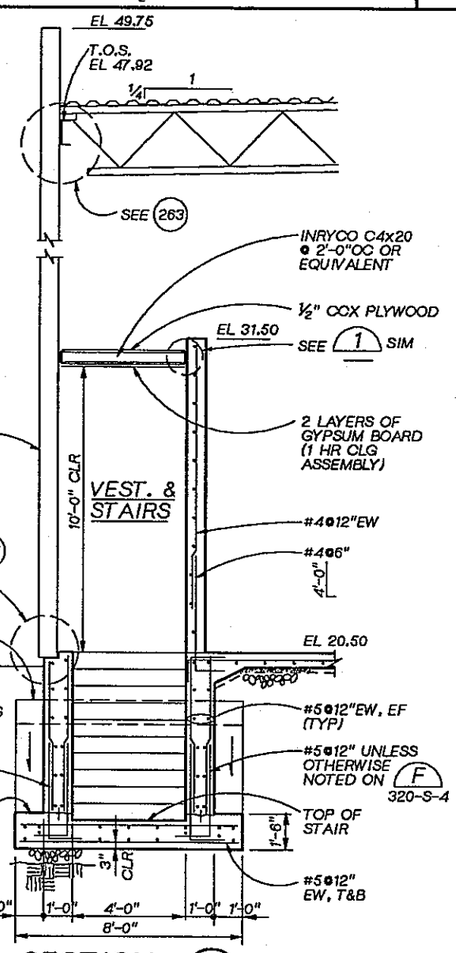

SECTION B
3/8" = 1'-0" 320-S-1 320-S-2

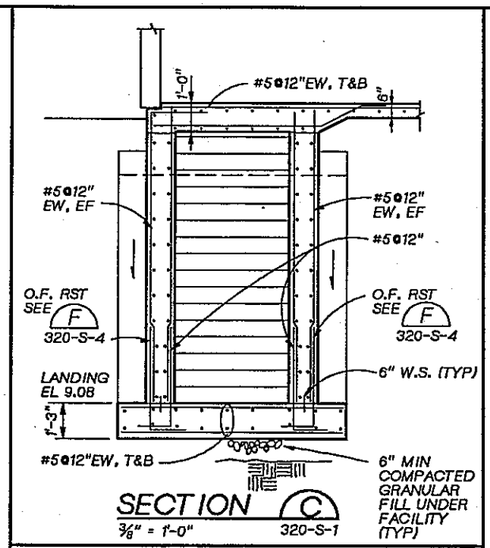

SECTION C
3/8" = 1'-0" 320-S-1

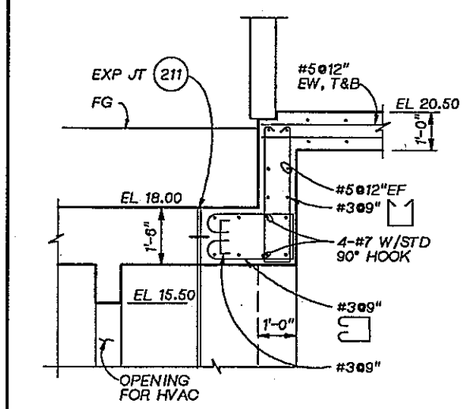

SECTION D
1/2" = 1'-0" 320-S-1

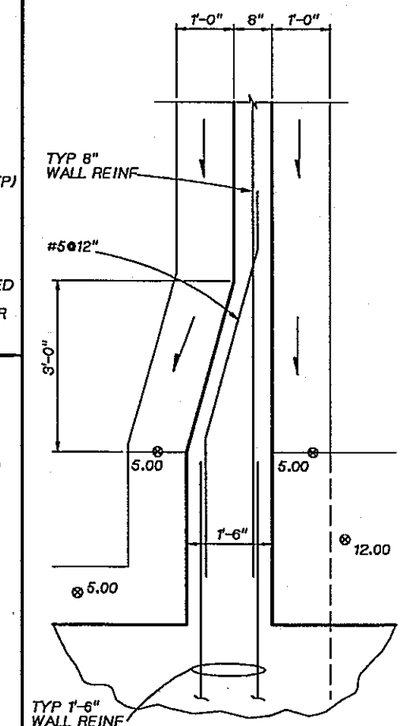

DETAIL 3
3/4" = 1'-0"

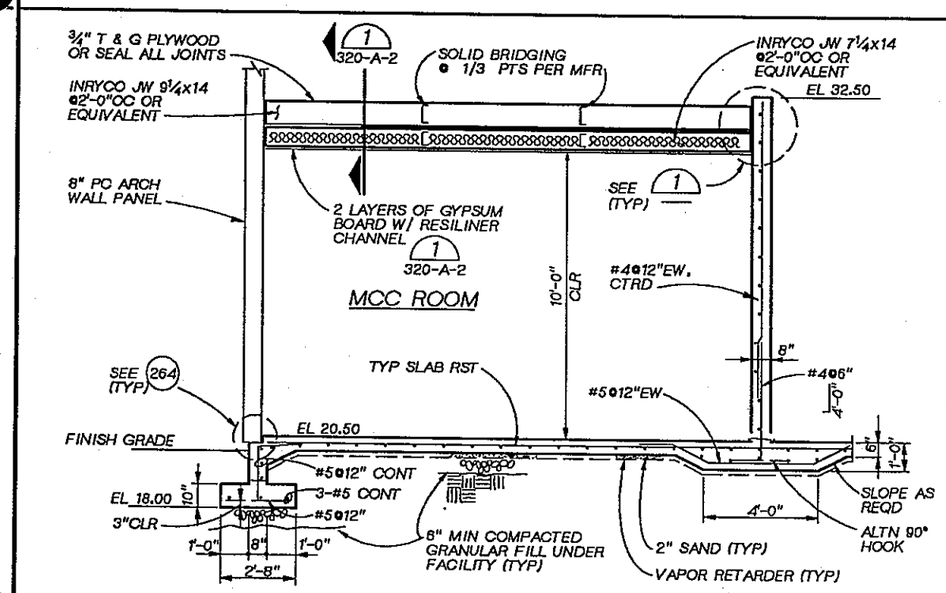

SECTION A
3/8" = 1'-0" 320-S-1

LINDA M. KORBUS STATE OF WASHINGTON 12264 REGISTERED PROFESSIONAL ENGINEER

CH2M HILL

DSGN	L. KORBUS			
DR	B. LAZARO			
CHK	W. BENNETT			
APVD	J. GAUTHIER	NO.	DATE	REVISION	BY	APVD

REUSE OF DOCUMENTS
THIS DOCUMENT, AND THE IDEAS AND DESIGNS INCORPORATED HEREIN, AS AN INSTRUMENT OF PROFESSIONAL SERVICE, IS THE PROPERTY OF CH2M HILL AND IS NOT TO BE USED, IN WHOLE OR IN PART, FOR ANY OTHER PROJECT WITHOUT THE WRITTEN AUTHORIZATION OF CH2M HILL.
©CH2M HILL

BAR IS ONE INCH ON ORIGINAL DRAWING. 0 1"
IF NOT ONE INCH ON THIS SHEET, ADJUST SCALES ACCORDINGLY.

CITY OF BELLINGHAM, WASHINGTON
POST POINT WASTEWATER TREATMENT PLANT UPGRADE

OXYGEN GENERATION FACILITY
STRUCTURAL SECTIONS AND DETAILS

DWG NO. 320-S-3
DATE AUG. 1990
PROJ NO. SEA22462.C1

DATE: 8-26-90
DRAWN BY: BBL DESIGNED BY: L.KORBUS
DGN NAME: H:/PROJ2/BELLINGH/BL320S-D.DGN

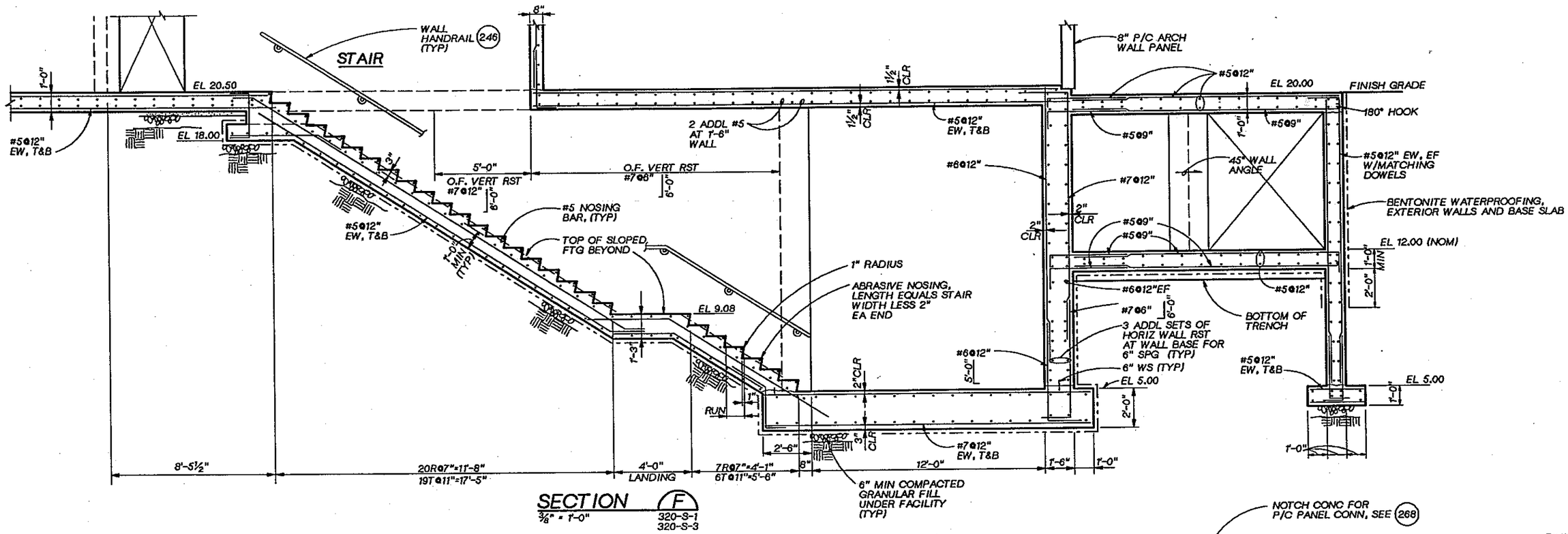

SECTION (F)
3/8" = 1'-0" 320-S-1 320-S-3

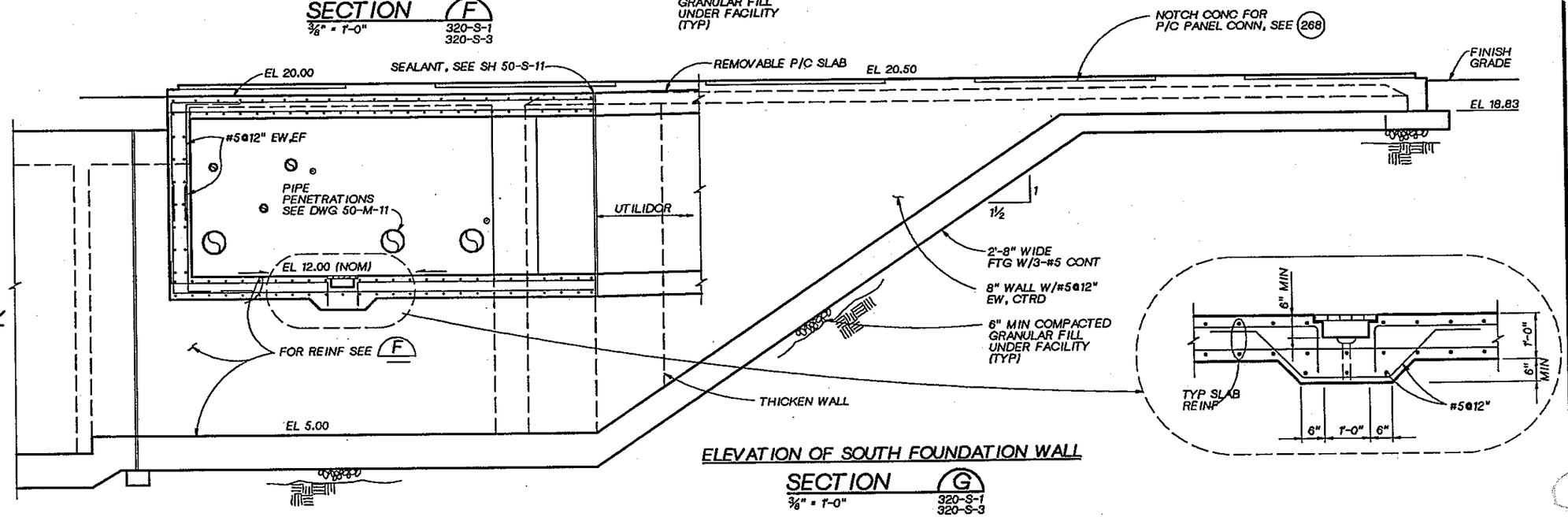

ELEVATION OF SOUTH FOUNDATION WALL

SECTION (G)
3/8" = 1'-0" 320-S-1 320-S-3

DSGN L. KORBUS					
DR B. LAZARO					
CHK W. BENNETT					
APVD J. GAUTHIER	NO.	DATE	REVISION	BY	APVD

CH2M HILL

REUSE OF DOCUMENTS
THIS DOCUMENT, AND THE IDEAS AND DESIGNS INCORPORATED HEREIN, AS AN INSTRUMENT OF PROFESSIONAL SERVICE, IS THE PROPERTY OF CH2M HILL AND IS NOT TO BE USED, IN WHOLE OR IN PART, FOR ANY OTHER PROJECT WITHOUT THE WRITTEN AUTHORIZATION OF CH2M HILL.
©CH2M HILL

BAR IS ONE INCH ON ORIGINAL DRAWING.
0 1"
IF NOT ONE INCH ON THIS SHEET, ADJUST SCALES ACCORDINGLY.

CITY OF BELLINGHAM, WASHINGTON
POST POINT WASTEWATER TREATMENT PLANT UPGRADE

OXYGEN GENERATION FACILITY
STRUCTURAL SECTIONS AND DETAILS

DWG NO. 320-S-4
DATE AUG. 1990
PROJ NO. SEA22462.C1

DRAWN BY: BBL DESIGNED BY: J. VALDES
DGN NAME: H:/PROJ2/BELLINGH/BL320M-A.DGN

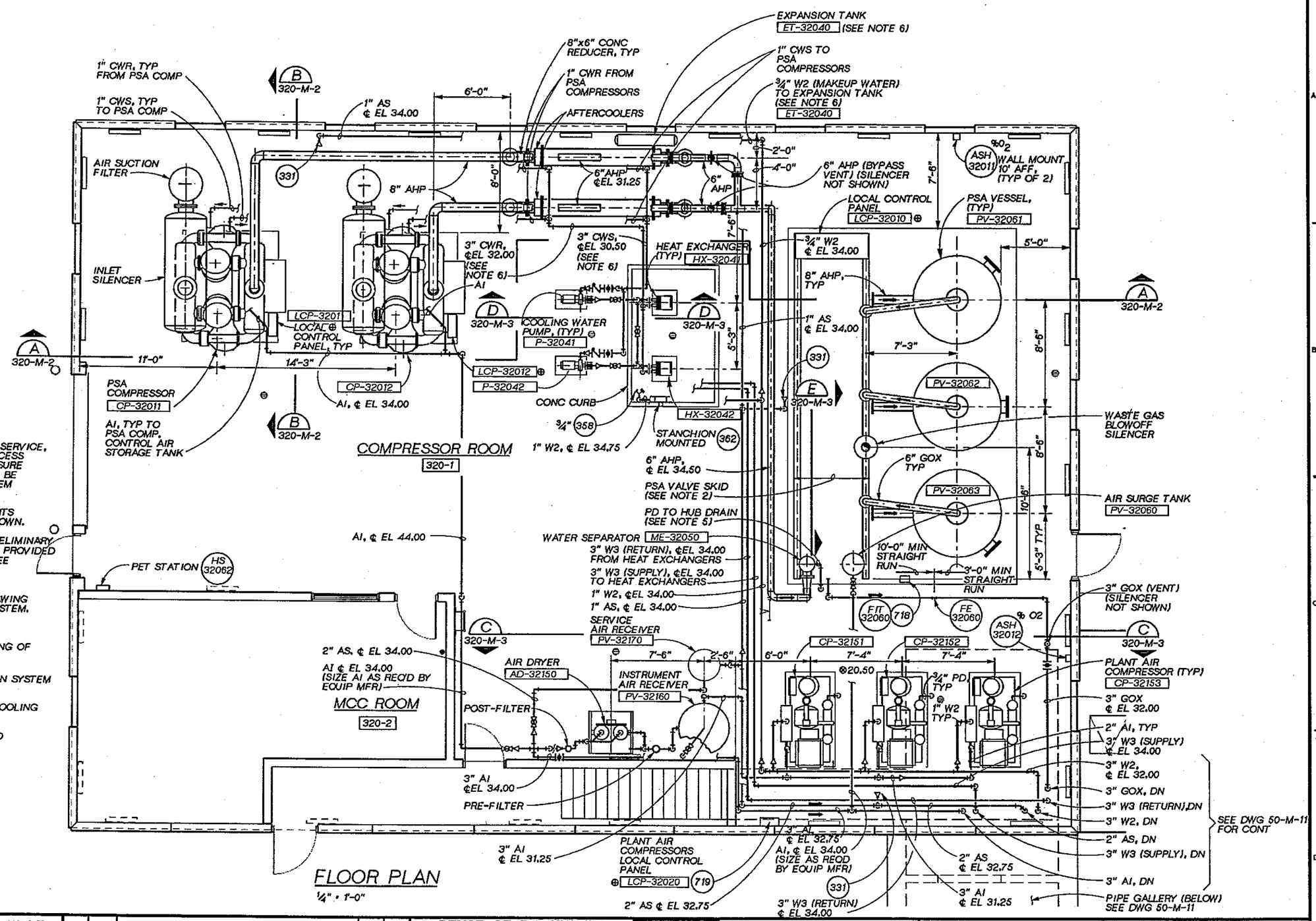

NOTES:

1. ALL VALVES IN LIQUID AND GASEOUS OXYGEN SERVICE, INCLUDING ALL CONTROL VALVES, MAJOR PROCESS VALVES, PRESSURE REGULATING VALVES, PRESSURE RELIEF VALVES, AND ISOLATION VALVES SHALL BE PROVIDED BY THE OXYGEN GENERATION SYSTEM SUPPLIER AS PART OF THE SYSTEM.
2. FOR CLARITY, ALL PSA VALVE SKID COMPONENTS (AS SPECIFIED IN SECTION 11339) ARE NOT SHOWN.
3. COOLING WATER PIPING SIZES SHOWN ARE PRELIMINARY. FINAL COOLING WATER SYSTEM DESIGN TO BE PROVIDED BY OXYGEN GENERATION SYSTEM SUPPLIER (SEE SPECIFICATIONS).

   (1) SEE DETAIL 320-M-2 FOR A SCHEMATIC DRAWING OF THE PSA COMPRESSOR COOLING WATER SYSTEM.

4. (1) SEE DETAIL 320-M-3 FOR ISOMETRIC DRAWING OF THE PLANT AIR COMPRESSOR SYSTEM.
5. DRAIN SIZE AND MTL PER OXYGEN GENERATION SYSTEM SUPPLIER.
6. FOR CLARITY, NOT ALL COMPONENTS OF THE COOLING (1) WATER SYSTEM ARE SHOWN. SEE 320-M-2 AND SPECIFICATIONS (11339).

JOSEPH A. GAUTHIER STATE OF WASHINGTON REGISTERED PROFESSIONAL ENGINEER

CH2M HILL

DSGN	J. VALDES
DR	K. RITTER
CHK	M. BRACKEN
APVD	J. GAUTHIER

NO.	DATE	REVISION	BY	APVD

REUSE OF DOCUMENTS
THIS DOCUMENT, AND THE IDEAS AND DESIGNS INCORPORATED HEREIN, AS AN INSTRUMENT OF PROFESSIONAL SERVICE, IS THE PROPERTY OF CH2M HILL AND IS NOT TO BE USED, IN WHOLE OR IN PART, FOR ANY OTHER PROJECT WITHOUT THE WRITTEN AUTHORIZATION OF CH2M HILL.
©CH2M HILL

VERIFY SCALE
BAR IS ONE INCH ON ORIGINAL DRAWING.
0 1"
IF NOT ONE INCH ON THIS SHEET, ADJUST SCALES ACCORDINGLY.

CITY OF BELLINGHAM, WASHINGTON
POST POINT WASTEWATER TREATMENT PLANT UPGRADE

OXYGEN GENERATION FACILITY
MECHANICAL PLAN

DWG NO. 320-M-1
DATE AUG. 1990
PROJ NO. SEA22462.C1

OVERLAY IDENTIFICATION: COMPOSITE, PROJID, PLAY, FILE, GEN

DATE: 8-27-90
DRAWN BY: C. BROWN DESIGNED BY: J. VALDES
DGN NAME: H:/PROJ2/BELLINGH/BL320M-B.DGN

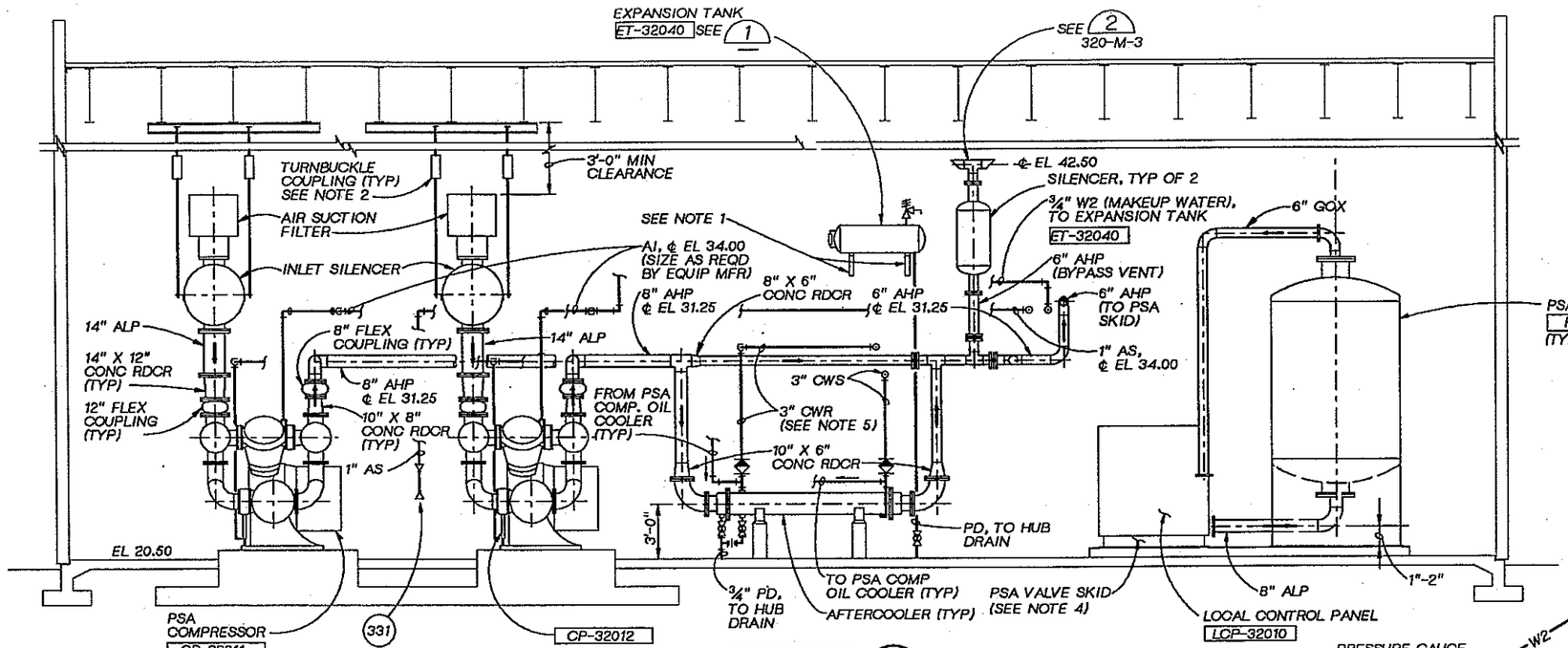

SECTION A
¼"=1'-0" 320-M-1

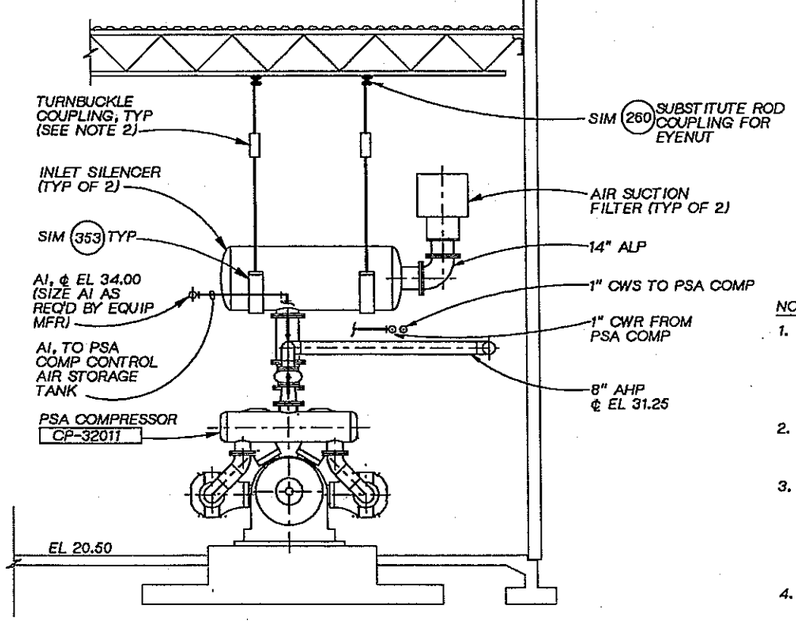

SECTION B
¼"= 1'-0" 320-M-1

NOTES:

1. MOUNT EXPANSION TANK ON WALL WITH FABRICATED BRACE AND SST CONCRETE ANCHORS TO SUIT LOAD. SUBMIT DESIGN DETAILS AND SIZING CALCULATIONS TO ENGR FOR REVIEW PRIOR TO FABRICATION.
2. ROD AND TURNBUCKLE COUPLING SHALL BE DESIGNED BY MFR TO DEVELOP FULL STRENGTH OF BOLT IN TENSION.
3. COOLING WATER SYSTEM PIPING SIZES SHOWN IN DETAIL 1 ARE PRELIMINARY.

   FINAL COOLING WATER SYSTEM DESIGN TO BE PROVIDED BY OXYGEN GENERATION SYSTEM SUPPIER (SEE SPECIFICATIONS).
4. FOR CLARITY, ALL PSA VALVE SKID COMPONENTS (AS SPECIFIED IN SECTION 11339) ARE NOT SHOWN.
5. AIR SEPARATOR NOT SHOWN FOR CLARITY.

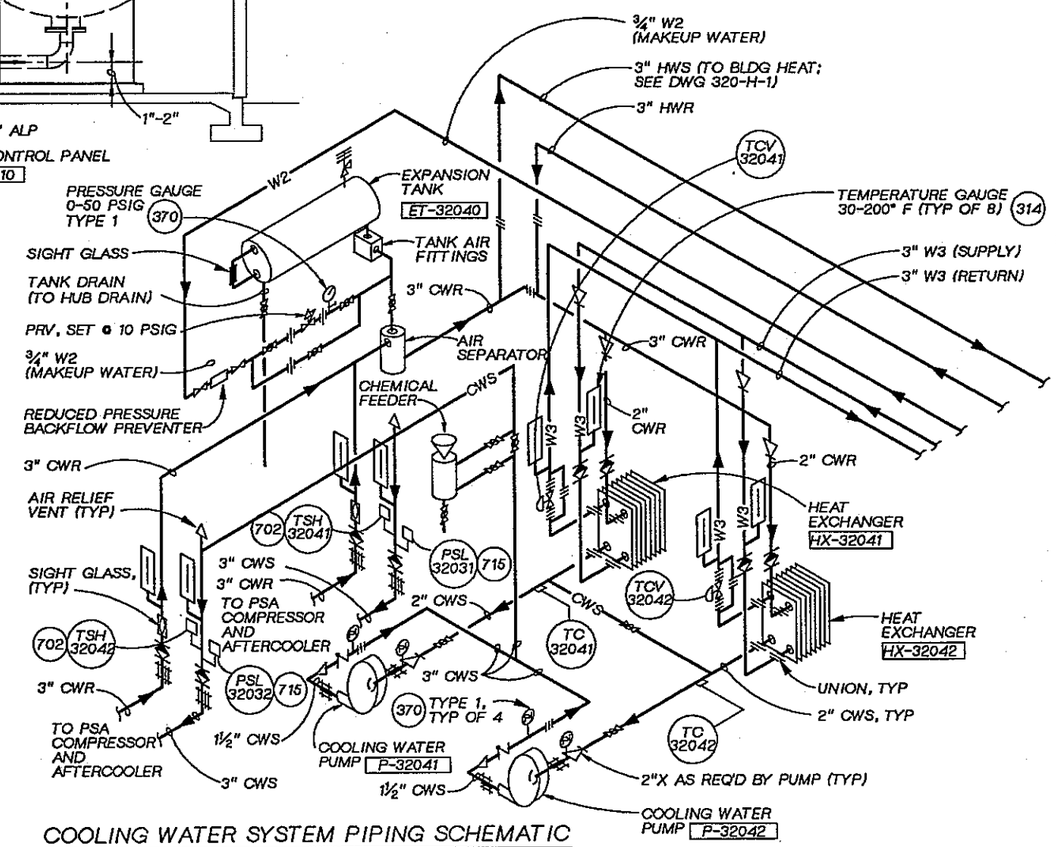

COOLING WATER SYSTEM PIPING SCHEMATIC
(SEE NOTE 3)

DETAIL 1
320-M-1
320-M-2

DSGN J. VALDES					
DR C. BROWN					
CHK M BRACKEN					
APVD J. GAUTHIER	NO.	DATE	REVISION	BY	APVD

CH2M HILL

REUSE OF DOCUMENTS
THIS DOCUMENT, AND THE IDEAS AND DESIGNS INCORPORATED HEREIN, AS AN INSTRUMENT OF PROFESSIONAL SERVICE, IS THE PROPERTY OF CH2M HILL AND IS NOT TO BE USED, IN WHOLE OR IN PART, FOR ANY OTHER PROJECT WITHOUT THE WRITTEN AUTHORIZATION OF CH2M HILL.
©CH2M HILL

BAR IS ONE INCH ON ORIGINAL DRAWING.
0 1"
IF NOT ONE INCH ON THIS SHEET, ADJUST SCALES ACCORDINGLY.

CITY OF BELLINGHAM, WASHINGTON
POST POINT WASTEWATER TREATMENT PLANT UPGRADE

OXYGEN GENERATION FACILITY
MECHANICAL
SECTIONS AND DETAILS

DWG NO. 320-M-2
DATE AUG. 1990
PROJ. NO. SEA22462.C1

JOSEPH A. GAUTHIER STATE OF WASHINGTON REGISTERED PROFESSIONAL ENGINEER

OVERLAY SCREEN
PROJ/D FILE

DRAWN BY: K. RITTER DESIGNED BY: J. VALDES
DGN NAME: H:/PROJ2/BELLINGH/BL320M-E.DGN

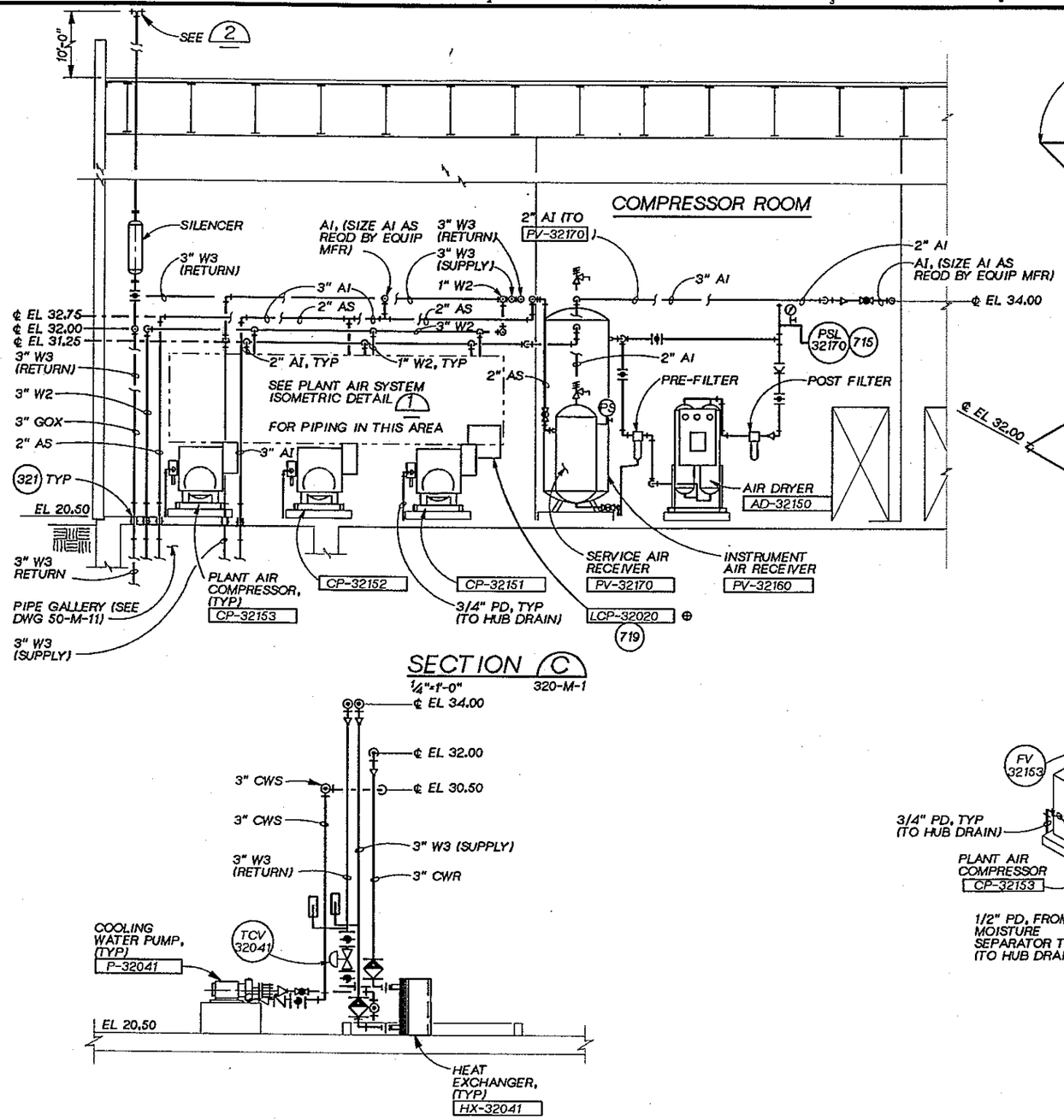

SECTION C
1/4"=1'-0" 320-M-1

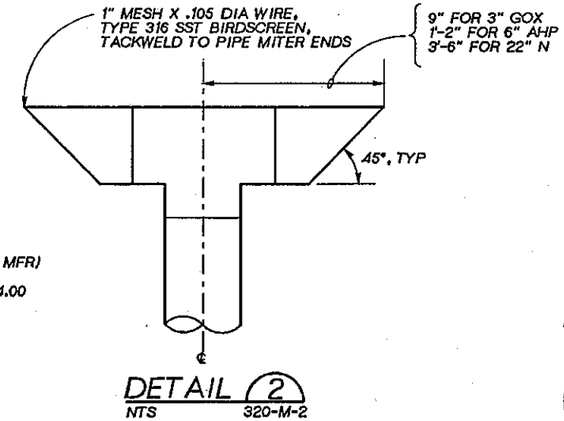

DETAIL 2
NTS 320-M-2

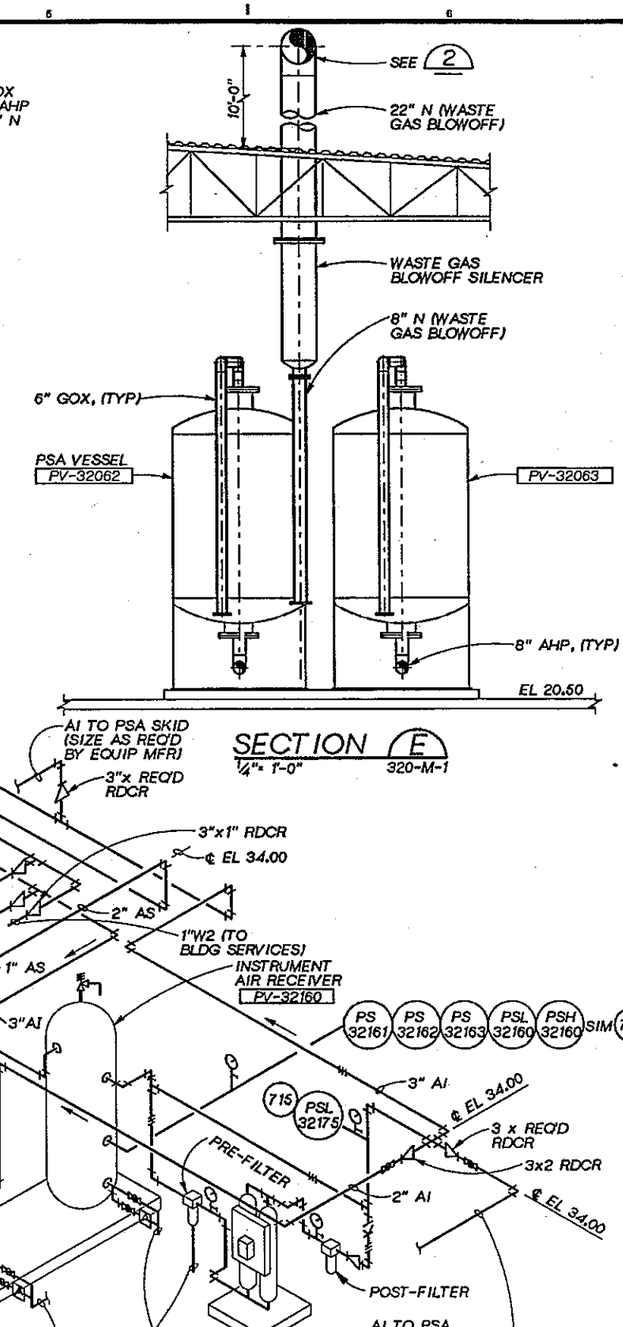

SECTION E
1/4"= 1'-0" 320-M-1

SECTION D
3/8"=1'-0" 320-M-1

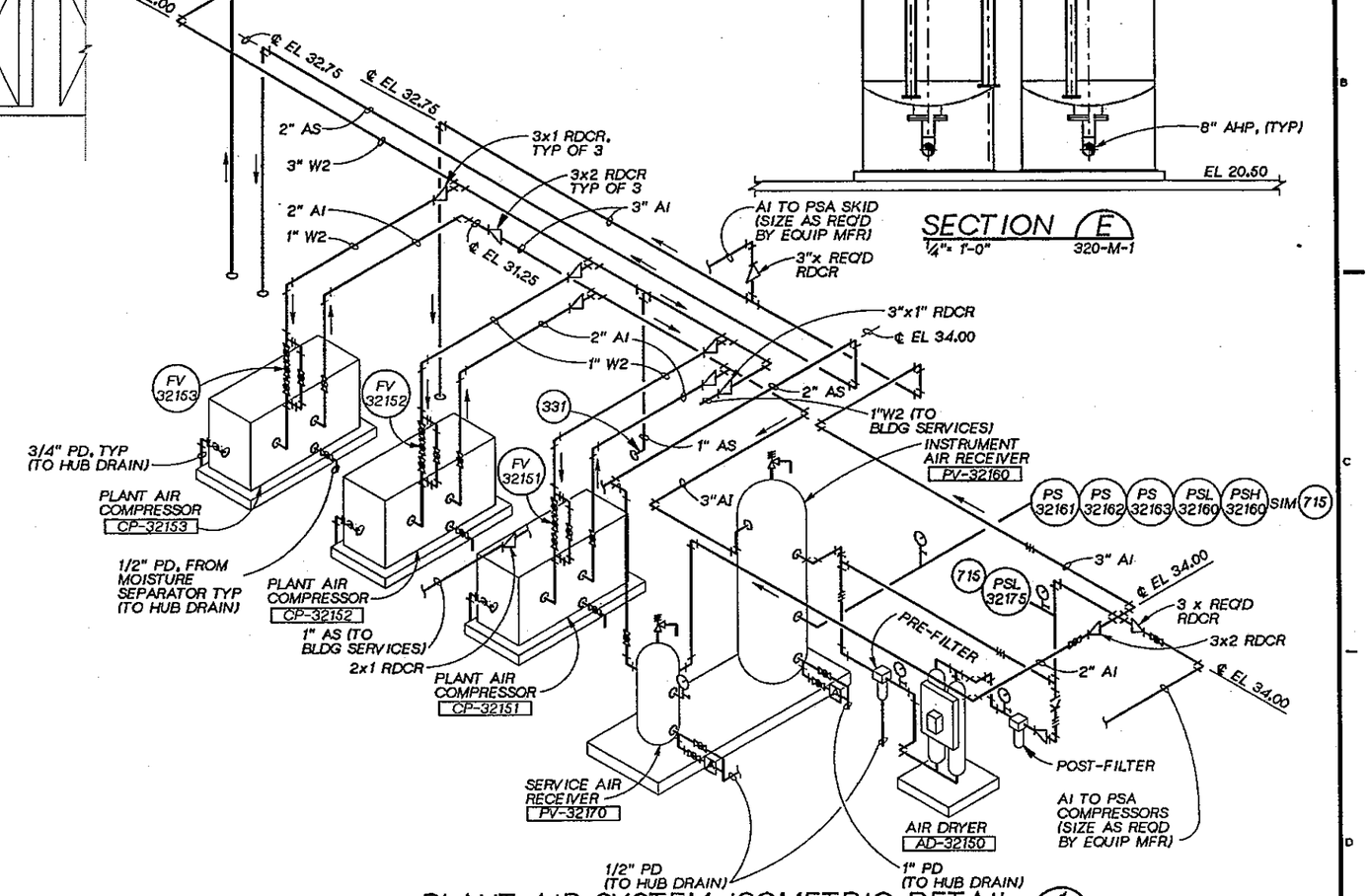

PLANT AIR SYSTEM ISOMETRIC DETAIL 1
NTS 320-M-1,320-M-2

JOSEPH A. GAUTHIER STATE OF WASHINGTON REGISTERED PROFESSIONAL ENGINEER

CH2M HILL

DSGN	J. VALDES				
DR	K. RITTER				
CHK	M. BRACKEN				
APVD	J. GAUTHIER	NO.	DATE	REVISION	BY	APVD

REUSE OF DOCUMENTS
THIS DOCUMENT, AND THE IDEAS AND DESIGNS INCORPORATED HEREIN, AS AN INSTRUMENT OF PROFESSIONAL SERVICE, IS THE PROPERTY OF CH2M HILL AND IS NOT TO BE USED, IN WHOLE OR IN PART, FOR ANY OTHER PROJECT WITHOUT THE WRITTEN AUTHORIZATION OF CH2M HILL.
©CH2M HILL

VERIFY SCALE
BAR IS ONE INCH ON ORIGINAL DRAWING.
0 1"
IF NOT ONE INCH ON THIS SHEET, ADJUST SCALES ACCORDINGLY.

CITY OF BELLINGHAM, WASHINGTON
POST POINT WASTEWATER TREATMENT PLANT UPGRADE

OXYGEN GENERATION FACILITY
MECHANICAL
SECTIONS AND DETAILS

DWG NO. 320-M-3
DATE AUG. 1990
PROJ NO. SEA22462.C1

OVERLAY IDENTIFICATION: COMPOSITE, PROJD, RELAY, FILE, GEN

DATE: 8-26-90
DRAWN BY: K. RITTER DESIGNED BY: J. VALDES
DGN NAME: H:/PROJ2/BELLINGH/BL320M-E.DGN

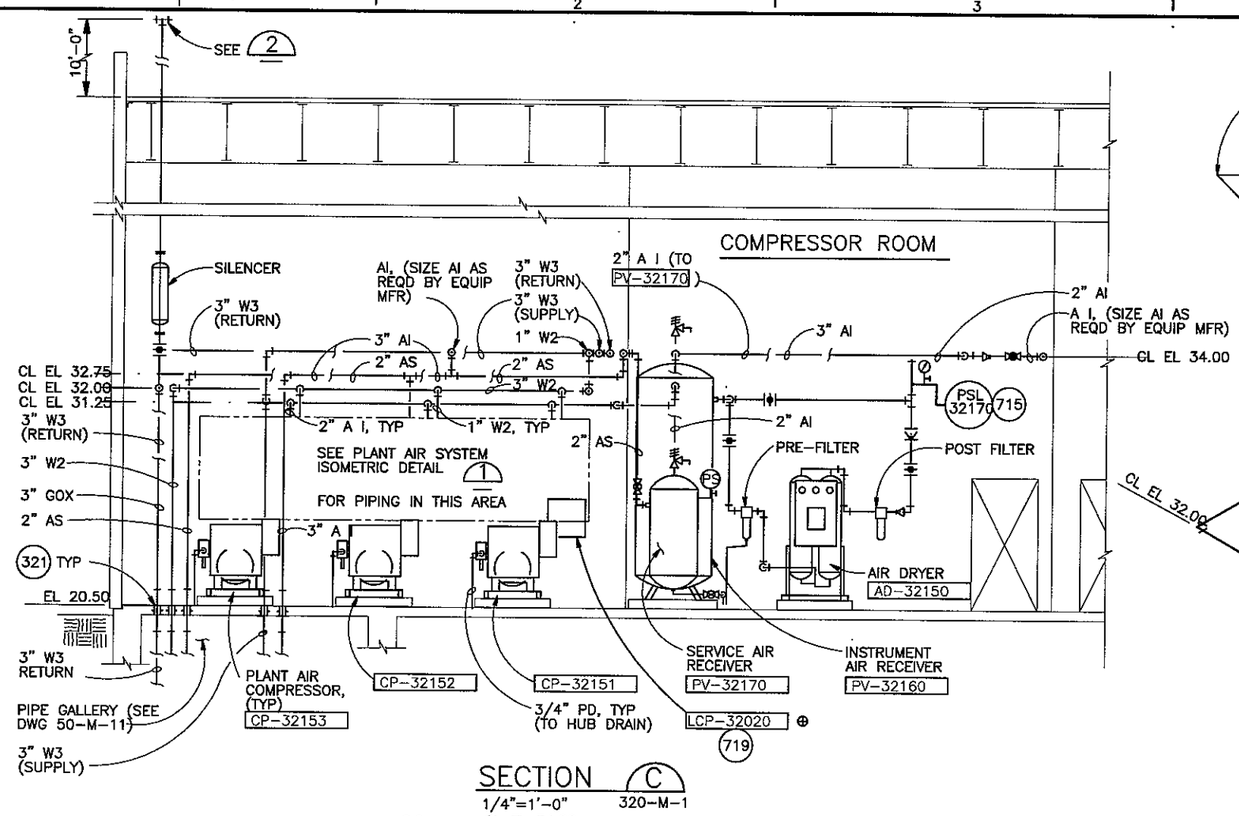

SECTION C
1/4"=1'-0" 320-M-1

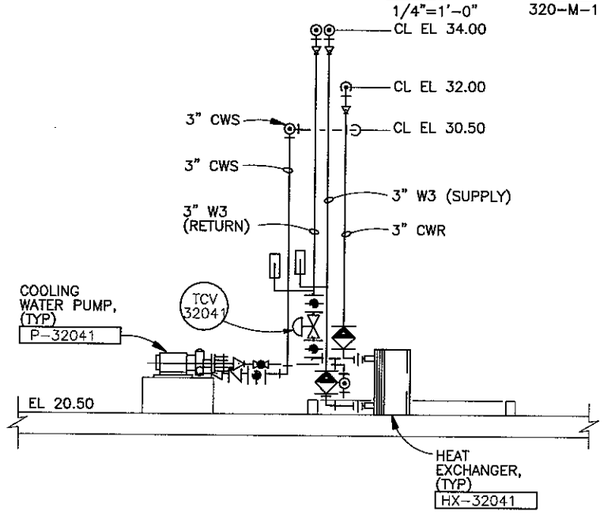

SECTION D
3/8"=1'-0" 320-M-1

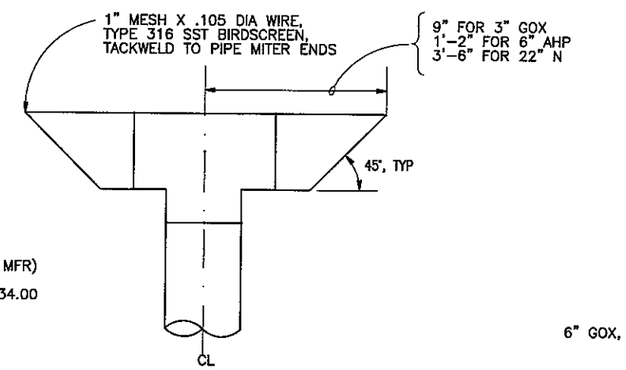

DETAIL 2
NTS 320-M-2 320-M-3

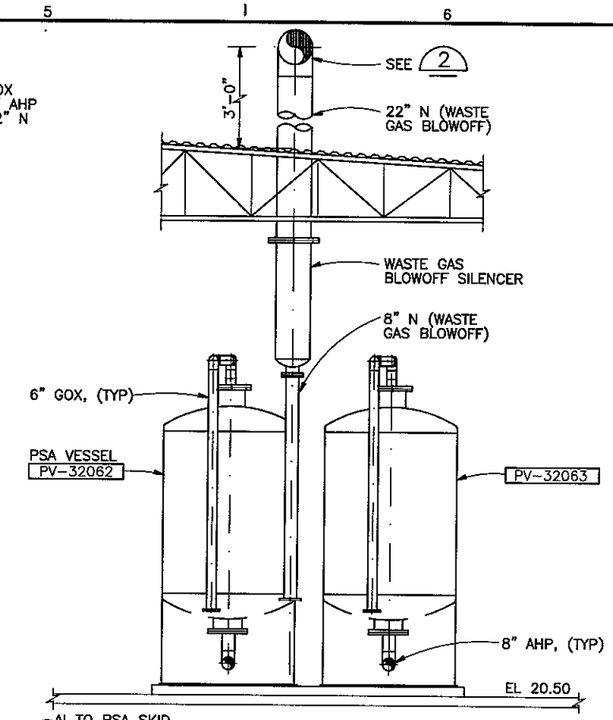

SECTION E
1/4"= 1'-0" 320-M-1

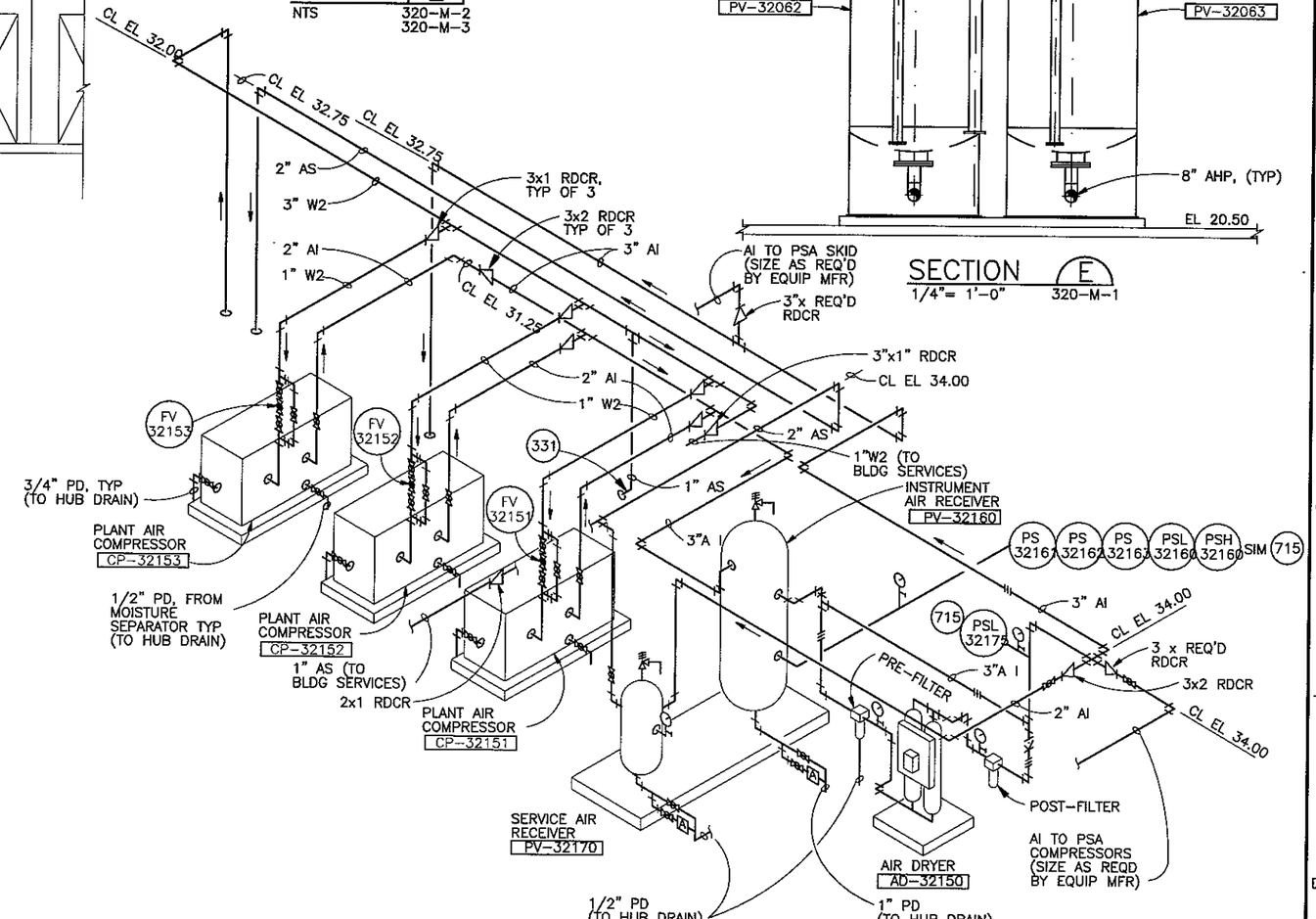

PLANT AIR SYSTEM ISOMETRIC DETAIL 1
NTS 320-M-1 320-M-2

RECORD DRAWINGS

Revisions Drawn By JG Date 3/25/94

CH2M HILL

DSGN	J. VALDES
DR	K. RITTER
CHK	M. BRACKEN
APVD	J. GAUTHIER

NO.	DATE	REVISION	BY	APVD

THESE RECORD DRAWINGS HAVE BEEN PREPARED, IN PART, ON THE BASIS OF INFORMATION COMPILED BY OTHERS. THEY ARE NOT INTENDED TO REPRESENT IN DETAIL THE EXACT LOCATION, TYPE OF COMPONENT NOR MANNER OF CONSTRUCTION. THE ENGINEER WILL NOT BE RESPONSIBLE FOR ANY ERRORS OR OMISSIONS WHICH HAVE BEEN INCORPORATED INTO THE RECORD DRAWINGS.

REUSE OF DOCUMENTS
THIS DOCUMENT, AND THE IDEAS AND DESIGNS INCORPORATED HEREIN, AS AN INSTRUMENT OF PROFESSIONAL SERVICE, IS THE PROPERTY OF CH2M HILL AND IS NOT TO BE USED, IN WHOLE OR IN PART, FOR ANY OTHER PROJECT WITHOUT THE WRITTEN AUTHORIZATION OF CH2M HILL.
©CH2M HILL

BAR IS ONE INCH ON ORIGINAL DRAWING. 0 1"
IF NOT ONE INCH ON THIS SHEET, ADJUST SCALES ACCORDINGLY.

CITY OF BELLINGHAM, WASHINGTON
POST POINT WASTEWATER TREATMENT PLANT UPGRADE

OXYGEN GENERATION FACILITY
MECHANICAL
SECTIONS AND DETAILS

SHEET
DWG NO. 320-M-3
DATE AUG. 1990
PROJ NO. SEA22462.C

DRAWN BY: SD GUNDY-CSH DESIGNED BY:S.GUNDY / G.FLOOD
DGN NAME: H:/PROJ2/BELLINGH/BL320H-A.DGN

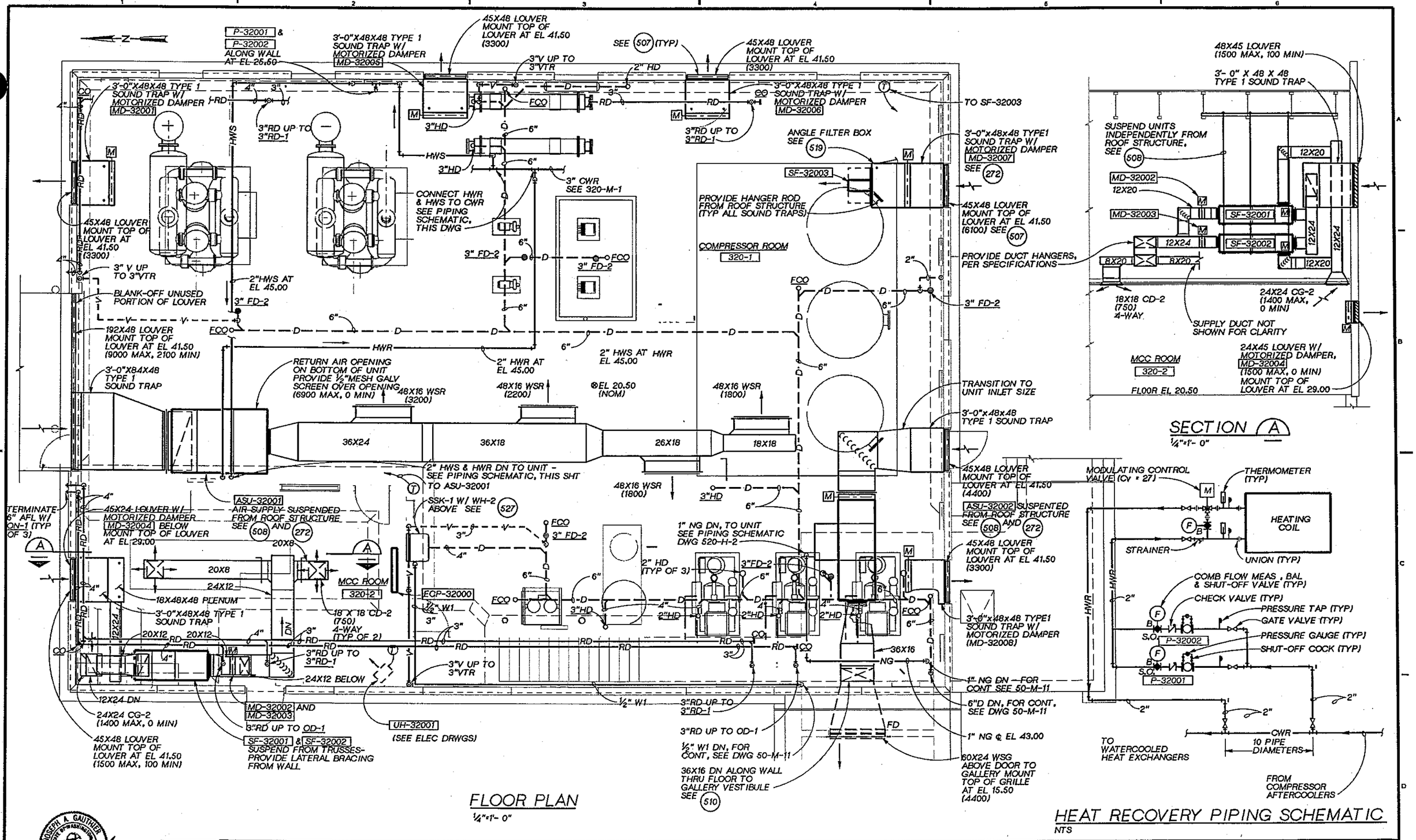

DSGN G.FLOOD					
DR S.D.GUNDY					
CHK J.SIEMENS					
APVD J. GAUTHIER	NO.	DATE	REVISION	BY	APVD

CH2M HILL

REUSE OF DOCUMENTS
THIS DOCUMENT, AND THE IDEAS AND DESIGNS INCORPORATED HEREIN, AS AN INSTRUMENT OF PROFESSIONAL SERVICE, IS THE PROPERTY OF CH2M HILL AND IS NOT TO BE USED, IN WHOLE OR IN PART, FOR ANY OTHER PROJECT WITHOUT THE WRITTEN AUTHORIZATION OF CH2M HILL.
©CH2M HILL

VERIFY SCALE
BAR IS ONE INCH ON ORIGINAL DRAWING.
0 1"
IF NOT ONE INCH ON THIS SHEET, ADJUST SCALES ACCORDINGLY.

CITY OF BELLINGHAM, WASHINGTON
POST POINT WASTEWATER TREATMENT PLANT UPGRADE

OXYGEN GENERATION FACILITY
HVAC AND PLUMBING PLAN

DWG NO. 320-H-1
DATE AUG. 1990
PROJ NO. SEA22462.C1

DATE: 8-26-90
DRAWN BY: BBL RSF DESIGNED BY: PG
DGN NAME: H:/PROJ2/BELLINGH/BL330S-A.DGN

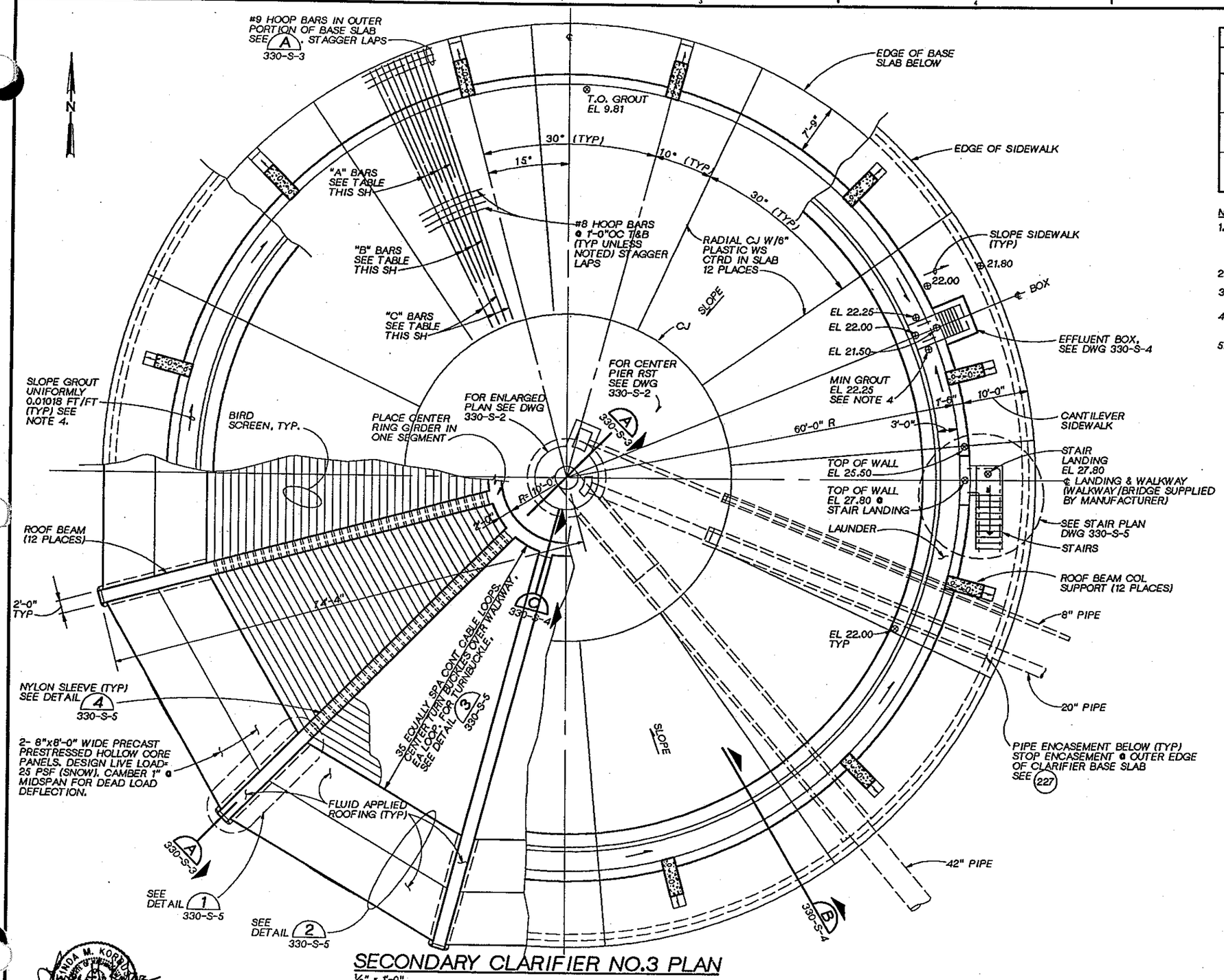

SECONDARY CLARIFIER NO.3 PLAN

1/8" = 1'-0"

BASE SLAB RADIAL REINFORCING

BAR DESIGNATION	LOCATION	SIZE	LENGTH FEET	TOTAL # OF BARS @ EQ SP
A	TOP	#8	20	156
	BOT	#9	20	156
B	TOP	#8	36	156
	BOT	#9	36	156
C	TOP	#8	43	156
	BOT	#9	43	156

NOTES:

1. SECONDARY CLARIFIER NO.3 IS SHOWN. SEE YARD PIPING PLAN, DWG 330-M-1 FOR ORIENTATION OF CENTER PIER, EFFLUENT BOX, AND STAIR LANDING FOR ALL SECONDARY CLARIFIERS.
2. SEE 201 FOR GENERAL STRUCTURAL NOTES.
3. FOR CORNER REINFORCING SEE 202.
4. SEE 204 FOR ADDITIONAL REINFORCING REQUIRED AT OPENINGS AND PENETRATIONS IN CONCRETE.
5. MAXIMUM GROUT ELEVATION IN LAUNDER IS ELEVATION 24.12, HIGH POINT FOR GROUT IN LAUNDER SHALL BE LOCATED 180° OPPOSITE OF EFFLUENT BOX. SLOPE GROUT UNIFORMLY BETWEEN ELEVATIONS SHOWN.

LINDA M. KORD, STATE OF WASHINGTON, 22864, REGISTERED PROFESSIONAL ENGINEER

CH2M HILL

DSGN	P. GUENTHER				
DR	B. LAZARO				
CHK	W. BENNETT				
APVD	J. GAUTHIER	NO.	DATE	REVISION	BY / APVD

REUSE OF DOCUMENTS
THIS DOCUMENT, AND THE IDEAS AND DESIGNS INCORPORATED HEREIN, AS AN INSTRUMENT OF PROFESSIONAL SERVICE, IS THE PROPERTY OF CH2M HILL AND IS NOT TO BE USED, IN WHOLE OR IN PART, FOR ANY OTHER PROJECT WITHOUT THE WRITTEN AUTHORIZATION OF CH2M HILL.
©CH2M HILL

BAR IS ONE INCH ON ORIGINAL DRAWING. 0 1"
IF NOT ONE INCH ON THIS SHEET, ADJUST SCALES ACCORDINGLY.

CITY OF BELLINGHAM, WASHINGTON
POST POINT WASTEWATER TREATMENT PLANT UPGRADE

SECONDARY CLARIFIERS
STRUCTURAL
CLARIFIER PLAN

DWG NO. 330-S-1
DATE AUG. 1990
PROJ. NO. SEA22462.C1

DATE: 8-26-90
DRAWN BY: BBL
DGN NAME: H:/PROJ2/BELLINGH/BL330S-G.DGN
DESIGNED BY: P.GUENTHER

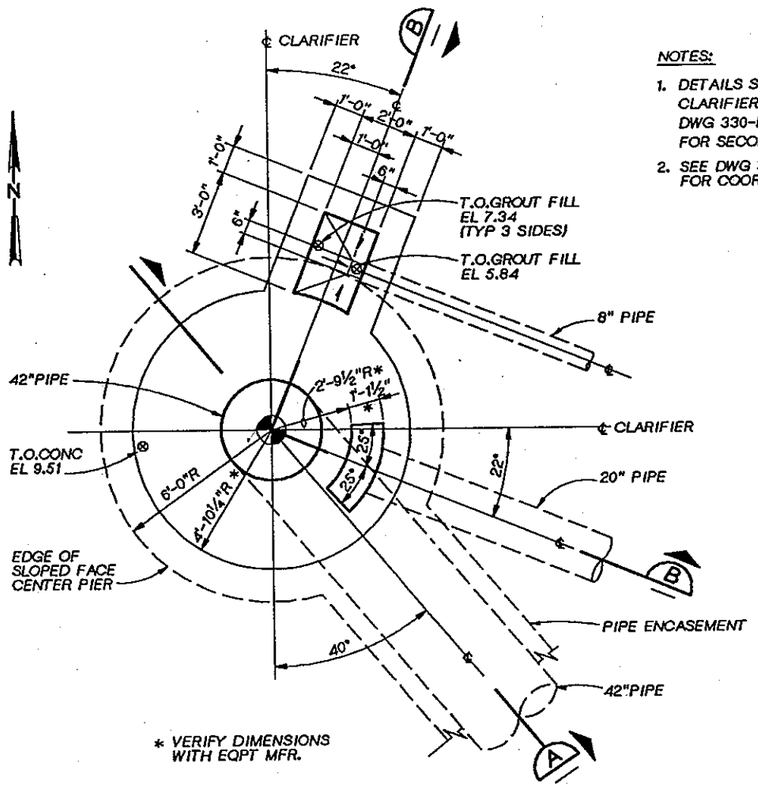

* VERIFY DIMENSIONS WITH EQPT MFR.

CENTER PIER PLAN
3/8" = 1'-0"

NOTES:

1. DETAILS SHOWN ARE FOR SECONDARY CLARIFIER NO. 3. SEE YARD PIPING PLAN, DWG 330-M-1, FOR CENTER PIER ORIENTATION FOR SECONDARY CLARIFIERS NO. 1 AND 2.
2. SEE DWG 30-C-6 AND 30-C-8 FOR COORDINATES.

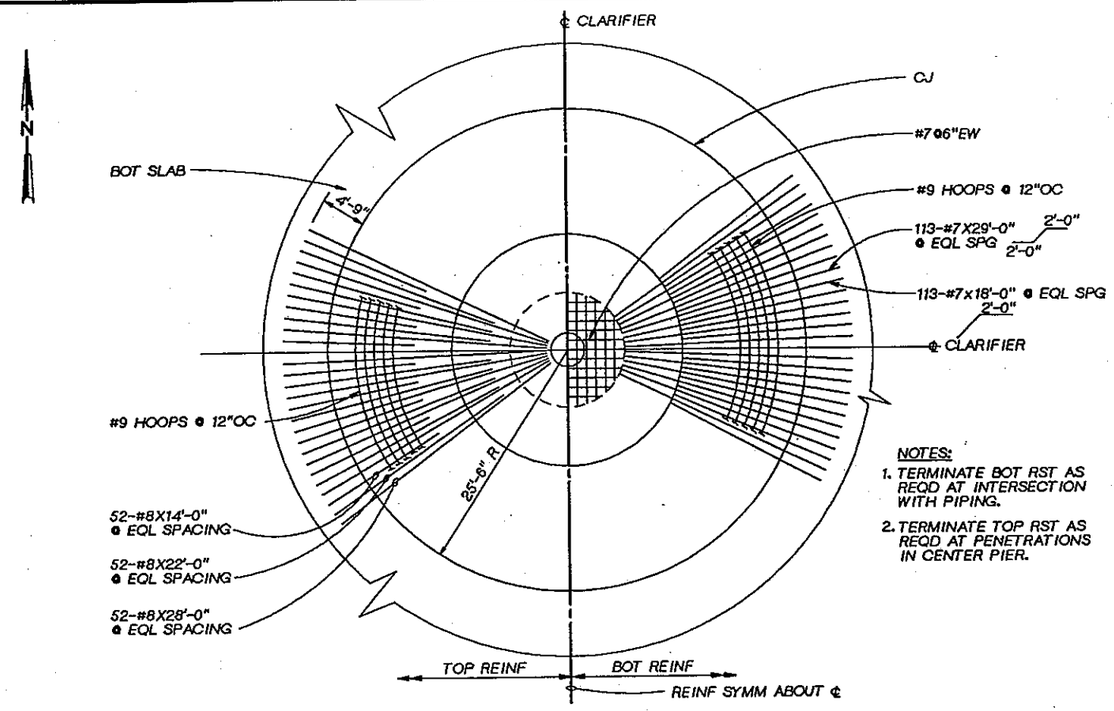

NOTES:

1. TERMINATE BOT RST AS REQD AT INTERSECTION WITH PIPING.
2. TERMINATE TOP RST AS REQD AT PENETRATIONS IN CENTER PIER.

CENTER PIER REINFORCING PLAN
1/8" = 1'-0"

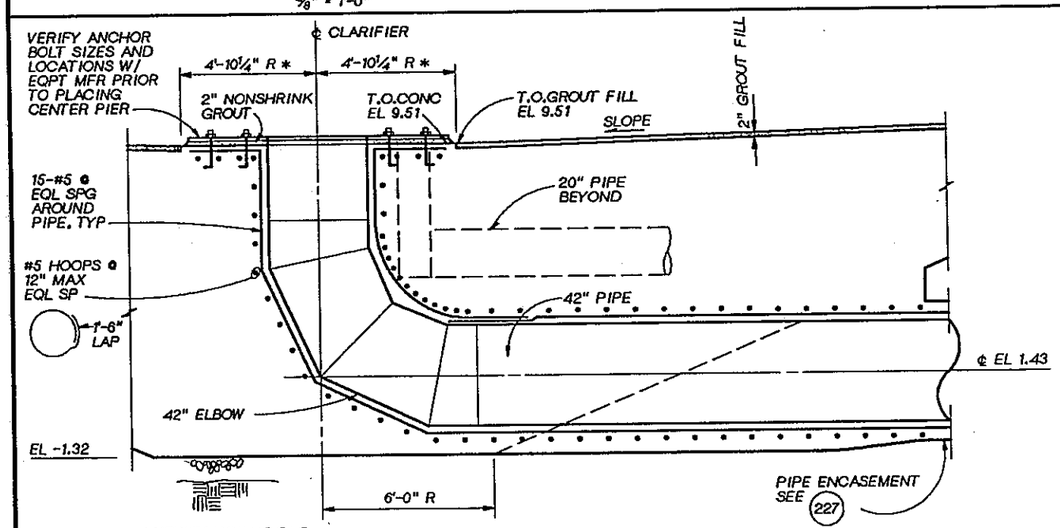

*VERIFY DIMENSIONS WITH EQPT MFR.

SECTION A
3/8" = 1'-0"

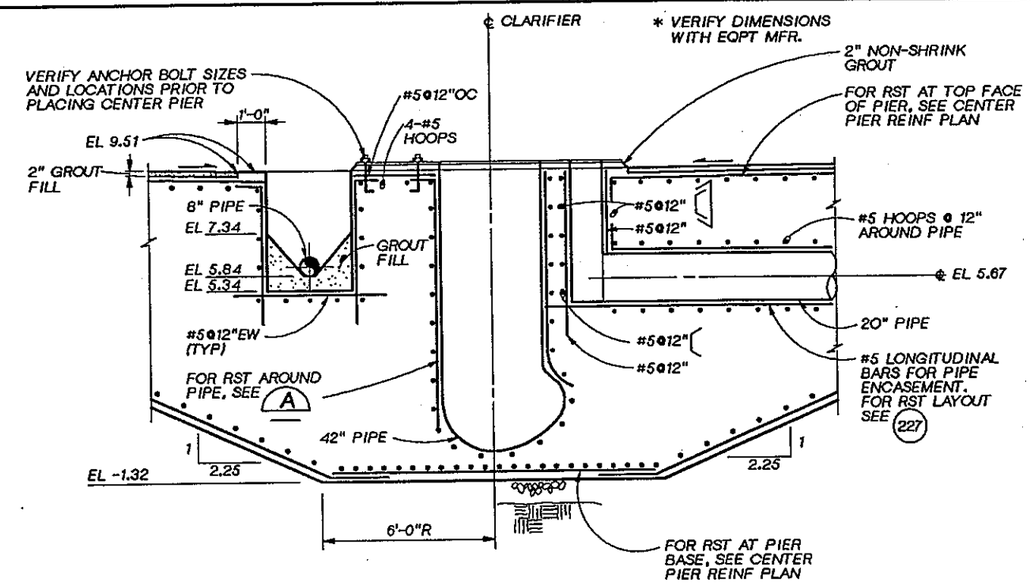

SECTION B
3/8" = 1'-0"

LINDA M. KORONA
STATE OF WASHINGTON
REGISTERED
PROFESSIONAL ENGINEER

CH2M HILL

DSGN	P. GUENTHER			
DR	B. LAZARO			
CHK	W. BENNETT			
APVD	J. GAUTHIER	NO.	DATE	REVISION

BY | APVD

REUSE OF DOCUMENTS
THIS DOCUMENT, AND THE IDEAS AND DESIGNS INCORPORATED HEREIN, AS AN INSTRUMENT OF PROFESSIONAL SERVICE, IS THE PROPERTY OF CH2M HILL AND IS NOT TO BE USED, IN WHOLE OR IN PART, FOR ANY OTHER PROJECT WITHOUT THE WRITTEN AUTHORIZATION OF CH2M HILL.
©CH2M HILL

BAR IS ONE INCH ON ORIGINAL DRAWING.
0 1"
IF NOT ONE INCH ON THIS SHEET, ADJUST SCALES ACCORDINGLY.

CITY OF BELLINGHAM, WASHINGTON
POST POINT WASTEWATER TREATMENT PLANT UPGRADE

SECONDARY CLARIFIERS
STRUCTURAL PLANS AND SECTIONS

DWG NO. 330-S-2
DATE AUG. 1990
PROJ NO. SEA22462.C1

DATE: 8-15-90
DRAWN BY: BBL RSF DESIGNED BY: PG
DGN NAME: H:/PROJ2/BELLINGH/BL330S-B.DGN

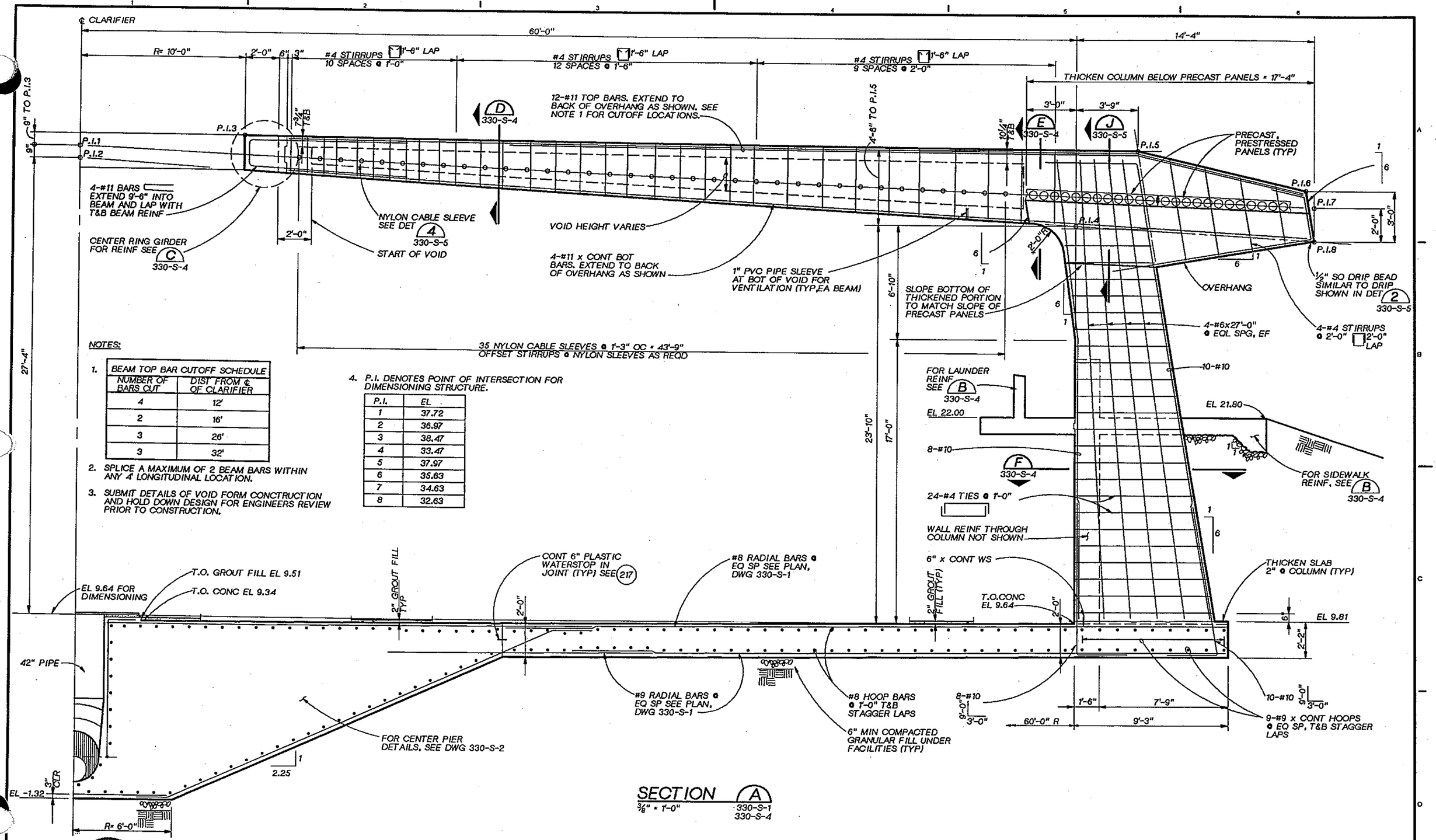

NOTES:

1.

BEAM TOP BAR CUTOFF SCHEDULE	
NUMBER OF BARS CUT	DIST FROM ℄ OF CLARIFIER
4	12'
2	16'
3	26'
3	32'

2. SPLICE A MAXIMUM OF 2 BEAM BARS WITHIN ANY 4' LONGITUDINAL LOCATION.

3. SUBMIT DETAILS OF VOID FORM CONCTRUCTION AND HOLD DOWN DESIGN FOR ENGINEERS REVIEW PRIOR TO CONSTRUCTION.

4. P.I. DENOTES POINT OF INTERSECTION FOR DIMENSIONING STRUCTURE.

P.I.	EL
1	37.72
2	36.97
3	38.47
4	33.47
5	37.97
6	35.63
7	34.63
8	32.63

SECTION A
3/8" = 1'-0"
330-S-1
330-S-4

LINDA M. KORBUN
STATE OF WASHINGTON
12284
REGISTERED PROFESSIONAL ENGINEER

CH2M HILL

DSGN	P. GUENTHER
DR	R. FRIBERG
CHK	W. BENNETT
APVD	J GAUTHIER

NO.	DATE	REVISION	BY	APVD

REUSE OF DOCUMENTS
THIS DOCUMENT, AND THE IDEAS AND DESIGNS INCORPORATED HEREIN, AS AN INSTRUMENT OF PROFESSIONAL SERVICE, IS THE PROPERTY OF CH2M HILL AND IS NOT TO BE USED, IN WHOLE OR IN PART, FOR ANY OTHER PROJECT WITHOUT THE WRITTEN AUTHORIZATION OF CH2M HILL.
©CH2M HILL

BAR IS ONE INCH ON ORIGINAL DRAWING.
0 1"
IF NOT ONE INCH ON THIS SHEET, ADJUST SCALES ACCORDINGLY.

CITY OF BELLINGHAM, WASHINGTON
POST POINT WASTEWATER TREATMENT PLANT UPGRADE

SECONDARY CLARIFIERS
STRUCTURAL SECTION

DWG NO. 330-S-3
DATE AUG. 1990
PROJ NO. SEA22462.C1

DATE: 8-26-90
DRAWN BY: RSF DESIGNED BY: PG
DGN NAME: H:/PROJ2/BELLINGH/BL330S-C.DGN

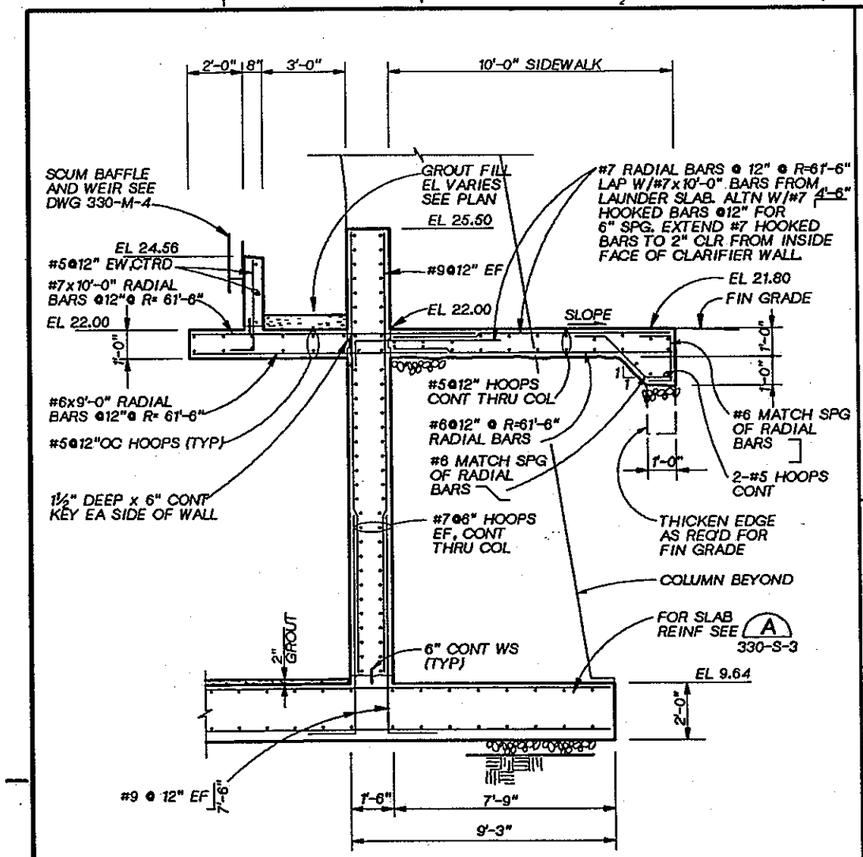

SECTION B
3/8" = 1'-0"
330-S-1
330-S-3
330-S-4

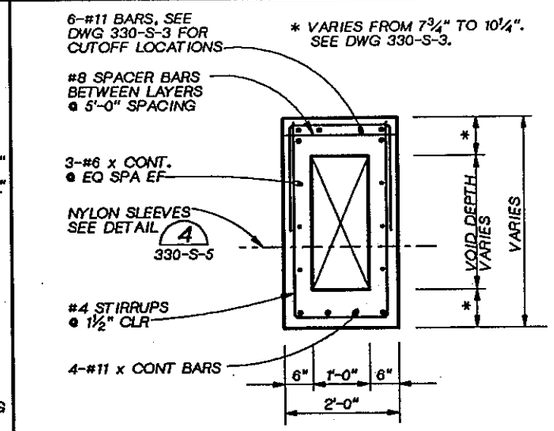

BEAM SECTION D
3/4" = 1'-0"
330-S-3

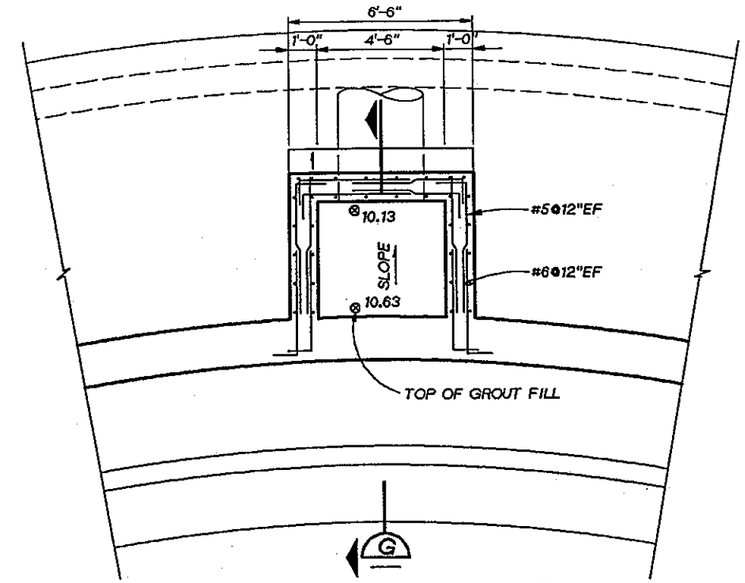

EFFLUENT BOX PLAN BELOW SIDEWALK

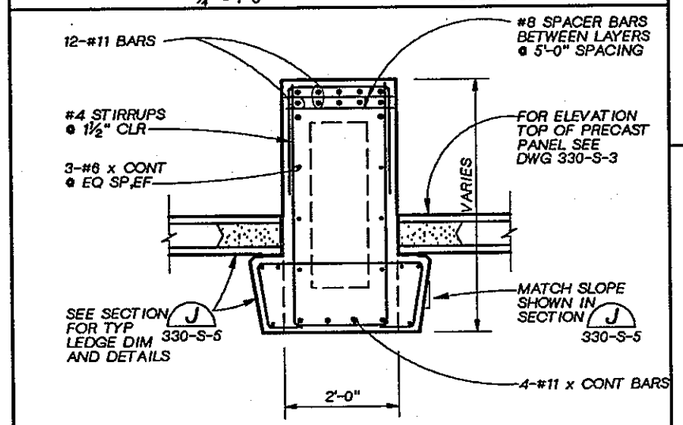

BEAM SECTION E
3/4" = 1'-0"
330-S-3

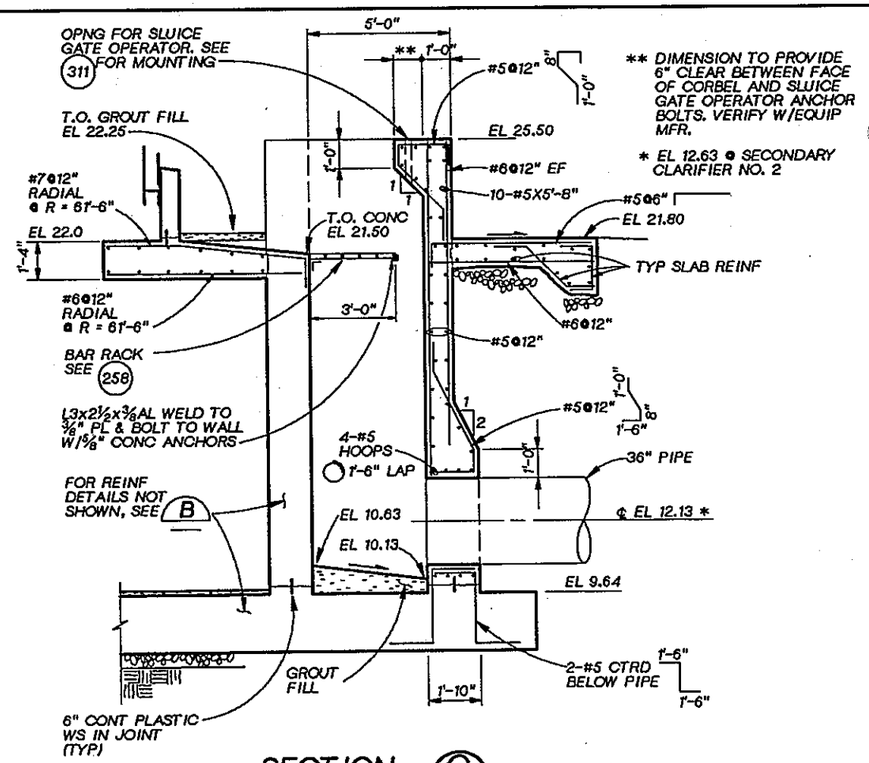

SECTION G
3/8" = 1'-0"

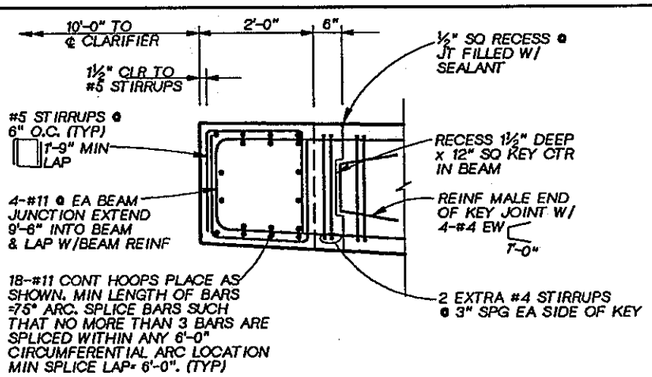

RING GIRDER C
3/4" = 1'-0"
330-S-1
330-S-3

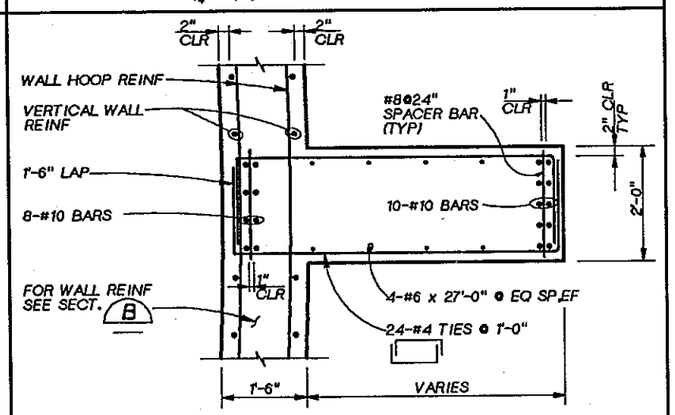

COLUMN SECTION F
3/4" = 1'-0"
330-S-3

DSGN	P. GUENTHER				
DR	R. FRIBERG				
CHK	W. BENNETT				
APVD	J. GAUTHIER	NO.	DATE	REVISION	BY / APVD

CH2M HILL

REUSE OF DOCUMENTS
THIS DOCUMENT, AND THE IDEAS AND DESIGNS INCORPORATED HEREIN, AS AN INSTRUMENT OF PROFESSIONAL SERVICE, IS THE PROPERTY OF CH2M HILL AND IS NOT TO BE USED, IN WHOLE OR IN PART, FOR ANY OTHER PROJECT WITHOUT THE WRITTEN AUTHORIZATION OF CH2M HILL.
©CH2M HILL

BAR IS ONE INCH ON ORIGINAL DRAWING.
0 1"
IF NOT ONE INCH ON THIS SHEET, ADJUST SCALES ACCORDINGLY.

CITY OF BELLINGHAM, WASHINGTON
POST POINT WASTEWATER TREATMENT PLANT UPGRADE

SECONDARY CLARIFIERS
STRUCTURAL SECTIONS AND DETAILS

DWG NO. 330-S-4
DATE AUG. 1990
PROJ NO. SEA22462.C1

DATE: 8-15-90
DRAWN BY: BBL DESIGNED BY: PG
DGN NAME: H:/PROJ2/BELLINGH/BL330S-D.DGN

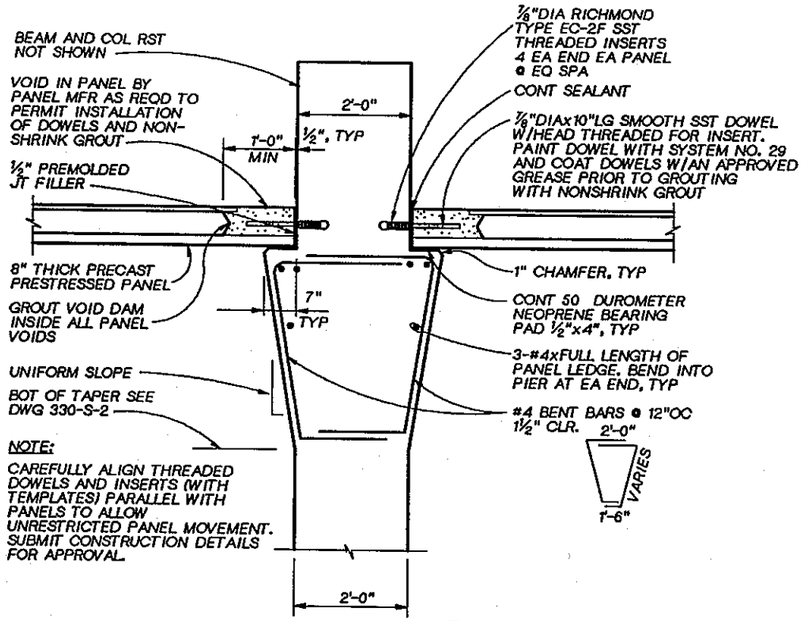

NOTE:
CAREFULLY ALIGN THREADED DOWELS AND INSERTS (WITH TEMPLATES) PARALLEL WITH PANELS TO ALLOW UNRESTRICTED PANEL MOVEMENT. SUBMIT CONSTRUCTION DETAILS FOR APPROVAL.

SECTION J
3/4" = 1'-0" 330-S-3 330-S-4

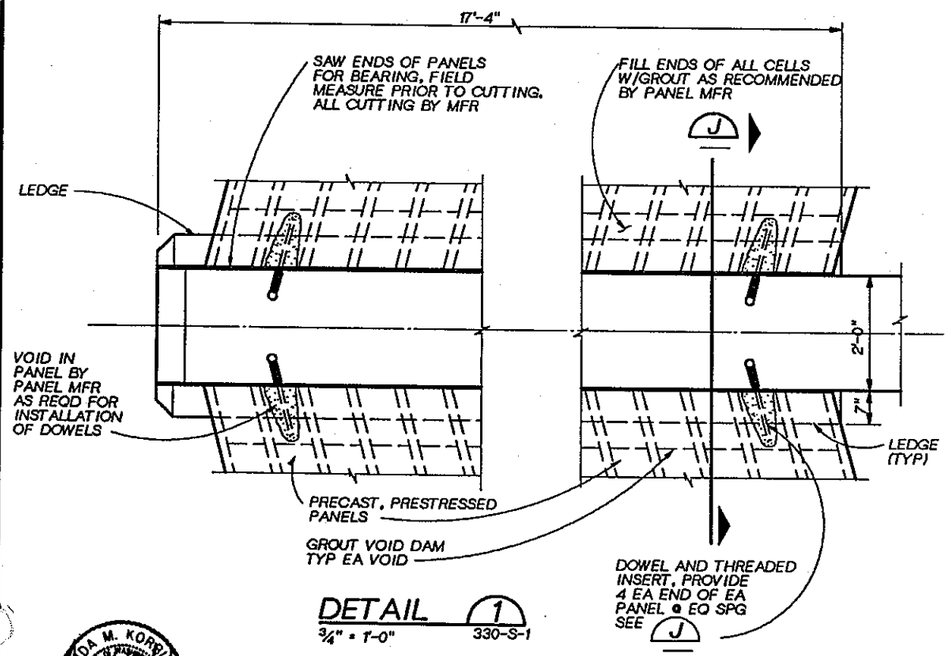

DETAIL 1
3/4" = 1'-0" 330-S-1

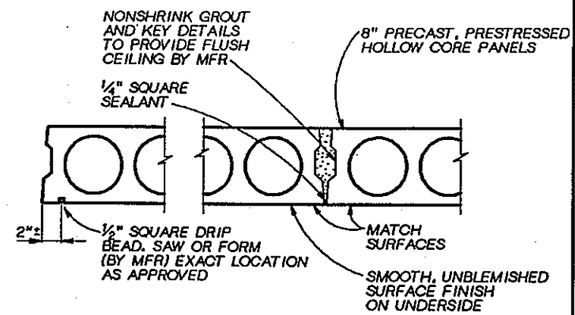

DETAIL 2
NTS 330-S-1

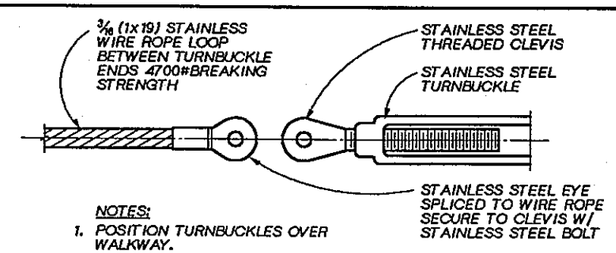

NOTES:
1. POSITION TURNBUCKLES OVER WALKWAY.
2. ALL MATERIALS SHALL BE STAINLESS STEEL SUITED FOR MARINE ENVIRONMENT.
3. ALL COMPONENTS OF TURNBUCKLE, CLEVIS, AND EYE SHALL HAVE STRENGTH EQUAL TO THE WIRE ROPE BREAKING STRENGTH.

TURNBUCKLE DETAIL 3
NTS 330-S-1

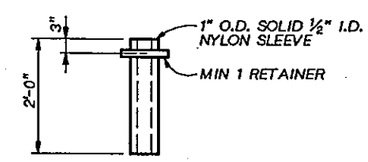

CONSTRUCT RING TO SLEEVE CONNECTIONS TO BE EQUIVALENT TO MONOLITHIC NYLON. PROVIDE TIGHT FIT THROUGH VOID FORM TO PREVENT CONCRETE LEAKAGE INTO VOID.

NYLON SLEEVE DETAIL 4
NTS 330-S-1 330-S-3

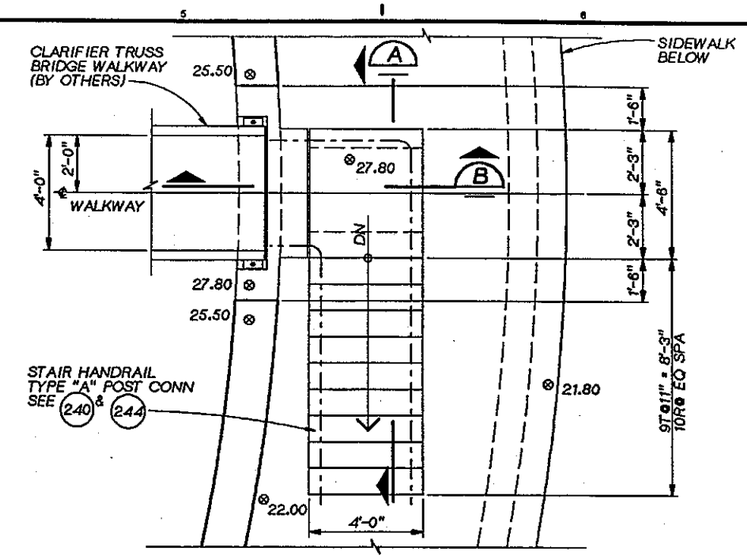

STAIR PLAN
3/8" = 1'-0"

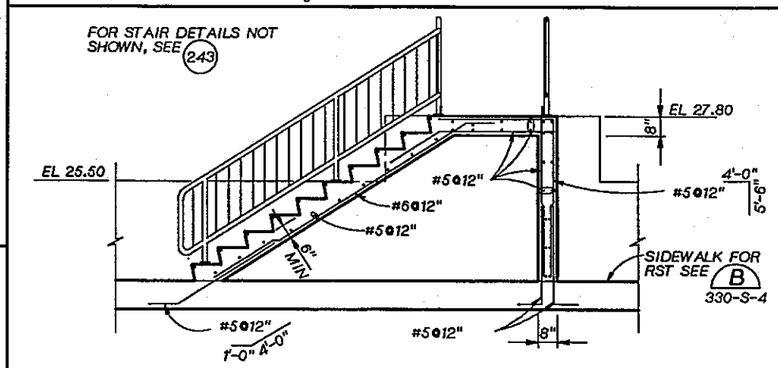

STAIR SECTION A
3/8" = 1'-0"

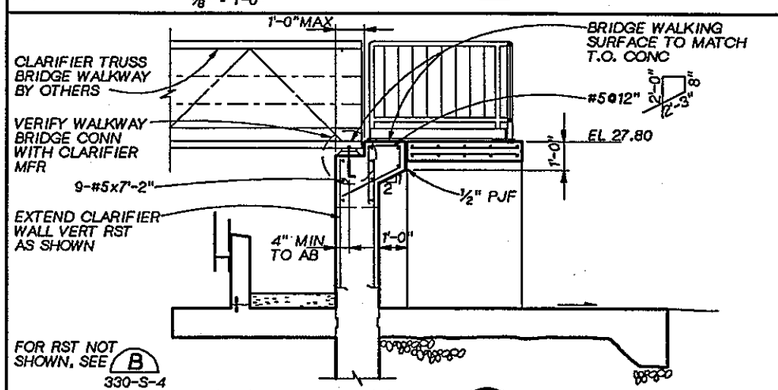

STAIR SECTION B
3/8" = 1'-0"

CHRISTINA M. KORDA STATE OF WASHINGTON 12361 REGISTERED PROFESSIONAL ENGINEER

CH2M HILL

DSGN	P. GUENTHER
DR	B. LAZARO
CHK	W. BENNETT
APVD	J. GAUTHIER

NO.	DATE	REVISION	BY	APVD

REUSE OF DOCUMENTS
THIS DOCUMENT, AND THE IDEAS AND DESIGNS INCORPORATED HEREIN, AS AN INSTRUMENT OF PROFESSIONAL SERVICE, IS THE PROPERTY OF CH2M HILL AND IS NOT TO BE USED, IN WHOLE OR IN PART, FOR ANY OTHER PROJECT WITHOUT THE WRITTEN AUTHORIZATION OF CH2M HILL.
©CH2M HILL

BAR IS ONE INCH ON ORIGINAL DRAWING. 0 1"
IF NOT ONE INCH ON THIS SHEET, ADJUST SCALES ACCORDINGLY.

CITY OF BELLINGHAM, WASHINGTON
POST POINT WASTEWATER TREATMENT PLANT UPGRADE

SECONDARY CLARIFIERS
STRUCTURAL SECTIONS AND DETAILS

DWG NO. 330-S-5
DATE AUG. 1990
PROJ NO. SEA22462.C1

DATE: 8-26-90
DRAWN BY: RSF DESIGNED BY: P. GUENTHER
DGN NAME: H:/PROJ2/BELLINGH/BL330S-E.DGN

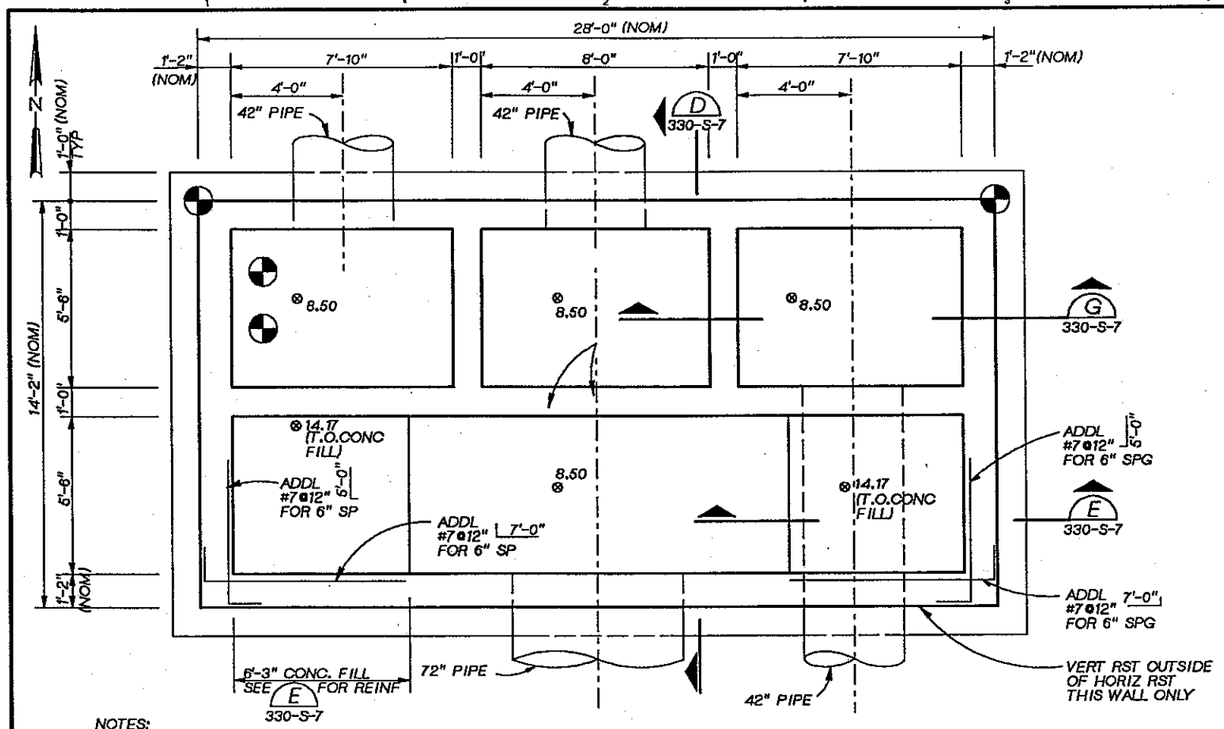

NOTES:

1. ALTERNATE HOOKED ENDS OF EXTERIOR FACE HORIZONTAL REINFORCING TO ACHIEVE STAGGERED LAPS.
2. FOR COORDINATES SEE DWG 30-C-8.
3. FOR ELEVATIONS AND FOR ARCH TREATMENT, SEE DWG 340-A-1.
4. FOR TYP CONFIGURATION OF CORNER AND WALL INTERSECTION REINF, SEE (202)

LOWER LEVEL PLAN

3/8" = 1'-0"

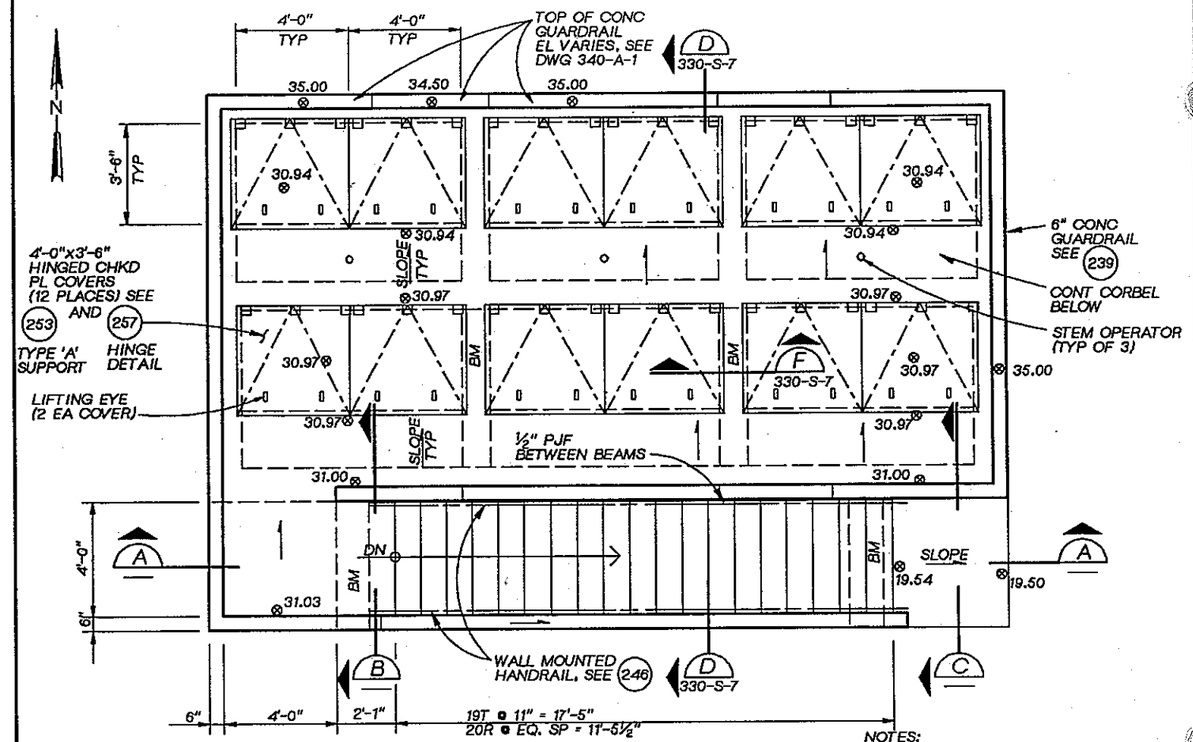

NOTES:

1. FOR ADDL REINF AT PIPE AND SLUICE GATE OPENINGS, SEE (204)
2. DESIGN LOADS:
   TOP DECK & STAIR LL = 100 PSF
   WIND LOAD: 1988 UBC, 80 MPH, EXP C
   SEISMIC: 1988 UBC ZONE 3

UPPER LEVEL PLAN

3/8" = 1'-0"

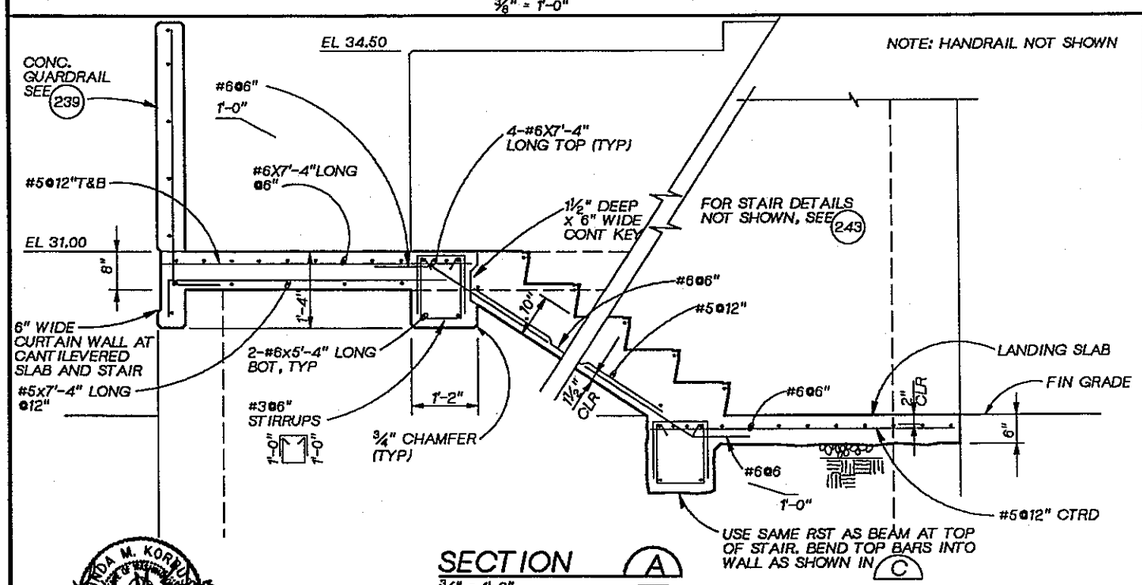

SECTION (A)

3/4" = 1'-0"

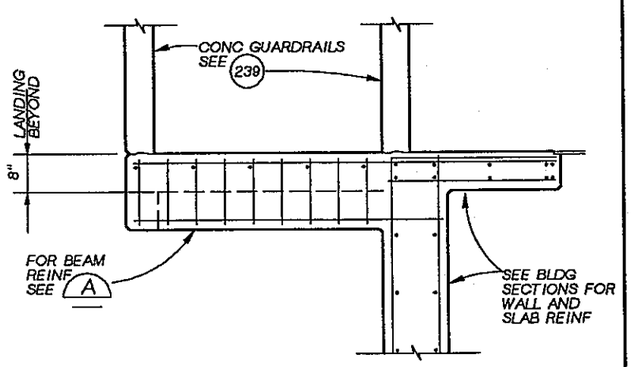

SECTION (B)

3/4" = 1'-0"

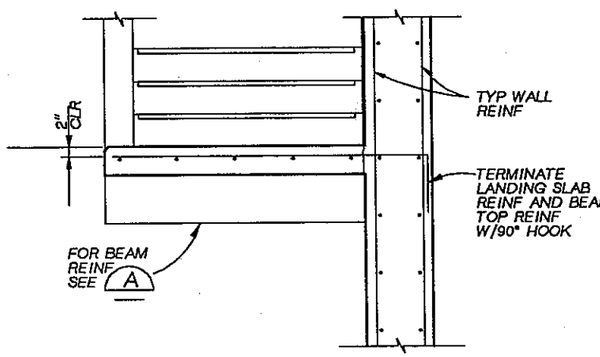

SECTION (C)

3/4" = 1'-0"

DSGN	P. GUENTHER					
DR	R. FRIBERG					
CHK	W. BENNETT					
APVD	J. GAUTHIER	NO.	DATE	REVISION	BY	APVD

CH2M HILL

REUSE OF DOCUMENTS
THIS DOCUMENT, AND THE IDEAS AND DESIGNS INCORPORATED HEREIN, AS AN INSTRUMENT OF PROFESSIONAL SERVICE, IS THE PROPERTY OF CH2M HILL AND IS NOT TO BE USED, IN WHOLE OR IN PART, FOR ANY OTHER PROJECT WITHOUT THE WRITTEN AUTHORIZATION OF CH2M HILL.
©CH2M HILL

BAR IS ONE INCH ON ORIGINAL DRAWING. 0 1"
IF NOT ONE INCH ON THIS SHEET, ADJUST SCALES ACCORDINGLY.

CITY OF BELLINGHAM, WASHINGTON
POST POINT WASTEWATER TREATMENT PLANT UPGRADE

SECONDARY CLARIFIERS
FLOW SPLITTER BOX
STRUCTURAL PLANS & SECTIONS

DWG NO. 330-S-6
DATE AUG. 1990
PROJ. NO. SEA22452.C1

DATE: 8-14-90
DRAWN BY: RSF
DGN NAME: H:/PROJ2/BELLINGH/BL330S-F.DGN
DESIGNED BY: P. GUENTHER

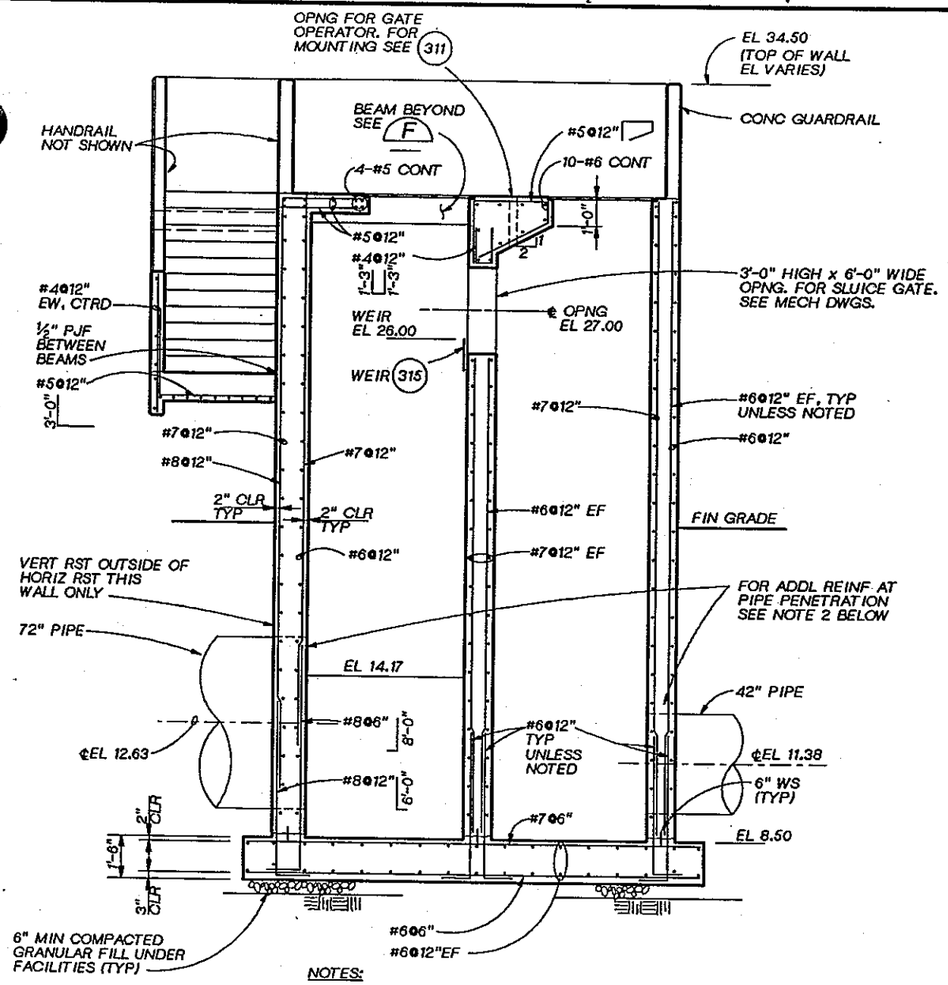

NOTES:

1. SEE LOWER LEVEL PLAN FOR ADDL CORNER HORIZ REINF.
2. PROVIDE 4 ADDL #8 EF VERT WITH MATCHING DOWELS ON EACH SIDE OF PIPES FOR 3" SPACING. PROVIDE 4 ADDL #7 EF HORIZ AT TOP OF EACH PIPE FOR 6" SPA (LENGTH = 11'-0" FOR 72" PIPE; LENGTH = 9'-0" FOR 42" PIPE). PROVIDE #5 HOOP EF AROUND EACH PIPE.

SECTION D
3/8" = 1'-0" 330-S-6

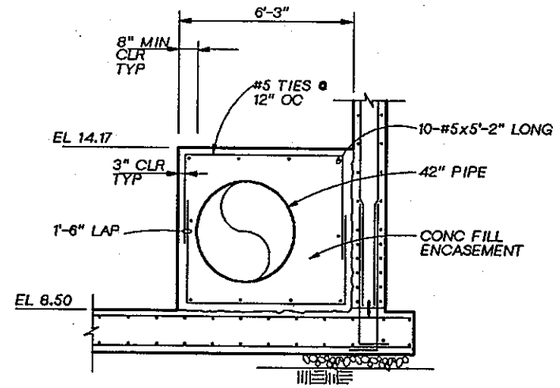

SECTION E
3/8" = 1'-0" 330-S-6

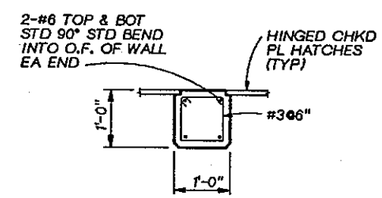

BEAM SECTION F
3/4" = 1'-0" 340-S-6 340-S-7

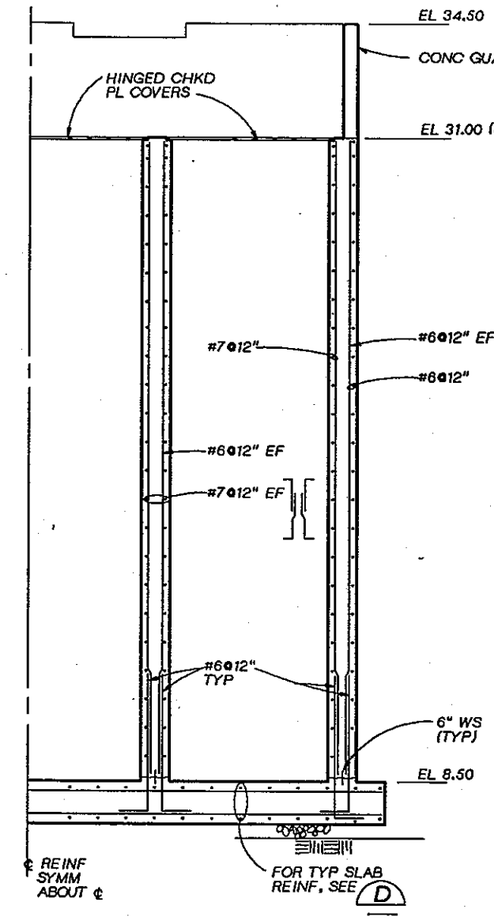

SECTION G
3/8" = 1'-0" 330-S-6

DSGN P. GUENTHER					
DR R. FRIBERG					
CHK W. BENNETT					
APVD J GAUTHIER	NO.	DATE	REVISION	BY	APVD

CH2M HILL

REUSE OF DOCUMENTS
THIS DOCUMENT, AND THE IDEAS AND DESIGNS INCORPORATED HEREIN, AS AN INSTRUMENT OF PROFESSIONAL SERVICE, IS THE PROPERTY OF CH2M HILL AND IS NOT TO BE USED, IN WHOLE OR IN PART, FOR ANY OTHER PROJECT WITHOUT THE WRITTEN AUTHORIZATION OF CH2M HILL.
©CH2M HILL

BAR IS ONE INCH ON ORIGINAL DRAWING.
0 1"
IF NOT ONE INCH ON THIS SHEET, ADJUST SCALES ACCORDINGLY.

CITY OF BELLINGHAM, WASHINGTON
POST POINT WASTEWATER TREATMENT PLANT UPGRADE

SECONDARY CLARIFIERS
FLOW SPLITTER BOX
STRUCTURAL SECTIONS

DWG NO. 330-S-7
DATE AUG. 1990
PROJ NO. SEA22462.C1

DATE: 8/27/90 GEB
DRAWN BY: M. MOORE DESIGNED BY: LMK
DGN NAME: H:/PROJ2/BELLINGH/BL330S-H.DGN

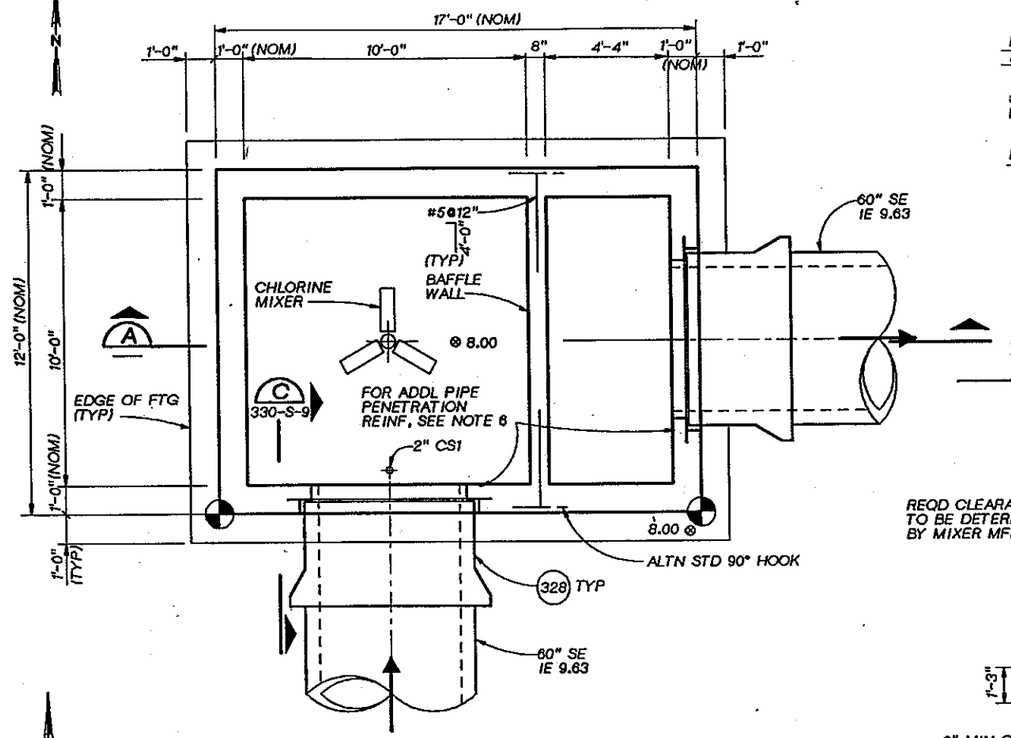

LOWER LEVEL PLAN

3/8" = 1'-0"

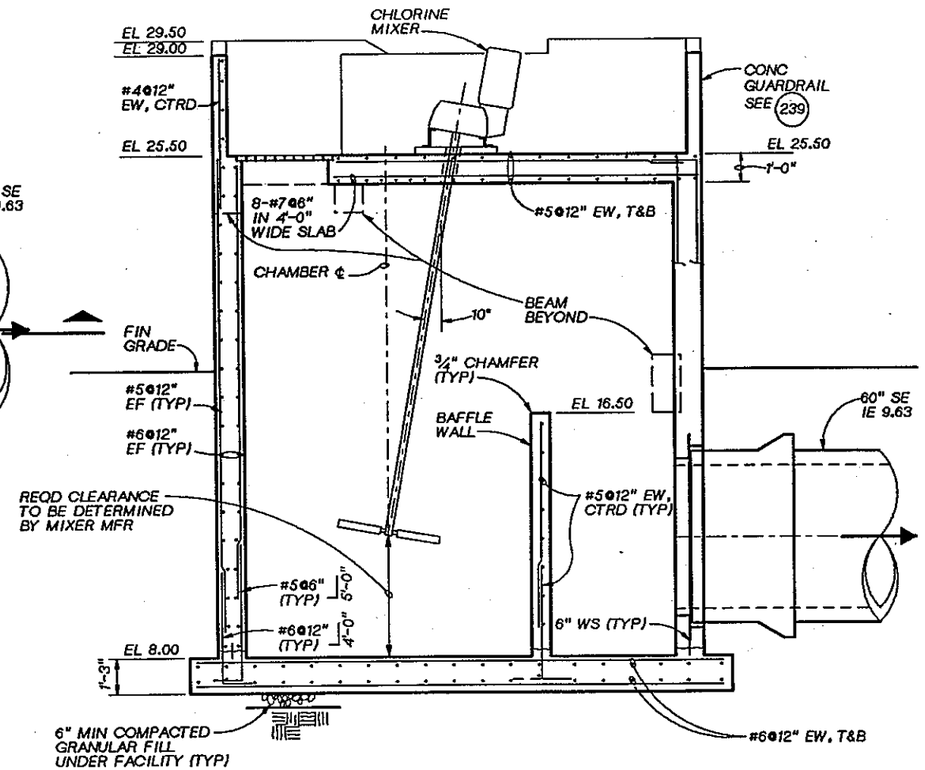

SECTION A

3/8" = 1'-0"

NOTES:

1. FOR GENERAL STRUCTURAL NOTES SEE 201
2. FOR TYP CONFIGURATION OF CORNER AND WALL INTERSECTION REINF, SEE 202
3. FOR OPENING REINF, SEE 204
4. DESIGN LOADS:
   DECK LL = 200 PSF
   STAIR LL = 100 PSF
5. FOR COORDINATES SEE DWG 30-C-8.
6. PROVIDE 3 ADDITIONAL #6 EF VERT WITH MATCHING DOWELS FOR 3" SPACING AT EACH SIDE OF PIPE. PROVIDE 3 ADDITIONAL #6 EF HORIZ WITH MATCHING CORNER BAR AT TOP OF PIPE. FOR 6" SPACING PROVIDE #5 HOOF EF AROUND PIPE.

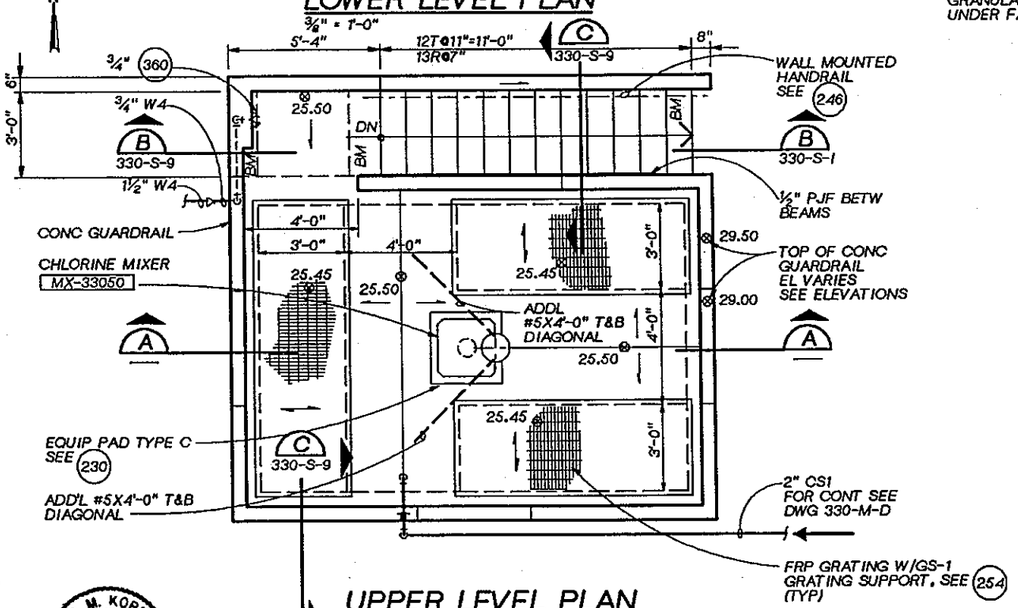

UPPER LEVEL PLAN

3/8" = 1'-0"

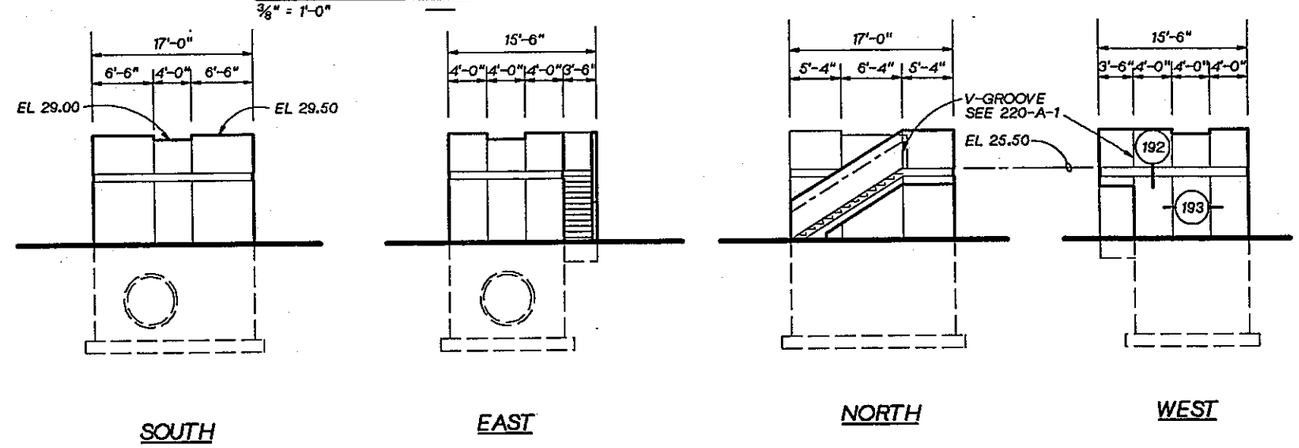

SOUTH EAST NORTH WEST

ELEVATIONS

1/8" = 1'-0"

REUSE OF DOCUMENTS
THIS DOCUMENT, AND THE IDEAS AND DESIGNS INCORPORATED HEREIN, AS AN INSTRUMENT OF PROFESSIONAL SERVICE, IS THE PROPERTY OF CH2M HILL AND IS NOT TO BE USED, IN WHOLE OR IN PART, FOR ANY OTHER PROJECT WITHOUT THE WRITTEN AUTHORIZATION OF CH2M HILL.
©CH2M HILL

BAR IS ONE INCH ON ORIGINAL DRAWING. 0 1"
IF NOT ONE INCH ON THIS SHEET, ADJUST SCALES ACCORDINGLY.

CH2M HILL

DSGN	KORBUS/MOORE				
DR	B. LAZARO				
CHK	M. BRACKEN				
APVD	J. GAUTHIER	NO.	DATE	REVISION	BY	APVD

CITY OF BELLINGHAM, WASHINGTON
POST POINT WASTEWATER TREATMENT PLANT UPGRADE

SECONDARY CLARIFIERS
MIXING CHAMBER
PLANS, SECTIONS, & ELEVATIONS

DWG NO. 330-S-8
DATE AUG. 1990
PROJ NO. SEA22462.C1

DATE: 8/24/90
DRAWN BY: M. MOORE DESIGNED BY: M. MOORE
DGN NAME: H:/PROJ2/BELLINGH/BL330S-1.DGN

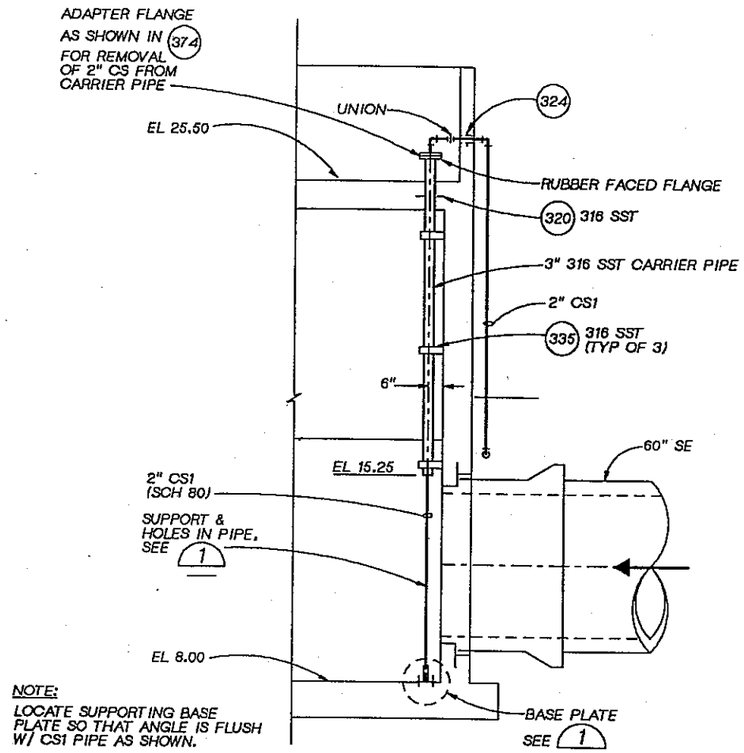

NOTE:
LOCATE SUPPORTING BASE PLATE SO THAT ANGLE IS FLUSH W/ CS1 PIPE AS SHOWN.

SECTION C
3/8" = 1'-0" 330-S-8

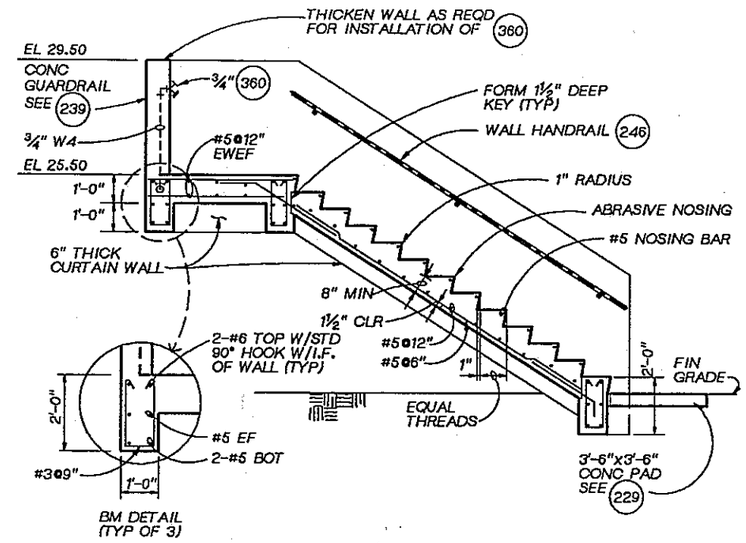

SECTION B
3/8" = 1'-0" 330-S-8

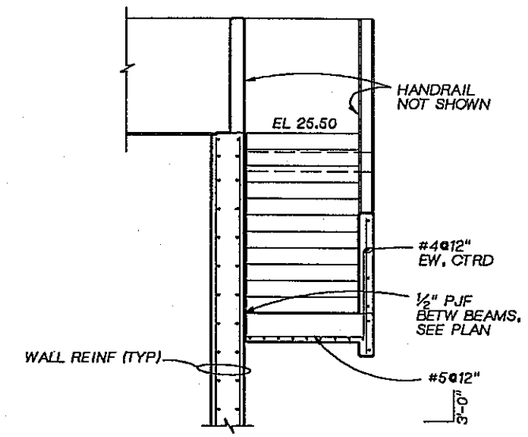

SECTION C
3/8" = 1'-0" 330-S-8

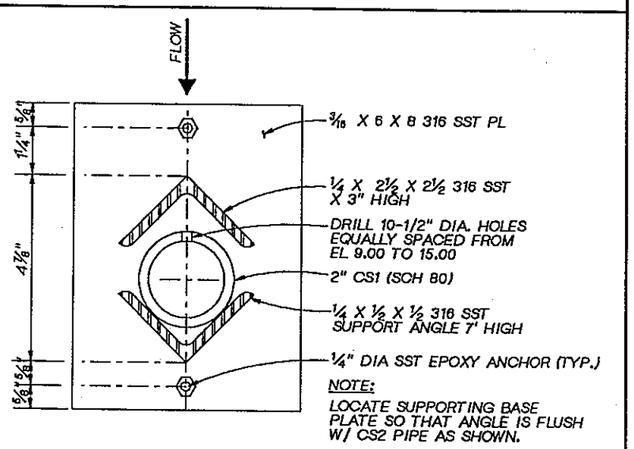

NOTE:
LOCATE SUPPORTING BASE PLATE SO THAT ANGLE IS FLUSH W/ CS2 PIPE AS SHOWN.

BASE PLATE DETAIL 1
HALF SCALE

DSGN M. MOORE						
DR M. MOORE						
CHK M. BRACKEN						
APVD J GAUTHIER	NO.	DATE	REVISION	BY	APVD	

CH2M HILL

REUSE OF DOCUMENTS
THIS DOCUMENT, AND THE IDEAS AND DESIGNS INCORPORATED HEREIN, AS AN INSTRUMENT OF PROFESSIONAL SERVICE, IS THE PROPERTY OF CH2M HILL AND IS NOT TO BE USED, IN WHOLE OR IN PART, FOR ANY OTHER PROJECT WITHOUT THE WRITTEN AUTHORIZATION OF CH2M HILL.
©CH2M HILL

BAR IS ONE INCH ON ORIGINAL DRAWING.
0 1"
IF NOT ONE INCH ON THIS SHEET, ADJUST SCALES ACCORDINGLY.

CITY OF BELLINGHAM, WASHINGTON
POST POINT WASTEWATER TREATMENT PLANT UPGRADE

SECONDARY CLARIFIER
MIXING CHAMBER
SECTIONS AND DETAILS

DWG NO. 330-S-9
DATE AUG. 1990
PROJ. NO. SEA22452.C1

DRAWN BY: MARVIN MOORE DESIGNED BY: M.MOORE
DGN NAME: H:/PROJ2/BELLINGH/BL330M-D.DGN

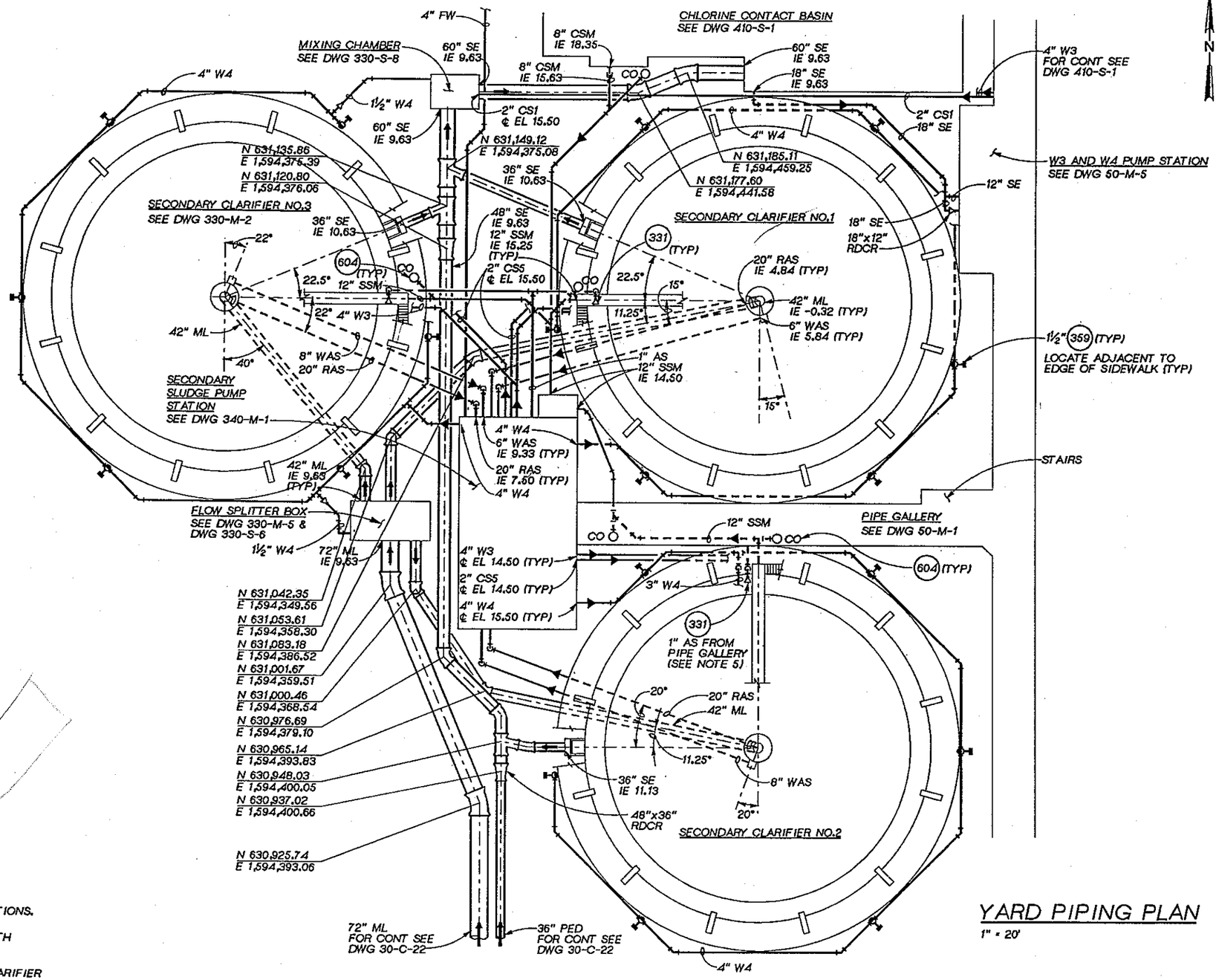

YARD PIPING PLAN

1" = 20'

NOTES:

1. PIPE INVERTS INDICATED FOR ONE CLARIFIER ARE THE SAME FOR ALL CLARIFIERS.
2. SEE DRAWING 30-C-29 FOR UNDERDRAIN PIPING NOT SHOWN.
3. DETAIL (396) SHALL BE PROVIDED AT ALL PIPE PENETRATIONS.
4. THE CONTRACTOR SHALL VERIFY ALL COORDINATES WITH ENGINEER PRIOR TO PIPE FABRICATION.
5. SECURE SERVICE AIR OUTLETS (331) TO HANDRAIL @ CLARIFIER LANDING (TYP OF 3).

JOSEPH A. GAUTHIER
STATE OF WASHINGTON
REGISTERED PROFESSIONAL ENGINEER

CH2M HILL

DSGN	M. MOORE
DR	M. MOORE
CHK	M. BRACKEN
APVD	J GAUTHIER

NO.	DATE	REVISION	BY	APVD

REUSE OF DOCUMENTS
THIS DOCUMENT, AND THE IDEAS AND DESIGNS INCORPORATED HEREIN, AS AN INSTRUMENT OF PROFESSIONAL SERVICE, IS THE PROPERTY OF CH2M HILL AND IS NOT TO BE USED, IN WHOLE OR IN PART, FOR ANY OTHER PROJECT WITHOUT THE WRITTEN AUTHORIZATION OF CH2M HILL.
©CH2M HILL

VERIFY SCALE
BAR IS ONE INCH ON ORIGINAL DRAWING.
0 1"
IF NOT ONE INCH ON THIS SHEET, ADJUST SCALES ACCORDINGLY.

CITY OF BELLINGHAM, WASHINGTON
POST POINT WASTEWATER TREATMENT PLANT UPGRADE

SECONDARY CLARIFIERS
MECHANICAL
YARD PIPING PLAN

DWG NO. 330-M-1
DATE AUG. 1990
PROJ. NO. SEA22462.C1

OVERLAY IDENTIFICATION | COMPOSITE | PROJID | OVERLAY | FILE | SCHEM

MARVIN MOORE 8/24/90
DGN NAME: H:/PROJ2/BELLINGH/BL330M-A.DGN

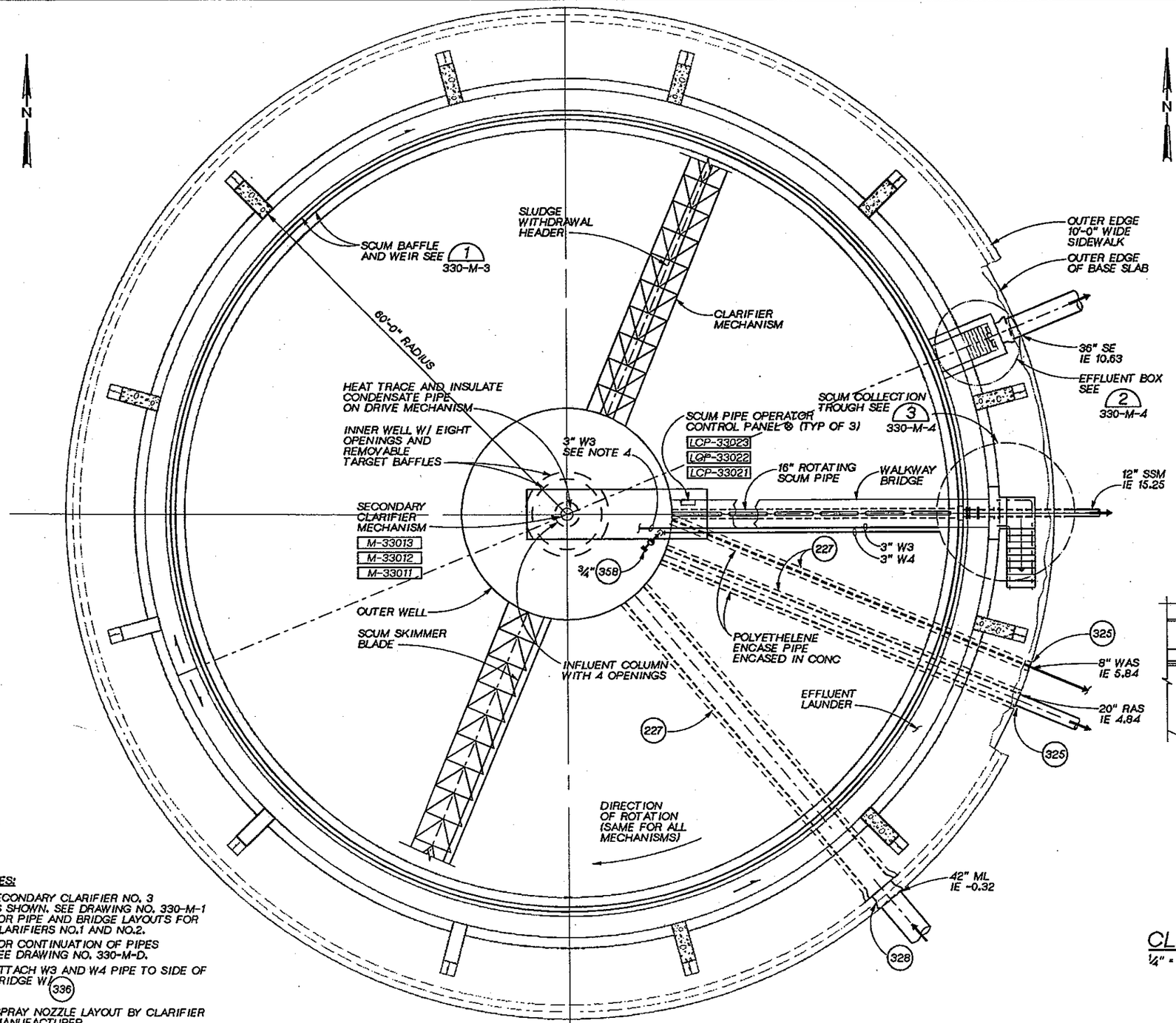

SECONDARY CLARIFIER NO.3 PLAN
1/8" = 1'-0"

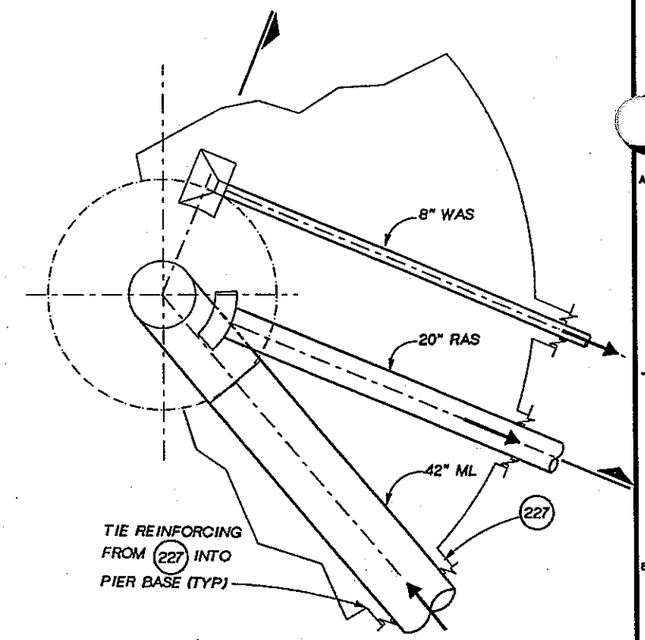

PLAN

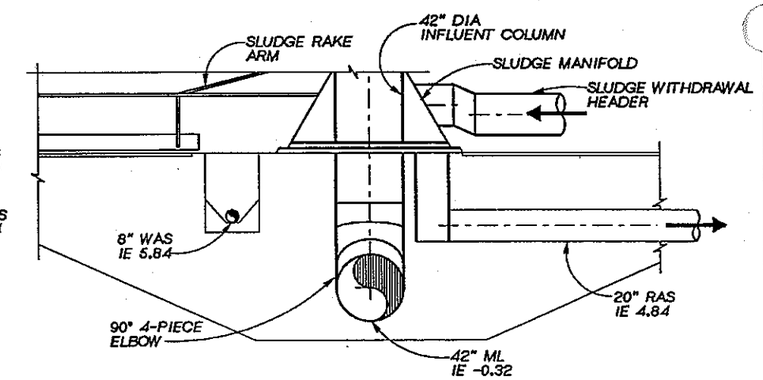

COMPOSITE SECTION

CLARIFIER CENTER PIER - DETAIL 1
1/4" = 1'-0"

NOTES:

1. SECONDARY CLARIFIER NO. 3 IS SHOWN. SEE DRAWING NO. 330-M-1 FOR PIPE AND BRIDGE LAYOUTS FOR CLARIFIERS NO.1 AND NO.2.
2. FOR CONTINUATION OF PIPES SEE DRAWING NO. 330-M-D.
3. ATTACH W3 AND W4 PIPE TO SIDE OF BRIDGE W/ 336
4. SPRAY NOZZLE LAYOUT BY CLARIFIER MANUFACTURER
5. HOSE VALVES AND PIPING NOT SHOWN - SEE DRAWING NO. 330-M-1.

JOSEPH A. GAUTHIER STATE OF WASHINGTON REGISTERED PROFESSIONAL ENGINEER

CH2M HILL

DSGN	M. MOORE
DR	M. MOORE
CHK	M. BRACKEN
APVD	J GAUTHIER

NO.	DATE	REVISION	BY	APVD

REUSE OF DOCUMENTS
THIS DOCUMENT, AND THE IDEAS AND DESIGNS INCORPORATED HEREIN, AS AN INSTRUMENT OF PROFESSIONAL SERVICE, IS THE PROPERTY OF CH2M HILL AND IS NOT TO BE USED, IN WHOLE OR IN PART, FOR ANY OTHER PROJECT WITHOUT THE WRITTEN AUTHORIZATION OF CH2M HILL.
©CH2M HILL

VERIFY SCALE
BAR IS ONE INCH ON ORIGINAL DRAWING.
0 1"
IF NOT ONE INCH ON THIS SHEET, ADJUST SCALES ACCORDINGLY.

CITY OF BELLINGHAM, WASHINGTON
POST POINT WASTEWATER TREATMENT PLANT UPGRADE

SECONDARY CLARIFIERS
MECHANICAL
PLAN AND DETAILS

DWG NO. 330-M-2
DATE AUG. 1990
PROJ NO. SEA22462.C1

OVERLAY IDENTIFICATION: COMPOSITE, OVERLAY, SCREEN; PROJID; FILE

6/24/90
DGN NAME: H:/PROJ2/BELLINGH/BL330M-B.DGN

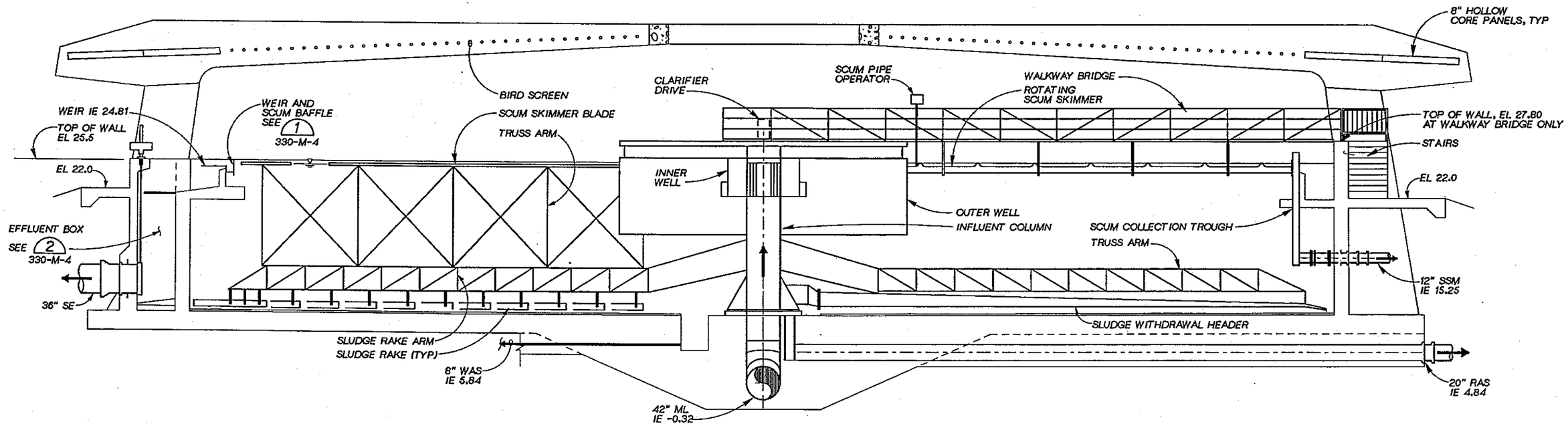

COMPOSITE SECTION

3/16" = 1'-0" 330-M-2

DSGN	M. MOORE
DR	M. MOORE
CHK	M. BRACKEN
APVD	J GAUTHIER

NO.	DATE	REVISION	BY	APVD

REUSE OF DOCUMENTS
THIS DOCUMENT, AND THE IDEAS AND DESIGNS INCORPORATED HEREIN, AS AN INSTRUMENT OF PROFESSIONAL SERVICE, IS THE PROPERTY OF CH2M HILL AND IS NOT TO BE USED, IN WHOLE OR IN PART, FOR ANY OTHER PROJECT WITHOUT THE WRITTEN AUTHORIZATION OF CH2M HILL.
©CH2M HILL

VERIFY SCALE
BAR IS ONE INCH ON ORIGINAL DRAWING.
0 1"
IF NOT ONE INCH ON THIS SHEET, ADJUST SCALES ACCORDINGLY.

CITY OF BELLINGHAM, WASHINGTON
POST POINT WASTEWATER TREATMENT PLANT UPGRADE

SECONDARY CLARIFIERS
MECHANICAL
COMPOSITE SECTION

DWG NO. 330-M-3
DATE AUG. 1990
PROJ NO. SEA22462.C1

OVERLAY IDENTIFICATION: COMPOSITE 15 17; PROJ/ID OVERLAY 15 17; FILE GREEN

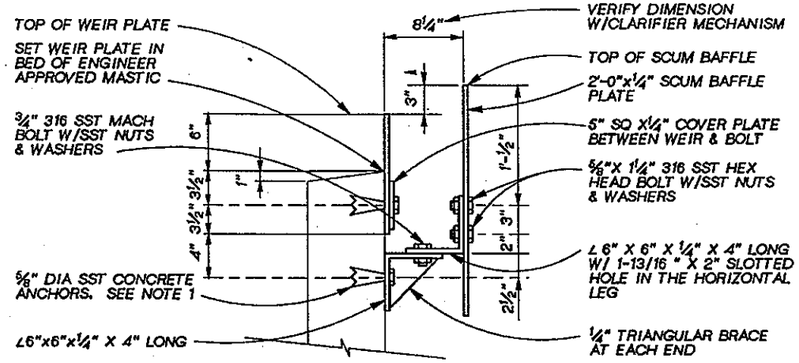

WEIR AND BAFFLE SECTION

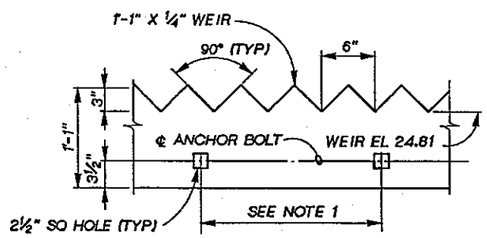

WEIR PLATE DETAIL

SECONDARY CLARIFIER "V" NOTCH WEIR AND BAFFLE ASSEMBLY

NOTES:

1. SCUM BAFFLE ANCHORS SHALL BE EQUALLY SPACED AT 4' - 0" O.C. MAX. PLACE WEIR ANCHORS AT 2' - 0" O.C. MAX OR AS RECOMMENDED BY MFR
2. ALL PARTS EXCEPT FASTENERS SHALL BE FIBERGLASS AS SPECIFIED
3. PROVIDE WEIR CLOSURE DETAIL SIMILAR TO DETAIL (314) AT EITHER SIDE OF SCUM TROUGH
4. STEEL TROWEL TOP OF CONCRETE TO OBTAIN SMOOTH DENSE FINISH

WEIR DETAIL (1)

NTS 330-M-2

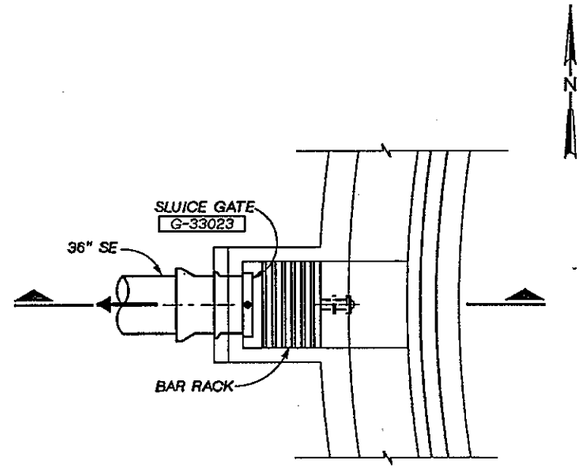

PLAN

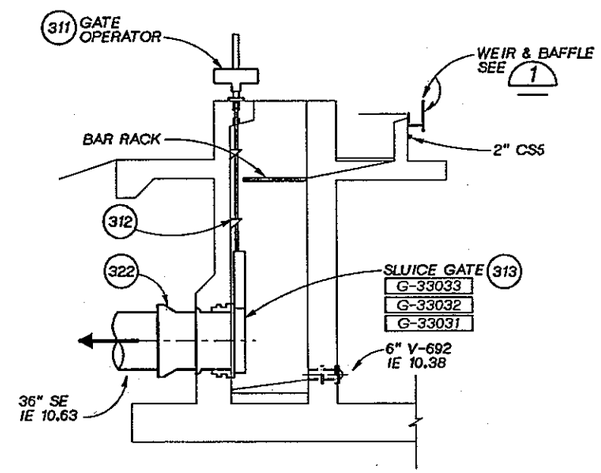

SECTION

EFFLUENT BOX DETAIL (2)

¼" = 1'-0" 330-M-1

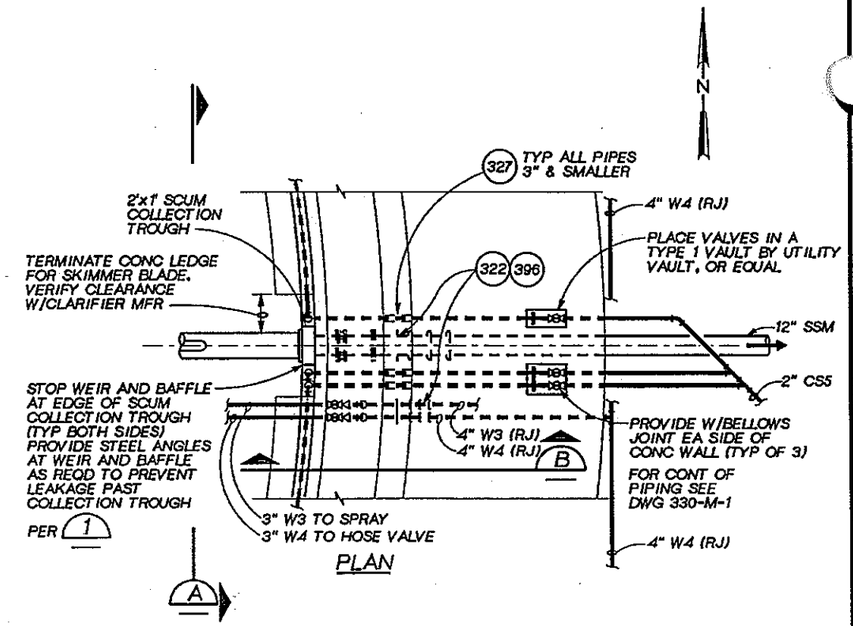

PLAN

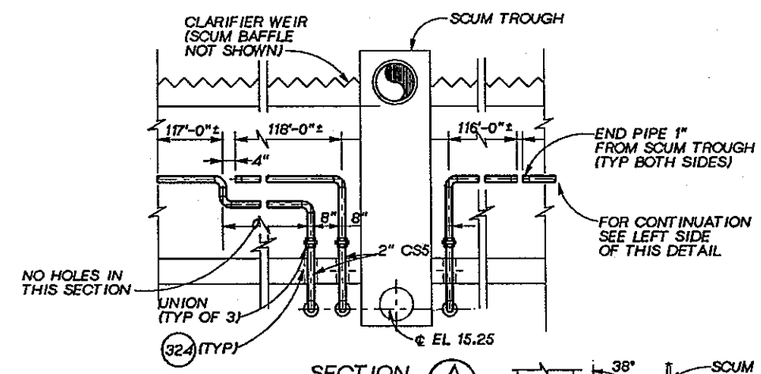

SECTION (A)

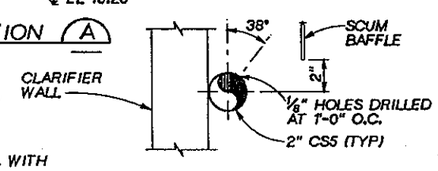

SECTION (B)

NOTES:

1. THIS COMPOSITE SECTION SHOWS THE CHLORINE DIFFUSER PIPING ON THE CLARIFIER INSIDE WALL.
2. SUPPORT PIPES 10'-0" O.C. WITH 316 SST SUPPORTS (336) (SIM)
3. SHOP BEND PIPE TO CLARIFIER WALL CURVATURE
4. FOR WEIR AND SCUM BAFFLE SEE (1)
5. FOR CONTINUATION OF PIPES SEE 330-M-1
6. SERVICE AIR NOT SHOWN, SEE DWG 330-M-1

SCUM TROUGH DETAIL (3)

¼" = 1'-0" 330-M-2

JOSEPH A. GAUTHIER — STATE OF WASHINGTON — REGISTERED PROFESSIONAL ENGINEER

CH2M HILL

DSGN	M. MOORE				
DR	M. MOORE				
CHK	M. BRACKEN				
APVD	J GAUTHIER	NO.	DATE	REVISION	BY	APVD

REUSE OF DOCUMENTS
THIS DOCUMENT, AND THE IDEAS AND DESIGNS INCORPORATED HEREIN, AS AN INSTRUMENT OF PROFESSIONAL SERVICE, IS THE PROPERTY OF CH2M HILL AND IS NOT TO BE USED, IN WHOLE OR IN PART, FOR ANY OTHER PROJECT WITHOUT THE WRITTEN AUTHORIZATION OF CH2M HILL.
©CH2M HILL

VERIFY SCALE
BAR IS ONE INCH ON ORIGINAL DRAWING.
0 1"
IF NOT ONE INCH ON THIS SHEET, ADJUST SCALES ACCORDINGLY.

CITY OF BELLINGHAM, WASHINGTON
POST POINT WASTEWATER TREATMENT PLANT UPGRADE

SECONDARY CLARIFIERS
MECHANICAL
PARTIAL PLANS AND DETAILS

DWG NO. 330-M-4
DATE AUG. 1990
PROJ NO. SEA22462.C1

OVERLAY IDENTIFICATION: PROJ/D FILE — COMPOSITE OVERLAY SCREEN

DRAWN BY: MARVIN MOORE DESIGNED BY: J. MILLER
DGN NAME: H:/PROJ2/BELLINGH/BL330M-E.DGN

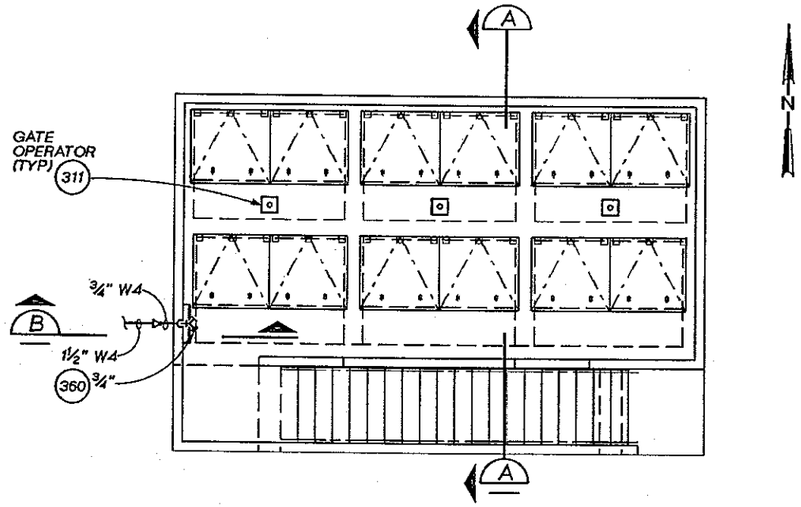

UPPER LEVEL PLAN
1/4" = 1'-0"

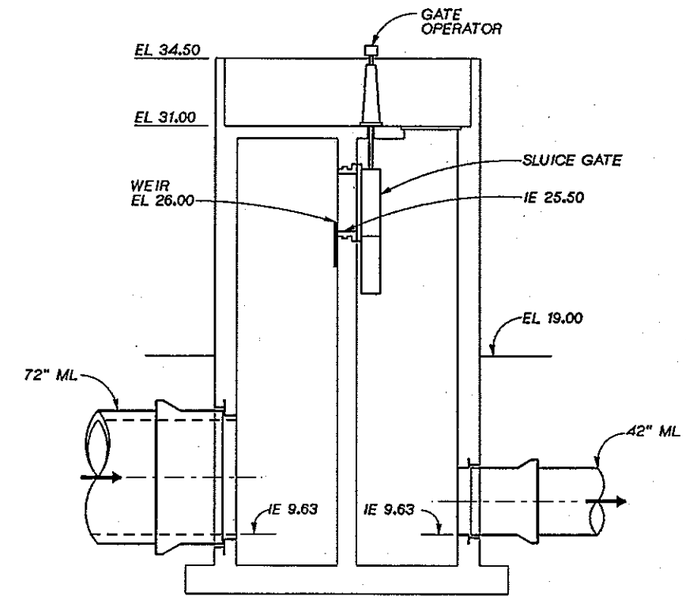

SECTION A
1/4" = 1'-0"

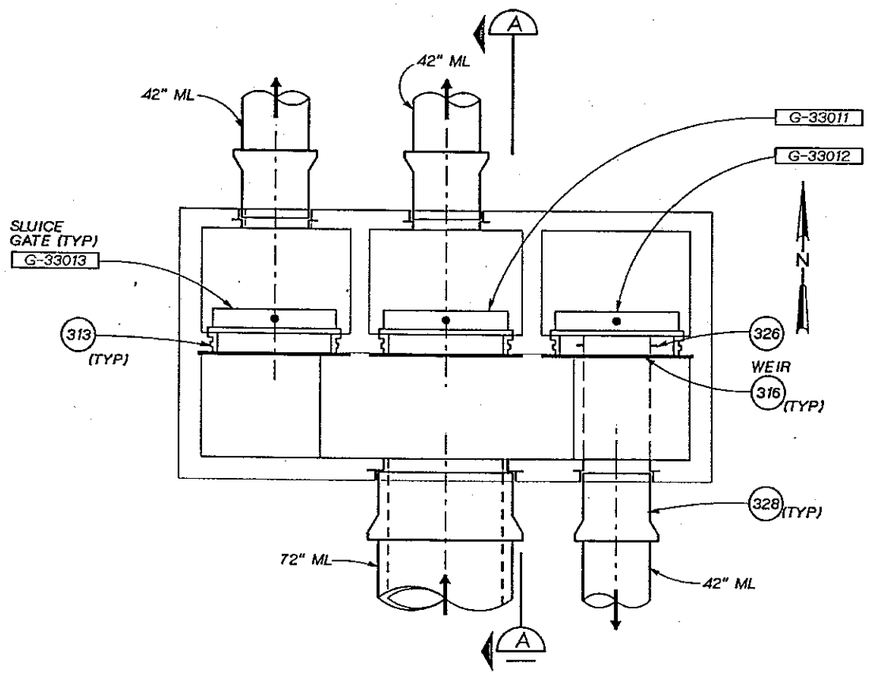

LOWER LEVEL PLAN
1/4" = 1'-0"

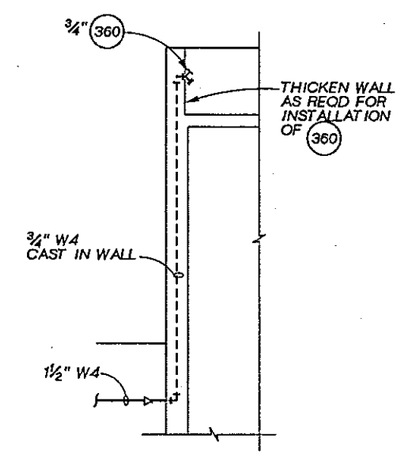

SECTION B
1/4" = 1'-0"

JOSEPH A. GAUTHIER STATE OF WASHINGTON REGISTERED PROFESSIONAL ENGINEER

CH2M HILL

DSGN	J. MILLER				
DR	M. MOORE				
CHK	M. BRACKEN				
APVD	J GAUTHIER	NO.	DATE	REVISION	BY	APVD

REUSE OF DOCUMENTS
THIS DOCUMENT, AND THE IDEAS AND DESIGNS INCORPORATED HEREIN, AS AN INSTRUMENT OF PROFESSIONAL SERVICE, IS THE PROPERTY OF CH2M HILL AND IS NOT TO BE USED, IN WHOLE OR IN PART, FOR ANY OTHER PROJECT WITHOUT THE WRITTEN AUTHORIZATION OF CH2M HILL.
©CH2M HILL

VERIFY SCALE
BAR IS ONE INCH ON ORIGINAL DRAWING.
0 1"
IF NOT ONE INCH ON THIS SHEET, ADJUST SCALES ACCORDINGLY.

CITY OF BELLINGHAM, WASHINGTON
POST POINT WASTEWATER TREATMENT PLANT UPGRADE

SECONDARY CLARIFIERS
FLOW SPLITTER BOX
MECHANICAL PLANS AND SECTIONS

DWG NO. 330-M-5
DATE AUG. 1990
PROJ. NO. SEA22462.C1

OVERLAY IDENTIFICATION: COMPOSITE, OVERLAY, PROJD, FILE, GREEN

DATE: 8-25-90
DRAWN BY: GE BOWER DESIGNED BY: GE BOWER
DGN NAME: H:/PROJ2/BELLINGH/BL340A-A.DGN

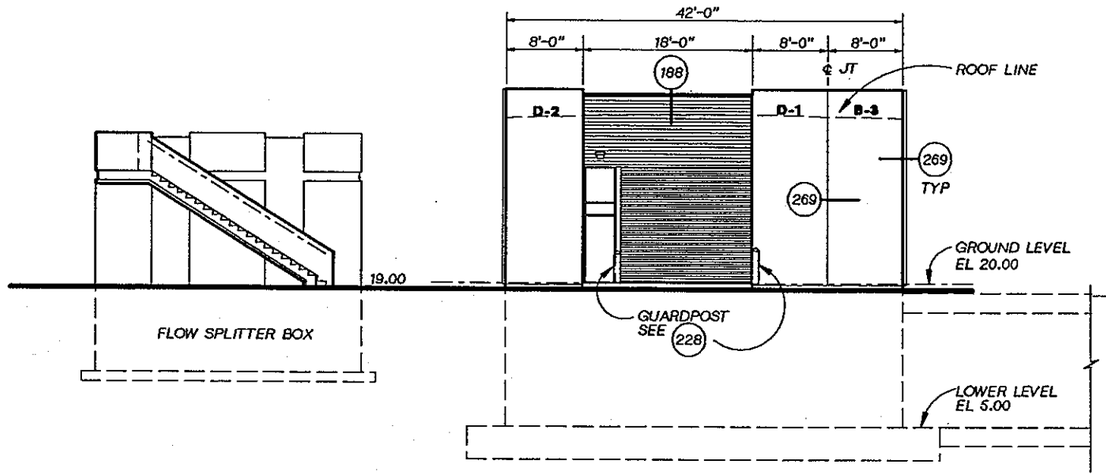

SOUTH ELEVATION
1/8"=1'-0"

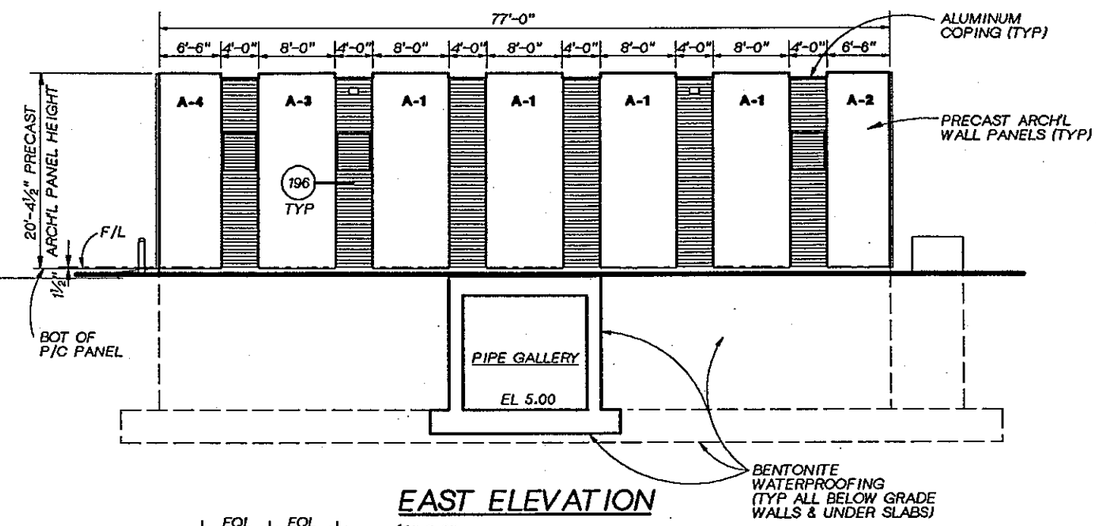

EAST ELEVATION
1/8"=1'-0"

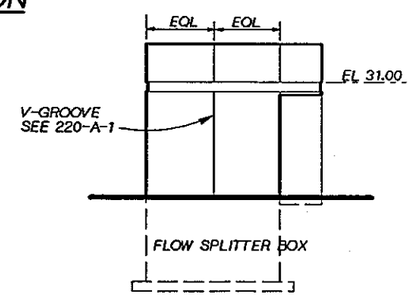

WEST ELEVATION
1/8"=1'-0"

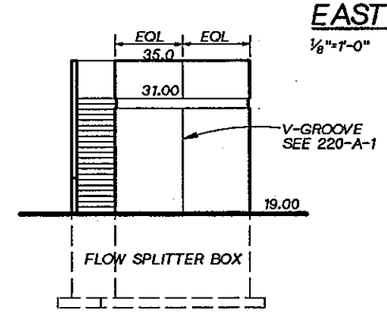

EAST ELEVATION
1/8"=1'-0"

NOTES

1. FOR PANEL SCHEDULE SEE DWG 800-S-12.
2. FOR STANDARD DETAILS ◯ SEE THE "800" SECTION OF THE DWGS.
3. FOR LOUVER SIZES AND TYPES, SEE SPECIFICATION SECTION 10200.
4. FOR EXTERIOR COLORS & FINISHES, SEE SPECIFICATION SECTION 09000.

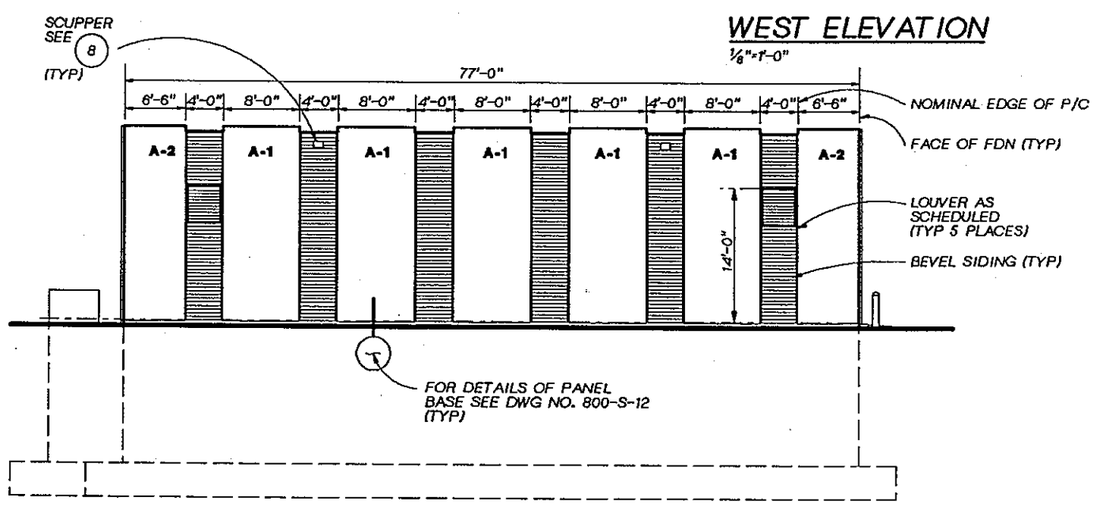

WEST ELEVATION
1/8"=1'-0"

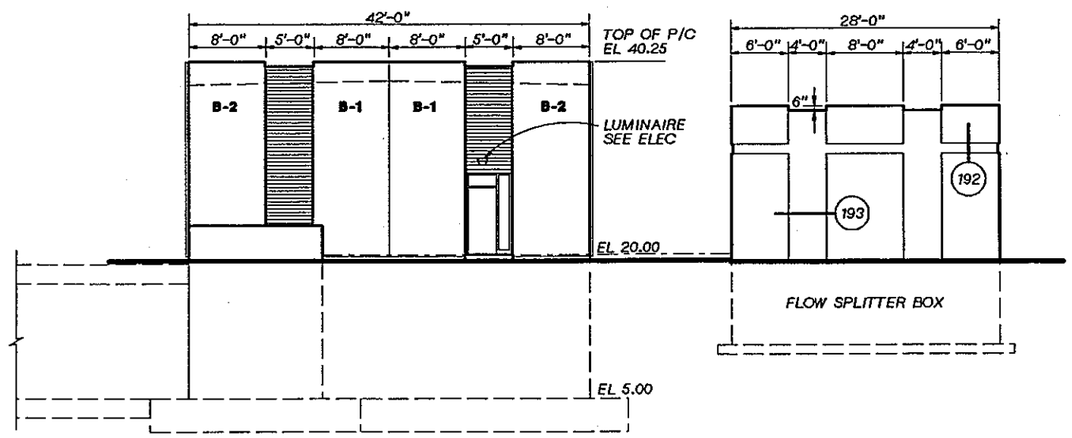

NORTH ELEVATION
1/8"=1'-0"

1986 REGISTERED ARCHITECT STATE OF WASHINGTON

CH2M HILL

DSGN	G BOWER				
DR	G BOWER				
CHK	R WHITE				
APVD	J GAUTHIER	NO.	DATE	REVISION	BY / APVD

REUSE OF DOCUMENTS
THIS DOCUMENT, AND THE IDEAS AND DESIGNS INCORPORATED HEREIN, AS AN INSTRUMENT OF PROFESSIONAL SERVICE, IS THE PROPERTY OF CH2M HILL AND IS NOT TO BE USED, IN WHOLE OR IN PART, FOR ANY OTHER PROJECT WITHOUT THE WRITTEN AUTHORIZATION OF CH2M HILL.
©CH2M HILL

BAR IS ONE INCH ON ORIGINAL DRAWING. 0 1"
IF NOT ONE INCH ON THIS SHEET, ADJUST SCALES ACCORDINGLY.

CITY OF BELLINGHAM, WASHINGTON
POST POINT WASTEWATER TREATMENT PLANT UPGRADE

SECONDARY SLUDGE PUMP STATION
ARCHITECTURAL ELEVATIONS

DWG NO. 340-A-1
DATE AUG. 1990
PROJ. NO. SEA22462.C1

OVERLAY IDENTIFICATION | COMPOSITE | PROJ/D | OVERLAY | FILE | GEN

DATE: 8-28-90
DRAWN BY: OSCAR A. FRIAL DESIGNED BY:
DGN NAME: H:/PROJ2/BELLINGH/BL340A-B.DGN

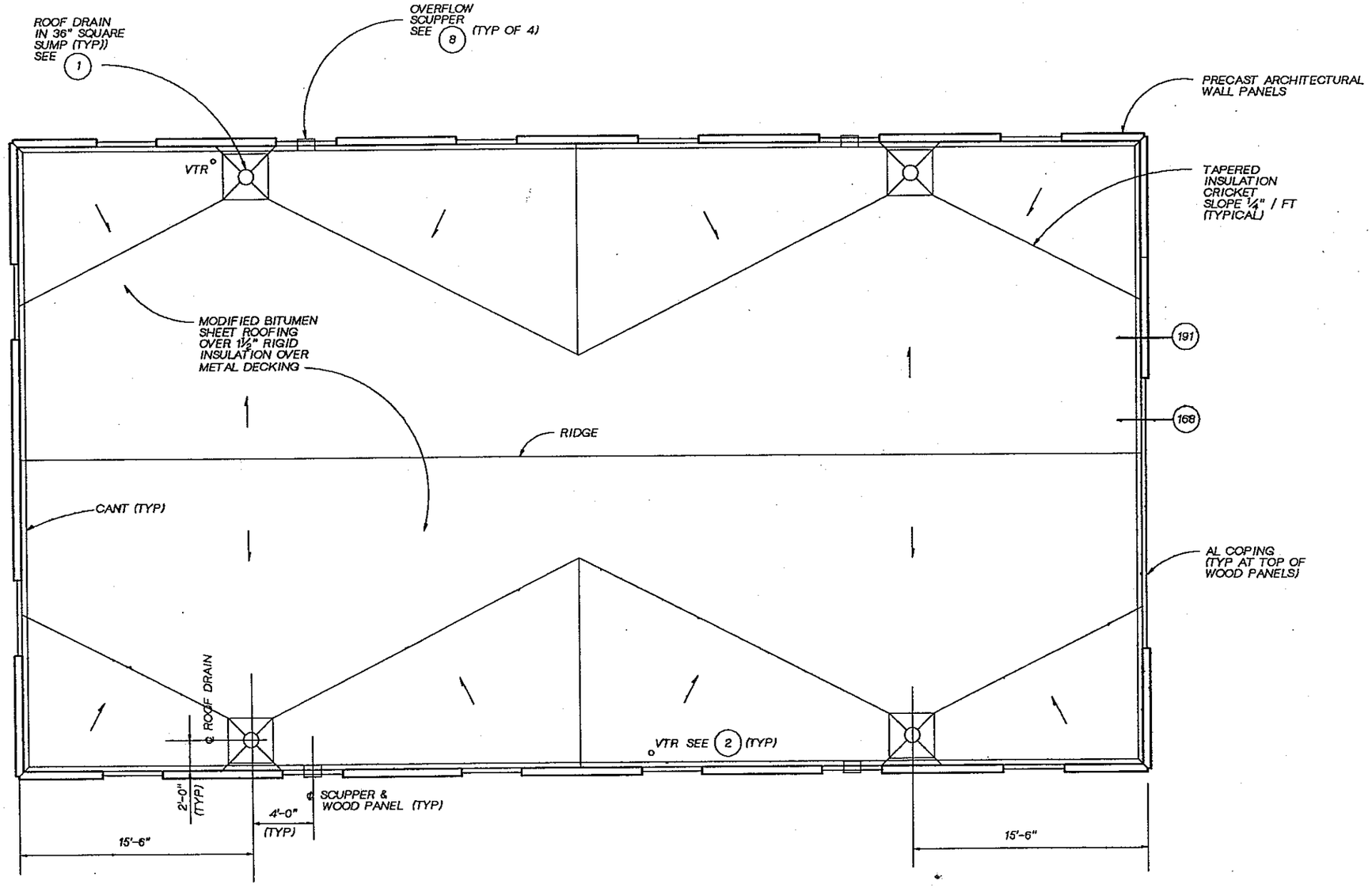

ROOF PLAN

1/4"=1'-0"

REGISTERED ARCHITECT JOHN A. MOES STATE OF WASHINGTON

CH2M HILL

DSGN	O FRIAL				
DR	O FRIAL				
CHK	R WHITE				
APVD	J. GAUTHIER	NO.	DATE	REVISION	BY	APVD

REUSE OF DOCUMENTS
THIS DOCUMENT, AND THE IDEAS AND DESIGNS INCORPORATED HEREIN, AS AN INSTRUMENT OF PROFESSIONAL SERVICE, IS THE PROPERTY OF CH2M HILL AND IS NOT TO BE USED, IN WHOLE OR IN PART, FOR ANY OTHER PROJECT WITHOUT THE WRITTEN AUTHORIZATION OF CH2M HILL.
©CH2M HILL

BAR IS ONE INCH ON ORIGINAL DRAWING. 0 1"
IF NOT ONE INCH ON THIS SHEET, ADJUST SCALES ACCORDINGLY.

CITY OF BELLINGHAM, WASHINGTON
POST POINT WASTEWATER TREATMENT PLANT UPGRADE

SECONDARY SLUDGE PUMP STATION
ARCHITECTURAL
ROOF PLAN

DWG NO. 340-A-2
DATE AUG. 1990
PROJ NO. SEA22452.C1

OVERLAY SCREEN
PROJ.ID FILE

DATE: 8-23-90 A. MCRILL
DRAWN BY: LAZARO/FRIBERG DESIGNED BY: P. GUENTHER
DGN NAME: H:/PROJ2/BELLINGH/BL340S-A.DGN

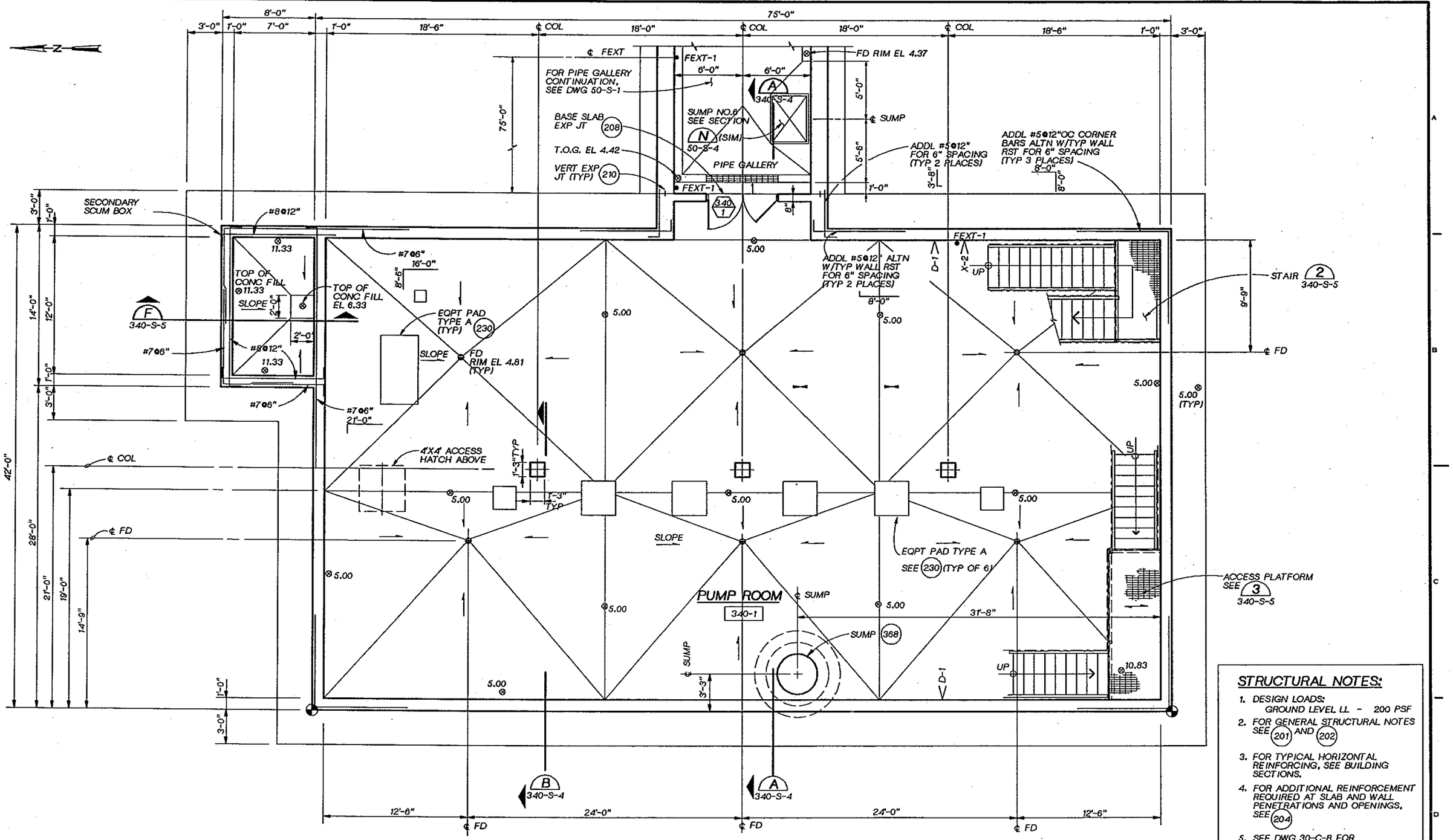

FOUNDATION PLAN

1/4" = 1'-0"

STRUCTURAL NOTES:

1. DESIGN LOADS:
   GROUND LEVEL LL - 200 PSF
2. FOR GENERAL STRUCTURAL NOTES SEE 201 AND 202
3. FOR TYPICAL HORIZONTAL REINFORCING, SEE BUILDING SECTIONS.
4. FOR ADDITIONAL REINFORCEMENT REQUIRED AT SLAB AND WALL PENETRATIONS AND OPENINGS, SEE 204
5. SEE DWG 30-C-8 FOR COORDINATES.

DSGN	P. GUENTHER				
DR	R. FRIBERG				
CHK	W. BENNETT				
APVD	J GAUTHIER	NO.	DATE	REVISION	BY	APVD

CH2M HILL

REUSE OF DOCUMENTS
THIS DOCUMENT, AND THE IDEAS AND DESIGNS INCORPORATED HEREIN, AS AN INSTRUMENT OF PROFESSIONAL SERVICE, IS THE PROPERTY OF CH2M HILL AND IS NOT TO BE USED, IN WHOLE OR IN PART, FOR ANY OTHER PROJECT WITHOUT THE WRITTEN AUTHORIZATION OF CH2M HILL.
©CH2M HILL

BAR IS ONE INCH ON ORIGINAL DRAWING.
0 1"
IF NOT ONE INCH ON THIS SHEET, ADJUST SCALES ACCORDINGLY.

CITY OF BELLINGHAM, WASHINGTON
POST POINT WASTEWATER TREATMENT PLANT UPGRADE

SECONDARY SLUDGE PUMP STATION
STRUCTURAL
FOUNDATION PLAN

DWG NO. 340-S-1
DATE AUG. 1990
PROJ NO. SEA22462.C1

DATE: 8-28-90
DRAWN BY: B.LAZARO-C.HOWELL DESIGNED BY: P.GUENTHER
DGN NAME: H:/PROJ2/BELLINGH/BL340S-B.DGN

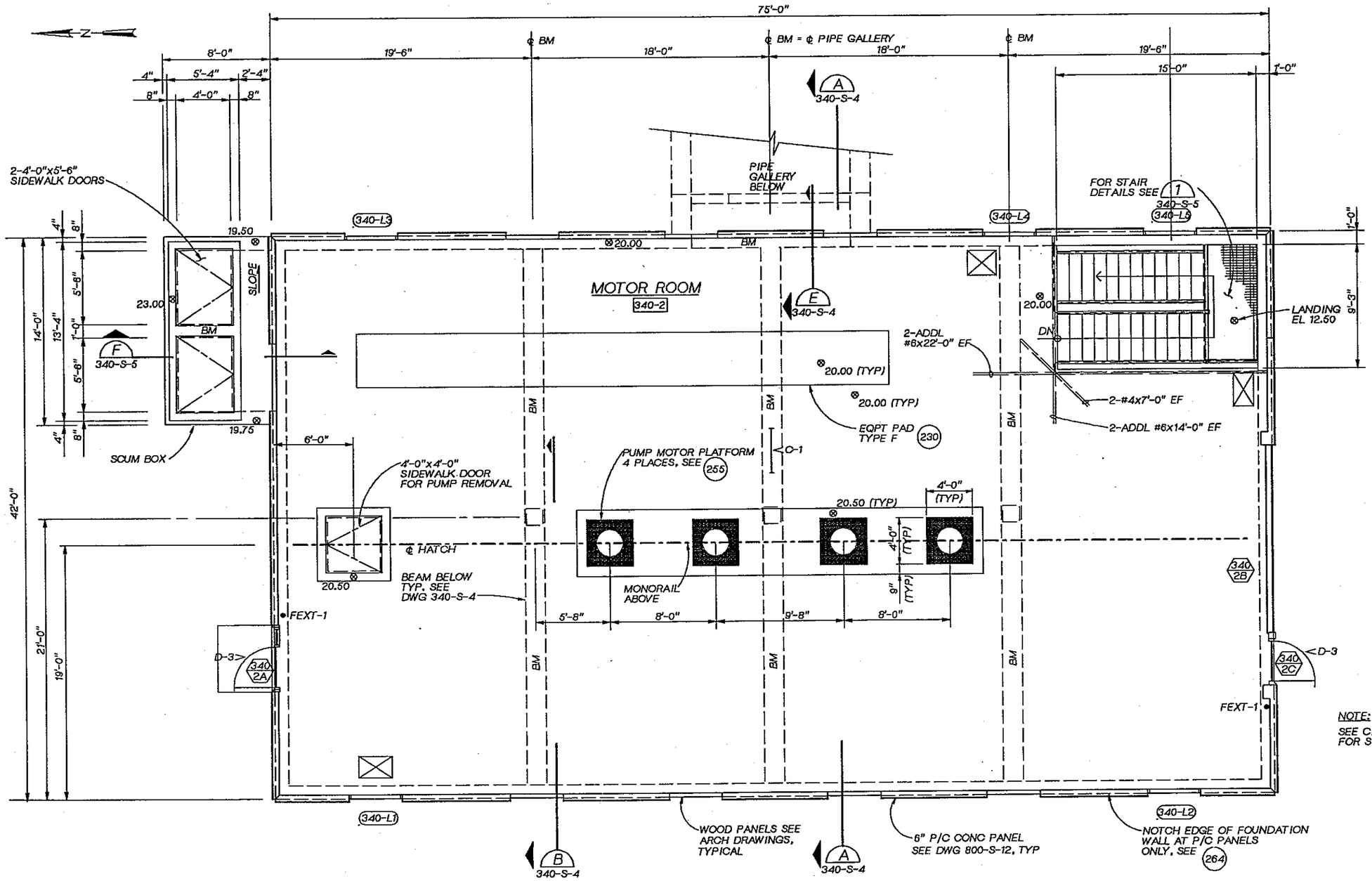

GROUND LEVEL PLAN

1/4" = 1'-0"

ARCHITECTURAL NOTES:

1. FOR "GENERAL NOTES," SEE DWG. NO. 800-A-1.
2. FOR "INTERIOR FINISH SCHEDULE" SEE SPECIFICATION SECTION 09000.
3. FOR "DOOR AND HARDWARE SCHEDULE" SEE SPECIFICATION SECTION 08000.
4. FOR PRECAST CONCRETE WALL PANEL AND OPENING DIMENSIONS, SEE ARCITECTURAL EXTERIOR ELEVATIONS.
5. FOR LOUVER SIZES AND DETAILS, SEE SPECIFICATION SECTION 10200.

BUILDING CODE NOTES:

APPLICABLE CODES: 1988 UBC
1988 UFC

1. TYPE OF OCCUPANCY: B-4
2. TYPE OF CONSTRUCTION: V-N
3. NUMBER OF STORIES
   ACTUAL: ONE + BASEMENT
   ALLOWED: TWO
4. ACTUAL FLOOR AREA
   - o GALLERY: 4235sf
   - o LOWER LEVEL: 2870sf
   - o GROUND LEVEL: 3150sf

   ALLOWABLE FLOOR AREA: 12,000sf
5. SPRINKLER SYSTEM REQD
   BASEMENT ONLY
6. OCCUPANT LOAD
   - o LOWER LEVEL: 7105/300 = 24
   - o GROUND LEVEL: 7253/300 = 24
   - o UPPER LEVEL: 3150/300 = 11

NOTE:
SEE CIVIL DRAWINGS FOR SIDEWALKS

DSGN P GUENTHER						
DR B LAZARO						
CHK W BENNETT						
APVD J. GAUTHIER	NO.	DATE	REVISION	BY	APVD	

CH2M HILL

REUSE OF DOCUMENTS
THIS DOCUMENT, AND THE IDEAS AND DESIGNS INCORPORATED HEREIN, AS AN INSTRUMENT OF PROFESSIONAL SERVICE, IS THE PROPERTY OF CH2M HILL AND IS NOT TO BE USED, IN WHOLE OR IN PART, FOR ANY OTHER PROJECT WITHOUT THE WRITTEN AUTHORIZATION OF CH2M HILL.
©CH2M HILL

BAR IS ONE INCH ON ORIGINAL DRAWING.
0 1"
IF NOT ONE INCH ON THIS SHEET, ADJUST SCALES ACCORDINGLY.

CITY OF BELLINGHAM, WASHINGTON
POST POINT WASTEWATER TREATMENT PLANT UPGRADE

SECONDARY SLUDGE PUMP STATION
STRUCTURAL
GROUND LEVEL FRAMING PLAN

DWG NO. 340-S-2
DATE AUG. 1990
PROJ NO. SEA22462.C1

DATE: 8-23-90
DRAWN BY: RSF-C.HOWELL DESIGNED BY: PG
DGN NAME: H:/PROJ2/BELLINGH/BL340S-C.DGN

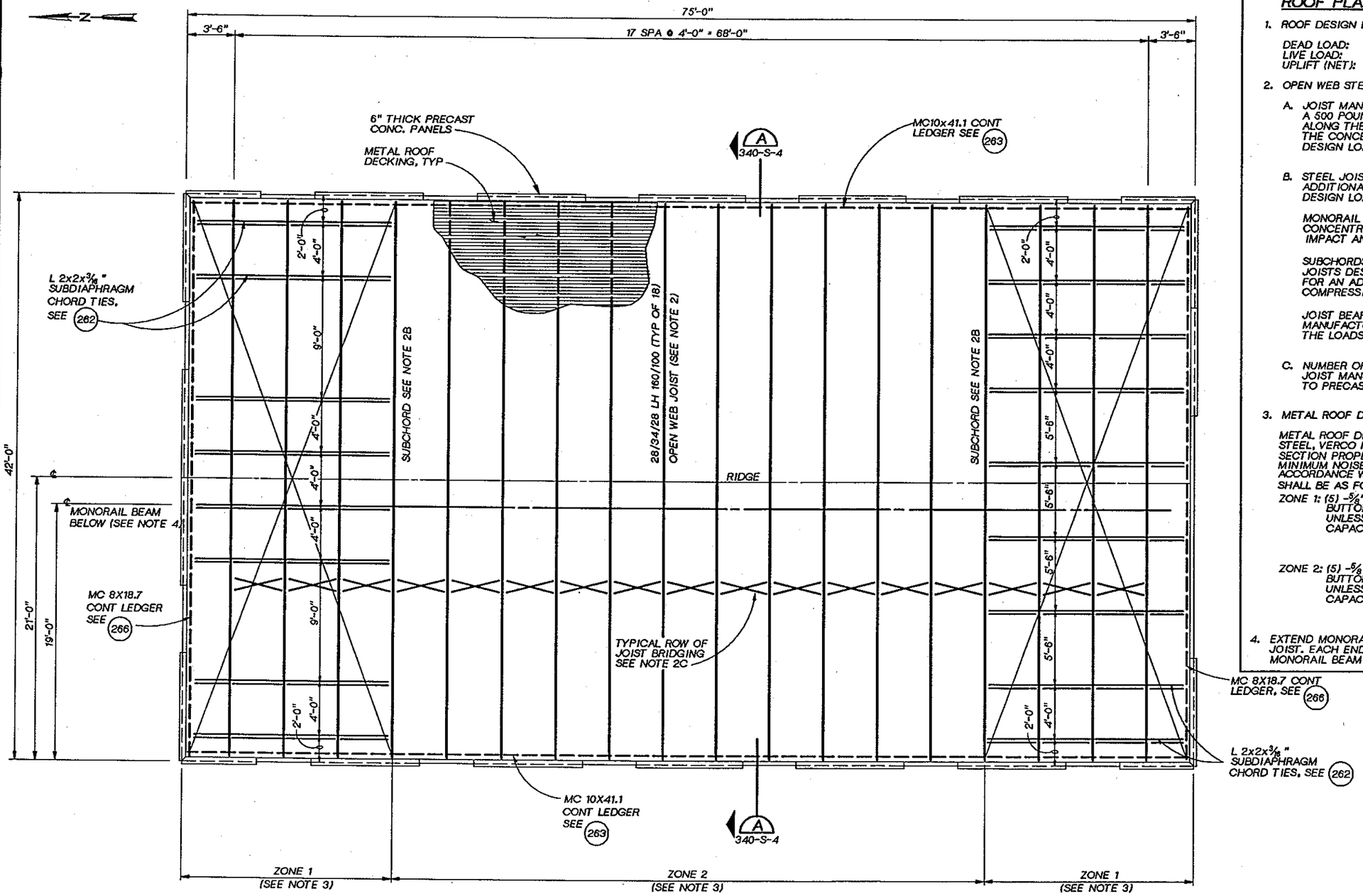

ROOF FRAMING PLAN

1/4" = 1'-0"

ROOF PLAN NOTES

1. ROOF DESIGN LOADS:

   DEAD LOAD: 15 PSF
   LIVE LOAD: 25 PSF
   UPLIFT (NET): 15 PSF

2. OPEN WEB STEEL JOISTS:

   A. JOIST MANUFACTURER SHALL DESIGN ALL JOISTS TO SUPPORT A 500 POUND CONCENTRATED LOAD LOCATED AT ANY POINT ALONG THE BOTTOM CHORD. THIS LOAD IS IN ADDITION TO THE CONCENTRATED LOAD DUE TO THE MONORAL AND THE DESIGN LOADS SHOWN.

   B. STEEL JOISTS SHALL BE DESIGNED FOR THE FOLLOWING ADDITIONAL LOADS APPLIED CONCURRENTLY WITH THE ROOF DESIGN LOADS AND CONCENTRATED LOADS:

      MONORAIL HOIST LOAD:
      CONCENTRATED MONORAIL POINT LOAD OF 6.2 KIP (INCLUDES 25% IMPACT AND HOIST WEIGHT). SEE PLANS FOR LOCATIONS.

      SUBCHORDS:
      JOISTS DESIGNATED AS SUBCHORDS SHALL BE DESIGNED FOR AN ADDITIONAL TOP CHORD FORCE OF 2.3 KIP (TENSION OR COMPRESSION) DUE TO WIND OR SEISMIC FORCES.

      JOIST BEARING SEATS:
      MANUFACTURER SHALL DESIGN JOIST BEARING SEATS FOR THE LOADS GIVEN IN DETAIL 261

   C. NUMBER OF ROWS AND SPACING OF BRIDGING AS REQD BY JOIST MANUFACTURERS. BRIDGING SHALL NOT BE CONNECTED TO PRECAST ARCH WALL PANELS OR WOOD PANELS.

3. METAL ROOF DECKING:

   METAL ROOF DECKING SHALL BE 1-1/2" - 20 GAGE GALVANIZED STEEL, VERCO HSB-36 ACOUSTICAL OR EQUIVALENT. MINIMUM SECTION PROPERTIES SHALL BE: I=.216in4, +S=.235in3, AND -S=.248in3. MINIMUM NOISE REDUCTION COEFFICENT OF .75 AS TESTED IN ACCORDANCE WITH ASTM C423. CONNECTION OF ROOF DECKING SHALL BE AS FOLLOWS:

   ZONE 1: (5) -5/8" PUDDLE WELDS TO SUPPORTS PER 36" SHEET. BUTTON PUNCH SIDE LAP CONNECTION AT 2'-0" OC, UNLESS OTHERWISE NOTED. MIN LATERAL SHEAR CAPACITY= 300 P/FT

   ZONE 2: (5) -5/8" PUDDLE WELDS TO SUPPORTS PER 36" SHEET. BUTTON PUNCH SIDE LAP CONNECTION AT 2'-0" OC, UNLESS OTHERWISE NOTED. MIN LATERAL SHEAR CAPACITY= 300 P/FT

4. EXTEND MONORAIL BEAM 1'-6" BEYOND LAST STEEL JOIST, EACH END OF BUILDING. SEE DETAIL 259 FOR MONORAIL BEAM DETAILS.

CH2M HILL	DSGN P. GUENTHER				
	DR R. FRIBERG				
	CHK W. BENNETT				
	APVD J GAUTHIER	NO.	DATE	REVISION	BY / APVD

REUSE OF DOCUMENTS
THIS DOCUMENT, AND THE IDEAS AND DESIGNS INCORPORATED HEREIN, AS AN INSTRUMENT OF PROFESSIONAL SERVICE, IS THE PROPERTY OF CH2M HILL AND IS NOT TO BE USED, IN WHOLE OR IN PART, FOR ANY OTHER PROJECT WITHOUT THE WRITTEN AUTHORIZATION OF CH2M HILL.
©CH2M HILL

BAR IS ONE INCH ON ORIGINAL DRAWING.
0 1"
IF NOT ONE INCH ON THIS SHEET, ADJUST SCALES ACCORDINGLY.

CITY OF BELLINGHAM, WASHINGTON
POST POINT WASTEWATER TREATMENT PLANT UPGRADE

SECONDARY SLUDGE PUMP STATION
STRUCTURAL
ROOF FRAMING PLAN

DWG NO. 340-S-3
DATE AUG. 1990
PROJ NO. SEA22462.C1

DRAWN BY: LAZARO/FRIBERG DESIGNED BY: P. GUENTHER
DGN NAME: H:/PROJ2/BELLINGH/BL340S-D.DGN

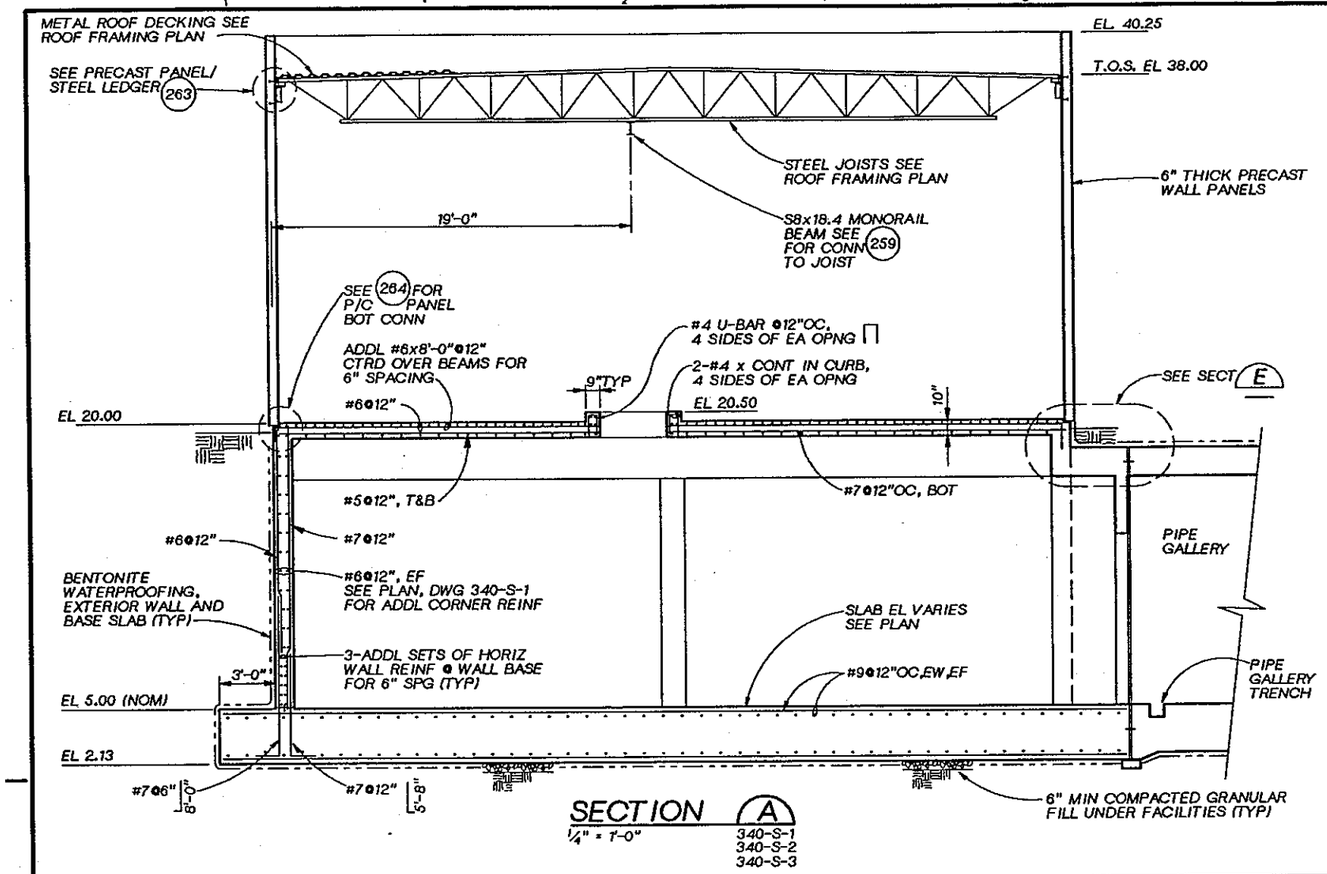

SECTION (A)
1/4" = 1'-0"
340-S-1
340-S-2
340-S-3

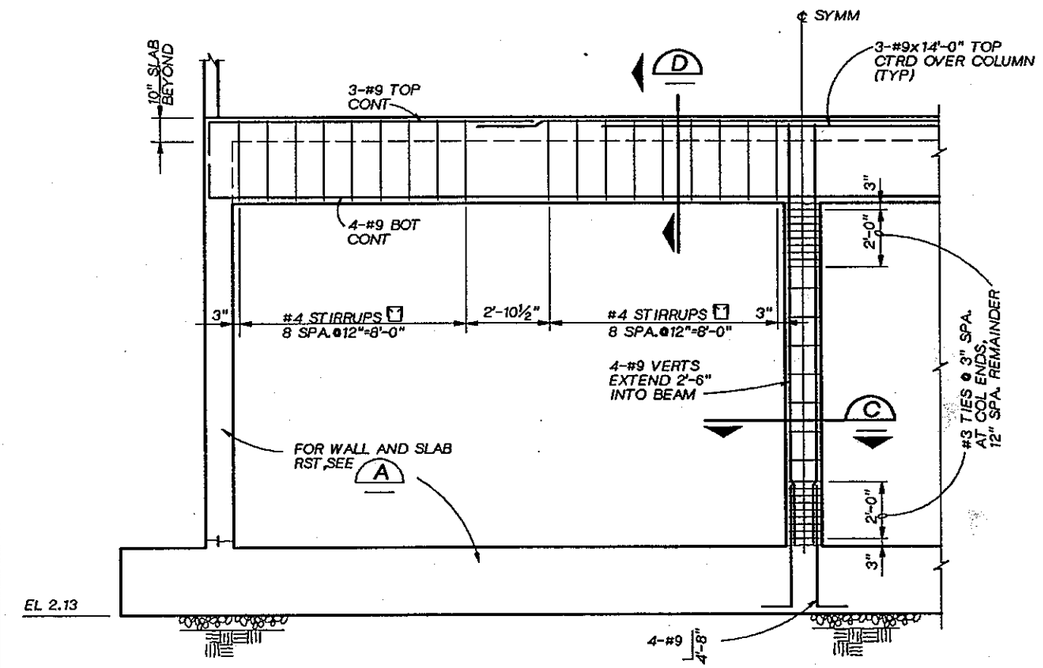

SECTION (B)
3/8" = 1'-0"
340-S-1
340-S-2

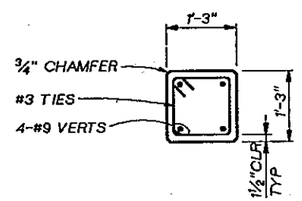

SECTION (C)
3/4" = 1'-0"

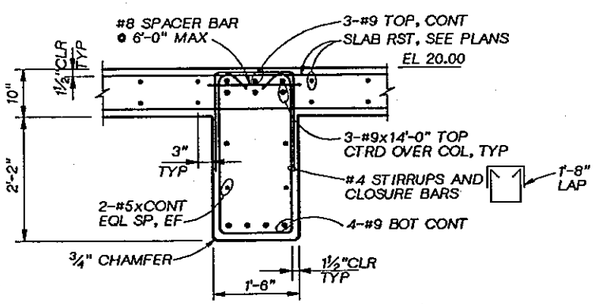

SECTION (D)
3/4" = 1'-0"

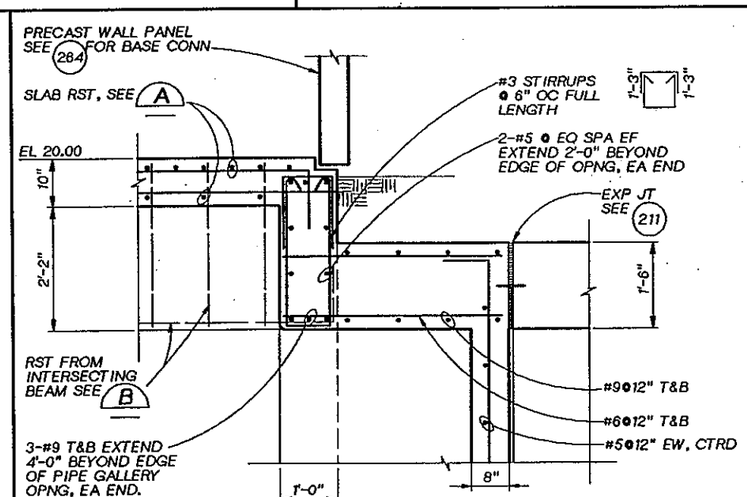

SECTION (E)
3/4" = 1'-0"
340-S-2
340-S-4

LINDA M. KORDO
STATE OF WASHINGTON
22867
REGISTERED
PROFESSIONAL ENGINEER

CH2M HILL

DSGN	P. GUENTHER				
DR	B. LAZARO				
CHK	W. BENNETT				
APVD	J GAUTHIER	NO.	DATE	REVISION	BY / APVD

REUSE OF DOCUMENTS
THIS DOCUMENT, AND THE IDEAS AND DESIGNS INCORPORATED HEREIN, AS AN INSTRUMENT OF PROFESSIONAL SERVICE, IS THE PROPERTY OF CH2M HILL AND IS NOT TO BE USED, IN WHOLE OR IN PART, FOR ANY OTHER PROJECT WITHOUT THE WRITTEN AUTHORIZATION OF CH2M HILL.
©CH2M HILL

BAR IS ONE INCH ON ORIGINAL DRAWING. 0 1"
IF NOT ONE INCH ON THIS SHEET, ADJUST SCALES ACCORDINGLY.

CITY OF BELLINGHAM, WASHINGTON
POST POINT WASTEWATER TREATMENT PLANT UPGRADE

SECONDARY SLUDGE PUMP STATION
STRUCTURAL
SECTIONS AND DETAILS

DWG NO. 340-S 4
DATE AUG. 1990
PROJ. NO. SEA22462.C1

OVERLAY IDENTIFICATION: COMPOSITE, OVERLAY SCREEN, PROJD, FILE

DATE: 8-23-90
DRAWN BY: R. FRIBERG DESIGNED BY: P. GUENTHER
DGN NAME: H:/PROJ2/BELLINGH/BL340S-E.DGN

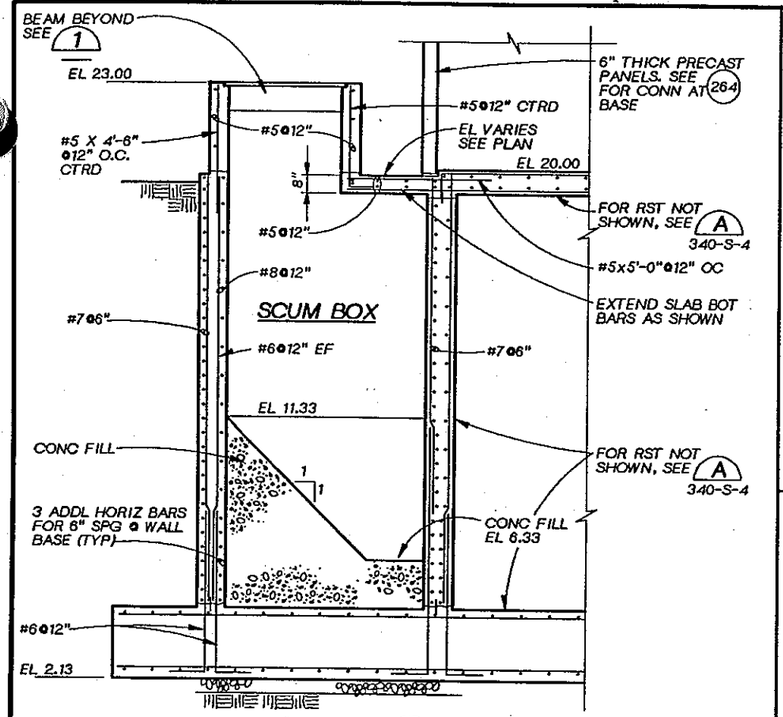

SECTION F
3/8" = 1'-0"
340-S-1
340-S-2

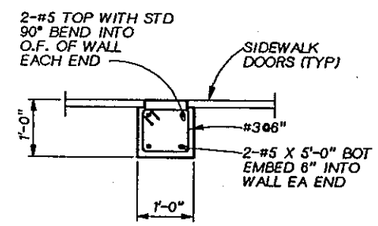

SECTION

DETAIL 1
3/4" = 1'-0"
340-S-5

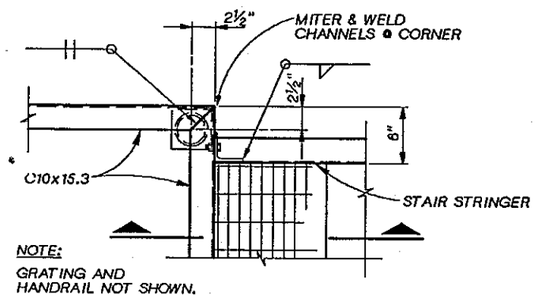

NOTE:
GRATING AND HANDRAIL NOT SHOWN.

PLAN

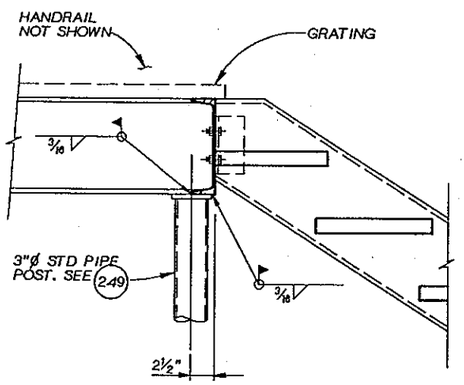

SECTION

DETAIL 4
1½" = 1'-0"

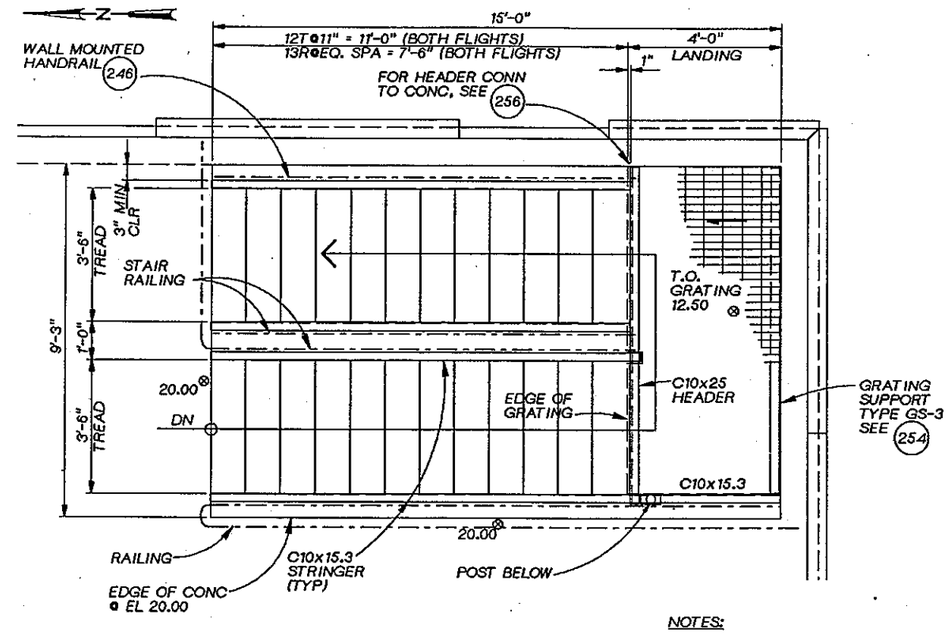

STAIR PLAN 2
1/2" = 1'-0"
340-S-2

NOTES:
1. FOR STAIR DETAILS NOT SHOWN SEE 24.9
2. SEE 24.4 AND 24.7 FOR RAILING DET.
3. SEE 25.4 FOR GRATING DETAILS.

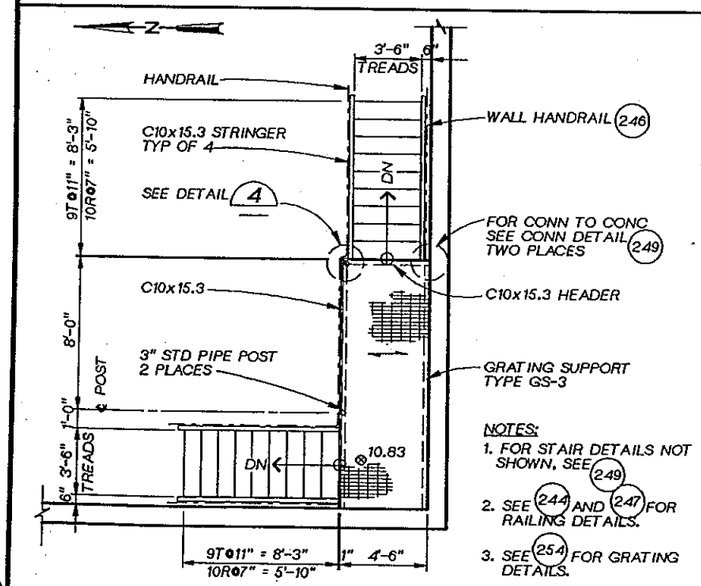

NOTES:
1. FOR STAIR DETAILS NOT SHOWN, SEE 24.9
2. SEE 24.4 AND 24.7 FOR RAILING DETAILS.
3. SEE 25.4 FOR GRATING DETAILS.

ACCESS PLATFORM FRAMING PLAN 3
1/4" = 1'-0"
340-S-1

DSGN P. GUENTHER						
DR R. FRIBERG						
CHK W. BENNETT						
APVD J GAUTHIER	NO.	DATE	REVISION	BY	APVD	

REUSE OF DOCUMENTS
THIS DOCUMENT, AND THE IDEAS AND DESIGNS INCORPORATED HEREIN, AS AN INSTRUMENT OF PROFESSIONAL SERVICE, IS THE PROPERTY OF CH2M HILL AND IS NOT TO BE USED, IN WHOLE OR IN PART, FOR ANY OTHER PROJECT WITHOUT THE WRITTEN AUTHORIZATION OF CH2M HILL.
©CH2M HILL

BAR IS ONE INCH ON ORIGINAL DRAWING.
0 1"
IF NOT ONE INCH ON THIS SHEET, ADJUST SCALES ACCORDINGLY.

CITY OF BELLINGHAM, WASHINGTON
POST POINT WASTEWATER TREATMENT PLANT UPGRADE

SECONDARY SLUDGE PUMP STATION
STRUCTURAL
SECTIONS AND DETAILS

DWG NO. 340-S-5
DATE AUG. 1990
PROJ. NO. SEA22462.C1

DATE: 8/26/90
DRAWN BY: M. MOORE DESIGNED BY: M.MOORE
DGN NAME: H:/PROJ2/BELLINGH/BL340M-A.DGN

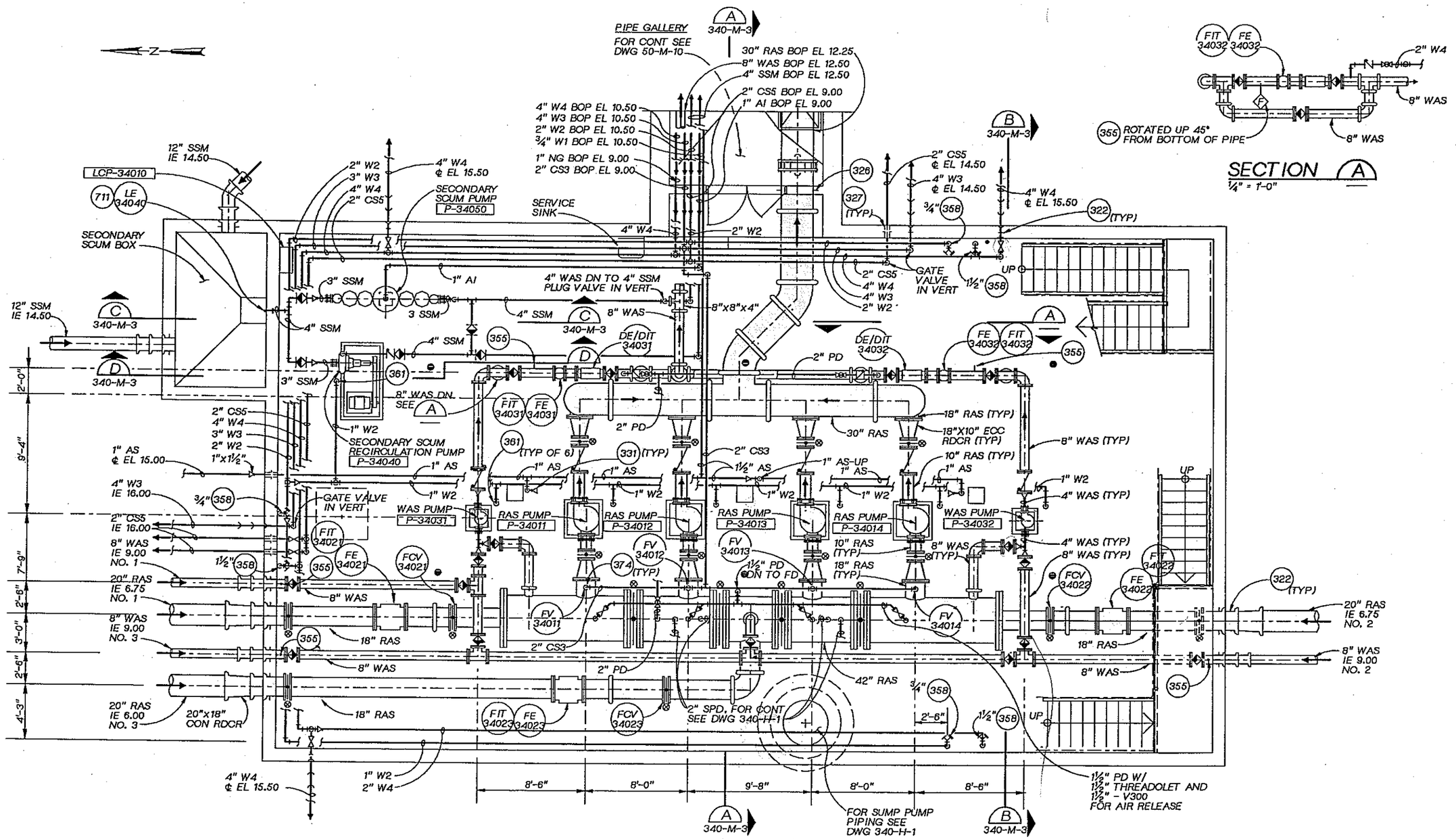

LOWER LEVEL PLAN

¼" = 1'-0"

DSGN	M. MOORE					
DR	M. MOORE					
CHK	M. BRACKEN					
APVD	J. GAUTHIER	NO.	DATE	REVISION	BY	APVD

CH2M HILL

REUSE OF DOCUMENTS
THIS DOCUMENT, AND THE IDEAS AND DESIGNS INCORPORATED HEREIN, AS AN INSTRUMENT OF PROFESSIONAL SERVICE, IS THE PROPERTY OF CH2M HILL AND IS NOT TO BE USED, IN WHOLE OR IN PART, FOR ANY OTHER PROJECT WITHOUT THE WRITTEN AUTHORIZATION OF CH2M HILL.
©CH2M HILL

BAR IS ONE INCH ON ORIGINAL DRAWING.
0 1"
IF NOT ONE INCH ON THIS SHEET, ADJUST SCALES ACCORDINGLY.

CITY OF BELLINGHAM, WASHINGTON
POST POINT WASTEWATER TREATMENT PLANT UPGRADE

SECONDARY SLUDGE PUMP STATION
MECHANICAL
LOWER LEVEL PLAN

DWG NO. 340-M-1
DATE AUG. 1990
PROJ NO. SEA22462.C1

DRAWN BY: MARVIN MOORE DESIGNED BY: M. MOORE
DGN NAME: H:/PROJ2/BELLINGH/BL340M-B.DGN

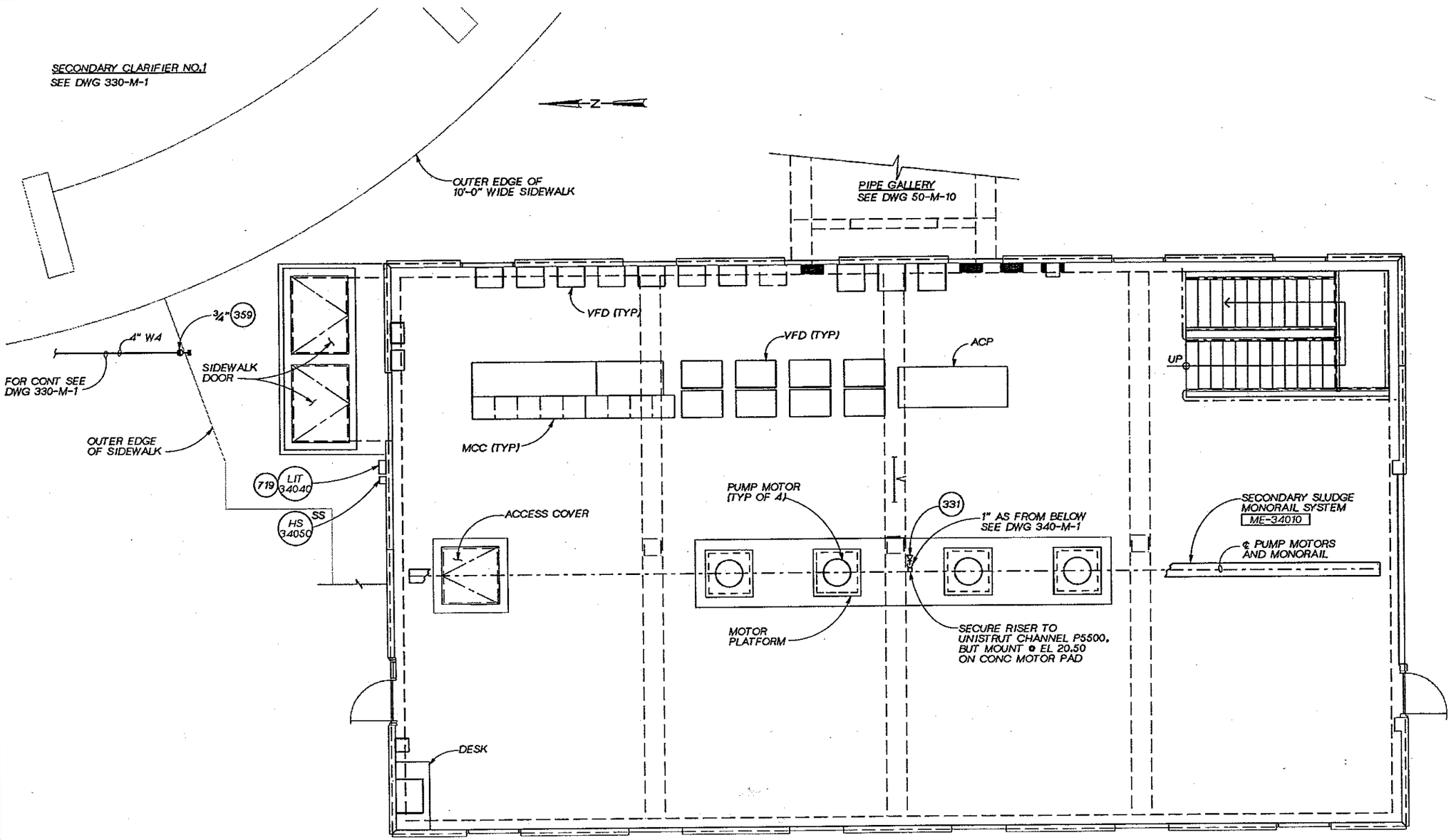

GROUND LEVEL PLAN

1/4" = 1'-0"

JOSEPH A. GAUTHIER STATE OF WASHINGTON REGISTERED PROFESSIONAL ENGINEER

CH2M HILL

DSGN	M. MOORE				
DR	M. MOORE				
CHK	M. BRACKEN				
APVD	J GAUTHIER	NO.	DATE	REVISION	BY / APVD

REUSE OF DOCUMENTS
THIS DOCUMENT, AND THE IDEAS AND DESIGNS INCORPORATED HEREIN, AS AN INSTRUMENT OF PROFESSIONAL SERVICE, IS THE PROPERTY OF CH2M HILL AND IS NOT TO BE USED, IN WHOLE OR IN PART, FOR ANY OTHER PROJECT WITHOUT THE WRITTEN AUTHORIZATION OF CH2M HILL.
©CH2M HILL

VERIFY SCALE
BAR IS ONE INCH ON ORIGINAL DRAWING.
0 1"
IF NOT ONE INCH ON THIS SHEET, ADJUST SCALES ACCORDINGLY.

CITY OF BELLINGHAM, WASHINGTON
POST POINT WASTEWATER TREATMENT PLANT UPGRADE

SECONDARY SLUDGE PUMP STATION
MECHANICAL
GROUND LEVEL PLAN

DWG NO. 340-M-2
DATE AUG. 1990
PROJ NO. SEA22462.C1

OVERLAY IDENTIFICATION: COMPOSITE, PROJID, FILE, OVERLAY, SCREEN

DGN NAME: H:/PROJ2/BELLINGH/BL340M-C.DGN

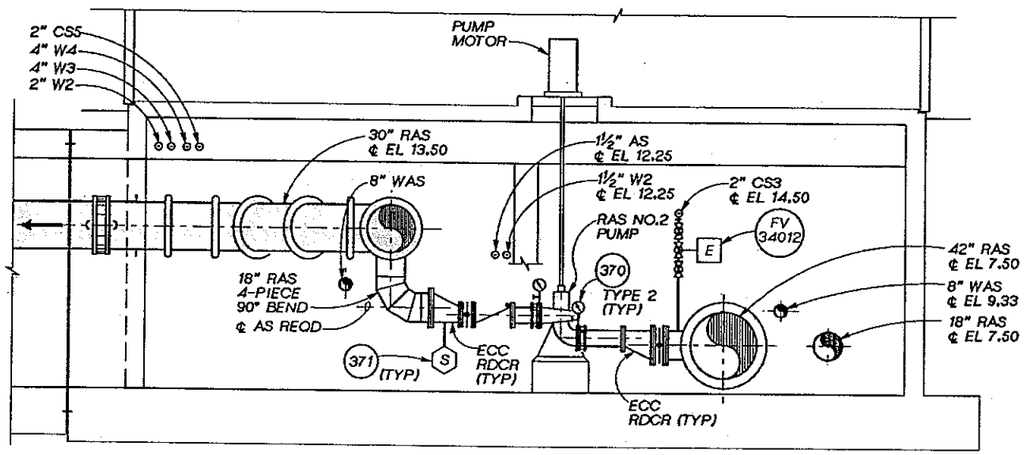

SECTION A
¼" = 1'-0"
340-M-1

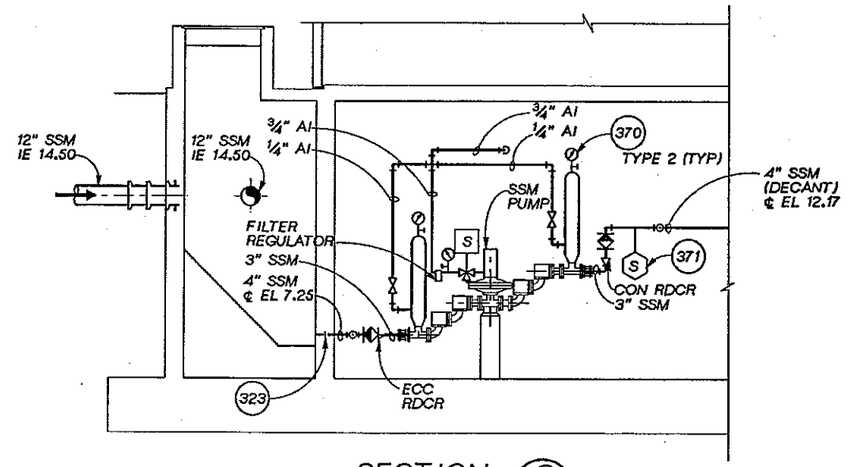

SECTION C
¼" = 1'-0"
340-M-1

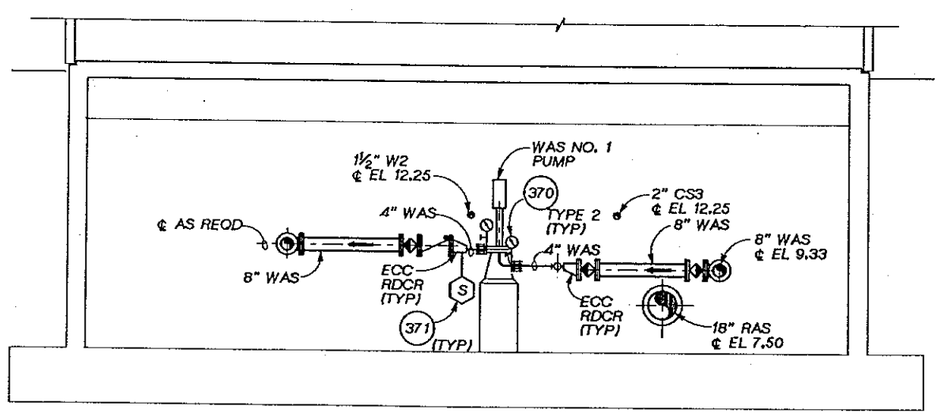

SECTION B
¼" = 1'-0"
340-M-1

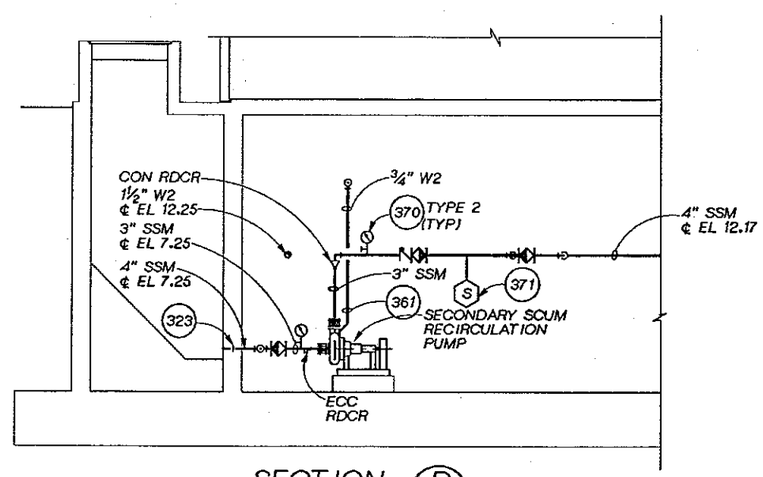

SECTION D
¼" = 1'-0"
340-M-1

JOSEPH A. GAUTHIER
STATE OF WASHINGTON
REGISTERED PROFESSIONAL ENGINEER

CH2M HILL

DSGN	M. MOORE
DR	M. MOORE
CHK	M. BRACKEN
APVD	J GAUTHIER

NO.	DATE	REVISION	BY	APVD

REUSE OF DOCUMENTS
THIS DOCUMENT, AND THE IDEAS AND DESIGNS INCORPORATED HEREIN, AS AN INSTRUMENT OF PROFESSIONAL SERVICE, IS THE PROPERTY OF CH2M HILL AND IS NOT TO BE USED, IN WHOLE OR IN PART, FOR ANY OTHER PROJECT WITHOUT THE WRITTEN AUTHORIZATION OF CH2M HILL.
©CH2M HILL

VERIFY SCALE
BAR IS ONE INCH ON ORIGINAL DRAWING.
0 1"
IF NOT ONE INCH ON THIS SHEET, ADJUST SCALES ACCORDINGLY.

CITY OF BELLINGHAM, WASHINGTON
POST POINT WASTEWATER TREATMENT PLANT UPGRADE

SECONDARY SLUDGE PUMP STATION
MECHANICAL SECTIONS

DWG NO. 340-M-3
DATE AUG. 1990
PROJ. NO. SEA22462.C1

DRAWN BY: SD GUNDY-C.S.H. DESIGNED BY:SD GUNDY/G FLOOD
DGN NAME: H:/PROJ2/BELLINGH/BL340H-A.DGN

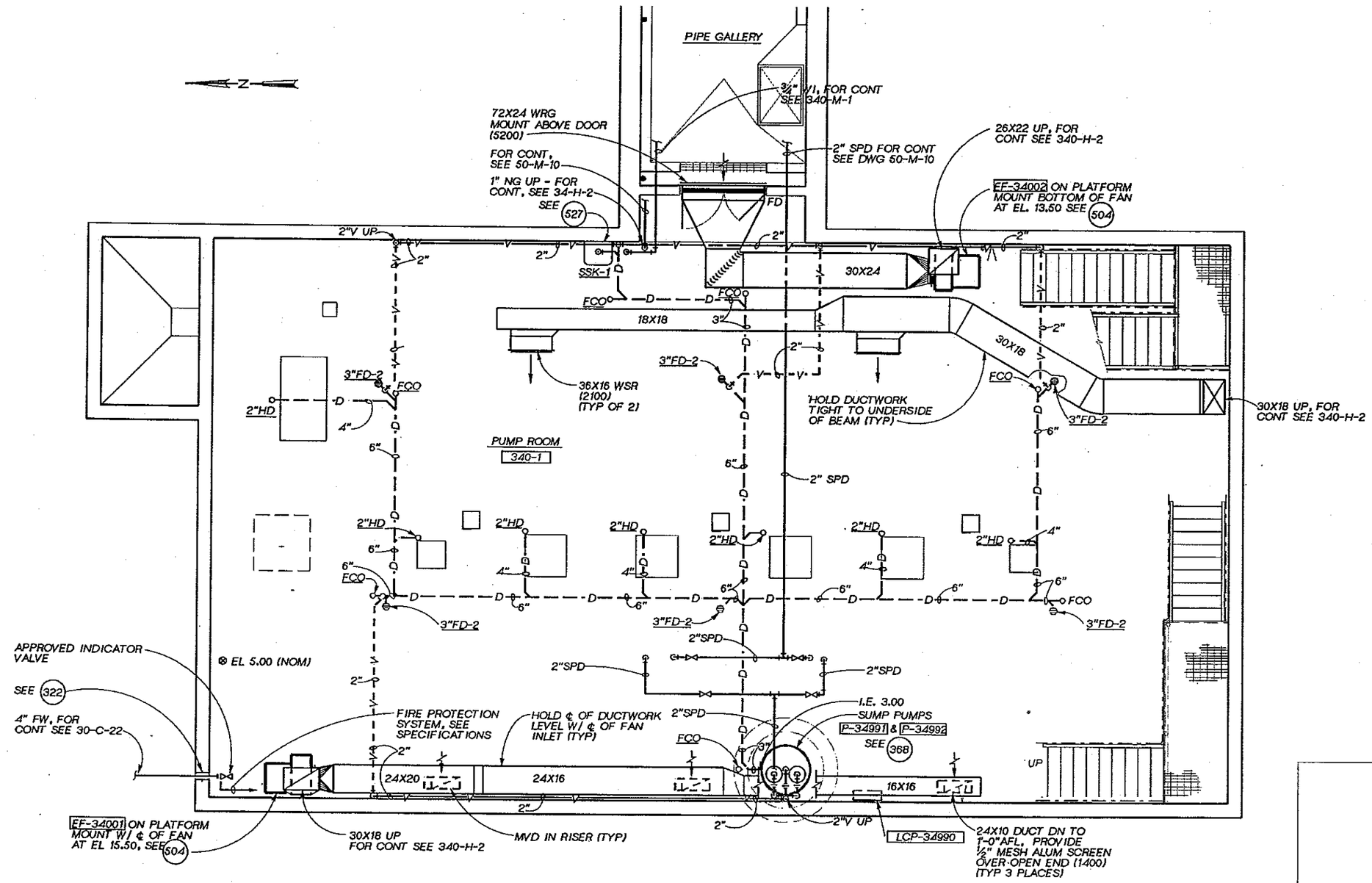

LOWER LEVEL PLAN

1/4"=1'-0"

DSGN S.GUNDY/G.FLOOD					
DR S.GUNDY					
CHK J. SIEMENS					
APVD J. GAUTHIER	NO.	DATE	REVISION	BY	APVD

CH2M HILL

REUSE OF DOCUMENTS
THIS DOCUMENT, AND THE IDEAS AND DESIGNS INCORPORATED HEREIN, AS AN INSTRUMENT OF PROFESSIONAL SERVICE, IS THE PROPERTY OF CH2M HILL AND IS NOT TO BE USED, IN WHOLE OR IN PART, FOR ANY OTHER PROJECT WITHOUT THE WRITTEN AUTHORIZATION OF CH2M HILL.
©CH2M HILL

VERIFY SCALE
BAR IS ONE INCH ON ORIGINAL DRAWING.
0 1"
IF NOT ONE INCH ON THIS SHEET, ADJUST SCALES ACCORDINGLY.

CITY OF BELLINGHAM, WASHINGTON
POST POINT WASTEWATER TREATMENT PLANT UPGRADE

SECONDARY SLUDGE PUMP STATION
HVAC AND PLUMBING
LOWER LEVEL PLAN

DWG NO. 340-H-1
DATE AUG. 1990
PROJ NO. SEA22462.C1

DRAWN BY: SD GUNDY-C.S.H. DESIGNED BY: S GUNDY/G FLOOD
DGN NAME: H:/PROJ2/BELLINGH/BL340H-B.DGN

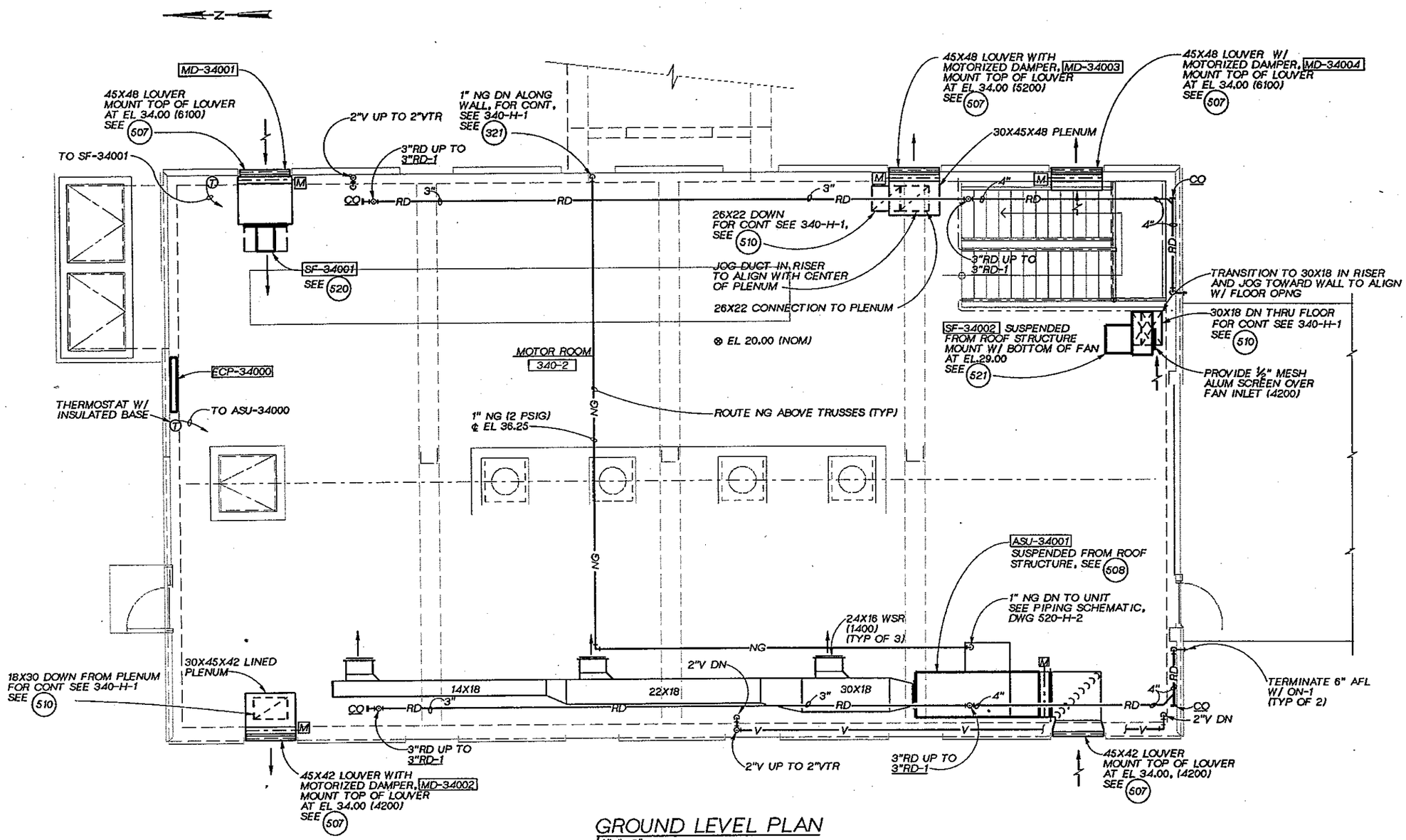

GROUND LEVEL PLAN

¼"=1'-0"

DSGN S.GUNDY/G.FLOOD					
DR S.GUNDY					
CHK J. SIEMENS					
APVD J. GAUTHIER	NO.	DATE	REVISION	BY	APVD

CH2M HILL

REUSE OF DOCUMENTS
THIS DOCUMENT, AND THE IDEAS AND DESIGNS INCORPORATED HEREIN, AS AN INSTRUMENT OF PROFESSIONAL SERVICE, IS THE PROPERTY OF CH2M HILL AND IS NOT TO BE USED, IN WHOLE OR IN PART, FOR ANY OTHER PROJECT WITHOUT THE WRITTEN AUTHORIZATION OF CH2M HILL.
©CH2M HILL

VERIFY SCALE
BAR IS ONE INCH ON ORIGINAL DRAWING.
0 1"
IF NOT ONE INCH ON THIS SHEET, ADJUST SCALES ACCORDINGLY.

CITY OF BELLINGHAM, WASHINGTON
POST POINT WASTEWATER TREATMENT PLANT UPGRADE

SECONDARY SLUDGE PUMP STATION
HVAC AND PLUMBING
GROUND LEVEL PLAN

DWG NO. 340-H-2
DATE AUG. 1990
PROJ NO. SEA22462.C1

JOSEPH A. GAUTHIER STATE OF WASHINGTON REGISTERED PROFESSIONAL ENGINEER

DRAWN BY: BBL RSF DESIGNED BY: KORBUS/MOORE
DGN NAME: H:/PROJ2/BELLINGH/BL410S-A.DGN

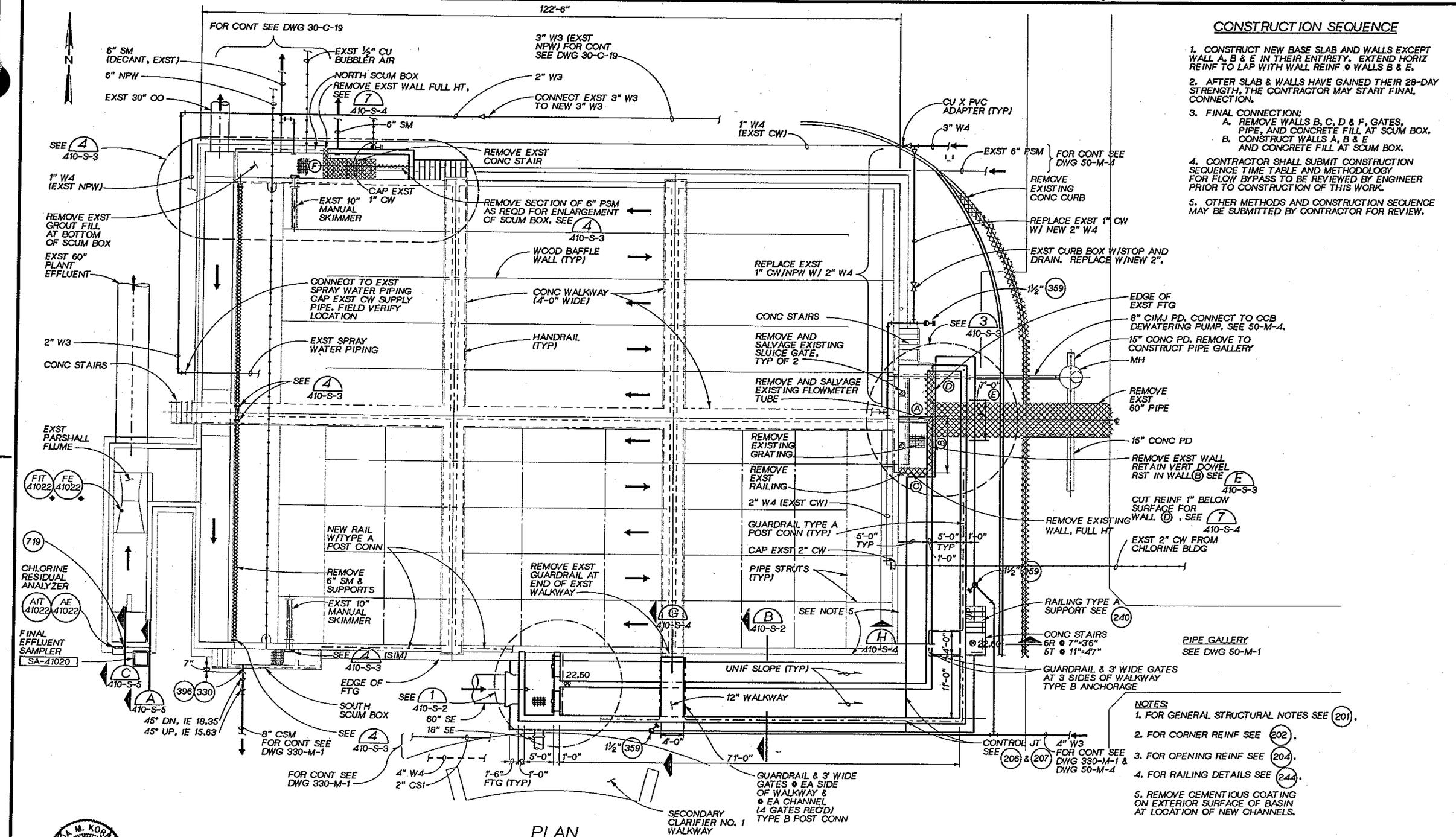

PLAN
1/8" = 1'-0"

CONSTRUCTION SEQUENCE

1. CONSTRUCT NEW BASE SLAB AND WALLS EXCEPT WALL A, B & E IN THEIR ENTIRETY. EXTEND HORIZ REINF TO LAP WITH WALL REINF @ WALLS B & E.
2. AFTER SLAB & WALLS HAVE GAINED THEIR 28-DAY STRENGTH, THE CONTRACTOR MAY START FINAL CONNECTION.
3. FINAL CONNECTION:
   A. REMOVE WALLS B, C, D & F, GATES, PIPE, AND CONCRETE FILL AT SCUM BOX.
   B. CONSTRUCT WALLS A, B & E AND CONCRETE FILL AT SCUM BOX.
4. CONTRACTOR SHALL SUBMIT CONSTRUCTION SEQUENCE TIME TABLE AND METHODOLOGY FOR FLOW BYPASS TO BE REVIEWED BY ENGINEER PRIOR TO CONSTRUCTION OF THIS WORK.
5. OTHER METHODS AND CONSTRUCTION SEQUENCE MAY BE SUBMITTED BY CONTRACTOR FOR REVIEW.

NOTES:
1. FOR GENERAL STRUCTURAL NOTES SEE 201.
2. FOR CORNER REINF SEE 202.
3. FOR OPENING REINF SEE 204.
4. FOR RAILING DETAILS SEE 244.
5. REMOVE CEMENTIOUS COATING ON EXTERIOR SURFACE OF BASIN AT LOCATION OF NEW CHANNELS.

CHRISTINA M. KORBUS STATE OF WASHINGTON 22364 REGISTERED PROFESSIONAL ENGINEER

CH2M HILL

DSGN	KORBUS/MOORE
DR	B. LAZARO
CHK	J. MACKEY
APVD	J GAUTHIER

NO.	DATE	REVISION	BY	APVD

REUSE OF DOCUMENTS
THIS DOCUMENT, AND THE IDEAS AND DESIGNS INCORPORATED HEREIN, AS AN INSTRUMENT OF PROFESSIONAL SERVICE, IS THE PROPERTY OF CH2M HILL AND IS NOT TO BE USED, IN WHOLE OR IN PART, FOR ANY OTHER PROJECT WITHOUT THE WRITTEN AUTHORIZATION OF CH2M HILL.
©CH2M HILL

VERIFY SCALE
BAR IS ONE INCH ON ORIGINAL DRAWING.
0 1"
IF NOT ONE INCH ON THIS SHEET, ADJUST SCALES ACCORDINGLY.

CITY OF BELLINGHAM, WASHINGTON
POST POINT WASTEWATER TREATMENT PLANT UPGRADE

CHLORINE CONTACT BASIN MODIFICATIONS
STRUCTURAL AND MECHANICAL PLAN

DWG NO. 410-S-1
DATE AUG. 1990
PROJ NO. SEA22462.C1

DRAWN BY: BBL/M.MOORE DESIGNED BY: LMK/M.MOORE
DGN NAME: H:/PROJ2/BELLINGH/BL410S-B.DGN

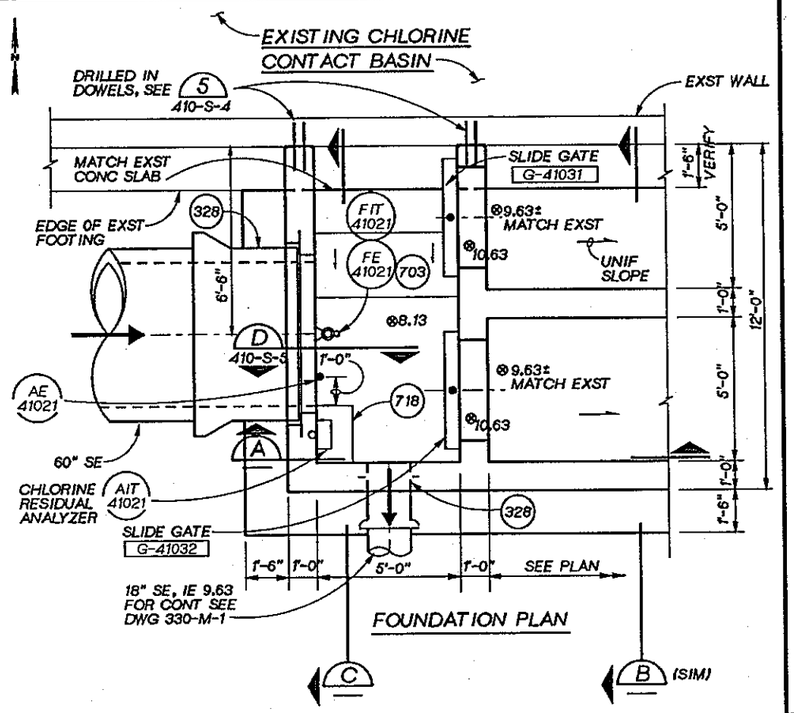

FOUNDATION PLAN

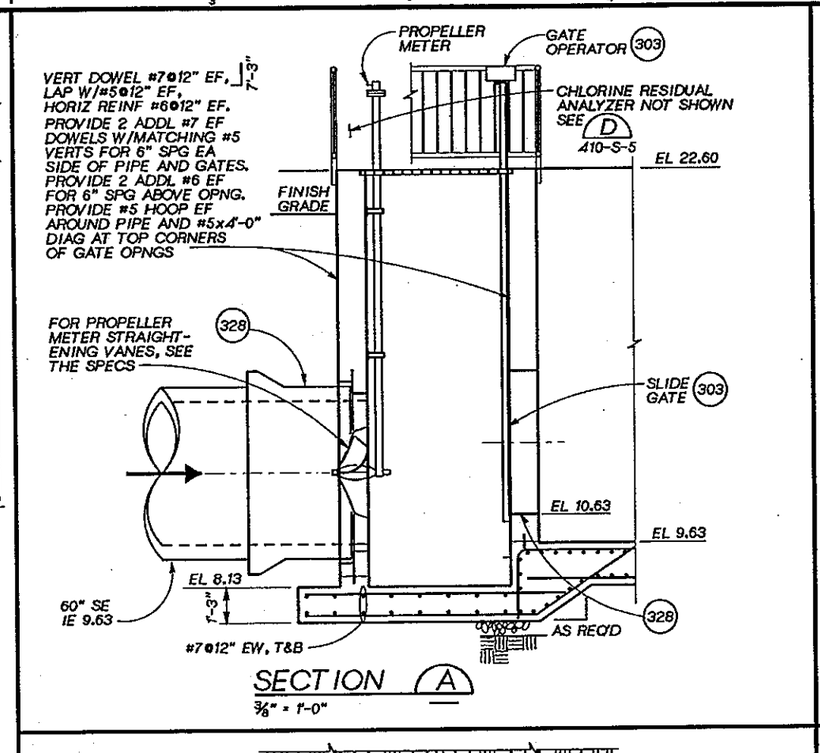

SECTION A
3/8" = 1'-0"

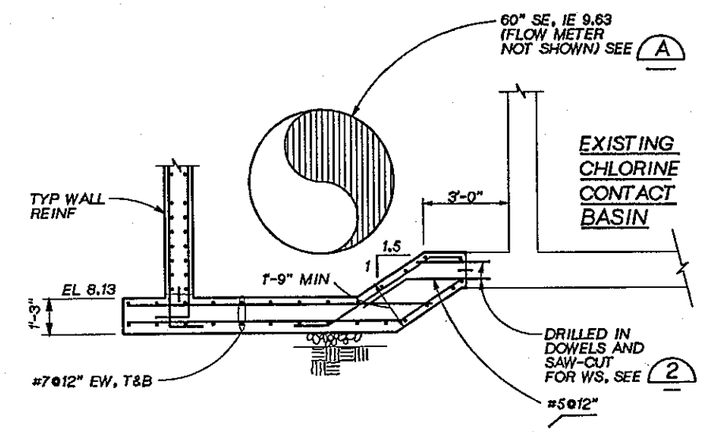

SECTION C
3/8" = 1'-0"

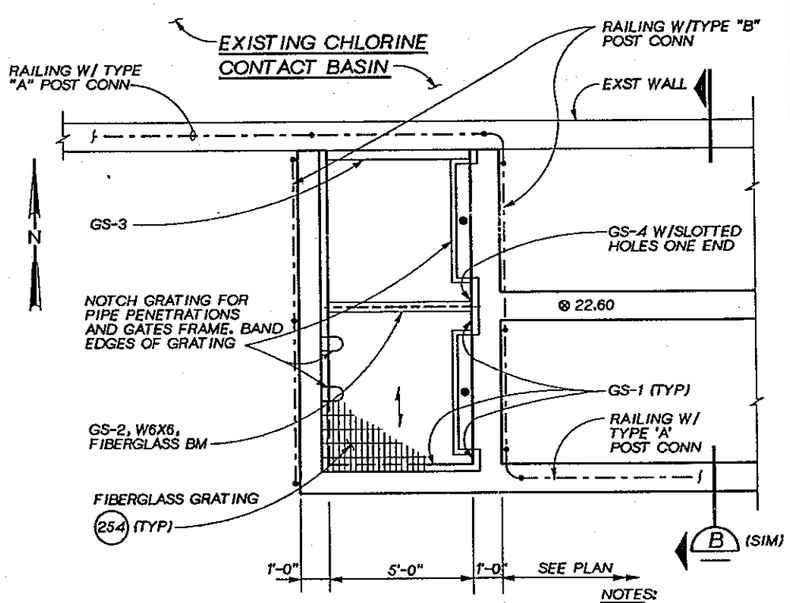

GROUND LEVEL PLAN

NOTES:
1. FOR GRATING DETAILS SEE 254
2. FOR RAILING DETAILS SEE 244

DETAIL 1
3/8" = 1'-0"
410-S-1

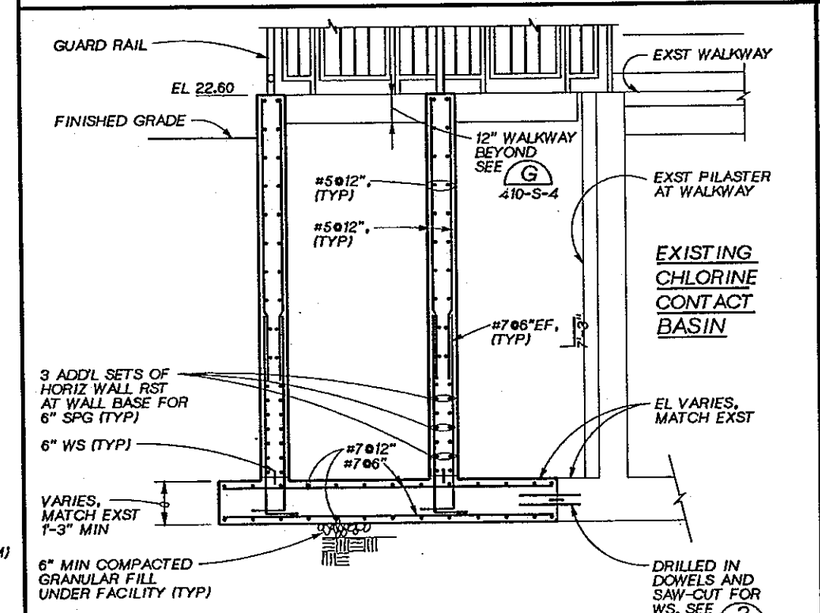

SECTION B
3/8" = 1'-0"
410-S-1

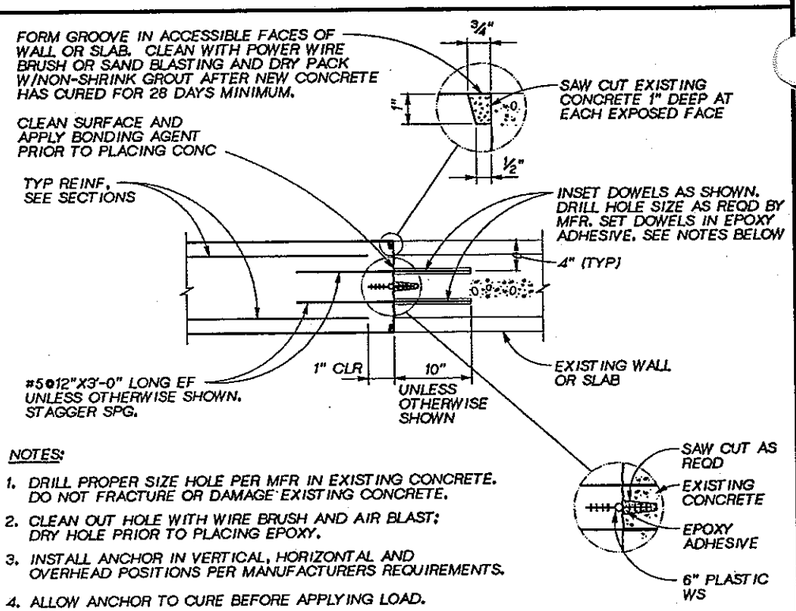

NOTES:
1. DRILL PROPER SIZE HOLE PER MFR IN EXISTING CONCRETE. DO NOT FRACTURE OR DAMAGE EXISTING CONCRETE.
2. CLEAN OUT HOLE WITH WIRE BRUSH AND AIR BLAST; DRY HOLE PRIOR TO PLACING EPOXY.
3. INSTALL ANCHOR IN VERTICAL, HORIZONTAL AND OVERHEAD POSITIONS PER MANUFACTURERS REQUIREMENTS.
4. ALLOW ANCHOR TO CURE BEFORE APPLYING LOAD.

DETAIL 2
NTS
410-S-2
410-S-3

LINDA M. KORBUS STATE OF WASHINGTON 22364 REGISTERED PROFESSIONAL ENGINEER

CH2M HILL

DSGN	KORBUS/MOORE
DR	B. LAZARO
CHK	J. MACKEY
APVD	J. GAUTHIER

NO.	DATE	REVISION	BY	APVD

REUSE OF DOCUMENTS
THIS DOCUMENT, AND THE IDEAS AND DESIGNS INCORPORATED HEREIN, AS AN INSTRUMENT OF PROFESSIONAL SERVICE, IS THE PROPERTY OF CH2M HILL AND IS NOT TO BE USED, IN WHOLE OR IN PART, FOR ANY OTHER PROJECT WITHOUT THE WRITTEN AUTHORIZATION OF CH2M HILL.
©CH2M HILL

VERIFY SCALE
BAR IS ONE INCH ON ORIGINAL DRAWING.
0 1"
IF NOT ONE INCH ON THIS SHEET, ADJUST SCALES ACCORDINGLY.

CITY OF BELLINGHAM, WASHINGTON
POST POINT WASTEWATER TREATMENT PLANT UPGRADE

CHLORINE CONTACT BASIN MODIFICATIONS
STRUCTURAL AND MECHANICAL SECTIONS AND DETAILS

DWG NO. 410-S-2
DATE AUG. 1990
PROJ. NO. SEA22462.C1

OVERLAY IDENTIFICATION: COMPOSITE, OVERLAY, SCREEN
PROJID
FILE

DRAWN BY: M.MOORE DESIGNED BY: KORBUS/MOORE
DGN NAME: H:/PROJ2/BELLINGH/BL410S-C.DGN

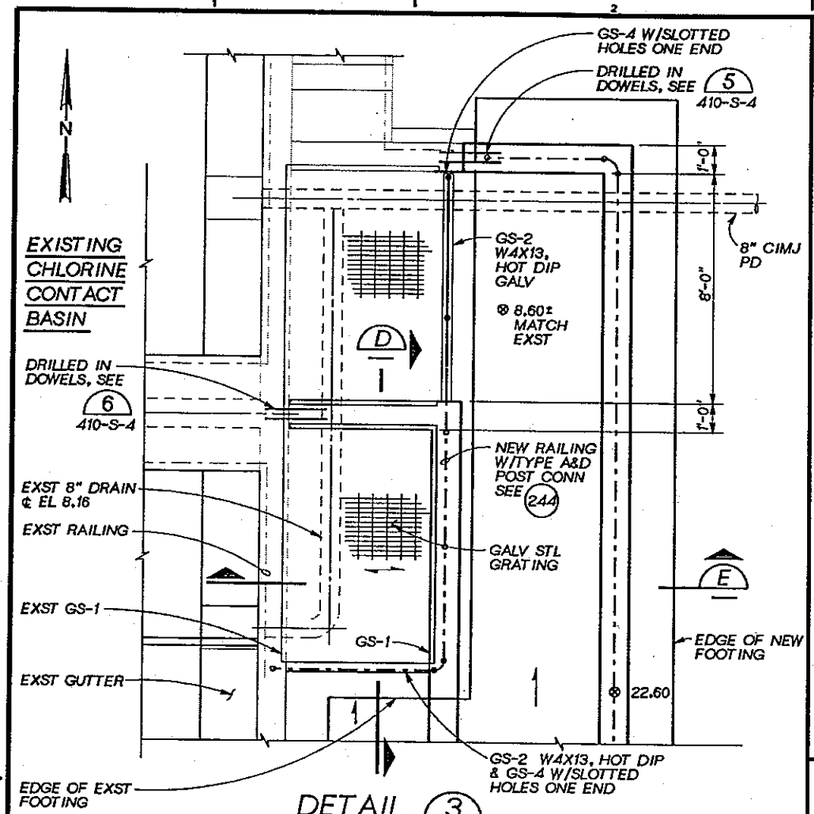

DETAIL 3
3/8" = 1'-0" 410-S-1

NOTE:
FOR GRATING DETAILS SEE 254

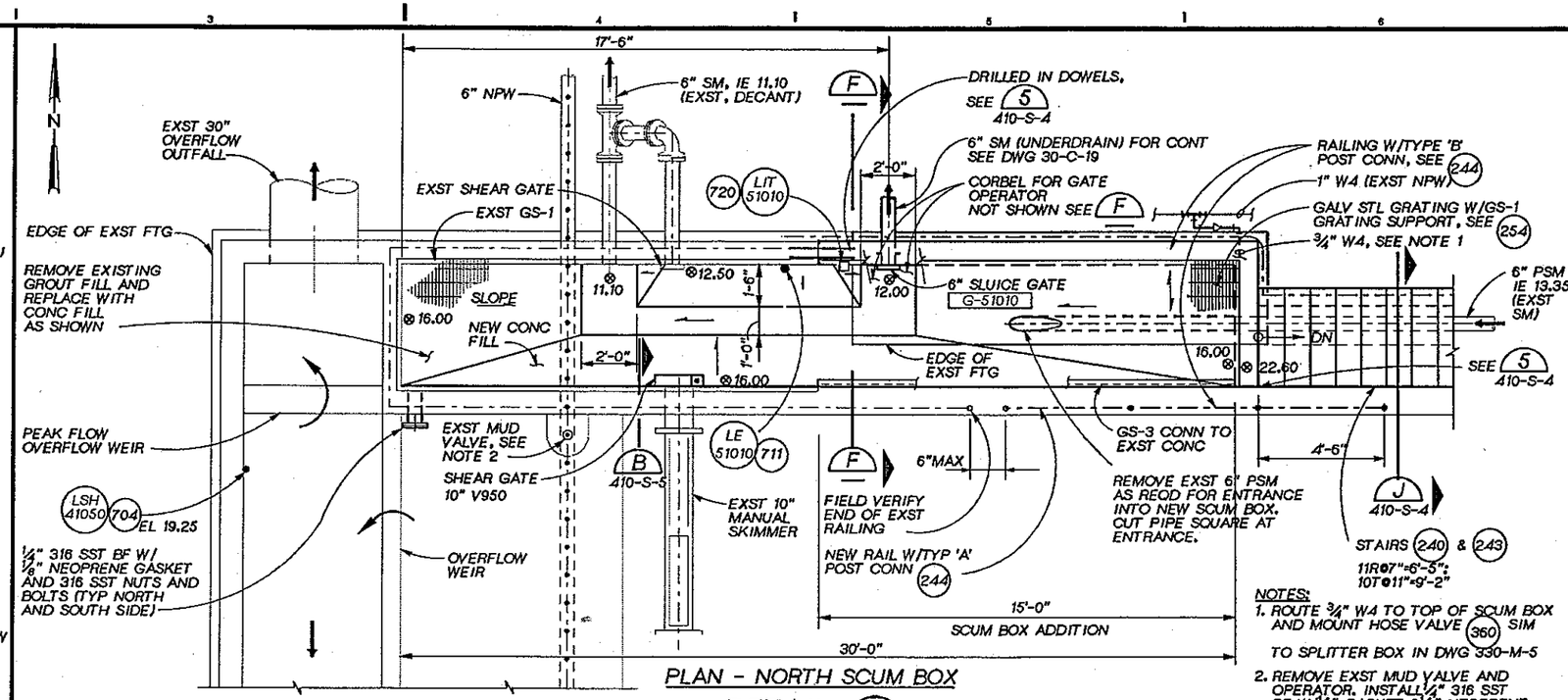

NOTES:
1. ROUTE 3/4" W4 TO TOP OF SCUM BOX AND MOUNT HOSE VALVE 360 SIM TO SPLITTER BOX IN DWG 330-M-5
2. REMOVE EXST MUD VALVE AND OPERATOR. INSTALL 1/4" 316 SST BF W/ 1/8" GASKET & 1/8" NEOPRENE BF W/ 1/8" NEOPRENE GASKET 316 SST BOLTS OVER VALVE OUTLET AFTER USE OF NPW NO LONGER NEEDED.

PLAN - NORTH SCUM BOX

DETAIL 4
3/8" = 1'-0" 410-S-1

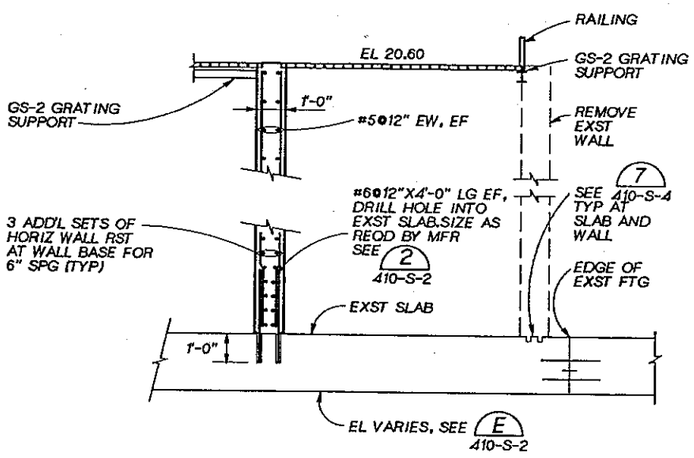

SECTION D
3/8" = 1'-0"

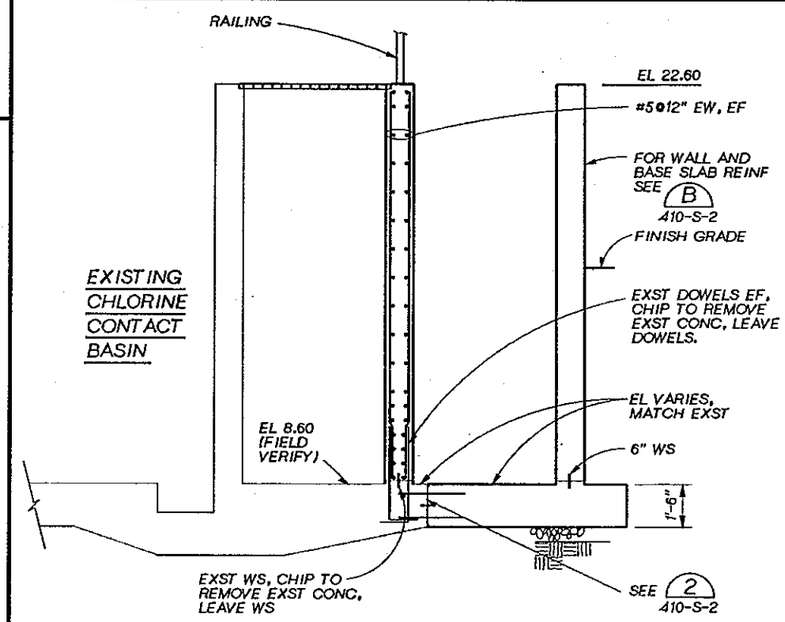

SECTION E
3/8" = 1'-0"

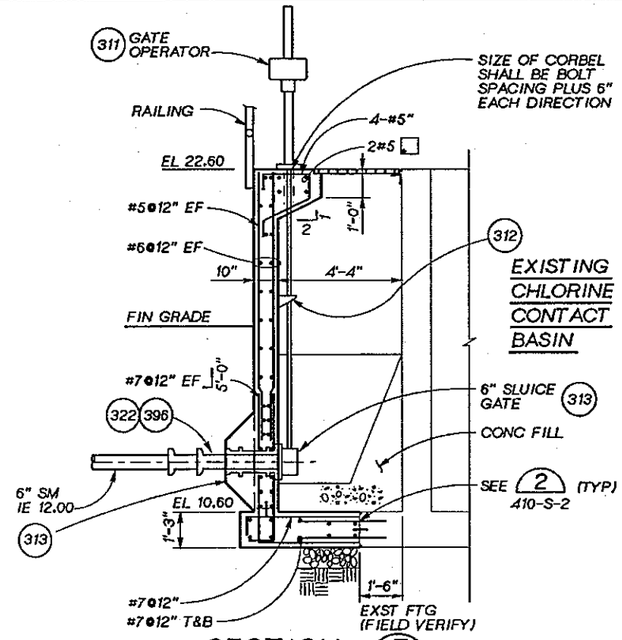

SECTION F
3/8" = 1'-0"

NOTE:
FOR GRATING DETAILS SEE 254

OVERLAY IDENTIFICATION: COMPOSITE, PROJD, DISPLAY, FILE, SCREEN

CHRISTINDA M. KORBUS, STATE OF WASHINGTON, REGISTERED PROFESSIONAL ENGINEER

CH2M HILL

DSGN	KORBUS/MOORE
DR	B. LAZARO
CHK	J. MACKEY
APVD	J. GAUTHIER

NO.	DATE	REVISION	BY	APVD

REUSE OF DOCUMENTS
THIS DOCUMENT, AND THE IDEAS AND DESIGNS INCORPORATED HEREIN, AS AN INSTRUMENT OF PROFESSIONAL SERVICE, IS THE PROPERTY OF CH2M HILL AND IS NOT TO BE USED, IN WHOLE OR IN PART, FOR ANY OTHER PROJECT WITHOUT THE WRITTEN AUTHORIZATION OF CH2M HILL.
©CH2M HILL

VERIFY SCALE
BAR IS ONE INCH ON ORIGINAL DRAWING.
0 1"
IF NOT ONE INCH ON THIS SHEET, ADJUST SCALES ACCORDINGLY.

CITY OF BELLINGHAM, WASHINGTON
POST POINT WASTEWATER TREATMENT PLANT UPGRADE

CHLORINE CONTACT BASIN MODIFICATIONS
STRUCTURAL AND MECHANICAL SECTIONS AND DETAILS

DWG NO. 410-S-3
DATE AUG. 1990
PROJ NO. SEA22462.C1

DATE: 8-28-90
DRAWN BY: M. MOORE DESIGNED BY: L.KORBUS
DGN NAME: H:/PROJ2/BELLINGH/BL410S-E.DGN

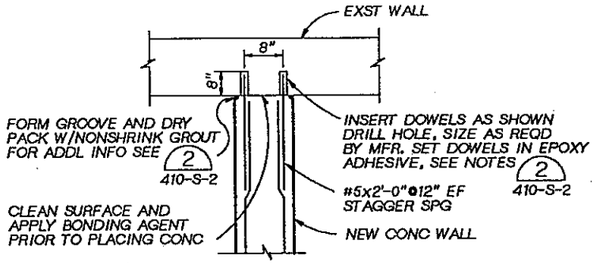

PLAN

DETAIL 5
3/4" =1'-0" 410-S-2 410-S-3

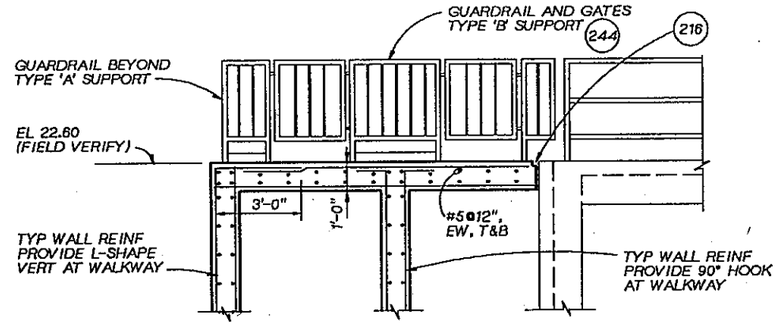

SECTION G
3/8" = 1'-0" 410-S-2 410-S-1

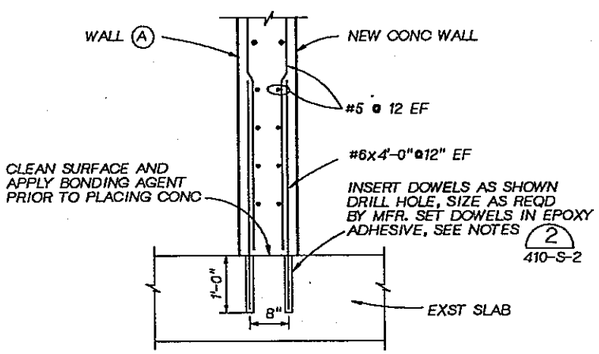

DETAIL 6
3/4" =1'-0" 410-S-3

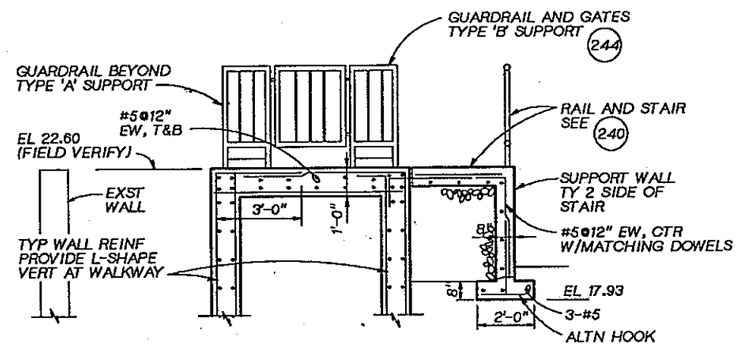

SECTION H
3/8" = 1'-0" 410-S-2

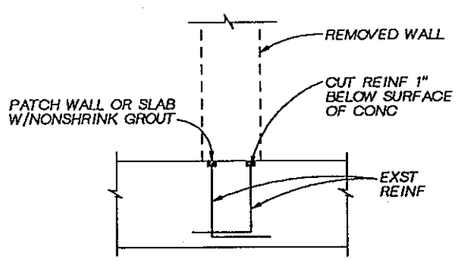

DETAIL 7
3/4" =1'-0" 410-S-1 410-S-3

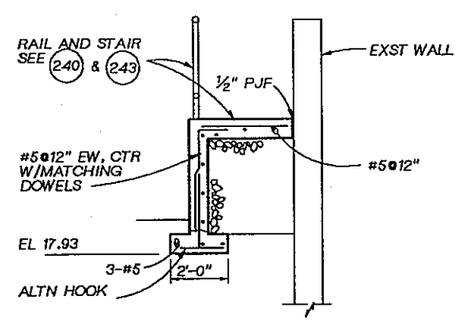

SECTION J
3/8" = 1'-0" 410-S-3

DSGN	L. KORBUS				
DR	B. LAZARO				
CHK	W. BENNETT				
APVD	J. GAUTHIER	NO.	DATE	REVISION	BY APVD

CH2M HILL

REUSE OF DOCUMENTS
THIS DOCUMENT, AND THE IDEAS AND DESIGNS INCORPORATED HEREIN, AS AN INSTRUMENT OF PROFESSIONAL SERVICE, IS THE PROPERTY OF CH2M HILL AND IS NOT TO BE USED, IN WHOLE OR IN PART, FOR ANY OTHER PROJECT WITHOUT THE WRITTEN AUTHORIZATION OF CH2M HILL.
©CH2M HILL

BAR IS ONE INCH ON ORIGINAL DRAWING. 0 1"
IF NOT ONE INCH ON THIS SHEET, ADJUST SCALES ACCORDINGLY.

CITY OF BELLINGHAM, WASHINGTON
POST POINT WASTEWATER TREATMENT PLANT UPGRADE

CHLORINE CONTACT BASIN MODIFICATIONS
STRUCTURAL AND MECHANICAL SECTIONS AND DETAILS

DWG NO. 410-S-4
DATE AUG. 1990
PROJ NO. SEA22462.C1

DATE: 8-17-90
DRAWN BY: M.MOORE DESIGNED BY: MOORE
DGN NAME: H:/PROJ2/BELLINGH/BL410S-D.DGN

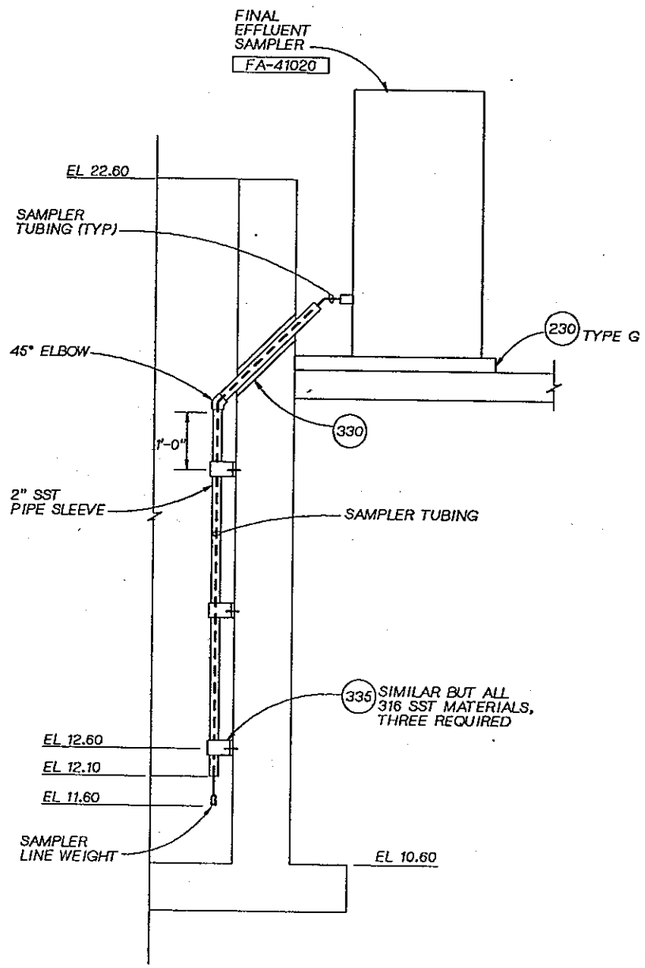

SECTION A
3/4" = 1'-0" 410-S-1

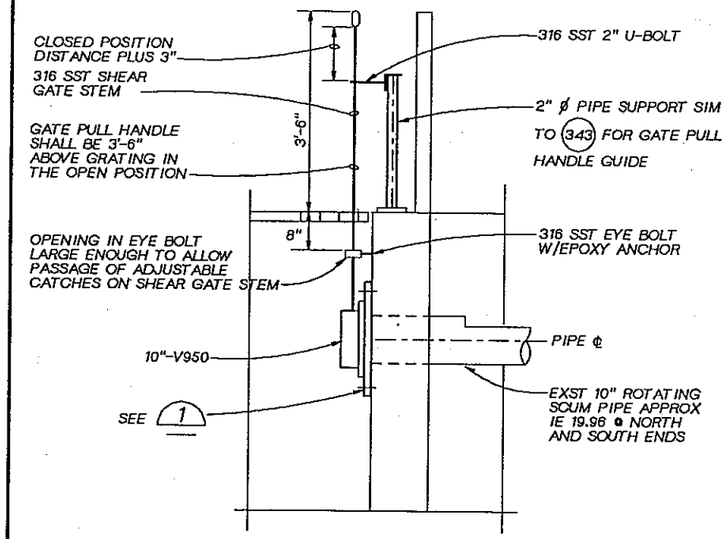

SECTION B
3/4" = 1'-0" 410-S-3

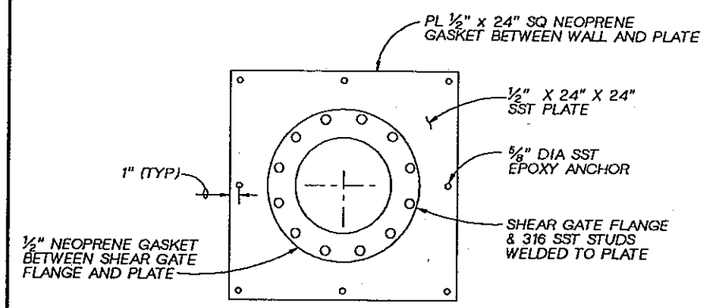

DETAIL 1
1 1/2" = 1'-0"

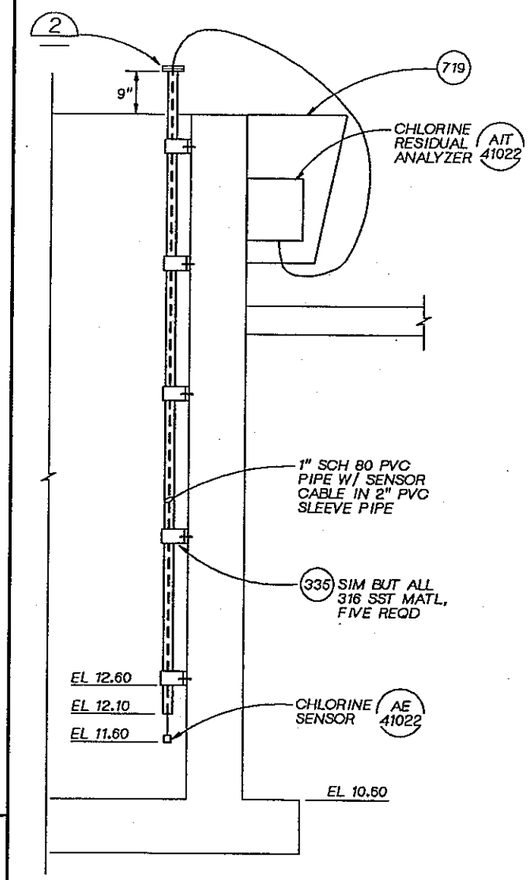

SECTION C
3/4" = 1'-0" 410-S-1

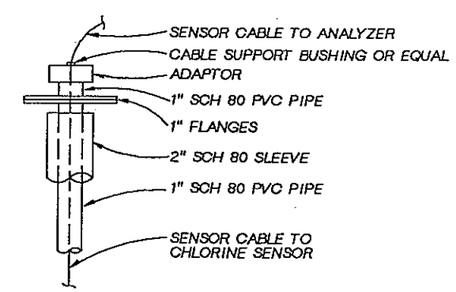

DETAIL 2
NTS

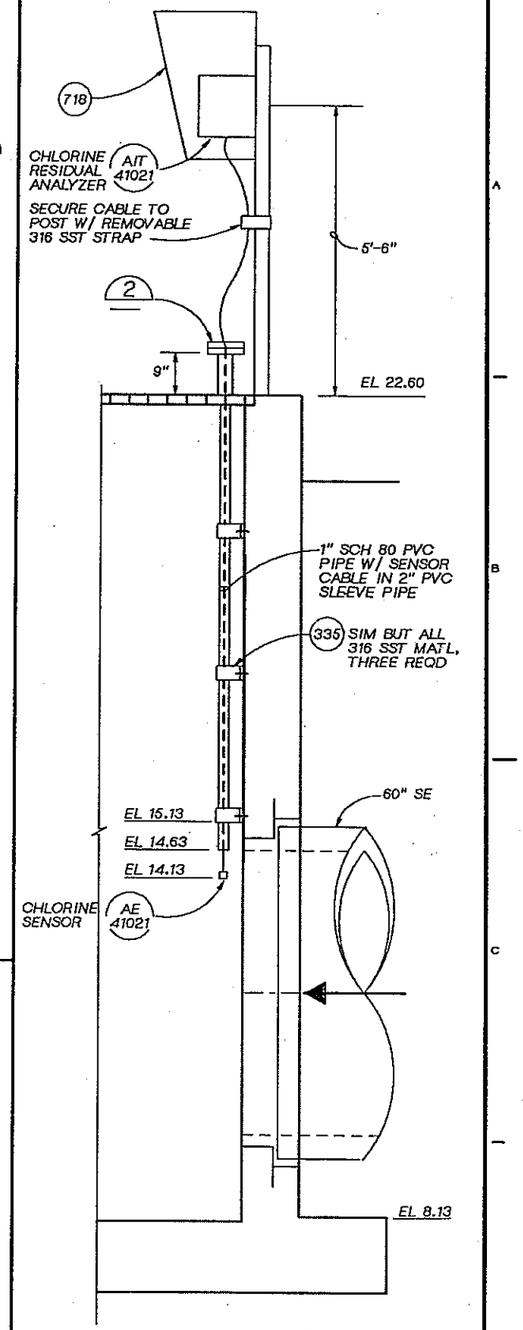

SECTION D
3/4" = 1'-0" 410-S-2

DSGN	M. MOORE			
DR	M. MOORE			
CHK	J. MACKEY			
APVD	J. GAUTHIER	NO.	DATE	REVISION	BY	APVD

CH2M HILL

REUSE OF DOCUMENTS
THIS DOCUMENT, AND THE IDEAS AND DESIGNS INCORPORATED HEREIN, AS AN INSTRUMENT OF PROFESSIONAL SERVICE, IS THE PROPERTY OF CH2M HILL AND IS NOT TO BE USED, IN WHOLE OR IN PART, FOR ANY OTHER PROJECT WITHOUT THE WRITTEN AUTHORIZATION OF CH2M HILL.
©CH2M HILL

BAR IS ONE INCH ON ORIGINAL DRAWING.
0 1"
IF NOT ONE INCH ON THIS SHEET, ADJUST SCALES ACCORDINGLY.

CITY OF BELLINGHAM, WASHINGTON
POST POINT WASTEWATER TREATMENT PLANT UPGRADE

CHLORINE CONTACT BASIN MODIFICATIONS
STRUCTURAL AND MECHANICAL SECTIONS AND DETAILS

DWG NO. 410-S-5
DATE AUG. 1990
PROJ NO. SEA22462.C1

DATE: 8-14-90
DRAWN BY: BBL DESIGNED BY: PG
DGN NAME: H:/PROJ2/BELLINGH/BL420A-B.DGN

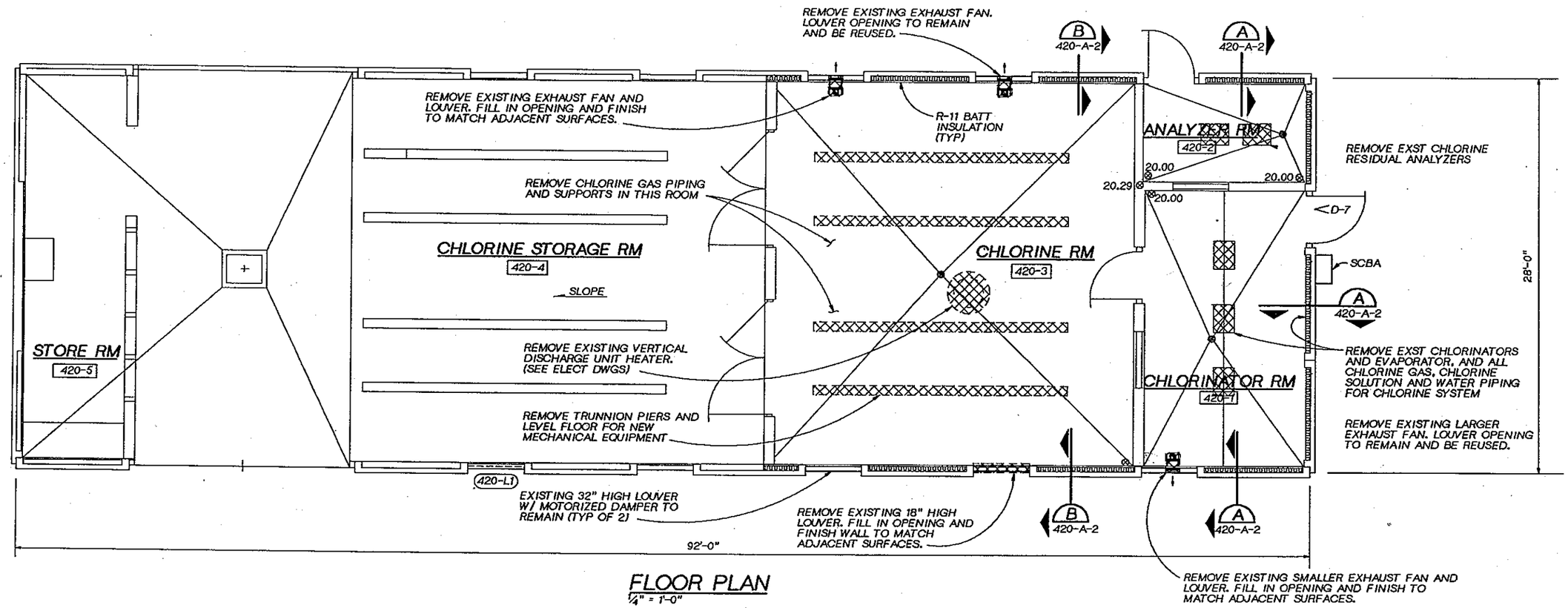

FLOOR PLAN
1/4" = 1'-0"

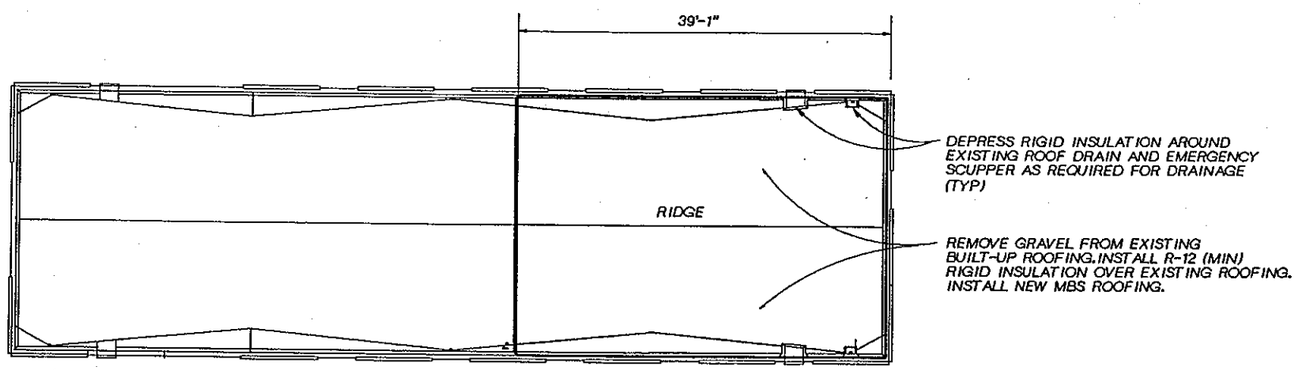

ROOF PLAN
1/8" = 1'-0"

BUILDING CODE NOTES:

APPLICABLE CODES: 1988 UBC
1988 UFC

1. TYPE OF OCCUPANCY: H-2, H-7
2. TYPE OF CONSTRUCTION: V-N
3. NUMBER OF STORIES
   ACTUAL: ONE
   ALLOWED: ONE
4. ACTUAL FLOOR AREA: 2296 sf
5. ALLOWABLE FLOOR AREA: 3,560sf
6. SPRINKLER SYSTEM REQD
   STORAGE & CHLORINATOR ROOMS
7. OCCUPANT LOAD: 2296/30 = 8

REGISTERED ARCHITECT JOHN L. PRUSS STATE OF WASHINGTON

CH2M HILL

DSGN	O FRIAL					
DR	O FRIAL					
CHK	R WHITE					
APVD	J. GAUTHIER	NO.	DATE	REVISION	BY	APVD

REUSE OF DOCUMENTS
THIS DOCUMENT, AND THE IDEAS AND DESIGNS INCORPORATED HEREIN, AS AN INSTRUMENT OF PROFESSIONAL SERVICE, IS THE PROPERTY OF CH2M HILL AND IS NOT TO BE USED, IN WHOLE OR IN PART, FOR ANY OTHER PROJECT WITHOUT THE WRITTEN AUTHORIZATION OF CH2M HILL.
©CH2M HILL

BAR IS ONE INCH ON ORIGINAL DRAWING.
0 1"
IF NOT ONE INCH ON THIS SHEET, ADJUST SCALES ACCORDINGLY.

CITY OF BELLINGHAM, WASHINGTON
POST POINT WASTEWATER TREATMENT PLANT UPGRADE

CHLORINE BUILDING MODIFICATIONS
ARCHITECTURAL
EXISTING BUILDING FLOOR AND ROOF PLANS

DWG NO. 420-A-1
DATE AUG. 1990
PROJ. NO. SEA22462.C1

OVERLAY IDENTIFICATION | COMPOSITE | OVERLAY | PROJ.ID | FILE

DATE: 08/26/90
DRAWN BY: O A FRIAL DESIGNED BY: OA FRIAL
DGN NAME: H:/PROJ2/BELLINGH/BL420A-C.DGN

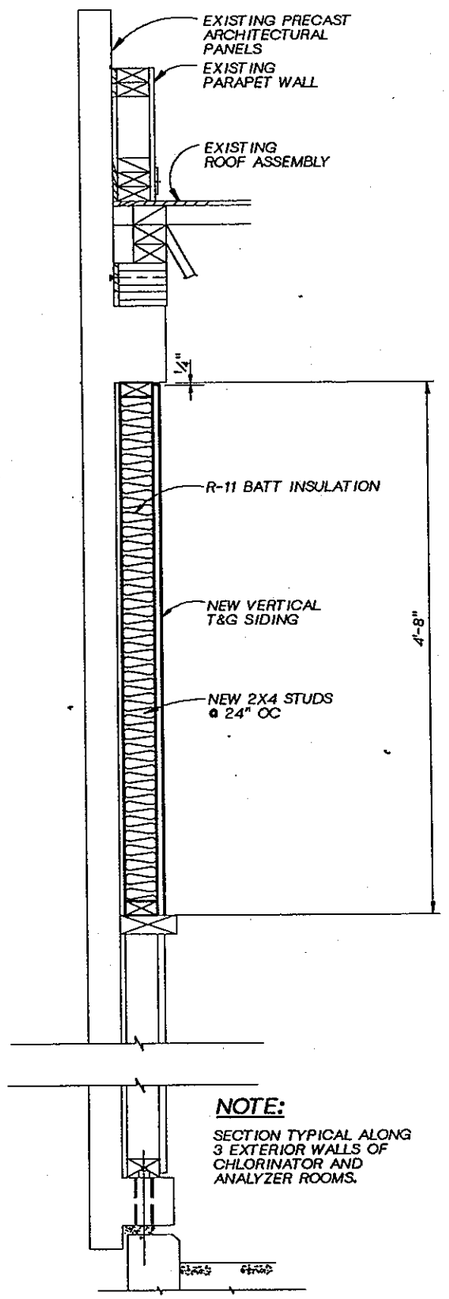

NOTE:
SECTION TYPICAL ALONG 3 EXTERIOR WALLS OF CHLORINATOR AND ANALYZER ROOMS.

SECTION A
1½" = 1'-0" 420-A-1

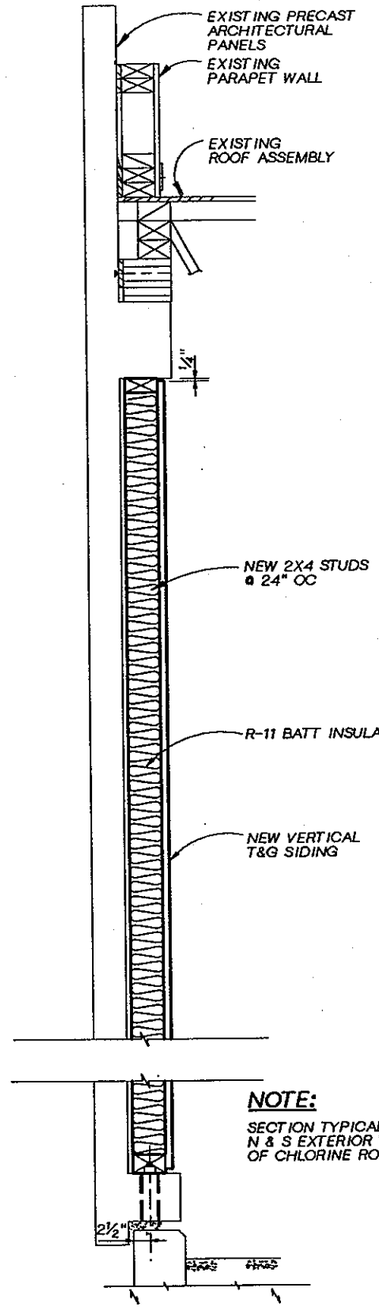

NOTE:
SECTION TYPICAL ALONG N & S EXTERIOR WALLS OF CHLORINE ROOM.

SECTION B
1½" = 1'-0" 420-A-1

REGISTERED ARCHITECT JOHN A. FRIAL STATE OF WASHINGTON

CH2M HILL

DSGN	O FRIAL
DR	O FRIAL
CHK	R WHITE
APVD	J. GAUTHIER

NO.	DATE	REVISION	BY	APVD

REUSE OF DOCUMENTS
THIS DOCUMENT, AND THE IDEAS AND DESIGNS INCORPORATED HEREIN, AS AN INSTRUMENT OF PROFESSIONAL SERVICE, IS THE PROPERTY OF CH2M HILL AND IS NOT TO BE USED, IN WHOLE OR IN PART, FOR ANY OTHER PROJECT WITHOUT THE WRITTEN AUTHORIZATION OF CH2M HILL.
©CH2M HILL

BAR IS ONE INCH ON ORIGINAL DRAWING.
0 1"
IF NOT ONE INCH ON THIS SHEET, ADJUST SCALES ACCORDINGLY.

CITY OF BELLINGHAM, WASHINGTON
POST POINT WASTEWATER TREATMENT PLANT UPGRADE

CHLORINE BUILDING MODIFICATIONS
ARCHITECTURAL
EXISTING BUILDING DETAILS

DWG NO. 420-A-2
DATE AUG. 1990
PROJ NO. SEA22462.C1

COMPOSITE
OVERLAY SCREEN
OVERLAY IDENTIFICATION
PROJID
FILE

DATE: 8/26/90
DRAWN BY: G BOWER DESIGNED BY: G BOWER
DGN NAME: H:/PROJ2/BELLINGH/BL420A-A.DGN

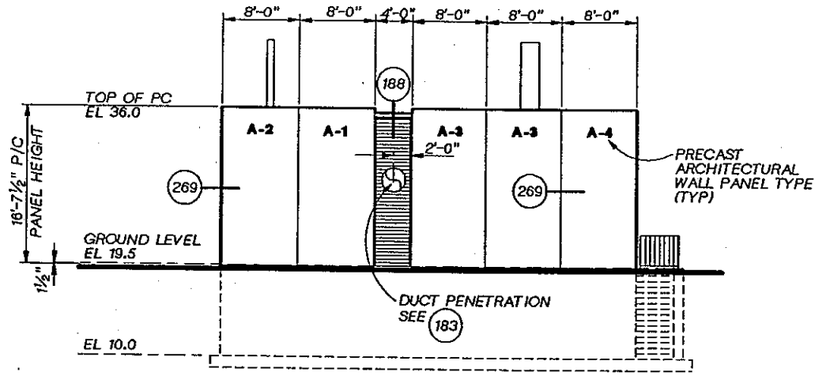

SOUTH ELEVATION
⅛"=1'-0"

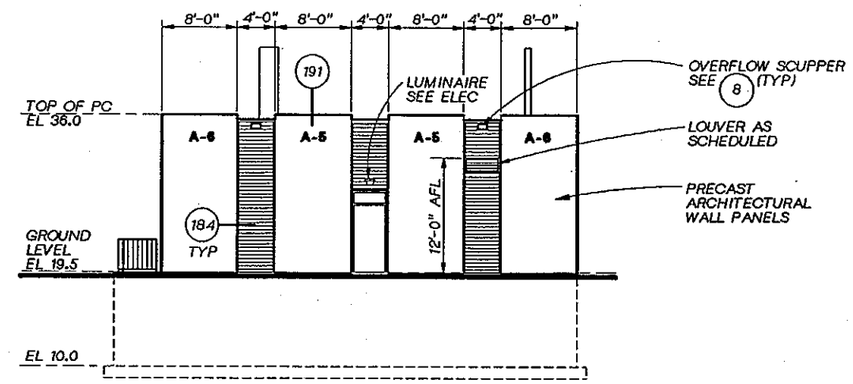

NORTH ELEVATION
⅛"=1'-0"

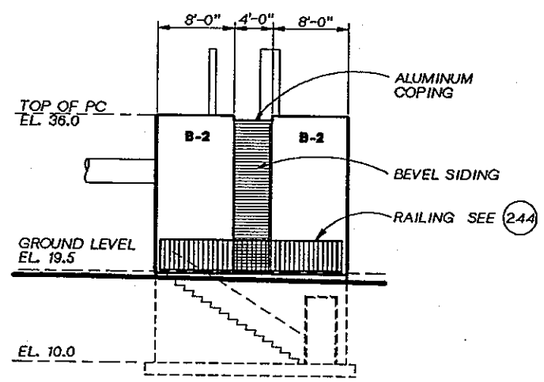

EAST ELEVATION
⅛"=1'-0"

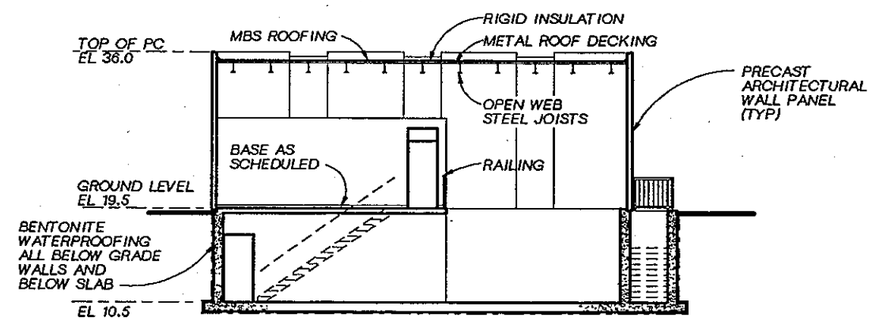

LONGITUDINAL SECTION
⅛"=1'-0"

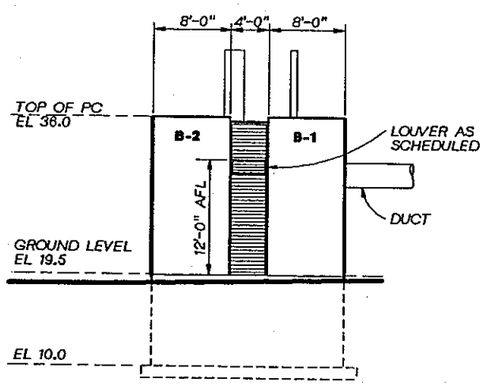

WEST ELEVATION
⅛"=1'-0"

NOTES

1. FOR PANEL SCHEDULE SEE DWG 800-S-12
2. FOR STANDARD DETAILS ◯ SEE THE "800" SECTION OF THE DWGS.
3. FOR LOUVER SIZES AND TYPES, SEE SPECIFICATION SECTION 10200.
4. FOR EXTERIOR COLORS & FINISHES, SEE SPECIFICATION SECTION 09000.

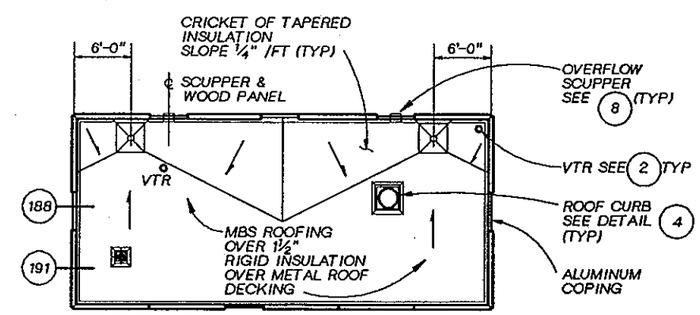

ROOF PLAN
⅛"=1'-0"

N

REGISTERED ARCHITECT JOHN J. PRUSS STATE OF WASHINGTON

CH2M HILL	DSGN G BOWER					
	DR G BOWER					
	CHK R WHITE					
	APVD J. GAUTHIER	NO.	DATE	REVISION	BY	APVD

REUSE OF DOCUMENTS
THIS DOCUMENT, AND THE IDEAS AND DESIGNS INCORPORATED HEREIN, AS AN INSTRUMENT OF PROFESSIONAL SERVICE, IS THE PROPERTY OF CH2M HILL AND IS NOT TO BE USED, IN WHOLE OR IN PART, FOR ANY OTHER PROJECT WITHOUT THE WRITTEN AUTHORIZATION OF CH2M HILL.
©CH2M HILL

BAR IS ONE INCH ON ORIGINAL DRAWING.
0 1"
IF NOT ONE INCH ON THIS SHEET, ADJUST SCALES ACCORDINGLY.

CITY OF BELLINGHAM, WASHINGTON
POST POINT WASTEWATER TREATMENT PLANT UPGRADE

CHLORINE BUILDING MODIFICATIONS
SCRUBBER BUILDING
ARCH'L ELEVATIONS & ROOF PLAN

DWG NO. 420-A-3
DATE AUG. 1990
PROJ. NO. SEA22462.C1

OVERLAY IDENTIFICATION | COMPOSITE | PROJ/D | PLAY | FILE

DATE: 8-26-90
DRAWN BY: C.S.HOWELL DESIGNED BY: L. KORBUS
DGN NAME: H:/PROJ2/BELLINGH/BL420S-C.DGN

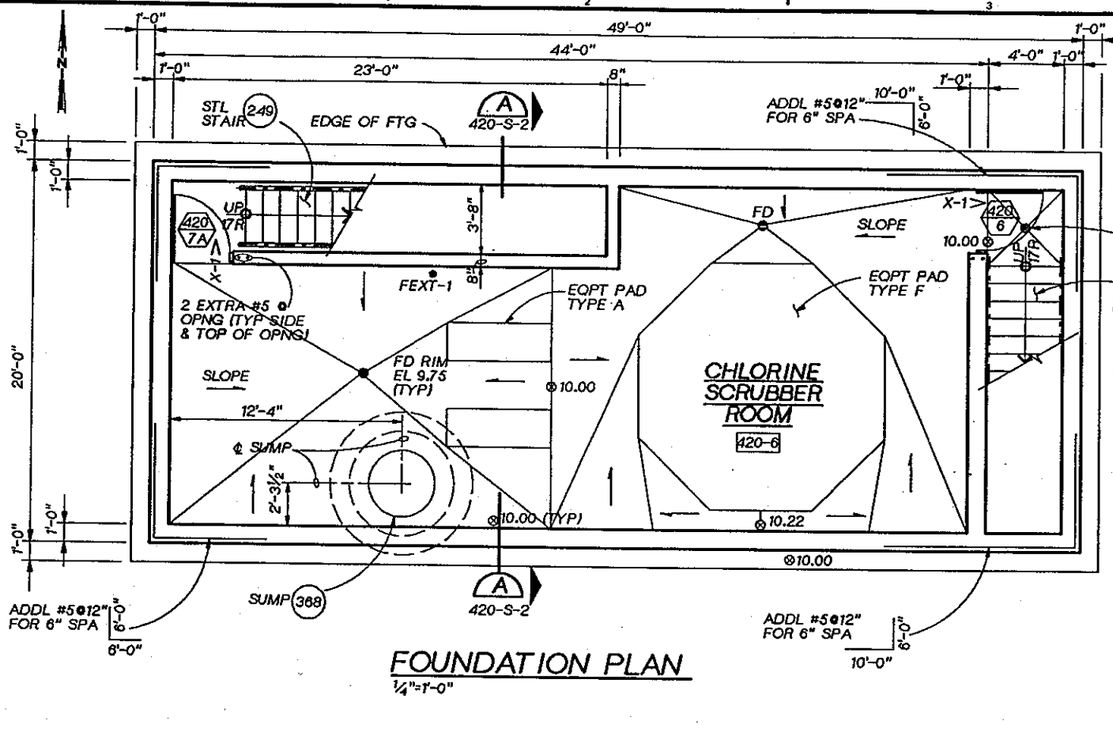

FOUNDATION PLAN
¼"=1'-0"

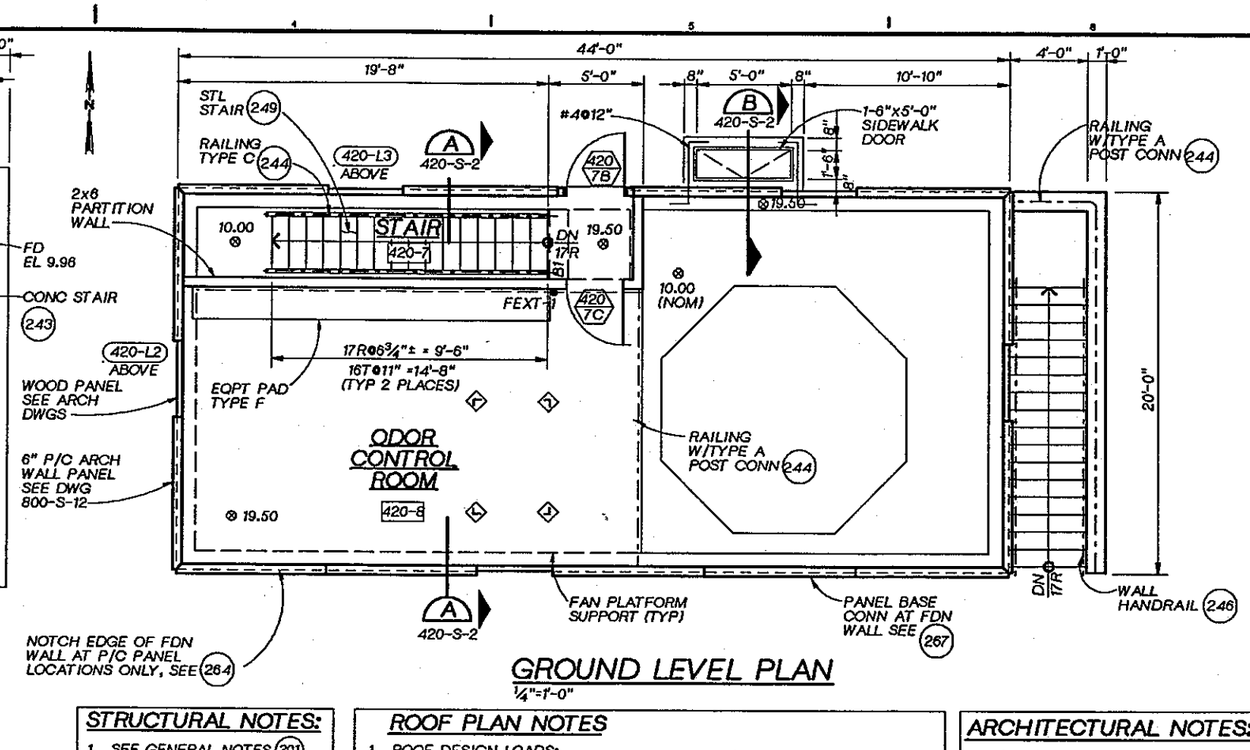

GROUND LEVEL PLAN
¼"=1'-0"

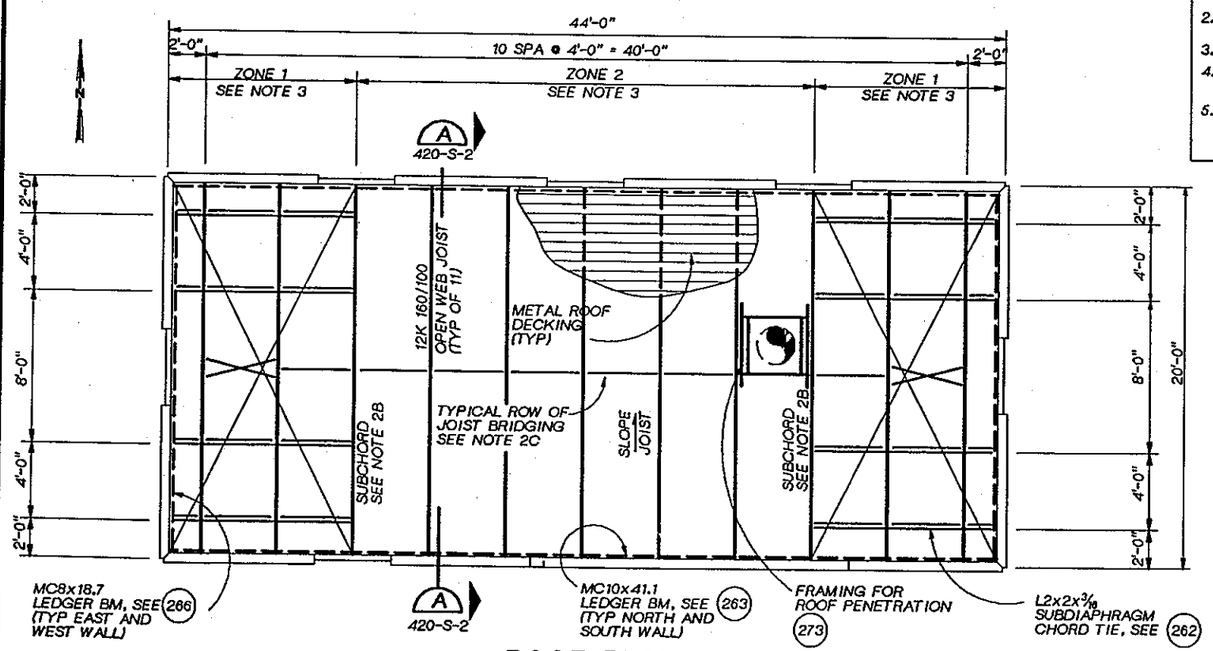

ROOF PLAN
¼"=1'-0"

STRUCTURAL NOTES:

1. SEE GENERAL NOTES 201
2. FOR CORNER RST SEE 202
3. FOR OPENING RST SEE 204
4. GROUND LEVEL DESIGN LIVE LOAD = 100 PSF
5. FOR EQPT PAD DETAILS SEE 230

ROOF PLAN NOTES

1. ROOF DESIGN LOADS:
   DEAD LOAD: 20 PSF LIVE LOAD: 25 PSF UPLIFT (NET): 15 PSF
2. OPEN WEB STEEL JOISTS:
   A. JOIST MANUFACTURER SHALL DESIGN ALL JOISTS TO SUPPORT A 500 POUND CONCENTRATED LOAD LOCATED AT ANY POINT ALONG THE BOTTOM CHORD. THIS LOAD IS IN ADDITION TO THE DESIGN LOADS AS SHOWN.
   B. JOISTS SHALL BE DESIGNED FOR THE FOLLOWING ADDITIONAL LOADS APPLIED CONCURRENTLY WITH THE ROOF DESIGN LOADS AND CONCENTRATED LOAD:
   SUBCHORDS:
   JOISTS DESIGNATED AS SUBCHORDS SHALL BE DESIGNED FOR AND ADDITIONAL TOP CHORD FORCE OF .60 KIP (TENSION OR COMPRESSION) DUE TO WIND OR SEISMIC FORCES.
   JOIST BEARING SEATS:
   MANUFACTURER SHALL DESIGN JOIST BEARING SEATS FOR THE LOADS GIVEN IN DETAIL 261
   C. NUMBER OF ROWS AND SPACING OF BRIDGING AS REQD BY JOIST MANUFACTURERS. BRIDGING SHALL NOT BE CONNECTED TO PRECAST ARCH WALL PANELS OR WOOD PANELS.
3. METAL ROOF DECKING:
   METAL ROOF DECKING SHALL BE 1-1/2" - 20 GAGE GALVANIZED STEEL, VERCO HSB-36 ACOUSTICAL OR EQUIVALENT. MIN SECTION PROPERTIES SHALL BE: I_+=.216 in^4 +S_-=.235 in^3 AND -S_+=.248 in^3. MINIMUM NOISE REDUCTION COEFFICIENT OF .75 AS TESTED IN ACCORDANCE WITH ASTM C423.
   CONNECTION OF ROOF DECKING SHALL BE AS FOLLOWS:
   ZONE 1: (5) -5/8" PUDDLE WELDS TO SUPPORTS PER 36" SHEET. BUTTON PUNCH SIDE LAP CONNECTION AT 2'-0" OC, UNLESS OTHERWISE NOTED. MIN LATERAL SHEAR CAPACITY= 290 P/FT
   ZONE 2: (5) -5/8" PUDDLE WELDS TO SUPPORTS PER 36" SHEET. BUTTON PUNCH SIDE LAP CONNECTION AT 2'-0" OC, UNLESS OTHERWISE NOTED. MIN LATERAL SHEAR CAPACITY= 290 P/FT

ARCHITECTURAL NOTES:

1. FOR "GENERAL NOTES," SEE DWG. NO. 800-A-1.
2. FOR "INTERIOR FINISH SCHEDULE" SEE SPECIFICATION SECTION 09000.
3. FOR "DOOR AND HARDWARE SCHEDULE" SEE SPECIFICATION SECTION 08001.
4. FOR PRECAST CONCRETE WALL PANEL AND OPENING DIMENSIONS, SEE ARCITECTURAL EXTERIOR ELEVATIONS.
5. FOR LOUVER SIZES AND DETAILS, SEE SPECIFICATION SECTION 10200.

BUILDING CODE NOTES:

APPLICABLE CODES: 1988 UBC
1988 UFC

1. TYPE OF OCCUPANCY: H-3, H-7
2. TYPE OF CONSTRUCTION: V-N
3. NUMBER OF STORIES
   ACTUAL: ONE + BASEMENT
   ALLOWED: ONE
4. ACTUAL FLOOR AREA
   o LOWER LEVEL: 880sf
   o GROUND LEVEL: 480sf
   ALLOWABLE FLOOR AREA: 3,560sf
5. SPRINKLER SYSTEM REQD
   BOTH LEVELS
6. OCCUPANT LOAD
   o LOWER LEVEL: 880/300 = 3
   o GROUND LEVEL: 480/300 = 2

DSGN	L. KORBUS				
DR	B. LAZARO				
CHK	W. BENNETT				
APVD	J. GAUTHIER	NO.	DATE	REVISION	BY / APVD

CH2M HILL

REUSE OF DOCUMENTS
THIS DOCUMENT, AND THE IDEAS AND DESIGNS INCORPORATED HEREIN, AS AN INSTRUMENT OF PROFESSIONAL SERVICE, IS THE PROPERTY OF CH2M HILL AND IS NOT TO BE USED, IN WHOLE OR IN PART, FOR ANY OTHER PROJECT WITHOUT THE WRITTEN AUTHORIZATION OF CH2M HILL.
©CH2M HILL

BAR IS ONE INCH ON ORIGINAL DRAWING. 0 — 1"
IF NOT ONE INCH ON THIS SHEET, ADJUST SCALES ACCORDINGLY.

CITY OF BELLINGHAM, WASHINGTON
POST POINT WASTEWATER TREATMENT PLANT UPGRADE

CHLORINE BUILDING MODIFICATIONS
SCRUBBER BUILDING
STRUCTURAL PLANS

DWG NO. 420-S-1
DATE AUG. 1990
PROJ. NO. SEA22462.C1

DRAWN BY: BBL DESIGNED BY: L. KORBUS
DGN NAME: H:/PROJ2/BELLINGH/BL420S-D.DGN

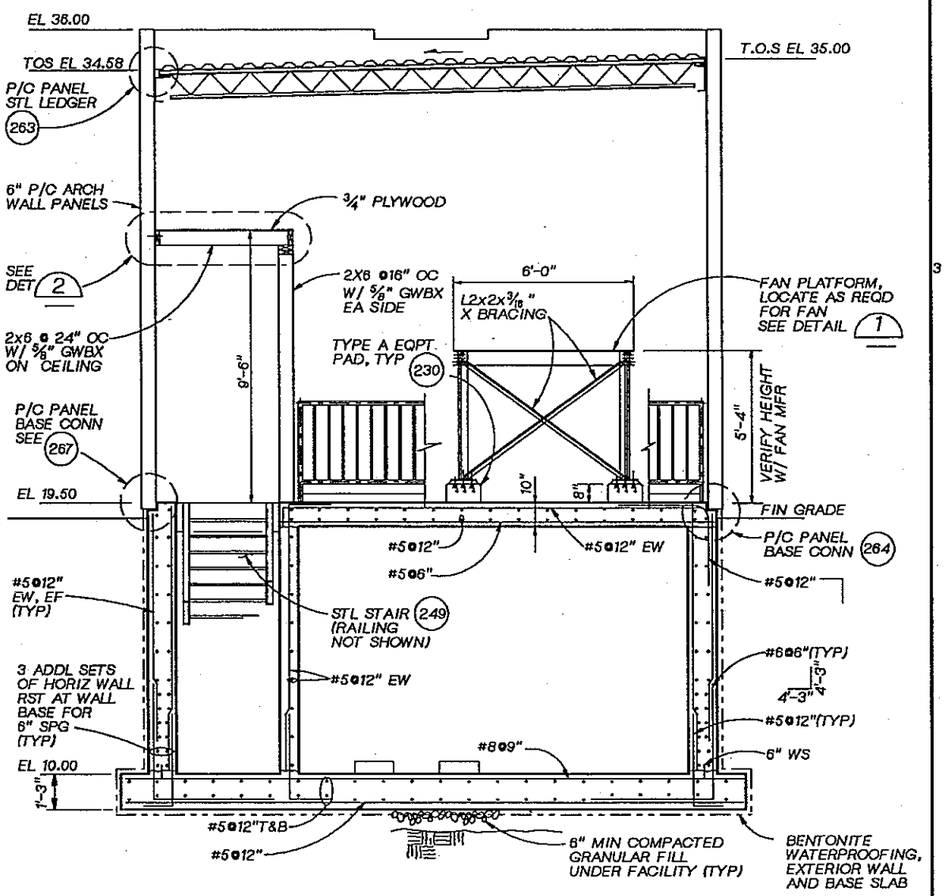

SECTION (A)

3/8" = 1'-0" 420-S-1

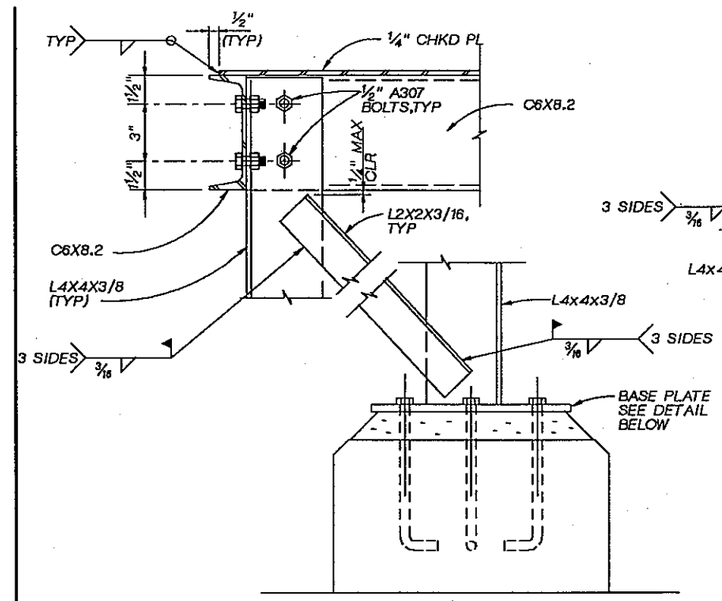

4 FT SIDE

3' = 1'-0"

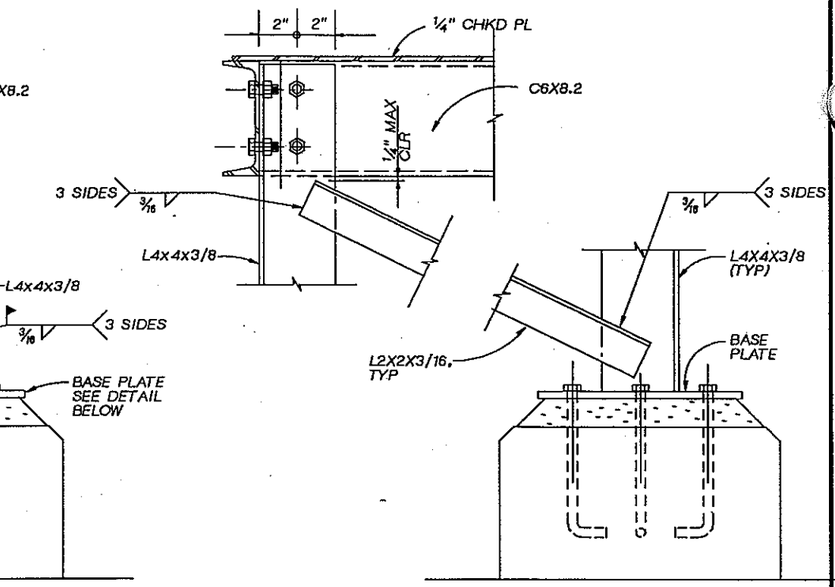

6 FT SIDE

3' = 1'-0"

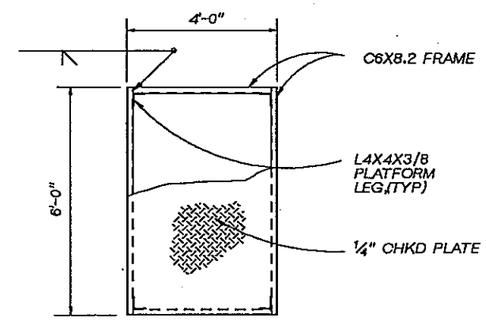

FAN PLATFORM - PLAN

1/2" = 1'-0"

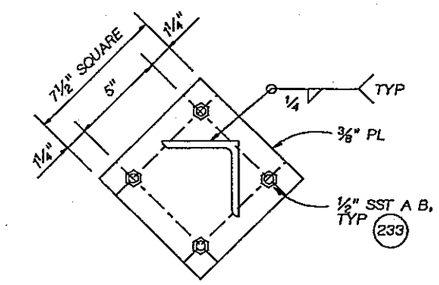

BASE DETAIL

3' = 1'-0"

NOTE: HOT DIP GALVANIZE AFTER FABRICATION

DETAIL (1)

SCALE AS SHOWN

BEAM SCHEDULE										
BEAM NO.	SIZE		TOP REINF AT LEFT SUPPORT		BOTTOM REINF		* TOP REINF AT RIGHT SUPPORT		SHEAR REINF	
	W	D	T	TC	B	BC	T	TC	NO. SIZE	SPACING FROM LEFT SUPPORT
B1	12"	12"	-	2-#5	-	2-#5	-	2-#5	#3	AT 6" THROUGHOUT

NOTE: FOR TYPICAL BEAM DETAIL SEE (221)

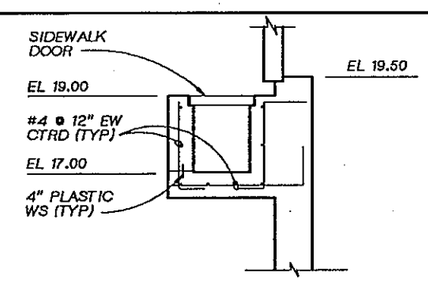

SECTION (B)

1/2" = 1'-0" 420-S-1

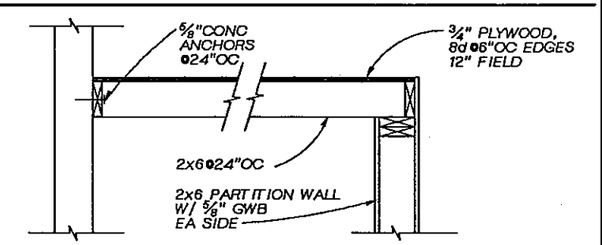

DETAIL (2)

1" = 1'-0"

CHRIS M. KORBUS STATE OF WASHINGTON 22260 REGISTERED PROFESSIONAL ENGINEER

CH2M HILL

DSGN	L. KORBUS			
DR	B. LAZARO			
CHK	W. BENNETT			
APVD	J. GAUTHIER	NO.	DATE	REVISION	BY	APVD

REUSE OF DOCUMENTS
THIS DOCUMENT, AND THE IDEAS AND DESIGNS INCORPORATED HEREIN, AS AN INSTRUMENT OF PROFESSIONAL SERVICE, IS THE PROPERTY OF CH2M HILL AND IS NOT TO BE USED, IN WHOLE OR IN PART, FOR ANY OTHER PROJECT WITHOUT THE WRITTEN AUTHORIZATION OF CH2M HILL.
©CH2M HILL

BAR IS ONE INCH ON ORIGINAL DRAWING. 0 1"
IF NOT ONE INCH ON THIS SHEET, ADJUST SCALES ACCORDINGLY.

CITY OF BELLINGHAM, WASHINGTON
POST POINT WASTEWATER TREATMENT PLANT UPGRADE

CHLORINE BUILDING MODIFICATIONS
SCRUBBER BUILDING
STRUCTURAL SECTIONS AND DETAILS

DWG NO. 420-S-2
DATE AUG. 1990
PROJ. NO. SEA22462.C1

DRAWN BY: M TO DESIGNED BY: M HIGHTREE
DGN NAME: H:/PROJ2/BELLINGH/BL420M-A.DGN

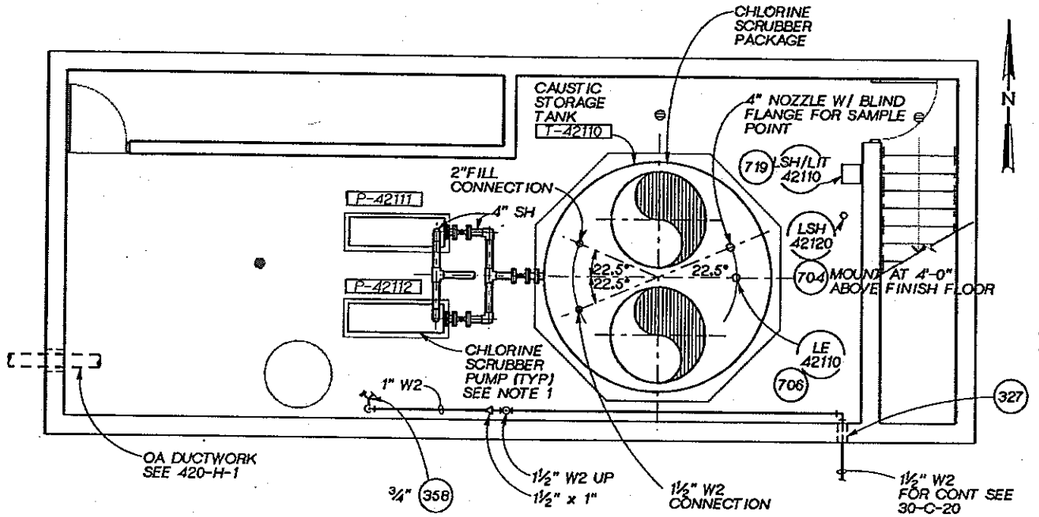

SCRUBBER BUILDING
LOWER LEVEL PLAN
¼"=1'-0"

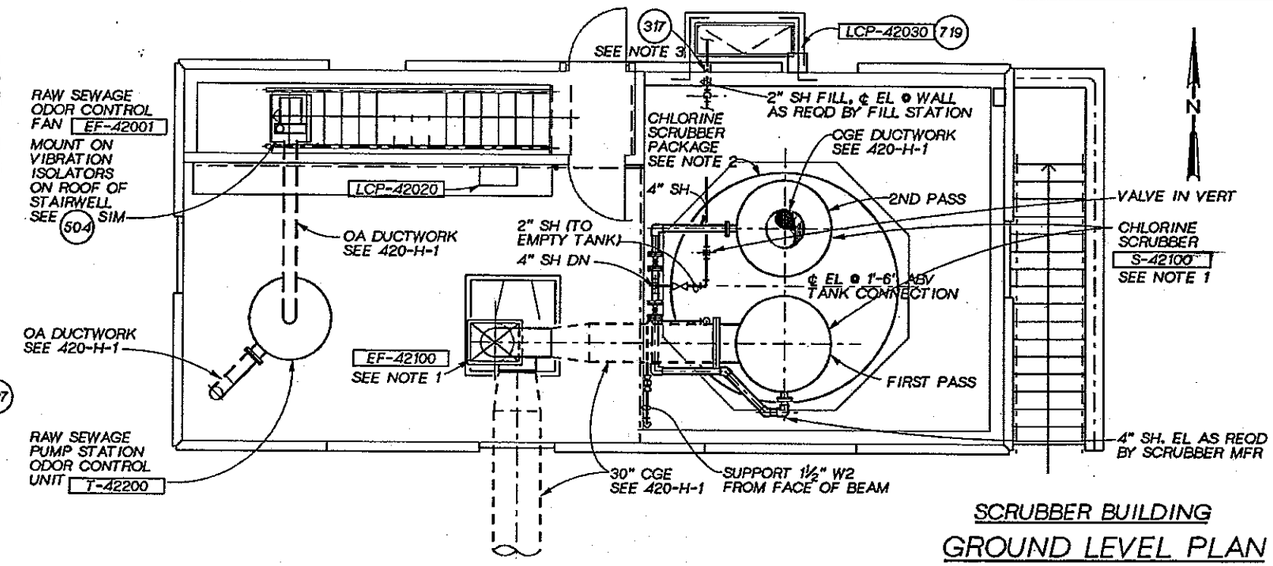

SCRUBBER BUILDING
GROUND LEVEL PLAN
¼"=1'-0"

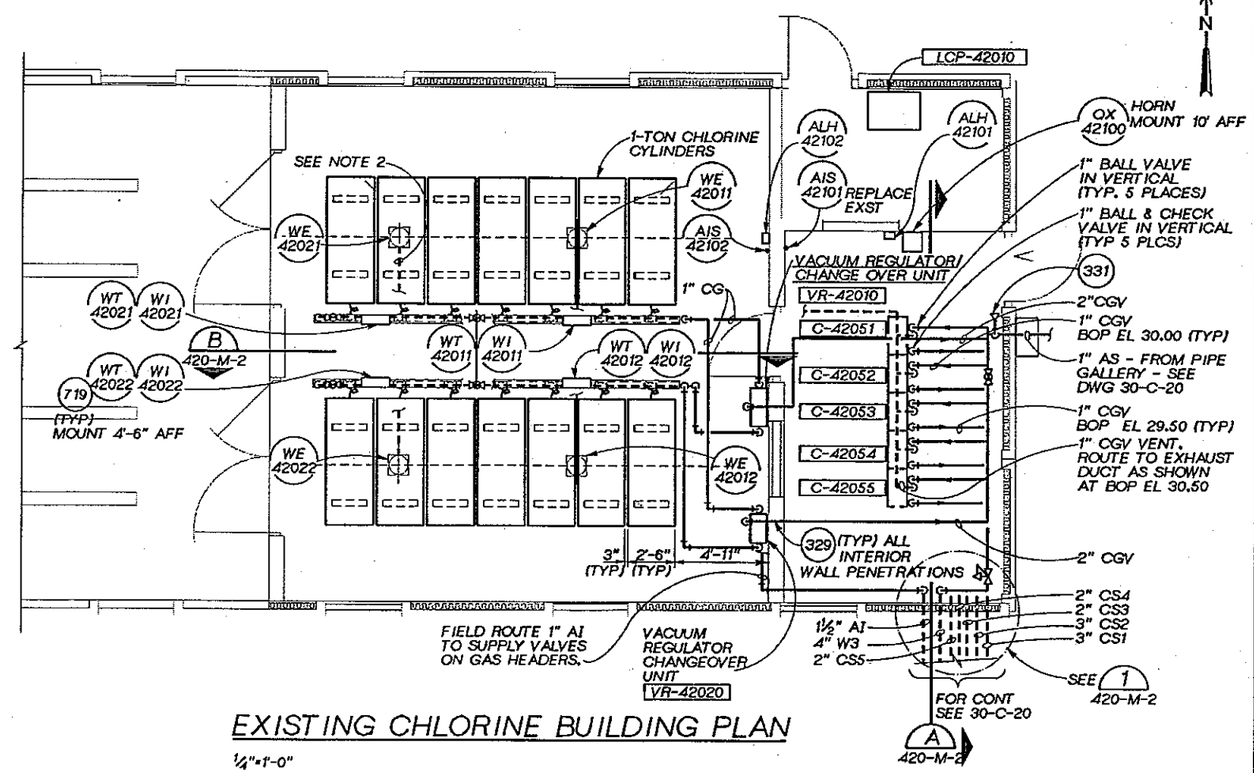

EXISTING CHLORINE BUILDING PLAN
¼"=1'-0"

NOTES:

1. CHLORINE SCRUBBER PACKAGE ALSO INCLUDES CHLORINE SCRUBBER CIRCULATION PUMPS P-42111 & P-42112 AND CHLORINE EXHAUST FAN EF-42100. SYSTEM PACKAGER IS RESPONSIBLE FOR LOCATING CONNECTIONS TO EQUIPMENT AND FOR SIZING, ROUTING AND SUPPORTING PIPES AND DUCTS CONNECTING TO THE VARIOUS PACKAGED EQUIPMENT. ROUTES AND SIZES SHOWN ARE FOR GENERAL INFORMATION ONLY. ALL PIPE SUPPORTS AND ACCESSORIES SHALL BE FRP.
2. HYDRAULIC HOSE. ROUTE FROM CHLORINE SCALE LOAD CELL TO WEIGHT INDICATOR CHLORINE HEADER SUPPORT FRAME (TYP OF 4)
3. NO CHECK VALVE SHALL BE INSTALLED AT THE CHEMICAL FILL STATION.

JOSEPH A. GAUTHIER STATE OF WASHINGTON REGISTERED PROFESSIONAL ENGINEER

CH2M HILL

DSGN	M. HIGHTREE
DR	M. TO
CHK	J. MACKEY
APVD	J. GAUTHIER

NO.	DATE	REVISION	BY	APVD

REUSE OF DOCUMENTS
THIS DOCUMENT, AND THE IDEAS AND DESIGNS INCORPORATED HEREIN, AS AN INSTRUMENT OF PROFESSIONAL SERVICE, IS THE PROPERTY OF CH2M HILL AND IS NOT TO BE USED, IN WHOLE OR IN PART, FOR ANY OTHER PROJECT WITHOUT THE WRITTEN AUTHORIZATION OF CH2M HILL.
©CH2M HILL

VERIFY SCALE
BAR IS ONE INCH ON ORIGINAL DRAWING.
0 1"
IF NOT ONE INCH ON THIS SHEET, ADJUST SCALES ACCORDINGLY.

CITY OF BELLINGHAM, WASHINGTON
POST POINT WASTEWATER TREATMENT PLANT UPGRADE

CHLORINE BUILDING MODIFICATIONS
MECHANICAL
EXISTING CHLORINE BUILDING & SCRUBBER BUILDING PLAN

DWG NO. 420-M-1
DATE AUG. 1990
PROJ NO. SEA22462.C1

DRAWN BY: M TO DESIGNED BY: M HIGHTREE
DGN NAME: H:/PROJ2/BELLINGH/BL420M-C.DGN

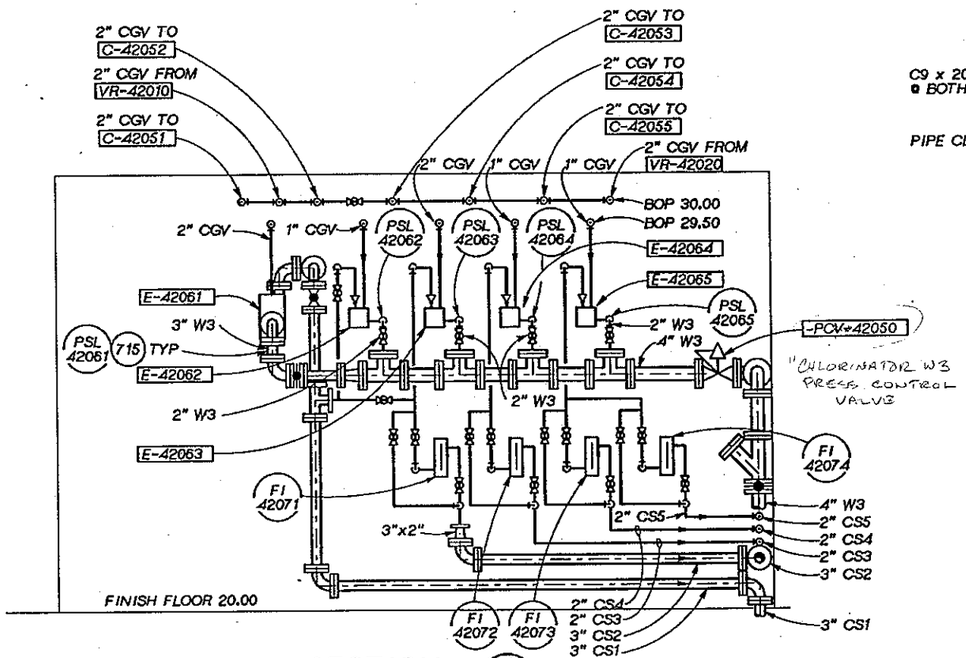

SECTION A
½"=1'-0"
420-M-1

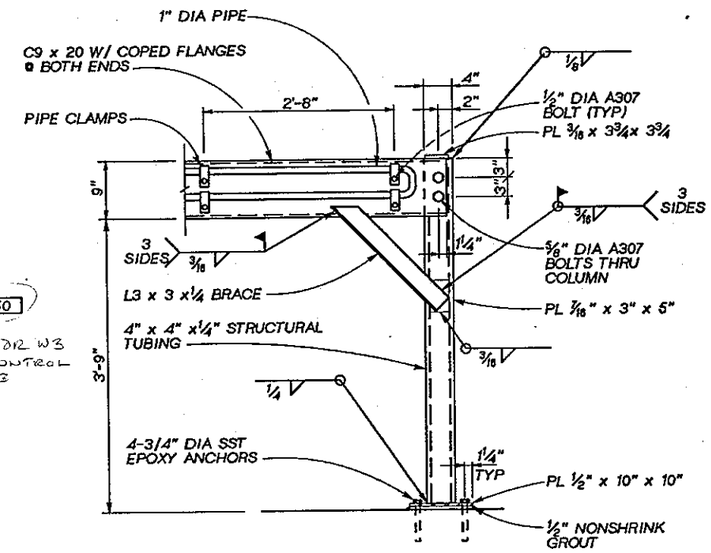

PIPE SUPPORT FRAME
DETAIL 2
1" = 1'-0"

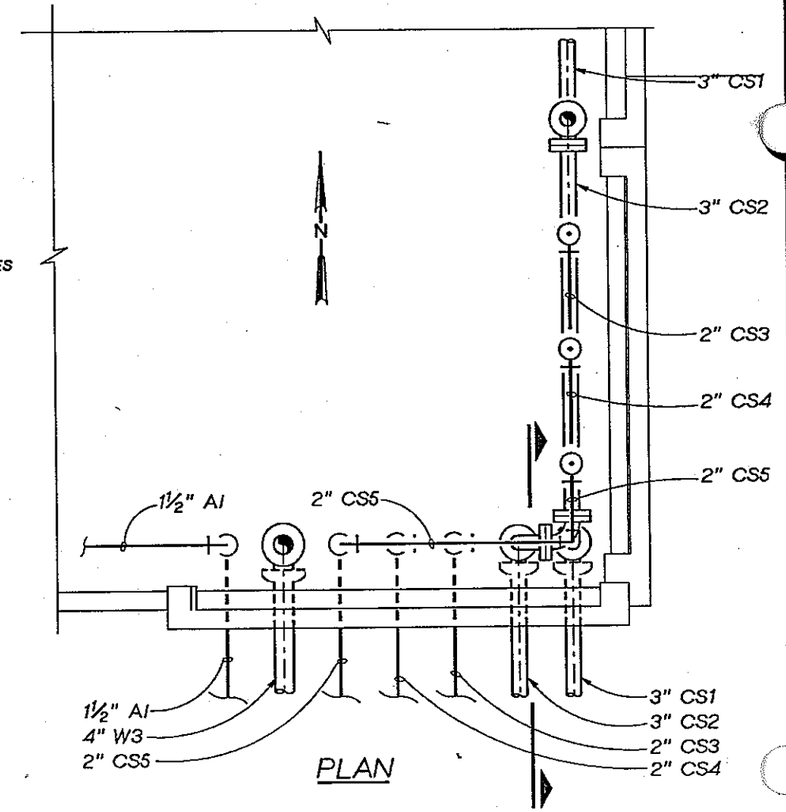

PLAN

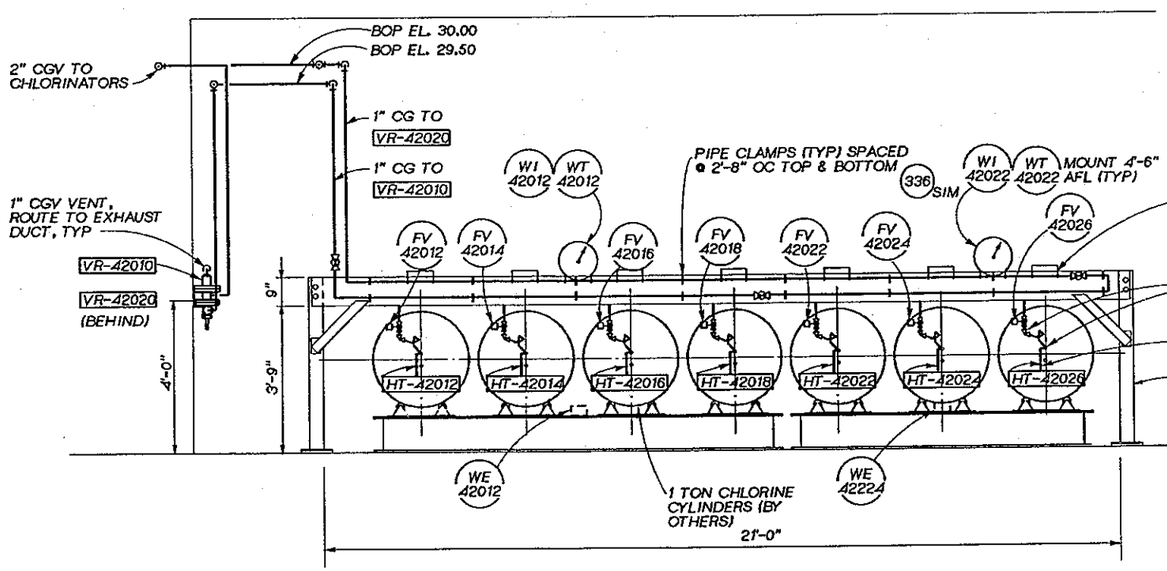

SECTION B
½"=1'-0"
420-M-1

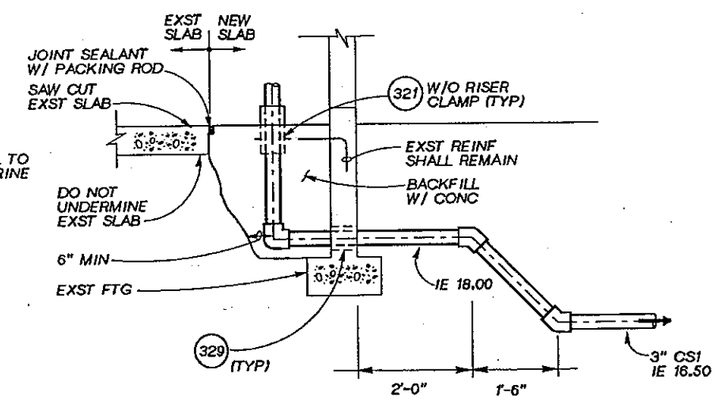

SECTION

CHLORINE BUILDING PIPING DETAIL 1

¾"=1'-0"
420-M-1

DSGN M. HIGHTREE					
DR M. TO					
CHK M. BRACKEN					
APVD J. GAUTHIER	NO.	DATE	REVISION	BY	APVD

CHRMHILL

REUSE OF DOCUMENTS
THIS DOCUMENT, AND THE IDEAS AND DESIGNS INCORPORATED HEREIN, AS AN INSTRUMENT OF PROFESSIONAL SERVICE, IS THE PROPERTY OF CH2M HILL AND IS NOT TO BE USED, IN WHOLE OR IN PART, FOR ANY OTHER PROJECT WITHOUT THE WRITTEN AUTHORIZATION OF CH2M HILL.
©CH2M HILL

VERIFY SCALE
BAR IS ONE INCH ON ORIGINAL DRAWING.
0 1"
IF NOT ONE INCH ON THIS SHEET, ADJUST SCALES ACCORDINGLY.

CITY OF BELLINGHAM, WASHINGTON
POST POINT WASTEWATER TREATMENT PLANT UPGRADE

CHLORINE BUILDING MODIFICATIONS
MECHANICAL
SCRUBBER BLDG LOWER LEVEL
PLAN & SECTIONS

DWG NO. 420-M-2
DATE AUG. 1990
PROJ. NO. SEA22462.C1

JOSEPH A. GAUTHIER, STATE OF WASHINGTON, REGISTERED PROFESSIONAL ENGINEER

COMPOSITE
OVERLAY (SCREEN)
OVERLAY IDENTIFICATION
PROJ'D
FILE

DRAWN BY: SD GUNDY DESIGNED BY: SD GUNDY/G FLOOD
DGN NAME: H:/PROJ2/BELLINGH/BL420H-B.DGN

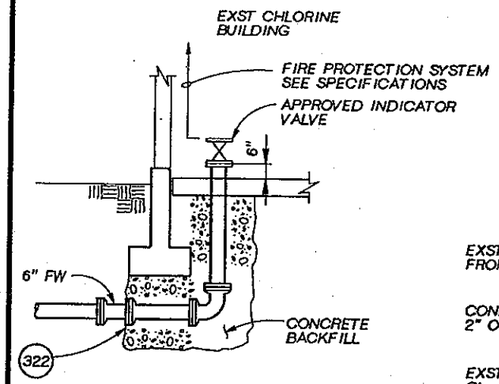

DETAIL 1
NTS 420-H-2

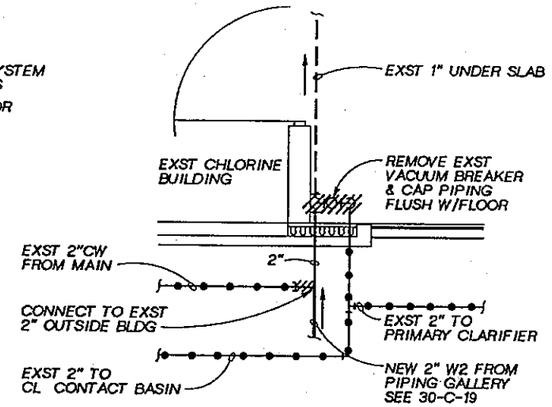

DETAIL 2
NTS 420-H-2

SCHED 80 PVC OA DUCT BELOW GRADE. SLOPE 1/8" PER FT (MIN) BACK TO RAW SEWAGE STATION. FOR CONT SEE 30-C-20

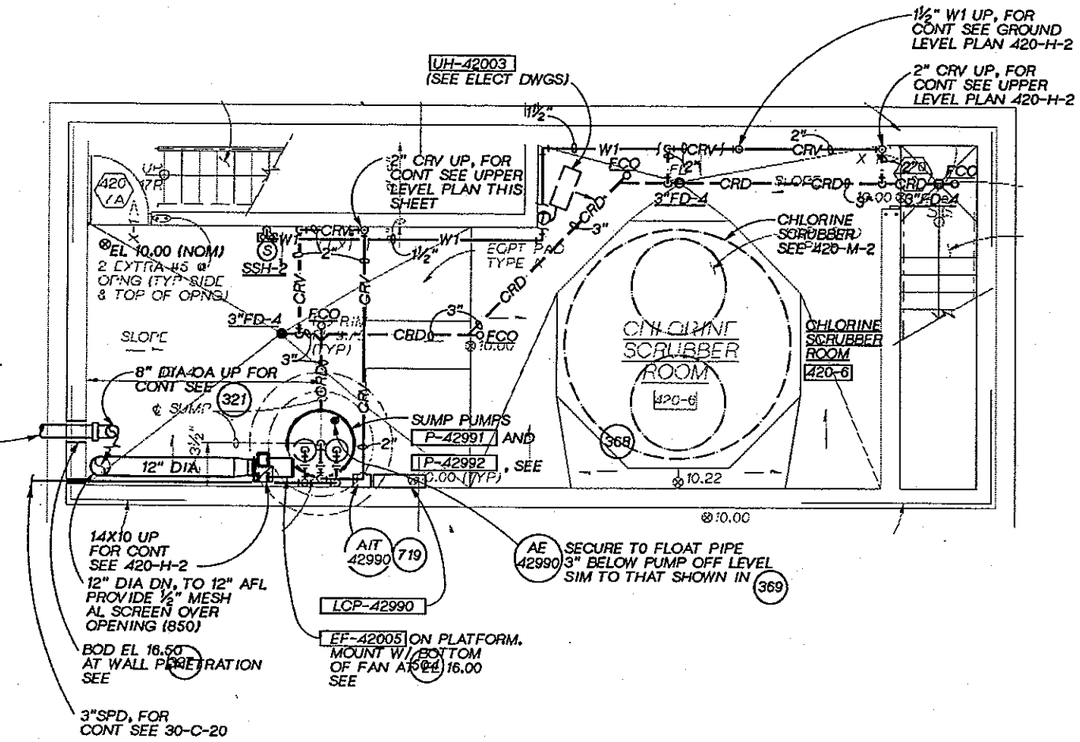

SCRUBBER BUILDING
LOWER LEVEL PLAN
¼"=1-0"

DSGN G.FLOOD						
DR S.D.GUNDY						
CHK J SIEMANS						
APVD J. GAUTHIER	NO.	DATE	REVISION	BY	APVD	

CH2M HILL

REUSE OF DOCUMENTS
THIS DOCUMENT, AND THE IDEAS AND DESIGNS INCORPORATED HEREIN, AS AN INSTRUMENT OF PROFESSIONAL SERVICE, IS THE PROPERTY OF CH2M HILL AND IS NOT TO BE USED, IN WHOLE OR IN PART, FOR ANY OTHER PROJECT WITHOUT THE WRITTEN AUTHORIZATION OF CH2M HILL.
©CH2M HILL

VERIFY SCALE
BAR IS ONE INCH ON ORIGINAL DRAWING.
0 1"
IF NOT ONE INCH ON THIS SHEET, ADJUST SCALES ACCORDINGLY.

CITY OF BELLINGHAM, WASHINGTON
POST POINT WASTEWATER TREATMENT PLANT UPGRADE

CHLORINE BUILDING MODIFICATIONS
HVAC AND PLUMBING
LOWER LEVEL PLAN AND DETAILS

DWG NO. 420-H-1
DATE AUG. 1990
PROJ NO. SEA22462.C1

DRAWN BY: SD GUNDY DESIGNED BY: SD GUNDY/G FLOOD
DGN NAME: H:/PROJ2/BELLINGH/BL420H-A.DGN

NOTES:
1. COORDINATE DUCTWORK CONNECTIONS W/ ODOR CONTROL EQUIPMENT.
2. PROVIDE BLAST GATE BALANCING DAMPER IN RISER. BUTTERFLY DAMPERS SHALL NOT BE USED.

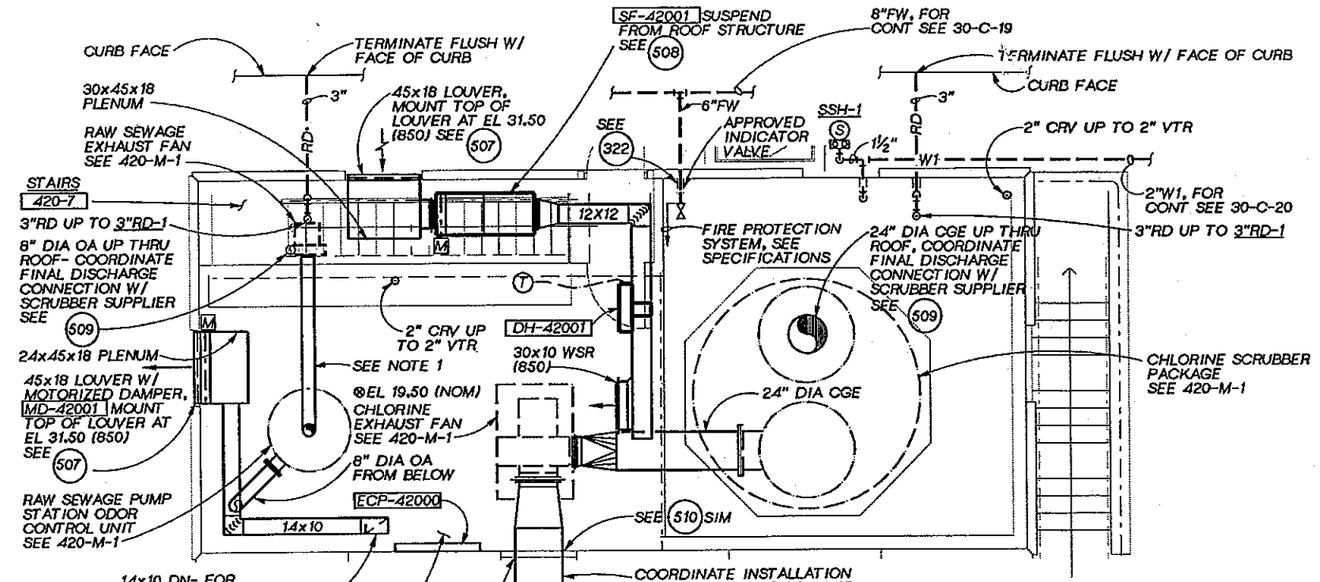

SCRUBBER BUILDING GROUND LEVEL PLAN

¼"=1-0"

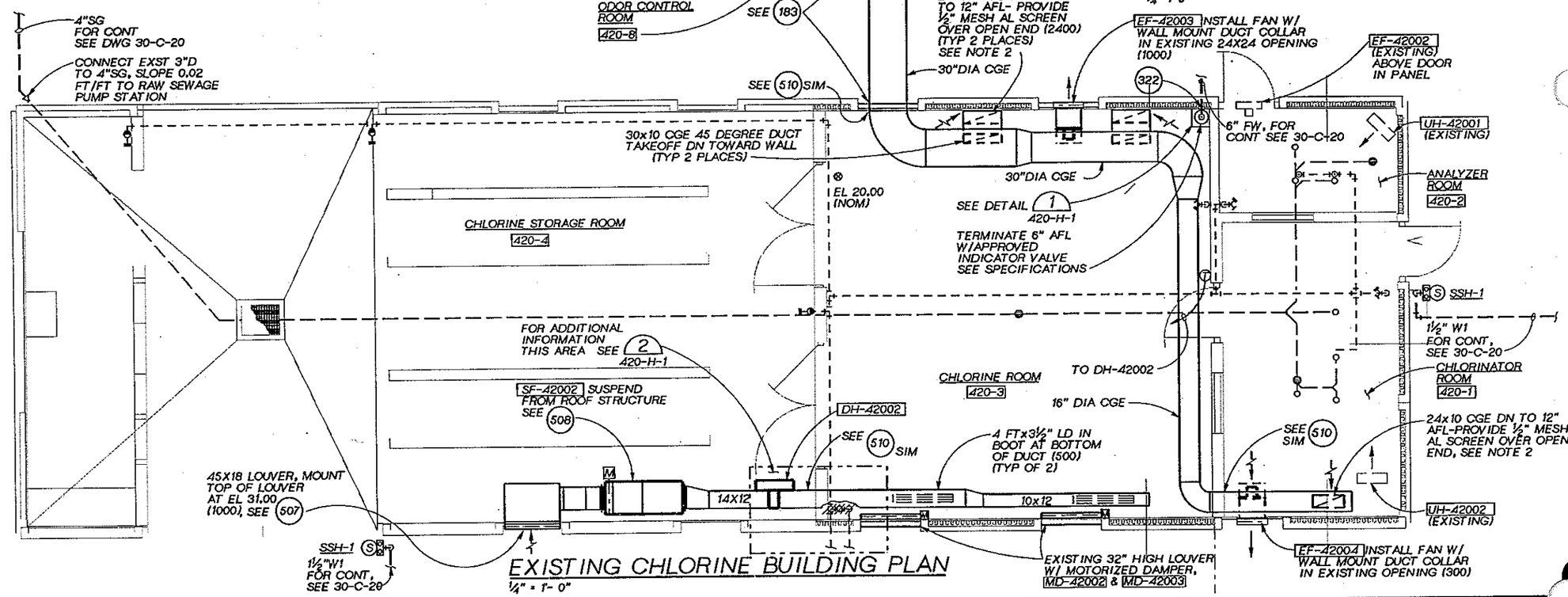

EXISTING CHLORINE BUILDING PLAN

¼" = 1'- 0"

JOSEPH A. GAUTHIER STATE OF WASHINGTON REGISTERED PROFESSIONAL ENGINEER

CH2M HILL

DSGN	G.FLOOD				
DR	S.D.GUNDY				
CHK	J SIEMENS				
APVD	J. GAUTHIER	NO.	DATE	REVISION	BY	APVD

REUSE OF DOCUMENTS
THIS DOCUMENT, AND THE IDEAS AND DESIGNS INCORPORATED HEREIN, AS AN INSTRUMENT OF PROFESSIONAL SERVICE, IS THE PROPERTY OF CH2M HILL AND IS NOT TO BE USED, IN WHOLE OR IN PART, FOR ANY OTHER PROJECT WITHOUT THE WRITTEN AUTHORIZATION OF CH2M HILL.
©CH2M HILL

VERIFY SCALE
BAR IS ONE INCH ON ORIGINAL DRAWING.
0 1"
IF NOT ONE INCH ON THIS SHEET, ADJUST SCALES ACCORDINGLY.

CITY OF BELLINGHAM, WASHINGTON
POST POINT WASTEWATER TREATMENT PLANT UPGRADE

CHLORINE BUILDING MODIFICATIONS
HVAC AND PLUMBING
GROUND LEVEL PLAN

DWG NO. 420-H-2
DATE AUG. 1990
PROJ NO. SEA22462.C1

OVERLAY IDENTIFICATION: COMPOSITE, OVERLAY, SCREEN, PROJD, FILE

DATE: 8-26-90
DRAWN BY: GE BOWER DESIGNED BY: GE BOWER
DGN NAME: H:/PROJ2/BELLINGH/BL610A-A.DGN

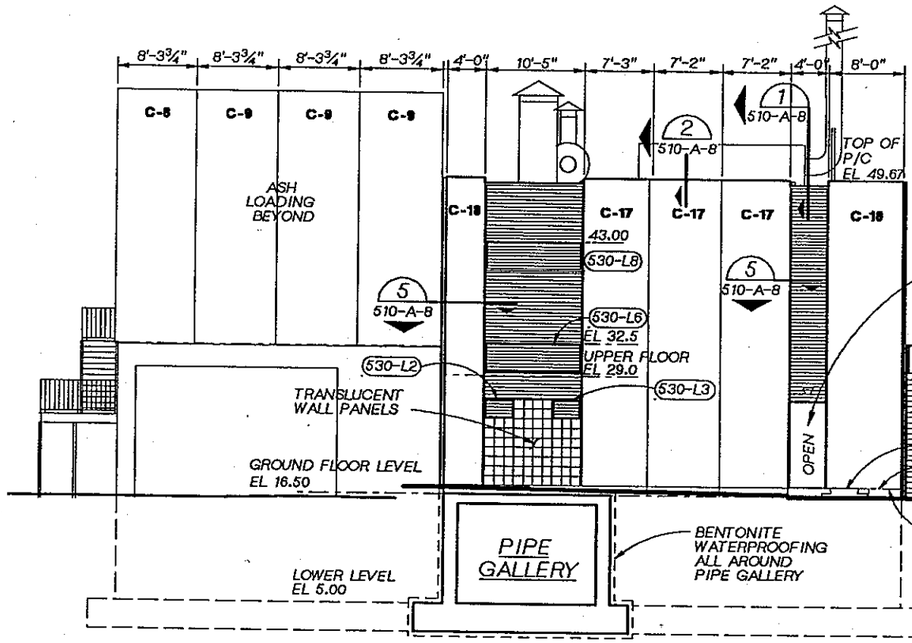

EAST ELEVATION
1/8"=1'-0"

NOTES
1. FOR PANEL SCHEDULE SEE DWG 800-S-12.
2. FOR STANDARD DETAILS SEE THE "800" SECTION OF THE DWGS.
3. FOR LOUVER SIZES AND TYPES, SEE SPECIFICATION SECTION 10200.
4. FOR EXTERIOR COLORS & FINISHES, SEE SPECIFICATION SECTION 09000.

NOTE:
FOR SOUTH ELEVATION SEE DWG 510-A-7

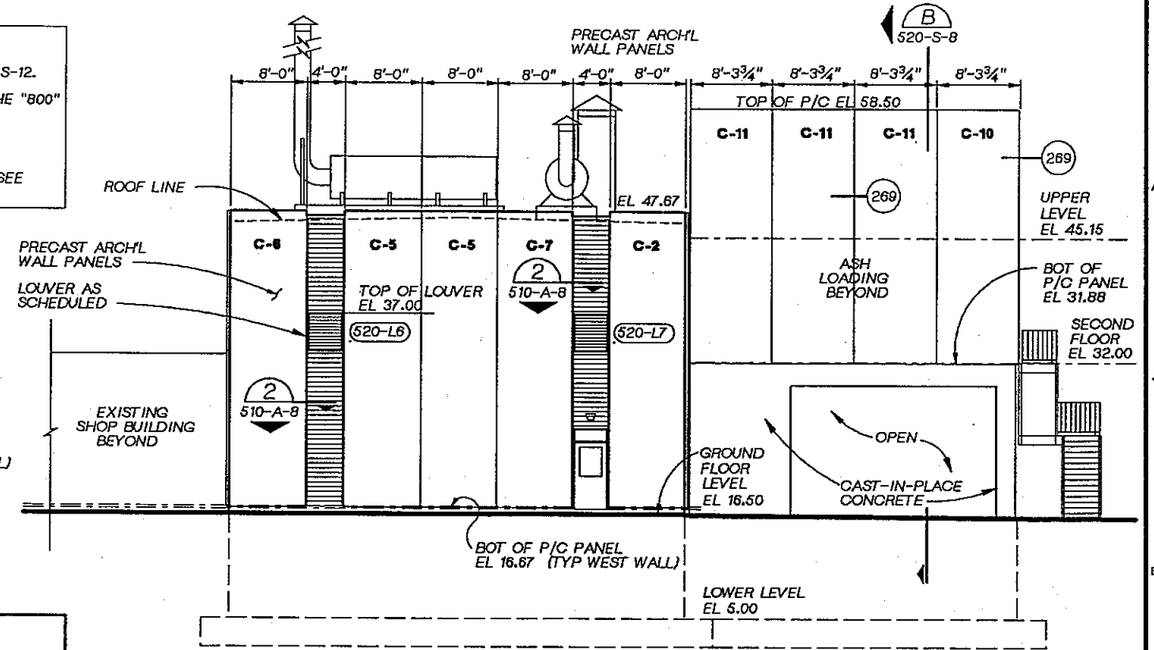

WEST ELEVATION
1/8"=1'-0"

NOTE:
UNLESS OTHERWISE NOTED, P/C PANEL DIMENSIONS ARE TO ℄ OF JOINTS, NOMINAL EDGE OF PANELS AND FACE OF FOUNDATION.

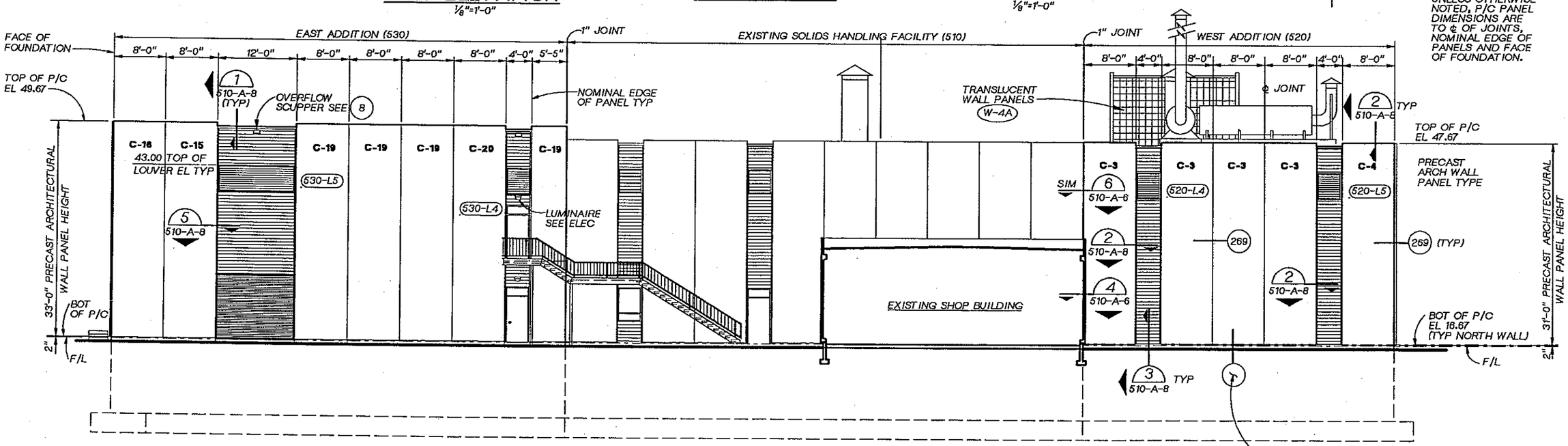

NORTH ELEVATION
1/8"=1'-0"

REGISTERED ARCHITECT JOHN F. PAGE STATE OF WASHINGTON

CH2M HILL	DSGN G BOWER					
	DR G BOWER					
	CHK R WHITE					
	APVD J. GAUTHIER	NO.	DATE	REVISION	BY	APVD

REUSE OF DOCUMENTS
THIS DOCUMENT, AND THE IDEAS AND DESIGNS INCORPORATED HEREIN, AS AN INSTRUMENT OF PROFESSIONAL SERVICE, IS THE PROPERTY OF CH2M HILL AND IS NOT TO BE USED, IN WHOLE OR IN PART, FOR ANY OTHER PROJECT WITHOUT THE WRITTEN AUTHORIZATION OF CH2M HILL.
©CH2M HILL

BAR IS ONE INCH ON ORIGINAL DRAWING. 0 1"
IF NOT ONE INCH ON THIS SHEET, ADJUST SCALES ACCORDINGLY.

CITY OF BELLINGHAM, WASHINGTON
POST POINT WASTEWATER TREATMENT PLANT UPGRADE

SOLIDS HANDLING FACILITY MODIFICATIONS
ARCHITECTURAL ELEVATIONS

DWG NO. 610-A-1
DATE AUG. 1990
PROJ. NO. SEA22462.C1

OVERLAY IDENTIFICATION | COMPOSITE | OVERLAY | PROJ | FILE

DATE: 8-08-90
DRAWN BY: GH BURLEY-CSH DESIGNED BY: G.E.BOWER
DGN NAME: H:/PROJ2/BELLINGH/BL510A-B.DGN

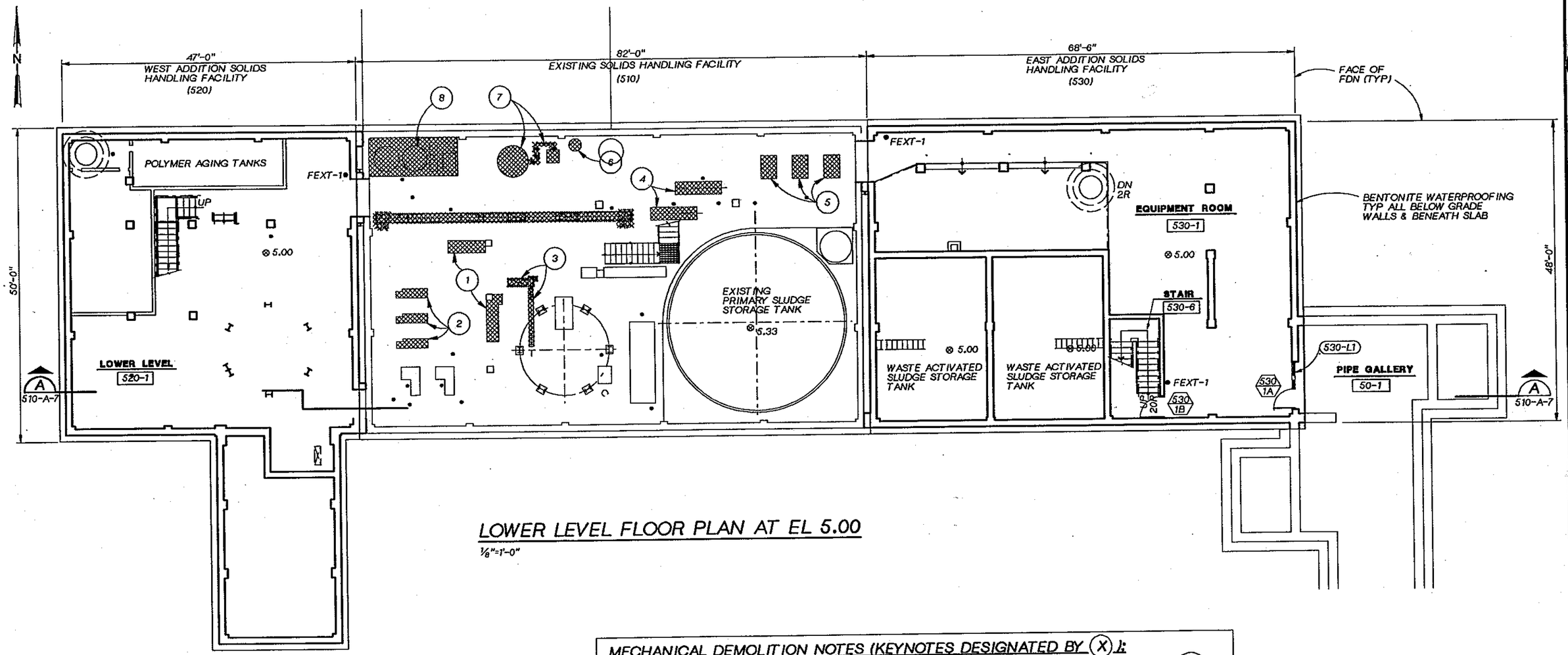

LOWER LEVEL FLOOR PLAN AT EL 5.00

1/8"=1'-0"

ARCHITECTURAL NOTES:

1. FOR "GENERAL NOTES," SEE DWG. NO. 800-A-1.
2. FOR "INTERIOR FINISH SCHEDULE" SEE SPECIFICATION SECTION 09000.
3. FOR "DOOR AND HARDWARE SCHEDULE" SEE SPECIFICATION SECTION 08001.
4. FOR PRECAST CONCRETE WALL PANEL AND OPENING DIMENSIONS, SEE ARCHITECTURAL EXTERIOR ELEVATIONS.
5. FOR LOUVER SIZES AND DETAILS, SEE SPECIFICATION SECTION 10200.

MECHANICAL DEMOLITION NOTES (KEYNOTES DESIGNATED BY (X)):

1. REMOVE AIR COMPRESSORS AND RECEIVERS AND AIR CONDITIONING ACCESSORIES. REMOVE EQUIPMENT PADS, SEE (1) 510-S-3
2. REMOVE NONPOTABLE WATER PUMPS, AND EQUIPMENT PADS, SEE (1) 510-S-3 REMOVE ALL DISCHARGE PIPING UP TO BASKET STRAINER, AND REMOVE STRAINER. ALSO REMOVE DISCHARGE PIPING ALONG WEST WALL AND BLIND FLANGE AT PENETRATIONS OF SOUTH WALL. REMOVE ALL SUCTION PIPING AND SUCTION STRAINER, AND PROVIDE BLIND FLANGES AT SOUTH WALL PENETRATIONS.
3. REMOVE ASH CONVEYOR AND BUCKET ELEVATOR. REMOVE ELEVATOR EQUIPMENT PAD, SEE (1) 510-S-3
4. REMOVE SLUDGE PUMPS AND PADS, SEE (1) 510-S-3 REMOVE SUCTION PIPING TO LIMITS SHOWN ON 510-M-1. REMOVE ALL ALL DISCHARGE PIPING.
5. REMOVE RAW SEWAGE PUMPS AND PADS, SEE (1) 510-S-3 REMOVE SUCTION AND DISCHARGE PIPING AND PROVIDE BLIND FLANGES AT NORTH WALL, SEE (9) 510-M-5
6. REMOVE WATER HEATER AND CAP WATER CONNECTIONS AT NEAREST ISOLATION VALVES. REMOVE EQUIPMENT PAD, SEE (1) 510-S-3
7. REMOVE ODOR CONTROL VESSEL AND FAN AND EQUIPMENT PADS, SEE (1) 510-S-3 REMOVE PIPING BETWEEN EQUIPMENT AND ALL DISCHARGE PIPING TO EXIT FROM BUILDING. CAP EXIT PIPE AT WALL. REMOVE SUCTION ODOR CONTROL PIPING TO ALL CONNECTED EQUIPMENT, OR TO LIMITS SHOWN ON 510-H-1 AND 510-H-2
8. REMOVE POLYMER FEED SYSTEM AND PAD, SEE (1) 510-S-3 REMOVE ALL POLYMER PIPING

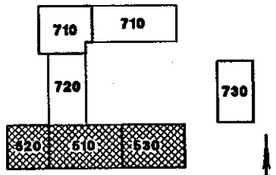

KEY PLAN

REGISTERED ARCHITECT JOHN J. KISS STATE OF WASHINGTON

CH2M HILL

DSGN	GE BOWER				
DR	GE BOWER				
CHK	R WHITE				
APVD	J. GAUTHIER	NO.	DATE	REVISION	BY	APVD

REUSE OF DOCUMENTS
THIS DOCUMENT, AND THE IDEAS AND DESIGNS INCORPORATED HEREIN, AS AN INSTRUMENT OF PROFESSIONAL SERVICE, IS THE PROPERTY OF CH2M HILL AND IS NOT TO BE USED, IN WHOLE OR IN PART, FOR ANY OTHER PROJECT WITHOUT THE WRITTEN AUTHORIZATION OF CH2M HILL.
©CH2M HILL

BAR IS ONE INCH ON ORIGINAL DRAWING. 0 1" IF NOT ONE INCH ON THIS SHEET, ADJUST SCALES ACCORDINGLY.

CITY OF BELLINGHAM, WASHINGTON
POST POINT WASTEWATER TREATMENT PLANT UPGRADE

SOLIDS HANDLING FACILITY MODIFICATIONS
ARCHITECTURAL PLAN @ ELEV. 5.00

DWG NO. 510-A-2
DATE AUG. 1990
PROJ. NO. SEA22462.C1

DATE: 8-28-90
DRAWN BY: GEB-CSH DESIGNED BY: GEB
DGN NAME: H:/PROJ2/BELLINGH/BL510A-C.DGN

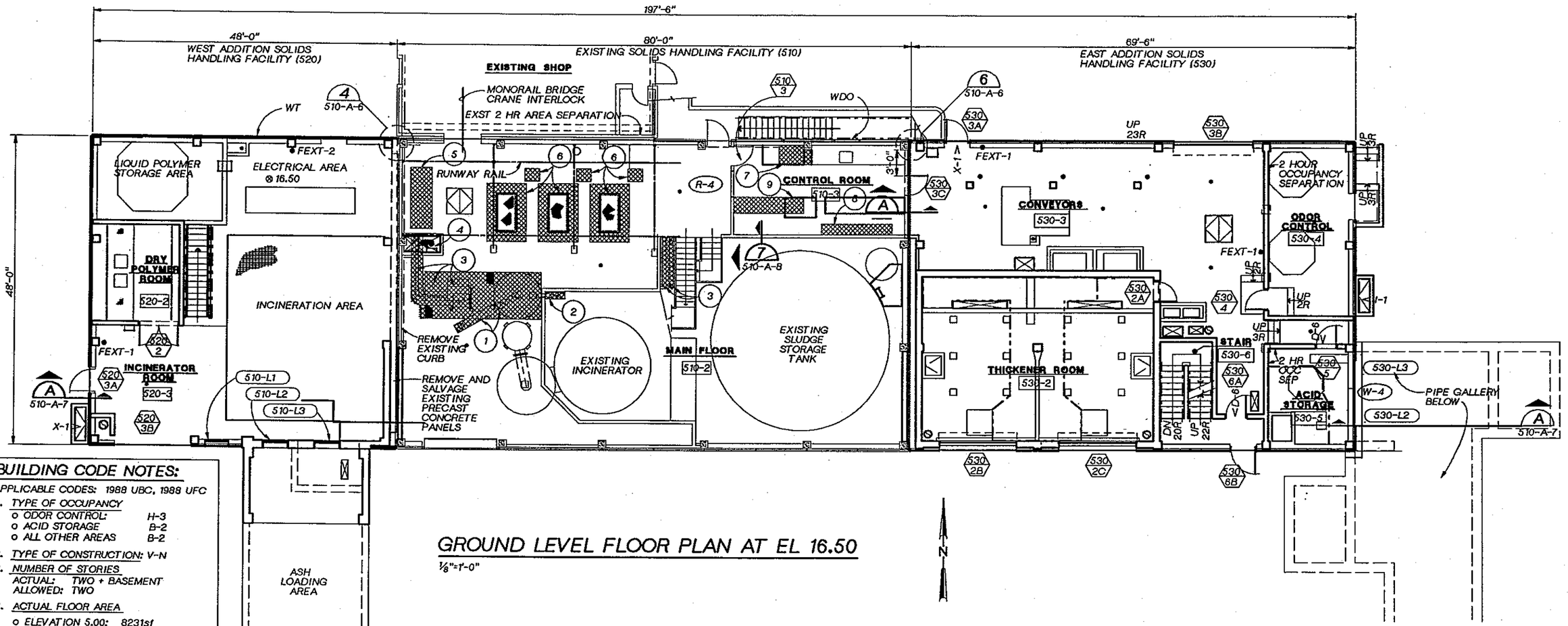

GROUND LEVEL FLOOR PLAN AT EL 16.50

1/8"=1'-0"

BUILDING CODE NOTES:

APPLICABLE CODES: 1988 UBC, 1988 UFC

1. TYPE OF OCCUPANCY
   - o ODOR CONTROL: H-3
   - o ACID STORAGE B-2
   - o ALL OTHER AREAS B-2
2. TYPE OF CONSTRUCTION: V-N
3. NUMBER OF STORIES
   ACTUAL: TWO + BASEMENT
   ALLOWED: TWO
4. ACTUAL FLOOR AREA
   - o ELEVATION 5.00: 8231sf
   - o ELEVATION 16.5: 9050sf
     ACID STORAGE: 210sf
     ODOR CONTROL: 356sf
   - o ELEVATION 16.5: 2640sf
   - o ASH LOADING
     ELEVATION 32.00: 1470sf
     ELEVATION 45.00: 1470sf
     TOTAL: 15,196sf

   ALLOWABLE FLOOR AREA: 16,000sf
5. SPRINKLER SYSTEM REQUIRED
   BASEMENT ONLY OF EAST & WEST ADDITIONS AND ACID STORAGE ROOM
6. OCCUPANT LOAD
   - o LOWER LEVEL: 8231/300 = 27
   - o GROUND LEVEL: 9050/300 = 30
   - o UPPER LEVEL: 2640/300 = 9
7. ONE HOUR OCCUPANCY SEPARATION REQUIRED AROUND STAIR ENCLOSURE
8. TWO HOUR AREA SEPARATION REQ'D BETWEEN BUILDING AND GALLERY
9. TWO HOUR AREA SEPARATION EXISTS BETWEEN BUILDING AND SHOP

ARCHITECTURAL NOTES:

1. FOR "GENERAL NOTES," SEE DWG. NO. 800-A-1.
2. FOR "INTERIOR FINISH SCHEDULE" SEE SPECIFICATION SECTION 09000.
3. FOR "DOOR AND HARDWARE SCHEDULE" SEE SPECIFICATION SECTION 08001.
4. FOR PRECAST CONCRETE WALL PANEL AND OPENING DIMENSIONS, SEE ARCHITECTURAL EXTERIOR ELEVATIONS.
5. FOR LOUVER SIZES AND DETAILS, SEE SPECIFICATION SECTION 10200.

MECHANICAL DEMOLITION NOTES (KEYNOTES DESIGNATED BY (X)):

1. REMOVE ASH HOPPER AND CONVEYOR, AND SUPPORT FRAMING AND GRATING.
2. REMOVE BUCKET ELEVATOR.
3. REMOVE PRAB CONVEYOR W/DRIVE UNIT AND SUPPORT FRAMING.
4. REMOVE LADDER AND HANDRAILING AND CURB AROUND OPENING, SEE (2) 510-S-3
5. REMOVE ENGINE GENERATOR SET AND PAD, SEE (1) 510-S-3. SALVAGE ENGINE GENERATOR TO OWNER. SEE SPECS.
6. REMOVE 2 CENTRIFUGES AND DRIVE UNITS. REMOVE 3 CENTRIFUGE EQUIPMENT PADS AND DRIVE PADS, SEE (2) 510-S-3
7. REMOVE BUILT-IN DESK.
8. REMOVE MCC AND TRANSFER SWITCH AND EQUIPMENT PAD, SEE (1) 510-S-3
9. REMOVE INCINERATOR CONTROL PANEL AND EQUIPMENT PAD, SEE (1) 510-S-3

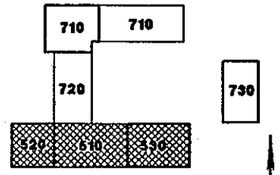

KEY PLAN

REGISTERED ARCHITECT JOHN J. MUSS STATE OF WASHINGTON

CH2M HILL

DSGN	G BOWER				
DR	G BOWER				
CHK	R WHITE				
APVD	J. GAUTHIER	NO.	DATE	REVISION	BY / APVD

REUSE OF DOCUMENTS
THIS DOCUMENT, AND THE IDEAS AND DESIGNS INCORPORATED HEREIN, AS AN INSTRUMENT OF PROFESSIONAL SERVICE, IS THE PROPERTY OF CH2M HILL AND IS NOT TO BE USED, IN WHOLE OR IN PART, FOR ANY OTHER PROJECT WITHOUT THE WRITTEN AUTHORIZATION OF CH2M HILL.
©CH2M HILL

BAR IS ONE INCH ON ORIGINAL DRAWING. 0 1"
IF NOT ONE INCH ON THIS SHEET, ADJUST SCALES ACCORDINGLY.

CITY OF BELLINGHAM, WASHINGTON
POST POINT WASTEWATER TREATMENT PLANT UPGRADE

SOLIDS HANDLING FACILITY MODIFICATIONS
ARCHITECTURAL
PLAN @ ELEV. 16.50

DWG NO. 510-A-3
DATE AUG. 1990
PROJ NO. SEA22462.C1

DATE: 08-27-90
DRAWN BY: GH BURLEY-CSH DESIGNED BY:GEB
DGN NAME: H:/PROJ2/BELLINGH/BL510A-D.DGN

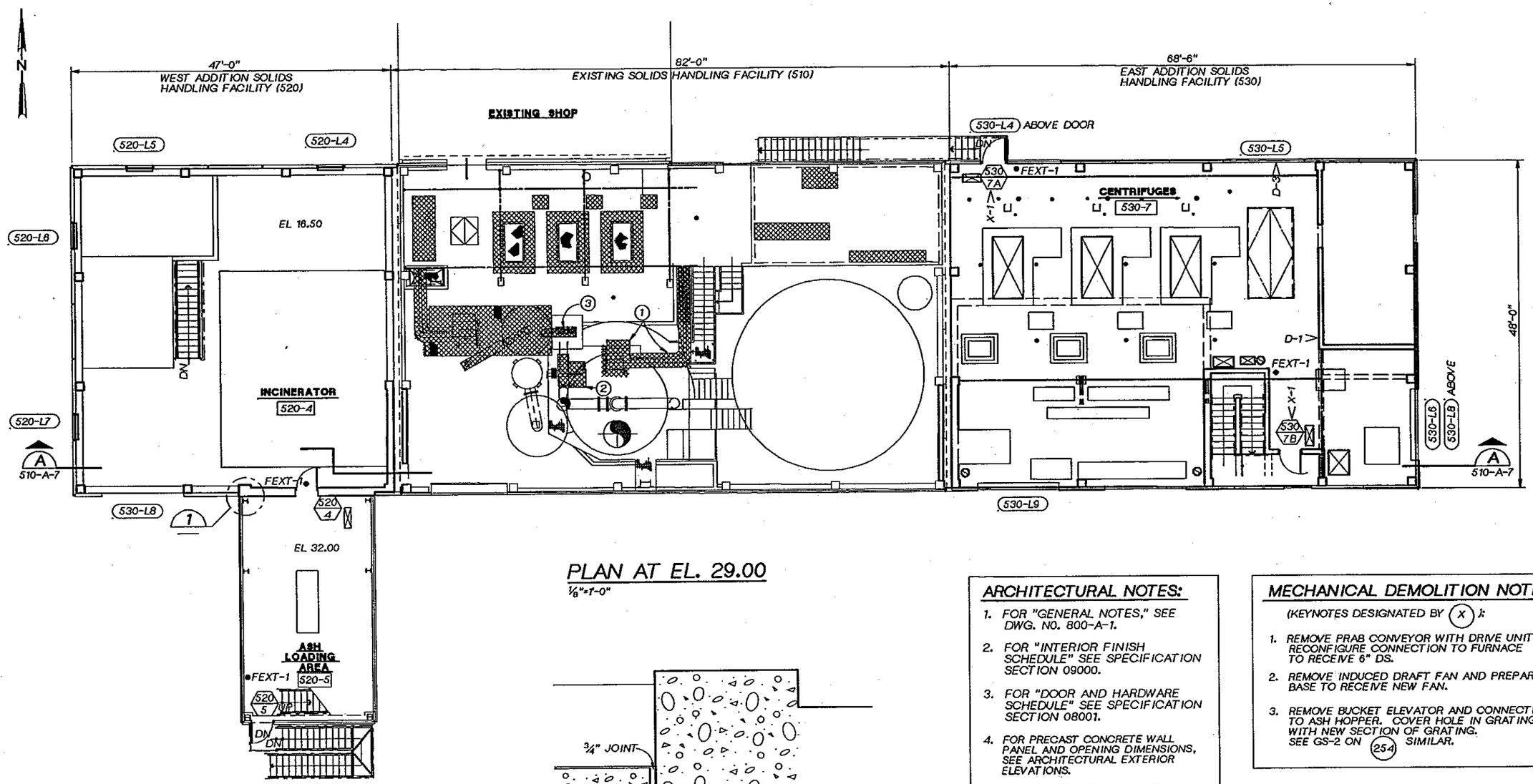

PLAN AT EL. 29.00

1/8"=1'-0"

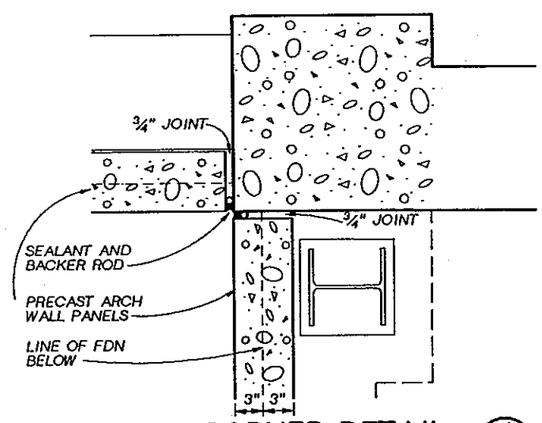

CORNER DETAIL 1

1/2"=1'-0" 510-A-4

ARCHITECTURAL NOTES:

1. FOR "GENERAL NOTES," SEE DWG. NO. 800-A-1.
2. FOR "INTERIOR FINISH SCHEDULE" SEE SPECIFICATION SECTION 09000.
3. FOR "DOOR AND HARDWARE SCHEDULE" SEE SPECIFICATION SECTION 08001.
4. FOR PRECAST CONCRETE WALL PANEL AND OPENING DIMENSIONS, SEE ARCHITECTURAL EXTERIOR ELEVATIONS.
5. FOR LOUVER SIZES AND DETAILS, SEE SPECIFICATION SECTION 10200.

MECHANICAL DEMOLITION NOTES

(KEYNOTES DESIGNATED BY (X)):

1. REMOVE PRAB CONVEYOR WITH DRIVE UNIT. RECONFIGURE CONNECTION TO FURNACE TO RECEIVE 6" DS.
2. REMOVE INDUCED DRAFT FAN AND PREPARE BASE TO RECEIVE NEW FAN.
3. REMOVE BUCKET ELEVATOR AND CONNECTION TO ASH HOPPER. COVER HOLE IN GRATING WITH NEW SECTION OF GRATING. SEE GS-2 ON (254) SIMILAR.

NOTES:

1. PLACE 400 S.F. OF ACOUSTICAL PANELS ON THE WALLS OF THE CENTRIFUGE ROOM [530-7]. LOCATE AS DIRECTED BY THE ENGINEER.

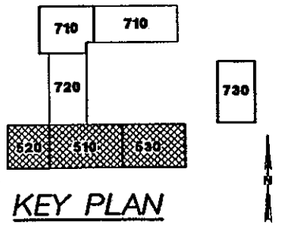

KEY PLAN

REGISTERED ARCHITECT JOHN K. PRICE STATE OF WASHINGTON

CH2M HILL

DSGN	G BOWER
DR	G BOWER
CHK	R WHITE
APVD	J. GAUTHIER

NO.	DATE	REVISION	BY	APVD

REUSE OF DOCUMENTS

THIS DOCUMENT, AND THE IDEAS AND DESIGNS INCORPORATED HEREIN, AS AN INSTRUMENT OF PROFESSIONAL SERVICE, IS THE PROPERTY OF CH2M HILL AND IS NOT TO BE USED, IN WHOLE OR IN PART, FOR ANY OTHER PROJECT WITHOUT THE WRITTEN AUTHORIZATION OF CH2M HILL.

©CH2M HILL

BAR IS ONE INCH ON ORIGINAL DRAWING. 0 1"
IF NOT ONE INCH ON THIS SHEET, ADJUST SCALES ACCORDINGLY.

CITY OF BELLINGHAM, WASHINGTON
POST POINT WASTEWATER TREATMENT PLANT UPGRADE

SOLIDS HANDLING FACILITY MODIFICATIONS

ARCHITECTURAL PLAN @ ELEV. 29.00

DWG NO. 510-A-4
DATE AUG. 1990
PROJ NO. SEA22462.C1

OVERLAY IDENTIFICATION: COMPOSITE, OVERLAY, SCITEX, PROJD, FILE

DATE: 08-15-90
DRAWN BY: GH BURLEY DESIGNED BY: GE BOWER
DGN NAME: H:/PROJ2/BELLINGH/BL510A-E.DGN

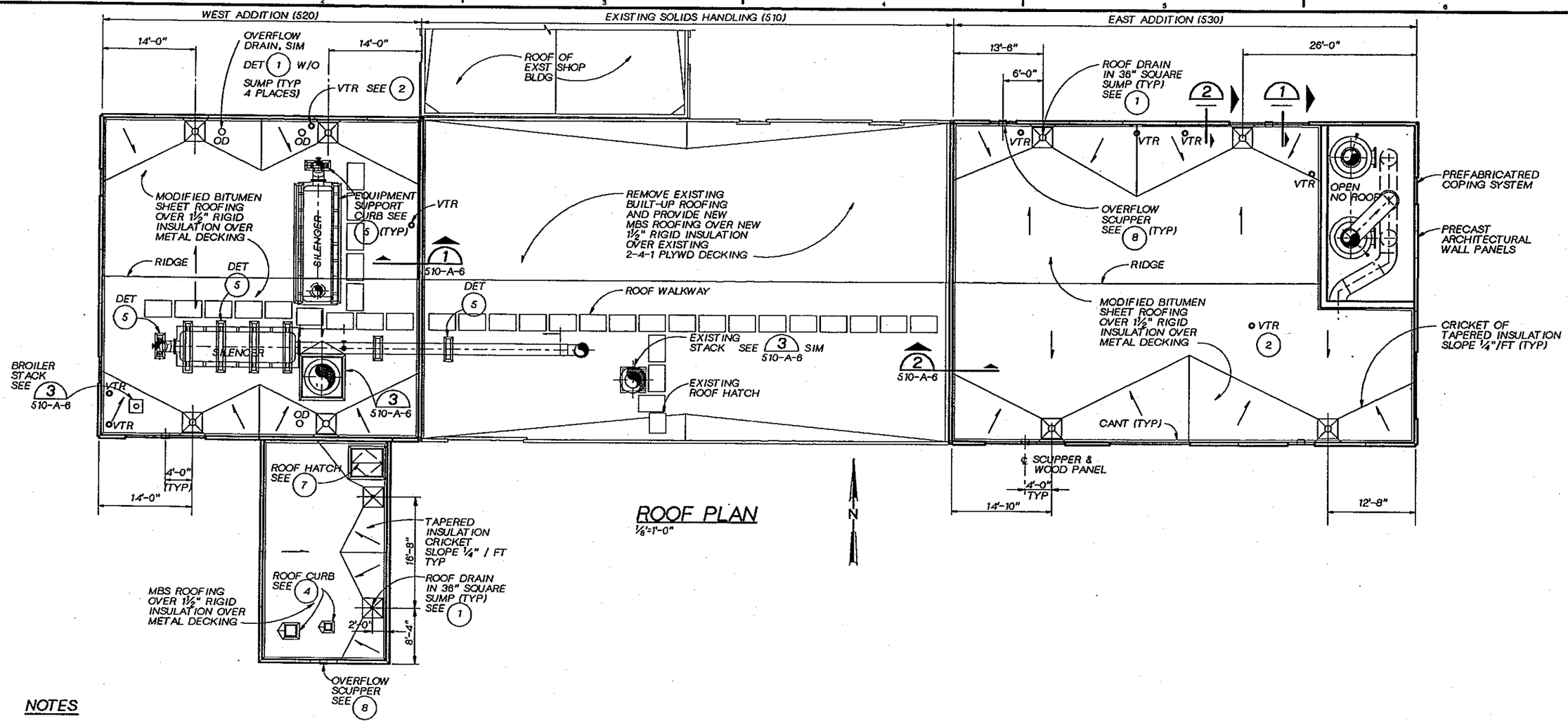

ROOF PLAN

⅛"=1'-0"

NOTES

1. VERIFY NUMBER OF AND LOCATION OF ALL EQUIPMENT SUPPORT CURBS WITH EQUIPMENT MANUFACTURER.

REGISTERED ARCHITECT STATE OF WASHINGTON

CH2M HILL

DSGN	G BOWER					
DR	O FRIAL					
CHK	R WHITE					
APVD	J. GAUTHIER	NO.	DATE	REVISION	BY	APVD

REUSE OF DOCUMENTS
THIS DOCUMENT, AND THE IDEAS AND DESIGNS INCORPORATED HEREIN, AS AN INSTRUMENT OF PROFESSIONAL SERVICE, IS THE PROPERTY OF CH2M HILL AND IS NOT TO BE USED, IN WHOLE OR IN PART, FOR ANY OTHER PROJECT WITHOUT THE WRITTEN AUTHORIZATION OF CH2M HILL.
©CH2M HILL

BAR IS ONE INCH ON ORIGINAL DRAWING.
0 1"
IF NOT ONE INCH ON THIS SHEET, ADJUST SCALES ACCORDINGLY.

CITY OF BELLINGHAM, WASHINGTON
POST POINT WASTEWATER TREATMENT PLANT UPGRADE

SOLIDS HANDLING FACILITY MODIFICATIONS

ARCHITECTURAL ROOF PLAN

DWG NO. 510-A-5
DATE AUG. 1990
PROJ NO. SEA22462.C1

DATE: 8-26-90
DRAWN BY: T.W. MCINTYRE DESIGNED BY: T.W. MCINTYRE
DGN NAME: H:/PROJ2/BELLINGH/BL510A-G.DGN

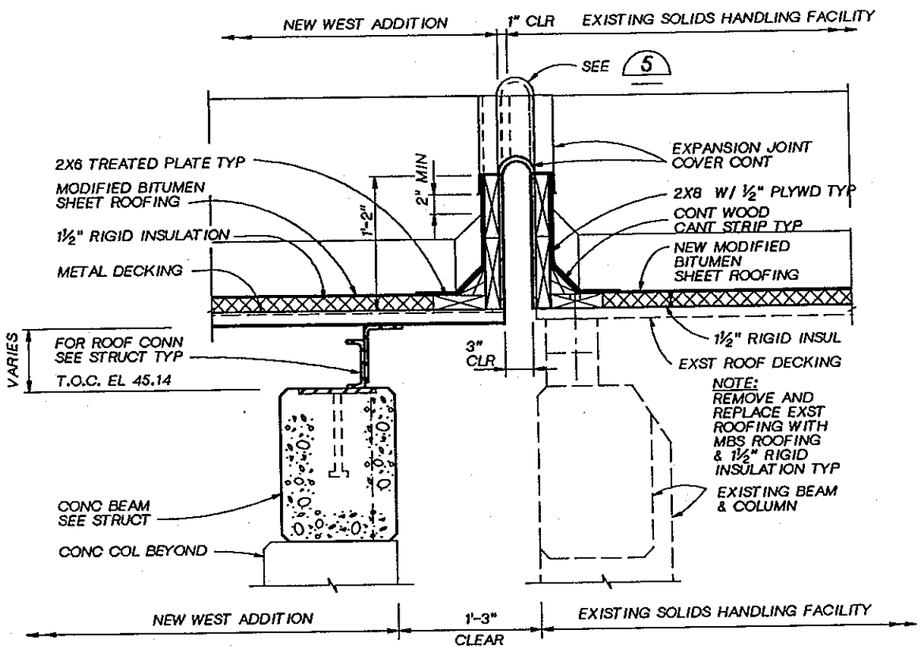

ROOF EXPANSION JOINT 1

1 ½" = 1'-0"

510-A-5
510-A-7

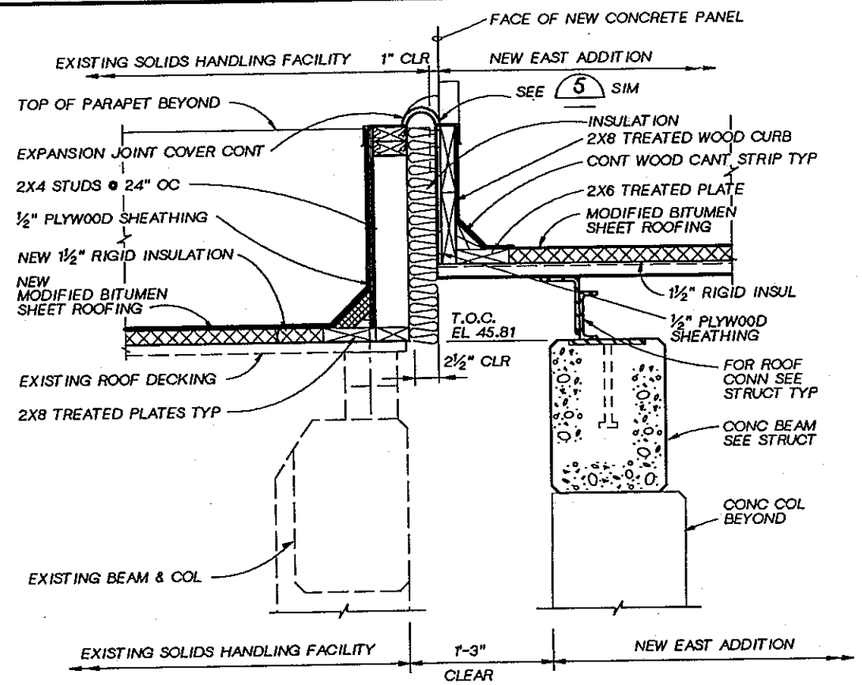

ROOF EXPANSION JOINT 2

1 ½" = 1'-0"

510-A-5
510-A-7

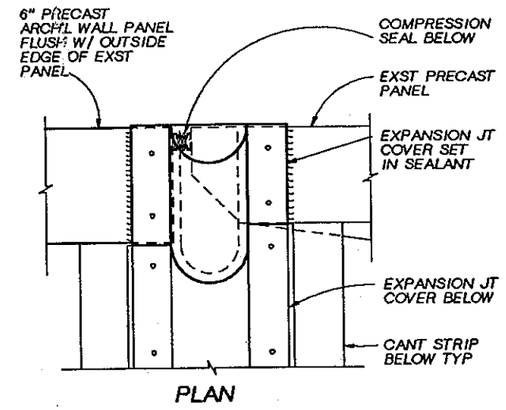

EXPANSION JOINT 5

3"= 1'-0"

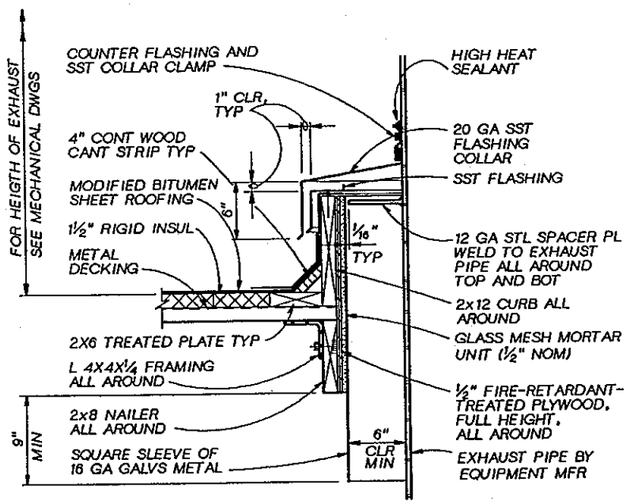

EXHAUST PIPE CURB 3

1 ½" = 1'-0"

510-A-5

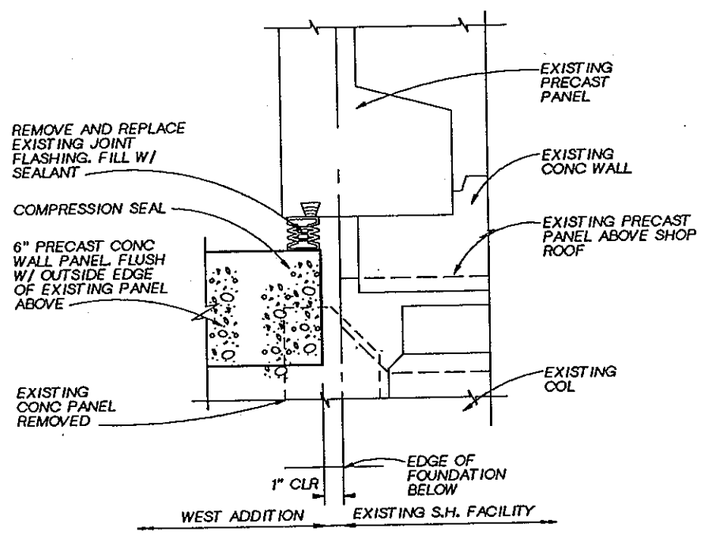

WALL EXPANSION JOINT 4

3"= 1'-0"

510-A-5

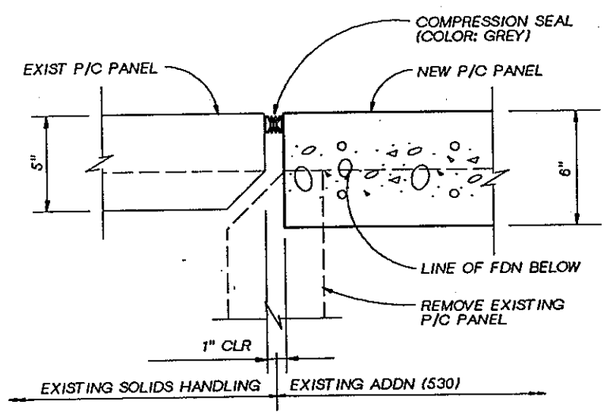

WALL EXPANSION JOINT 6

3"= 1'-0"

510-A-5

REGISTERED ARCHITECT JOHN LYONS STATE OF WASHINGTON

CH2M HILL

DSGN	T MCINTYRE					
DR	T MCINTYRE					
CHK	R WHITE					
APVD	J. GAUTHIER	NO.	DATE	REVISION	BY	APVD

REUSE OF DOCUMENTS
THIS DOCUMENT, AND THE IDEAS AND DESIGNS INCORPORATED HEREIN, AS AN INSTRUMENT OF PROFESSIONAL SERVICE, IS THE PROPERTY OF CH2M HILL AND IS NOT TO BE USED, IN WHOLE OR IN PART, FOR ANY OTHER PROJECT WITHOUT THE WRITTEN AUTHORIZATION OF CH2M HILL.
©CH2M HILL

BAR IS ONE INCH ON ORIGINAL DRAWING. 0 1"
IF NOT ONE INCH ON THIS SHEET, ADJUST SCALES ACCORDINGLY.

CITY OF BELLINGHAM, WASHINGTON
POST POINT WASTEWATER TREATMENT PLANT UPGRADE

SOLIDS HANDLING FACILITY MODIFICATIONS
ARCHITECTURAL DETAILS

DWG NO. 510-A-6
DATE AUG. 1990
PROJ NO. SEA22462.C1

OVERLAY COMPOSITE OVERLAY SCREEN PROJID FILE

DATE: 8-24-90
DRAWN BY: G BOWER DESIGNED BY: G BOWER
DGN NAME: H:/PROJ2/BELLINGH/BL510A-F.DGN

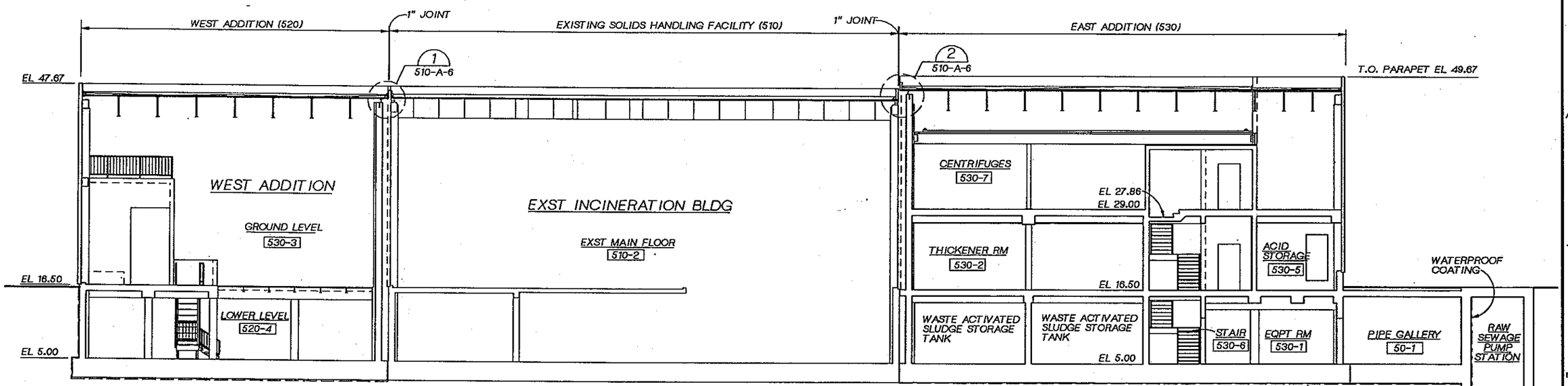

SECTION A

1/8" = 1'-0" 510-A-2,510-A-3,510-A-4

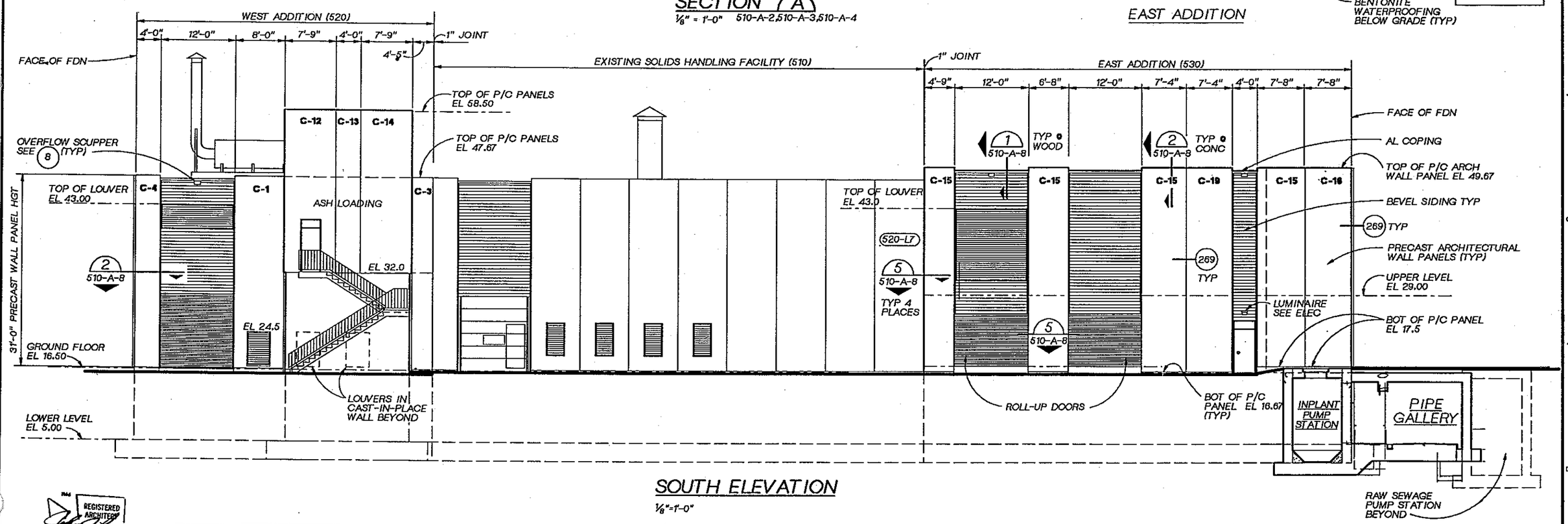

SOUTH ELEVATION

1/8"=1'-0"

REGISTERED ARCHITECT JOHN F. HILL STATE OF WASHINGTON

CH2M HILL

DSGN	G BOWER
DR	G BOWER
CHK	R WHITE
APVD	J GAUTHIER

NO.	DATE	REVISION	BY	APVD

REUSE OF DOCUMENTS
THIS DOCUMENT, AND THE IDEAS AND DESIGNS INCORPORATED HEREIN, AS AN INSTRUMENT OF PROFESSIONAL SERVICE, IS THE PROPERTY OF CH2M HILL AND IS NOT TO BE USED, IN WHOLE OR IN PART, FOR ANY OTHER PROJECT WITHOUT THE WRITTEN AUTHORIZATION OF CH2M HILL.
©CH2M HILL

BAR IS ONE INCH ON ORIGINAL DRAWING. 0 1"
IF NOT ONE INCH ON THIS SHEET, ADJUST SCALES ACCORDINGLY.

CITY OF BELLINGHAM, WASHINGTON
POST POINT WASTEWATER TREATMENT PLANT UPGRADE

SOLIDS HANDLING FACILITY -- WEST ADDITION
LONGITUDINAL SECTION & SOUTH ELEVATION

DWG NO. 510-A-7
DATE AUG. 1990
PROJ NO. SEA22462.C1

DATE: 8/27/90
DRAWN BY: GE BOWER/CSH DESIGNED BY: GE BOWER
DGN NAME: H:/PROJ2/BELLINGH/BL510A-H.DGN

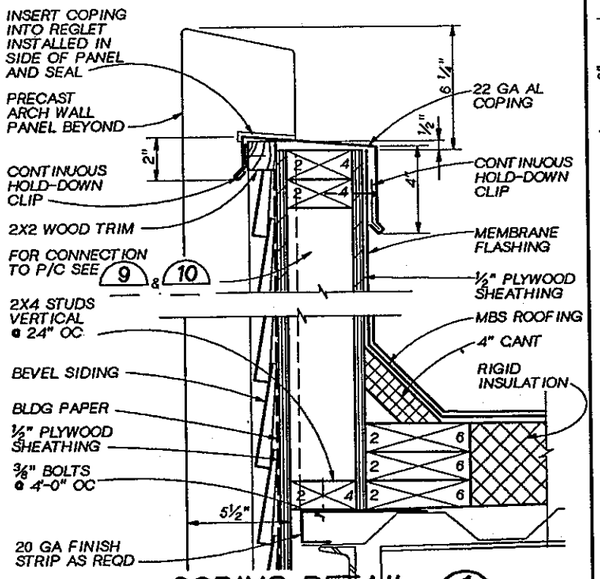

COPING DETAIL 1
3"=1'-0" 510-A-1, 510-A-5, 510-A-7

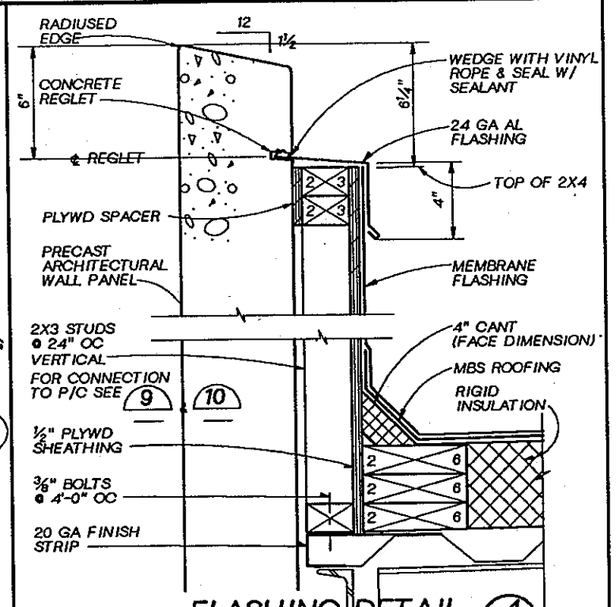

FLASHING DETAIL 4
3"=1'-0" 510-A-1, 510-A-5, 510-A-7

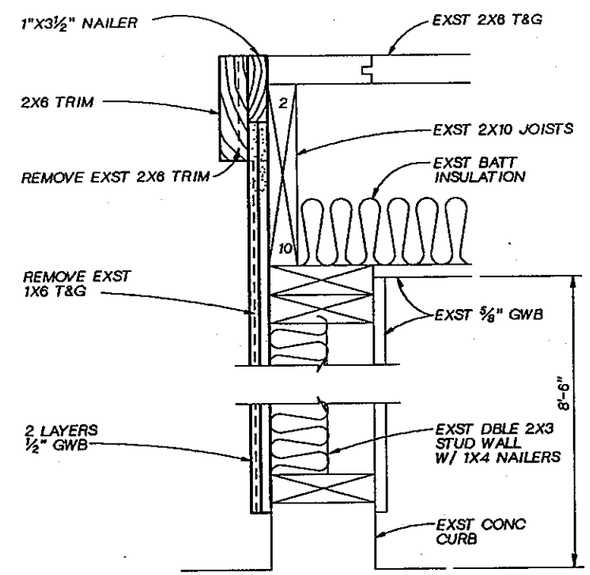

WALL SECTION 7
3"=1'-0" 510-A-3

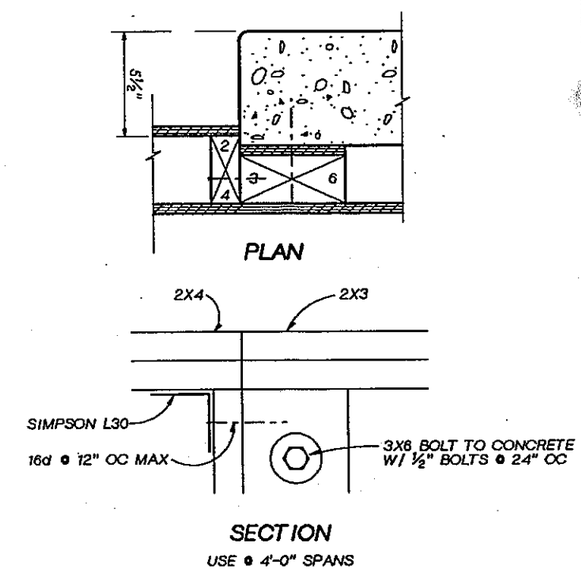

WOOD PANEL CONNECTION 9
3"=1'-0"

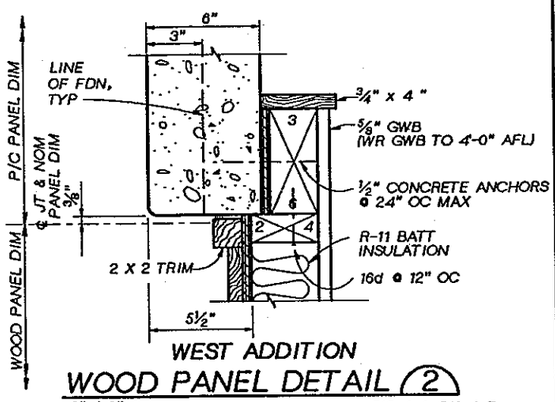

WOOD PANEL DETAIL 2
3"=1'-0" 510-A-1, 510-A-7

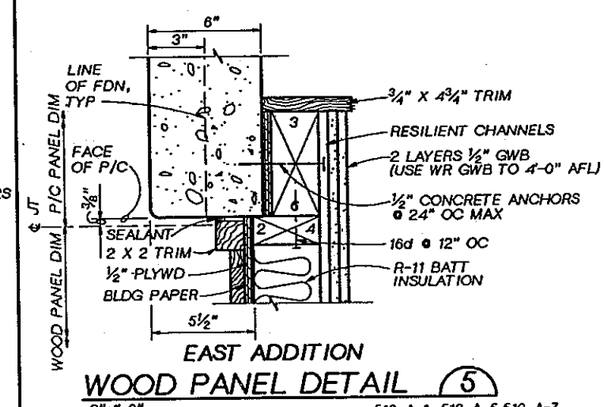

WOOD PANEL DETAIL 5
3"=1'-0" 510-A-1, 510-A-5, 510-A-7

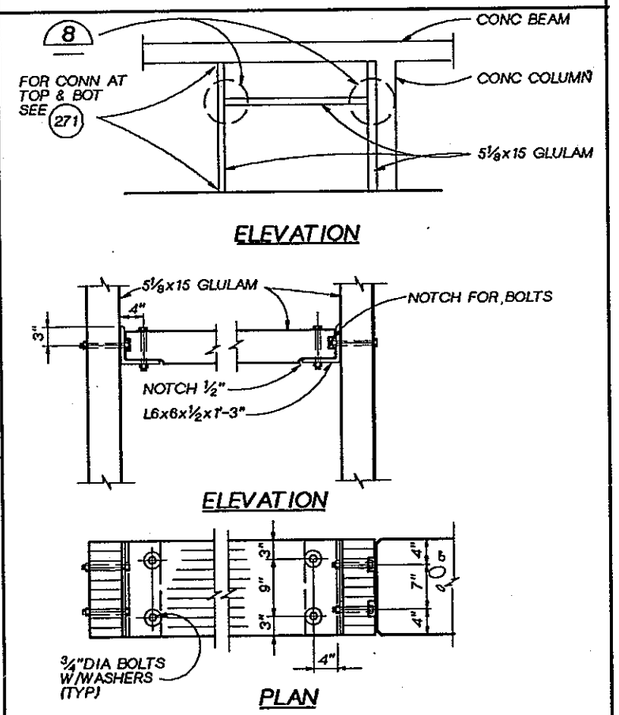

DOOR FRAMING 8
1" = 1'-0"

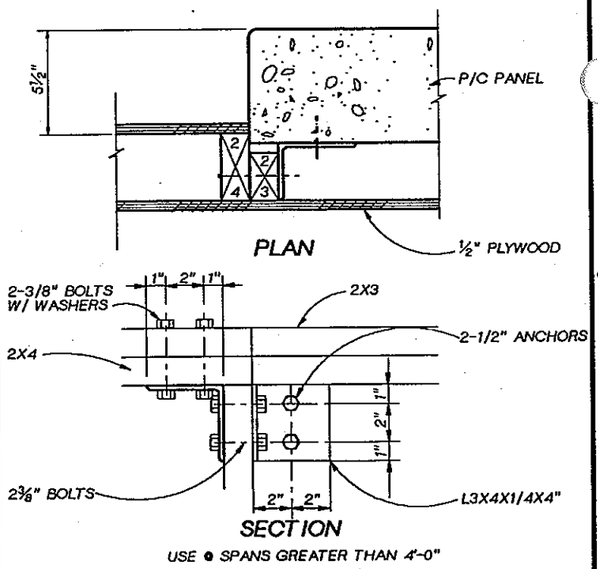

WOOD PANEL CONNECTION 10
3"=1'-0"

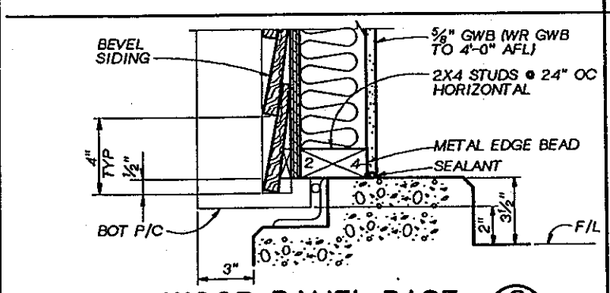

WOOD PANEL BASE 3
3"=1'-0" 510-A-1, 510-A-7

REGISTERED ARCHITECT JOHN J. KIRKS STATE OF WASHINGTON

CH2M HILL

DSGN	G BOWER		
DR	G BOWER		
CHK	R WHITE		
APVD	J. GAUTHIER	NO.	DATE

REVISION | BY | APVD

REUSE OF DOCUMENTS
THIS DOCUMENT, AND THE IDEAS AND DESIGNS INCORPORATED HEREIN, AS AN INSTRUMENT OF PROFESSIONAL SERVICE, IS THE PROPERTY OF CH2M HILL AND IS NOT TO BE USED, IN WHOLE OR IN PART, FOR ANY OTHER PROJECT WITHOUT THE WRITTEN AUTHORIZATION OF CH2M HILL.
©CH2M HILL

BAR IS ONE INCH ON ORIGINAL DRAWING.
0 1"
IF NOT ONE INCH ON THIS SHEET, ADJUST SCALES ACCORDINGLY.

CITY OF BELLINGHAM, WASHINGTON
POST POINT WASTEWATER TREATMENT PLANT UPGRADE

SOLIDS HANDLING FACILITY MODIFICATIONS
ARCHITECTURAL MISCELLANEOUS DETAILS

DWG NO. 510-A-8
DATE AUG. 1990
PROJ. NO. SEA22462.C1

OVERLAY IDENTIFICATION: PROJID FILE | COMPOSITE OVERLAY SCREEN

DRAWN BY: BBL DESIGNED BY: LMK
DGN NAME: H:/PROJ2/BELLINGH/BL510S-A.DGN

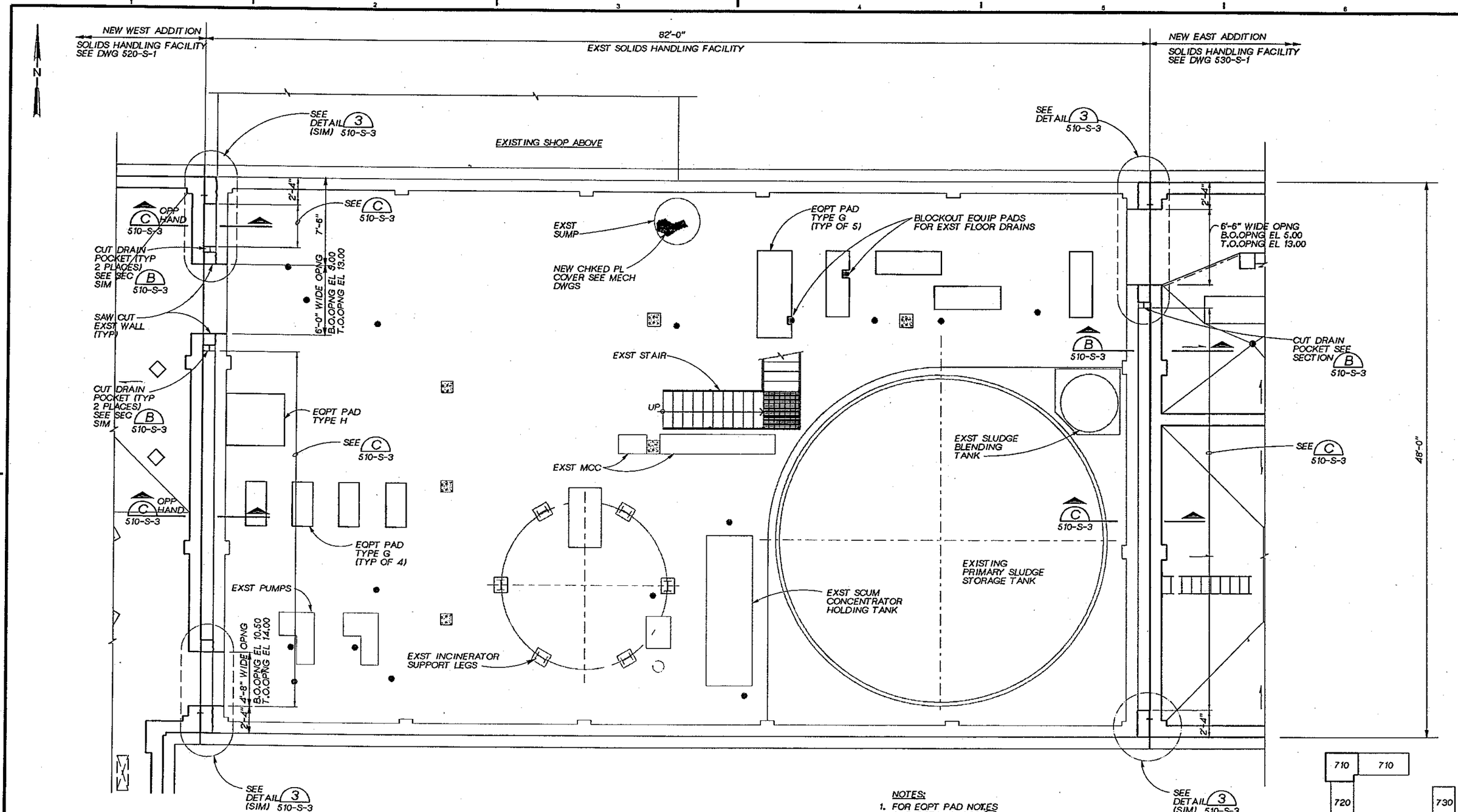

NOTES:
1. FOR EQPT PAD NOTES AND DETAILS, SEE 230

FOUNDATION PLAN
1/4" = 1'-0"

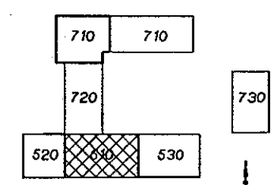

KEY PLAN

DSGN L. KORBUS				
DR B. LAZARO				
CHK W. BENNETT				
APVD J GAUTHIER	NO.	DATE	REVISION	BY / APVD

CH2M HILL

REUSE OF DOCUMENTS
THIS DOCUMENT, AND THE IDEAS AND DESIGNS INCORPORATED HEREIN, AS AN INSTRUMENT OF PROFESSIONAL SERVICE, IS THE PROPERTY OF CH2M HILL AND IS NOT TO BE USED, IN WHOLE OR IN PART, FOR ANY OTHER PROJECT WITHOUT THE WRITTEN AUTHORIZATION OF CH2M HILL.
©CH2M HILL

VERIFY SCALE
BAR IS ONE INCH ON ORIGINAL DRAWING.
0 1"
IF NOT ONE INCH ON THIS SHEET, ADJUST SCALES ACCORDINGLY.

CITY OF BELLINGHAM, WASHINGTON
POST POINT WASTEWATER TREATMENT PLANT UPGRADE

SOLIDS HANDLING FACILITY MODIFICATIONS
STRUCTURAL
FOUNDATION PLAN

DWG NO. 510-S-1
DATE AUG. 1990
PROJ NO. SEA22462.C1

DATE: 6-20-90
DRAWN BY: BBL DESIGNED BY: LMK
DGN NAME: H:/PROJ2/BELLINGH/BL510S-B.DGN

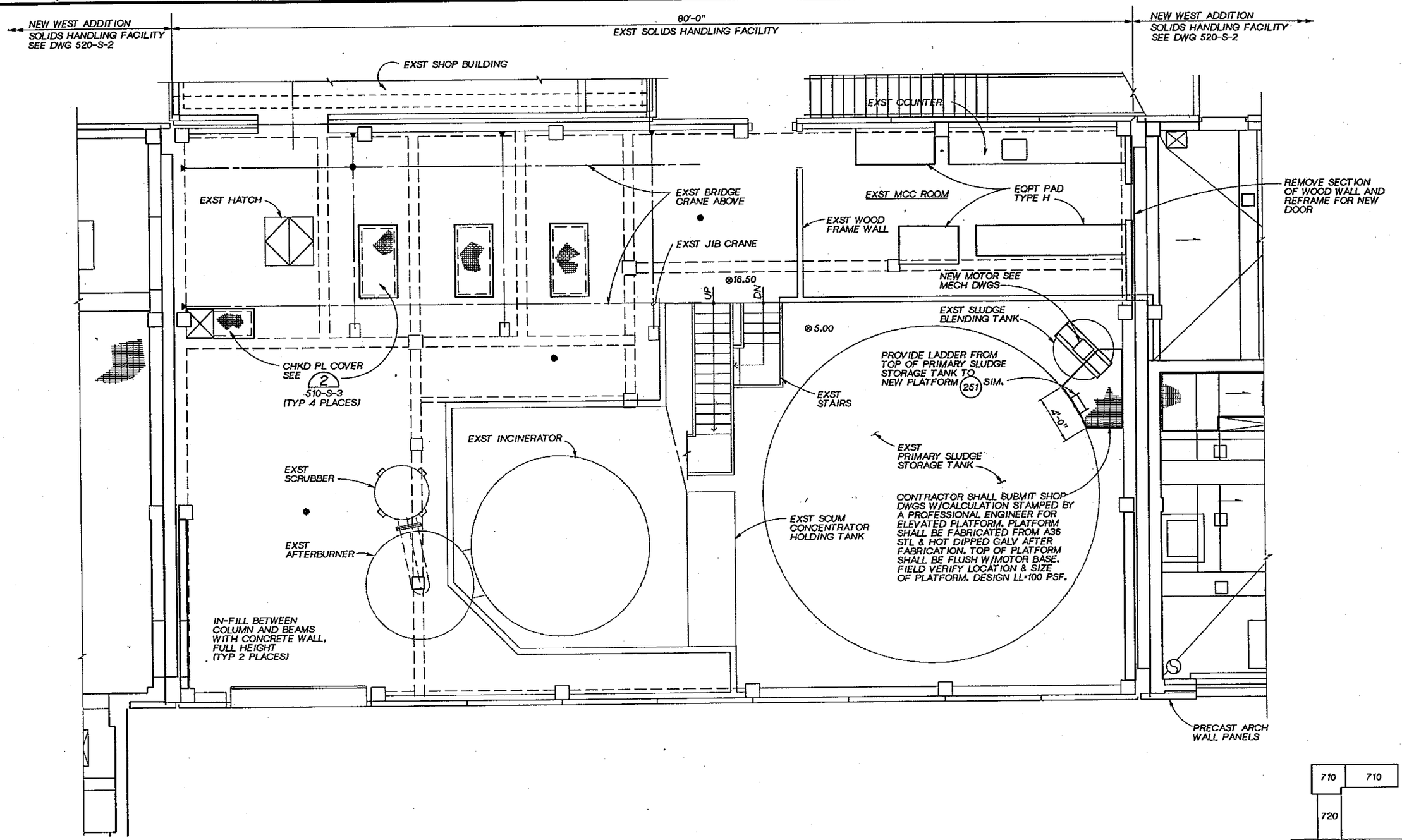

GROUND LEVEL PLAN

1/4" = 1'-0"

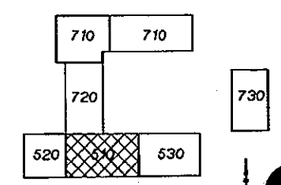

KEY PLAN

LINDA M. KORBUS
REGISTERED PROFESSIONAL ENGINEER

CH2M HILL

DSGN	L. KORBUS
DR	B. LAZARO
CHK	W. BENNETT
APVD	J. GAUTHIER

NO.	DATE	REVISION	BY	APVD

REUSE OF DOCUMENTS

THIS DOCUMENT, AND THE IDEAS AND DESIGNS INCORPORATED HEREIN, AS AN INSTRUMENT OF PROFESSIONAL SERVICE, IS THE PROPERTY OF CH2M HILL AND IS NOT TO BE USED, IN WHOLE OR IN PART, FOR ANY OTHER PROJECT WITHOUT THE WRITTEN AUTHORIZATION OF CH2M HILL.
©CH2M HILL

VERIFY SCALE
BAR IS ONE INCH ON ORIGINAL DRAWING.
0 1"
IF NOT ONE INCH ON THIS SHEET, ADJUST SCALES ACCORDINGLY.

CITY OF BELLINGHAM, WASHINGTON
POST POINT WASTEWATER TREATMENT PLANT UPGRADE

SOLIDS HANDLING FACILITY MODIFICATIONS
STRUCTURAL
GROUND LEVEL PLAN

DWG NO. 510-S-2
DATE AUG. 1990
PROJ NO. SEA22462.C1

OVERLAY IDENTIFICATION
PROJID
FILE
COMPOSITE 1 14 15
OVERLAY 1 14 15
SCREEN

DATE: 8-28-90
DRAWN BY: BBL DESIGNED BY: L. KORBUS
DGN NAME: H:/PROJ2/BELLINGH/BL610S-C.DGN

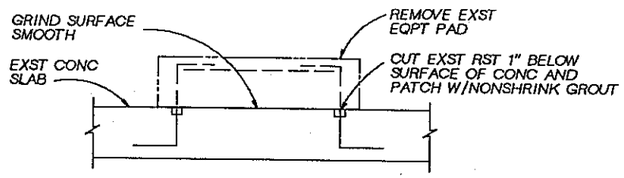

DETAIL 1
NTS 510-A-2 510-A-3

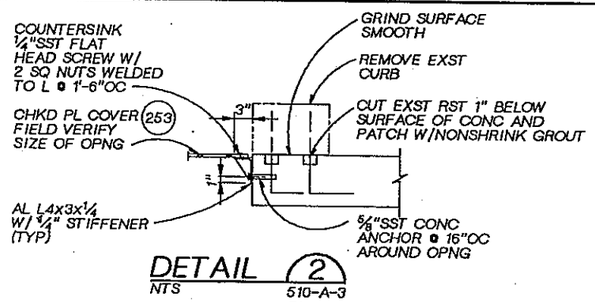

DETAIL 2
NTS 510-A-3 510-S-2

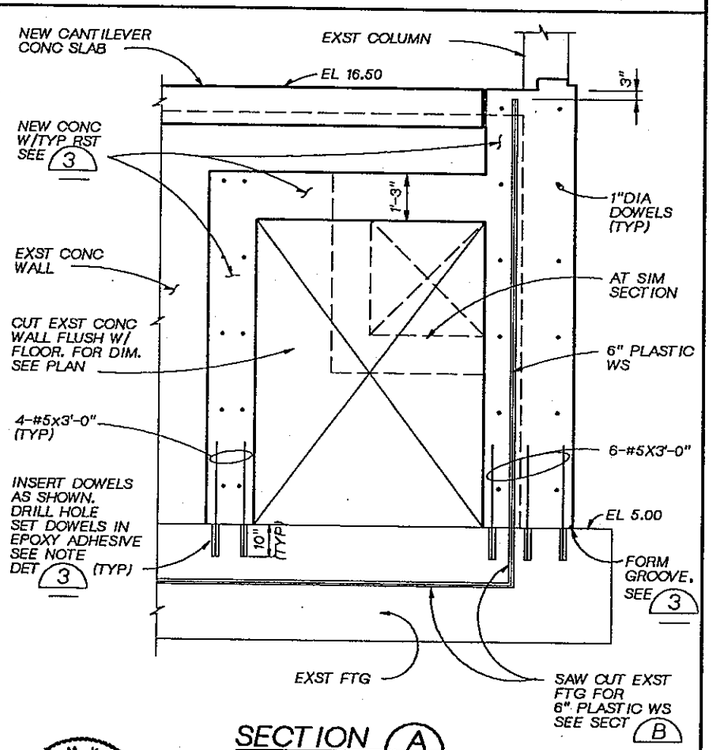

SECTION A
½" = 1'-0"

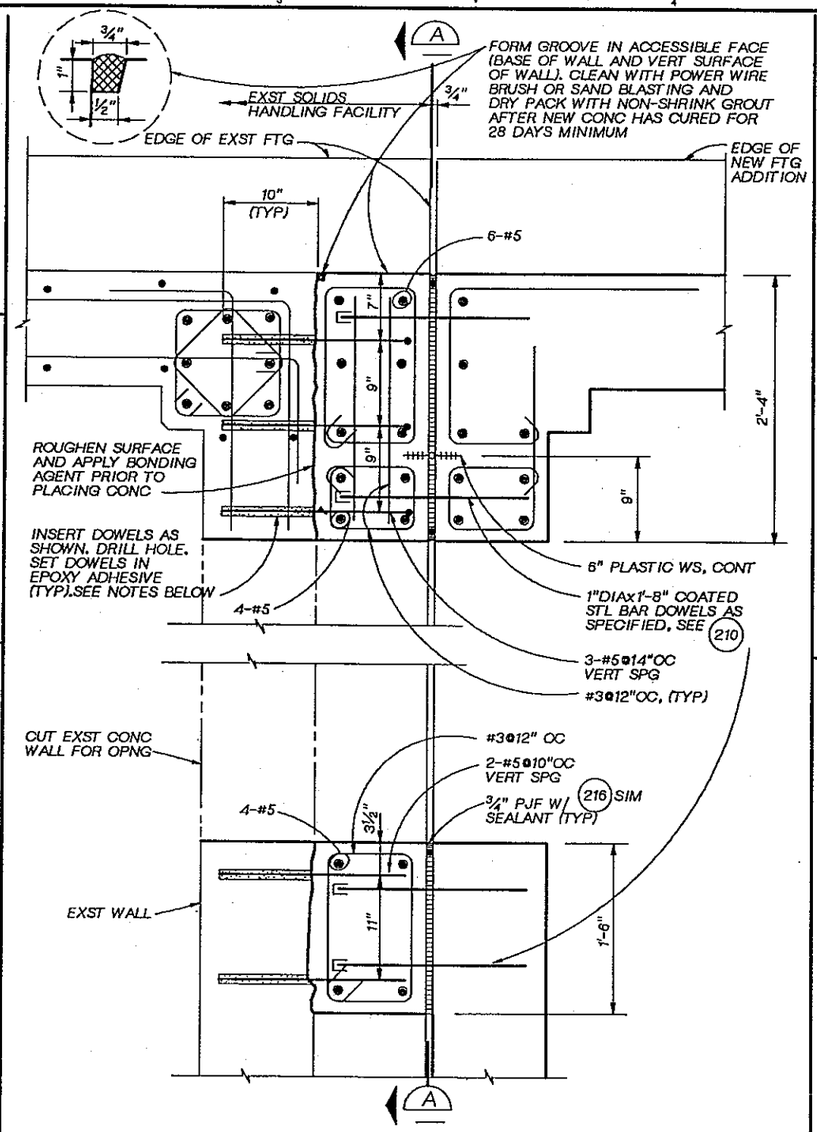

PLAN

NOTES ON ANCHOR INSTALLATION:

1. DRILL PROPER SIZE HOLE IN EXISTING CONCRETE. DO NOT FRACTURE OR DAMAGE EXISTING CONCRETE.
2. CLEAN OUT HOLE WITH WIRE BRUSH AND AIR BLAST; DRY HOLE PRIOR TO PLACING EPOXY.
3. INSTALL ANCHOR IN VERTICAL, HORIZONTAL AND OVERHEAD POSITIONS PER MANUFACTURER'S REQUIREMENTS.
4. ALLOW ANCHOR TO CURE BEFORE APPLYING LOAD.

DETAIL 3
1½" = 1'-0" 510-S-2 510-S-3 510-S-4

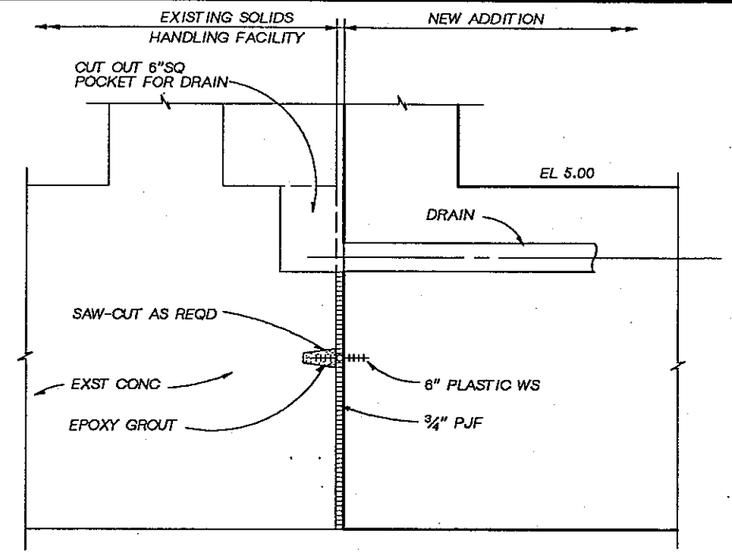

SECTION B
1 ½" = 1'-0" 510-S-2

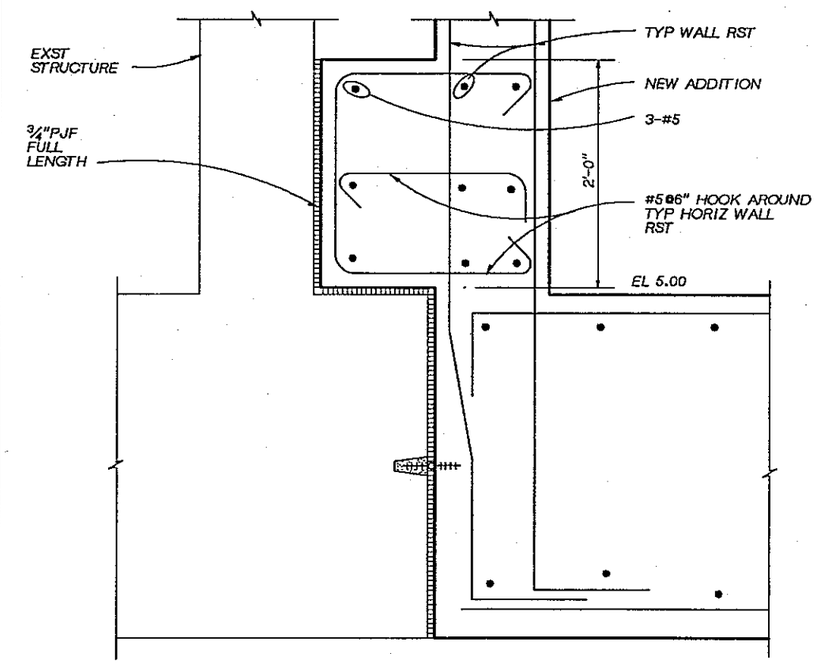

SECTION C
1 ½" = 1'-0" 510-S-2

CH2M HILL	DSGN L. KORBUS				
	DR B. LAZARO				
	CHK W. BENNETT				
	APVD J. GAUTHIER	NO.	DATE	REVISION	BY	APVD

REUSE OF DOCUMENTS
THIS DOCUMENT, AND THE IDEAS AND DESIGNS INCORPORATED HEREIN, AS AN INSTRUMENT OF PROFESSIONAL SERVICE, IS THE PROPERTY OF CH2M HILL AND IS NOT TO BE USED, IN WHOLE OR IN PART, FOR ANY OTHER PROJECT WITHOUT THE WRITTEN AUTHORIZATION OF CH2M HILL.
©CH2M HILL

BAR IS ONE INCH ON ORIGINAL DRAWING. 0 1"
IF NOT ONE INCH ON THIS SHEET, ADJUST SCALES ACCORDINGLY.

CITY OF BELLINGHAM, WASHINGTON
POST POINT WASTEWATER TREATMENT PLANT UPGRADE

SOLIDS HANDLING FACILITY MODIFICATIONS
STRUCTURAL
SECTIONS AND DETAILS

DWG NO. 510-S-3
DATE AUG. 1990
PROJ NO. SEA22462.C1

OVERLAY IDENTIFICATION | COMPOSITE | PROJ ID | OVERLAY | FILE | PEN

DATE: 8-26-90
DRAWN BY: BBL DESIGNED BY: L. KORBUS
DGN NAME: H:/PROJ2/BELLINGH/BL510S-D.DGN

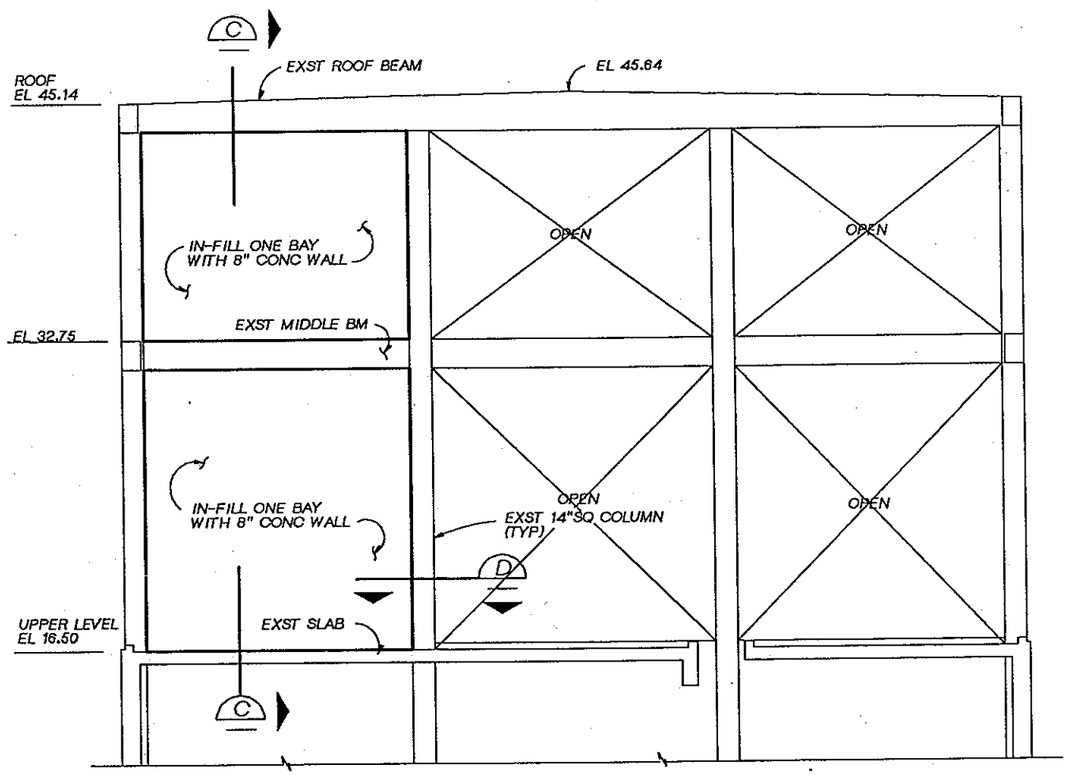

WEST END WALL ELEVATION

1/4" = 1'-0" (EAST END WALL OPPOSITE)

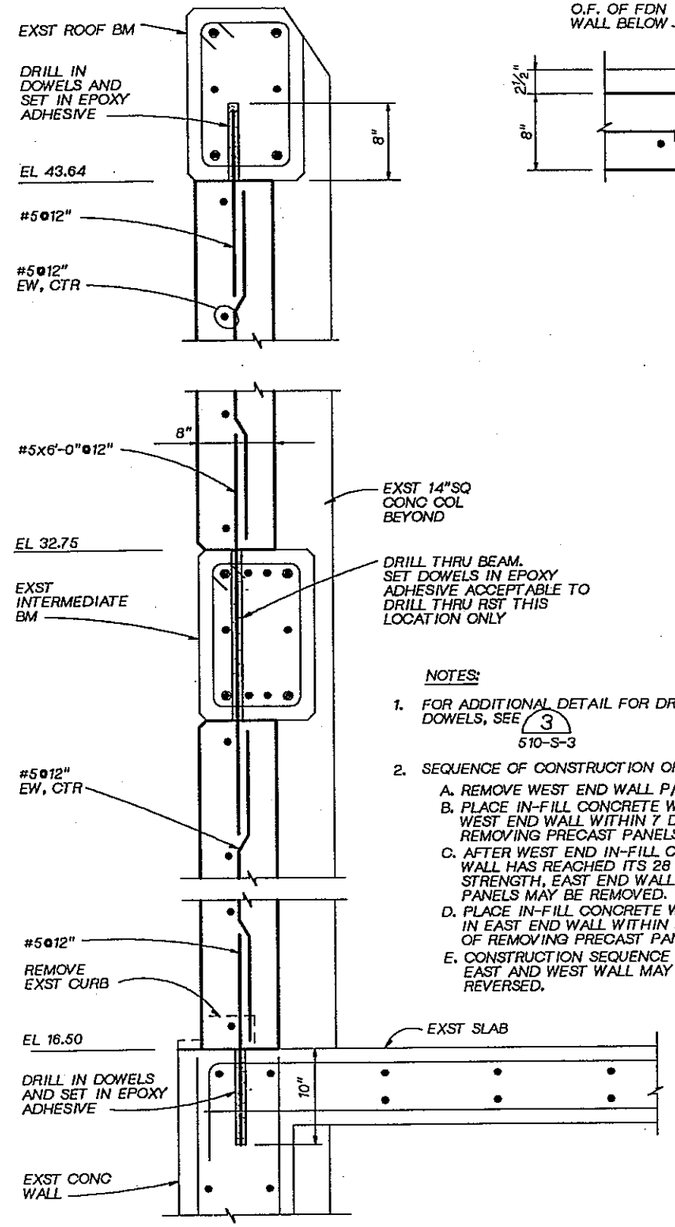

SECTION C

1½" = 1'-0"

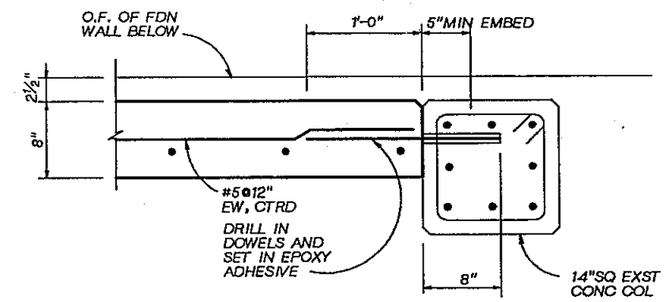

SECTION D

1½" = 1'-0"

NOTES:

1. FOR ADDITIONAL DETAIL FOR DRILLED IN DOWELS, SEE 3 / 510-S-3
2. SEQUENCE OF CONSTRUCTION OF IN-FILL WALLS:
   A. REMOVE WEST END WALL P/C PANELS.
   B. PLACE IN-FILL CONCRETE WALL IN WEST END WALL WITHIN 7 DAYS OR REMOVING PRECAST PANELS.
   C. AFTER WEST END IN-FILL CONCRETE WALL HAS REACHED ITS 28 DAY STRENGTH, EAST END WALL P/C PANELS MAY BE REMOVED.
   D. PLACE IN-FILL CONCRETE WALL IN EAST END WALL WITHIN 7 DAYS OF REMOVING PRECAST PANELS.
   E. CONSTRUCTION SEQUENCE OF EAST AND WEST WALL MAY BE REVERSED.

LINDA M. KORBUS 22864 REGISTERED PROFESSIONAL ENGINEER 8-26-90

CH2M HILL

DSGN	L KORBUS
DR	B LAZARO
CHK	W BENNETT
APVD	J GAUTHIER

NO.	DATE	REVISION	BY	APVD

REUSE OF DOCUMENTS
THIS DOCUMENT, AND THE IDEAS AND DESIGNS INCORPORATED HEREIN, AS AN INSTRUMENT OF PROFESSIONAL SERVICE, IS THE PROPERTY OF CH2M HILL AND IS NOT TO BE USED, IN WHOLE OR IN PART, FOR ANY OTHER PROJECT WITHOUT THE WRITTEN AUTHORIZATION OF CH2M HILL.
©CH2M HILL

BAR IS ONE INCH ON ORIGINAL DRAWING.
0 1"
IF NOT ONE INCH ON THIS SHEET, ADJUST SCALES ACCORDINGLY.

CITY OF BELLINGHAM, WASHINGTON
POST POINT WASTEWATER TREATMENT PLANT UPGRADE

SOLDS HANDLING FACILITY MODIFICATIONS
STRUCTURAL DETAILS

DWG NO. 510-S-4
DATE AUG. 1990
PROJ NO. SEA22462.C1

DATE: 8-22-90
DRAWN BY: R. FRIBERG DESIGNED BY: G. SAKAGAWA
DGN NAME: H:/PROJ2/BELLINGH/BL510M-A.DGN

NOTES (KEYNOTES DESIGNATED BY (X)):

1. PHOTO DETAILS DESIGNATED BY (XX) WHERE XX IS DETAIL NUMBER. PHOTO DETAILS ARE SHOWN ON 510-M-4 AND 510-M-5.
2. HYDROPNEUMATIC TANK (TYP OF 3) SEE 1 / 510-M-3
3. 4" W3, CONNECT TO EXST SEE 4 / 510-M-4
4. ASH CONVEYOR, BOTTOM OF TROUGH EL 12.00, MIN.
5. CONVEYOR SUPPORTS AS REQD
6. NEW BOTTOM ASH CONVEYOR SLOPE AS REQD TO MAINTAIN CONNECTING CONVEYOR ELEVATION
7. ROLL 6" WYE BRANCH UP AT 45° TO ℄ EL 14.0
8. ALL FSL THIS SHEET TO BE INSTALLED PER (702)
9. 6" W3 45° OFFSET DOWN FROM ℄ EL 14.0 TO ℄ EL 12.5. 6" FW SIM
10. FOR PIPING DETAILS IN THIS AREA, SEE PARTIAL PLAN DWG 510-M-3
11. MAINTAIN UNIFORM SLOPE FROM NEW TEE TO AIRGAP OVERFLOW CONNECTION.
12. 3" W4 DOWN WALL. REDUCE & TIE IN TO EXST 1" WATER LINE THROUGH WALL IN THIS VICINITY. CAP EXST WATER LINE INSIDE BUILDING.
13. ALL PSH THIS SHEET SHALL BE INSTALLED WITH CORRESPONDING PE PER (709)
14. NEW DUCTWORK VALVE AND CONNECTIONS

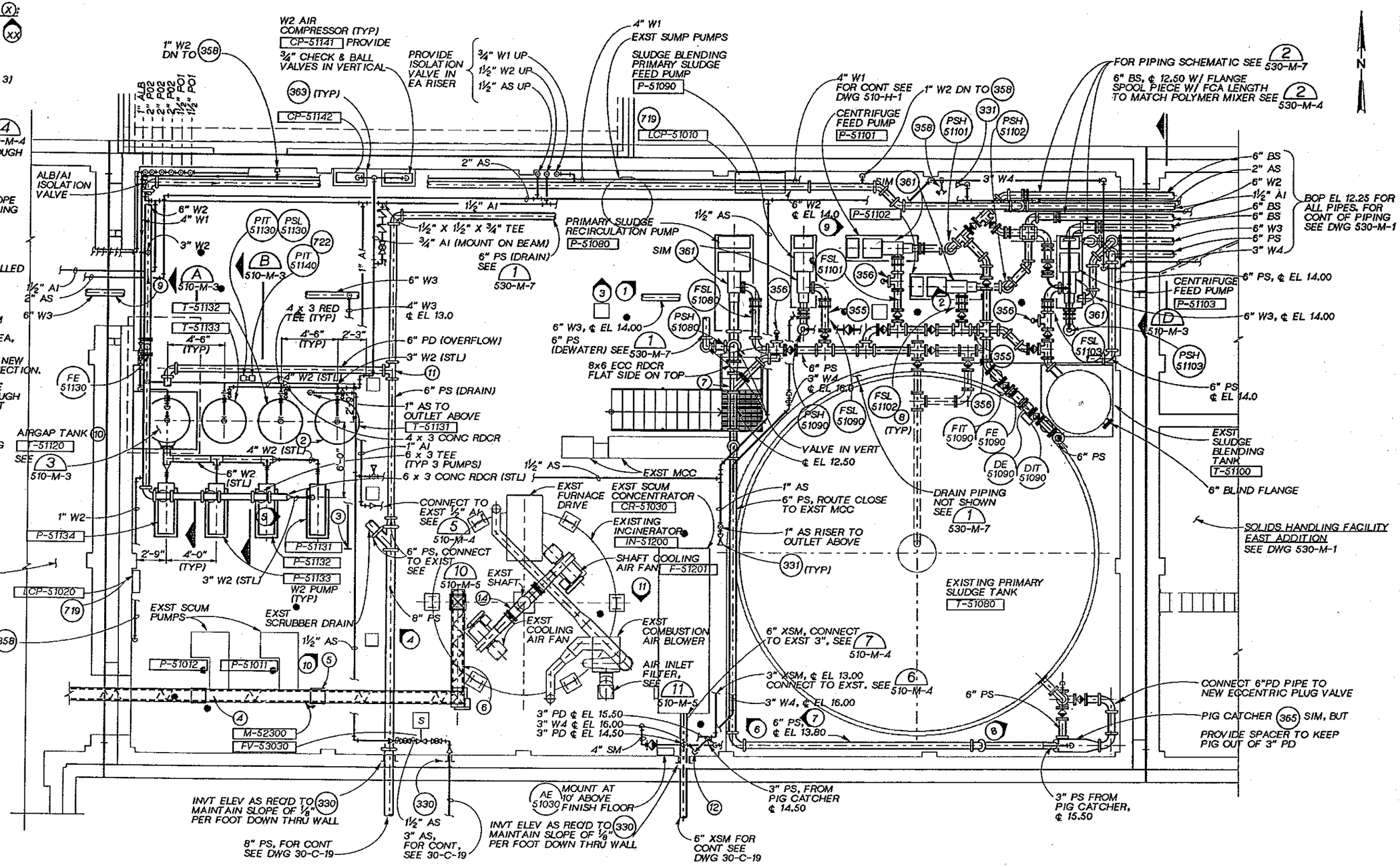

LOWER LEVEL FLOOR PLAN AT EL. 5.00

1/4" = 1'-0"

DSGN G. SAKAGAWA					
DR R. FRIBERG					
CHK R. NAEF					
APVD J. GAUTHIER	NO.	DATE	REVISION	BY	APVD

CH2M HILL

REUSE OF DOCUMENTS
THIS DOCUMENT, AND THE IDEAS AND DESIGNS INCORPORATED HEREIN, AS AN INSTRUMENT OF PROFESSIONAL SERVICE, IS THE PROPERTY OF CH2M HILL AND IS NOT TO BE USED, IN WHOLE OR IN PART, FOR ANY OTHER PROJECT WITHOUT THE WRITTEN AUTHORIZATION OF CH2M HILL.
©CH2M HILL

VERIFY SCALES
BAR IS ONE INCH ON ORIGINAL DRAWING.
0 1"
IF NOT ONE INCH ON THIS SHEET, ADJUST SCALES ACCORDINGLY.

CITY OF BELLINGHAM, WASHINGTON
POST POINT WASTEWATER TREATMENT PLANT UPGRADE

SOLIDS HANDLING FACILITY MODIFICATIONS
MECHANICAL
LOWER LEVEL PLAN

DWG NO. 510-M-1
DATE AUG. 1990
PROJ NO. SEA22462.C1

DRAWN BY: M. MOORE DESIGNED BY:
DGN NAME: H:/PROJ2/BELLINGH/BL510M-B.DGN

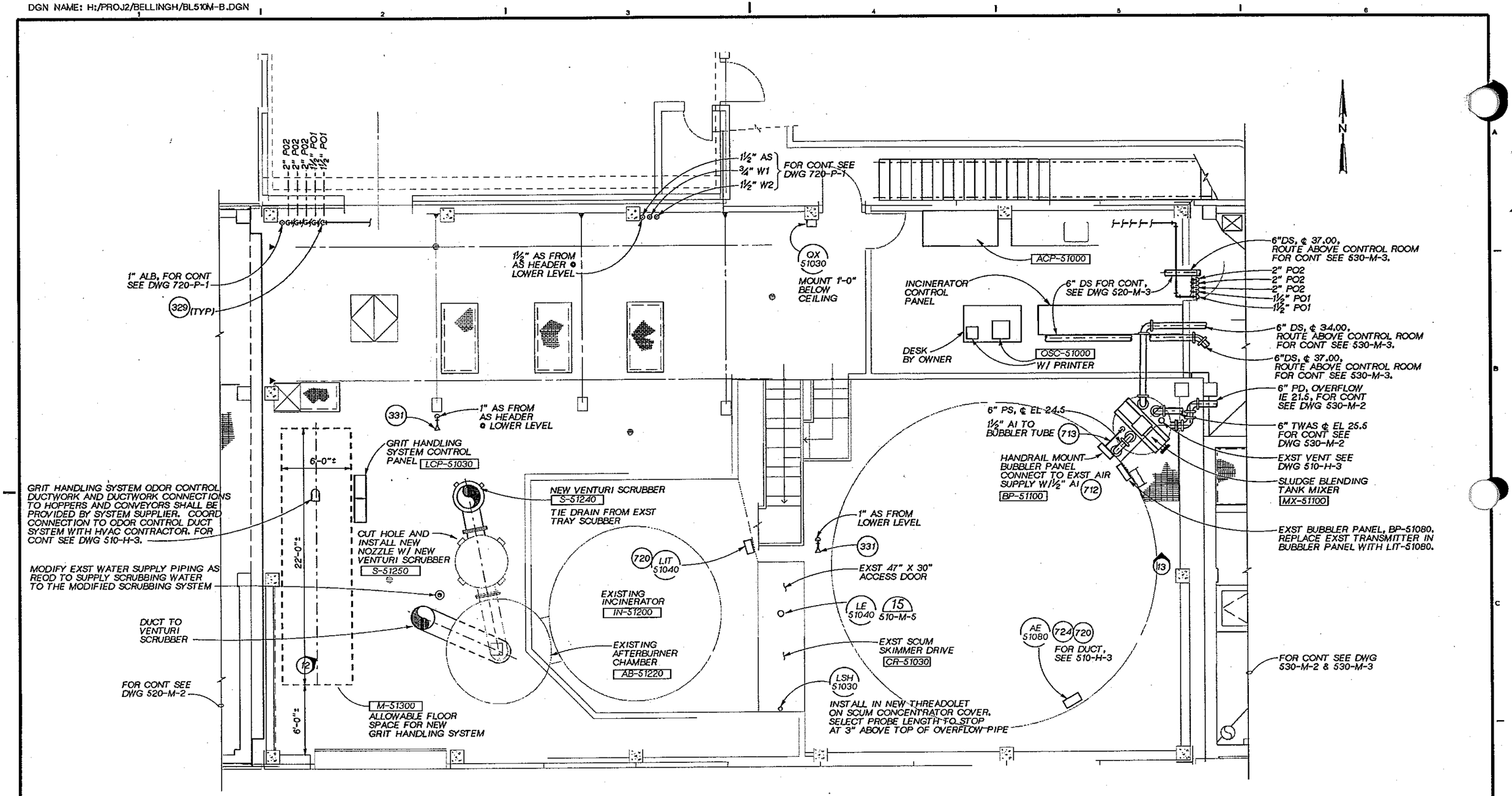

PLAN AT FLOOR EL 16.50

¼" = 1'-0"

NOTES:
1. PHOTO DETAILS CALLED OUT BY (XX), WHERE XX IS DETAIL NO. SEE PHOTO DETAILS ON 510-M-4 AND 510-M-5.

JOSEPH A. GAUTHIER — STATE OF WASHINGTON — REGISTERED PROFESSIONAL ENGINEER

CH2M HILL

DSGN	T BAUER					
DR	M TO					
CHK	R NAEF					
APVD	J. GAUTHIER	NO.	DATE	REVISION	BY	APVD

REUSE OF DOCUMENTS
THIS DOCUMENT, AND THE IDEAS AND DESIGNS INCORPORATED HEREIN, AS AN INSTRUMENT OF PROFESSIONAL SERVICE, IS THE PROPERTY OF CH2M HILL AND IS NOT TO BE USED, IN WHOLE OR IN PART, FOR ANY OTHER PROJECT WITHOUT THE WRITTEN AUTHORIZATION OF CH2M HILL.
©CH2M HILL

GRAPHIC SCALE
BAR IS ONE INCH ON ORIGINAL DRAWING.
0 1"
IF NOT ONE INCH ON THIS SHEET, ADJUST SCALES ACCORDINGLY.

CITY OF BELLINGHAM, WASHINGTON
POST POINT WASTEWATER TREATMENT PLANT UPGRADE

SOLIDS HANDLING FACILITY MODIFICATIONS
MECHANICAL
GROUND LEVEL PLAN

DWG NO. 510-M-2
DATE AUG. 1990
PROJ NO. SEA22462.C1

DRAWN BY: M. MOORE DESIGNED BY: H. SEBALD
DGN NAME: H:/PROJ2/BELLINGH/BL510M-D.DGN

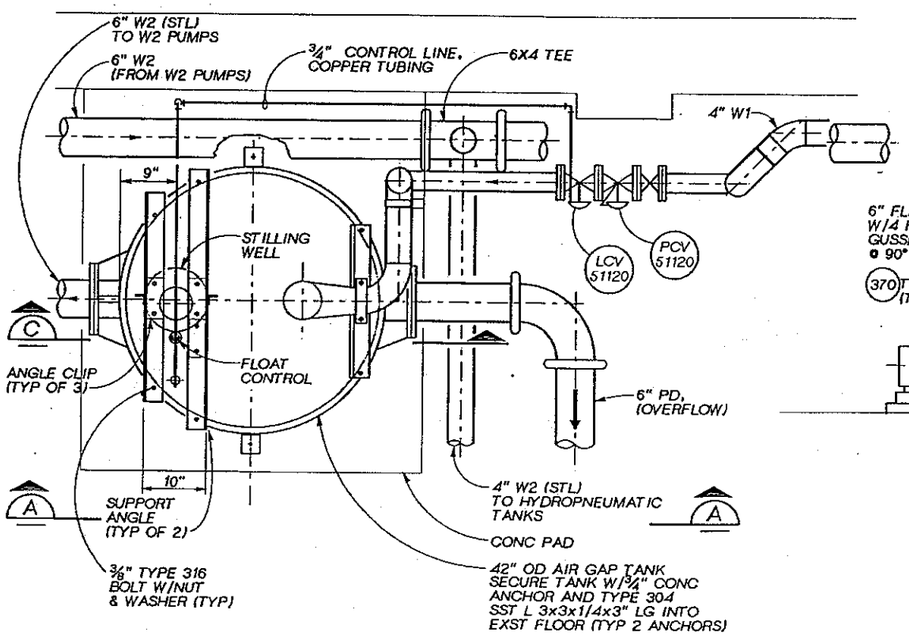

PARTIAL PLAN OF AIR GAP TANK (3)
1"=1'-0" 510-M-1

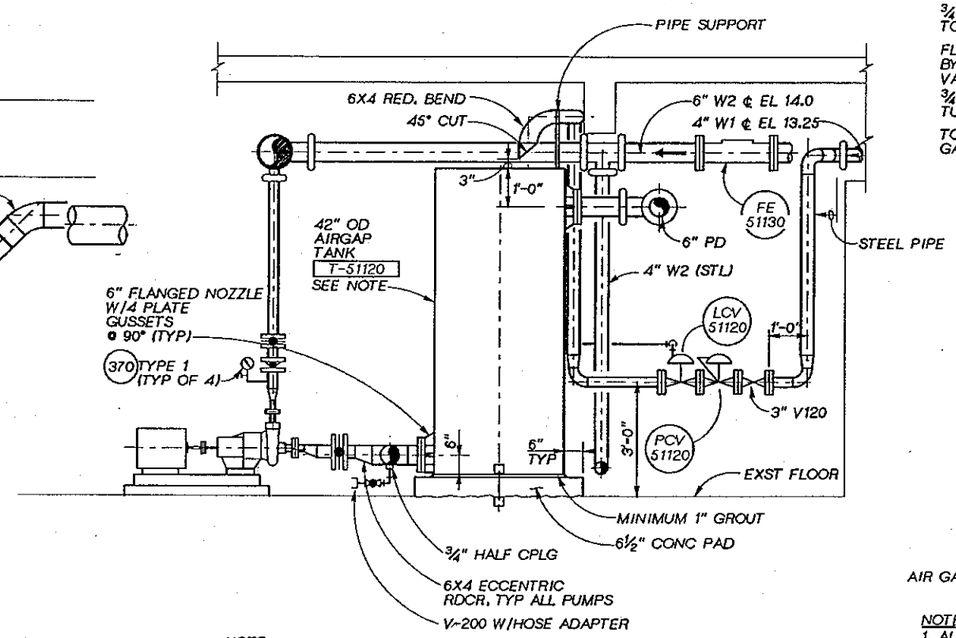

NOTE:
FABRICATE AIRGAP TANK FROM 1/4"PLATE IN ACCORDANCE W/DETAILS SHOWN. OVERALL HEIGHT OF TANK 8'-0". SEAL WELD ALL JOINTS. HYDROSTATICALLY TEST TANK PRIOR TO PAINTING. PAINT TANK INTERIOR W/ SYSTEM NO. 2. PAINT EXTERIOR W/ PAINT SYSTEM NO. 5. INSULATE AS SPECIFIED FOR HYDROPNEUMATIC TANK

SECTION (A)
1/2"=1'-0" 510-M-1

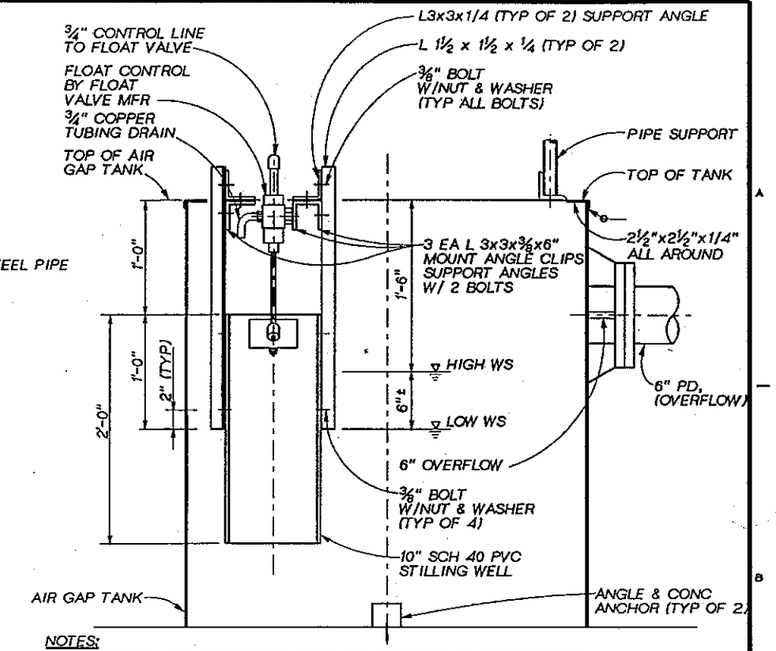

NOTES:
1. ALL ANGLES AND FASTENERS SHALL BE TYPE 304 STAINLESS STEEL.
2. INSTALL FLOAT CONTROL SO THAT FLOAT IS MINIMUM 1½" CLEAR OF STILLING WELL WALL THROUGHOUT ITS TRAVEL. NOTCH TOP OF STILLING WELL AS REQ'D TO CLEAR FLOAT CONTROL ARM.

SECTION (C)
1½"=1'-0"

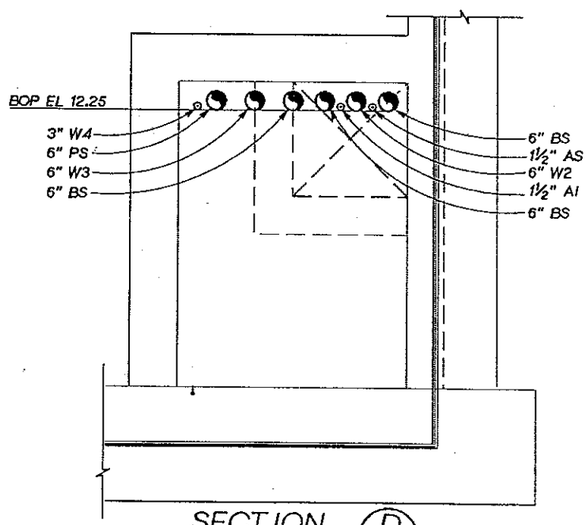

SECTION (D)
1/2"=1'-0" 510-M-1 530-M-1

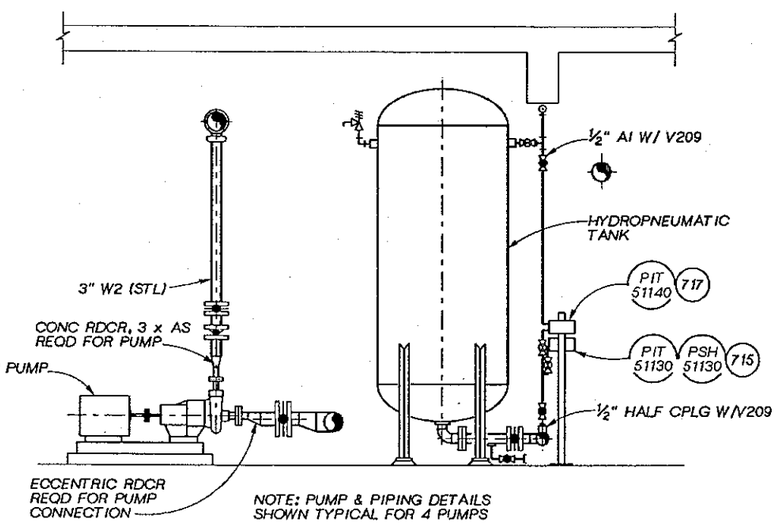

SECTION (B)
1/2"=1'-0" 510-M-1

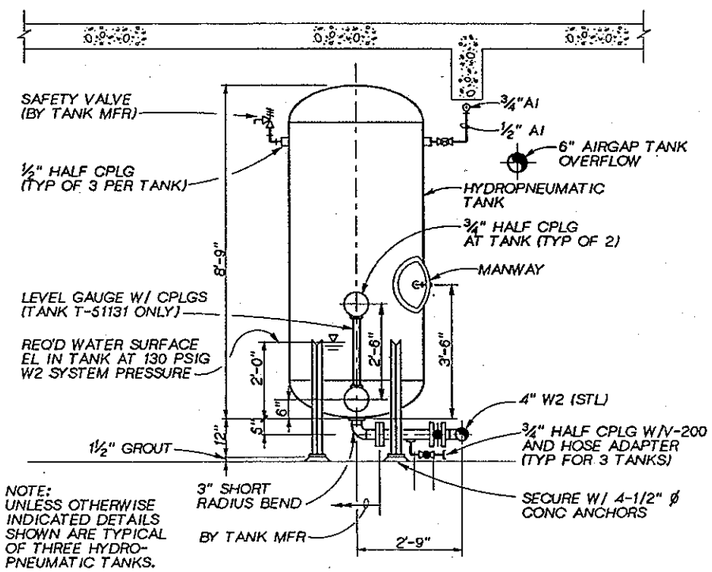

NOTE:
UNLESS OTHERWISE INDICATED DETAILS SHOWN ARE TYPICAL OF THREE HYDRO-PNEUMATIC TANKS.

DETAIL (1)
1/2"=1'-0" 510-M-1

JOSEPH A. GAUTHIER STATE OF WASHINGTON REGISTERED PROFESSIONAL ENGINEER

CH2M HILL

DSGN	H. SEBALD				
DR	M. TO				
CHK	R. NAEF				
APVD	J. GAUTHIER	NO.	DATE	REVISION	BY / APVD

REUSE OF DOCUMENTS
THIS DOCUMENT, AND THE IDEAS AND DESIGNS INCORPORATED HEREIN, AS AN INSTRUMENT OF PROFESSIONAL SERVICE, IS THE PROPERTY OF CH2M HILL AND IS NOT TO BE USED, IN WHOLE OR IN PART, FOR ANY OTHER PROJECT WITHOUT THE WRITTEN AUTHORIZATION OF CH2M HILL.
©CH2M HILL

VERIFY SCALE
BAR IS ONE INCH ON ORIGINAL DRAWING.
0 1"
IF NOT ONE INCH ON THIS SHEET, ADJUST SCALES ACCORDINGLY.

CITY OF BELLINGHAM, WASHINGTON
POST POINT WASTEWATER TREATMENT PLANT UPGRADE

SOLIDS HANDLING FACILITY MODIFICATIONS
MECHANICAL
SECTION AND DETAILS

DWG NO. 510-M-3
DATE AUG. 1990
PROJ NO. SEA22462.C1

ABANDON W2 PIPE AND CAP AT WALL. CONNECT NEW 2" W2 AT VALVE AS SHOWN.

LCP-51010

PHOTO DETAIL (1)
NTS 510-M-1

REMOVE DRAIN LINE FROM ODOR CONTROL UNIT

NEW 2" VENT FROM SUMP. FOR CONT. SEE 510-H-1

ATTACH NEW 2" VENT TO ALUMINUM CHECKER PLATE WITH GAS TIGHT PLATE. PROVIDE UNION.

REPLACE GRATING WITH TYPE "C" COVER (258) SIM. USE FLAT PLATE INSTEAD OF CHECKER PLATE, AND DO NOT PROVIDE BOLTS. SHIM COVER TO FIT EXIST. GRATING SUPPORT AND BE FLUSH WITH FLOOR. PROVIDE SEALED PUMP ACCESS PLATES AT EACH PUMP DISCHARGE OF SUFFICIENT SIZE TO REMOVE PUMPS.

PHOTO DETAIL (3)
NTS 510-M-1 510-H-1

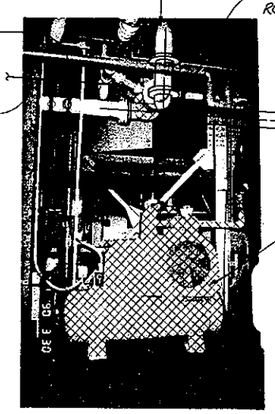

6" PD FROM SCRUBBER

EXIST. 6" ELBOW ROTATE 45°

1/2" AI CONNECT TO EXIST.

8" PD SEE (10) 510-M-5

1" AI

REMOVE COMPRESSOR, DRYER, FILTERS, AND PIPING FROM OTHER COMPRESSOR

PHOTO DETAIL (5)
NTS 510-M-1

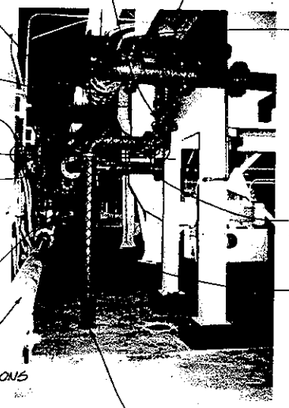

6"X 3" REDUCING ELBOW CONNECT TO EXIST.

BOTTOM OF OVERFLOW BOX

3" PD FROM PIG CATCHER

4" SM W/4"-V407 TIE INTO EXST 4" SM UPSTREAM OF EXST DIAPHRAGM VALVE W/4" SM TEE

4" TEE

CORE DRILL WALL AND INSTALL NEW PIPE (380)

6" TEE

FLUSHING CONNECTION (365)

REMOVE PIPE AND 2 ELBOWS

6"XSM FROM SCUM CONCENTRATOR

4" NG

SEE (16) 510-M-5 FOR MODIFICATIONS

CUT OFF PIPE FLUSH WITH FLOOR. FILL 1' LENGTH OF PIPE END WITH STIFF GROUT AND SMOOTH LEVEL

PHOTO DETAIL (7)
NTS 510-M-1

REPLACE PS STORAGE TANK OVERFLOW, SEE (1) 530-M-7

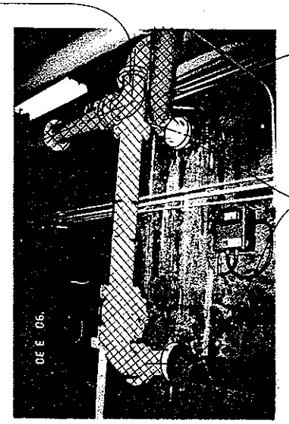

REMOVE 6" OA FROM STORAGE TANK

PROVIDE NEW BLIND FLANGE AT WALL

PHOTO DETAIL (2)
NTS 510-M-1

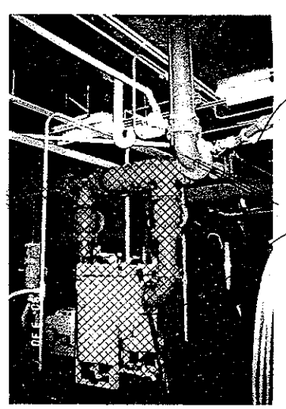

CONNECT 4" W8 TO EXIST. ELBOW

REMOVE BASKET STRAINER AND NPW PIPING

PHOTO DETAIL (4)
NTS 510-M-1

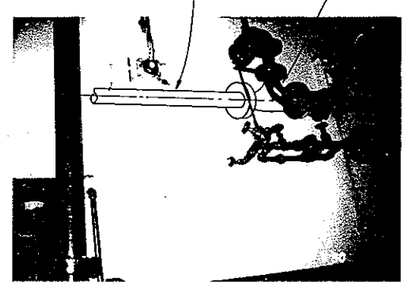

3"XSM

REPLACE 3"x 2" REDUCING ELBOW WITH 3"x 3"x 2" TEE

PHOTO DETAIL (6)
NTS 510-M-1

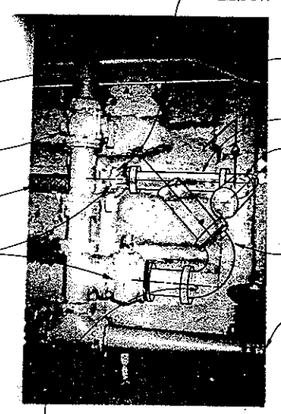

ROTATE EXST ELBOW 180°

3" PS TIE TO PD FROM SCUM CONCENTRATOR

EXIST. 6" PS TO PS STORAGE TANK

6" PS

VALVE TO REMAIN

PIG CATCHER (365) SIM.

REMOVE PIPE TO SURGE TANK

REPLACE W/ V407

6" PS

BLIND FLANGE AT WALL (NOT SHOWN)

ROTATE ELBOW AT 45° FROM HORIZONTAL UP TO CENTER LINE ELEVATION NOTED ON PLAN VIEW

PHOTO DETAIL (8)
NTS 510-M-1

JOSEPH A. GAUTHIER STATE OF WASHINGTON REGISTERED PROFESSIONAL ENGINEER

CH2M HILL

DSGN	M. HIGHTREE
DR	M. MERCIER
CHK	R. NAEF
APVD	J. GAUTHIER

NO.	DATE	REVISION	BY	APVD

REUSE OF DOCUMENTS
THIS DOCUMENT, AND THE IDEAS AND DESIGNS INCORPORATED HEREIN, AS AN INSTRUMENT OF PROFESSIONAL SERVICE, IS THE PROPERTY OF CH2M HILL AND IS NOT TO BE USED, IN WHOLE OR IN PART, FOR ANY OTHER PROJECT WITHOUT THE WRITTEN AUTHORIZATION OF CH2M HILL.
©CH2M HILL

VERIFY SCALES
BAR IS ONE INCH ON ORIGINAL DRAWING.
0 1"
IF NOT ONE INCH ON THIS SHEET, ADJUST SCALES ACCORDINGLY.

CITY OF BELLINGHAM, WASHINGTON
POST POINT WASTEWATER TREATMENT PLANT UPGRADE

SOLIDS HANDLING FACILITY MODIFICATIONS
MECHANICAL DETAILS

DWG NO 510-M-4
DATE AUG 1990
PROJ NO. SEA22462.C1

OVERLAY IDENTIFICATION
PROJ NO.
CONTRACT
OVERLAY
SCREEN

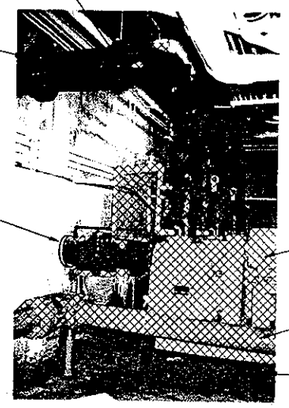

PHOTO DETAIL (9)
NTS — 510-A-2, 510-M-1

PHOTO DETAIL (11)
NTS — 510-M-1

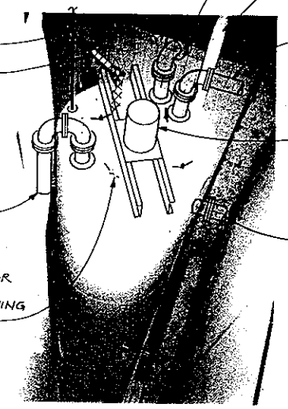

PHOTO DETAIL (13)
NTS — 510-M-2

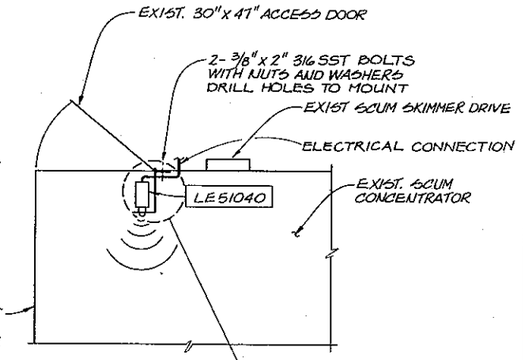

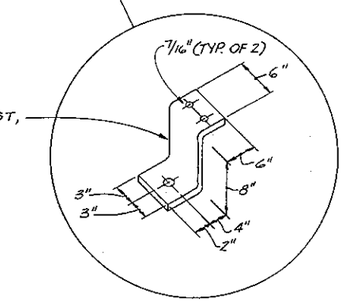

DETAIL (15)
NTS — 510-M-2

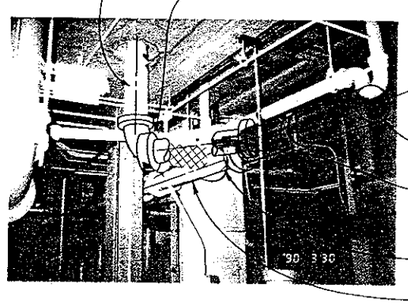

PHOTO DETAIL (10)
NTS — 510-M-1

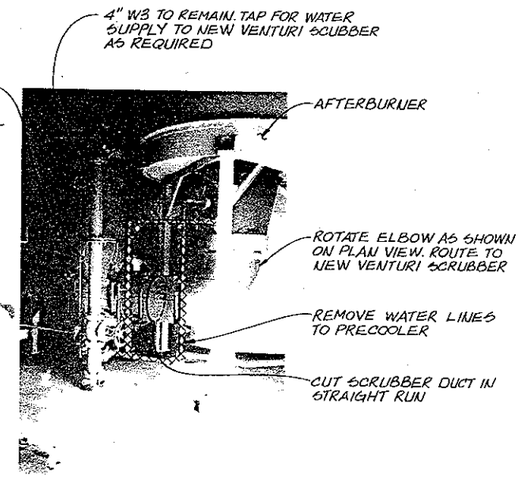

PHOTO DETAIL (12)
NTS — 510-M-2

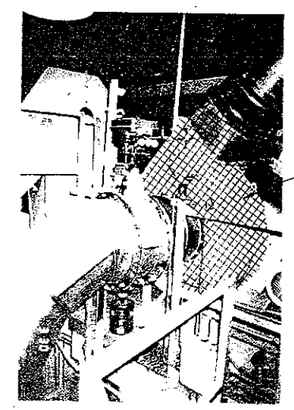

PHOTO DETAIL (14)
NTS — 510-M-3

JOSEPH A. GAUTHIER — STATE OF WASHINGTON — REGISTERED PROFESSIONAL ENGINEER

CH2M HILL

DSGN	M. HIGHTREE
DR	M. MERCIER
CHK	R. NAEF
APVD	J. GAUTHIER

NO.	DATE	REVISION	BY	APVD

REUSE OF DOCUMENTS
THIS DOCUMENT, AND THE IDEAS AND DESIGNS INCORPORATED HEREIN, AS AN INSTRUMENT OF PROFESSIONAL SERVICE, IS THE PROPERTY OF CH2M HILL AND IS NOT TO BE USED, IN WHOLE OR IN PART, FOR ANY OTHER PROJECT WITHOUT THE WRITTEN AUTHORIZATION OF CH2M HILL
© CH2M HILL

VERIFY SCALES
BAR IS ONE INCH ON ORIGINAL DRAWING.
0 — 1"
IF NOT ONE INCH ON THIS SHEET, ADJUST SCALES ACCORDINGLY.

CITY OF BELLINGHAM, WASHINGTON
POST POINT WASTEWATER TREATMENT PLANT UPGRADE

SOLIDS HANDLING FACILITY MODIFICATIONS
MECHANICAL DETAILS

DWG NO 510-M-5
DATE AUG 1990
PROJ NO. SEA22462.C1

DRAWN BY: SD GUNDY DESIGNED BY: SD GUNDY/GG FLOOD
DGN NAME: H:/PROJ2/BELLINGH/BL510H-A.DGN

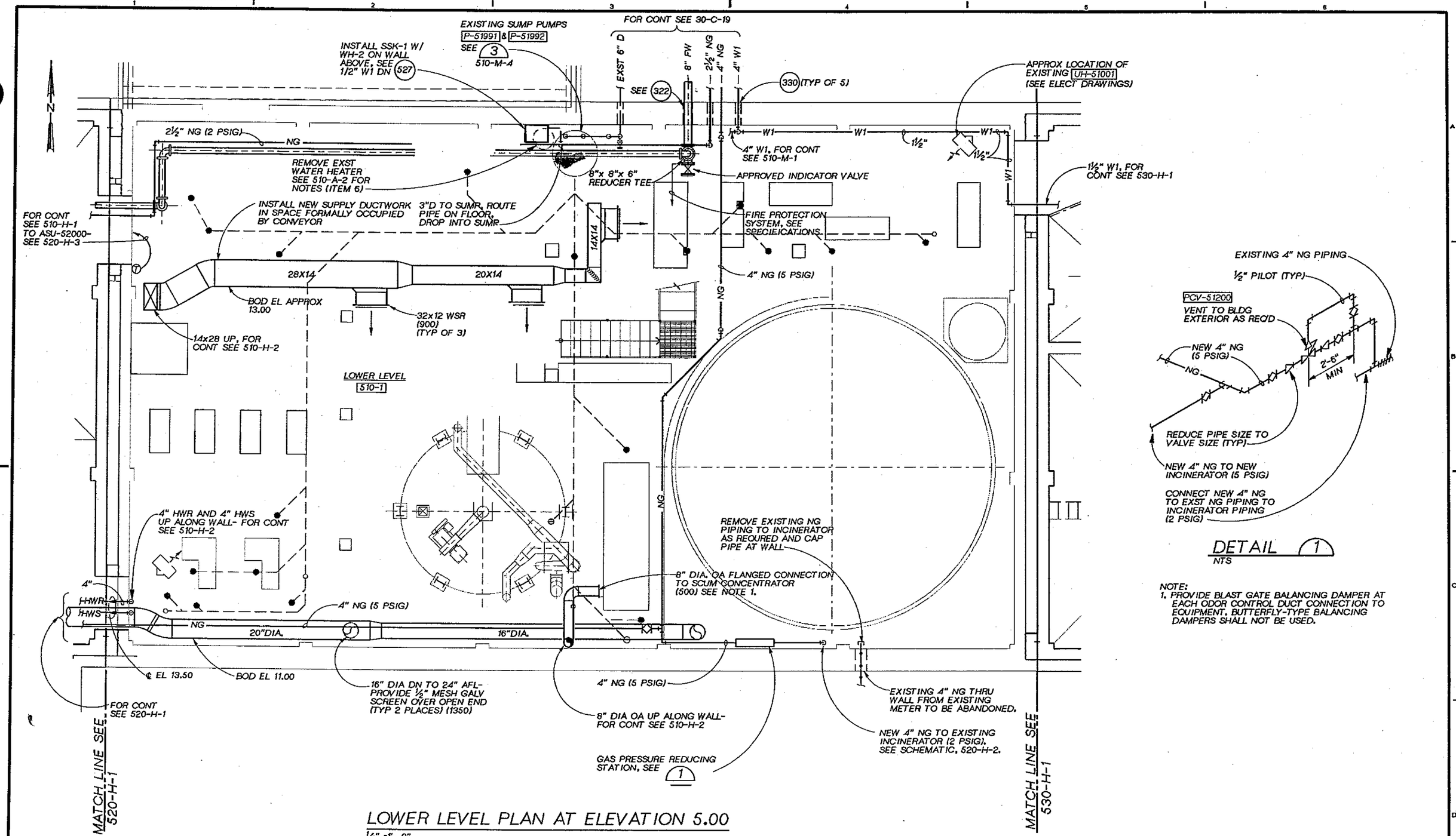

LOWER LEVEL PLAN AT ELEVATION 5.00
¼" =1'- 0"

DETAIL 1
NTS

NOTE:
1. PROVIDE BLAST GATE BALANCING DAMPER AT EACH ODOR CONTROL DUCT CONNECTION TO EQUIPMENT. BUTTERFLY-TYPE BALANCING DAMPERS SHALL NOT BE USED.

JOSEPH A. GAUTHIER STATE OF WASHINGTON REGISTERED PROFESSIONAL ENGINEER

CH2M HILL

DSGN	G.FLOOD
DR	S.D.GUNDY
CHK	J.A.SIEMENS
APVD	J. GAUTHIER

NO.	DATE	REVISION	BY	APVD

REUSE OF DOCUMENTS
THIS DOCUMENT, AND THE IDEAS AND DESIGNS INCORPORATED HEREIN, AS AN INSTRUMENT OF PROFESSIONAL SERVICE, IS THE PROPERTY OF CH2M HILL AND IS NOT TO BE USED, IN WHOLE OR IN PART, FOR ANY OTHER PROJECT WITHOUT THE WRITTEN AUTHORIZATION OF CH2M HILL.
©CH2M HILL

VERIFY SCALE
BAR IS ONE INCH ON ORIGINAL DRAWING.
0 1"
IF NOT ONE INCH ON THIS SHEET, ADJUST SCALES ACCORDINGLY.

CITY OF BELLINGHAM, WASHINGTON
POST POINT WASTEWATER TREATMENT PLANT UPGRADE

SOLIDS HANDLING FACILITY MODIFICATIONS
HVAC AND PLUMBING
LOWER LEVEL MODIFICATIONS

DWG NO. 510-H-1
DATE AUG. 1990
PROJ. NO. SEA22462.C1

DRAWN BY: B. CARR DESIGNED BY: SD GUNDY/G FLOOD
DGN NAME: H:/PROJ2/BELLINGH/BL510H-B.DGN

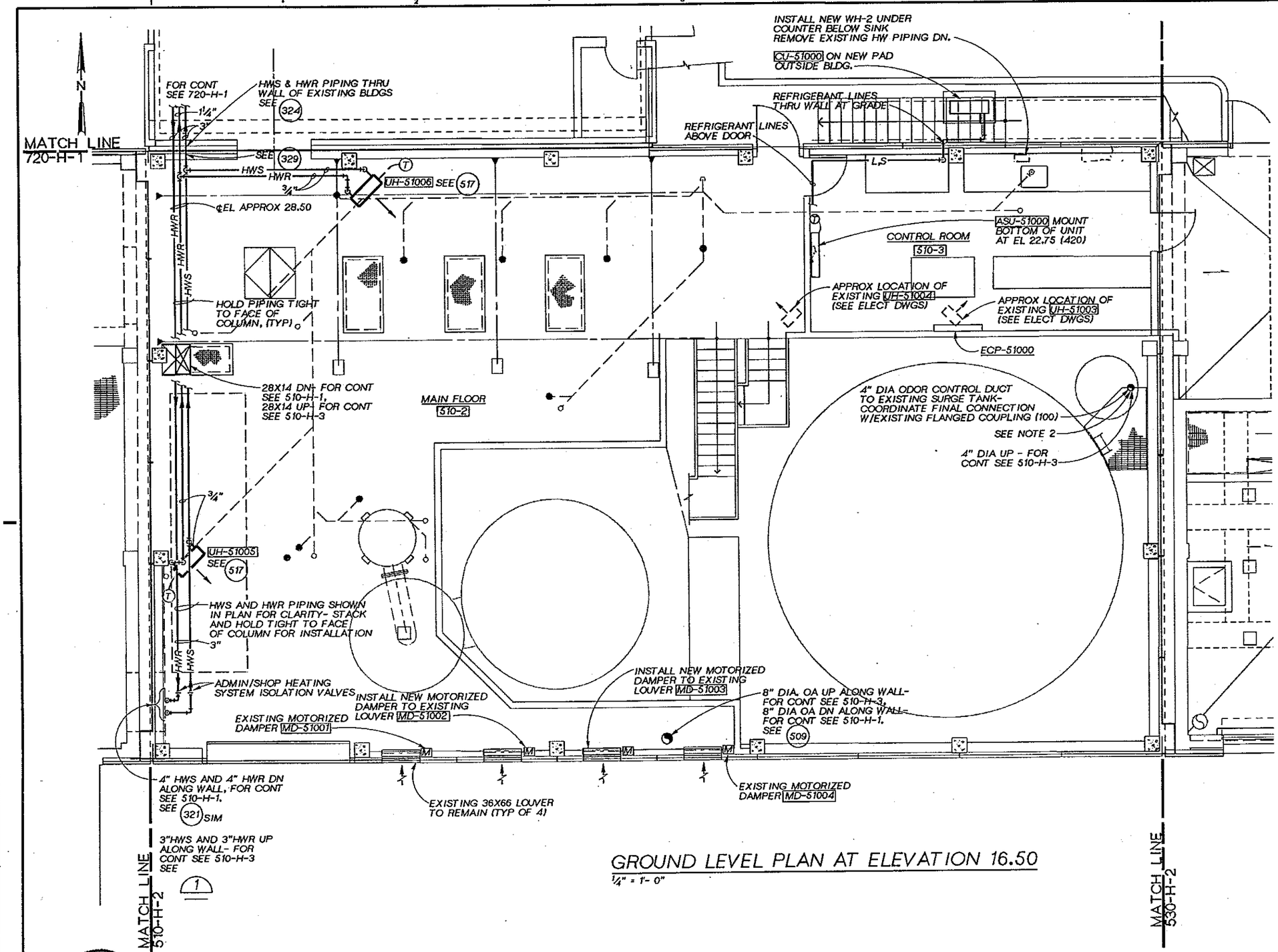

GROUND LEVEL PLAN AT ELEVATION 16.50

¼" = 1'- 0"

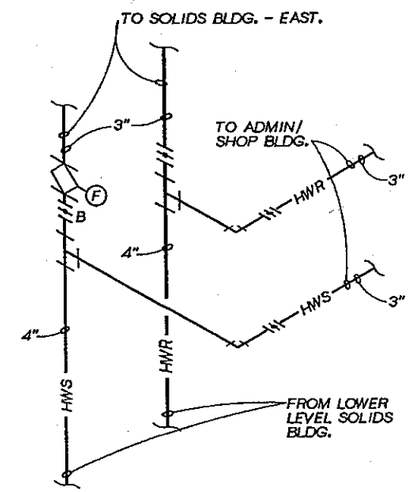

DETAIL 1

NOTES:

1. MOUNT UNIT HOUSING WITH BOTTOM AT EL24.50 UNLESS OTHERWISE NOTED. MOUNT THERMOSTAT AT EL 22.00.
2. PROVIDE BLAST GATE BALANCING DAMPER AT EACH ODOR CONTROL DUCT CONNECTION TO EQUIPMENT. BUTTERFLY-TYPE BALANCING DAMPERS SHALL NOT BE USED.

JOSEPH A. GAUTHIER STATE OF WASHINGTON REGISTERED PROFESSIONAL ENGINEER

CH2M HILL

DSGN	G.FLOOD
DR	S.D.GUNDY
CHK	J. SIEMENS
APVD	J. GAUTHIER

NO.	DATE	REVISION	BY	APVD

REUSE OF DOCUMENTS
THIS DOCUMENT, AND THE IDEAS AND DESIGNS INCORPORATED HEREIN, AS AN INSTRUMENT OF PROFESSIONAL SERVICE, IS THE PROPERTY OF CH2M HILL AND IS NOT TO BE USED, IN WHOLE OR IN PART, FOR ANY OTHER PROJECT WITHOUT THE WRITTEN AUTHORIZATION OF CH2M HILL.
©CH2M HILL

VERIFY SCALE
BAR IS ONE INCH ON ORIGINAL DRAWING.
0 1"
IF NOT ONE INCH ON THIS SHEET, ADJUST SCALES ACCORDINGLY.

CITY OF BELLINGHAM, WASHINGTON
POST POINT WASTEWATER TREATMENT PLANT UPGRADE

SOLIDS HANDLING FACILITY MODIFICATIONS
HVAC AND PLUMBING
GROUND LEVEL MODIFICATIONS

DWG NO. 510-H-2
DATE AUG. 1990
PROJ. NO. SEA22452.C1

DRAWN BY: B. CARR DESIGNED BY: SD GUNDY/G FLOOD
DGN NAME: H:/PROJ2/BELLINGH/BL510H-C.DGN

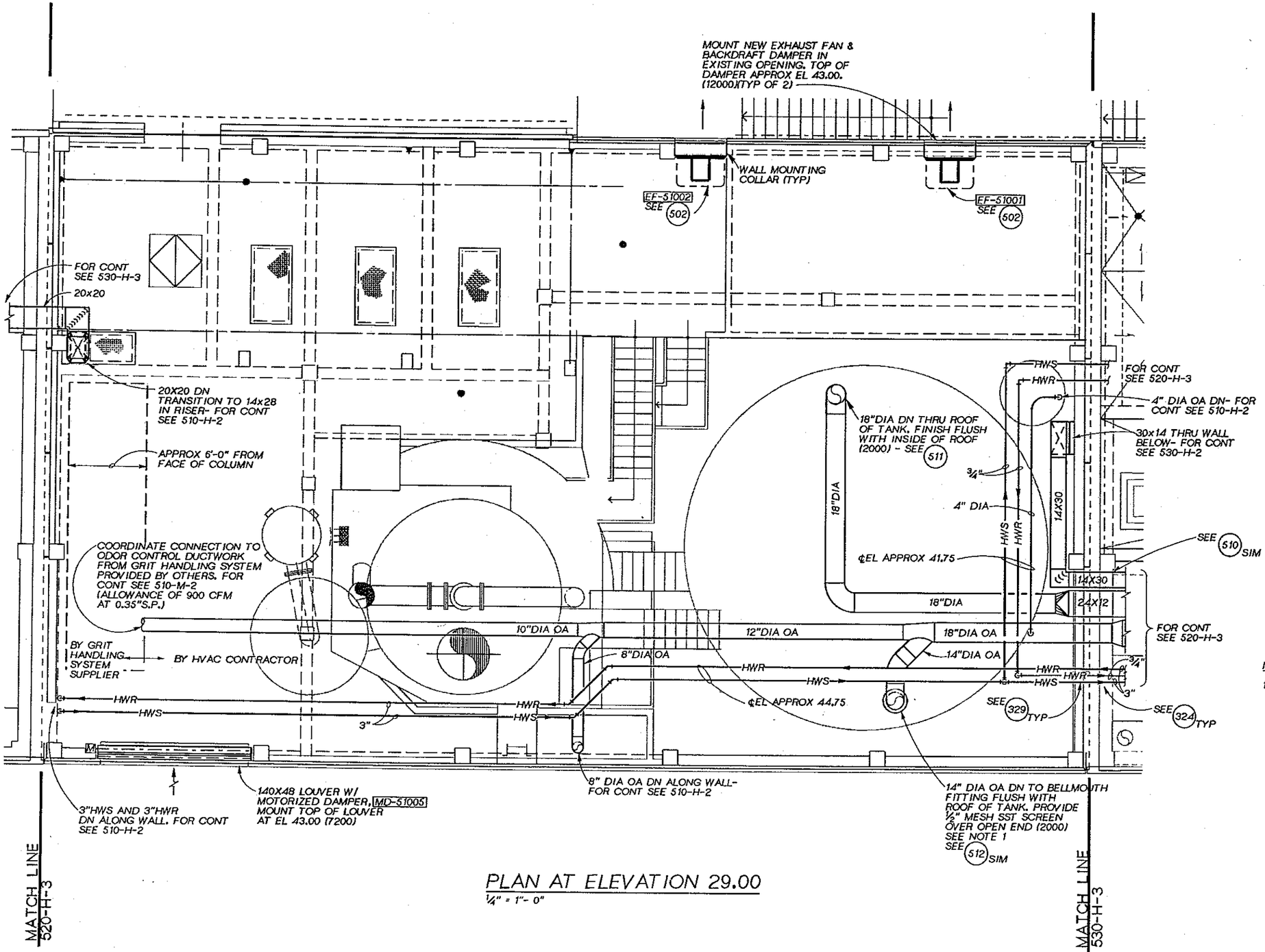

PLAN AT ELEVATION 29.00

1/4" = 1'- 0"

NOTES:

1. PROVIDE BLAST GATE BALANCING DAMPER AT EACH ODOR CONTROL DUCT CONNECTION TO EQUIPMENT. BUTTERFLY-TYPE BALANCING DAMPERS SHALL NOT BE USED.

DSGN	G.FLOOD				
DR	S.D.GUNDY				
CHK	J. SIEMENS				
APVD	J. GAUTHIER	NO.	DATE	REVISION	BY / APVD

CH2M HILL

REUSE OF DOCUMENTS
THIS DOCUMENT, AND THE IDEAS AND DESIGNS INCORPORATED HEREIN, AS AN INSTRUMENT OF PROFESSIONAL SERVICE, IS THE PROPERTY OF CH2M HILL AND IS NOT TO BE USED, IN WHOLE OR IN PART, FOR ANY OTHER PROJECT WITHOUT THE WRITTEN AUTHORIZATION OF CH2M HILL.
©CH2M HILL

VERIFY SCALE
BAR IS ONE INCH ON ORIGINAL DRAWING.
0 1"
IF NOT ONE INCH ON THIS SHEET, ADJUST SCALES ACCORDINGLY.

CITY OF BELLINGHAM, WASHINGTON
POST POINT WASTEWATER TREATMENT PLANT UPGRADE

SOLIDS HANDLING FACILITY MODIFICATIONS
HVAC AND PLUMBING
ELEVATION 29.00 MODIFICATIONS

DWG NO. 510-H-3
DATE AUG. 1990
PROJ. NO. SEA22462.C1

DRAWN BY: HG / DGE DESIGNED BY: M. ANDERSON
DGN NAME: H:/PROJ2/BELLINGH/BL520S-A.DGN

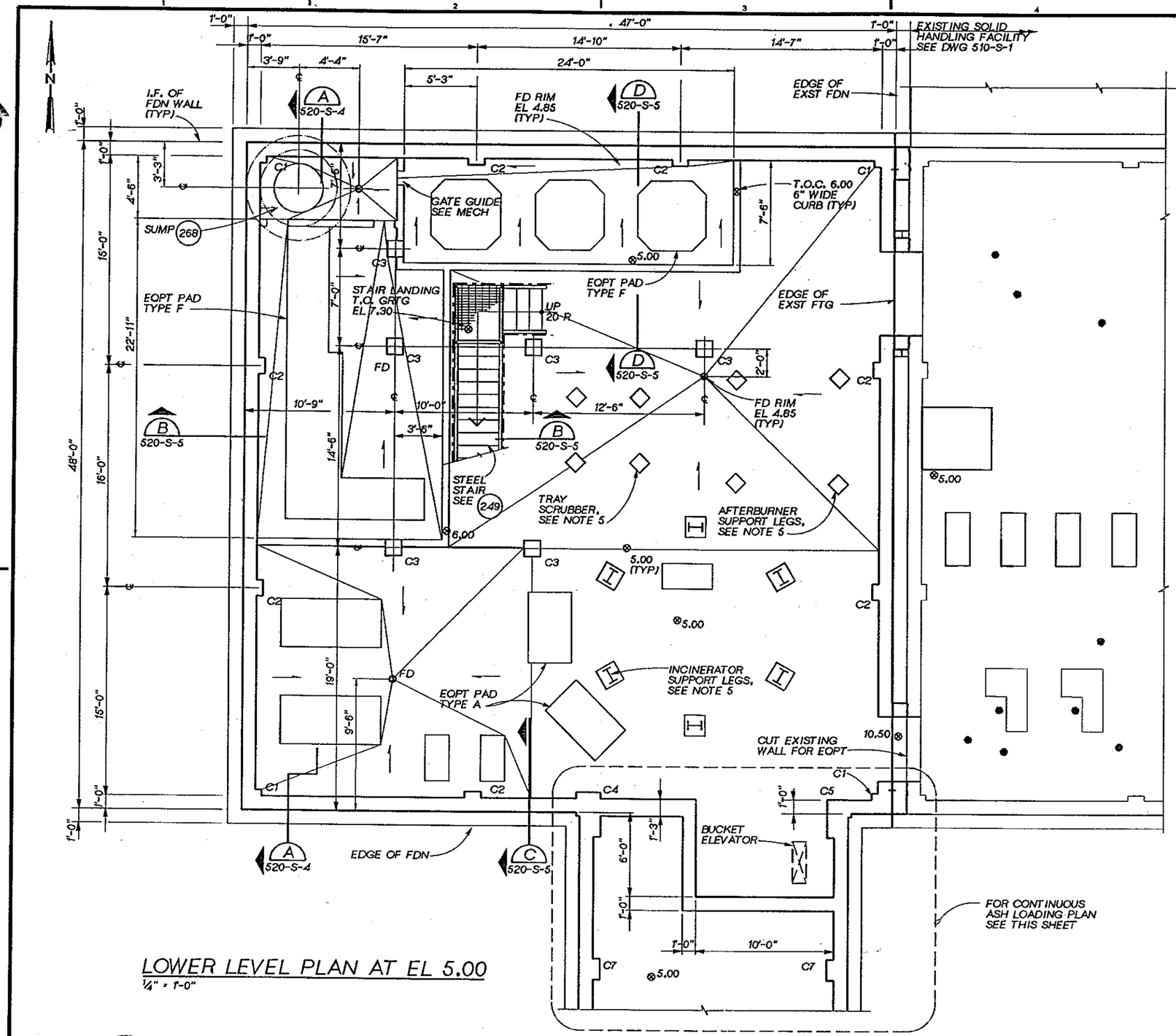

LOWER LEVEL PLAN AT EL 5.00

1/4" = 1'-0"

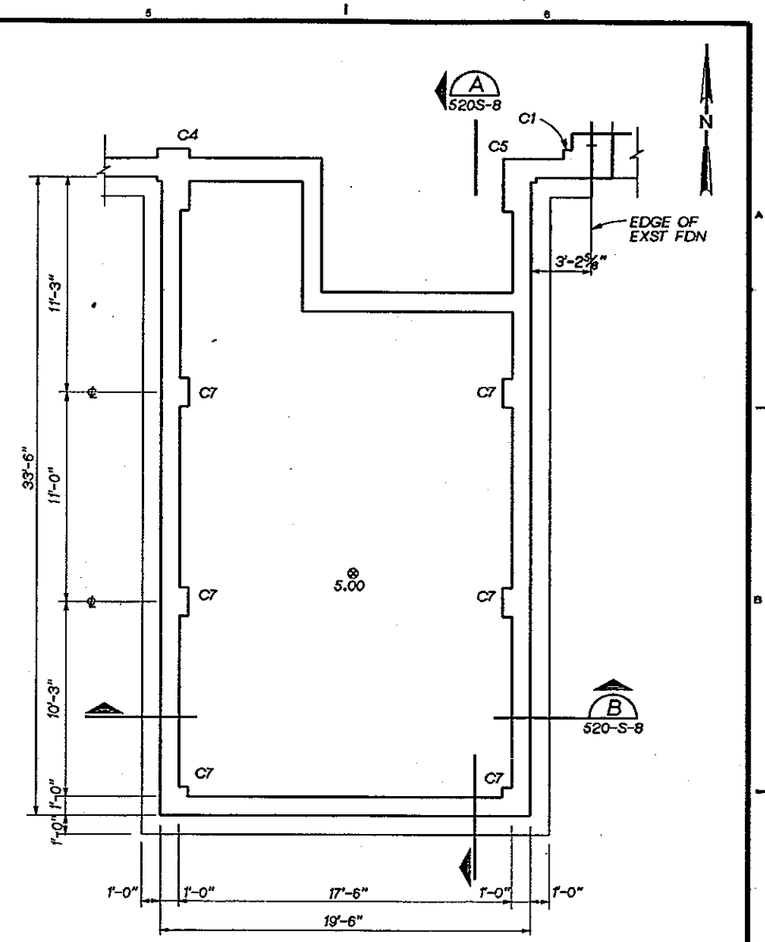

ASH LOADING PLAN AT EL 5.00

1/4" = 1'-0"

STRUCTURAL NOTES:

1. FOR GENERAL STRUCTURAL NOTES SEE 201
2. FOR CORNER REINF SEE 202
3. FOR OPENING REINF SEE 204
4. FOR COLUMN SCHEDULE SEE DWG 520-S-6
5. EQUIPMENT PADS FOR SUPPORT LEGS AS REQUIRED BY INCINERATOR SYSTEM SUPPLIER. CONTRACTOR SHALL COORDINATE WITH SUPPLIER PRIOR TO PLACING CONCRETE SLAB.
6. FOR EOPT PAD DETAILS, SEE 230

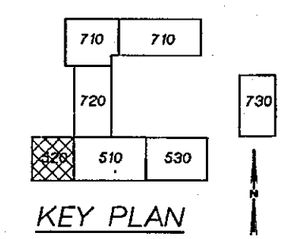

KEY PLAN

DSGN	M. ANDERSON				
DR	R. FRIBERG				
CHK	W. BENNETT				
APVD	J. GAUTHIER	NO.	DATE	REVISION	BY / APVD

REUSE OF DOCUMENTS
THIS DOCUMENT, AND THE IDEAS AND DESIGNS INCORPORATED HEREIN, AS AN INSTRUMENT OF PROFESSIONAL SERVICE, IS THE PROPERTY OF CH2M HILL AND IS NOT TO BE USED, IN WHOLE OR IN PART, FOR ANY OTHER PROJECT WITHOUT THE WRITTEN AUTHORIZATION OF CH2M HILL.
©CH2M HILL

VERIFY SCALE
BAR IS ONE INCH ON ORIGINAL DRAWING.
0 1"
IF NOT ONE INCH ON THIS SHEET, ADJUST SCALES ACCORDINGLY.

CITY OF BELLINGHAM, WASHINGTON
POST POINT WASTEWATER TREATMENT PLANT UPGRADE

SOLIDS HANDLING FACILITY -- WEST ADDITION
STRUCTURAL FOUNDATION PLAN

DWG NO. 520-S-1
DATE AUG. 1990
PROJ NO. SEA22462.C1

DRAWN BY: HSP / BBL DESIGNED BY: M. ANDERSON
DGN NAME: H:/PROJ2/BELLINGH/BL520S-B.DGN

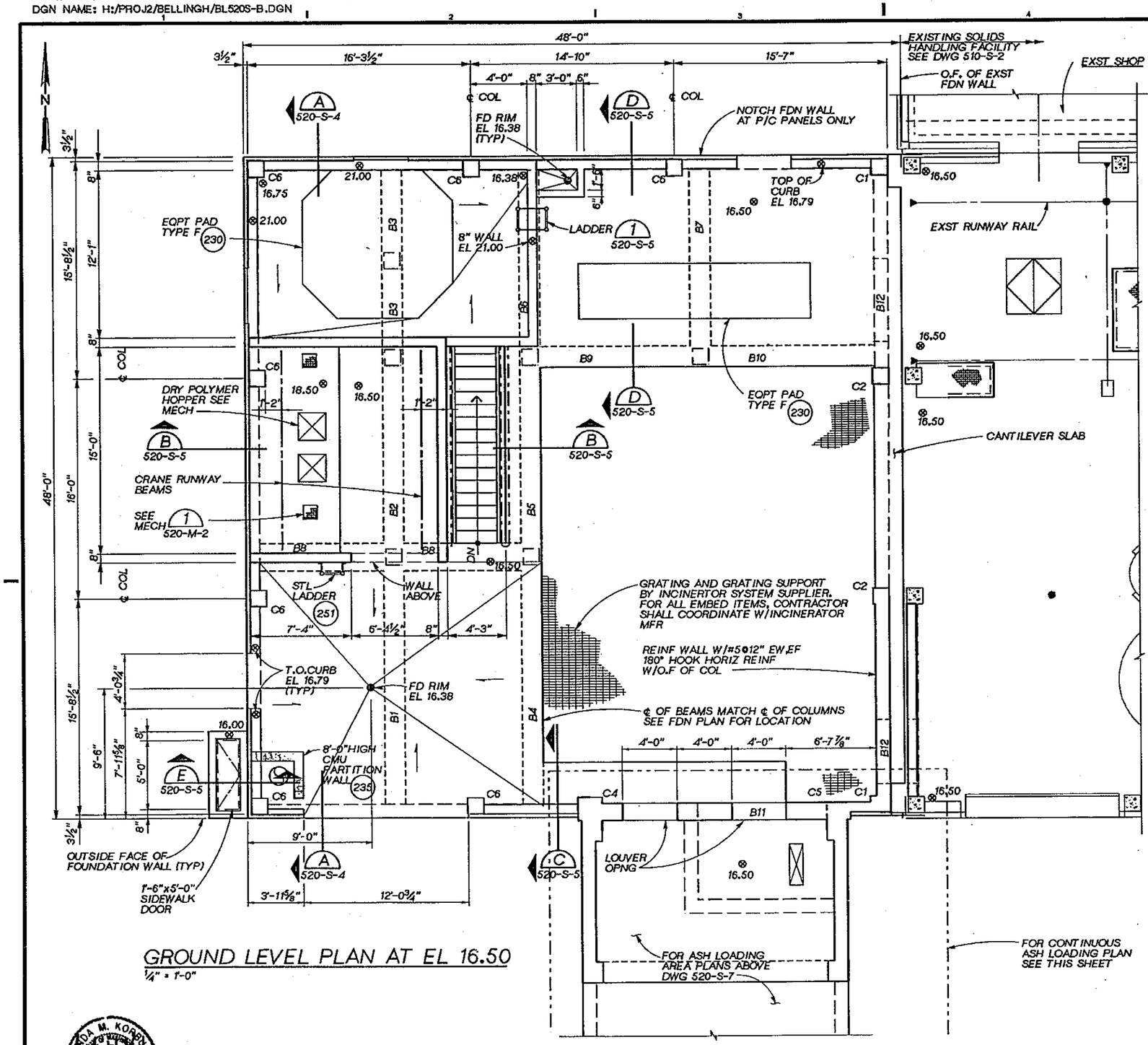

GROUND LEVEL PLAN AT EL 16.50
¼" = 1'-0"

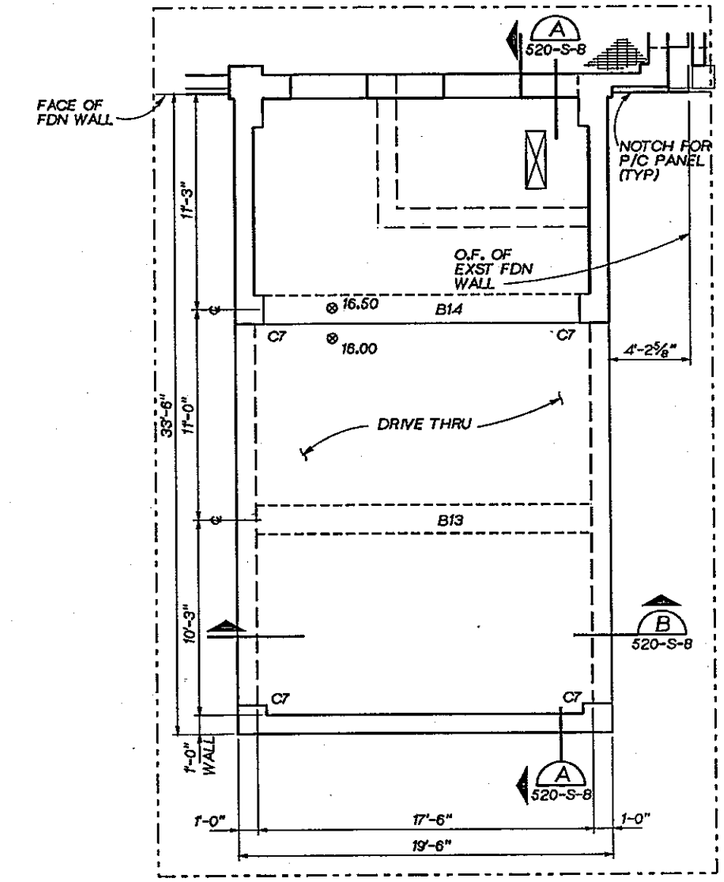

ASH LOADING PLAN @ EL 16.50
¼" = 1'-0"

STRUCTURAL NOTES:

1. DESIGN LOADS
   GROUND FLOOR LL - 200 PSF
   GRATING LL - 100 PSF
2. PLACE TOP REINFORCING STEEL FOR NORTH/SOUTH BEAMS OVER TOP REINFORCING STEEL FOR EAST/WEST BEAMS UNLESS NOTED OTHERWISE.
3. PLACE BOT REINF STEEL FOR EAST/WEST BEAMS OVER BOT REINF STEEL FOR NORTH/SOUTH BEAMS UNLESS NOTED OTHERWISE.
4. FOR BEAM AND COLUMN SCHEDULES SEE DWG 520-S-6.

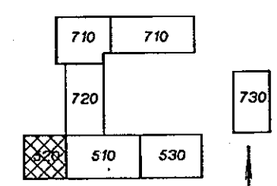

KEY PLAN

DSGN M. ANDERSON						
DR B. LAZARO						
CHK W. BENNETT						
APVD J. GAUTHIER	NO.	DATE	REVISION	BY	APVD	

CH2M HILL

REUSE OF DOCUMENTS
THIS DOCUMENT, AND THE IDEAS AND DESIGNS INCORPORATED HEREIN, AS AN INSTRUMENT OF PROFESSIONAL SERVICE, IS THE PROPERTY OF CH2M HILL AND IS NOT TO BE USED, IN WHOLE OR IN PART, FOR ANY OTHER PROJECT WITHOUT THE WRITTEN AUTHORIZATION OF CH2M HILL.
©CH2M HILL

VERIFY SCALE
BAR IS ONE INCH ON ORIGINAL DRAWING.
0 1"
IF NOT ONE INCH ON THIS SHEET, ADJUST SCALES ACCORDINGLY.

CITY OF BELLINGHAM, WASHINGTON
POST POINT WASTEWATER TREATMENT PLANT UPGRADE

SOLIDS HANDLING FACILITY -- WEST ADDITION
STRUCTURAL
GROUND LEVEL FRAMING PLAN

DWG NO. 520-S-2
DATE AUG. 1990
PROJ NO. SEA22462.C1

DRAWN BY: RSF DESIGNED BY: M. ANDERSON
DGN NAME: H:/PROJ2/BELLINGH/BL520S-C.DGN

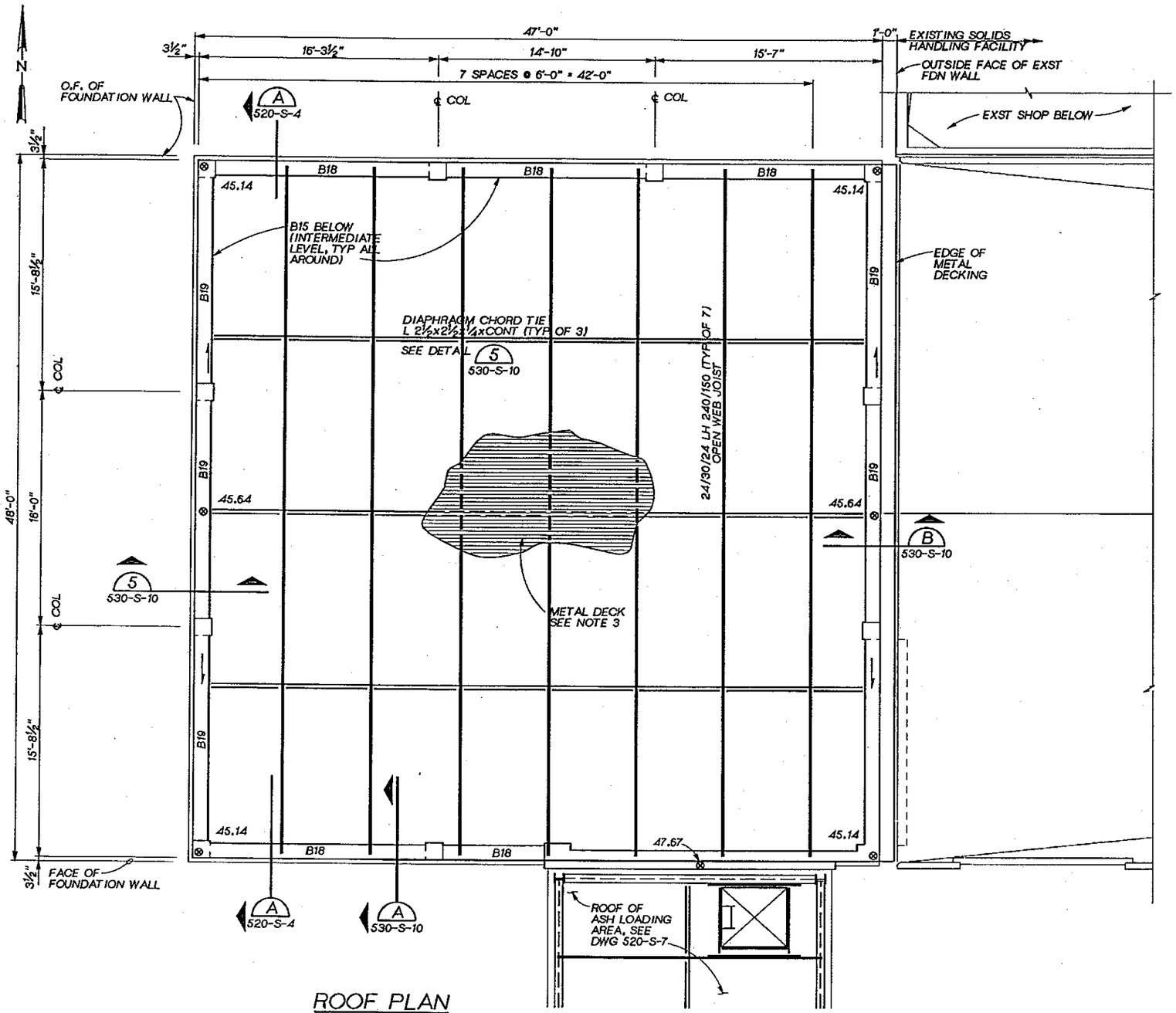

ROOF PLAN
¼" = 1'-0"

ROOF PLAN NOTES

1. ROOF DESIGN LOADS:

   DEAD LOAD: 20 PSF
   LIVE LOAD: 25 PSF
   UPLIFT (NET): 15 PSF

2. OPEN WEB STEEL JOISTS:

   A 1000 POUND CONCENTRATED LOAD LOCATED AT ANY POINT ALONG THE BOTTOM CHORD. THIS LOAD IS IN ADDITION TO THE DESIGN LOADS AS SHOWN.

   B. STEEL JOISTS SHALL BE DESIGNED FOR THE FOLLOWING ADDITIONAL LOADS APPLIED CONCURRENTLY WITH THE ROOF DESIGN LOADS:

   JOIST BEARING SEATS:
   MANUFACTURER SHALL DESIGN JOIST BEARING SEATS FOR THE LOADS GIVEN IN DETAIL 261 V = 3200 LB

   JOIST MANUFACTURERS. BRIDGING SHALL NOT BE CONNECTED TO PRECAST ARCH WALL PANELS OR WOOD PANELS. BRIDGING MAY BE CONNECTED TO CAST IN PLACE WALL.

3. METAL ROOF DECKING:

   METAL ROOF DECKING SHALL BE 1-1/2" - 20 GAGE GALVANIZED STEEL, VERCO HSB-36 ACOUSTICAL OR EQUIVALENT. MINIMUM SECTION PROPERTIES SHALL BE: I=.216 in^4 +S=.235 in^3 AND -S=.248 in^3. MINIMUM NOISE REDUCTION COEFFICIENT OF .75 AS TESTED IN ACCORDANCE WITH ASTM C423. CONNECTION OF ROOF DECKING SHALL BE AS FOLLOWS:

   (5) -⅝" PUDDLE WELDS TO SUPPORTS PER 36" SHEET. BUTTON PUNCH SIDE LAP CONNECTION AT 1'-0" OC, UNLESS OTHERWISE NOTED. MIN LATERAL SHEAR CAPACITY=

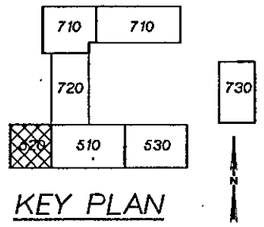

KEY PLAN

DSGN M. ANDERSON						
DR R. FRIBERG						
CHK W. BENNETT						
APVD J. GAUTHIER	NO.	DATE	REVISION	BY	APVD	

CH2M HILL

REUSE OF DOCUMENTS
THIS DOCUMENT, AND THE IDEAS AND DESIGNS INCORPORATED HEREIN, AS AN INSTRUMENT OF PROFESSIONAL SERVICE, IS THE PROPERTY OF CH2M HILL AND IS NOT TO BE USED, IN WHOLE OR IN PART, FOR ANY OTHER PROJECT WITHOUT THE WRITTEN AUTHORIZATION OF CH2M HILL.
©CH2M HILL

VERIFY SCALE
BAR IS ONE INCH ON ORIGINAL DRAWING.
0 1"
IF NOT ONE INCH ON THIS SHEET, ADJUST SCALES ACCORDINGLY.

CITY OF BELLINGHAM, WASHINGTON
POST POINT WASTEWATER TREATMENT PLANT UPGRADE

SOLIDS HANDLING FACILITY -- WEST ADDITION
STRUCTURAL
ROOF FRAMING PLAN

DWG NO. 520-S-3
DATE AUG. 1990
PROJ. NO. SEA22462.C1

DRAWN BY: BBL DESIGNED BY: M. ANDERSON
DGN NAME: H:/PROJ2/BELLINGH/BL520S-D.DGN

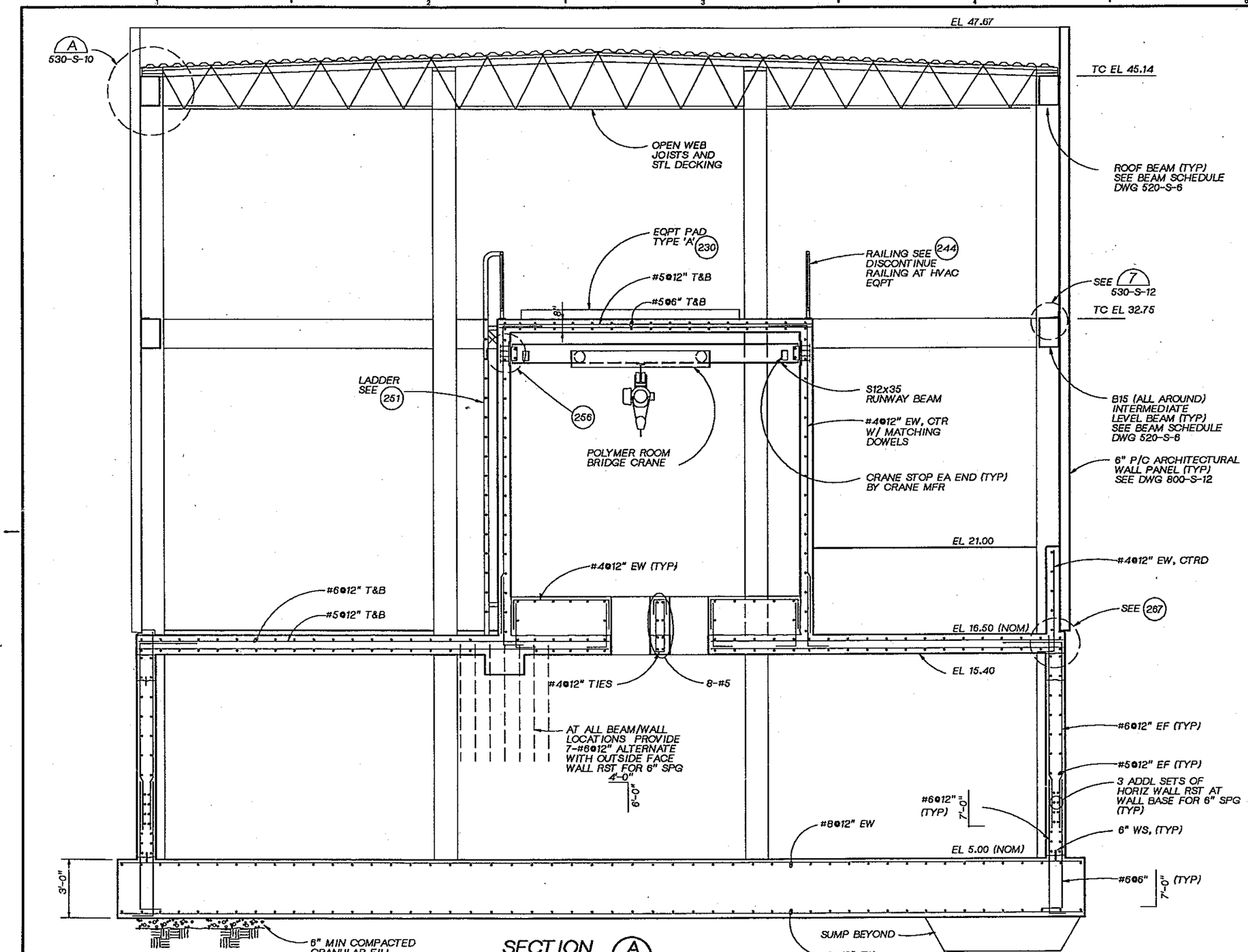

SECTION A
3/8" = 1'-0"
520-S-1
520-S-2
520-S-3

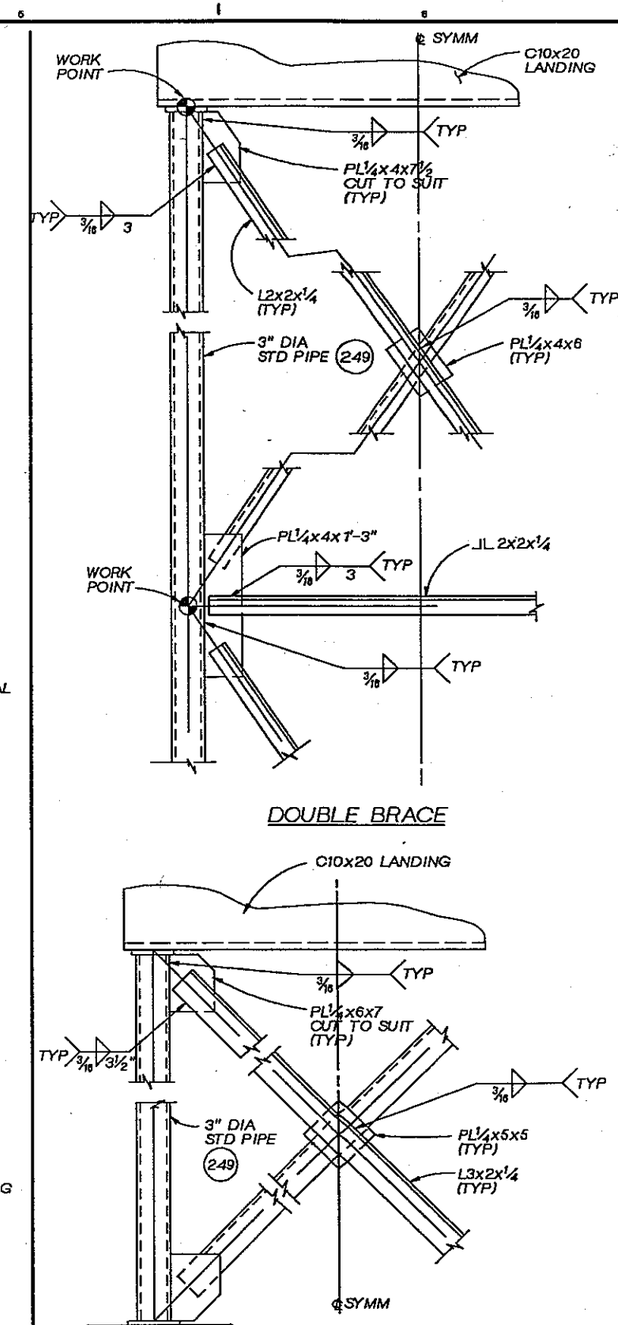

STAIR BRACING 1
1 1/2" = 1'-0"
520-S-7
530-S-3

DSGN M. ANDERSON					
DR R. FRIBERG					
CHK W. BENNETT					
APVD J. GAUTHIER	NO.	DATE	REVISION	BY	APVD

CH2M HILL

REUSE OF DOCUMENTS
THIS DOCUMENT, AND THE IDEAS AND DESIGNS INCORPORATED HEREIN, AS AN INSTRUMENT OF PROFESSIONAL SERVICE, IS THE PROPERTY OF CH2M HILL AND IS NOT TO BE USED, IN WHOLE OR IN PART, FOR ANY OTHER PROJECT WITHOUT THE WRITTEN AUTHORIZATION OF CH2M HILL.
©CH2M HILL

BAR IS ONE INCH ON ORIGINAL DRAWING. 0 1"
IF NOT ONE INCH ON THIS SHEET, ADJUST SCALES ACCORDINGLY.

CITY OF BELLINGHAM, WASHINGTON
POST POINT WASTEWATER TREATMENT PLANT UPGRADE

SOLIDS HANDLING FACILITY -- WEST ADDITION
STRUCTURAL SECTIONS

DWG NO. 520-S-4
DATE AUG. 1990
PROJ NO. SEA22462.C1

DATE: 8-25-90
DRAWN BY: RSF DESIGNED BY: M. ANDERSON
DGN NAME: H:/PROJ2/BELLINGH/BL520S-E.DGN

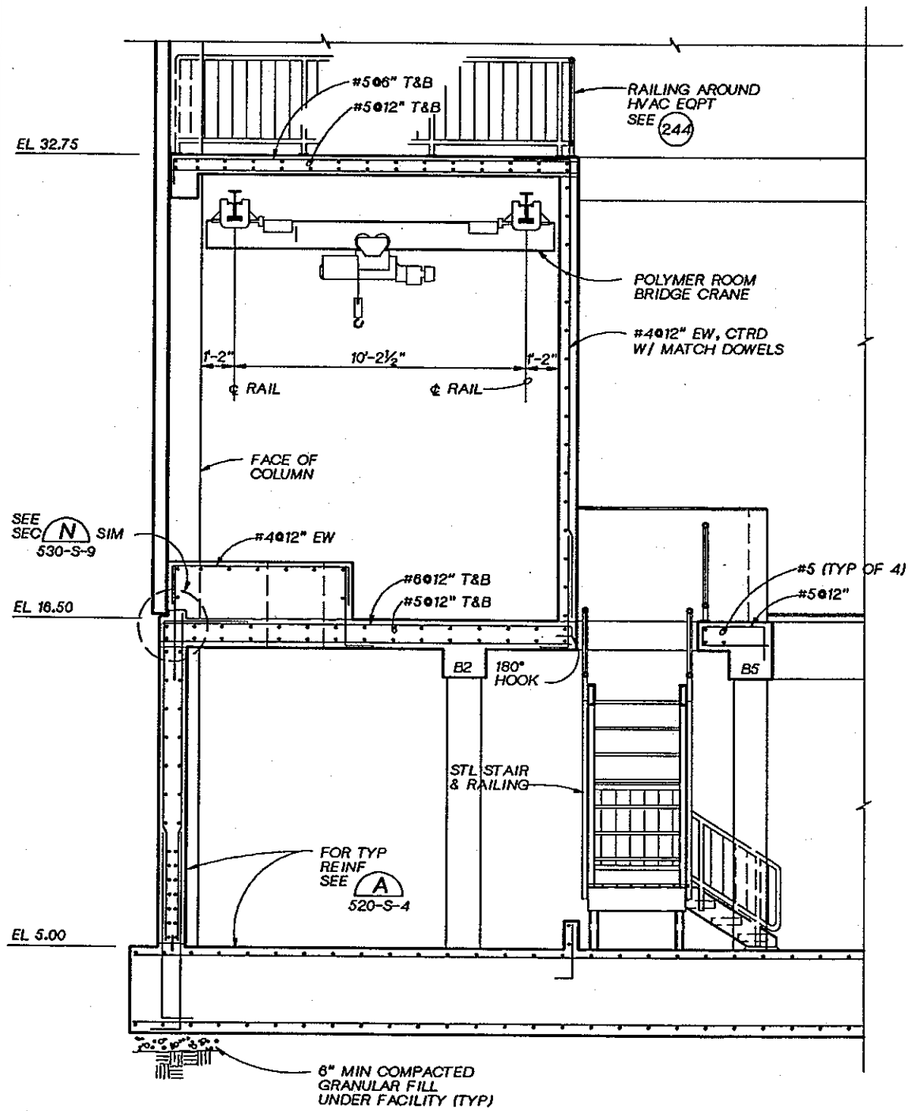

SECTION B
3/8" = 1'-0"
520-S-1
520-S-2

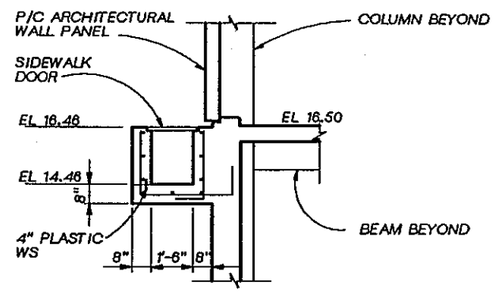

SECTION E
3/8" = 1'-0"
520-S-2
530-S-2

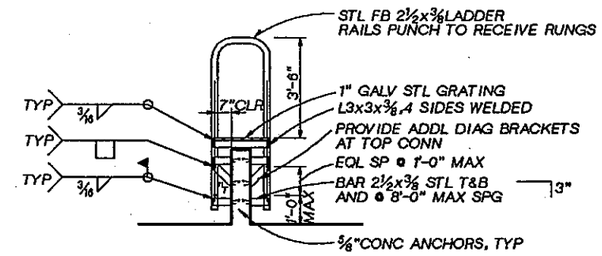

NOTE:
HOT DIP GALV STEEL AFTER FABRICATION.

DETAIL 1
NTS
520-S-2
520-S-5

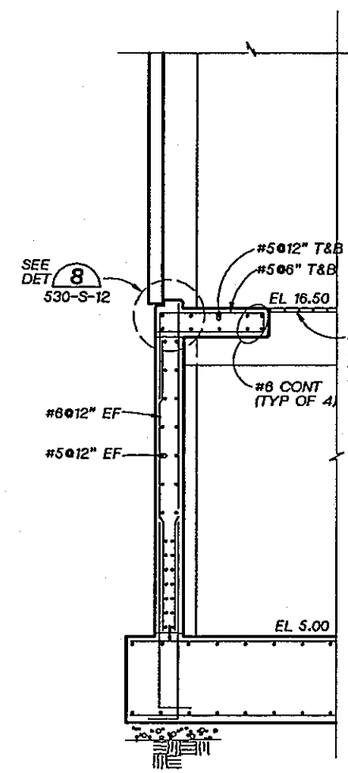

SECTION C
3/8" = 1'-0"
520-S-1
520-S-2

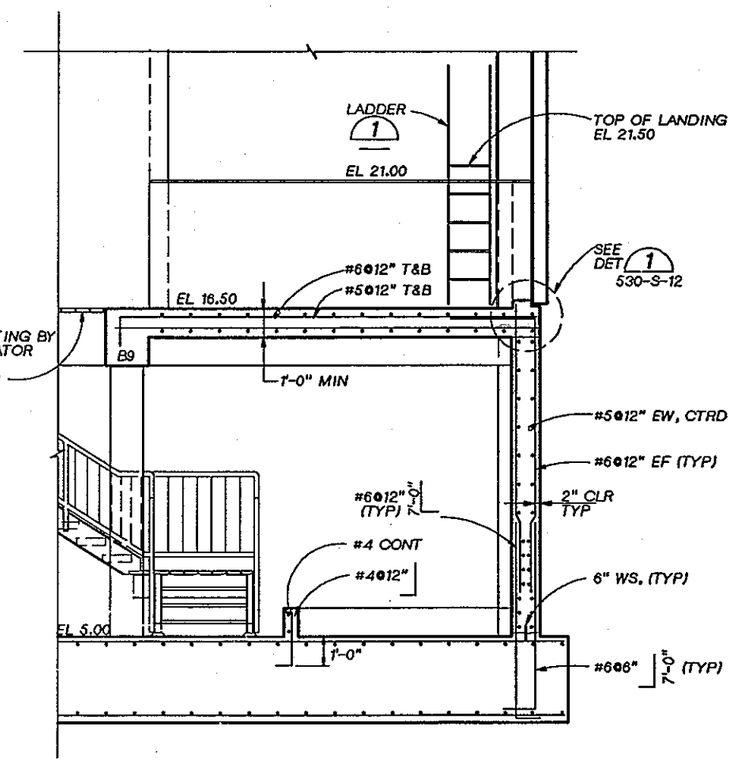

SECTION D
3/8" = 1'-0"
520-S-1
520-S-2

CH2M HILL

DSGN	M. ANDERSON
DR	R. FRIBERG
CHK	W. BENNETT
APVD	J GAUTHIER

NO.	DATE	REVISION	BY	APVD

REUSE OF DOCUMENTS
THIS DOCUMENT, AND THE IDEAS AND DESIGNS INCORPORATED HEREIN, AS AN INSTRUMENT OF PROFESSIONAL SERVICE, IS THE PROPERTY OF CH2M HILL AND IS NOT TO BE USED, IN WHOLE OR IN PART, FOR ANY OTHER PROJECT WITHOUT THE WRITTEN AUTHORIZATION OF CH2M HILL.
©CH2M HILL

BAR IS ONE INCH ON ORIGINAL DRAWING.
0 1"
IF NOT ONE INCH ON THIS SHEET, ADJUST SCALES ACCORDINGLY.

CITY OF BELLINGHAM, WASHINGTON
POST POINT WASTEWATER TREATMENT PLANT UPGRADE

SOLIDS HANDLING FACILITY -- WEST ADDITION

STRUCTURAL SECTIONS

DWG NO. 520-S-5
DATE AUG. 1990
PROJ NO. SEA22462.C1

DATE: 8-26-90
DRAWN BY: RSF DESIGNED BY: M. ANDERSON
DGN NAME: H:/PROJ2/BELLINGH/BL520S-H.DGN

BEAM SCHEDULE

GROUND LEVEL (TC EL 16.50)

BEAM NO.	SIZE		TOP REINF AT LEFT SUPPORT		BOTTOM REINF		* TOP REINF AT RIGHT SUPPORT		SHEAR REINF		REMARKS
	W	D	T	TC	B	BC	T	TC	NO. SIZE	SPACING FROM LEFT SUPPORT	
B1	24	24		2-#9	2-#9	6-#9	2-#9	2-#9	#3	ALL @ 6"	
B2	24	24	2-#9	2-#9	2-#9	2-#9	2-#9	2-#9	#3	ALL @ 6"	
B3	24	24	2-#9	2-#9	2-#9	2-#9	2-#9	2-#9	#4	ALL @ 6"	
B4	18	24		2-#9		5-#9	2-#9	2-#9	#3	ALL @ 8"	
B5	18	24	2-#9	2-#9		2-#9	2-#9	2-#9	#3	ALL @ 8"	
B6	18	24	2-#9	2-#9		4-#9		2-#9	#3	ALL @ 8"	
B7	18	24		2-#9	2-#9	2-#9		2-#9	#3	ALL @ 8"	
B8	24	24		3-#8		6-#9		3-#8	#3	ALL @ 6"	
B9	18	24		2-#9	1-#9	2-#9	2-#9	2-#9	#3	ALL @ 8"	
B10	18	24	2-#9	2-#9	1-#9	2-#9		2-#9	#3	ALL @ 8"	
B11	12	48		2-#9		2-#9		2-#9	#3	ALL @ 9"	
B12	12	42		2-#9		2-#9		2-#9	#3	ALL @ 9"	
B13	18	27		2-#9		4-#9		2-#9	#3	ALL @ 6"	ASH LOADING AREA
B14	18	33		2-#9		4-#9		2-#9	#3	ALL @ 6"	ASH LOADING AREA

INTERMEDIATE LEVEL (TC EL 32.73)

BEAM NO.	SIZE		TOP REINF AT LEFT SUPPORT		BOTTOM REINF		* TOP REINF AT RIGHT SUPPORT		SHEAR REINF		REMARKS
	W	D	T	TC	B	BC	T	TC	NO. SIZE	SPACING FROM LEFT SUPPORT	
B15	12	18	1-#8	2-#8	1-#8	2-#8	1-#8	2-#8	#3	ALL @ 6"	ALL AROUND WEST ADDITION (NOT SHOWN IN PLAN)
B16	18	24	1-#9	2-#9	3-#9	3-#9	1-#9	2-#9	#3	ALL @ 8"	ASH LOADING AREA
B17+	18	30		4-#9	2-#9	4-#9	4-#9	4-#9	#5	ALL @ 6"	ASH LOADING AREA

+ USE 4-#6 SIDE BARS INSTEAD OF 4-#5 AS SHOWN IN (221)

ROOF LEVEL (TC EL 45.14 & VARIES)

BEAM NO.	SIZE		TOP REINF AT LEFT SUPPORT		BOTTOM REINF		* TOP REINF AT RIGHT SUPPORT		SHEAR REINF		REMARKS
	W	D	T	TC	B	BC	T	TC	NO. SIZE	SPACING FROM LEFT SUPPORT	
B18	12	18	1-#9	2-#9	1-#9	2-#9	1-#9	2-#9	#3	ALL @ 6"	
B19	12	VARIES	1-#9	2-#9	1-#9	2-#9	1-#9	2-#9	#3	ALL @ 6"	(2) 530-S-10

NOTE: FOR TYPICAL BEAM DETAILS SEE (221)

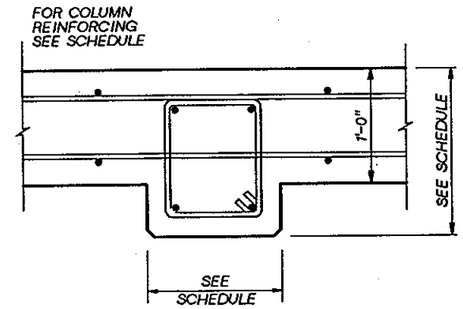

TYPICAL EXTERIOR WALL PILASTER
NTS

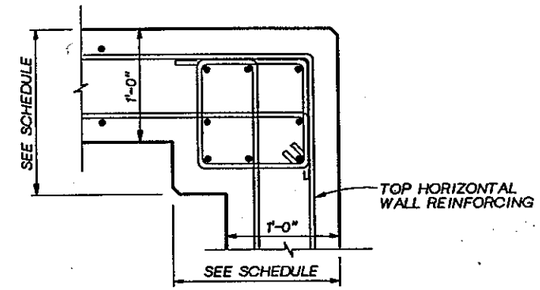

TYPICAL CORNER PILASTER
NTS

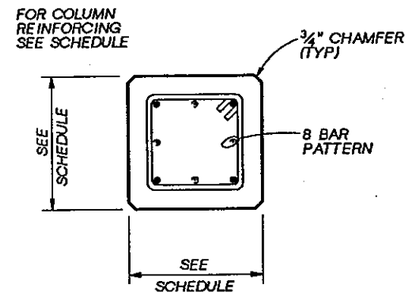

TYPICAL 4 & 8 BAR COLUMN
NTS

COLUMN SCHEDULE

MARK NUMBER	COLUMN SIZE	VERICAL REINF	HORIZ. TIES
C1	17½X17½	8-#7	6-#3@6" T&B REST @ 12"
C2	17½X16	8-#7	6-#3@6" T&B REST @ 12"
C3	14x14	4-#8	6-#3@6" T&B REST @ 12"
C4	(1)		6-#3@6" T&B REST @ 12"
C5	(2)		6-#3@6" T&B REST @ 12"
C6	14x14	8-#7	6-#3@6" T&B REST @ 12"
C7	18x18	4-#9	6-#3@6" T&B REST @ 12"

NOTE:
CONTINUE HORIZ TIES & SPACING THRU BEAM/ COLUMN JOINT

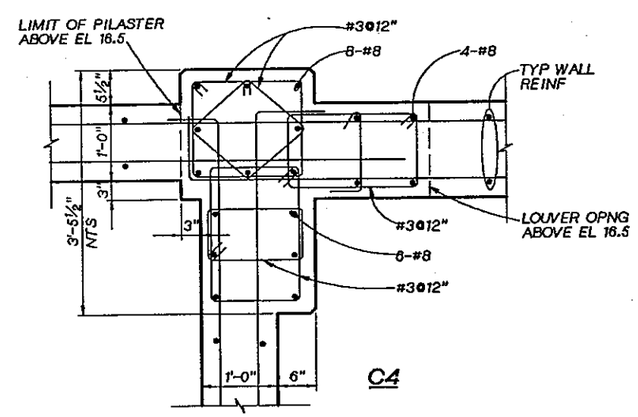

DETAIL (1)
1" = 1'-0"

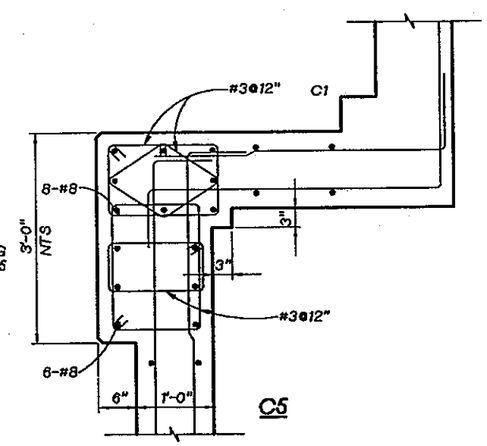

DETAIL (2)
1" = 1'-0"

REUSE OF DOCUMENTS
THIS DOCUMENT, AND THE IDEAS AND DESIGNS INCORPORATED HEREIN, AS AN INSTRUMENT OF PROFESSIONAL SERVICE, IS THE PROPERTY OF CH2M HILL AND IS NOT TO BE USED, IN WHOLE OR IN PART, FOR ANY OTHER PROJECT WITHOUT THE WRITTEN AUTHORIZATION OF CH2M HILL.
©CH2M HILL

DSGN M. ANDERSON
DR R. FRIBERG
CHK W. BENNETT
APVD J. GAUTHIER

NO.	DATE	REVISION	BY	APVD

BAR IS ONE INCH ON ORIGINAL DRAWING.
0 1"
IF NOT ONE INCH ON THIS SHEET, ADJUST SCALES ACCORDINGLY.

CITY OF BELLINGHAM, WASHINGTON
POST POINT WASTEWATER TREATMENT PLANT UPGRADE

SOLIDS HANDLING FACILITY -- WEST ADDITION
STRUCTURAL
BEAM AND COLUMN SCHEDULES

DWG NO. 520-S-6
DATE AUG. 1990
PROJ NO. SEA22462.C1

DATE: 8-26-90
DRAWN BY: RSF DESIGNED BY: M. ANDERSON
DGN NAME: H:/PROJ2/BELLINGH/BL520S-F.DGN

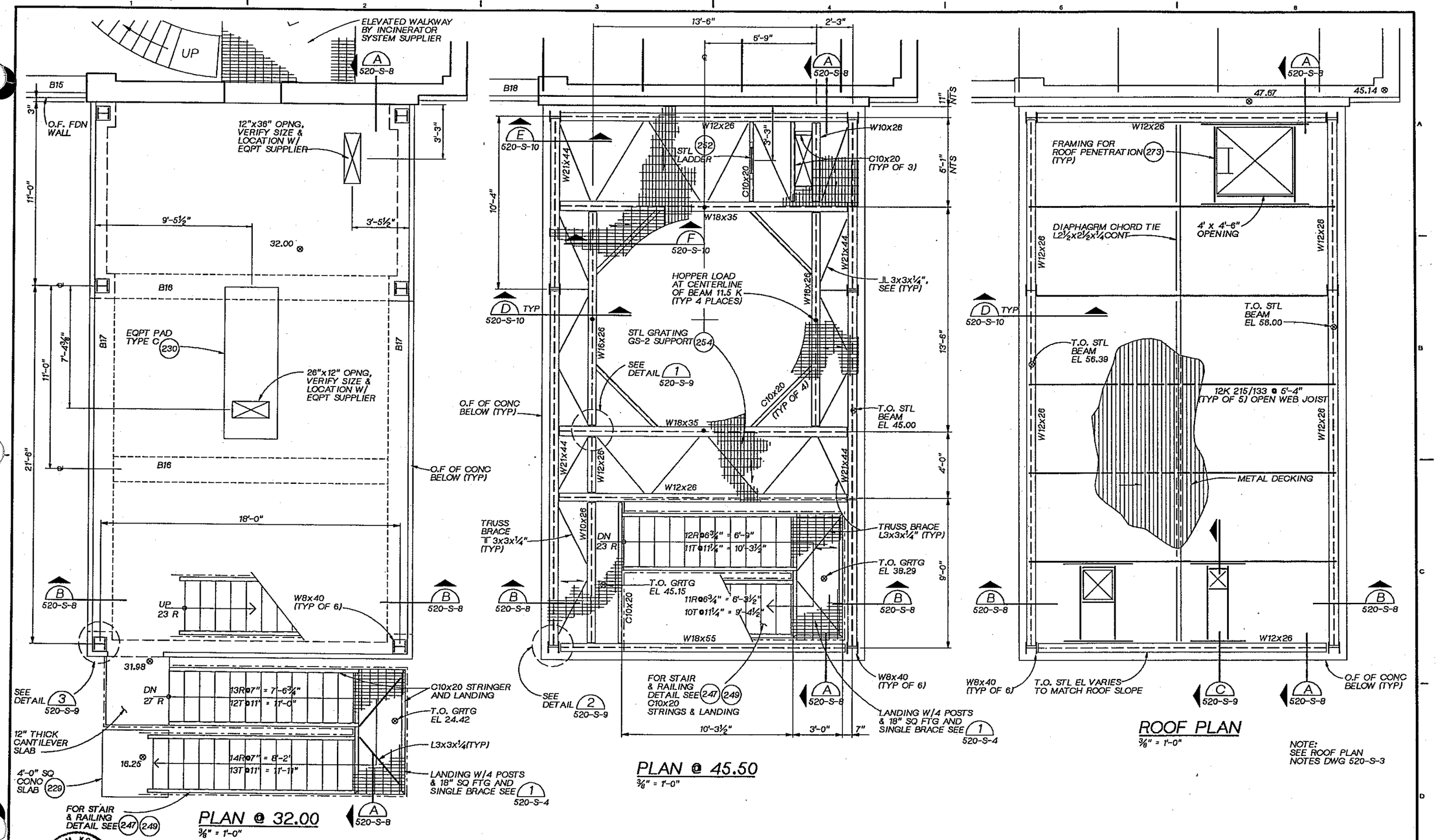

NOTE:
SEE ROOF PLAN NOTES DWG 520-S-3

DSGN	M. ANDERSON			
DR	R. FRIBERG			
CHK	W. BENNETT			
APVD	J. GAUTHIER	NO.	DATE	REVISION

BY | APVD

REUSE OF DOCUMENTS
THIS DOCUMENT, AND THE IDEAS AND DESIGNS INCORPORATED HEREIN, AS AN INSTRUMENT OF PROFESSIONAL SERVICE, IS THE PROPERTY OF CH2M HILL AND IS NOT TO BE USED, IN WHOLE OR IN PART, FOR ANY OTHER PROJECT WITHOUT THE WRITTEN AUTHORIZATION OF CH2M HILL.
©CH2M HILL

BAR IS ONE INCH ON ORIGINAL DRAWING.
0 1"
IF NOT ONE INCH ON THIS SHEET, ADJUST SCALES ACCORDINGLY.

CITY OF BELLINGHAM, WASHINGTON
POST POINT WASTEWATER TREATMENT PLANT UPGRADE

SOLIDS HANDLING FACILITY -- WEST ADDITION
STRUCTURAL
ASH LOADING AREA PLANS

DWG NO. 520-S-7
DATE AUG. 1990
PROJ NO. SEA22452.C1

DATE: 8-26-90
DRAWN BY: RSF DESIGNED BY: M. ANDERSON
DGN NAME: H:/PROJ2/BELLINGH/BL620S-G.DGN

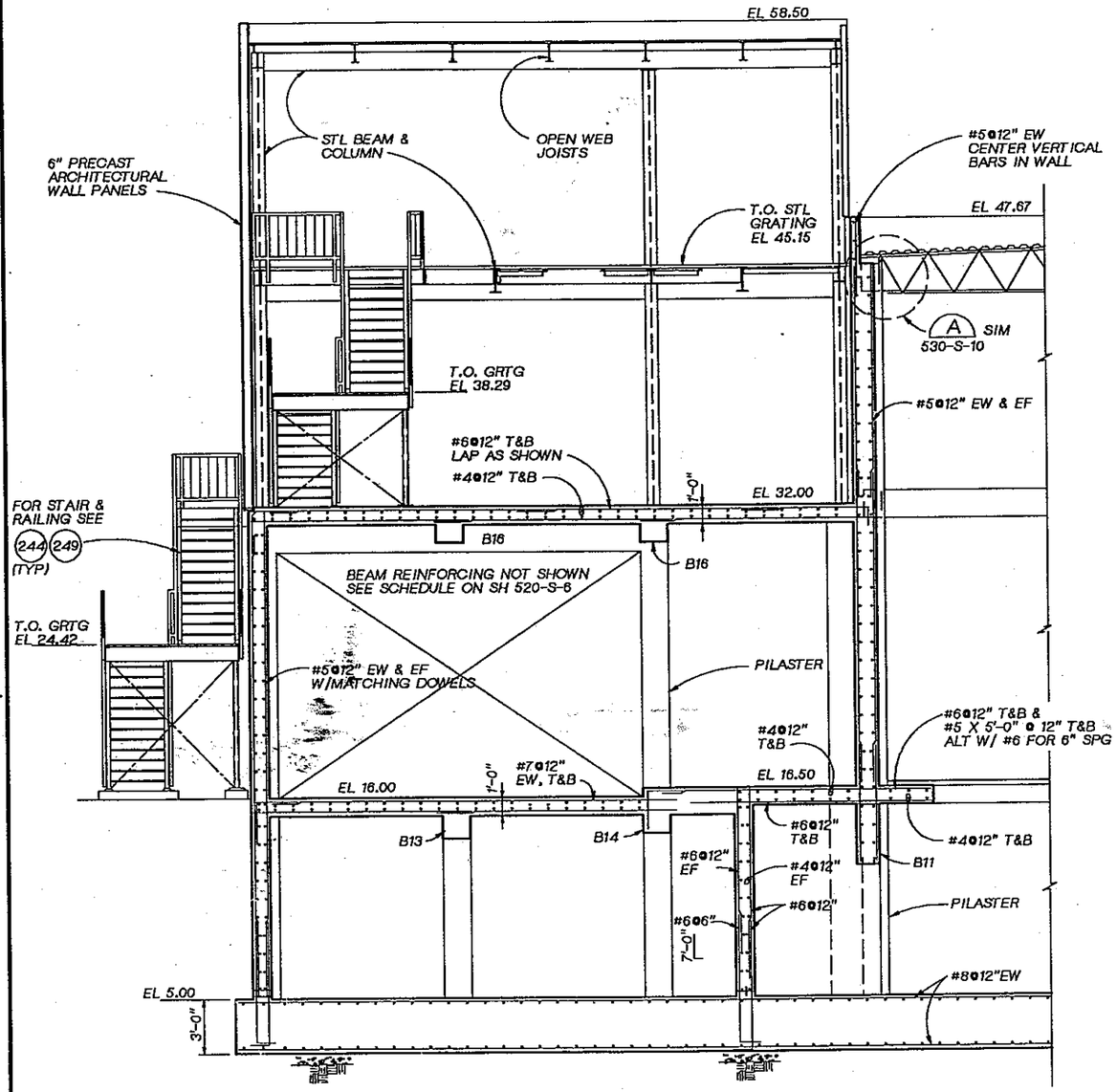

SECTION A
1/4" = 1'-0"
520-S-1
520-S-2
520-S-7

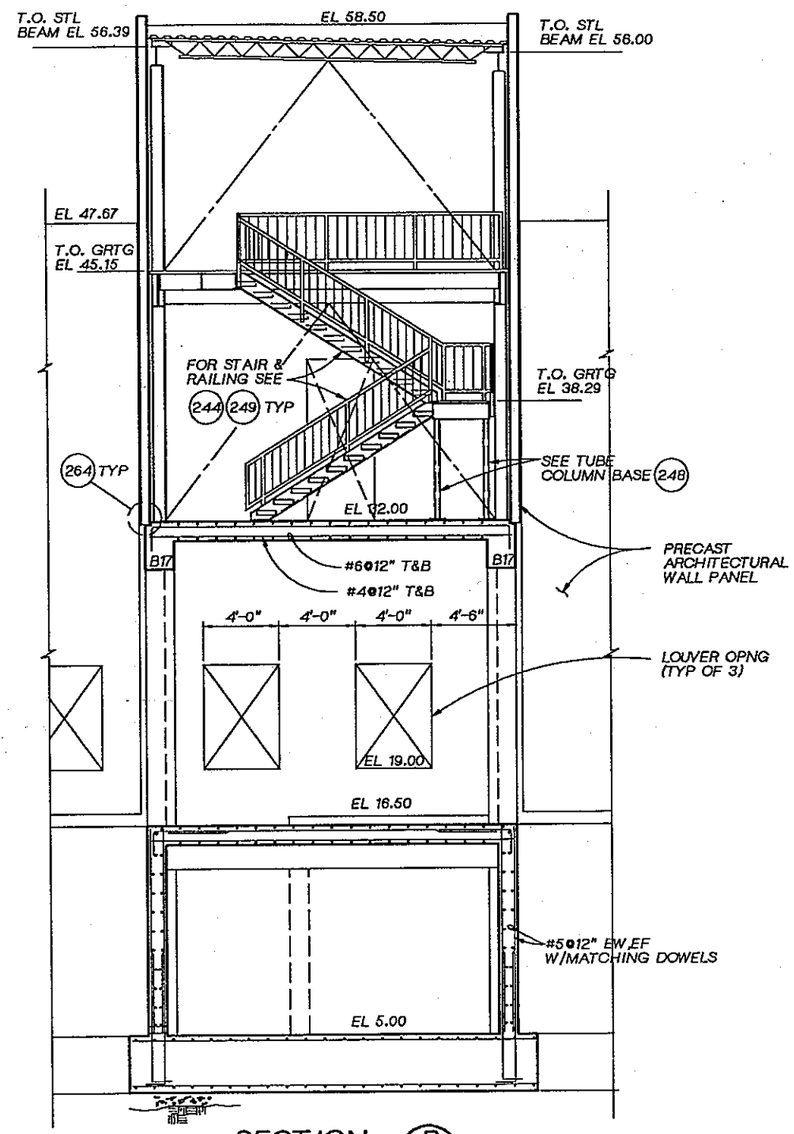

SECTION B
1/4" = 1'-0"
520-S-7

CH2M HILL	DSGN M ANDERSON DR R FRIBERG CHK W BENNETT APVD J GAUTHIER	NO.	DATE	REVISION	BY	APVD

REUSE OF DOCUMENTS
THIS DOCUMENT, AND THE IDEAS AND DESIGNS INCORPORATED HEREIN, AS AN INSTRUMENT OF PROFESSIONAL SERVICE, IS THE PROPERTY OF CH2M HILL AND IS NOT TO BE USED, IN WHOLE OR IN PART, FOR ANY OTHER PROJECT WITHOUT THE WRITTEN AUTHORIZATION OF CH2M HILL.
©CH2M HILL

BAR IS ONE INCH ON ORIGINAL DRAWING. 0 1"
IF NOT ONE INCH ON THIS SHEET, ADJUST SCALES ACCORDINGLY.

CITY OF BELLINGHAM, WASHINGTON
POST POINT WASTEWATER TREATMENT PLANT UPGRADE

SOLIDS HANDLING FACILITY -- WEST ADDITION
STRUCTURAL
ASH LOADING AREA
SECTION & DETAILS

DWG NO. 520-S-8
DATE AUG. 1990
PROJ NO. SEA22462.C1

DATE: 8-26-90
DRAWN BY: RSF DESIGNED BY: M. ANDERSON
DGN NAME: H:/PROJ2/BELLINGH/BL520S-1.DGN

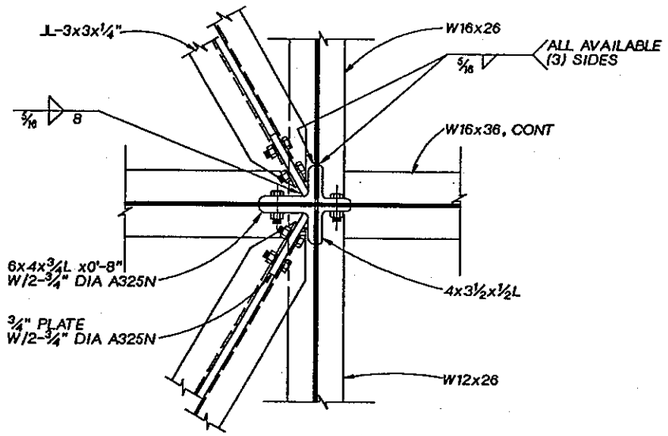

PLAN

DETAIL 1
1½" = 1'-0" 520-S-7

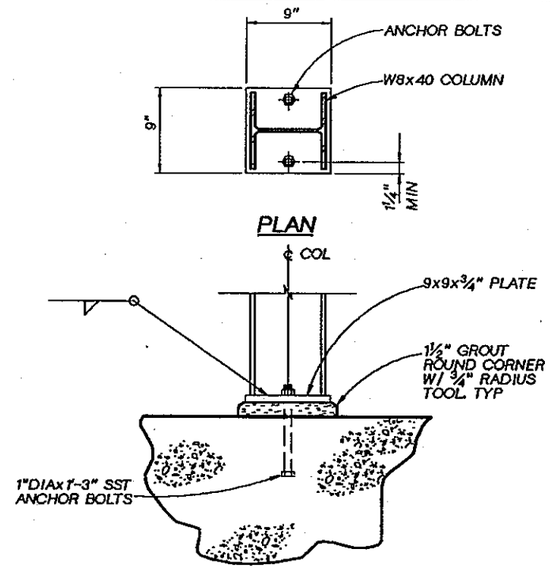

ELEVATION

DETAIL 3
1½" = 1'-0" 520-S-7

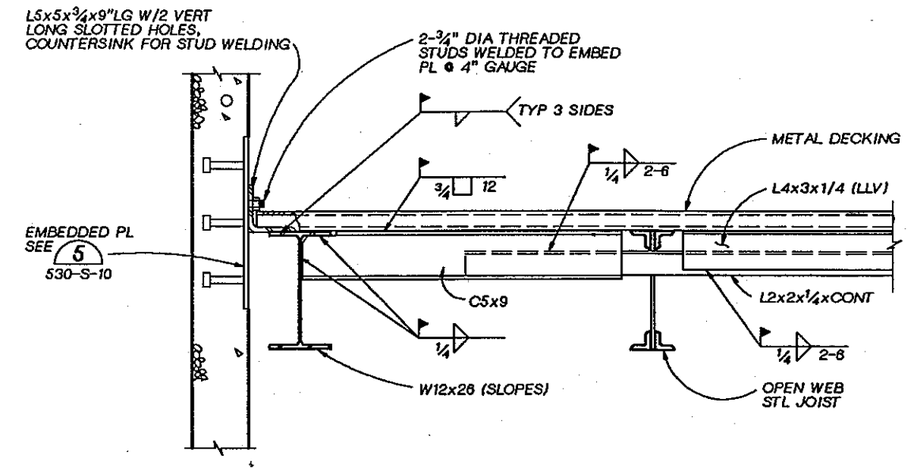

SECTION C
1½" = 1'-0" 520-S-7

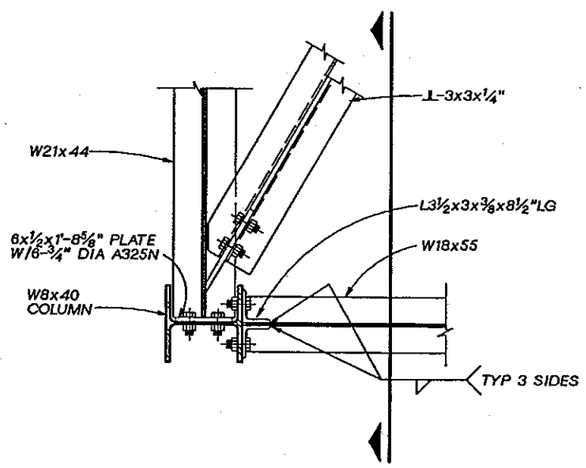

PLAN

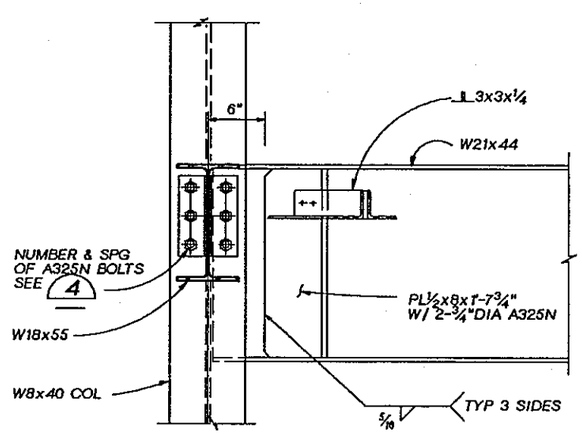

SECTION

DETAIL 2
1½" = 1'-0" 520-S-7

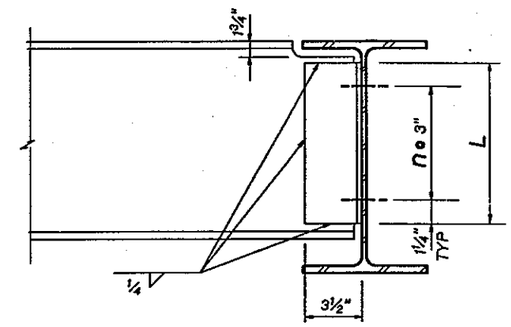

MEMBER NOMINAL DEPTH d (IN)	ANGLE SIZE	L (IN)	n
10	2-4x3½x¼	5½	2
12	2-4x3½x¼	8½	3
16	2-4x3½x5/16	11½	3
18, 21	2-4x3½x5/16	17½	4

n - NUMBER OF ¾"DIA A325N BOLTS

TYPICAL BEAM CONNECTION

DETAIL 4
NTS

LINDA M. KORDON STATE OF WASHINGTON 22863 REGISTERED PROFESSIONAL ENGINEER

CH2M HILL

DSGN	M. ANDERSON				
DR	R. FRIBERG				
CHK	W. BENNETT				
APVD	J. GAUTHIER	NO.	DATE	REVISION	BY / APVD

REUSE OF DOCUMENTS
THIS DOCUMENT, AND THE IDEAS AND DESIGNS INCORPORATED HEREIN, AS AN INSTRUMENT OF PROFESSIONAL SERVICE, IS THE PROPERTY OF CH2M HILL AND IS NOT TO BE USED, IN WHOLE OR IN PART, FOR ANY OTHER PROJECT WITHOUT THE WRITTEN AUTHORIZATION OF CH2M HILL.
©CH2M HILL

BAR IS ONE INCH ON ORIGINAL DRAWING. 0 1"
IF NOT ONE INCH ON THIS SHEET, ADJUST SCALES ACCORDINGLY.

CITY OF BELLINGHAM, WASHINGTON
POST POINT WASTEWATER TREATMENT PLANT UPGRADE

SOLIDS HANDLING FACILITY -- WEST ADDITION
STRUCTURAL
SECTION AND DETAILS

DWG NO. 520-S-9
DATE AUG. 1990
PROJ. NO. SEA22462.C1

DATE: 8-23-90
DRAWN BY: RSF DESIGNED BY: M. ANDERSON
DGN NAME: H:/PROJ2/BELLINGH/BL520S-J.DGN

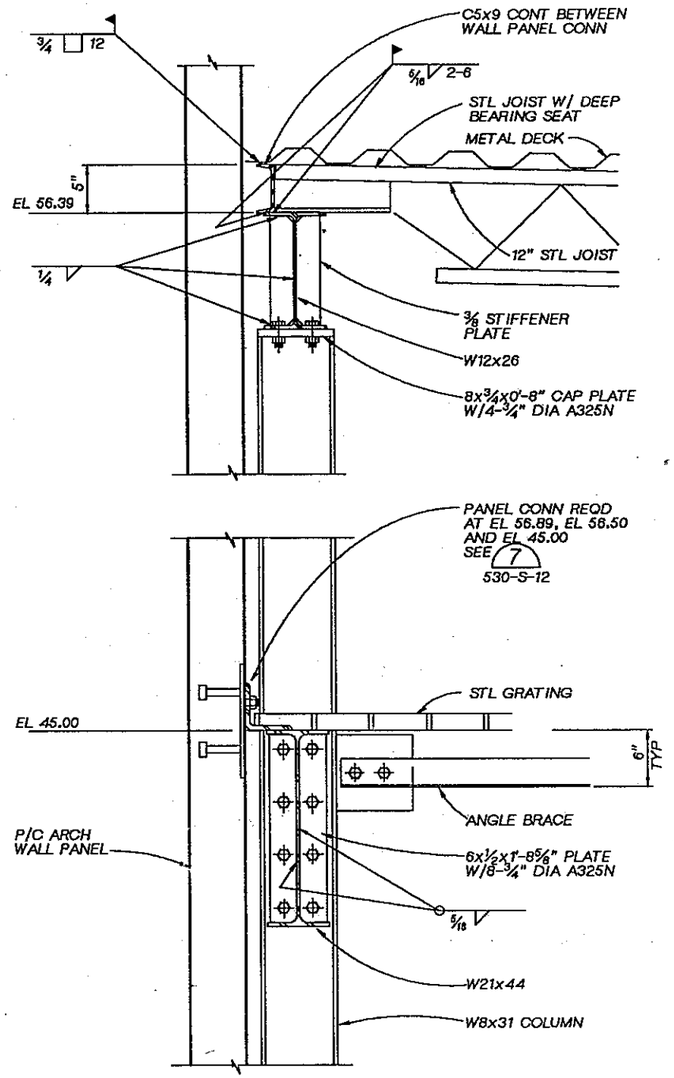

SECTION D 520-S-7
1 1/2" = 1'-0"

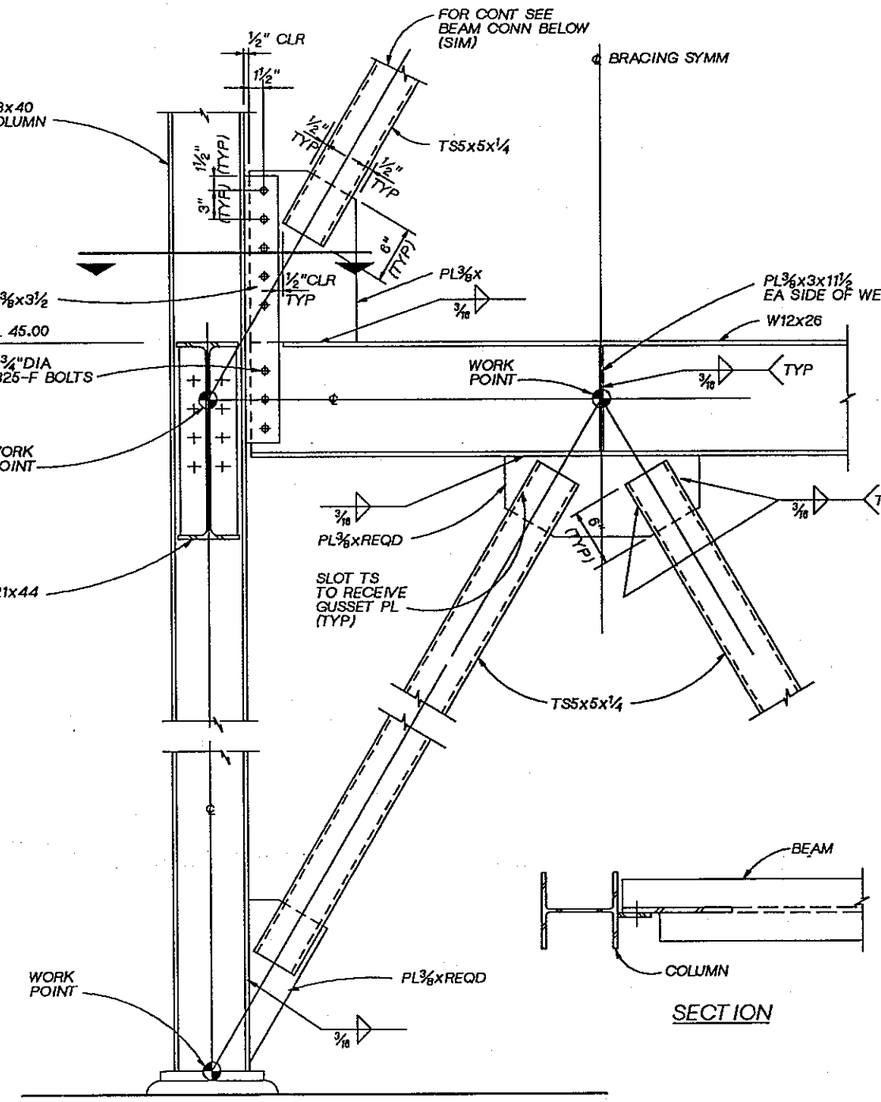

SECTION

SECTION E 520-S-7
1 1/2" = 1'-0"

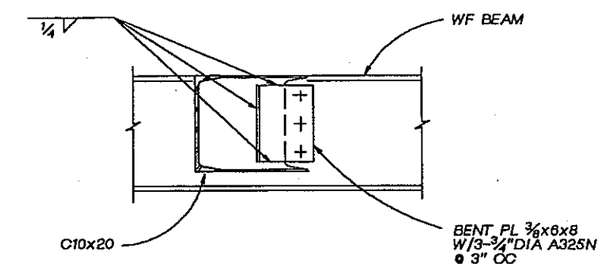

SECTION F 520-S-7
1 1/2" = 1'-0"

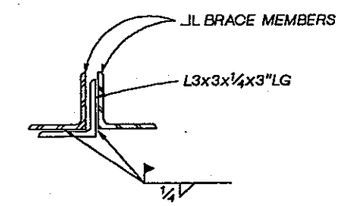

NOTE:
PROVIDE AT MID-SPAN OF ALL JL BRACE MEMBERS.

DETAIL 5 520-S-7 520-S-10
NTS

DSGN M. ANDERSON					
DR R. FRIBERG					
CHK W. BENNETT					
APVD J GAUTHIER	NO.	DATE	REVISION	BY	APVD

CH2M HILL

REUSE OF DOCUMENTS
THIS DOCUMENT, AND THE IDEAS AND DESIGNS INCORPORATED HEREIN, AS AN INSTRUMENT OF PROFESSIONAL SERVICE, IS THE PROPERTY OF CH2M HILL AND IS NOT TO BE USED, IN WHOLE OR IN PART, FOR ANY OTHER PROJECT WITHOUT THE WRITTEN AUTHORIZATION OF CH2M HILL.
©CH2M HILL

BAR IS ONE INCH ON ORIGINAL DRAWING. 0 1"
IF NOT ONE INCH ON THIS SHEET, ADJUST SCALES ACCORDINGLY.

CITY OF BELLINGHAM, WASHINGTON
POST POINT WASTEWATER TREATMENT PLANT UPGRADE

SOLIDS HANDLING FACILITY -- WEST ADDITION
STRUCTURAL
SECTION AND DETAILS

DWG NO. 520-S-10
DATE AUG. 1990
PROJ NO. SEA22462.C1

DATE: 10-18-90
DRAWN BY: BBL DESIGNED BY: LMK
DGN NAME: H:/PROJ2/BELLINGH/BL520SKA.DGN

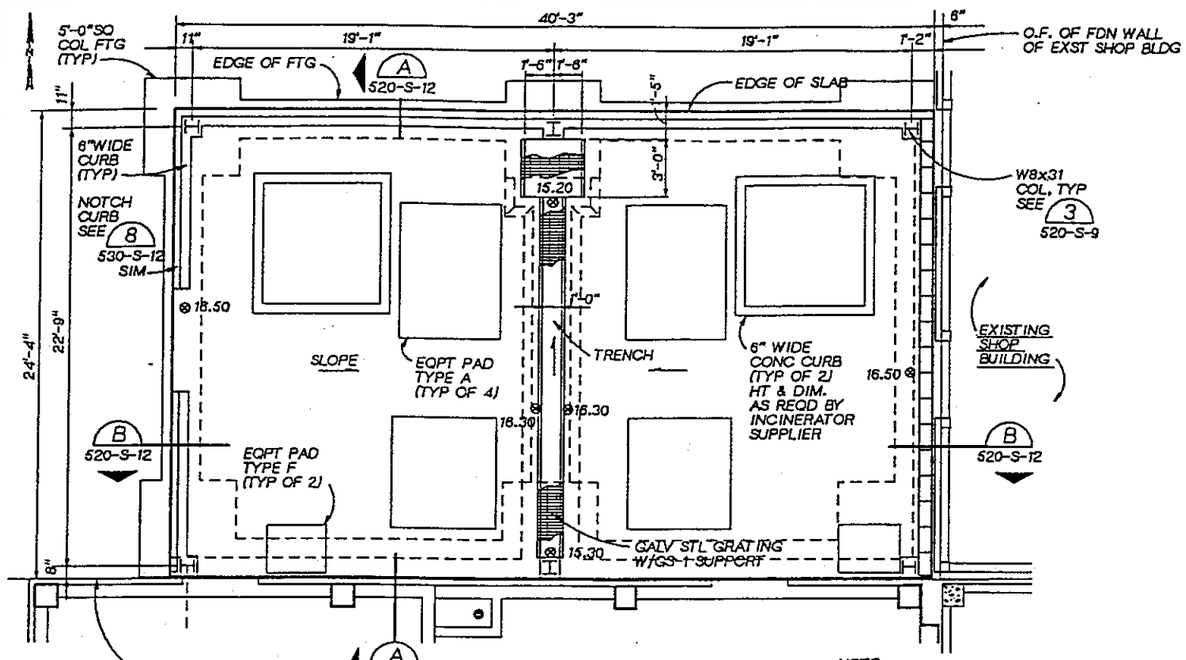

GROUND LEVEL PLAN
1/4"=1'-0"

NOTE:
FOR EQPT PADS SEE 230

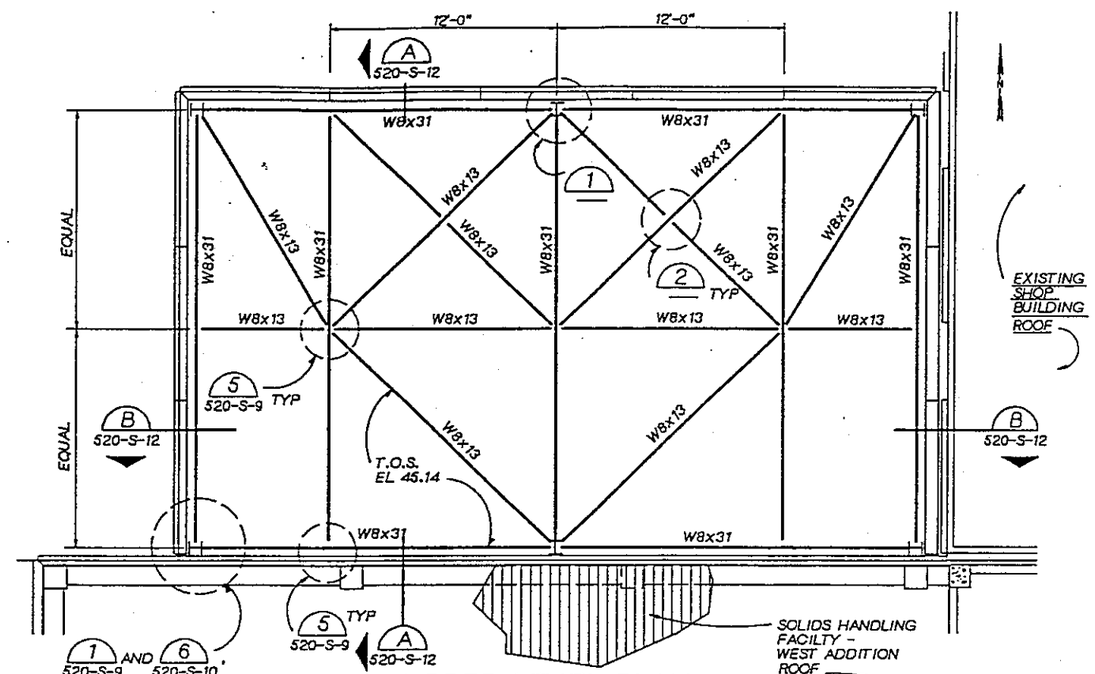

UPPER LEVEL PLAN
1/4"=1'-0"

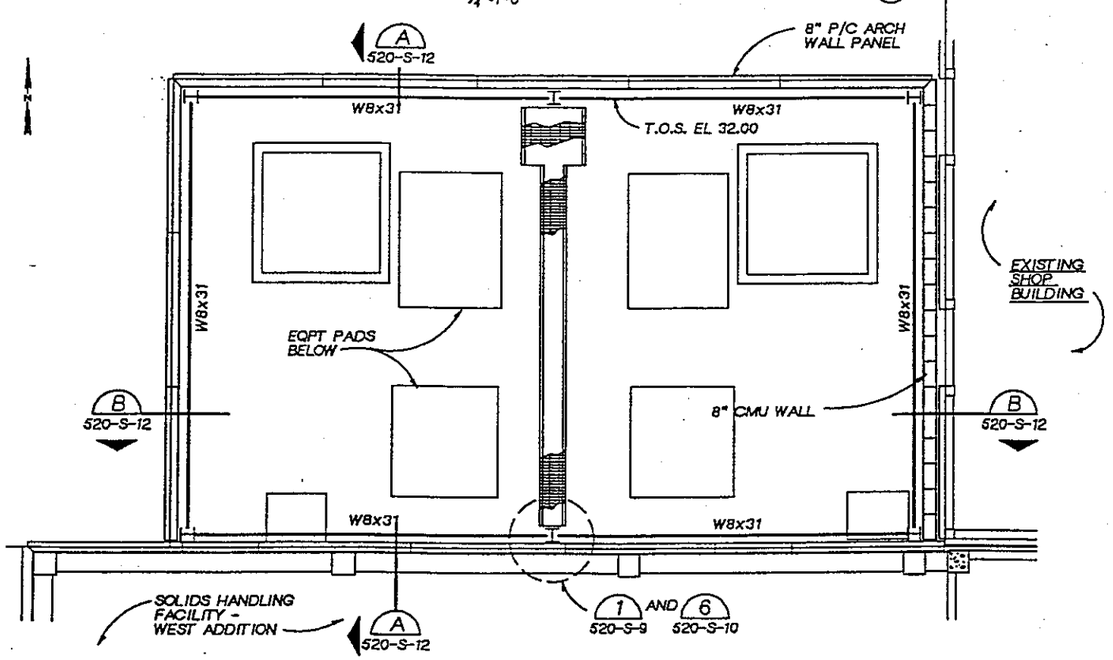

INTTERMEDIATE LEVEL PLAN
1/4"=1'-0"

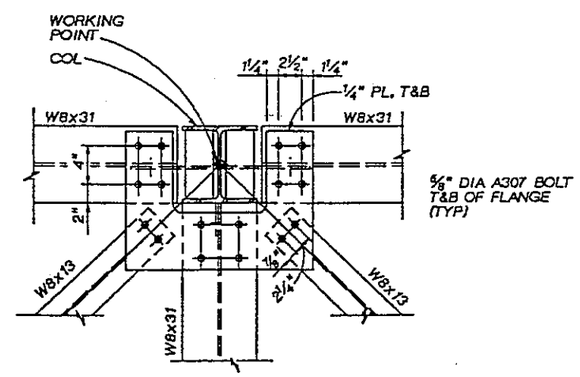

PLAN

DETAIL 1
1 1/2" = 1'-0"

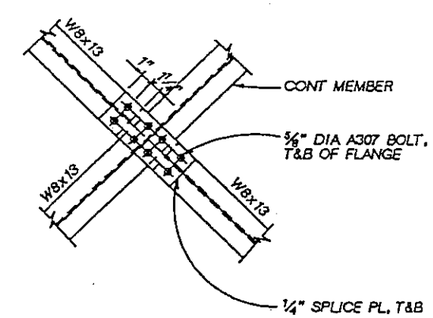

PLAN

DETAIL 2
1 1/2" = 1'-0"

DSGN L. KORBUS					
DR B. LAZARO					
CHK					
APVD J. GAUTHIER	NO.	DATE	REVISION	BY	APVD
	1	10/16/90	ADDENDUM NO.3	LMK	JAG

REUSE OF DOCUMENTS
THIS DOCUMENT, AND THE IDEAS AND DESIGNS INCORPORATED HEREIN, AS AN INSTRUMENT OF PROFESSIONAL SERVICE, IS THE PROPERTY OF CH2M HILL AND IS NOT TO BE USED, IN WHOLE OR IN PART, FOR ANY OTHER PROJECT WITHOUT THE WRITTEN AUTHORIZATION OF CH2M HILL.
©CH2M HILL

BAR IS ONE INCH ON ORIGINAL DRAWING.
0 1"
IF NOT ONE INCH ON THIS SHEET, ADJUST SCALES ACCORDINGLY.

CITY OF BELLINGHAM, WASHINGTON
POST POINT WASTEWATER TREATMENT PLANT UPGRADE

SOLIDS HANDLING FACILITY - WEST ADDITION
ESP SCREEN WALL
STRUCTURAL
PLANS AND DETAILS

DWG NO. 520-S-11
DATE AUG. 1990
PROJ. NO. SEA22452.C1

WAS CROSS-OVER

TOP VIEW EXISTING

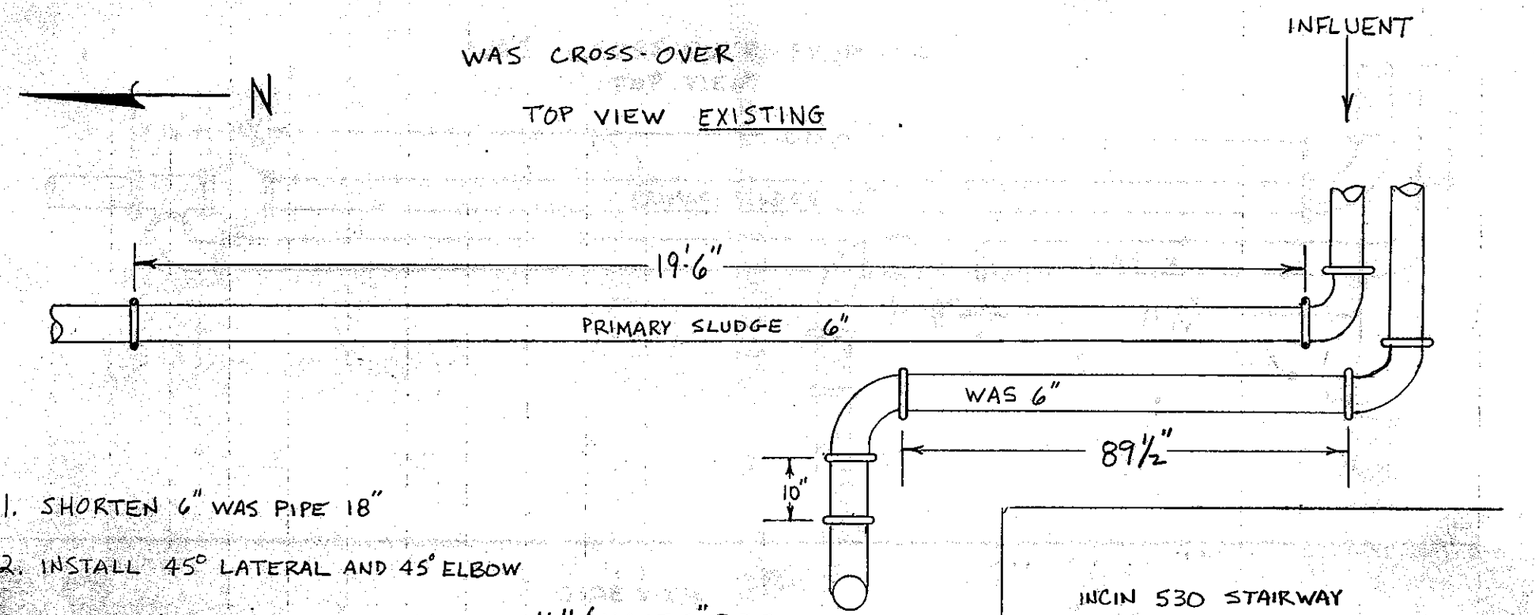

1. SHORTEN 6" WAS PIPE 18"
2. INSTALL 45° LATERAL AND 45° ELBOW
3. SHORTEN PRIMARY SLUDGE PIPE 26½" (HAVE 6" PIPE CUT TO LENGTH, 207½" READY TO INSTALL)
4. INSTALL 6" TEE AND VICTAULIC PLUG VALVE TO SHORTENED PRIMARY SLUDGE PIPE.
5. INSTALL SHORT 90° ELBOW TO TEE.
6. INSTALL 125" SECTION OF 6" PIPE BETWEEN 45° ELBOW OF WAS LINE AND PLUG VALVE ATTACHED TO SHORT 90° ON PRIMARY SLUDGE LINE.

MICK C. 12-11-97

WAS CROSS OVER PROPOSED

TOP VIEW

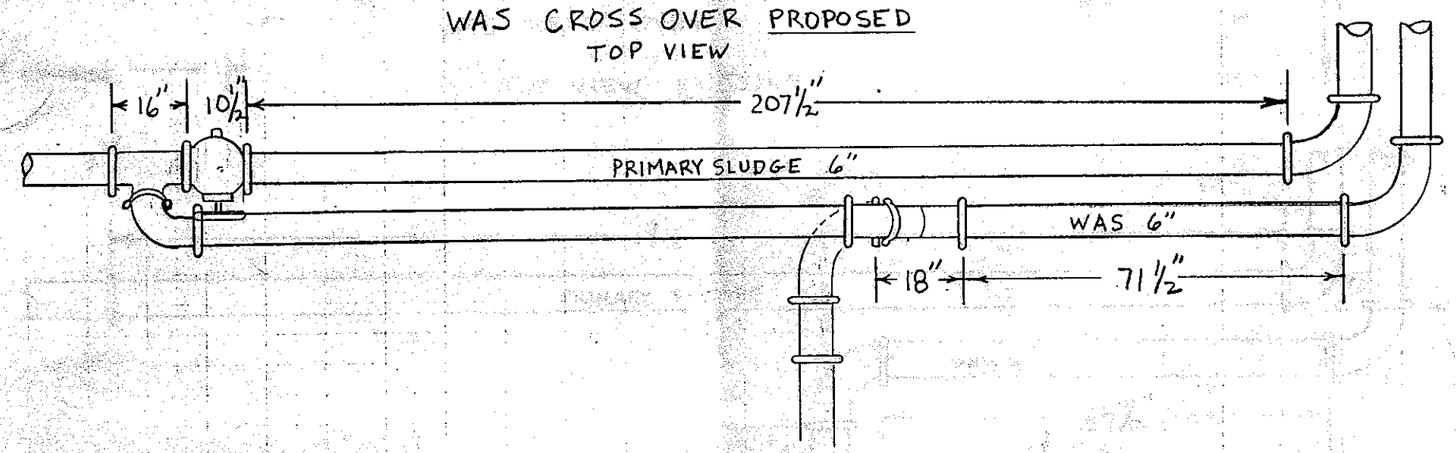

SIDE VIEW

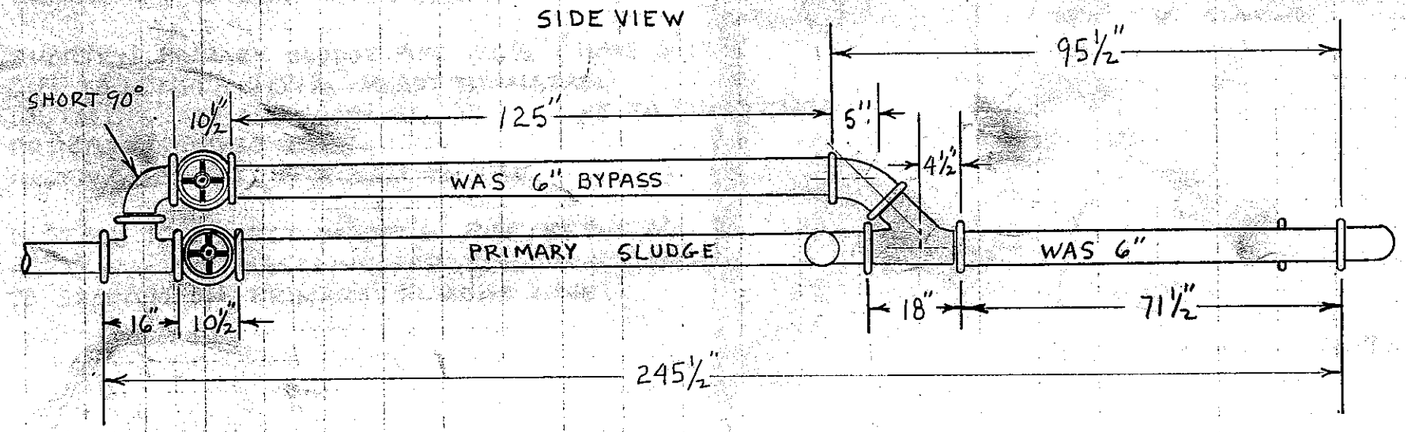

MICK C. 12-11-97

DATE: 10-8-90
DRAWN BY: BBL DESIGNED BY: LMK
DGN NAME: H:/PROJ2/BELLINGH/BL520SLA.DGN

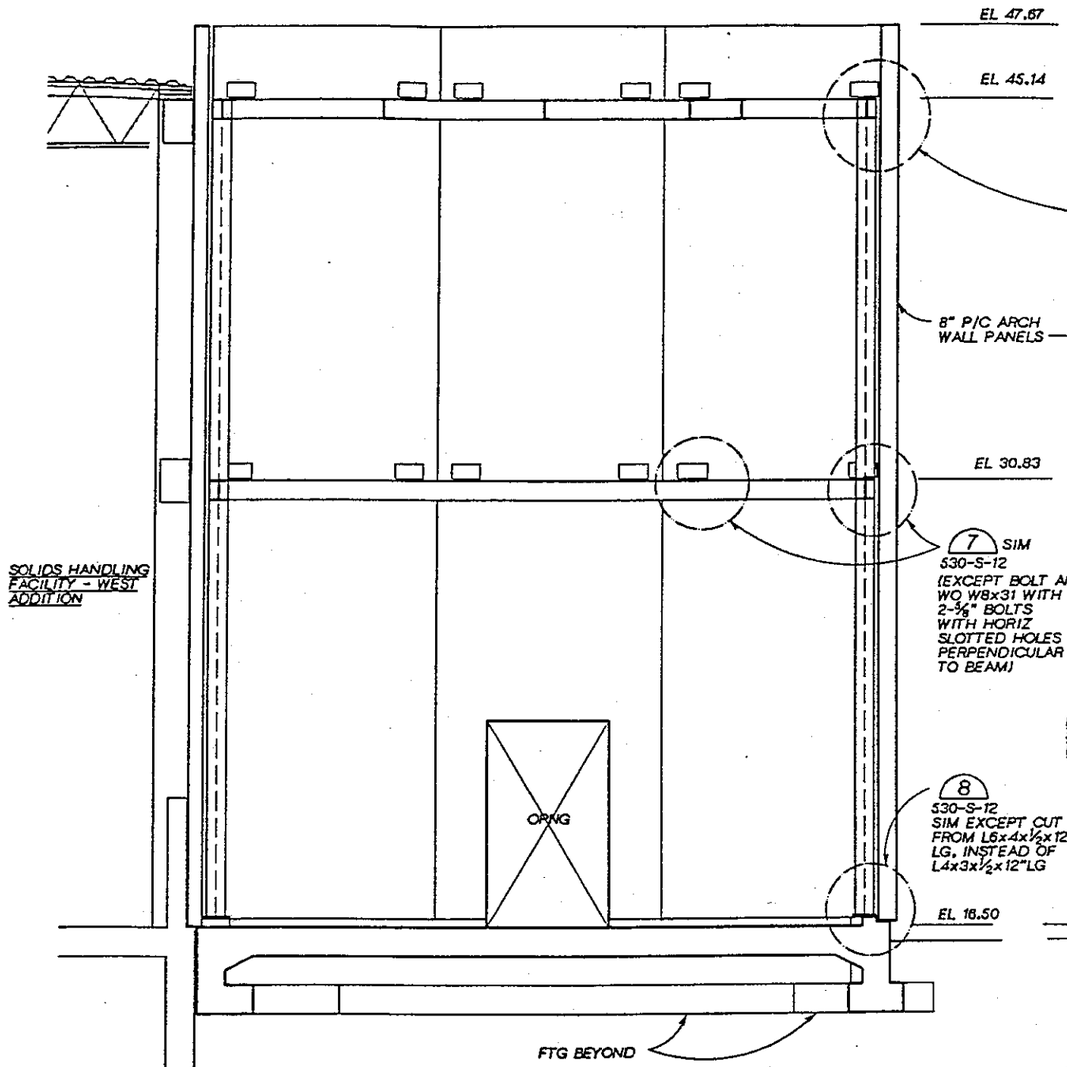

SECTION A
3/8" = 1'-0" S20-S-11

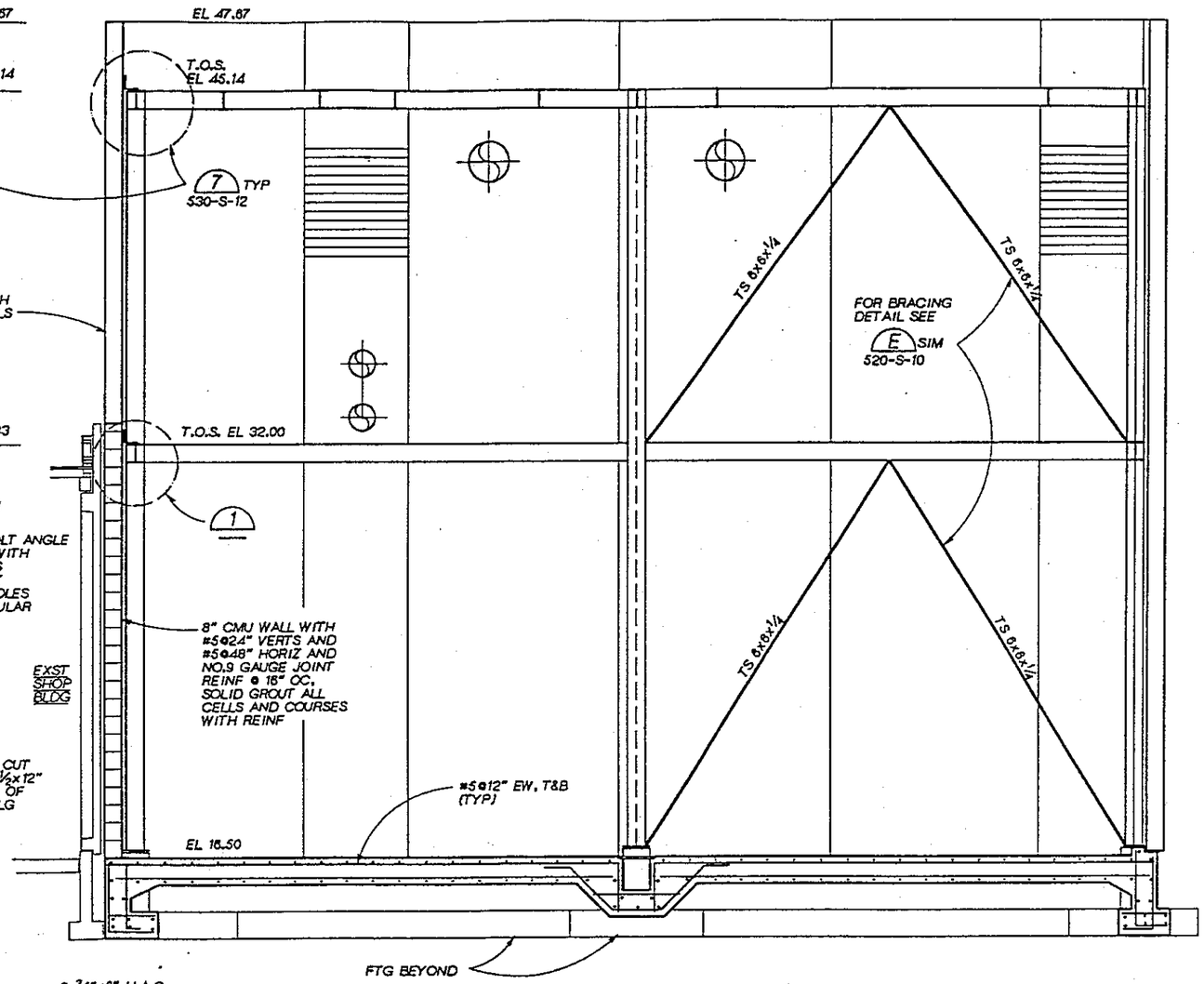

SECTION B
3/8" = 1'-0" S20-S-11

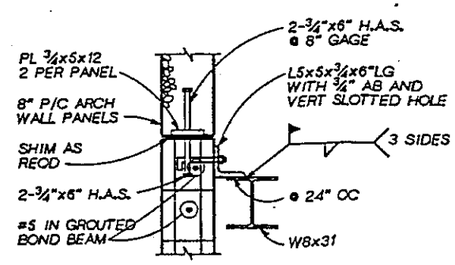

DETAIL 1
1" = 1'-0"

DSGN L. KORBUS					
DR B. LAZARO					
CHK W. BENNETT					
APVD J. GAUTHIER	NO.	DATE	REVISION	BY	APVD

CH2M HILL

REUSE OF DOCUMENTS
THIS DOCUMENT, AND THE IDEAS AND DESIGNS INCORPORATED HEREIN, AS AN INSTRUMENT OF PROFESSIONAL SERVICE, IS THE PROPERTY OF CH2M HILL AND IS NOT TO BE USED, IN WHOLE OR IN PART, FOR ANY OTHER PROJECT WITHOUT THE WRITTEN AUTHORIZATION OF CH2M HILL.
©CH2M HILL

BAR IS ONE INCH ON ORIGINAL DRAWING. 0 1" IF NOT ONE INCH ON THIS SHEET, ADJUST SCALES ACCORDINGLY.

CITY OF BELLINGHAM, WASHINGTON
POST POINT WASTEWATER TREATMENT PLANT UPGRADE

SOLIDS HANDLING FACILITY - WEST ADDITION
STRUCTURAL
ESP SCREEN WALL SECTIONS

DWG NO. 520-S-12
DATE AUG. 1990
PROJ. NO. SEA22462.C1

DRAWN BY: M. MOORE DESIGNED BY: J. WODRICH
DGN NAME: H:/PROJ2/BELLINGH/BL520M-A.DGN

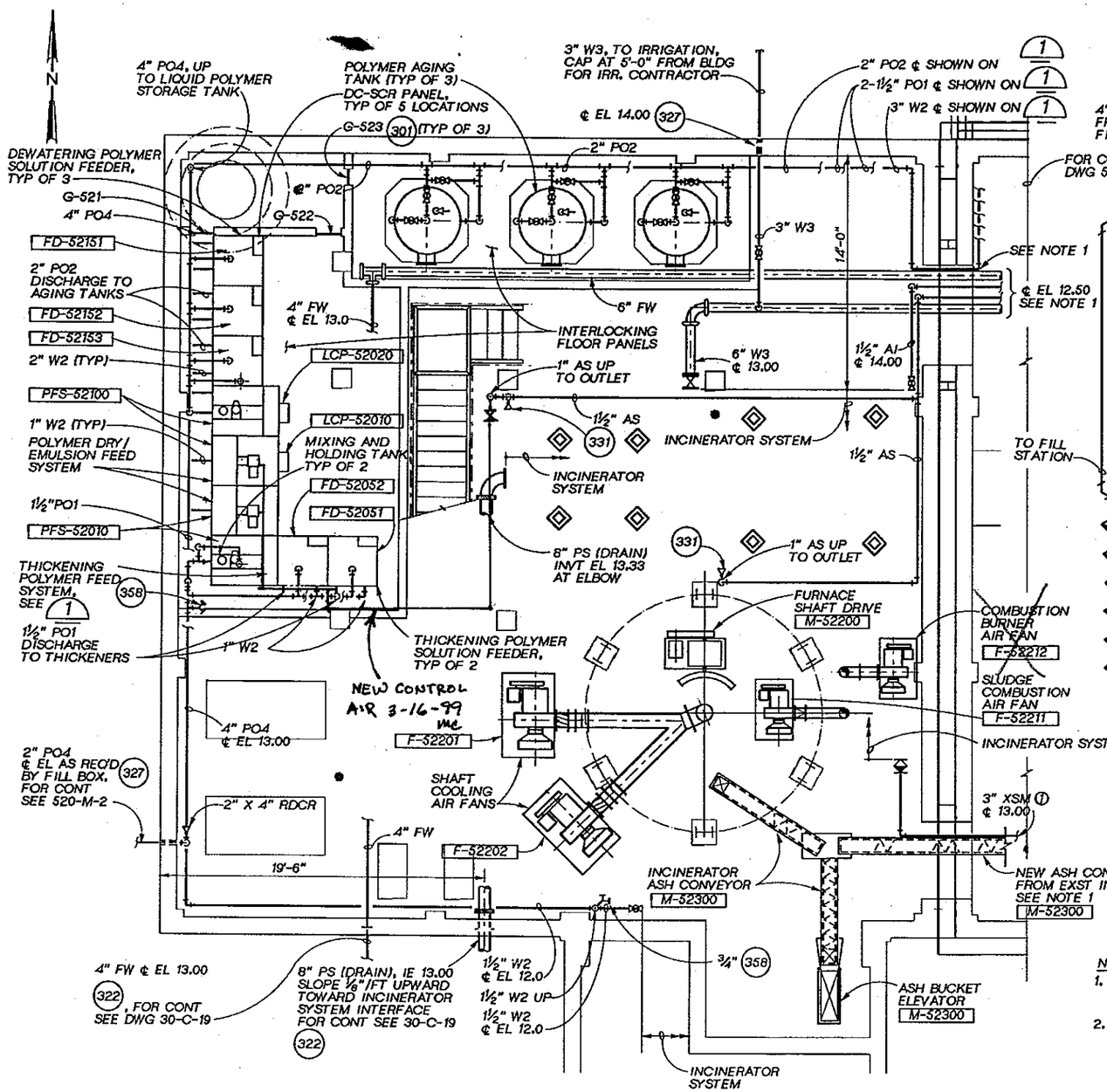

PLAN AT FLOOR EL 5.00
¼"=1'-0"

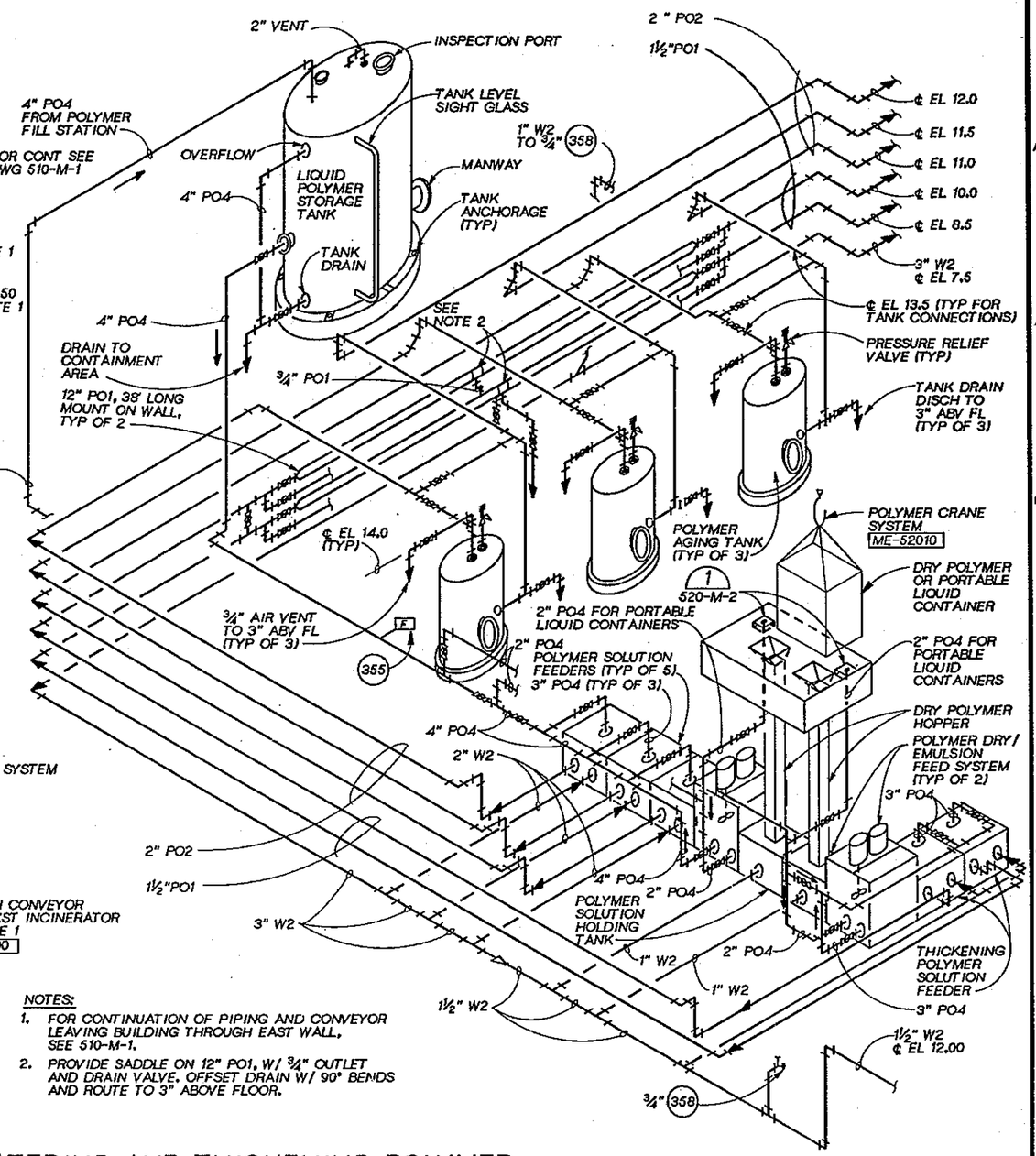

NOTES:

1. FOR CONTINUATION OF PIPING AND CONVEYOR LEAVING BUILDING THROUGH EAST WALL, SEE 510-M-1.
2. PROVIDE SADDLE ON 12" PO1, W/ ¾" OUTLET AND DRAIN VALVE. OFFSET DRAIN W/ 90° BENDS AND ROUTE TO 3" ABOVE FLOOR.

DEWATERING AND THICKENING POLYMER PIPING FEED SYSTEM ISOMETRIC (1) 520-M-2
NTS

JOSEPH A. GAUTHIER, STATE OF WASHINGTON, REGISTERED PROFESSIONAL ENGINEER

CH2M HILL

DSGN	T. BAUER, J. WODRICH
DR	J. MERILL
CHK	R. NAEF
APVD	J. GAUTHIER

NO.	DATE	REVISION	BY	APVD

REUSE OF DOCUMENTS
THIS DOCUMENT, AND THE IDEAS AND DESIGNS INCORPORATED HEREIN, AS AN INSTRUMENT OF PROFESSIONAL SERVICE, IS THE PROPERTY OF CH2M HILL AND IS NOT TO BE USED, IN WHOLE OR IN PART, FOR ANY OTHER PROJECT WITHOUT THE WRITTEN AUTHORIZATION OF CH2M HILL.
©CH2M HILL

VERIFY SCALE
BAR IS ONE INCH ON ORIGINAL DRAWING.
0 1"
IF NOT ONE INCH ON THIS SHEET, ADJUST SCALES ACCORDINGLY.

CITY OF BELLINGHAM, WASHINGTON
POST POINT WASTEWATER TREATMENT PLANT UPGRADE

SOLIDS HANDLING FACILITY - WEST ADDITION
MECHANICAL - LOWER LEVEL & POLYMER PIPING ISOMETRIC

DWG NO. 520-M-1
DATE AUG. 1990
PROJ NO. SEA22462.C1

DGN NAME: H:/PROJ2/BELLINGH/BL520M-B.DGN

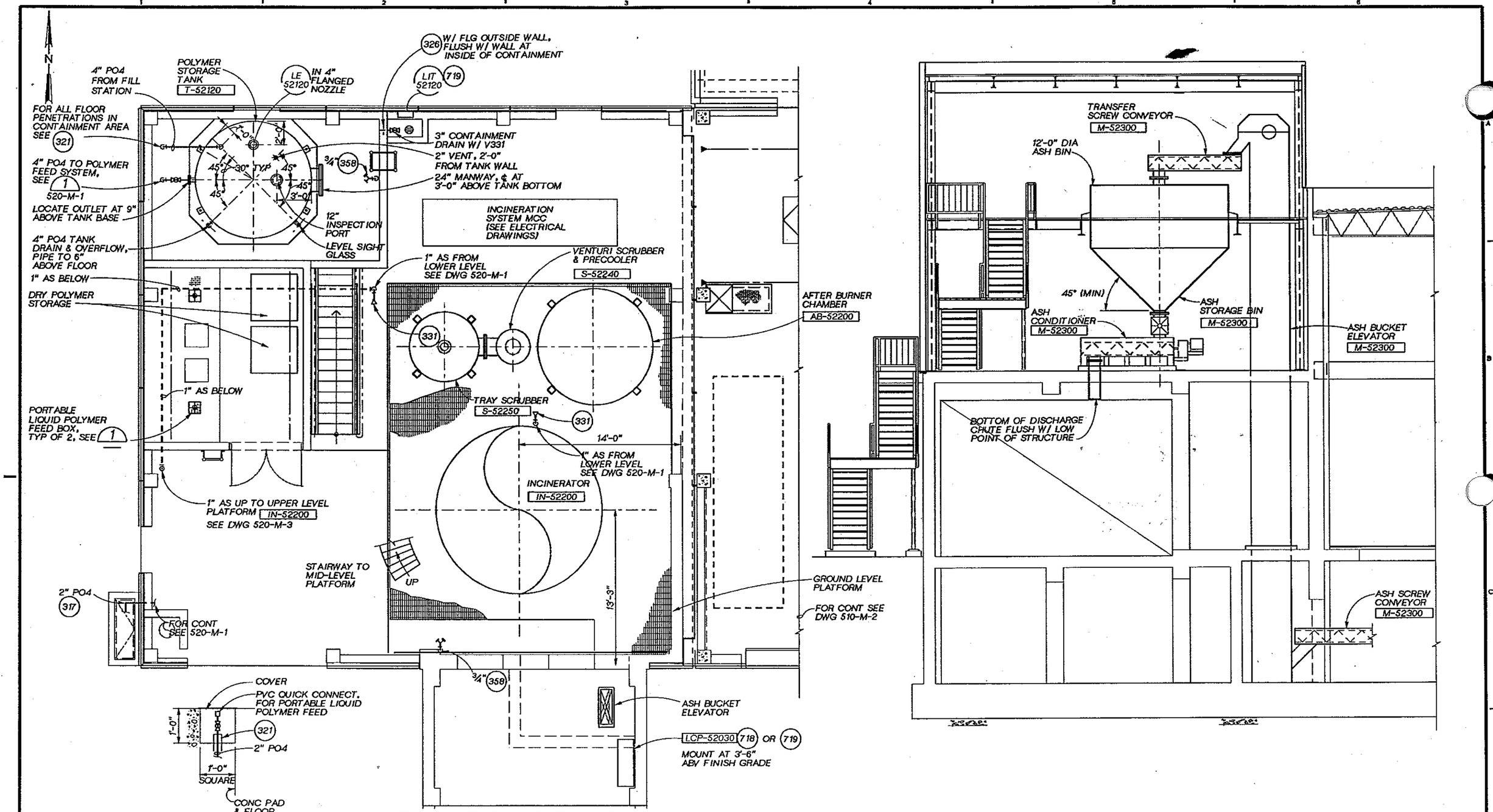

DETAIL 1
NTS
520-M-1
520-S-2

PLAN AT FLOOR EL 16.50
1/4"=1'-0"

SECTION A
1/4"=1'-0"
520-M-3

JOSEPH A. GAUTHIER STATE OF WASHINGTON REGISTERED PROFESSIONAL ENGINEER

CH2M HILL

DSGN	T BAUER J WODRICH					
DR	A. MCRILL					
CHK	R. NAEF					
APVD	J. GAUTHIER	NO.	DATE	REVISION	BY	APVD

REUSE OF DOCUMENTS
THIS DOCUMENT, AND THE IDEAS AND DESIGNS INCORPORATED HEREIN, AS AN INSTRUMENT OF PROFESSIONAL SERVICE, IS THE PROPERTY OF CH2M HILL AND IS NOT TO BE USED, IN WHOLE OR IN PART, FOR ANY OTHER PROJECT WITHOUT THE WRITTEN AUTHORIZATION OF CH2M HILL.
©CH2M HILL

VERIFY SCALE
BAR IS ONE INCH ON ORIGINAL DRAWING.
0 1"
IF NOT ONE INCH ON THIS SHEET, ADJUST SCALES ACCORDINGLY.

CITY OF BELLINGHAM, WASHINGTON
POST POINT WASTEWATER TREATMENT PLANT UPGRADE

SOLIDS HANDLING FACILITY - WEST ADDITION
MECHANICAL
GROUND LEVEL PLAN AND SECTION

DWG NO. 520-M-2
DATE AUG. 1990
PROJ NO. SEA22462.C1

OVERLAY IDENTIFICATION: COMPOSITE, OVERLAY, SCREEN; PROJID; FILE

DATE: 8-26-90
DRAWN BY: M. MOORE DESIGNED BY: J. WODRICH
DGN NAME: H:/PROJ2/BELLINGH/BL620M-C.DGN

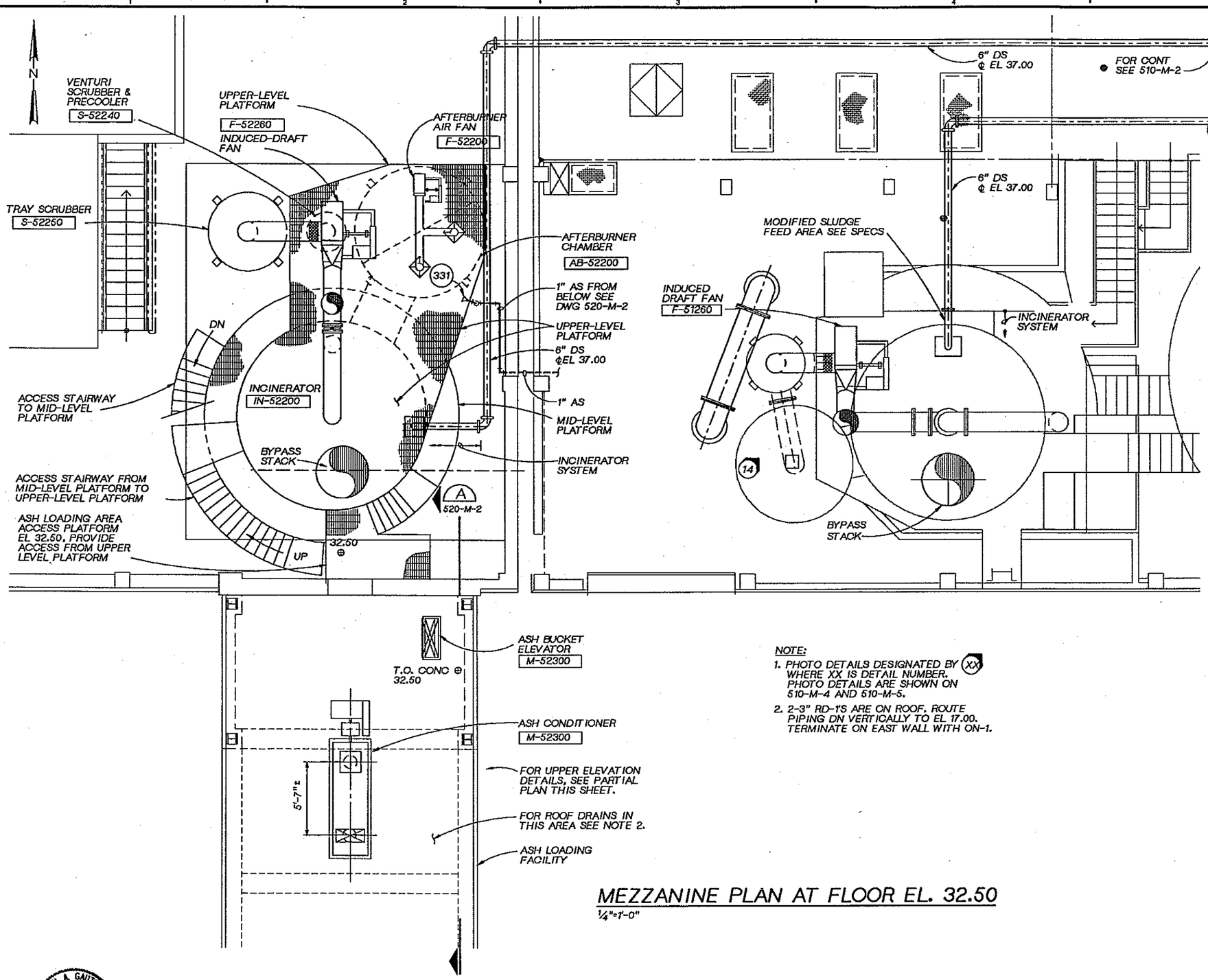

NOTE:
1. PHOTO DETAILS DESIGNATED BY (XX) WHERE XX IS DETAIL NUMBER. PHOTO DETAILS ARE SHOWN ON 510-M-4 AND 510-M-5.
2. 2-3" RD-1'S ARE ON ROOF. ROUTE PIPING DN VERTICALLY TO EL 17.00. TERMINATE ON EAST WALL WITH ON-1.

MEZZANINE PLAN AT FLOOR EL. 32.50

1/4"=1'-0"

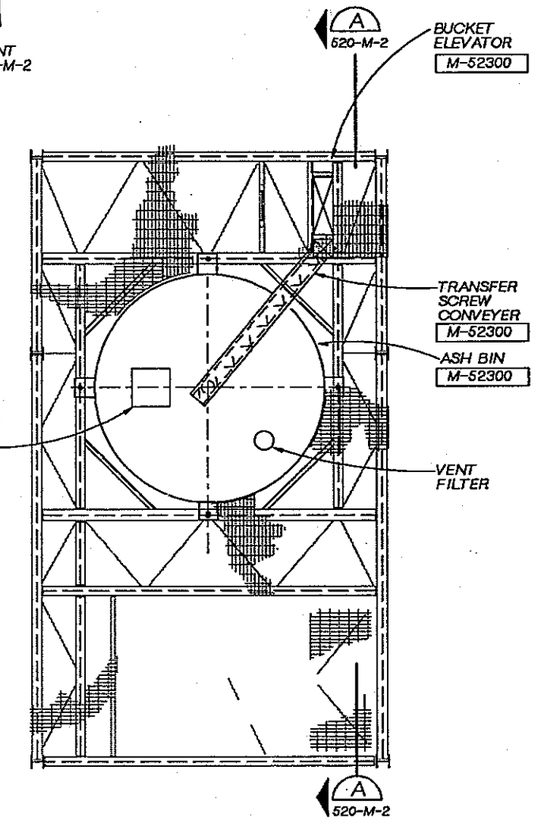

ASH LOADING FACILITY

PARTIAL PLAN @ EL 45.50

1/4"=1'-0"

DSGN	T. BAUER, J. WODRICH				
DR	A. MCRILL				
CHK	R. NAEF				
APVD	J. GAUTHIER	NO.	DATE	REVISION	BY / APVD

CH2M HILL

REUSE OF DOCUMENTS
THIS DOCUMENT, AND THE IDEAS AND DESIGNS INCORPORATED HEREIN, AS AN INSTRUMENT OF PROFESSIONAL SERVICE, IS THE PROPERTY OF CH2M HILL AND IS NOT TO BE USED, IN WHOLE OR IN PART, FOR ANY OTHER PROJECT WITHOUT THE WRITTEN AUTHORIZATION OF CH2M HILL.
©CH2M HILL

BAR IS ONE INCH ON ORIGINAL DRAWING. 0 1"
IF NOT ONE INCH ON THIS SHEET, ADJUST SCALES ACCORDINGLY.

CITY OF BELLINGHAM, WASHINGTON
POST POINT WASTEWATER TREATMENT PLANT UPGRADE

SOLIDS HANDLING FACILITY - WEST ADDITION
MECHANICAL
MEZZANINE PLAN & PARTIAL PLAN

DWG NO. 520-M-3
DATE AUG. 1990
PROJ. NO. SEA22462.C1

OVERLAY IDENTIFICATION: COMPOSITE, PLAT PLAN, PROJ, FILE

DATE: 8-20-90
DRAWN BY: BBL DESIGNED BY: LMK
DGN NAME: H:/PROJ2/BELLINGH/BL520M-D.DGN

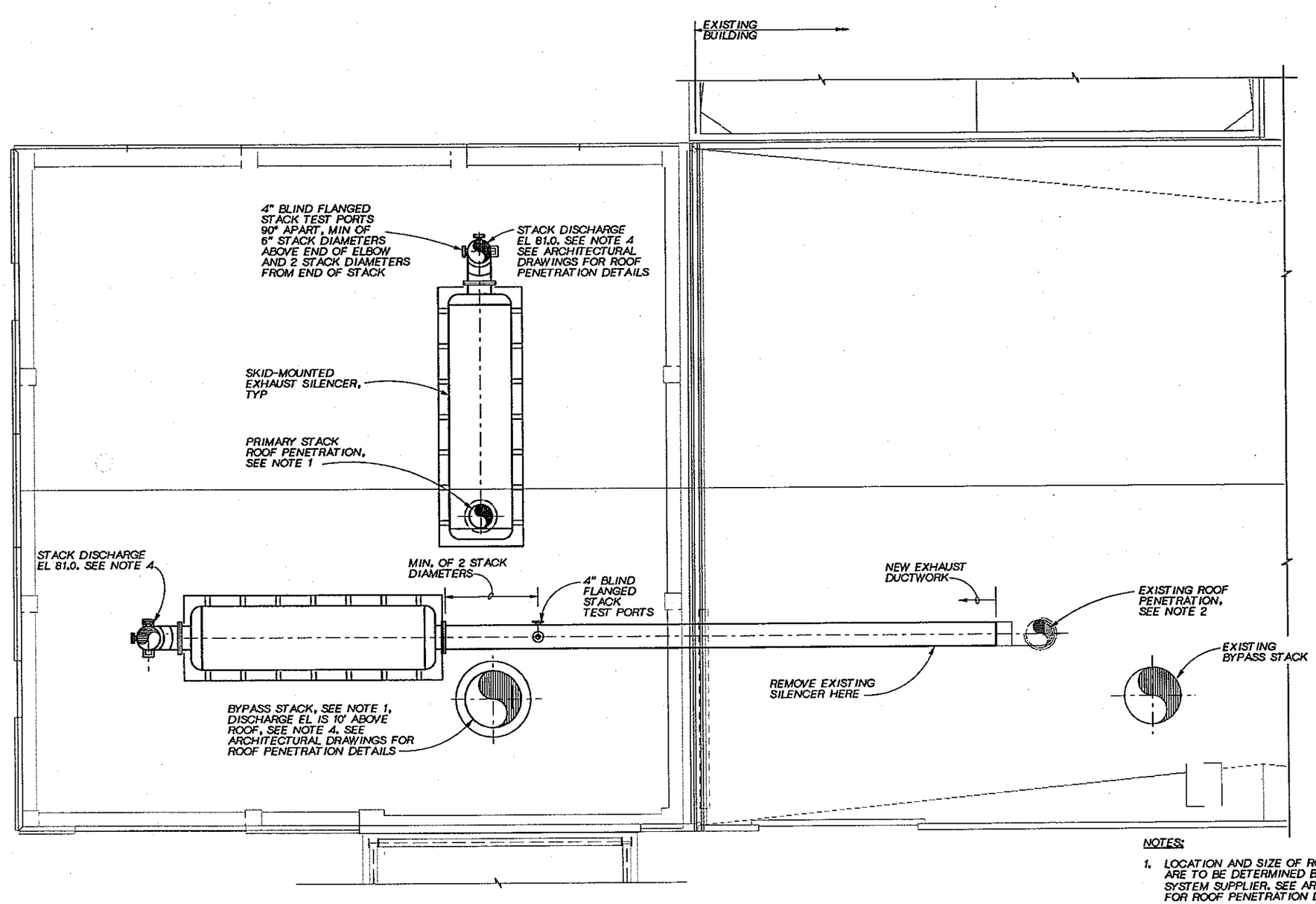

ROOF PLAN

1/4" = 1'-0"

NOTES:

1. LOCATION AND SIZE OF ROOF PENETRATIONS ARE TO BE DETERMINED BY THE INCINERATION SYSTEM SUPPLIER. SEE ARCHITECTURAL DRAWINGS FOR ROOF PENETRATION DETAILS.
2. USE EXISTING ROOF PENETRATION IF POSSIBLE. IF IMPOSSIBLE, CAP AND SEAL EXISTING PENETRATION AND COORDINATE LOCATION OF
3. PROVIDE STACK CAPS OF SAME MATERIAL AS STACK.
4. STACK HEIGHT MAY CHANGE SUBJECT TO AIR PERMIT REQUIREMENTS.

JOSEPH A. GAUTHIER, STATE OF WASHINGTON, REGISTERED PROFESSIONAL ENGINEER

CH2M HILL

DSGN	T BAUER
DR	KL MCCOY
CHK	R. NAEF
APVD	J GAUTHIER

NO.	DATE	REVISION	BY	APVD

REUSE OF DOCUMENTS
THIS DOCUMENT, AND THE IDEAS AND DESIGNS INCORPORATED HEREIN, AS AN INSTRUMENT OF PROFESSIONAL SERVICE, IS THE PROPERTY OF CH2M HILL AND IS NOT TO BE USED, IN WHOLE OR IN PART, FOR ANY OTHER PROJECT WITHOUT THE WRITTEN AUTHORIZATION OF CH2M HILL.
©CH2M HILL

VERIFY SCALE
BAR IS ONE INCH ON ORIGINAL DRAWING.
0 1"
IF NOT ONE INCH ON THIS SHEET, ADJUST SCALES ACCORDINGLY.

CITY OF BELLINGHAM, WASHINGTON
POST POINT WASTEWATER TREATMENT PLANT UPGRADE

SOLIDS HANDLING FACILITY -- WEST ADDITION
MECHANICAL
ROOF PLAN

DWG NO. 520-M-4
DATE AUG. 1990
PROJ. NO. SEA22462.C1

DRAWN BY: B. CARR DESIGNED BY: SD GUNDY/G FLOOD
DGN NAME: H:/PROJ2/BELLINGH/BL520H-A.DGN

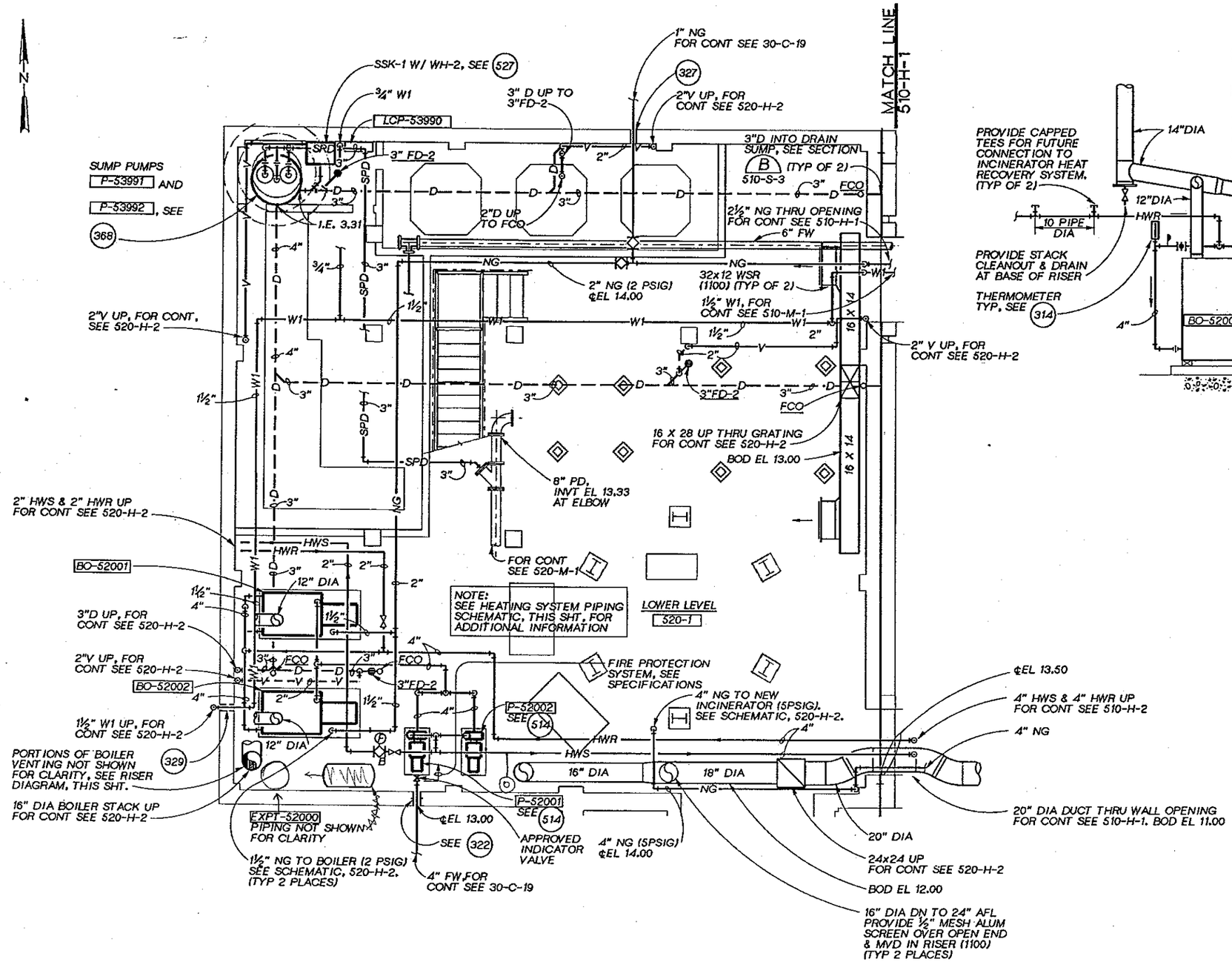

LOWER LEVEL PLAN AT EL 5.00

1/4" = 1'-0"

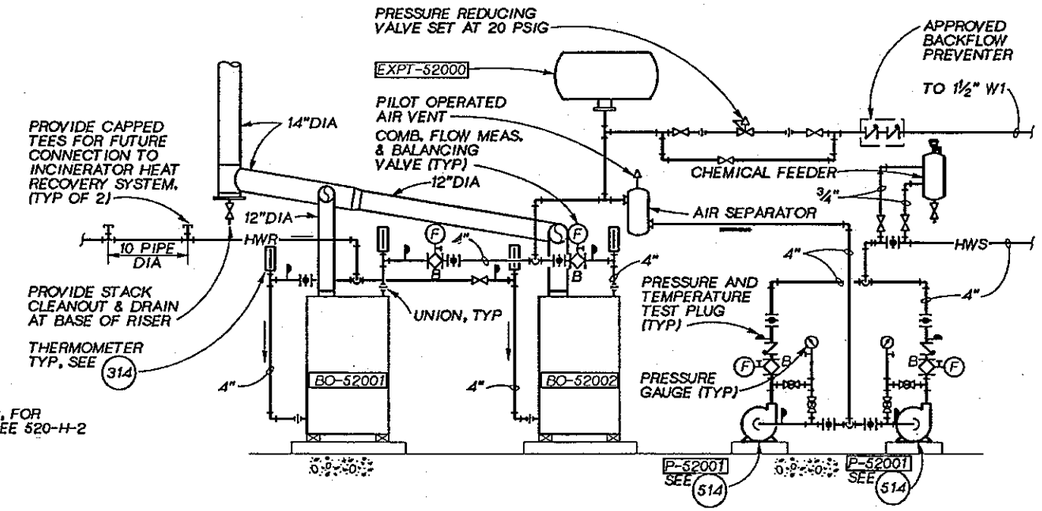

HEATING SYSTEM PIPING SCHEMATIC

NTS

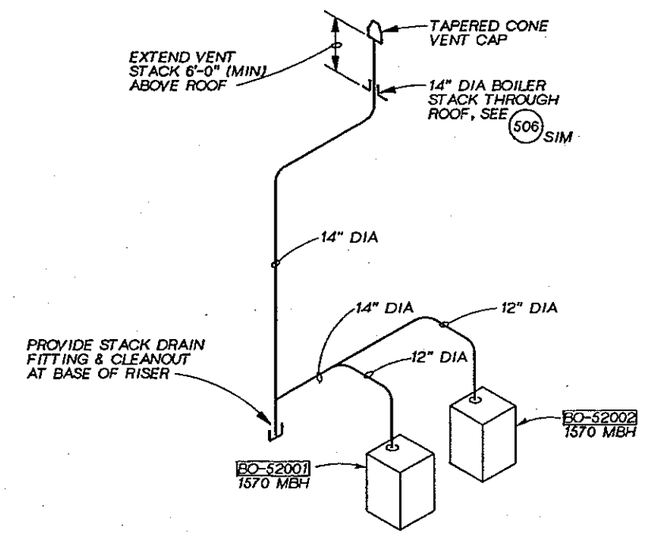

BOILER GAS VENT RISER DIAGRAM

NTS

DSGN	G.FLOOD					
DR	S.D.GUNDY					
CHK	J. SIEMENS					
APVD	J. GAUTHIER	NO.	DATE	REVISION	BY	APVD

CH2M HILL

REUSE OF DOCUMENTS
THIS DOCUMENT, AND THE IDEAS AND DESIGNS INCORPORATED HEREIN, AS AN INSTRUMENT OF PROFESSIONAL SERVICE, IS THE PROPERTY OF CH2M HILL AND IS NOT TO BE USED, IN WHOLE OR IN PART, FOR ANY OTHER PROJECT WITHOUT THE WRITTEN AUTHORIZATION OF CH2M HILL.
©CH2M HILL

VERIFY SCALE
BAR IS ONE INCH ON ORIGINAL DRAWING.
0 1"
IF NOT ONE INCH ON THIS SHEET, ADJUST SCALES ACCORDINGLY.

CITY OF BELLINGHAM, WASHINGTON
POST POINT WASTEWATER TREATMENT PLANT UPGRADE

SOLIDS HANDLING FACILITY - WEST ADDITION
HVAC AND PLUMBING
LOWER LEVEL PLAN

DWG NO. 520-H-1
DATE AUG. 1990
PROJ. NO. SEA22462.C1

DATE: 8/27/90
DRAWN BY: B. CARR DESIGNED BY: SD GUNDY/G FLOOD
DGN NAME: H:/PROJ2/BELLINGH/BL520H-B.DGN

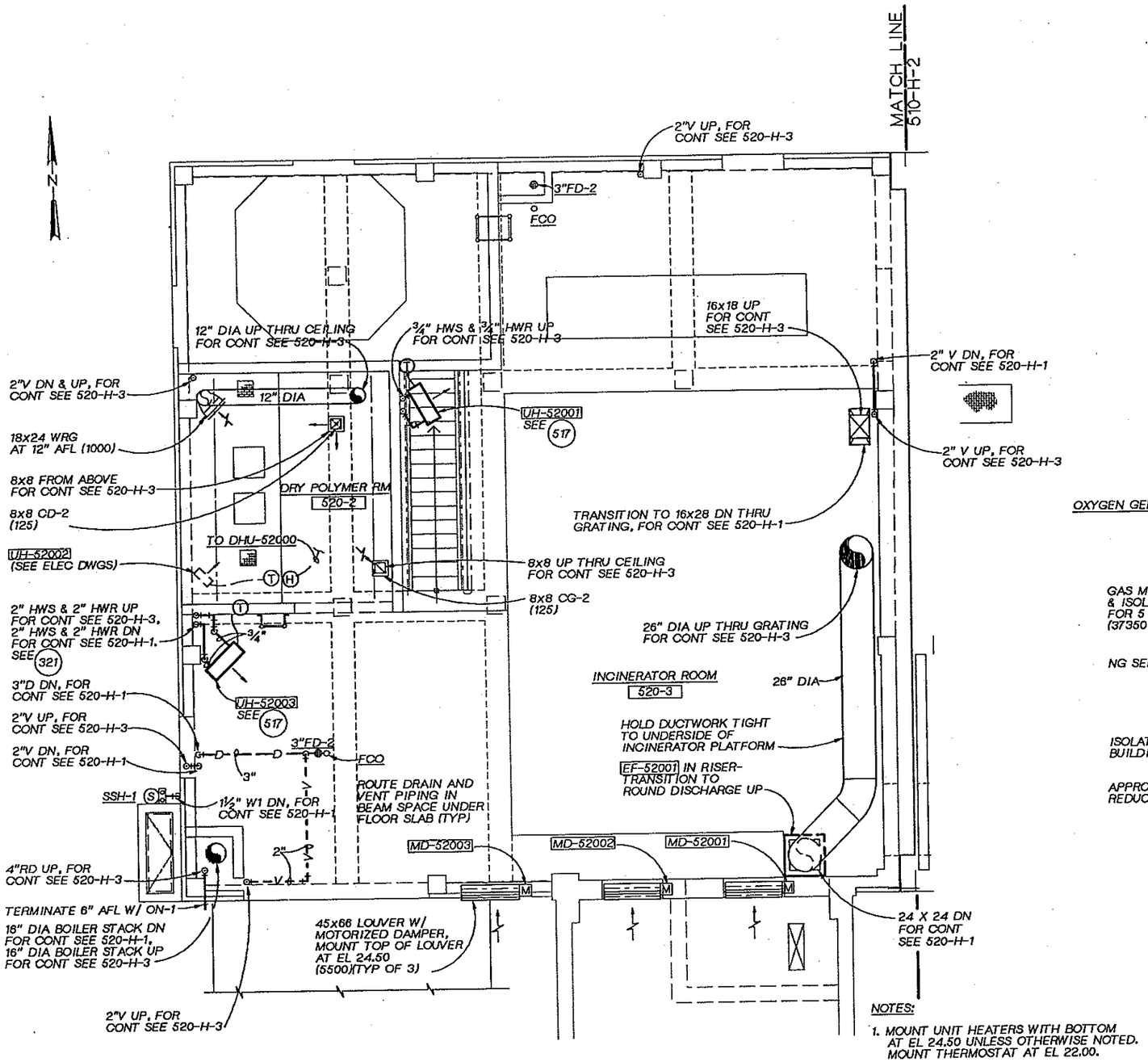

NOTES:

1. MOUNT UNIT HEATERS WITH BOTTOM AT EL 24.50 UNLESS OTHERWISE NOTED. MOUNT THERMOSTAT AT EL 22.00.

GROUND LEVEL PLAN AT EL 16.50

1/4"=1'-0"

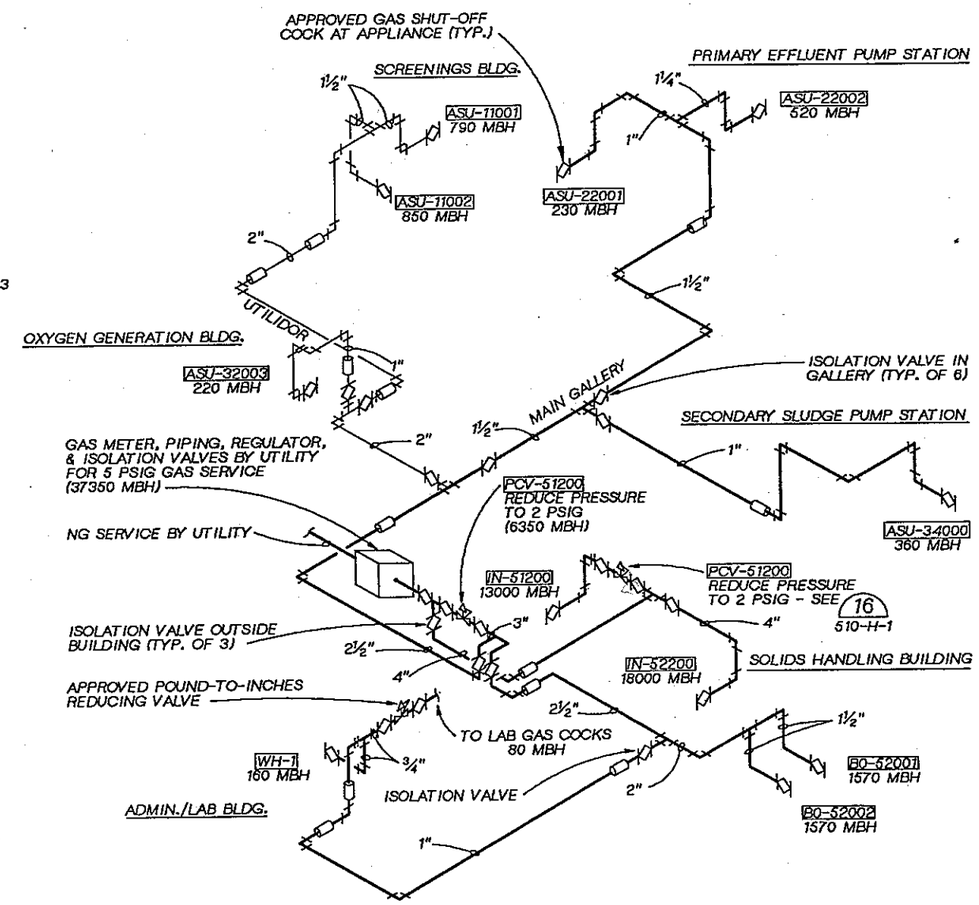

NATURAL GAS SYSTEM PIPING SCHEMATIC

NTS

JOSEPH A. GAUTHIER — STATE OF WASHINGTON — REGISTERED PROFESSIONAL ENGINEER

CH2M HILL

DSGN	G.FLOOD					
DR	S.D.GUNDY					
CHK	J SIEMENS					
APVD	J. GAUTHIER	NO.	DATE	REVISION	BY	APVD

REUSE OF DOCUMENTS
THIS DOCUMENT, AND THE IDEAS AND DESIGNS INCORPORATED HEREIN, AS AN INSTRUMENT OF PROFESSIONAL SERVICE, IS THE PROPERTY OF CH2M HILL AND IS NOT TO BE USED, IN WHOLE OR IN PART, FOR ANY OTHER PROJECT WITHOUT THE WRITTEN AUTHORIZATION OF CH2M HILL.
©CH2M HILL

BAR IS ONE INCH ON ORIGINAL DRAWING. 0 1"
IF NOT ONE INCH ON THIS SHEET, ADJUST SCALES ACCORDINGLY.

CITY OF BELLINGHAM, WASHINGTON
POST POINT WASTEWATER TREATMENT PLANT UPGRADE

SOLIDS HANDLING FACILITY - WEST ADDITION
HVAC AND PLUMBING
GROUND LEVEL PLAN

DWG NO. 620-H-2
DATE AUG. 1990
PROJ NO. SEA22462.C1

DATE: 8/24/90
DRAWN BY: B. CARR DESIGNED BY: SD GUNDY/G FLOOD
DGN NAME: H:/PROJ2/BELLINGH/BL520H-C.DGN

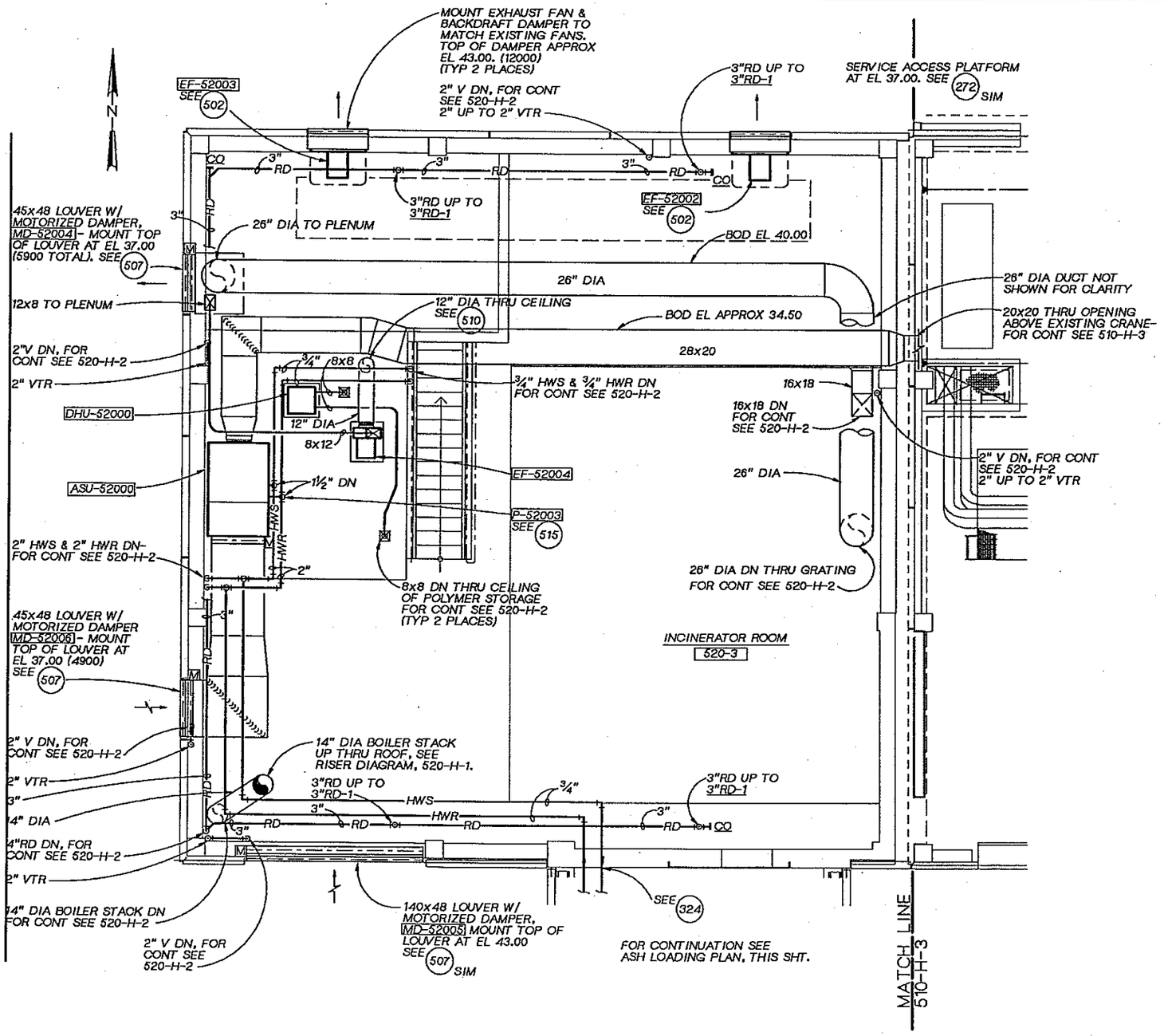

PLAN AT EL 29.00

1/4" = 1'-0"

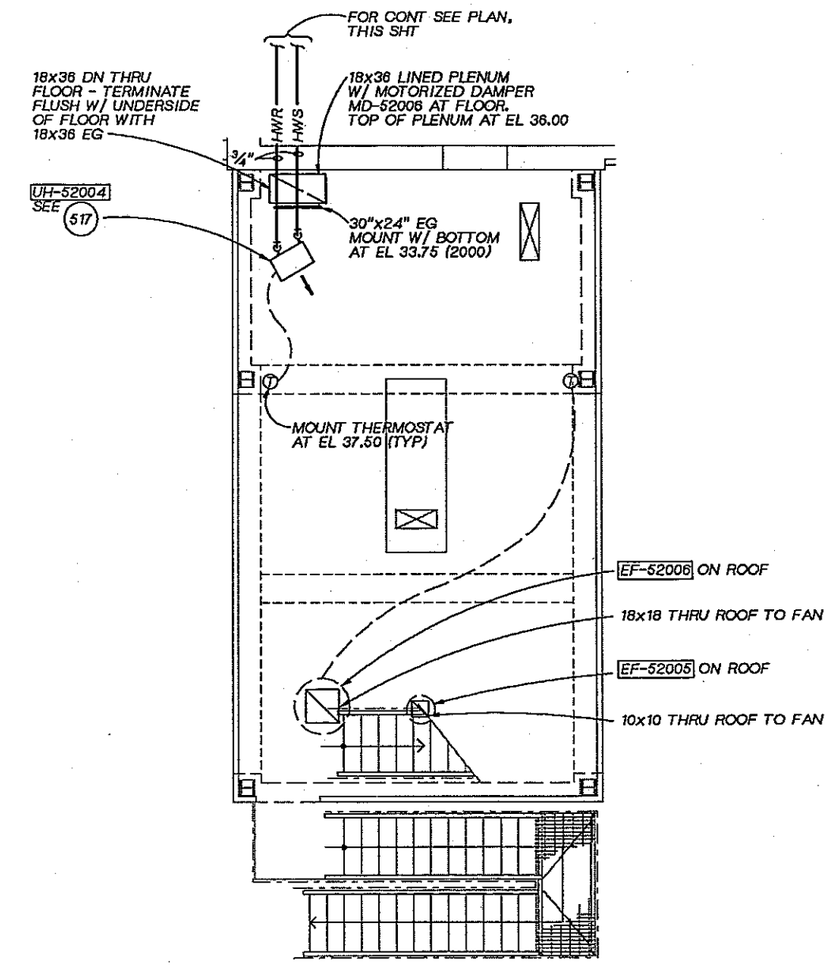

ASH LOADING PLAN

1/4"=1'-0"

JOSEPH A. GAUTHIER STATE OF WASHINGTON REGISTERED PROFESSIONAL ENGINEER

CH2M HILL

DSGN	G.FLOOD
DR	S.D.GUNDY
CHK	J.A.SIEMENS
APVD	J GAUTHIER

NO.	DATE	REVISION	BY	APVD

REUSE OF DOCUMENTS
THIS DOCUMENT, AND THE IDEAS AND DESIGNS INCORPORATED HEREIN, AS AN INSTRUMENT OF PROFESSIONAL SERVICE, IS THE PROPERTY OF CH2M HILL AND IS NOT TO BE USED, IN WHOLE OR IN PART, FOR ANY OTHER PROJECT WITHOUT THE WRITTEN AUTHORIZATION OF CH2M HILL.
©CH2M HILL

BAR IS ONE INCH ON ORIGINAL DRAWING. 0 1"
IF NOT ONE INCH ON THIS SHEET, ADJUST SCALES ACCORDINGLY.

CITY OF BELLINGHAM, WASHINGTON
POST POINT WASTEWATER TREATMENT PLANT UPGRADE

SOLIDS HANDLING FACILITY - WEST ADDITION
HVAC AND PLUMBING
ELEVATION 25.0 PLAN

DWG NO. 520-H-3
DATE AUG. 1990
PROJ. NO. SEA22462.C1

OVERLAY IDENTIFICATION | COMPOSITE | PROJ | FILE

DRAWN BY: HG / DBL DESIGNED BY: M. ANDERSON
DGN NAME: H:/PROJ2/BELLINGH/BL530S-A.DGN

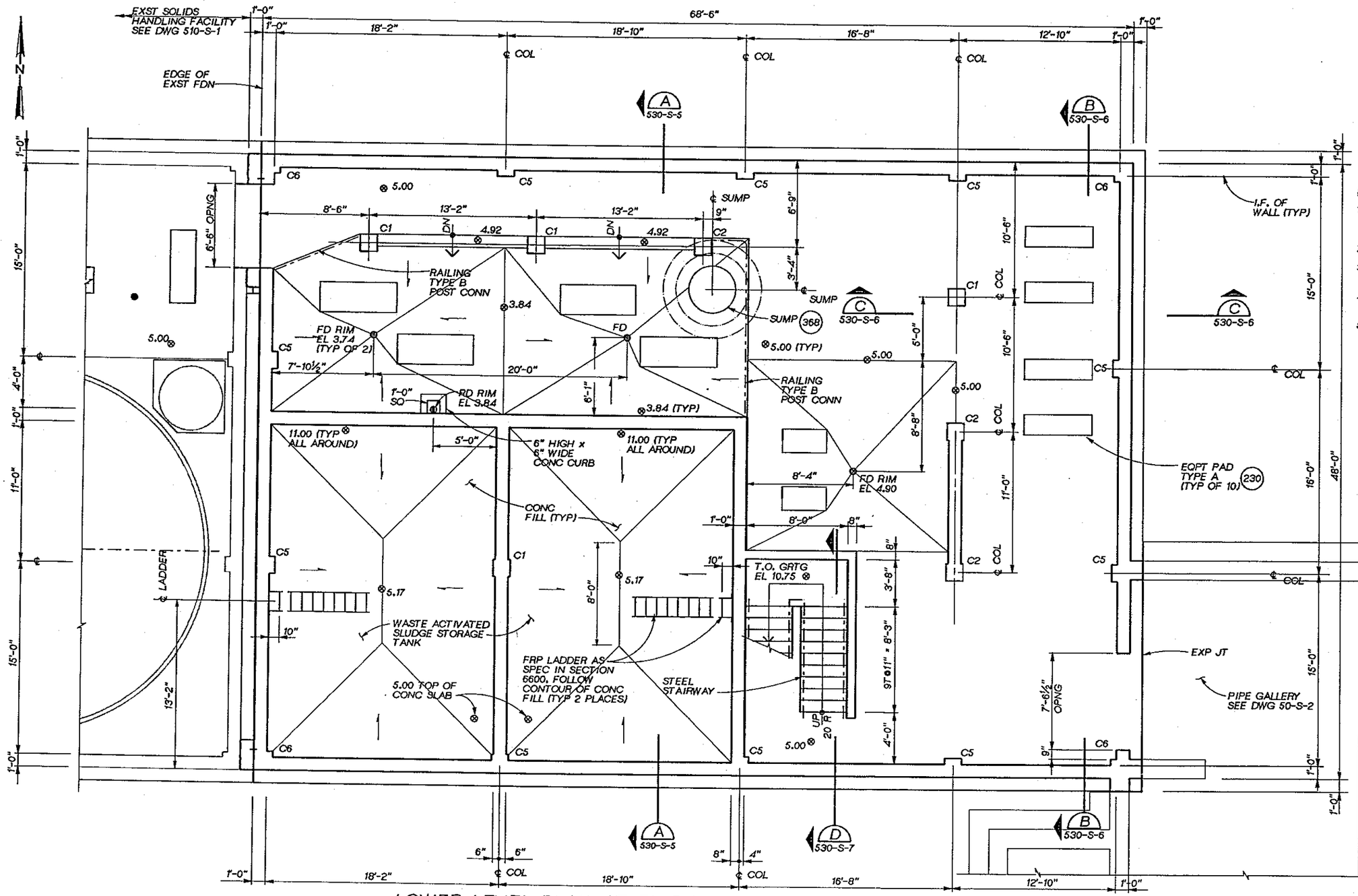

LOWER LEVEL PLAN AT EL 5.00

¼" = 1'-0"

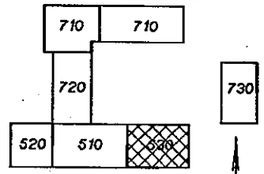

KEY PLAN

NOTES:

1. FOR GENERAL STRUCTURAL NOTES SEE (201)
2. FOR CORNER REINF SEE (202) (TYP).
3. FOR OPENING REINF SEE (204) (TYP).
4. FOR COLUMN SCHEDULE SEE DWG 530-S-9.
5. FOR RAILING DETAILS SEE (244)

DSGN	M. ANDERSON
DR	R. FRIBERG
CHK	W. BENNETT
APVD	J GAUTHIER

CH2M HILL

NO.	DATE	REVISION	BY	APVD

REUSE OF DOCUMENTS
THIS DOCUMENT, AND THE IDEAS AND DESIGNS INCORPORATED HEREIN, AS AN INSTRUMENT OF PROFESSIONAL SERVICE, IS THE PROPERTY OF CH2M HILL AND IS NOT TO BE USED, IN WHOLE OR IN PART, FOR ANY OTHER PROJECT WITHOUT THE WRITTEN AUTHORIZATION OF CH2M HILL.
©CH2M HILL

VERIFY SCALE
BAR IS ONE INCH ON ORIGINAL DRAWING.
0 1"
IF NOT ONE INCH ON THIS SHEET, ADJUST SCALES ACCORDINGLY.

CITY OF BELLINGHAM, WASHINGTON
POST POINT WASTEWATER TREATMENT PLANT UPGRADE

SOLIDS HANDLING FACILITY -- EAST ADDITION
STRUCTURAL FOUNDATION PLAN

DWG NO. 530-S-1
DATE AUG. 1990
PROJ NO. SEA22462.C1

DRAWN BY: RSF / BBL DESIGNED BY: M. ANDERSON
DGN NAME: H:/PROJ2/BELLINGH/BL530S-B.DGN

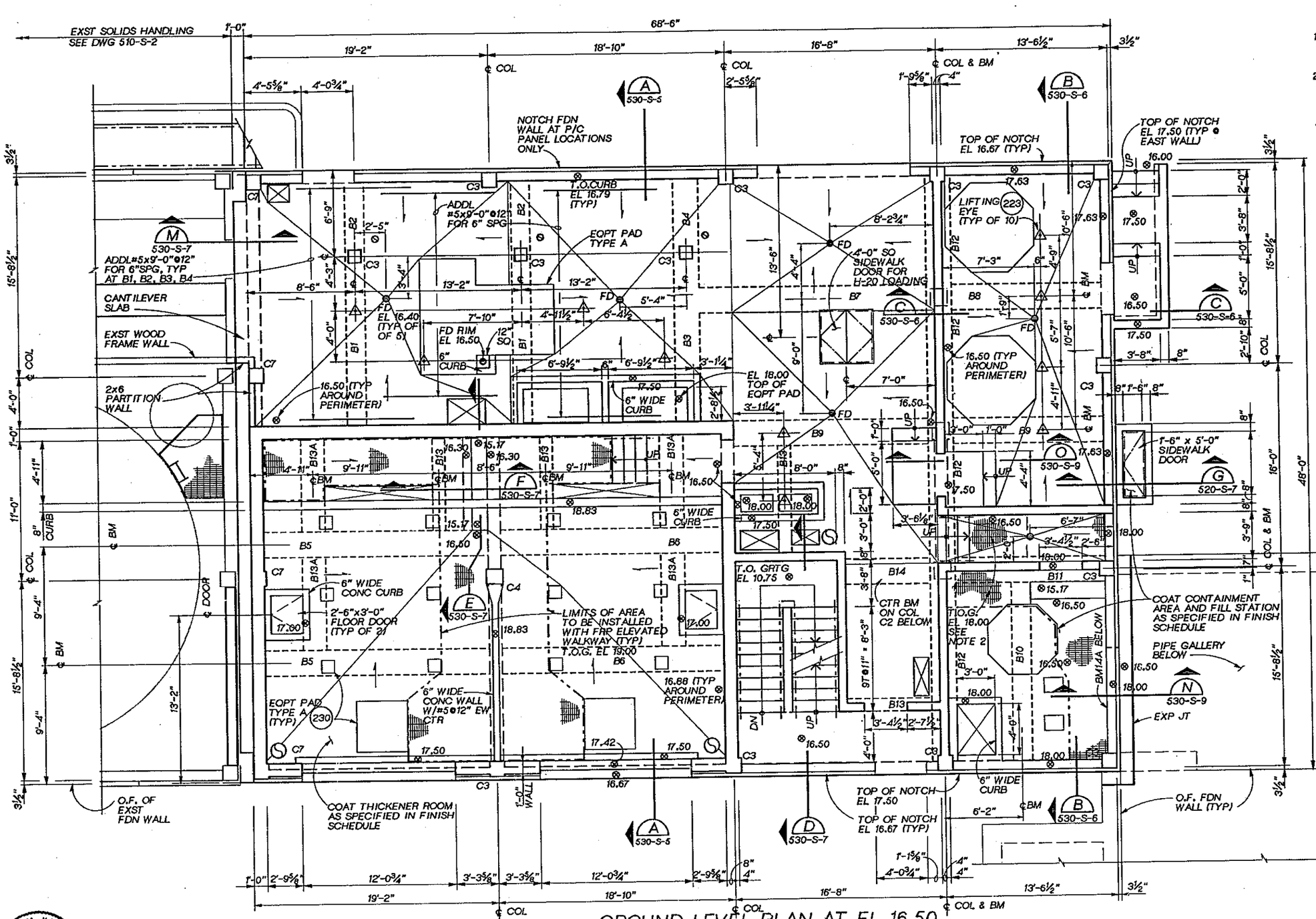

GROUND LEVEL PLAN AT EL 16.50
¼" = 1'-0"

NOTES:

1. DESIGN LOADS
   FLOOR LL = 300 PSF
   ELEVATED WALKWAY LL = 100 PSF
2. FIBERGLASS ELEVATED WALKWAY AND STAIRWAY AS SPECIFIED IN SECTION 6600.
3. PLACE TOP RST FOR EAST/WEST BEAMS OVER TOP RST FOR NORTH/SOUTH BEAMS UNLESS OTHERWISE NOTED.
4. FOR BEAM SCHEDULE SEE DWG 530-S-8.
5. FOR COLUMN SCHEDULE SEE DWG 530-S-9.
6. FOR LOCATION OF MECH & ELEC PENETRATION SEE MECH, HVAC & ELEC DWGS.

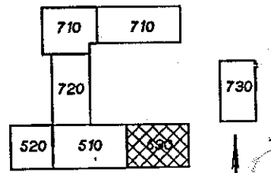

KEY PLAN

DSGN	M. ANDERSON				
DR	R. FRIBERG				
CHK	W. BENNETT				
APVD	J. GAUTHIER	NO.	DATE	REVISION	BY	APVD

CH2M HILL

REUSE OF DOCUMENTS
THIS DOCUMENT, AND THE IDEAS AND DESIGNS INCORPORATED HEREIN, AS AN INSTRUMENT OF PROFESSIONAL SERVICE, IS THE PROPERTY OF CH2M HILL AND IS NOT TO BE USED, IN WHOLE OR IN PART, FOR ANY OTHER PROJECT WITHOUT THE WRITTEN AUTHORIZATION OF CH2M HILL.
©CH2M HILL

VERIFY SCALE
BAR IS ONE INCH ON ORIGINAL DRAWING.
0 1"
IF NOT ONE INCH ON THIS SHEET, ADJUST SCALES ACCORDINGLY.

CITY OF BELLINGHAM, WASHINGTON
POST POINT WASTEWATER TREATMENT PLANT UPGRADE

SOLIDS HANDLING FACILITY -- EAST ADDITION
STRUCTURAL
GROUND LEVEL FRAMING PLAN

DWG NO. 530-S-2
DATE AUG. 1990
PROJ NO. SEA22462.C1

OVERLAY IDENTIFICATION: COMPOSITE, OVERLAY, SCREEN
PROJID
FILE

DRAWN BY: RSF / BBL DESIGNED BY: M. ANDERSON
DGN NAME: H:/PROJ2/BELLINGH/BL530S-C.DGN

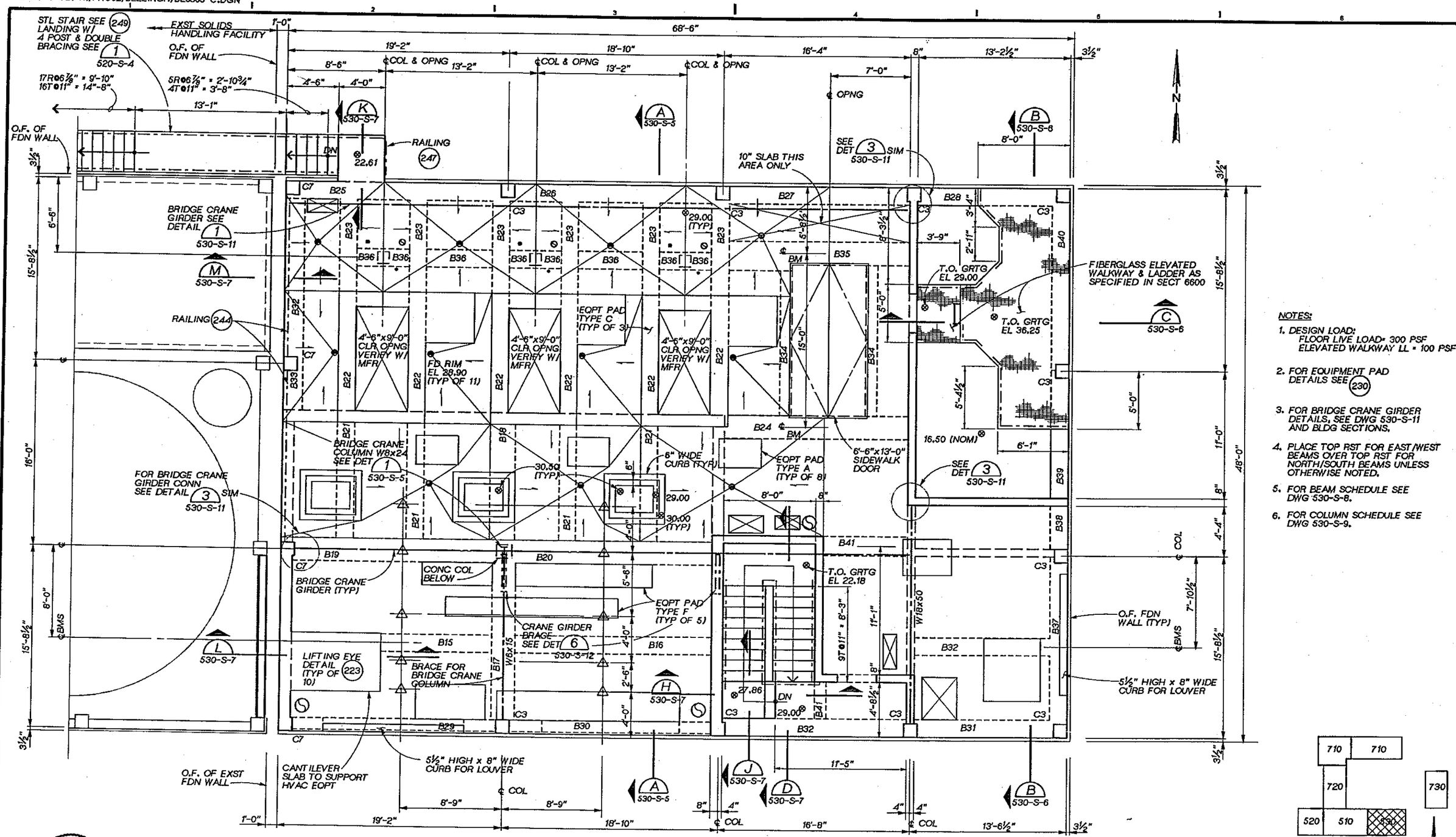

UPPER LEVEL PLAN AT EL 29.00

¼" = 1'-0"

NOTES:

1. DESIGN LOAD:
   FLOOR LIVE LOAD = 300 PSF
   ELEVATED WALKWAY LL = 100 PSF
2. FOR EQUIPMENT PAD DETAILS SEE 230
3. FOR BRIDGE CRANE GIRDER DETAILS, SEE DWG 530-S-11 AND BLDG SECTIONS.
4. PLACE TOP RST FOR EAST/WEST BEAMS OVER TOP RST FOR NORTH/SOUTH BEAMS UNLESS OTHERWISE NOTED.
5. FOR BEAM SCHEDULE SEE DWG 530-S-8.
6. FOR COLUMN SCHEDULE SEE DWG 530-S-9.

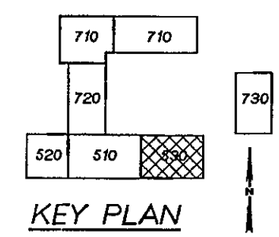

KEY PLAN

DSGN	M. ANDERSON				
DR	R. FRIBERG				
CHK	W. BENNETT				
APVD	J. GAUTHIER	NO.	DATE	REVISION	BY / APVD

CH2M HILL

REUSE OF DOCUMENTS
THIS DOCUMENT, AND THE IDEAS AND DESIGNS INCORPORATED HEREIN, AS AN INSTRUMENT OF PROFESSIONAL SERVICE, IS THE PROPERTY OF CH2M HILL AND IS NOT TO BE USED, IN WHOLE OR IN PART, FOR ANY OTHER PROJECT WITHOUT THE WRITTEN AUTHORIZATION OF CH2M HILL.
©CH2M HILL

VERIFY SCALE
BAR IS ONE INCH ON ORIGINAL DRAWING.
0 1"
IF NOT ONE INCH ON THIS SHEET, ADJUST SCALES ACCORDINGLY.

CITY OF BELLINGHAM, WASHINGTON
POST POINT WASTEWATER TREATMENT PLANT UPGRADE

SOLIDS HANDLING FACILITY -- EAST ADDITION
STRUCTURAL
UPPER LEVEL FRAMING PLAN

DWG NO. 530-S-3
DATE AUG. 1990
PROJ. NO. SEA22462.C1

DRAWN BY: BBL DESIGNED BY: M. ANDERSON
DGN NAME: H:/PROJ2/BELLINGH/BL530S-D.DGN

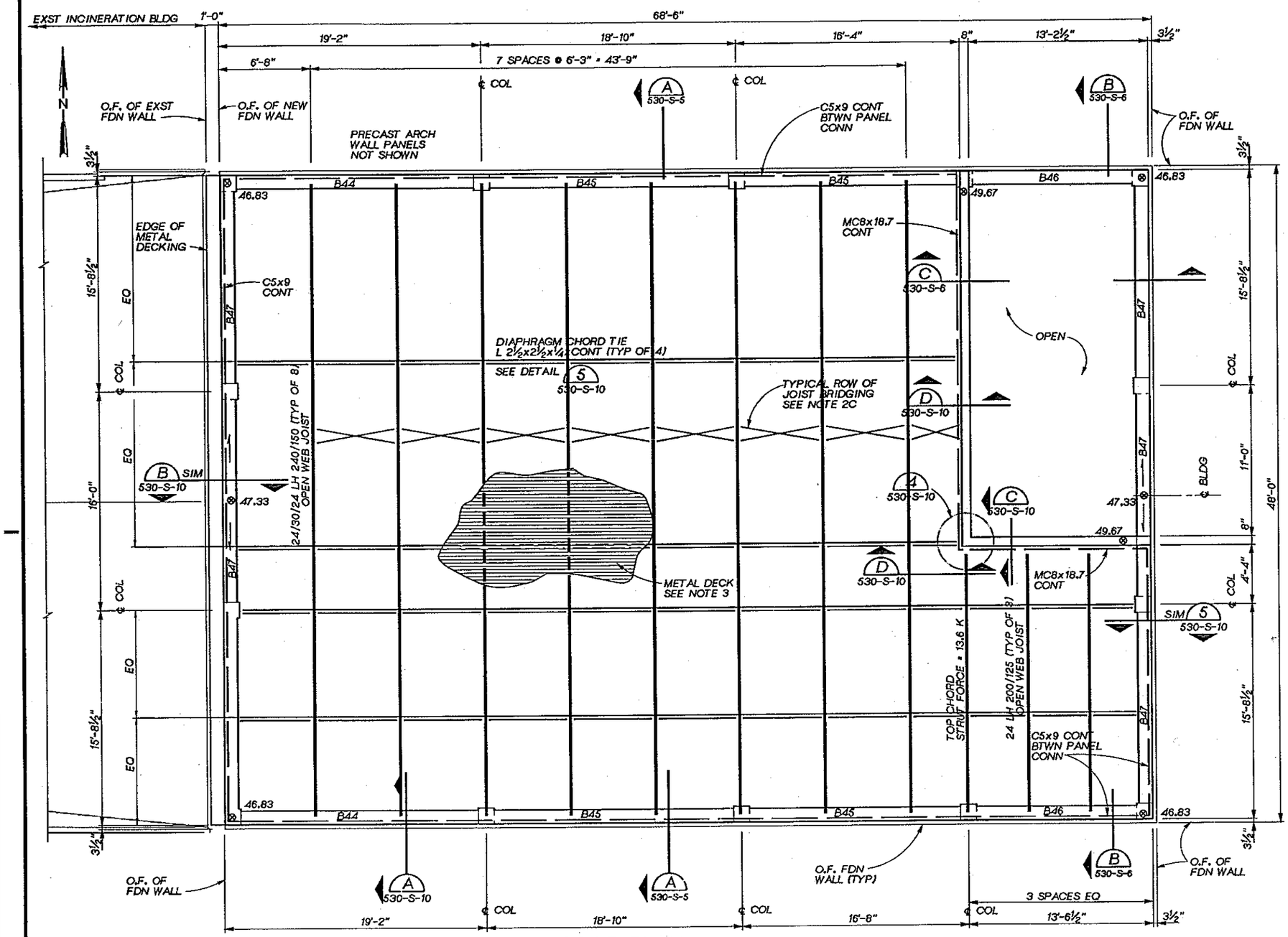

ROOF PLAN
¼" = 1'-0"

ROOF PLAN NOTES

1. ROOF DESIGN LOADS:

   DEAD LOAD: 20 PSF
   LIVE LOAD: 25 PSF
   UPLIFT (NET): 15 PSF

2. OPEN WEB STEEL JOISTS:

   A. JOIST MANUFACTURER SHALL DESIGN ALL JOISTS TO SUPPORT A 1000 POUND CONCENTRATED LOAD LOCATED AT ANY POINT ALONG THE BOTTOM CHORD. THIS LOAD IS IN ADDITION TO THE DESIGN LOADS AS SHOWN.

   B. STEEL JOISTS SHALL BE DESIGNED FOR THE FOLLOWING ADDITIONAL LOADS APPLIED CONCURRENTLY WITH THE ROOF DESIGN LOADS:

      JOIST BEARING SEATS:
      MANUFACTURER SHALL DESIGN JOIST BEARING SEATS FOR THE LOADS GIVEN IN DETAIL 261 V = 3200 LB

   C. NUMBER OF ROWS AND SPACING OF BRIDGING AS REQD BY JOIST MANUFACTURERS. BRIDGING SHALL NOT BE CONNECTED TO PRECAST ARCH WALL PANELS OR WOOD PANELS. BRIDGING MAY BE CONNECTED TO CAST IN PLACE WALL.

3. METAL ROOF DECKING:

   METAL ROOF DECKING SHALL BE 1-1/2" - 20 GAGE GALVANIZED STEEL, VERCO HSB-36 ACOUSTICAL OR EQUIVALENT. MINIMUM SECTION PROPERTIES SHALL BE: I=.216 in⁴, +S=.235 in³, AND -S=.248 in³. MINIMUM NOISE REDUCTION COEFFICIENT OF .75 AS TESTED IN ACCORDANCE WITH ASTM C423. CONNECTION OF ROOF DECKING SHALL BE AS FOLLOWS:

   (5) -⅝" PUDDLE WELDS TO SUPPORTS PER 36" SHEET. BUTTON PUNCH SIDE LAP CONNECTION AT 1'-0" OC, UNLESS OTHERWISE NOTED. MIN LATERAL SHEAR CAPACITY=

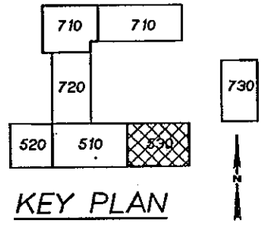

KEY PLAN

DSGN M. ANDERSON					
DR R. FRIBERG					
CHK W. BENNETT					
APVD J. GAUTHIER	NO.	DATE	REVISION	BY	APVD

C.H.M HILL

REUSE OF DOCUMENTS
THIS DOCUMENT, AND THE IDEAS AND DESIGNS INCORPORATED HEREIN, AS AN INSTRUMENT OF PROFESSIONAL SERVICE, IS THE PROPERTY OF CH2M HILL AND IS NOT TO BE USED, IN WHOLE OR IN PART, FOR ANY OTHER PROJECT WITHOUT THE WRITTEN AUTHORIZATION OF CH2M HILL.
©CH2M HILL

VERIFY SCALE
BAR IS ONE INCH ON ORIGINAL DRAWING.
0 1"
IF NOT ONE INCH ON THIS SHEET, ADJUST SCALES ACCORDINGLY.

CITY OF BELLINGHAM, WASHINGTON
POST POINT WASTEWATER TREATMENT PLANT UPGRADE

SOLIDS HANDLING FACILITY -- EAST ADDITION
STRUCTURAL
ROOF FRAMING PLAN

DWG NO. 530-S-4
DATE AUG. 1990
PROJ NO. SEA22462.C1

DRAWN BY: BBL DESIGNED BY: LMK
DGN NAME: H:/PROJ2/BELLINGH/BL530S-E.DGN

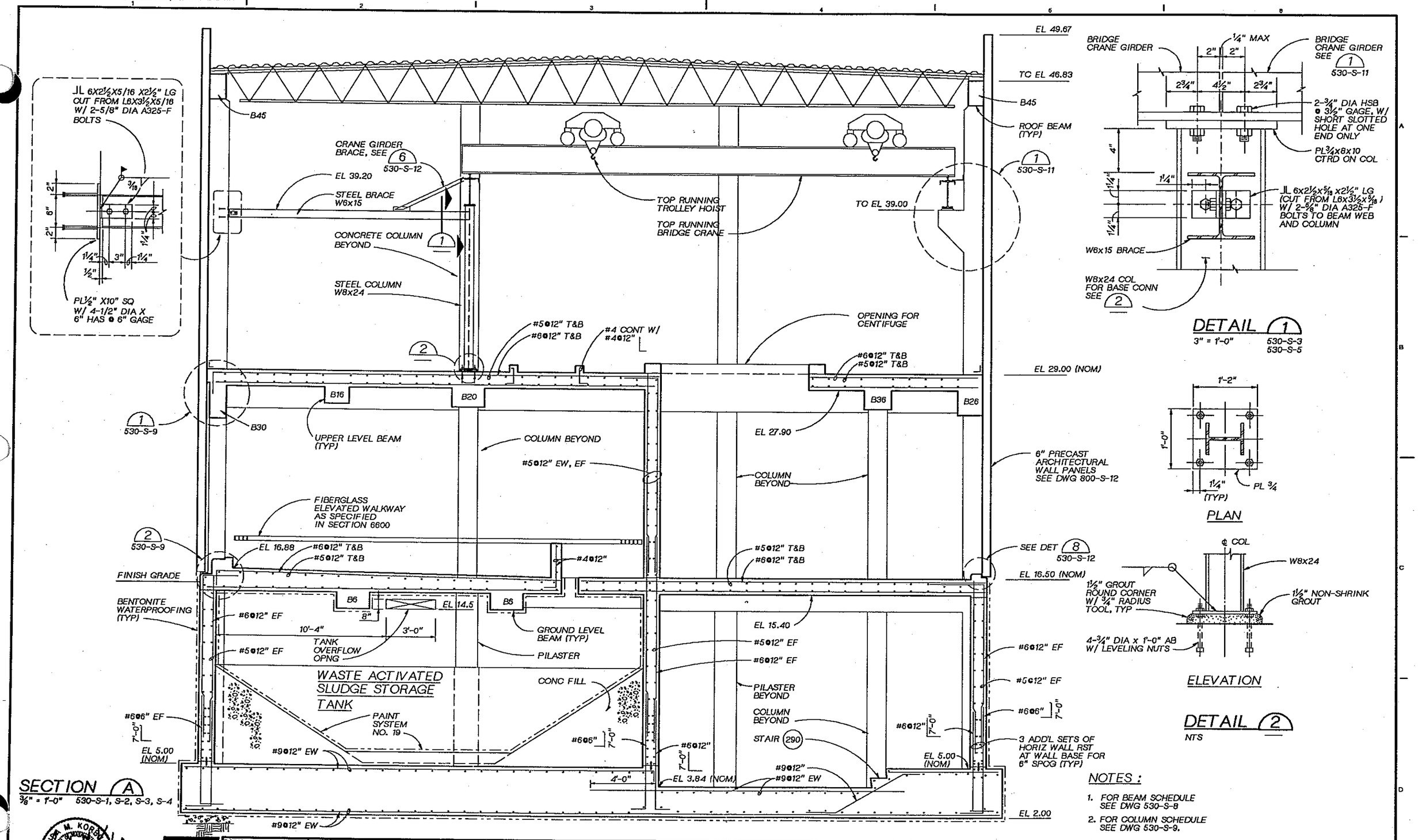

SECTION A
⅜" = 1'-0" 530-S-1, S-2, S-3, S-4

NOTES :

1. FOR BEAM SCHEDULE SEE DWG 530-S-8
2. FOR COLUMN SCHEDULE SEE DWG 530-S-9.

DSGN L. KORBUS					
DR B. LAZARO					
CHK W. BENNETT					
APVD J. GAUTHIER	NO.	DATE	REVISION	BY	APVD

CH2M HILL

REUSE OF DOCUMENTS
THIS DOCUMENT, AND THE IDEAS AND DESIGNS INCORPORATED HEREIN, AS AN INSTRUMENT OF PROFESSIONAL SERVICE, IS THE PROPERTY OF CH2M HILL AND IS NOT TO BE USED, IN WHOLE OR IN PART, FOR ANY OTHER PROJECT WITHOUT THE WRITTEN AUTHORIZATION OF CH2M HILL.
©CH2M HILL

BAR IS ONE INCH ON ORIGINAL DRAWING. 0 1"
IF NOT ONE INCH ON THIS SHEET, ADJUST SCALES ACCORDINGLY.

CITY OF BELLINGHAM, WASHINGTON
POST POINT WASTEWATER TREATMENT PLANT UPGRADE

SOLIDS HANDLING FACILITY -- EAST ADDITION
STRUCTURAL SECTIONS

DWG NO. 530-S-5
DATE AUG. 1990
PROJ NO. SEA22462.C1

DRAWN BY: BBL DESIGNED BY: LMK
DGN NAME: H:/PROJ2/BELLINGH/BL530S-F.DGN

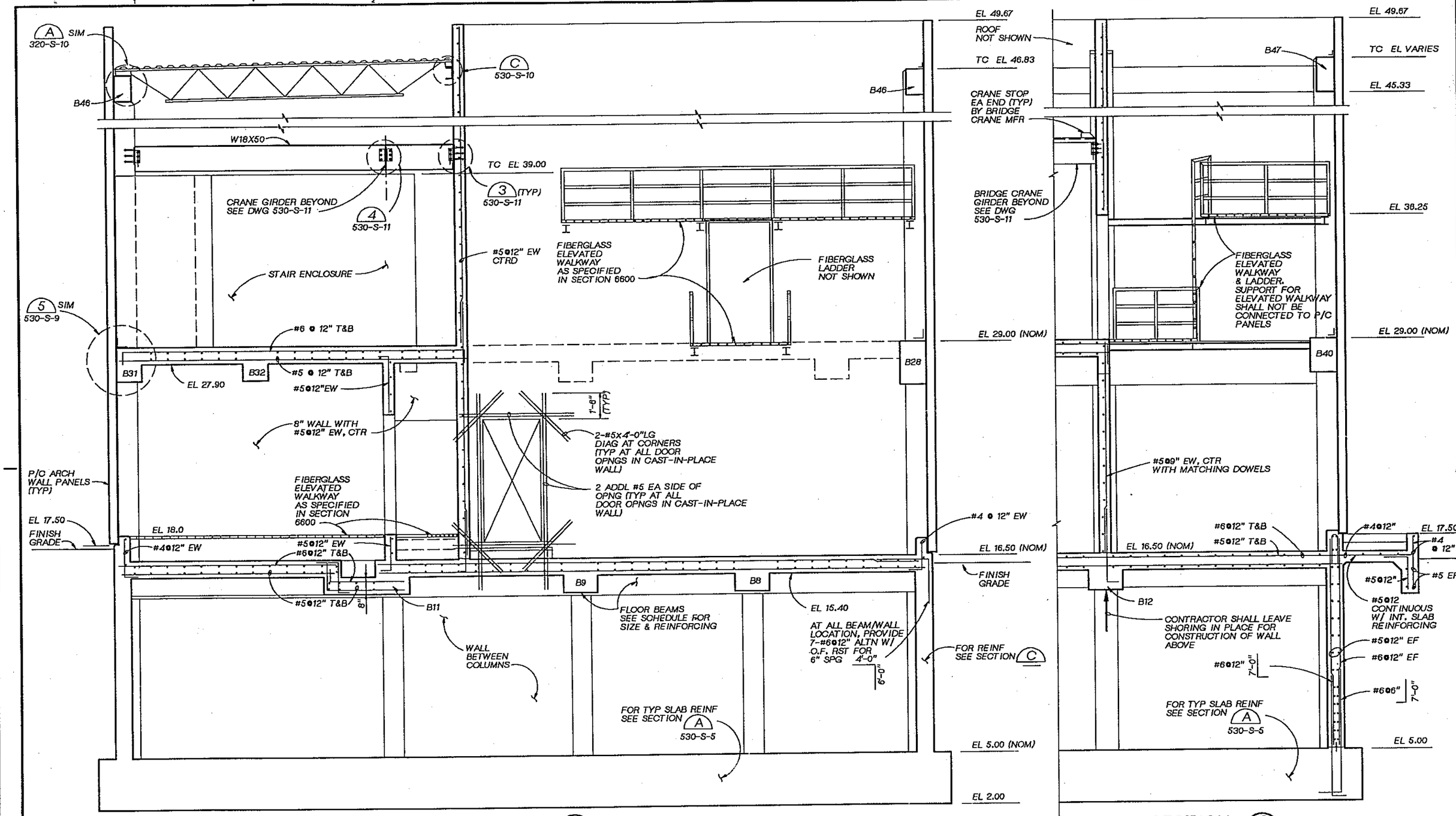

SECTION B
3/8" = 1'-0"
530-S-1
530-S-2
530-S-3
530-S-4

SECTION C
3/8" = 1'-0"
530-S-1
530-S-2
530-S-3

LINDA M. KORSAN STATE OF WASHINGTON 22864 REGISTERED PROFESSIONAL ENGINEER

CH2M HILL

DSGN	M. ANDERSON				
DR	B. LAZARO				
CHK	W. BENNETT				
APVD	J. GAUTHIER	NO.	DATE	REVISION	BY	APVD

REUSE OF DOCUMENTS
THIS DOCUMENT, AND THE IDEAS AND DESIGNS INCORPORATED HEREIN, AS AN INSTRUMENT OF PROFESSIONAL SERVICE, IS THE PROPERTY OF CH2M HILL AND IS NOT TO BE USED, IN WHOLE OR IN PART, FOR ANY OTHER PROJECT WITHOUT THE WRITTEN AUTHORIZATION OF CH2M HILL.
©CH2M HILL

BAR IS ONE INCH ON ORIGINAL DRAWING.
0 1"
IF NOT ONE INCH ON THIS SHEET, ADJUST SCALES ACCORDINGLY.

CITY OF BELLINGHAM, WASHINGTON
POST POINT WASTEWATER TREATMENT PLANT UPGRADE

SOLIDS HANDLING FACILITY -- EAST ADDITION
STRUCTURAL SECTIONS

DWG NO. 530-S-6
DATE AUG. 1990
PROJ NO. SEA22452.C1

DRAWN BY: BBL DESIGNED BY: M. ANDERSON
DGN NAME: H:/PROJ2/BELLINGH/BL530S-G.DGN

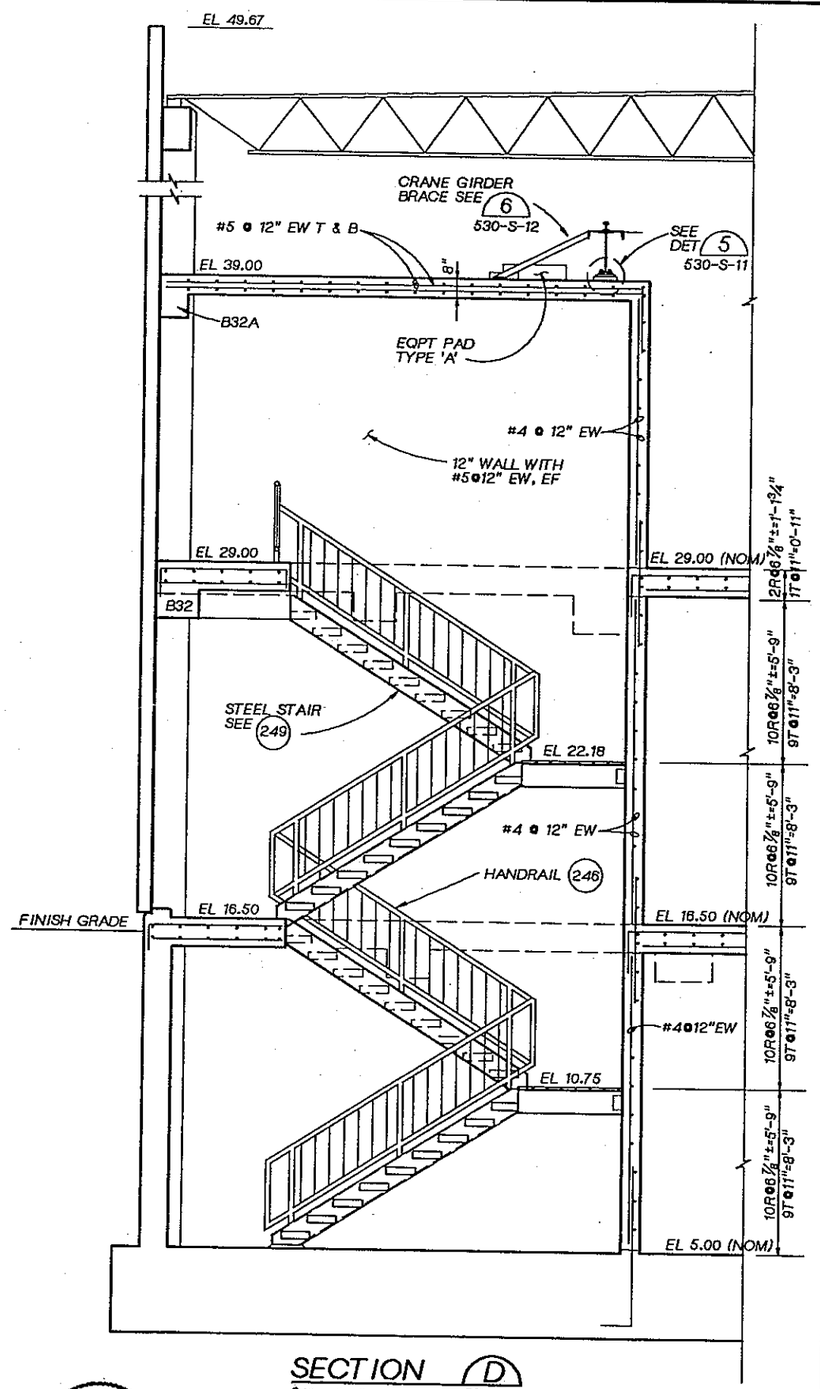

SECTION D
3/8" = 1'-0"
530-S-1
530-S-2
530-S-3

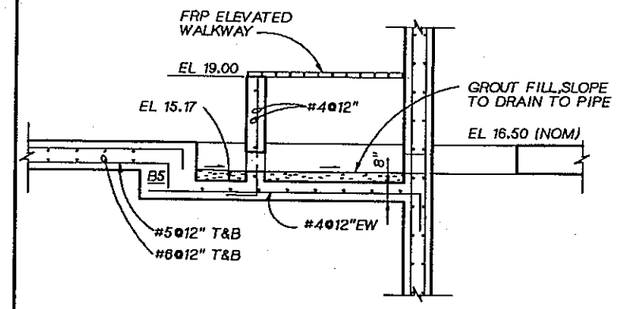

SECTION E
3/8" = 1'-0"
530-S-2

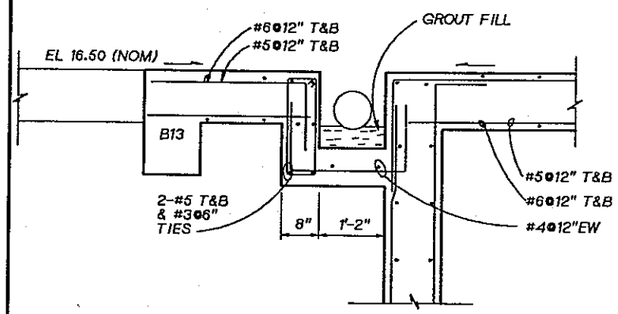

SECTION F
3/4" = 1'-0"
530-S-2

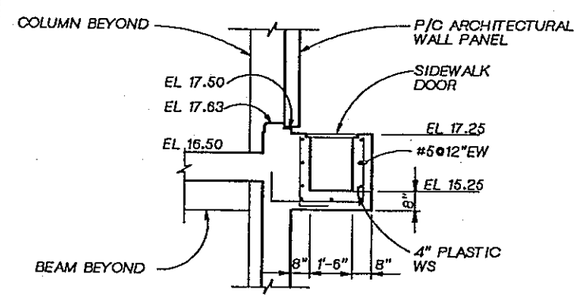

SECTION G
3/8" = 1'-0"
530-S-2

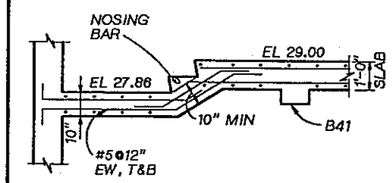

SECTION H
3/8" = 1'-0"
530-S-3

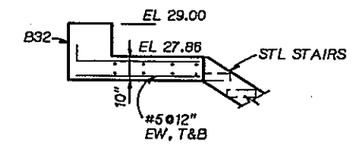

SECTION J
3/8" = 1'-0"
530-S-3

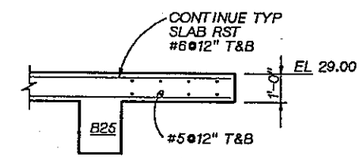

STAIR LANDING

SECTION K
3/8" = 1'-0"
530-S-3

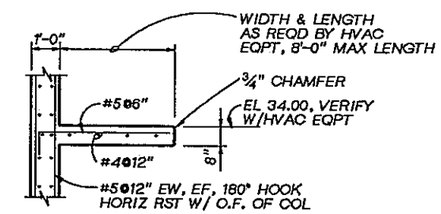

CANTILEVER SLAB FOR HVAC EQPT

SECTION L
3/8" = 1'-0"
530-S-3

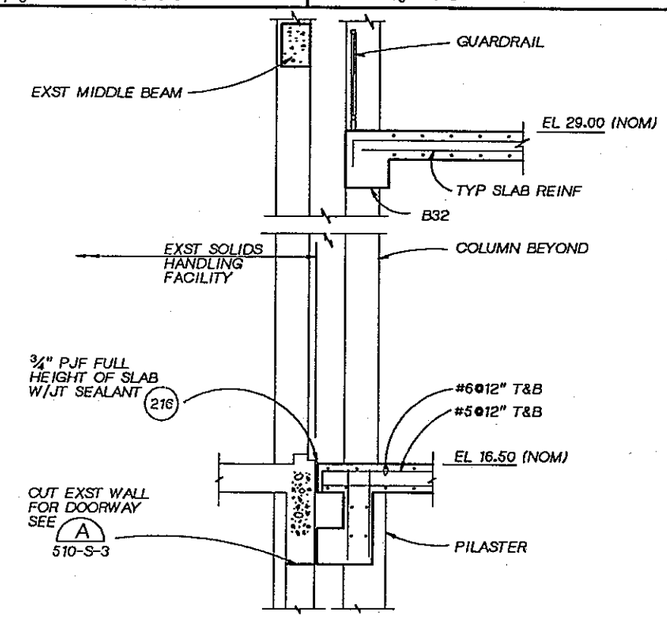

SECTION M
3/8" = 1'-0"
530-S-2
530-S-3

DSGN	M. ANDERSON			
DR	R. FRIBERG			
CHK	W. BENNETT			
APVD	J. GAUTHIER	NO.	DATE	REVISION

BY | APVD

REUSE OF DOCUMENTS
THIS DOCUMENT, AND THE IDEAS AND DESIGNS INCORPORATED HEREIN, AS AN INSTRUMENT OF PROFESSIONAL SERVICE, IS THE PROPERTY OF CH2M HILL AND IS NOT TO BE USED, IN WHOLE OR IN PART, FOR ANY OTHER PROJECT WITHOUT THE WRITTEN AUTHORIZATION OF CH2M HILL.
©CH2M HILL

BAR IS ONE INCH ON ORIGINAL DRAWING. 0 1"
IF NOT ONE INCH ON THIS SHEET, ADJUST SCALES ACCORDINGLY.

CITY OF BELLINGHAM, WASHINGTON
POST POINT WASTEWATER TREATMENT PLANT UPGRADE

SOLIDS HANDLING FACILITY -- EAST ADDITION
STRUCTURAL SECTIONS

DWG NO. 530-S-7
DATE AUG. 1990
PROJ NO. SEA22452.C1

DRAWN BY: RSF DESIGNED BY: M. ANDERSON
DGN NAME: H:/PROJ2/BELLINGH/BL530S-H.DGN

BEAM SCHEDULE

GROUND LEVEL (TC EL 16.50)

BEAM NO.	SIZE		TOP REINF AT LEFT SUPPORT		BOTTOM REINF		* TOP REINF AT RIGHT SUPPORT		SHEAR REINF		
	W	D	T	TC	B	BC	T	TC	NO. SIZE	SPACING FROM EACH SUPPORT	REMARKS
B1	18"	24"	2-#8	2-#8	2-#8	2-#8	2-#8	2-#8	#4	4@3", 4@6" REST @ 9"	
B2	18"	24"		4-#8		2-#8		4-#8	#4	4@3", REST @ 9"	
B3	24"	26"		2-#10	2-#10	4-#10	3-#9	2-#10	#6	ALL @ 6"	USE 2-#7 EF OF BM INSTEAD OF #5@12"
B4	24"	26"	3-#9	2-#10		2-#10	3-#9	2-#10	#6	ALL @ 6"	USE 2-#7 EF OF BM INSTEAD OF #5@12"
B5	24"	24"	2-#9	2-#9	2-#9	2-#9	2-#9	3-#10	#4	4@3", REST @ 9"	
B6	24"	24"	3-#10	2-#9	2-#9	2-#9	2-#9	2-#9.	#4	4@3", REST @ 9"	
B7	24"	24"	2-#9	2-#9	3-#9	2-#9	4-#10	2-#9	#4	4@3", REST @ 9"	
B8	24"	24"	4-#10	2-#9	2-#9	2-#9	2-#9	2-#9	#4	4@3", REST @ 9"	
B9	24"	24"	3-#9	2-#9	2-#9	2-#9	3-#9	2-#9	#4	4@3", REST @ 9"	
B10	18"	24"		2-#9	2-#9	2-#9		2-#9	#3	4@3", REST @ 9"	PLACE BOT REINF OVER B11 BOT REINF
B11	24"	24"	2-#9	2-#9	2-#9	2-#9		2-#9	#4	4@3" REST @ 9"	USE 3-#7 EF OF BM INSTEAD OF #5@12"
B12	24"	26"	2-#9	2-#9	2-#9	2-#9	2-#9	2-#9	#4	ALL @ 6"	
B13	12"	22"		2-#8		2-#9		2-#8	#3	4@3", REST @ 9"	
B13A	22"	22"	2-#8	2-#8	2-#9	2-#9	2-#8	2-#8	#4	4@3", REST @ 9"	
B14	24"	24"		2-#9	2-#9	2-#9	2-#9	2-#9	#4	4@3" REST @ 9"	USE 3-#7 EF OF BM INSTEAD OF #5@12"
B14A	12"	24"		2-#9		2-#9		2-#9	#4	4@3", REST @ 12"	SEE N 530-S-9

UPPER LEVEL (TC EL 29.00)

BEAM NO.	SIZE		TOP REINF AT LEFT SUPPORT		BOTTOM REINF		* TOP REINF AT RIGHT SUPPORT		SHEAR REINF		
	W	D	T	TC	B	BC	T	TC	NO. SIZE	SPACING FROM EACH SUPPORT	REMARKS
B15	18"	24"	2-#9	2-#9	2-#9	2-#9	4-#9	2-#9	#4	4@3", 4@6" REST @ 9"	PLACE TOP REINF AT RIGHT SUPPORT IN TWO LAYERS
B16	18"	24"	4-#9	2-#9	2-#9	2-#9	2-#9	2-#9	#4	4@3", 4@6" REST @ 9"	
B17	24"	28"		2-#9	4-#9	2-#10	2-#9	2-#9	#4	4@3", 10@6" REST @ 12"	
B18	27"	28"		4-#9	2-#7	2-#7		2-#9	#4	4@3", 5@6" REST @ 9"	
B19	24"	28"		2-#9		3-#9	2-#9	2-#9	#4	4@3", 9@6" REST @ 12"	PLACE BOT REINF OVER B21 BOT REINF
B20	24"	28"	2-#9	2-#9		3-#9		2-#9	#4	4@3", 9@6" REST @ 12"	PLACE BOT REINF OVER B21 BOT REINF
B21	18"	28"		2-#9		2-#9		2-#9	#4	4@3", 5@6" REST @ 9"	EXTEND TOP REINF AT LEFT SUPPORT 5'-0" INTO 12" SLAB
B22	18"	28"		2-#9		2-#9		2-#9	#4	4@3", 4@6" REST @ 12"	
B23	18"	28"		2-#9		2-#9		2-#9	#4	4@3", REST @ 9"	
B24	24"	28"		2-#9	2-#9	3-#9		2-#9	#4	4@3", 7@6" REST @ 12"	PLACE BOT REINF OVER B22 BOT REINF
B25	18"	30"		2-#7	1-#7	2-#7	1-#7	2-#7	#3	4@3", 4@6" REST @ 12"	SEE NOTE 2
B26	18"	30"	1-#7	2-#7	1-#7	2-#7	1-#7	2-#7	#3	4@3", 6@6" REST @ 12"	SEE NOTE 2
B27	18"	30"	1-#7	2-#7	1-#7	2-#7	1-#7	2-#7	#3	4@3", 4@6" REST @ 12"	SEE NOTE 2

BEAM SCHEDULE

UPPER LEVEL (TC EL 29.00)

BEAM NO.	SIZE		TOP REINF AT LEFT SUPPORT		BOTTOM REINF		* TOP REINF AT RIGHT SUPPORT		SHEAR REINF		
	W	D	T	TC	B	BC	T	TC	NO. SIZE	SPACING FROM EACH SUPPORT	REMARKS
B28	18"	30"	1-#7	2-#7	1-#7	2-#7		2-#7	#3	4@3", 4@6" REST @ 12"	SEE NOTE 2
B29	12"	36"		2-#7		2-#8	1-#7	2-#7	#3	4@3", 4@6" REST @ 12"	SEE DETAIL 1 530-S-9
B30	12"	36"	1-#7	2-#7		2-#8	1-#7	2-#7	#3	4@3", 4@6" REST @ 12"	SEE DETAIL 1 530-S-9
B31	18"	24"	1-#7	2-#7		2-#8		2-#7	#3	4@3", REST @ 9"	SEE NOTE 2
B32	18"	24"	1-#7	2-#7	1-#8	2-#8	1-#7	2-#7	#3	4@3", REST @ 9"	SEE NOTE 2
B32A	12"	18"		2-#5		2-#6		2-#5	#3	ALL @ 6"	
B33	18"	24"		2-#7		2-#8	1-#7	2-#7	#3	ALL @ 6"	
B34	14"	18"		2-#7		3-#9		2-#7	#3	2@3", REST @ 6"	EXTEND TOP REINF 4'-0" INTO 12" SLAB
B35	24" (NOM)	26"	2-#9	3-#9	2-#9	4-#9		3-#9	#4	4@3", 5@6" REST @ 12"	SEE PLAN FOR WIDENED SECTION
B36	20"	26"		5-#9		3-#9		5-#9	#4	ALL @ 6"	
B37	18"	26"		2-#7	1-#9	2-#9		3-#7	#3	4@3", 6@6" REST @ 12"	SEE NOTE 2
B38	18"	26"		3-#7		2-#9		3-#7	#3	4@3", REST @ 9"	SEE NOTE 2
B39	18"	26"		3-#7		2-#9		2-#7	#3	4@3", 6@6" REST @ 12"	SEE NOTE 2
B40	18"	26"		2-#7		2-#9		2-#7	#3	4@3", 6@6" REST @ 12"	SEE NOTE 2
B41	23½"	18"		4-#7		4-#7		4-#7	#3	4@3", REST @ 6"	

ROOF LEVEL (TC EL 46.83 OR VARIES)

BEAM NO.	SIZE		TOP REINF AT LEFT SUPPORT		BOTTOM REINF		* TOP REINF AT RIGHT SUPPORT		SHEAR REINF		
	W	D	T	TC	B	BC	T	TC	NO. SIZE	SPACING FROM EACH SUPPORT	REMARKS
B44	12"	18"		2-#7		3-#7	1-#7	2-#7	#3	4@3", REST @ 6"	
B45	12"	18"	1-#7	2-#7		3-#7	1-#7	2-#7	#3	4@3", REST @ 6"	
B46	12"	18"	1-#7	2-#7		3-#7		2-#7	#3	4@3", REST @ 6"	
B47	12"	VARIES		2-#7		3-#7		2-#7	#3	4@3", REST @ 6"	SEE DETAIL B 530-S-10

NOTES:
1. FOR TYPICAL BEAM DETAIL SEE 221
2. USE 2-#6 EF OF BEAM INSTEAD OF #5@12" AS SHOWN IN DETAIL 221

LINDA M. KORDONOWY — STATE OF WASHINGTON — 22863 — REGISTERED PROFESSIONAL ENGINEER

CH2M HILL

DSGN M. ANDERSON
DR R. FRIBERG
CHK W. BENNETT
APVD J GAUTHIER

NO.	DATE	REVISION	BY	APVD

REUSE OF DOCUMENTS
THIS DOCUMENT, AND THE IDEAS AND DESIGNS INCORPORATED HEREIN, AS AN INSTRUMENT OF PROFESSIONAL SERVICE, IS THE PROPERTY OF CH2M HILL AND IS NOT TO BE USED, IN WHOLE OR IN PART, FOR ANY OTHER PROJECT WITHOUT THE WRITTEN AUTHORIZATION OF CH2M HILL.
©CH2M HILL

BAR IS ONE INCH ON ORIGINAL DRAWING. 0 1"
IF NOT ONE INCH ON THIS SHEET, ADJUST SCALES ACCORDINGLY.

CITY OF BELLINGHAM, WASHINGTON
POST POINT WASTEWATER TREATMENT PLANT UPGRADE

SOLIDS HANDLING FACILITY -- EAST ADDITION
STRUCTURAL BEAM SCHEDULE

DWG NO. 530-S-8
DATE AUG. 1990
PROJ NO. SEA22462.C1

DRAWN BY: BBL DESIGNED BY: M. ANDERSON
DGN NAME: H:/PROJ2/BELLINGH/BL530S-M.DGN

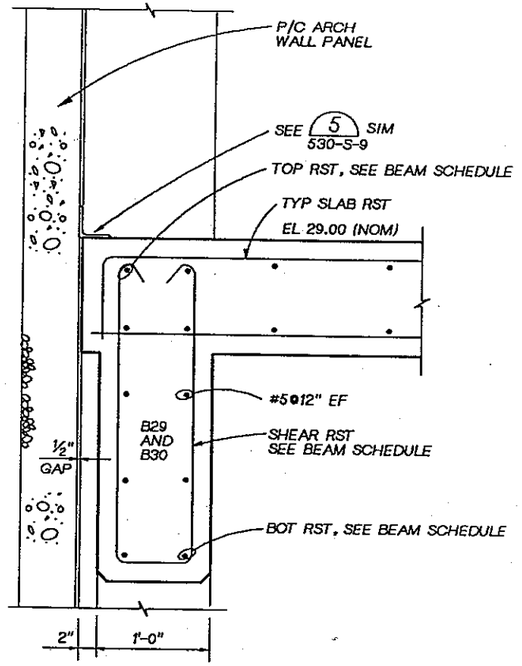

DETAIL 1
1½" = 1'-0" 530-S-5 530-S-8

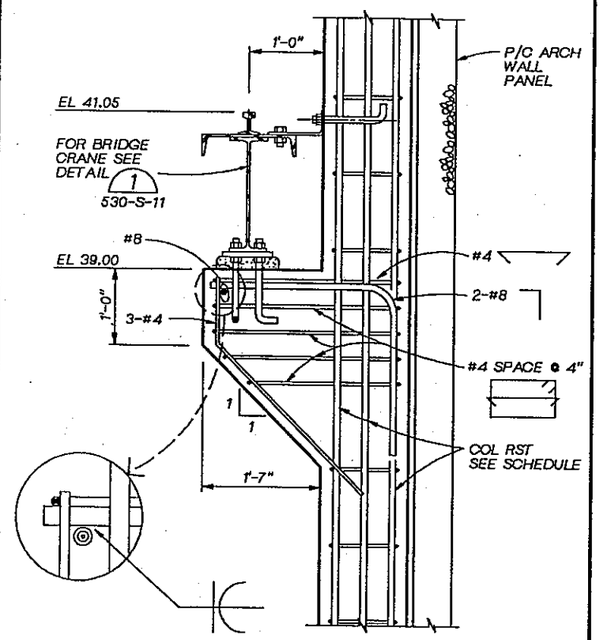

SECTION

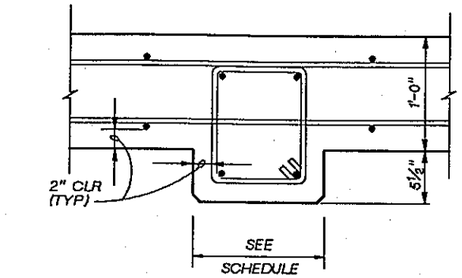

TYPICAL EXTERIOR WALL PILASTER
NTS

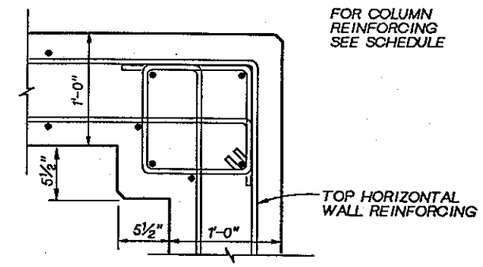

TYPICAL CORNER PILASTER
NTS

NOTE: CONTINUE HORIZ TIES AND SPACING THRU BEAM /COLUMN JOINT.

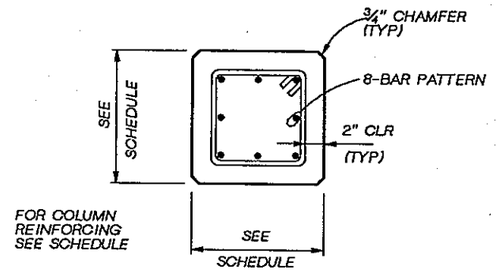

TYPICAL 4 & 8 BAR COLUMN
NTS

COLUMN SCHEDULE

MARK NUMBER	COLUMN SIZE	VERICAL REINF	HORIZ. TIES	REMARKS
C1	16"x16"	8-#7	6-#3@6" T&B REST@12"	
C2	16"x16"	8-#9	6-#3@6" T&B REST@12"	
C3	14"x14"	8-#7	6-#3@6" T&B REST@12"	
C4	14"x14"	8-#7	6-#3@6" T&B REST@12"	
C5	16"x17½"	8-#7	6-#3@6" T&B REST@12"	WALL PILASTER
C6	17½"x17½"	8-#7	6-#3@6" T&B REST@12"	CORNER PILASTER
C7	14"x16½"	8-#7	6-#3@6" T&B REST@12"	

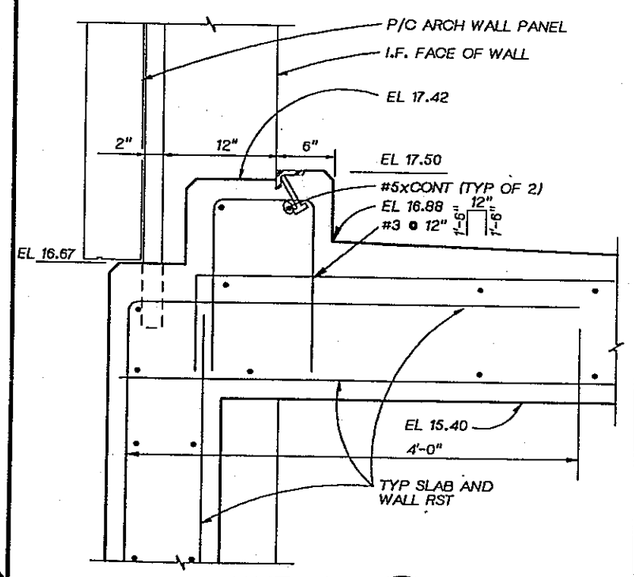

DETAIL 2
1½" = 1'-0" 520-S-4 530-S-5

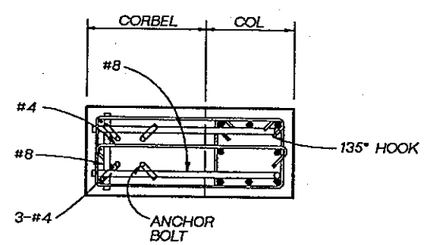

PLAN

DETAIL 3
1" = 1'-0" 530-S-11

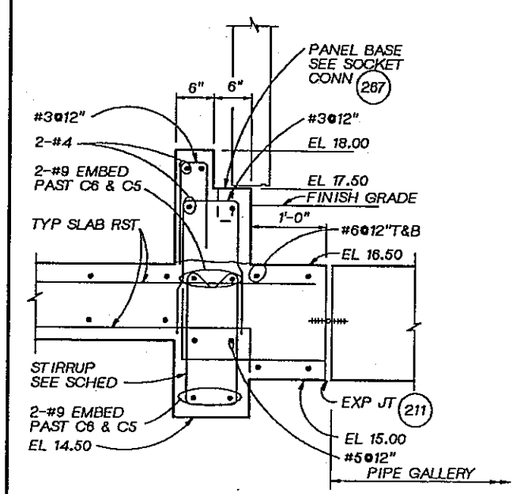

SECTION N
1" = 1'-0" 530-S-2 530-S-8

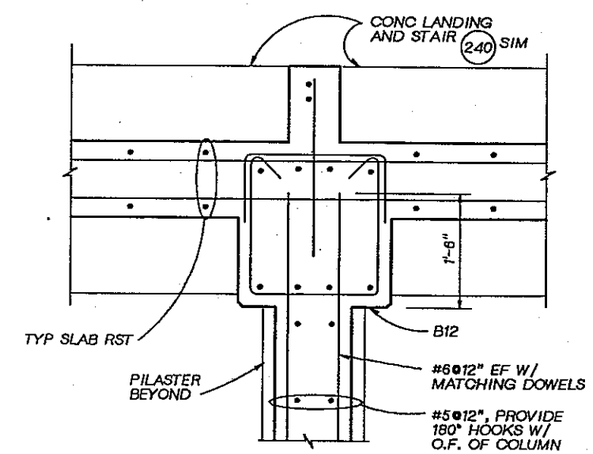

SECTION O
1" = 1'-0" 530-S-2

LINDA M. KORENSKY STATE OF WASHINGTON 22364 REGISTERED PROFESSIONAL ENGINEER

CH2M HILL

DSGN	M. ANDERSON		
DR	B. LAZARO		
CHK	W. BENNETT		
APVD	J. GAUTHIER		

NO.	DATE	REVISION	BY	APVD

REUSE OF DOCUMENTS
THIS DOCUMENT, AND THE IDEAS AND DESIGNS INCORPORATED HEREIN, AS AN INSTRUMENT OF PROFESSIONAL SERVICE, IS THE PROPERTY OF CH2M HILL AND IS NOT TO BE USED, IN WHOLE OR IN PART, FOR ANY OTHER PROJECT WITHOUT THE WRITTEN AUTHORIZATION OF CH2M HILL.
©CH2M HILL

BAR IS ONE INCH ON ORIGINAL DRAWING. 0 1" IF NOT ONE INCH ON THIS SHEET, ADJUST SCALES ACCORDINGLY.

CITY OF BELLINGHAM, WASHINGTON
POST POINT WASTEWATER TREATMENT PLANT UPGRADE

SOLIDS HANDLING FACILITY--EAST ADDITION
STRUCTURAL
COLUMN SCHEDULE AND DETAILS

DWG NO. 530-S-9
DATE AUG. 1990
PROJ NO. SEA22462.C1

OVERLAY IDENTIFICATION | COMPOSITE | OVERLAY | PROJID | FILE | GEN

DATE: 8-21-90
DRAWN BY: BBL
DGN NAME: H:/PROJ2/BELLINGH/BL530S-J.DGN
DESIGNED BY: M. ANDERSON

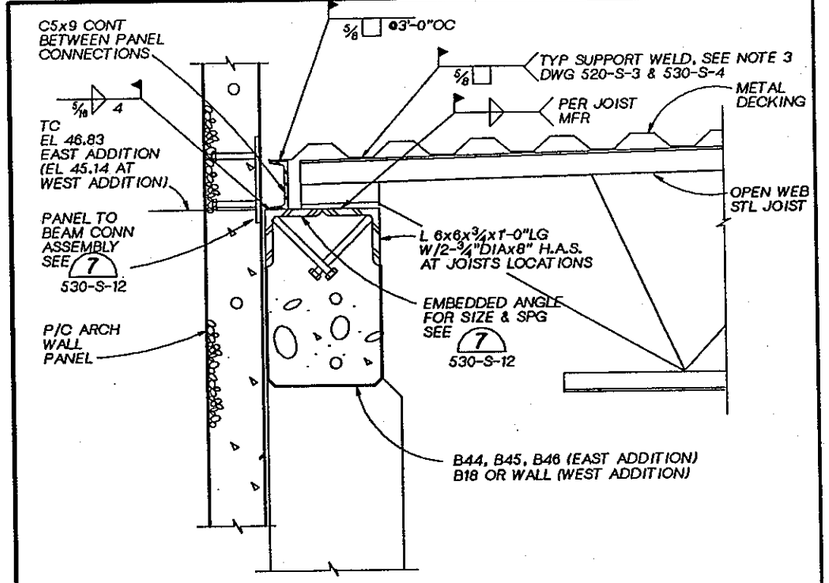

SECTION A
1½" = 1'-0"
520-S-3 520-S-4 520-S-8 530-S-4 530-S-6

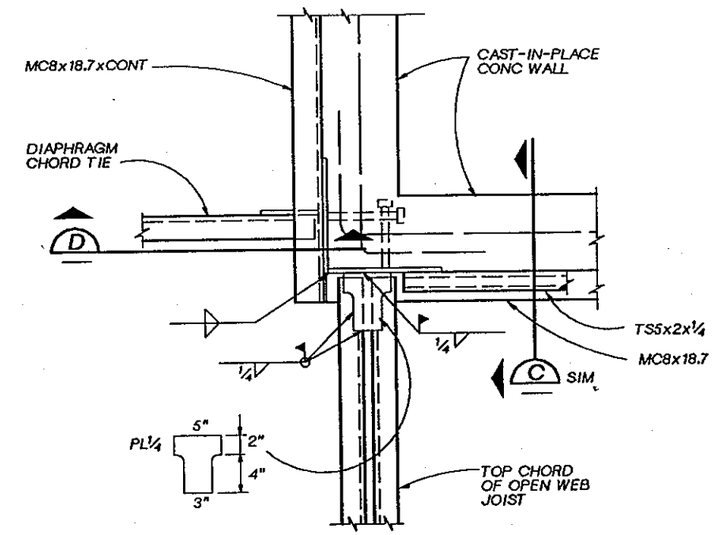

DETAIL 4
1½"=1'-0"" 530-S-4

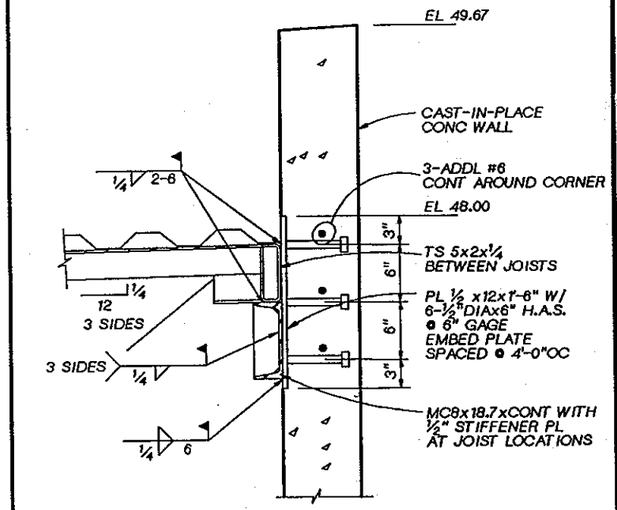

SECTION C
1½" = 1'-0" 530-S-4 530-S-10

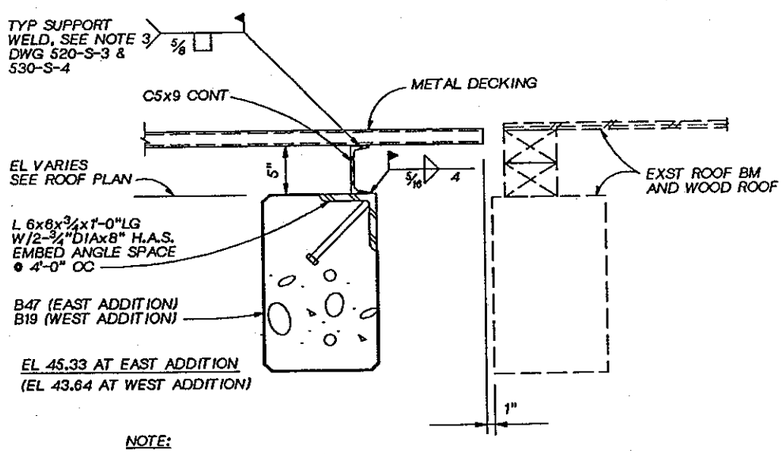

NOTE:

1. FOR ROOF EXPANSION JOINT AT EAST ADDITION SEE DET 2 510-A-6
2. FOR ROOF EXPANSION JOINT AT WEST ADDITION SEE DET 1 510-A-6

SECTION B
1½" = 1'-0" 520-S-3 530-S-4

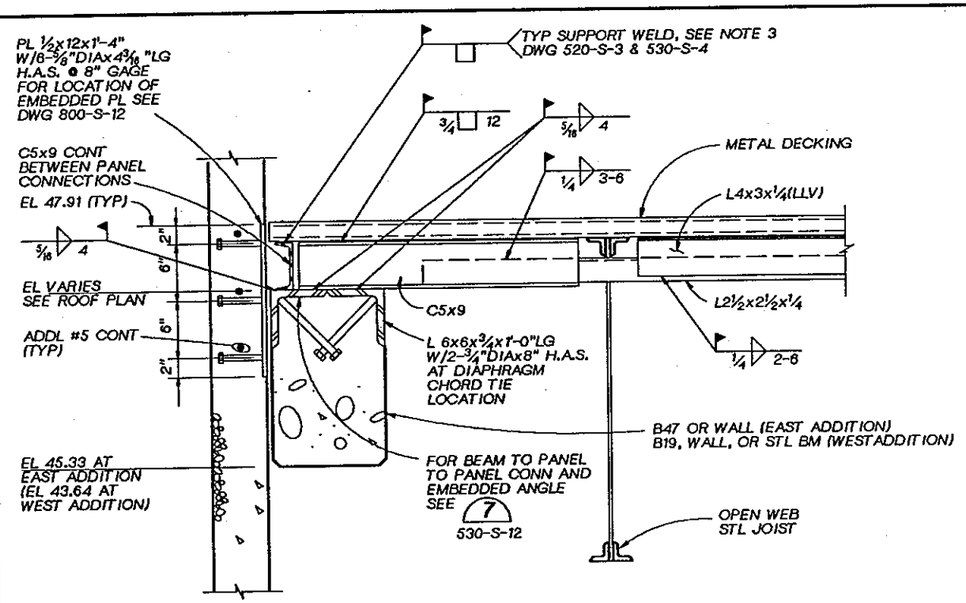

DIAPHRAGM CHORD TIE

DETAIL 5
1½"=1'-0"" 520-S-3 520-S-9 530-S-4

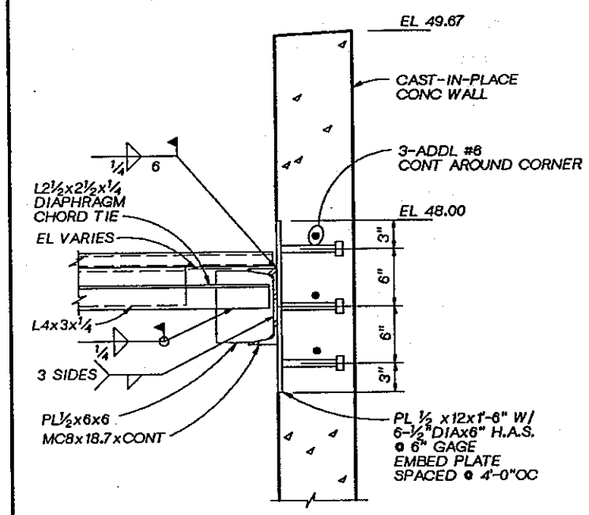

SECTION D
1½" = 1'-0" 530-S-4 530-S-10

CH2M HILL

DSGN	M. ANDERSON				
DR	B. LAZARO				
CHK	W. BENNETT				
APVD	J. GAUTHIER	NO.	DATE	REVISION	BY	APVD

REUSE OF DOCUMENTS
THIS DOCUMENT, AND THE IDEAS AND DESIGNS INCORPORATED HEREIN, AS AN INSTRUMENT OF PROFESSIONAL SERVICE, IS THE PROPERTY OF CH2M HILL AND IS NOT TO BE USED, IN WHOLE OR IN PART, FOR ANY OTHER PROJECT WITHOUT THE WRITTEN AUTHORIZATION OF CH2M HILL.
©CH2M HILL

BAR IS ONE INCH ON ORIGINAL DRAWING.
0 1"
IF NOT ONE INCH ON THIS SHEET, ADJUST SCALES ACCORDINGLY.

CITY OF BELLINGHAM, WASHINGTON
POST POINT WASTEWATER TREATMENT PLANT UPGRADE

SOLIDS HANDLING FACILITY--EAST ADDITION
STRUCTURAL
ROOF AND PANEL DETAILS

DWG NO. 530-S-10
DATE AUG. 1990
PROJ NO. SEA22462.C1

OVERLAY SCREEN
PROJID FILE

DATE: 8-26-90
DRAWN BY: BBL
DGN NAME: H:/PROJ2/BELLINGH/BL530S-L.DGN
DESIGNED BY: P. GUENTHER

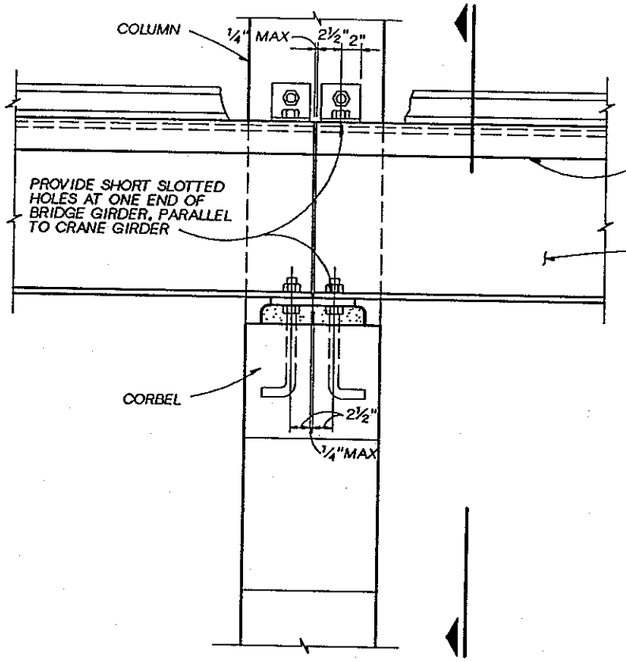

FRONT ELEVATION

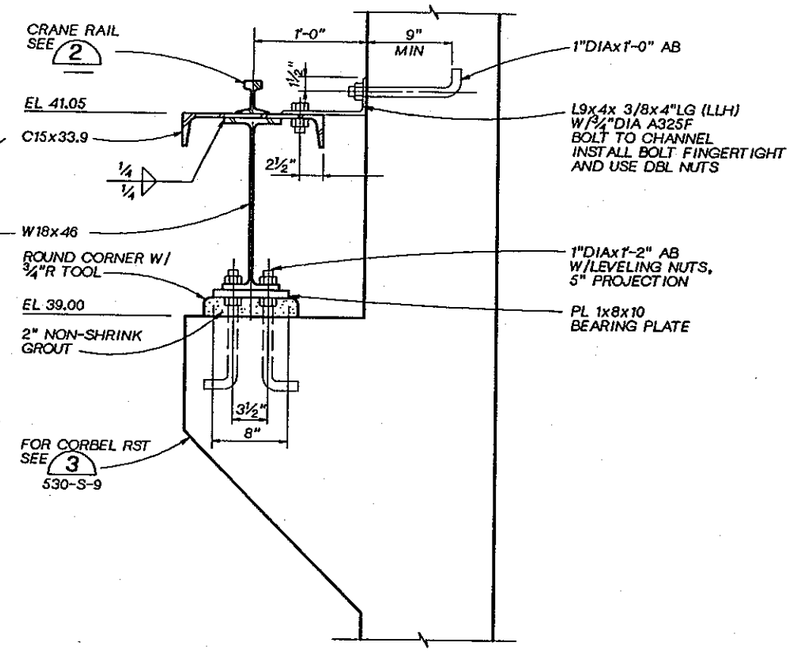

SECTION

DETAIL 1
1 1/2" = 1'-0"
530-S-3
530-S-5
530-S-9

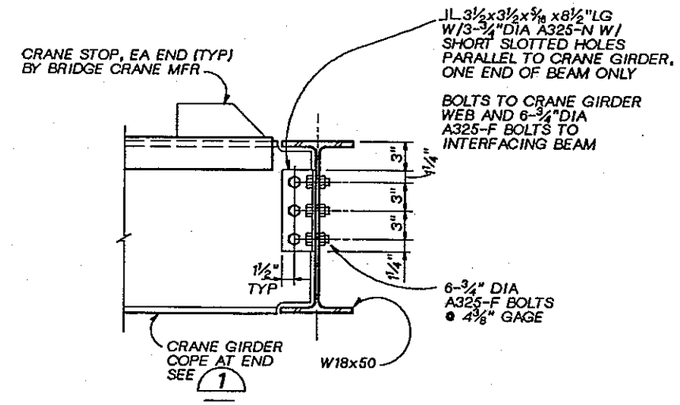

DETAIL 4
1 1/2" = 1'-0"
530-S-6

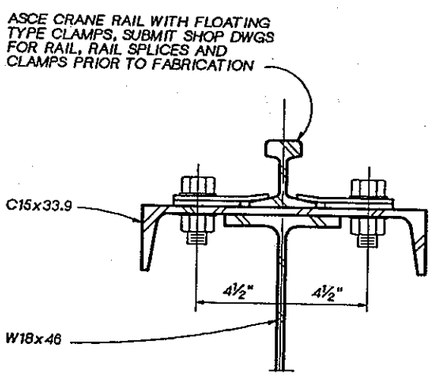

DETAIL 2
3" = 1'-0"

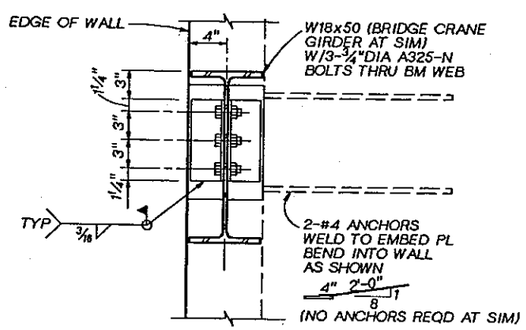

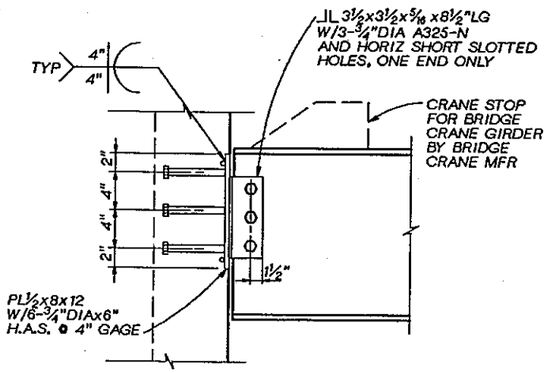

DETAIL 3
1 1/2" = 1'-0"
530-S-3
530-S-6

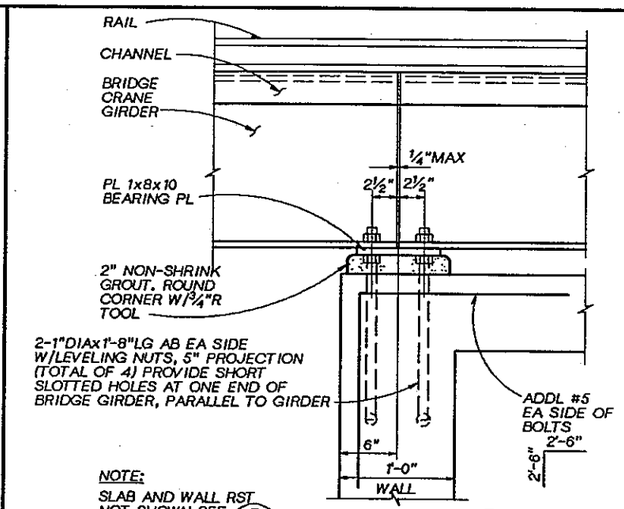

NOTE:
SLAB AND WALL RST NOT SHOWN SEE D 530-S-7

DETAIL 5
1 1/2" = 1'-0"
530-S-7

CH2M HILL

DSGN	P.GUENTHER
DR	B.LAZARO
CHK	W. BENNETT
APVD	J. GAUTHIER

NO.	DATE	REVISION	BY	APVD

REUSE OF DOCUMENTS
THIS DOCUMENT, AND THE IDEAS AND DESIGNS INCORPORATED HEREIN, AS AN INSTRUMENT OF PROFESSIONAL SERVICE, IS THE PROPERTY OF CH2M HILL AND IS NOT TO BE USED, IN WHOLE OR IN PART, FOR ANY OTHER PROJECT WITHOUT THE WRITTEN AUTHORIZATION OF CH2M HILL.
©CH2M HILL

BAR IS ONE INCH ON ORIGINAL DRAWING.
0 1"
IF NOT ONE INCH ON THIS SHEET, ADJUST SCALES ACCORDINGLY.

CITY OF BELLINGHAM, WASHINGTON
POST POINT WASTEWATER TREATMENT PLANT UPGRADE

SOLIDS HNADLING FACILITY--EAST ADDITION
STRUCTURAL
BRIDGE CRANE DETAILS

DWG NO. 530-S-11
DATE AUG. 1990
PROJ NO. SEA22462.C1

OVERLAY IDENTIFICATION
PROJID
FILE

DATE: 8-28-90
DRAWN BY: BBL DESIGNED BY: P. GUENTHER
DGN NAME: H:/PROJ2/BELLINGH/BL630S-K.DGN

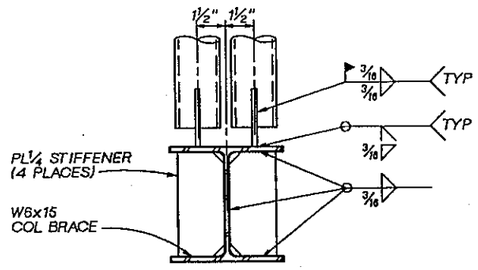

SECTION

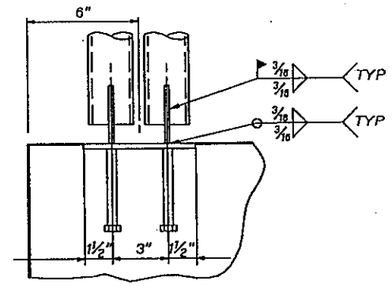

SECTION

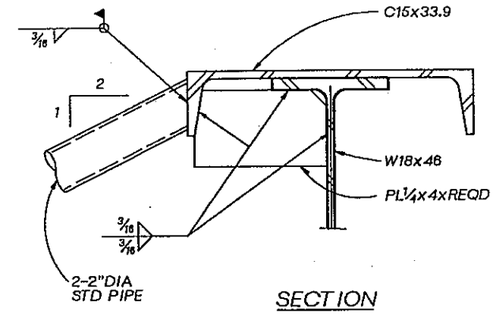

SECTION

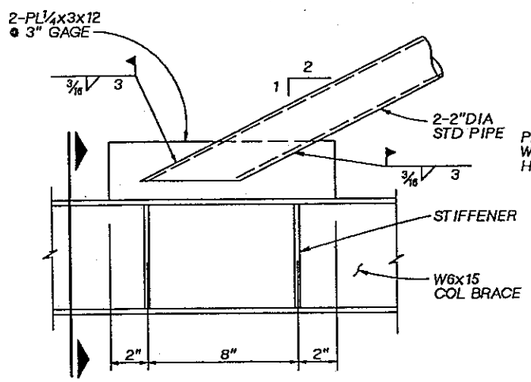

ELEVATION
BRACE CONN AT COLUMN BRACE

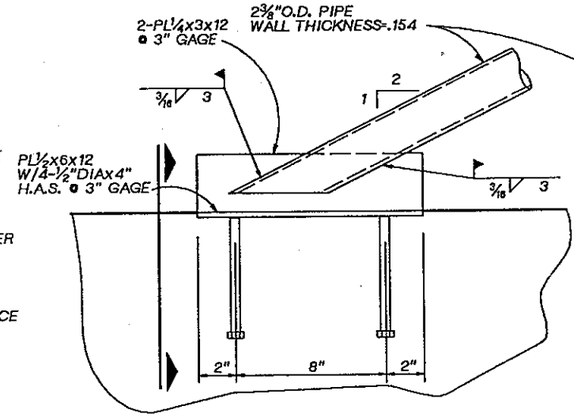

ELEVATION
BRACE CONN AT STAIRS

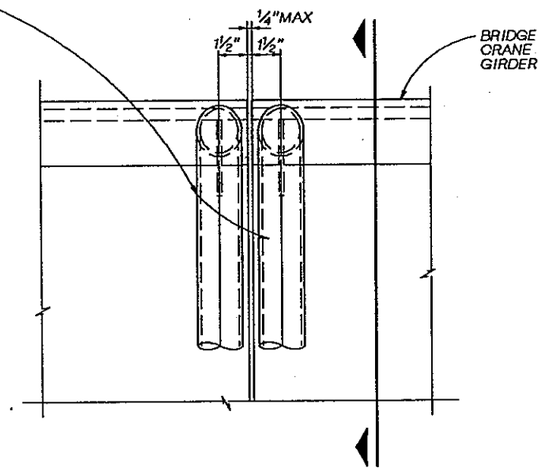

ELEVATION
BRACE CONN AT CRANE GIRDER

CRANE GIRDER BRACE DETAIL (6)

3" = 1'-0"

530-S-3
530-S-5
530-S-7

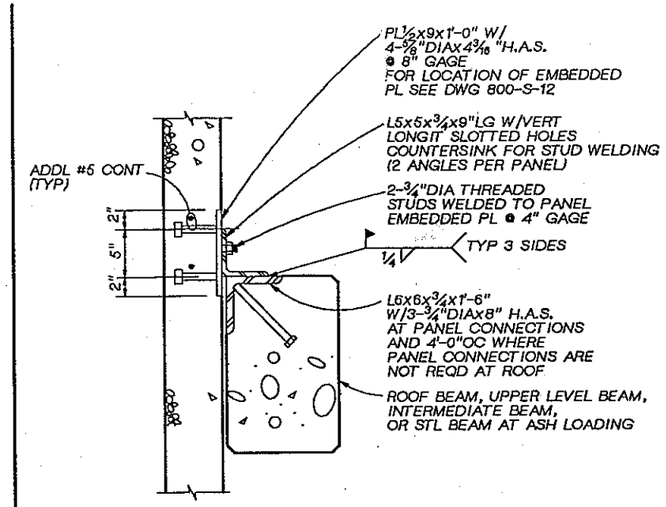

TYP PANEL CONNECTION (7)

1½" = 1'-0"

520-S-4
520-S-10
530-S-6
530-S-10

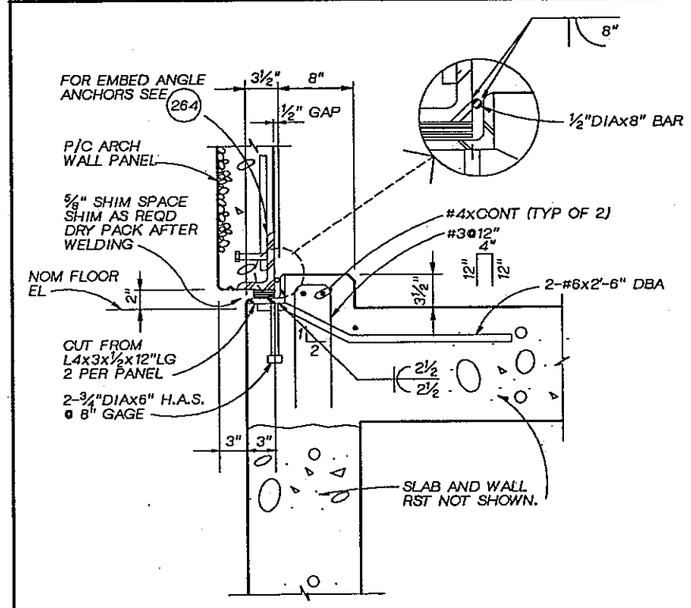

DETAIL (8)

1½" = 1'-0"

520-S-4
520-S-5
530-S-5

FLORIDA M. KOROL STATE OF WASHINGTON 22661 REGISTERED PROFESSIONAL ENGINEER

CH2M HILL

DSGN	P. GUENTHER					
DR	B. LAZARO					
CHK	W. BENNETT					
APVD	J. GAUTHIER	NO.	DATE	REVISION	BY	APVD

REUSE OF DOCUMENTS
THIS DOCUMENT, AND THE IDEAS AND DESIGNS INCORPORATED HEREIN, AS AN INSTRUMENT OF PROFESSIONAL SERVICE, IS THE PROPERTY OF CH2M HILL AND IS NOT TO BE USED, IN WHOLE OR IN PART, FOR ANY OTHER PROJECT WITHOUT THE WRITTEN AUTHORIZATION OF CH2M HILL.
©CH2M HILL

BAR IS ONE INCH ON ORIGINAL DRAWING.
0 1"
IF NOT ONE INCH ON THIS SHEET, ADJUST SCALES ACCORDINGLY.

CITY OF BELLINGHAM, WASHINGTON
POST POINT WASTEWATER TREATMENT PLANT UPGRADE

SOLIDS HANDLING FACILITY--EAST ADDITION
STRUCTURAL DETAILS

DWG NO. 530-S-12
DATE AUG. 1990
PROJ NO. SEA22462.C1

OVERLAY SCREEN
PROJID
FILE

DRAWN BY: M. MOORE DESIGNED BY: J. WODRICH
DGN NAME: H:/PROJ2/BELLINGH/BL530M-A.DGN

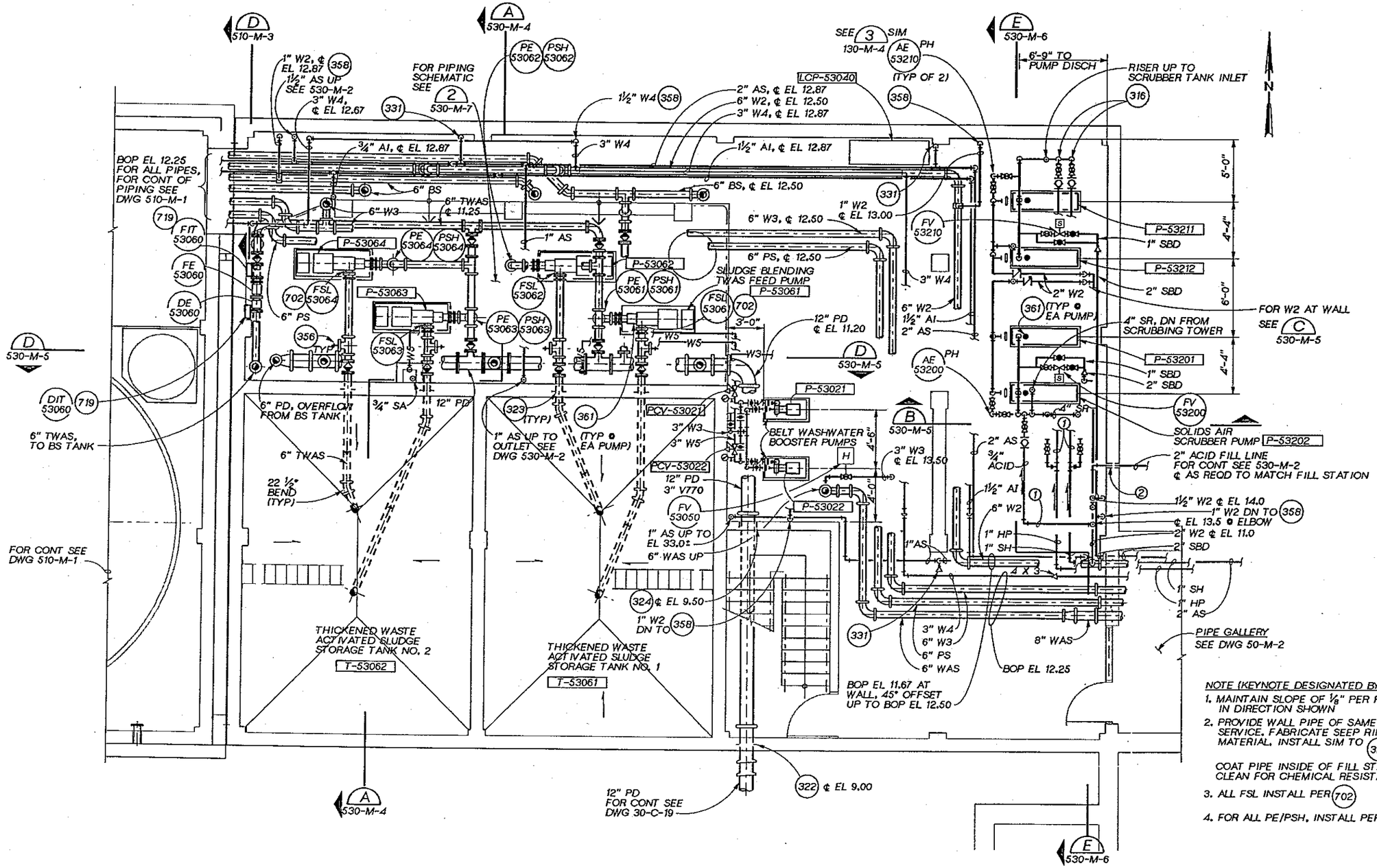

PLAN AT FLOOR EL 5.0

¼" = 1'-0"

NOTE (KEYNOTE DESIGNATED BY ⓧ):

1. MAINTAIN SLOPE OF ⅛" PER FOOT, DROPPING IN DIRECTION SHOWN
2. PROVIDE WALL PIPE OF SAME MATERIAL AS ACID SERVICE. FABRICATE SEEP RING OF SAME MATERIAL. INSTALL SIM TO (326), BUT DO NOT COAT PIPE INSIDE OF FILL STATION. KEEP PIPE CLEAN FOR CHEMICAL RESISTANT COATING.
3. ALL FSL INSTALL PER (702)
4. FOR ALL PE/PSH, INSTALL PER (709)

JOSEPH A. GAUTHIER — STATE OF WASHINGTON — REGISTERED PROFESSIONAL ENGINEER

CH2M HILL

DSGN	J. WODRICH				
DR	A. MCRILL				
CHK	R. NAEF				
APVD	J. GAUTHIER	NO.	DATE	REVISION	BY / APVD

REUSE OF DOCUMENTS
THIS DOCUMENT, AND THE IDEAS AND DESIGNS INCORPORATED HEREIN, AS AN INSTRUMENT OF PROFESSIONAL SERVICE, IS THE PROPERTY OF CH2M HILL AND IS NOT TO BE USED, IN WHOLE OR IN PART, FOR ANY OTHER PROJECT WITHOUT THE WRITTEN AUTHORIZATION OF CH2M HILL.
©CH2M HILL

VERIFY SCALE
BAR IS ONE INCH ON ORIGINAL DRAWING.
0 1"
IF NOT ONE INCH ON THIS SHEET, ADJUST SCALES ACCORDINGLY.

CITY OF BELLINGHAM, WASHINGTON
FRONT PAGE TO CONTROL CONTENT
SECOND APPLICABLE AREA FOR FACILITIES

SOLIDS HANDLING FACILITY - EAST ADDITION
MECHANICAL
LOWER LEVEL PLAN

DWG NO. 530-M-1
DATE AUG. 1990
PROJ NO. SEA22462.C1

DRAWN BY: M. MOORE DESIGNED BY: J. WODRICH
DGN NAME: H:/PROJ2/BELLINGH/BL530M-B.DGN

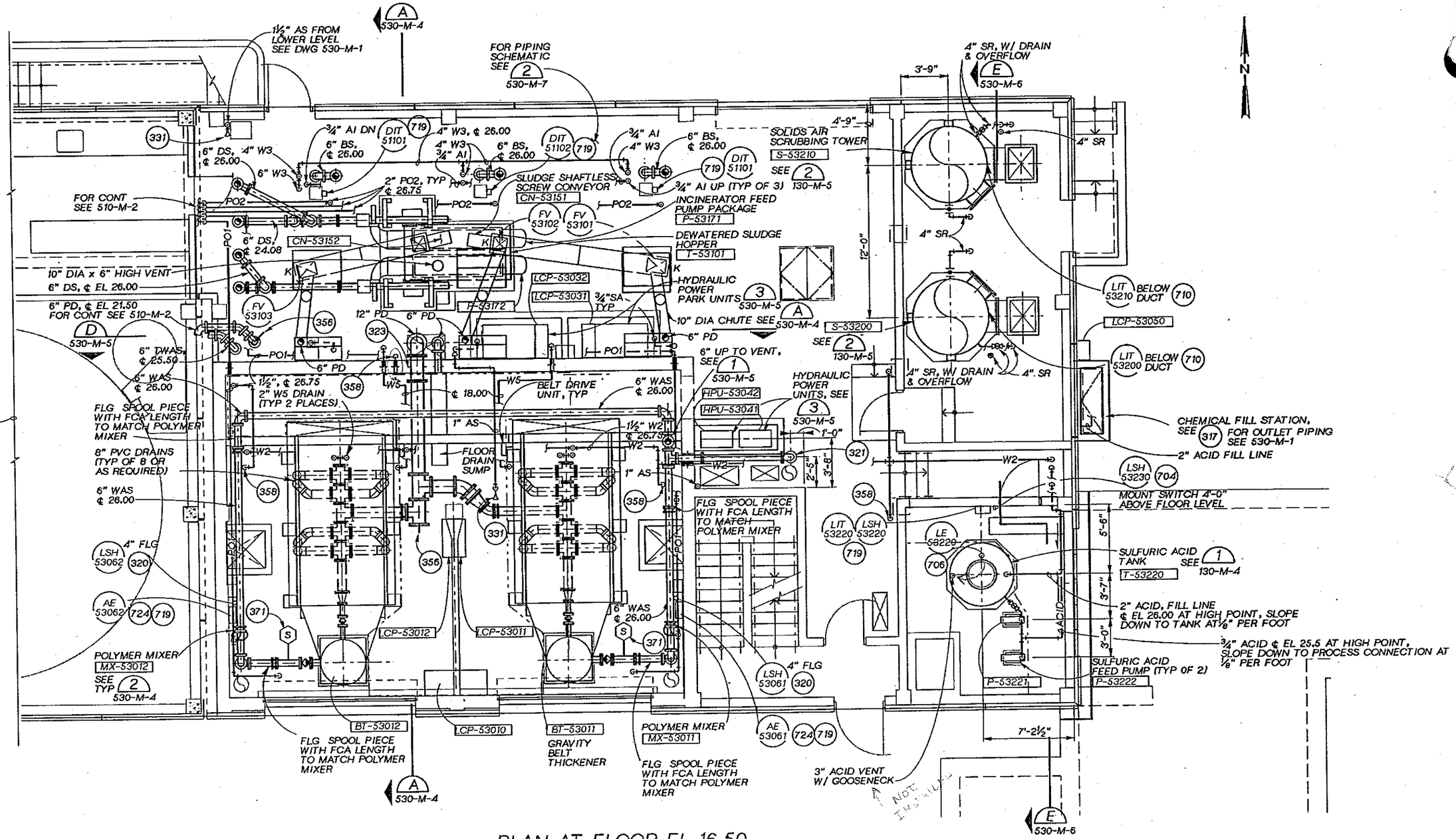

PLAN AT FLOOR EL 16.50

¼"= 1'-0"

DSGN	J. WODRICH				
DR	C. BROWN				
CHK	R. NAEF				
APVD	J. GAUTHIER	NO.	DATE	REVISION	BY	APVD

CH2M HILL

REUSE OF DOCUMENTS
THIS DOCUMENT, AND THE IDEAS AND DESIGNS INCORPORATED HEREIN, AS AN INSTRUMENT OF PROFESSIONAL SERVICE, IS THE PROPERTY OF CH2M HILL AND IS NOT TO BE USED, IN WHOLE OR IN PART, FOR ANY OTHER PROJECT WITHOUT THE WRITTEN AUTHORIZATION OF CH2M HILL.
©CH2M HILL

VERIFY SCALE
BAR IS ONE INCH ON ORIGINAL DRAWING.
0 1"
IF NOT ONE INCH ON THIS SHEET, ADJUST SCALES ACCORDINGLY.

CITY OF BELLINGHAM, WASHINGTON
POST POINT WASTEWATER TREATMENT PLANT UPGRADE

SOLIDS HANDLING FACILITY - EAST ADDITION
MECHANICAL
GROUND LEVEL PLAN

DWG NO. 530-M-2
DATE AUG. 1990
PROJ. NO. SEA22462.C1

OVERLAY IDENTIFICATION: PROJID, FILE; COMPOSITE, OVERLAY, SCREEN

DRAWN BY: M. MOORE DESIGNED BY: G. SAKAGAWA
DGN NAME: H:/PROJ2/BELLINGH/BL530M-C.DGN

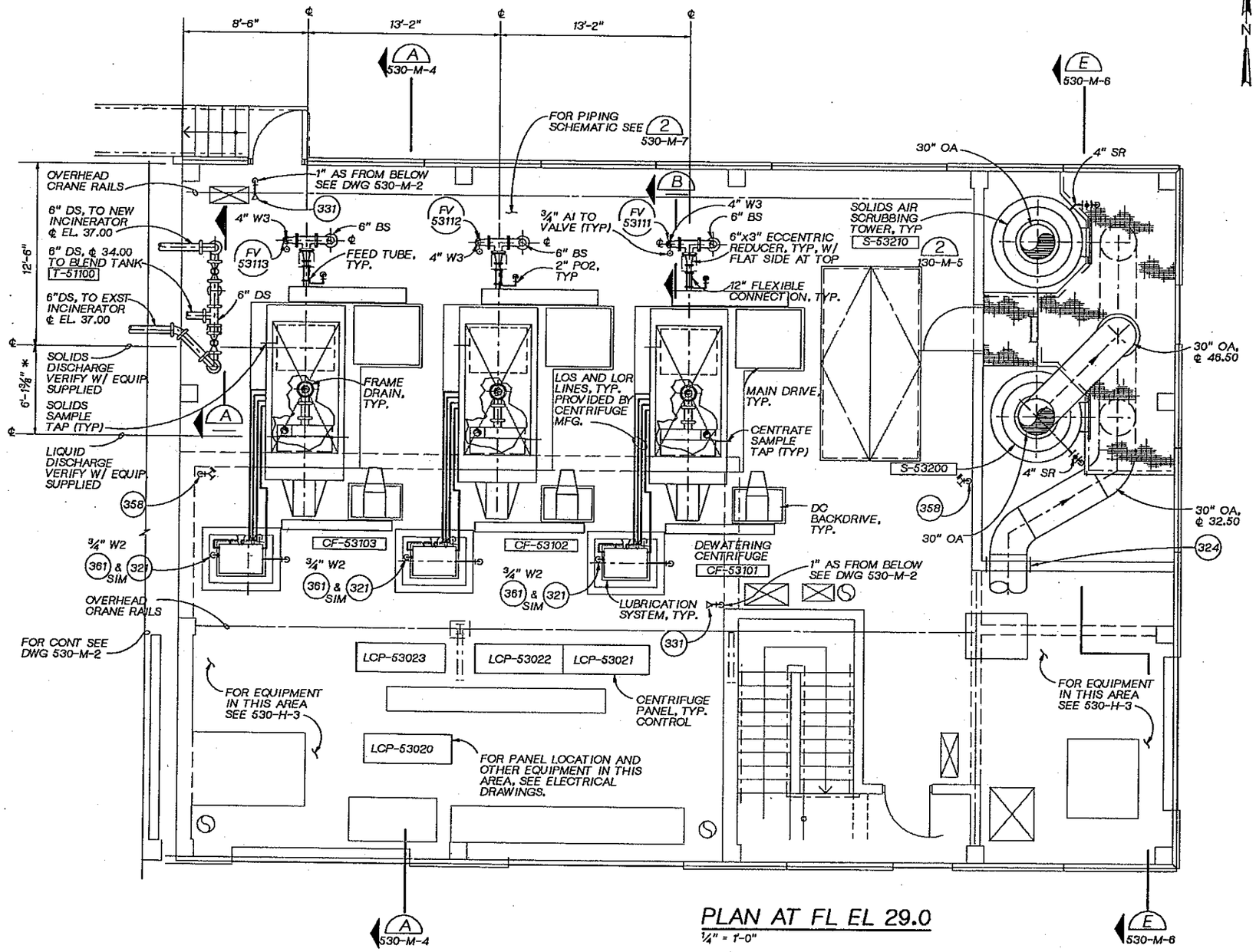

PLAN AT FL EL 29.0

1/4" = 1'-0"

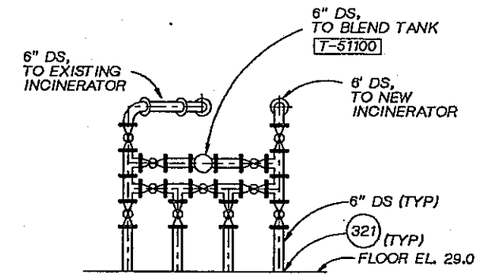

SECTION A

1/4" = 1'-0"

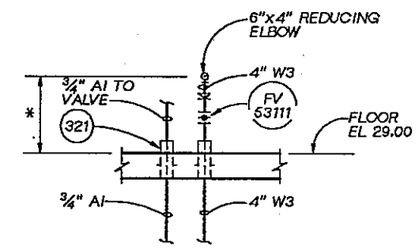

SECTION B

NTS

JOSEPH A. GAUTHIER STATE OF WASHINGTON REGISTERED PROFESSIONAL ENGINEER

CH2M HILL

DSGN	G. SAKAGAWA				
DR	A. MCRILL				
CHK	R. NAEF				
APVD	J. GAUTHIER	NO.	DATE	REVISION	BY / APVD

REUSE OF DOCUMENTS
THIS DOCUMENT, AND THE IDEAS AND DESIGNS INCORPORATED HEREIN, AS AN INSTRUMENT OF PROFESSIONAL SERVICE, IS THE PROPERTY OF CH2M HILL AND IS NOT TO BE USED, IN WHOLE OR IN PART, FOR ANY OTHER PROJECT WITHOUT THE WRITTEN AUTHORIZATION OF CH2M HILL.
©CH2M HILL

BAR IS ONE INCH ON ORIGINAL DRAWING. 0 1"
IF NOT ONE INCH ON THIS SHEET, ADJUST SCALES ACCORDINGLY.

CITY OF BELLINGHAM, WASHINGTON
POST POINT WASTEWATER TREATMENT PLANT UPGRADE

SOLIDS HANDLING BUILDING - EAST ADDITION
MECHANICAL
UPPER LEVEL PLAN

DWG NO. 530-M-3
DATE AUG. 1990
PROJ. NO. SEA22462.C1

COMPOSITE | OVERLAY GEN | OVERLAY IDENTIFIER | PROJID | FILE

DGN NAME: H:/PROJ2/BELLINGH/BL530M-D.DGN

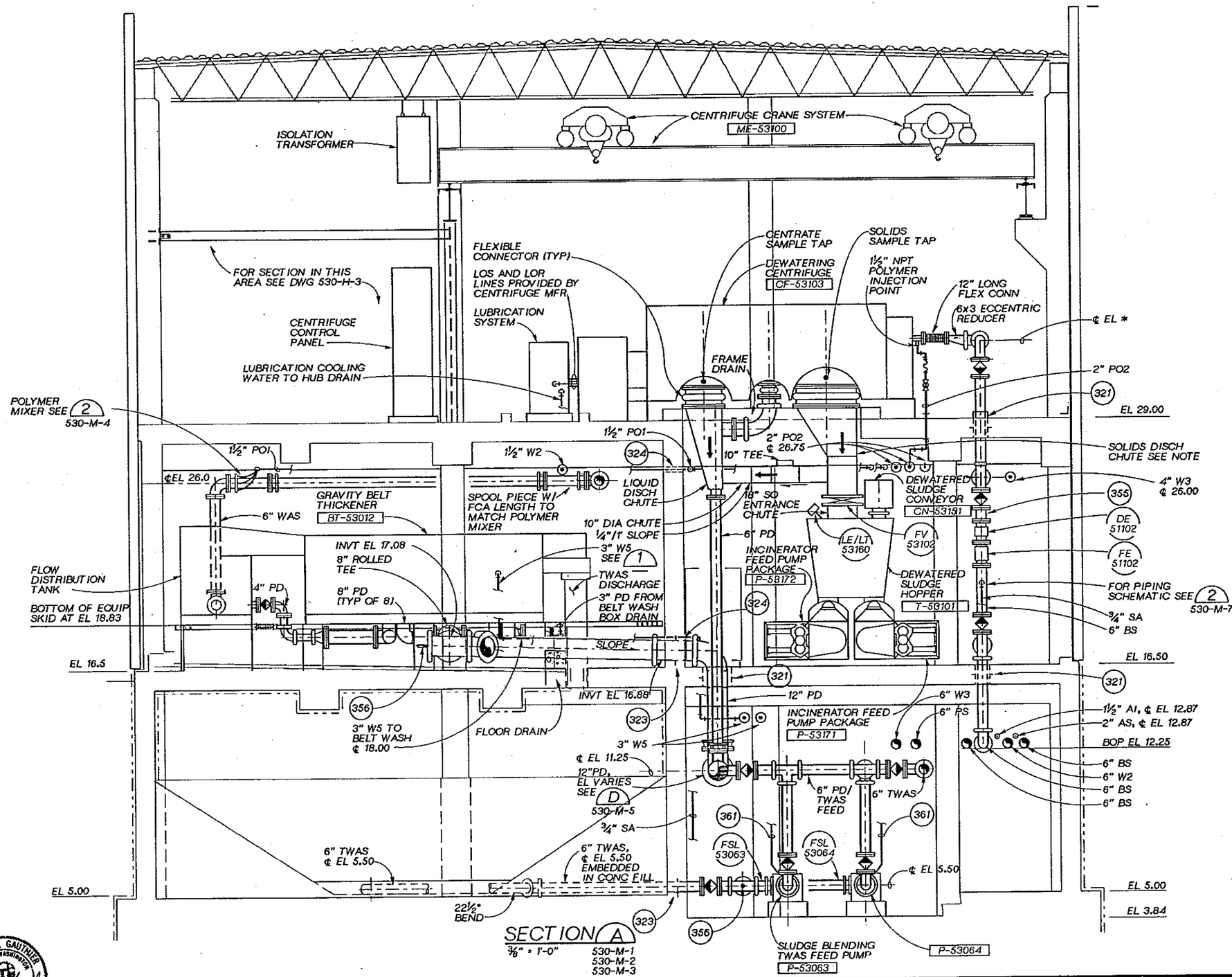

SECTION A
3/8" = 1'-0"
530-M-1
530-M-2
530-M-3

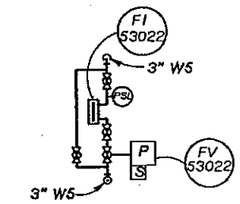

DETAIL 1
¼" = 1'-0"

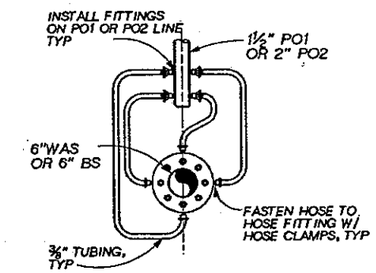

SECTION

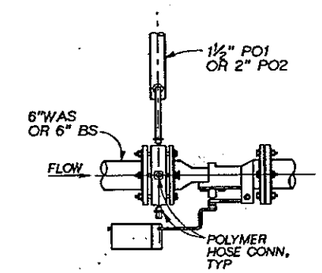

PLAN

POLYMER MIXER DETAIL 2
NTS
510-M-1
530-M-2

NOTE:
CHUTES FOR OTHER TWO CENTRIFUGES NOT SHOWN, BUT ARE SIMILAR TO NO. 2. SEE PLAN FOR ORIENTATION.

JOSEPH A. GAUTHIER STATE OF WASHINGTON REGISTERED PROFESSIONAL ENGINEER

CH2M HILL

DSGN	G.SAKAGAWA				
DR	J.PIERONI				
CHK	R. NAEF				
APVD	J. GAUTHIER	NO.	DATE	REVISION	BY / APVD

REUSE OF DOCUMENTS
THIS DOCUMENT, AND THE IDEAS AND DESIGNS INCORPORATED HEREIN, AS AN INSTRUMENT OF PROFESSIONAL SERVICE, IS THE PROPERTY OF CH2M HILL AND IS NOT TO BE USED, IN WHOLE OR IN PART, FOR ANY OTHER PROJECT WITHOUT THE WRITTEN AUTHORIZATION OF CH2M HILL.
©CH2M HILL

VERIFY SCALES
BAR IS ONE INCH ON ORIGINAL DRAWING.
0 1"
IF NOT ONE INCH ON THIS SHEET, ADJUST SCALES ACCORDINGLY.

CITY OF BELLINGHAM, WASHINGTON
POST POINT WASTEWATER TREATMENT PLANT UPGRADE

SOLIDS HANDLING FACILITY-EAST ADDITION
MECHANICAL SECTION

DWG NO. 530-M-[illegible]
DATE AUG. 1990
PROJ NO. SEA22462.C1

DRAWN BY: M. MOORE DESIGNED BY: M. HIGHTREE
DGN NAME: H:/PROJ2/BELLINGH/BL530M-E.DGN

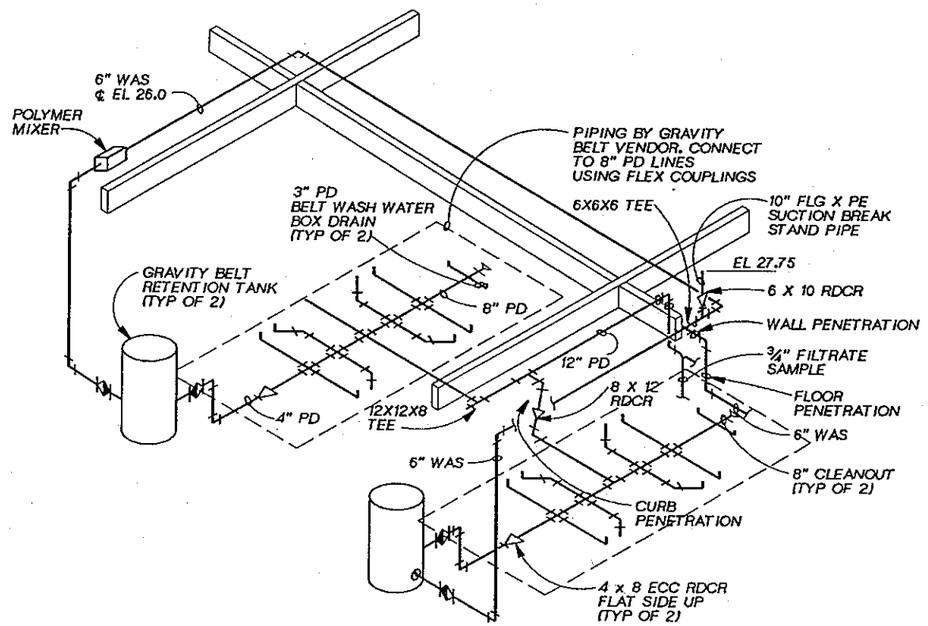

GRAVITY BELT THICKENER PIPING ISOMETRIC

DETAIL 1
530-M-2

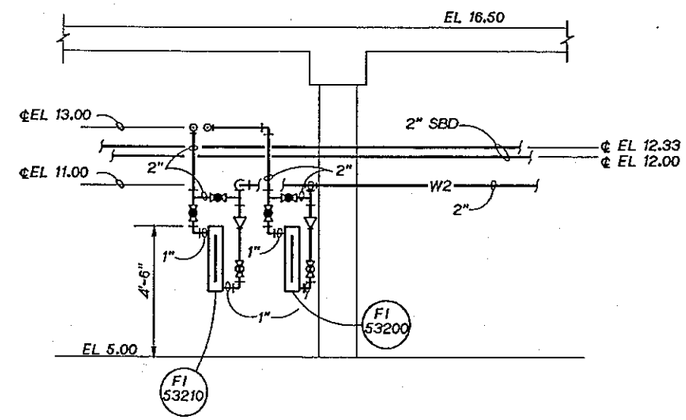

SECTION C
⅜" = 1'-0"
530-M-1

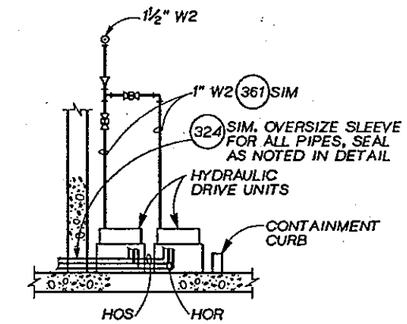

DETAIL 3
¼" = 1'-0"
530-M-2

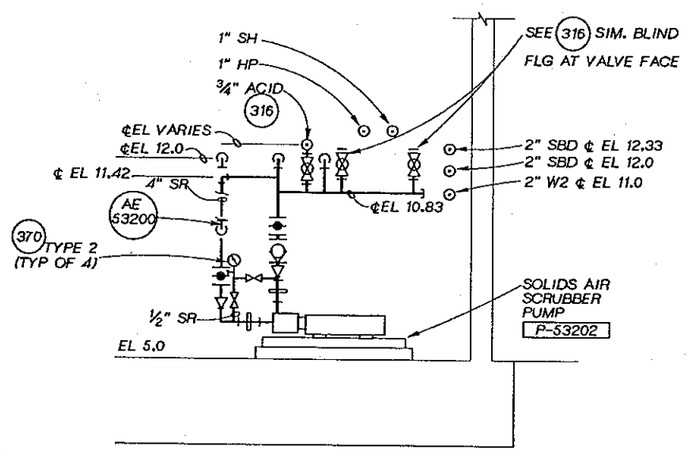

SECTION B
⅜" = 1'-0"
530-M-1

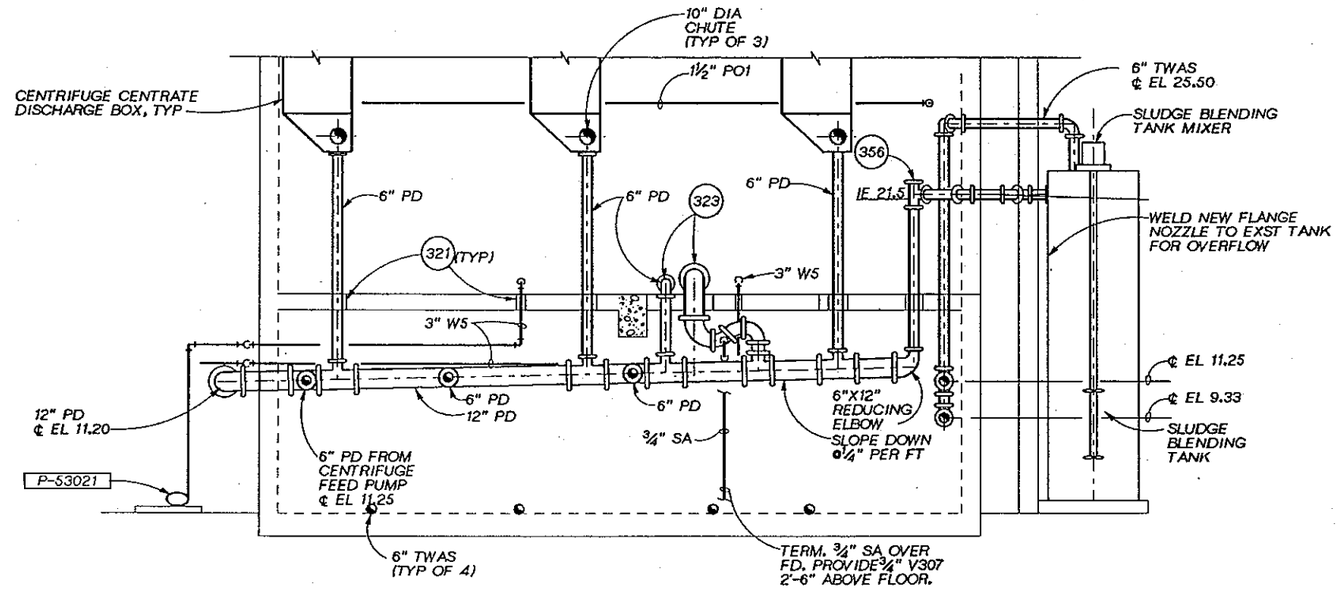

SECTION D
¼"=1'-0"
530-M-1
530-M-2

JOSEPH A. GAUTHIER STATE OF WASHINGTON REGISTERED PROFESSIONAL ENGINEER

CH2M HILL

DSGN	M. HIGHTREE				
DR	C. BROWN				
CHK	R. NAEF				
APVD	J. GAUTHIER	NO.	DATE	REVISION	BY / APVD

REUSE OF DOCUMENTS
THIS DOCUMENT, AND THE IDEAS AND DESIGNS INCORPORATED HEREIN, AS AN INSTRUMENT OF PROFESSIONAL SERVICE, IS THE PROPERTY OF CH2M HILL AND IS NOT TO BE USED, IN WHOLE OR IN PART, FOR ANY OTHER PROJECT WITHOUT THE WRITTEN AUTHORIZATION OF CH2M HILL.
©CH2M HILL

VERIFY SCALE
BAR IS ONE INCH ON ORIGINAL DRAWING.
0 1"
IF NOT ONE INCH ON THIS SHEET, ADJUST SCALES ACCORDINGLY.

CITY OF BELLINGHAM, WASHINGTON
POST POINT WASTEWATER TREATMENT PLANT UPGRADE

SOLIDS HANDLING FACILITY - EAST ADDITION
MECHANICAL SECTIONS AND DETAILS

DWG NO. 530-M-5
DATE AUG. 1990
PROJ NO. SEA22462.C1

DRAWN BY: M. MOORE DESIGNED BY: IPPOLITO
DGN NAME: H:/PROJ2/BELLINGH/BL530M-F

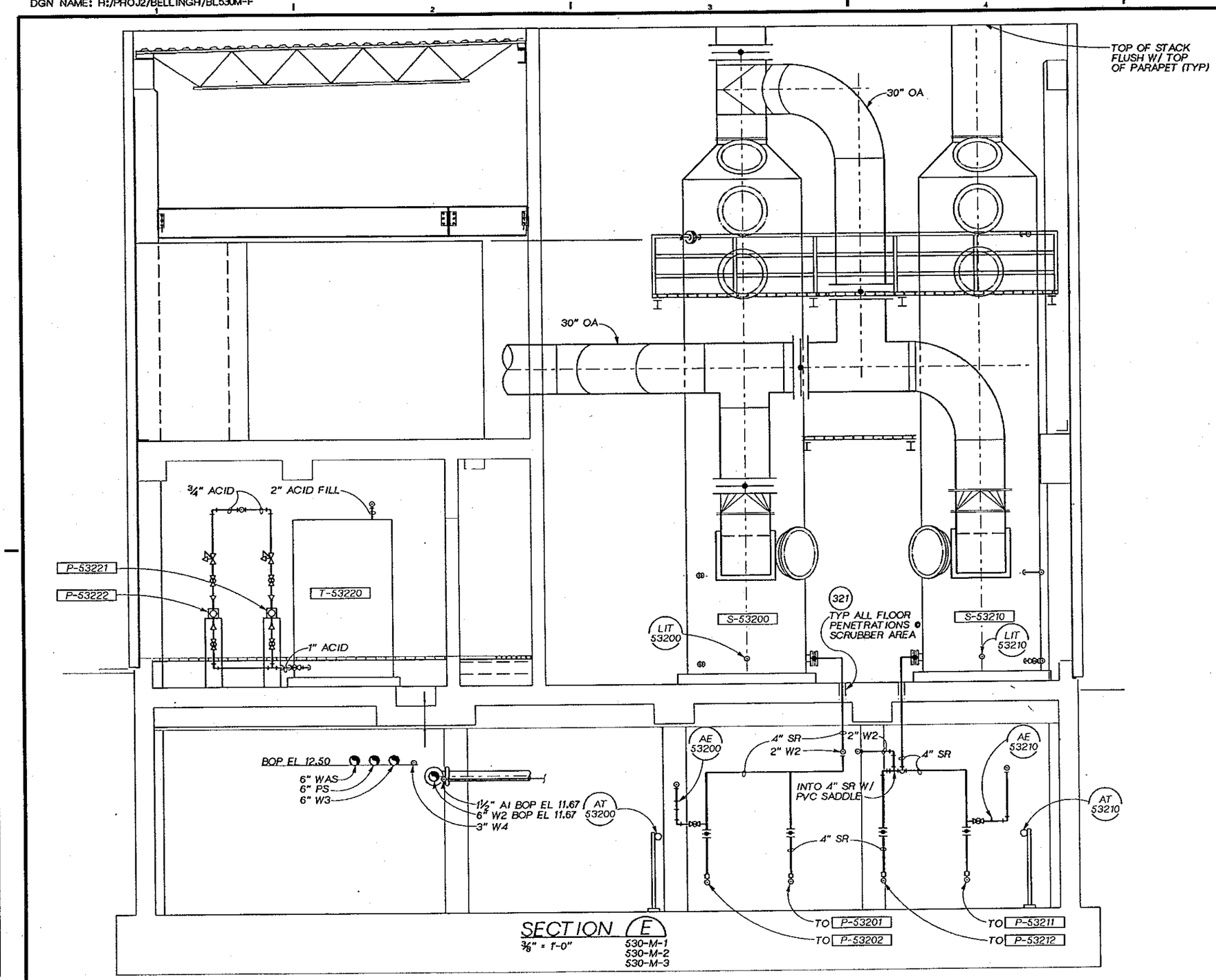

SECTION E
3/8" = 1'-0"
530-M-1
530-M-2
530-M-3

DSGN	S. IPPOLITO				
DR	J. PIERONI				
CHK	R. NAEF				
APVD	J. GAUTHIER	NO.	DATE	REVISION	BY	APVD

CH2M HILL

REUSE OF DOCUMENTS
THIS DOCUMENT, AND THE IDEAS AND DESIGNS INCORPORATED HEREIN, AS AN INSTRUMENT OF PROFESSIONAL SERVICE, IS THE PROPERTY OF CH2M HILL AND IS NOT TO BE USED, IN WHOLE OR IN PART, FOR ANY OTHER PROJECT WITHOUT THE WRITTEN AUTHORIZATION OF CH2M HILL.
©CH2M HILL

VERIFY SCALE
BAR IS ONE INCH ON ORIGINAL DRAWING.
0 1"
IF NOT ONE INCH ON THIS SHEET, ADJUST SCALES ACCORDINGLY.

CITY OF BELLINGHAM, WASHINGTON
POST POINT WASTEWATER TREATMENT PLANT UPGRADE

SOLIDS HANDLING FACILITY-EAST ADDITION
MECHANICAL
SECTIONS AND DETAILS

DWG NO. 530-M-6
DATE AUG. 1990
PROJ NO. SEA22462.C1

OVERLAY IDENTIFICATION
PROJD
FILE
COMPOSITE
OVERLAY
SCREEN

DRAWN BY: M. MOORE DESIGNED BY: G. SAKAGAWA
DGN NAME: H:/PROJ2/BELLINGH/BL530M-H.DGN

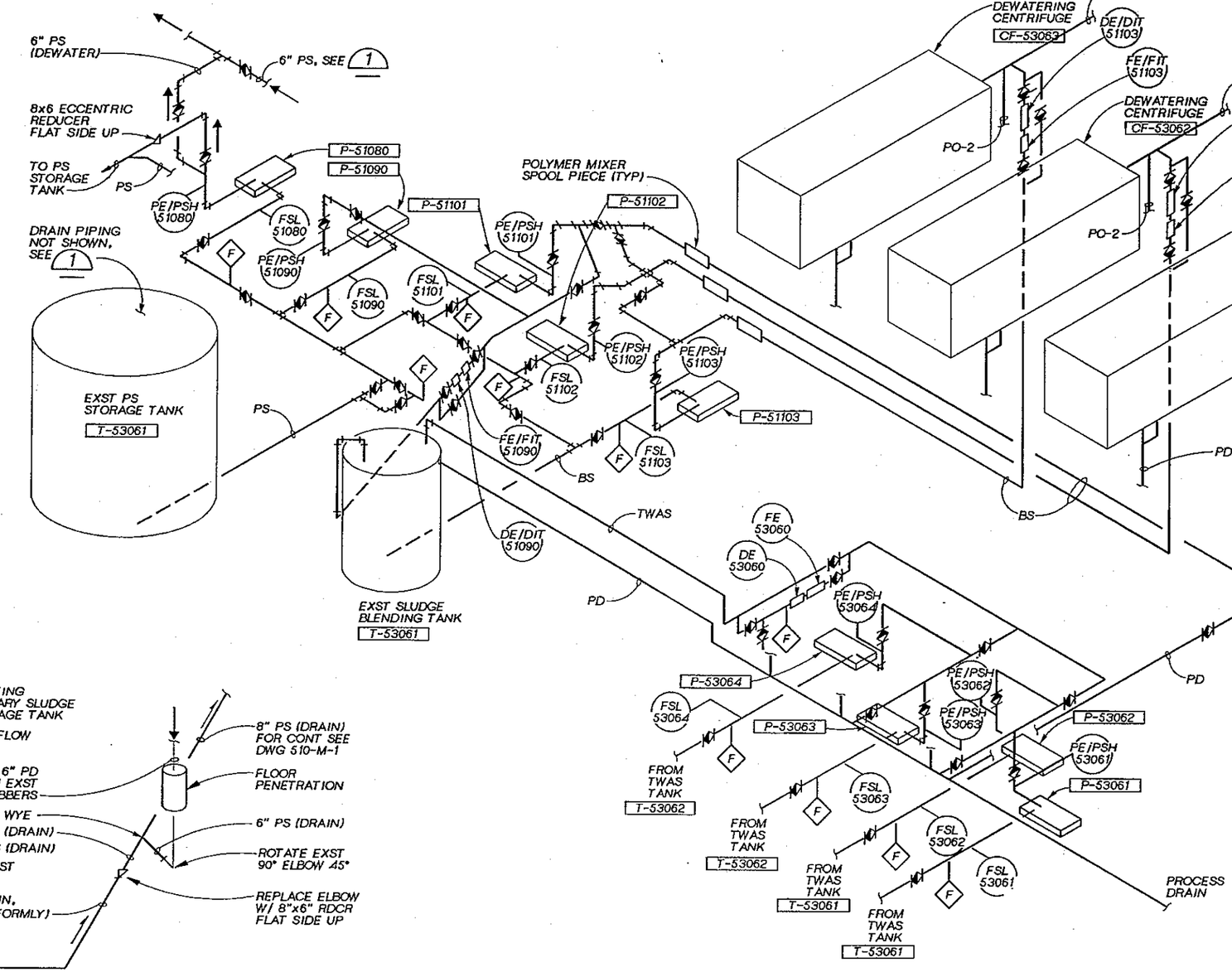

PIPING ISOMETRIC 2

NTS

510-M-1
530-M-1
530-M-2
530-M-3
530-M-4

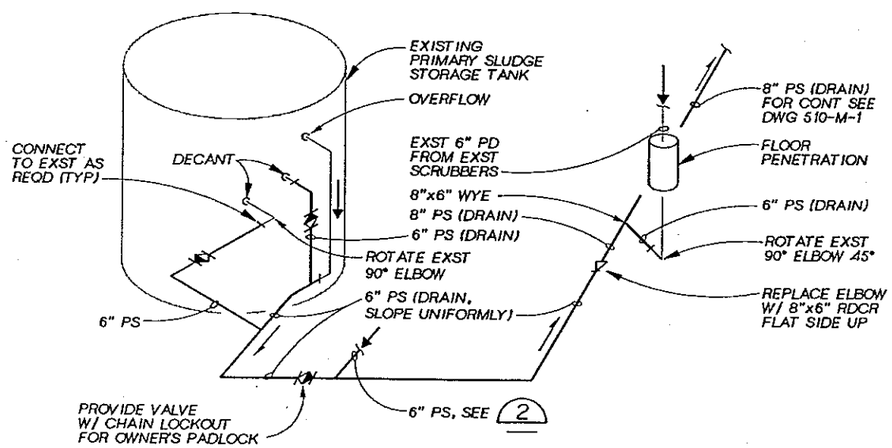

DRAIN PIPING SCHEMATIC 2

510-M-1

JOSEPH A. GAUTHIER STATE OF WASHINGTON REGISTERED PROFESSIONAL ENGINEER

CH2M HILL

DSGN	G SAKAGAWA
DR	M TO
CHK	R NAEF
APVD	J. GAUTHIER

NO.	DATE	REVISION	BY	APVD

REUSE OF DOCUMENTS

THIS DOCUMENT, AND THE IDEAS AND DESIGNS INCORPORATED HEREIN, AS AN INSTRUMENT OF PROFESSIONAL SERVICE, IS THE PROPERTY OF CH2M HILL AND IS NOT TO BE USED, IN WHOLE OR IN PART, FOR ANY OTHER PROJECT WITHOUT THE WRITTEN AUTHORIZATION OF CH2M HILL.

©CH2M HILL

VERIFY SCALE
BAR IS ONE INCH ON ORIGINAL DRAWING.
0 1"
IF NOT ONE INCH ON THIS SHEET, ADJUST SCALES ACCORDINGLY.

CITY OF BELLINGHAM, WASHINGTON
POST POINT WASTEWATER TREATMENT PLANT UPGRADE

SOLIDS HANDLING FACILITY - EAST ADDITION

MECHANICAL
PIPING ISOMETRIC

DWG NO. 530-M-7
DATE AUG. 1990
PROJ. NO. SEA22462.C1

DGN NAME: H:/PROJ2/BELLINGH/BL530H-A.DGN

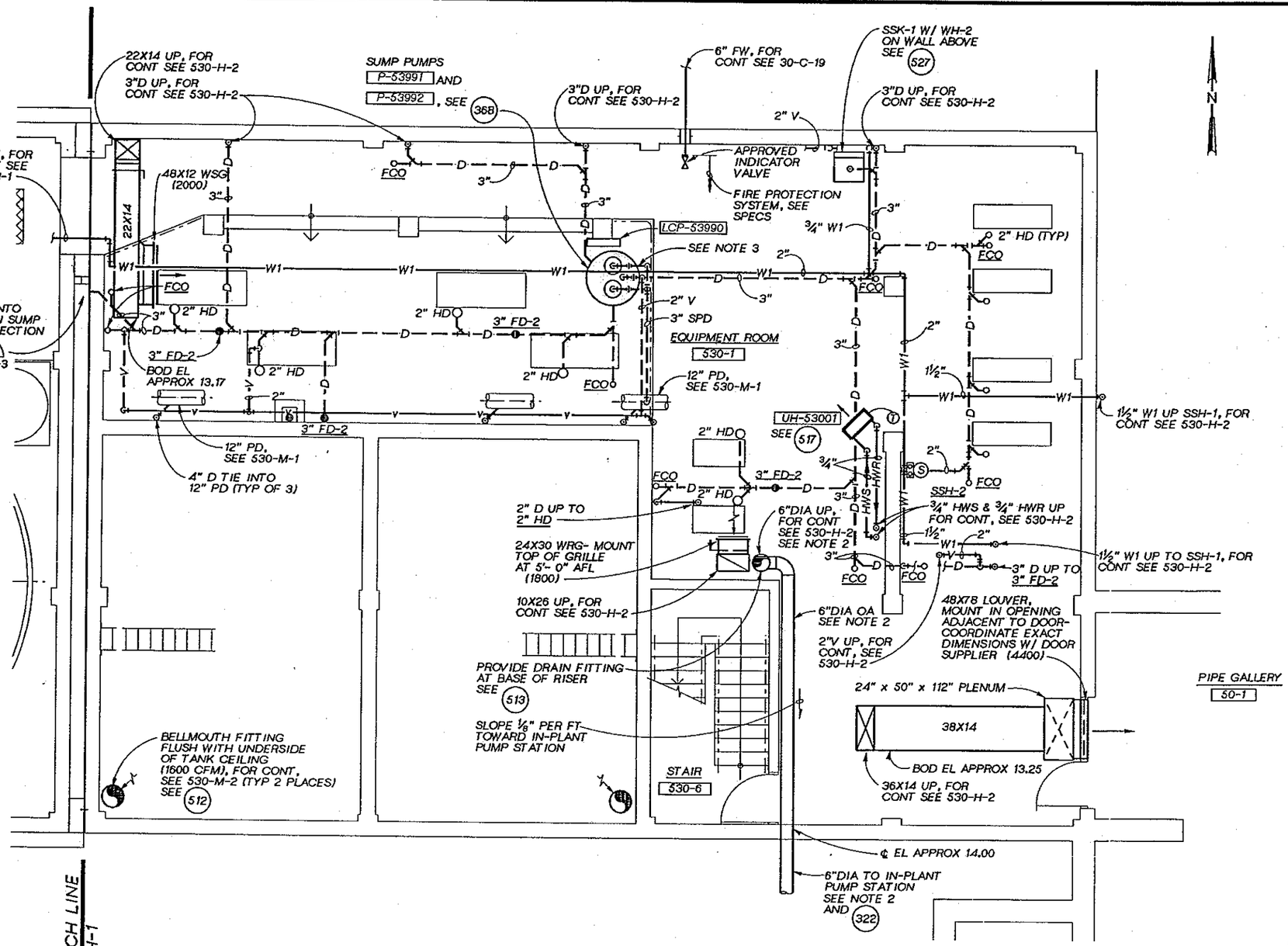

LOWER LEVEL PLAN AT EL. 5.00

¼"=1'-0"

NOTES:

1. MOUNT UNIT HEATER WITH BOTTOM AT EL 13.00, MOUNT THERMOSTAT AT EL 10.50.
2. OA DUCT TO IN-PLANT PUMP STATION SHALL BE GLASS-LINED DUCTILE IRON SPEC 15060-03 FROM EL 18.00 TO PUMP STATION.
3. PROVIDE "UNISTRUT" TYPE FRAME TO SUPPORT PIPING AND VALVES FOR SUMP.

JOSEPH A. GAUTHIER — STATE OF WASHINGTON — REGISTERED PROFESSIONAL ENGINEER

CH2M HILL

DSGN	G FLOOD
DR	SD GUNDY
CHK	J.A. SIEMENS
APVD	J. GAUTHIER

NO.	DATE	REVISION	BY	APVD

REUSE OF DOCUMENTS

THIS DOCUMENT, AND THE IDEAS AND DESIGNS INCORPORATED HEREIN, AS AN INSTRUMENT OF PROFESSIONAL SERVICE, IS THE PROPERTY OF CH2M HILL AND IS NOT TO BE USED, IN WHOLE OR IN PART, FOR ANY OTHER PROJECT WITHOUT THE WRITTEN AUTHORIZATION OF CH2M HILL.
©CH2M HILL

VERIFY SCALE
BAR IS ONE INCH ON ORIGINAL DRAWING.
0 1"
IF NOT ONE INCH ON THIS SHEET, ADJUST SCALES ACCORDINGLY.

CITY OF BELLINGHAM, WASHINGTON
POST POINT WASTEWATER TREATMENT PLANT UPGRADE

SOLIDS HANDLING FACILITY - EAST ADDITION

HVAC AND PLUMBING LOWER LEVEL PLAN

DWG NO. 530-H-1
DATE AUG. 1990
PROJ NO. SEA22462.C1

DRAWN BY: B. CARR DESIGNED BY: SD GUNDY/G FLOOD
DGN NAME: H:/PROJ2/BELLINGH/BL530H-B.DGN

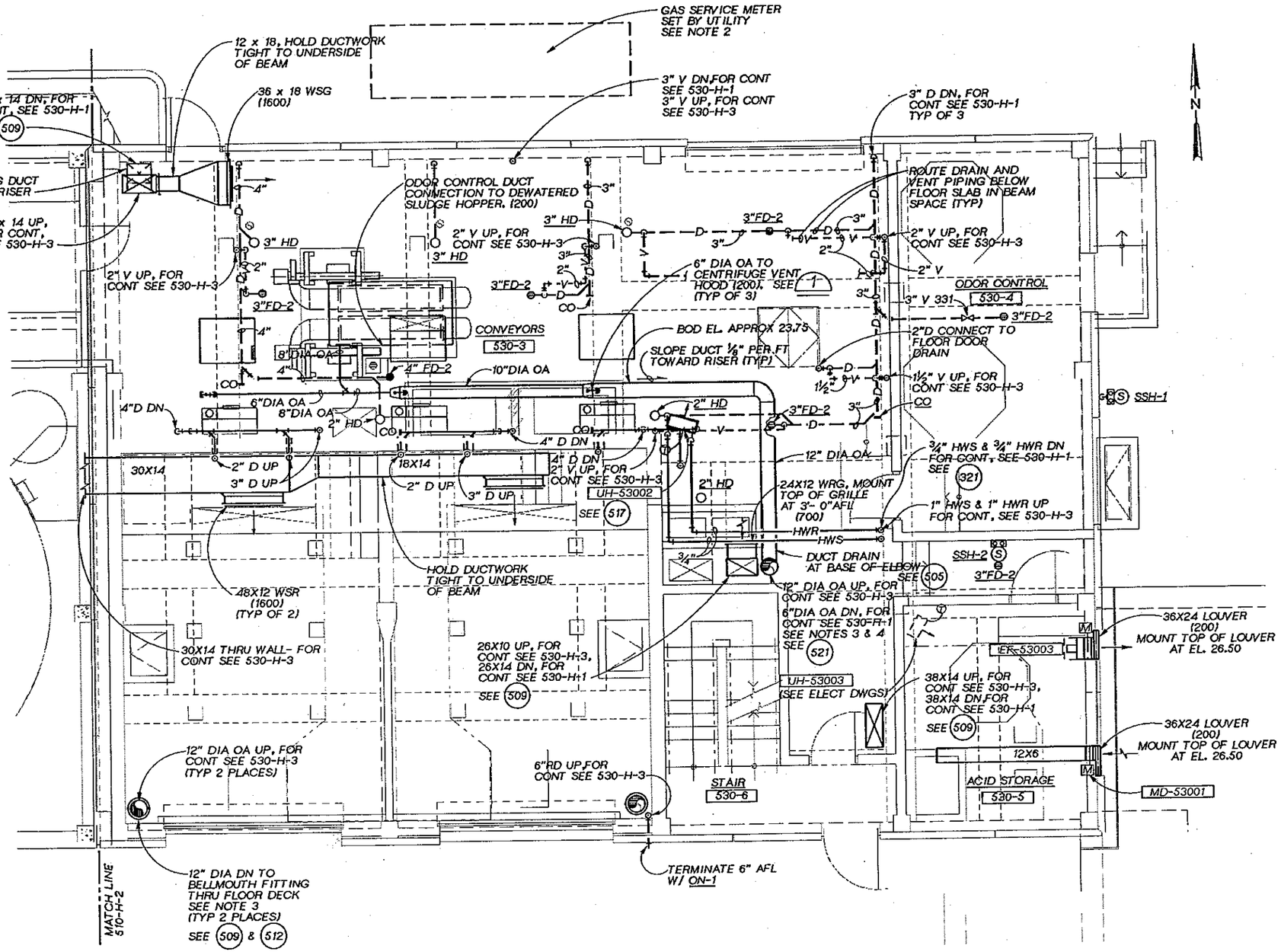

GROUND LEVEL PLAN AT ELEVATION 16.50

¼"=1'-0"

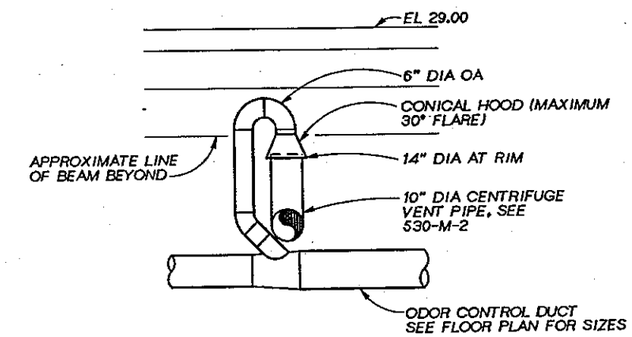

DETAIL 1

NTS

NOTES:

1. MOUNT UNIT HEATER WITH BOTTOM AT EL. 24.50. MOUNT THERMOSTAT AT EL. 22.00.
2. COORDINATE INSTALLATION OF GAS PIPING AND METER WITH CASCADE NATURAL GAS UP THROUGH METER AND REGULATOR. DOWNSTREAM OF REGULATOR AND METER TO BE PROVIDED BY CONTRACTOR. SEE ALSO YARD PIPING AND SPECIFICATION SECTION 15400.
3. PROVIDE BLAST GATE BALANCING DAMPER AT EACH ODOR ONTROL DUCT CONNECTION TO EQUIPMENT. BUTTERFLY - TYPE BALANCING DAMPERS SHALL NOT BE USED.
4. OA DUCT TO IN-PLANT PUMP STATION SHALL BE GLASS-LINED DUCTILE IRON PER SPEC 15060-03 FROM EL. 18.00 TO PUMP STATION.

JOSEPH A. GAUTHIER, STATE OF WASHINGTON, REGISTERED PROFESSIONAL ENGINEER

CH2M HILL

DSGN	G. FLOOD
DR	SD GUNDY
CHK	J. SIEMENS
APVD	J. GAUTHIER

NO.	DATE	REVISION	BY	APVD

REUSE OF DOCUMENTS
THIS DOCUMENT, AND THE IDEAS AND DESIGNS INCORPORATED HEREIN, AS AN INSTRUMENT OF PROFESSIONAL SERVICE, IS THE PROPERTY OF CH2M HILL AND IS NOT TO BE USED, IN WHOLE OR IN PART, FOR ANY OTHER PROJECT WITHOUT THE WRITTEN AUTHORIZATION OF CH2M HILL.
©CH2M HILL

VERIFY SCALE
BAR IS ONE INCH ON ORIGINAL DRAWING.
0 1"
IF NOT ONE INCH ON THIS SHEET, ADJUST SCALES ACCORDINGLY.

CITY OF BELLINGHAM, WASHINGTON
POST POINT WASTEWATER TREATMENT PLANT UPGRADE

SOLIDS HANDLING FACILITY - EAST ADDITION
HVAC AND PLUMBING
GROUND LEVEL PLAN

DWG NO. 530-H-2
DATE AUG. 1990
PROJ NO. SEA22462.C1

OVERLAY IDENTIFICATION: COMPOSITE, OVERLAY, SCREEN
PROJ ID
FILE
CHECKED BY
DRAWN BY
DESIGNED BY

DRAWN BY: SD GUNDY DESIGNED BY: SD GUNDY/G FLOOD
DGN NAME: H:/PROJ2/BELLINGH/BL630H-C.DGN

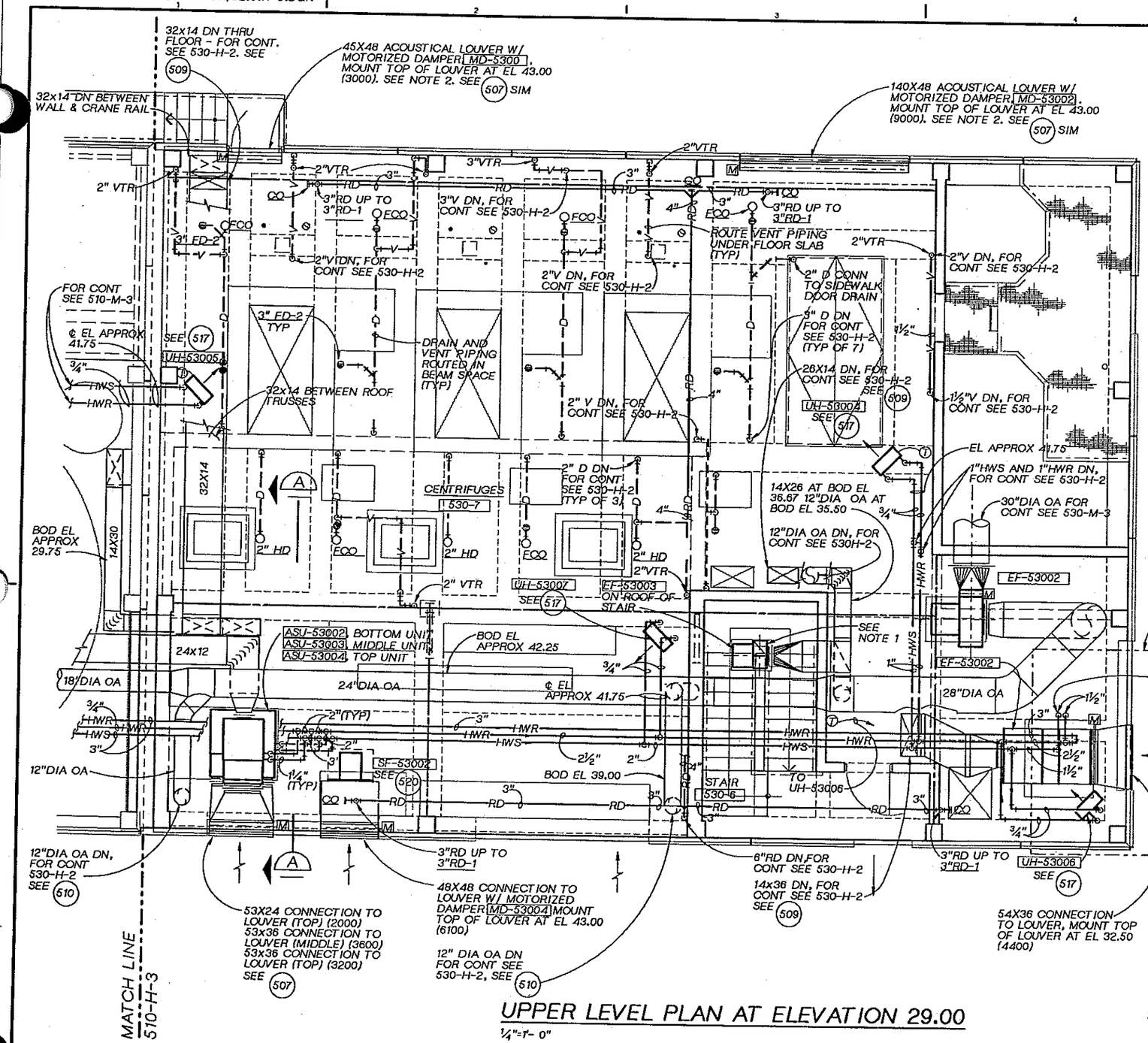

UPPER LEVEL PLAN AT ELEVATION 29.00

¼"=1'- 0"

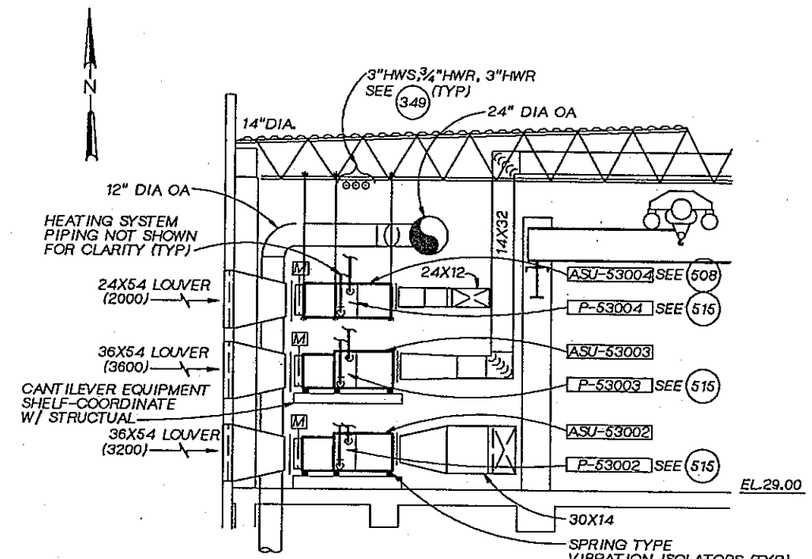

SECTION A

¼"=1'- 0"

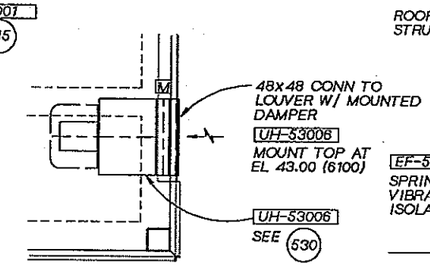

DETAIL 1

¼"=1'- 0" 530-H-3

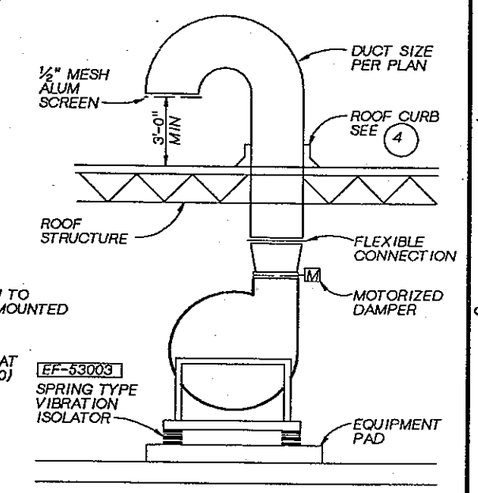

DETAIL 2

NTS

NOTES:

1. MOUNT UNIT HEATERS WITH BOTTOM AT EL 37.00 UNLESS OTHERWISE NOTED. MOUNT THERMOSTAT AT EL 34.50.
2. TOTAL SPACE AVAILABLE FOR ACOUSTICAL LOUVER, MOTORIZED DAMPER AND OPERATOR APPROX 18". COORDINATE INSTALLATION W/ OVERHEAD CRANE AND ARCHITECTURAL TO AVOID CONFLICT.
3. 20x16 UP THRU ROOF TO GOOSENECK, SEE 2.

JOSEPH A. GAUTHIER STATE OF WASHINGTON REGISTERED PROFESSIONAL ENGINEER

CH2M HILL

DSGN	G.FLOOD
DR	S.D. GUNDY
CHK	J.A.SIEMENS
APVD	J. GAUTHIER

NO.	DATE	REVISION	BY	APVD

REUSE OF DOCUMENTS
THIS DOCUMENT, AND THE IDEAS AND DESIGNS INCORPORATED HEREIN, AS AN INSTRUMENT OF PROFESSIONAL SERVICE, IS THE PROPERTY OF CH2M HILL AND IS NOT TO BE USED, IN WHOLE OR IN PART, FOR ANY OTHER PROJECT WITHOUT THE WRITTEN AUTHORIZATION OF CH2M HILL.
©CH2M HILL

BAR IS ONE INCH ON ORIGINAL DRAWING. 0 1"
IF NOT ONE INCH ON THIS SHEET, ADJUST SCALES ACCORDINGLY.

CITY OF BELLINGHAM, WASHINGTON
POST POINT WASTEWATER TREATMENT PLANT UPGRADE

SOLIDS HANDLING FACILITY - EAST ADDITION
HVAC AND PLUMBING
UPPER LEVEL PLAN AND SECTIONS

DWG NO. 530-H-3
DATE AUG. 1990
PROJ. NO. SEA22462.C1

OVERLAY IDENTIFICATION: COMPOSITE, OVERLAY, PROJD, FILE

DRAWN BY: GH BURLEY DESIGNED BY:
DGN NAME: H:/PROJ2/BELLINGH/BL710A-A.DGN

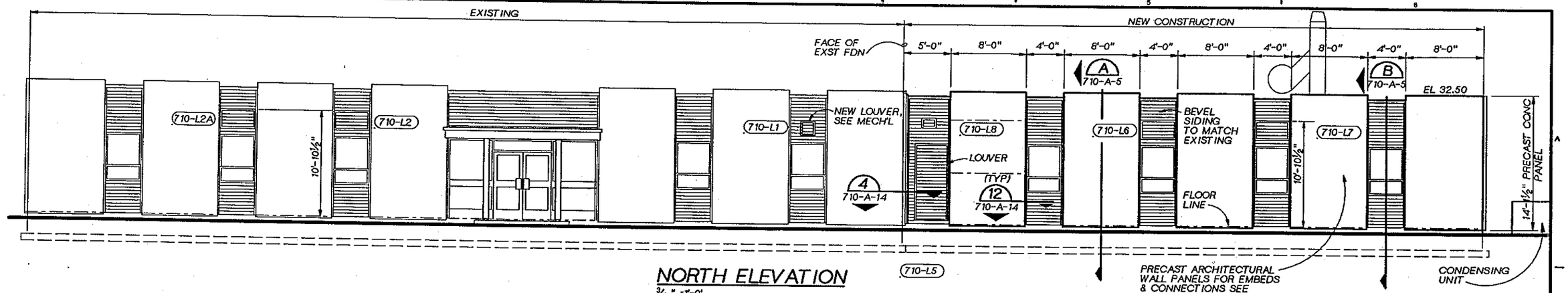

NORTH ELEVATION

3/16" =1'-0'

NOTES

1. FOR PANEL DETAILS SEE DWG 710-S-4
2. FOR STANDARD DETAILS SEE THE "800" SECTION OF THE DWGS.
3. FOR LOUVER SIZES AND TYPES, SEE SPECIFICATION SECTION 10200.
4. FOR EXTERIOR COLORS & FINISHES, SEE SPECIFICATION SECTION 09000.

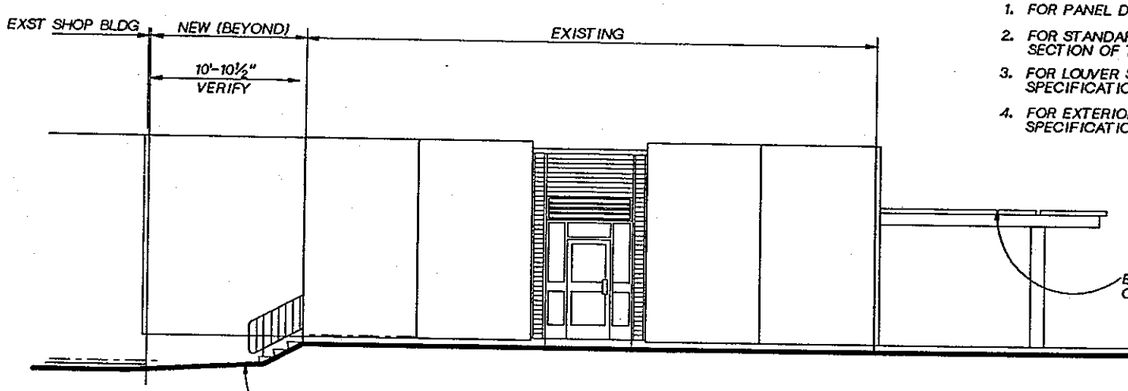

EAST ELEVATION

3/16" =1'-0"

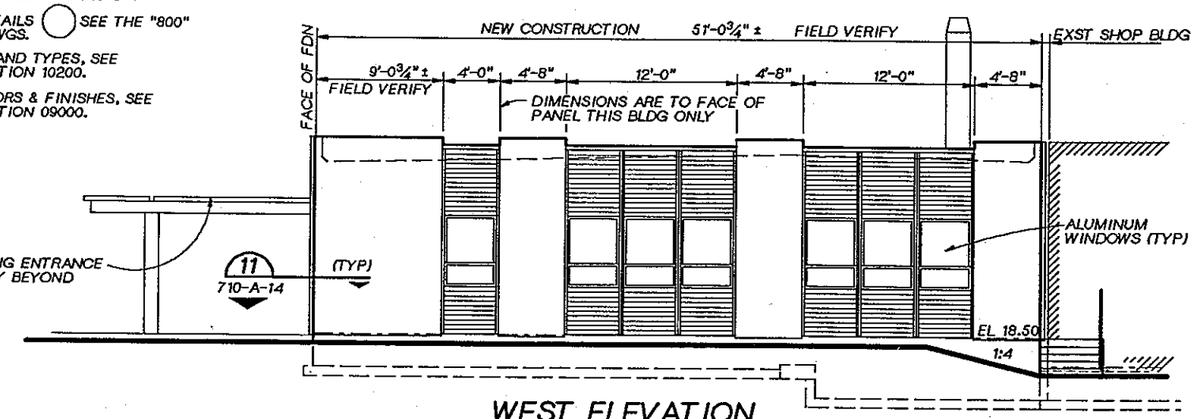

WEST ELEVATION

3/16" =1'-0"

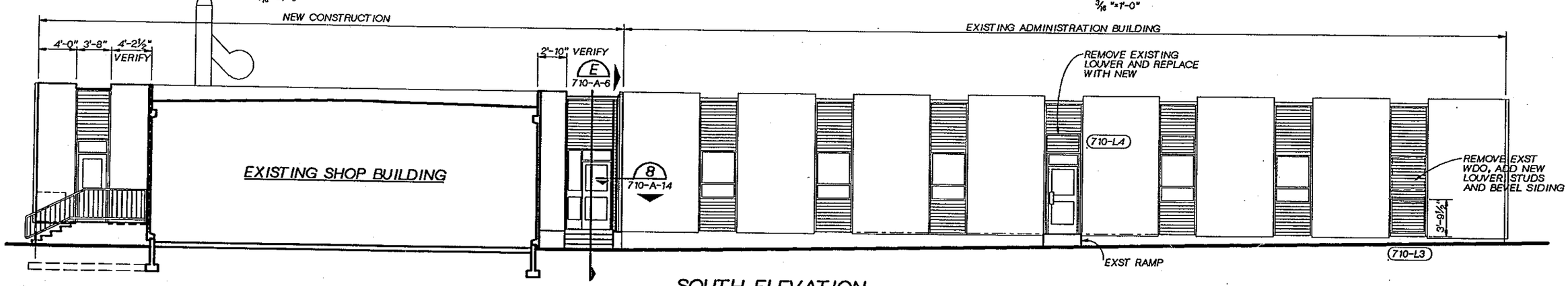

SOUTH ELEVATION

3/16" =1'-0'

REGISTERED ARCHITECT JOHN Z. PRIES STATE OF WASHINGTON

CH2M HILL

DSGN	G BOWER				
DR	G BOWER				
CHK	R WHITE				
APVD	J. GAUTHIER	NO.	DATE	REVISION	BY	APVD

REUSE OF DOCUMENTS

THIS DOCUMENT, AND THE IDEAS AND DESIGNS INCORPORATED HEREIN, AS AN INSTRUMENT OF PROFESSIONAL SERVICE, IS THE PROPERTY OF CH2M HILL AND IS NOT TO BE USED, IN WHOLE OR IN PART, FOR ANY OTHER PROJECT WITHOUT THE WRITTEN AUTHORIZATION OF CH2M HILL.

©CH2M HILL

BAR IS ONE INCH ON ORIGINAL DRAWING. 0 1"
IF NOT ONE INCH ON THIS SHEET, ADJUST SCALES ACCORDINGLY.

CITY OF BELLINGHAM, WASHINGTON
POST POINT WASTEWATER TREATMENT PLANT UPGRADE

ADMINISTRATION / LABORATORY BUILDING

ARCHITECTURAL ELEVATIONS

DWG NO. 710-A-1
DATE AUG. 1990
PROJ NO. SEA22462.C1

DATE: 8-9-90
DRAWN BY: GH BURLEY DESIGNED BY:
DGN NAME: H:/PROJ2/BELLINGH/BL710A-B.DGN

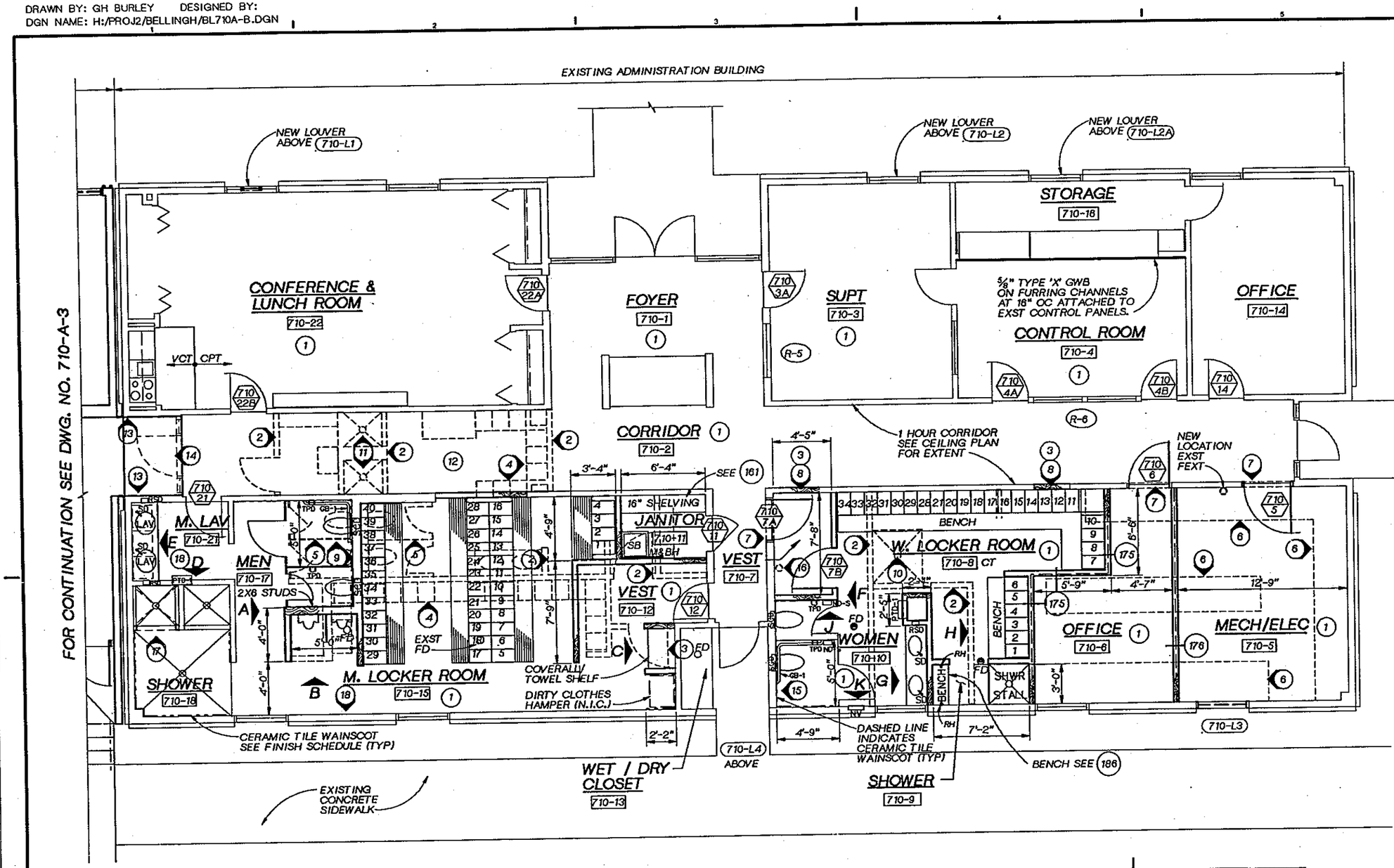

ADMINISTRATION BUILDING FLOOR PLAN

1/4" = 1'-0"

DEMOLITION NOTES

1. REMOVE EXISTING CEILING INCLUDING TEE BAR GRID AND ACOUSTICAL TILE, LUMINAIRES, DUCTS AND CEILING GRILLES (TYP ALL EXST CEILINGS)
2. REMOVE WOOD STUD AND GYPSUM WALLBOARD PARTITION
3. REMOVE WOOD DOOR AND FRAME
4. REMOVE EXISTING METAL LOCKERS
5. REMOVE EXISTING METAL TOILET PARTITIONS, WATER CLOSETS AND URINALS.
6. REMOVE EXISTING WOOD LABORATORY CASEWORK AND EQUIPMENT
7. FRAME NEW OPENING IN EXISTING WOOD STUD AND GYPSUM WALLBOARD BEARING WALL. PROVIDE NEW DOOR, FRAME, AND HARDWARE AS SCHEDULED
8. CONSTRUCT WOOD STUD AND GYPSUM WALLBOARD CLOSURE IN EXISTING DOOR OPENING. MATCH ADJACENT WALL.
9. REMOVE EXISTING CERAMIC TILE WAINSCOT AND GYPSUM WALL BOARD. PROVIDE NEW WATER RESISTANT WALLBOARD AND CERAMIC TILE WAINSCOT AS SHOWN ON PLAN.
10. PLUG DRAIN HOLE WITH CONCRETE AND FINISH SMOOTH WITH ADJACENT FLOOR.
11. REMOVE EXISTING SHOWER BASE AND PATCH FLOOR SMOOTH AND LEVEL WITH ADJACENT SURFACE
12. PATCH HOLES IN FLOOR AND WALLS SMOOTH AND LEVEL WITH ADJACENT SURFACES
13. REMOVE EXISTING WOOD SIDING. INSTALL NEW GYPSUM WALLBOARD, FINISH AND PAINT
14. REMOVE EXISTING ALUMINUM FRAME, DOOR AND HARDWARE
15. REMOVE EXISTING WALLBOARD, INSTALL PLUMBING AND APPLY NEW WALLBOARD AND FINISH AS SCHEDULED.
16. MOVE EXISTING FIRE EXTINGUISHER TO MECHANICAL/ELECTRICAL ROOM 710-5
17. REMOVE EXISTING SHOWER COMPARTMENT AND INSTALL NEW SHOWER COMPARTMENT.
18. REMOVE EXISTING CERAMIC TILE BASE AND WAINSCOT THROUGHOUT.

NOTES

1. FOR GENERAL NOTES, SEE DWG. NO. 710-A-3.
2. FOR INTERIOR ELEVATIONS, SEE DWG. NO. 710-A-10.
3. FOR INTERIOR COLORS AND FINISHES SEE INTERIOR FINISH SCHEDULE IN SPECIFICATION SECTION 09000.
4. FOR DOOR AND HARDWARE SCHEDULE, SEE SPECIFICATION SECTION 08001.
5. FOR STANDARD DETAILS, SEE SECTION 800 OF THE DRAWINGS.
6. FOR ABBREVIATIONS, SEE DWG. NO. 10-G-5.
7. FOR MATERIALS LEGEND, SEE DWG. NO. 10-G-6.
8. UNLESS OTHERWISE NOTED, ALL INTERIOR PARTITIONS SHALL BE 2X4 STUDS @ 16" OC WITH 5/8" TYPE 'X' GWB EACH SIDE. FOR PARTITION HEIGHTS, SEE REFLECTED CEILING PLAN.

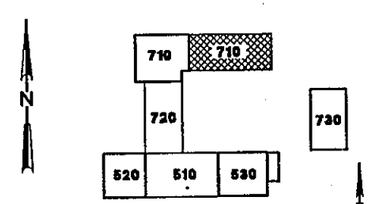

KEY PLAN

REGISTERED ARCHITECT JOHN Z FRIAS STATE OF WASHINGTON

CH2M HILL

DSGN	G BOWER				
DR	G BOWER				
CHK	R WHITE				
APVD	J GAUTHIER	NO.	DATE	REVISION	BY / APVD

REUSE OF DOCUMENTS
THIS DOCUMENT, AND THE IDEAS AND DESIGNS INCORPORATED HEREIN, AS AN INSTRUMENT OF PROFESSIONAL SERVICE, IS THE PROPERTY OF CH2M HILL AND IS NOT TO BE USED, IN WHOLE OR IN PART, FOR ANY OTHER PROJECT WITHOUT THE WRITTEN AUTHORIZATION OF CH2M HILL.
©CH2M HILL

BAR IS ONE INCH ON ORIGINAL DRAWING. 0 1"
IF NOT ONE INCH ON THIS SHEET, ADJUST SCALES ACCORDINGLY.

CITY OF BELLINGHAM, WASHINGTON
POST POINT WASTEWATER TREATMENT PLANT UPGRADE

ADMINISTRATION / LABORATORY BUILDING
ARCHITECTURAL
EXISTING BUILDING MODIFICATIONS
FLOOR PLAN

DWG NO. 710-A-2
DATE AUG. 1990
PROJ. NO. SEA22462.C1

DATE: 8/26/90
DRAWN BY: GH BURLEY DESIGNED BY:
DGN NAME: H:/PROJ2/BELLINGH/BL710A-C.dgn

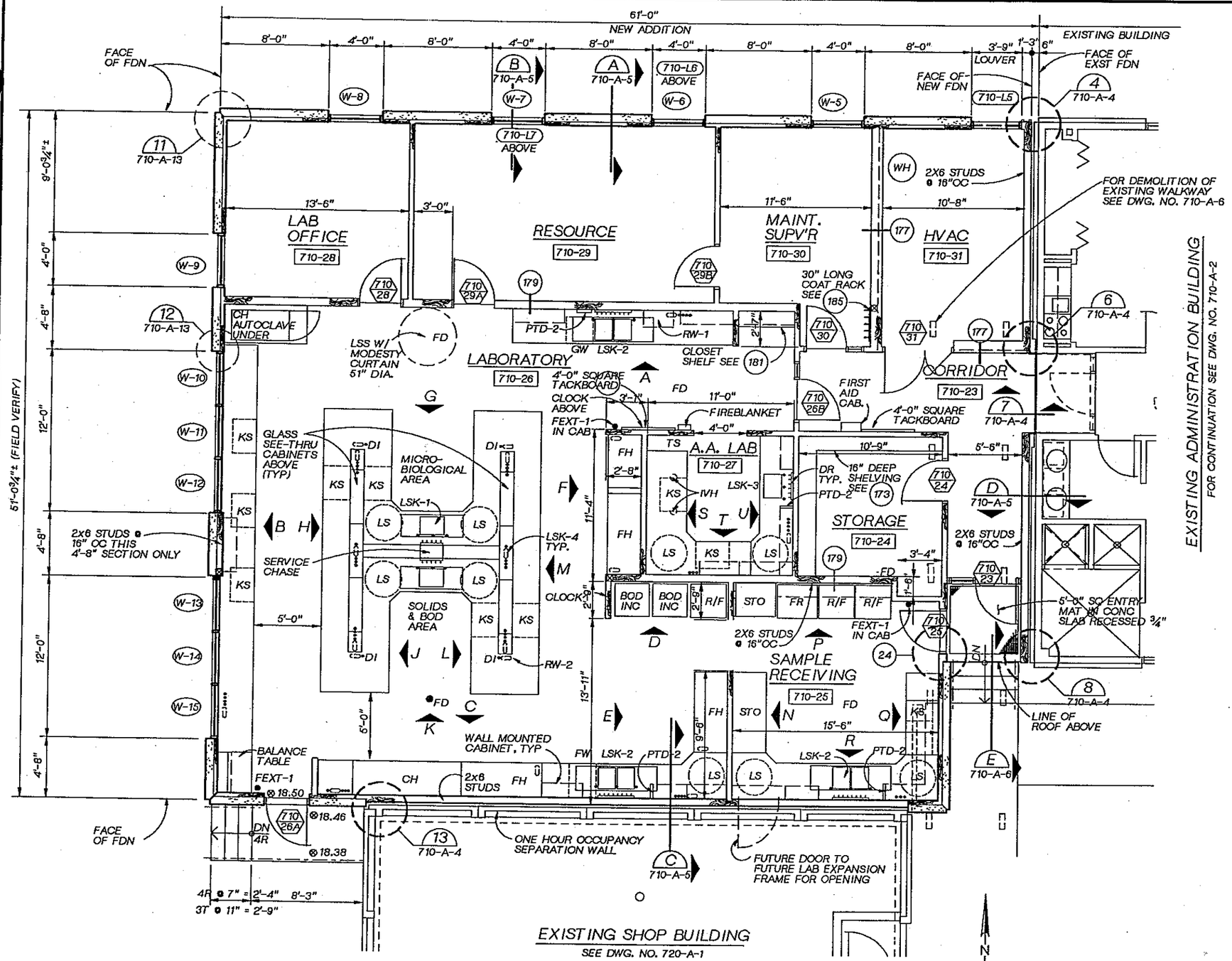

ADMINISTRATION BUILDING FLOOR PLAN

1/4" = 1'-0"

NOTES

1. FOR "GENERAL NOTES", SEE DWG. NO. 800-A-1.
2. FOR "INTERIOR FINISH SCHEDULE" SEE SPECIFICATION SECTION 09000.
3. FOR "DOOR AND HARDWARE SCHEDULE" SEE SPECIFICATION SECTION 08001.
4. FOR "ABBREVIATIONS", SEE DWG. NO. 10-G-5.
5. FOR "ARCHITECTURAL LEGEND" AND "MATERIAL SYMBOLS," SEE DWG. NO. 10-G-6.
6. FOR "STANDARD DETAILS" (132), SEE THE "800" SECTION OF THE DRAWINGS.
7. UNLESS OTHERWISE NOTED, ALL INTERIOR PARTITIONS SHALL BE 2X4 STUDS @ 16" OC WITH 5/8" TYPE 'X' GWB EACH SIDE. PARTITION HEIGHTS SHALL BE AS INDICATED ON THE REFLECTED CEILING PLANS.
8. FOR INTERIOR ELEVATIONS, SEE DWG. NO. 710-1-10, 710-A-11 AND 710-A-12.
9. FOR "LAB ABBREVIATIONS" SEE DWG. NO. 710-A-12.
10. FOR "WINDOW AND RELITE SCHEDULE" SEE SPECIFICATION SECTION 08002.
11. FOR "LOUVER SCHEDULE" SEE SPECIFICATION SECTION 10200.
12. MOUNT TOP OF TACKBOARDS 7'-0" AFF.

BUILDING CODE NOTES (1988 UBC)

1. TYPE OF OCCUPANCY:
   - o ADMINISTRATION BUILDING: B-2
   - o CONFERENCE / LUNCH ROOM: A-3
2. TYPE OF CONSTRUCTION: V-N
3. NUMBER OF STORIES: ONE
4. HEIGHT:
   - o ALLOWABLE: 40 FEET
   - o ACTUAL: 14 FEET
5. FLOOR AREA:
   - o ALLOWABLE: 16,000 SF
   - o ACTUAL: B-2 6375
     A-3 416 SF
6. SPRINKLER SYSTEM NOT REQUIRED
7. OCCUPANT LOAD:
   - o CONFERENCE: 416/15 = 28 OCCUPANTS
   - o LOCKER ROOMS: 350/50 = 7 OCCUPANTS
   - o MECHANICAL: 329/300 = 1 OCCUPANT
   - o OFFICE SPACE: 5450/100 = 55 OCCUPANTS
8. FIRE RESISTANCE REQUIREMENTS
   - o ONE HOUR CORRIDOR REQUIRED
   - o 1 HOUR OCCUPANCY SEPARATION REQUIRED BETWEEN ADMINISTRATION BUILDING AND EXISTING SHOP.
9. THE WEST ADDITION, THE EXISTING BUILDING AND THE EXISTING SHOP BUILDING ARE BEING CONSIDERED AS PORTIONS OF ONE BUILDING.

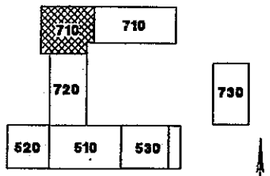

KEY PLAN

REGISTERED ARCHITECT
STATE OF WASHINGTON

CH2M HILL

DSGN	J PRUSS
DR	G BOWER
CHK	R WHITE
APVD	J. GAUTHIER

NO.	DATE	REVISION	BY	APVD

REUSE OF DOCUMENTS
THIS DOCUMENT, AND THE IDEAS AND DESIGNS INCORPORATED HEREIN, AS AN INSTRUMENT OF PROFESSIONAL SERVICE, IS THE PROPERTY OF CH2M HILL AND IS NOT TO BE USED, IN WHOLE OR IN PART, FOR ANY OTHER PROJECT WITHOUT THE WRITTEN AUTHORIZATION OF CH2M HILL.
©CH2M HILL

BAR IS ONE INCH ON ORIGINAL DRAWING.
0 1"
IF NOT ONE INCH ON THIS SHEET, ADJUST SCALES ACCORDINGLY.

CITY OF BELLINGHAM, WASHINGTON
POST POINT WASTEWATER TREATMENT PLANT UPGRADE

ADMINISTRATION / LABORATORY BUILDING
ARCHITECTURAL
WEST ADDITION FLOOR PLAN

DWG NO. 710-A-3
DATE AUG. 1990
PROJ NO. SEA22462.C1

OVERLAY IDENTIFICATION: COMPOSITE
PROJID
FILE

DATE: 8/08/90
DRAWN BY: GE BOWER DESIGNED BY: GE BOWER
DGN NAME: H:/PROJ2/BELLINGH/BL710A-D.DGN

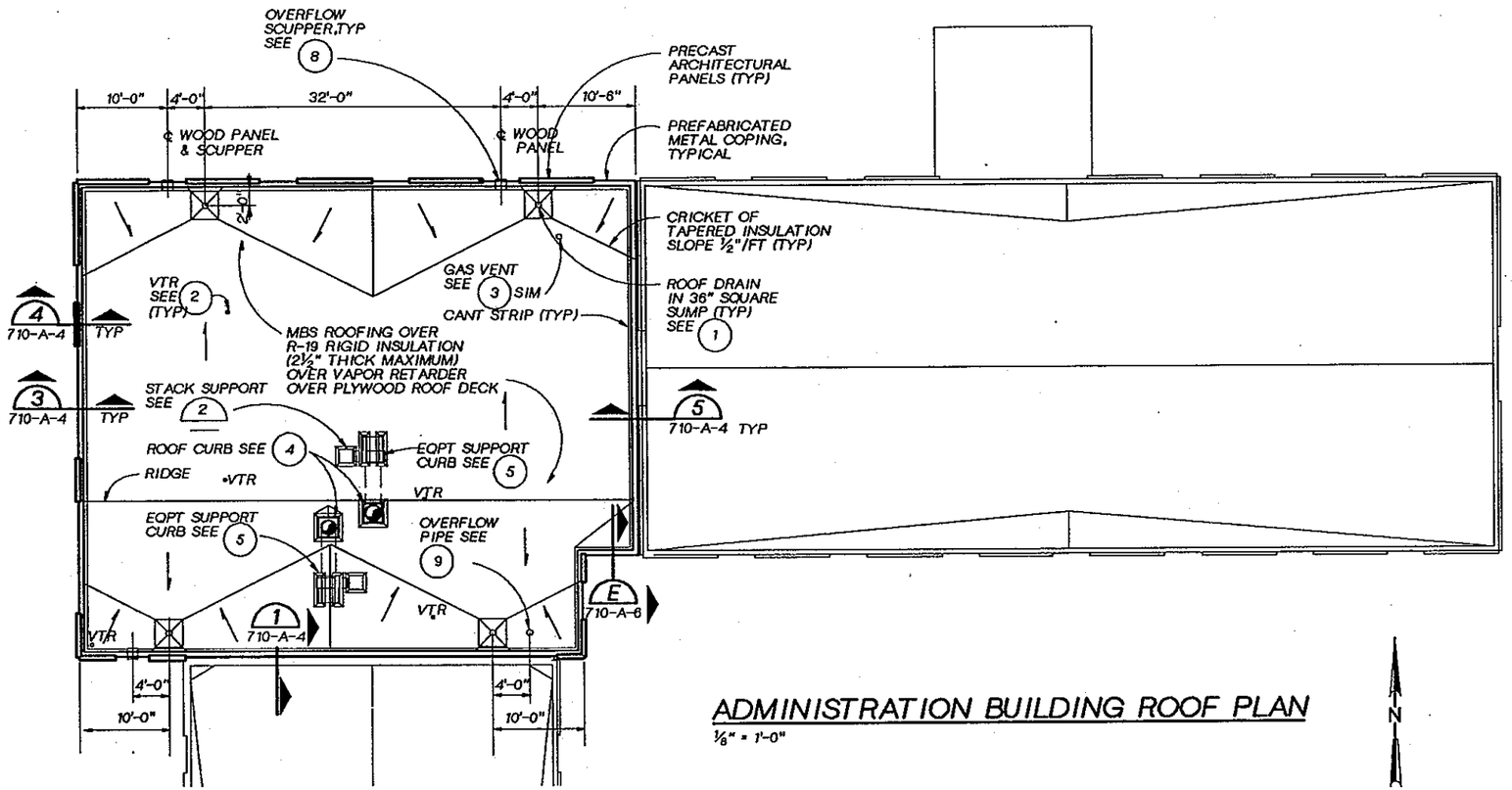

ADMINISTRATION BUILDING ROOF PLAN

⅛" = 1'-0"

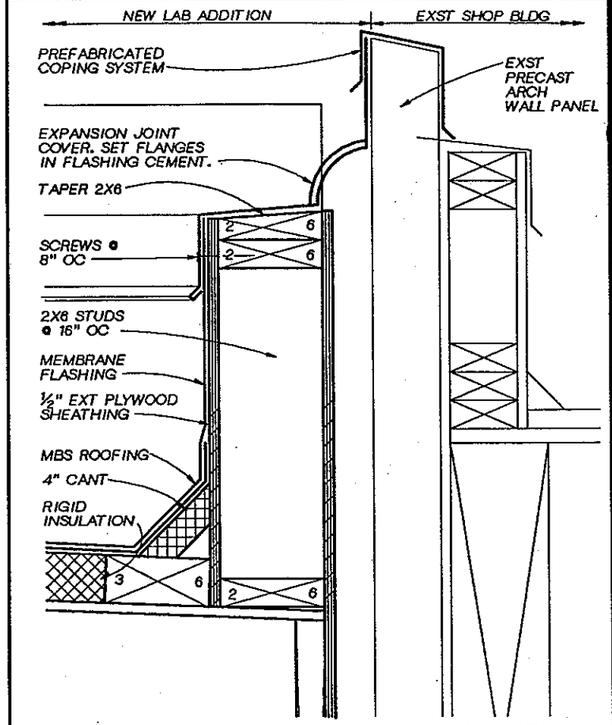

EXPANSION JOINT DETAIL 1

3"=1'-0"

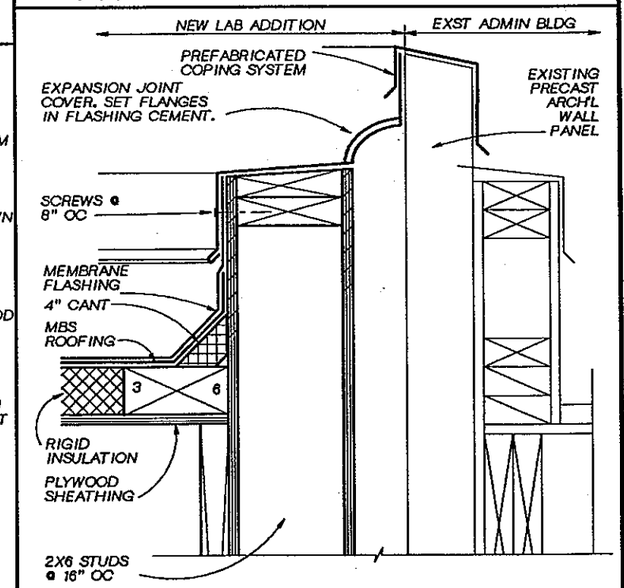

EXPANSION JOINT DETAIL 5

3"=1'-0"

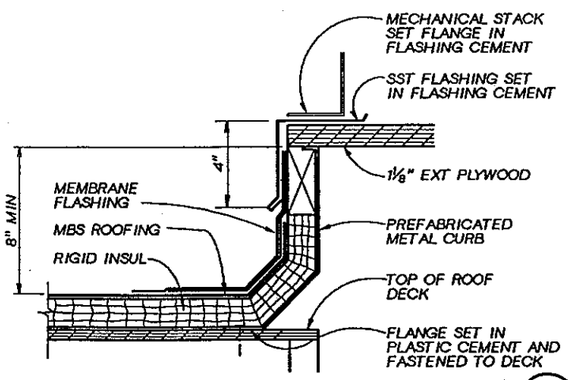

ROOF CURB DETAIL 4

3"=1'-0"

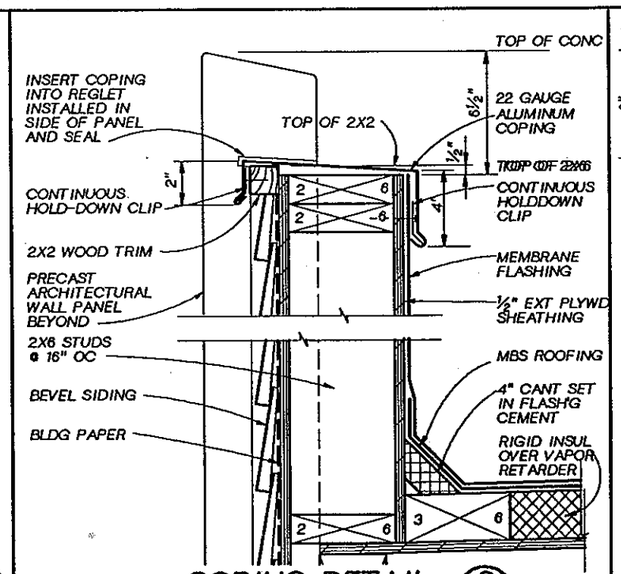

COPING DETAIL 3

3"=1'-0" 710-A-1, 710-A-4

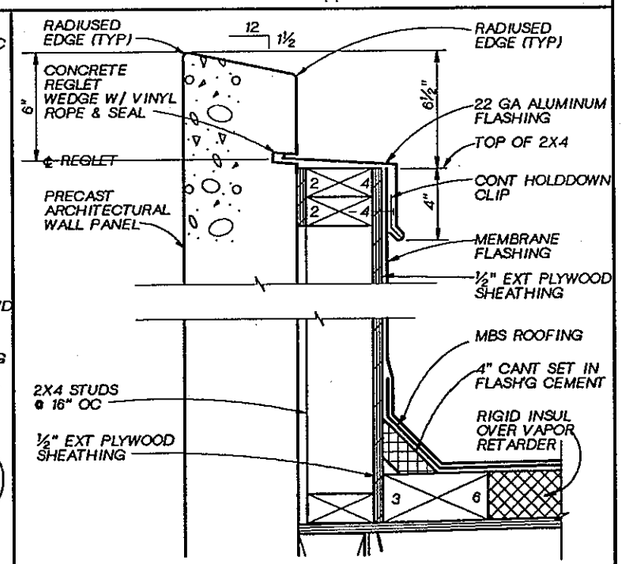

FLASHING DETAIL 4

3"=1'-0"

REGISTERED ARCHITECT JOHN A. PRUSS STATE OF WASHINGTON

CH2M HILL

DSGN	G BOWER
DR	O FRIAL
CHK	R WHITE
APVD	J. GAUTHIER

NO.	DATE	REVISION	BY	APVD

REUSE OF DOCUMENTS
THIS DOCUMENT, AND THE IDEAS AND DESIGNS INCORPORATED HEREIN, AS AN INSTRUMENT OF PROFESSIONAL SERVICE, IS THE PROPERTY OF CH2M HILL AND IS NOT TO BE USED, IN WHOLE OR IN PART, FOR ANY OTHER PROJECT WITHOUT THE WRITTEN AUTHORIZATION OF CH2M HILL.
©CH2M HILL

BAR IS ONE INCH ON ORIGINAL DRAWING.
0 1"
IF NOT ONE INCH ON THIS SHEET, ADJUST SCALES ACCORDINGLY.

CITY OF BELLINGHAM, WASHINGTON
POST POINT WASTEWATER TREATMENT PLANT UPGRADE

ADMINISTRATION / LABORATORY BUILDING
ARCHITECTURAL
ROOF PLAN AND DETAILS

DWG NO. 710-A-4
DATE AUG. 1990
PROJ NO. SEA22462.C1

DRAWN BY: G.E. BOWER DESIGNED BY: G.E.BOWER
DGN NAME: H:/PROJ2/BELLINGH/BL710A-E.DGN

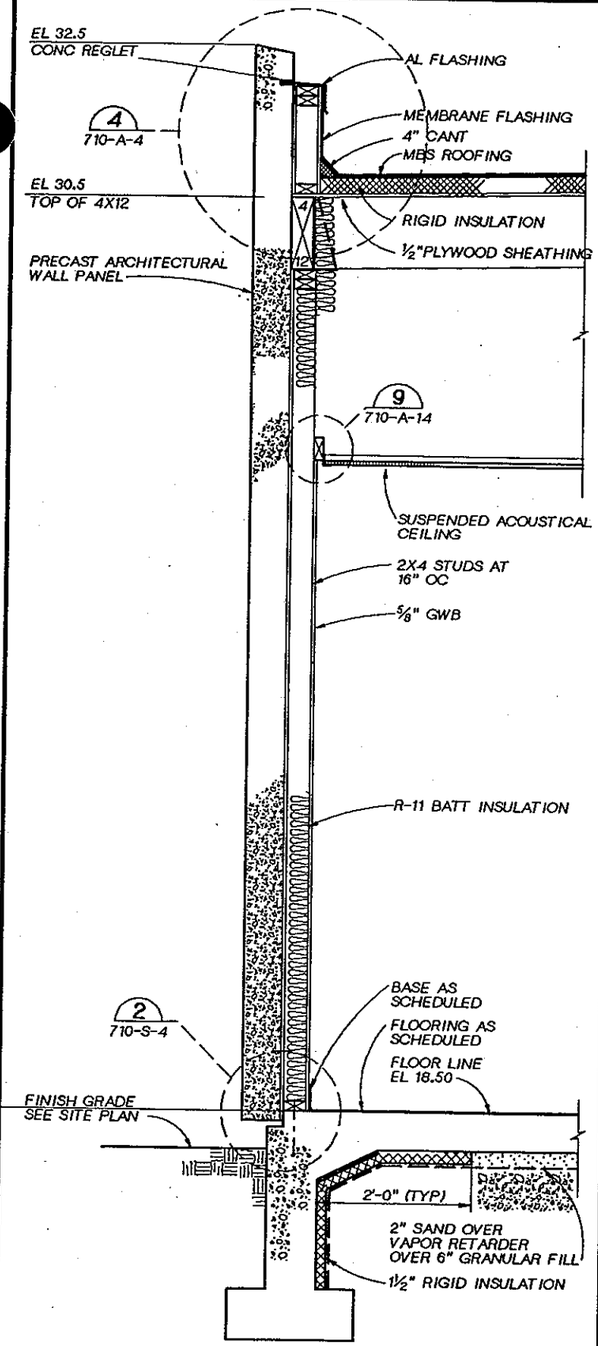

WALL SECTION A 710-A-1
1"=1'-0"

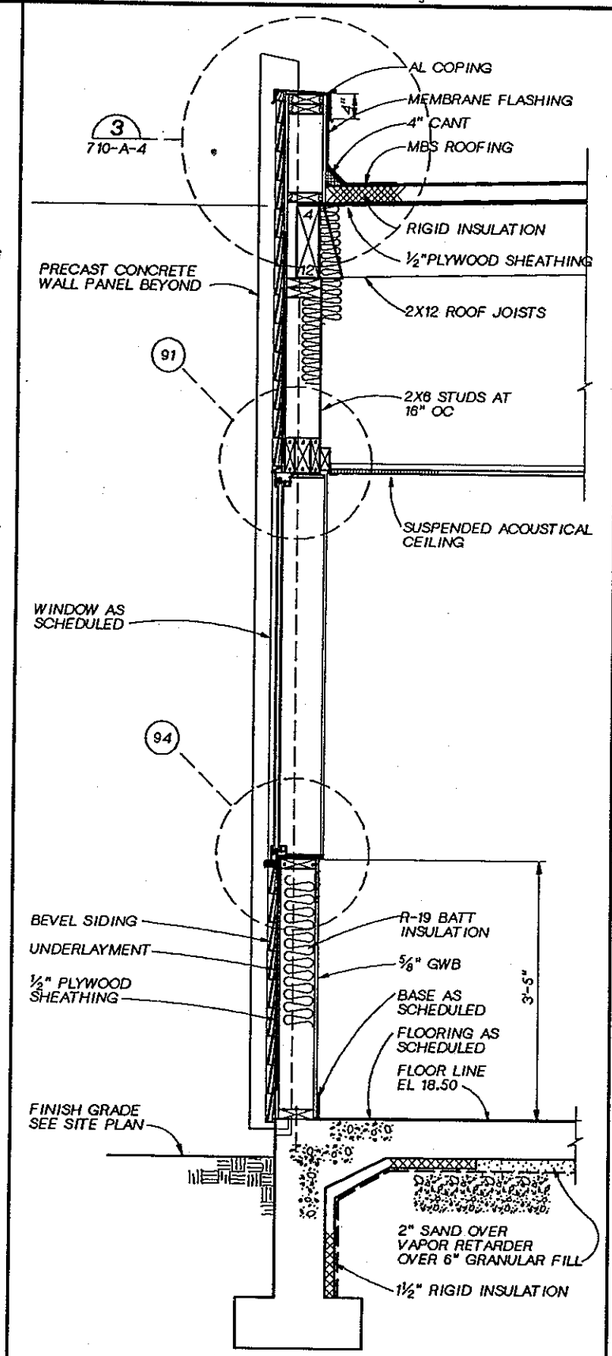

WALL SECTION B 710-A-1
1"=1'-0"

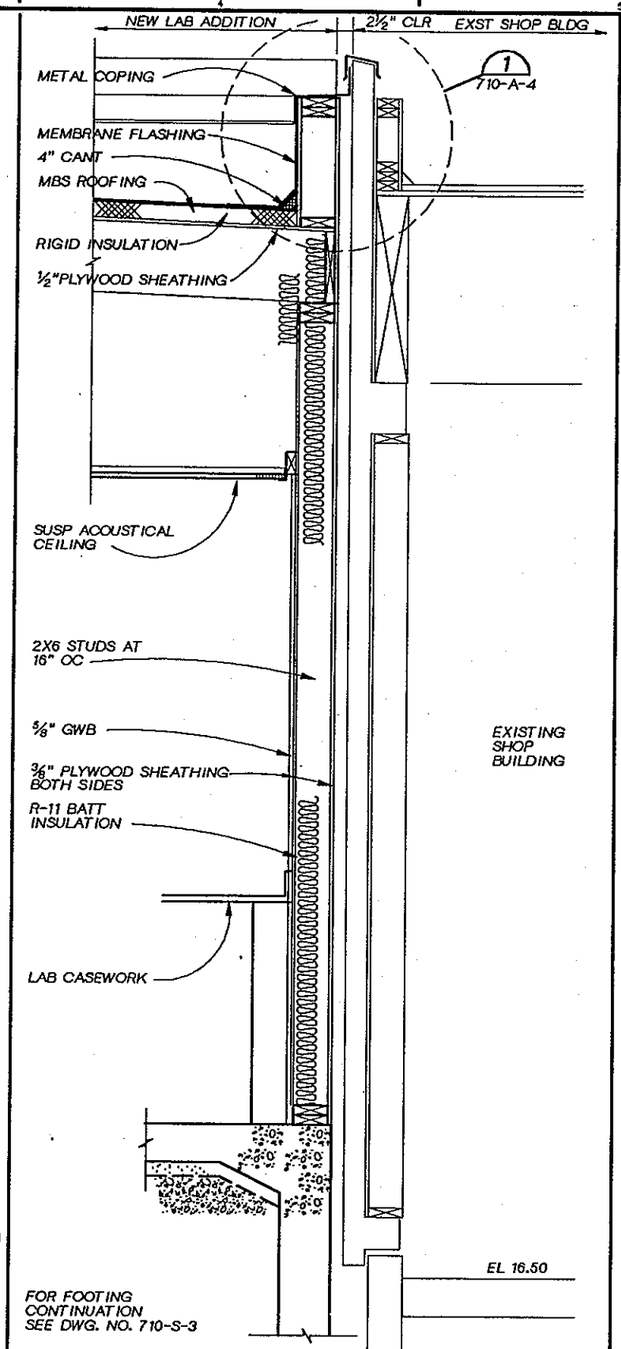

WALL SECTION C 710-A-1
1"=1'-0"

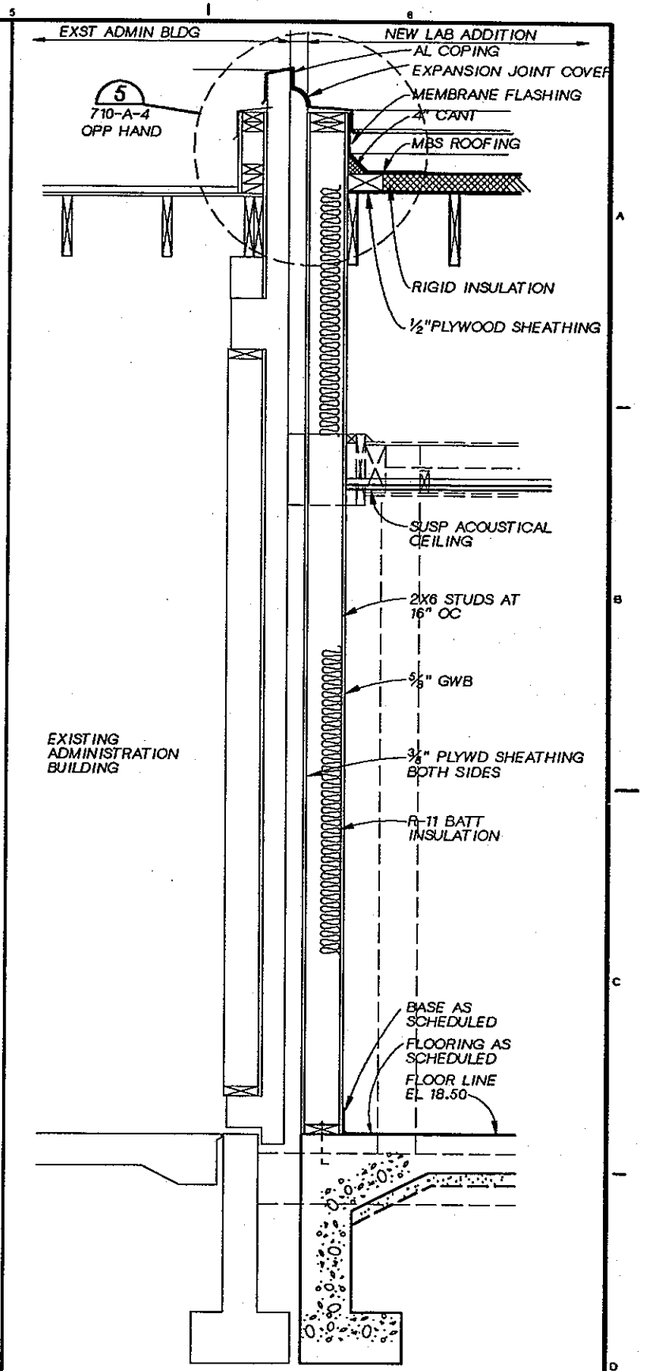

WALL SECTION D 710-A-1
1"=1'-0"

REGISTERED ARCHITECT STATE OF WASHINGTON

CH2M HILL

DSGN	G BOWER
DR	G BOWER
CHK	R WHITE
APVD	J. GAUTHIER

NO.	DATE	REVISION	BY	APVD

REUSE OF DOCUMENTS
THIS DOCUMENT, AND THE IDEAS AND DESIGNS INCORPORATED HEREIN, AS AN INSTRUMENT OF PROFESSIONAL SERVICE, IS THE PROPERTY OF CH2M HILL AND IS NOT TO BE USED, IN WHOLE OR IN PART, FOR ANY OTHER PROJECT WITHOUT THE WRITTEN AUTHORIZATION OF CH2M HILL.
©CH2M HILL

BAR IS ONE INCH ON ORIGINAL DRAWING.
0 1"
IF NOT ONE INCH ON THIS SHEET, ADJUST SCALES ACCORDINGLY.

CITY OF BELLINGHAM, WASHINGTON
POST POINT WASTEWATER TREATMENT PLANT UPGRADE

ADMINISTRATION / LABORATORY BUILDING
ARCHITECTURAL WALL SECTIONS

DWG NO. 710-A-5
DATE AUG. 1990
PROJ. NO. SEA22462.C1

OVERLAY IDENTIFICATION | COMPOSITE | PROJID | OVERLAY | FILE

DATE: 8/26/90
DRAWN BY: GRETCHEN BOWER DESIGNED BY: GRETCHEN BOWER
DGN NAME: H:/PROJ2/BELLINGH/BL710A-F.DGN

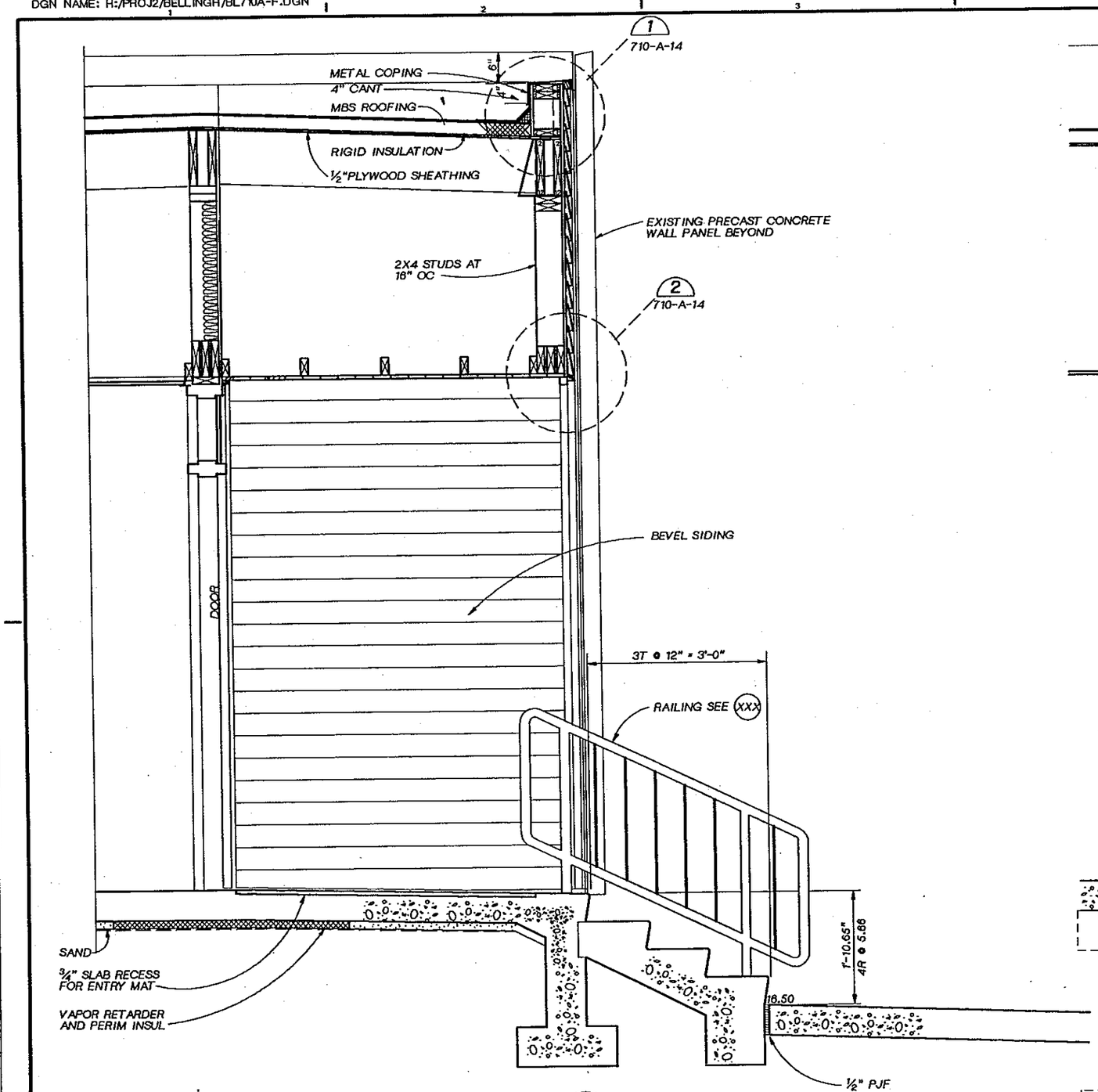

WALL SECTION E
1"=1'-0" 710-A-C

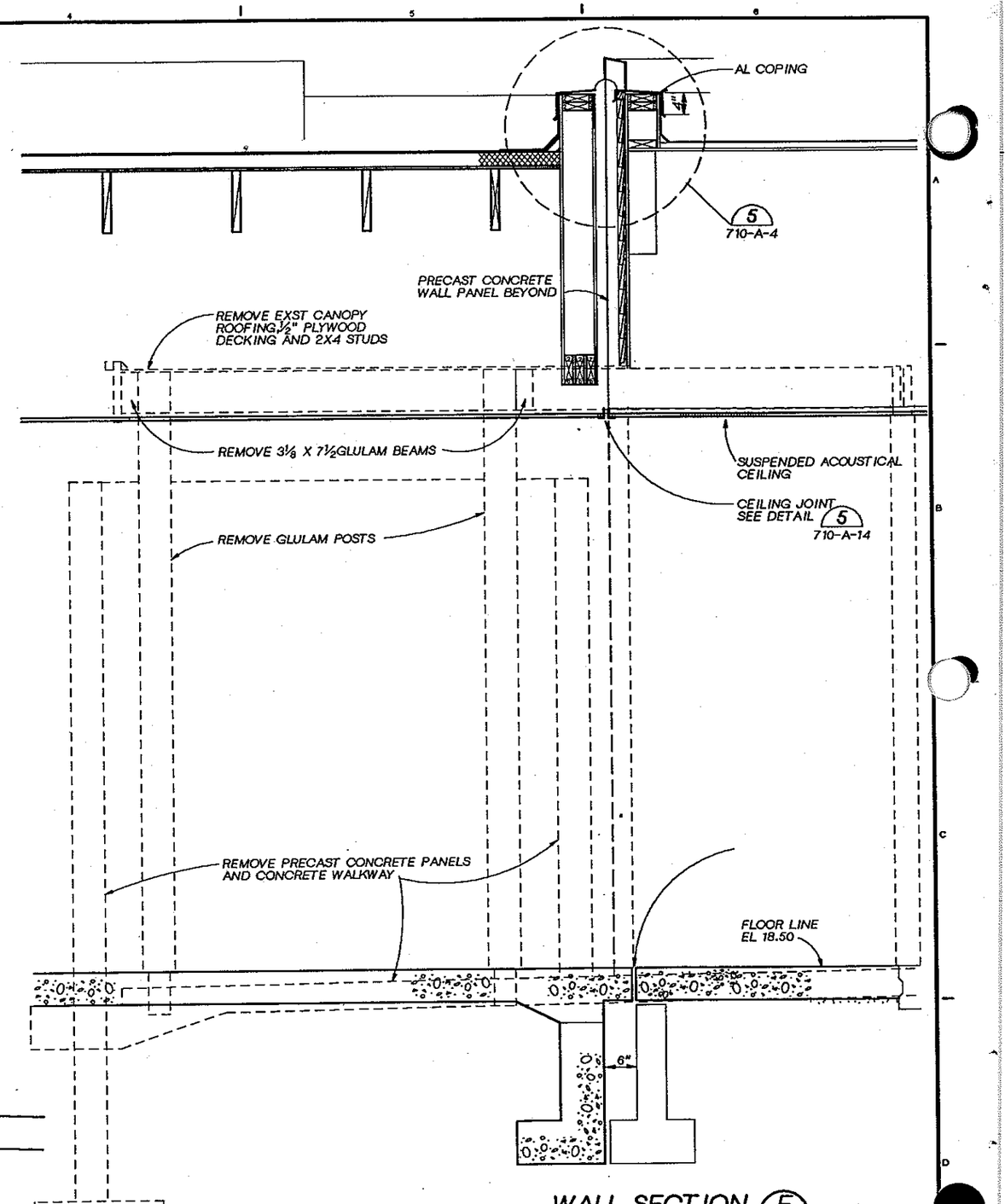

WALL SECTION F
1"=1'-0" 710-A-1

REGISTERED ARCHITECT JOHN A. PRUES STATE OF WASHINGTON

CH2M HILL

DSGN	G BOWER				
DR	G BOWER				
CHK	R WHITE				
APVD	J. GAUTHIER	NO.	DATE	REVISION	BY	APVD

REUSE OF DOCUMENTS
THIS DOCUMENT, AND THE IDEAS AND DESIGNS INCORPORATED HEREIN, AS AN INSTRUMENT OF PROFESSIONAL SERVICE, IS THE PROPERTY OF CH2M HILL AND IS NOT TO BE USED, IN WHOLE OR IN PART, FOR ANY OTHER PROJECT WITHOUT THE WRITTEN AUTHORIZATION OF CH2M HILL.
©CH2M HILL

BAR IS ONE INCH ON ORIGINAL DRAWING.
0 1"
IF NOT ONE INCH ON THIS SHEET, ADJUST SCALES ACCORDINGLY.

CITY OF BELLINGHAM, WASHINGTON
POST POINT WASTEWATER TREATMENT PLANT UPGRADE

ADMINISTRATION / LABORATORY BUILDING
ARCHITECTURAL
WALL SECTIONS AND DETAILS

DWG NO. 710-A-6
DATE AUG. 1990
PROJ NO. SEA22462.C1

OVERLAY IDENTIFICATION
COMPOSITE
OVERLAY SCREEN
PROJID
FILE

DATE: 8-27-90
DRAWN BY: TW MCINTYRE DESIGNED BY: GRETCHEN BOWER
DGN NAME: H:/PROJ2/BELLINGH/BL710A-J.DGN

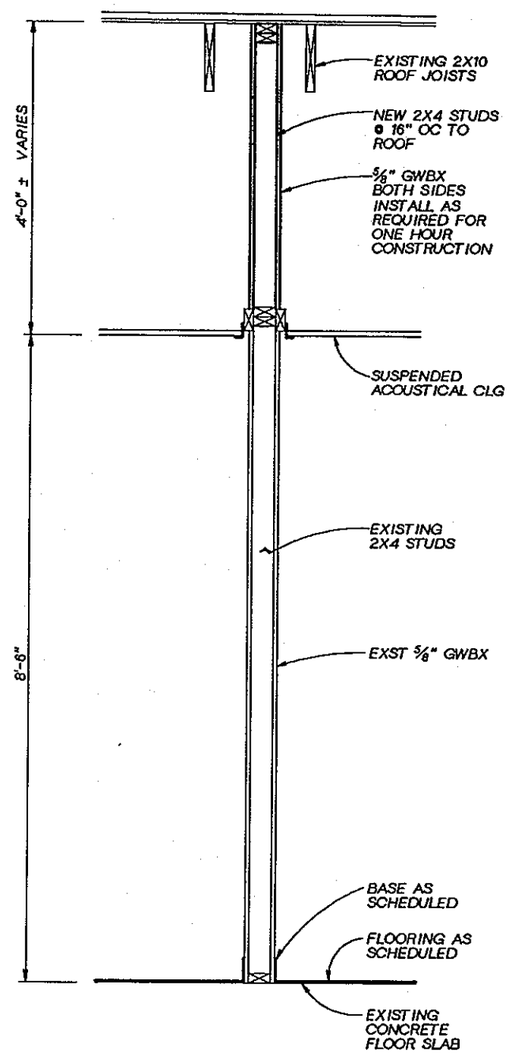

ONE HOUR CORRIDOR SECTION (G) 710-A-7
1"=1'-0"

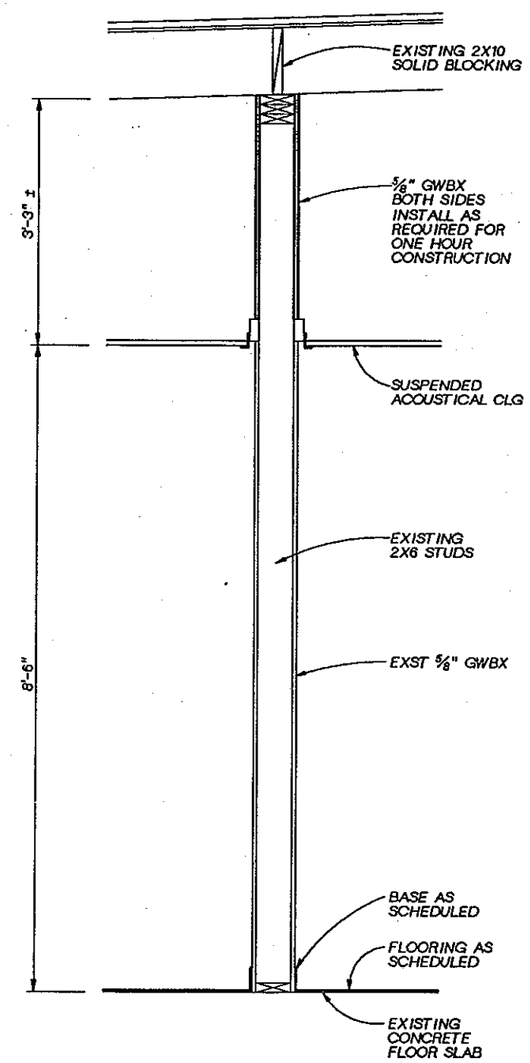

ONE HOUR CORRIDOR SECTION (H) 710-A-7
1"=1'-0"

REGISTERED ARCHITECT JOHN J. MEGAS STATE OF WASHINGTON

CH2M HILL

DSGN	G BOWER
DR	G BOWER
CHK	R WHITE
APVD	J. XXXXTHIER

NO.	DATE	REVISION	BY	APVD

REUSE OF DOCUMENTS
THIS DOCUMENT, AND THE IDEAS AND DESIGNS INCORPORATED HEREIN, AS AN INSTRUMENT OF PROFESSIONAL SERVICE, IS THE PROPERTY OF CH2M HILL AND IS NOT TO BE USED, IN WHOLE OR IN PART, FOR ANY OTHER PROJECT WITHOUT THE WRITTEN AUTHORIZATION OF CH2M HILL.
©CH2M HILL

BAR IS ONE INCH ON ORIGINAL DRAWING.
0 1"
IF NOT ONE INCH ON THIS SHEET, ADJUST SCALES ACCORDINGLY.

CITY OF BELLINGHAM, WASHINGTON
POST POINT WASTEWATER TREATMENT PLANT UPGRADE

ADMINISTRATION / LABORATORY BUILDING
ARCHITECTURAL WALL SECTIONS

DWG NO. 710-A-7
DATE AUG. 1990
PROJ NO. SEA22462.C1

OVERLAY IDENTIFICATION
PRIMARY
FILE
COMPOSITE
DISPLAY
OPEN

DATE: 7/30/90
DRAWN BY: OSCAR A. FRIAL DESIGNED BY: GRETCHEN BOWER
DGN NAME: H:/PROJ2/BELLINGH/BL710A-P.DGN

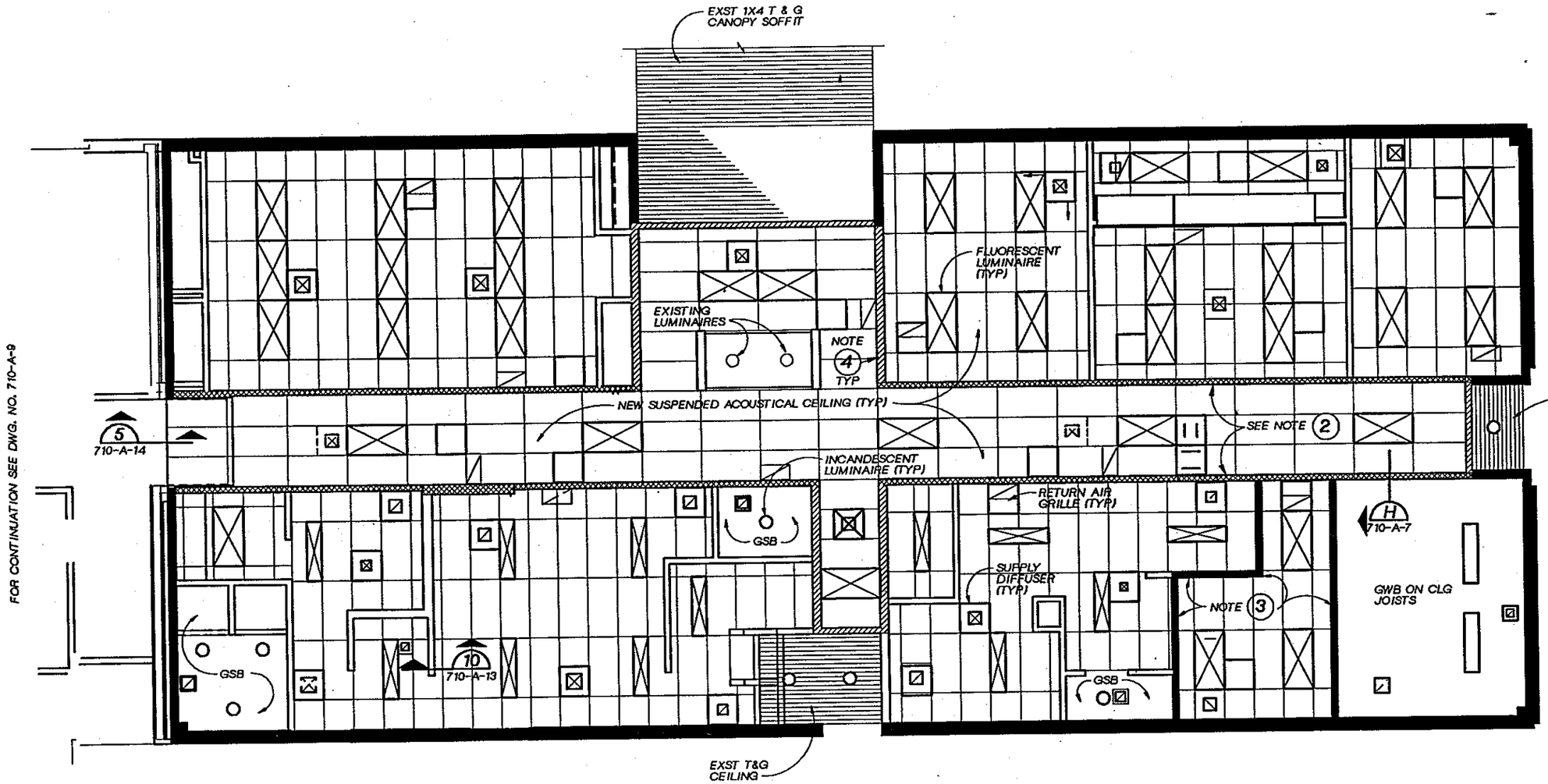

NOTES

1. EXTEND ALL NEW PARTITIONS 4" ABOVE CEILING. SEE 10 710-A-14 (TYP)
2. CROSS HATCHING INDICATES EXTENT OF EXISTING STUDS TO ROOF. (TYP EAST-WEST CORRIDOR WALLS) MODIFY CONSTRUCTION TO PROVIDE A ONE HOUR CORRIDOR. SEE SECTION H 710-A-7
3. EXTEND PARTITION TO ROOF STRUCTURE ABOVE.
4. HATCHING INDICATES EXISTING STUD WALLS THAT STOP AT CEILING. EXTEND THESE WALLS TO THE ROOF ABOVE AND APPLY GWB TO UNDERSIDE OF LOBBY ROOF AS REQUIRED FOR A 1 HOUR CORRIDOR AS SHOWN IN SECTION H 710-A-7 SIM

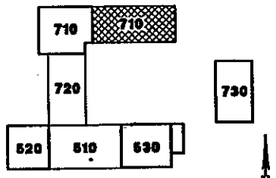

KEY PLAN

REGISTERED ARCHITECT JOHN VIRGILI STATE OF WASHINGTON

CH2M HILL

DSGN	G BOWER				
DR	O FRIAL				
CHK	R WHITE				
APVD	J GAUTHIER	NO.	DATE	REVISION	BY	APVD

REUSE OF DOCUMENTS
THIS DOCUMENT, AND THE IDEAS AND DESIGNS INCORPORATED HEREIN, AS AN INSTRUMENT OF PROFESSIONAL SERVICE, IS THE PROPERTY OF CH2M HILL AND IS NOT TO BE USED, IN WHOLE OR IN PART, FOR ANY OTHER PROJECT WITHOUT THE WRITTEN AUTHORIZATION OF CH2M HILL.
©CH2M HILL

BAR IS ONE INCH ON ORIGINAL DRAWING. 0 1"
IF NOT ONE INCH ON THIS SHEET, ADJUST SCALES ACCORDINGLY.

CITY OF BELLINGHAM, WASHINGTON
POST POINT WASTEWATER TREATMENT PLANT UPGRADE

ADMINISTRATION / LABORATORY BUILDING
EXISTING BUILDING
REFLECTED CEILING PLAN

DWG NO. 710-A-8
DATE AUG. 1990
PROJ. NO. SEA22462.C1

OVERLAY (DESIGN IDENTIFICATION) COMPOSITE OVERLAY SCREEN
PROJ/D
FILE

DRAWN BY: OSCAR A. FRIAL DESIGNED BY: GRETCHEN BOWER
DGN NAME: H:/PROJ2/BELLINGH/BL710A-G.DGN

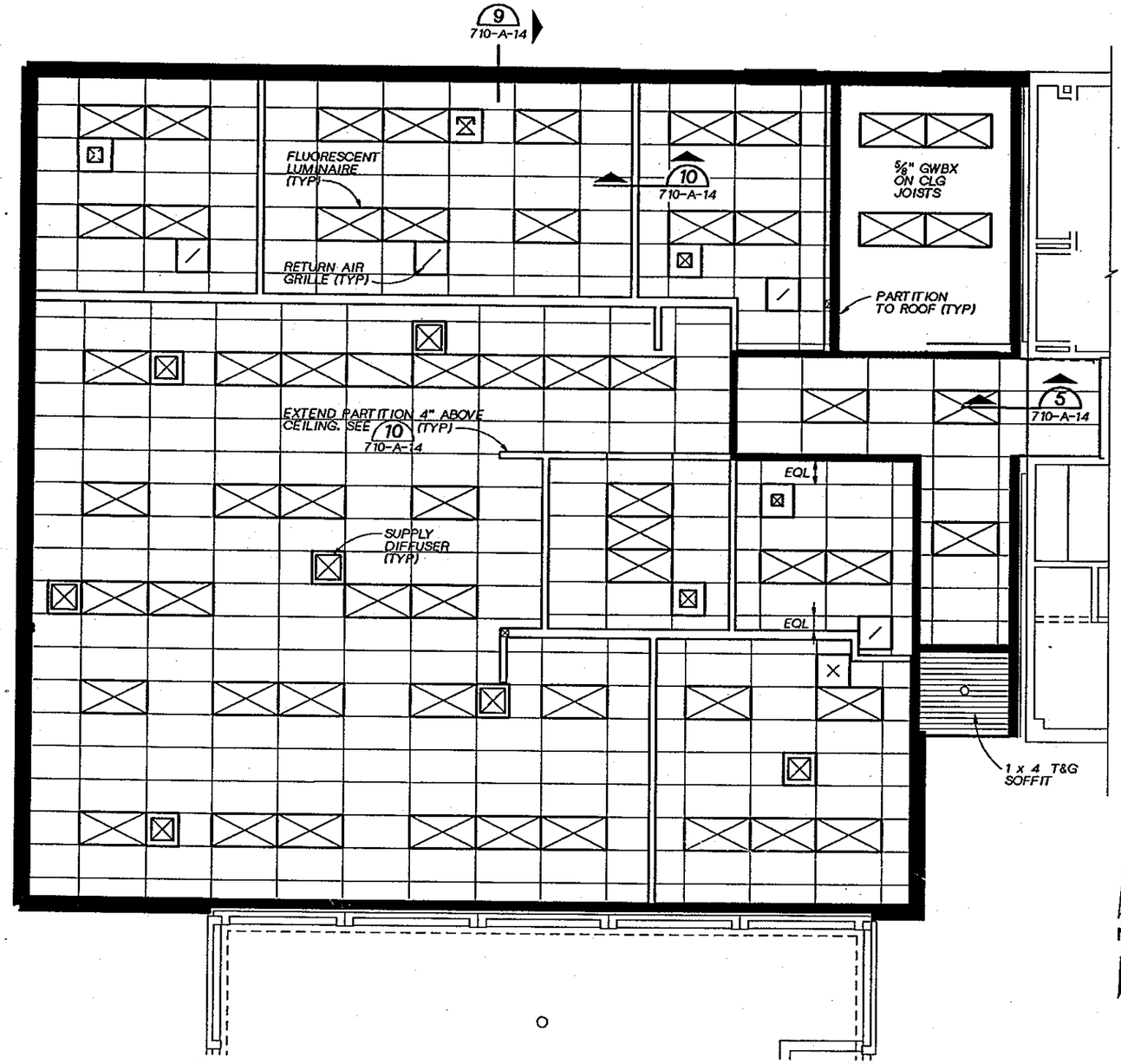

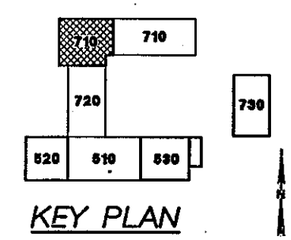

KEY PLAN

REGISTERED ARCHITECT STATE OF WASHINGTON

CH2M HILL

DSGN	G BOWER			
DR	O FRIAL			
CHK	R WHITE			
APVD	J. GAUTHIER	NO.	DATE	REVISION

BY | APVD

REUSE OF DOCUMENTS
THIS DOCUMENT, AND THE IDEAS AND DESIGNS INCORPORATED HEREIN, AS AN INSTRUMENT OF PROFESSIONAL SERVICE, IS THE PROPERTY OF CH2M HILL AND IS NOT TO BE USED, IN WHOLE OR IN PART, FOR ANY OTHER PROJECT WITHOUT THE WRITTEN AUTHORIZATION OF CH2M HILL.
©CH2M HILL

BAR IS ONE INCH ON ORIGINAL DRAWING.
0 1"
IF NOT ONE INCH ON THIS SHEET, ADJUST SCALES ACCORDINGLY.

CITY OF BELLINGHAM, WASHINGTON
POST POINT WASTEWATER TREATMENT PLANT UPGRADE

ADMINISTRATION / LABORATORY BUILDING
WEST ADDITIONN
REFLECTED CEILING PLAN

DWG NO. 710-A-9
DATE AUG. 1990
PROJ. NO. SEA22462.C1

OVERLAY IDENTIFICATION | COMPOSITE | PROJID | OVERLAY | FILE | SCREEN

DATE: 8-17-90 A. MCRILL
DRAWN BY: C.S.HOWELL DESIGNED BY: G. BOWER
DGN NAME: H:/PROJ2/BELLINGH/BL710A-1.DGN

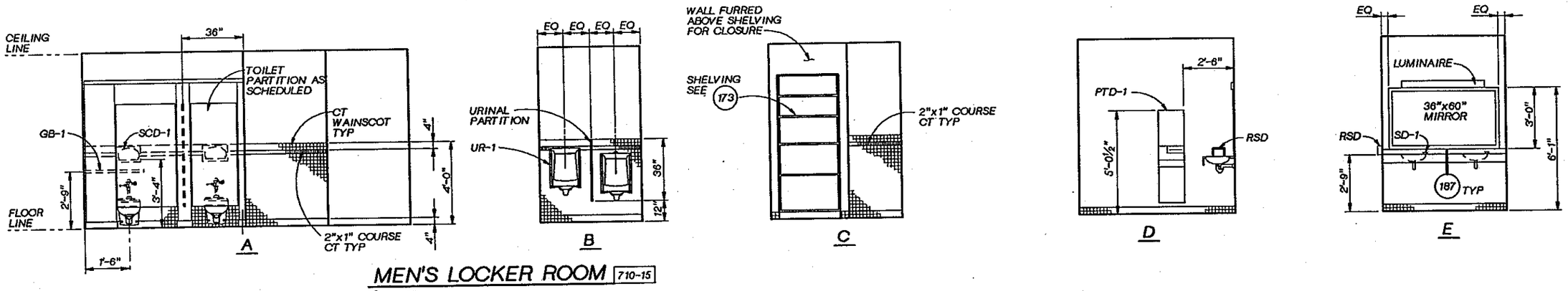

MEN'S LOCKER ROOM 710-15

⅜"=1'-0"

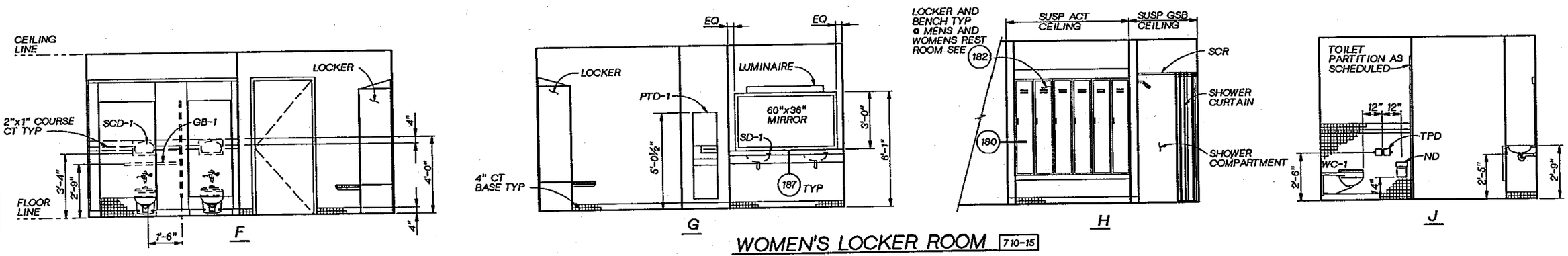

WOMEN'S LOCKER ROOM 710-15

⅜"=1'-0"

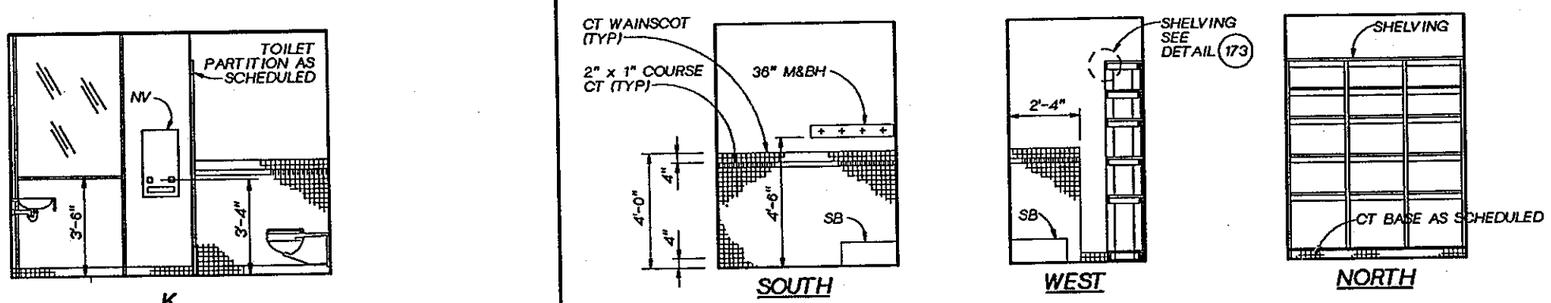

JANITOR ROOM 710-11

⅜"=1'-0"

REGISTERED ARCHITECT JOHN A. PAGE STATE OF WASHINGTON

CH2M HILL

DSGN	G BOWER			
DR	C HOWELL			
CHK	R WHITE			
APVD	J. GAUTHIER	NO.	DATE	REVISION	BY	APVD

REUSE OF DOCUMENTS
THIS DOCUMENT, AND THE IDEAS AND DESIGNS INCORPORATED HEREIN, AS AN INSTRUMENT OF PROFESSIONAL SERVICE, IS THE PROPERTY OF CH2M HILL AND IS NOT TO BE USED, IN WHOLE OR IN PART, FOR ANY OTHER PROJECT WITHOUT THE WRITTEN AUTHORIZATION OF CH2M HILL.
©CH2M HILL

BAR IS ONE INCH ON ORIGINAL DRAWING. 0 1"
IF NOT ONE INCH ON THIS SHEET, ADJUST SCALES ACCORDINGLY.

CITY OF BELLINGHAM, WASHINGTON
POST POINT WASTEWATER TREATMENT PLANT UPGRADE

ADMINISTRATION / LABORATORY BUILDING
ARCHITECTURAL INTERIOR ELEVATIONS

DWG NO. 710-A-10
DATE AUG. 1990
PROJ NO. SEA22462.C1

OVERLAY IDENTIFICATION: COMPOSITE, OVERLAY, SCREEN
PROJ/D
FILE

DRAWN BY:GH BURLEY-CSH DESIGNED BY: EARL HADFIELD
DGN NAME: H:/PROJ2/BELLINGH/BL710A-K.DGN

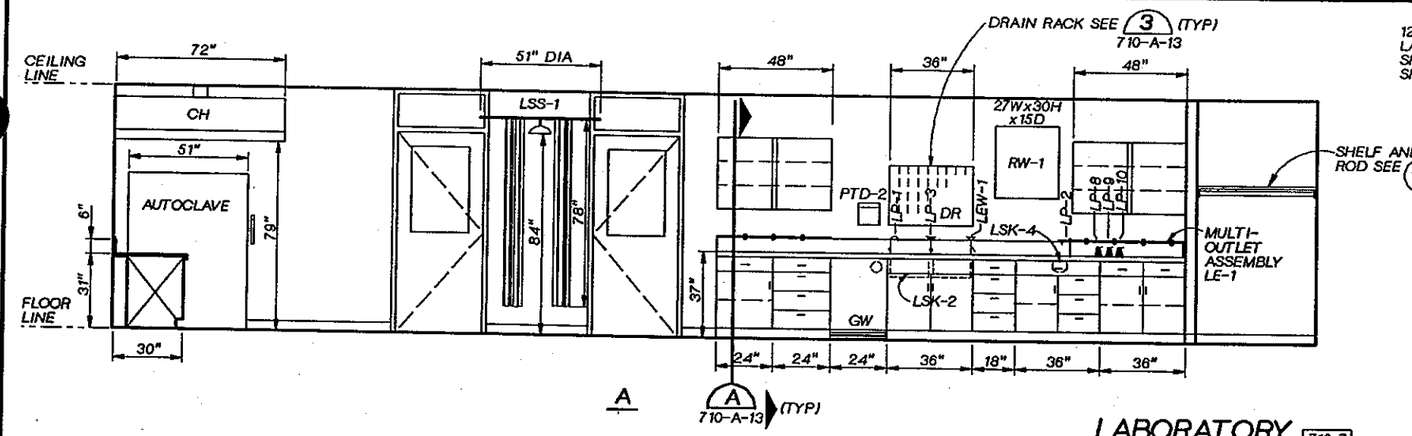

LABORATORY 710-7

3/8"=1'-0"

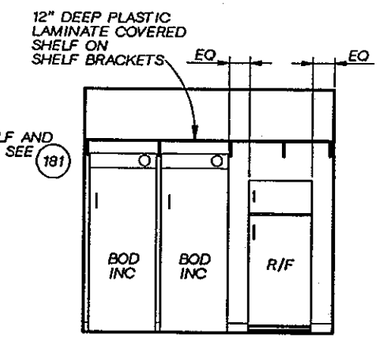

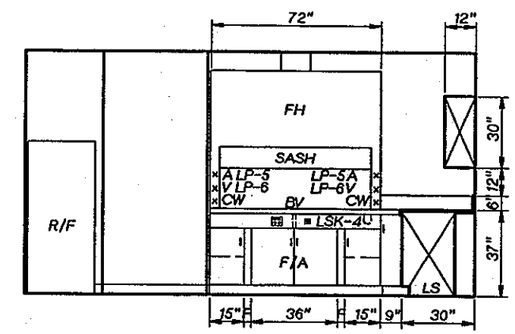

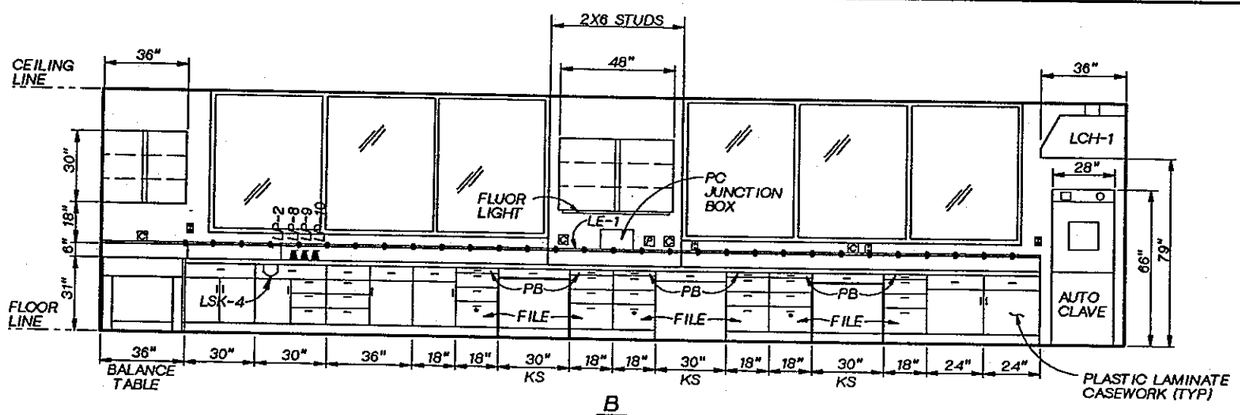

LABORATORY 710-7

3/8"=1'-0"

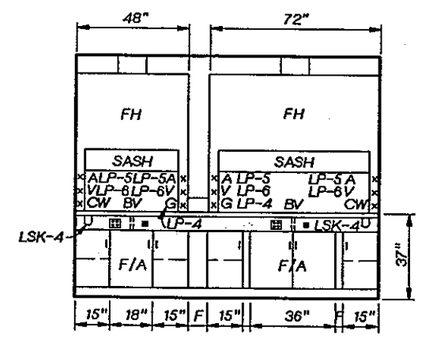

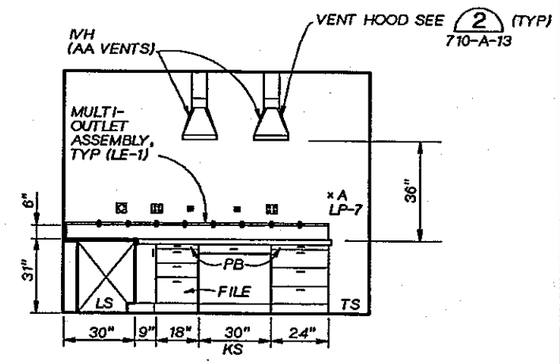

A.A. LAB 710-28

3/8"=1'-0"

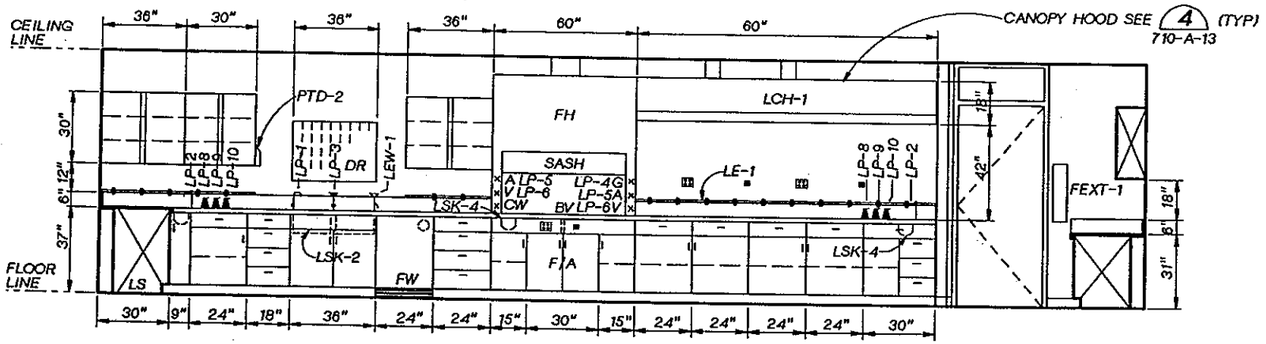

LABORATORY 710-7

3/8"=1'-0"

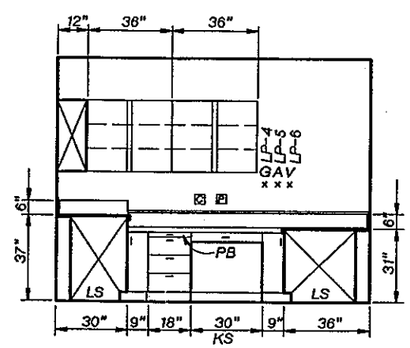

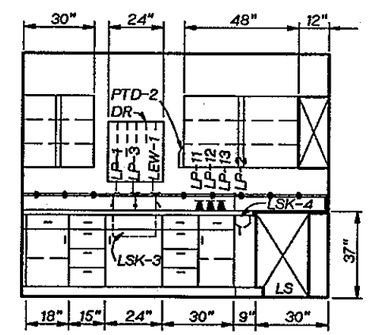

A.A. LAB 710-28

3/8"=1'-0"

REGISTERED ARCHITECT JOHN L. PELES STATE OF WASHINGTON

CH2M HILL

DSGN	E HADFIELD			
DR	B CRADDOCK			
CHK	R WHITE			
APVD	J GAUTHIER	NO.	DATE	REVISION	BY	APVD

REUSE OF DOCUMENTS

THIS DOCUMENT, AND THE IDEAS AND DESIGNS INCORPORATED HEREIN, AS AN INSTRUMENT OF PROFESSIONAL SERVICE, IS THE PROPERTY OF CH2M HILL AND IS NOT TO BE USED, IN WHOLE OR IN PART, FOR ANY OTHER PROJECT WITHOUT THE WRITTEN AUTHORIZATION OF CH2M HILL.

©CH2M HILL

BAR IS ONE INCH ON ORIGINAL DRAWING. 0 1"
IF NOT ONE INCH ON THIS SHEET, ADJUST SCALES ACCORDINGLY.

CITY OF BELLINGHAM, WASHINGTON
POST POINT WASTEWATER TREATMENT PLANT UPGRADE

ADMINISTRATION / LABORATORY BUILDING
ARCHITECTURAL
INTERIOR ELEVATIONS - LABORATORY

DWG NO. 710-A-11
DATE AUG. 1990
PROJ NO. SEA22462.C1

OVERLAY IDENTIFICATION COMPOSITE OVERLAY PROJID FILE

DRAWN BY: GH BURLEY-CSH DESIGNED BY: EARL HADFIELD
DGN NAME: H:/PROJ2/BELLINGH/BL710A-L.DGN

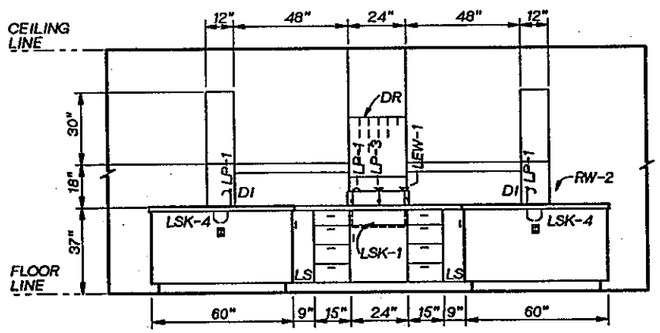

G/K

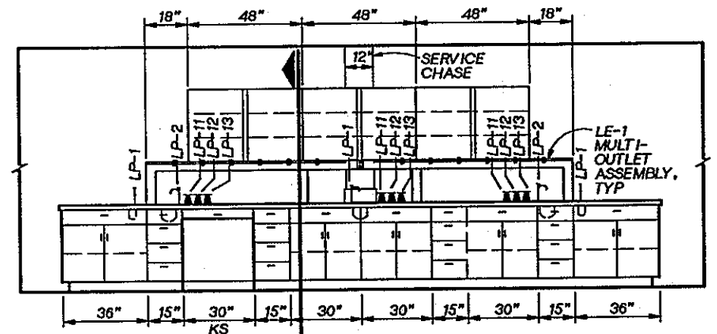

B 710-A-13 H/M

LABORATORY 710-7

3/8"=1'-0"

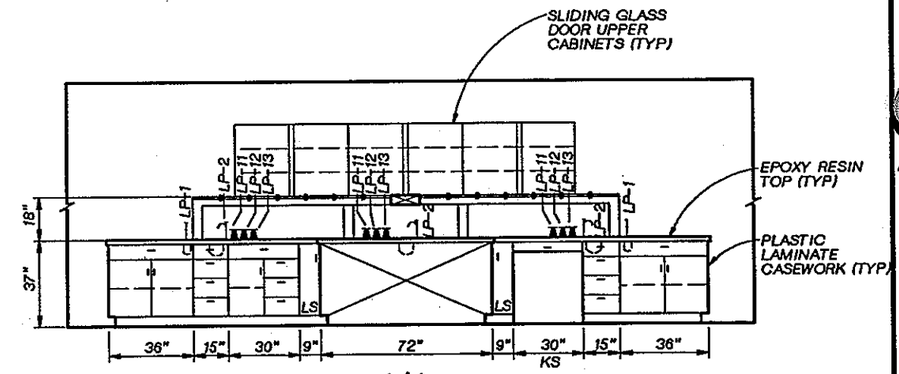

L/J

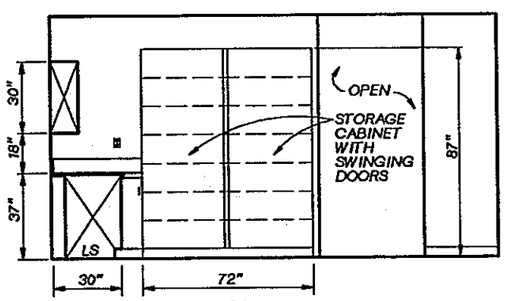

N

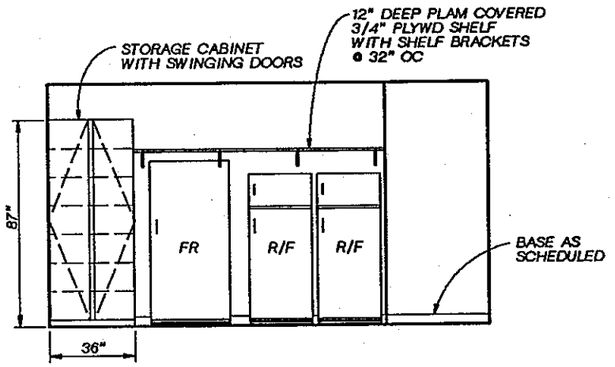

P

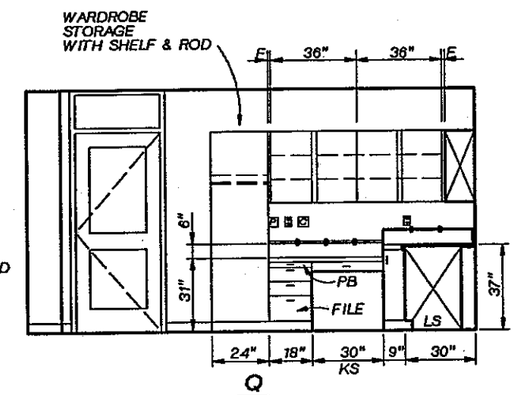

Q

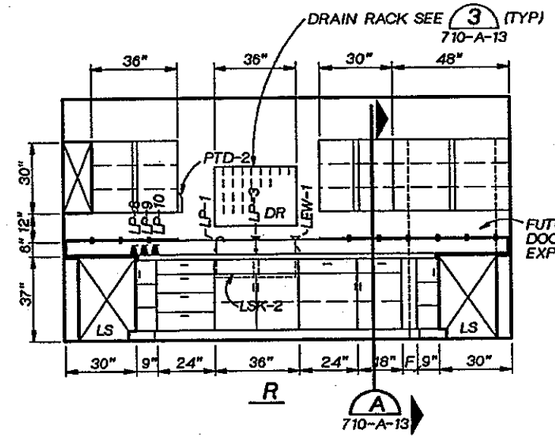

R

A 710-A-13

SAMPLE RECEIVING 710-23

3/8"=1'-0"

FIXTURE LEGEND AND ABBREVIATIONS:

- HOT & COLD MIXING FAUCET (LP-3)
- DEIONIZED WATER FAUCET (LP-1)
- EYE WASH/BODY WASH (LEW-1) (HAND HELD)
- COLD WATER FAUCET (LP-2) & CUP SINK (LSK-4)
- CUP SINK (SECTION & PLAN)
- GAS COCKS (PANEL MOUNT) G A V (LP-4, LP-5, LP-6)
- GAS COCKS (DECK MOUNT) G A V (LP-8, LP-9, LP-10)
- DOUBLE GAS COCKS (DECK MOUNT) G A V (LP-11, LP-12, LP-13)
- DESIGNATED ELEC CIRCUIT (SEE ELEC DRAWINGS)
- MULTI-OUTLET ASSEMBLY (LE-1)
- RS-232C COMPUTER CABLE
- TELEPHONE JACK
- CLOCK
- PULL
- LOCK

BV	BASE VENT
CH	CANOPY HOOD
CW	COLD WATER
DI	DEIONIZED WATER
DR	DRAIN RACK
F	FILLER
F/A	FLAMMABLES/ACID CABINET
FD	FLOOR DRAIN
FH	FUME HOOD
FR	FREEZER
FW	FLASK WASHER
GAV	GAS, AIR, VACUUM
GW	GLASSWARE WASHER
IVH	INSTRUMENT VENT HOOD
KS	KNEE SPACE
LS	LAZY SUSAN
LSS	LAB SAFETY SHOWER WITH FLOOR DRAIN BELOW
PB	PULL BOARD
PC	PERSONAL COMPUTER
PTD	PAPER TOWEL DISPENSER
R/F	REFRIGERATOR/FREEZER
RW-1	DISTILLED WATER SYSTEM
RW-2	DEIONIZED WATER SYSTEM
SS	STAINLESS STEEL
STO	STORAGE CABINET
TS	TANK SPACE

REGISTERED ARCHITECT JOHN A. PRUSS STATE OF WASHINGTON

CH2M HILL

DSGN	E HADFIELD
DR	B CRADDOCK
CHK	R WHITE
APVD	J GAUTHIER

NO.	DATE	REVISION	BY	APVD

REUSE OF DOCUMENTS
THIS DOCUMENT, AND THE IDEAS AND DESIGNS INCORPORATED HEREIN, AS AN INSTRUMENT OF PROFESSIONAL SERVICE, IS THE PROPERTY OF CH2M HILL AND IS NOT TO BE USED, IN WHOLE OR IN PART, FOR ANY OTHER PROJECT WITHOUT THE WRITTEN AUTHORIZATION OF CH2M HILL.
©CH2M HILL

BAR IS ONE INCH ON ORIGINAL DRAWING. 0 1"
IF NOT ONE INCH ON THIS SHEET, ADJUST SCALES ACCORDINGLY.

CITY OF BELLINGHAM, WASHINGTON
POST POINT WASTEWATER TREATMENT PLANT UPGRADE

ADMINISTRATION / LABORATORY BUILDING
ARCHITECTURAL
INTERIOR ELEVATIONS - LABORATORY

DWG NO. 710-A-12
DATE AUG. 1990
PROJ. NO. SEA22462.C1

DATE: 8-17-90 A. MCRILL
DRAWN BY: C.S.HOWELL DESIGNED BY: G. BOWER
DGN NAME: H:/PROJ2/BELLINGH/BL710A-N.DGN

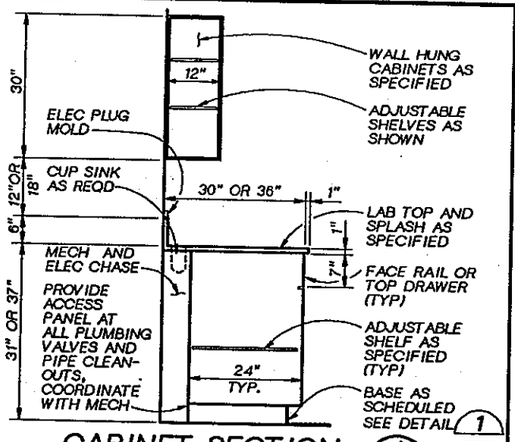

CABINET SECTION A

3/4"=1'-0" 710-A-11, 710-A-12

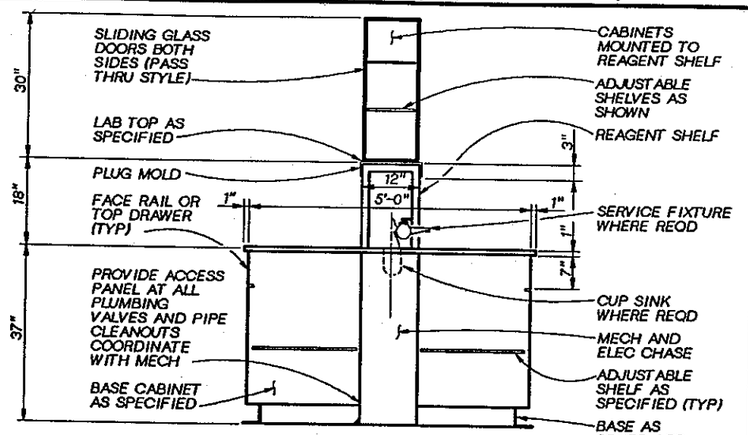

CABINET SECTION B

3/4"=1'-0" 710-A-12

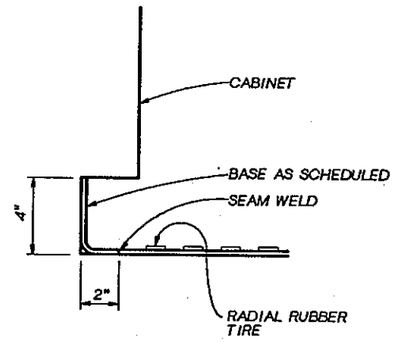

CABINET BASE DETAIL 1

3"=1'-0"

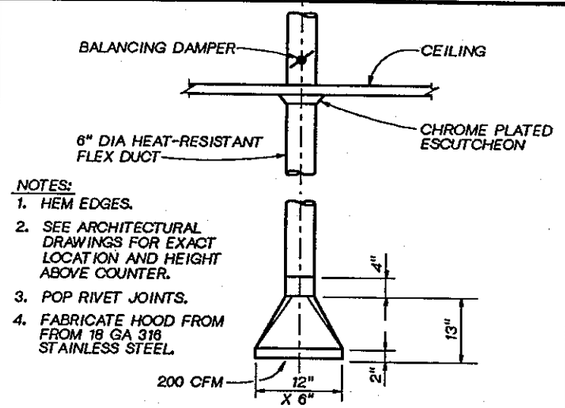

NOTES:
1. HEM EDGES.
2. SEE ARCHITECTURAL DRAWINGS FOR EXACT LOCATION AND HEIGHT ABOVE COUNTER.
3. POP RIVET JOINTS.
4. FABRICATE HOOD FROM FROM 18 GA 316 STAINLESS STEEL.

INSTRUMENT VENT HOOD 2

3/4"=1'-0" 710-A-11

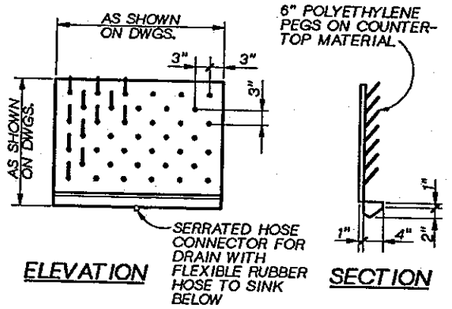

ELEVATION SECTION

DRAIN RACK 3

3/4"=1'-0" 710-A-11, 710-A-12

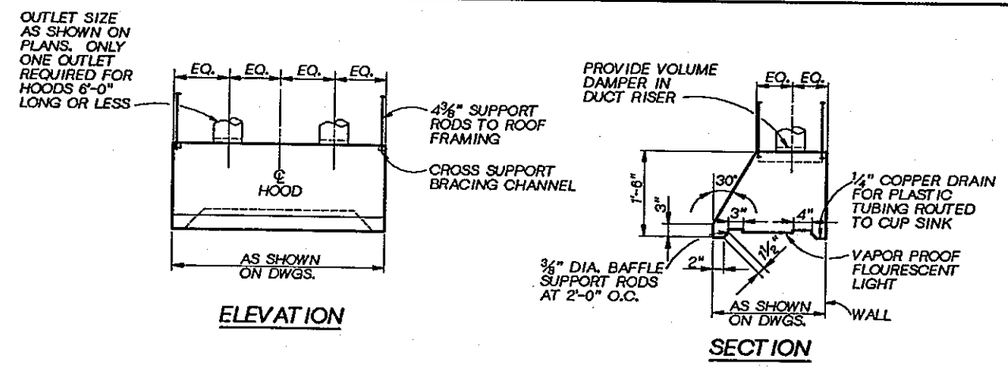

ELEVATION SECTION

CANOPY HOOD 4

3/4"=1'-0" 710-A-11

REGISTERED ARCHITECT JOHN L. PRESS STATE OF WASHINGTON

CH2M HILL

DSGN	G BOWER					
DR	C HOWELL					
CHK	R WHITE					
APVD	J. GAUTHIER	NO.	DATE	REVISION	BY	APVD

REUSE OF DOCUMENTS
THIS DOCUMENT, AND THE IDEAS AND DESIGNS INCORPORATED HEREIN, AS AN INSTRUMENT OF PROFESSIONAL SERVICE, IS THE PROPERTY OF CH2M HILL AND IS NOT TO BE USED, IN WHOLE OR IN PART, FOR ANY OTHER PROJECT WITHOUT THE WRITTEN AUTHORIZATION OF CH2M HILL.
©CH2M HILL

BAR IS ONE INCH ON ORIGINAL DRAWING.
0 1"
IF NOT ONE INCH ON THIS SHEET, ADJUST SCALES ACCORDINGLY.

CITY OF BELLINGHAM, WASHINGTON
POST POINT WASTEWATER TREATMENT PLANT UPGRADE

ADMINISTRATION / LABORATORY BUILDING
ARCHITECTURAL MISCELLANEOUS DETAILS

DWG NO. 710-A-13
DATE AUG. 1990
PROJ NO. SEA22462.C1

DATE: 8-27-90
DRAWN BY: C.S.HOWELL DESIGNED BY: G.BOWER
DGN NAME: H:/PROJ2/BELLINGH/BL710A-M.DGN

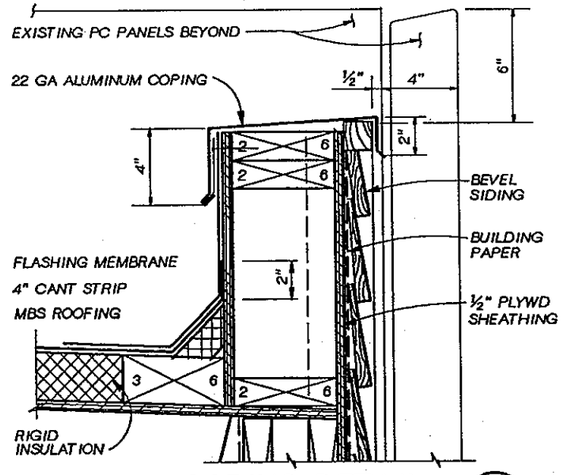

COPING DETAIL (1)
3"=1'-0" 710-A-6

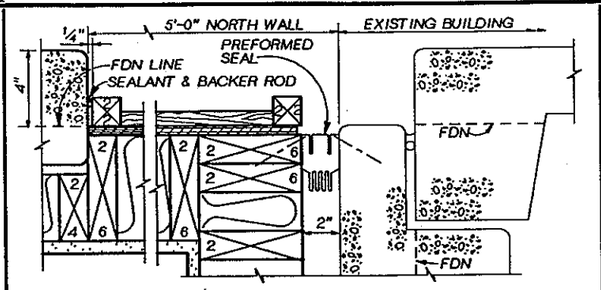

EXPANSION JOINT DETAIL (4)
3"=1'-0" 710-A-1, 710-A-3

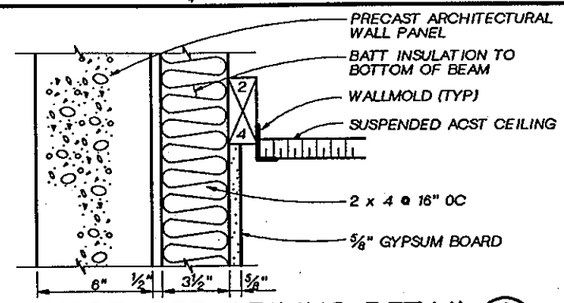

SUSPENDED CEILING DETAIL (9)
3"=1'-0" 710-A-9

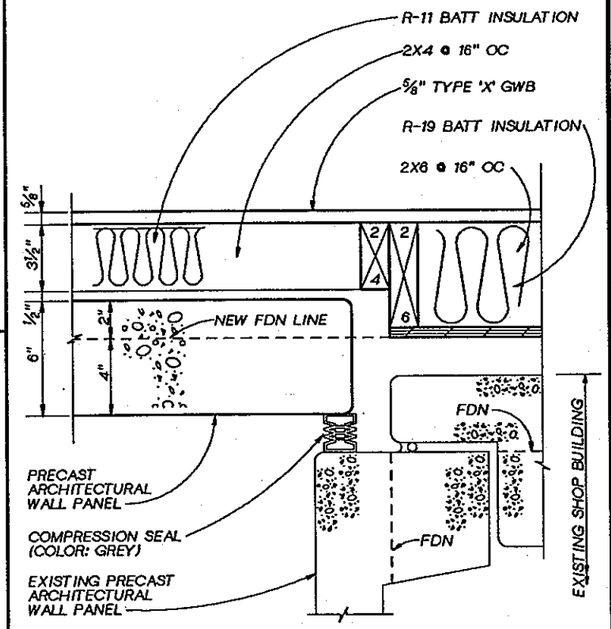

EXPANSION JOINT DETAIL (13)
3"=1'-0" 710-A-1, 710-A-3

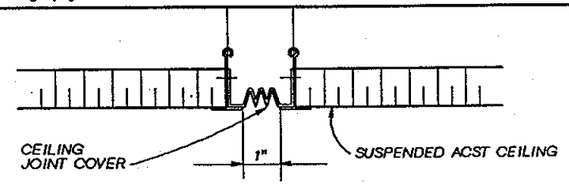

CEILING JOINT DETAIL (5)
HALF SIZE 710-A-8

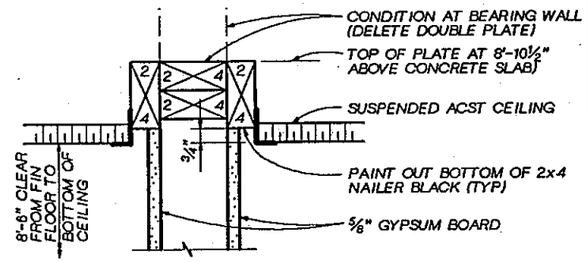

TYPICAL TOP OF WALL AT SUSPENDED CEILING (10)
3"=1'-0" 710-A-8

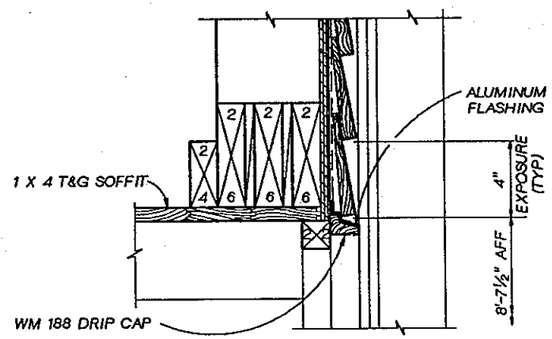

SOFFIT DETAIL (2)
3"=1'-0" 710-A-6

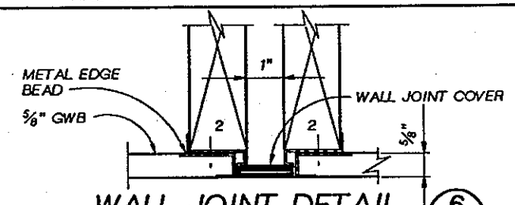

WALL JOINT DETAIL (6)
HALF SIZE 710-A-3

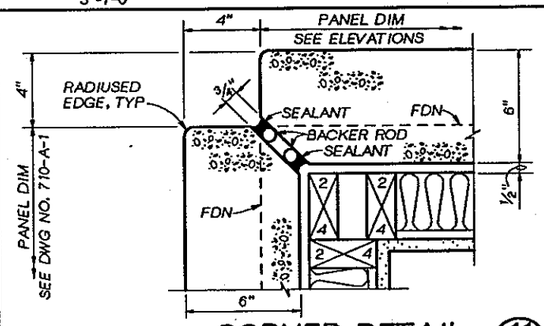

CORNER DETAIL (11)
3"=1'-0" 710-A-1, 710-A-3

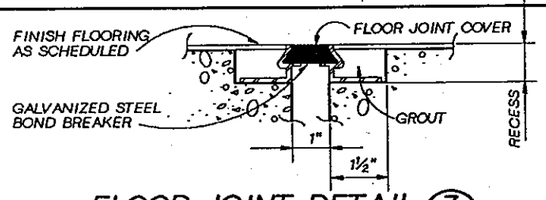

FLOOR JOINT DETAIL (7)
HALF SIZE 710-A-3

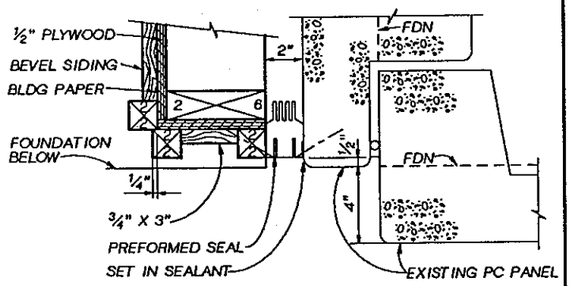

CORNER DETAIL (8)
3"=1'-0" 710-A-1, 710-A-3

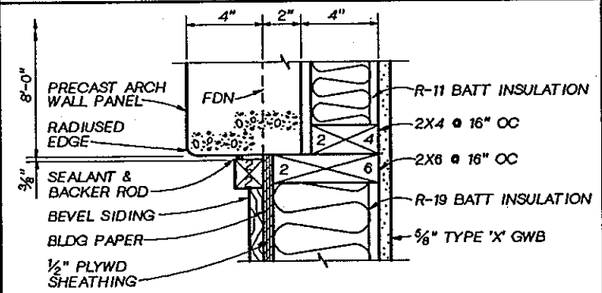

WOOD PANEL DETAIL (12)
3"=1'-0" 710-A-1, 710-A-3

REGISTERED ARCHITECT JOHN C. MEDE STATE OF WASHINGTON

CH2M HILL

DSGN	G BOWER				
DR	C HOWELL				
CHK	R WHITE				
APVD	J. GAUTHIER	NO.	DATE	REVISION	BY	APVD

REUSE OF DOCUMENTS
THIS DOCUMENT, AND THE IDEAS AND DESIGNS INCORPORATED HEREIN, AS AN INSTRUMENT OF PROFESSIONAL SERVICE, IS THE PROPERTY OF CH2M HILL AND IS NOT TO BE USED, IN WHOLE OR IN PART, FOR ANY OTHER PROJECT WITHOUT THE WRITTEN AUTHORIZATION OF CH2M HILL.
©CH2M HILL

BAR IS ONE INCH ON ORIGINAL DRAWING. 0 — 1"
IF NOT ONE INCH ON THIS SHEET, ADJUST SCALES ACCORDINGLY.

CITY OF BELLINGHAM, WASHINGTON
POST POINT WASTEWATER TREATMENT PLANT UPGRADE

ADMINISTRATION/LABORATORY BUILDING
ARCHITECTURAL MISCELLANEOUS DETAILS

DWG NO. 710-A-14
DATE AUG. 1990
PROJ NO. SEA22462.C1

DATE: 8-22-90
DRAWN BY: BBL DESIGNED BY: CK
DGN NAME: H:/PROJ2/BELLINGH/BL710S-A.DGN

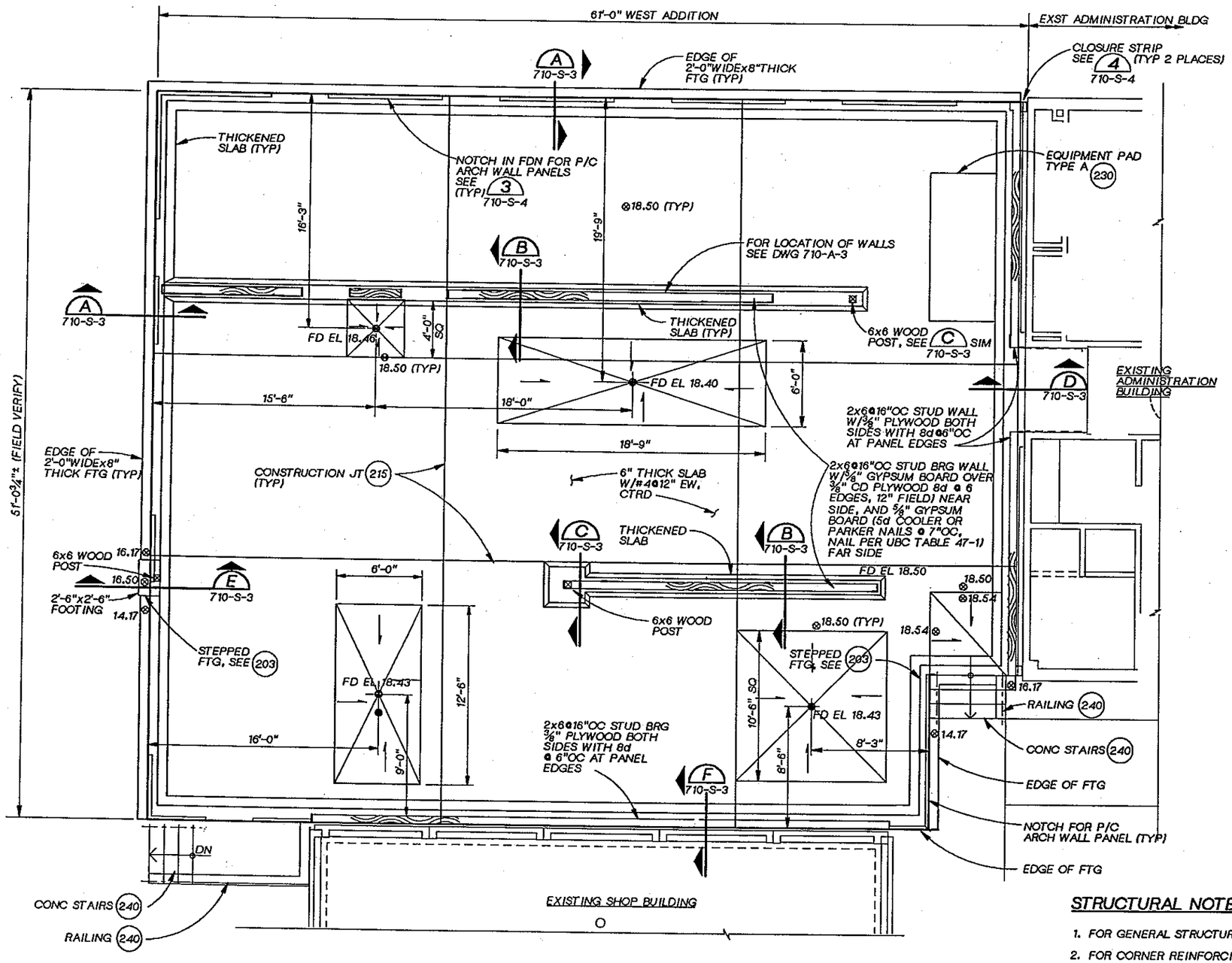

FOUNDATION PLAN

1/4"=1'-0"

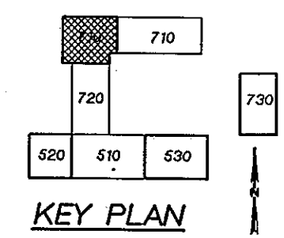

KEY PLAN

STRUCTURAL NOTES:

1. FOR GENERAL STRUCTURAL NOTES SEE 201
2. FOR CORNER REINFORCING DETAILS, SEE 202
3. FOR INFORMATION NOT SHOWN, SEE ARCHITECTURAL DRAWINGS.
4. NON LOAD BEARING PARTITION WALLS NOT SHOWN, SEE DWG 710-A-3.

LINDA M. KORB — STATE OF WASHINGTON — 22364 — REGISTERED PROFESSIONAL ENGINEER

CH2M HILL

DSGN	C. KEEL
DR	B. LAZARO
CHK	W. BENNETT
APVD	J GAUTHIER

NO.	DATE	REVISION	BY	APVD

REUSE OF DOCUMENTS
THIS DOCUMENT, AND THE IDEAS AND DESIGNS INCORPORATED HEREIN, AS AN INSTRUMENT OF PROFESSIONAL SERVICE, IS THE PROPERTY OF CH2M HILL AND IS NOT TO BE USED, IN WHOLE OR IN PART, FOR ANY OTHER PROJECT WITHOUT THE WRITTEN AUTHORIZATION OF CH2M HILL.
©CH2M HILL

BAR IS ONE INCH ON ORIGINAL DRAWING. 0 — 1"
IF NOT ONE INCH ON THIS SHEET, ADJUST SCALES ACCORDINGLY.

CITY OF BELLINGHAM, WASHINGTON
POST POINT WASTEWATER TREATMENT PLANT UPGRADE

ADMINISTRATION / LABORATORY BUILDING
STRUCTURAL WEST ADDITION
FOUNDATION PLAN AND DETAILS

DWG NO. 710-S-1
DATE AUG. 1990
PROJ NO. SEA22462.C1

DATE: 8-26-90
DRAWN BY: BBL DESIGNED BY: CK
DGN NAME: H:/PROJ2/BELLINGH/BL710S-B.DGN

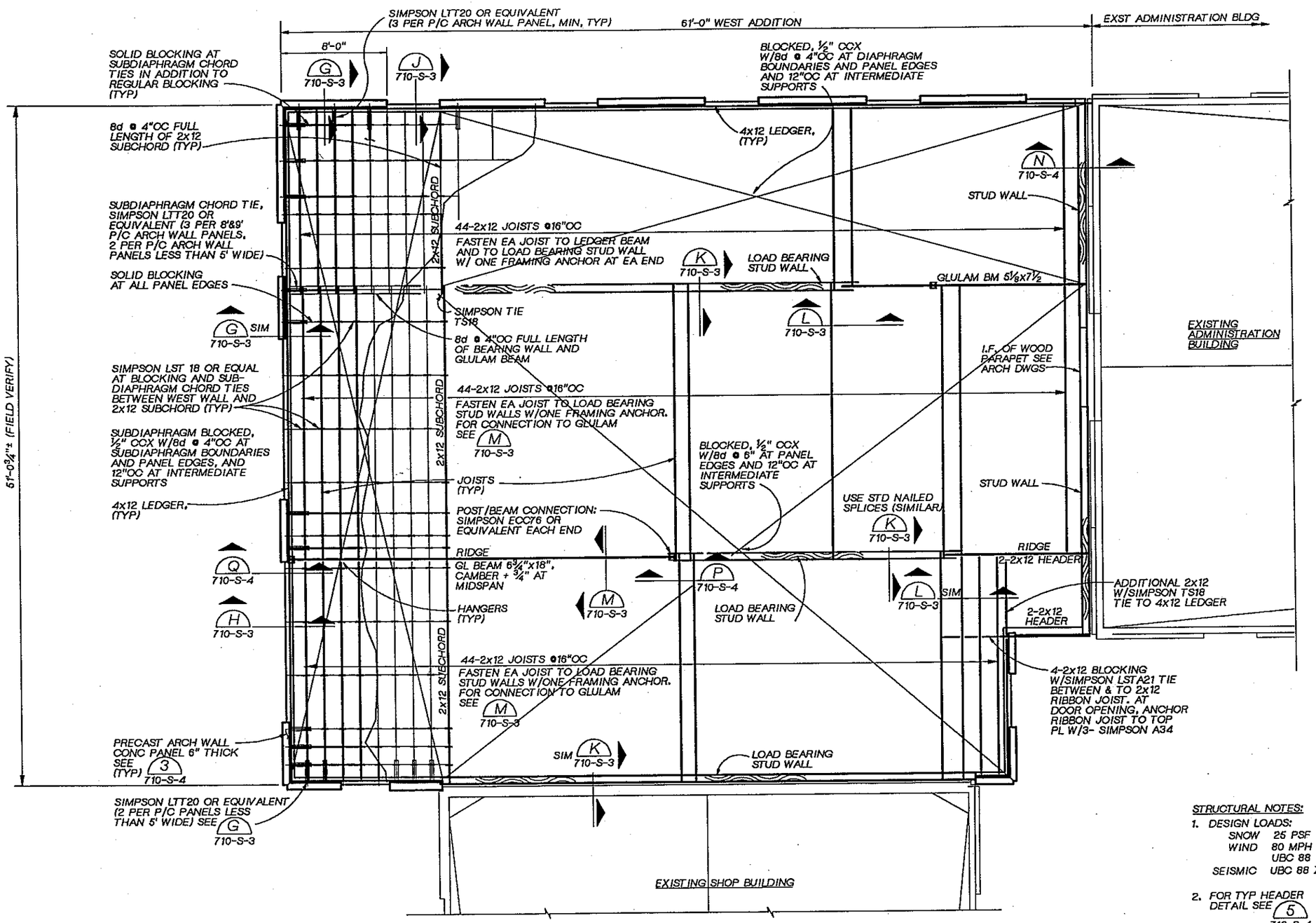

ROOF FRAMING PLAN

¼"=1'-0"

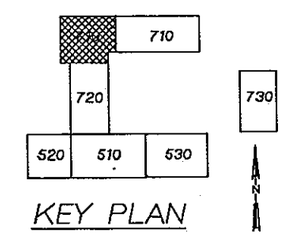

KEY PLAN

STRUCTURAL NOTES:

1. DESIGN LOADS:
   SNOW 25 PSF
   WIND 80 MPH EXP C
   UBC 88
   SEISMIC UBC 88 ZONE 3
2. FOR TYP HEADER DETAIL SEE 5 710-S-4

DSGN C. KEEL						
DR B. LAZARO						
CHK W. BENNETT						
APVD J. GAUTHIER	NO.	DATE	REVISION	BY	APVD	

CH2M HILL

REUSE OF DOCUMENTS
THIS DOCUMENT, AND THE IDEAS AND DESIGNS INCORPORATED HEREIN, AS AN INSTRUMENT OF PROFESSIONAL SERVICE, IS THE PROPERTY OF CH2M HILL AND IS NOT TO BE USED, IN WHOLE OR IN PART, FOR ANY OTHER PROJECT WITHOUT THE WRITTEN AUTHORIZATION OF CH2M HILL.
©CH2M HILL

BAR IS ONE INCH ON ORIGINAL DRAWING. 0 1"
IF NOT ONE INCH ON THIS SHEET, ADJUST SCALES ACCORDINGLY.

CITY OF BELLINGHAM, WASHINGTON
POST POINT WASTEWATER TREATMENT PLANT UPGRADE

ADMINISTRATION / LABORATORY BUILDING
STRUCTURAL WEST ADDITION
ROOF FRAMING PLAN

DWG NO. 710-S-2
DATE AUG. 1990
PROJ NO. SEA22462.C1

DATE: 8-22-90
DRAWN BY: B. LAZARO DESIGNED BY: C. KEEL
DGN NAME: H:/PROJ2/BELLINGH/BL710S-D.DGN

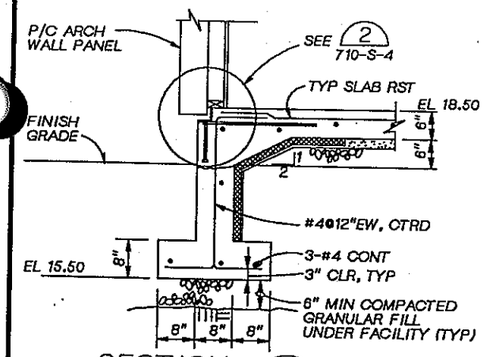

SECTION A
3/4" = 1'-0" 710-S-1

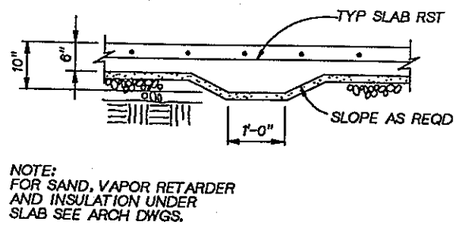

TYPICAL THICKENED SLAB

SECTION B
3/4" = 1'-0" 710-S-1

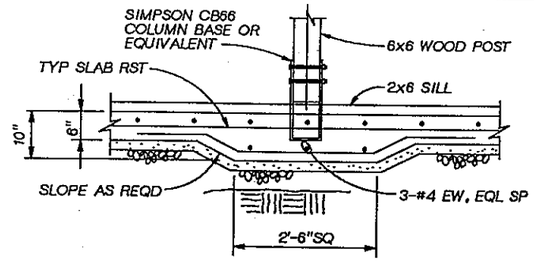

THICKENED SLAB
AT WOOD INTERIOR POST

SECTION C
3/4" = 1'-0" 710-S-1

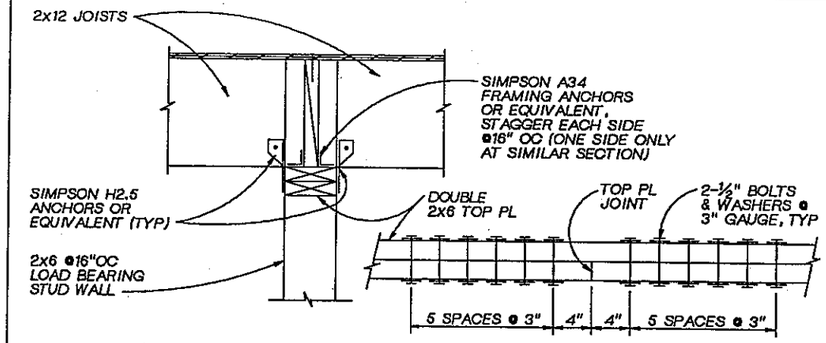

SECTION K
1 1/2" = 1'-0" 710-S-2

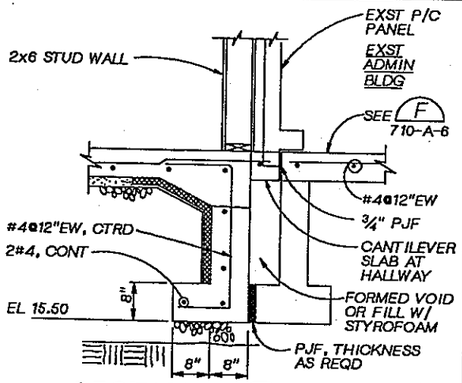

SECTION D
3/4" = 1'-0" 710-S-1

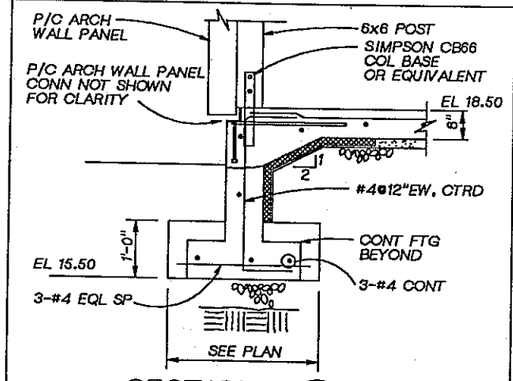

SECTION E
3/4" = 1'-0" 710-S-1

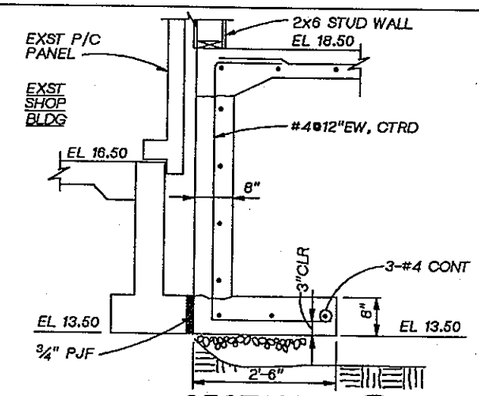

SECTION F
3/4" = 1'-0" 710-S-1

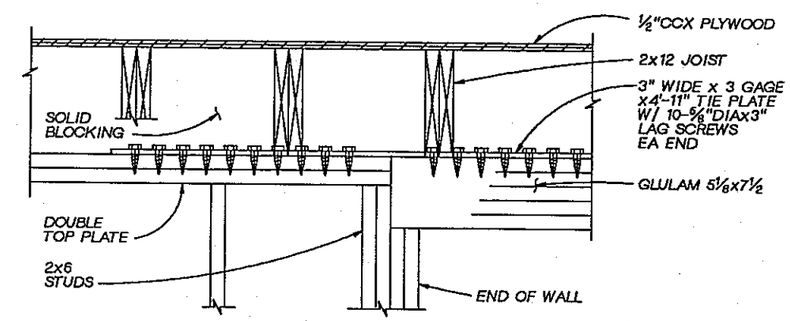

NOTE:
NO TIE PLATE AT SIMILAR SECTION WITH 2-2x12

SECTION L
1 1/2" = 1'-0" 710-S-2

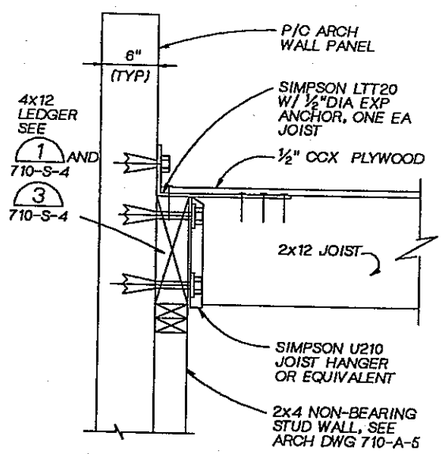

SECTION G
1 1/2" = 1'-0" 710-S-2

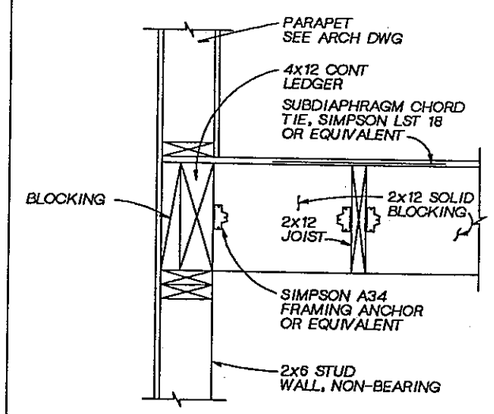

SECTION H
1 1/2" = 1'-0" 710-S-2

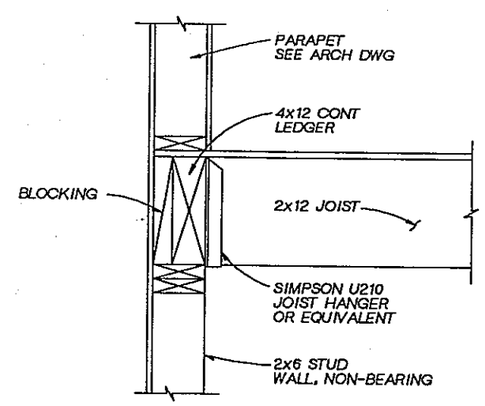

SECTION J
1 1/2" = 1'-0" 710-S-2

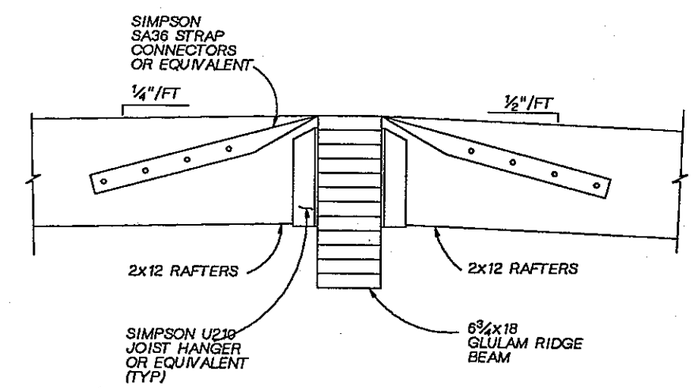

SECTION M
1 1/2" = 1'-0" 710-S-2

LINDA M. KORNAS
STATE OF WASHINGTON
12561
REGISTERED PROFESSIONAL ENGINEER

CH2M HILL

DSGN	C. KEEL
DR	B. LAZARO
CHK	W. BENNETT
APVD	J GAUTHIER

NO.	DATE	REVISION	BY	APVD

REUSE OF DOCUMENTS
THIS DOCUMENT, AND THE IDEAS AND DESIGNS INCORPORATED HEREIN, AS AN INSTRUMENT OF PROFESSIONAL SERVICE, IS THE PROPERTY OF CH2M HILL AND IS NOT TO BE USED, IN WHOLE OR IN PART, FOR ANY OTHER PROJECT WITHOUT THE WRITTEN AUTHORIZATION OF CH2M HILL.
©CH2M HILL

BAR IS ONE INCH ON ORIGINAL DRAWING.
0 1"
IF NOT ONE INCH ON THIS SHEET, ADJUST SCALES ACCORDINGLY.

CITY OF BELLINGHAM, WASHINGTON
POST POINT WASTEWATER TREATMENT PLANT UPGRADE

ADMINISTRATION / LABORATORY BUILDING
STRUCTURAL
WEST ADDITION SECTIONS

DWG NO. 710-S-3
DATE AUG. 1990
PROJ NO. SEA22462.C1

DATE: 8-25-90 A. MCHILL
DRAWN BY: R. FRIBERG
DGN NAME: H:/PROJ2/BELLINGH/BL710S-E.DGN
DESIGNED BY: C. KEEL

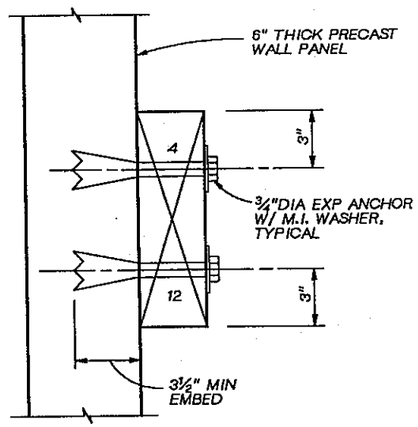

DETAIL 1
3" = 1'-0"
710-S-3
710-S-4

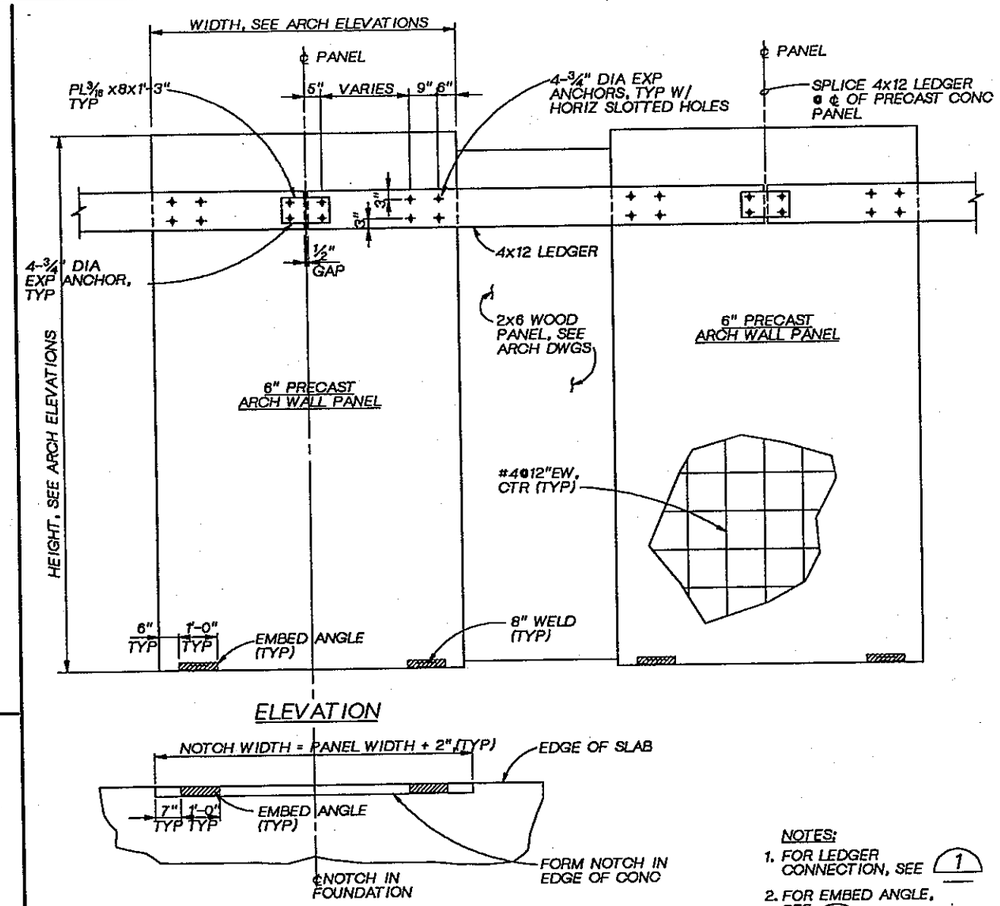

ELEVATION

PLAN

DETAIL 3
½" = 1'-0"
710-S-2

NOTES:
1. FOR LEDGER CONNECTION, SEE 1
2. FOR EMBED ANGLE, SEE 2

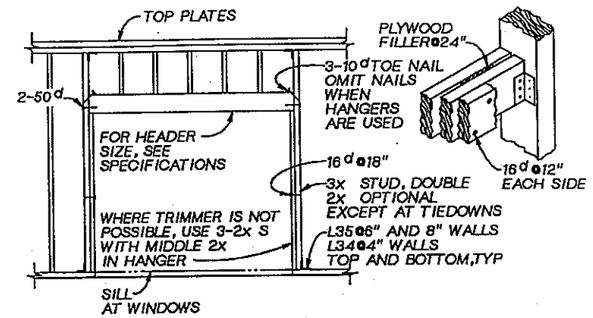

HEADER DETAIL 5
NTS
710-S-2

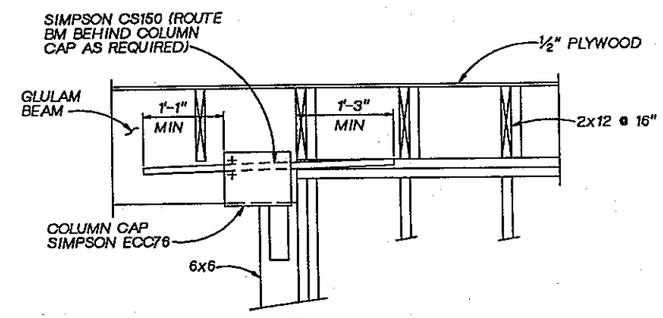

SECTION P
1"= 1'-0"
710-S-2

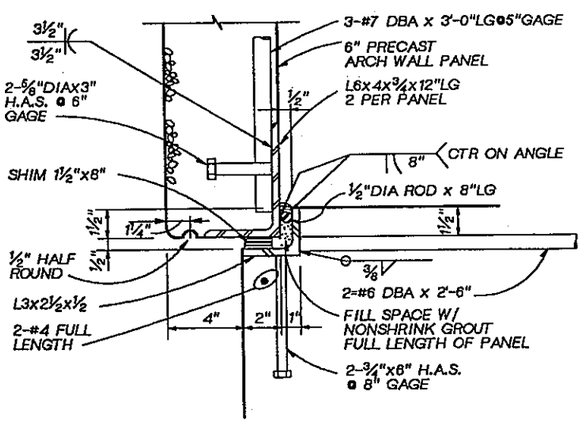

DETAIL 2
3" = 1'-0"
710-S-3
710-S-4

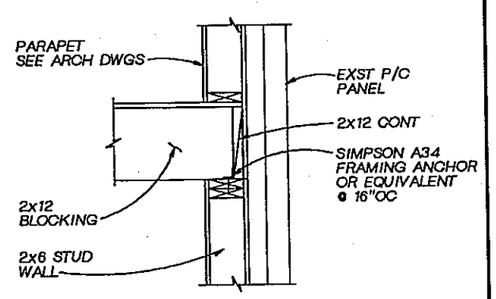

SECTION N
1" = 1'-0"
710-S-2

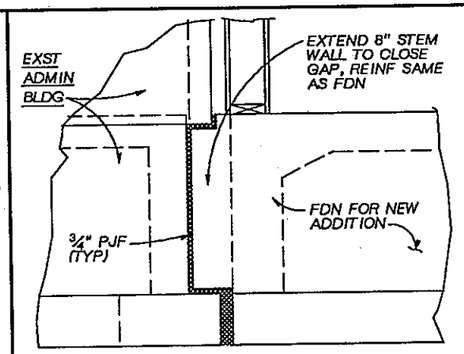

DETAIL 4
1" = 1'-0"
710-S-1

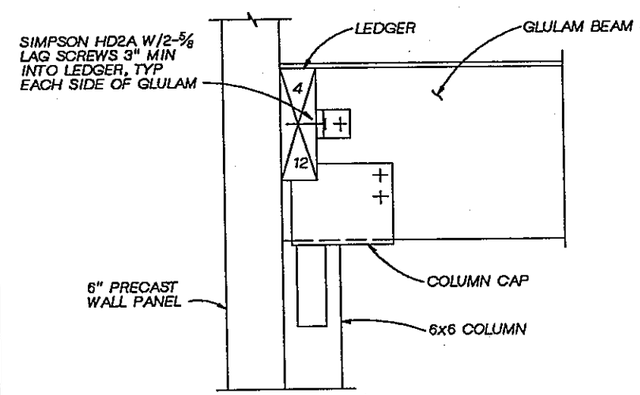

SECTION Q
1½"= 1'-0"
710-S-1

DSGN	L. KORBUS				
DR	R. FRIBERG				
CHK	W. BENNETT				
APVD	J GAUTHIER	NO.	DATE	REVISION	BY / APVD

CH2M HILL

REUSE OF DOCUMENTS
THIS DOCUMENT, AND THE IDEAS AND DESIGNS INCORPORATED HEREIN, AS AN INSTRUMENT OF PROFESSIONAL SERVICE, IS THE PROPERTY OF CH2M HILL AND IS NOT TO BE USED, IN WHOLE OR IN PART, FOR ANY OTHER PROJECT WITHOUT THE WRITTEN AUTHORIZATION OF CH2M HILL.
©CH2M HILL

BAR IS ONE INCH ON ORIGINAL DRAWING. 0 1"
IF NOT ONE INCH ON THIS SHEET, ADJUST SCALES ACCORDINGLY.

CITY OF BELLINGHAM, WASHINGTON
POST POINT WASTEWATER TREATMENT PLANT UPGRADE

ADMINISTRATION / LABORATORY BUILDING
STRUCTURAL
WEST ADDITION DETAILS

DWG NO. 710-S-4
DATE AUG. 1990
PROJ NO. SEA22462.C1

DRAWN BY: SD GUNDY DESIGNED BY: G FLOOD
DGN NAME: H:/PROJ2/BELLINGH/BL710H-A.DGN

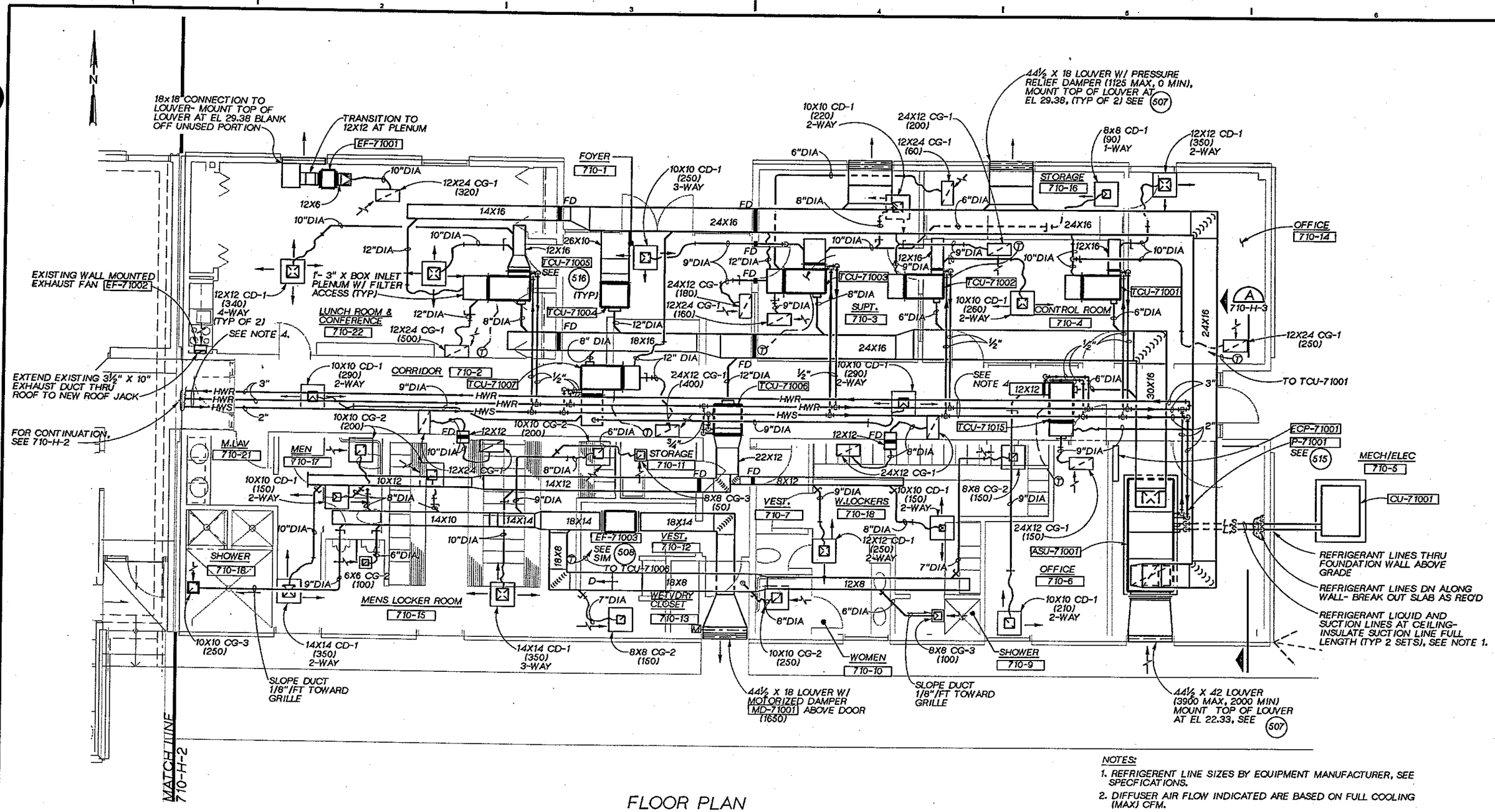

FLOOR PLAN

¼" = 1'- 0"

NOTES:

1. REFRIGERENT LINE SIZES BY EQUIPMENT MANUFACTURER, SEE SPECFICATIONS.
2. DIFFUSER AIR FLOW INDICATED ARE BASED ON FULL COOLING (MAX) CFM.
3. COOLING SPACE IS EXTREMELY LIMITED, COORDINATION WITH OTHER TRADES IS IMPERATIVE TO AVOID CONFUSION.
4. HOLD HWR & HWS PIPING AS HIGH AS POSSIBLE, CLOSE TO ROOF STRUCTURE, ℄ EL APPROX 29.67 (VERIFY).
5. FLOOR EL APPROX 18.50, SEE STRUCTURAL DWGS.

JOSEPH A. GAUTHIER STATE OF WASHINGTON REGISTERED PROFESSIONAL ENGINEER

CH2M HILL

DSGN	G. FLOOD
DR	S.D.GUNDY
CHK	J. SIEMENS
APVD	J. GAUTHIER

NO.	DATE	REVISION	BY	APVD

REUSE OF DOCUMENTS
THIS DOCUMENT, AND THE IDEAS AND DESIGNS INCORPORATED HEREIN, AS AN INSTRUMENT OF PROFESSIONAL SERVICE, IS THE PROPERTY OF CH2M HILL AND IS NOT TO BE USED, IN WHOLE OR IN PART, FOR ANY OTHER PROJECT WITHOUT THE WRITTEN AUTHORIZATION OF CH2M HILL.
©CH2M HILL

VERIFY SCALE
BAR IS ONE INCH ON ORIGINAL DRAWING.
0 1"
IF NOT ONE INCH ON THIS SHEET, ADJUST SCALES ACCORDINGLY.

CITY OF BELLINGHAM, WASHINGTON
POST POINT WASTEWATER TREATMENT PLANT UPGRADE

ADMINISTRATION/LABORATORY BUILDING
HVAC EXISTING BUILDING MODIFICATIONS FLOOR PLAN

DWG NO. 710-H-1
DATE AUG. 1990
PROJ NO. SEA22462.C1

OVERLAY IDENTIFICATION: COMPOSITE, VERIFY, PROJID, FILE

DATE: 8/20/90
DRAWN BY: B. CARR DESIGNED BY: G.FLOOD
DGN NAME: H:/PROJ2/BELLINGH/BL710H-B.DGN

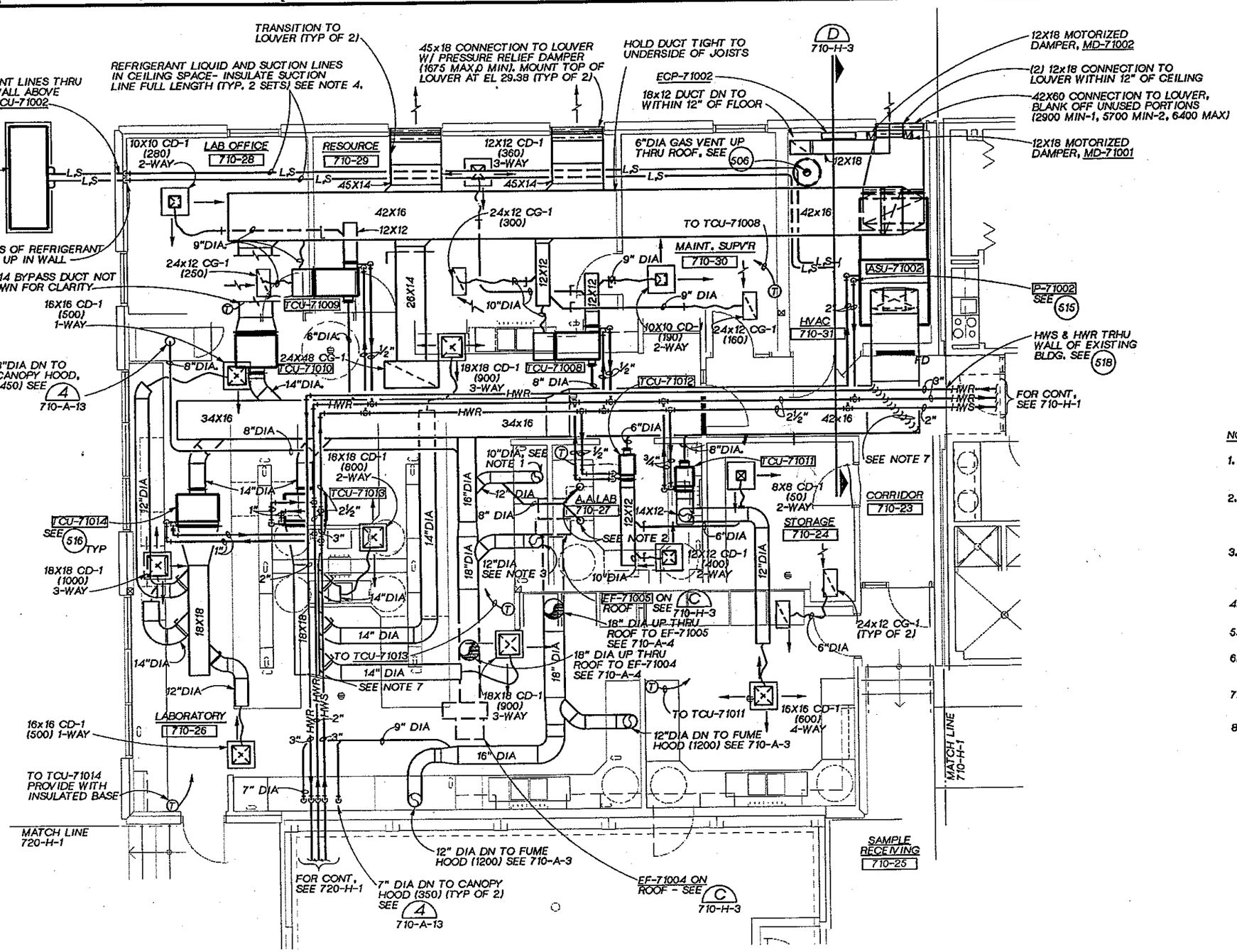

FLOOR PLAN

¼"=1'- 0"

NOTES:

1. 10"DIA DN TO FUME HOOD (800)-SEE 710-A-3
2. 5"DIA DN TO INSTRUMENT VENT HOOD, (200)-SEE 2 710-A-13
3. 12" DIA DN TO CANOPY HOOD (1200)-SEE 4 710-A-13
4. REFRIGERANT LINE SIZES BY EQUIPMENT MANUFACTURER. SEE SPECIFICATIONS.
5. DIFFUSER AIRFLOWS INDICATED ARE BASED ON FULL COOLING (MAX) CFM.
6. CEILING SPACE IS EXTREMELY LIMITED. COORDINATION WITH OTHER TRADES IS IMPERATIVE TO AVOID CONFLICTS.
7. HOLD HWS & HWR AS HIGH AS POSSIBLE. CLOSE TO ROOF STRUCTURE. ℄EL APPROX. 29.67 (VERIFY).
8. FLOOR EL APPROX 18.50. SEE STRUCTURAL DWGS.

JOSEPH A. GAUTHIER STATE OF WASHINGTON REGISTERED PROFESSIONAL ENGINEER

CH2M HILL

DSGN	G.FLOOD
DR	S.D.GUNDY
CHK	J. SIEMENS
APVD	J GAUTHIER

NO.	DATE	REVISION	BY	APVD

REUSE OF DOCUMENTS
THIS DOCUMENT, AND THE IDEAS AND DESIGNS INCORPORATED HEREIN, AS AN INSTRUMENT OF PROFESSIONAL SERVICE, IS THE PROPERTY OF CH2M HILL AND IS NOT TO BE USED, IN WHOLE OR IN PART, FOR ANY OTHER PROJECT WITHOUT THE WRITTEN AUTHORIZATION OF CH2M HILL.
©CH2M HILL

VERIFY SCALE
BAR IS ONE INCH ON ORIGINAL DRAWING.
0 1"
IF NOT ONE INCH ON THIS SHEET, ADJUST SCALES ACCORDINGLY.

CITY OF BELLINGHAM, WASHINGTON
POST POINT WASTEWATER TREATMENT PLANT UPGRADE

ADMINISTRATION / LABORARY BUILDING
HVAC
WEST ADDITION FLOOR PLAN

DWG NO. 710-H-2
DATE AUG. 1990
PROJ NO. SEA22462.C1

COMPOSITE
OVERLAY SCREEN
OVERLAY IDENTIFICATION
PROJD
FILE

DATE: 8-24-90
DRAWN BY: M. SPARLING DESIGNED BY: G. FLOOD
DGN NAME: H:/PROJ2/BELLINGH/BLBL710H-C.DGN

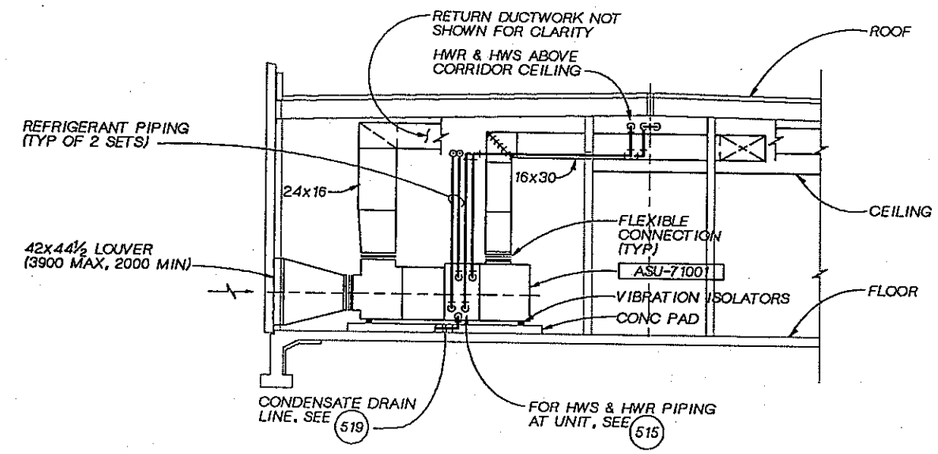

MECHANICAL ROOM SECTION (A)

¼" = 1'-0"

710-H-1

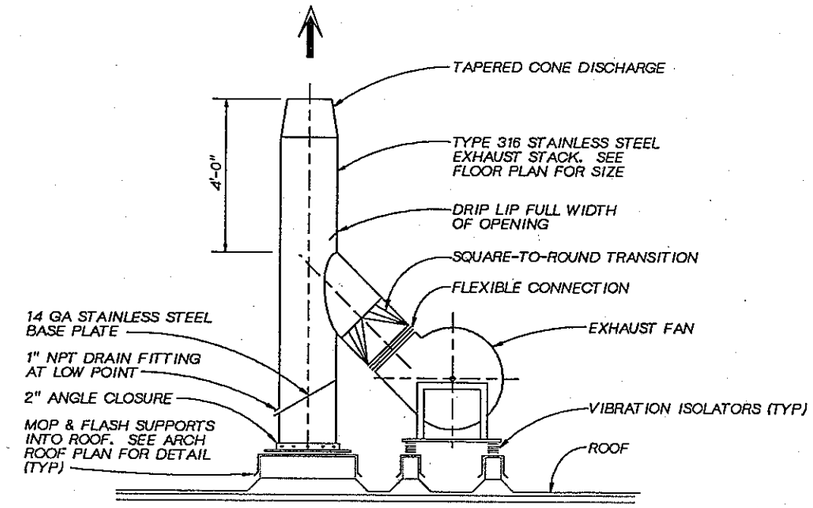

LABORATORY EXHAUST FAN (C)

N.T.S.

710-H-2

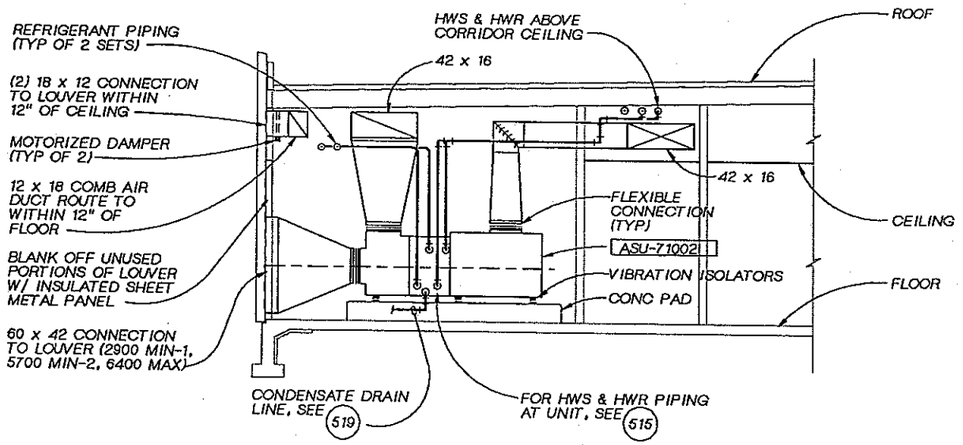

MECHANICAL ROOM SECTION (B)

¼" = 1'-0"

710-H-2

JOSEPH A. GAUTHIER — STATE OF WASHINGTON — REGISTERED PROFESSIONAL ENGINEER

CH2M HILL

DSGN	G. FLOOD				
DR	M. SPARLING				
CHK	J. GAUTHIER				
APVD	J. GAUTHIER	NO.	DATE	REVISION	BY	APVD

REUSE OF DOCUMENTS
THIS DOCUMENT, AND THE IDEAS AND DESIGNS INCORPORATED HEREIN, AS AN INSTRUMENT OF PROFESSIONAL SERVICE, IS THE PROPERTY OF CH2M HILL AND IS NOT TO BE USED, IN WHOLE OR IN PART, FOR ANY OTHER PROJECT WITHOUT THE WRITTEN AUTHORIZATION OF CH2M HILL.
©CH2M HILL

BAR IS ONE INCH ON ORIGINAL DRAWING.
0 1"
IF NOT ONE INCH ON THIS SHEET, ADJUST SCALES ACCORDINGLY.

CITY OF BELLINGHAM, WASHINGTON
POST POINT WASTEWATER TREATMENT PLANT UPGRADE

ADMINISTRATION/LABORATORY BUILDING
HVAC SECTIONS AND DETAILS

DWG NO. 710-H-3
DATE AUG. 1990
PROJ NO. SEA22462.C1

DATE: 8/22/90
DRAWN BY: B. CARR DESIGNED BY:
DGN NAME: H:/PROJ2/BELLINGH/BL710P-A.DGN

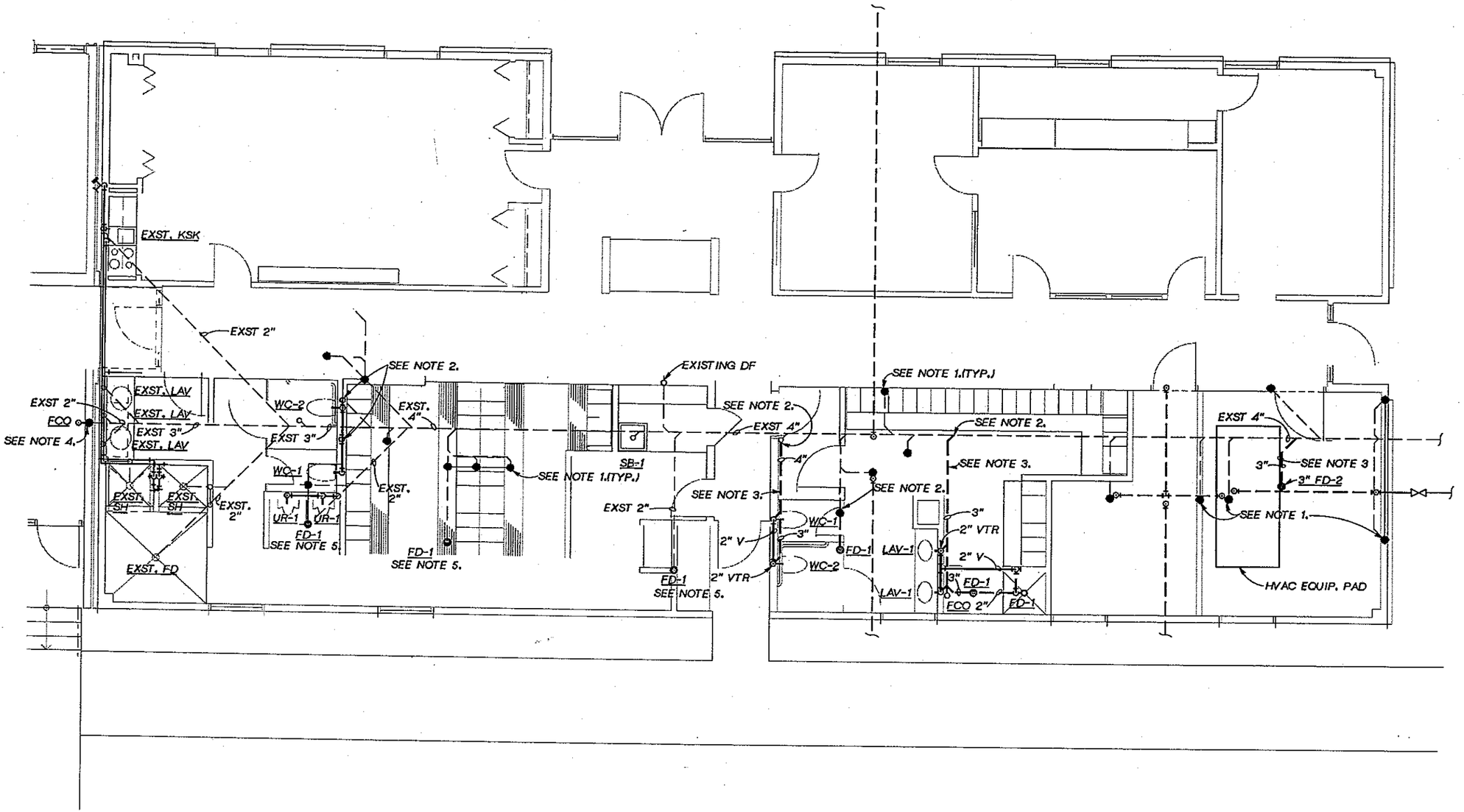

NOTES:

1. FILL AND CAP EXISTING DRAIN PIPING FLUSH WITH FINISH FLOOR.
2. CONNECT NEW PIPING TO EXISTING PIPING AT APPROXIMATE LOCATIONS SHOWN.VERIFY LOCATIONS IN THE FIELD.
3. SAW CUT SLAB AS REQUIRED FOR NEW DRAIN PIPING.
4. EXTEND EXISTING DRAIN PIPING AND INSTALL NEW FLOOR CLEANOUT IN NEW SLAB.
5. INSTALL NEW FLOOR DRAIN ON EXISTING DRAIN PIPING.VERIFY SIZE FOR CORRECT FIT OF NEW FLOOR DRAIN.

JOSEPH A. GAUTHIER — STATE OF WASHINGTON — REGISTERED PROFESSIONAL ENGINEER

CH2M HILL

DSGN	S.D. GUNDY
DR	S.D. GUNDY
CHK	J.W. REGER
APVD	J GAUTHIER

NO.	DATE	REVISION	BY	APVD

REUSE OF DOCUMENTS
THIS DOCUMENT, AND THE IDEAS AND DESIGNS INCORPORATED HEREIN, AS AN INSTRUMENT OF PROFESSIONAL SERVICE, IS THE PROPERTY OF CH2M HILL AND IS NOT TO BE USED, IN WHOLE OR IN PART, FOR ANY OTHER PROJECT WITHOUT THE WRITTEN AUTHORIZATION OF CH2M HILL.
©CH2M HILL

VERIFY SCALE
BAR IS ONE INCH ON ORIGINAL DRAWING.
0 1"
IF NOT ONE INCH ON THIS SHEET, ADJUST SCALES ACCORDINGLY.

CITY OF BELLINGHAM, WASHINGTON
POST POINT WASTEWATER TREATMENT PLANT UPGRADE

ADMINISTRATION / LABORATORY BUILDING
PLUMBING - EXISTING BUILDING MODIFICATIONS - DRAIN AND VENT

DWG NO. 710-P-1
DATE AUG. 1990
PROJ. NO. SEA22462.C1

OVERLAY IDENTIFICATION: COMPOSITE, PROJID, FILE

DATE: 8/25/90 ERR
DRAWN BY: B. CARR DESIGNED BY:
DGN NAME: H:/PROJ2/BELLINGH/BL710P-B.DGN

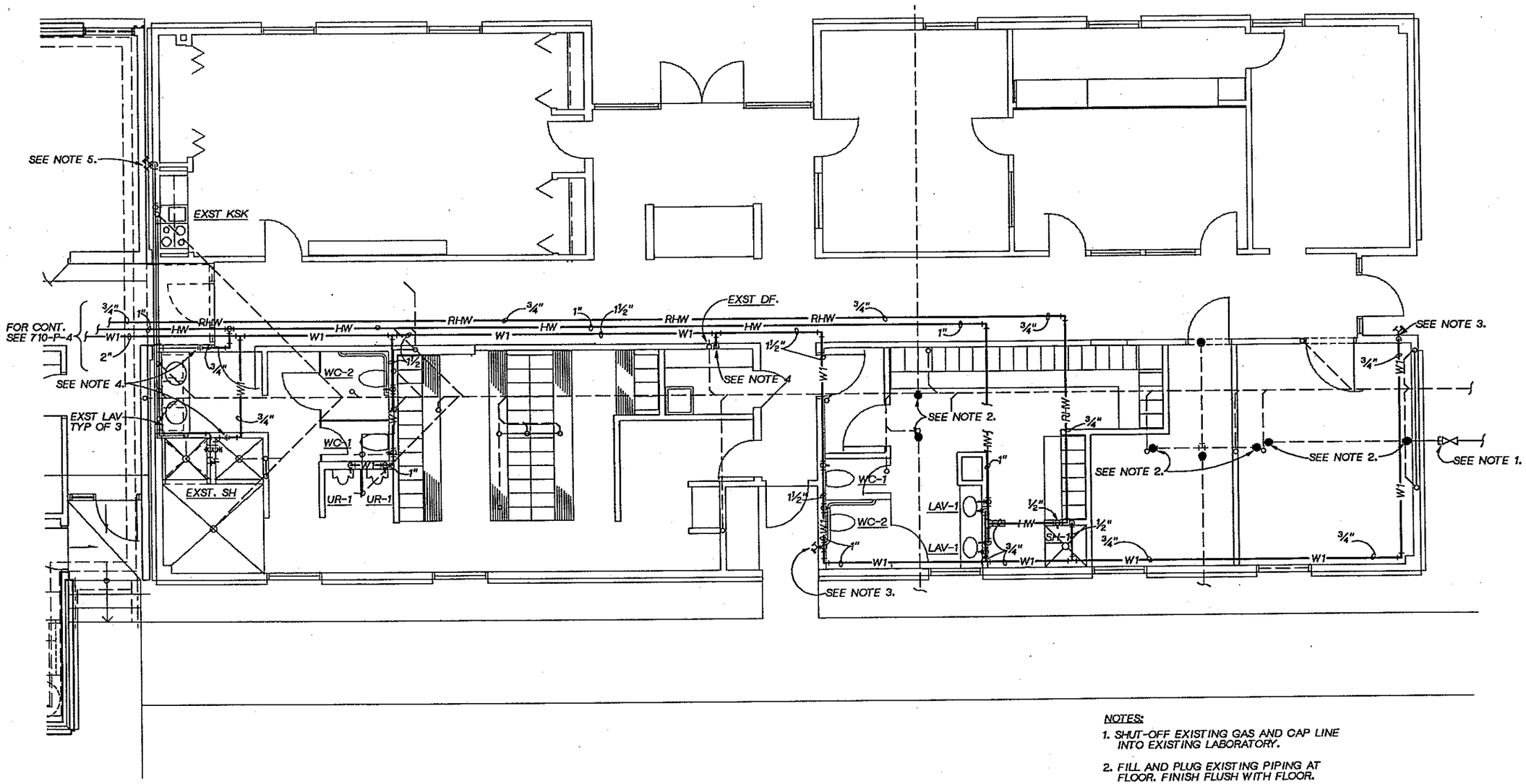

NOTES:

1. SHUT-OFF EXISTING GAS AND CAP LINE INTO EXISTING LABORATORY.
2. FILL AND PLUG EXISTING PIPING AT FLOOR. FINISH FLUSH WITH FLOOR.
3. REMOVE EXISTING HOSE VALVE AND REPLACE WITH NEW HOSE VALVE, INSTALL NEW PIPING TO VALVE.
4. TIE INTO EXISTING PIPING AT LOCATION SHOWN(FIELD VERIFY LOCATION). TIE-IN AFTER NEW EDITION IS COMPLETE AND WORKING.
5. REMOVE EXISTING HOSE VALVE AND PLUG EXISTING PIPE.

JOSEPH A. GAUTHIER STATE OF WASHINGTON REGISTERED PROFESSIONAL ENGINEER

CH2M HILL

DSGN	S.D. GUNDY
DR	S.D. GUNDY
CHK	J.W. REGER
APVD	J. GAUTHIER

NO.	DATE	REVISION	BY	APVD

REUSE OF DOCUMENTS
THIS DOCUMENT, AND THE IDEAS AND DESIGNS INCORPORATED HEREIN, AS AN INSTRUMENT OF PROFESSIONAL SERVICE, IS THE PROPERTY OF CH2M HILL AND IS NOT TO BE USED, IN WHOLE OR IN PART, FOR ANY OTHER PROJECT WITHOUT THE WRITTEN AUTHORIZATION OF CH2M HILL.
©CH2M HILL

BAR IS ONE INCH ON ORIGINAL DRAWING.
0 1"
IF NOT ONE INCH ON THIS SHEET, ADJUST SCALES ACCORDINGLY.

CITY OF BELLINGHAM, WASHINGTON
POST POINT WASTEWATER TREATMENT PLANT UPGRADE

ADMINISTRATION / LABORATORY BUILDING
PLUMBING - EXISTING BUILDING MODIFICATIONS - W1 & HOT WATER

DWG NO. 710-P-2
DATE AUG. 1990
PROJ. NO. SEA22462.C1

OVERLAY SCREEN
PROJ10 FILE

DRAWN BY: B. CARR DESIGNED BY:
DGN NAME: H:/PROJ2/BELLINGH/BL710P-C.DGN

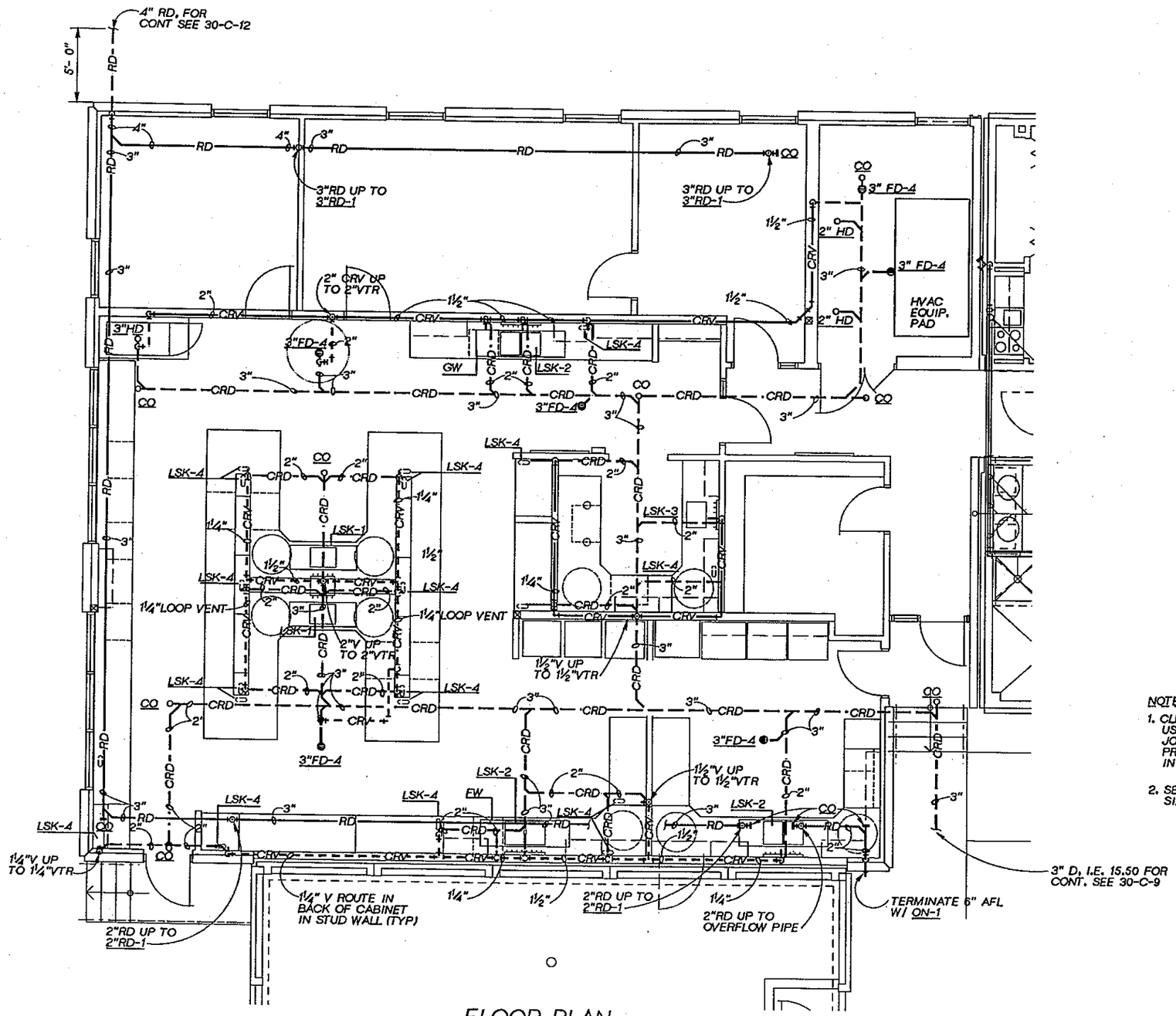

FLOOR PLAN

¼"=1'- 0"

NOTES:

1. CLEAN OUTS FOR "CRD" PIPING - USE CLEAN OUT BOX J.R. SMITH FIG. 4890, JOSAM SERIES, 58670, OR EQUAL. PROVIDE THREADED PLUG IN PIPE IN CLEAN OUT BOX.
2. SEE PLUMBING FIXTURE SCHEDULE FOR SIZES, DRAWING NO. 800-P-1.

JOSEPH A. GAUTHIER STATE OF WASHINGTON REGISTERED PROFESSIONAL ENGINEER

CH2M HILL

DSGN	S.D. GUNDY				
DR	S.D. GUNDY				
CHK	J.W. REGER				
APVD	J. GAUTHIER	NO.	DATE	REVISION	BY	APVD

REUSE OF DOCUMENTS
THIS DOCUMENT, AND THE IDEAS AND DESIGNS INCORPORATED HEREIN, AS AN INSTRUMENT OF PROFESSIONAL SERVICE, IS THE PROPERTY OF CH2M HILL AND IS NOT TO BE USED, IN WHOLE OR IN PART, FOR ANY OTHER PROJECT WITHOUT THE WRITTEN AUTHORIZATION OF CH2M HILL.
©CH2M HILL

VERIFY SCALE
BAR IS ONE INCH ON ORIGINAL DRAWING.
0 1"
IF NOT ONE INCH ON THIS SHEET, ADJUST SCALES ACCORDINGLY.

CITY OF BELLINGHAM, WASHINGTON
POST POINT WASTEWATER TREATMENT PLANT UPGRADE

ADMINISTRATION / LABORATORY BUILDING
PLUMBING - WEST ADDITION
DRAIN AND VENT PLAN

DWG NO. 710-P-3
DATE AUG. 1990
PROJ NO. SEA22462.C1

OVERLAY IDENTIFICATION: COMPOSITE, PROJID, FILE, OVERLAY, REDN

DATE: 8/20/90
DRAWN BY: B. CARR DESIGNED BY: SD GUNDY
DGN NAME: H:/PROJ2/BELLINGH/BL710P-D.DGN

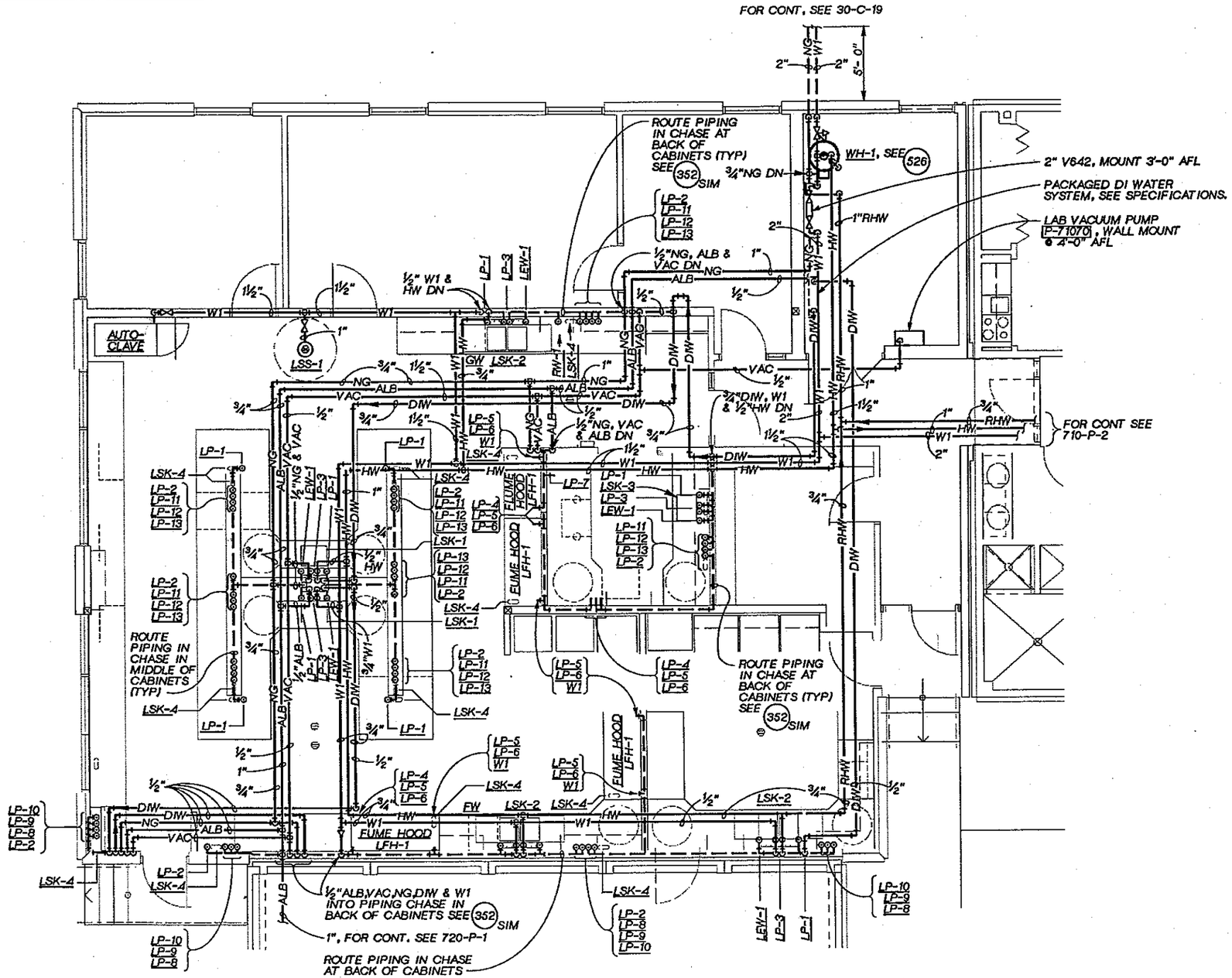

NOTES:

1. AT EACH FUME HOOD, PROVIDE ROUGH-IN FOR NG, ALB, VAC & W1 AS REQUIRED. SEE ARCHITECTURAL ELEVATION DRAWING NO. 710-A-12.
2. SEE PLUMBING FIXTURES SCHEDULE FOR SIZES OF ROUGH-IN, DRAWING NO. 800-P-1

JOSEPH A. GAUTHIER — STATE OF WASHINGTON — REGISTERED PROFESSIONAL ENGINEER

CH2M HILL

DSGN	S.GUNDY
DR	S.GUNDY
CHK	J.W. REGER
APVD	J GAUTHIER

NO.	DATE	REVISION	BY	APVD

REUSE OF DOCUMENTS
THIS DOCUMENT, AND THE IDEAS AND DESIGNS INCORPORATED HEREIN, AS AN INSTRUMENT OF PROFESSIONAL SERVICE, IS THE PROPERTY OF CH2M HILL AND IS NOT TO BE USED, IN WHOLE OR IN PART, FOR ANY OTHER PROJECT WITHOUT THE WRITTEN AUTHORIZATION OF CH2M HILL.
©CH2M HILL

VERIFY SCALE
BAR IS ONE INCH ON ORIGINAL DRAWING.
0 1"
IF NOT ONE INCH ON THIS SHEET, ADJUST SCALES ACCORDINGLY.

CITY OF BELLINGHAM, WASHINGTON
POST POINT WASTEWATER TREATMENT PLANT UPGRADE

ADMINISTRATION/LABORATORY BUILDING
PLUMBING WEST ADDITION - W1 AND HOT WATER

DWG NO. 710-P-4
DATE AUG. 1990
PROJ NO. SEA22462.C1

COMPOSITE
OVERLAY SCREEN
OVERLAY IDENTIFICATION
PROJID
FILE

DATE: 8-25-90
DRAWN BY: GH BURLEY DESIGNED BY:
DGN NAME: H:/PROJ2/BELLINGH/BL720A-A.DGN

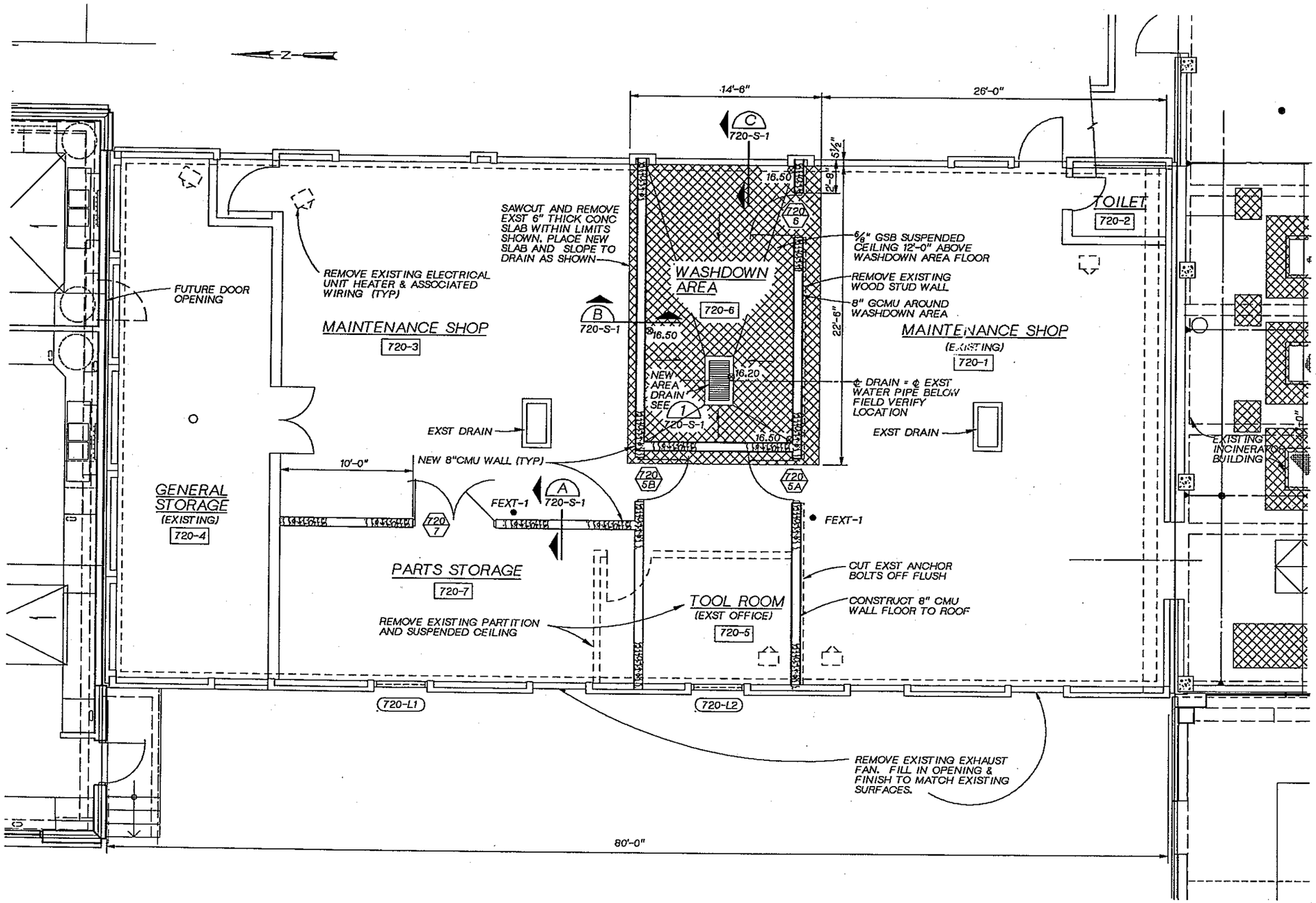

PLAN
¼" = 1'-0"

NOTES

1. FOR "GENERAL NOTES," SEE DWG. NO. 800-A-1.
2. FOR "INTERIOR FINISH SCHEDULE" SEE SPECIFICATION SECTION 09000.
3. FOR "DOOR AND HARDWARE SCHEDULE" SEE SPECIFICATION SECTION 08001.
4. FOR "ABBREVIATIONS," SEE DWG. NO. 10-G-5.
5. FOR "ARCHITECTURAL LEGEND" AND "MATERIAL SYMBOLS," SEE DWG. NO. 10-G-6.
6. FOR "STANDARD DETAILS" ◯, SEE THE "800" SECTION OF THE DRAWINGS.

STRUCTURAL NOTES

1. FOR CMU WALL CORNER REINFORCING, SEE (234)
2. FOR CMU OPENING REINFORCING, SEE (236)

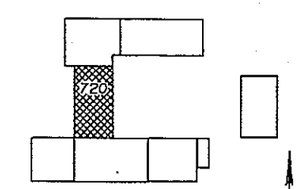

KEY PLAN

REGISTERED ARCHITECT
JOHN L. ROSS
STATE OF WASHINGTON

CH2M HILL

DSGN	G BOWER
DR	G BURLEY
CHK	R WHITE
APVD	J GAUTHIER

NO.	DATE	REVISION	BY	APVD

REUSE OF DOCUMENTS
THIS DOCUMENT, AND THE IDEAS AND DESIGNS INCORPORATED HEREIN, AS AN INSTRUMENT OF PROFESSIONAL SERVICE, IS THE PROPERTY OF CH2M HILL AND IS NOT TO BE USED, IN WHOLE OR IN PART, FOR ANY OTHER PROJECT WITHOUT THE WRITTEN AUTHORIZATION OF CH2M HILL.
©CH2M HILL

BAR IS ONE INCH ON ORIGINAL DRAWING.
0 1"
IF NOT ONE INCH ON THIS SHEET, ADJUST SCALES ACCORDINGLY.

CITY OF BELLINGHAM, WASHINGTON
POST POINT WASTEWATER TREATMENT PLANT UPGRADE

SHOP BUILDING MODIFICATIONS
ARCHITECTURAL FLOOR PLAN

DWG NO. 720-A-1
DATE AUG. 1990
PROJ NO. SEA22462.C1

DATE: 8-26-90
DRAWN BY: BBL DESIGNED BY: QUENTHER
DGN NAME: H:/PROJ2/BELLINGH/BL720S-A.DGN

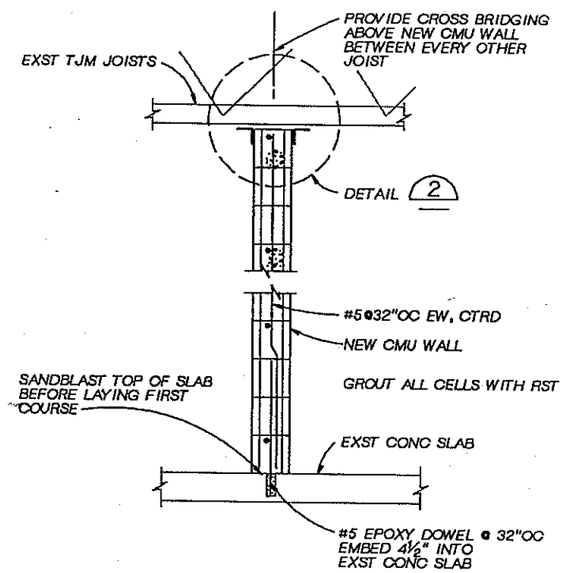

SECTION A
¾" = 1'-0" 720-A-1

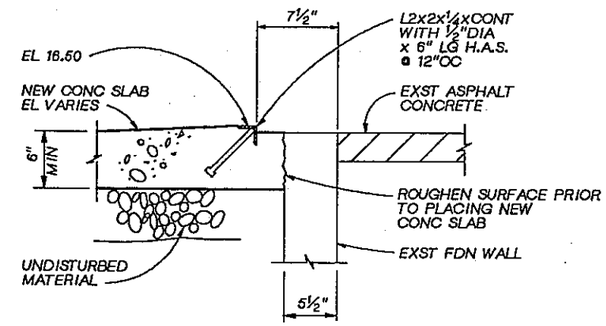

SECTION C
¾" = 1'-0" 720-A-1

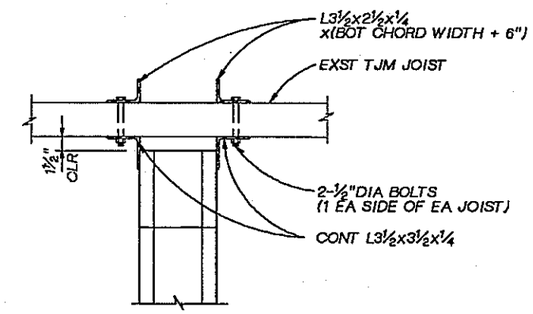

DETAIL 2
1½" = 1'-0"

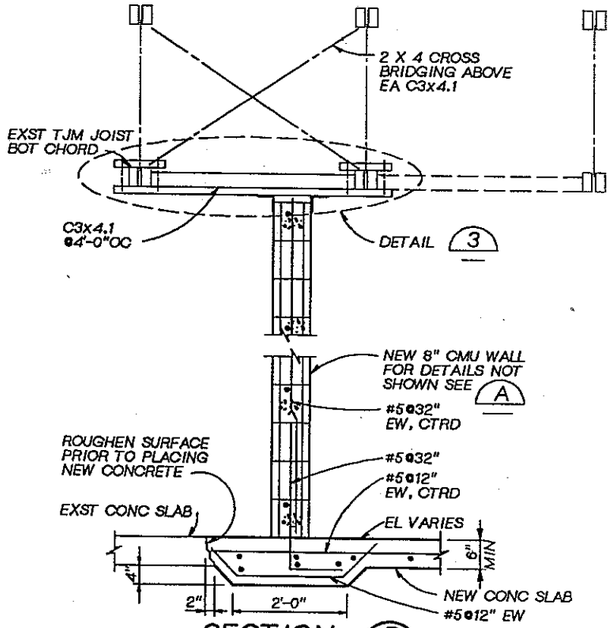

SECTION B
¾" = 1'-0" 720-A-1

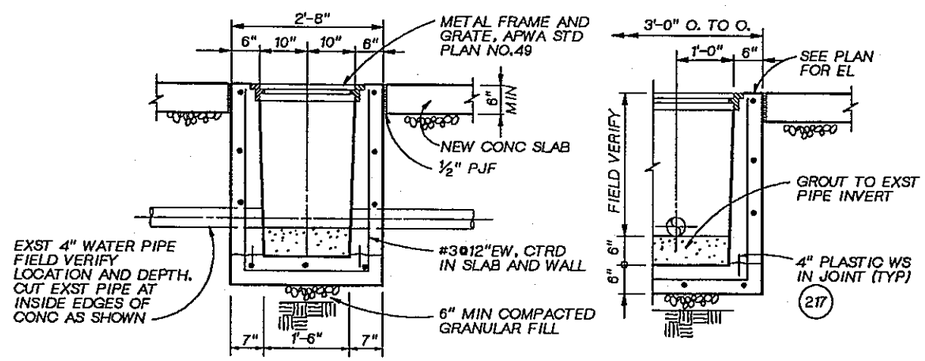

TRANSVERSE SECTION LONGITUDINAL SECTION

AREA DRAIN DETAIL 1
¾" = 1'-0" 720-A-1

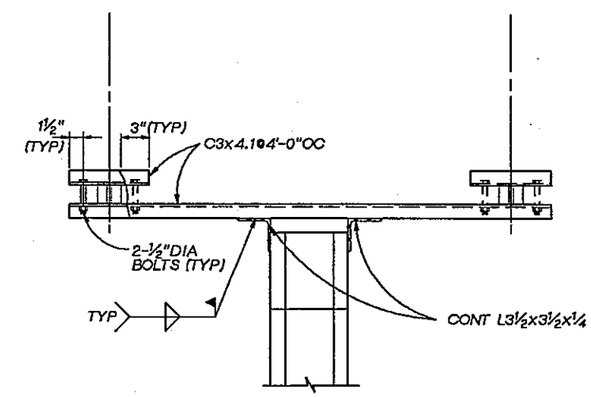

DETAIL 3
1½" = 1'-0"

DSGN	P. GUENTHER
DR	B. LAZARO
CHK	W.BENNETT
APVD	J. GAUTHIER

CH2M HILL

NO.	DATE	REVISION	BY	APVD

REUSE OF DOCUMENTS
THIS DOCUMENT, AND THE IDEAS AND DESIGNS INCORPORATED HEREIN, AS AN INSTRUMENT OF PROFESSIONAL SERVICE, IS THE PROPERTY OF CH2M HILL AND IS NOT TO BE USED, IN WHOLE OR IN PART, FOR ANY OTHER PROJECT WITHOUT THE WRITTEN AUTHORIZATION OF CH2M HILL.
©CH2M HILL

BAR IS ONE INCH ON ORIGINAL DRAWING.
0 1"
IF NOT ONE INCH ON THIS SHEET, ADJUST SCALES ACCORDINGLY.

CITY OF BELLINGHAM, WASHINGTON
POST POINT WASTEWATER TREATMENT PLANT UPGRADE

SHOP BUILDING MODIFICATIONS
STRUCTURAL SECTIONS AND DETAILS

DWG NO. 720-S-1
DATE AUG. 1990
PROJ. NO. SEA22462.C1

DRAWN BY: SD GUNDY DESIGNED BY: G FLOOD
DGN NAME: H:/PROJ2/BELLINGH/BL720H-A.DGN

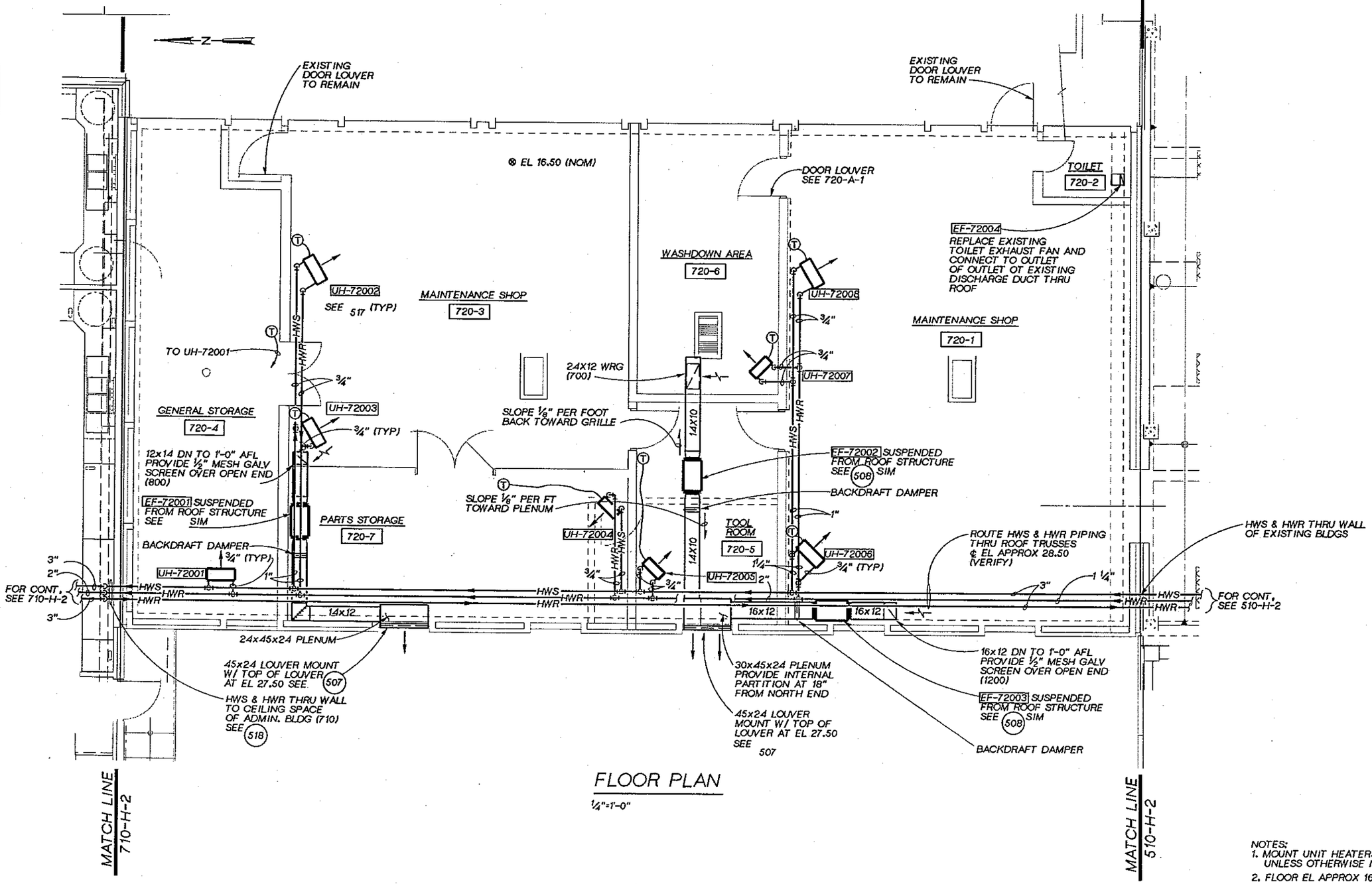

FLOOR PLAN

1/4"=1'-0"

NOTES:
1. MOUNT UNIT HEATERS WITH BOTTOM AT EL 24.50 UNLESS OTHERWISE NOTED.
2. FLOOR EL APPROX 16.50, SEE STRUCTURAL DWGS.

JOSEPH A. GAUTHIER STATE OF WASHINGTON REGISTERED PROFESSIONAL ENGINEER

CH2M HILL

DSGN	G.FLOOD
DR	S.D.GUNDY
CHK	J. SIEMENS
APVD	J. GAUTHIER

NO.	DATE	REVISION	BY	APVD

REUSE OF DOCUMENTS
THIS DOCUMENT, AND THE IDEAS AND DESIGNS INCORPORATED HEREIN, AS AN INSTRUMENT OF PROFESSIONAL SERVICE, IS THE PROPERTY OF CH2M HILL AND IS NOT TO BE USED, IN WHOLE OR IN PART, FOR ANY OTHER PROJECT WITHOUT THE WRITTEN AUTHORIZATION OF CH2M HILL.
©CH2M HILL

VERIFY SCALE
BAR IS ONE INCH ON ORIGINAL DRAWING.
0 1"
IF NOT ONE INCH ON THIS SHEET, ADJUST SCALES ACCORDINGLY.

CITY OF BELLINGHAM, WASHINGTON
POST POINT WASTEWATER TREATMENT PLANT UPGRADE

SHOP BUILDING MODIFICATIONS
HVAC PLAN

DWG NO. 720-H-1
DATE AUG. 1990
PROJ. NO. SEA22462.C1

DRAWN BY: B. CARR DESIGNED BY:
DGN NAME: H:/PROJ2/BELLINGH/BL720P-B.DGN

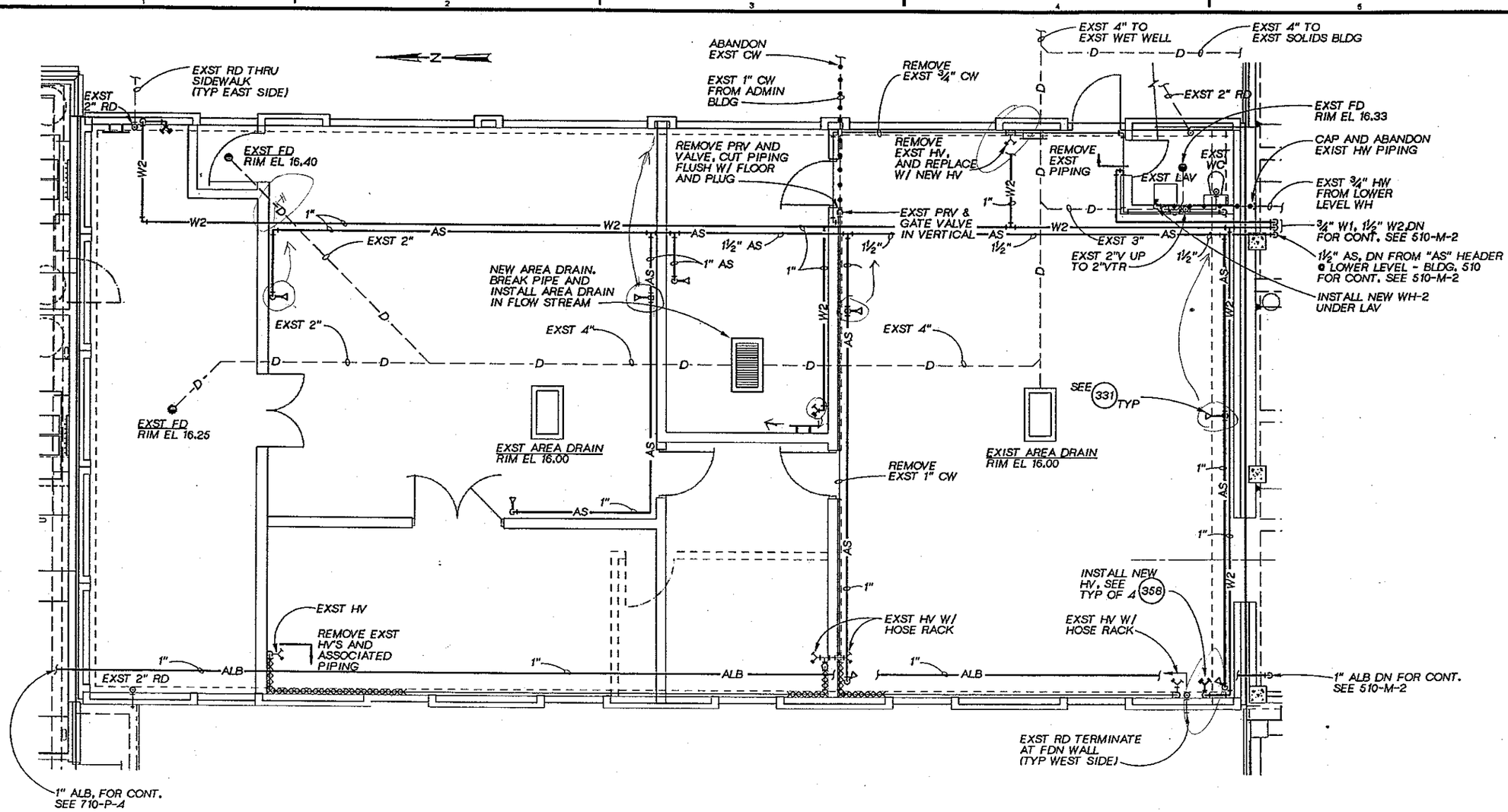

DSGN	S GUNDY				
DR	S GUNDY				
CHK	J.W. REGER				
APVD	J. GAUTHIER	NO.	DATE	REVISION	BY	APVD

CH2M HILL

REUSE OF DOCUMENTS
THIS DOCUMENT, AND THE IDEAS AND DESIGNS INCORPORATED HEREIN, AS AN INSTRUMENT OF PROFESSIONAL SERVICE, IS THE PROPERTY OF CH2M HILL AND IS NOT TO BE USED, IN WHOLE OR IN PART, FOR ANY OTHER PROJECT WITHOUT THE WRITTEN AUTHORIZATION OF CH2M HILL.
©CH2M HILL

VERIFY SCALE
BAR IS ONE INCH ON ORIGINAL DRAWING.
0 1"
IF NOT ONE INCH ON THIS SHEET, ADJUST SCALES ACCORDINGLY.

CITY OF BELLINGHAM, WASHINGTON
POST POINT WASTEWATER TREATMENT PLANT UPGRADE

SHOP BUILDING MODIFICATIONS
PLUMBING PLAN

DWG NO. 720-P-1
DATE AUG. 1990
PROJ NO. SEA22462.C1

OVERLAY IDENTIFICATION: COMPOSITE, PROJD, FILE

DRAWN BY: OA FRIAL DESIGNED BY: GE BOWER
DGN NAME: H:/PROJ2/BELLINGH/BL730A-A.DGN

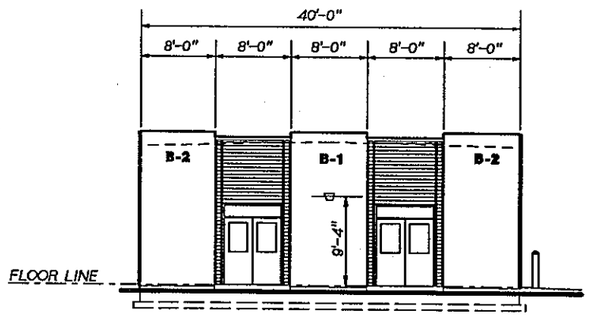

NORTH ELEVATION
1/8"=1'-0"

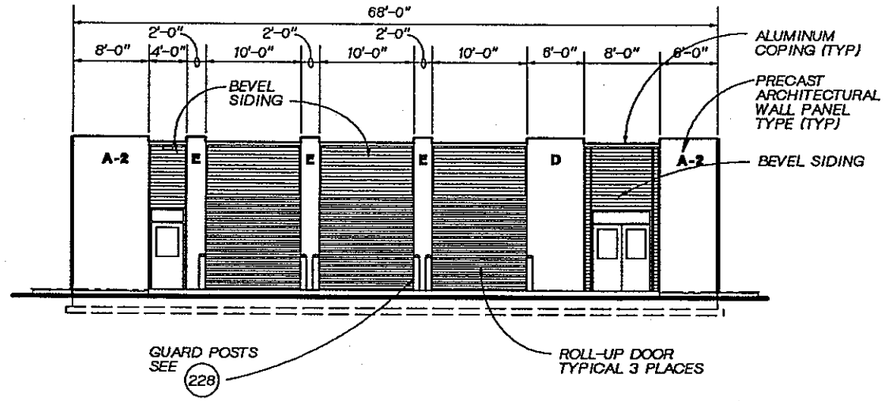

WEST ELEVATION
1/8"=1'-0"

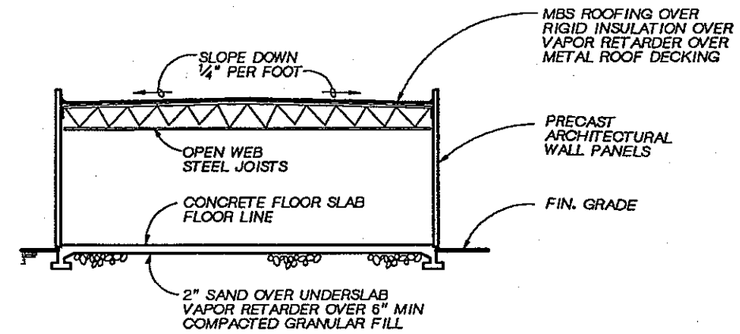

SECTION A
1/8" = 1'-0" 730-A-1

NOTES
1. FOR ARCHITECTURAL WALL PANEL SCHEDULE, SEE DWG. NO. 800-S-12.
2. FOR STANDARD DETAILS SEE THE "800" SECTION OF THE DWGS.
3. FOR LOUVER SIZES AND TYPES, SEE SPECIFICATION SECTION 10200.
4. FOR EXTERIOR COLORS & FINISHES, SEE SPECIFICATION SECTION 09000.

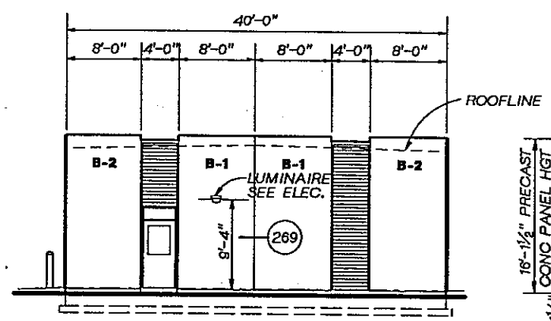

SOUTH ELEVATON
1/8"=1'-0"

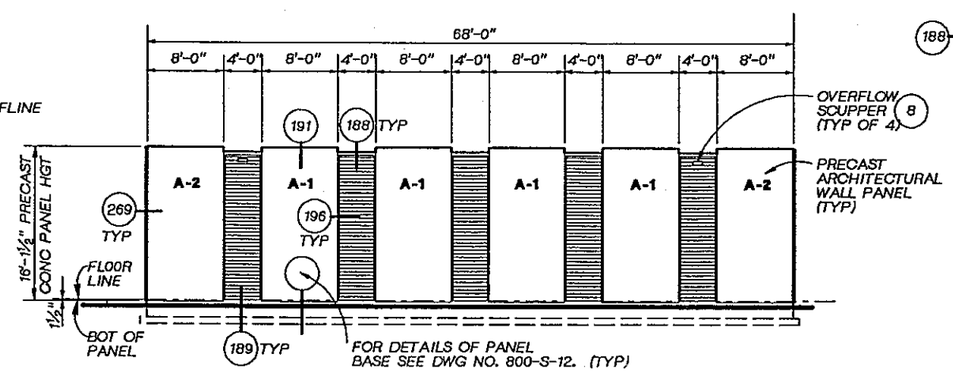

EAST ELEVATION
1/8"=1-0"

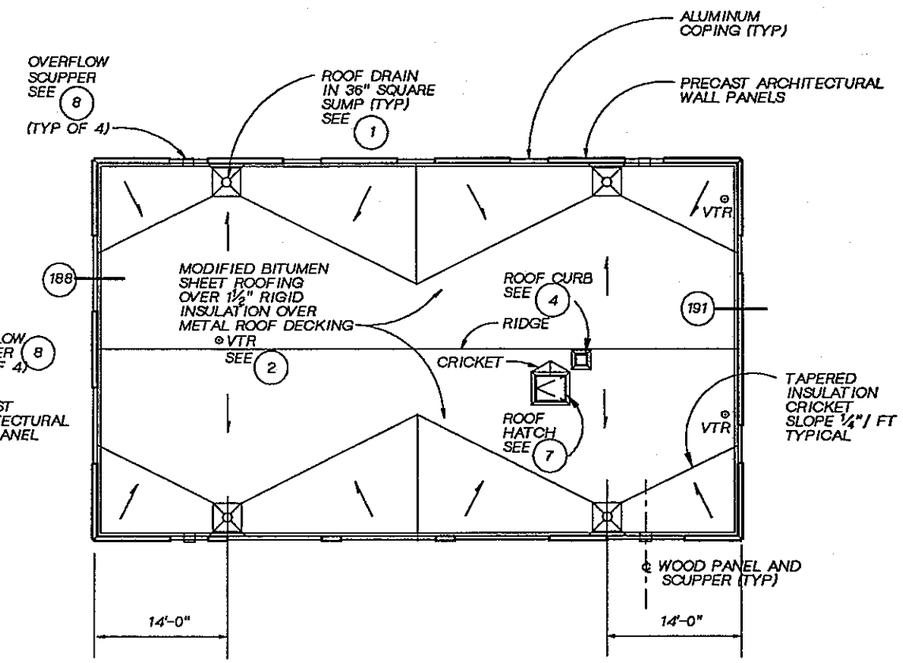

ROOF PLAN
1/8"=1'-0"

REGISTERED ARCHITECT RONN FRIAL STATE OF WASHINGTON

DSGN G BOWER						
DR O FRIAL						
CHK R WHITE						
APVD J. GAUTHIER	NO.	DATE	REVISION	BY	APVD	

REUSE OF DOCUMENTS
THIS DOCUMENT, AND THE IDEAS AND DESIGNS INCORPORATED HEREIN, AS AN INSTRUMENT OF PROFESSIONAL SERVICE, IS THE PROPERTY OF CH2M HILL AND IS NOT TO BE USED, IN WHOLE OR IN PART, FOR ANY OTHER PROJECT WITHOUT THE WRITTEN AUTHORIZATION OF CH2M HILL.
©CH2M HILL

BAR IS ONE INCH ON ORIGINAL DRAWING. 0 1"
IF NOT ONE INCH ON THIS SHEET, ADJUST SCALES ACCORDINGLY.

CITY OF BELLINGHAM, WASHINGTON
POST POINT WASTEWATER TREATMENT PLANT UPGRADE

STORAGE BUILDING
ARCHITECTURAL
ELEVATIONS, SECTION & ROOF PLAN

DWG NO. 730-A-1
DATE AUG. 1990
PROJ NO. SEA22462.C1

OVERLAY IDENTIFICATION: COMPOSITE, OVERLAY, PROJID, FILE

DRAWN BY: BBL-C.S.HOWELL DESIGNED BY: CK
DGN NAME: H:/PROJ2/BELLINGH/BL730S-A.DGN

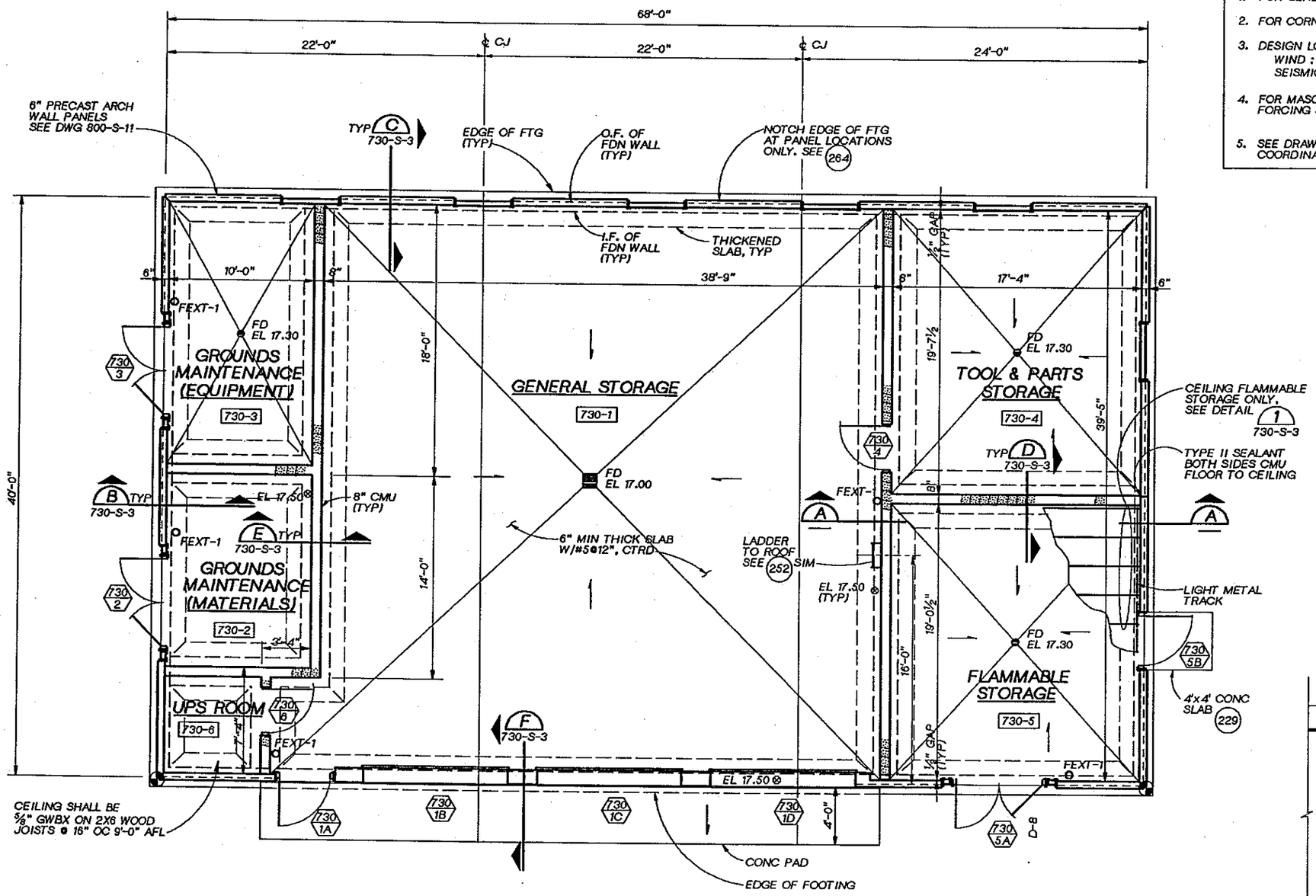

FOUNDATION/ FLOOR PLAN
¼" = 1'-0"

STRUCTURAL NOTES:

1. FOR GENERAL NOTES SEE 201
2. FOR CORNER REINFORCING, SEE 202
3. DESIGN LOADS:
   WIND : UBC 83 80 MPH EXP C
   SEISMIC : UBC 83, ZONE 3
4. FOR MASONRY CORNER REINFORCING SEE 234
5. SEE DRAWING 30-C-5 FOR COORDINATES.

ARCHITECTURAL NOTES:

1. FOR "GENERAL NOTES," SEE DWG. NO. 800-A-1.
2. FOR "INTERIOR FINISH SCHEDULE" SEE SPECIFICATION SECTION 09000.
3. FOR "DOOR AND HARDWARE SCHEDULE" SEE SPECIFICATION SECTION 08001.
4. FOR PRECAST CONCRETE WALL PANEL AND OPENING DIMENSIONS, SEE ARCHITECTURAL EXTERIOR ELEVATIONS.
5. FOR LOUVER SIZES AND DETAILS, SEE SPECIFICATION SECTION 10200.

BUILDING CODE NOTES:

APPLICABLE CODES: 1988 UBC
1988 UFC

1. TYPE OF OCCUPANCY
   - o STORAGE: B-1
   - o FLAMMABLE STORAGE: H-2
2. TYPE OF CONSTRUCTION: V-N
3. NUMBER OF STORIES
   ACTUAL: ONE
   ALLOWED: TWO
4. ACTUAL FLOOR AREA
   - o B-1: 2360sf
   - o H-2: 360sf

   ALLOWABLE FLOOR AREA:
   - o B-1: 16000sf
   - o H-2: 3750sf
5. SPRINKLER SYSTEM REQD
   FLAMMABLE STORAGE ONLY
6. OCCUPANT LOAD
   - o B-1: 2360/300 = 8
   - o H-2: 360/300 = 2
7. TWO HOUR OCCUPANCY SEPARATION REQUIRED BETWEEN FLAMMABLE STORAGE AND REST.

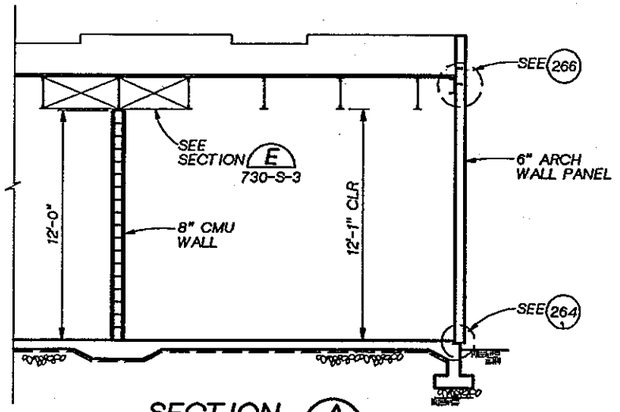

SECTION A
¼" = 1'-0"

DSGN C. KEEL					
DR B. LAZARO					
CHK W. BENNETT					
APVD J GAUTHIER	NO.	DATE	REVISION	BY	APVD

CH2M HILL

REUSE OF DOCUMENTS
THIS DOCUMENT, AND THE IDEAS AND DESIGNS INCORPORATED HEREIN, AS AN INSTRUMENT OF PROFESSIONAL SERVICE, IS THE PROPERTY OF CH2M HILL AND IS NOT TO BE USED, IN WHOLE OR IN PART, FOR ANY OTHER PROJECT WITHOUT THE WRITTEN AUTHORIZATION OF CH2M HILL.
©CH2M HILL

BAR IS ONE INCH ON ORIGINAL DRAWING.
0 1"
IF NOT ONE INCH ON THIS SHEET, ADJUST SCALES ACCORDINGLY.

CITY OF BELLINGHAM, WASHINGTON
POST POINT WASTEWATER TREATMENT PLANT UPGRADE

STORAGE BUILDING
STRUCTURAL
FOUNDATION/FLOOR PLAN

DWG NO. 730-S-1
DATE AUG. 1990
PROJ NO. SEA22462.C1

DATE: 8-22-90
DRAWN BY: LAZARO/FRIBERG DESIGNED BY: C. KEEL
DGN NAME: H:/PROJ2/BELLINGH/BL730S-B.DGN

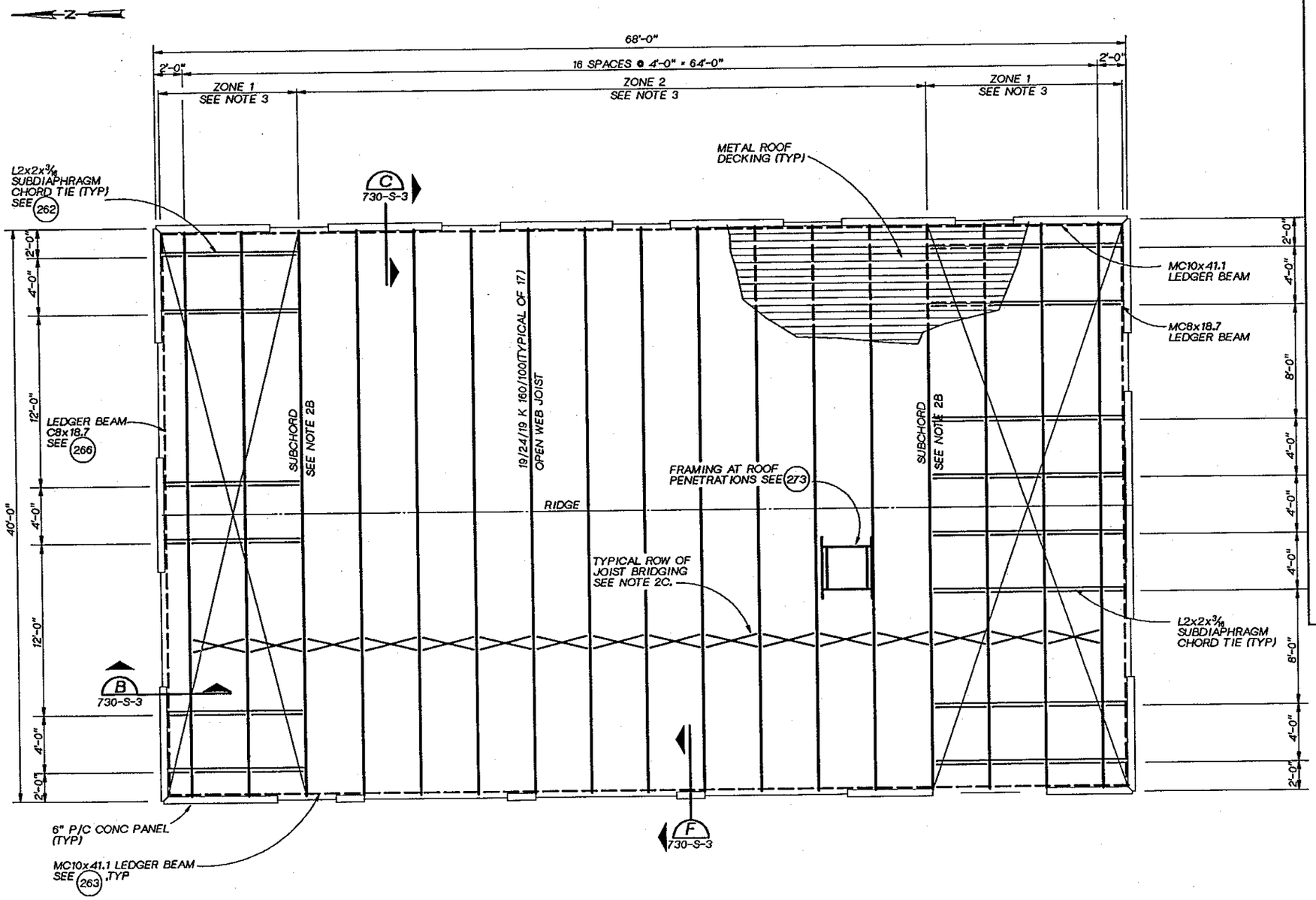

ROOF FRAMING PLAN

1/4" = 1'-0"

ROOF PLAN NOTES

1. ROOF DESIGN LOADS:

   DEAD LOAD: 15 PSF
   LIVE LOAD: 25 PSF
   UPLIFT (NET): 15 PSF

2. OPEN WEB STEEL JOISTS:

   A. JOIST MANUFACTURER SHALL DESIGN ALL JOISTS TO SUPPORT A 500 POUND CONCENTRATED LOAD LOCATED AT ANY POINT ALONG THE BOTTOM CHORD. THIS LOAD IS IN ADDITION TO THE DESIGN LOADS AS SHOWN.

   B. STEEL JOISTS SHALL BE DESIGNED FOR THE FOLLOWING ADDITIONAL LOADS APPLIED CONCURRENTLY WITH THE ROOF DESIGN LOADS:

      SUBCHORDS:
      JOISTS DESIGNATED AS SUBCHORDS SHALL BE DESIGNED FOR AN ADDITIONAL TOP CHORD FORCE OF 2.2 KIP (TENSION OR COMPRESSION) DUE TO WIND OR SEISMIC FORCES.

      JOIST BEARING SEATS:
      MANUFACTURER SHALL DESIGN JOIST BEARING SEATS FOR THE LOADS GIVEN IN DETAIL 261

   C. NUMBER OF ROWS AND SPACING OF BRIDGING AS REQD BY JOIST MANUFACTURERS. BRIDGING SHALL NOT BE CONNECTED TO PRECAST ARCH WALL PANELS OR WOOD PANELS.

3. METAL ROOF DECKING:

   METAL ROOF DECKING SHALL BE 1-1/2" - 20 GAGE GALVANIZED STEEL, VERCO HSB-36 OR EQUIVALENT. MINIMUM SECTION PROPERTIES SHALL BE: $I_+ = .216\ in^4$, $+S_+ = .235\ in^3$, AND $-S_+ = .248\ in^3$. CONNECTION OF ROOF DECKING SHALL BE AS FOLLOWS:

   ZONE 1: (5) -5/8" PUDDLE WELDS TO SUPPORTS PER 36" SHEET. BUTTON PUNCH SIDE LAP CONNECTION AT 2'-0" OC, UNLESS OTHERWISE NOTED. MIN LATERAL SHEAR CAPACITY = 220 P/FT

   ZONE 2: (5) -5/8" PUDDLE WELDS TO SUPPORTS PER 36" SHEET. BUTTON PUNCH SIDE LAP CONNECTION AT 2'-0" OC, UNLESS OTHERWISE NOTED. MIN LATERAL SHEAR CAPACITY = 220 P/FT

LINDA M. KORDUCKI
STATE OF WASHINGTON
22864
REGISTERED PROFESSIONAL ENGINEER

CH2M HILL

DSGN	C. KEEL
DR	B. LAZARO
CHK	W. BENNETT
APVD	J GAUTHIER

NO.	DATE	REVISION	BY	APVD

REUSE OF DOCUMENTS
THIS DOCUMENT, AND THE IDEAS AND DESIGNS INCORPORATED HEREIN, AS AN INSTRUMENT OF PROFESSIONAL SERVICE, IS THE PROPERTY OF CH2M HILL AND IS NOT TO BE USED, IN WHOLE OR IN PART, FOR ANY OTHER PROJECT WITHOUT THE WRITTEN AUTHORIZATION OF CH2M HILL.
©CH2M HILL

BAR IS ONE INCH ON ORIGINAL DRAWING.
0 1"
IF NOT ONE INCH ON THIS SHEET, ADJUST SCALES ACCORDINGLY.

CITY OF BELLINGHAM, WASHINGTON
POST POINT WASTEWATER TREATMENT PLANT UPGRADE

STORAGE BUILDING
STRUCTURAL
ROOF FRAMING PLAN AND DETAILS

DWG NO. 730-S-2
DATE AUG. 1990
PROJ. NO. SEA22462.C1

DATE: 8-22-90
DRAWN BY: BBL DESIGNED BY: C. KEEL
DGN NAME: H:/PROJ2/BELLINGH/BL730S-C.DGN

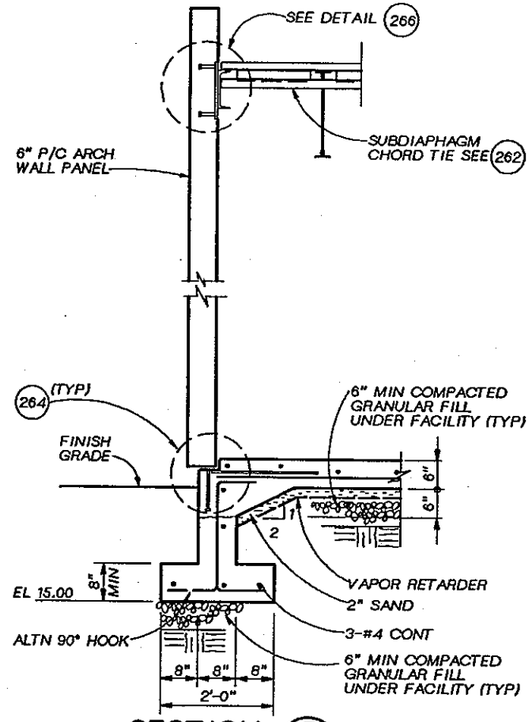

SECTION B
3/4" = 1'-0" 730-S-2

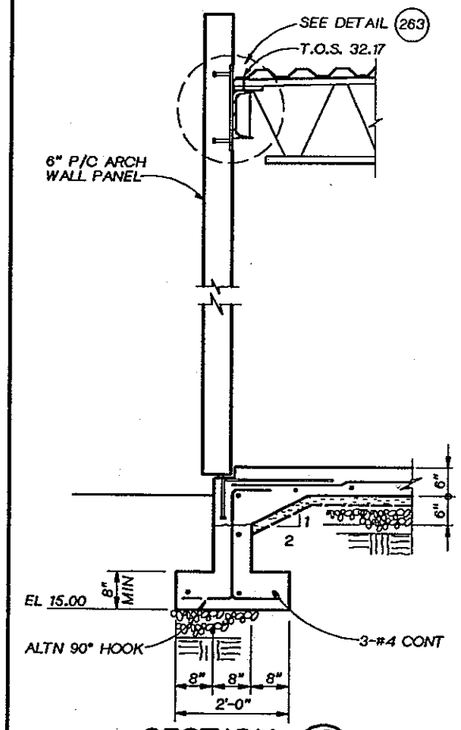

SECTION C
3/4" = 1'-0" 730-S-2

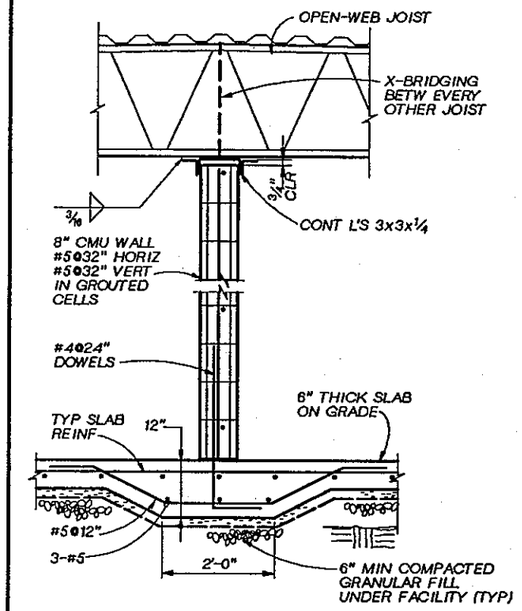

SECTION D
3/4" = 1'-0" 730-S-1

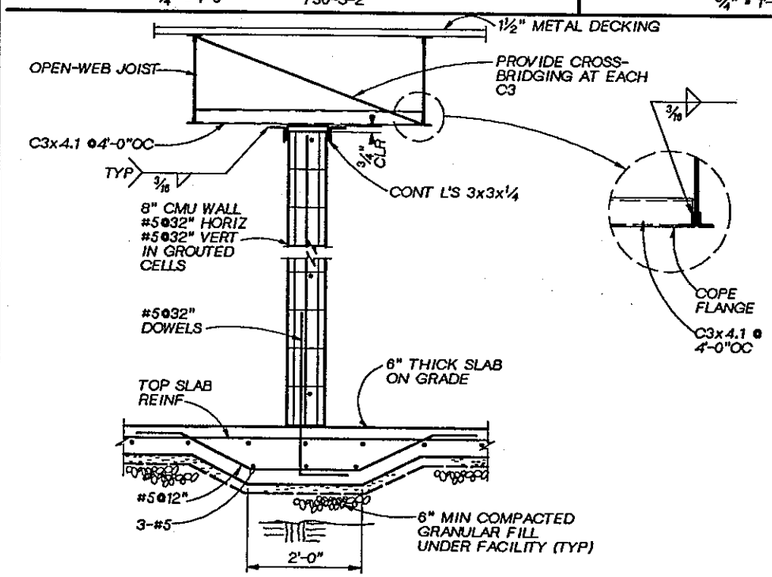

SECTION E
3/4" = 1'-0" 730-S-1

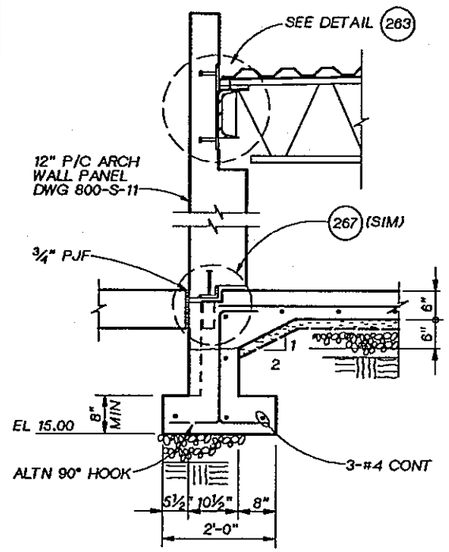

SECTION F
3/4" = 1'-0" 730-S-1

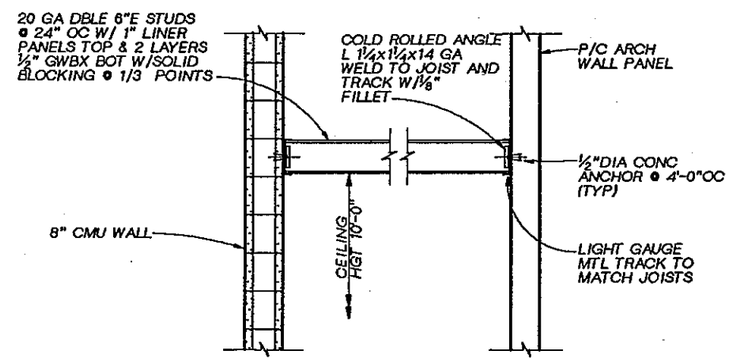

DETAIL 1
3/4" = 1'-0" 730-S-1

DSGN C. KEEL					
DR B. LAZARO					
CHK W. BENNETT					
APVD J GAUTHIER	NO.	DATE	REVISION	BY	APVD

CH2M HILL

REUSE OF DOCUMENTS
THIS DOCUMENT, AND THE IDEAS AND DESIGNS INCORPORATED HEREIN, AS AN INSTRUMENT OF PROFESSIONAL SERVICE, IS THE PROPERTY OF CH2M HILL AND IS NOT TO BE USED, IN WHOLE OR IN PART, FOR ANY OTHER PROJECT WITHOUT THE WRITTEN AUTHORIZATION OF CH2M HILL.
©CH2M HILL

BAR IS ONE INCH ON ORIGINAL DRAWING.
0 1"
IF NOT ONE INCH ON THIS SHEET, ADJUST SCALES ACCORDINGLY.

CITY OF BELLINGHAM, WASHINGTON
POST POINT WASTEWATER TREATMENT PLANT UPGRADE

STORAGE BUILDING
STRUCTURAL
SECTIONS AND DETAILS

DWG NO. 730-S-3
DATE AUG. 1990
PROJ NO. SEA22462.C1

OVERLAY IDENTIFICATION | COMPOSITE | OVERLAY | PROJID | FILE

DRAWN BY: B. CARR DESIGNED BY: G FLOOD
DGN NAME: H:/PROJ2/BELLINGH/BL730H-A.DGN

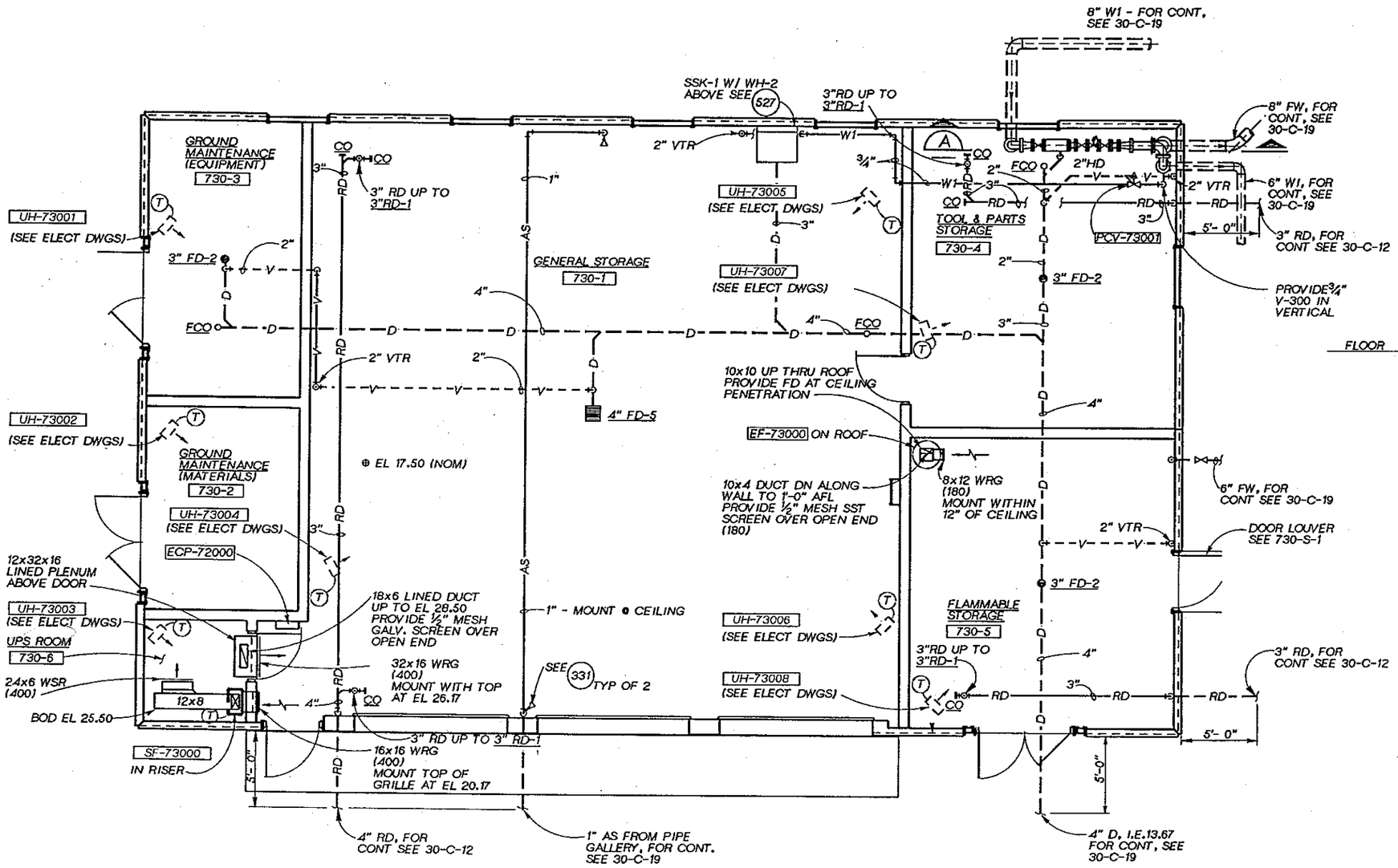

FLOOR PLAN
¼"=1'-0"

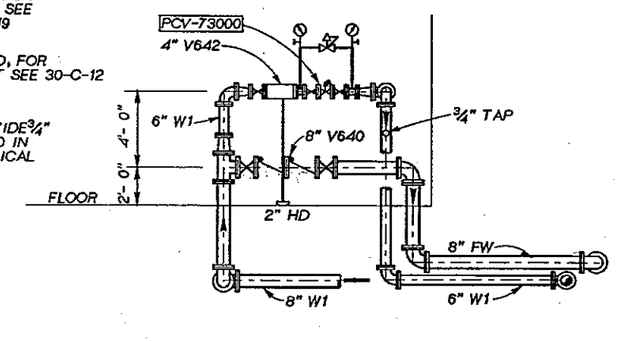

SECTION A
¼"=1'- 0"

JOSEPH A. GAUTHIER STATE OF WASHINGTON REGISTERED PROFESSIONAL ENGINEER

CH2M HILL

DSGN	S.GUNDY/G.FLOOD
DR	S.D.GUNDY
CHK	J.A. SIEMENS
APVD	J. GAUTHIER

NO.	DATE	REVISION	BY	APVD

REUSE OF DOCUMENTS
THIS DOCUMENT, AND THE IDEAS AND DESIGNS INCORPORATED HEREIN, AS AN INSTRUMENT OF PROFESSIONAL SERVICE, IS THE PROPERTY OF CH2M HILL AND IS NOT TO BE USED, IN WHOLE OR IN PART, FOR ANY OTHER PROJECT WITHOUT THE WRITTEN AUTHORIZATION OF CH2M HILL.
©CH2M HILL

VERIFY SCALE
BAR IS ONE INCH ON ORIGINAL DRAWING.
0 1"
IF NOT ONE INCH ON THIS SHEET, ADJUST SCALES ACCORDINGLY.

CITY OF BELLINGHAM, WASHINGTON
POST POINT WASTEWATER TREATMENT PLANT UPGRADE

STORAGE BUILDING
HVAC AND PLUMBING PLAN

DWG NO. 730-H-1
DATE AUG. 1990
PROJ. NO. SEA22462.C1

DRAWN BY: R. CRADDOCK-CSH DESIGNED BY:G.E.BOWER
DGN NAME: H:/PROJ2/BELLINGH/BL740A-A.DGN

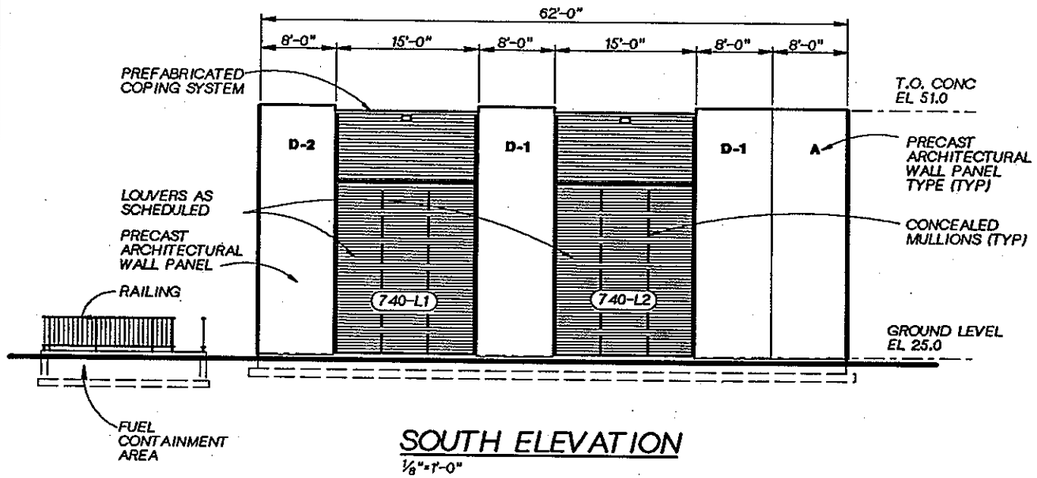

SOUTH ELEVATION
1/8"=1'-0"

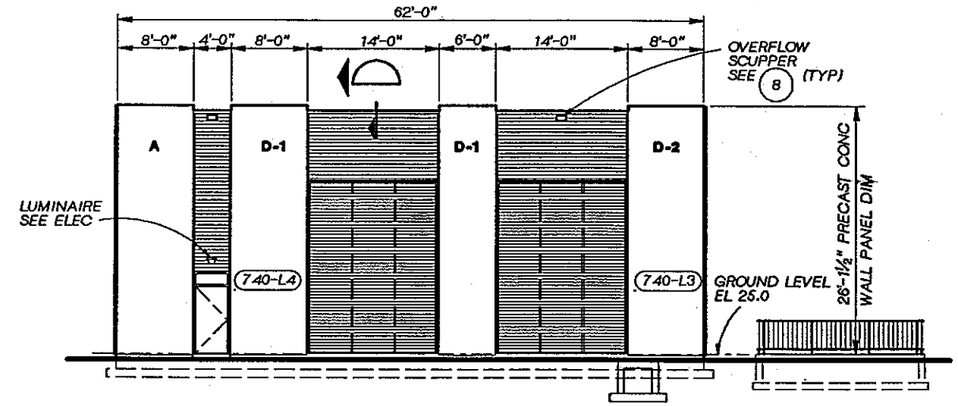

NORTH ELEVATION
1/8"=1'-0"

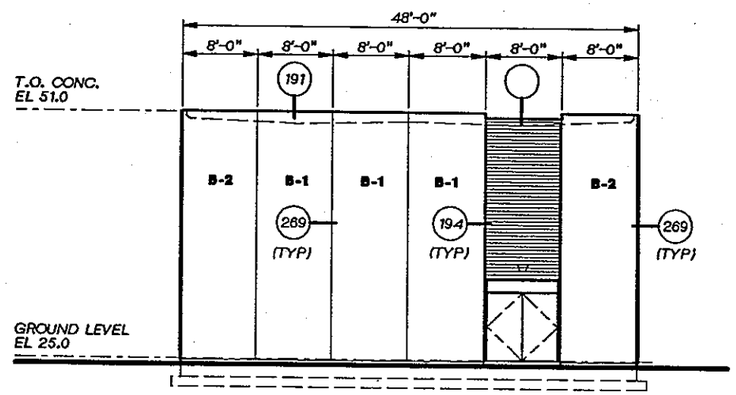

WEST ELEVATION
1/8"=1'-0"

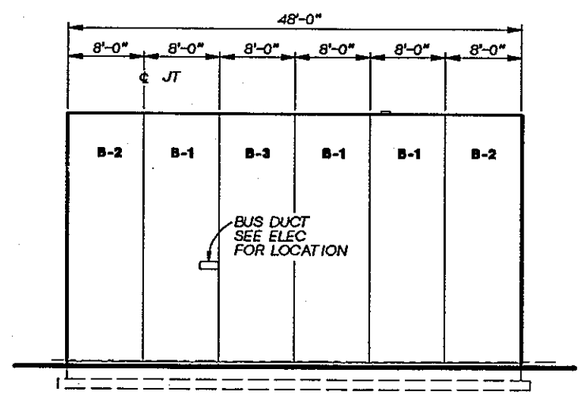

EAST ELEVATION
1/8"=1'-0"

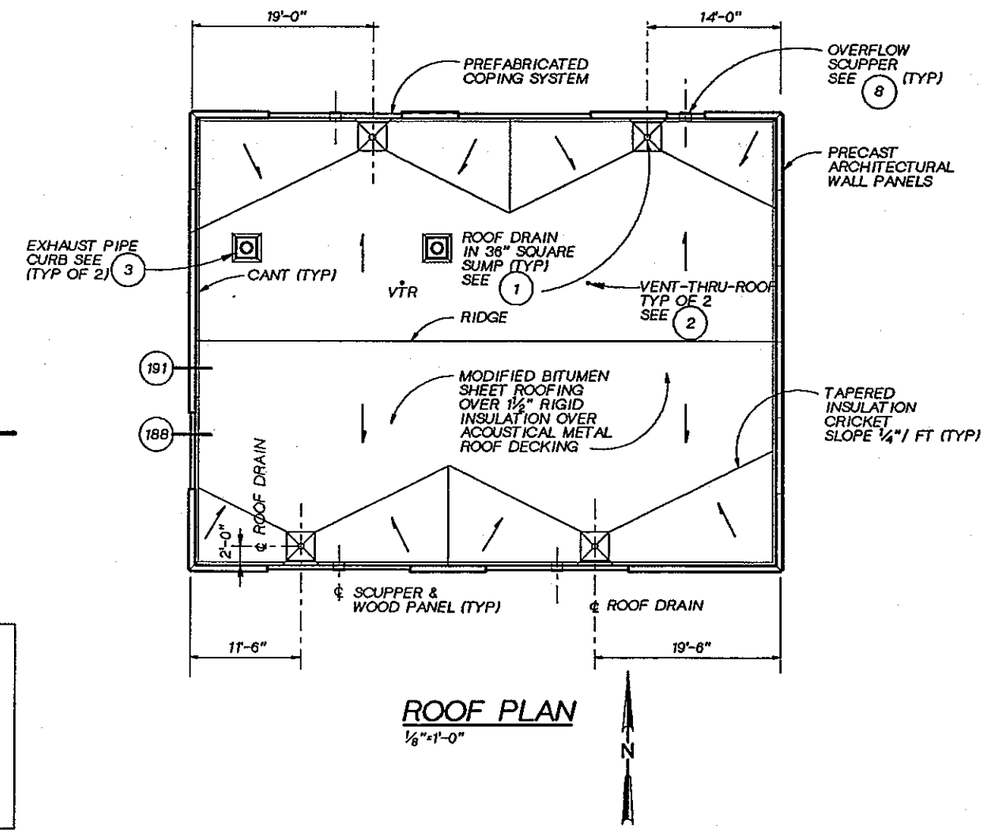

ROOF PLAN
1/8"=1'-0"

NOTES
1. FOR PANEL SCHEDULE SEE DWG 800-S-12.
2. FOR STANDARD DETAILS ◯ SEE THE "800" SECTION OF THE DWGS.
3. FOR LOUVER SIZES AND TYPES, SEE SPECIFICATION SECTION 10200.
4. FOR EXTERIOR COLORS & FINISHES, SEE SPECIFICATION SECTION 09000.

REGISTERED ARCHITECT JOHN E. PAGE STATE OF WASHINGTON

CH2M HILL

DSGN	G BOWER
DR	G BOWER
CHK	R WHITE
APVD	J GAUTHIER

NO.	DATE	REVISION	BY	APVD

REUSE OF DOCUMENTS
THIS DOCUMENT, AND THE IDEAS AND DESIGNS INCORPORATED HEREIN, AS AN INSTRUMENT OF PROFESSIONAL SERVICE, IS THE PROPERTY OF CH2M HILL AND IS NOT TO BE USED, IN WHOLE OR IN PART, FOR ANY OTHER PROJECT WITHOUT THE WRITTEN AUTHORIZATION OF CH2M HILL.
©CH2M HILL

BAR IS ONE INCH ON ORIGINAL DRAWING. 0 1"
IF NOT ONE INCH ON THIS SHEET, ADJUST SCALES ACCORDINGLY.

CITY OF BELLINGHAM, WASHINGTON
POST POINT WASTEWATER TREATMENT PLANT UPGRADE

EMERGENCY GENERATOR BUILDING
ARCHITECTURAL ELEVATIONS AND ROOF PLAN

DWG NO. 740-A-1
DATE AUG. 1990
PROJ NO. SEA22462.C1

OVERLAY IDENTIFICATION: COMPOSITE* OVERLAY GREEN; PROJ/D; FILE

DRAWN BY: BBL DESIGNED BY: L.KORBUS
DGN NAME: H:/PROJ2/BELLINGH/BL740S-A.DGN

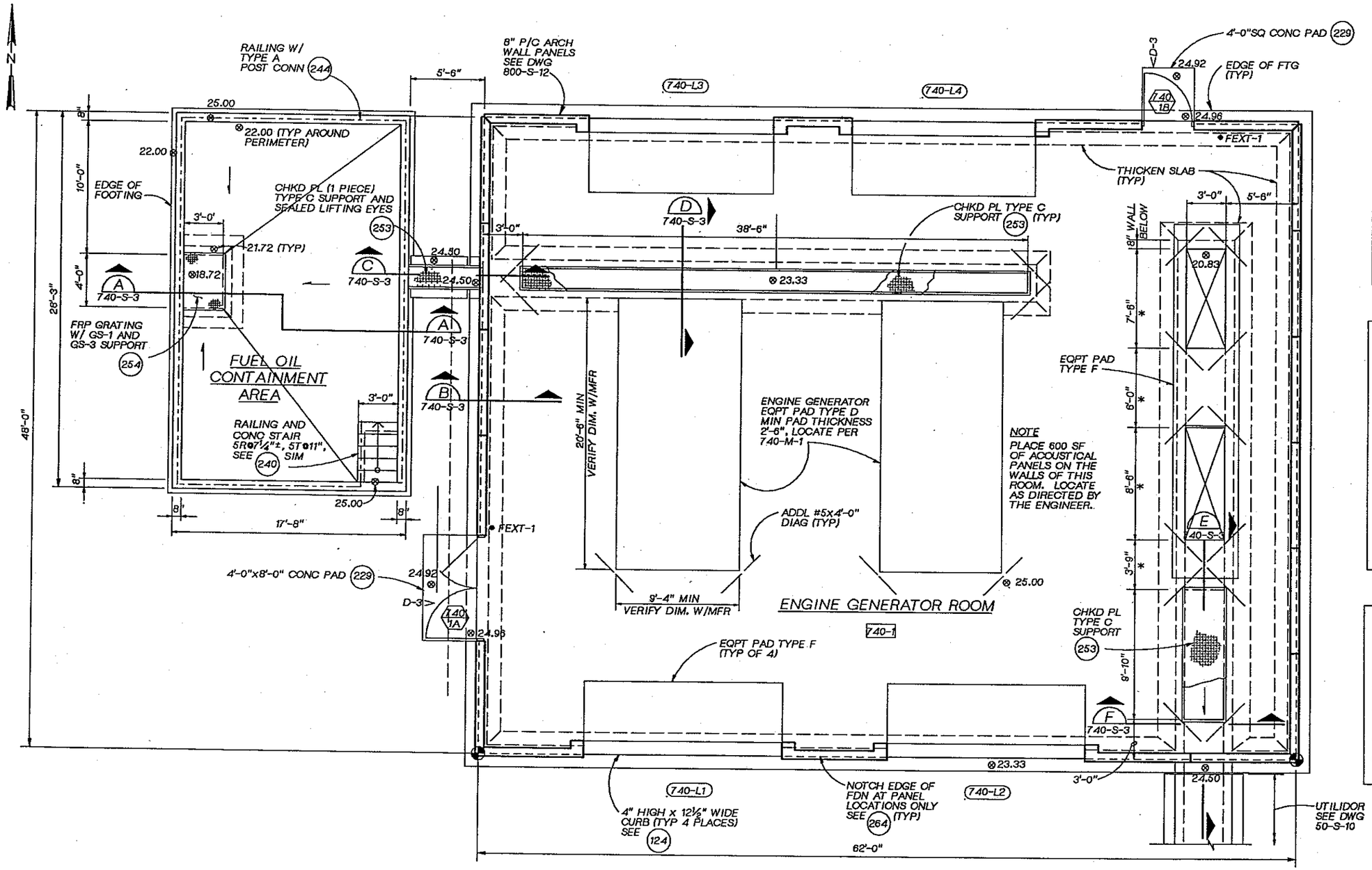

FOUNDATION / FLOOR PLAN

¼" = 1'-0"

ARCHITECTURAL NOTES:

1. FOR "GENERAL NOTES," SEE DWG. NO. 800-A-1.
2. FOR "INTERIOR FINISH SCHEDULE" SEE SPECIFICATION SECTION 09000.
3. FOR "DOOR AND HARDWARE SCHEDULE" SEE SPECIFICATION SECTION 08001.
4. FOR PRECAST CONCRETE WALL PANEL AND OPENING DIMENSIONS, SEE ARCHITECTURAL EXTERIOR ELEVATIONS.
5. FOR LOUVER SIZES AND DETAILS, SEE SPECIFICATION SECTION 10200.

BUILDING CODE NOTES:

APPLICABLE CODES: 1988 UBC
1988 UFC

1. TYPE OF OCCUPANCY: B-4
2. TYPE OF CONSTRUCTION: V-N
3. NUMBER OF STORIES
   ACTUAL: ONE
   ALLOWED: TWO
4. ACTUAL FLOOR AREA: 2976 sf
   ALLOWABLE FLOOR AREA: 24000 sf
5. SPRINKLER SYSTEM NOT REQUIRED
6. OCCUPANT LOAD: 2976/300=10

STRUCTURAL NOTES:

1. FOR GENERAL NOTES SEE (201)
2. FOR CORNER REINFORCEMENT SEE (202)
3. FOR OPENING REINFORCEMENT SEE (204)
4. FOR EQUIPMENT PAD DETAILS SEE (230)
5. FOR COORDINATES SEE DWG 30-C-3.
6. * DESIGNATES DIMENSION TO BE VERIFIED BY CONTRACTOR.

DSGN	L KORBUS					
DR	B LAZARO					
CHK	W BENNETT					
APVD	J. GAUTHIER	NO.	DATE	REVISION	BY	APVD

CH2M HILL

REUSE OF DOCUMENTS
THIS DOCUMENT, AND THE IDEAS AND DESIGNS INCORPORATED HEREIN, AS AN INSTRUMENT OF PROFESSIONAL SERVICE, IS THE PROPERTY OF CH2M HILL AND IS NOT TO BE USED, IN WHOLE OR IN PART, FOR ANY OTHER PROJECT WITHOUT THE WRITTEN AUTHORIZATION OF CH2M HILL.
©CH2M HILL

BAR IS ONE INCH ON ORIGINAL DRAWING.
0 1"
IF NOT ONE INCH ON THIS SHEET, ADJUST SCALES ACCORDINGLY.

CITY OF BELLINGHAM, WASHINGTON
POST POINT WASTEWATER TREATMENT PLANT UPGRADE

EMERGENCY GENERATOR BUILDING
STRUCTURAL
FOUNDATION / FLOOR PLAN

DWG NO. 740-S-1
DATE AUG. 1990
PROJ. NO. SEA22462.C1

DRAWN BY: BBL DESIGNED BY: L. KORBUS
DGN NAME: H:/PROJ2/BELLINGH/BL740S-B.DGN

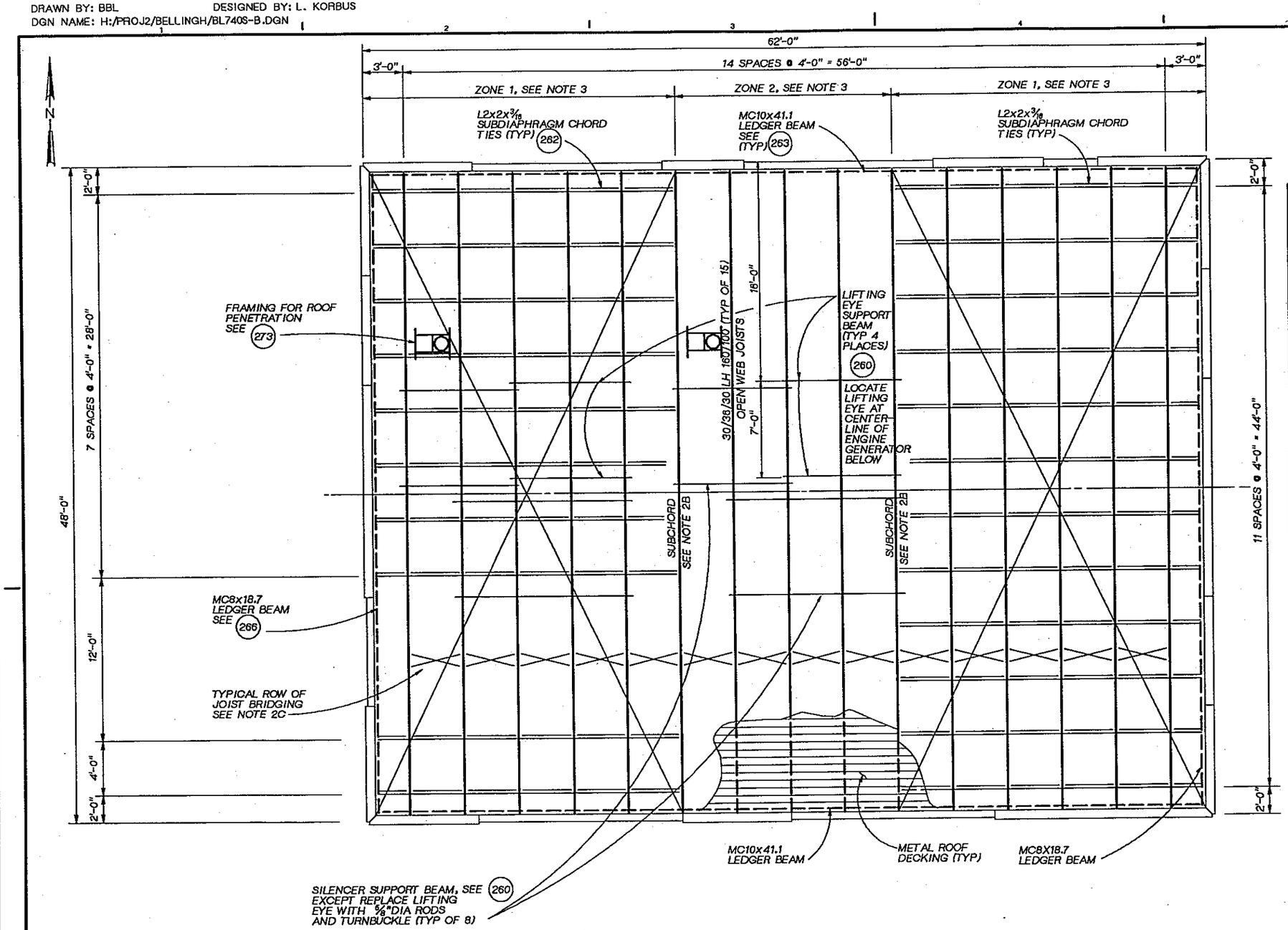

ROOF PLAN NOTES

1. ROOF DESIGN LOADS:

   DEAD LOAD: 15 PSF
   LIVE LOAD: 25 PSF
   UPLIFT (NET): 15 PSF

2. OPEN WEB STEEL JOISTS:

   A. JOIST MANUFACTURER SHALL DESIGN ALL JOISTS TO SUPPORT A 1000 POUND CONCENTRATED LOAD LOCATED AT ANY POINT ALONG THE BOTTOM CHORD. THIS LOAD IS IN ADDITION TO THE CONCENTRATED LOAD DUE TO THE LIFTING EYE SUPPORT BEAM AND THE DESIGN LOADS SHOWN.

   B. STEEL JOISTS SHALL BE DESIGNED FOR THE FOLLOWING ADDITIONAL LOADS APPLIED CONCURRENTLY WITH THE ROOF DESIGN LOADS AND CONCENTRATED LOADS:

   SUBCHORDS:
   JOISTS DESIGNATED AS SUBCHORDS SHALL BE DESIGNED FOR AND ADDITIONAL TOP CHORD FORCE OF 4.0 KIP (TENSION OR COMPRESSION) DUE TO WIND OR SEISMIC FORCES.

   JOIST BEARING SEATS:
   MANUFACTURER SHALL DESIGN JOIST BEARING SEATS FOR THE LOADS GIVEN IN DETAIL 261

   C. NUMBER OF ROWS AND SPACING OF BRIDGING AS REQD BY JOIST MANUFACTURERS. BRIDGING SHALL NOT BE CONNECTED TO PRECAST ARCH WALL PANELS OR WOOD PANELS.

3. METAL ROOF DECKING:

   METAL ROOF DECKING SHALL BE 1-1/2" - 20 GAGE GALVANIZED STEEL, VERCO HSB-36 ACOUSTICAL OR EQUIVALENT. MINIMUM SECTION PROPERTIES SHALL BE: I_+=.216 in^4, $+S_+$=.235 in^3, AND $-S_+$=.248 in^3. MINUMUM NOISE REDUCTION COEFFICIENT OF .75 AS TESTED IN ACCORDANCE WITH ASTM C423. CONNECTION OF ROOF DECKING SHALL BE AS FOLLOWS:

   ZONE 1: (5) -5/8" PUDDLE WELDS TO SUPPORTS PER 36" SHEET. BUTTON PUNCH SIDE LAP CONNECTION AT 2'-0" OC, UNLESS OTHERWISE NOTED. MIN LATERAL SHEAR CAPACITY= 270 P/FT

   ZONE 2: (5) -5/8" PUDDLE WELDS TO SUPPORTS PER 36" SHEET. BUTTON PUNCH SIDE LAP CONNECTION AT 2'-0" OC, UNLESS OTHERWISE NOTED. MIN LATERAL SHEAR CAPACITY= 270 P/FT

ROOF FRAMING PLAN

1/4" = 1'-0"

LINDA M. KORBUS STATE OF WASHINGTON 22864 REGISTERED PROFESSIONAL ENGINEER

CH2M HILL

DSGN	L. KORBUS				
DR	B. LAZARO				
CHK	W. BENNETT				
APVD	J. GAUTHIER	NO.	DATE	REVISION	BY	APVD

REUSE OF DOCUMENTS
THIS DOCUMENT, AND THE IDEAS AND DESIGNS INCORPORATED HEREIN, AS AN INSTRUMENT OF PROFESSIONAL SERVICE, IS THE PROPERTY OF CH2M HILL AND IS NOT TO BE USED, IN WHOLE OR IN PART, FOR ANY OTHER PROJECT WITHOUT THE WRITTEN AUTHORIZATION OF CH2M HILL.
©CH2M HILL

BAR IS ONE INCH ON ORIGINAL DRAWING.
0 1"
IF NOT ONE INCH ON THIS SHEET, ADJUST SCALES ACCORDINGLY.

CITY OF BELLINGHAM, WASHINGTON
POST POINT WASTEWATER TREATMENT PLANT UPGRADE

EMERGENCY GENERATOR BUILDING
STRUCTURAL
ROOF FRAMING PLAN

DWG NO. 740-S-2
DATE AUG. 1990
PROJ NO. SEA22462.C1

OVERLAY IDENTIFICATION | CONFIG311 | PROJ/ID | OVERLAY | FILE | SCREEN

DATE: 8-28-90
DRAWN BY: BBL DESIGNED BY: L. KORBUS
DGN NAME: H:/PROJ2/BELLINGH/BL740S-C.DGN

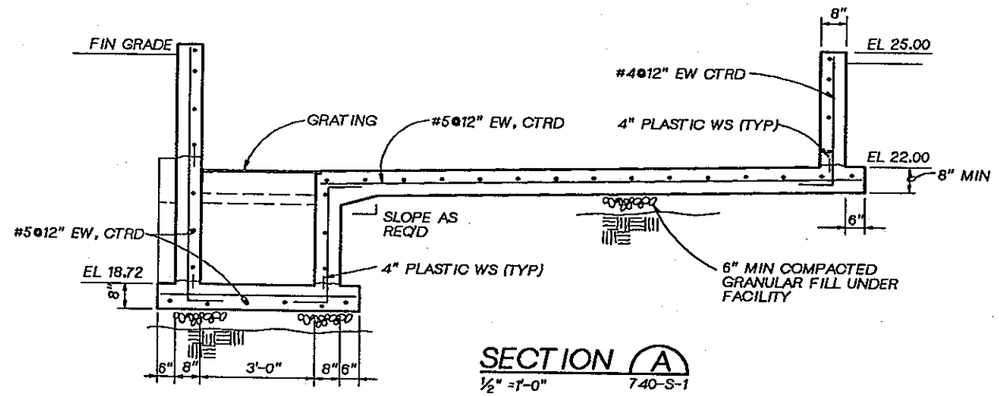

SECTION A
½" =1'-0" 740-S-1

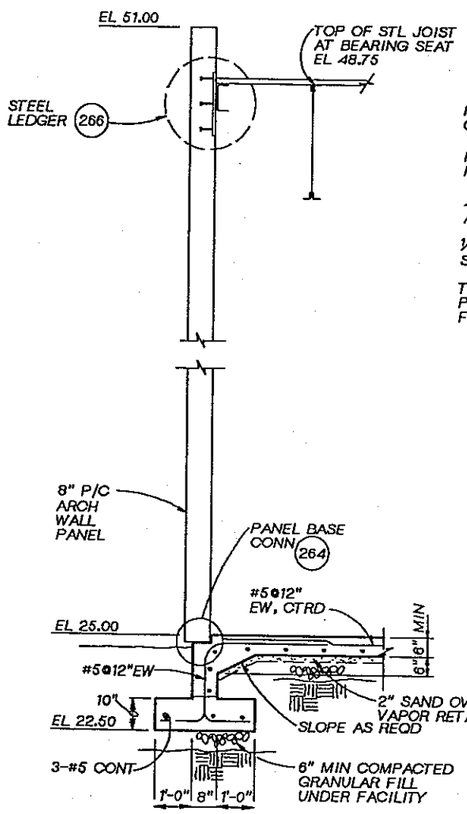

SECTION B
½" =1'-0" 740-S-1

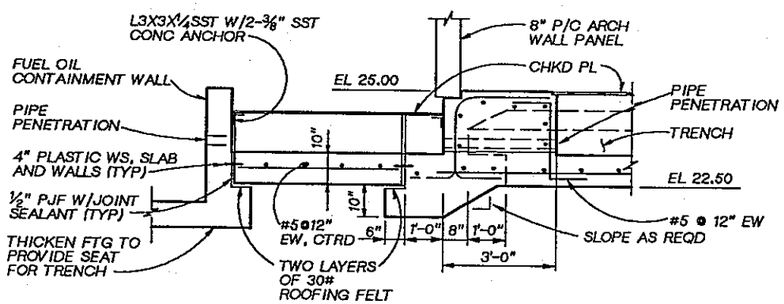

SECTION C
½" =1'-0" 740-S-1

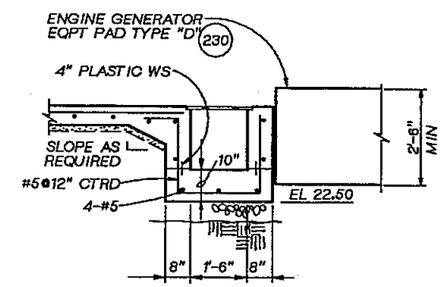

SECTION D
½" =1'-0" 740-S-1

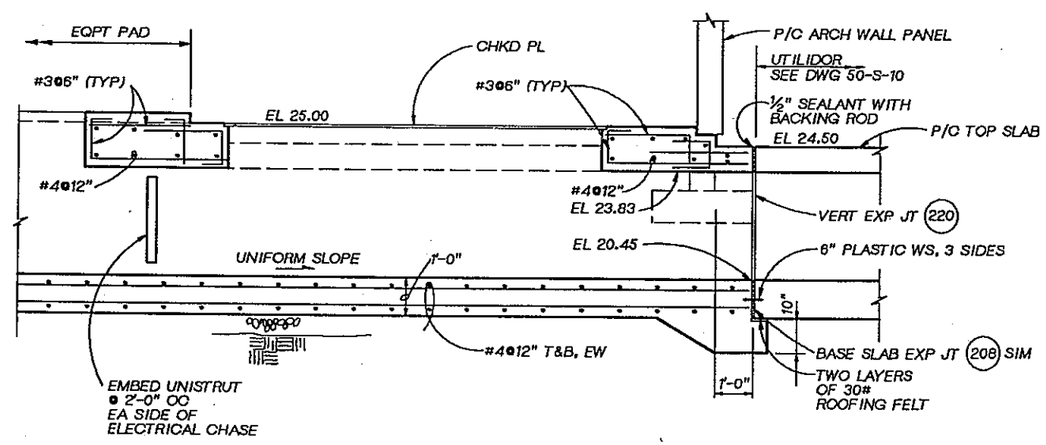

SECTION E
½" =1'-0" 740-S-1

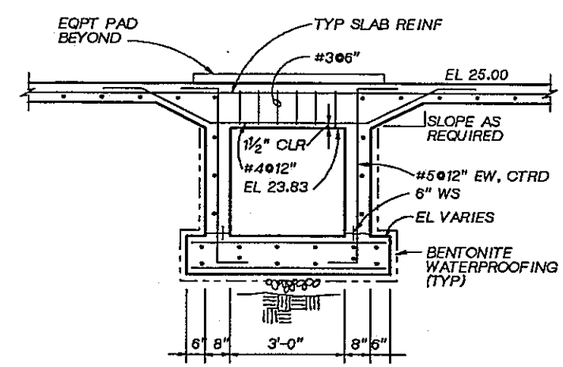

SECTION F
½" =1'-0" 740-S-1

DSGN L. KORBUS						
DR B. LAZARO						
CHK W. BENNETT						
APVD J. GAUTHIER	NO.	DATE	REVISION	BY	APVD	

REUSE OF DOCUMENTS
THIS DOCUMENT, AND THE IDEAS AND DESIGNS INCORPORATED HEREIN, AS AN INSTRUMENT OF PROFESSIONAL SERVICE, IS THE PROPERTY OF CH2M HILL AND IS NOT TO BE USED, IN WHOLE OR IN PART, FOR ANY OTHER PROJECT WITHOUT THE WRITTEN AUTHORIZATION OF CH2M HILL.
©CH2M HILL

BAR IS ONE INCH ON ORIGINAL DRAWING.
0 1"
IF NOT ONE INCH ON THIS SHEET, ADJUST SCALES ACCORDINGLY.

CITY OF BELLINGHAM, WASHINGTON
POST POINT WASTEWATER TREATMENT PLANT UPGRADE

EMERGENCY GENERATOR BUILDING
STRUCTURAL
SECTIONS AND DETAILS

DWG NO. 740-S-3
DATE AUG. 1990
PROJ NO. SEA22462.C1

OVERLAY IDENTIFICATION | COMPOSITE | OVERLAY | PROJID | FLB

DATE: 8/27/90 CJB
DRAWN BY: A. MCRILL DESIGNED BY: G. SAKAGAWA
DGN NAME: H:/PROJ2/BELLINGH/BL740M-A.DGN

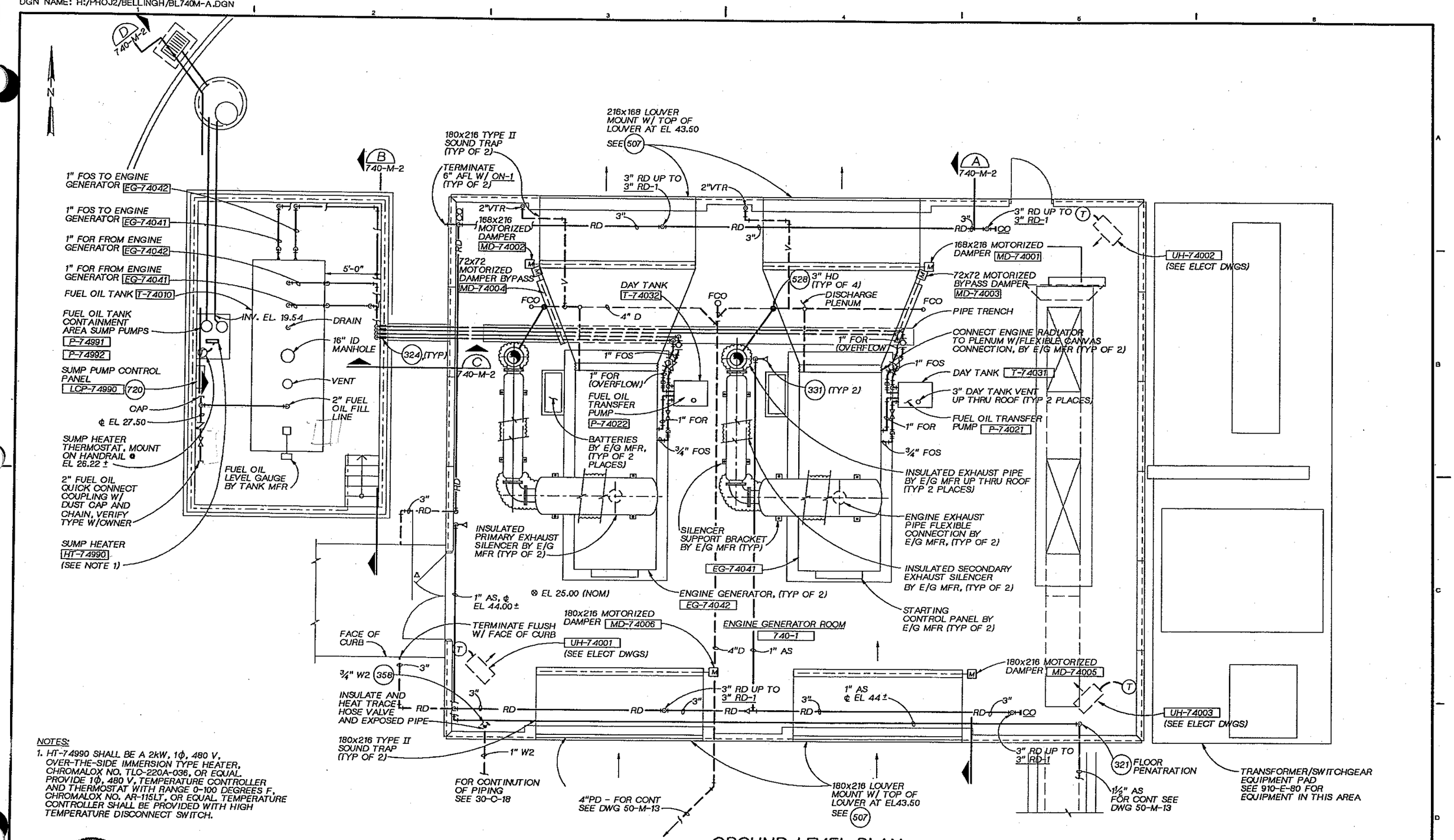

NOTES:

1. HT-74990 SHALL BE A 2kW, 1ϕ, 480 V, OVER-THE-SIDE IMMERSION TYPE HEATER, CHROMALOX NO. TLC-220A-036, OR EQUAL. PROVIDE 1ϕ, 480 V, TEMPERATURE CONTROLLER AND THERMOSTAT WITH RANGE 0-100 DEGREES F, CHROMALOX NO. AR-115LT, OR EQUAL. TEMPERATURE CONTROLLER SHALL BE PROVIDED WITH HIGH TEMPERATURE DISCONNECT SWITCH.

GROUND LEVEL PLAN

¼"=1'-0"

JOSEPH A. GAUTHIER STATE OF WASHINGTON REGISTERED PROFESSIONAL ENGINEER

CH2M HILL

DSGN G. SAKAGAWA
DR A. MCRILL
CHK GAUTHIER/SIEMENS
APVD J. GAUTHIER

NO.	DATE	REVISION	BY	APVD

REUSE OF DOCUMENTS
THIS DOCUMENT, AND THE IDEAS AND DESIGNS INCORPORATED HEREIN, AS AN INSTRUMENT OF PROFESSIONAL SERVICE, IS THE PROPERTY OF CH2M HILL AND IS NOT TO BE USED, IN WHOLE OR IN PART, FOR ANY OTHER PROJECT WITHOUT THE WRITTEN AUTHORIZATION OF CH2M HILL.
©CH2M HILL

BAR IS ONE INCH ON ORIGINAL DRAWING.
0 1"
IF NOT ONE INCH ON THIS SHEET, ADJUST SCALES ACCORDINGLY.

CITY OF BELLINGHAM, WASHINGTON
POST POINT WASTEWATER TREATMENT PLANT UPGRADE

EMERGENCY GENERATOR BUILDING
MECHANICAL/HVAC/PLUMBING PLAN

DWG NO. 740-M-1
DATE AUG. 1990
PROJ NO. SEA22462.C1

OVERLAY IDENTIFICATION
COMPOSITE
OVERLAY
PROJD
FILE

DATE: 8-27-90
DRAWN BY: C. BROWN DESIGNED BY:
DGN NAME: H:/PROJ2/BELLINGH/BL740M-B.DGN G. SAKAGAWA

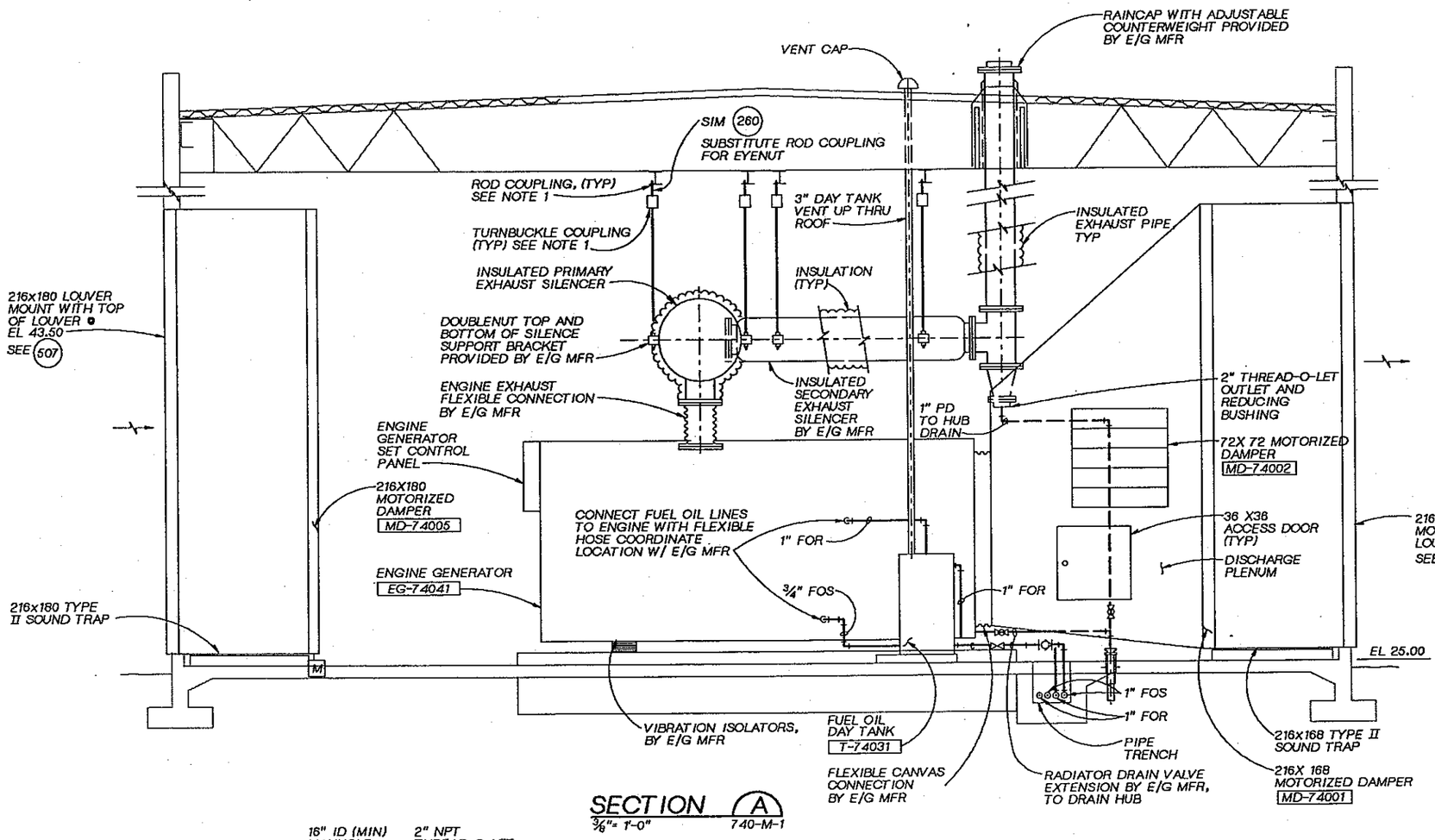

SECTION A
3/8"= 1'-0" 740-M-1

NOTES:

1. ROD AND TURNBUCKLE COUPLING SHALL BE DESIGNED BY MANUFACTURER TO DEVELOPE FULL STRENGTH OF BOLT IN TENSION.

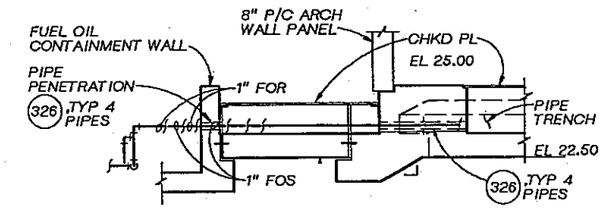

SECTION C
3/8"= 1'-0" 740-M-1

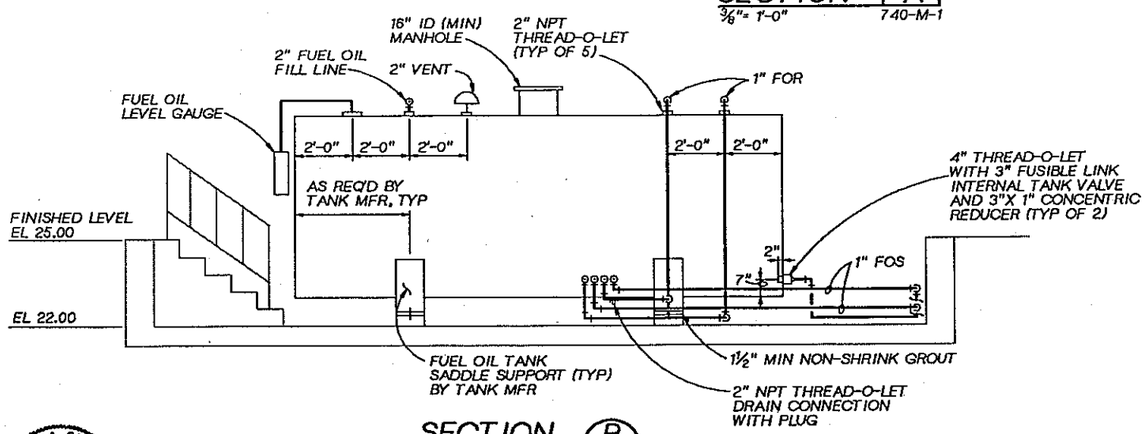

SECTION B
3/8"= 1'-0" 740-M-1

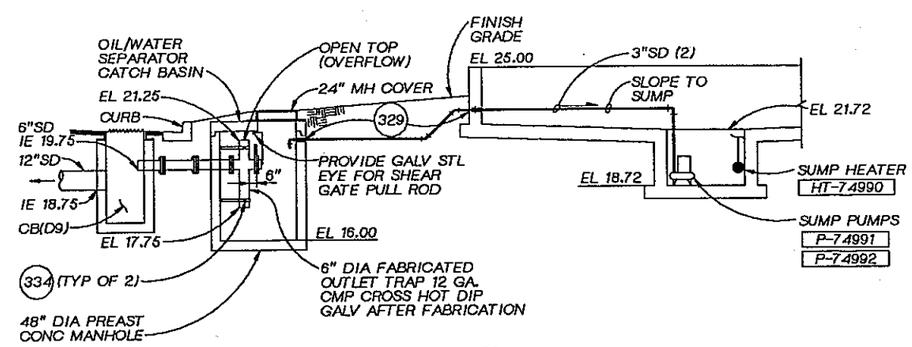

SECTION D
1/4"=1'-0" 740-M-1

JOSEPH A. GAUTHIER STATE OF WASHINGTON REGISTERED PROFESSIONAL ENGINEER

CH2M HILL

DSGN G. SAKAGAWA					
DR C. BROWN					
CHK GAUTHIER/SIEMENS					
APVD J. GAUTHIER	NO.	DATE	REVISION	BY	APVD

REUSE OF DOCUMENTS
THIS DOCUMENT, AND THE IDEAS AND DESIGNS INCORPORATED HEREIN, AS AN INSTRUMENT OF PROFESSIONAL SERVICE, IS THE PROPERTY OF CH2M HILL AND IS NOT TO BE USED, IN WHOLE OR IN PART, FOR ANY OTHER PROJECT WITHOUT THE WRITTEN AUTHORIZATION OF CH2M HILL.
©CH2M HILL

BAR IS ONE INCH ON ORIGINAL DRAWING.
0 1"
IF NOT ONE INCH ON THIS SHEET, ADJUST SCALES ACCORDINGLY.

CITY OF BELLINGHAM, WASHINGTON
POST POINT WASTEWATER TREATMENT PLANT UPGRADE

EMERGENCY GENERATOR BUILDING
MECHANICAL
SECTIONS AND DETAILS

DWG NO. 740-M-2
DATE AUG. 1990
PROJ NO. SEA22452.C1

DATE: 8/26/90
DRAWN BY: GH BURLEY DESIGNED BY: GE BOWER
DGN NAME: H:/PROJ2/BELLINGH/BL800A-A.DGN

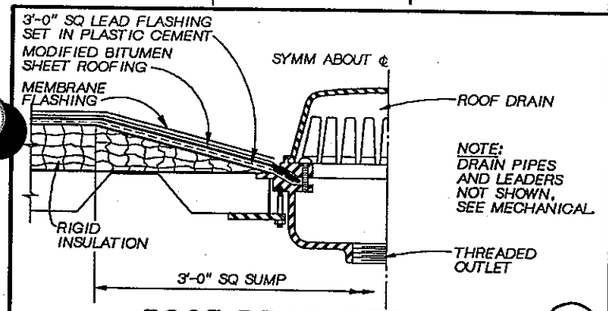

ROOF DRAIN DETAIL (1)
NTS

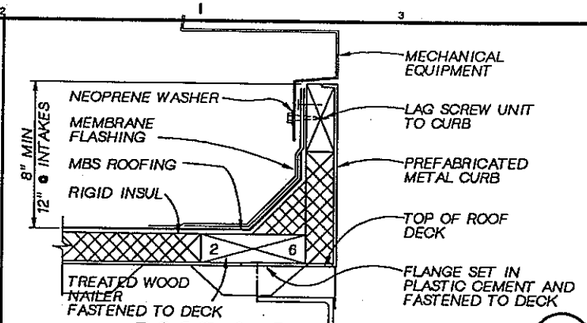

ROOF CURB DETAIL (4)
3"=1'-0"

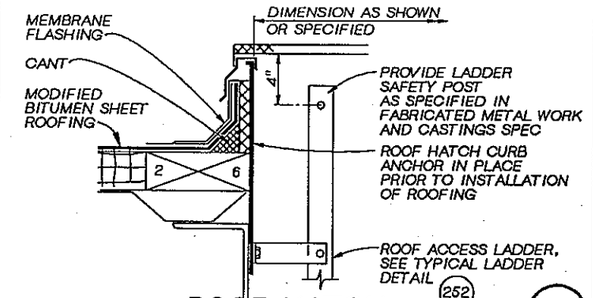

ROOF HATCH (7)
NTS

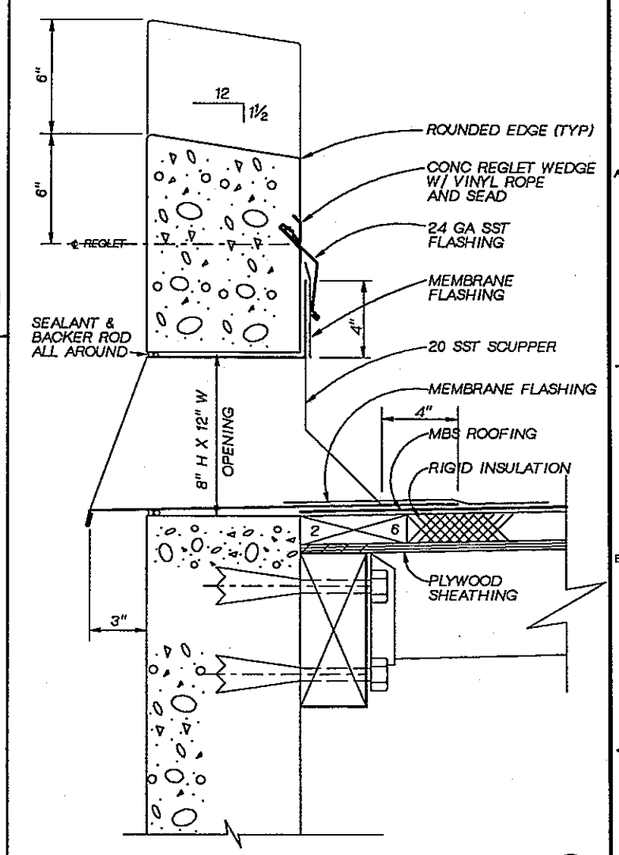

(10)

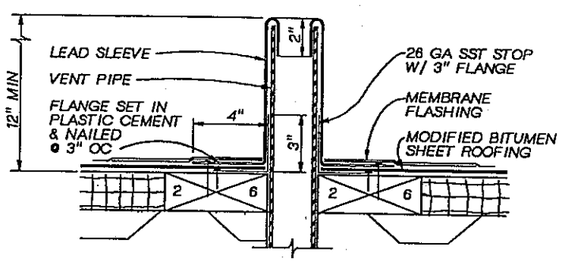

VENT PIPE DETAIL (2)
3"=1'-0"

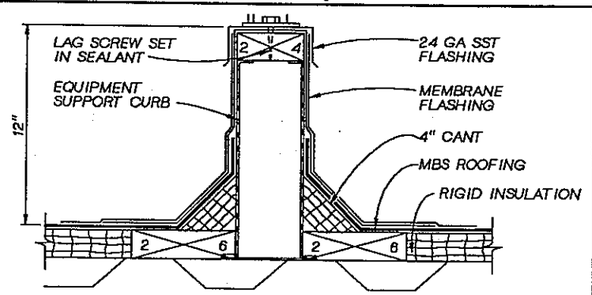

EQUIPMENT SUPPORT DETAIL (5)
3"=1'-0"

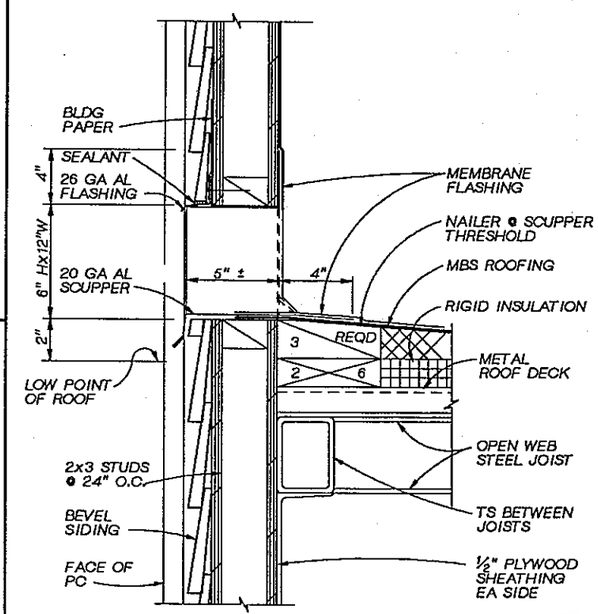

OVERFLOW SCUPPER (8)
3"= 1'-0"

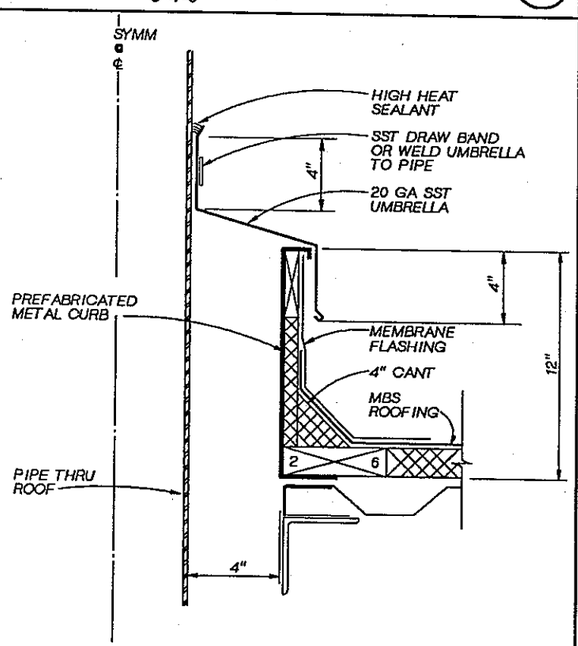

EXHAUST PIPE CURB DETAIL (3)
3"=1'-0"

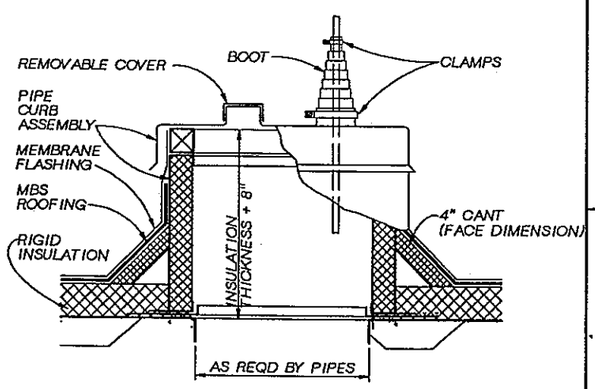

PIPE CURB ASSEMBLY (6)
3"=1'-0"

NOT USED

(9)

GENERAL NOTES

1. UNLESS OTHERWISE NOTED, PLAN DIMENSIONS ARE TO COLUMN CENTERLINES, NOMINAL FACE OF MASONRY, FACE OF STUDS AND FACE OF CONCRETE.
2. FLOOR LINE REFERS TO TOP OF CONCRETE SLABS AT THE HIGH POINT. FINISH FLOORING IS INSTALLED ABOVE THE FLOOR LINE. FOR DEPRESSED FLOORS, CURBS, AND FLOOR SLOPES, SEE STRUCTURAL DRAWINGS.
3. FIGURE DIMENSIONS TAKE PRECEDENCE OVER SCALED DIMENSIONS.
4. WHERE DOOR IS LOCATED NEAR CORNER OF ROOM AND IS NOT LOCATED BY DIMENSION, IT SHALL BE 6 INCHES FROM FACE OF WALL TO DOOR OPENING.
5. VERIFY SIZE AND LOCATION OF AND PROVIDE ALL OPENINGS THROUGH FLOORS AND WALLS, ACCESS DOORS, FURRING, CURBS, ANCHORS, AND INSERTS. PROVIDE ALL BASES AND BLOCKING REQUIRED FOR ACCESSORIES, MECHANICAL, ELECTRICAL, AND OTHER EQUIPMENT.
6. REPETITIVE FEATURES ARE NOT DRAWN IN THEIR ENTIRETY AND SHALL BE COMPLETELY PROVIDED AS IF DRAWN IN FULL.
7. REFER TO SCHEDULE SHEETS, STRUCTURAL, MECHANICAL, ELECTRICAL, AND OTHER CATEGORIES OF DRAWINGS FOR ADDITIONAL NOTES.

(11)

REGISTERED ARCHITECT JOHN L. PRUNS STATE OF WASHINGTON

CH2M HILL

DSGN	G BOWER
DR	G BOWER
CHK	R WHITE
APVD	J. GAUTHIER

NO.	DATE	REVISION	BY	APVD

REUSE OF DOCUMENTS
THIS DOCUMENT, AND THE IDEAS AND DESIGNS INCORPORATED HEREIN, AS AN INSTRUMENT OF PROFESSIONAL SERVICE, IS THE PROPERTY OF CH2M HILL AND IS NOT TO BE USED, IN WHOLE OR IN PART, FOR ANY OTHER PROJECT WITHOUT THE WRITTEN AUTHORIZATION OF CH2M HILL.
©CH2M HILL

BAR IS ONE INCH ON ORIGINAL DRAWING. 0 1"
IF NOT ONE INCH ON THIS SHEET, ADJUST SCALES ACCORDINGLY.

CITY OF BELLINGHAM, WASHINGTON
POST POINT WASTEWATER TREATMENT PLANT UPGRADE

STANDARD DETAILS
ARCHITECTURAL ROOF DETAILS

DWG NO. 800-A-1
DATE AUG. 1990
PROJ NO. SEA22462.C1

DATE: 8-26-90
DRAWN BY: R.C.- C.S.H. DESIGNED BY: C.LONGMATE
DGN NAME: H:/PROJ2/BELLINGH/BL800A-F.DGN

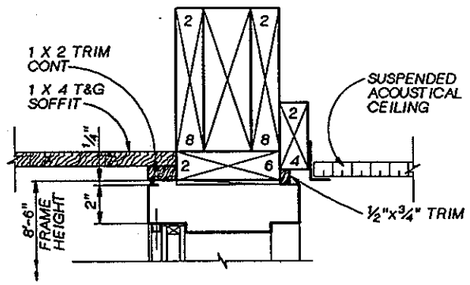

TRANSOM LIGHT HEAD (12)
3"=1'-0"

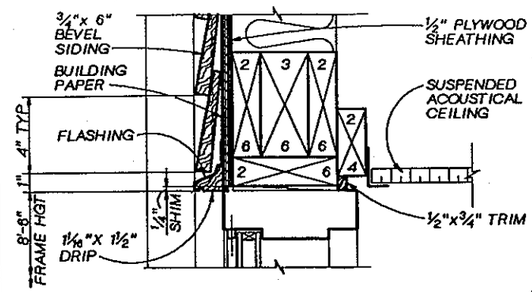

TRANSOM LIGHT HEAD (16)
3"=1'-0"

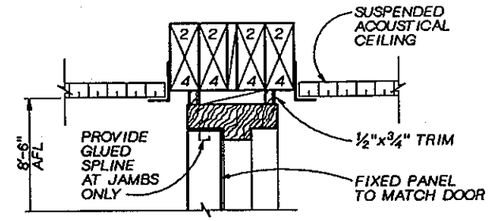

TRANSOM PANEL HEAD (20)
3"=1'-0" (JAMB SIM)

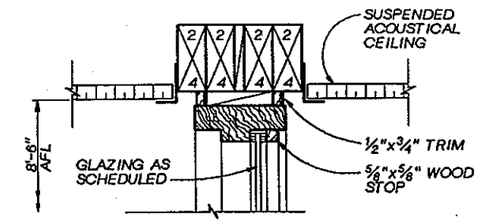

SIDELIGHT HEAD (24)
3"=1'-0"

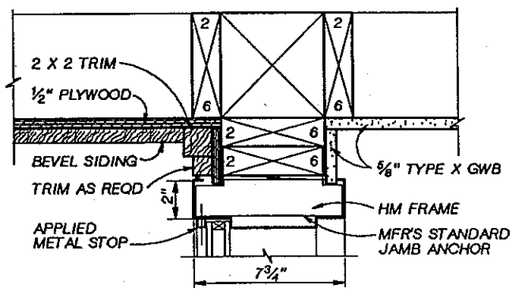

SIDELIGHT JAMB (13)
3"=1'-0"

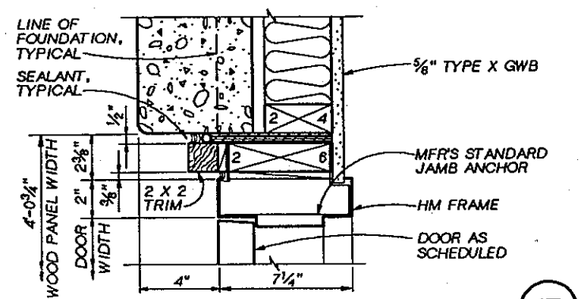

JAMB (17)
3"=1'-0"

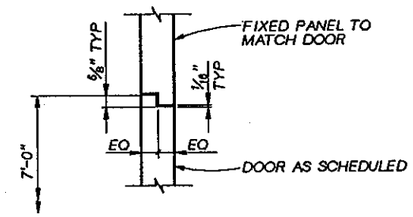

TRANSOM PANEL/DOOR HEAD (21)
3"=1'-0"

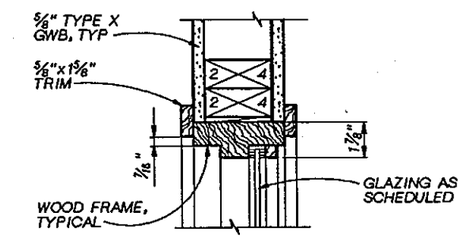

SIDELIGHT JAMB (25)
3"=1'-0"

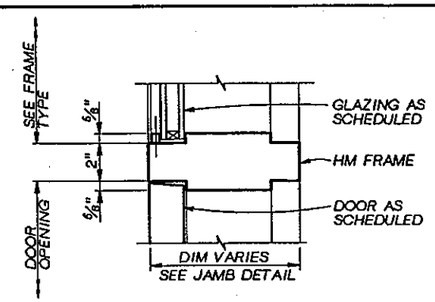

SIDELIGHT/DOOR JAMB (14)
3"=1'-0" (TRANSOM LIGHT/DOOR HEAD SIM)

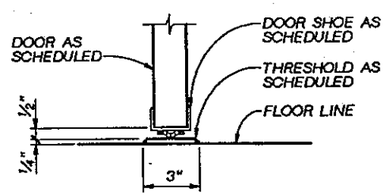

SILL (18)
3"=1'-0"

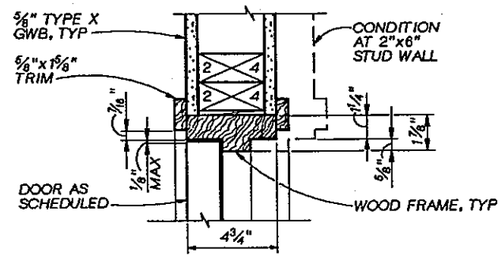

JAMB (22)
3"=1'-0"

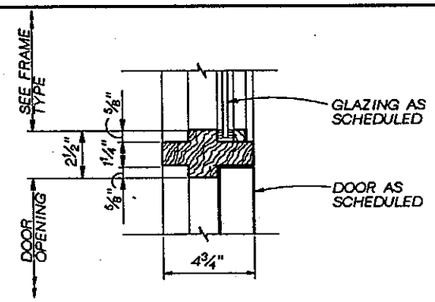

SIDELIGHT/DOOR JAMB (26)
3"=1'-0"

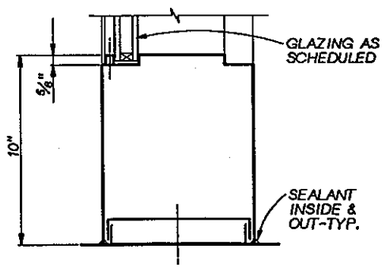

SIDELIGHT SILL (15)
3"=1'-0"

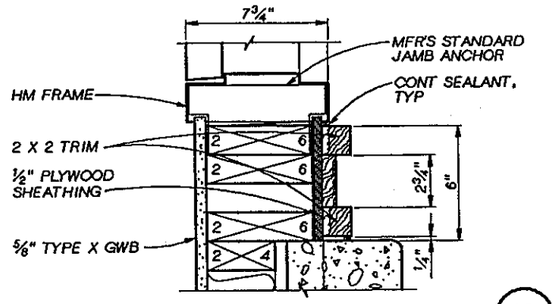

JAMB (19)
3"=1'-0"

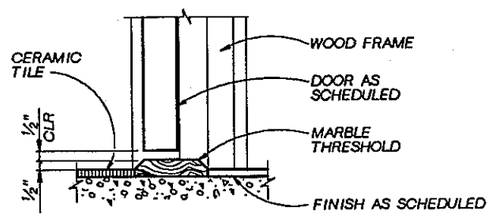

SILL (23)
3"=1'-0"

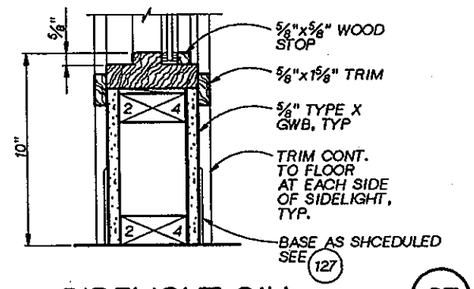

SIDELIGHT SILL (27)
3"=1'-0"

REGISTERED ARCHITECT JOHN L. PRIBE STATE OF WASHINGTON

CH2M HILL

DSGN	C LONGMATE			
DR	C HOWELL			
CHK	R WHITE			
APVD	J. GAUTHIER	NO.	DATE	REVISION	BY	APVD

REUSE OF DOCUMENTS
THIS DOCUMENT, AND THE IDEAS AND DESIGNS INCORPORATED HEREIN, AS AN INSTRUMENT OF PROFESSIONAL SERVICE, IS THE PROPERTY OF CH2M HILL AND IS NOT TO BE USED, IN WHOLE OR IN PART, FOR ANY OTHER PROJECT WITHOUT THE WRITTEN AUTHORIZATION OF CH2M HILL.
©CH2M HILL

BAR IS ONE INCH ON ORIGINAL DRAWING.
0 1"
IF NOT ONE INCH ON THIS SHEET, ADJUST SCALES ACCORDINGLY.

CITY OF BELLINGHAM, WASHINGTON
POST POINT WASTEWATER TREATMENT PLANT UPGRADE

STANDARD DETAILS
ARCHITECTURAL DOOR DETAILS

DWG NO. 800-A-2
DATE AUG. 1990
PROJ NO. SEA22462.C1

OVERLAY SCREEN
PROJ ID
FILE

DATE: 8-22-90
DRAWN BY:CSH/MGS DESIGNED BY: C.LONGMATE
DGN NAME: H:/PROJ2/BELLINGH/BL800A-G.DGN

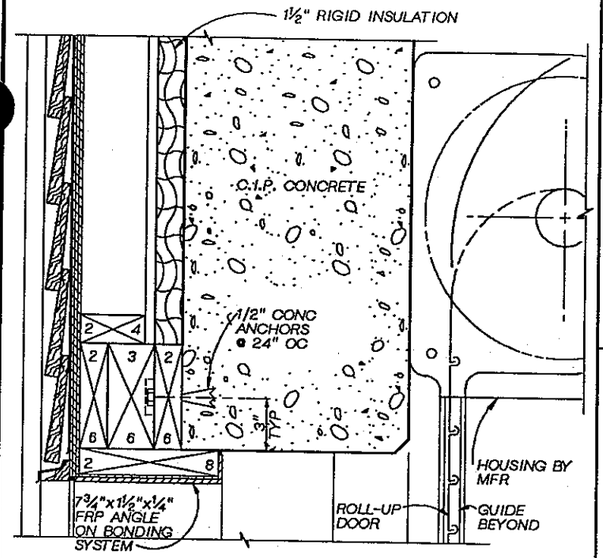

ROLL-UP DOOR HEAD (28)
3"=1'-0"

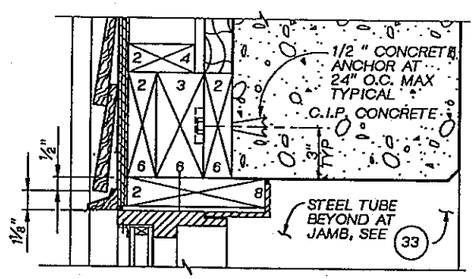

TRANSOM LIGHT HEAD (31)
3"=1'-0"

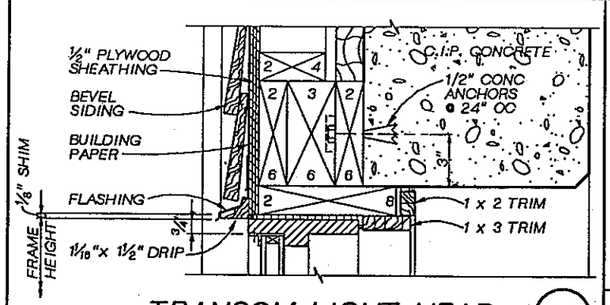

TRANSOM LIGHT HEAD (35)
3"=1'-0"

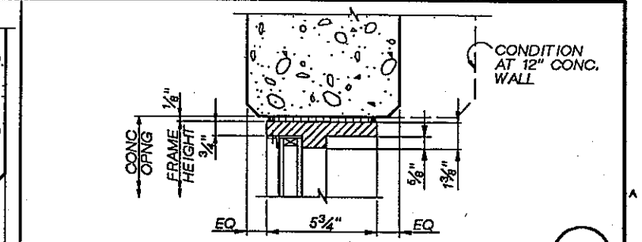

TRANSOM LIGHT HEAD (39)
3"=1'-0"

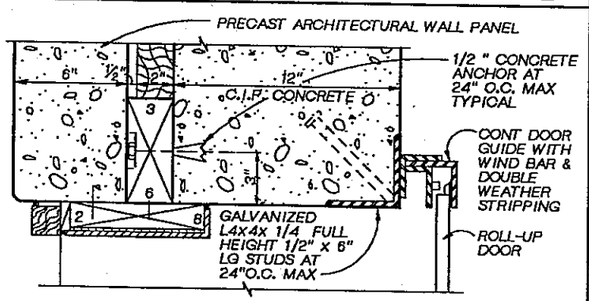

ROLL-UP DOOR JAMB (29)
3"=1'-0"

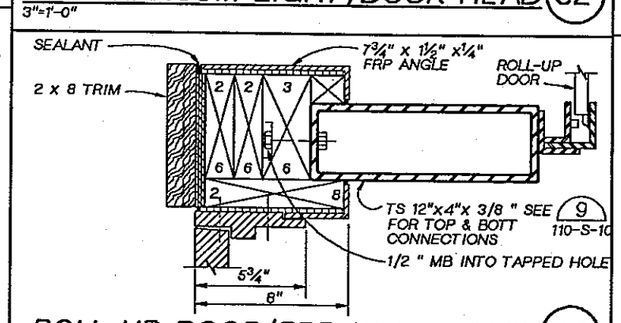

ROLL-UP DOOR/FRP DOOR JAMB (33)
3"=1'-0"

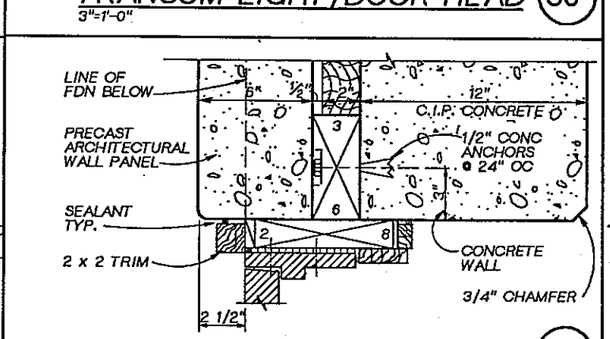

DOOR JAMB (37)
3"=1'-0"

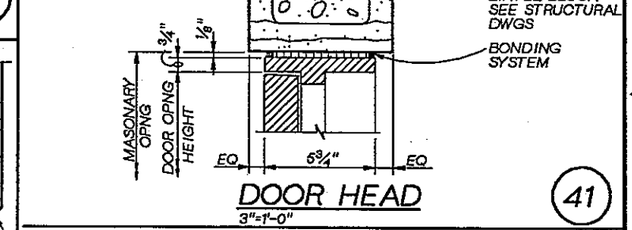

DOOR HEAD (41)
3"=1'-0"

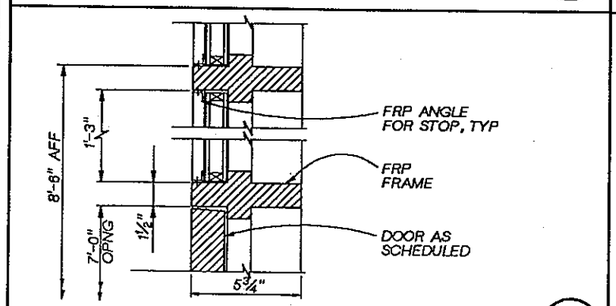

DBL TRANSOM LIGHT/DOOR HEAD (32)
3"=1'-0"

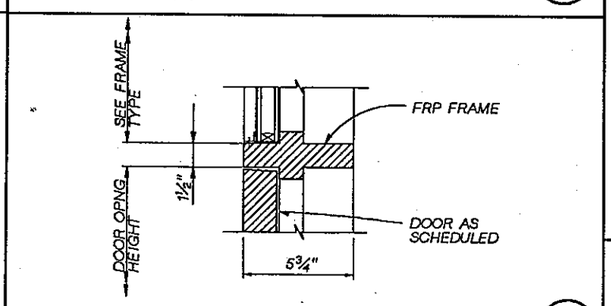

TRANSOM LIGHT/DOOR HEAD (36)
3"=1'-0"

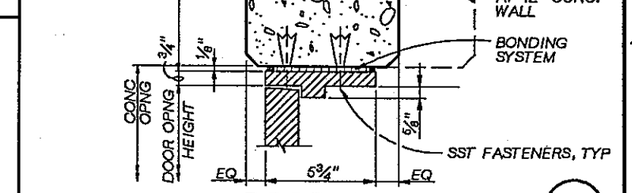

DOOR JAMB (40)
3"=1'-0"

TRANSOM GRILLE/DOOR HEAD (42)
3"=1'-0"

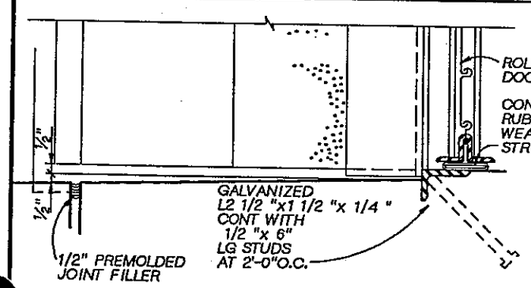

ROLL-UP DOOR SILL (30)
3"=1'-0"

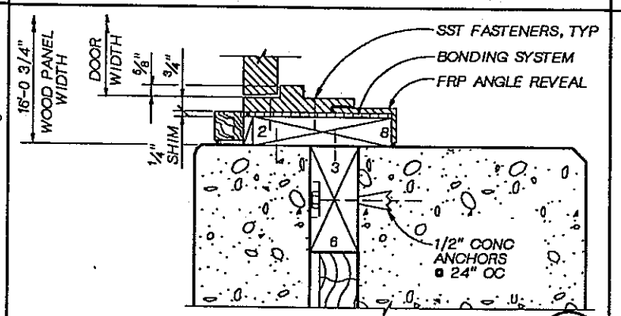

DOOR JAMB (34)
3"=1'-0"

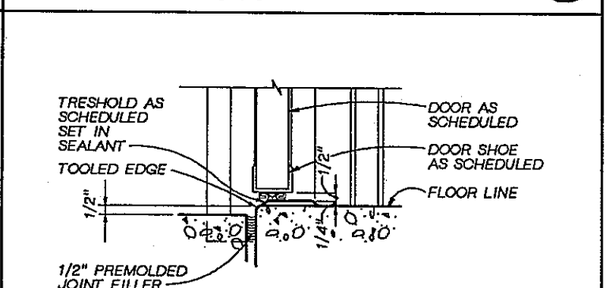

DOOR SILL (38)
3"=1'-0"

REGISTERED ARCHITECT JOHN L. PRESS STATE OF WASHINGTON

CH2M HILL

DSGN	C LONGMATE		
DR	C HOWELL		
CHK	R WHITE		
APVD	J. GAUTHIER		

NO.	DATE	REVISION	BY	APVD

REUSE OF DOCUMENTS
THIS DOCUMENT, AND THE IDEAS AND DESIGNS INCORPORATED HEREIN, AS AN INSTRUMENT OF PROFESSIONAL SERVICE, IS THE PROPERTY OF CH2M HILL AND IS NOT TO BE USED, IN WHOLE OR IN PART, FOR ANY OTHER PROJECT WITHOUT THE WRITTEN AUTHORIZATION OF CH2M HILL.
©CH2M HILL

BAR IS ONE INCH ON ORIGINAL DRAWING.
0 1"
IF NOT ONE INCH ON THIS SHEET, ADJUST SCALES ACCORDINGLY.

CITY OF BELLINGHAM, WASHINGTON
POST POINT WASTEWATER TREATMENT PLANT UPGRADE

STANDARD DETAILS
ARCHITECTURAL DOOR DETAILS

DWG NO. 800-A-3
DATE AUG. 1990
PROJ NO. SEA22462.C1

DATE: 8-26-90
DRAWN BY:R.C.-C.S.HOWELL DESIGNED BY:C.LONGMATE
DGN NAME: H:/PROJ2/BELLINGH/BL800A-H.DGN

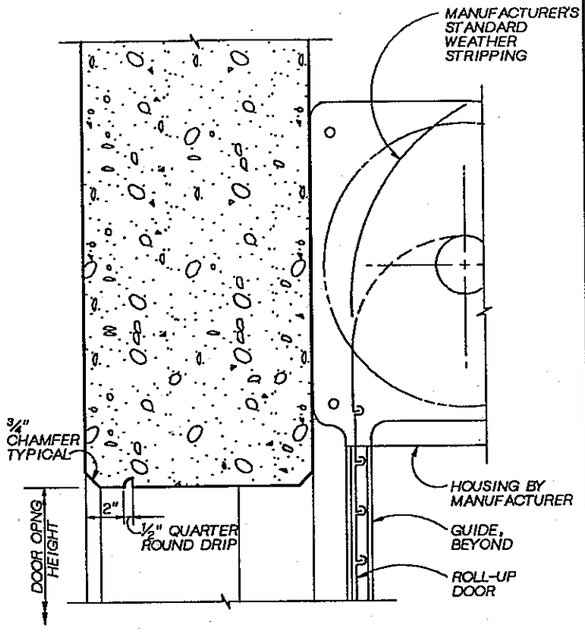

ROLL-UP DOOR HEAD (43)
3"=1'-0"

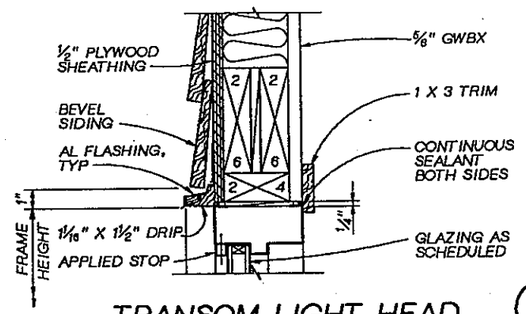

TRANSOM LIGHT HEAD (46)
3"=1'-0"

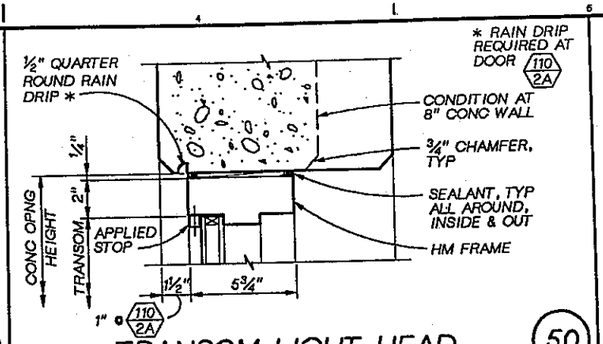

TRANSOM LIGHT HEAD (50)
3"=1'-0" (JAMB SIM)

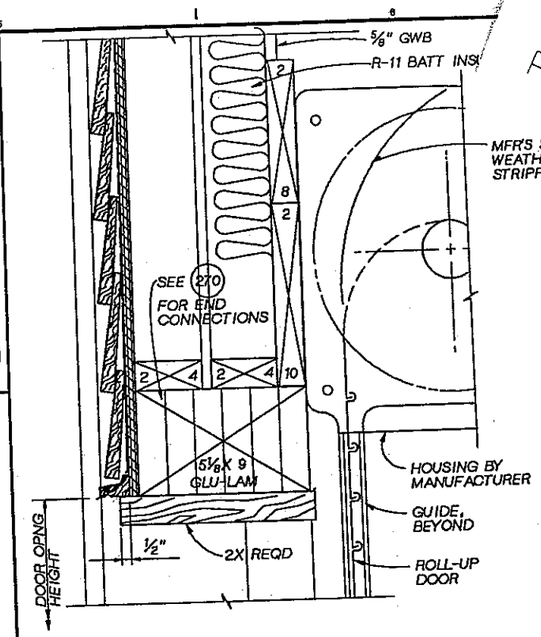

ROLL-UP DOOR HEAD (54)
3"=1'-0"

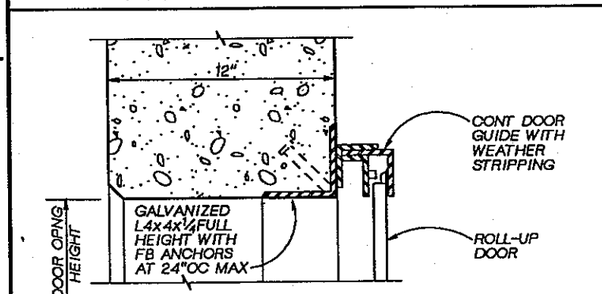

ROLL-UP DOOR JAMB (44)
3"=1'-0"

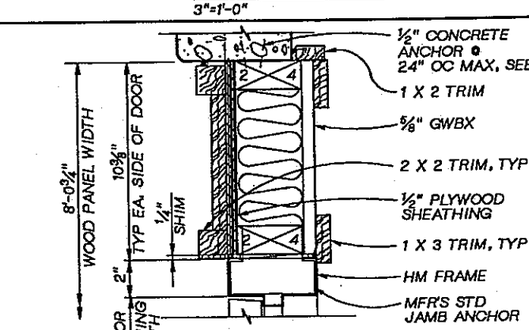

DOOR JAMB (47)
3"=1'-0"

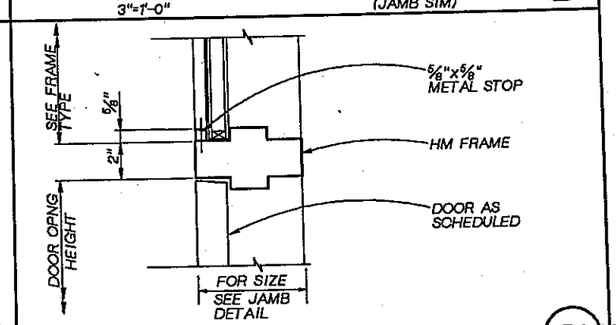

TRANSOM LIGHT/DOOR HEAD (51)
3"=1'-0"

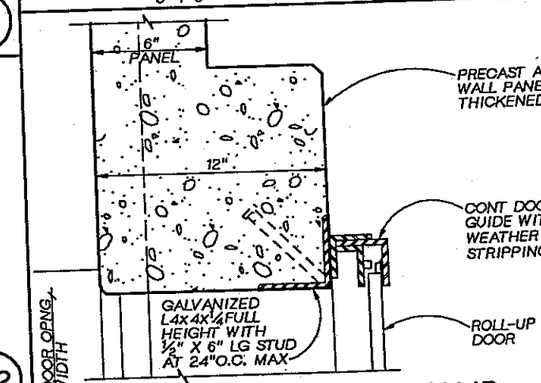

ROLL-UP DOOR JAMB (55)
3"=1'-0"

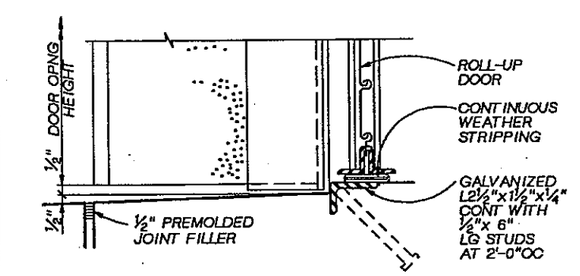

ROLL-UP DOOR SILL (45)
3"=1'-0"

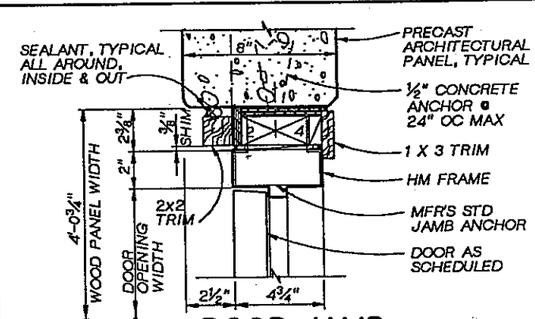

DOOR JAMB (49)
3"=1'-0"

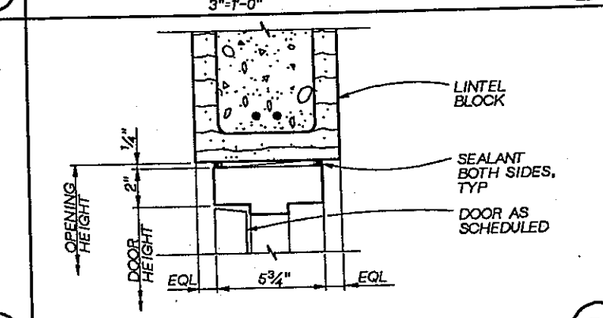

DOOR HEAD (53)
3"=1'-0" (JAMB SIM)

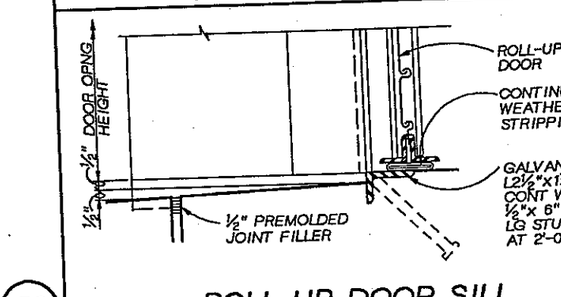

ROLL-UP DOOR SILL (5
3"=1'-0"

REGISTERED ARCHITECT JOHN ZYNDSE STATE OF WASHINGTON

CH2M HILL

DSGN	C LONGMATE
DR	C HOWELL
CHK	R WHITE
APVD	J. GAUTHIER

NO.	DATE	REVISION	BY	APVD

REUSE OF DOCUMENTS
THIS DOCUMENT, AND THE IDEAS AND DESIGNS INCORPORATED HEREIN, AS AN INSTRUMENT OF PROFESSIONAL SERVICE, IS THE PROPERTY OF CH2M HILL AND IS NOT TO BE USED, IN WHOLE OR IN PART, FOR ANY OTHER PROJECT WITHOUT THE WRITTEN AUTHORIZATION OF CH2M HILL.
©CH2M HILL

BAR IS ONE INCH ON ORIGINAL DRAWING.
0 1"
IF NOT ONE INCH ON THIS SHEET, ADJUST SCALES ACCORDINGLY.

CITY OF BELLINGHAM, WASHINGTON
POST POINT WASTEWATER TREATMENT PLANT UPGRADE

STANDARD DETAILS
ARCHITECTURAL DOOR DETAILS

DWG NO. 800-A-4
DATE AUG. 1990
PROJ. NO. SEA22462.C1

OVERLAY SCREEN
PROJ.ID FILE

DATE: 8-26-90
DRAWN BY: C.S.HOWELL DESIGNED BY: C.LONGMATE
DGN NAME: H:/PROJ2/BELLINGH/BL800A-K.DGN

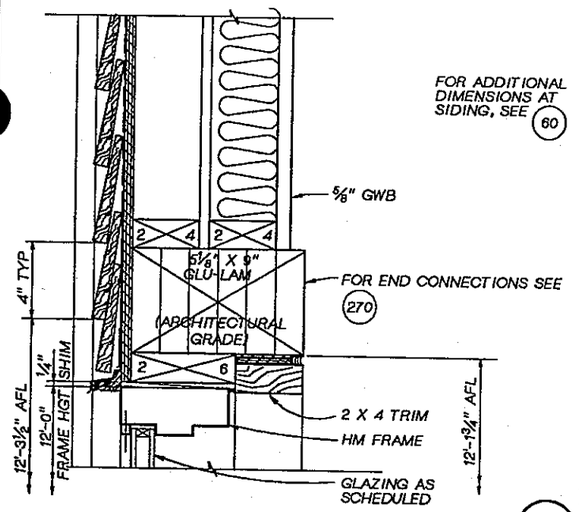

TRANSOM LIGHT HEAD 57
3"=1'-0"

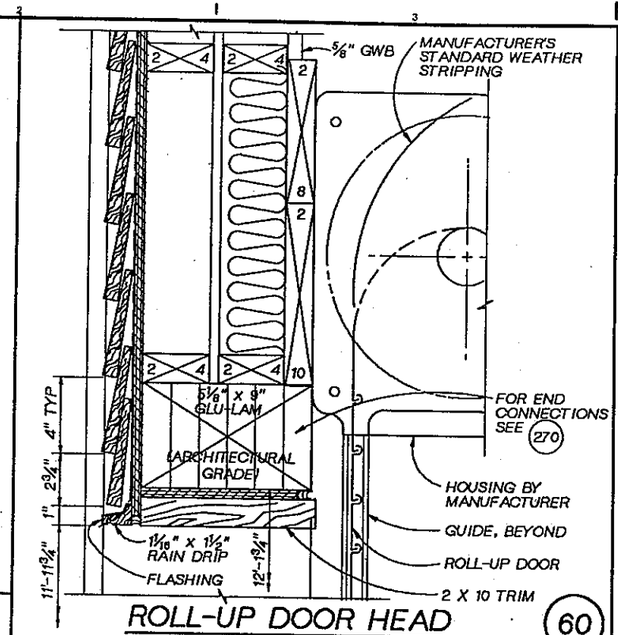

ROLL-UP DOOR HEAD 60
3"=1'-0"

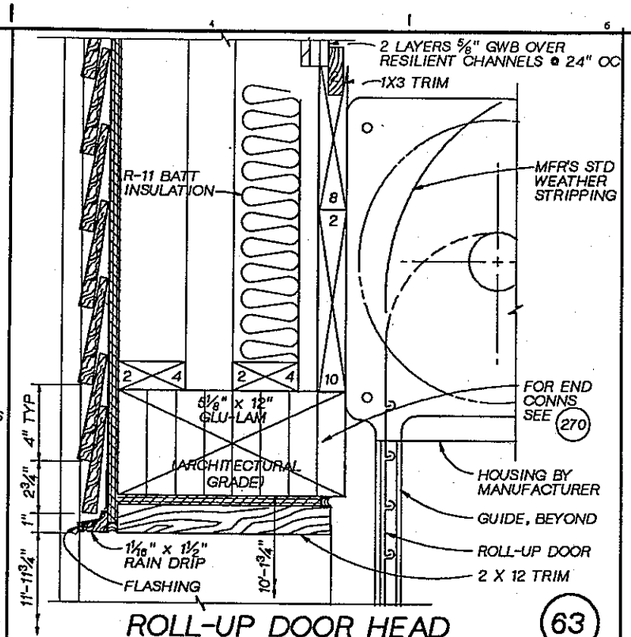

ROLL-UP DOOR HEAD 63
3"=1'-0"

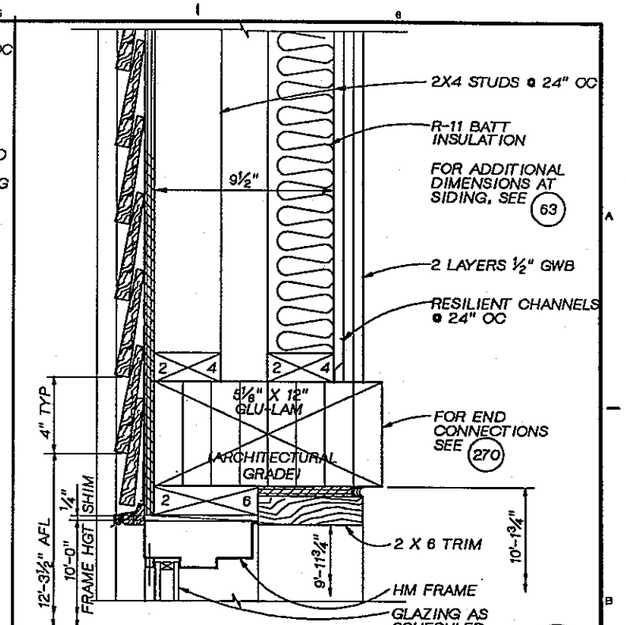

TRANSOM LITE HEAD 66
3"=1'-0"

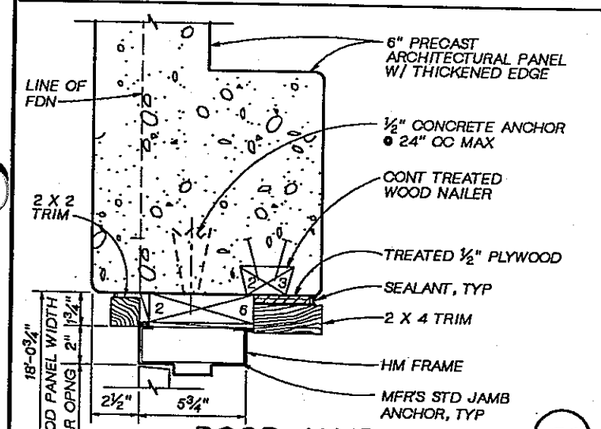

DOOR JAMB 58
3"=1'-0"

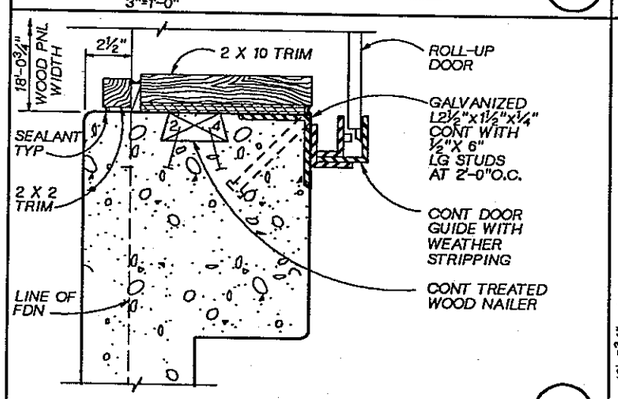

ROLL-UP DOOR JAMB 61
3"=1'-0"

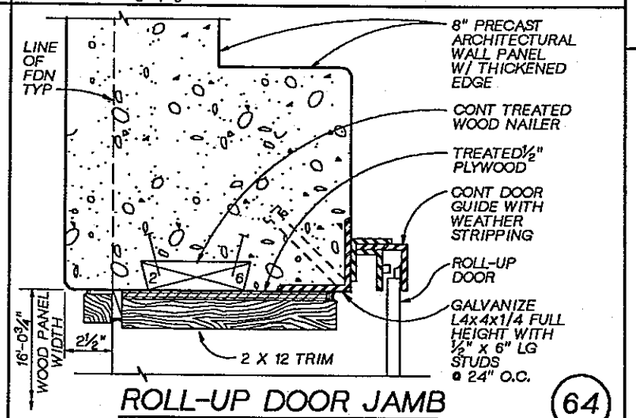

ROLL-UP DOOR JAMB 64
3"=1'-0"

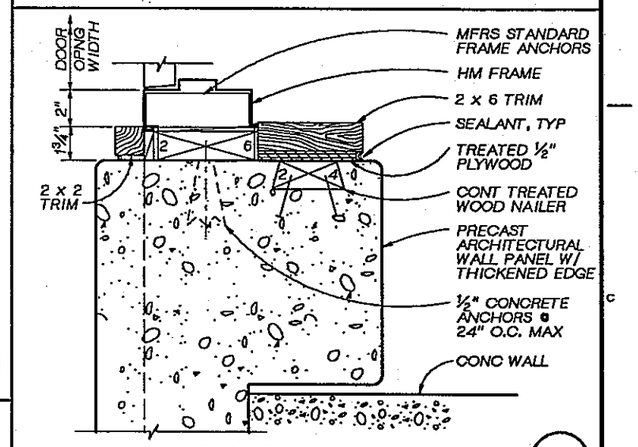

DOOR JAMB 67
3"=1'-0"

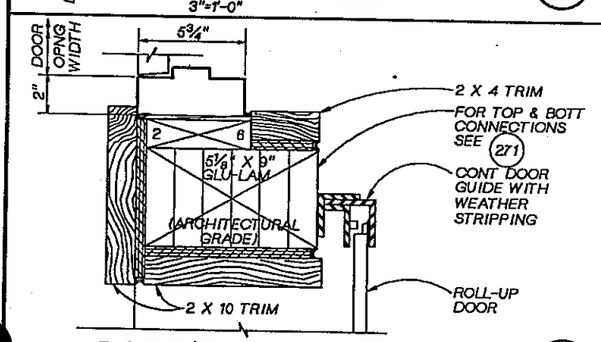

DOOR/ROLL-UP DOOR JAMB 59
3"=1'-0"

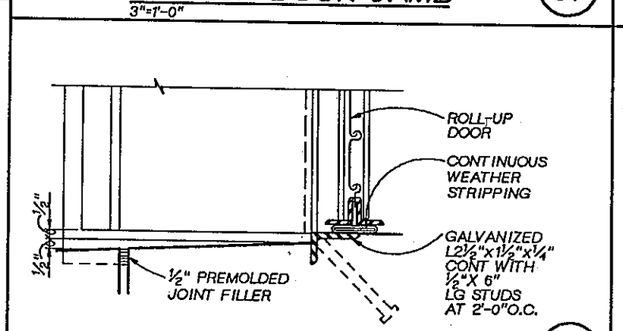

ROLL-UP DOOR SILL 62
3"=1'-0"

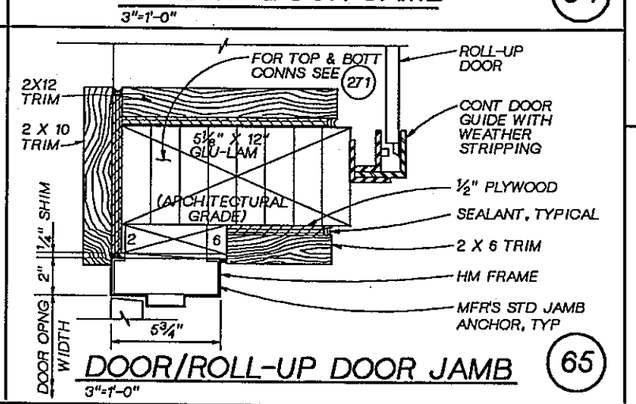

DOOR/ROLL-UP DOOR JAMB 65
3"=1'-0"

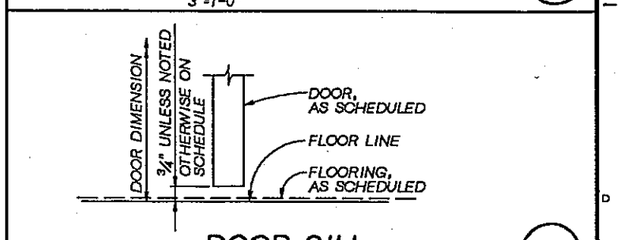

DOOR SILL 68
3"=1'-0"

REGISTERED ARCHITECT JOHN L. BLUME STATE OF WASHINGTON

CH2M HILL

DSGN	C LONGMATE
DR	C HOWELL
CHK	R WHITE
APVD	J. GAUTHIER

NO.	DATE	REVISION	BY	APVD

REUSE OF DOCUMENTS
THIS DOCUMENT, AND THE IDEAS AND DESIGNS INCORPORATED HEREIN, AS AN INSTRUMENT OF PROFESSIONAL SERVICE, IS THE PROPERTY OF CH2M HILL AND IS NOT TO BE USED, IN WHOLE OR IN PART, FOR ANY OTHER PROJECT WITHOUT THE WRITTEN AUTHORIZATION OF CH2M HILL.
©CH2M HILL

BAR IS ONE INCH ON ORIGINAL DRAWING.
0 1"
IF NOT ONE INCH ON THIS SHEET, ADJUST SCALES ACCORDINGLY.

CITY OF BELLINGHAM, WASHINGTON
POST POINT WASTEWATER TREATMENT PLANT UPGRADE

STANDARD DETAILS
ARCHITECTURAL DOOR DETAILS

DWG NO. 800-A-5
DATE AUG. 1990
PROJ. NO. SEA22462.C1

DATE: 8-26-90
DRAWN BY: R. CRADDOCK-CSH DESIGNED BY: C. LONGMATE
DGN NAME: H:/PROJ2/BELLINGH/BL800A-1.DGN

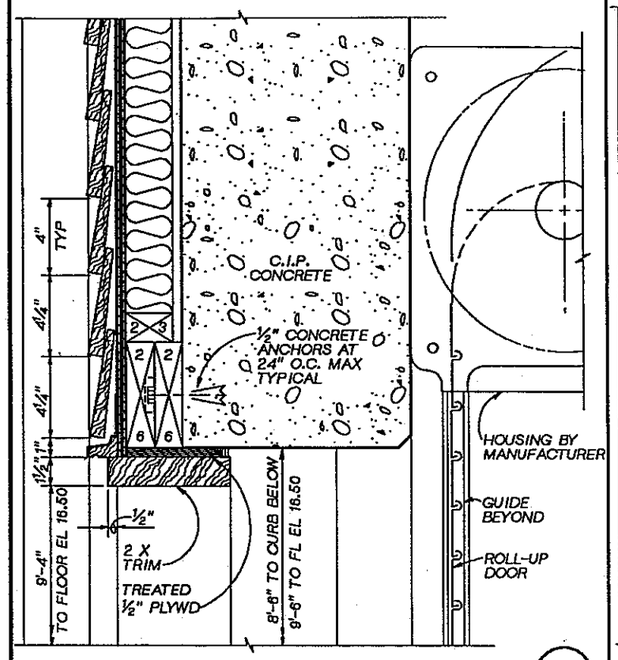

ROLL-UP DOOR HEAD (69)
3"=1'-0"

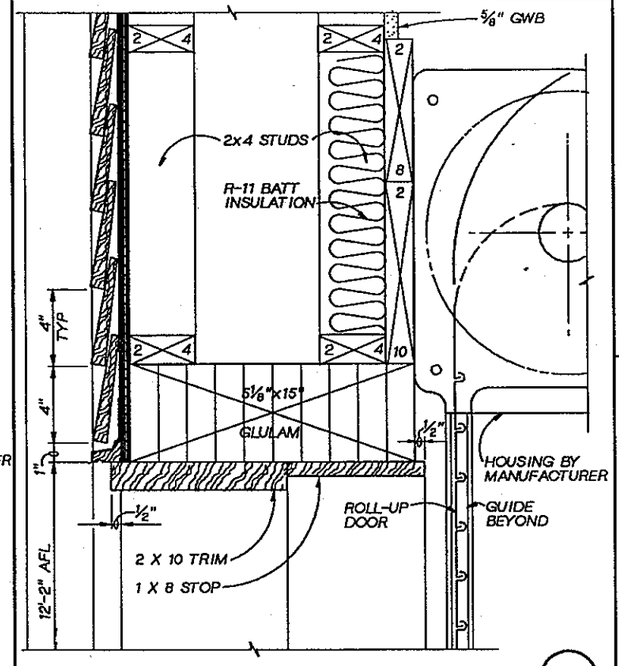

ROLL-UP DOOR HEAD (72)
3"=1'-0"

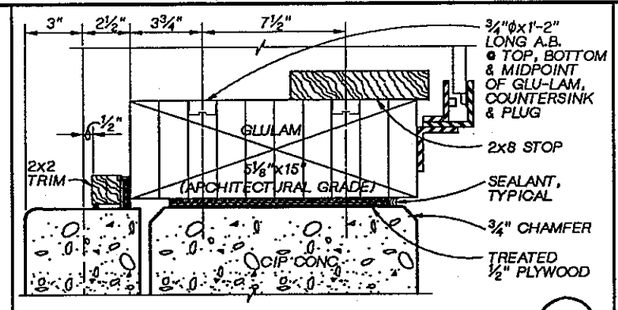

ROLL-UP DOOR JAMB (75)
3"=1'-0"

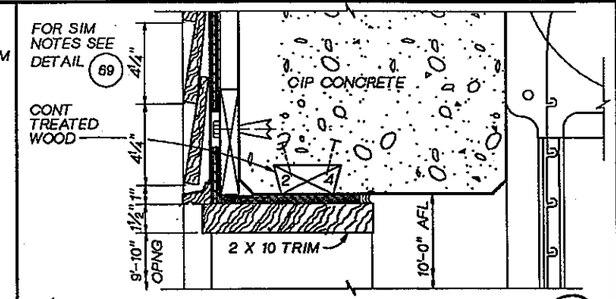

ROLL-UP DOOR HEAD (79)
3"=1'-0"

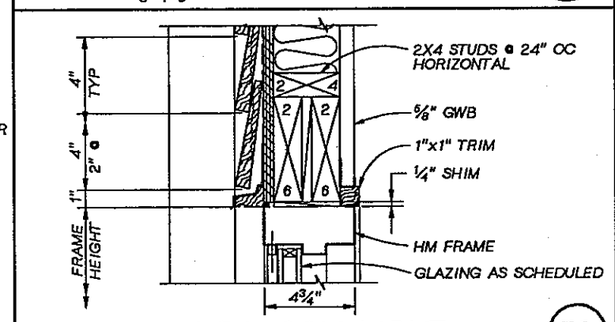

TRANSOM LIGHT (76)
3"=1'-0"

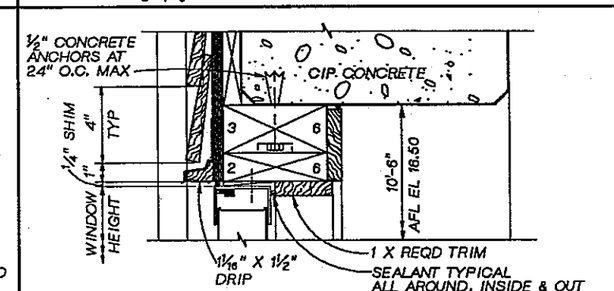

TRANSLUCENT PANEL HEAD (80)
3"=1'-0"

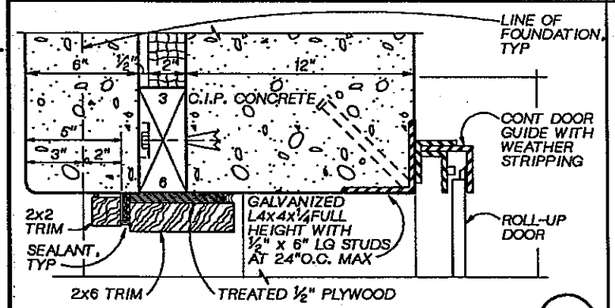

ROLL-UP DOOR JAMB (70)
3"=1'-0"

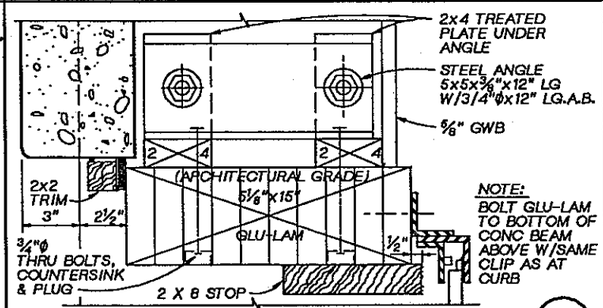

ROLL-UP DOOR JAMB (73)
3"=1'-0"

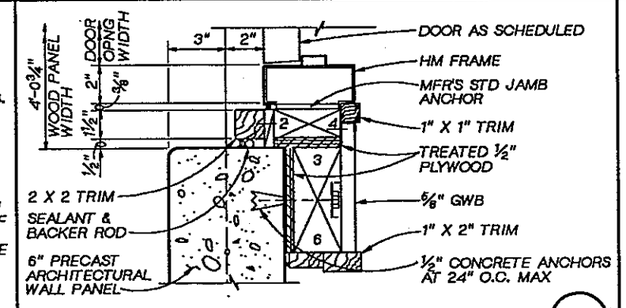

DOOR JAMB (77)
3"=1'-0"

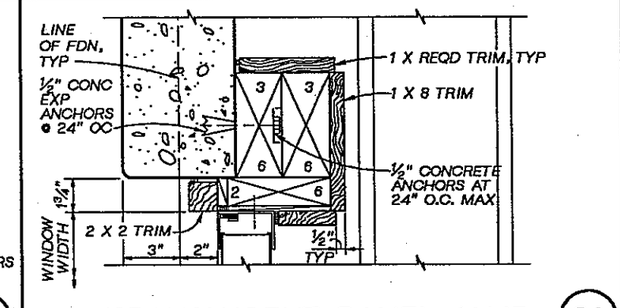

TRANSLUCENT PANEL JAMB (81)
3"=1'-0"

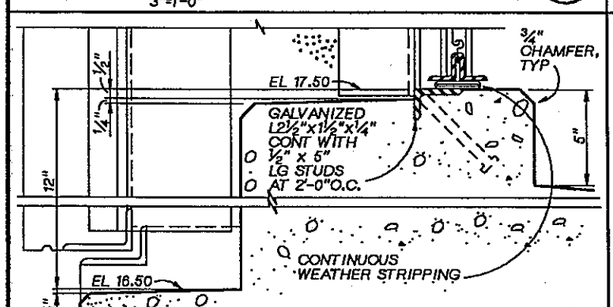

ROLL-UP DOOR SILL (71)
3"=1'-0"

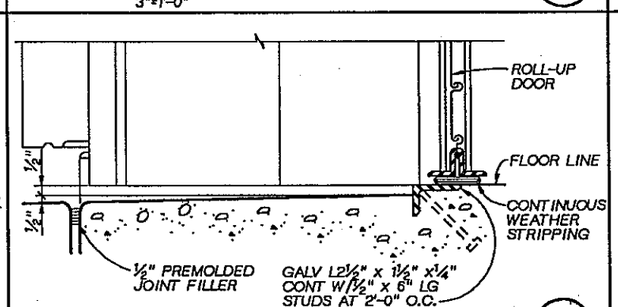

ROLL-UP DOOR SILL (74)
3"=1'-0"

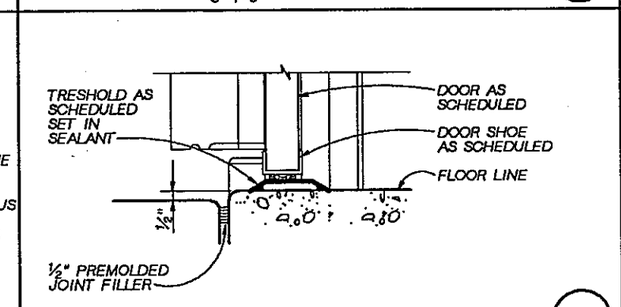

DOOR SILL (78)
3"=1'-0"

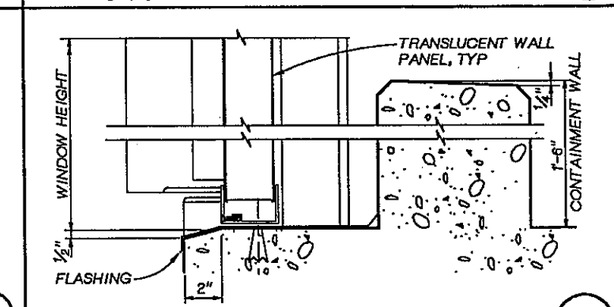

TRANSLUCENT PANEL SILL (82)
3"=1'-0"

REGISTERED ARCHITECT JOHN J. PRUNS STATE OF WASHINGTON

CH2M HILL

DSGN	C LONGMATE
DR	C HOWELL
CHK	R WHITE
APVD	J. GAUTHIER

NO.	DATE	REVISION	BY	APVD

REUSE OF DOCUMENTS
THIS DOCUMENT, AND THE IDEAS AND DESIGNS INCORPORATED HEREIN, AS AN INSTRUMENT OF PROFESSIONAL SERVICE, IS THE PROPERTY OF CH2M HILL AND IS NOT TO BE USED, IN WHOLE OR IN PART, FOR ANY OTHER PROJECT WITHOUT THE WRITTEN AUTHORIZATION OF CH2M HILL.
©CH2M HILL

BAR IS ONE INCH ON ORIGINAL DRAWING. 0 1"
IF NOT ONE INCH ON THIS SHEET, ADJUST SCALES ACCORDINGLY.

CITY OF BELLINGHAM, WASHINGTON
POST POINT WASTEWATER TREATMENT PLANT UPGRADE

STANDARD DETAILS
ARCHITECTURAL
DOOR & WINDOW DETAILS

DWG NO. 800-A-6
DATE AUG. 1990
PROJ NO. SEA22452.C1

DRAWN BY: C.S.HOWELL/M SPARLING DESIGNED BY: C.LONGMATE
DGN NAME: H:/PROJ2/BELLINGH/BL800A-L.DGN

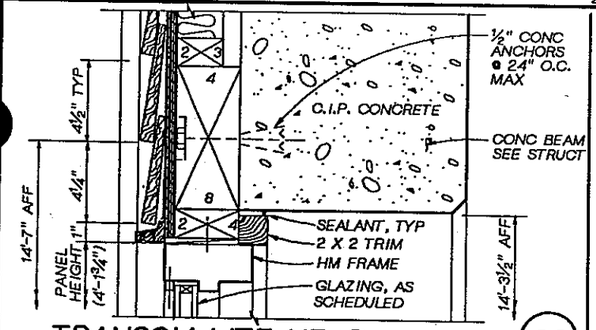

TRANSOM LITE HEAD (83)
3"=1'-0"

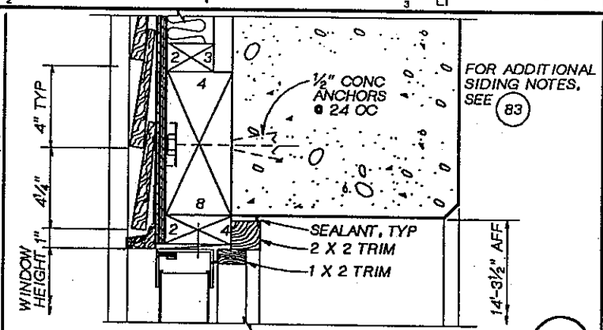

TRANSLUCENT PANEL HEAD (87)
3"=1'-0"

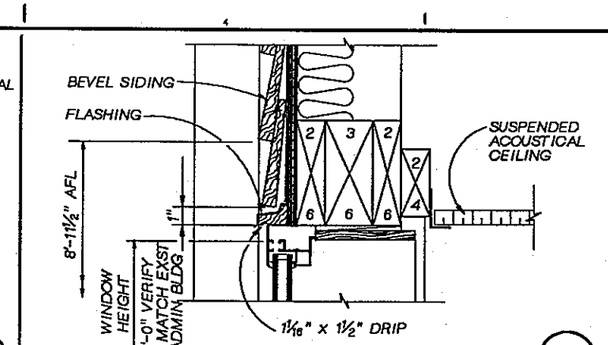

WINDOW HEAD (91)
3"=1'-0"

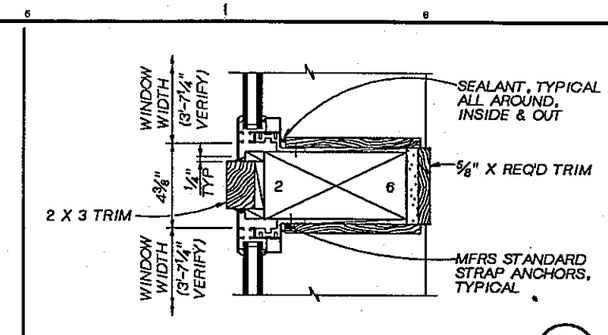

WINDOW JAMB (95)
3"=1'-0"

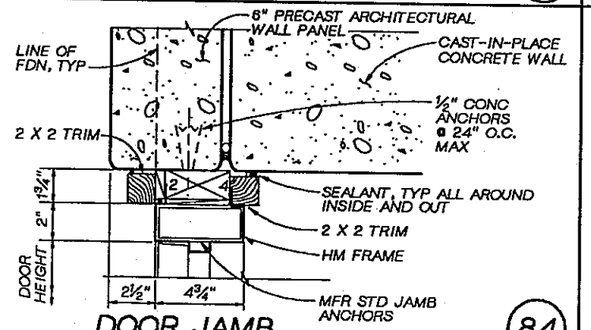

DOOR JAMB (84)
3"=1'-0"

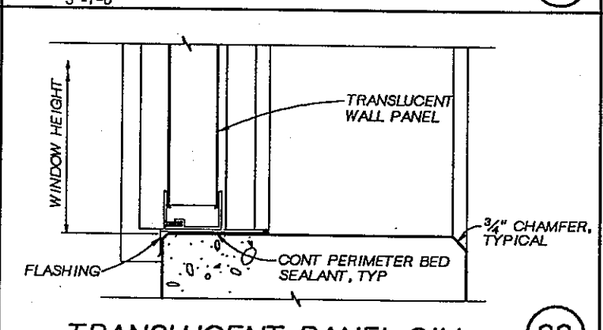

TRANSLUCENT PANEL SILL (88)
3"=1'-0"

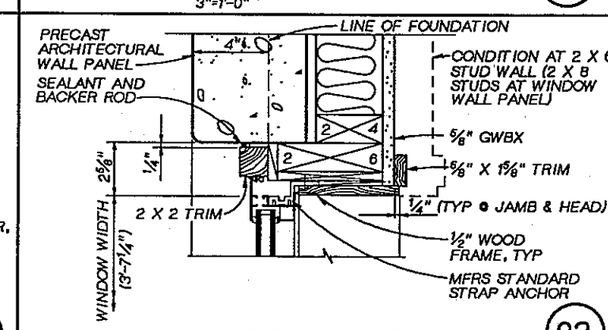

WINDOW JAMB (92)
3"=1'-0"

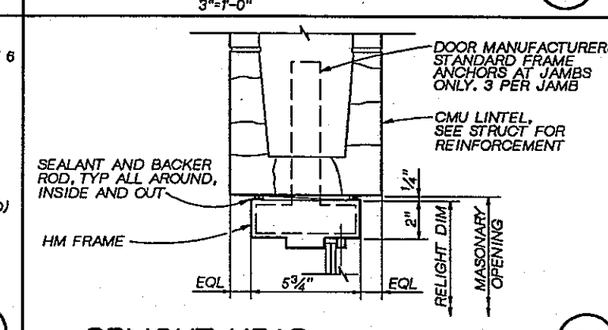

RELIGHT HEAD (JAMB & SILL SIM) (96)
3"=1'-0"

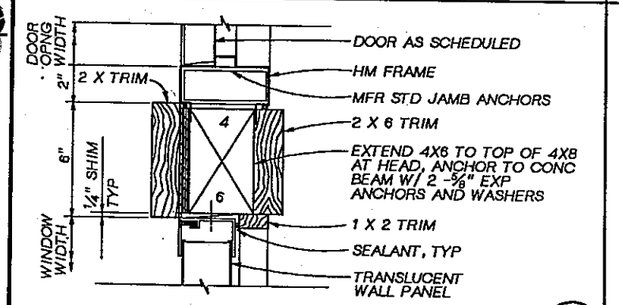

DOOR/TRANSLUCENT PANEL JAMB (85)
3"=1'-0"

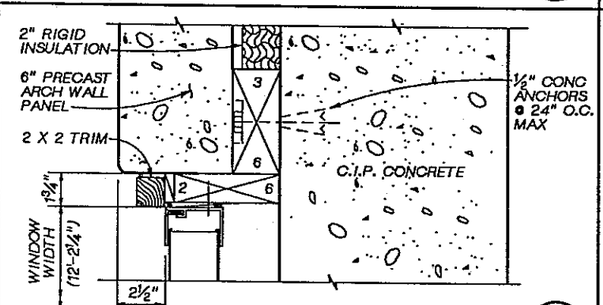

TRANSLUCENT PANEL JAMB (89)
3"=1'-0"

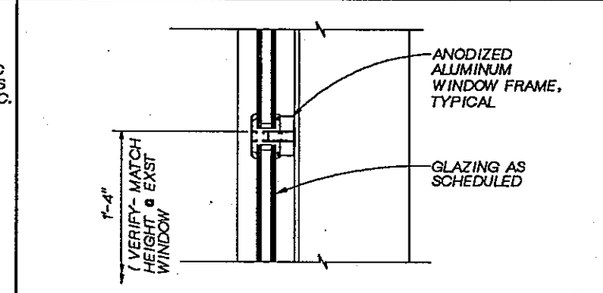

HORIZONTAL MULLION (93)
3"=1'-0"

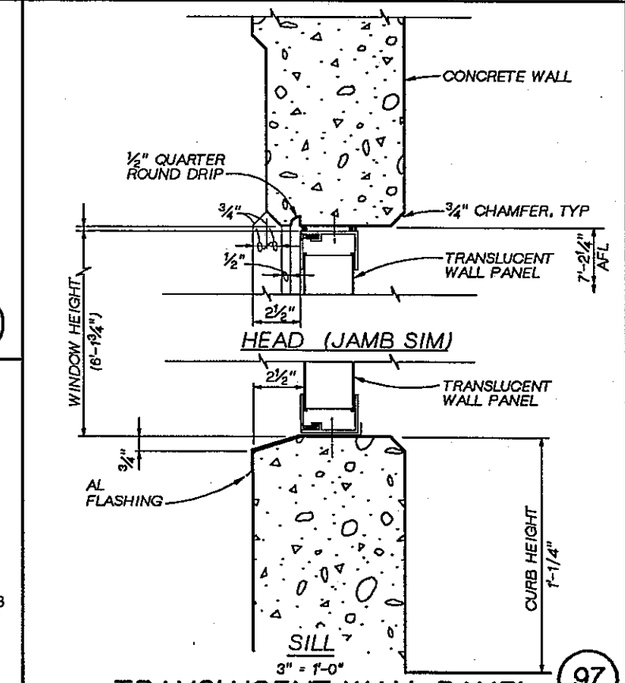

TRANSLUCENT WALL PANEL (97)

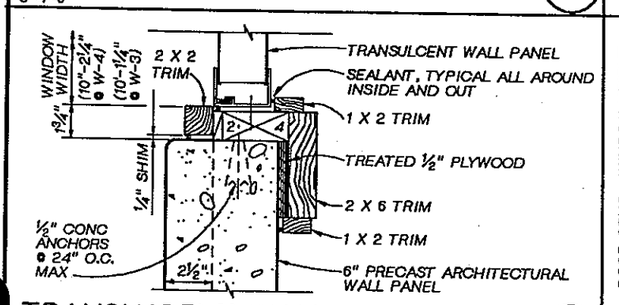

TRANSLUCENT WALL PANEL JAMB (86)
3"=1'-0"

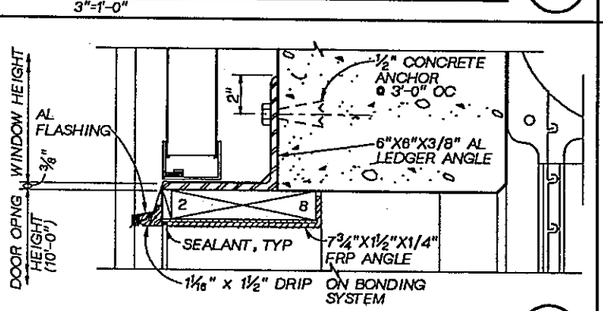

TRANSLUCENT PANEL SILL (90)
3"=1'-0"
@ ROLL-UP DOOR

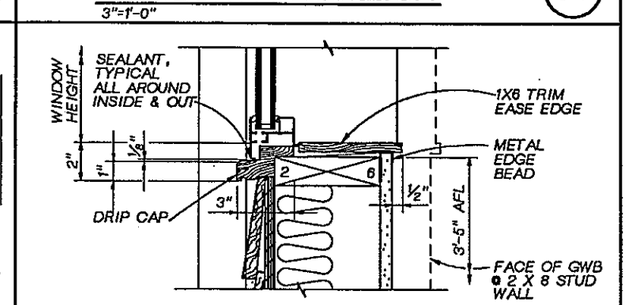

WINDOW SILL (94)
3"=1'-0"

REGISTERED ARCHITECT JOHN J. GAUTHIER STATE OF WASHINGTON

CH2M HILL

DSGN	C LONGMATE
DR	C HOWELL
CHK	R WHITE
APVD	J. GAUTHIER

NO.	DATE	REVISION	BY	APVD

REUSE OF DOCUMENTS
THIS DOCUMENT, AND THE IDEAS AND DESIGNS INCORPORATED HEREIN, AS AN INSTRUMENT OF PROFESSIONAL SERVICE, IS THE PROPERTY OF CH2M HILL AND IS NOT TO BE USED, IN WHOLE OR IN PART, FOR ANY OTHER PROJECT WITHOUT THE WRITTEN AUTHORIZATION OF CH2M HILL.
©CH2M HILL

BAR IS ONE INCH ON ORIGINAL DRAWING. 0 1"
IF NOT ONE INCH ON THIS SHEET, ADJUST SCALES ACCORDINGLY.

CITY OF BELLINGHAM, WASHINGTON
POST POINT WASTEWATER TREATMENT PLANT UPGRADE

STANDARD DETAILS
ARCHITECTURAL
DOOR AND WINDOW DETAILS

DWG NO. 800-A-7
DATE AUG. 1990
PROJ NO. SEA22452.C1

DATE: 8/26/90 GE BOWER
DRAWN BY: J. KUNTHARA DESIGNED BY: C. LONGMATE
DGN NAME: H:/PROJ2/BELLINGH/BL800A-J.DGN

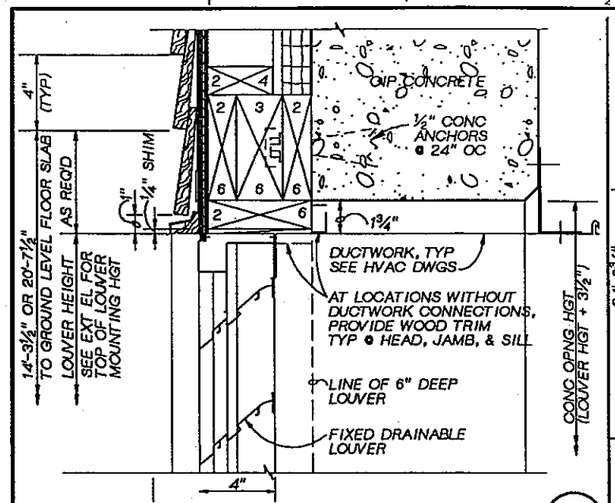

LOUVER HEAD DETAIL (98)
3"=1'-0"

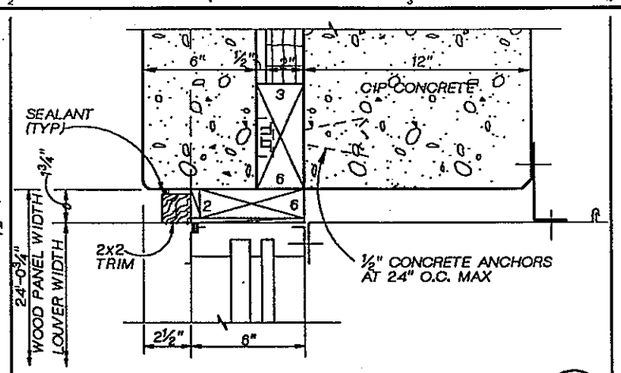

LOUVER JAMB DETAIL (101)
3"=1'-0"

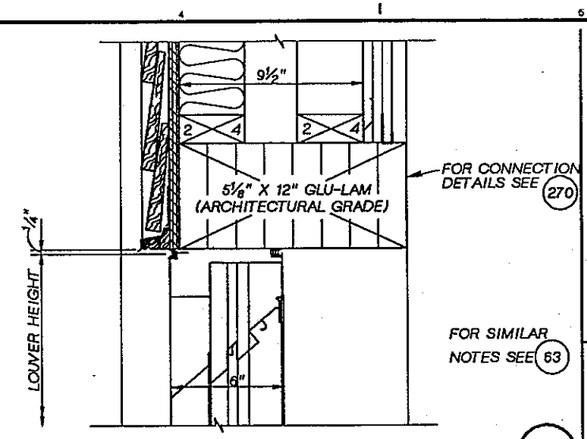

LOUVER HEAD DETAIL (104)
3"=1'-0"

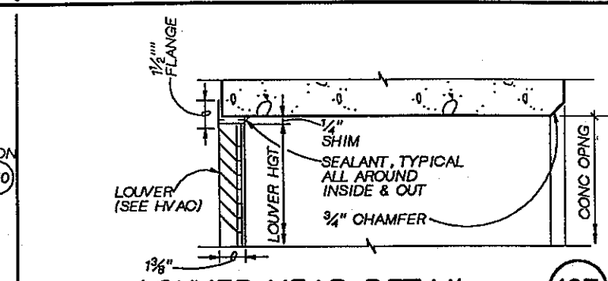

LOUVER HEAD DETAIL (107)
3"=1'-0"

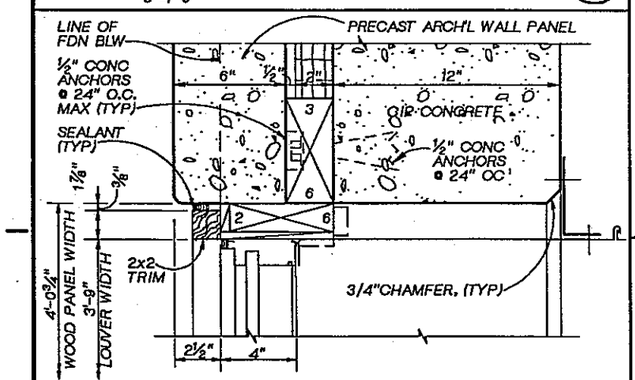

LOUVER JAMB DETAIL (99)
3"=1'-0"

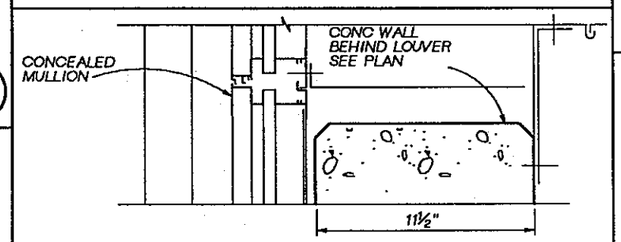

LOUVER MULLION DETAIL (102)
3"=1'-0"

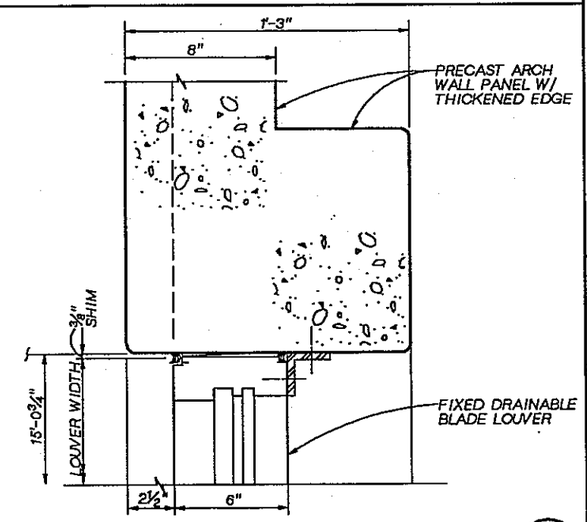

LOUVER JAMB DETAIL (105)
3"=1'-0"

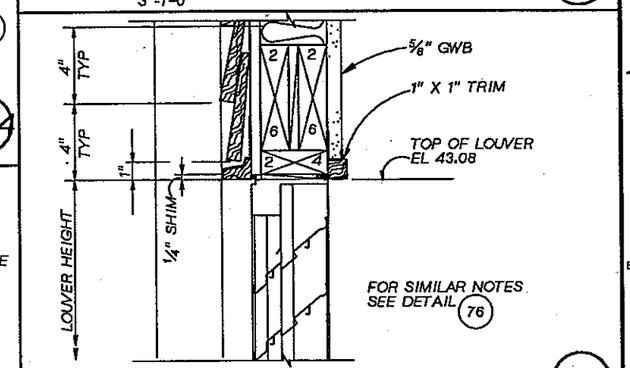

LOUVER HEAD DETAIL (108)
3"=1'-0"

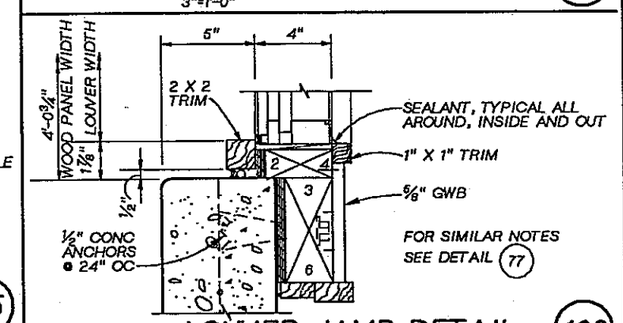

LOUVER JAMB DETAIL (109)
3"=1'-0"

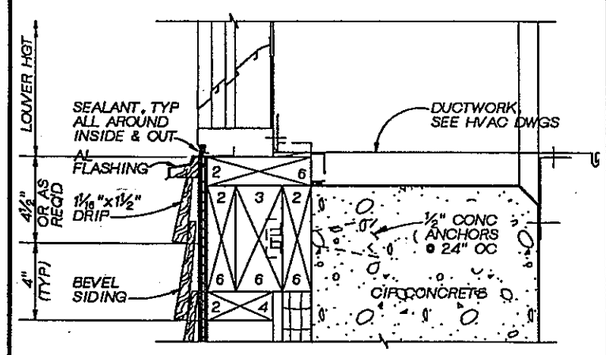

LOUVER SILL DETAIL (100)
3"=1'-0"

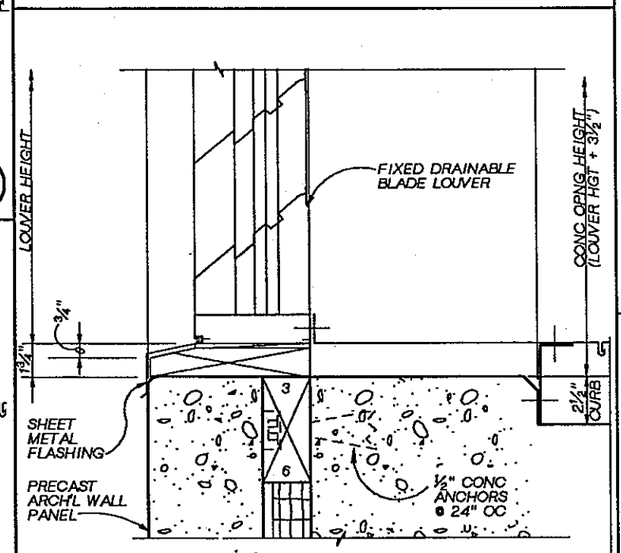

LOUVER SILL DETAIL (103)
3"=1'-0"

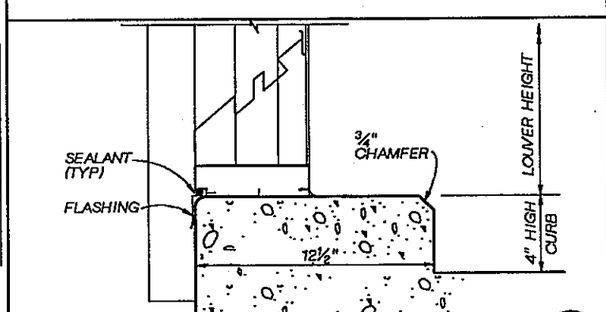

LOUVER SILL DETAIL (106)
3"=1'-0"

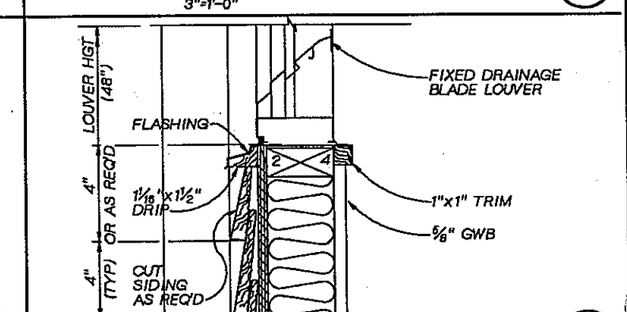

LOUVER SILL DETAIL (110)
3"=1'-0"

REGISTERED ARCHITECT STATE OF WASHINGTON

CH2M HILL

DSGN	C LONGMATE			
DR	J KUNTHARA			
CHK	R WHITE			
APVD	J. GAUTHIER	NO.	DATE	REVISION	BY	APVD

REUSE OF DOCUMENTS
THIS DOCUMENT, AND THE IDEAS AND DESIGNS INCORPORATED HEREIN, AS AN INSTRUMENT OF PROFESSIONAL SERVICE, IS THE PROPERTY OF CH2M HILL AND IS NOT TO BE USED, IN WHOLE OR IN PART, FOR ANY OTHER PROJECT WITHOUT THE WRITTEN AUTHORIZATION OF CH2M HILL.
©CH2M HILL

BAR IS ONE INCH ON ORIGINAL DRAWING.
0 1"
IF NOT ONE INCH ON THIS SHEET, ADJUST SCALES ACCORDINGLY.

CITY OF BELLINGHAM, WASHINGTON
POST POINT WASTEWATER TREATMENT PLANT UPGRADE

STANDARD
ARCHITECTURAL LOUVER DETAILS

DWG NO. 800-A-8
DATE AUG. 1990
PROJ NO. SEA22452.C1

DATE: 08/26/90 GE BOWER
DRAWN BY:J.KUNTHARA DESIGNED BY:C.LONGMATE
DGN NAME: H:/PROJ2/BELLINGH/BL800A-N.DGN

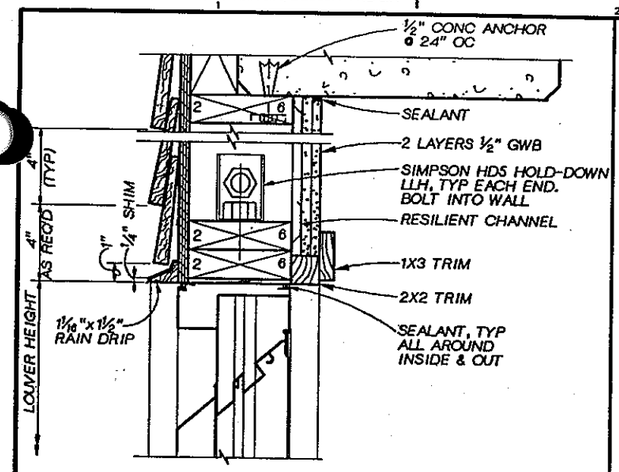

LOUVER HEAD DETAIL
3"=1'-0"
111

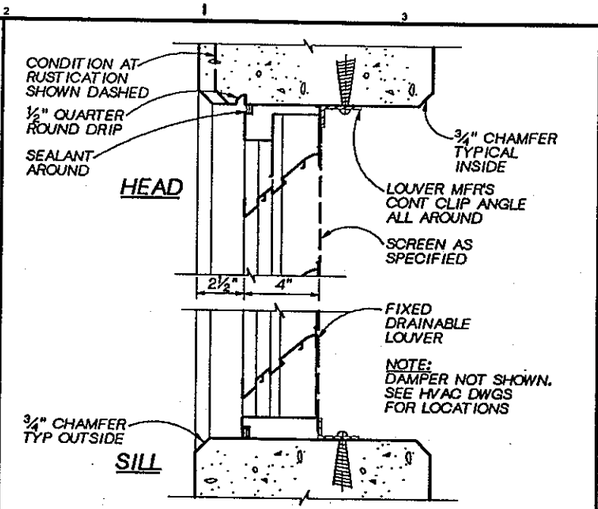

LOUVER DETAIL
3"=1'-0"
114

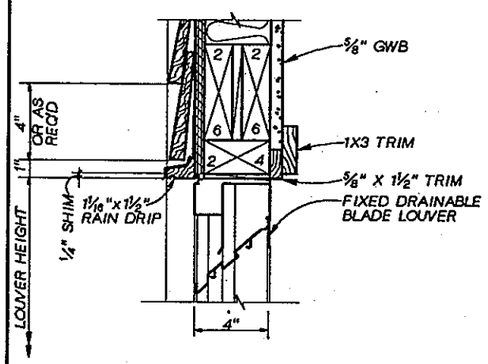

LOUVER HEAD DETAIL
3"=1'-0"
117

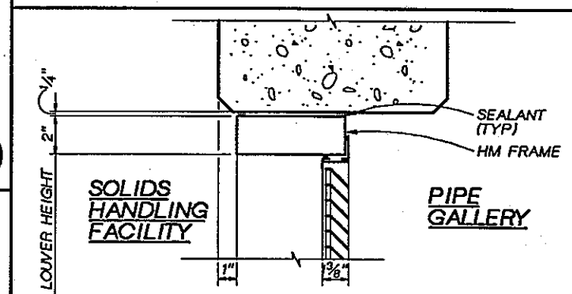

LOUVER HEAD DETAIL
3"=1'-0"
121

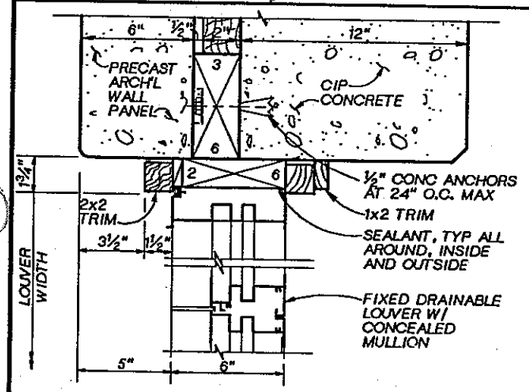

LOUVER JAMB DETAIL
3"=1'-0"
112

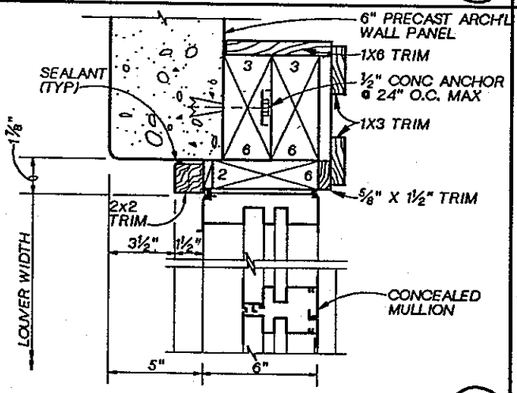

LOUVER JAMB DETAIL
3"=1'-0"
115

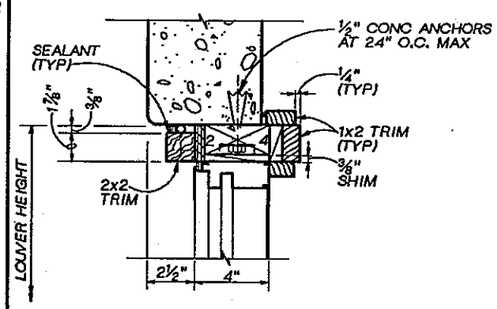

LOUVER JAMB DETAIL
3"=1'-0"
118

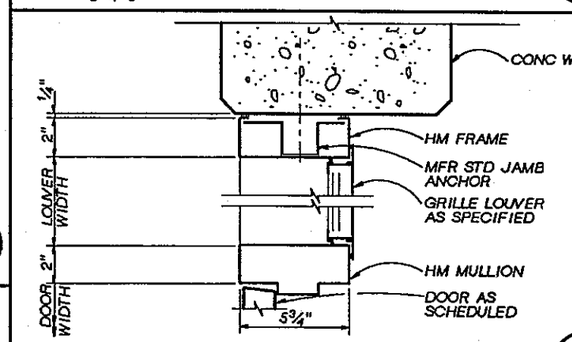

LOUVER JAMB/DOOR JAMB
3"=1'-0"
122

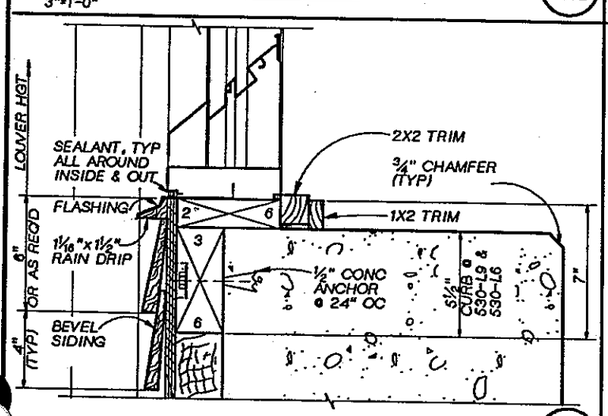

LOUVER SILL DETAIL
3"=1'-0"
113

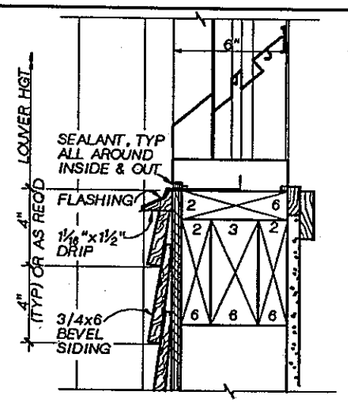

LOUVER SILL DETAIL
3"=1'-0"
116

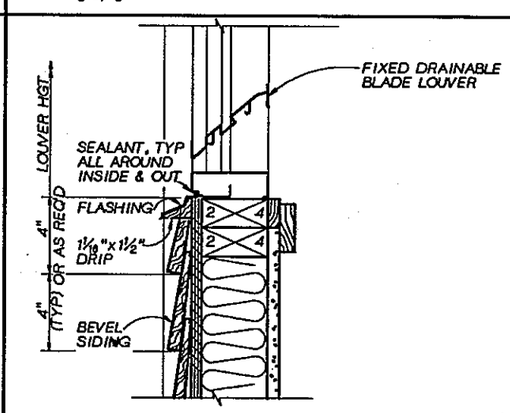

LOUVER SILL DETAIL
3"=1'-0"
140 119

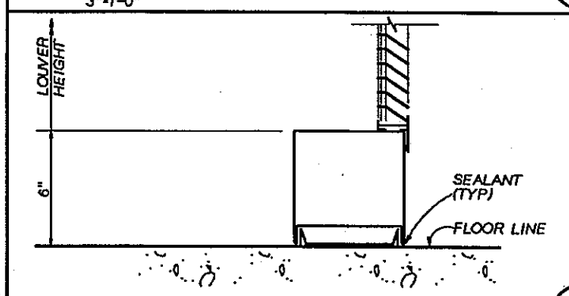

LOUVER SILL DETAIL
3"=1'-0"
123

REGISTERED ARCHITECT
STATE OF WASHINGTON

CH2M HILL

DSGN	C LONGMATE
DR	J KUNTHARA
CHK	R WHITE
APVD	J. GAUTHIER

NO.	DATE	REVISION	BY	APVD

REUSE OF DOCUMENTS
THIS DOCUMENT, AND THE IDEAS AND DESIGNS INCORPORATED HEREIN, AS AN INSTRUMENT OF PROFESSIONAL SERVICE, IS THE PROPERTY OF CH2M HILL AND IS NOT TO BE USED, IN WHOLE OR IN PART, FOR ANY OTHER PROJECT WITHOUT THE WRITTEN AUTHORIZATION OF CH2M HILL.
©CH2M HILL

BAR IS ONE INCH ON ORIGINAL DRAWING.
0 1"
IF NOT ONE INCH ON THIS SHEET, ADJUST SCALES ACCORDINGLY.

CITY OF BELLINGHAM, WASHINGTON
POST POINT WASTEWATER TREATMENT PLANT UPGRADE

STANDARD
ARCHITECTURAL LOUVER DETAILS

DWG NO. 800-A-9
DATE AUG. 1990
PROJ NO. SEA22462.C1

DATE: 8/26/90
DRAWN BY: GE BOWER DESIGNED BY: CR LONGMATE
DGN NAME: H:/PROJ2/BELLINGH/BL800A-P.DGN

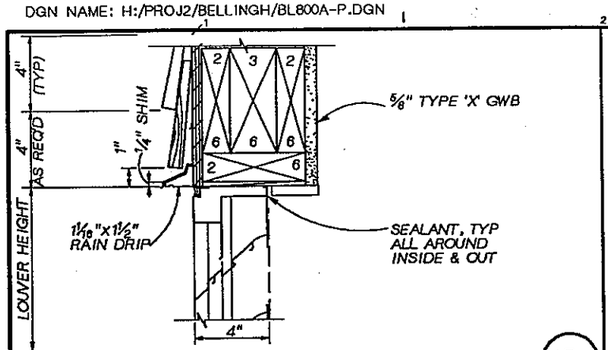

LOUVER HEAD DETAIL (124)
3"=1'-0"

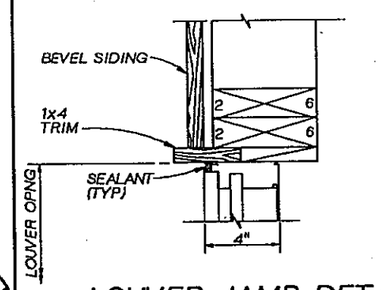

LOUVER JAMB DETAIL (128)
3"=1'-0"

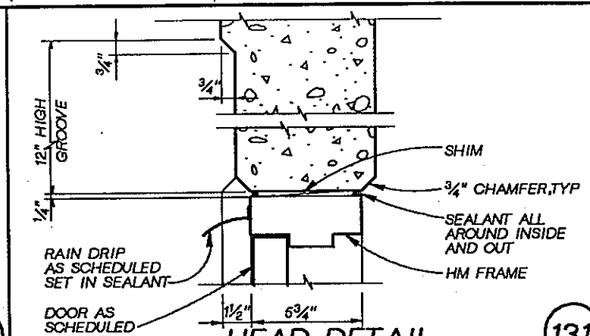

HEAD DETAIL (131)
3"=1'-0"

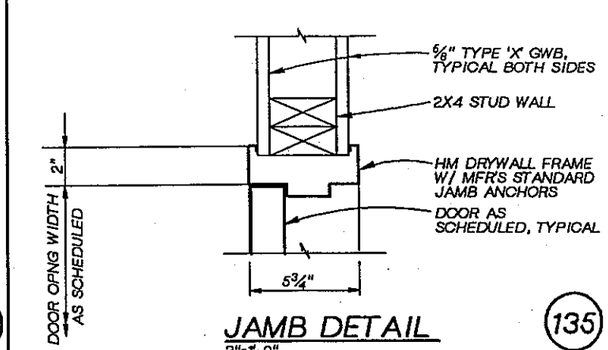

JAMB DETAIL (135)
3"=1'-0"

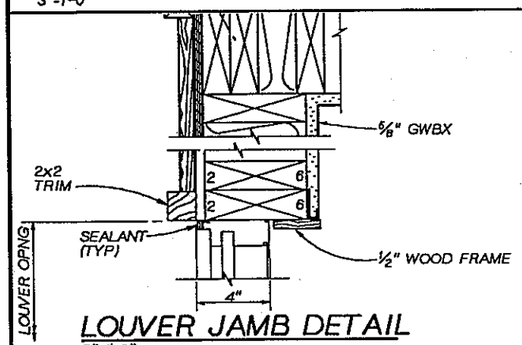

LOUVER JAMB DETAIL (125)
3"=1'-0"

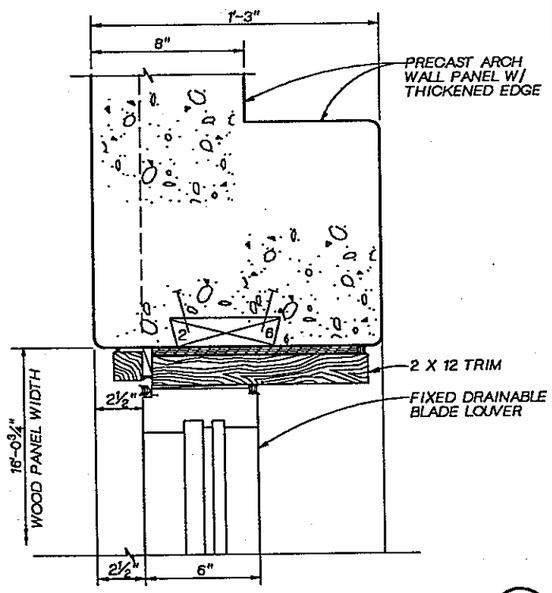

LOUVER JAMB DETAIL (129)
3"=1'-0"

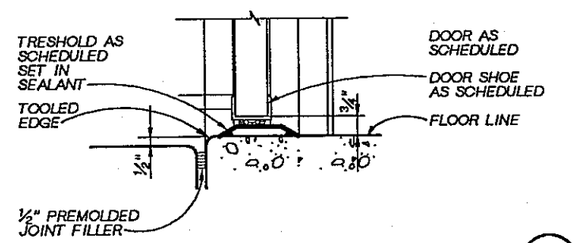

DOOR SILL (132)
3"=1'-0"

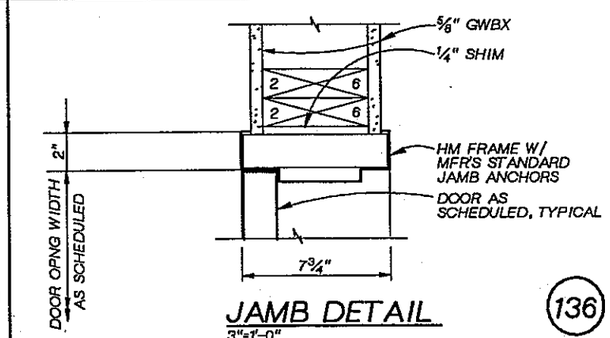

JAMB DETAIL (136)
3"=1'-0"

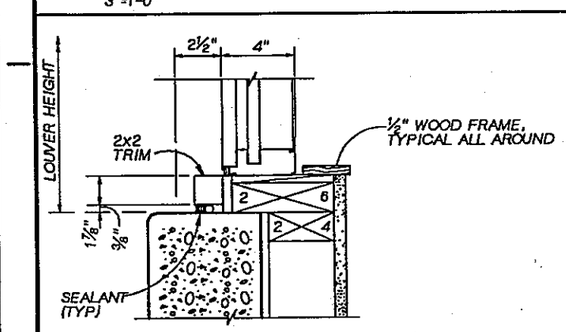

LOUVER JAMB DETAIL (126)
3"=1'-0"

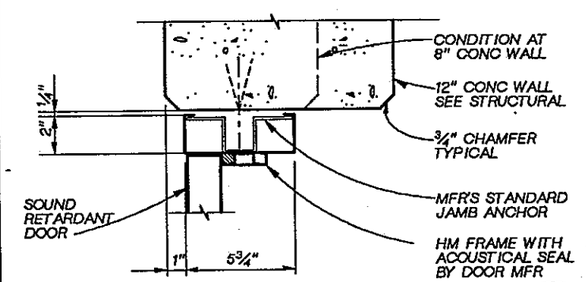

SOUND RETARDANT DOOR JAMB (133)
3"=1'-0"

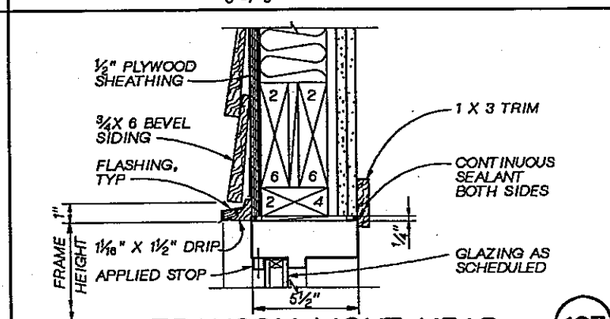

TRANSOM LIGHT HEAD (137)
3"=1'-0"

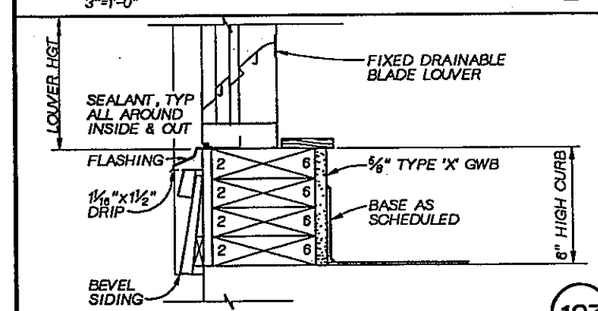

LOUVER SILL DETAIL (127)
3"=1'-0"

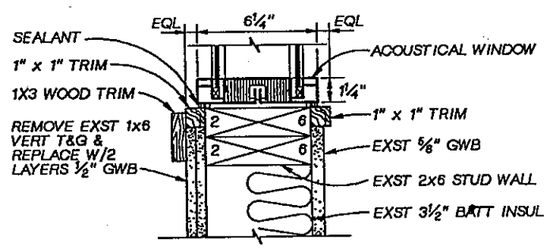

ACOUSTICAL WINDOW DETAIL (130)
3"=1'-0"

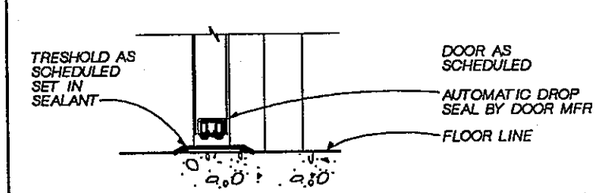

SOUND RETARDANT DOOR SILL (134)
3"=1'-0"

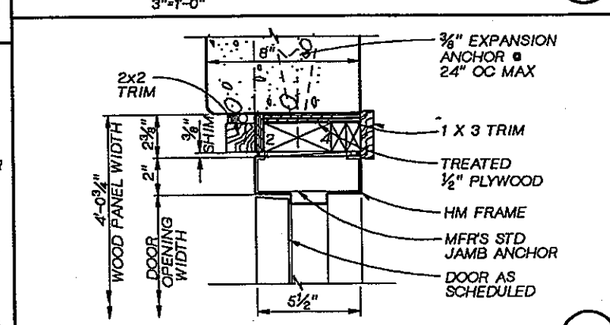

DOOR JAMB (138)
3"=1'-0"

REGISTERED ARCHITECT STATE OF WASHINGTON

CH2M HILL

DSGN	C LONGMATE
DR	G BOWER
CHK	R WHITE
APVD	J. GAUTHIER

NO.	DATE	REVISION	BY	APVD

REUSE OF DOCUMENTS
THIS DOCUMENT, AND THE IDEAS AND DESIGNS INCORPORATED HEREIN, AS AN INSTRUMENT OF PROFESSIONAL SERVICE, IS THE PROPERTY OF CH2M HILL AND IS NOT TO BE USED, IN WHOLE OR IN PART, FOR ANY OTHER PROJECT WITHOUT THE WRITTEN AUTHORIZATION OF CH2M HILL.
©CH2M HILL

BAR IS ONE INCH ON ORIGINAL DRAWING.
0 1"
IF NOT ONE INCH ON THIS SHEET, ADJUST SCALES ACCORDINGLY.

CITY OF BELLINGHAM, WASHINGTON
POST POINT WASTEWATER TREATMENT PLANT UPGRADE

STANDARD DETAILS
ARCHITECTURAL LOUVER DETAILS

DWG NO. 800-A-10
DATE AUG. 1990
PROJ NO. SEA22462.C1

DRAWN BY: GE BOWER DESIGNED BY: GE BOWER
DGN NAME: H:/PROJ2/BELLINGH/BL800A-Q.DGN

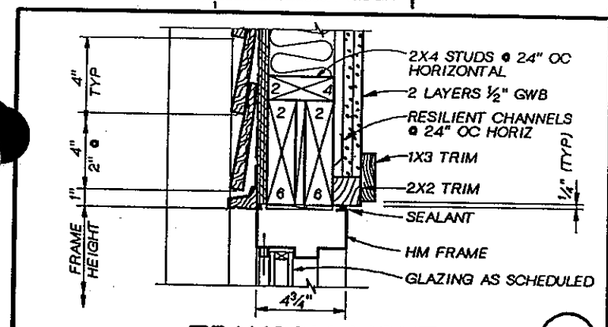

TRANSOM LIGHT (139)
3"=1'-0"

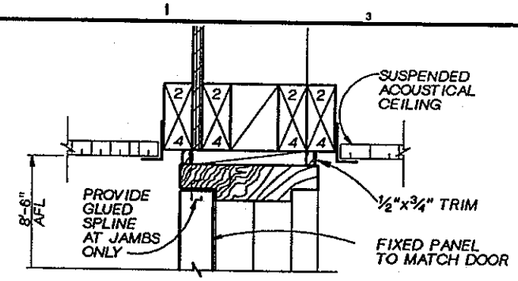

TRANSOM PANEL HEAD (143)
3"=1'-0"

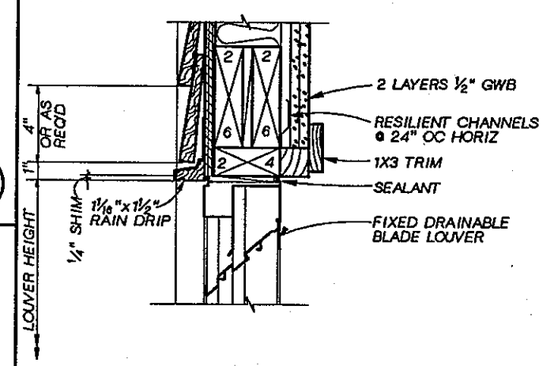

LOUVER HEAD DETAIL (147)
3"=1'-0"

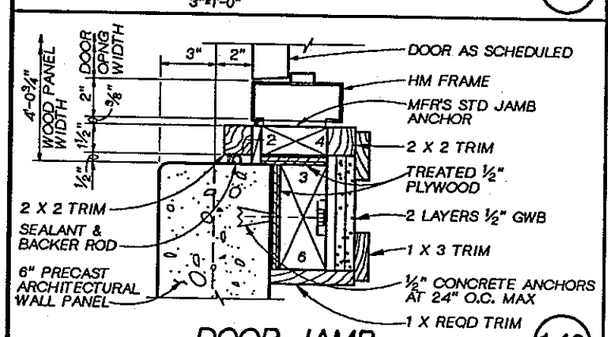

DOOR JAMB (140)
3"=1'-0"

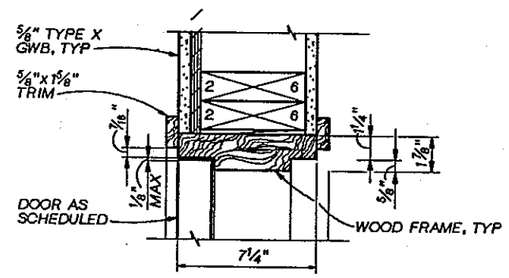

JAMB (144)
3"=1'-0"

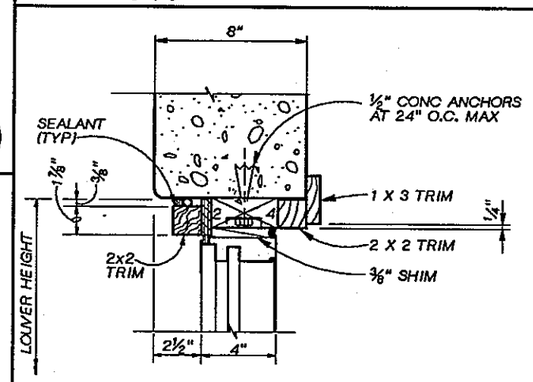

LOUVER JAMB DETAIL (148)
3"=1'-0"

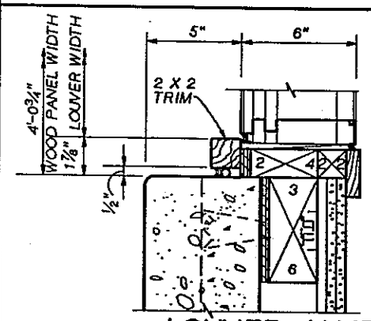

LOUVER JAMB DETAIL (145)
3"=1'-0"

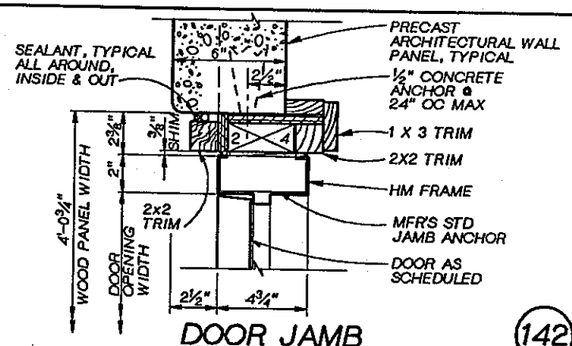

DOOR JAMB (142)
3"=1'-0"

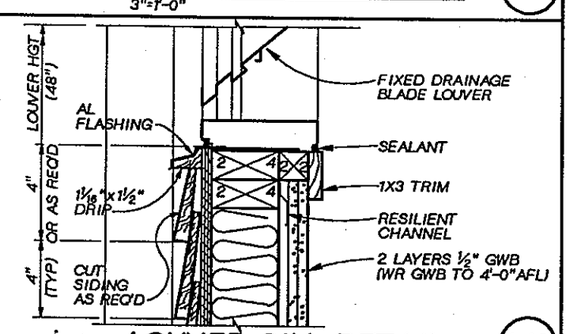

LOUVER SILL DETAIL (146)
3"=1'-0"

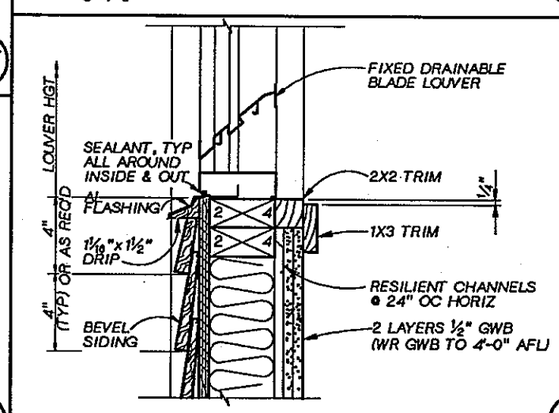

LOUVER SILL DETAIL (149)
3"=1'-0"

REGISTERED ARCHITECT JOHN J. MEGIS STATE OF WASHINGTON

CH2M HILL

DSGN	G BOWER
DR	G BOWER
CHK	R WHITE
APVD	J. GAUTHIER

NO.	DATE	REVISION	BY	APVD

REUSE OF DOCUMENTS
THIS DOCUMENT, AND THE IDEAS AND DESIGNS INCORPORATED HEREIN, AS AN INSTRUMENT OF PROFESSIONAL SERVICE, IS THE PROPERTY OF CH2M HILL AND IS NOT TO BE USED, IN WHOLE OR IN PART, FOR ANY OTHER PROJECT WITHOUT THE WRITTEN AUTHORIZATION OF CH2M HILL.
©CH2M HILL

BAR IS ONE INCH ON ORIGINAL DRAWING. 0 — 1"
IF NOT ONE INCH ON THIS SHEET, ADJUST SCALES ACCORDINGLY.

CITY OF BELLINGHAM, WASHINGTON
POST POINT WASTEWATER TREATMENT PLANT UPGRADE

STANDARD
ARCHITECTURAL
DOOR AND LOUVER DETAILS

DWG NO. 800-A-11
DATE AUG. 1990
PROJ NO. SEA22462.C1

DATE: 08/26/90
DRAWN BY: GE BOWER DESIGNED BY: GE BOWER
DGN NAME: H:/PROJ2/BELLINGH/BL800A-R.DGN

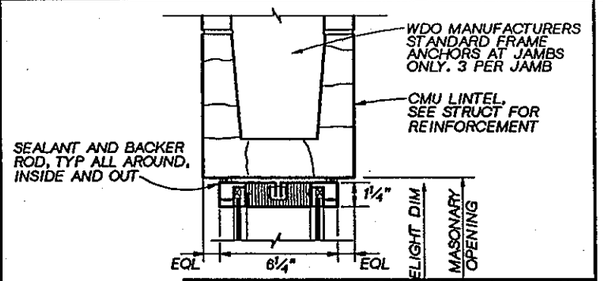

(JAMB & SILL SIM)
ACOUSTICAL WINDOW HEAD (153)
3"=1'-0"

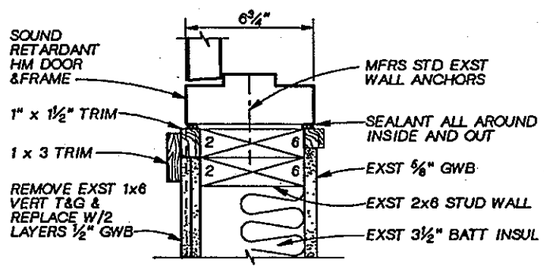

ACOUSTICAL DOOR DETAIL (154)
3"=1'-0"

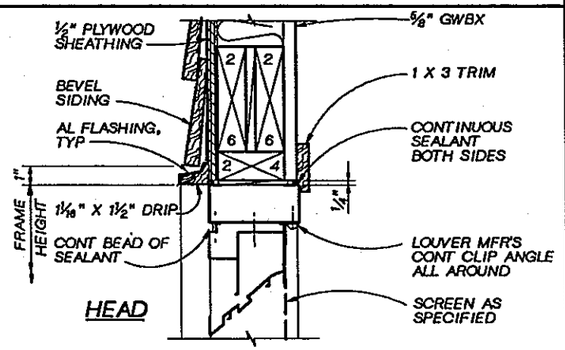

HEAD

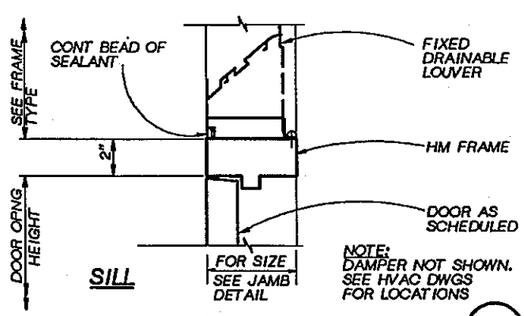

SILL

NOTE: DAMPER NOT SHOWN. SEE HVAC DWGS FOR LOCATIONS

TRANSOM LOUVER DETAILS (155)
3"=1'-0"

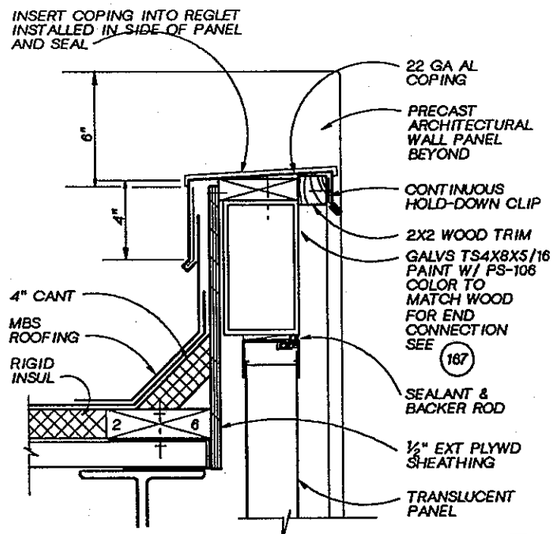

COPING DETAIL (156)
3"=1'-0"

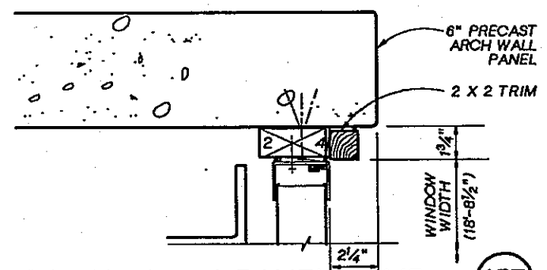

TRANSLUCENT PANEL JAMB (157)
3"=1'-0"

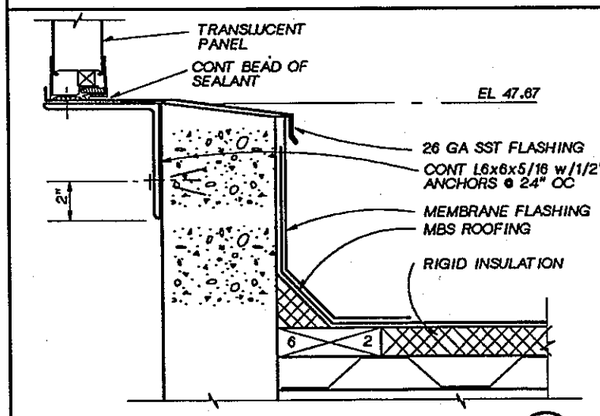

SILL & COPING DETAIL (158)
3"=1'-0"

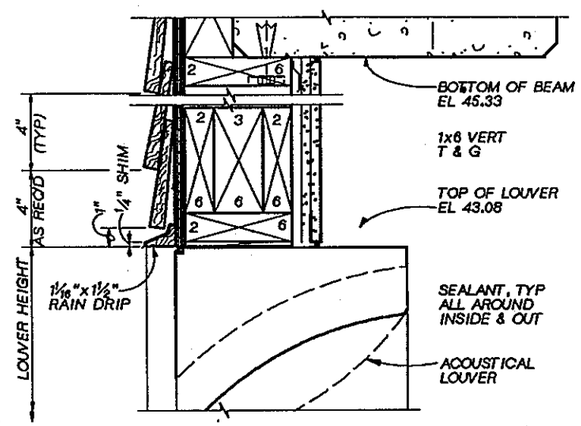

LOUVER HEAD DETAIL (161)
3"=1'-0"

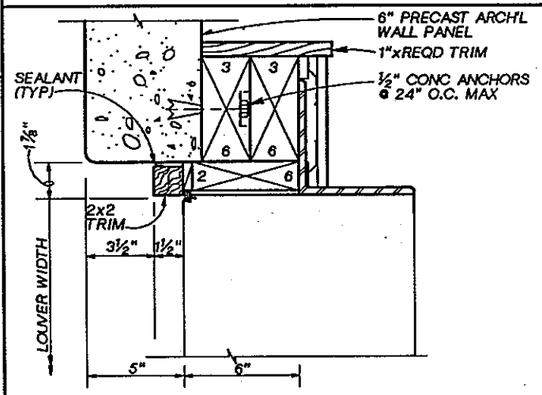

LOUVER JAMB DETAIL (162)
3"=1'-0"

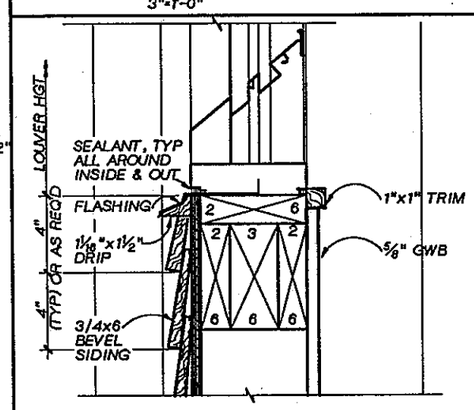

LOUVER SILL DETAIL (163)
3"=1'-0"

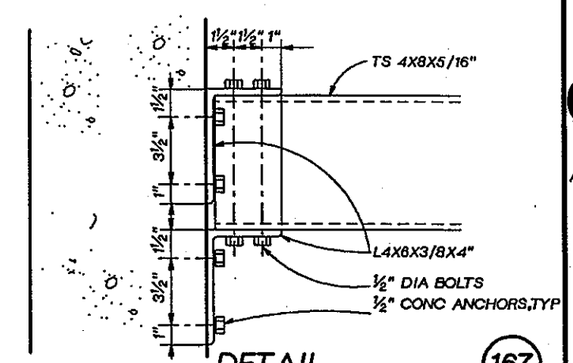

DETAIL (167)
3"=1'-0"

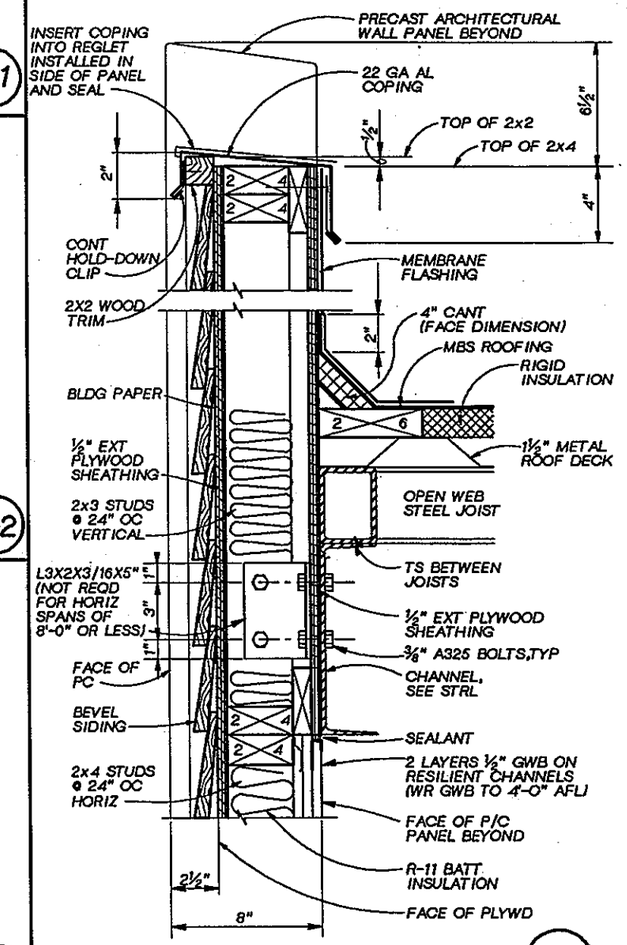

TYP WOOD PANEL @ ROOF (168)
3"=1'-0"

REGISTERED ARCHITECT JOHN J. BURKE STATE OF WASHINGTON

CH2M HILL

DSGN	G BOWER
DR	G BOWER
CHK	R WHITE
APVD	J. GAUTHIER

NO.	DATE	REVISION	BY	APVD

REUSE OF DOCUMENTS
THIS DOCUMENT, AND THE IDEAS AND DESIGNS INCORPORATED HEREIN, AS AN INSTRUMENT OF PROFESSIONAL SERVICE, IS THE PROPERTY OF CH2M HILL AND IS NOT TO BE USED, IN WHOLE OR IN PART, FOR ANY OTHER PROJECT WITHOUT THE WRITTEN AUTHORIZATION OF CH2M HILL.
©CH2M HILL

BAR IS ONE INCH ON ORIGINAL DRAWING.
0 1"
IF NOT ONE INCH ON THIS SHEET, ADJUST SCALES ACCORDINGLY.

CITY OF BELLINGHAM, WASHINGTON
POST POINT WASTEWATER TREATMENT PLANT UPGRADE

STANDARD
ARCHITECTURAL
DOOR, WINDOW AND LOUVER DETAILS

DWG NO. 800-A-12
DATE AUG. 1990
PROJ NO. SEA22462.C1

DATE: 8/28/90
DRAWN BY: GH BURLEY DESIGNED BY:
DGN NAME: H:/PROJ2/BELLINGH/BL800A-D.DGN

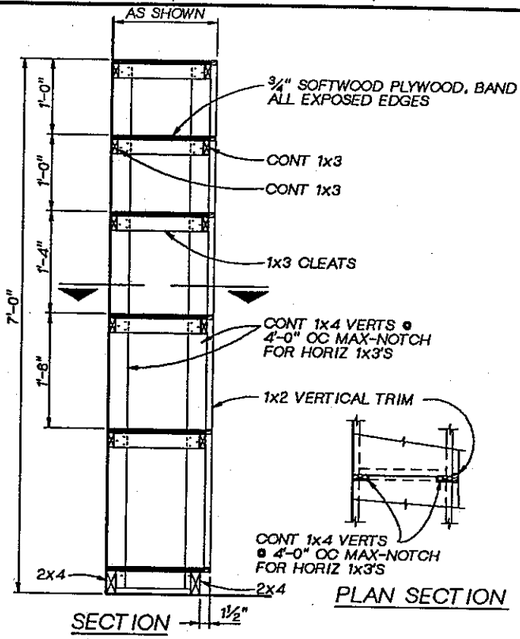

STORAGE SHELVES (173)
1"=1'-0"

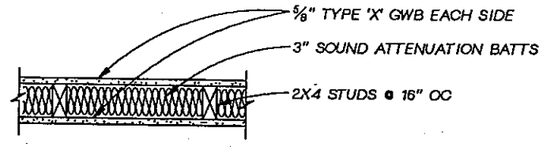

PARTITION TYPE (175)
1 1/2" = 1'-0"

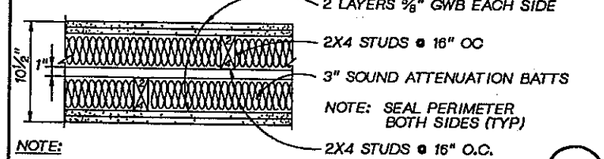

NOTE: EXTEND WALL FROM FLOOR TO ROOF STRUCTURE ABOVE.

PARTITION TYPE (176)
1 1/2" = 1'-0"

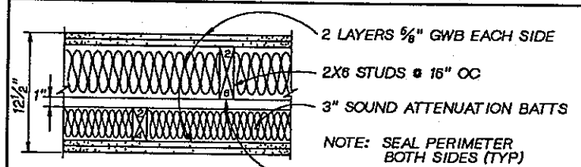

NOTE: EXTEND WALL FROM FLOOR TO ROOF STRUCTURE ABOVE.

PARTITION TYPE (177)
1 1/2" = 1'-0"

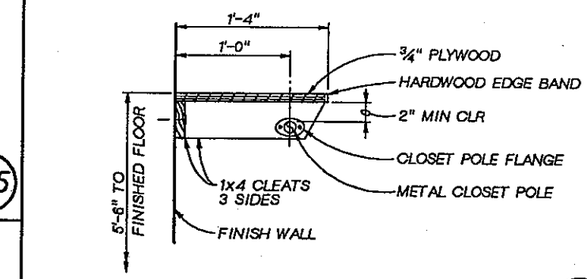

CLOSET SHELF SECTION (181)
1 1/2" = 1'-0"

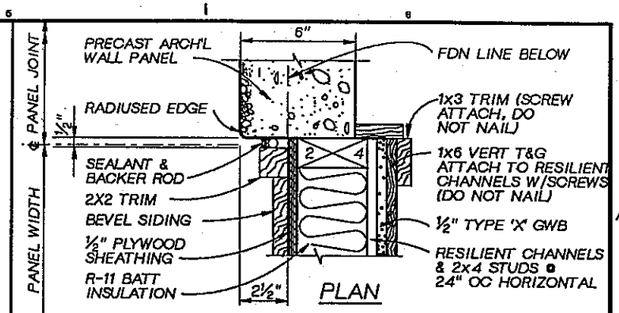

DETAIL (184)
3"=1'-0"

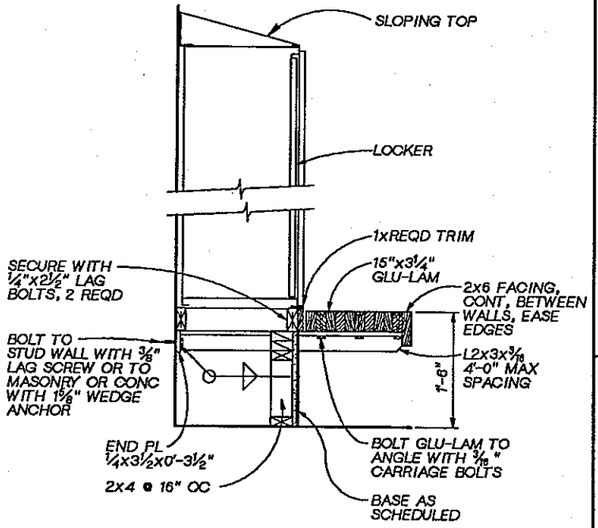

LOCKER AND BENCH SECTION (182)
1"=1'-0"

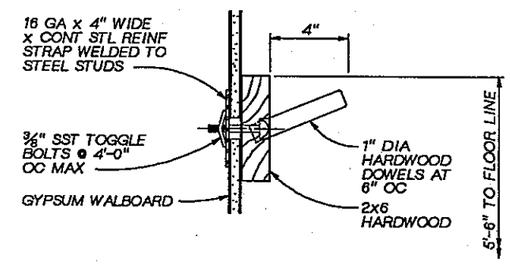

COAT RACK DETAIL (185)
3"=1'-0"

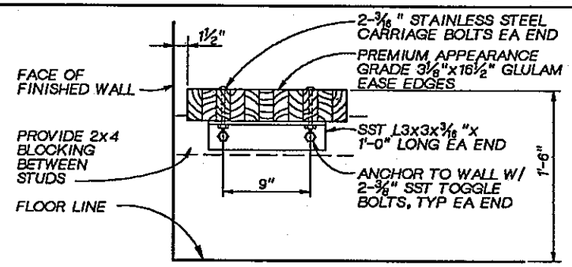

SHOWER BENCH DETAIL (186)
1 1/2"=1'-0"

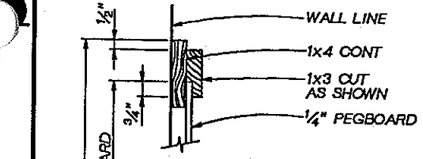

PEGBOARD DETAIL

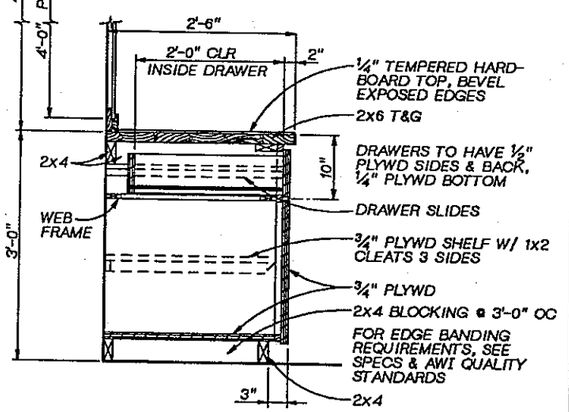

WORKBENCH SECTION (174)
1"=1'-0"

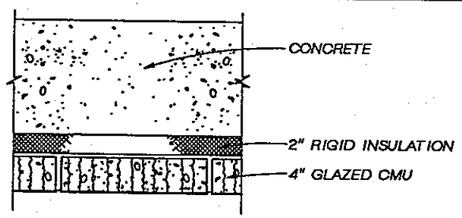

(178)

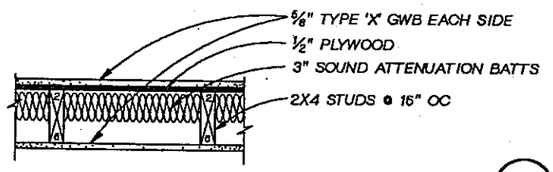

PARTITION TYPE (179)
1 1/2" = 1'-0"

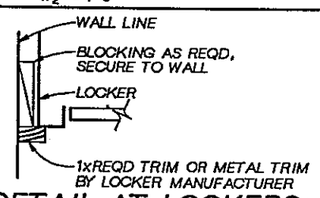

DETAIL AT LOCKERS (180)
NTS

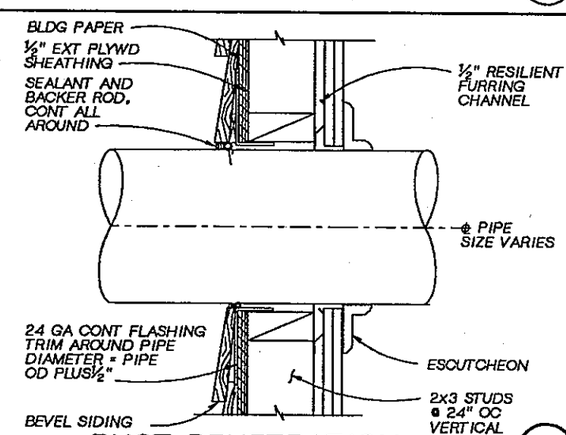

DUCT PENETRATION (183)
3" = 1'-0"

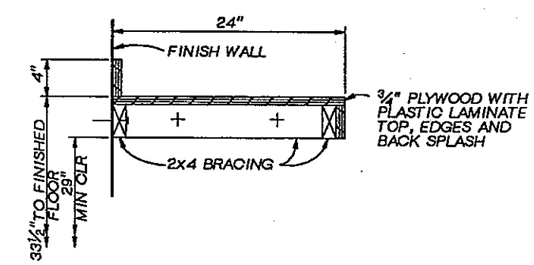

COUNTER SECTION (187)
1 1/2"=1'-0"

REGISTERED ARCHITECT JOHN L. PROSS STATE OF WASHINGTON

CH2M HILL

DSGN	G BOWER		
DR	G BOWER		
CHK	R WHITE		
APVD	J. GAUTHIER		

NO.	DATE	REVISION	BY	APVD

REUSE OF DOCUMENTS
THIS DOCUMENT, AND THE IDEAS AND DESIGNS INCORPORATED HEREIN, AS AN INSTRUMENT OF PROFESSIONAL SERVICE, IS THE PROPERTY OF CH2M HILL AND IS NOT TO BE USED, IN WHOLE OR IN PART, FOR ANY OTHER PROJECT WITHOUT THE WRITTEN AUTHORIZATION OF CH2M HILL.
©CH2M HILL

BAR IS ONE INCH ON ORIGINAL DRAWING. 0 1" IF NOT ONE INCH ON THIS SHEET, ADJUST SCALES ACCORDINGLY.

CITY OF BELLINGHAM, WASHINGTON
POST POINT WASTEWATER TREATMENT PLANT UPGRADE

STANDARD DETAILS
ARCHITECTURAL INTERIOR DETAILS

DWG NO. 800-A-13
DATE AUG. 1990
PROJ NO. SEA22462.C1

DATE: 8/27/90
DRAWN BY: R. CRADDOCK/CSH DESIGNED BY:
DGN NAME: H:/PROJ2/BELLINGH/BL800A-E.DGN

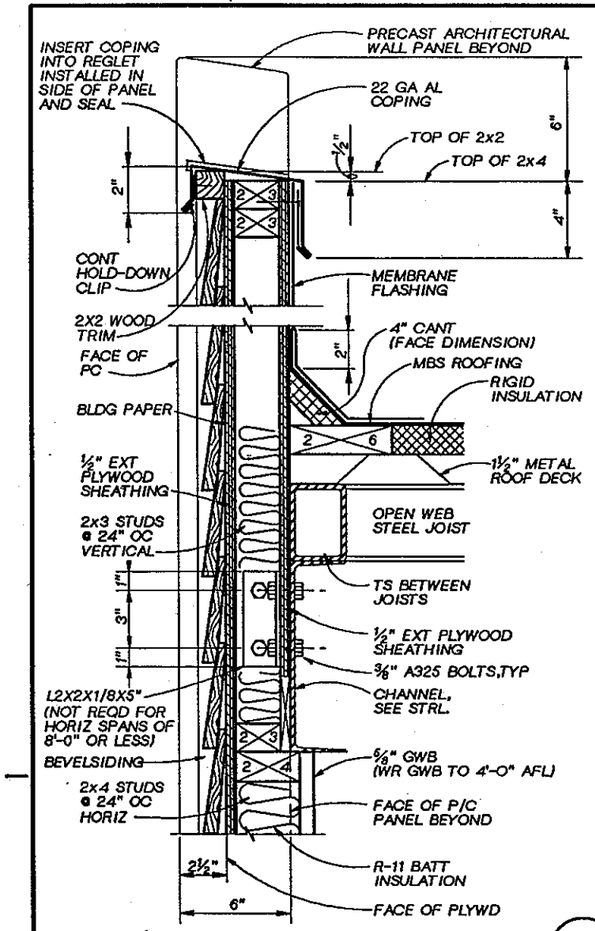

TYP WOOD PANEL @ ROOF (188)

3"=1'-0"

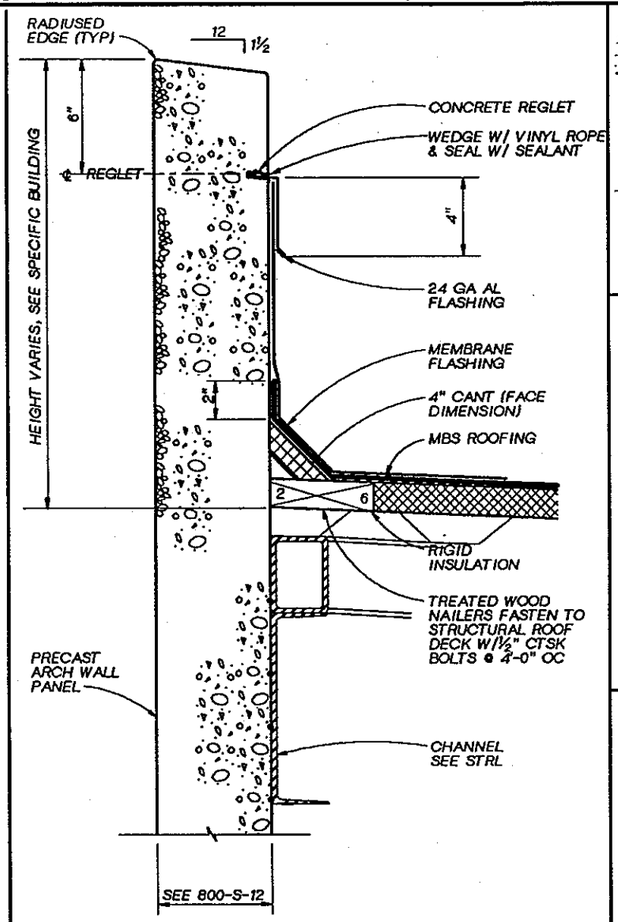

TYP WALL SECTION (191)

3"=1'-0"

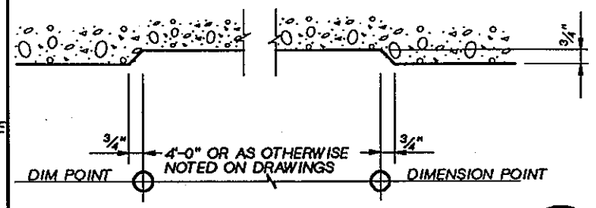

VERTICAL GROOVE (193)

3"=1'-0"

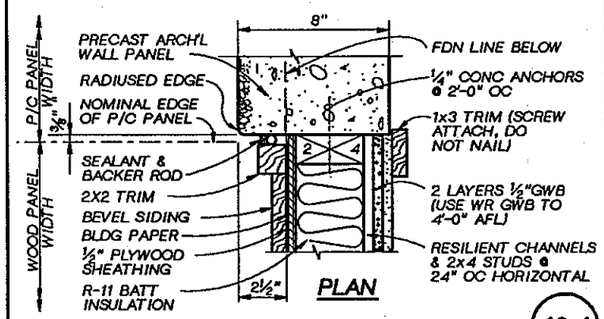

TYP JAMB @ ACST WOOD PANEL (194)

3"=1'-0"

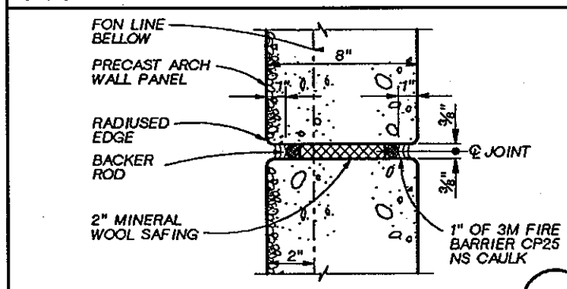

TYP VERT JOINT @ 4 HR WALL (195)

3"= 1'-0"

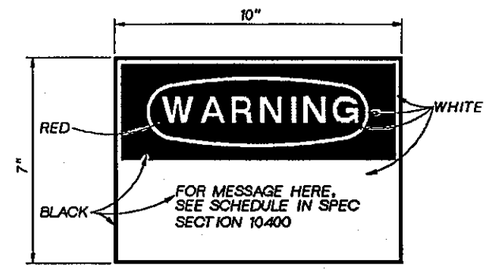

(197)

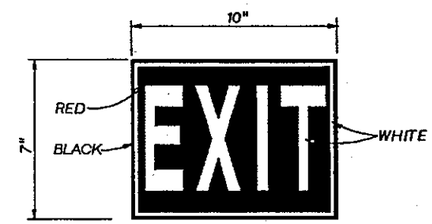

(198)

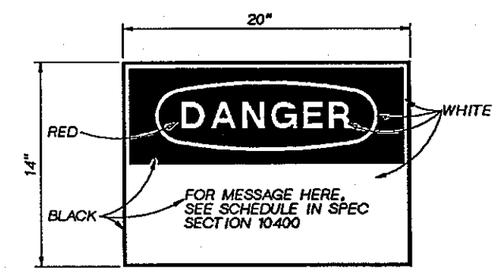

(199)

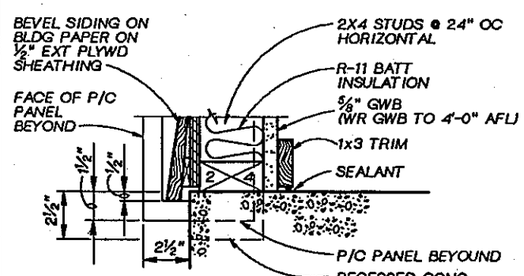

TYP WOOD PANEL @ FLOOR (189)

3"=1'-0"

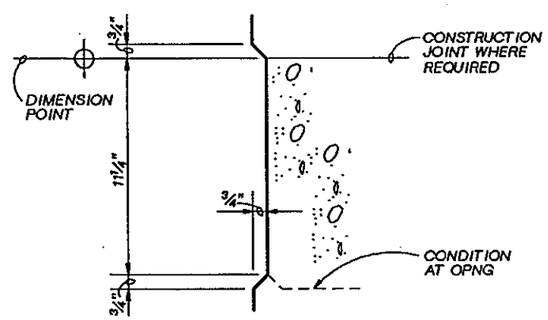

HORIZONTAL GROOVE (192)

3"=1'-0"

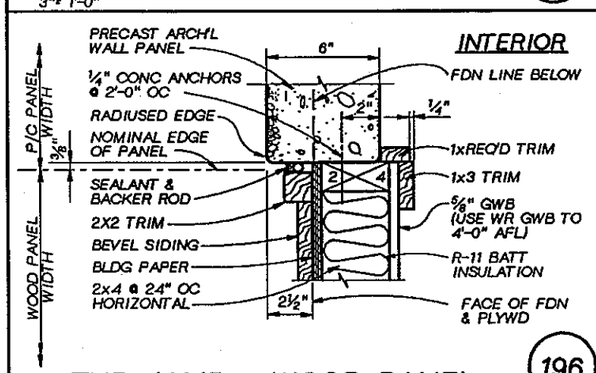

TYP JAMB @ WOOD PANEL (196)

3"=1'-0"

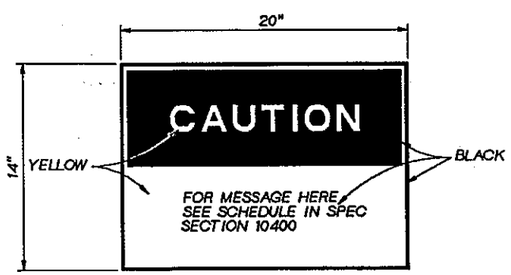

(200)

REGISTERED ARCHITECT
STATE OF WASHINGTON

CH2M HILL

DSGN	G BOWER				
DR	G BOWER				
CHK	R WHITE				
APVD	J. GAUTHIER	NO.	DATE	REVISION	BY / APVD

REUSE OF DOCUMENTS
THIS DOCUMENT, AND THE IDEAS AND DESIGNS INCORPORATED HEREIN, AS AN INSTRUMENT OF PROFESSIONAL SERVICE, IS THE PROPERTY OF CH2M HILL AND IS NOT TO BE USED, IN WHOLE OR IN PART, FOR ANY OTHER PROJECT WITHOUT THE WRITTEN AUTHORIZATION OF CH2M HILL.
©CH2M HILL

BAR IS ONE INCH ON ORIGINAL DRAWING.
0 1"
IF NOT ONE INCH ON THIS SHEET, ADJUST SCALES ACCORDINGLY.

CITY OF BELLINGHAM, WASHINGTON
POST POINT WASTEWATER TREATMENT PLANT UPGRADE

STANDARD DETAILS
ARCHITECTURAL MISCELLANEOUS DETAILS

DWG NO. 800-A-14
DATE AUG. 1990
PROJ NO. SEA22462.C1

DGN NAME: H:/PROJ2/BELLINGH/BL800S-A.DGN

GENERAL STRUCTURAL NOTES

REINFORCING DETAILS

1. THE MINIMUM REINFORCING FOR ALL CONCRETE WALLS AND SLABS SHALL BE AS FOLLOWS:

WALL THICKNESS	REINF EACH WAY	LOCATION
6"	#4@12"	CENTERED
8"	#5@12"	CENTERED
10"	#4@12"	EACH FACE
12"	#5@12"	EACH FACE

PROVIDE LARGER SIZES AND MORE REINFORCING IN ALL SECTIONS OF CONCRETE WHERE REQUIRED BY THE DETAILS ON THE DRAWINGS OR BY THE SPECIFICATIONS.

2. CLEARANCE FOR REINFORCEMENT BARS, UNLESS SHOWN OTHERWISE, SHALL BE:

•WHEN PLACED ON GROUND:——3" •DRY CONDITION:
•EXPOSED CODITION, WALLS AND SLAB: SLABS ——— ¾"
#5 BAR OR SMALLER ——— 1½" BEAMS ——— 1½"
#6 BAR OR LARGER ——— 2" COLUMNS ——— 1½"
BEAM STIRRUPS & COL TIES —— 2" WALLS ——— ¾"

EXPOSED CONDITIONS: ALL SURFACES IN CONTACTWITH EARTH OR WATER; IN CONTACT WITH OR OVER SEWAGE; EXPOSED TO WEATHER, CONDENSATION, CHEMICALS, OR WASHDOWN; OR AS NOTED.

3. ALL BENDS, UNLESS OTHERWISE SHOWN, SHALL BE A 90 DEGREE STANDARD HOOK AS DEFINED IN LATEST EDITION OF ACI 318.
4. ALL WALL CORNER AND WALL INTERSECTION REINFORCEMENT BARS SHALL BE CONTINUOUS AROUND CORNERS AND THROUGH COLUMNS OR PILASTERS. REINFORCEMENT SHALL BE EXTENDED INTO CONNECTING WALLS AND LAPPED ON THE OPPOSITE FACE OF THE CONNECTING WALLS, AS INDICATED ELSEWHERE ON THIS SHEET.
5. VERTICAL WALL BARS SHALL BE LAPPED WITH DOWELS FROM BASE SLABS AND EXTENDED INTO THE TOP FACE OF ROOF SLABS AND LAPPED WITH TOP SLAB REINFORCEMENT. PROVIDE A MINIMUM OF TWO FULL HEIGHT VERTICAL BARS WITH MATCHING DOWELS AT WALL ENDS, CORNERS AND INTERSECTIONS WITH SIZE TO MATCH TYPICAL VERTICAL REINFORCING STEEL SHOWN OR REQUIRED BY NOTES ABOVE.
6. UNLESS INDICATED OTHERWISE, CONTRACTOR MAY SPLICE CONTINUOUS SLAB OR LONGITUDINAL BEAM BARS AT LOCATIONS OF HIS CHOOSING, EXCEPT THAT TOP BAR SPLICES SHALL BE LOCATED AT MIDSPAN AND BOTTOM BAR SPLICES SHALL BE LOCATED AT SUPPORTS. ALL REINFORCEMENT BENDS AND LAPS, UNLESS OTHERWISE NOTED, SHALL SATISFY THE FOLLOWING MINIMUM REQUIREMENT:

DETAIL OF REINFORCEMENT - LAP LENGTHS

BAR SIZE		#6 OR SMALLER	#7	#8	#9	#10	#11
CONC DESIGN STRENGTH		3000 PSI					
GR 40	TOP BAR*	34 DIA, MIN 1'-6"	3'-0"	3'-9"	4'-8"	6'-0"	7'-3"
	OTHER BAR	24 DIA, MIN 1'-0"	2'-0"	2'-8"	3'-4"	4'-4"	5'-2"
GR 60	TOP BAR*	49 DIA, MIN 2'-0"	4'-2"	5'-6"	7'-0"	8'-8"	10'-10"
	OTHER BAR	35 DIA, MIN 1'-6"	3'-0"	4'-0"	5'-0"	6'-6"	7'-9"
CONC DESIGN STRENGTH		3500 PSI					
GR 40	TOP BAR*	33 DIA, MIN 1'-6"	2'-9"	3'-6"	4'-4"	5'-6"	6'-8"
	OTHER BAR	24 DIA, MIN 1'-0"	1'-10"	2'-6"	3'-2"	4'-0"	4'-10"
GR 60	TOP BAR*	47 DIA, MIN 2'-0"	3'-10"	5'-2"	6'-6"	8'-2"	10'-0"
	OTHER BAR	34 DIA, MIN 1'-6"	2'-10"	3'-9"	4'-8"	6'-0"	7'-3"
CONC DESIGN STRENGTH		4000 PSI					
GR 40	TOP BAR*	32 DIA, MIN 1'-6"	2'-6"	3'-3"	4'-0"	5'-0"	6'-4"
	OTHER BAR	22 DIA, MIN 1'-0"	1'-9"	2'-4"	3'-0"	3'-8"	4'-5"
GR 60	TOP BAR*	45 DIA, MIN 2'-0"	3'-8"	4'-9"	6'-0"	7'-8"	9'-6"
	OTHER BAR	32 DIA, MIN 1'-6"	2'-8"	3'-6"	4'-4"	5'-6"	6'-9"

*TOP BARS SHALL BE DEFINED AS ANY HORIZONTAL BARS PLACED SUCH THAT MORE THAN 12" OF FRESH CONCRETE IS CAST IN THE MEMBER BELOW THE BAR, IN ANY SINGLE POUR. HORIZONTAL WALL BARS ARE CONSIDERED TOP BARS.

7. CONTINUOUS GALVANIZED STEEL WATERSTOP AS SPECIFIED, SHALL BE INSTALLED IN ALL CONSTRUCTION JOINTS IN WALLS OF WATER HOLDING BASINS AND CHANNELS, EXCEPT WHERE INDICATED OTHERWISE.
8. PROVIDE AND INSTALL GRANULAR FILL UNDER FACILITIES AS SPECIFIED UNDER ALL SLABS AND FOOTINGS TO UNDISTURBED EARTH WITH MINIMUM THICKNESS, EQUAL TO 6", UNLESS OTHERWISE NOTED.
9. INCREASE LAP LENGTHS SHOWN ABOVE BY 25% WHERE BARS ARE SPACED CLOSER THAN 6" O.C. OR LESS THAN 3" FROM FACE OF MEMBER TO EDGE BAR MEASURED IN DIRECTION OF SPACING.

201

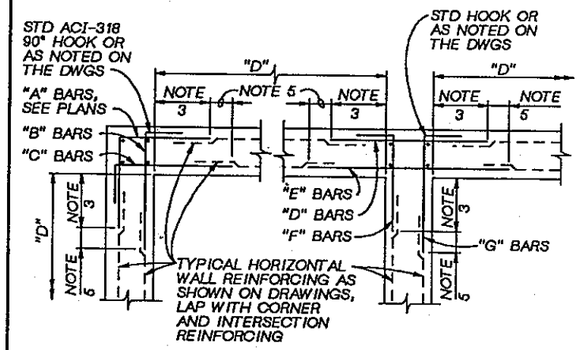

TYPICAL DOUBLE MAT CORNER AND INTERSECTION REINFORCING

NTS (SEE PLANS FOR SIZE AND SPACING)

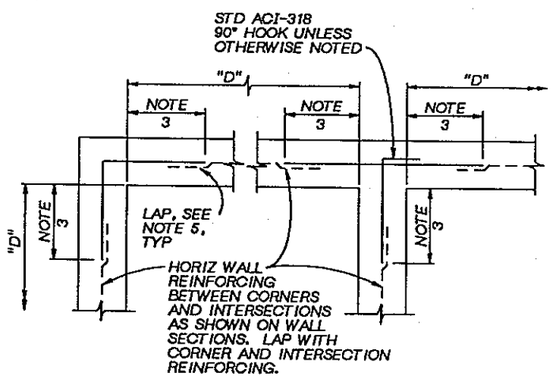

TYPICAL SINGLE MAT CORNER AND INTERSECTION REINFORCING

NTS 202

GENERAL STRUCTURAL NOTES

CORNER AND INTERSECTION REINFORCING DETAILS

1. TYPICAL HORIZONTAL WALL CORNER AND INTERSECTION REINFORCING LAYOUT IS SHOWN TO AVOID CONGESTION AND PERMIT PROPER PLACEMENT. FOR SIZE AND SPACING SEE PLANS. ALL HORIZONTAL REINFORCING AT CORNERS AND INTERSECTIONS SHALL BE FABRICATED AND INSTALLED WITH SPLICES LOCATED WHERE SHOWN REGARDLESS OF BAR SIZE AND SPACING.
2. WHERE THE CORNER OR INTERSECTION REINFORCING SIZE AND SPACING IS NOT SHOWN, NOTED OR TABULATED ON THE PLANS, THE SIZE AND SPACING SHALL BE THE SAME AS THE WALL HORIZONTAL REINFORCING SHOWN ON THE WALL SECTIONS OR AS NOTED FOR THE REINFORCING BETWEEN THE CORNERS OR INTERSECTIONS.
3. EXCEPT WHERE OTHERWISE SHOWN ON THE DRAWINGS, THE LENGTH INDICATED AS 'NOTE 3' SHALL BE THE LESSER OF D/4, 10 FEET, OR 1.0 TIMES THE HEIGHT OF THE WALL, EXCEPT THAT IN NO CASE SHALL IT BE LESS THAN 2.0 FEET.
4. D = LENGTH OF WALL PARALLEL TO THE BAR LENGTH IN QUESTION.
5. EXCEPT WHERE OTHERWISE SHOWN ON THE DRAWINGS, THE LENGTH INDICATED AS 'NOTE 5' SHALL BE EQUAL TO ONE "LAP LENGTH" AS REQUIRED BY THE GENERAL STRUCTURAL NOTES. USE THE LAP LENGTH AS REQUIRED FOR THE SMALLER OF THE TWO REINFORCING BARS BEING SPLICED.
6. UNLESS OTHERWISE NOTED, "B" AND "C" BARS ARE THE SAME SIZE AND SPACING AND, "F" AND "G" BARS ARE THE SAME SIZE AND SPACING.

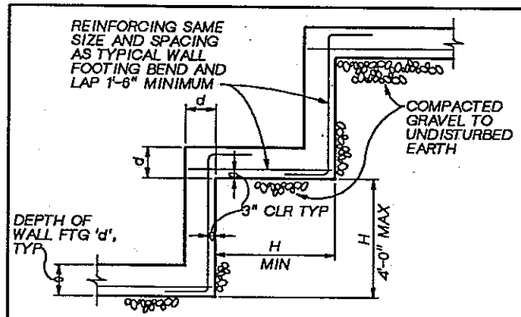

STEPPED FOOTING

NTS 203

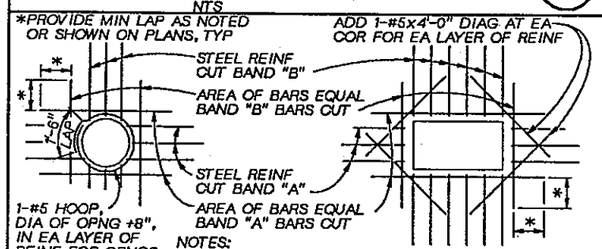

NOTES:
1. TYPICAL FOR ALL OPENINGS IN CONCRETE WALLS AND SLABS UNLESS INDICATED OTHERWISE ON PLANS.
2. DO NOT WELD REINFORCEMENT TO PIPE SLEEVES AND INSERTS.

OPENING REINFORCING

NTS 204

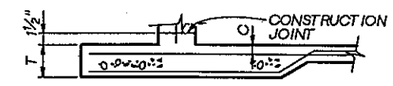

TYPICAL BASE

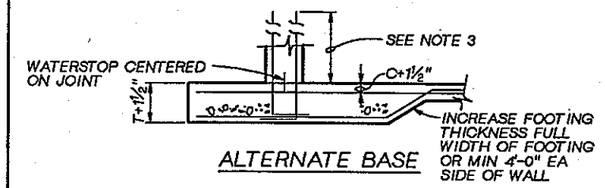

ALTERNATE BASE

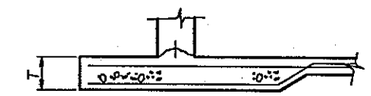

UNACCEPTABLE BASE

NOTES:
1. C-MIN CLR FOR REINF BARS, SEE GENERAL STRUCTURAL NOTES.
2. T-FOOTING THICKNESS AS DETAILED.
3. WHEN USING ALTERNATE BASE INCREASE DOWEL BARS TO PROVIDE SAME LAP LENGTH AS TYPICAL BASE.

WALL BASE CONSTRUCTION JOINT

NTS 205

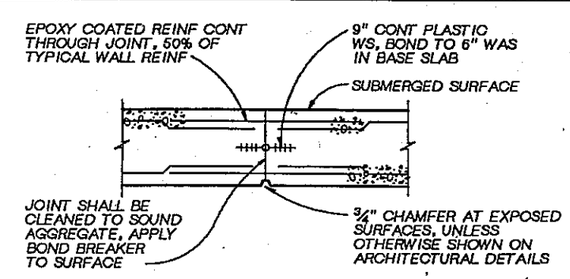

VERTICAL CONTROL JOINT

NTS 206

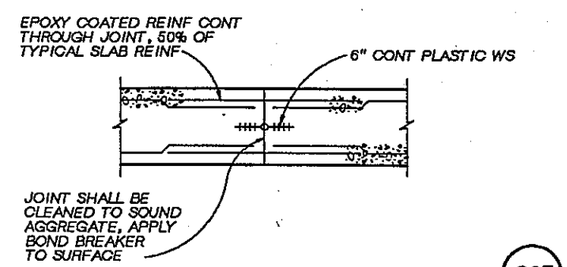

SLAB CONTROL JOINT

NTS 207

REUSE OF DOCUMENTS
THIS DOCUMENT, AND THE IDEAS AND DESIGNS INCORPORATED HEREIN, AS AN INSTRUMENT OF PROFESSIONAL SERVICE, IS THE PROPERTY OF CH2M HILL AND IS NOT TO BE USED, IN WHOLE OR IN PART, FOR ANY OTHER PROJECT WITHOUT THE WRITTEN AUTHORIZATION OF CH2M HILL.
©CH2M HILL

DSGN L. KORBUS
DR B. LAZARO
CHK W. BENNETT
APVD J. GAUTHIER

NO.	DATE	REVISION	BY	APVD

BAR IS ONE INCH ON ORIGINAL DRAWING. 0 1"
IF NOT ONE INCH ON THIS SHEET, ADJUST SCALES ACCORDINGLY.

CITY OF BELLINGHAM, WASHINGTON
POST POINT WASTEWATER TREATMENT PLANT UPGRADE

STANDARD DETAILS
STRUCTURAL STANDARD DETAILS

DWG NO. 800-S-1
DATE AUG. 1990
PROJ NO. SEA22462.C1

DATE: 8-23-90
DRAWN BY: BBL DESIGNED BY: LMK
DGN NAME: H:/PROJ2/BELLINGH/BL800S-B.DGN

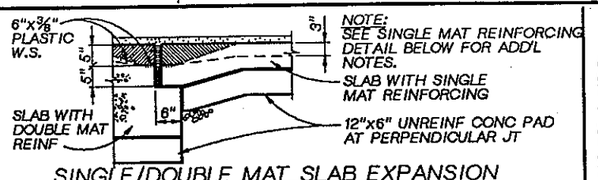

SINGLE/DOUBLE MAT SLAB EXPANSION JOINT INTERSECTION

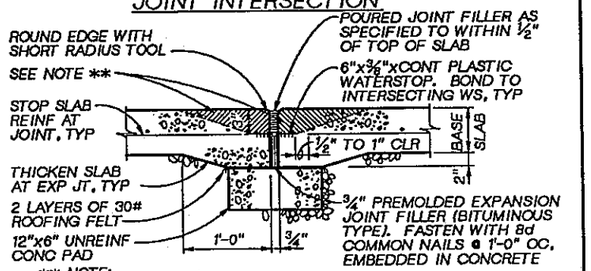

** NOTE:
PLACE CONCRETE AROUND WATERSTOP AS SHOWN ON "CONCRETE PLACEMENT SEQUENCE AT EXPANSION JOINT" DETAIL. (209)

SLAB WITH SINGLE MAT REINFORCING

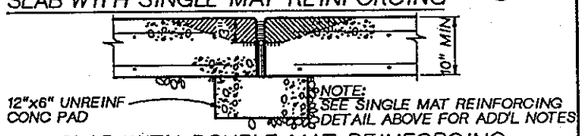

SLAB WITH DOUBLE MAT REINFORCING

BASE SLAB EXPANSION JOINT (208)

NTS

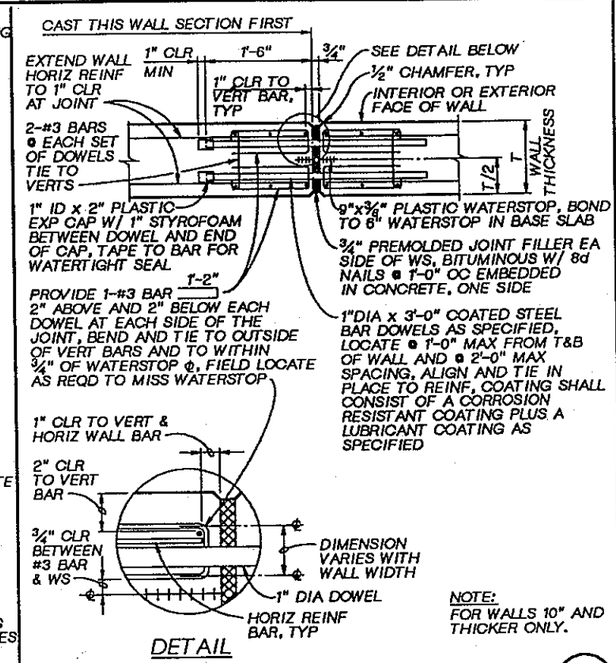

DETAIL

NOTE:
FOR WALLS 10" AND THICKER ONLY.

VERTICAL EXPANSION JOINT (210)

NTS

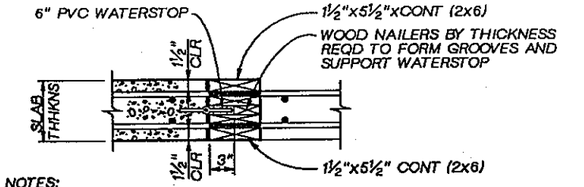

NOTES:
1. SPACES BETWEEN STOCK MATERIAL WHERE REINFORCING BARS DO NOT PENETRATE BULKHEAD SHALL BE FILLED WITH STYROFOAM CUT TO FIT. ▬ THICKNESS OF REINFORCING BARS.
2. REINFORCING BARS AT CONSTRUCTION JOINTS SHALL NOT BE SPLICED, CUT, WELDED OR OTHERWISE ALTERED FROM THAT SHOWN ON THE PLANS.
3. STRIP WOOD FORMS ONE DAY FOLLOWING CASTING AND ROUGHEN CONCRETE WITH WIRE BRUSH TO INCREASE BOND CAPACITY OF CONCRETE.

SLAB CONSTRUCTION JOINT (213)

NTS

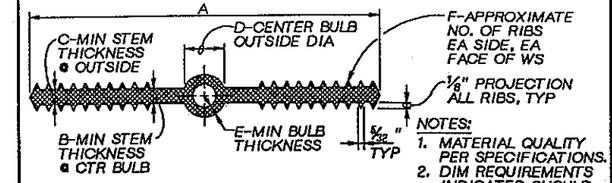

SIZE	A	B	C	D	E	F
4"x3/16"	4"	3/16"	3/16"	3/4"	1/4"	4
6"x3/8"	6"	3/8"	3/8"	7/8"	1/4"	6
9"x3/8"	9"	3/8"	3/8"	1"	1/4"	8

NOTES:
1. MATERIAL QUALITY PER SPECIFICATIONS.
2. DIM REQUIREMENTS INDICATED SHOULD BE GIVEN TO SUPPLIERS PRIOR TO PLACING ORDERS.
3. NON-ROUND CENTER BULBS SHALL HAVE A MIN OUTSIDE DIM OF 'D'.

PLASTIC WATERSTOP (217)

NTS

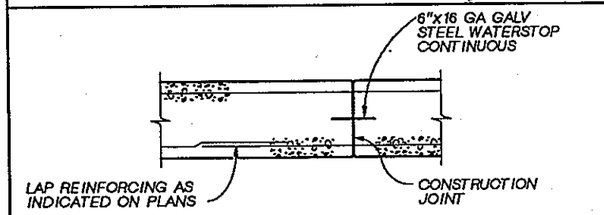

NOTE:
REINFORCING CONTINUOUS ACROSS JOINT. STAGGER MINIMUM 40 BAR DIAMETERS UNLESS INDICATED OTHERWISE.

PLAN

VERTICAL CONSTRUCTION JOINT (214)

NTS

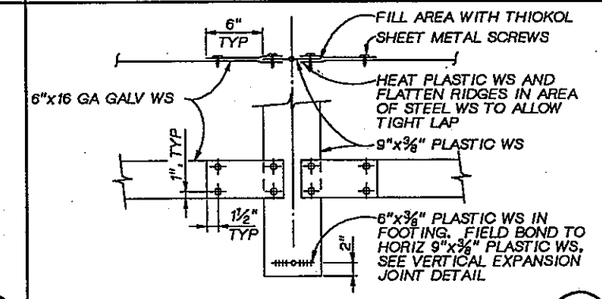

STEEL-PLASTIC WS SPLICE (218)

NTS

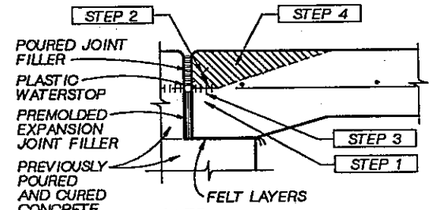

NOTE:
CONCRETE PLACEMENT SEQUENCE IS THE SAME ON BASE SLAB EXPANSION JOINT.

STEP 1
PLACE CONCRETE BELOW WATERSTOP FIRST, REMOVE ALL AIR VOIDS BY VIBRATING THOROUGHLY.

STEP 2
TO CONFIRM THERE ARE NO AIR VOIDS, LIFT WATERSTOP. A CONTINUOUS IMPRESSION OF THE WATERSTOP, INCLUDING EDGE OF BULB, SHOULD BE VISIBLE IN THE FRESH CONCRETE. CONTINUE THIS PROCEDURE ALONG THE ENTIRE POURED JOINT, END TO END. IF A CONTINUOUS IMPRESSION IS CONFIRMED, PROCEED WITH STEP 4. IF A VOID LARGER THAN 1/4 INCH IN DIAMETER IS PRESENT ANYWHERE IN THE WATERSTOP IMPRESSION, PROCEED WITH STEP 3.

STEP 3
IF A VOID LARGER THAN 1/4 INCH IN DIAMETER IS PRESENT IN THE WATERSTOP IMPRESSION, ADDITIONAL CONCRETE SHALL BE PLACED UNDER THE WATERSTOP, VIBRATED, AND STEP 2 REPEATED.

STEP 4
FINISH PLACING CONCRETE ABOVE THE WATERSTOP TO TOP OF SLAB.

CONCRETE PLACEMENT SEQUENCE AT EXPANSION JOINT (209)

NTS (SEE EXPANSION JOINT DETAILS FOR SPECIFIC MATERIALS)

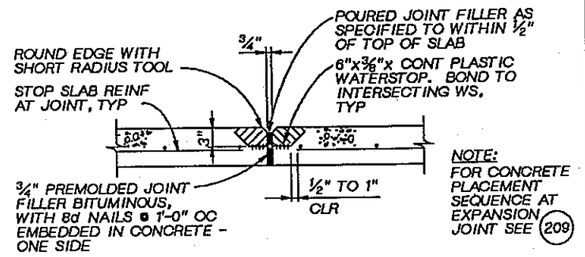

NOTE:
FOR CONCRETE PLACEMENT SEQUENCE AT EXPANSION JOINT SEE (209)

ELEVATED SLAB EXP JOINT (211)

NTS

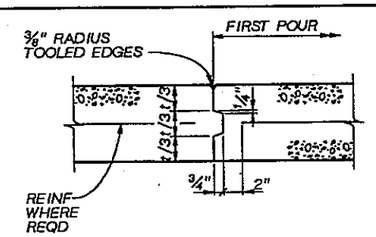

SLAB ON GRADE KEYED CONSTRUCTION JOINT (215)

NTS

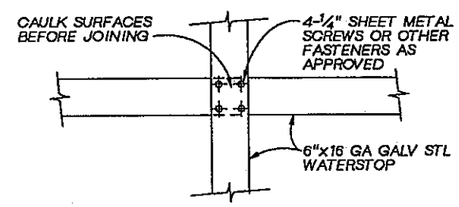

STEEL-STEEL WS SPLICE (219)

NTS

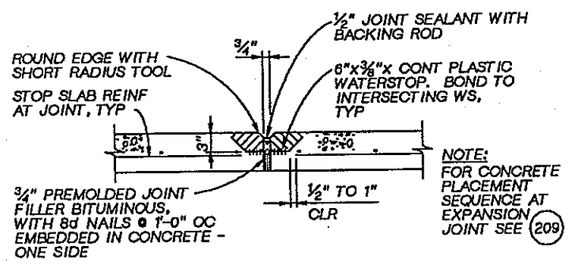

NOTE:
FOR CONCRETE PLACEMENT SEQUENCE AT EXPANSION JOINT SEE (209)

ELEVATED SLAB EXP JOINT (212)

NTS

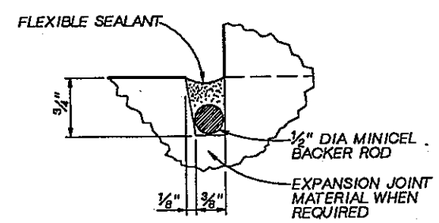

JOINT SEALANT (216)

NTS

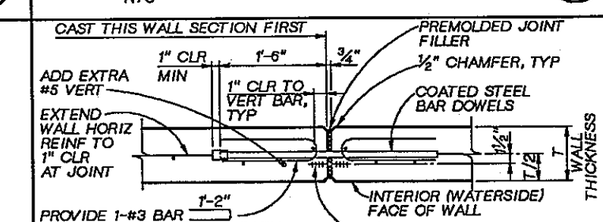

NOTE:
1. FOR WALLS LESS THAN 10" THICK ONLY.
2. FOR ADDL INFORMATION SEE (210)

VERTICAL EXPANSION JOINT (220)

NTS

REUSE OF DOCUMENTS
THIS DOCUMENT, AND THE IDEAS AND DESIGNS INCORPORATED HEREIN, AS AN INSTRUMENT OF PROFESSIONAL SERVICE, IS THE PROPERTY OF CH2M HILL AND IS NOT TO BE USED, IN WHOLE OR IN PART, FOR ANY OTHER PROJECT WITHOUT THE WRITTEN AUTHORIZATION OF CH2M HILL.
©CH2M HILL

BAR IS ONE INCH ON ORIGINAL DRAWING. 0 ▬ 1" IF NOT ONE INCH ON THIS SHEET, ADJUST SCALES ACCORDINGLY.

CITY OF BELLINGHAM, WASHINGTON
POST POINT WASTEWATER TREATMENT PLANT UPGRADE

STANDARD DETAILS
STRUCTURAL STANDARD DETAILS

DWG NO. 800-S-2
DATE AUG. 1990
PROJ NO. SEA22462.C1

DSGN L. KORBUS
DR B. LAZARO
CHK W. BENNETT
APVD J GAUTHIER

NO.	DATE	REVISION	BY	APVD

CH2M HILL

OVERLAY SCREEN
PROJ ID
FILE

DATE: 8-23-90
DRAWN BY: BBL DESIGNED BY: LMK
DGN NAME: H:/PROJ2/BELLINGH/BL800S-C.DGN

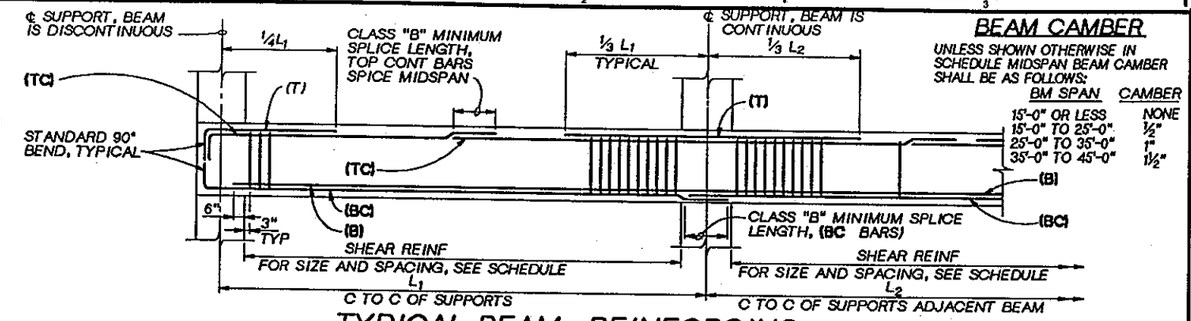

TYPICAL BEAM REINFORCING
NTS

BEAM CAMBER

UNLESS SHOWN OTHERWISE IN SCHEDULE MIDSPAN BEAM CAMBER SHALL BE AS FOLLOWS:

BM SPAN	CAMBER
15'-0" OR LESS	NONE
15'-0" TO 25'-0"	½"
25'-0" TO 35'-0"	1"
35'-0" TO 45'-0"	1½"

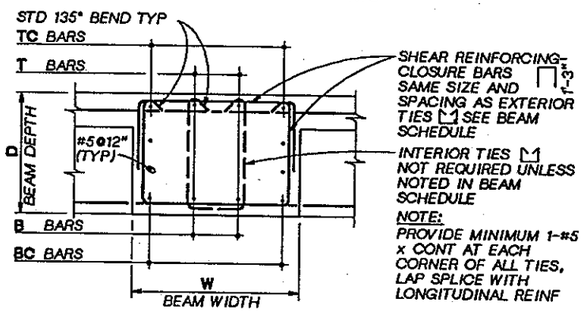

NOTE:
PROVIDE MINIMUM 1-#5 x CONT AT EACH CORNER OF ALL TIES, LAP SPLICE WITH LONGITUDINAL REINF

TYPICAL BEAM SECTION
NTS

*TOP REINF. MAY BE CALLED-OUT TWICE IN SCHEDULE. (I.E. "TOP REINF. AT RIGHT SUPPORT" OF BEAM THAT IS CONTINUOUS OVER THE RIGHT SUPPORT IS CALLED-OUT AS "TOP REINF. AT LEFT SUPPORT" OF ADJACENT BEAM.)

LEFT SUPPORT IS DESIGNATED AS THE SUPPORT CLOSEST THE LEFT SIDE OR BOTTOM OF SHEET ON WHICH FRAMING PLAN IS DRAWN, UNLESS NOTED OTHERWISE ON PLAN.

LAP LENGTH FOR CLASS "B" SPLICE AS SHOWN IN TABLE (201) WITHOUT INCREASE FOR SPACING OF BARS

** SAMPLE BEAM SCHEDULE.

BEAM SCHEDULE **

BEAM NO. (SEE PLANS)	SIZE		TOP REINF AT LEFT SUPPORT		BOTTOM REINF		* TOP REINF AT RIGHT SUPPORT		SHEAR REINF		REMARKS
	W	D	T	TC	B	BC	T	TC	NO. SIZE	SPACING FROM LEFT SUPPORT	

CONCRETE BEAM
NTS
(221)

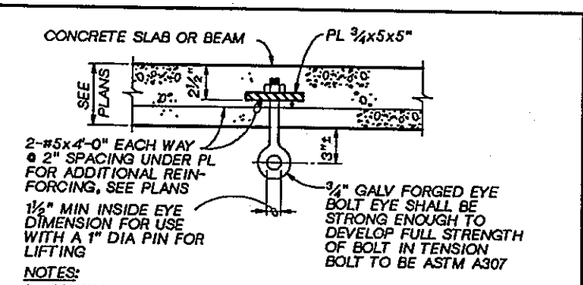

NOTES:
1. MAXIMUM LOAD RATING FOR LIFTING EYE 2000 LBS.
2. SUBMIT DATA ON EYE BOLT WITH SHOP DRAWINGS.

LIFTING EYE - 1
NTS
(222)

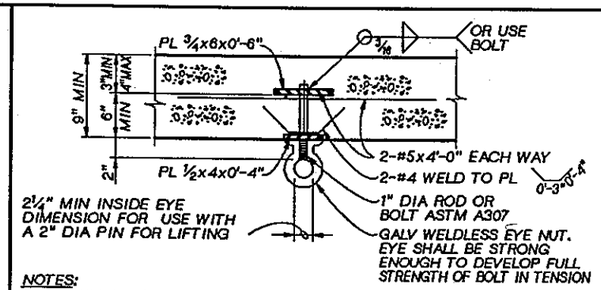

NOTES:
1. MAXIMUM LOAD RATING FOR LIFTING EYE 4000 LBS.
2. SUBMIT DATA ON EYE BOLT WITH SHOP DRAWINGS.

LIFTING EYE - 2
NTS
(223)

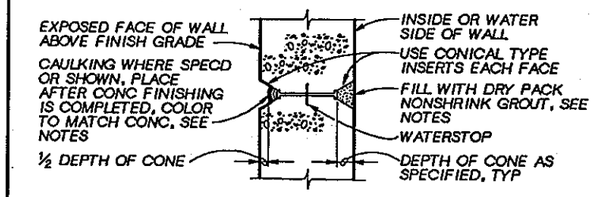

NOTES:
1. FOR FORM TIE HOLES ON OUTSIDE FACE OF WALL BELOW GRADE, FILL WITH NONSHRINK GROUT, (DRY PACK)
2. THE SPACING OF FORM TIES ON EXPOSED PORTIONS OF WALLS SHALL BE APPROXIMATELY EQUAL HORIZONTALLY AND VERTICALLY AND SHALL BE UNIFORM IN EACH DIRECTION.
3. WHERE CAULKING IS NOT SPECIFIED OR SHOWN, DRY PACK EXTERIOR TIE HOLES WITH NONSHRINK GROUT WITH COLOR OF GROUT TO MATCH COLOR OF CONCRETE AS CLOSE AS POSSIBLE.
4. DRY PACK METHOD SHALL BE AS SPECIFIED USING STEEL TOOLS.

FORM SNAP-TIE HOLE
NTS
(224)

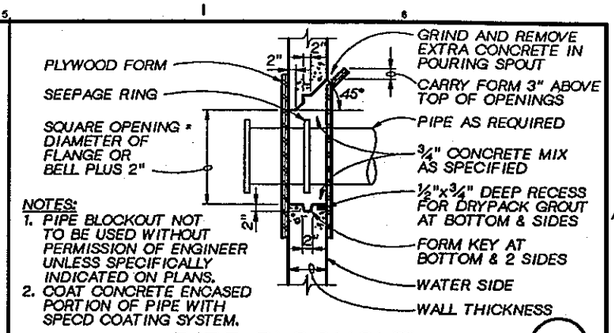

NOTES:
1. PIPE BLOCKOUT NOT TO BE USED WITHOUT PERMISSION OF ENGINEER UNLESS SPECIFICALLY INDICATED ON PLANS.
2. COAT CONCRETE ENCASED PORTION OF PIPE WITH SPECD COATING SYSTEM.

PIPE BLOCKOUT
NTS
(226)

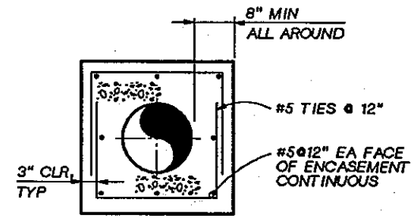

PIPE ENCASEMENT
NTS
(227)

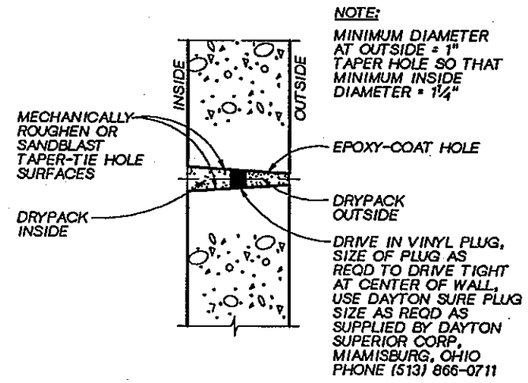

NOTE:
MINIMUM DIAMETER AT OUTSIDE = 1" TAPER HOLE SO THAT MINIMUM INSIDE DIAMETER = 1¼"

CONSTRUCTION STEPS:
1. SANDBLAST OR MECHANICALLY ROUGHEN WITH ELECTRIC EQUIPMENT.
2. DRIVE IN VINYL PLUG.
3. EPOXY COAT INSIDE AND WHILE EPOXY IS TACKY DRYPACK INSIDE.
4. EPOXY COAT OUTSIDE AND WHILE EPOXY IS TACKY DRYPACK OUTSIDE. USE NONMETALIC, NONSHRINK GROUT AS SPECIFIED.

ALTERNATE FORM TIE-THROUGH BOLT
NTS
(225)

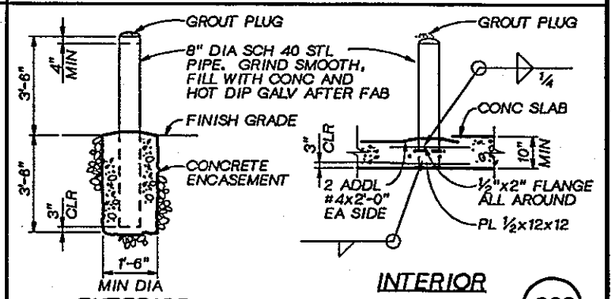

GUARD POST
NTS
(228)

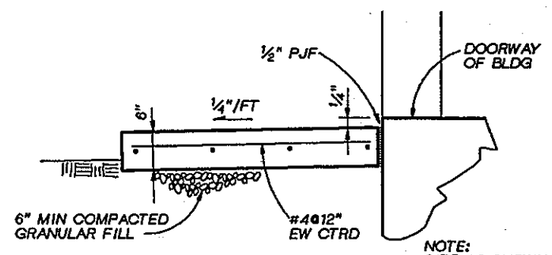

CONCRETE PAD
NTS
(229)

LINDA M. KORBUS STATE OF WASHINGTON REGISTERED PROFESSIONAL ENGINEER

CH2M HILL

DSGN	L. KORBUS	
DR	B. LAZARO	
CHK	W. BENNETT	
APVD	J GAUTHIER	

NO.	DATE	REVISION	BY	APVD

REUSE OF DOCUMENTS
THIS DOCUMENT, AND THE IDEAS AND DESIGNS INCORPORATED HEREIN, AS AN INSTRUMENT OF PROFESSIONAL SERVICE, IS THE PROPERTY OF CH2M HILL AND IS NOT TO BE USED, IN WHOLE OR IN PART, FOR ANY OTHER PROJECT WITHOUT THE WRITTEN AUTHORIZATION OF CH2M HILL.
©CH2M HILL

BAR IS ONE INCH ON ORIGINAL DRAWING. 0 1"
IF NOT ONE INCH ON THIS SHEET, ADJUST SCALES ACCORDINGLY.

CITY OF BELLINGHAM, WASHINGTON
POST POINT WASTEWATER TREATMENT PLANT UPGRADE

STANDARD DETAILS
STRUCTURAL STANDARD DETAILS

DWG NO. 800-S-3
DATE AUG. 1990
PROJ NO. SEA22462.C1

DATE: 8-23-90
DRAWN BY: BBL DESIGNED BY: LMK
DGN NAME: H:/PROJ2/BELLINGH/BL800S-D.DGN

EQUIPMENT BASE NOTES

1. PAD SIZE SHALL BE MINIMUM INDICATED OR AS SHOWN ON THE PLANS OR AS INDICATED BY THE MANUFACTURER AND APPROVED BY THE ENGINEER.
2. THE SIZE, NUMBER, TYPE, LOCATION, AND THREAD PROJECTION OF THE ANCHOR BOLTS SHALL BE DETERMINED BY THE EQUIPMENT MANUFACTURER, AND SHALL BE AS APPROVED BY THE ENGINEER. PROVIDE MINIMUM ½" DIA ANCHOR BOLTS. VERIFY LOADS ON ANCHOR BOLTS DO NOT EXCEED MAXIMUM ALLOWABLE LOADS TABULATED BELOW. IF LOADS EXCEED THE TABLUATED VALUES, PROVIDE SPECIAL ANCHORAGE DETAILS APPROVED BY THE EQUIPMENT MANUFACTURER. PROVIDE ANCHOR BOLT EDGE DISTANCE NOT LESS THAN THE MINIMUM TABULATED BELOW. ANCHOR BOLTS SHALL BE HELD IN POSITION WITH A TEMPLATE WHILE PAD IS BEING POURED.
3. ANCHOR BOLT SLEEVES SHALL BE USED TO PROVIDE THE ANCHOR BOLT A MINIMUM MOVEMENT OF ½" IN ALL DIRECTIONS. THE MINIMUM SLEEVE LENGTH SHALL BE 8 TIMES THE BOLT DIAMETER. SLEEVES SHALL BE FILLED WITH NON-SHRINK GROUT.
4. ANCHOR BOLT SLEEVES SHALL HAVE A MINIMUM INTERNAL DIAMETER 1" GREATER THAN BOLT DIAMETER AND A MAXIMUM INTERNAL DIAMETER 3" GREATER THAN ANCHOR BOLT DIAMETER. SLEEVES SHALL BE FILLED WITH NON-SHRINK GROUT.
5. FOR MACHINERY ANCHOR BOLTS SEE (232).
6. EQUIPMENT BASES SHALL BE INSTALLED LEVEL UNLESS SPECIFIED OTHERWISE.
7. TYPE "D" DETAIL SHALL BE USED ONLY FOR SLABS ON GRADE AND AT GRADE. THE SURROUNDING FLOOR SLAB SHALL NOT BE PLACED UNTIL THE EXACT SIZE AND LOCATION OF THE PAD IS KNOWN.
8. WEDGES OR SHIMS SHALL BE USED TO SUPPORT THE BASE WHILE THE NON-SHRINK GROUT IS PLACED. TEMPORARY LEVELING NUTS SHALL BE BACKED OFF. IF LEFT IN, THE WEDGES OR SHIMS SHALL NOT BE EXPOSED TO VIEW.

EQUIPMENT PAD DIMENSIONS AND ANCHOR BOLT VALUES

ANCHOR BOLT DIA	(IN)	½	⅝	¾	⅞	1	1¼
MAX ALLOW. AB SHEAR	(LB)	2000	3000	3560	4150	4150	5300
MAX ALLOW. AB TENSION	(LB)	1900	3000	4500	6400	6400	6400
MIN PAD HEIGHT	(IN)	7	8 1/2	10	11	12 1/2	15
MIN AB EDGE DISTANCE	(IN)	3	3 3/4	4 1/2	5 1/4	6	7 1/2
MIN AB SPACING	(IN)	6	7 1/2	9	10½	12	15

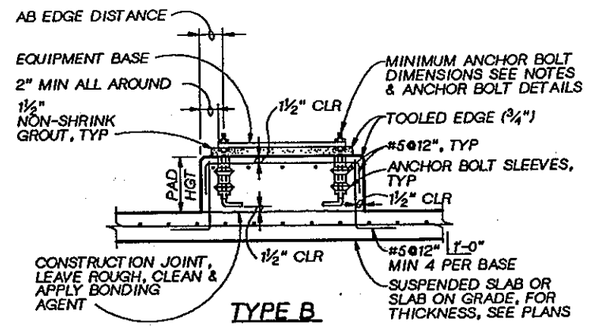

TYPE B

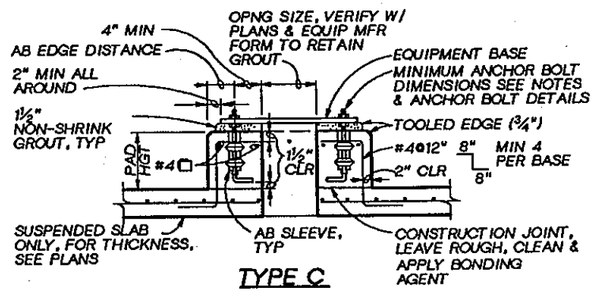

TYPE C

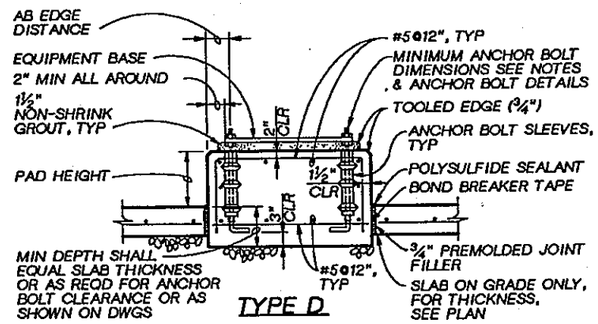

TYPE D

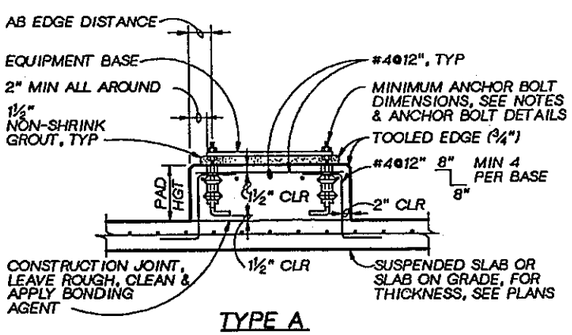

TYPE A

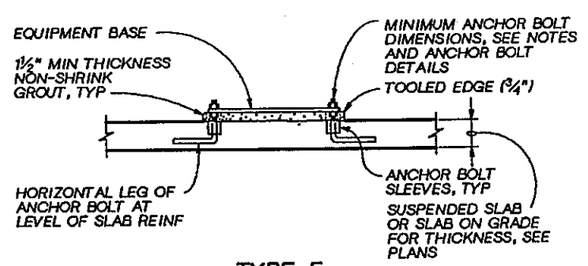

TYPE E

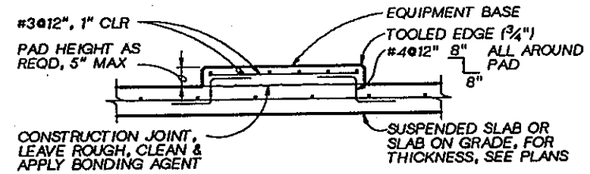

TYPE F

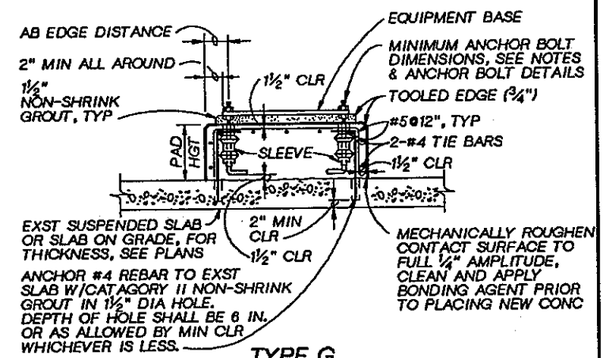

TYPE G

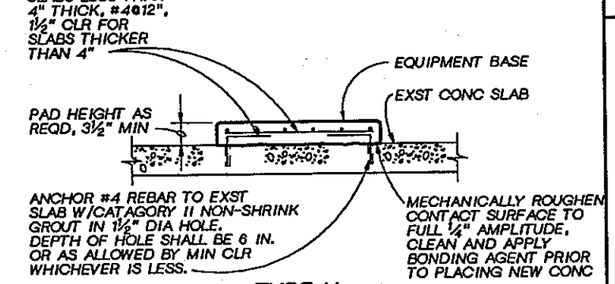

TYPE H

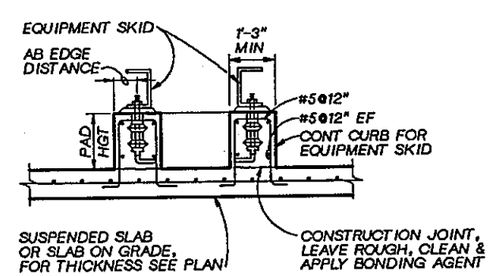

TYPE J

EQUIPMENT PAD
NTS

(230)

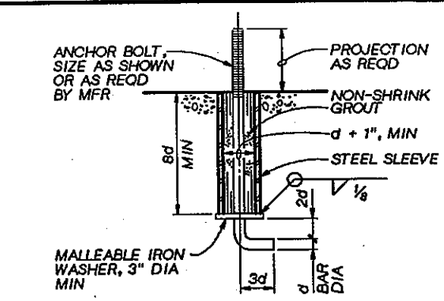

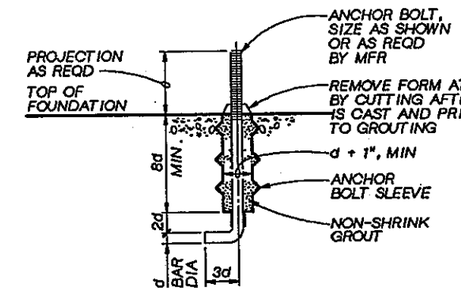

MACHINERY ANCHOR BOLTS
NTS

(232)

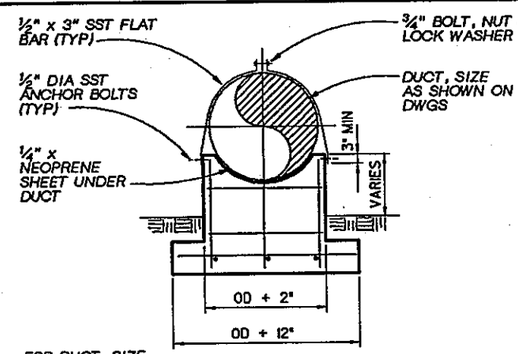

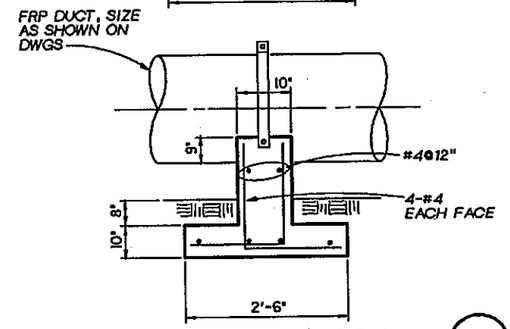

DUCT SUPPORT
NTS

(233)

DSGN L. KORBUS					
DR B. LAZARO					
CHK W. BENNETT					
APVD J GAUTHIER	NO.	DATE	REVISION	BY	APVD

CH2M HILL

REUSE OF DOCUMENTS
THIS DOCUMENT, AND THE IDEAS AND DESIGNS INCORPORATED HEREIN, AS AN INSTRUMENT OF PROFESSIONAL SERVICE, IS THE PROPERTY OF CH2M HILL AND IS NOT TO BE USED, IN WHOLE OR IN PART, FOR ANY OTHER PROJECT WITHOUT THE WRITTEN AUTHORIZATION OF CH2M HILL.
©CH2M HILL

BAR IS ONE INCH ON ORIGINAL DRAWING.
0 1"
IF NOT ONE INCH ON THIS SHEET, ADJUST SCALES ACCORDINGLY.

CITY OF BELLINGHAM, WASHINGTON
POST POINT WASTEWATER TREATMENT PLANT UPGRADE

STANDARD DETAILS
STRUCTURAL STANDARD DETAILS

DWG NO. 800-S-4
DATE AUG. 1990
PROJ. NO. SEA22462.C1

DATE: 8-23-90
DRAWN BY: BBL
DESIGNED BY: LMK
DGN NAME: H:/PROJ2/BELLINGH/BL800S-E.DGN

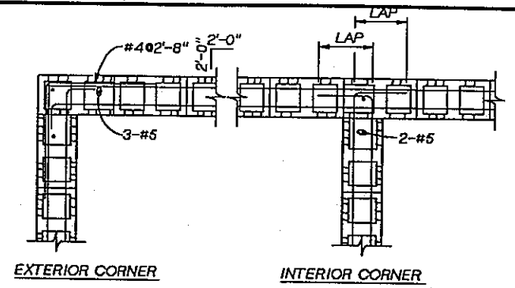

DOUBLE MAT

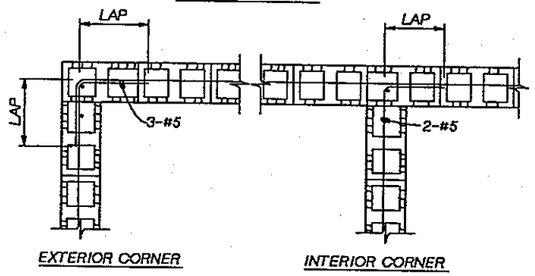

SINGLE MAT

NOTE:
LAP=30 BAR DIAMETERS OR 2'-0" MIN UNLESS OTHERWISE NOTED.

CMU WALL CORNERS (234)
NTS

NOTES:
1. PROVIDE 2-#5 VERTS AT BEAM REACTIONS (TYP).
2. FOR CORNER REINF SEE (234)
3. MAX HEIGHT OF WALL 8'-6".

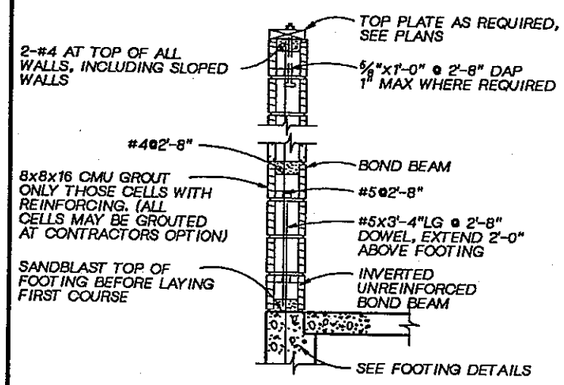

CMU WALL SECTION (235)
NTS

CMU OPENING REINF SCHEDULE								
W	"A" BARS		"B" BARS		"C" BARS		# CELLS TO GROUT NOTE 3	
	8" CMU	12" CMU	8" CMU	12" CMU	8" CMU	12" CMU	8" CMU	12" CMU
≤2'-0"	1-#5	2-#5	1-#5	2-#5	1-#5	2-#4	ONE	ONE
>2'-0" ≤6'-0"	2-#5	2-#5	1-#5	2-#5	1-#5	2-#4	ONE	ONE
>6'-0" ≤8'-0"	2-#6	2-#6	2-#5	2-#6	2-#5	2-#5	TWO	TWO
> 8'-0" ≤10'-0"	2-#7	2-#8	2-#6	2-#6	2-#5	2-#6	THREE	THREE
>10'-0"	SEE DRAWINGS							

NOTES:
1. EXTEND "C" BARS 2'-0" MINIMUM BEYOND TOP AND BOTTOM OF OPENING EXCEPT THAT WHEN "H" OR "W" EXCEEDS 2'-0", "C" BARS SHALL EXTEND FULL HEIGHT.
2. "A" AND "B" BARS SHALL EXTEND 2'-0" EACH SIDE OF OPENING. GROUT TO END OF BARS.
3. SEE SCHEDULE FOR NUMBER OF CELLS TO GROUT ON EACH SIDE OF THE OPENING.
4. GROUT ALL CELLS OVER OPENING TO W/2 OR 2'-0" WHICHEVER IS GREATER UNLESS TOP OF WALL IS REACHED FIRST.

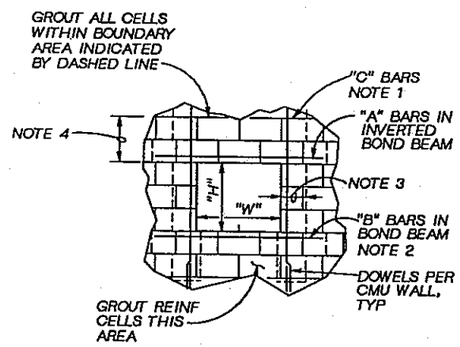

CMU OPENING REINFORCING (236)
NTS

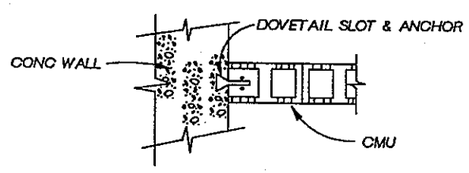

CMU CONCRETE WALL INTERSECTION (237)
NTS

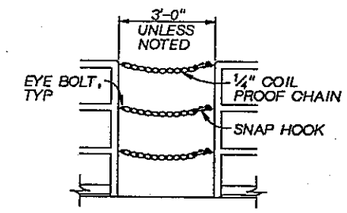

SAFETY CHAIN (238)
NTS

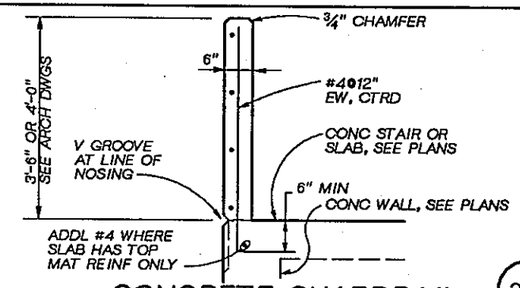

CONCRETE GUARDRAIL (239)
NTS

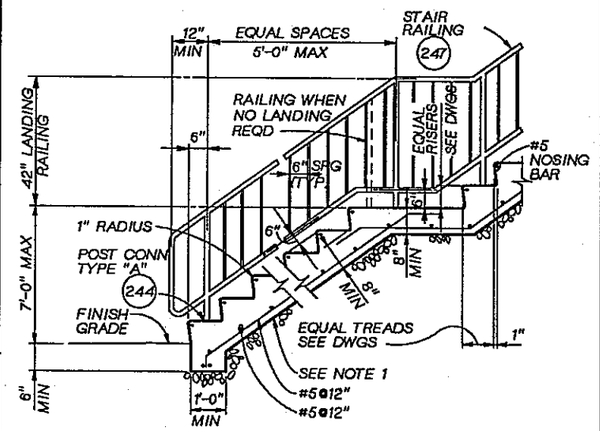

NOTES:
1. PLACE STEPS AND LANDING AGAINST FIRM UNDISTURBED MATERIAL OR APPROVED FILL.
2. WIDTH OF STEPS AND LANDING SHALL BE 3'-6", WITH A CROSS SLOPE OF 1/4" PER FOOT, UNLESS NOTED.
3. SUPPORT WALL REQUIRED ALL AROUND LANDING OR STEPS, EXCEPT AT SIDES THAT ABUT A STRUCTURE. SEE (241) AND (242)
4. FOR TYPE OF HANDRAIL, SEE HANDRAIL DETAILS.

STEPS TO LANDING (240)
NTS

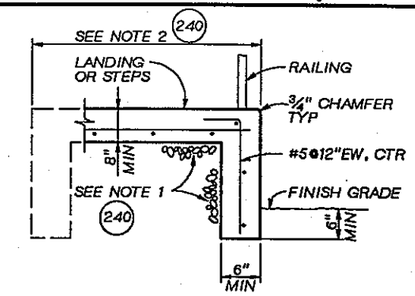

SUPPORT WALL (241)
NTS

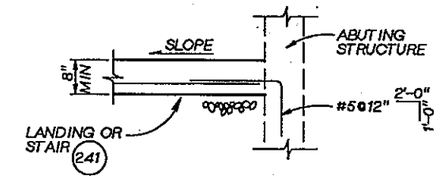

CONNECTION TO STRUCTURE (242)
NTS

NOTE:
STAIR HANDRAIL NOT SHOWN.

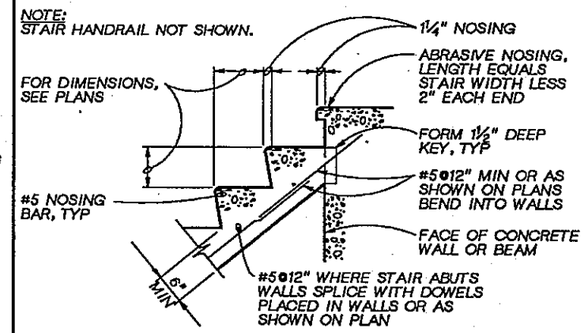

TOP CONN

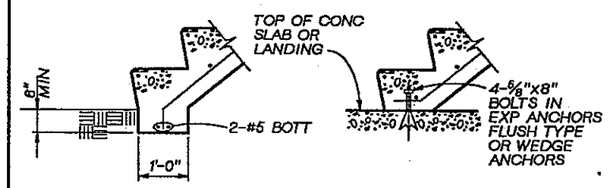

ALTERNATE BOT CONN BOTTOM CONN

CONCRETE STAIR (243)
NTS

DSGN	L. KORBUS			
DR	B. LAZARO			
CHK	W. BENNETT			
APVD	J GAUTHIER	NO.	DATE	REVISION

CH2M HILL

REUSE OF DOCUMENTS
THIS DOCUMENT, AND THE IDEAS AND DESIGNS INCORPORATED HEREIN, AS AN INSTRUMENT OF PROFESSIONAL SERVICE, IS THE PROPERTY OF CH2M HILL AND IS NOT TO BE USED, IN WHOLE OR IN PART, FOR ANY OTHER PROJECT WITHOUT THE WRITTEN AUTHORIZATION OF CH2M HILL.
©CH2M HILL

BY | APVD

BAR IS ONE INCH ON ORIGINAL DRAWING.
0 1"
IF NOT ONE INCH ON THIS SHEET, ADJUST SCALES ACCORDINGLY.

CITY OF BELLINGHAM, WASHINGTON
POST POINT WASTEWATER TREATMENT PLANT UPGRADE

STANDARD DETAILS
STRUCTURAL STANDARD DETAILS

DWG NO. 800-S-5
DATE AUG. 1990
PROJ NO. SEA22462.C1

DATE: 8-23-90
DRAWN BY: BBL DESIGNED BY: LMK
DGN NAME: H:/PROJ2/BELLINGH/BL800S-F.DGN

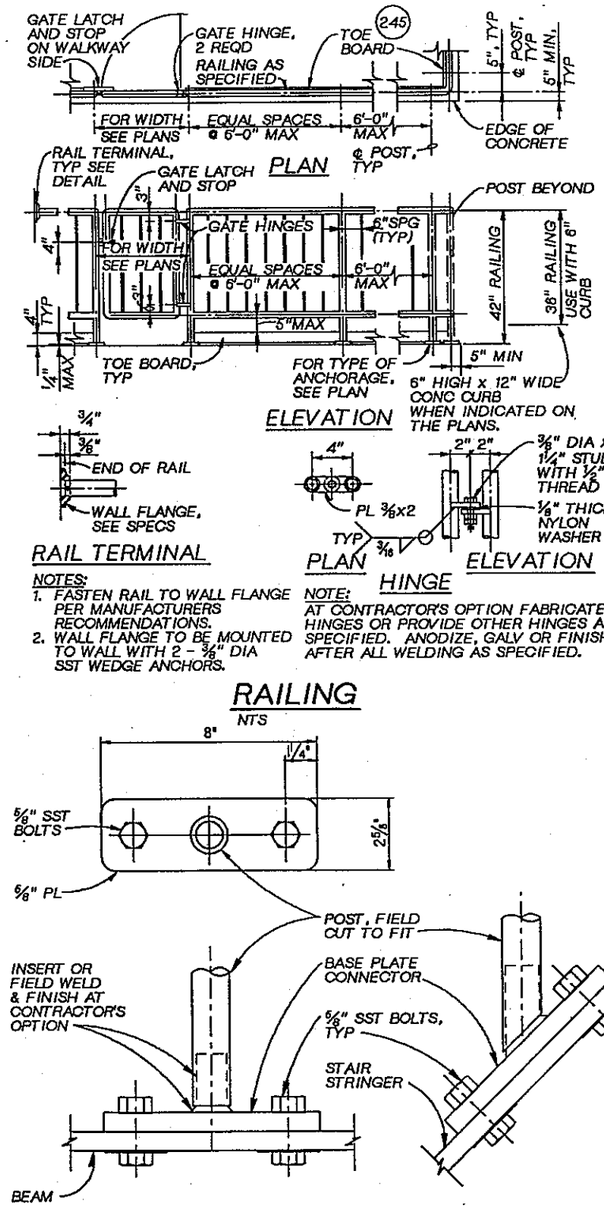

NOTES:
1. FASTEN RAIL TO WALL FLANGE PER MANUFACTURERS RECOMMENDATIONS.
2. WALL FLANGE TO BE MOUNTED TO WALL WITH 2 - 3/8" DIA SST WEDGE ANCHORS.

NOTE:
AT CONTRACTOR'S OPTION FABRICATE HINGES OR PROVIDE OTHER HINGES AS SPECIFIED. ANODIZE, GALV OR FINISH AFTER ALL WELDING AS SPECIFIED.

RAILING
NTS

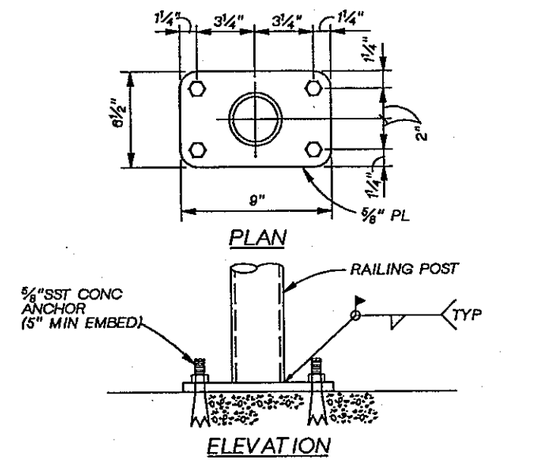

NOTES:
1. THE BASE PLATE SHALL SIT SOLIDLY ON CONCRETE. THE USE OF SHIMS, WEDGES, GROUT, ETC. FOR RAILING ALIGNMENT OR ANY OTHER REASON WILL NOT BE PERMITTED.

POST ANCHORAGE TYPE "A"

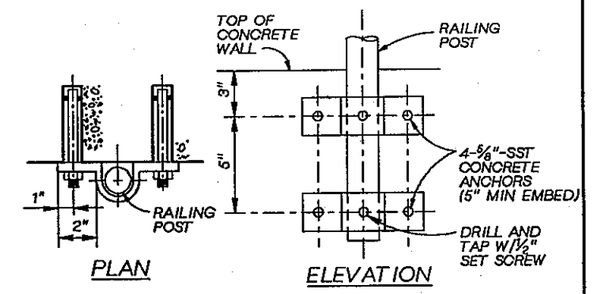

POST ANCHORAGE TYPE "B"

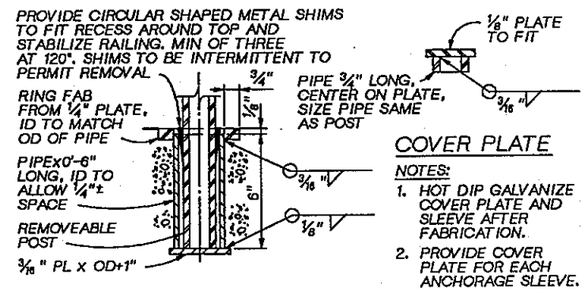

COVER PLATE

NOTES:
1. HOT DIP GALVANIZE COVER PLATE AND SLEEVE AFTER FABRICATION.
2. PROVIDE COVER PLATE FOR EACH ANCHORAGE SLEEVE.

POST ANCHORAGE TYPE "E"

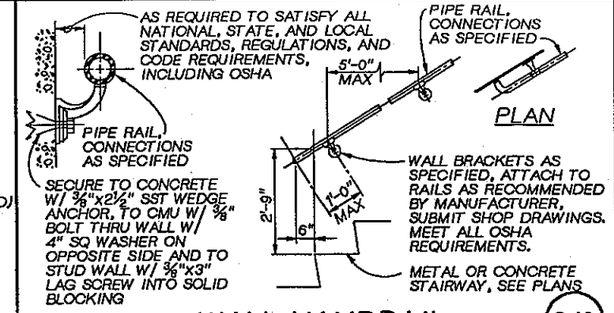

WALL HANDRAIL
NTS

246

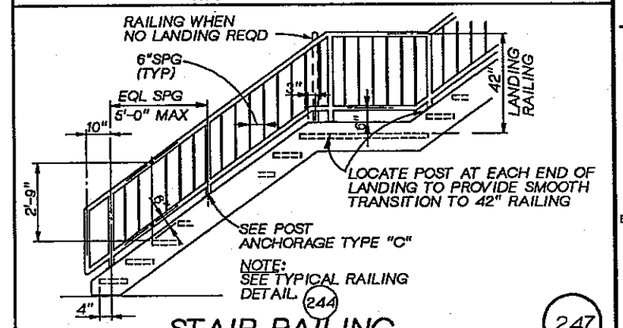

NOTE:
SEE TYPICAL RAILING DETAIL. 244

STAIR RAILING
NTS

247

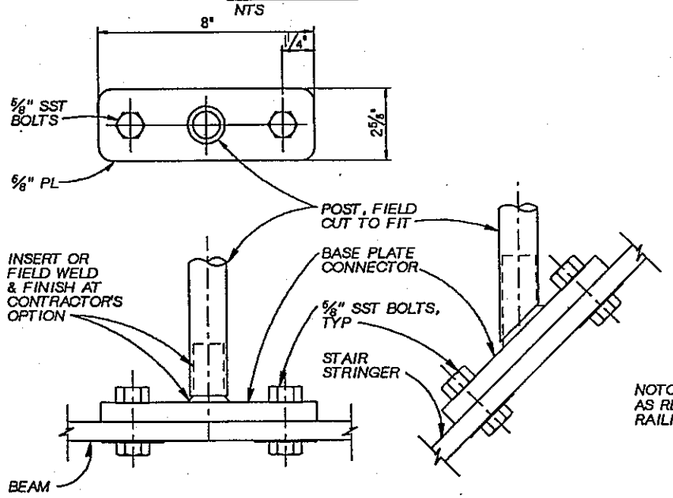

POST ANCHORAGE TYPE "C"

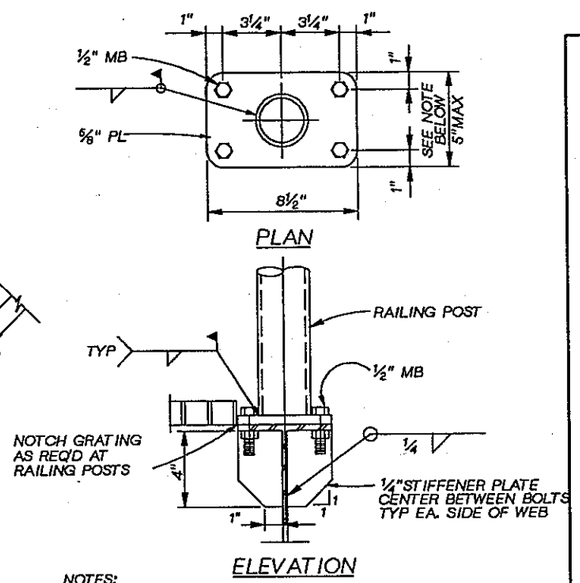

NOTES:
1. WIDTH OF BASE PLATE SHALL MATCH WIDTH OF BEAM FLANGE.

POST ANCHORAGE TYPE "D"

RAILING DETAILS
NTS

244

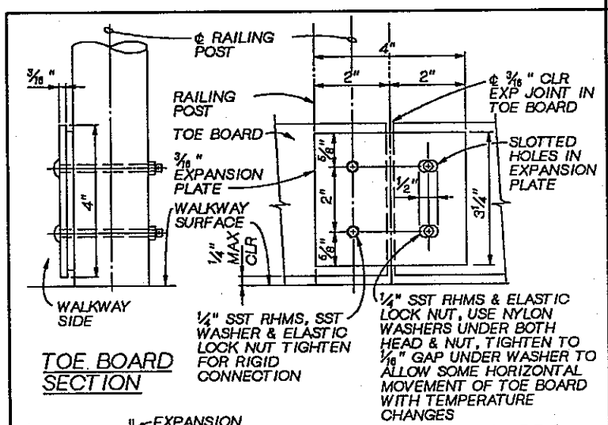

TOE BOARD SECTION

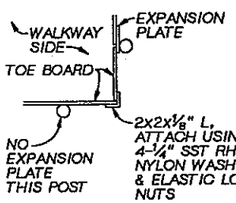

PLAN - TOE BOARD INSIDE CORNER
(OUTSIDE CORNER SIMILAR)

ELEVATION - TOE BOARD/ EXPANSION PLATE CONNECTION

NOTES:
1. WHERE BOLTED BASE PLATE EXTENDS ABOVE WALKWAY SURFACE, NOTCH TOE BOARD TO FIT AROUND BASE PLATE WITH MAXIMUM OF 1/4" GAP.
2. TOE BOARD TO BE MOUNTED ON WALKWAY SIDE OF RAILING.
3. RHMS = ROUND HEAD MACHINE SCREW AS SPECIFIED, SST.

HANDRAIL TOE BOARD
NTS

245

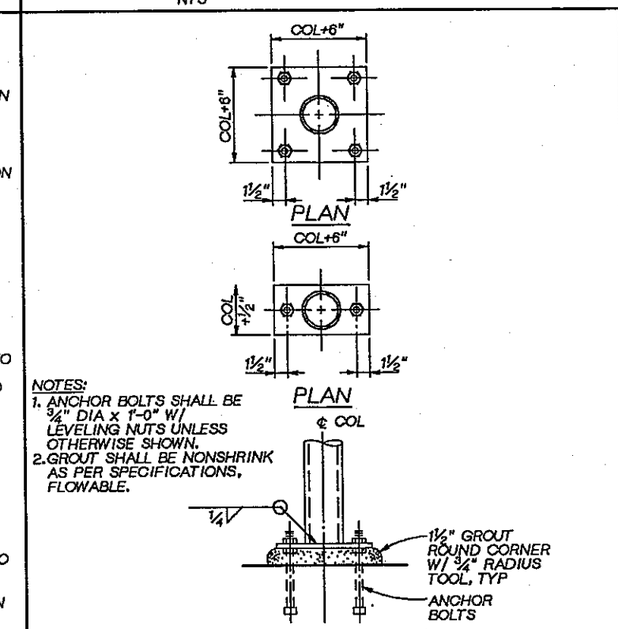

NOTES:
1. ANCHOR BOLTS SHALL BE 3/4" DIA x 1'-0" W/ LEVELING NUTS UNLESS OTHERWISE SHOWN.
2. GROUT SHALL BE NONSHRINK AS PER SPECIFICATIONS, FLOWABLE.

TUBE COLUMN BASE
NTS

248

DSGN L. KORBUS					
DR B. LAZARO					
CHK W. BENNETT					
APVD J GAUTHIER	NO.	DATE	REVISION	BY	APVD

CH2M HILL

REUSE OF DOCUMENTS
THIS DOCUMENT, AND THE IDEAS AND DESIGNS INCORPORATED HEREIN, AS AN INSTRUMENT OF PROFESSIONAL SERVICE, IS THE PROPERTY OF CH2M HILL AND IS NOT TO BE USED, IN WHOLE OR IN PART, FOR ANY OTHER PROJECT WITHOUT THE WRITTEN AUTHORIZATION OF CH2M HILL.
©CH2M HILL

BAR IS ONE INCH ON ORIGINAL DRAWING.
0 1"
IF NOT ONE INCH ON THIS SHEET, ADJUST SCALES ACCORDINGLY.

CITY OF BELLINGHAM, WASHINGTON
POST POINT WASTEWATER TREATMENT PLANT UPGRADE

STANDARD DETAILS
STRUCTURAL STANDARD DETAILS

DWG NO. 800-S-6
DATE AUG. 1990
PROJ NO. SEA22462.C1

DATE: 8-24-90
DRAWN BY: BBL
DGN NAME: H:/PROJ2/BELLINGH/BL800S-G.DGN
DESIGNED BY: LMK

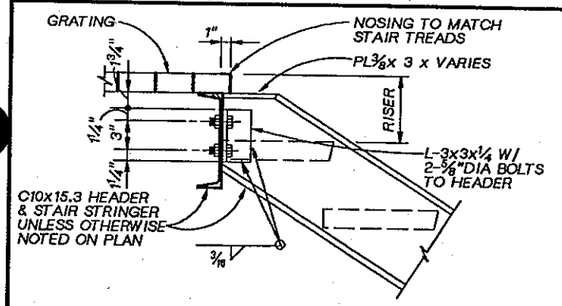

STAIR TOP CONNECTION AT HEADER

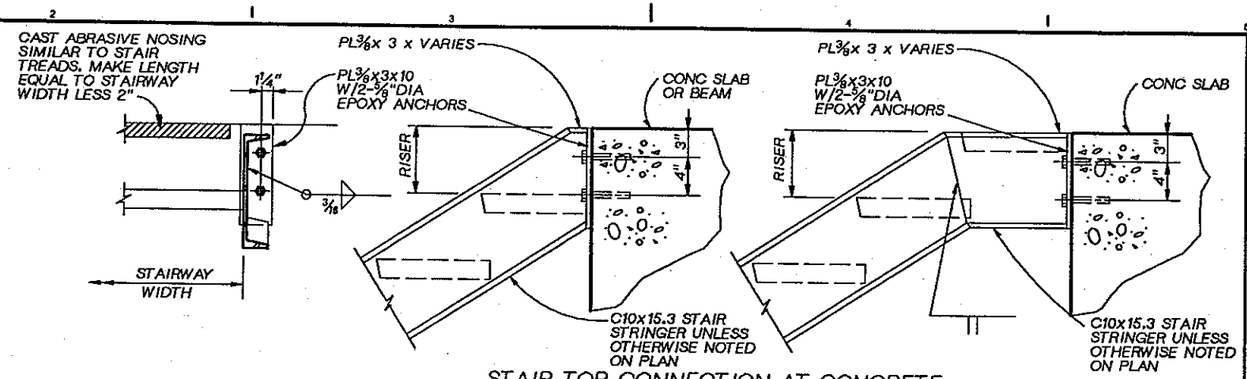

STAIR TOP CONNECTION AT CONCRETE

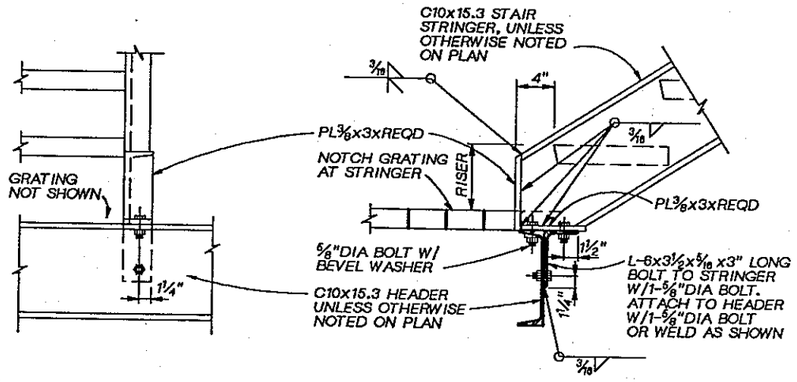

STAIR BOTTOM CONNECTION AT HEADER

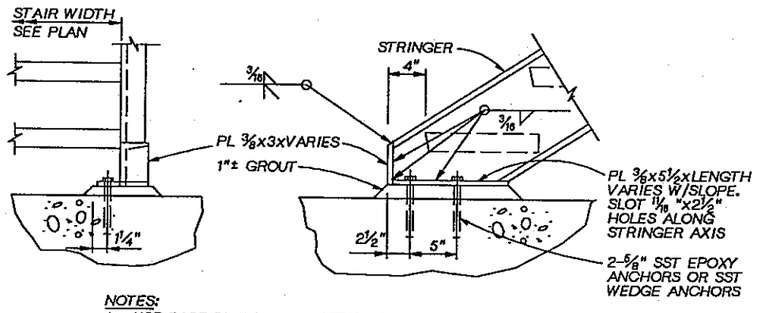

NOTES:
1. USE BASE PL OF SAME METAL AS STRINGER.
2. PROVIDE PROTECTION FOR DISSIMILAR METALS AND CONCRETE AS SPECIFIED.
3. STAIR HANDRAIL NOT SHOWN.

STAIR BOTTOM CONNECTION AT CONCRETE

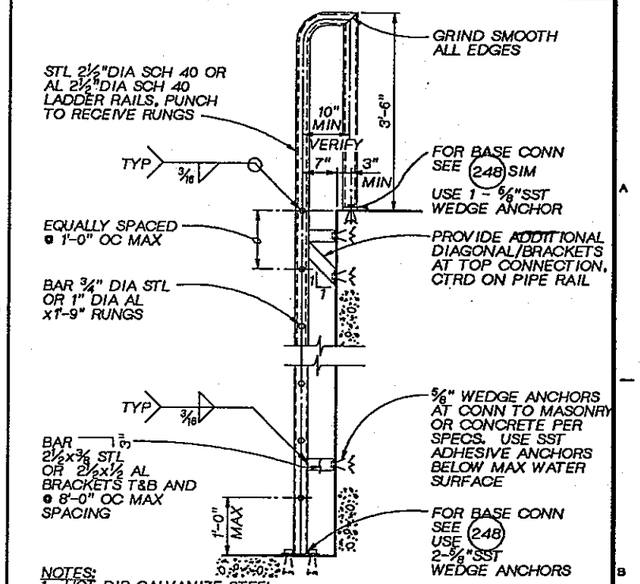

NOTES:
1. HOT DIP GALVANIZE STEEL AFTER FABRICATION.
2. PROVIDE PROTECTION FOR DISSIMILAR METALS AND CONCRETE PER SPECIFICATIONS.

LADDER
NTS

(251)

NOTES:
1. FOR MATERIALS USED FOR STAIRWAY, SEE PLANS AND OR SPECS. USE C10x15.3 FOR STEEL STRINGERS AND C12x7.41 FOR ALUMINUM STRINGERS.
2. STAIR HANDRAIL NOT SHOWN.

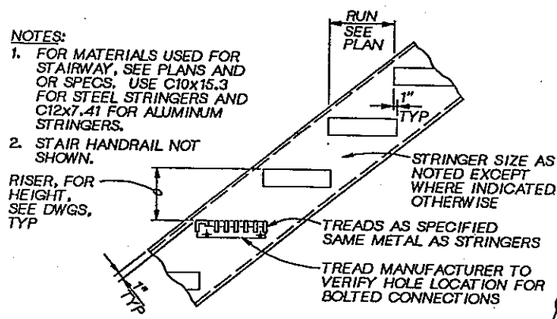

STAIR DEATIL

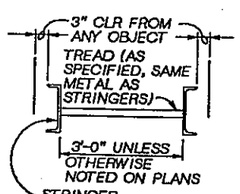

STAIRWAY WIDTH	BEARING BARS	
	ALUMINUM TREAD	STEEL TREAD
2'-0" OR LESS	1"x3/16"	3/4"x3/16"
2'-8" OR LESS	1 1/4"x3/16"	1"x3/16"
3'-6" OR LESS	1 1/2"x3/16"	1 1/4"x3/16"
4'-7" OR LESS	1 3/4"x3/16"	1 1/2"x3/16"

STAIR TREADS

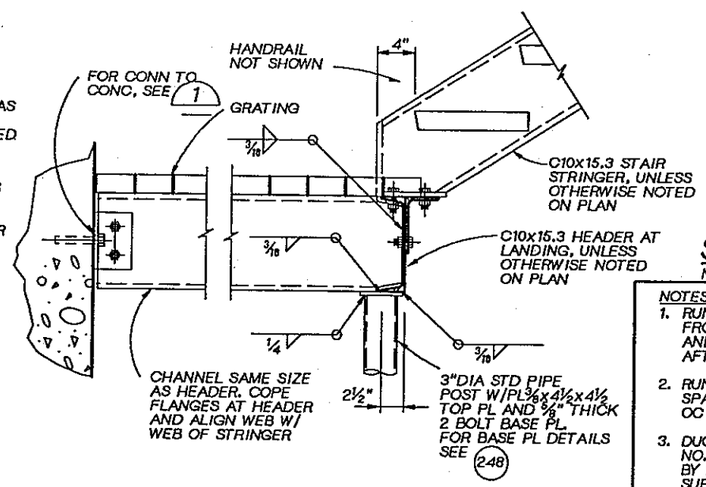

STAIR LANDING WITH SUPPORTS

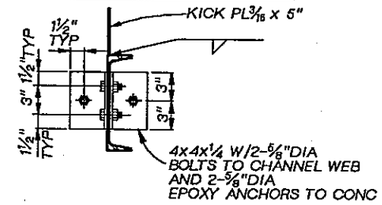

CONNECTION DETAIL (1)

STEEL STAIR DETAILS
NTS

(249)

NOTES:
1. RUNGS SHALL BE FABRICATED FROM 3/4" DIA SMOOTH STL BAR AND SHALL BE GALVANIZED AFTER FABRICATION.
2. RUNGS SHALL BE EQUALLY SPACED VERTICALLY AT 12" OC MAX.
3. DUCTILE IRON MANHOLE STEPS NO. R1982-J AS MANUFACTURED BY NEENAH FOUNDRY COMPANY MAY BE SUBSTITUTED AT CONTRACTOR'S OPTION.
4. EMBEDDED PORTION OF RUNGS SHALL BE COATED AS PER SPECIFICATIONS.

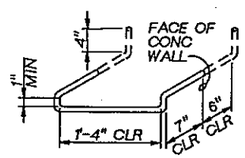

INDIVIDUAL RUNG LADDER
NTS

(250)

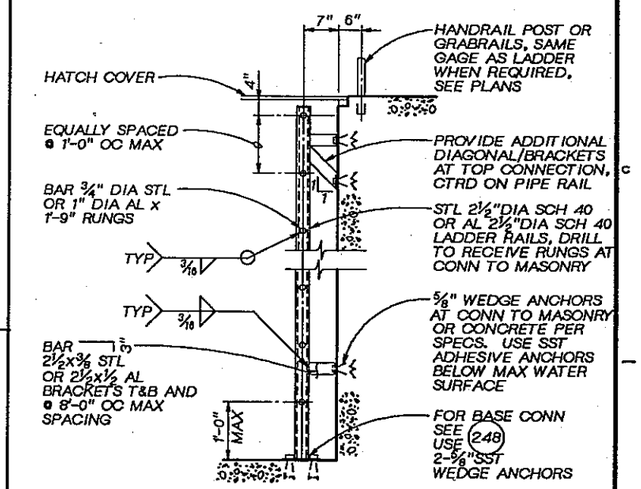

NOTES:
1. HOT DIP GALVANIZE STEEL AFTER FABRICATION.
2. PROVIDE PROTECTION FOR DISSIMILAR METALS AND CONCRETE PER SPECIFICATIONS.

LADDER
NTS

(252)

DSGN	L. KORBUS				
DR	B. LAZARO				
CHK	W. BENNETT				
APVD	J GAUTHIER	NO.	DATE	REVISION	BY / APVD

CH2M HILL

REUSE OF DOCUMENTS
THIS DOCUMENT, AND THE IDEAS AND DESIGNS INCORPORATED HEREIN, AS AN INSTRUMENT OF PROFESSIONAL SERVICE, IS THE PROPERTY OF CH2M HILL AND IS NOT TO BE USED, IN WHOLE OR IN PART, FOR ANY OTHER PROJECT WITHOUT THE WRITTEN AUTHORIZATION OF CH2M HILL.
©CH2M HILL

BAR IS ONE INCH ON ORIGINAL DRAWING.
0 1"
IF NOT ONE INCH ON THIS SHEET, ADJUST SCALES ACCORDINGLY.

CITY OF BELLINGHAM, WASHINGTON
POST POINT WASTEWATER TREATMENT PLANT UPGRADE

STANDARD DETAILS
STRUCTURAL STANDARD DETAILS

DWG NO. 800-S-7
DATE AUG. 1990
PROJ NO. SEA22452.C1

DATE: 8-24-90
DRAWN BY: BBL DESIGNED BY: LMK
DGN NAME: H:/PROJ2/BELLINGH/BL800S-H.DGN

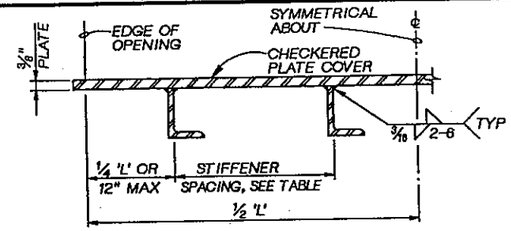

NOTES:
1. STIFFENERS TO BE PLACED LONG LEG VERTICAL.
2. STIFFENER TO BE PARALLEL TO THE SHORT EDGE OF OPENING.
3. MAXIMUM ALLOWABLE UNIFORM DESIGN LOAD = 300psf

TABLE		
SHORT SPANS	STIFFENER SIZES	MAXIMUM SPACING
3'-0"	L2x1½x¼	1'-6"
3'-6"	L2x1½x¼	1'-6"
4'-0"	L2x1½x¼	1'-3"
4'-6"	L2½x1½x¼	1'-6"
5'-0"	L2½x1½x¼	1'-3"

COVER STIFFENERS

NOTES:
1. COVER PLATE TYPES 'A', 'B', AND 'C' AND STIFFENERS ARE ALUMINUM PLATES AND ANGLES.
2. ALL COVER PLATES TO HAVE APPLICABLE LIFTING EYES AS SHOWN IN LIFTING EYE DETAILS.

SLAB OPENING COVER

NTS

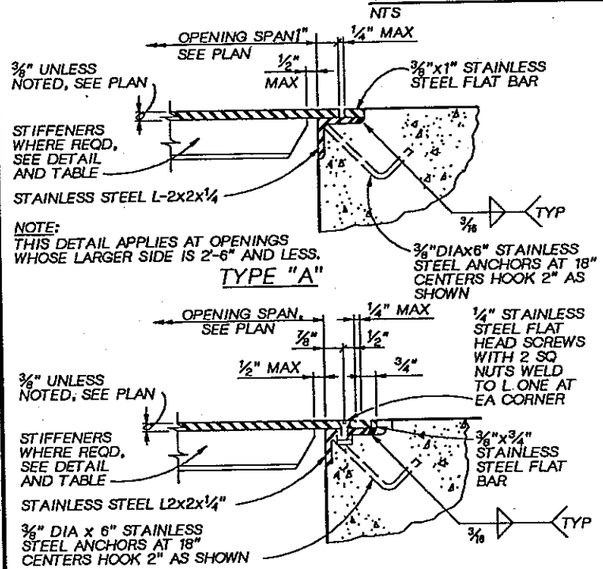

NOTE:
THIS DETAIL APPLIES AT OPENINGS WHOSE LARGER SIDE IS 2'-6" AND LESS.

TYPE "A"

NOTE:
THIS DETAIL APPLIES AT OPENINGS WHOSE LARGER SIDE IS LARGER THAN 2'-6" AND AIR TIGHTNESS IS NOT REQUIRED.

TYPE "B"

NOTE:
THIS DETAIL APPLIES AT OPENINGS THAT REQUIRE AIR TIGHT COVERS.

TYPE "C"

SLAB COVER SUPPORTS

NTS

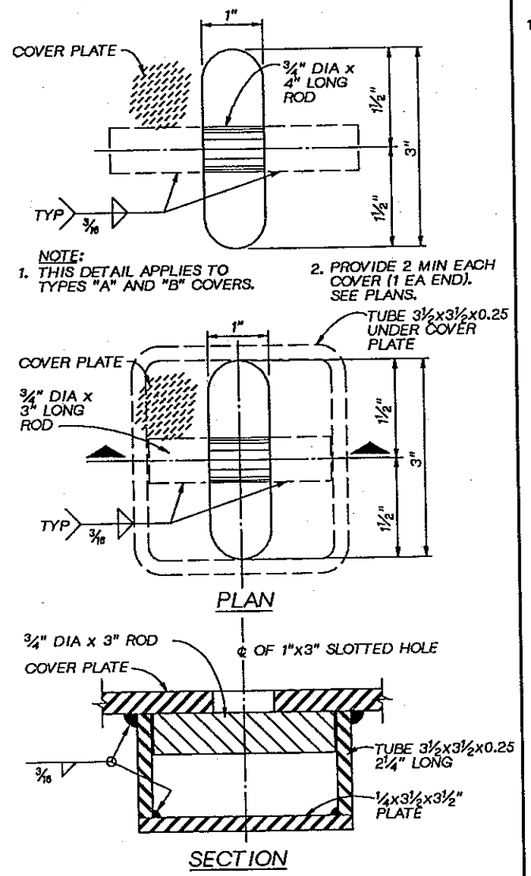

NOTE:
1. THIS DETAIL APPLIES TO TYPES "A" AND "B" COVERS.
2. PROVIDE 2 MIN EACH COVER (1 EA END). SEE PLANS.

PLAN

NOTE:
1. THE DETAIL IS APPLICABLE TO TYPE "C" COVERS AND OTHER AIR TIGHT COVERS.
2. PROVIDE 2 MIN EA COVER (1 EA END) SEE PLAN.

SECTION

LIFTING EYE DETAILS

NTS

253

CHECKERED PLATE COVER

GRATING NOTES

1. EXTEND GRATING CONTINUOUSLY OVER GATE GUIDES AND GATES.
2. NOTCH GRATING SUPPORTS AT GATES AS REQUIRED.
3. GRATING SPAN —·— SEE PLAN.
4. WIDTH OF GRATING SECTIONS SHALL NOT EXCEED 3'-0".
5. SHOP DRAWINGS BASED ON FIELD DIMENSIONS SHALL BE SUBMITTED TO THE ENGINEER PRIOR TO FABRICATION.
6. MATERIAL FOR SUPPORTS OF STEEL AND ALUMINUM GRATING TO BE SAME AS GRATING, EXCEPT METAL SUPPORTS THAT ARE TO BE EMBEDDED IN CONCRETE SHALL BE TYPE 316 STAINLESS STEEL.
7. UNLESS NOTED OTHERWISE ON PLANS, GRATING THICKNESS SHALL BE AS TABULATED IN "GRATING THICKNESS TABLE" FOR APPLICABLE TRAFFIC.
8. BEARING BAR THICKNESS FOR GRATING TO BE 3/16" MINIMUM.
9. BAND ALL EDGES WITH 3/16 x DEPTH OF BEARING BAR.
10. PROVIDE MISCELLANEOUS GRATING FASTENERS AS REQUIRED.
11. TYPE OF MATERIAL USED SHALL BE AS SHOWN ON PLANS OR AS SPECIFIED. THIS STANDARD DETAIL INCLUDES 3 TYPES, ALTHOUGH ALL 3 MAY NOT BE INCLUDED IN PROJECT.
12. THE HORIZONTAL CLEARANCE BETWEEN THE GRATING AND GRATING SUPPORTS SHALL NOT BE LESS THAN ¼" NOR GREATER THAN ½" AND AS SPECIFIED.
13. ALL GRATING SECTIONS, WHEN IN PLACE, SHALL ALWAYS BE FIRMLY ANCHORED TO THEIR SUPPORTS AS SPECIFIED.

FOOT TRAFFIC

GRATING THICKNESS TABLE

MAXIMUM SPAN	ALUMINUM (IN.)	STEEL (IN.)	FIBERGLASS (IN.)
3'-6"	1¼"	1"	1½"
4'-0"	1½"	1"	1½"
4'-6"	1¾"	1"	1½"
5'-0"	1¾"	1¼"	2"
5'-6"	2"	1¼"	MAX. ALLOW. SPAN IS 5'-0" LIMIT DEFLECTION TO ¼" MAX
6'-0"	2¼"	1½"	
6'-6"	2¼"	1½"	
7'-0"	2½"	1¾"	

VEHICULAR TRAFFIC

GRATING THICKNESS TABLE

HEAVY VEHICULAR TRAFFIC

(HS 20-44)

MAXIMUM SPAN	STEEL (IN.)	ALUMINUM (IN.)
1'-0"	2"x3/16"	DO NOT USE ALUMINUM GRATING
1'-8"	2½"x¼"	
2'-0"	2½"x3/16" OR 3"x¼"	
2'-6"	3"x3/16" OR 4"x¼"	
3'-3"	3½"x3/8"	
4'-0"	4"x3/8"	
5'-0"	4½"x3/8"	

LIGHT VEHICULAR TRAFFIC

(WHEEL LOAD = 2000 POUNDS OR LESS)

MAXIMUM SPAN	STEEL (IN.)	ALUMINUM (IN.)
1'-0"	1¾"x3/16"	1¾"x3/16"
1'-6"	1¾"x3/16"	1¾"x3/16"
2'-0"	2"x3/16"	2"x3/16"
2'-6"	2¼"x3/16"	2¼"x3/16"
3'-0"	2½"x3/16"	2½"x3/16"
4'-0"	2½"x¼"	DO NOT USE ALUMINUM GRATING
5'-0"	2½"x3/8"	
6'-0"	2½"x3/8"	
7'-0"	3"x3/8"	

NOTE:
STEEL GRATING BEARING BARS FOR VEHICULAR TRAFFIC SHALL BE SPACED AT 1⅛" OC; ALUMINUM GRATING BEARING BARS FOR VEHICULAR TRAFFIC SHALL BE SPACED AT 1 3/16" OC.

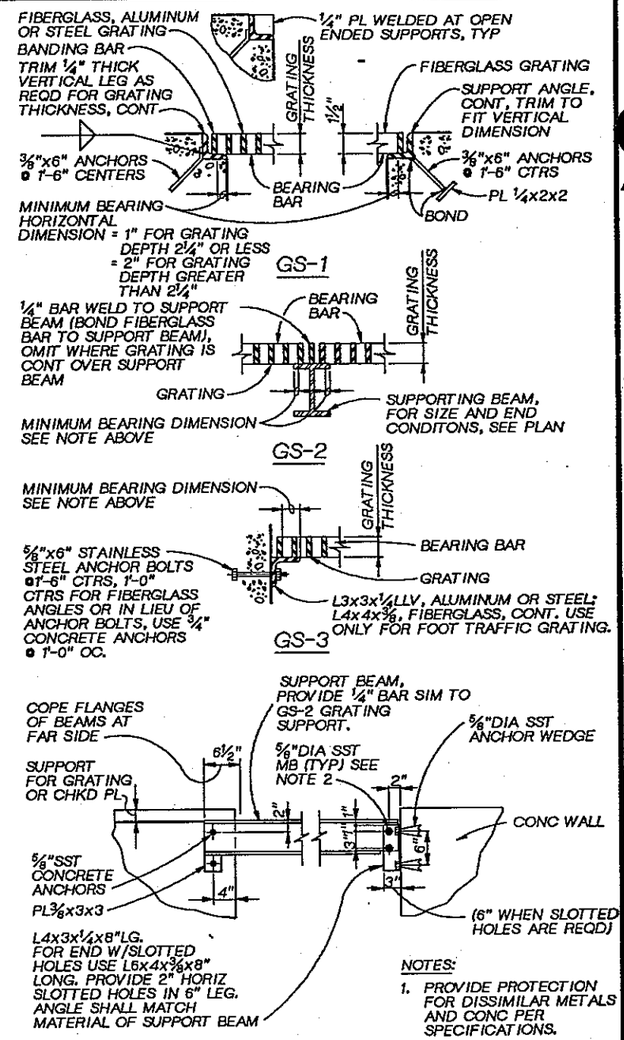

NOTES:
1. PROVIDE PROTECTION FOR DISSIMILAR METALS AND CONC PER SPECIFICATIONS.
2. 1 - 5/8" DIA SST MB REQ'D FOR 4" DEEP SUPPORT BEAM.

GS-4

GRATING SUPPORT

GRATING DETAILS

NTS

254

REUSE OF DOCUMENTS
THIS DOCUMENT, AND THE IDEAS AND DESIGNS INCORPORATED HEREIN, AS AN INSTRUMENT OF PROFESSIONAL SERVICE, IS THE PROPERTY OF CH2M HILL AND IS NOT TO BE USED, IN WHOLE OR IN PART, FOR ANY OTHER PROJECT WITHOUT THE WRITTEN AUTHORIZATION OF CH2M HILL.
©CH2M HILL

DSGN L. KORBUS
DR B. LAZARO
CHK W. BENNETT
APVD J GAUTHIER

NO.	DATE	REVISION	BY	APVD

BAR IS ONE INCH ON ORIGINAL DRAWING.
0 1"
IF NOT ONE INCH ON THIS SHEET, ADJUST SCALES ACCORDINGLY.

CITY OF BELLINGHAM, WASHINGTON
POST POINT WASTEWATER TREATMENT PLANT UPGRADE

STANDARD DETAILS
STRUCTURAL STANDARD DETAILS

DWG NO. 800-S-8
DATE AUG. 1990
PROJ NO. SEA22462.C1

LINDA M. KORBUS STATE OF WASHINGTON 22864 REGISTERED PROFESSIONAL ENGINEER

OVERLAY IDENTIFICATION: COMPOSITE, OVERLAY, SCREEN, PROJ, FILE

DRAWN BY: BBL DESIGNED BY: LMK
DGN NAME: H:/PROJ2/BELLINGH/BL800S-1.DGN

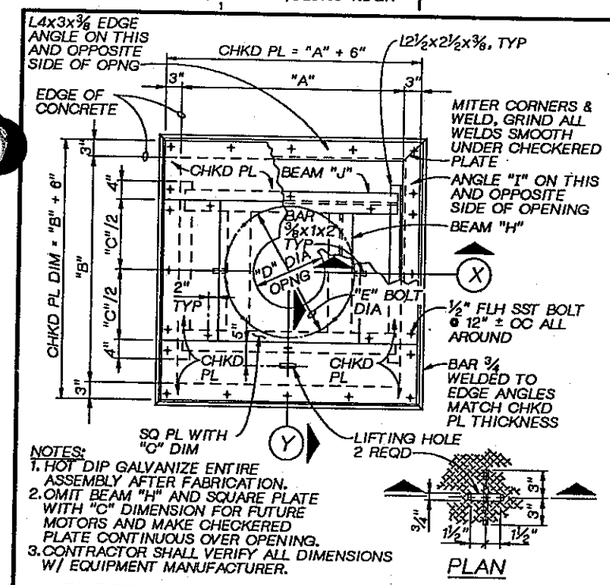

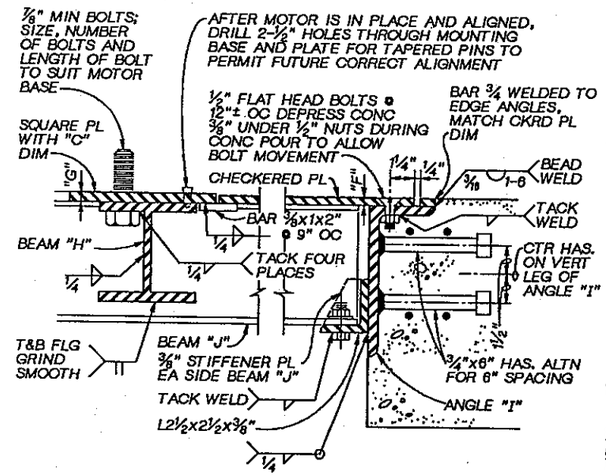

SECTION (X)

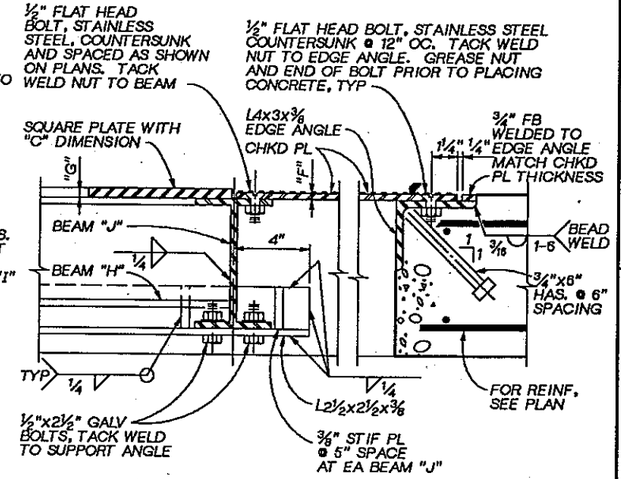

SECTION (Y)

PUMP MOTOR PLATFORM
NTS

(255)

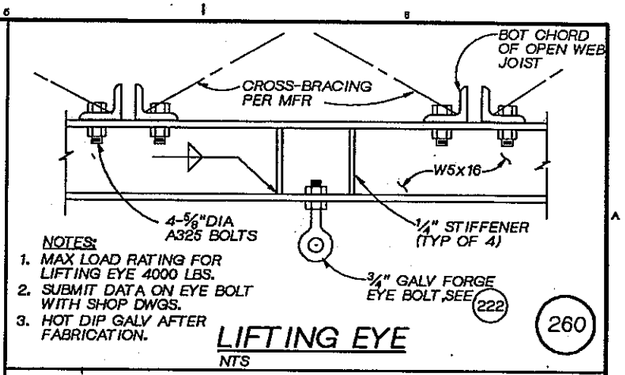

LIFTING EYE
NTS

(260)

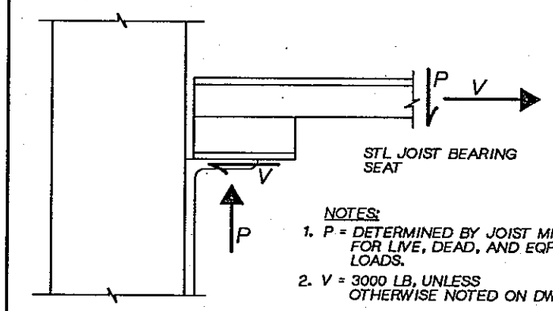

JOIST BEARING SEAT
NTS

(261)

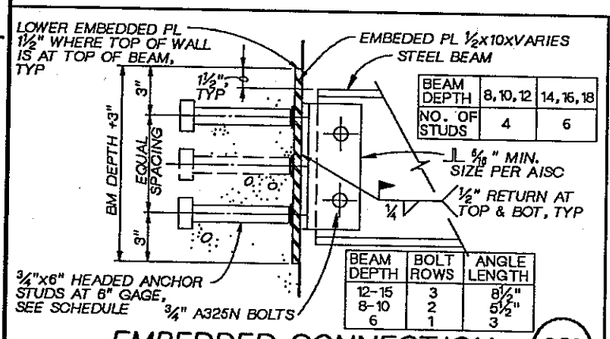

BEAM DEPTH	8, 10, 12	14, 16, 18
NO. OF STUDS	4	6

BEAM DEPTH	BOLT ROWS	ANGLE LENGTH
12-15	3	8½"
8-10	2	5½"
6	1	3

EMBEDDED CONNECTION
NTS

(256)

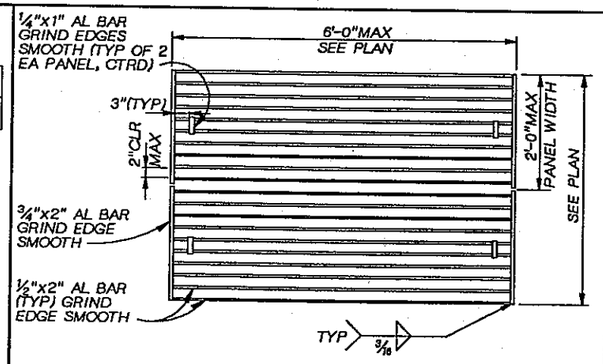

PLAN

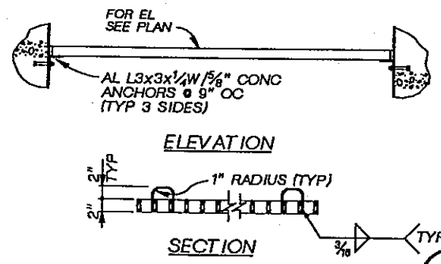

ELEVATION

SECTION

BAR RACK
NTS

(258)

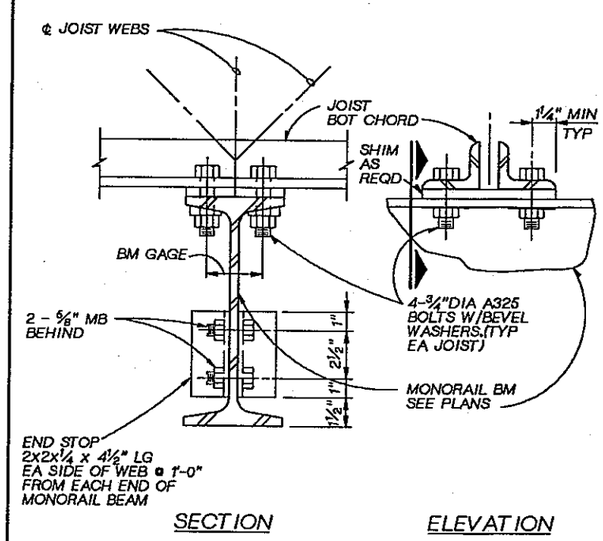

SECTION ELEVATION

MONORAIL BEAM DETAILS
NTS

(259)

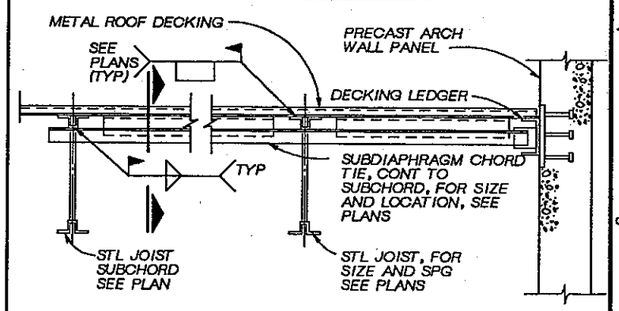

ELEVATION

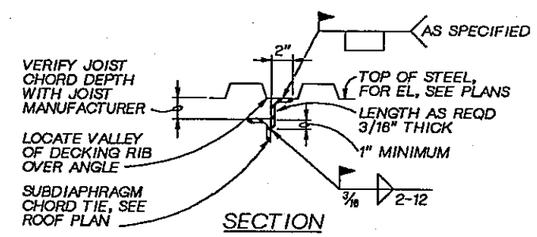

SECTION

SUBDIAPHRAGM CHORD TIE DETAIL
NTS

(262)

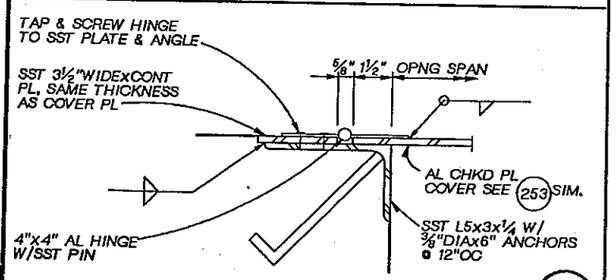

HINGE DETAIL
NTS

(257)

DSGN	L. KORBUS		
DR	B. LAZARO		
CHK	W. BENNETT		
APVD	J GAUTHIER	NO.	DATE

REVISION | BY | APVD

REUSE OF DOCUMENTS
THIS DOCUMENT, AND THE IDEAS AND DESIGNS INCORPORATED HEREIN, AS AN INSTRUMENT OF PROFESSIONAL SERVICE, IS THE PROPERTY OF CH2M HILL AND IS NOT TO BE USED, IN WHOLE OR IN PART, FOR ANY OTHER PROJECT WITHOUT THE WRITTEN AUTHORIZATION OF CH2M HILL.
©CH2M HILL

BAR IS ONE INCH ON ORIGINAL DRAWING. 0 — 1"
IF NOT ONE INCH ON THIS SHEET, ADJUST SCALES ACCORDINGLY.

CITY OF BELLINGHAM, WASHINGTON
POST POINT WASTEWATER TREATMENT PLANT UPGRADE

STANDARD DETAILS
STRUCTURAL STANDARD DETAILS

DWG NO. 800-S-8
DATE AUG. 1990
PROJ NO. SEA22462.C1

DRAWN BY: BBL DESIGNED BY: LMK
DGN NAME: H:/PROJ2/BELLINGH/BL800S-J.DGN

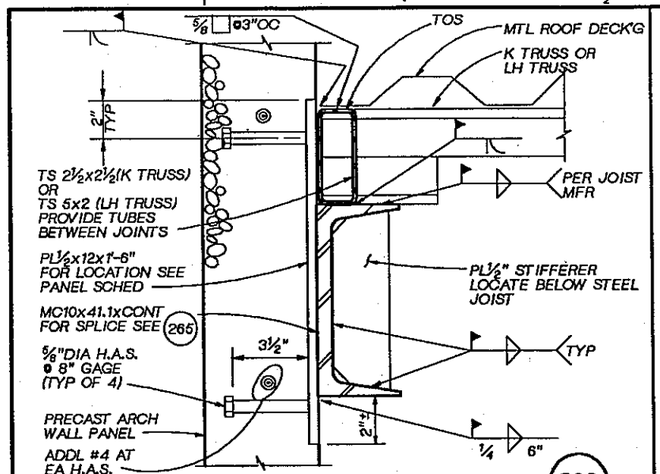

PRECAST PANEL/STEEL LEDGER (263)

3" = 1'-0"

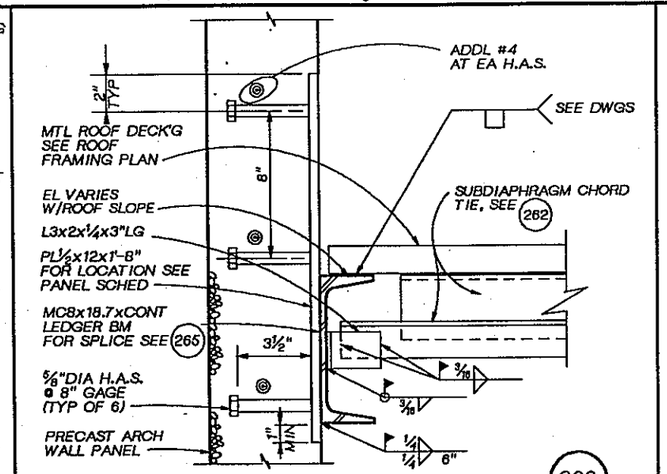

PRECAST PANEL/STEEL LEDGER (266)

3" = 1'-0"

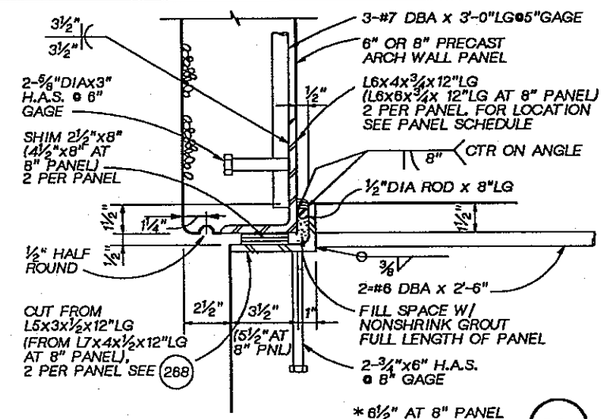

PRECAST PANEL BASE CONN (264)

3" = 1'-0"

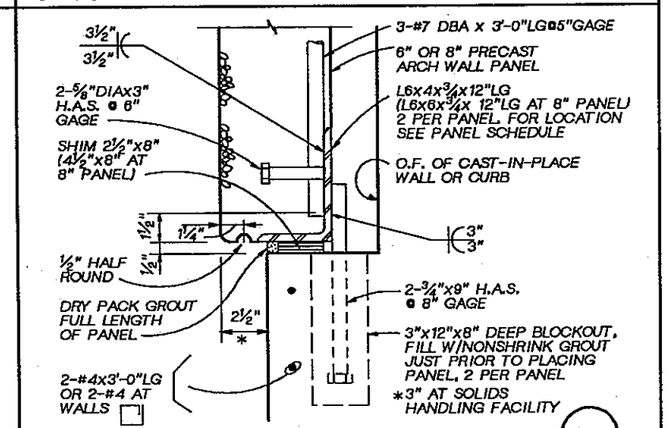

PANEL BASE SOCKET CONN (267)

3" = 1'-0"

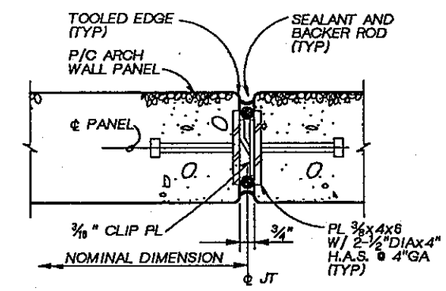

PANEL EDGE CONN

3" = 1'-0"

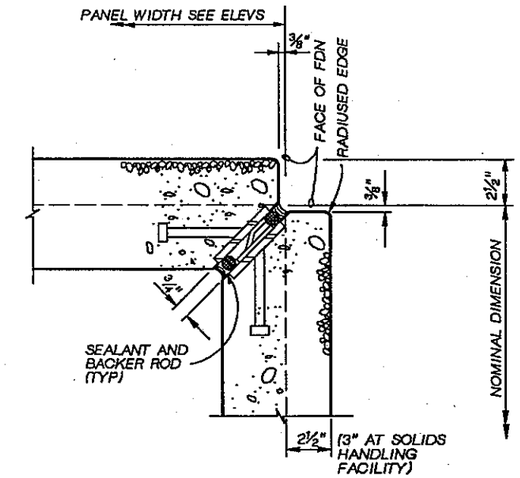

PANEL CORNER CONN

3" = 1'-0"

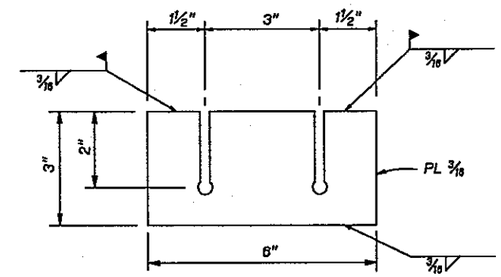

CLIP PLATE

½FULL SIZE

NOTES:

1. USE 3 CONNECTIONS, EQUALLY SPACED, PER PANEL JOINT UNLESS SHOWN OTHERWISE.
2. PANEL CONNECTION NOT REQUIRED WHEN PRECAST PANEL IS ADJACENT TO WOOD PANEL.
3. SHOP BEND AND WELD CLIP PLATE TO EMBEDDED PLATE. FIELD WELD 2" TAB TO EMBEDDED PLATE IN ADJACENT PANEL.

PANEL TO PANEL CONN DETAIL (269)

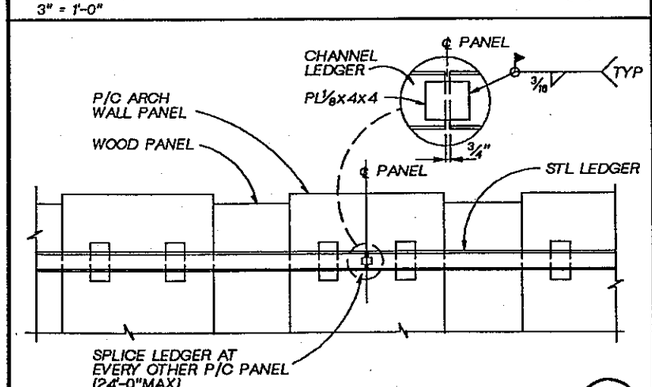

STEEL LEDGER SPLICE DETAIL (265)

NTS

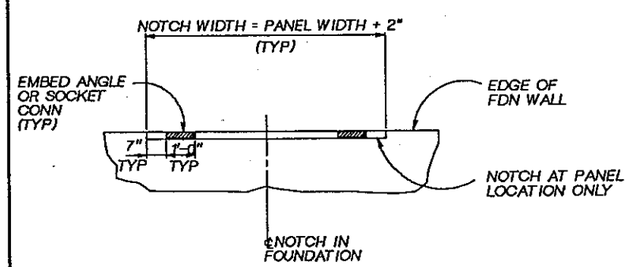

PLAN

NOTCH DETAIL (268)

NTS

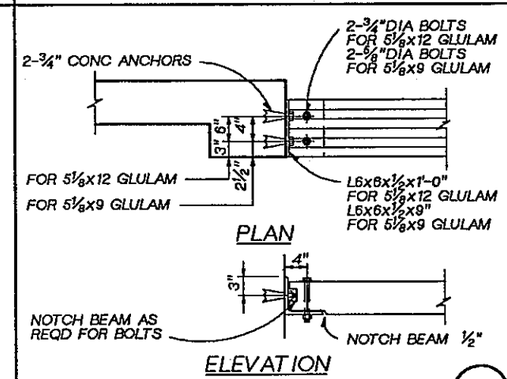

PLAN

ELEVATION

HEADER CONNECTION (270)

NTS

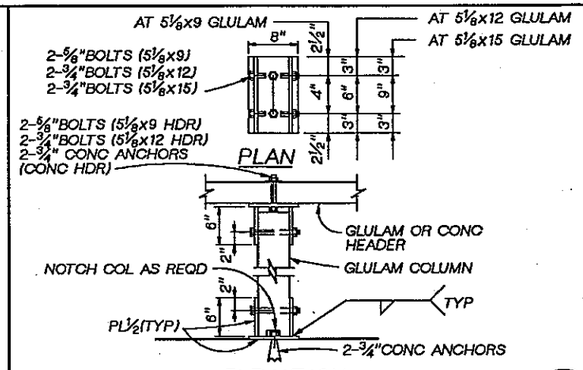

ELEVATION

GLULAM JAMB CONNECTION (271)

NTS

DSGN	L. KORBUS				
DR	B. LAZARO				
CHK	W. BENNETT				
APVD	J GAUTHIER	NO.	DATE	REVISION	BY / APVD

CHRM HILL

REUSE OF DOCUMENTS
THIS DOCUMENT, AND THE IDEAS AND DESIGNS INCORPORATED HEREIN, AS AN INSTRUMENT OF PROFESSIONAL SERVICE, IS THE PROPERTY OF CH2M HILL AND IS NOT TO BE USED, IN WHOLE OR IN PART, FOR ANY OTHER PROJECT WITHOUT THE WRITTEN AUTHORIZATION OF CH2M HILL.
©CH2M HILL

BAR IS ONE INCH ON ORIGINAL DRAWING. 0 1"
IF NOT ONE INCH ON THIS SHEET, ADJUST SCALES ACCORDINGLY.

CITY OF BELLINGHAM, WASHINGTON
POST POINT WASTEWATER TREATMENT PLANT UPGRADE

STANDARD DETAILS
STRUCTURAL STANDARD DETAILS

DWG NO. 800-S-10
DATE AUG. 1990
PROJ. NO. SEA22462.C1

DRAWN BY: BBL DESIGNED BY: LMK
DGN NAME: H:/PROJ2/BELLINGH/BL800S-K.DGN

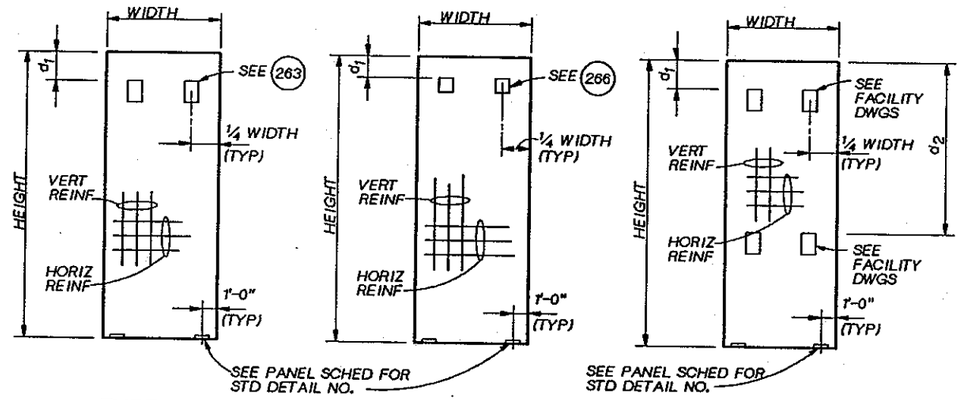

TYPE A TYPE B TYPE C

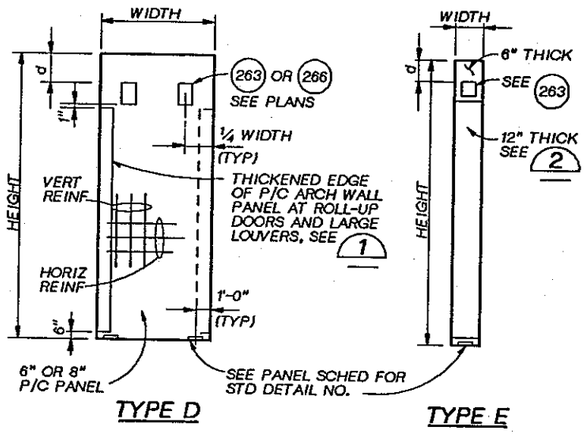

TYPE D TYPE E

PANEL
NTS

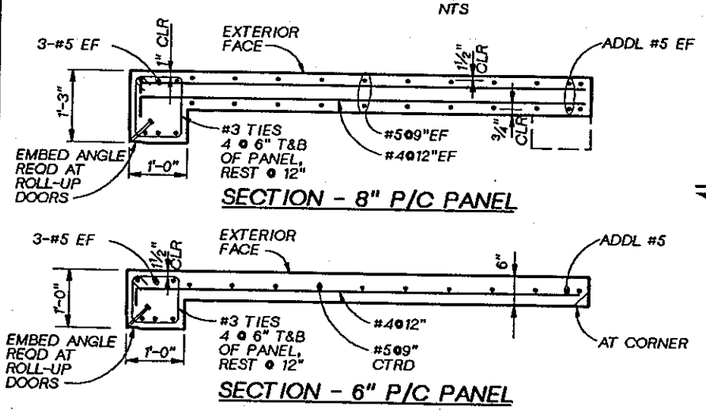

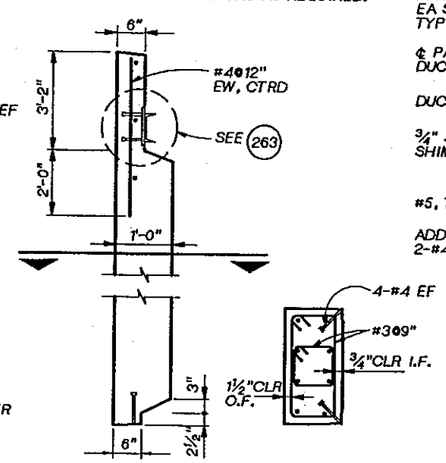

ELEVATION SECTION

DETAIL 1 ¾" = 1'-0" 800-S-12

DETAIL 2 ¾" = 1'-0" 800-S-12

TYPE C

NOTES:

1. FOR WIDTH AND HEIGHT OF PRECAST ARCH WALL PANELS SEE ARCH ELEVATIONS.
2. HORIZONTAL DIMENSIONS SHOWN ARE NOMINAL. ALLOW CLEARANCE FOR DOORS AND PANEL JOINTS.
3. VERTICAL DIMENSIONS SHOWN ARE ACTUAL.
4. REINFORCING FOR ALL 6" THICK PANELS SHALL BE #5@9" VERT AND #4@12" HORIZ CENTERED IN PANEL. PROVIDE 1 ADDL #5 @ EACH EDGE OF PANEL.
5. REINFORCING FOR ALL 8" THICK PANELS SHALL BE #5@9" EF VERT AND #4@12" EF HORIZ. PROVIDE 1 ADDL #5 EF @ EACH EDGE OF PANEL. FOR REINFORCEMENT CLEARANCES SEE 1
6. REINFORCING SHOWN IS FOR IN-PLACE LOADS ONLY. CONTRACTOR SHALL BE RESPONSIBLE TO ADD REINFORCING AS REQUIRED FOR INSERTS, LIFTING, AND HANDLING. USE STRONGBACKS AS REQUIRED.

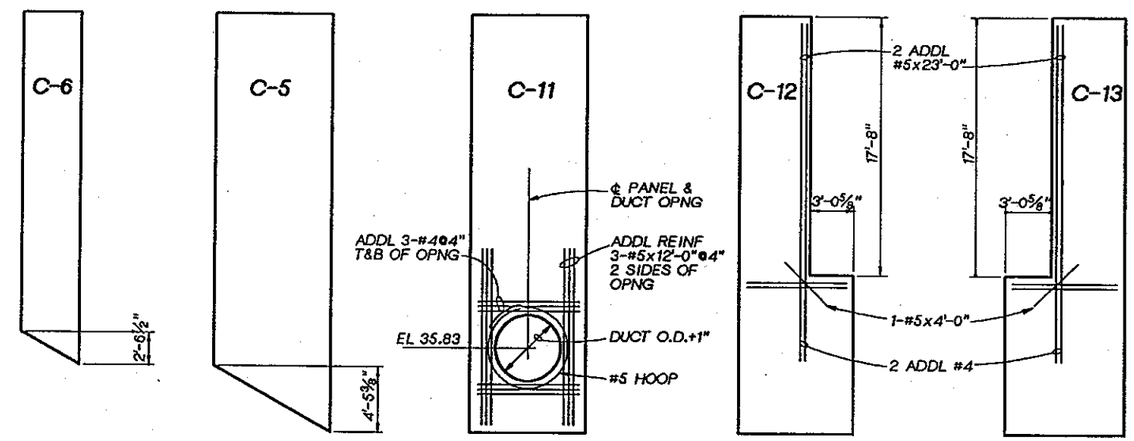

SCREENING FACILITY

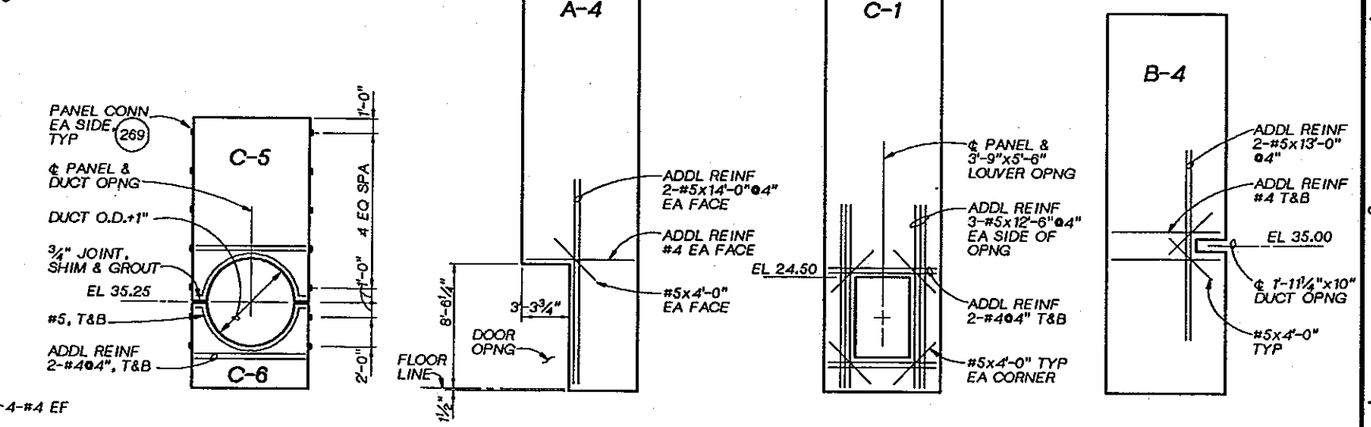

PRELIMINARY TREATMENT ODOR CONTROL

OXYGEN GENERATION FACILITY

SOLIDS HANDLING WEST

EMERGENCY GENERATION

DETAIL 3 NTS 800-S-12

DSGN L. KORBUS					
DR B. LAZARO					
CHK W. BENNETT					
APVD J GAUTHIER	NO.	DATE	REVISION	BY	APVD

CH2M HILL

REUSE OF DOCUMENTS
THIS DOCUMENT, AND THE IDEAS AND DESIGNS INCORPORATED HEREIN, AS AN INSTRUMENT OF PROFESSIONAL SERVICE, IS THE PROPERTY OF CH2M HILL AND IS NOT TO BE USED, IN WHOLE OR IN PART, FOR ANY OTHER PROJECT WITHOUT THE WRITTEN AUTHORIZATION OF CH2M HILL.
©CH2M HILL

BAR IS ONE INCH ON ORIGINAL DRAWING. 0 1"
IF NOT ONE INCH ON THIS SHEET, ADJUST SCALES ACCORDINGLY.

CITY OF BELLINGHAM, WASHINGTON
POST POINT WASTEWATER TREATMENT PLANT UPGRADE

STANDARD DETAILS
STRUCTURAL STANDARD DETAILS

DWG NO. 800-S-11
DATE AUG. 1990
PROJ. NO. SEA22462.C1

DRAWN BY: R. FRIBERG DESIGNED BY: M. JOHNSON
DGN NAME: H:/PROJ2/BELLINGH/BL800S-L.DGN

PANEL SCHEDULE

FACILITY	PANEL TYPE	THICKNESS	d		PANEL BASE CONN	REMARKS
			d_1	d_2		
110 - SCREENINGS FACILITY	C-1	6"	1'-2"	0	267	
	C-2	6"	1'-2"	0	267	CORNER PANEL
	C-3	6"	1'-2"	15'-1"	267	
	C-4	6"	1'-2"	15'-1"	267	CORNER PANEL
	C-5	6"	1'-2"	0	267	SEE DET 3
	C-6	6"	1'-2"	0	267	SEE DET 3
	C-7	6"	4"	0	267	
	C-8	6"	1'-2"	11'-1"	267	CORNER PANEL
	C-9	6"	1'-2"	11'-1"	267	
	C-10	6"	1'-2"	0	267	FOR TOP 6 CONN SEE 110-S-9
	C-11	6"	1'-2"	15'-1"	267	CORNER PANEL, SEE DETAIL 3
	C-12	6"	1'-2"	0	267	SEE DET 3
	C-13	6"	1'-2"	0	267	SEE DET 3
130 - PRELIMINARY TREATMENT ODOR CONTROL	C-1	6"	2'-10"	0	267	
	C-2	6"	2'-10"	0	267	CORNER PANEL
	C-3	6"	3'-4"	0	267	
	C-4	6"	3'-4"	0	267	CORNER PANEL
	C-5	6"	2'-10"	0		SEE DET 3
	C-6	6"	0	0	267	SEE DET 3
320 - OXYGEN GENERATION FACILITY	A-1	8"	1'-8"		264	
	A-2	8"	1'-8"		264	CORNER PANEL
	A-3	8"	1'-8"		267	
	A-4	8"	1'-8"		264	SEE DET 3
	B-1	8"	1'-1"		264	
	B-2	8"	1'-1"		264	CORNER PANEL
	D	8"	1'-1"		264	SEE DET 1
340 - SECONDARY SLUDGE PUMP STATION	A-1	6"	2'-7"		264	
	A-2	6"	2'-7"		264	CORNER PANEL
	A-3	6"	2'-7"		267	
	A-4	6"	2'-7"		267	CORNER PANEL
	B-1	6"	2'-1"		264	
	B-2	6"	2'-1"		264	CORNER PANEL
	B-3	6"	2'-1"		267	CORNER PANEL
	D-1	6"	2'-1"		267	SEE DET 1
	D-2	6"	2'-1"		264	CORNER PANEL, SEE DET 1
420 - SCRUBBER BUILDING	A-1	6"	10"		264	
	A-2	6"	10"		264	CORNER PANEL
	A-3	6"	10"		267	
	A-4	6"	10"		267	CORNER PANEL
	A-5	6"	1'-3"		267	
	A-6	6"	1'-3"		267	CORNER PANEL
	B-1	6"	10"		264	CORNER PANEL
	B-2	6"	10"		267	CORNER PANEL

PANEL SCHEDULE

FACILITY	PANEL TYPE	THICKNESS	d		PANEL BASE CONN	REMARKS
			d_1	d_2		
520 WEST ADDITION SOLIDS HANDLING FACILITY	C-1	6"	1'-11½"	14'-1"		SEE FACILITY DWGS FOR BASE CONNECTION
	C-2	6"	1'-5½"	14'-1"		CORNER PANEL, SEE FACILITY DWGS FOR BASE CONNECTION
	C-3	6"	1'-11½"	14'-1"	267	
	C-4	6"	1'-11½"	14'-1"	267	CORNER PANEL
	C-5	6"	1'-5½"	14'-1"	267	
	C-6	6"	1'-5½"	14'-1"	267	CORNER PANEL
	C-7	6"	1'-5½"	14'-1"		SEE FACILITY DWGS FOR BASE CONNECTION
	C-8	6"	1'-5"	12'-8"	264	CORNER PANEL
	C-9	6"	1'-5"	12'-8"	264	
	C-10	6"	1'-0½"	12'-8"	264	CORNER PANEL
	C-11	6"	1'-0½"	12'-8"	264	
	C-12	6"	1'-0½"	12'-8"	264	CORNER PANEL, SEE DET 3
	C-13	6"	1'-0½"	12'-8"	264	
	C-14	6"	1'-0½"	12'-8"	264	CORNER PANEL
530 EAST ADDITION SOLIDS HANDLING FACILITY	C-15	6"	2'-3"	19'-10"	267	
	C-16	6"	2'-3"	19'-10"	267	CORNER PANEL
	C-17	6"	1'-9"	19'-10"	267	
	C-18	6"	1'-9"	19'-10"	267	CORNER PANEL
	C-19	6"	2'-3"	19'-10"		SEE FACILITY DWGS FOR BASE CONNECTION
	C-20	6"	2'-3"	19'-10"		SEE FACILITY DWGS FOR BASE CONNECTION,BLOCKOUT
710 ADMINISTRATION / LABORATORY BUILDING	SEE 710 DRAWINGS					
730 - STORAGE BUILDING	A-1	6"	2'-2"		264	
	A-2	6"	2'-2"		264	CORNER PANEL
	B-1	6"	1'-9"		264	
	B-2	6"	1'-9"		264	CORNER PANEL
	D	6"	2'-2"		264	SEE DET 1
	E	2	2'-2"		267	
740 - EMERGENCY GENERATOR BUILDING	A	8"	2'-1½"		264	CORNER PANEL
	B-1	8"	1'-7½"		264	
	B-2	8"	1'-7½"		264	CORNER PANEL
	B-3	8"	1'-7½"		264	BLOCKOUT
	B-4	8"	1'-7½"		264	SEE DET 3
	D-1	8"	2'-1½"		264	SEE DET 1
	D-2	8"	2'-1½"		264	CORNER PANEL, SEE DET 1

NOTES:

1. FOR PANEL TYPE & DETAILS SEE DWG 800-S-11.
2. FOR PANEL TO PANEL CONN SEE 269

DSGN M. JOHNSON
DR R. FRIBERG
CHK W. BENNETT
APVD J. GAUTHIER

NO.	DATE	REVISION	BY	APVD

REUSE OF DOCUMENTS
THIS DOCUMENT, AND THE IDEAS AND DESIGNS INCORPORATED HEREIN, AS AN INSTRUMENT OF PROFESSIONAL SERVICE, IS THE PROPERTY OF CH2M HILL AND IS NOT TO BE USED, IN WHOLE OR IN PART, FOR ANY OTHER PROJECT WITHOUT THE WRITTEN AUTHORIZATION OF CH2M HILL.
©CH2M HILL

BAR IS ONE INCH ON ORIGINAL DRAWING.
0 1"
IF NOT ONE INCH ON THIS SHEET, ADJUST SCALES ACCORDINGLY.

CITY OF BELLINGHAM, WASHINGTON
POST POINT WASTEWATER TREATMENT PLANT UPGRADE

STANDARD DETAILS
STRUCTURAL STANDARD DETAILS

DWG NO. 800-S-12
DATE AUG. 1990
PROJ. NO. SEA22462.C1

DATE: 8-23-90
DRAWN BY: L. WILCOX DESIGNED BY:
DGN NAME: H:/PROJ2/BELLINGH/BL800S-M.DGN

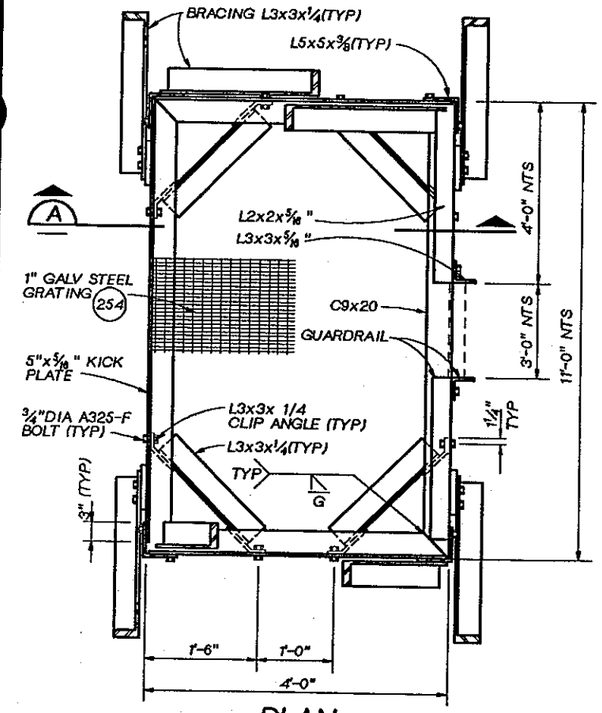

PLAN
1" = 1'-0"

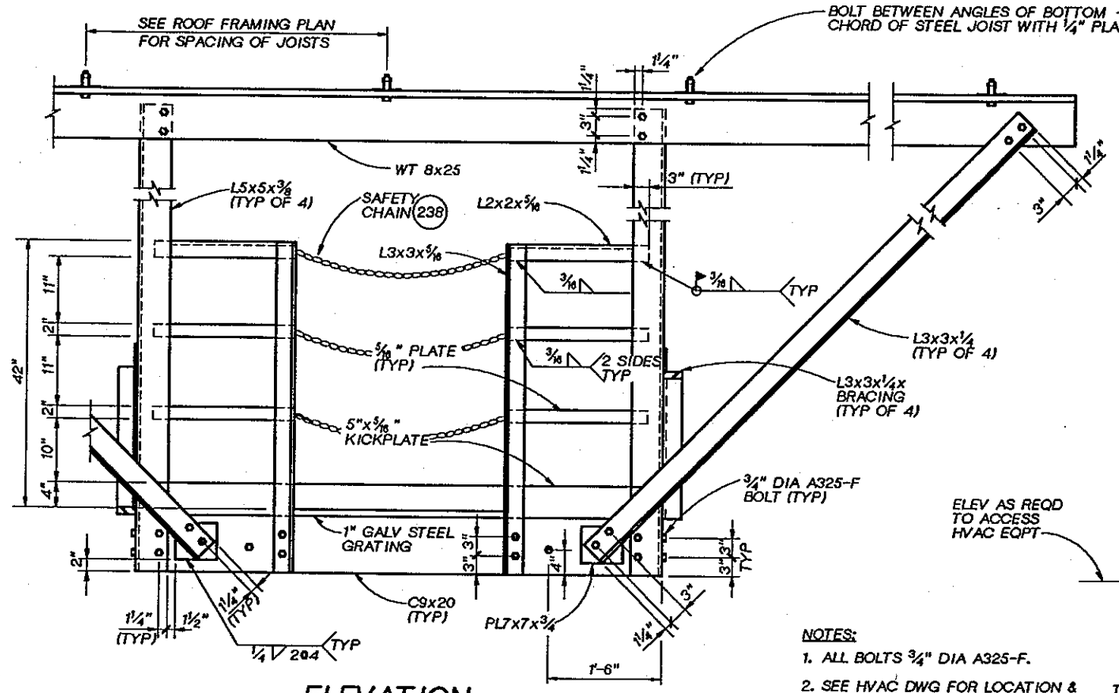

ELEVATION
1" = 1'-0"

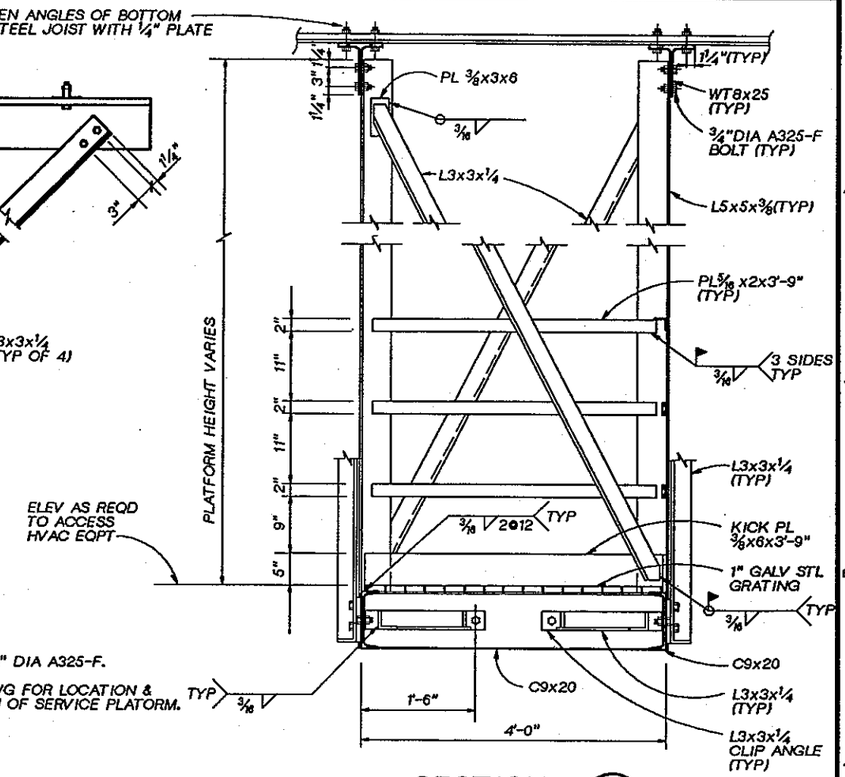

NOTES:
1. ALL BOLTS ¾" DIA A325-F.
2. SEE HVAC DWG FOR LOCATION & ORIENTATION OF SERVICE PLATORM.

SECTION A
1" = 1'-0"

SERVICE PLATFORM DETAIL (272)

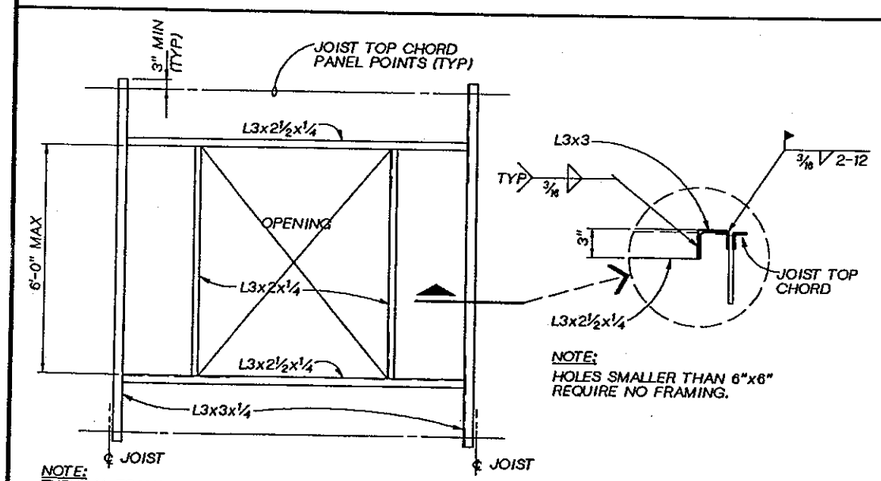

NOTE:
HOLES SMALLER THAN 6"x6" REQUIRE NO FRAMING.

NOTE:
TYPYCAL FRAMING AT OPNGS IN METAL ROOF DECK (MAX LOAD= 600#) SEE MECH OR ARCH FOR SIZE.

ROOF PENETRATION (273)
NTS

DSGN	M. JOHNSON				
DR	B. LAZARO				
CHK	W. BENNETT				
APVD	J GAUTHIER	NO.	DATE	REVISION	BY / APVD

CH2M HILL

REUSE OF DOCUMENTS
THIS DOCUMENT, AND THE IDEAS AND DESIGNS INCORPORATED HEREIN, AS AN INSTRUMENT OF PROFESSIONAL SERVICE, IS THE PROPERTY OF CH2M HILL AND IS NOT TO BE USED, IN WHOLE OR IN PART, FOR ANY OTHER PROJECT WITHOUT THE WRITTEN AUTHORIZATION OF CH2M HILL.
©CH2M HILL

BAR IS ONE INCH ON ORIGINAL DRAWING.
0 1"
IF NOT ONE INCH ON THIS SHEET, ADJUST SCALES ACCORDINGLY.

CITY OF BELLINGHAM, WASHINGTON
POST POINT WASTEWATER TREATMENT PLANT UPGRADE

STANDARD DETAILS
STRUCTURAL STANDARD DETAILS

DWG NO. 800-S-13
DATE AUG. 1990
PROJ NO. SEA22462.C1

DRAWN BY: C. HOWELL DESIGNED BY: M. HIGHTREE
DGN NAME: H:/PROJ2/BELLINGH/BL800M-A.DGN

LEGEND	SERVICE	SIZE (INCHES) (NOTE 2)	SPEC SECT NO. NOTE 10	INSTL NOTE 11	TEST PRESS & TYPE NOTE 5	COLOR BAND NOTE 3	MANUAL VALVES (NOTE 4)	REMARKS
ACID	SULFURIC ACID	2" & SMALLER	-28	A	100-H	SYW	V341,V631	
AHP	AIR, HIGH PRESSURE PROCESS	2" & SMALLER 3" & LARGER ALL	-05 -05 -13	I,O I,O S,E	200-P 200-P 200-P	SGN	V300 V510,V612	INSULATE WHERE SHOWN PER SPEC 15060
AI	AIR, INSTRUMENT	2" & SMALLER 3" & LARGER 2" & SMALLER	-17 -05 -13	I,O I,O S	200-P 200-P 200-P	SPL	V300,V302,V600 V510,V612 V307	SUBMERGED INCLUDES PIPE BELOW SCREENINGS BUILDING FLOOR
ALB	AIR, LABORATORY	2" & SMALLER	-17	I	200-P	DGN	V300,V302	
ALP	AIR, LOW PRESSURE PROCESS	2" & SMALLER 3" & LARGER 2" & SMALLER 3" & LARGER	-13 -13 -05 -05	S,E S,E I,O I,O	50-P 50-P 50-P 50-P	SGN	V510 V300 V510,V612	
AP	AIR, PURGE	2" TO 6"	-13	I,O,E	50-P	SRD	V510	FLANGED TO EQUIPMENT & VALVES
AS	AIR, SERVICE	2" & SMALLER	-17	I,O	200-P	SPL	V300,V302	
BS	BLENDED SLUDGE	4" & LARGER	-02	I	150-H	DBN	V405	ALL ELBOWS SHALL BE LONG RADIUS
CG	CHLORINE GAS, PRESSURE	3" & SMALLER	-04	I	300-P	SYW	V310	SEE NOTE 6
CGE	CHLORINE GAS, EXHAUST	ALL	-16	I,O	5-P	SYW	——	
CGV	CHLORINE GAS, VACUUM	4" & SMALLER	-14	I	50-P	SYW	V330,V630	
CRD	CHEMICAL RESISTANT DRAIN	ALL	-25	A	SEE REMARKS	BK	——	TEST IN ACCORDANCE WITH UPC FOR DRAINS
CRV	CHEMICAL RESISTANT VENT	ALL	-25	A	SEE REMARKS	BK	——	TEST IN ACCORDANCE WITH UPC FOR DRAINS
CSZ	CHLORINE SOLUTION	8" & SMALLER	-14	A	100-H	SYW	V330,V630	SEE NOTE 13
CSM	CHLORINE SCUM	4" & SMALLER	-03	A	150-H	LBN		SEE NOTE 7 FOR BURIED
CWR	COLD WATER RETURN	2" & SMALLER 2½" & LARGER	-05 -05	I I	125-H 125-H	SBU	V300,V470,V600 V472,V502,V608	INSULATE ALL LOCATIONS INSULATE ALL LOCATIONS
CWS	COLD WATER SUPPLY	2" & SMALLER 2½" & LARGER	-05 -05	I I	125-H 125-H	SBU	V300,V470,V600 V472,V502,V608	INSULATE ALL LOCATIONS INSULATE ALL LOCATIONS
D	DRAIN, PLUMBING	8" & SMALLER	-25	A	SEE REMARKS	BK	——	MATERIAL, INSTALLATION & TESTING PER UPC
DIW	DEIONIZED WATER	1½" & SMALLER	-15	A	SEE REMARKS	SGN	V335	TEST IN ACCORDANCE WITH UPC FOR WATER SUPPLY PIPING AT MIN 125-H
DS	DEWATERED SLUDGE	4" & LARGER	-04	I	500-H	DBN	V343	USE 300 POUND FITTINGS
EE	ENGINE EXHAUST	ALL	-06	I,O	5-P	——	——	INSULATE WHERE SHOWN PER SPEC 11500
EI	EXHAUST, INCINERATOR	ALL	11397	A	5-P	——	SEE REMARKS	PIPE & VALVES PER SPEC 11397
FOR	FUEL OIL RETURN	2" & SMALLER	-13	I,O,B	150-H	SOG	SEE REMARKS	VALVES PER SPEC 15605; FOR BURIED PIPE MODIFICATIONS, SEE 15605
FOS	FUEL OIL SUPPLY	2" & SMALLER	-13	I,O,B	150-H	SOG	SEE REMARKS	VALVES PER SPEC 15605; FOR BURIED PIPE MODIFICATIONS, SEE 15605
FS	FIRE SPRINKLER	2" & SMALLER 3" & LARGER	-05 -05	I I	200-H 200-H	SRD	V140,V640 V142,V640	SPRINKLER SYSTEMS TO BE PROVIDED AS SPECIFIED IN 15330
FW	FIRE WATER	12" & SMALLER	-02	B,E	250-H	——	V504	SEE NOTE 7 FOR BURIED; HYDRANTS PROVIDED PER 15119, SEE NOTE 12
G	GRIT	4" & LARGER	-03	I	50-H	DBN	——	
GOX	GASEOUS OXYGEN	ALL	-04 -13	I O,B,E	20-P 20-P	SRD	SEE NOTE 8	FLANGED TO EQUIPMENT & VALVES; SEE NOTE 9; TEST OF PIPING ON OXYGEN ACTIVATED SLUDGE BASIN PER SPEC P33
HOR	HYDRAULIC OIL RETURN	2" & SMALLER	-13	I	SEE REMARKS	SOG	SEE REMARKS	PRESSURE TEST AT 1.5 TIMES THE NORMAL OPERATING PRESSURE. VALVES SHALL BE AS RECOMMENDED BY EQPT MFR & SUITED FOR TEST PRESSURE.
HOS	HYDRAULIC OIL SUPPLY	2" & SMALLER	-13	I	SEE REMARKS	SOG	SEE REMARKS	PRESSURE TEST AT 1.5 TIMES THE NORMAL OPERATING PRESSURE. VALVES SHALL BE AS RECOMMENDED BY EQPT MFR & SUITED FOR TEST PRESSURE.
HP	HYDROGEN PEROXIDE	2" & SMALLER	-27	I,O	150-H	SYW	V337,V631	SEE NOTE 6

LEGEND	SERVICE	SIZE (INCHES) (NOTE 2)	SPEC SECT NO. NOTE 10	INSTL NOTE 11	TEST PRESS & TYPE NOTE 5	COLOR BAND NOTE 3	MANUAL VALVES (NOTE 4)	REMARKS
HW	HOT WATER, POTABLE	2" & SMALLER	-17	I,C	SEE REMARKS	SOG	V300,V470,V600	INSULATE ALL LOCATIONS; TEST IN ACCORDANCE WITH UPC AT MIN 125-H
HWR	HEATING WATER RETURN	2½" & SMALLER 3" & LARGER	15505 15505	I,C I,C	100-H 100-H	SOG	V100,V300,V600 V110,V502,V608	INSULATE ALL LOCATIONS INSULATE ALL LOCATIONS
HWS	HEATING WATER SUPPLY	2½" & SMALLER 3" & LARGER	15505 15505	I,C I,C	100-H 100-H	SOG	V100,V300,V600 V110,V502,V608	INSULATE ALL LOCATIONS INSULATE ALL LOCATIONS
LOR	LUBE OIL RETURN	2" & SMALLER	-05	I	50-H	SOG	V300,V600	
LOS	LUBE OIL SUPPLY	2" & SMALLER	-05	I	50-H	SOG	V300,V600	
LOX	LIQUID OXYGEN	2" & SMALLER	-17	O	190-P	SRD	SEE NOTE 8	INSULATED & SUPPLIED BY OXYGEN SYSTEM SUPPLIER; THREADED FITTINGS; SEE NOTES 6, 9, 13.
ML	MIXED LIQUOR	36" & LARGER 36" & LARGER	-20 -06	B E	G G	LBN	V915 (DRAIN ONLY)	COAL TAR EPOXY COATING INSIDE & OUTSIDE FOR -06 PIPE
N	NITROGEN GAS	12" & SMALLER 14" & LARGER	-05 -06	I,O I,O	100-P 100-P	SRD SRD	V502 V502	
NG	NATURAL GAS	2" & SMALLER 3" & LARGER	-04 -04	I,O I,O,B,E	250-P 250-P	SGN	V466	FLANGED TO EQUIPMENT & VALVES; SEE NOTE 6; SEE NOTE 7 FOR BURIED
OA	ODOROUS AIR	ALL ALL	15890 -03	I,O B	REMARKS 5-H	LGN	V307 (DRAIN) V307 (DRAIN)	SEE 15890 FOR EXECUTION SEE NOTE 7 FOR BURIED
OO	OVERFLOW OUTFALL	30"	-20	B	G	——	——	
PD	PLANT, PROCESS, & OVERFLOW DRAINS	3" & SMALLER 4" & LARGER	-13 -02	I,B,E I,B,E	SEE REMARKS	BK	V307,V400 V405,V608	TEST PUMP DISCHARGE LINES AT 50-H, ALL OTHERS TO BE G; SEE NOTE 7 FOR BURIED
PE	PRIMARY EFFLUENT	12" & SMALLER 16" & LARGER 60"	-05 -06 -20	I I B	30-H 30-H G	GY	V120,V612	COAL TAR EPOXY LINED COAL TAR EPOXY LINED
PED	PRIMARY EFFLUENT DIVERSION	36"	-20	B	G	——	——	
PO Z	POLYMER SOLUTION	4" & SMALLER	-14	I	150-H	WT	V331,V630	SEE NOTE 13
PS	PRIMARY SLUDGE	6" & SMALLER	-03	I,B	150-H	DBN	V407,V632	SEE NOTE 7 FOR BURIED; SEE NOTE 12
PSM	PRIMARY SCUM	6" & SMALLER	-03	I,O,B,E	150-H	LBN	V407,V632	SEE NOTE 7 FOR BURIED; SEE NOTE 12
RAS	RETURN ACTIVATED SLUDGE	16" & LARGER 16" & LARGER	-06 -02	I B,E	100-H G	LBN	V500, V502,V608	COAL TAR EPOXY LINED; SEE NOTE 7 FOR BURIED
RD	ROOF DRAIN	8" & SMALLER	-25	I	SEE REMARKS	BK	——	INSULATE ALL INTERIOR LOCATIONS. MATERIAL, INSTALLATION & TESTING PER UPC.
RS	RAW SEWAGE	6" & LARGER	-02	I,B	50-H	GY	V405,V608,V915 (DRAIN ONLY)	SEE NOTE 7 FOR BURIED
SA	SAMPLE	4" & SMALLER	-13	I,O	50-H	SEE RMKS	V400,V925	COLOR BANDS SAME AS PIPE BEING SAMPLED
SBD	SCRUBBER BLOWDOWN	2" & SMALLER	-15	I,O	100-H	SYW	V241,V335	
SD	STORM DRAIN	24" & SMALLER	2724	B,E	G	——	——	
SE	SECONDARY EFFLUENT	LESS THAN 24" 24" & LARGER	-02 -20	B,I B	G G	GY	V502	
SEP	SEPTAGE	4" & LARGER	-02	I,S	50-H	BK	V405,V608,V692	
SG	SANITARY SEWER (GRAVITY)	4" & LARGER	-02	B	G	——	——	TEST PER UPC; SEE NOTE 7 FOR BURIED
SH	SODIUM HYDROXIDE	2" & SMALLER	-15	I,O	150-H	SYW	V335,V631	HEAT TRACE AND INSULATE PER SPEC 15060 WHERE OUTSIDE; FLANGED TO EQUIPMENT & VALVES; SEE NOTE 6
SM	SCUM (COMBINED)	4" & LARGER	-03	I,B	100-H	LBN	——	SEE NOTE 7 FOR BURIED; SEE NOTE 12
SPD	SUMP PUMP DISCHARGE	3" & SMALLER 4" & LARGER	-14 -02	I I	100-H 100-H	BK	V110,V600 FOR ≤ 2",V120 FOR 3" V120,V608	USE -13 PIPE AT PUMPS, AS SHOWN

JOSEPH A. GAUTHIER REGISTERED PROFESSIONAL ENGINEER

CH2M HILL

DSGN M. HIGHTREE
DR A. MCRILL
CHK M. BRACKEN
APVD J. GAUTHIER

NO.	DATE	REVISION	BY	APVD

REUSE OF DOCUMENTS
THIS DOCUMENT, AND THE IDEAS AND DESIGNS INCORPORATED HEREIN, AS AN INSTRUMENT OF PROFESSIONAL SERVICE, IS THE PROPERTY OF CH2M HILL AND IS NOT TO BE USED, IN WHOLE OR IN PART, FOR ANY OTHER PROJECT WITHOUT THE WRITTEN AUTHORIZATION OF CH2M HILL.
©CH2M HILL

VERIFY SCALE
BAR IS ONE INCH ON ORIGINAL DRAWING.
0 1"
IF NOT ONE INCH ON THIS SHEET, ADJUST SCALES ACCORDINGLY.

CITY OF BELLINGHAM, WASHINGTON
POST POINT WASTEWATER TREATMENT PLANT UPGRADE

STANDARD DETAILS
PIPING AND VALVE SCHEDULE

DWG NO. 800-M-1
DATE AUG. 1990
PROJ NO. SEA22462.C1

DRAWN BY: M. MOORE DESIGNED BY: M. HIGHTREE
DGN NAME: H:/PROJ2/BELLINGH/BL800M-B.DGN

LEGEND	SERVICE	SIZE (INCHES) (NOTE 2)	SPEC SECT NO. NOTE 10	INSTL NOTE 11	TEST PRESS & TYPE NOTE 5	COLOR BAND NOTE 3	MANUAL VALVES (NOTE 4)	REMARKS
SR	SCRUBBER RECIRCULATION	8" & SMALLER	-15	I,O	100-H	SYW	V330,V520,V630	INSULATE & HEAT TRACE PER SPEC 15060 WHERE OUTDOORS
SSM	SECONDARY SCUM	4" & LARGER	-03	I,B	150-H	LBN	V405,V608	SEE NOTE 7 FOR BURIED; SEE NOTE 12
TWAS	THICKENED WASTE ACTIVATED SLUDGE	4" TO 12"	-03	I	150-H	DBN	V405	
V	VENT, PLUMBING	6" SMALLER	-25	I,O,B,E	SEE REMARKS	BK	——	MATERIAL, INSTALLATION, AND TESTING PER UPC FOR VENTS
VAC	VACUUM	2" & SMALLER	-17	I,C	100-P	SPL	V300	
W1	WATER, CITY POTABLE	3" & SMALLER 4" & LARGER 4" & LARGER	-17 -02 -02	I,C,B I,C B,E	SEE REMARKS	LBU	V300,V600 FOR ≤ 2", V120 FOR 3" V502,V612 V504	HEAT TRACE AND INSULATE PER SPEC 15060 WHERE OUTSIDE; TEST IN ACCORDANCE WITH UPC FOR WATER SUPPLY PIPING AT 250-H MIN; SEE NOTE 7 FOR BURIED; SEE NOTE 12
W2	WATER, CITY NONPOTABLE	3" & SMALLER 3" & SMALLER 4" & LARGER	-14 -05 -02	I,C,B O I,C,O	175-H	BN	V200,V300,V600 FOR ≤ 2", V120 FOR 3" V502,V612	HEAT TRACE & INSULATE PER SPEC 15060 WHERE OUTSIDE; PIPE AT W2 PUMPS TO BE -05.
W3	WATER, PLANT EFFLUENT LOW PRESSURE	3" & SMALLER 4" & LARGER 4" & LARGER	-14 -02 -02	I,C,B I,C,O B,E	250-H 250-H 250-H	GY	V300,V600 FOR ≤ 2", V120 FOR 3" V502,V612 V504	HEAT TRACE & INSULATE PER SPEC 15060 WHERE OUTSIDE; SEE NOTE 7 FOR BURIED; SEE NOTE 12
W4	WATER, PLANT EFFLUENT HIGH PRESSURE	3" & SMALLER 4" & LARGER	-04 -02 -02	I,C,B I,C,O B,E	250-H 250-H 250-H	GY	V300,V600 FOR ≤ 2", V120 FOR 3" V502,V612 V504	HEAT TRACE & INSULATE PER SPEC 15060 WHERE OUTSIDE SEE NOTE 14; SEE NOTE 7 FOR BURIED; SEE NOTE 12
W5	WATER, PLANT EFFLUENT BELT WASH	3" & SMALLER	-05	I	150-H	GY	V300,V600 FOR ≤ 2", V120 FOR 3"	
WAS	WASTE ACTIVATED SLUDGE	18" & SMALLER	-02	B,E,I	100-H	DBN	V405,V608	SEE NOTE 7 FOR BURIED; SEE NOTE 12; ALL ELBOWS SHALL BE LONG RADIUS
XSM	CONCENTRATED SCUM	2" & 3" 4" & LARGER	-05 -03	I I	150-H 150-H	LBN	V400 V405	GLASS LINE THE -05 PIPE. ALL ELBOWS SHALL BE LONG RADIUS

NOTES:

1. PIPING AND VALVE SCHEDULE APPLIES TO PROCESS PIPING, SITE DRAINAGE PIPING, AND BUILDING SERVICE PIPING. SCHEDULE IS GENERAL, AND MAY BE SUPERCEDED WHERE SPECIFICALLY NOTED ON THE DRAWINGS.
2. PIPE SIZES FOR EACH SERVICE ARE SHOWN ON THE DRAWINGS.
3. PIPE, VALVES, AND APPURTENANCES SHALL BE ALL ONE COLOR, PAINTED IN ACCORDANCE WITH SECTION 09900, PAINTING. PIPING SHALL BE IDENTIFIED BY FLOW STREAM PIPE LABELS AND COLOR BANDS AS SPECIFIED IN SECTION 10400, IDENTIFYING DEVICES AND SIGNAGE. COLORS SHOWN ARE DEFINED AS FOLLOWS:
   - BK BLACK
   - BN BROWN
   - DBN DARK BROWN
   - DGN DARK GREEN
   - GY GRAY
   - LBN LIGHT BROWN
   - LGN LIGHT GREEN
   - SBU SAFETY BLUE
   - SGN SAFETY GREEN
   - SOG SAFETY ORANGE
   - SPL SAFETY PURPLE
   - SRD SAFETY RED
   - SYW SAFETY YELLOW
   - WT WHITE
4. VALVE TYPES SHOWN HERE SHALL BE USED IN THE SERVICE SHOWN UNLESS SPECIFICALLY NOTED OTHERWISE ON THE DRAWINGS. VALVE NUMBERS CORRESPOND TO THE FOLLOWING TYPES OF VALVES PER SECTION 15101; SELF CONTAINED VALVE TYPES ARE NOT IDENTIFIED IN THIS SCHEDULE.
   - 100-199 GATE
   - 200-299 GLOBE AND ANGLE
   - 300-399 BALL
   - 400-499 PLUG
   - 500-599 BUTTERFLY
   - 600-699 CHECK
   - 700-799 SELF CONTAINED
   - 800-899 HOSE VALVES AND HYDRANTS
   - 900-999 MISCELLANEOUS
5. TEST PER SPECIFICATION SECTION 15060 EXCEPT AS NOTED. TEST COLUMN ARRANGED AS "XXX-Y", WHERE XXX= TEST PRESSURE IN PSIG UNLESS OTHERWISE NOTED, AND Y= TEST METHOD, WHERE
   - G = GRAVITY SYSTEMS
   - H = HYDROSTATIC TEST
   - P = PNEUMATIC TEST

   PRESSURE IS NOT SHOWN FOR GRAVITY SYSTEMS. TEST AS SPECIFIED IN 15060.
6. PIPE SHALL BE LABELED WITH HAZARD SIGNAL SYSTEM AS SPECIFIED IN SECTION 10400 AT 15 FEET ON CENTER.
7. BURIED PIPING SHALL BE PROTECTED FROM CORROSION PER SECTION 15060. BURIED PIPE SHALL BE TAPE WRAPPED IN ACCORDANCE WITH SECTION 15060. DUCTILE IRON PIPE JOINTS SHALL BE BONDED IN IN ACCORDANCE WITH SECTION 13900 AND (390) AND (391). ALL BURIED PIPE SHALL BE CATHODICALLY PROTECTED IN ACCORDANCE WITH SECTION 13800 AND (392) AND (393), AND FLUSH MOUNTED TEST STATIONS SHALL BE LOCATED WHERE SHOWN, PER (396).
8. LOX AND GOX VALVES ARE TO BE AS REQUIRED AND FURNISHED BY THE SUPPLIER OF THE OXYGEN GENERATION DISSOLUTION SYSTEMS.
9. LOX AND GOX PIPING SHALL BE AS SPECIFIED, OR AS REQUIRED BY SUPPLIER OF PROPRIETARY OXYGEN GENERATION AND DISSOLUTION SYSTEMS, AND SHALL BE CLEANED FOR OXYGEN SERVICE AS SPECIFIED AND AS REQUIRED BY THE OXYGEN SERVICE VENDOR.
10. ALL PIPING SHALL CONFORM TO THE REQUIREMENTS OF SECTION 15060, PLANT PIPING - GENERAL. DETAIL PIPING SPECIFICATION FOR SERVICES NOTED ARE AS FOLLOWS:

    SECTION
    - 15060- 02 CEMENT-LINED DUCTILE IRON PIPE & FITTINGS
    - 15060- 03 GLASS-LINED DUCTILE IRON PIPE & FITTINGS
    - 15060- 04 MILL TYPE STEEL PIPE & FITTINGS - SPECIAL SERVICE
    - 15060- 05 MILL TYPE STEEL PIPE & FITTINGS- GENERAL SERVICE
    - 15060- 06 FABRICATED WELDED STEEL PIPE & FITTINGS
    - 15060- 12 GALVANIZED STEEL PIPE & MALLEABLE IRON FITTINGS
    - 15060- 13 STAINLESS STEEL PIPE & FITTINGS
    - 15060- 14 PVC PIPE & FITTINGS
    - 15060- 15 CPVC PIPE & FITTINGS
    - 15060- 16 FRP PIPE & DUCT
    - 15060- 17 COPPER & COPPER ALLOY PIPE, TUBING & FITTINGS
    - 15060- 20 REINFORCED CONCRETE PIPE & FITTINGS
    - 15060- 25 MISCELLANEOUS BUILDING DRAINAGE SYSTEMS
    - 15060- 27 ALUMINUM PIPE & FITTINGS
    - 15060- 28 ALLOY 20 STEEL PIPE & FITTINGS
    - 15505 HEATING, VENTILATING & AIR CONDITIONING SYSTEMS
11. INSTALLATION LOCATIONS ARE DEFINED AS FOLLOWS:
    - B BURIED
    - O OUTSIDE, EXPOSED
    - I INSIDE, EXPOSED
    - S SUBMERGED AND TO 1 FOOT ABOVE MAXIMUM WATER SURFACE
    - E ENCASED IN CONCRETE
    - A ALL INSTALLATION LOCATIONS
    - C CONCEALED
12. BURIED PIPING 4" & LARGER SHALL BE PROVIDED WITH RESTRAINED PIPE JOINTS PER SECTION 15060-02.
13. Z=1, 2, 3, 4, OR 5 REFERS TO THE SERVICE DESIGNATION DEFINED IN THE FLOWSTREAM IDENTIFICATION ON DRAWING 10-G-5. MATERIALS AND TEST INFORMATION ARE THE SAME FOR ALL SERVICES DESIGNATED WITH "Z" IN THIS PIPING AND VALVE SCHEDULE.

JOSEPH A. GAUTHIER STATE OF WASHINGTON REGISTERED PROFESSIONAL ENGINEER

CH2M HILL

DSGN M. HIGHTREE
DR A. MCRILL
CHK M. BRACKEN
APVD J. GAUTHIER

NO.	DATE	REVISION	BY	APVD

REUSE OF DOCUMENTS
THIS DOCUMENT, AND THE IDEAS AND DESIGNS INCORPORATED HEREIN, AS AN INSTRUMENT OF PROFESSIONAL SERVICE, IS THE PROPERTY OF CH2M HILL AND IS NOT TO BE USED, IN WHOLE OR IN PART, FOR ANY OTHER PROJECT WITHOUT THE WRITTEN AUTHORIZATION OF CH2M HILL.
©CH2M HILL

VERIFY SCALE
BAR IS ONE INCH ON ORIGINAL DRAWING.
0 1"
IF NOT ONE INCH ON THIS SHEET, ADJUST SCALES ACCORDINGLY.

CITY OF BELLINGHAM, WASHINGTON
POST POINT WASTEWATER TREATMENT PLANT UPGRADE

STANDARD DETAILS
PIPING AND VALVE SCHEDULE

DWG NO. 800-M-2
DATE AUG. 1990
PROJ NO. SEA22452.C1

M. MOORE DESIGNED BY:
DGN NAME: H:/PROJ2/BELLINGH/BL800M-C.DGN

GATE SCHEDULE

GATE TAG NUMBER	GATE DESCRIPTION	REFERENCE DRAWING	GATE WIDTH (INCHES)	GATE HEIGHT (INCHES)	GATE INVERT ELEVATION (FEET)	GATE SLIDE HEIGHT (INCHES) SEE NOTE	DESIGN OPERATING HEAD CONDITION (GATE ℄ TO MAXIMUM WATER SURFACE) SEATING HEAD/UNSEATING HEAD	OPERATOR TYPE (SEE SPECS)	REMARKS
G-11041, 4 & 5	MECH BAR SCREEN CHANNEL ISOLATION SLIDE GATES, STYLE A	110-M-2	72	60	30.50	66	6/6	ELECTRIC MOTOR	PROVIDE DUAL STEM ARRANGEMENT 303
G-11042 & 3	BYPASS CHANNEL ISOLATION SLIDE GATES, STYLE B	110-M-2	96	48	30.50	42	6/6	ELECTRIC MOTOR	DOWNWARD ACTING WEIR GATE. VERTICAL TRAVEL SHALL BE FROM EL 34.00 TO EL 30.50. PROVIDE TOP STOPS AT EL 34.00 & DUAL STEM ARRANGEMENT. 304
G-11051, 4 & 5	MECH BAR SCREEN CHANNEL ISOLATION SLIDE GATES, STYLE A	110-M-2	72	33	30.25	36	4/4	ELECTRIC MOTOR	PROVIDE DUAL STEM ARRANGEMENT 303
G-11052 & 3	BYPASS CHANNEL ISOLATION SLIDE GATES, STYLE B	110-M-2	96	30	30.25	24½	4/4	ELECTRIC MOTOR	DOWNWARD ACTING WEIR GATE. VERTICAL TRAVEL SHALL BE FROM EL 32.30 TO EL 30.25. PROVIDE TOP STOPS AT EL 32.30 & DUAL STEM ARRANGEMENT. 304
G-21011 & 2	EXISTING PRIMARY CLARIFIER INFLUENT ISOLATION SLUICE GATES	120-M-5	36 ϕ	—	18.00	—	—	EXISTING ELECTRIC MOTOR	EXISTING, SEE I & C FOR CONTROLS
G-21021 & 2	EXISTING PRIMARY CLARIFIER EFFLUENT ISOLATION SLUICE GATES	50-M-6	42	42	11.00	—	—	EXISTING ELECTRIC MOTOR	EXISTING, SEE I & C FOR CONTROLS
G-31041, 2 & 3	OXYGEN ACTIVATED SLUDGE BASIN INFLUENT SLUICE GATES	220-M-2	48	48	16.00	48	20/20	ELECTRIC MOTOR	WALL THIMBLE TYPE F W/SQ FLG & SQ OPENING, 311, 312, 313
G-33011, 2 & 3	SECONDARY CLARIFIER INFLUENT ISOLATION SLUICE GATES	330-M-5	72	36	25.50	36	10/10	ELECTRIC MOTOR	WALL THIMBLE TYPE F WITH SQ FLG & SQ OPENING 311 312 313
G-33031 & 3	SECONDARY CLARIFIER EFFLUENT ISOLATION SLUICE GATES	330-M-3	36	36	10.63	36	20/20	ELECTRIC MOTOR SEE REMARKS	WALL THIMBLE TYPE F WITH SQ FLG & SQ OPENING PROVIDE W/ADAPTOR PLATE & W/O FLOOR STAND AS SPECIFIED 311 312 313
G-33032	SECONDARY CLARIFIER ISOLATION SLUICE GATE	330-M-3	36	36	11.13	36	20/20	ELECTRIC MOTOR SEE REMARKS	WALL THIMBLE TYPE F WITH SQ FLG & SQ OPENING PROVIDE W/ ADAPTOR PLATE & W/O FLOOR STAND AS SPECIFIED 311 312 313
G-31051 & 2	OXYGEN ACTIVATED SLUDGE BASIN EFFLUENT SLUICE GATES	310-M-1	72	60	15.20	60	20/20	ELECTRIC MOTOR	WALL THIMBLE TYPE F W/SQ FLG & SQ OPENING, 311, 312, 313
G-41031 & 2	CHLORINE CONTRACT CHAMBER ISOLATION SLIDE GATES, STYLE A	410-S-2	42	60	10.63	60	20/20	ELECTRIC MOTOR	PROVIDE DUAL STEM ARRANGEMENT 303
G-51010	NORTH SCUM BOX SLUICE GATE	410-S-2	6	6	12.50	6	20/20	ELECTRIC MOTOR	WALL THIMBLE TYPE F WITH SQ FLG & SQ OPENING 311 312 313
G-521, 2, 3	SOLIDS HANDLING FACILITY - WEST ADDITION HAND STOP GATES TYPE A	520-M-1	12	15	4.75	15	---	—	311 W/ GG-1

NOTE: GATE HEIGHT IS EQUAL TO THE TRAVEL DISTANCE FOR THE GATE FROM THE FULL CLOSED POSITION TO THE FULL OPEN POSITION.

JOSEPH A. GAUTHIER STATE OF WASHINGTON REGISTERED PROFESSIONAL ENGINEER

CH2M HILL

DSGN JR MILLER
DR RK LATTA
CHK M. BRACKEN
APVD J. GAUTHIER

NO.	DATE	REVISION	BY	APVD

REUSE OF DOCUMENTS
THIS DOCUMENT, AND THE IDEAS AND DESIGNS INCORPORATED HEREIN, AS AN INSTRUMENT OF PROFESSIONAL SERVICE, IS THE PROPERTY OF CH2M HILL AND IS NOT TO BE USED, IN WHOLE OR IN PART, FOR ANY OTHER PROJECT WITHOUT THE WRITTEN AUTHORIZATION OF CH2M HILL.
©CH2M HILL

VERIFY SCALE
BAR IS ONE INCH ON ORIGINAL DRAWING.
0 1"
IF NOT ONE INCH ON THIS SHEET, ADJUST SCALES ACCORDINGLY.

CITY OF BELLINGHAM, WASHINGTON
POST POINT WASTEWATER TREATMENT PLANT UPGRADE

STANDARD DETAILS
GATE SCHEDULE

DWG NO. 800-M-3
DATE AUG. 1990
PROJ NO. SEA22462.C1

DRAWN BY: M MOORE DESIGNED BY: J.R. MILLER
DGN NAME: H:/PROJ2/BELLINGH/BL800M-D.DWG

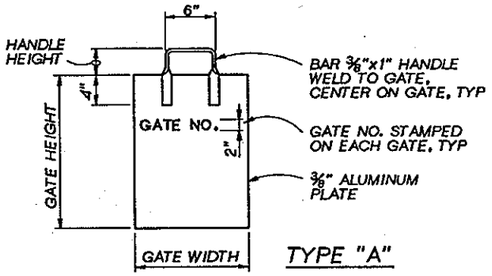

TYPE "A"

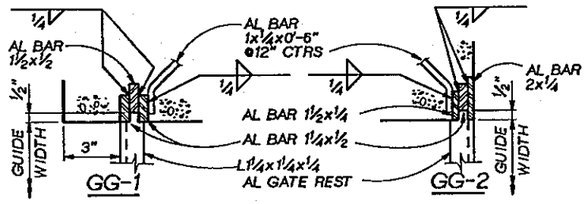

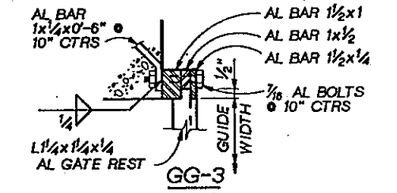

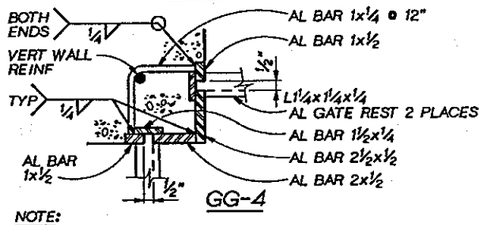

GATE AND GATE GUIDE NOTES:

1. COAT ALL ALUMINUM SURFACES EMBEDDED IN OR IN DIRECT CONTACT WITH CONCRETE WITH ONE COAT OF BITUMASTIC, ACCORDING TO SPECIFICATIONS.
2. ON GATES LESS THAN 3'-0" WIDE, LOCATE ONLY ONE HANDLE AT CENTER OF GATE.
3. ALL GATES TO BE ALUMINUM AS SPECIFIED.
4. ALL GUIDES, ANCHORS AND GATE RESTS TO BE ALUMINUM AS SPECIFIED.
5. GUIDES TO BE ASSEMBLED AS A COMPLETE UNIT. AFTER FABRICATION AND PRIOR TO SHIPMENT THEY SHALL BE CROSS-BRACED TO ASSURE TRUE ALIGNMENT.
6. GUIDES TO BE CONTINUOUS WELDED TO GATE RESTS.
7. ANCHORS FOR GATE RESTS TO BE SIMILAR TO THOSE FOR GUIDES.
8. GATE GUIDES TO BE FLUSH WITH BOTTOM OF GRATING SUPPORTS WHERE UNDER GRATING.
9. GRATING, WHERE OVER GATES, IS TO BE EXTENDED CONTINUOUSLY OVER GUIDES AND GATES.
10. GRATING SUPPORTS TO BE NOTCHED AS REQUIRED TO CLEAR GATES.

NOTE:
WHERE APPLICABLE EXTRUDED GUIDE SECTIONS AS MANUFACTURED BY WASHINGTON ALUMINUM CO, BALTIMORE, MARYLAND MAY BE SUBSTITUTED.

HAND STOP GATES AND GATE GUIDE DETAILS

NTS

301

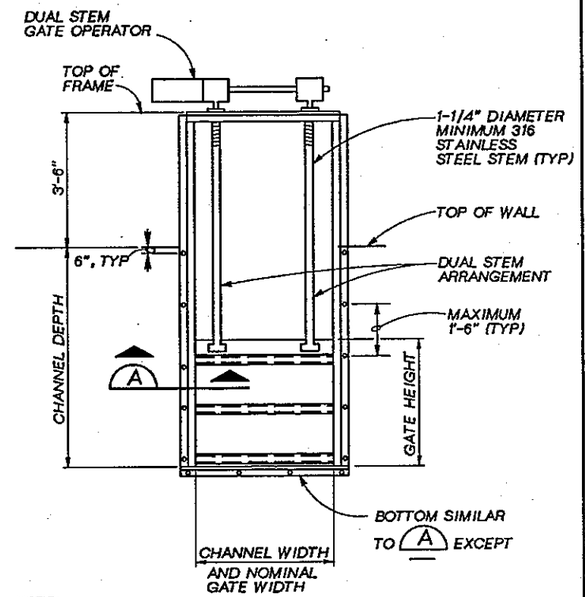

NOTE:
SEE GATE SCHEDULE ON 800-M-3 AND SPECS.

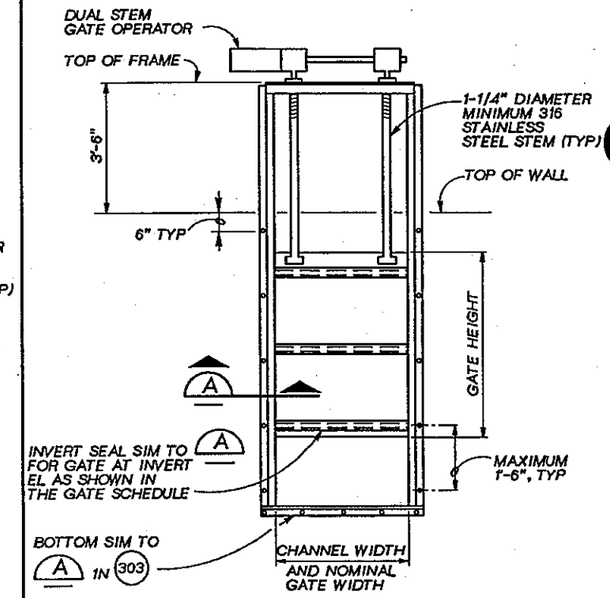

NOTE:
SEE GATE SCHEDULE ON 800-M-3 AND SPECS.

STYLE B WEIR GATE

NTS

304

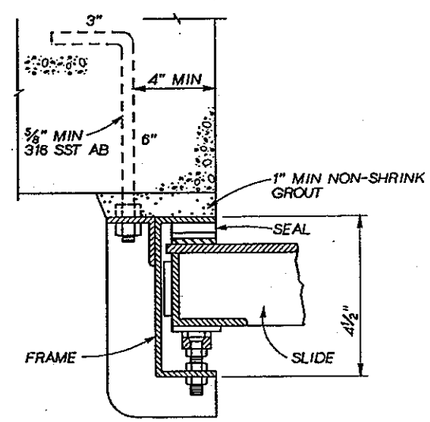

PLAN

SECTION A

NTS

STYLE A SLIDE GATE

NTS

303

DSGN JR MILLER						
DR CM BLACKWELL						
CHK M BRACKEN						
APVD J. GAUTHIER	NO.	DATE	REVISION	BY	APVD	

CH2M HILL

REUSE OF DOCUMENTS
THIS DOCUMENT, AND THE IDEAS AND DESIGNS INCORPORATED HEREIN, AS AN INSTRUMENT OF PROFESSIONAL SERVICE, IS THE PROPERTY OF CH2M HILL AND IS NOT TO BE USED, IN WHOLE OR IN PART, FOR ANY OTHER PROJECT WITHOUT THE WRITTEN AUTHORIZATION OF CH2M HILL.
©CH2M HILL

VERIFY SCALE
BAR IS ONE INCH ON ORIGINAL DRAWING.
0 1"
IF NOT ONE INCH ON THIS SHEET, ADJUST SCALES ACCORDINGLY.

CITY OF BELLINGHAM, WASHINGTON
POST POINT WASTEWATER TREATMENT PLANT UPGRADE

STANDARD DETAILS
MECHANICAL STANDARD DETAILS

DWG NO. 800-M-4
DATE AUG. 1990
PROJ NO. SEA22462.C1

LARGEST DIMENSION, EITHER WIDTH OR HEIGHT	MIN BLOCKOUT	
	A	B
6" THRU 24"	11"	16"
30" THRU 42"	15"	20"
48" THRU 72"	17"	23"

NOTE:
GATE SHOWN IN RAISED POSITION. FILL WITH GROUT AFTER GATE INSTALLATION.

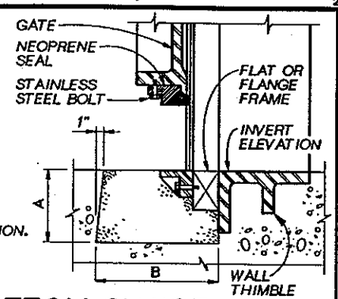

FLUSH BOTTOM SLUICE GATE BLOCKOUT (310)
NTS

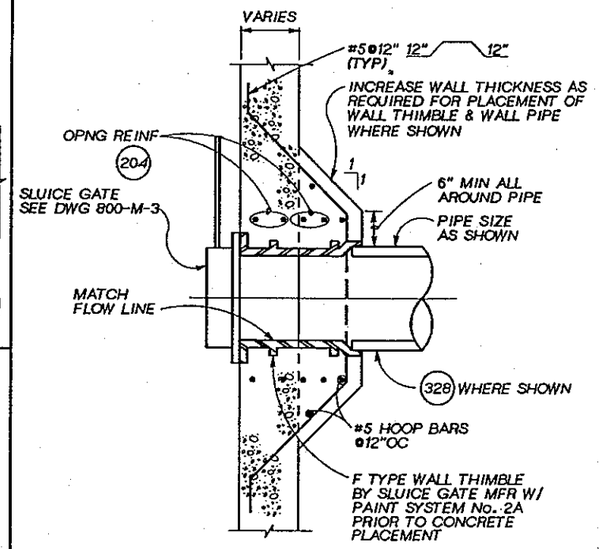

SECTION

WALL MOUNTED SLUICE GATE (313)
NTS

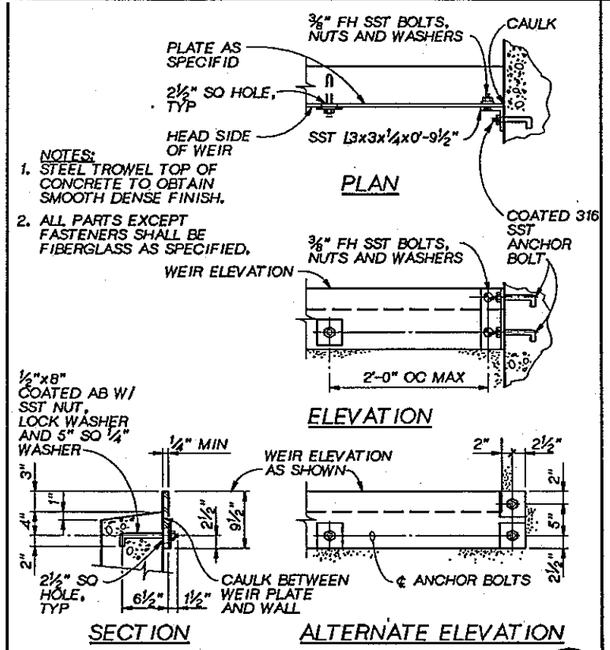

NOTES:
1. STEEL TROWEL TOP OF CONCRETE TO OBTAIN SMOOTH DENSE FINISH.
2. ALL PARTS EXCEPT FASTENERS SHALL BE FIBERGLASS AS SPECIFIED.

STRAIGHT EDGE WEIR (315)
NTS

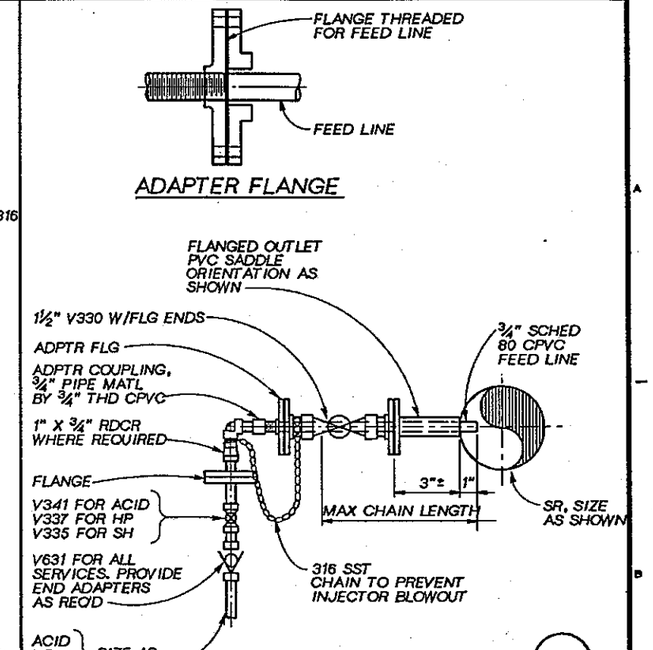

CHEMICAL INJECTOR (316)

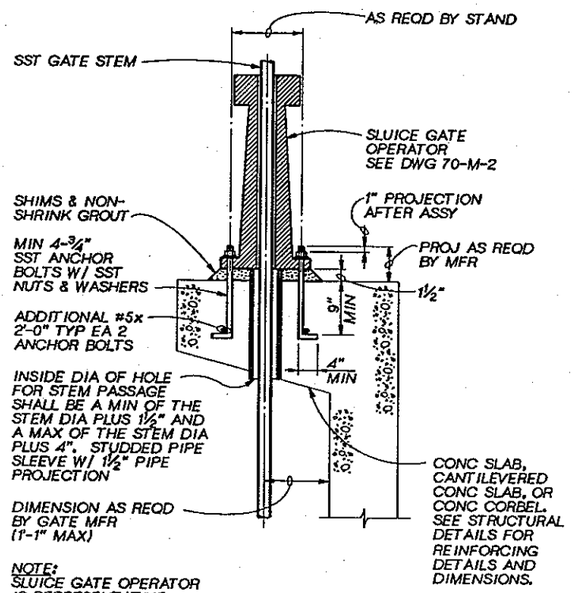

NOTE:
SLUICE GATE OPERATOR IS REPRESENTATIVE ONLY.

GATE OPERATOR INSTALLATION (311)
NTS

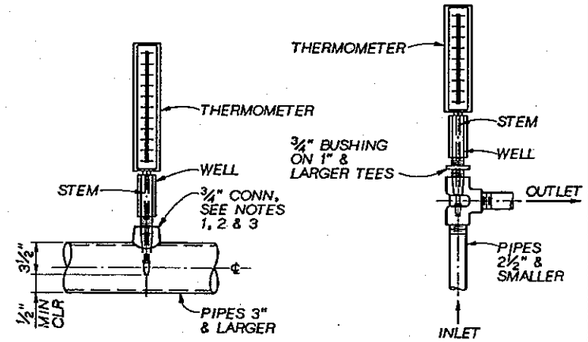

NOTES:
1. FOR STEEL, GALVANIZED STEEL AND PVC 2½" AND SMALLER, USE A ¾" BUSHING IN TEE.
2. FOR DUCTILE IRON AND FIBERGLASS REINFORCED PLASTIC PIPE, ALL SIZES, USE A ¾" OUTLET PIPE SADDLE.
3. FOR STEEL AND STAINLESS STEEL PIPES 3" AND LARGER, AND PRESSURE VESSELS, USE ¾" THRED-O-LETS AS SHOWN.

THERMOMETER MOUNTING DETAILS (314)
NTS

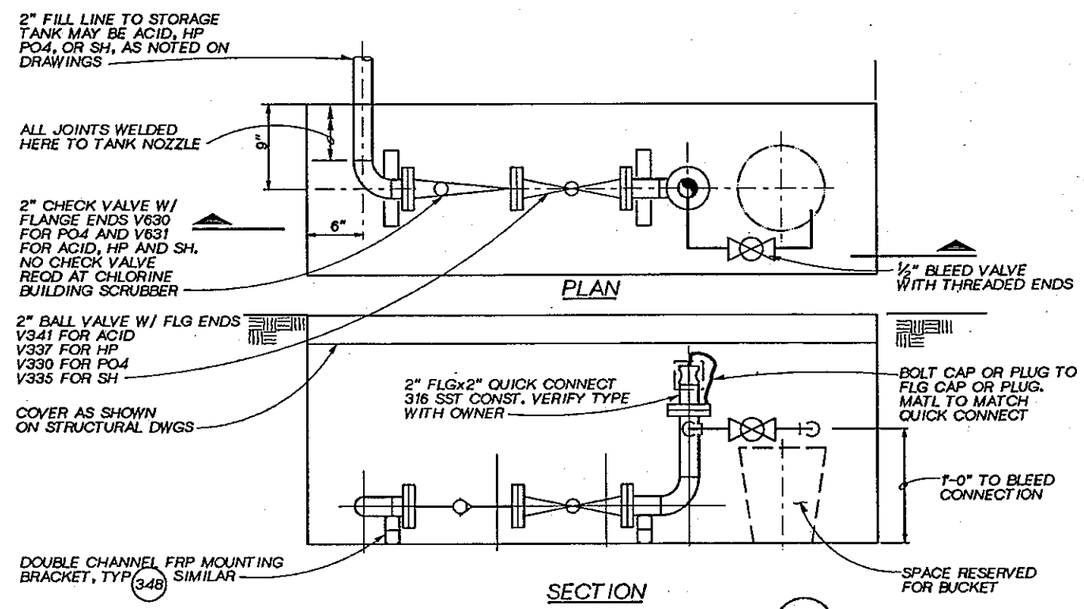

NOTE: PLAN ORIENTATION MIRROR IMAGE FROM WHAT IS SHOWN FOR SODIUM HYDROXIDE AT CHLORINE SCRUBBER BUILDING, AND FOR HYDROGEN PEROXIDE.

CHEMICAL FILL STATION (317)
1½"=1'-0"

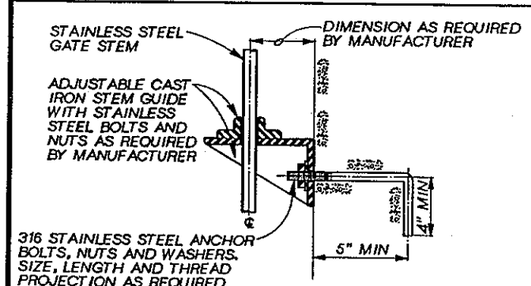

STEM GUIDE INSTALLATION (312)
NTS

DSGN	JR MILLER
DR	CS HOWELL
CHK	M BRACKEN
APVD	J GAUTHIER

NO.	DATE	REVISION	BY	APVD

REUSE OF DOCUMENTS
THIS DOCUMENT, AND THE IDEAS AND DESIGNS INCORPORATED HEREIN, AS AN INSTRUMENT OF PROFESSIONAL SERVICE, IS THE PROPERTY OF CH2M HILL AND IS NOT TO BE USED, IN WHOLE OR IN PART, FOR ANY OTHER PROJECT WITHOUT THE WRITTEN AUTHORIZATION OF CH2M HILL.
©CH2M HILL

VERIFY SCALE
BAR IS ONE INCH ON ORIGINAL DRAWING.
0 1"
IF NOT ONE INCH ON THIS SHEET, ADJUST SCALES ACCORDINGLY.

CITY OF BELLINGHAM, WASHINGTON
POST POINT WASTEWATER TREATMENT PLANT UPGRADE

STANDARD DETAILS
MECHANICAL STANDARD DETAILS

DWG NO. 800-M-5
DATE AUG. 1990
PROJ NO. SEA22462.C1

DRAWN BY: C.S.HOWELL DESIGNED BY: J.R.MILLER
DGN NAME: H:/PROJ2/BELLINGH/BL800M-F.DWG

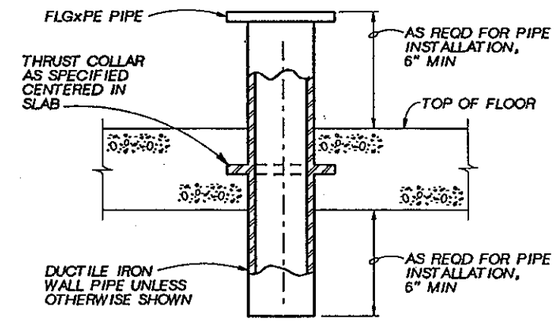

NOTE:
COAT FLOOR PIPE WITH PAINT SYSTEM NO. 2A PRIOR TO CONCRETE PLACEMENT.

FLOOR PIPE (320)
NTS

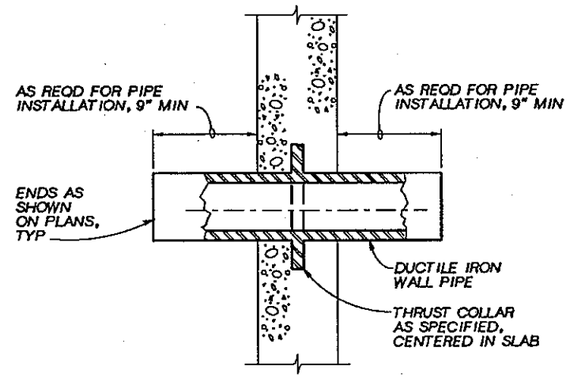

NOTE:
COAT WALL PIPE WITH PAINT SYSTEM NO. 2A PRIOR TO CONCRETE PLACEMENT.

DUCTILE IRON WALL PIPE (323)
NTS

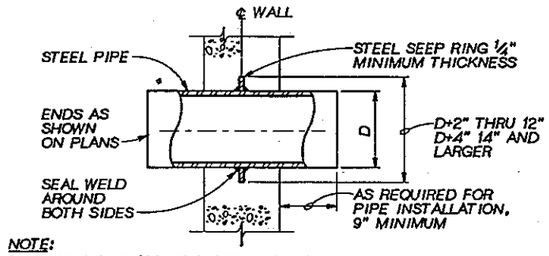

NOTE:
1. COAT PIPE W/PAINT SYSTEM NO. 2A PRIOR TO CONCRETE PLACEMENT.

STEEL WALL PIPE (326)
NTS

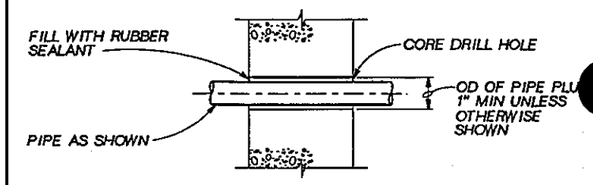

PIPE WALL PENETRATION (329)
NTS

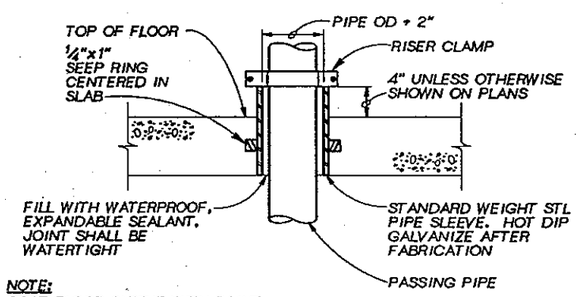

NOTE:
COAT FLOOR SLEEVE WITH PAINT SYSTEM NO. 2A BEFORE CONCRETE PLACEMENT.

FLOOR SLEEVE (321)
NTS

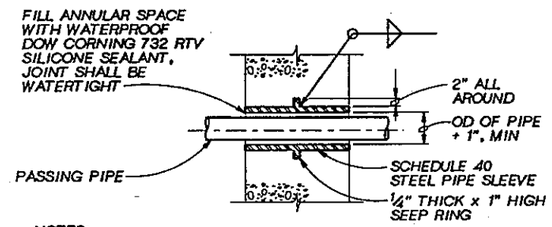

NOTES:
1. DO NOT USE WHERE SUBJECT TO HYDROSTATIC PRESSURE.
2. COAT PIPE W/PAINT SYSTEM NO. 2A PRIOR TO CONCRETE PLACEMENT.

TYPE 'B' PIPE SLEEVE (324)
NTS

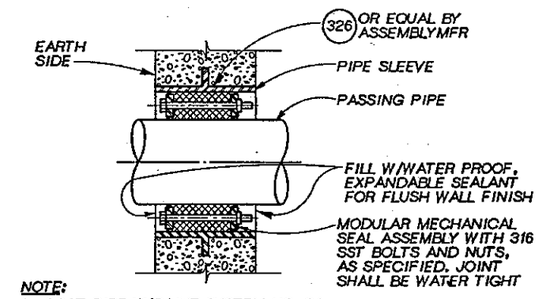

NOTE:
1. COAT PIPE W/PAINT SYSTEM NO. 2A PRIOR TO CONCRETE PLACEMENT.

WALL PENETRATION SEAL DETAIL (327)
NTS

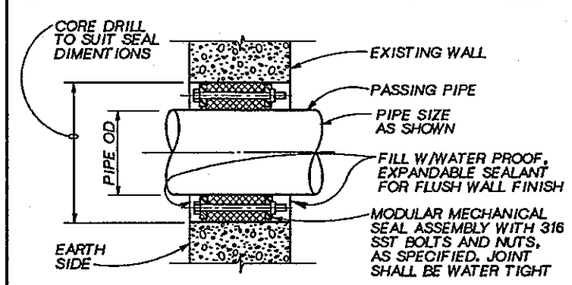

EXISTING WALL PENETRATION SEAL (330)
NTS

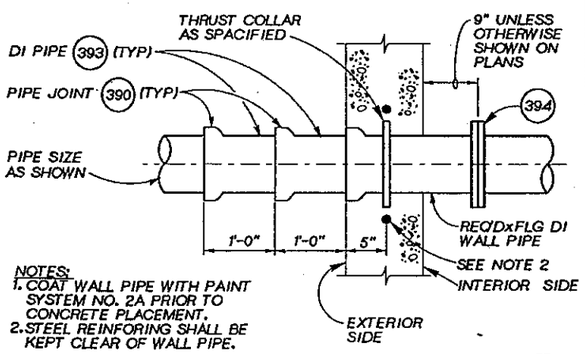

NOTES:
1. COAT WALL PIPE WITH PAINT SYSTEM NO. 2A PRIOR TO CONCRETE PLACEMENT.
2. STEEL REINFORING SHALL BE KEPT CLEAR OF WALL PIPE.

DUCTILE IRON WALL PIPE (322)
NTS

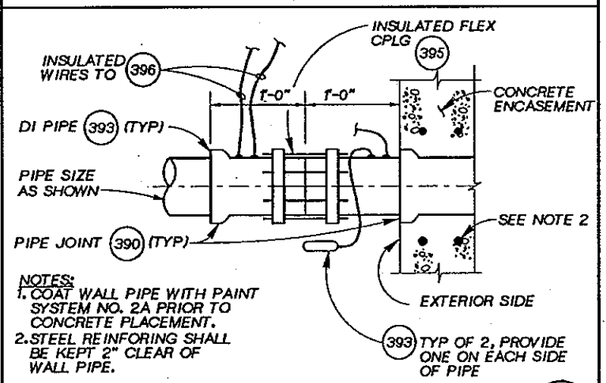

NOTES:
1. COAT WALL PIPE WITH PAINT SYSTEM NO. 2A PRIOR TO CONCRETE PLACEMENT.
2. STEEL REINFORING SHALL BE KEPT 2" CLEAR OF WALL PIPE.

DUCTILE IRON WALL PIPE (325)
NTS

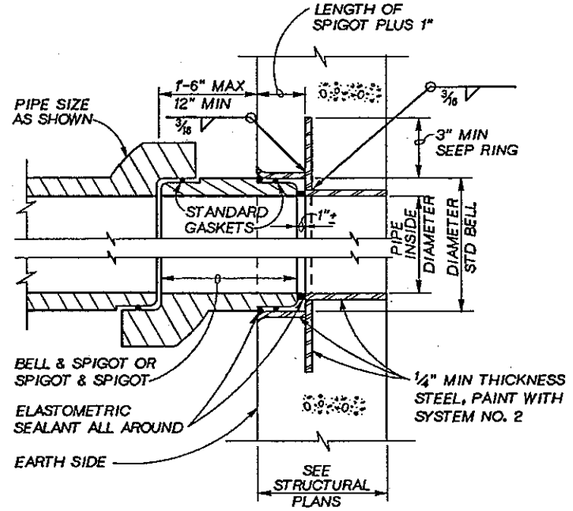

RCP WALL PIPE (328)
NTS

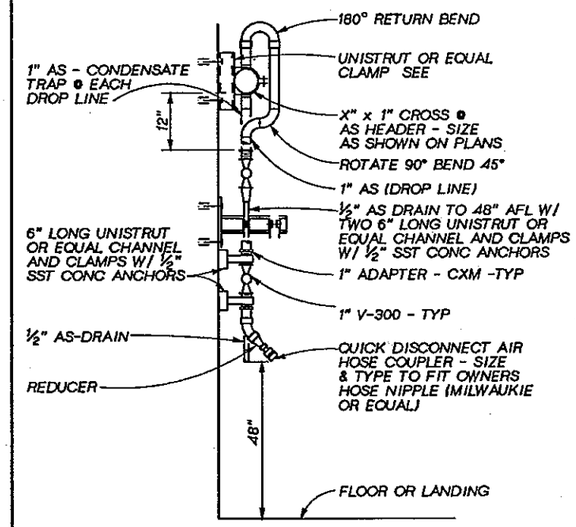

SERVICE AIR OUTLET (AS) (331)
NTS

JOSEPH A. GAUTHIER — STATE OF WASHINGTON — REGISTERED PROFESSIONAL ENGINEER

CH2M HILL

DSGN	E RONSHAUGEN
DR	CS HOWELL
CHK	JR MILLER
APVD	J. GAUTHIER

NO.	DATE	REVISION	BY	APVD

REUSE OF DOCUMENTS
THIS DOCUMENT, AND THE IDEAS AND DESIGNS INCORPORATED HEREIN, AS AN INSTRUMENT OF PROFESSIONAL SERVICE, IS THE PROPERTY OF CH2M HILL AND IS NOT TO BE USED, IN WHOLE OR IN PART, FOR ANY OTHER PROJECT WITHOUT THE WRITTEN AUTHORIZATION OF CH2M HILL.
©CH2M HILL

VERIFY SCALE
BAR IS ONE INCH ON ORIGINAL DRAWING.
0 1"
IF NOT ONE INCH ON THIS SHEET, ADJUST SCALES ACCORDINGLY.

CITY OF BELLINGHAM, WASHINGTON
POST POINT WASTEWATER TREATMENT PLANT UPGRADE

STANDARD DETAILS
MECHANICAL STANDARD DETAILS

DWG NO. 800-M-6
DATE AUG. 1990
PROJ NO. SEA22462.C1

OVERLAY IDENTIFICATION: COMPOSITE / OVERLAY / SCREEN
PROJID / FILE

DRAWN BY: C.S.HOWELL DESIGNED BY: J.R.MILLER
DGN NAME: H:/PROJ2/BELLINGH/BL800M-G.DWG

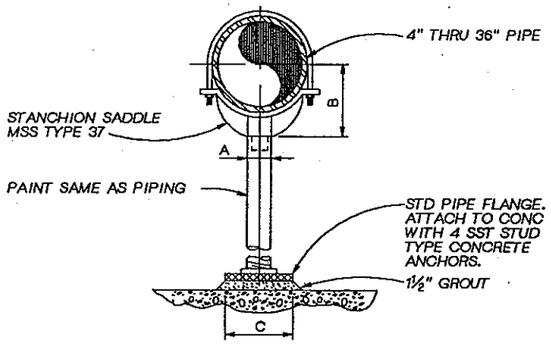

NOTES:
1. PROVIDE HALF ROUND RIGID INSULATION AND MSS TYPE 40 INSULATION PROTECTION SHIELD WHERE PIPING IS INSULATED.
2. PROVIDE NEOPRENE WAFFLE ISOLATION PAD, SIMILAR TO MASON TYPE 'W' OR KORFUND KORPAD 40, UNDER SUPPORT FOOT WHEN PIPING IS ISOLATED OR SUPPORT IS ADJACENT TO MECHANICAL EQUIPMENT.
3. FOR BASE, HEIGHT AND FLANGE DIMENSIONS, SEE TABLE.
4. HOT DIP GALVANIZE AFTER FABRICATION.

DIMENSION TABLE

PIPE SIZE	A	B	C
4"	3"	4-3/16"	9"
6"	3"	4-13/16"	9"
6"	3"	5-7/16"	9"
8"	3"	6-15/16"	9"
10"	3"	8-7/16"	9"
12"	3"	9-15/16"	9"
14"	4"	10-15/16"	11"
16"	4"	12-3/8"	11"
18"	4"	13-7/8"	11"
20"	6"	15-3/8"	13-1/2"
22"	6"	16-5/8"	13-1/2"
24"	6"	17-15/16"	13-1/2"
26"	6"	19-1/8"	13-1/2"
30"	6"	21-5/16"	13-1/2"
32"	6"	22-1/2"	13-1/2"
36"	8"	24-1/2"	16"

PIPE SUPPORT
NTS
332

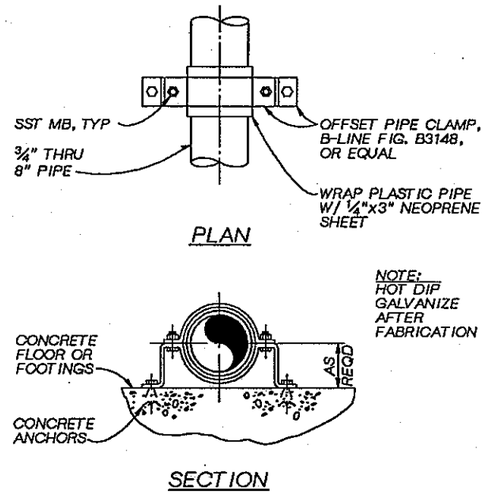

PIPE SUPPORT
NTS
334

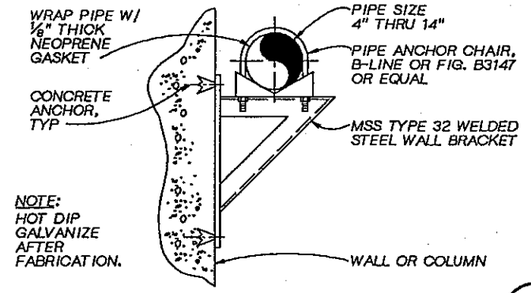

PIPE SUPPORT - MEDIUM
NTS
337

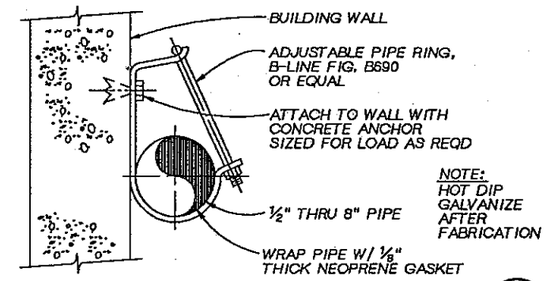

PIPE SUPPORT
NTS
338

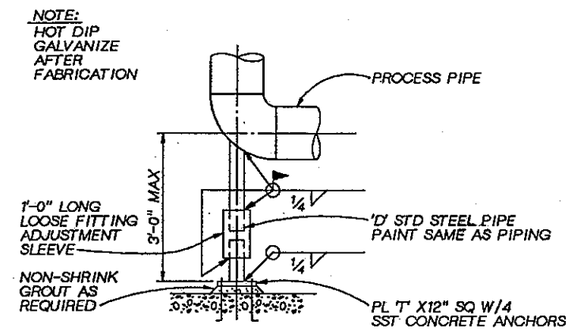

PIPE DIAMETER	SUPPORT DIAMETER 'D'	PLATE THICKNESS 'T'	ANCHOR BOLT DIAMETER
3"	2½"	⅜"	⅜"
4" THRU 12"	3"	⅜"	½"
14" AND 16"	4"	⅜"	½"
18" AND 20"	6"	½"	⅝"
24" AND 30"	8"	⅝"	¾"

PIPE SUPPORT
NTS
341

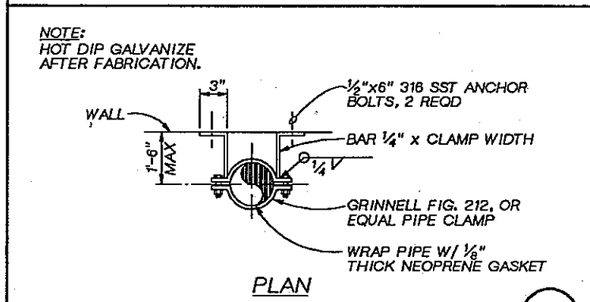

PIPE SWAY BRACE
NTS
335

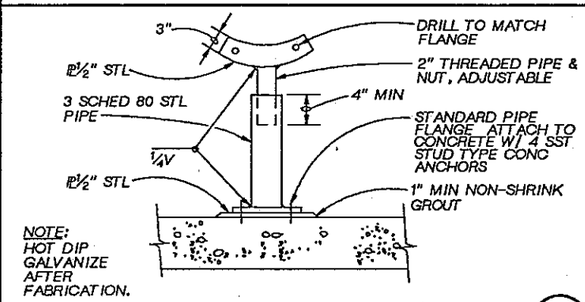

FLANGE PIPE SUPPORT
NTS
339

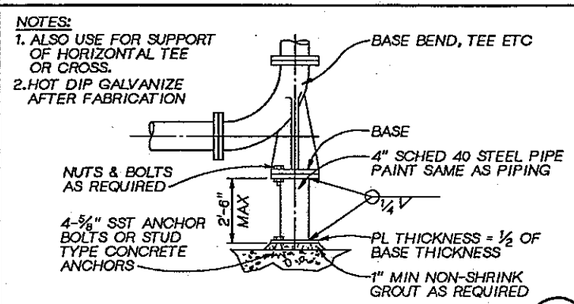

BASE BEND DETAIL
NTS
342

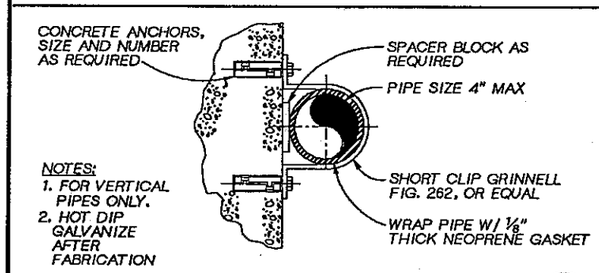

PIPE SUPPORT
NTS
333

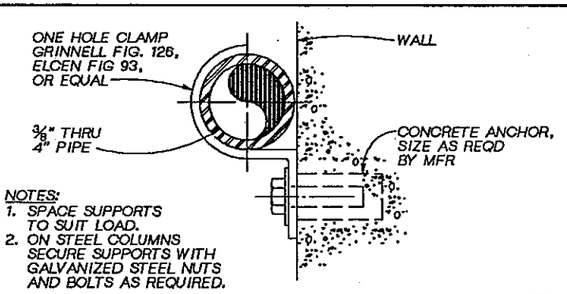

PIPE SUPPORT
NTS
336

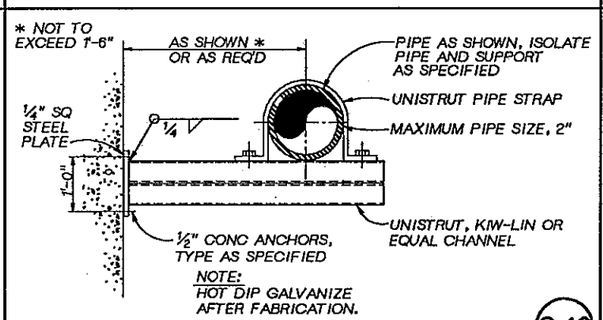

PIPE WALL SUPPORT
NTS
340

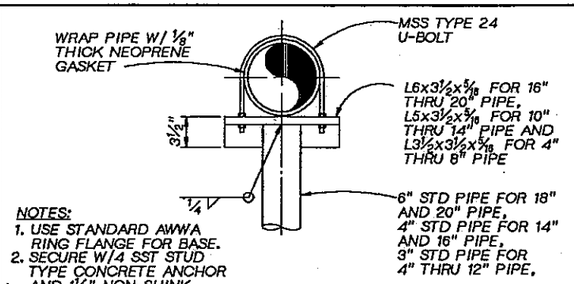

PIPE SUPPORT
NTS
343

JOSEPH A. GAUTHIER STATE OF WASHINGTON REGISTERED PROFESSIONAL ENGINEER

CH2M HILL

DSGN	JR MILLER
DR	CS HOWELL
CHK	M. BRACKEN
APVD	J. GAUTHIER

NO.	DATE	REVISION	BY	APVD

REUSE OF DOCUMENTS
THIS DOCUMENT, AND THE IDEAS AND DESIGNS INCORPORATED HEREIN, AS AN INSTRUMENT OF PROFESSIONAL SERVICE, IS THE PROPERTY OF CH2M HILL AND IS NOT TO BE USED, IN WHOLE OR IN PART, FOR ANY OTHER PROJECT WITHOUT THE WRITTEN AUTHORIZATION OF CH2M HILL.
©CH2M HILL

BAR IS ONE INCH ON ORIGINAL DRAWING.
0 1"
IF NOT ONE INCH ON THIS SHEET, ADJUST SCALES ACCORDINGLY.

CITY OF BELLINGHAM, WASHINGTON
POST POINT WASTEWATER TREATMENT PLANT UPGRADE

STANDARD DETAILS
MECHANICAL STANDARD DETAILS

DWG NO. 800-M-7
DATE AUG. 1990
PROJ NO. SEA22462.C1

OVERLAY IDENTIFICATION: COMPOSITE, OVERLAY SEEN, PROJ'D, FILE

DRAWN BY: C.S.HOWELL DESIGNED BY: J.H.MILLER
DGN NAME: H:/PROJ2/BELLINGH/BL800M-H.DWG

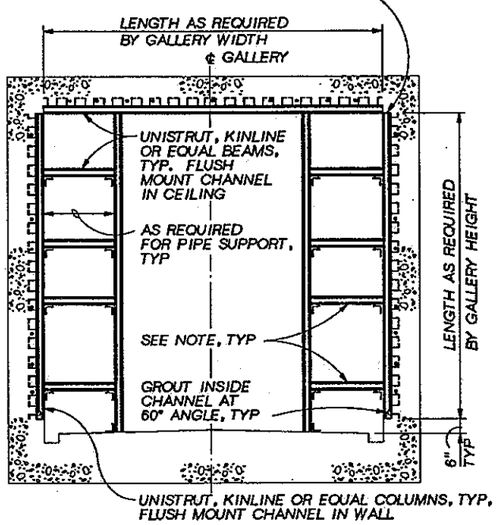

NOTES:
1. LOCATION AND SIZE AS REQUIRED TO SUPPORT PIPES AND ELECTRICAL CONDUITS.
2. 3" MIN CLR BETWEEN COUPLINGS, FLANGES, AND WALLS.
3. WALL SUPPORT MEMBERS TO BE HOT DIPPED GALVANIZED AFTER FABRICATION.

GALLERY PIPE SUPPORT (345)
NTS

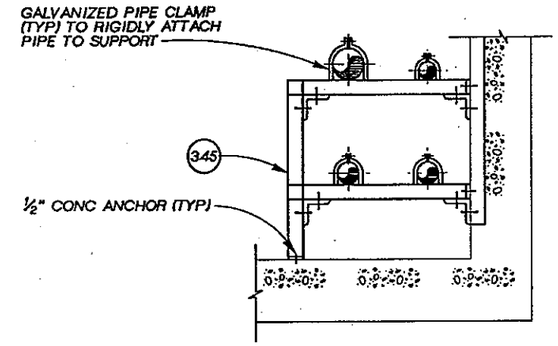

SECTION A
NTS

NOTES:
1. HOT DIP GALVANIZE AFTER FABRICATION.
2. LOCATION AND SIZE AS REQUIRED TO SUPPORT PIPES AND ELECTRICAL CONDUITS.
3. BEAM AND COLUMN MFR NO'S. TYPICAL. SUPPORT PIPE SUPPORT MEMBERS W/CORRECT SECTION MODULUS FOR DESIGN LOADINGS.

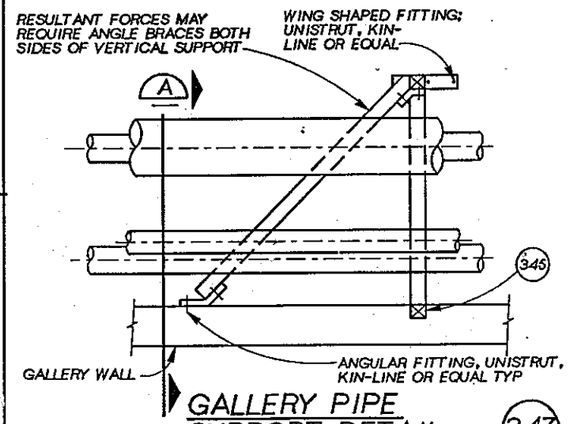

GALLERY PIPE SUPPORT DETAIL (347)
NTS

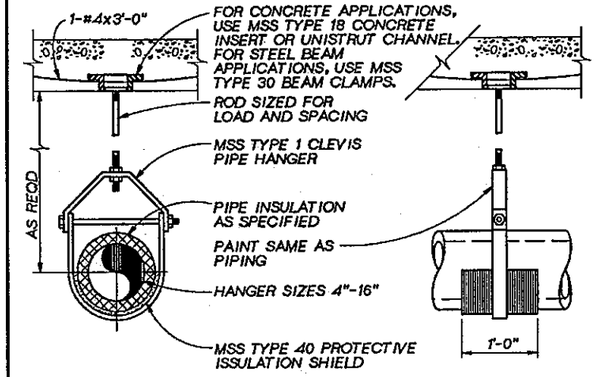

NOTES:
1. PIPE HANGERS SHALL BE OVERSIZED AS REQUIRED TO ACCOMMODATE THICKNESS OF INSULATION SPECIFIED. HANGER SHALL NOT COME INTO CONTACT WITH THE INSULATION DIRECTLY, EITHER AT THE VERTICAL YOKE OR AT THE POINT OF SUPPORT. FOR REQUIREMENTS ON ISOLATORS USED WITH PIPE HANGERS, SEE SPECIFICATIONS.
2. TOTAL LOADING ON EACH CONCRETE INSERT OR OTHER TYPE HANGER ROD ANCHOR SHALL NOT EXCEED MANUFACTURER'S RECOMMENDED LOADINGS.
3. FOR UNINSULATED PIPES, SIZE CLEVIS HANGER FOR OUTSIDE DIAMETER OF PIPE.

PIPE HANGER (349)
NTS

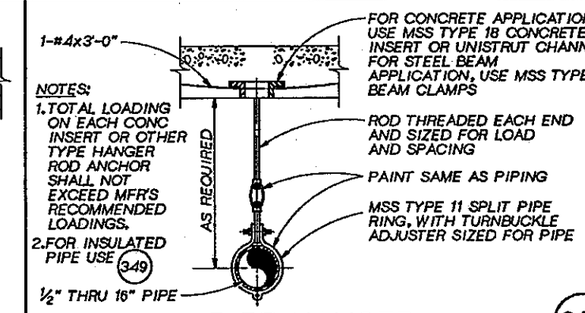

PIPE HANGER (351)
NTS

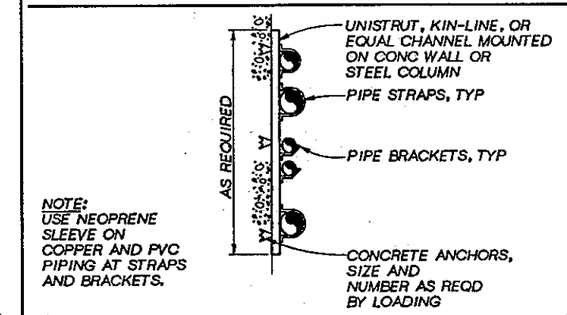

STACKED PIPE WALL SYSTEM (352)
NTS

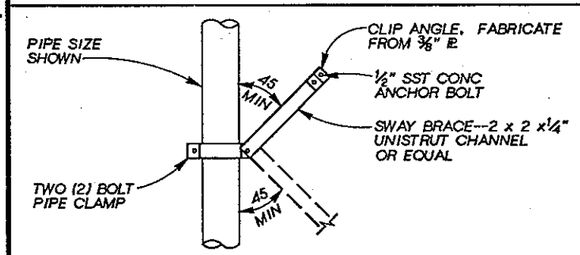

PLAN
NTS

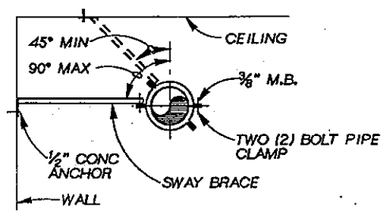

NOTE:
ALL BRACE COMPONENTS SHALL BE HOT DIP GALVANIZED AFTER FABRICATION. SWAY BRACE CAN BE ATTACHED TO PIPE SUPPORTS WHERE MULTIPLE PIPE ARE CARRED ON SINGLE SUPPORTS.

SWAY BRACE (346)
NTS

PIPE CLAMP, UNISTRUT, KIN-LINE OR EQUAL, FOR INTERMEDIATE GUIDES AND SUPPORTS FIT LOOSELY, OR USE SPACERS TO ALLOW MOVEMENT OF PIPE. CLAMPS REQ'D ON EVERY OTHER SUPPORT FRAME IN GALLERIES. DELETE AT BENDS ONLY AS REQ'D TO ALLOW MOVEMENT DUE TO EXPANSION/CONTRACTION.

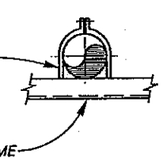

INTERMEDIATE PIPE GUIDE DETAIL (348)
NTS

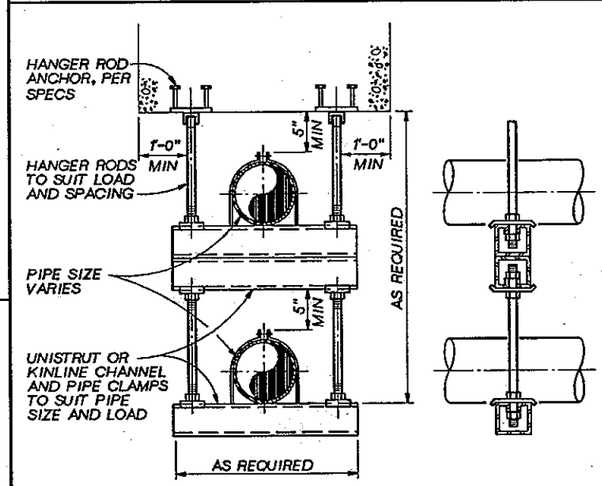

TYPICAL STACKED TRAPEZE PIPE HANGER (350)
NTS

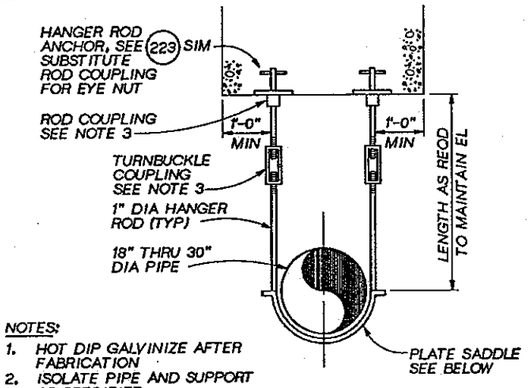

NOTES:
1. HOT DIP GALVINIZE AFTER FABRICATION
2. ISOLATE PIPE AND SUPPORT AS SPECIFIED.
3. NUT AND COUPLING SHALL BE STRONG ENOUGH TO DEVELOP FULL STRENGTH OF BOLT TENSION.

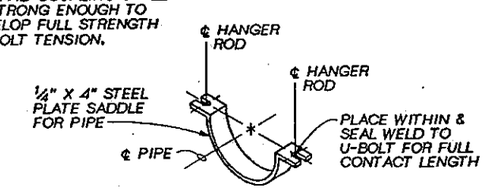

PIPE HANGER (353)
NTS

JOSEPH A. GAUTHIER, STATE OF WASHINGTON, REGISTERED PROFESSIONAL ENGINEER

CH2M HILL

DSGN	JR MILLER
DR	CS HOWELL
CHK	M BRACKEN
APVD	J GAUTHIER

NO.	DATE	REVISION	BY	APVD

REUSE OF DOCUMENTS
THIS DOCUMENT, AND THE IDEAS AND DESIGNS INCORPORATED HEREIN, AS AN INSTRUMENT OF PROFESSIONAL SERVICE, IS THE PROPERTY OF CH2M HILL AND IS NOT TO BE USED, IN WHOLE OR IN PART, FOR ANY OTHER PROJECT WITHOUT THE WRITTEN AUTHORIZATION OF CH2M HILL.
©CH2M HILL

VERIFY SCALE
BAR IS ONE INCH ON ORIGINAL DRAWING.
0 1"
IF NOT ONE INCH ON THIS SHEET, ADJUST SCALES ACCORDINGLY.

CITY OF BELLINGHAM, WASHINGTON
POST POINT WASTEWATER TREATMENT PLANT UPGRADE

STANDARD DETAILS
MECHANICAL STANDARD DETAILS

DWG NO. 800-M-8
DATE AUG. 1990
PROJ NO. SEA22462.C1

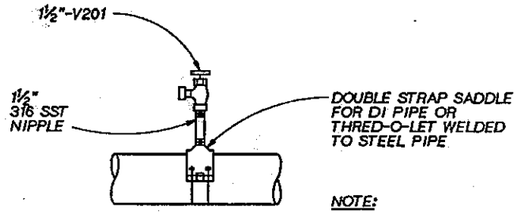

NOTE:
TAPPING OF FITTINGS ALLOWED AT BOSS ONLY.

TYPE 1 FLUSHING CONNECTION (355)
NTS

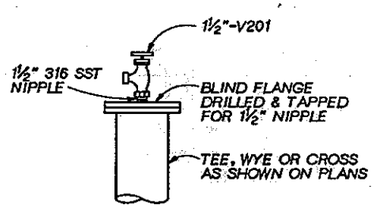

TYPE 2 FLUSHING CONNECTION (356)
NTS

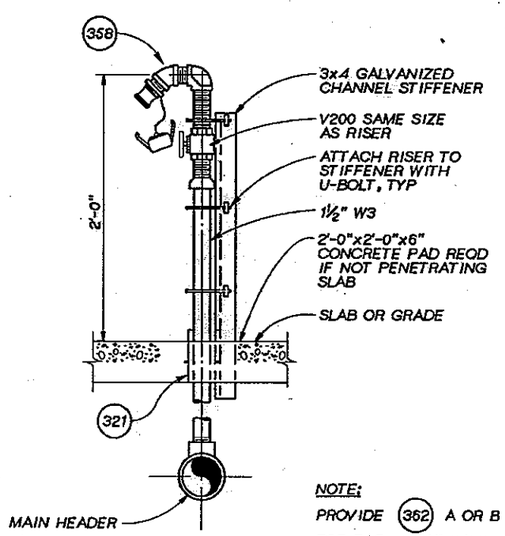

NOTE:
PROVIDE (362) A OR B FOR EACH HOSE VALVE

EXTERIOR HOSE VALVE (357)
NTS

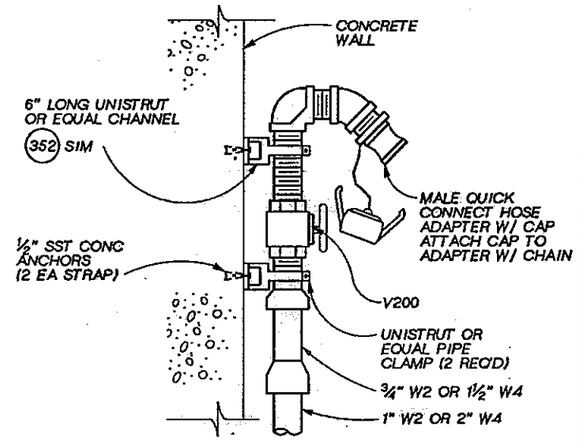

NOTES:
1. VALVE AND FITTINGS SIZED TO MATCH SUPPLY RISER SIZE.
2. LOCATE BALL VALVE 2'-0" ABOVE FINISHED FLOOR.
3. PROVIDE (362) A OR B FOR EACH HOSE VALVE
4. FITTINGS SIMILAR FOR EACH TYPE

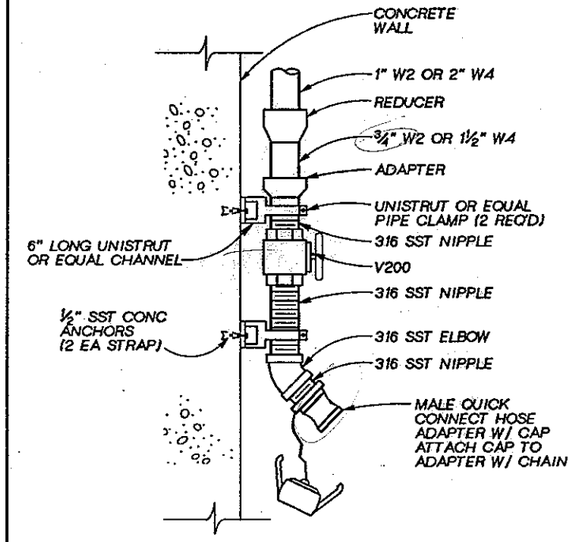

INTERIOR HOSE VALVE DETAIL (358)
NTS

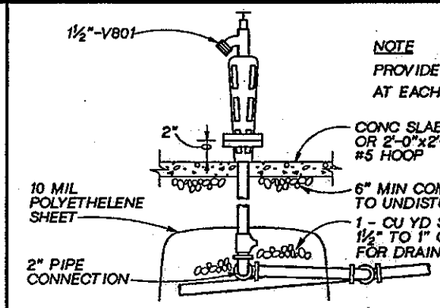

NOTE
PROVIDE (362) AT EACH POST HYDRANT

NON-FREEZE POST HYDRANT (359)
NTS

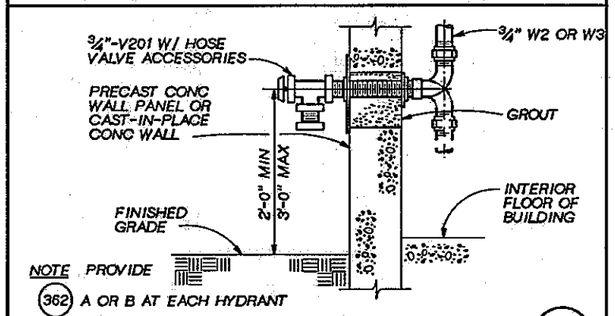

NOTE PROVIDE (362) A OR B AT EACH HYDRANT

WALL HYDRANT (360)
NTS

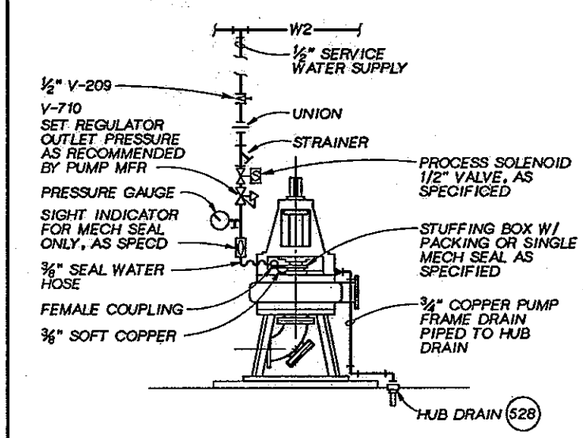

NOTES:
1. USE COPPER TUBE ADAPTERS AND BUSHINGS AS REQUIRED FOR ALL CONNECTIONS TO PUMP.
2. VERTICAL PUMP SHOWN-HORIZONTAL PUMP SIMILAR

CENTRIFUGAL PUMP SEAL WATER PIPING (361)
NTS

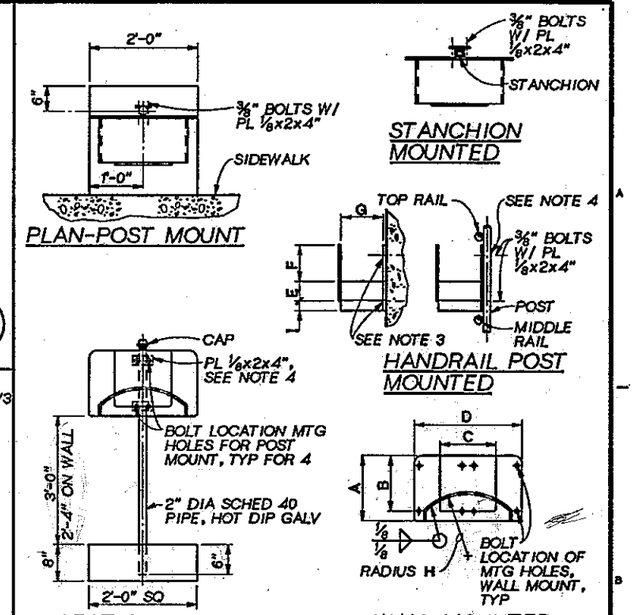

RACK TYPE	DIMENSION IN INCHES								
	A	B	C	D	E	F	G	H	I
TYPE A-¾" & 1" HOSE	10-½	9	9	18	3	6	7-½	9-¾	1-½
TYPE B-1½" HOSE	14	12	12	24	4	8	10	13	2

NOTES:
1. INTERIOR UNITS SHALL BE FABRICATED FROM ⅛" A-36 STEEL PLATE AND ENTIRE UNIT SHALL BE HOT DIP GALVANIZED AFTER FABRICATION.
2. EXTERIOR UNITS SHALL BE FABRICATED FROM ⅜" 6061-T6 ALUMINUM ALLOY PLATE.
3. ATTACH TO CONCRETE WALL WITH (4)-¼" STAINLESS STEEL STUD TYPE WEDGE ANCHORS.
4. ATTACH TO VERTICAL HANDRAIL OR INDIVIDUAL POST WITH PLATES AND (4)-¼" STAINLESS STEEL BOLTS.
5. ATTACH TO STEEL COLUMN WITH (4)-¼" ROUND HEAD BOLTS, ONE IN EACH CORNER. INSERT DOUBLE SPACER NUTS BETWEEN COLUMN AND HOSE RACK.

HOSE RACK DETAILS (362)
NTS

NOTE:
HOT DIP GALVANIZE ENTIRE ASSEMBLY AFTER FABRICATION.

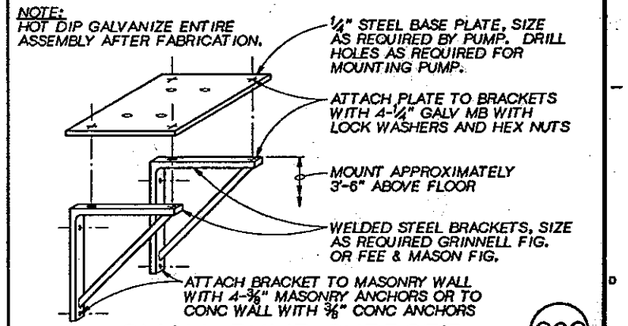

SMALL PUMP SUPPORT (363)
NTS

JOSEPH A. GAUTHIER — STATE OF WASHINGTON — REGISTERED PROFESSIONAL ENGINEER

CH2M HILL

DSGN	JR MILLER
DR	CS HOWELL
CHK	M BRACKEN
APVD	J. GAUTHIER

NO.	DATE	REVISION	BY	APVD

REUSE OF DOCUMENTS
THIS DOCUMENT, AND THE IDEAS AND DESIGNS INCORPORATED HEREIN, AS AN INSTRUMENT OF PROFESSIONAL SERVICE, IS THE PROPERTY OF CH2M HILL AND IS NOT TO BE USED, IN WHOLE OR IN PART, FOR ANY OTHER PROJECT WITHOUT THE WRITTEN AUTHORIZATION OF CH2M HILL.
©CH2M HILL

VERIFY SCALE
BAR IS ONE INCH ON ORIGINAL DRAWING.
0 1"
IF NOT ONE INCH ON THIS SHEET, ADJUST SCALES ACCORDINGLY.

CITY OF BELLINGHAM, WASHINGTON
POST POINT WASTEWATER TREATMENT PLANT UPGRADE

STANDARD DETAILS
MECHANICAL STANDARD DETAILS

DWG NO. 800-M-9
DATE AUG. 1990
PROJ NO. SEA22462.C1

DRAWN BY: M. MOORE DESIGNED BY: J.H. MILLER
DGN NAME: H:/PROJ2/BELLINGH/BL800M-J.DWG

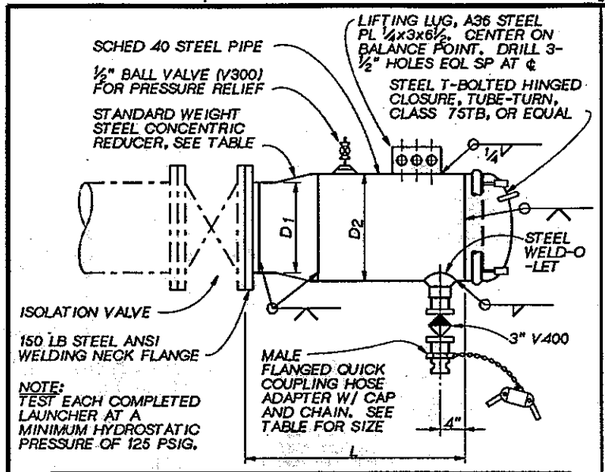

NOTE: TEST EACH COMPLETED LAUNCHER AT A MINIMUM HYDROSTATIC PRESSURE OF 125 PSIG.

TABLE OF DIMENSIONS - PIG LAUNCHER AND CATCHER				
HOSE COUPLING AND VALVE	D_1 (NOMINAL PIPE SIZE)	REDUCER SIZE	L	D_2 (NOMINAL PIPE SIZE)
3" FLGD	4"	6"x4"	14"	6"
3" FLGD	5"	8"x5"	18"	8"
3" FLGD	6"	8"x6"	20"	8"

PIG LAUNCHER (365)
NTS

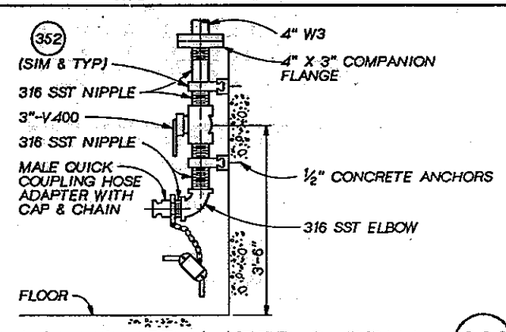

PIG LAUNCHER WATER SUPPLY (366)
NTS

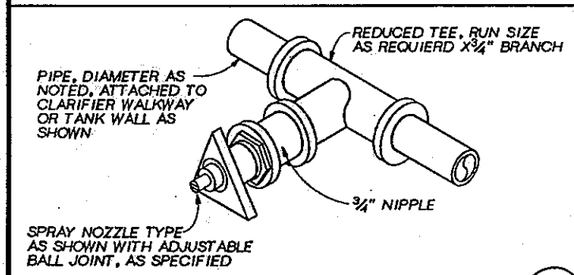

SPRAY NOZZLE (367)
NTS

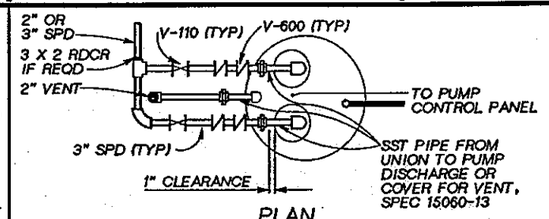

PLAN

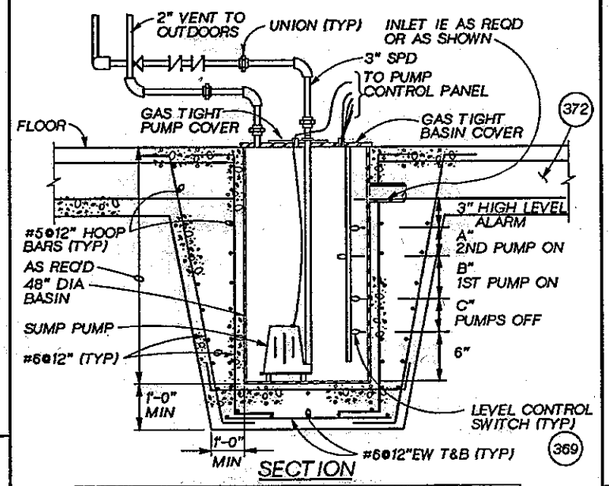

SECTION

FACILITY	PUMP NO.	A	B	C
SCREENINGS	P-11991, 2	6"	6"	6"
	P-11994, 5	6"	10"	6"
PRELIM. TRMT. ODOR CONTROL	P-13991, 2	1'	2'	2'
PRIMARY EFFL. P.S.	P-22991, 2	6"	1'	1'
SECONDARY SLUDGE P.S.	P-34991, 2	6"	1'	1'
CL2 SCRUBBER BLDG	P-42991, 2	1'	1'	2'
SOLIDS HNDLG - WEST	P-52991, 2	1'	1'	2'
SOLIDS HNDLG - EAST	P-53991, 2	2'	2'	3'

NOTES:
1. STANDARD DETAIL IS GENERAL W/ RESPECT TO PIPING ARRANGEMENT. SEE PLANS FOR SPECIFIC ORIENTATION OF PIPE AND VALVES.
2. SUPPORT PIPING FROM WALL OR FLOOR.

SUMP PUMP (368)
NTS

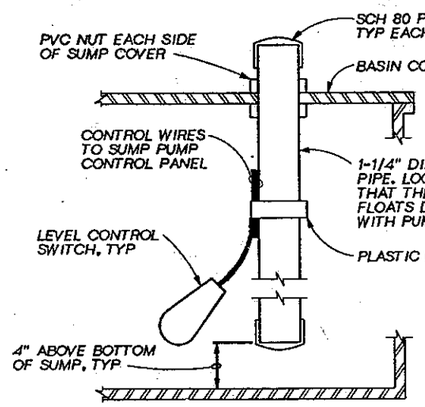

LEVEL SWIT[illegible]S SUPPORT PIPE (369)
NTS

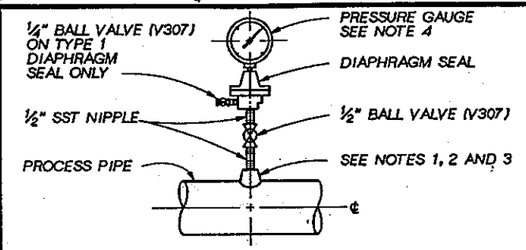

DIAPHRAGM PRESSURE GAUGE, TYPE 2

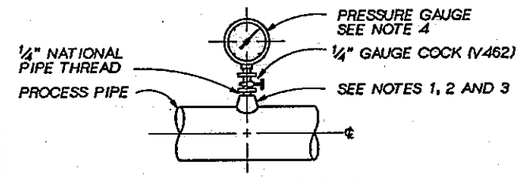

PRESSURE GAUGE, TYPE 1

NOTES:
1. FOR STEEL, GALVANIZED STEEL, AND PVC 2½" AND SMALLER USE A BUSHING IN A TEE.
2. FOR DUCTILE IRON AND FIBERGLASS REINFORCED PLASTIC PIPE, ALL SIZES, USE PIPE SADDLE WITH BUSHING.
3. FOR STEEL AND STAINLESS STEEL PIPES 3" AND LARGER, AND PRESSURE VESSELS, USE THRED-O-LET AS SHOWN.
4. PROVIDE SNUBBER FOR ALL PUMP INSTALLATIONS

PRESSURE GAUGE MOUNTING DETAILS (370)
NTS

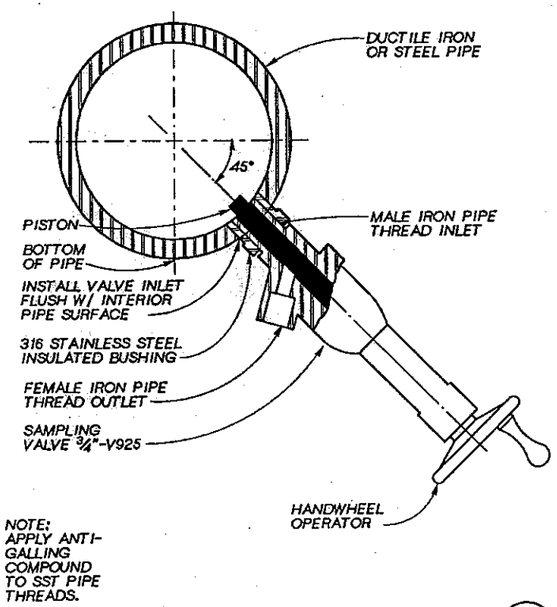

NOTE: APPLY ANTI-GALLING COMPOUND TO SST PIPE THREADS.

SAMPLING VALVE (371)
NTS

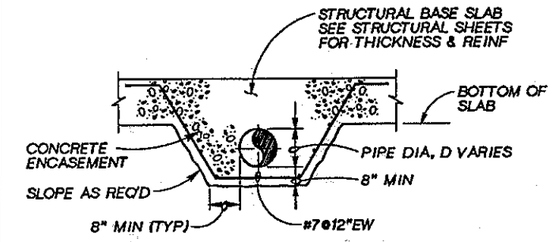

NOTE: WHERE PIPE PASSES THROUGH A BASE SLAB EXPANSION JOINT, PROVIDE A PIPE CONNECTION (373)

PIPE ENCASEMENT SECTION (372)
NTS

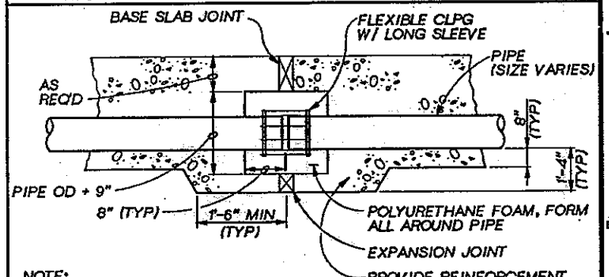

NOTE: PROVIDE WHERE PIPE EXTENDS THROUGH BASE SLAB EXPANSION JOINT

EXPANSION JOINT PIPE CONNECTION PIPE (373)
NTS

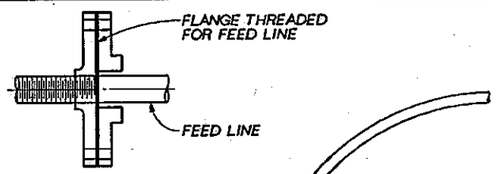

ADAPTER FLANGE

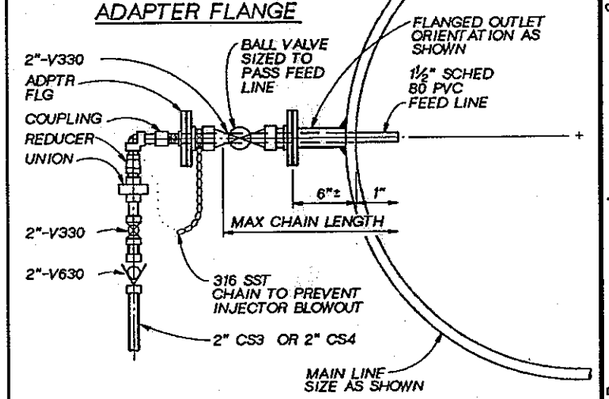

CHLORINE SOLUTON INJECTOR (374)
NTS

DSGN	JR MILLER
DR	CS HOWELL
CHK	M BRACKEN
APVD	J. GAUTHIER

CH2M HILL

NO.	DATE	REVISION

REUSE OF DOCUMENTS
THIS DOCUMENT, AND THE IDEAS AND DESIGNS INCORPORATED HEREIN, AS AN INSTRUMENT OF PROFESSIONAL SERVICE, IS THE PROPERTY OF CH2M HILL AND IS NOT TO BE USED, IN WHOLE OR IN PART, FOR ANY OTHER PROJECT WITHOUT THE WRITTEN AUTHORIZATION OF CH2M HILL.
APVD ©CH2M HILL

VERIFY SCALE
BAR IS ONE INCH ON ORIGINAL DRAWING.
0 1"
IF NOT ONE INCH ON THIS SHEET, ADJUST SCALES ACCORDINGLY.

CITY OF BELLINGHAM, WASHINGTON
POST POINT WASTEWATER TREATMENT PLANT UPGRADE

STANDARD DETAILS
MECHANICAL STANDARD DETAILS

DWG NO. 800-M-10
DATE AUG. 1990
PROJ. NO. SEA22462.C1

DRAWN BY: M. MOORE DESIGNED BY: M HIGHTREE
DGN NAME: H:/PROJ2/BELLINGH/BL800M-M.DGN

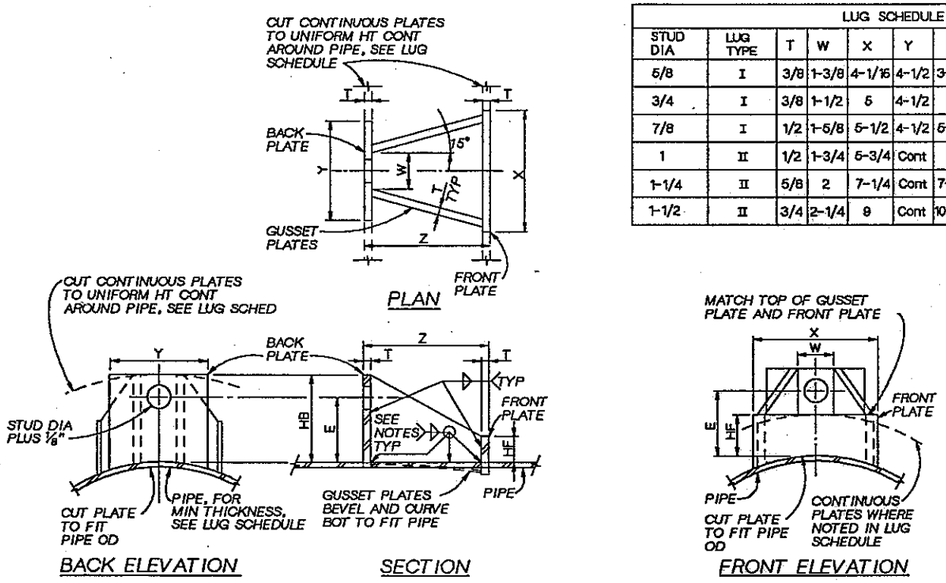

TIE ROD LUG FOR WS PIPE

NTS

LUG SCHEDULE										
STUD DIA	LUG TYPE	T	W	X	Y	Z	HB	E	HF	L
5/8	I	3/8	1-3/8	4-1/16	4-1/2	3-3/8	3-7/8	3	1-3/4	3
3/4	I	3/8	1-1/2	5	4-1/2	5	4-1/8	3-1/8	1-3/4	3
7/8	I	1/2	1-5/8	5-1/2	4-1/2	5-1/8	4-1/4	3-1/8	1-3/4	4
1	II	1/2	1-3/4	5-3/4	Cont	6	4-1/2	3-1/4	2	4
1-1/4	II	5/8	2	7-1/4	Cont	7-5/8	5	3-3/4	2	4
1-1/2	II	3/4	2-1/4	9	Cont	10-1/8	5-1/2	3-7/8	2	4

*SEE NOTES		TIE ROD SCHEDULE											
TEST PRESSURE		25 PSI		50 PSI		100 PSI		150 PSI		225 PSI		375 PSI	
PIPE DIAMETER (IN.)	MINIMUM PIPE WALL THICKNESS (IN.)*	TIE RODS		TIE RODS		TIE RODS		TIE RODS		TIE RODS		TIE RODS	
		DIA (IN.)	NO. REQD	DIA (IN.)	NO. REQD	DIA (IN.)	NO. REQD	DIA (IN.)	NO. REQD	DIA (IN.)	NO. REQD	DIA (IN.)	NO. REQD
6	3/16	—	—	—	—	5/8	2	5/8	2	5/8	2	5/8	2
8	3/16	—	—	—	—	5/8	2	5/8	2	5/8	2	3/4	2
10	3/16	—	—	—	—	5/8	2	5/8	2	3/4	2	7/8	2
12	3/16	5/8	2	5/8	2	5/8	2	5/8	2	3/4	2	7/8	4
14	3/16	5/8	2	5/8	2	3/4	2	3/4	2	3/4	4	1	4
16	3/16	5/8	2	5/8	2	3/4	2	7/8	2	7/8	4	1	4
18	1/4	5/8	2	5/8	2	7/8	2	1	2	1	4	1-1/4	4
20	1/4	5/8	2	3/4	2	7/8	2	7/8	4	1	4	1-1/4	4
22	1/4	5/8	2	3/4	2	3/4	4	7/8	4	1	4	1-1/2	4
24	1/4	5/8	2	3/4	2	7/8	4	1	4	1	6	1-1/2	6
30	1/4	5/8	4	3/4	4	7/8	8	1	8	1	8	1-1/2	8

NOTES FOR TIE ROD LUG FOR WS PIPE:

1. LUG SCHEDULE DIMENSIONS IN INCHES.
2. TIE RODS SHALL CONFORM TO ASTM A193 GRADE B7.
3. NUTS SHALL CONFORM TO ASTM A194 GRADE 2H.
4. PLATE SHALL CONFORM TO ASTM A283 GRADE D.
5. TIE ROD NUTS SHALL BE TIGHTENED GRADUALLY AND EQUALLY IN STAGES TO PREVENT UNEVEN ALIGNMENT AND TO ALLOW EQUAL STRESS ON ALL TIE RODS UNDER PRESSURE. TIGHTEN UNTIL SNUG. THREADS SHALL PROTRUDE FROM NUTS. PEEN THREADS AFTER TIGHTENING NUTS.
6. TIE ROD LUGS SHALL BE SPACED EQUALLY AROUND PIPE.
7. FILLET WELDS SHALL MEET THE MINIMUM REQUIREMENTS OF THE AISC SPECIFICATION EXCEPT AS FOLLOWS: FILLET WELDS SHALL BE 1/4-INCH MINIMUM EXCEPT WHEN WELDING 3/16-INCH PLATE WHERE THEY SHALL BE 3/16-INCH.
8. CATHODIC PROTECTION FOR FLEXIBLE COUPLINGS REQUIRED WHERE NOTED ON PLANS OR IN THE SPECIFICATIONS.
9. CONTRACTOR SHALL USE DATA FOR ONLY THOSE PIPE SIZES AND TEST PRESSURES SPECIFIED IN THIS CONTRACT.
10. LUG TYPE I IS AS SHOWN IN DETAIL. LUG TYPE II HAS A CONTINUOUS BACK PLATE AROUND PIPE. LUG TYPE III HAS CONTINUOUS FRONT AND BACK PLATES AROUND PIPE.
11. TIE RODS SHALL NOT BE ATTACHED TO A PIPE WHEN THE WALL THICKNESS IS LESS THAN THE MINIMUM SHOWN ON THE TIE ROD SCHEDULE.

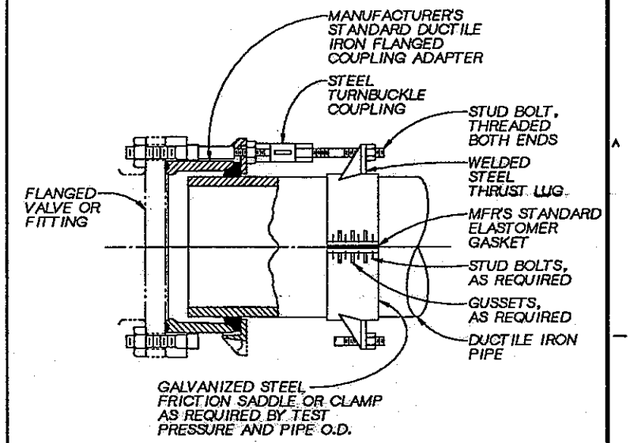

NOTE:
SADDLE SHOWN TYPICAL FOR HIGH PRESSURE AND/OR LARGE DIAMETER PIPE. CLAMP FOR LOWER PRESSURE AND/OR SMALL DIAMETER PIPE, SIMILAR.

THRUST HARNESS FOR DUCTILE IRON FLANGED COUPLING ADAPTER

NTS

376

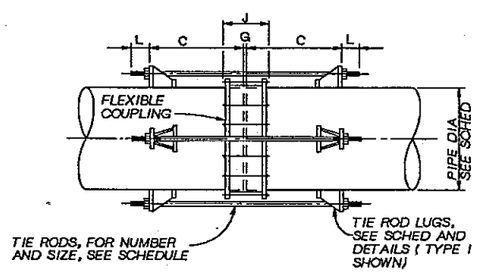

NOTES FOR FLEXIBLE COUPLING:

1. THE MIDDLE RING LENGTH OF THE FLEXIBLE COUPLING SHALL BE AS SPECIFIED.
2. THE CONTRACTOR SHALL DETERMINE THE LENGTH "J" (COUPLING BOLT LENGTH) FROM MANUFACTURER'S CATALOGS USING THE SPECIFIED MIDDLE RING LENGTH.
3. "G" = MANUFACTURER'S RECOMMENDED SPACE BETWEEN ENDS OF PIPE.
4. "C" = J+Z+1 INCH, (ROUND THIS VALUE UP TO NEXT EVEN INCH). MINIMUM. (FOR Z DIMENSIONS, SEE LUG SCHEDULE.)
5. TIE ROD LENGTH = 2L+2C+G.
6. INSERT FLARED NYLON BUSHING IN LUGS TO ISOLATE TIE RODS AND NUTS FROM PIPE WHERE INSULATED COUPLINGS ARE SHOWN.

NOTES FOR THRUST TYING MATERIALS FOR DUCTILE IRON PIPE:

1. THRUST TYING MATERIALS FOR 12 INCH AND SMALLER PIPE SHALL CONSIST OF THRUST TIE RODS THROUGH THE FLANGED COUPLING ADAPTOR TO THE NEXT FLANGE SHOWN.
2. THRUST TYING MATERIALS FOR 16 INCH AND LARGER PIPE SHALL CONSIST OF TIE RODS AND FLANGE LUGS.
3. ROD NUMBER AND SIZE SHALL BE SHOWN IN THE ROD SCHEDULE FOR THE TEST PRESSURE SHOWN IN THE PIPING SCHEDULE.
4. THRUST TYING MATERIALS SHALL BE AS SPECIFIED TIE ROD LUGS AND TIE ROD FLANGE LUG.

TYPICAL THRUST TIE DETAIL

NTS

375

JOSEPH A. GAUTHIER STATE OF WASHINGTON REGISTERED PROFESSIONAL ENGINEER

CH2M HILL

DSGN M HIGHTREE					
DR RK LATTA					
CHK M. BRACKEN					
APVD J. GAUTHIER	NO.	DATE	REVISION	BY	APVD

REUSE OF DOCUMENTS
THIS DOCUMENT, AND THE IDEAS AND DESIGNS INCORPORATED HEREIN, AS AN INSTRUMENT OF PROFESSIONAL SERVICE, IS THE PROPERTY OF CH2M HILL AND IS NOT TO BE USED, IN WHOLE OR IN PART, FOR ANY OTHER PROJECT WITHOUT THE WRITTEN AUTHORIZATION OF CH2M HILL.
©CH2M HILL

BAR IS ONE INCH ON ORIGINAL DRAWING. 0 1"
IF NOT ONE INCH ON THIS SHEET, ADJUST SCALES ACCORDINGLY.

CITY OF BELLINGHAM, WASHINGTON
POST POINT WASTEWATER TREATMENT PLANT UPGRADE

STANDARD DETAILS
MECHANICAL STANDARD DETAILS

DWG NO. 800-M-11
DATE AUG. 1980
PROJ NO. SEA22462.C1

OVERLAY IDENTIFICATION | COMPOSITE | OVERLAY | PROJID | FILE

DRAWN BY: C.S.HOWELL DESIGNED BY: J.R.MILLER
DGN NAME: H:/PROJ2/BELLINGH/BL800M-L.DWG

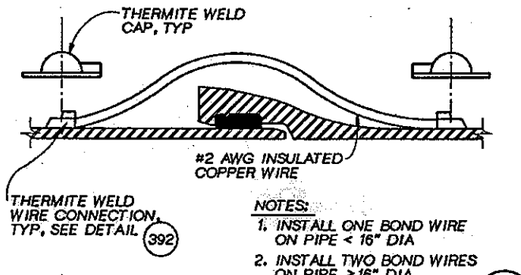

NOTES:
1. INSTALL ONE BOND WIRE ON PIPE < 16" DIA
2. INSTALL TWO BOND WIRES ON PIPE >16" DIA

PUSH-ON JOINT BOND (390)
NTS

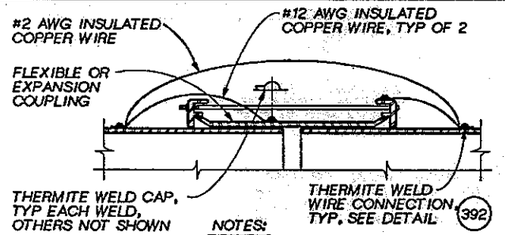

NOTES:
1. INSTALL ONE BOND WIRE ON PIPE < 16" DIA
2. INSTALL TWO BOND WIRES ON PIPE >16" DIA

FLEXIBLE JOINT BOND (391)
NTS

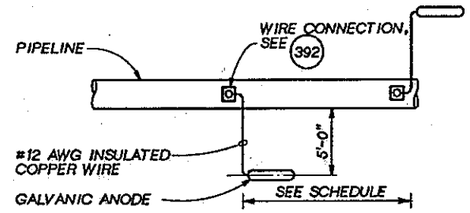

PLAN

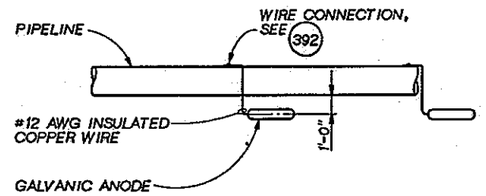

ELEVATION

SCHEDULE

PIPE MATERIAL	WIRE CONNECTION	ANODE SPACING
DUCTILE IRON/STEEL	THERMITE WELD	20 FEET

GALVANIC ANODE INSTALLATION (393)
NTS

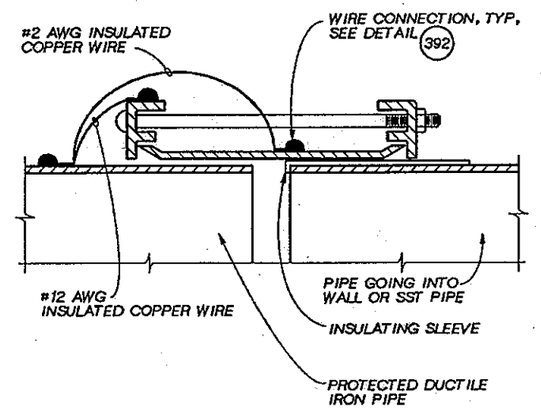

NOTE:
BOND WIRES NOT REQUIRED FOR ABOVE GRADE COUPLINGS

INSULATED FLEXIBLE COUPLING (395)
NTS

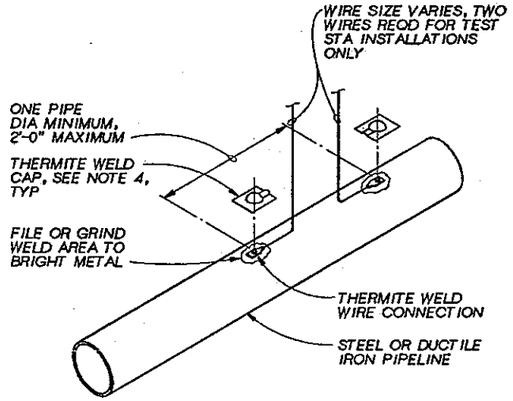

NOTES:
1. COPPER SLEEVE REQUIRED FOR THERMITE WELDING OF #10 AWG AND SMALLER WIRE.
2. USE COPPER SLEEVE ON #2 AWG JOINT BONDING WIRES.
3. WELDER AND CARTRIDGE SIZE VARIES ACCORDING TO WIRE SIZE AND PIPE MATERIAL, CONSULT WELDER MANUFACTURER FOR RECOMMENDED WELDER AND CARTRIDGE.
4. COAT WELD AREA AND FILL RECESS ON THERMITE WELD CAP WITH COLD APPLIED COAL TAR MASTIC AND APPLY CAP TO WELD.

WIRE CONNECTION FOR STEEL AND DUCTILE IRON PIPE (392)
NTS

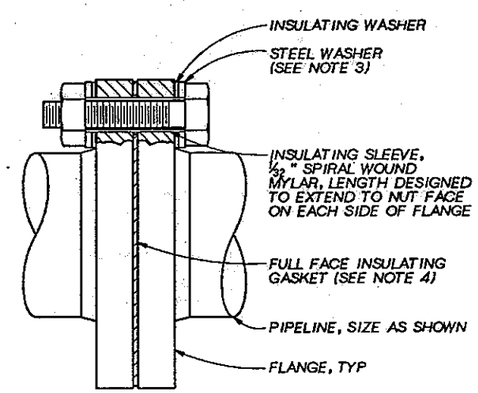

NOTES:
1. INSTALL INSULATING WASHER ON UNPROTECTED SIDE OF FLANGE.
2. COAT WITH COLD APPLIED COAL TAR MASTIC AFTER ASSEMBLING JOINT AND WRAP WITH A BUTYL RUBBER ADHESIVE, POLYETHYLENE BACKED TAPE.
3. USE 316 SST BOLTS, NUTS AND WASHER FOR GOX PIPING.
4. USE 1/16" DURABLA GASKET (FULL FACE) FOR GOX PIPING

INSULATING FLANGE (394)
NTS

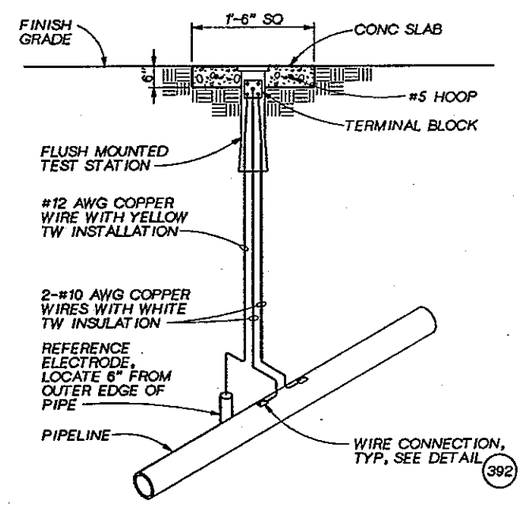

NOTE:
FOR LOCATION SEE XX-X-X & XX-X-X

FLUSH MOUNTED TEST STATION (396)
NTS

JOSEPH A. GAUTHIER, REGISTERED PROFESSIONAL ENGINEER

CH2M HILL

DSGN	JR MILLER				
DR	CS HOWELL				
CHK	M BRACKEN				
APVD	J. GAUTHIER	NO.	DATE	REVISION	BY / APVD

REUSE OF DOCUMENTS
THIS DOCUMENT, AND THE IDEAS AND DESIGNS INCORPORATED HEREIN, AS AN INSTRUMENT OF PROFESSIONAL SERVICE, IS THE PROPERTY OF CH2M HILL AND IS NOT TO BE USED, IN WHOLE OR IN PART, FOR ANY OTHER PROJECT WITHOUT THE WRITTEN AUTHORIZATION OF CH2M HILL.
© CH2M HILL

VERIFY SCALE
BAR IS ONE INCH ON ORIGINAL DRAWING.
0 1"
IF NOT ONE INCH ON THIS SHEET, ADJUST SCALES ACCORDINGLY.

CITY OF BELLINGHAM, WASHINGTON
POST POINT WASTEWATER TREATMENT PLANT UPGRADE

STANDARD DETAILS
MECHANICAL
STANDARD DETAIL

DWG NO. 800-M-12
DATE AUG. 1990
PROJ NO. SEA22462.C1

OVERLAY IDENTIFICATION: COMPOSITE, OVERLAY, SCREEN, PROJID, FILE

DATE: 8/23/90
DRAWN BY: B. CARR DESIGNED BY: GG FLOOD
DGN NAME: H:/PROJ2/BELLINGH/BL800H-A.DGN

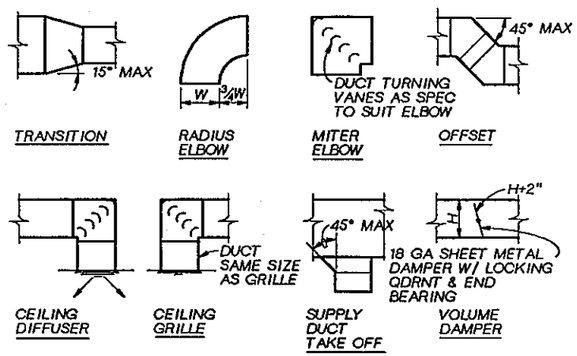

DUCT CONSTRUCTION DETAILS
NTS

GENERAL DUCTWORK NOTES:

1. CEILING DIFFUSERS AND GRILLES ARE TO BE LOCATED IN THE PANELS BETWEEN THE T-BAR GRIDS IN ALL SUSPENDED CEILING SYSTEMS. WHERE REFLECTED CEILING PLANS ARE PROVIDED, LOCATE DIFFUSERS AND GRILLES AS INDICATED.
2. PROVIDE VOLUME DAMPERS FOR EACH GRILLE AT EACH RETURN CONNECTION AND ANY OTHER LOCATIONS INDICATED ON THE DRAWINGS, IN ACCORDANCE WITH TYPICAL DUCT CONSTRUCTION DETAILS ABOVE. DAMPERS TO BE INSTALLED MINIMUM 5'-0" FROM GRILLE, EXCEPT AS NOTED.

500

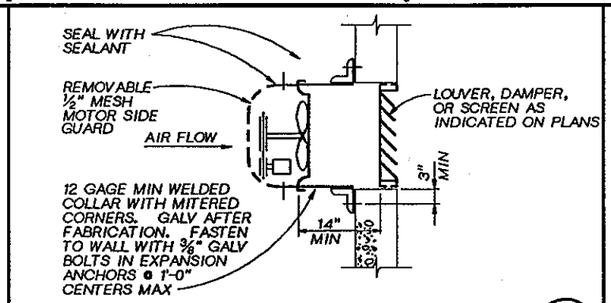

WALL MOUNTED PROPELLER FAN
NTS

502

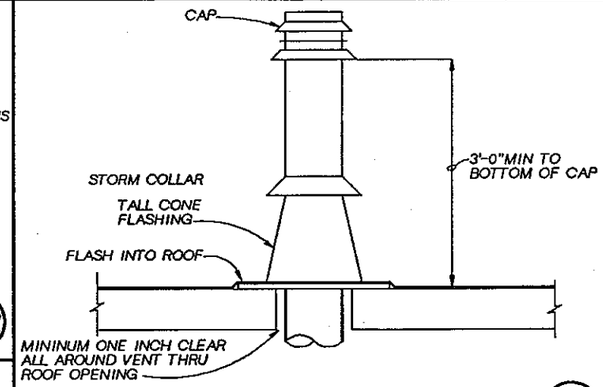

TYPICAL GAS VENT
NTS

506

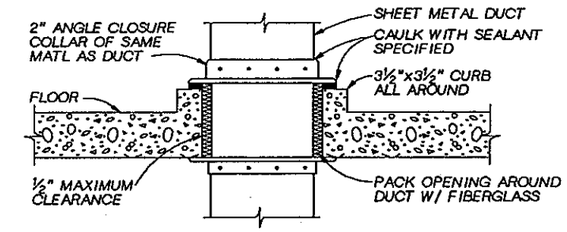

FLOOR PENETRATION-WET AREA
NTS

509

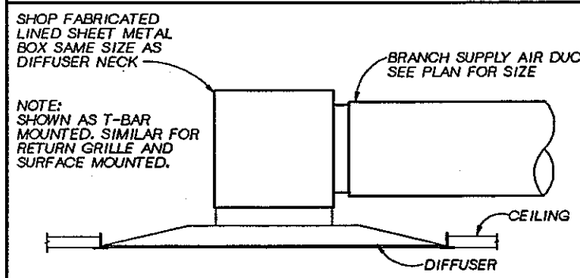

CEILING DIFFUSER
NTS

503

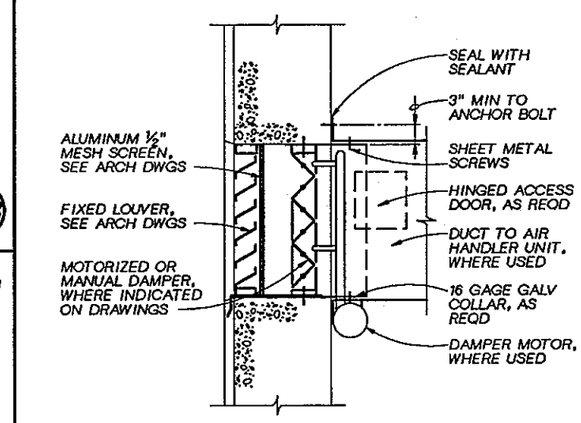

OUTSIDE AIR INTAKE
NTS

507

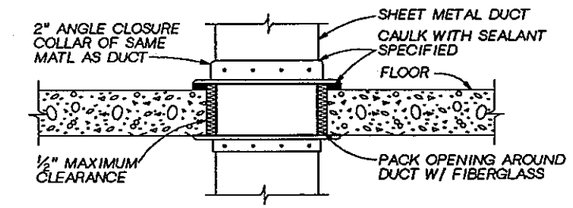

NOTES:
1. WALL PENETRATION SIMILAR.

FLOOR PENETRATION - DRY AREA
NTS

510

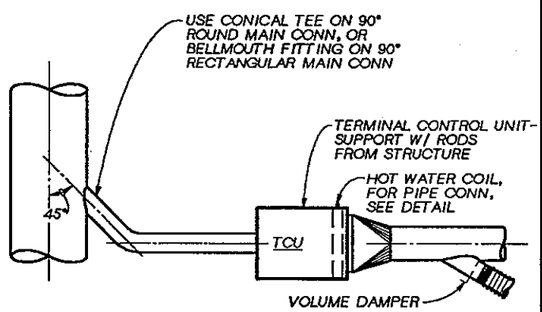

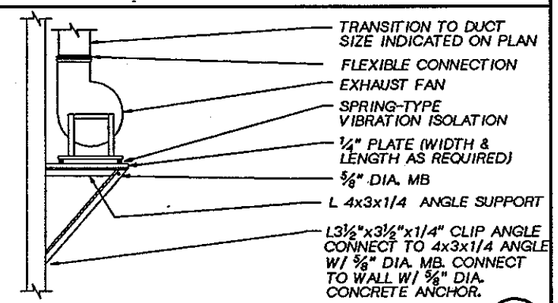

WALL MTD. CENTRIFUGAL FAN
NTS

504

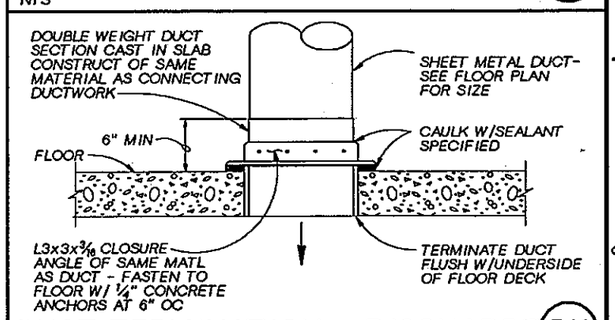

DUCT TERMINATION - DISCHARGE
NTS

511

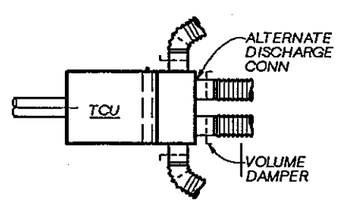

NOTE:
BRANCH DUCT BALANCING DAMPER REQUIRED WHEN NOT INTEGRAL WITH UNIT.

TERMINAL CONTROL UNIT INSTALLATION
NTS

501

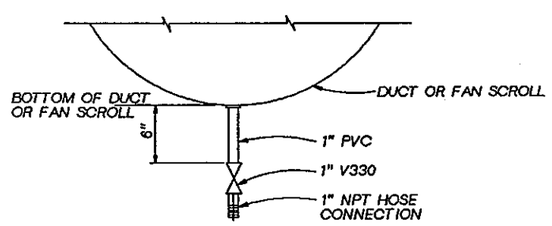

DUCT/FAN DRAIN DETAIL
NTS

505

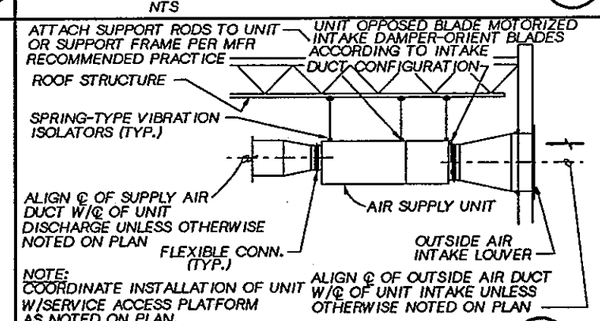

NOTE:
COORDINATE INSTALLATION OF UNIT W/SERVICE ACCESS PLATFORM AS NOTED ON PLAN.

SUSPENDED AIR SUPPLY UNIT
NTS

508

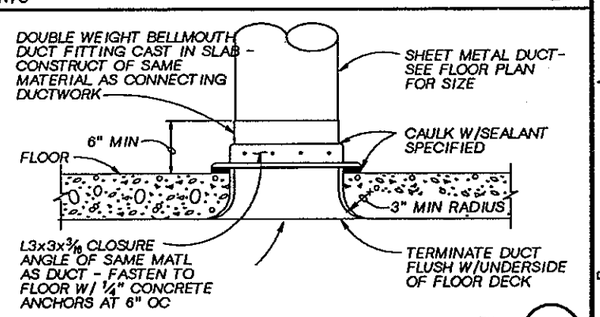

DUCT TERMINATION - INTAKE
NTS

512

JOSEPH A. GAUTHIER STATE OF WASHINGTON REGISTERED PROFESSIONAL ENGINEER

CH2M HILL

DSGN	G FLOOD
DR	S GUNDY
CHK	J. SIEMENS
APVD	J. GAUTHIER

NO.	DATE	REVISION	BY	APVD

REUSE OF DOCUMENTS
THIS DOCUMENT, AND THE IDEAS AND DESIGNS INCORPORATED HEREIN, AS AN INSTRUMENT OF PROFESSIONAL SERVICE, IS THE PROPERTY OF CH2M HILL AND IS NOT TO BE USED, IN WHOLE OR IN PART, FOR ANY OTHER PROJECT WITHOUT THE WRITTEN AUTHORIZATION OF CH2M HILL.
©CH2M HILL

BAR IS ONE INCH ON ORIGINAL DRAWING.
0 1"
IF NOT ONE INCH ON THIS SHEET, ADJUST SCALES ACCORDINGLY.

CITY OF BELLINGHAM, WASHINGTON
POST POINT WASTEWATER TREATMENT PLANT UPGRADE

STANDARD DETAILS
HVAC
STANDARD DETAILS

DWG NO. 800-H-1
DATE AUG. 1990
PROJ NO. SEA22462.C1

OVERLAY IDENTIFICATION: COMPOSITE, OVERLAY, PROJ/D, FILE

DRAWN BY: M. MOORE DESIGNED BY: GG FLOOD
DGN NAME: H:/PROJ2/BELLINGH/BL800H-B.DGN

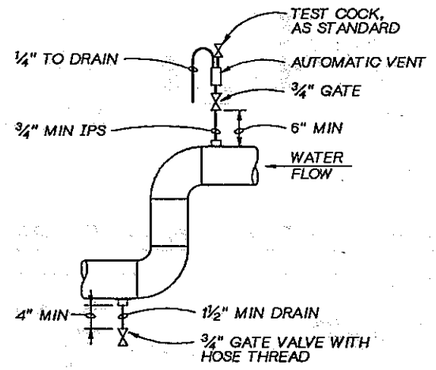

NOTES:
1. TYPICAL FOR ALL HIGH POINTS, LOW POINTS AND POCKETS.
2. LOW POINT DRAINS TO BE 2" MINIMUM ON 6" AND LARGER MAINS.

VENT AND DRAIN (513)
NTS

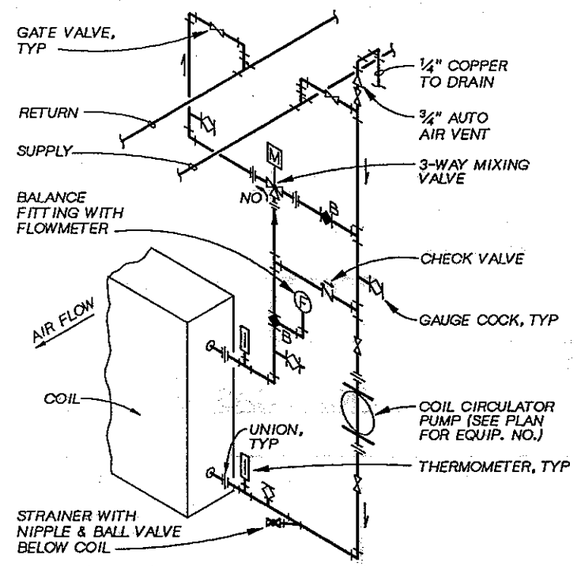

NOTE:
DETAIL GIVES REQUIRED SEQUENCE. PIPING ARRANGEMENT MAY VARY TO SUIT FIELD REQUIREMENTS.

COIL CONNECTION (515)
NTS

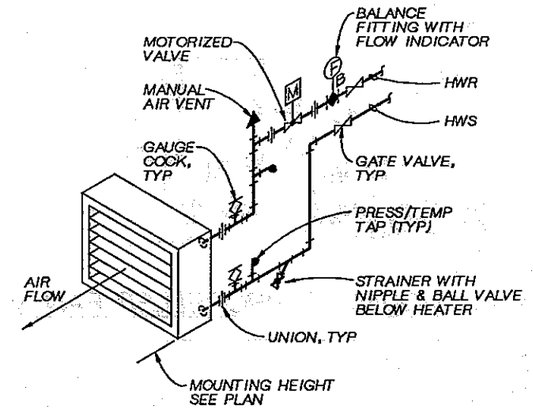

NOTE:
DETAIL GIVES REQUIRED SEQUENCE. PIPING ARRANGEMENT MAY VARY TO SUIT FIELD REQUIREMENTS.

HORIZONTAL UNIT HEATER CONNECTION (517)
NTS

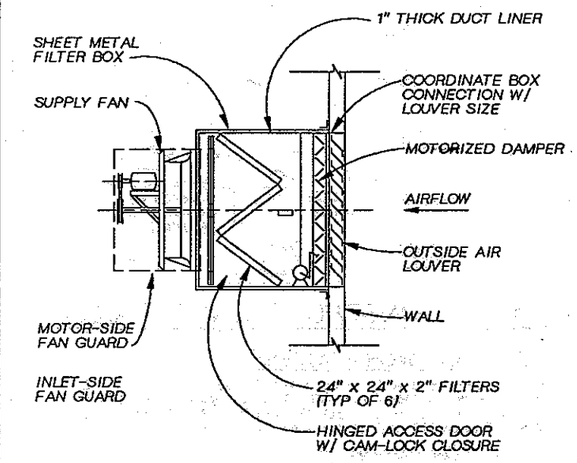

SUPPLY FAN FILTER BOX (520)
NTS

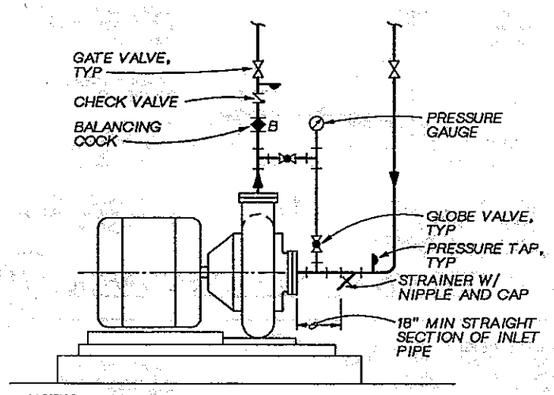

NOTES:
1. DETAIL SIMILAR FOR INLINE PUMPS.
2. FLEXIBLE CONNECTIONS SHALL BE AS SPECIFIED.
3. PUMP SIDE OF GATE VALVE SHALL HAVE UNION IF 2" AND SMALLER, FLANGE IF 2 1/2" AND LARGER.

CIRCULATING PUMP PIPING ARRANGEMENT (514)
NTS

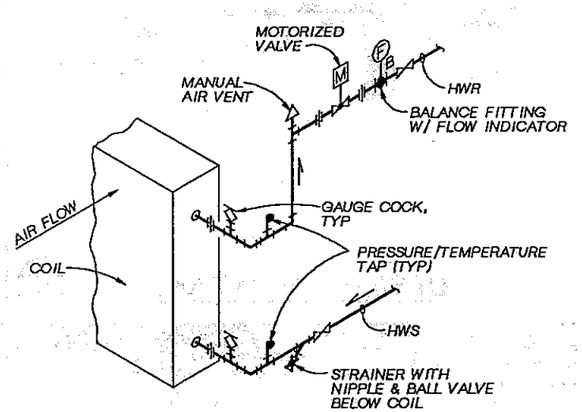

NOTE:
DETAIL GIVES REQUIRED SEQUENCE. PIPING ARRANGEMENT MAY VARY TO SUIT FIELD REQUIREMENTS.

REHEAT COIL CONNECTION (516)
NTS

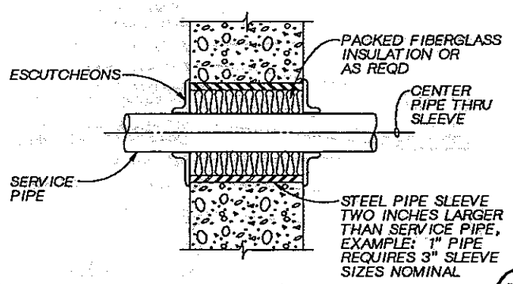

PIPE PENETRATION (518)
NTS

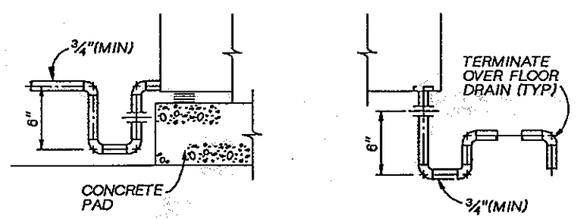

ALTERNATE PREFERRED

COIL DRAIN-PAN PIPING (519)
NTS

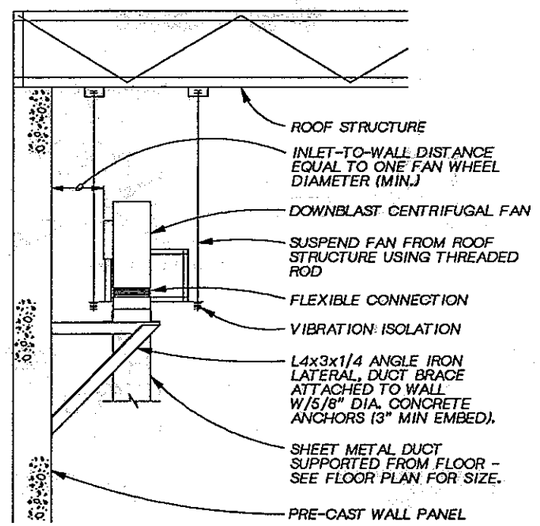

SUSPENDED CENTRIFUGAL FAN (521)
NTS

JOSEPH A. GAUTHIER — STATE OF WASHINGTON — REGISTERED PROFESSIONAL ENGINEER

CH2M HILL

DSGN	G FLOOD
DR	SD GUNDY
CHK	J. SIEMENS
APVD	J. GAUTHIER

NO.	DATE	REVISION	BY	APVD

REUSE OF DOCUMENTS
THIS DOCUMENT, AND THE IDEAS AND DESIGNS INCORPORATED HEREIN, AS AN INSTRUMENT OF PROFESSIONAL SERVICE, IS THE PROPERTY OF CH2M HILL AND IS NOT TO BE USED, IN WHOLE OR IN PART, FOR ANY OTHER PROJECT WITHOUT THE WRITTEN AUTHORIZATION OF CH2M HILL.
©CH2M HILL

BAR IS ONE INCH ON ORIGINAL DRAWING.
0 1"
IF NOT ONE INCH ON THIS SHEET, ADJUST SCALES ACCORDINGLY.

CITY OF BELLINGHAM, WASHINGTON
POST POINT WASTEWATER TREATMENT PLANT UPGRADE

STANDARD DETAILS
HVAC
STANDARD DETAILS

DWG NO. 800-H-2
DATE AUG. 1990
PROJ. NO. SEA22462.C1

DATE: 5/2/90
DRAWN BY: SD GUNDY/M SPARLING DESIGNED BY: SD GUNDY
DGN NAME: H:/PROJ2/BELLINGH/BL800P-A.DGN

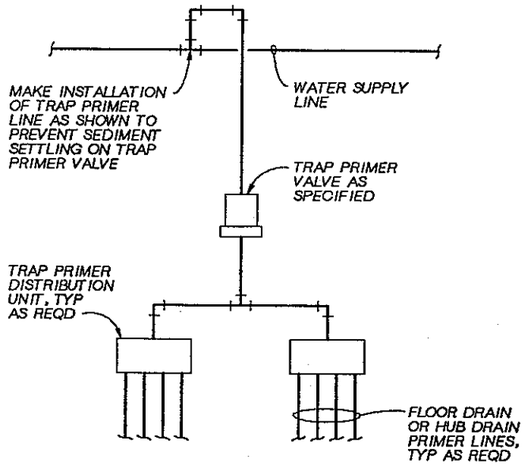

FLOOR DRAIN TRAP PRIMER VALVE DETAIL (525)

NTS

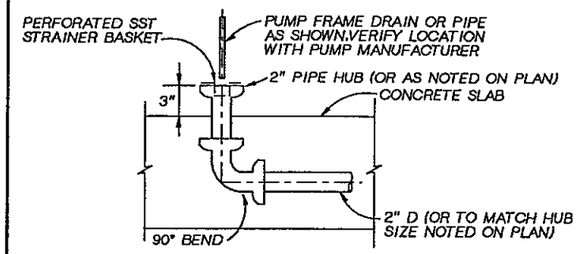

HUB DRAIN DETAIL (528)

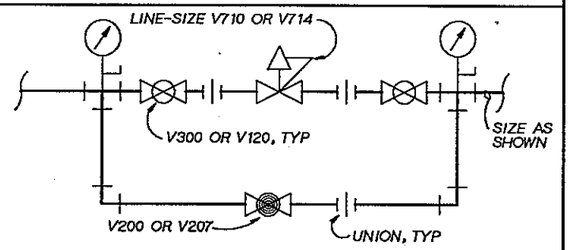

PRESSURE REDUCING VALVE ASSEMBLY DEATAIL (529)

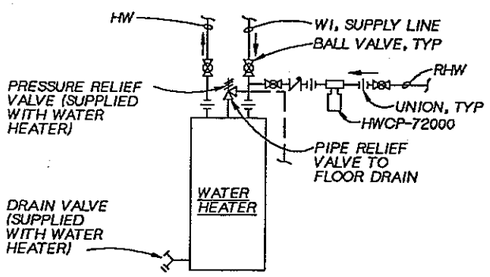

WATER HEATER DETAIL (526)

NTS

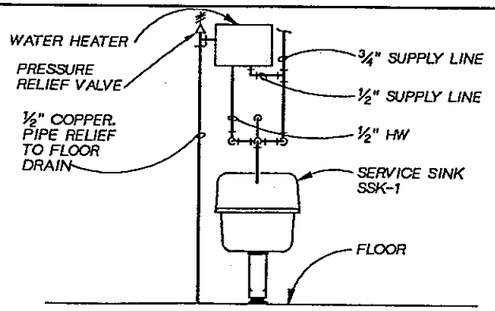

SERVICE SINK DETAIL (527)

NTS

PLUMBING FIXTURE IDENTIFICATION

DF	DRINKING FOUNTAIN
FD	FLOOR DRAIN
FW	FLASK WASHER
GW	GLASSWARE WASHER
KSK	KITCHEN SINK
LAV	LAVATORY
LEW	LAB. EYE WASH
LP	LAB. PLUMBING FIXTURE
LSK	LAB. SINK
LSS	LAB. SAFETY SHOWER
SB	SERVICE BASIN
SH	SHOWER
SSH	SAFETY SHOWER
SSK	SERVICE SINK
WC	WATER CLOSET
WH	WATER HEATER
UR	URINAL

EXAMPLE: LAV 2

FIXTURE LEGEND — LAV

NO. IN SPECIFICATIONS — 2

PLUMBING FIXTURE SCHEDULE

ITEM NO.	DESCRIPTION	DRAIN	VENT	W1	HW	NG	ALB	VAC	DIW
DF	EXST DRINKING FOUNTIAN	1½"	1¼"	½"	-	-	-	-	-
FD-1	FLOOR DRAIN	*	*	½"	-	-	-	-	-
FD-2	FLOOR DRAIN-GEN. AREAS	*	*	½"	-	-	-	-	-
FD-3	FLOOR DRAIN	*	*	½"	-	-	-	-	-
FD-4	FLOOR DRAIN-CHEM.RESIST	*	*	½"	-	-	-	-	-
FD-5	FLOOR DRAIN	*	*	½"	-	-	-	-	-
FW	FLASK WASHER	2"	1½"	½"	-	-	-	-	½"
GW	GLASSWARE WASHER	2"	1½"	½"	-	-	-	-	½"
KSK	EXST KITCHEN SINK	-	-	½"	½"	-	-	-	-
LAV	EXST LAVATORY	-	-	½"	½"	-	-	-	-
LAV-1	LAVATORY	1½"	1¼"	½"	½"	-	-	-	-
LEW-1	LAB. EYEWASH	-	-	½"	-	-	-	-	-
LP-1	DIW. FAUCET ROUGH-IN	-	-	-	-	-	-	-	½"
LP-2	W1 FAUCET ROUGH-IN	-	-	½"	-	-	-	-	-
LP-3	MIXING FAUCET ROUGH-IN	-	-	½"	½"	-	-	-	-
LP-4	SIN.PANEL GAS COCK ROUGH-IN	-	-	-	-	½"	-	-	-
LP-5	SIN.PANEL AIR COCK ROUGH-IN	-	-	-	-	-	½"	-	-
LP-6	SIN.PANEL VAC COCK ROUGH-IN	-	-	-	-	-	-	½"	-
LP-7	SIN.PANEL AIR COCK ROUGH-IN	-	-	-	-	-	½"	-	-
LP-8	SIN.PED. GAS COCK ROUGH-IN	-	-	-	-	½"	-	-	-
LP-9	SIN.PED. AIR COCK ROUGH-IN	-	-	-	-	-	½"	-	-
LP-10	SIN.PED. VAC COCK ROUGH-IN	-	-	-	-	-	-	½"	-
LP-11	DOUB.PED. GAS COCK ROUGH-IN	-	-	-	-	½"	-	-	-
LP-12	DOUB.PED. AIR COCK ROUGH-IN	-	-	-	-	-	½"	-	-
LP-13	DOUB.PED. VAC COCK ROUGH-IN	-	-	-	-	-	-	½"	-
LSK-1	LAB SINK-SINGLE COMPART.	1½"	1¼"	-	-	-	-	-	-
LSK-2	LAB SINK-DOUBLE COMPART.	1½"	1¼"	-	-	-	-	-	-
LSK-3	LAB SINK-SINGLE COMP.(EPOXY)	1½"	1¼"	-	-	-	-	-	-
LSK-4	LAB CUP SINK	1½"	1¼"	-	-	-	-	-	-
LSS-1	LAB SAFETY SHOWER	-	-	1½"	-	-	-	-	-
SB-1	SERVICE BASIN	3"	2"	½"	½"	-	-	-	-
SH-1	SHOWER	-	-	½"	½"	-	-	-	-
SSH-1	SAFETY SHOWER-FROST PROOF	-	-	1½"	-	-	-	-	-
SSH-2	SAFETY SHOWER	-	-	1½"	-	-	-	-	-
SSK-1	SERVICE SINK	3"	2"	½"	½"	-	-	-	-
WC-1	WATER CLOSET-WALL MOUNT	4"	2"	1"	-	-	-	-	-
WC-2	WATER CLOSET-HANDICAPPED	4"	2"	1"	-	-	-	-	-
WC-3	WATER CLOSET-TANK TYPE	4"	2"	½"	-	-	-	-	-
WH-1	WATER HEATER	-	-	1½"	1½"	-	-	-	-
UR-1	URINAL-WALL MOUNT	2"	1½"	¾"	-	-	-	-	-

NOTE: * INDICATES SIZE AS SHOWN ON DRAWINGS

JOSEPH A. GAUTHIER — STATE OF WASHINGTON — REGISTERED PROFESSIONAL ENGINEER

CH2M HILL

DSGN	S.D. GUNDY
DR	S.D. GUNDY
CHK	R.W. REGER
APVD	J. GAUTHIER

NO.	DATE	REVISION	BY	APVD

REUSE OF DOCUMENTS
THIS DOCUMENT, AND THE IDEAS AND DESIGNS INCORPORATED HEREIN, AS AN INSTRUMENT OF PROFESSIONAL SERVICE, IS THE PROPERTY OF CH2M HILL AND IS NOT TO BE USED, IN WHOLE OR IN PART, FOR ANY OTHER PROJECT WITHOUT THE WRITTEN AUTHORIZATION OF CH2M HILL.
©CH2M HILL

BAR IS ONE INCH ON ORIGINAL DRAWING. 0 — 1"
IF NOT ONE INCH ON THIS SHEET, ADJUST SCALES ACCORDINGLY.

CITY OF BELLINGHAM, WASHINGTON
POST POINT WASTEWATER TREATMENT PLANT UPGRADE

STANDARD DETAILS
PLUMBING
STANDARD DETAILS

DWG NO. 800-P-1
DATE AUG. 1990
PROJ NO. SEA22462.C1

OVERLAY IDENTIFICATION | COMPOSITE | OVERLAY | PROJID | FILE

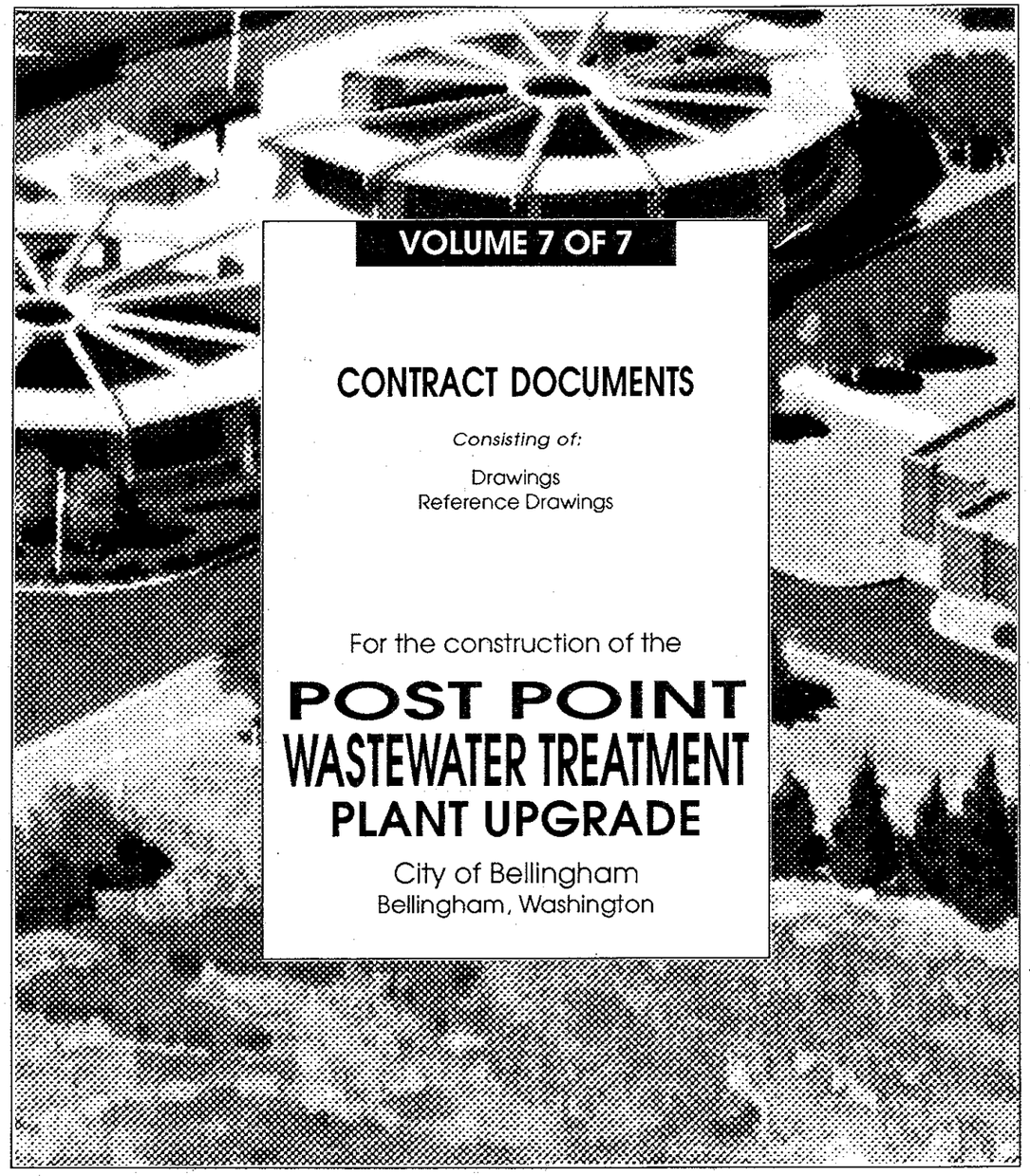

VOLUME 7 OF 7

CONTRACT DOCUMENTS

Consisting of:

Drawings
Reference Drawings

For the construction of the

POST POINT WASTEWATER TREATMENT PLANT UPGRADE

City of Bellingham
Bellingham, Washington

FOR INFORMATION REGARDING THIS PROJECT CONTACT

JOSEPH A. GAUTHIER
BELLEVUE, WASHINGTON
(206) 453-5000

CH2M HILL

August 1990

DRAWN BY: G. SLAYTER DESIGNED BY: V. AUSTIN
DGN NAME: H:/PROJ2/BELLINGH/BL900N-A.DGN

INSTRUMENT IDENTIFICATION

EXAMPLE SYMBOLS

EQUIPMENT TAGGED HS-35311 THROUGH HS-35313
IS SHOWN AS FOLLOWS ON THE P & ID DRAWINGS

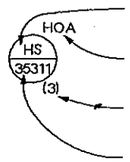

I.S.A. FUNCTIONAL IDENTIFICATION
(SEE I.S.A. TABLE BELOW)

TYPE
(SEE ABBREVIATIONS AND LETTER SYMBOLS)

QUANTITY OF SIMILAR ITEMS IN THE
SAME PROCESS LOOP

IDENTIFICATION NUMBER

FIRST TWO DIGITS	-	AREA NUMBERS
THIRD AND FOURTH DIGITS	-	PROCESS FUNCTION OR LOOP NUMBER
FIFTH DIGIT	-	CONSECUTIVE NUMBER FOR SIMILAR ITEMS IN THE SAME LOOP

FIELD MOUNTED INSTRUMENT

REAR-OF-PANEL MOUNTED INSTRUMENT

PANEL MOUNTED INSTRUMENT

MOTOR CONTROL CENTER MOUNTED INSTRUMENT

FUNCTION PART OF PROGRAMMABLE
CONTROL SYSTEM

FUNCTION PART OF COMPUTER
SYSTEM

INSTRUMENT SOCIETY OF AMERICA TABLE

	FIRST LETTER(S)		SUCCEEDING LETTERS		
LETTER	PROCESS OR INITIATING VARIABLE	MODIFIER	READOUT OR PASSIVE FUNCTION	OUTPUT FUNCTION	MODIFIER
A	ANALYSIS (t)		ALARM		
B	BURNER FLAME		USER'S CHOICE (t)	USER'S CHOICE (t)	USER'S CHOICE (t)
C	CONDUCTIVITY			CONTROL	
D	DENSITY (S.G.)	DIFFERENTIAL			
E	VOLTAGE		PRIMARY ELEMENT		
F	FLOW RATE	RATIO			
G	GAUGE		GLASS	GATE	
H	HAND (MANUAL)				HIGH
I	CURRENT		INDICATE		
J	POWER	SCAN			
K	TIME OR SCHEDULE			CONTROL STATION	
L	LEVEL		LIGHT (PILOT)		LOW
M	MOTION				MIDDDLE
N	USER'S CHOICE (t)		USER'S CHOICE (t)	USER'S CHOICE (t)	USER'S CHOICE (t)
O	USER'S CHOICE (t)		ORIFICE		
P	PRESSURE (OR VACUUM)		POINT (TEST CONNECTION)		
Q	QUANTITY OF EVENT (t)	INTEGRATE	INTEGRATE		
R			RECORD OR PRINT		
S	SPEED OR FREQUENCY	SAFETY		SWITCH	
T	TEMPERATURE			TRANSMIT	
U	MULTIVARIABLE (t)		MULTIFUNCTION (t)		
V	VISCOSITY			VALVE	
W	WEIGHT OR FORCE		WELL		
X	UNCLASSIFIED (t)		UNCLASSIFIED (t)	UNCLASSIFIED (t)	UNCLASSIFIED (t)
Y	USER'S CHOICE (t)			RELAY OR COMPUTE (t)	
Z	POSITION			DRIVE, ACTUATE OR UNCLASSIFIED FINAL CONTROL ELEMENT	

(t) WHEN USED, EXPLANATION IS SHOWN ADJACENT TO INSTRUMENT SYMBOL. SEE ABBREVIATIONS AND LETTER SYMBOLS.

EQUIPMENT TYPES

AB	AFTERBURNER
ASU	AIR SUPPLY UNIT
AVR	AIR AND/OR VACUUM RELEASE VALVE
ACP	AREA CONTROL PANEL
ATS	AUTOMATIC TRANSFER SWITCH
BS	BARSCREEN
BC	BATTERY CHARGER
BT	BELT THICKENER
B	BLOWER
BO	BOILER
BP	BUBBLER PANEL
CF	CENTRIFUGE
CH	CHILLER
C	CHLORINATOR
CB	CIRCUIT BREAKER
CL	CLASSIFIER
CP	COMPRESSER
CR	CONCENTRATOR
CN	CONVEYOR
CC	COOLING COILS
CS	CYCLONE SEPARATOR
DHU	DEHUMIDIFIER
DX	DIRECT EXPANSION COIL
DPL	DISTRIBUTION PANEL BOARD 120 Y/208 VOLTS
DPP	DISTRIBUTION PANEL BOARD 120 Y/208 VOLTS
DH	DUCT HEATER
E	EJECTORS
EG	ENGINE GENERATOR
EGP	ENGINE GENERATOR PANEL
ECP	ENVIRONMENTAL CONTROL PANEL
EF	EXHAUST FAN
ET	EXPANSION TANK
F	FAN
FD	FEEDER
G	GATE
GB	GEAR BOX
GD	GRINDER
HX	HEAT EXCHANGER
HT	HEATER
HC	HEATING COILS
IN	INCINERATOR
ICP	INCINERATOR CONTROL PANEL
LCP	LOCAL CONTROL PANEL
ME	MISCELLANEOUS EQUIPMENT
MX	MIXER
MCC	MOTOR CONTROL CENTER
MD	MOTORIZED DAMPER
OCS	OPERATOR CONTROL STATION
PFS	POLYMER FEED SYSTEM
PDB	POWER DISTRITUTION BOARD
PV	PRESSURE VESSEL
PRV	PRESSURE RELIEF VALVE
P	PUMP
RU	ROLL UP DOOR
SA	SAMPLER
S	SCRUBBER
GT	SECURITY GATE
SL	SILENCER
ST	STRAINER
SF	SUPPLY FAN
SB	SWITCHBOARD
SG	SWITCHGEAR
T	TANK OR HOPPER
XF	TRANSFORMER
UPS	UNINTERRUPTABLE POWER SUPPLY
UH	UNIT HEATER
US	UNIT SUBSTATION
VP	VAPORIZER
VFD	VARIABLE FREQUENCY DRIVE
VR	VACUMM REGULATOR

ABBREVIATIONS AND LETTER SYMBOLS

ACK	ACKNOWLEDGE
AM	AUTO-MANUAL
CL2	CHLORINE
CS	CONTROL STATION
DO	DISSOLVED OXYGEN
DODE	DELAY ON DE-ENERGIZATION
DOE	DELAY ON ENERGIZATION
FOR	FORWARD-OFF-REVERSE
HOA	HAND-OFF-AUTO
HOR	HAND-OFF-REMOTE
HPU	HYDRAULIC POWER UNIT
INT/EXT	INTERNAL/EXTERNAL
LEL	LOWER EXPLOSIVE LIMIT
LOR	LOCAL-OFF-REMOTE
LOS	LOCKOUT STOP
LR	LOCAL-REMOTE
LUA	LOAD-UNLOAD-AUTOMATIC
OC	OPEN-CLOSE(D)
OCA	OPEN-CLOSE-AUTOMATIC
OO	ON-OFF
OOA	ON-OFF-AUTOMATIC
OOR	ON-OFF-REMOTE
OSC	OPEN-STOP-CLOSE
PET	PSA EMERGENCY TRIP
pH	HYDROGEN ION CONCENTRATION
PLC	PROGRAMMABLE LOGIC CONTROLLER
$\%O_2$	PERCENT OXYGEN
PSM	PRIMARY SCUM
PS-BS	PRIMARY SLUDGE-BLENDED SLUDGE
RIO	REMOTE INPUT/OUTPUT
RS	RUN-STOP
SS	START-STOP
SS/R	START-STOP / RESET
TMF	TIME-MANUAL-FLOW
VHC	VOLATILE HYDROCARBONS
VIB	VIBRATION
Σ	SUM
$\sqrt{\ }$	SQUARE ROOT
X	MULTIPLY

GENERAL NOTES

1. ALL PANEL MOUNTED INSTRUMENTS SHOWN ON P & ID DRAWINGS ARE PART OF CONTROL PANEL NOTED EITHER AT THE BOTTOM OF THE DRAWING OR AT THE LOWER LEFT SIDE OF THE INSTRUMENT SYMBOL.
2. COMPONENTS AND PANELS SHOWN WITH A (◆) ARE EXISTING ITEMS.
3. THIS IS A STANDARD LEGEND, THEREFORE NOT ALL OF THIS INFORMATION MAY BE USED ON THIS PROJECT.
4. COMPONENTS AND PANELS SHOWN WITH A (⊕) ARE SUPPLIED AS PART OF A PACKAGE SYSTEM.

JERALD L. SLAYTER — STATE OF WASHINGTON — REGISTERED PROFESSIONAL ENGINEER

CH2M HILL

DSGN	V. AUSTIN
DR	G. SLAYTER
CHK	J. BLACK
APVD	J GAUTHIER

NO.	DATE	REVISION	BY	APVD

REUSE OF DOCUMENTS
THIS DOCUMENT, AND THE IDEAS AND DESIGNS INCORPORATED HEREIN, AS AN INSTRUMENT OF PROFESSIONAL SERVICE, IS THE PROPERTY OF CH2M HILL AND IS NOT TO BE USED, IN WHOLE OR IN PART, FOR ANY OTHER PROJECT WITHOUT THE WRITTEN AUTHORIZATION OF CH2M HILL.
©CH2M HILL

BAR IS ONE INCH ON ORIGINAL DRAWING.
0 1"
IF NOT ONE INCH ON THIS SHEET, ADJUST SCALES ACCORDINGLY.

CITY OF BELLINGHAM, WASHINGTON
POST POINT WASTEWATER TREATMENT PLANT UPGRADE

INSTRUMENTATION AND CONTROL
ABBREVIATIONS AND INSTRUMENT IDENTIFICATION

DWG NO. 900-N-1
DATE AUG. 1990
PROJ NO. SEA22462.C1

OVERLAY IDENTIFICATION | COMPOSITE | OVERLAY | GREEN | PROJID | FILE

DATE: 08-24-90
DRAWN BY: J.PIERONI DESIGNED BY:
DGN NAME: H:/PROJ2/BELLINGH/BL900N-B.DGN

PRIMARY ELEMENT SYMBOLS

- PARSHALL FLUME
- WEIR
- ORIFICE PLATE
- FLOW TUBE
- FLOW SWITCH (THERMAL)
- ROTAMETER
- ULTRASONIC FLOW METER
- VORTEX FLOW METER
- PROPELLER OR TURBINE METER
- ELECTROMAGNETIC FLOWMETER
- LEVEL (PRESSURE TYPE)
- LEVEL (BUBBLER TUBE)
- LEVEL (FLOAT TYPE)
- LEVEL (ULTRASONIC)
- DENSITY METER

ACTUATOR SYMBOLS

- P Z XX — PNEUMATIC W/ POSITIONER
- P S XX — PNEUMATIC W/ SOLENOID
- E XX — ELECTRIC
- E Z XX — ELECTRIC W/ POSITIONER
- H XX — HYDRAULIC
- MANUAL
- S — SOLENOID

NOTE: ON LOSS OF PRIMARY POWER (PNEUMATIC OR ELECTRICAL)
XX: FO = FAIL OPEN
FC = FAIL CLOSED
FLP = FAIL TO LAST POSITION

PUMP AND COMPRESSOR SYMBOLS

NOTE: XX:
- AS ADJUSTABLE SPEED
- AZ ADJUSTABLE STROKE
- CS-1 CONSTANT SPEED (SINGLE SPEED)
- CS-2 CONSTANT SPEED (TWO SPEED)

- CENTRIFUGAL PUMP (DRY PIT) XX
- CENTRIFUGAL PUMP (WET PIT) XX
- CHEMICAL FEED PUMP XX
- DIAPHRAGM PUMP XX
- GEAR PUMP OR BLOWER (POSITIVE DISPLACEMENT) XX
- PISTON PUMP XX
- PROGRESSING CAVITY PUMP XX
- SUBMERSIBLE SUMP PUMP XX
- COMPRESSOR (CENTRIFUGAL) OR BLOWER XX
- COMPRESSOR (PISTON) XX
- EJECTOR

MISCELLANEOUS SYMBOLS

- SIGHT GLASS
- DIAPHRAGM SEAL
- BLIND FLANGE
- AIR GAP
- VENT TO ATMOSPHERE
- S — SAMPLE POINT
- M — ELECTRIC MOTOR
- PI — PRESSURE GAUGE
- TI — TEMPERATURE GAUGE
- M — MIXER
- LEVEL REGULATOR WITH MECHANICAL LINKAGE
- 120V — 120 VOLT, 60 HZ POWER SUPPLY POINT
- 480V — 480 VOLT, 60 HZ POWER SUPPLY POINT
- ANNULAR DIAPHRAGM SEAL
- RUPTURE DISK
- F — FLUSHING CONNECTION
  - HOSE ADAPTER
- S — SEAL WATER SET
  - FLOW INDICATOR
- AIR SET
- CONTROL PANEL INTERNAL WIRING TERMINAL
- CONTROL PANEL FIELD CONNECTION TERMINAL
- FLEXIBLE CONNECTION

LINE LEGEND

- PROCESS (CLOSED CONDUIT). DASHED LINE INDICATES ALTERNATE FLOW STREAM
- PROCESS (OPEN CHANNEL)
- A — MODULATED SIGNAL (4 TO 20 MADC ETC.)
- DISCRETE SIGNAL (ON/OFF ETC.)
- PF — PULSE FREQUENCY
- PNEUMATIC SIGNAL
- FILLED SYSTEM SIGNAL
- HYDRAULIC SYSTEM SIGNAL
- SOFTWARE SIGNAL
- CONTROL PANEL OR PACKAGE BOUNDARY
- ITEMS ENCLOSED ARE SIMILAR TO DETAIL
- (4) (8) (3) — PARALLELING LINES (PARENTHETICAL NUMBER INDICATES THE NUMBER OF SIGNALS REPRESENTED)
- CONNECTING LINES
- NON-CONNECTING LINES
- I — INTERLOCK. SEE CONTROL DIAGRAMS OR PROGRAM
- OR

GENERAL NOTES

1. REFER TO MECHANICAL LEGEND FOR VALVE AND GATE SYMBOLS USED ON P & ID.

GERALD L. SLATER — STATE OF WASHINGTON — 17546 — REGISTERED PROFESSIONAL ENGINEER

CH2M HILL

DSGN	V. AUSTIN
DR	J. PIERONI
CHK	J. BLACK
APVD	J GAUTHIER

NO.	DATE	REVISION	BY	APVD

REUSE OF DOCUMENTS
THIS DOCUMENT, AND THE IDEAS AND DESIGNS INCORPORATED HEREIN, AS AN INSTRUMENT OF PROFESSIONAL SERVICE, IS THE PROPERTY OF CH2M HILL AND IS NOT TO BE USED, IN WHOLE OR IN PART, FOR ANY OTHER PROJECT WITHOUT THE WRITTEN AUTHORIZATION OF CH2M HILL.
©CH2M HILL

BAR IS ONE INCH ON ORIGINAL DRAWING. 0 — 1"
IF NOT ONE INCH ON THIS SHEET, ADJUST SCALES ACCORDINGLY.

CITY OF BELLINGHAM, WASHINGTON
POST POINT WASTEWATER TREATMENT PLANT UPGRADE

INSTRUMENTATION AND CONTROL
LEGEND

DWG NO. 900-N-2
DATE AUG. 1990
PROJ NO. SEA22462.C1

OVERLAY IDENTIFICATION | COMPOSITE | OVERLAY | SCREEN | PROJID | FILE

G SLAYTER 08-24-90
DGN NAME: H:/PROJ2/BELLINGH/BL900N-C.DGN

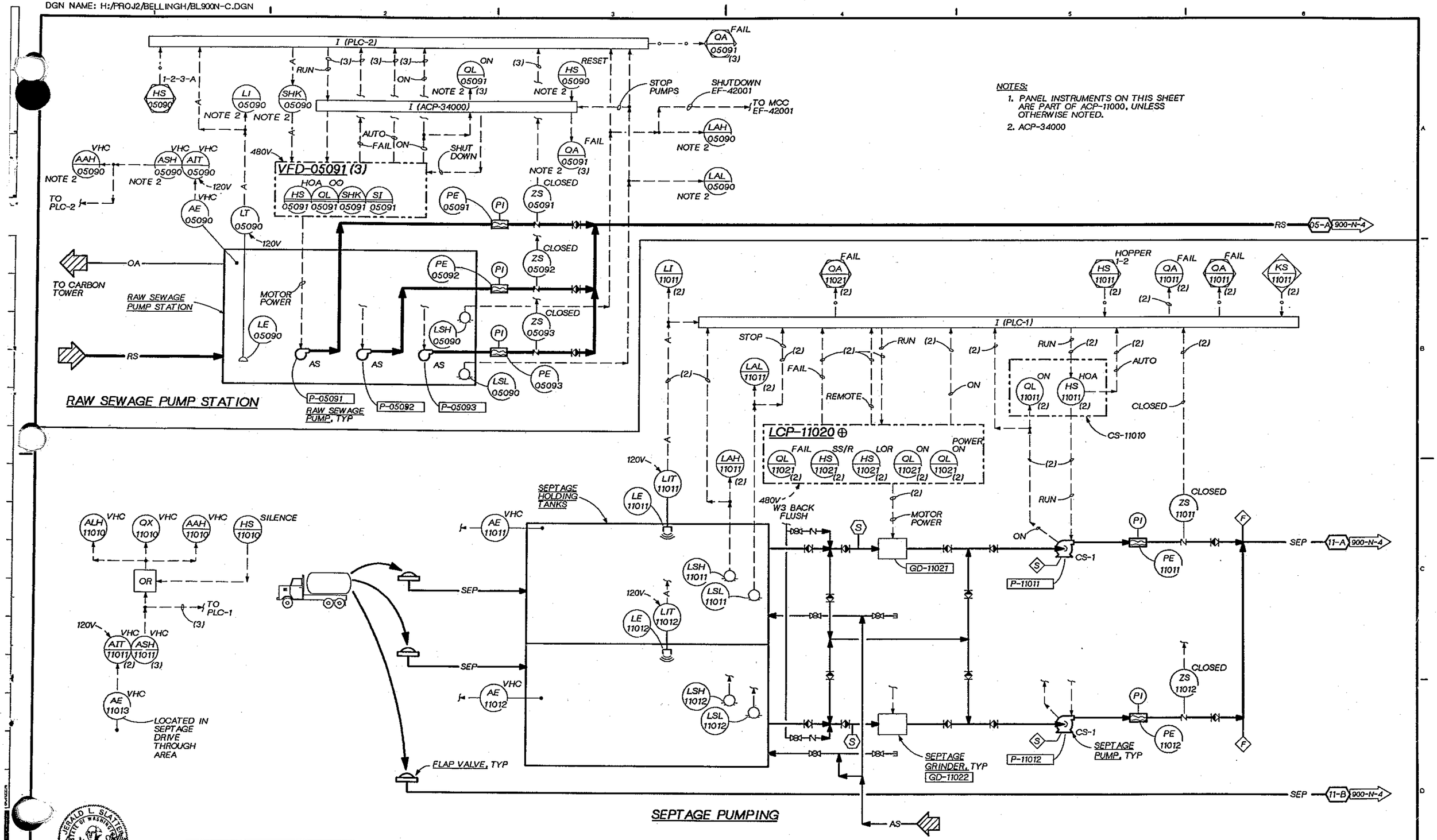

DSGN V. AUSTIN					
DR G. SLAYTER					
CHK J. BLACK					
APVD J GAUTHIER	NO.	DATE	REVISION	BY	APVD

REUSE OF DOCUMENTS
THIS DOCUMENT, AND THE IDEAS AND DESIGNS INCORPORATED HEREIN, AS AN INSTRUMENT OF PROFESSIONAL SERVICE, IS THE PROPERTY OF CH2M HILL AND IS NOT TO BE USED, IN WHOLE OR IN PART, FOR ANY OTHER PROJECT WITHOUT THE WRITTEN AUTHORIZATION OF CH2M HILL.
©CH2M HILL

BAR IS ONE INCH ON ORIGINAL DRAWING. 0 1"
IF NOT ONE INCH ON THIS SHEET, ADJUST SCALES ACCORDINGLY.

CITY OF BELLINGHAM, WASHINGTON
POST POINT WASTEWATER TREATMENT PLANT UPGRADE

INSTRUMENTATION AND CONTROL
P & ID
RAW SEWAGE PUMP STATION / SEPTAGE PUMPING

DWG NO. 900-N-3
DATE AUG. 1990
PROJ. NO. SEA22462.C1

D PARKER 08-24-90
DGN NAME: H:/PROJ2/BELLINGH/BL900N-D.DGN

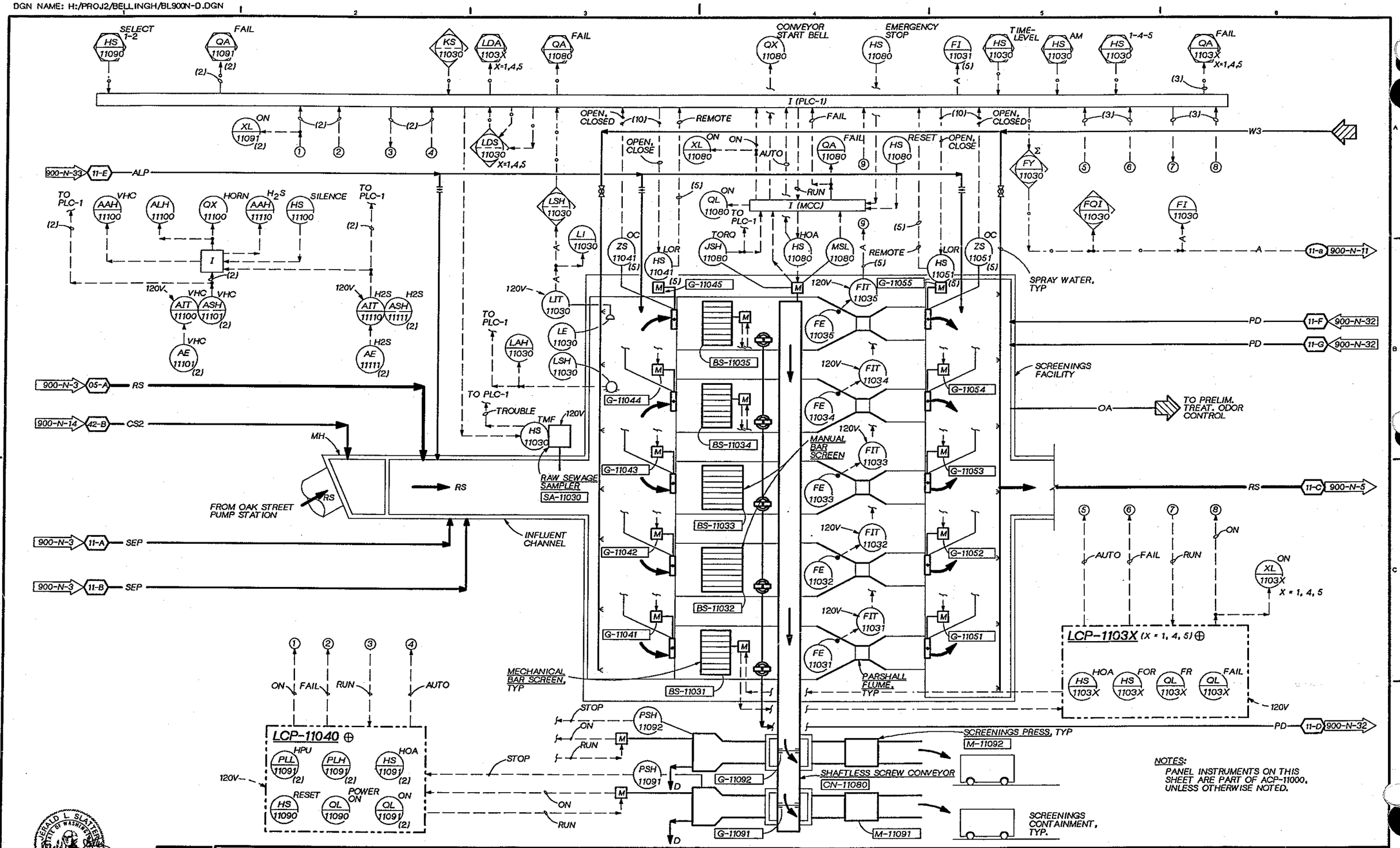

NOTES:
PANEL INSTRUMENTS ON THIS SHEET ARE PART OF ACP-11000, UNLESS OTHERWISE NOTED.

DSGN	V. AUSTIN
DR	D. PARKER
CHK	J. BLACK
APVD	J. GAUTHIER

CH2M HILL

REUSE OF DOCUMENTS
THIS DOCUMENT, AND THE IDEAS AND DESIGNS INCORPORATED HEREIN, AS AN INSTRUMENT OF PROFESSIONAL SERVICE, IS THE PROPERTY OF CH2M HILL AND IS NOT TO BE USED, IN WHOLE OR IN PART, FOR ANY OTHER PROJECT WITHOUT THE WRITTEN AUTHORIZATION OF CH2M HILL.

BAR IS ONE INCH ON ORIGINAL DRAWING.
0 1"
IF NOT ONE INCH ON THIS SHEET, ADJUST SCALE ACCORDINGLY

CITY OF BELLINGHAM, WASHINGTON
POST POINT WASTEWATER TREATMENT PLANT UPGRADE

INSTRUMENTATION AND CONTROL
P & ID
SCREENINGS FACILITY

DWG NO. 900-N-4
DATE AUG. 1990
PROJ

CM BLACKWELL 08-19-90
DGN NAME: H:/PROJ2/BELLINGH/BL900N-E.DGN

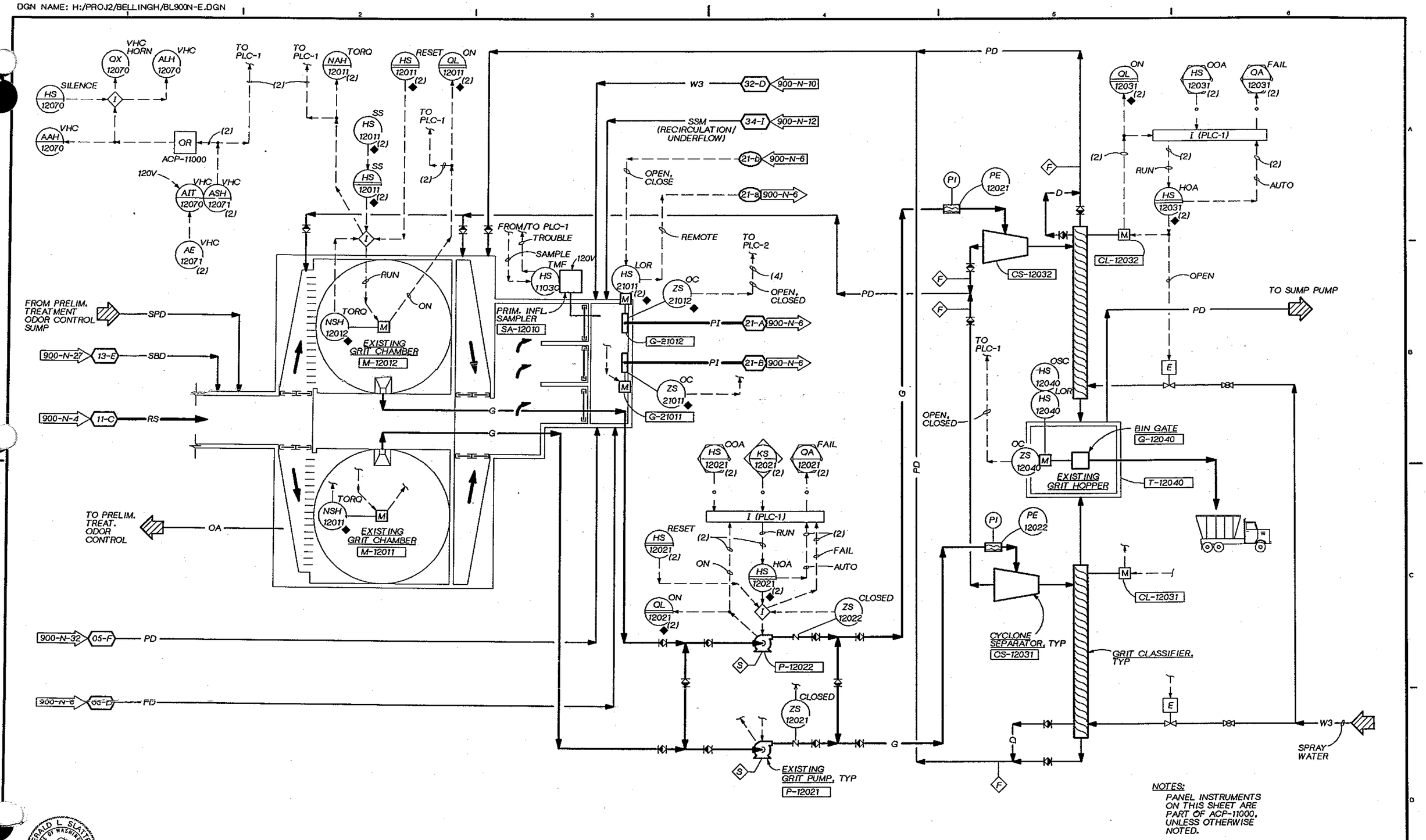

NOTES:
PANEL INSTRUMENTS ON THIS SHEET ARE PART OF ACP-11000, UNLESS OTHERWISE NOTED.

CH2M HILL	DSGN V. AUSTIN DR C. BLACKWELL CHK J. BLACK APVD J GAUTHIER	NO.	DATE	REVISION	BY	APVD

REUSE OF DOCUMENTS
THIS DOCUMENT, AND THE IDEAS AND DESIGNS INCORPORATED HEREIN, AS AN INSTRUMENT OF PROFESSIONAL SERVICE, IS THE PROPERTY OF CH2M HILL AND IS NOT TO BE USED, IN WHOLE OR IN PART, FOR ANY OTHER PROJECT WITHOUT THE WRITTEN AUTHORIZATION OF CH2M HILL.
©CH2M HILL

FILM SCALE
BAR IS ONE INCH ON ORIGINAL DRAWING.
0 1"
IF NOT ONE INCH ON THIS SHEET, ADJUST SCALES ACCORDINGLY.

CITY OF BELLINGHAM, WASHINGTON
POST POINT WASTEWATER TREATMENT PLANT UPGRADE

INSTRUMENTATION AND CONTROL
P & ID
GRIT REMOVAL

DWG NO. 900-N-5
DATE AUG. 1990
PROJ. NO. SEA22462.C1

R E BROWN 08-19-90
DGN NAME: H:/PROJ2/BELLINGH/BL900N-F.DGN

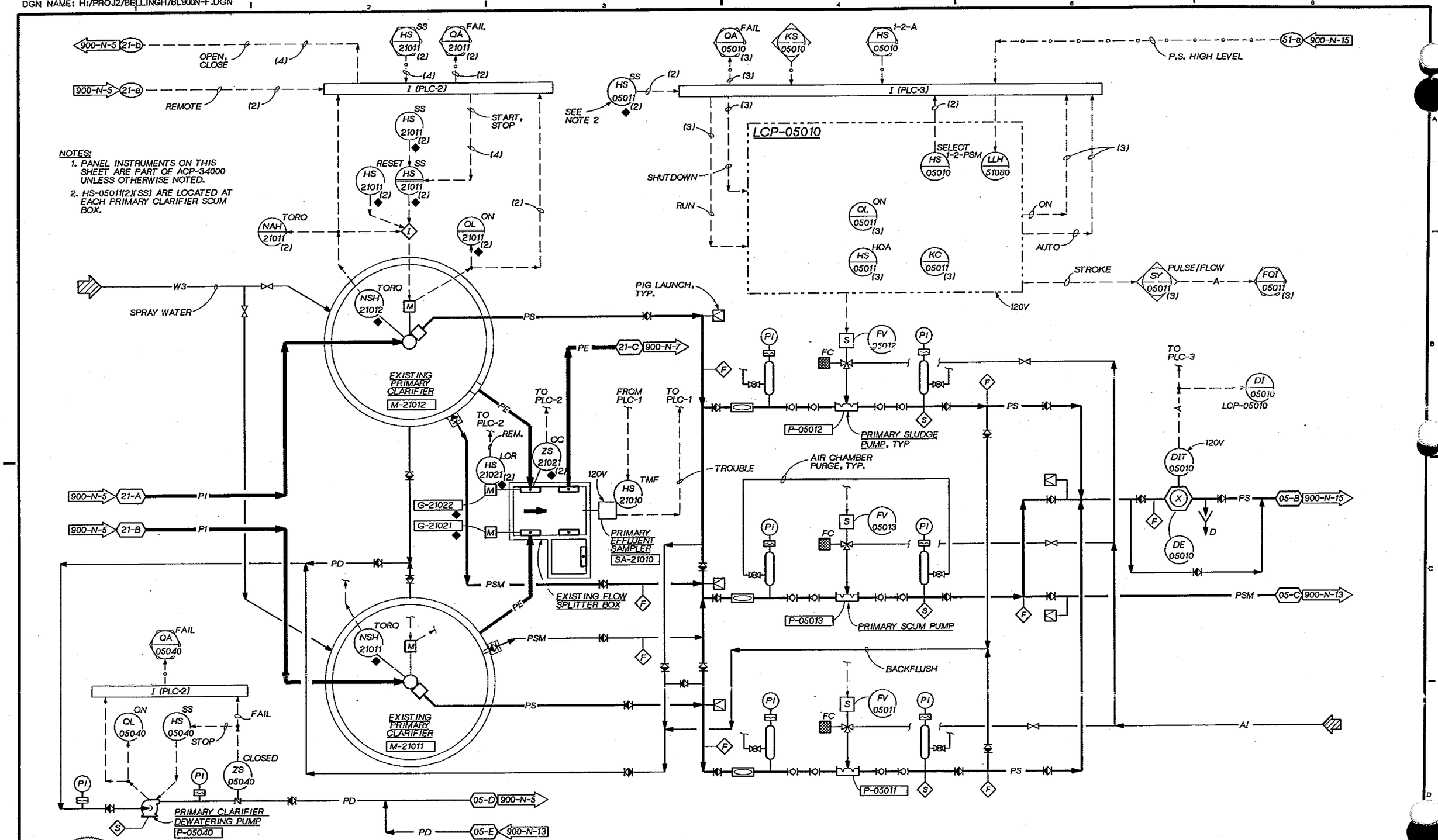

DSGN	V. AUSTIN		
DR	R. E. BROWN		
CHK	J. BLACK		
APVD	J GAUTHIER		

CH2M HILL

NO.	DATE	REVISION	BY	APVD

REUSE OF DOCUMENTS
THIS DOCUMENT, AND THE IDEAS AND DESIGNS INCORPORATED HEREIN, AS AN INSTRUMENT OF PROFESSIONAL SERVICE, IS THE PROPERTY OF CH2M HILL AND IS NOT TO BE USED, IN WHOLE OR IN PART, FOR ANY OTHER PROJECT WITHOUT THE WRITTEN AUTHORIZATION OF CH2M HILL.
©CH2M HILL

VERIFY SCALE
BAR IS ONE INCH ON ORIGINAL DRAWING.
0 1"
IF NOT ONE INCH ON THIS SHEET, ADJUST SCALES ACCORDINGLY.

CITY OF BELLINGHAM, WASHINGTON
POST POINT WASTEWATER TREATMENT PLANT UPGRADE

INSTRUMENTATION AND CONTROL
P & ID
PRIMARY CLARIFIERS / PRIMARY SLUDGE PUMPING

DWG NO. 900-N-6
DATE AUG. 1990
PROJ NO. SEA22462.C1

COMPOSITE
OVERLAY SCREEN
OVERLAY IDENTIFICATION
PROJID
FILE

V A MAXEY-SUHR 08-13-90
DGN NAME: H:/PROJ2/BELLINGH/BL900N-G.DGN

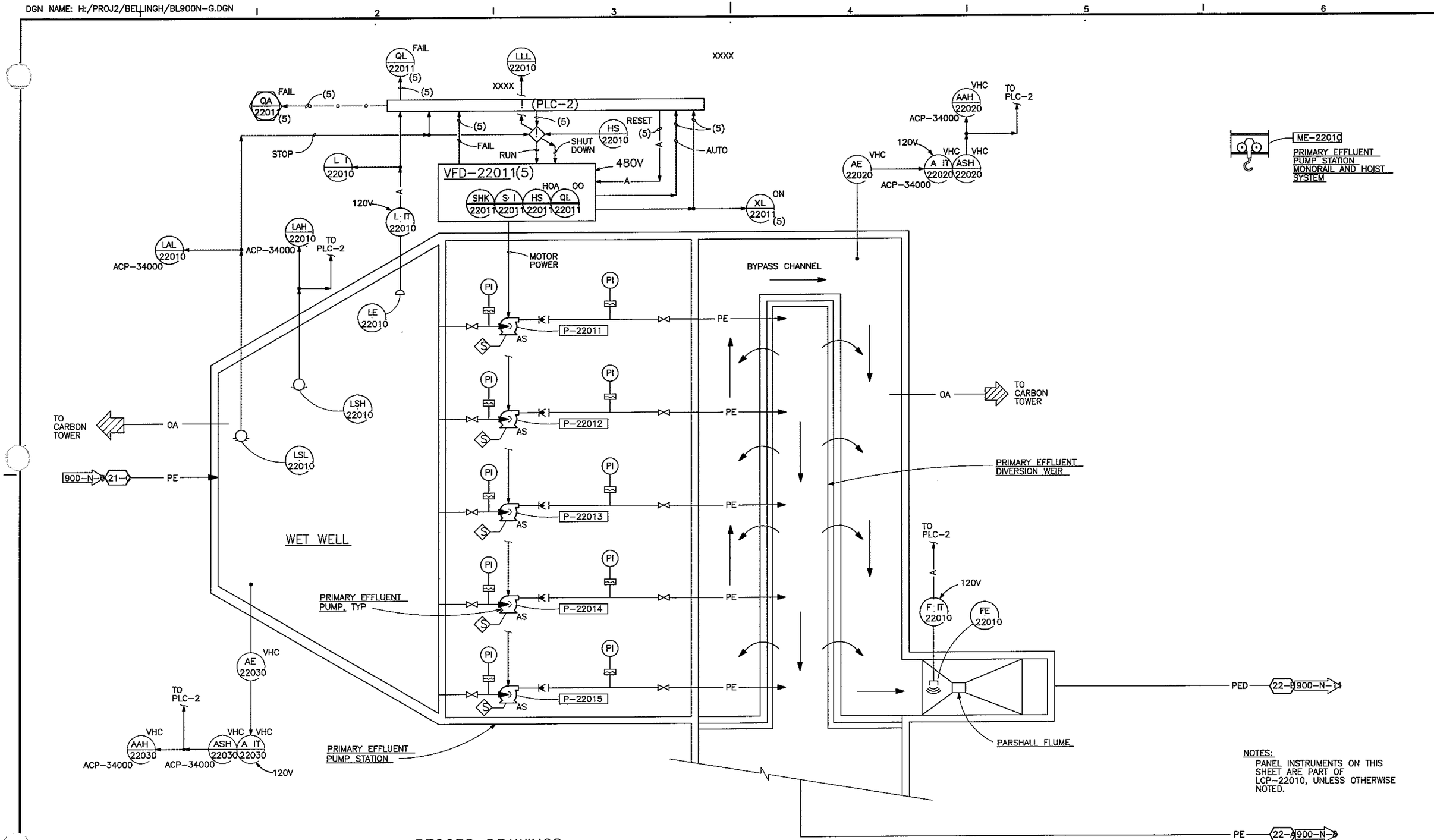

NOTES:
PANEL INSTRUMENTS ON THIS SHEET ARE PART OF LCP-22010, UNLESS OTHERWISE NOTED.

RECORD DRAWINGS

Revisions Drawn By JG Date 3/25/94

CH2M HILL

DSGN V. AUSTIN
DR MAXEY-SUHR
CHK J. BLACK
APVD J. GAUTHIER

NO.	DATE	REVISION	BY	APVD

THESE RECORD DRAWINGS HAVE BEEN PREPARED, IN PART, ON THE BASIS OF INFORMATION COMPILED BY OTHERS. THEY ARE NOT INTENDED TO REPRESENT IN DETAIL THE EXACT LOCATION, TYPE OF COMPONENT NOR MANNER OF CONSTRUCTION. THE ENGINEER WILL NOT BE RESPONSIBLE FOR ANY ERRORS OR OMISSIONS WHICH HAVE BEEN INCORPORATED INTO THE RECORD DRAWINGS.

REUSE OF DOCUMENTS
THIS DOCUMENT, AND THE IDEAS AND DESIGNS INCORPORATED HEREIN, AS AN INSTRUMENT OF PROFESSIONAL SERVICE, IS THE PROPERTY OF CH2M HILL AND IS NOT TO BE USED, IN WHOLE OR IN PART, FOR ANY OTHER PROJECT WITHOUT THE WRITTEN AUTHORIZATION OF CH2M HILL.
© CH2M HILL

BAR IS ONE INCH ON ORIGINAL DRAWING.
0 1"
IF NOT ONE INCH ON THIS SHEET, ADJUST SCALES ACCORDINGLY.

CITY OF BELLINGHAM, WASHINGTON
POST POINT WASTEWATER TREATMENT PLANT UPGRADE

INSTRUMENTATION AND CONTROL
P & ID
PRIMARY EFFLUENT PUMP STATION

SHEET
DWG NO. 900-N-7
DATE AUG. 1990
PROJ NO. SEA22462.C1

J. VALDES 08-22-90
DGN NAME: H:/PROJ2/BELLINGH/BL900N-H.DGN

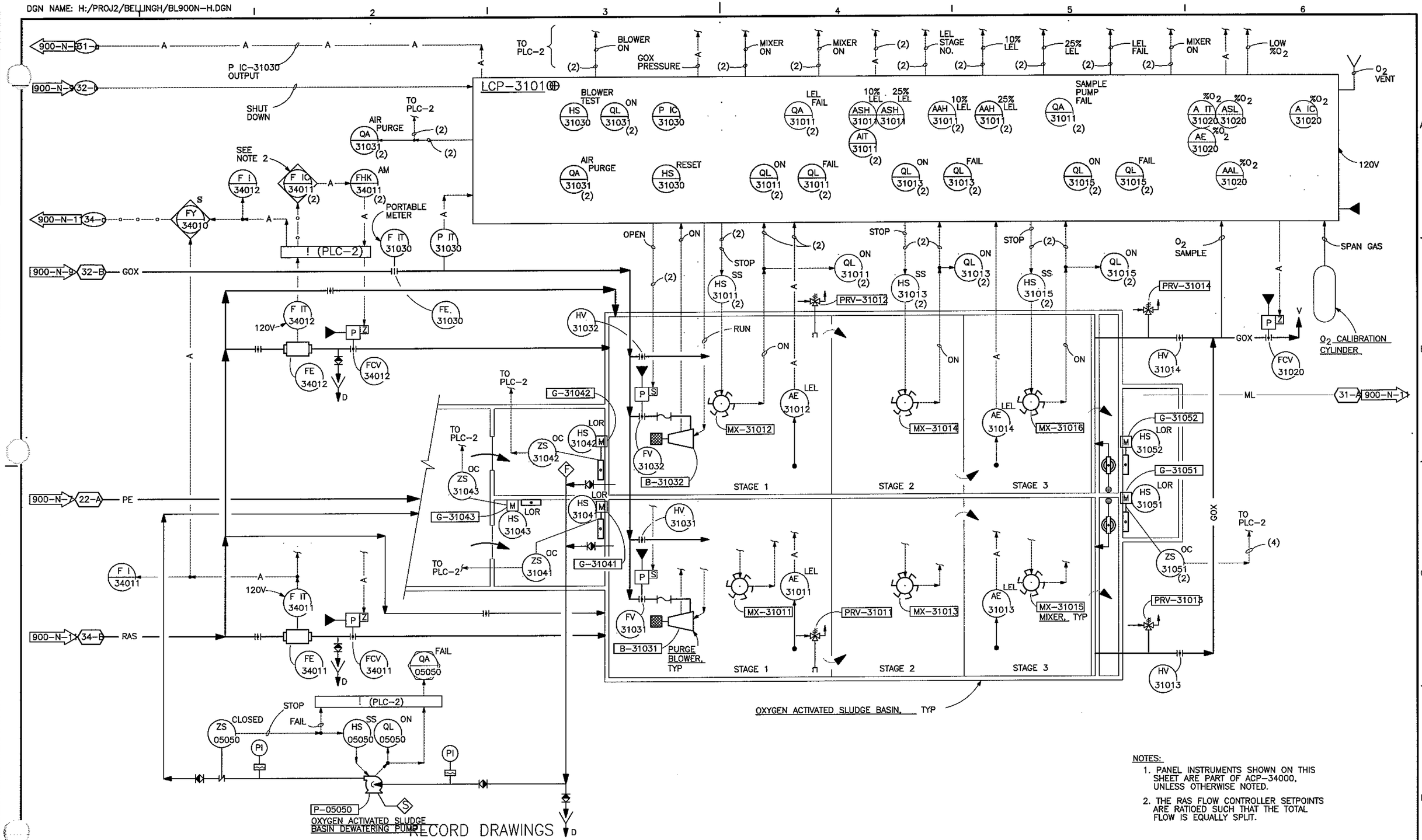

NOTES:

1. PANEL INSTRUMENTS SHOWN ON THIS SHEET ARE PART OF ACP-34000, UNLESS OTHERWISE NOTED.
2. THE RAS FLOW CONTROLLER SETPOINTS ARE RATIOED SUCH THAT THE TOTAL FLOW IS EQUALLY SPLIT.

RECORD DRAWINGS

Revisions Drawn By JG Date 3/25/94

CH2M HILL

DSGN V. AUSTIN
DR R. E. BROWN
CHK J. BLACK
APVD J. GAUTHIER

NO.	DATE	REVISION	BY	APVD

THESE RECORD DRAWINGS HAVE BEEN PREPARED, IN PART, ON THE BASIS OF INFORMATION COMPILED BY OTHERS. THEY ARE NOT INTENDED TO REPRESENT IN DETAIL THE EXACT LOCATION, TYPE OF COMPONENT NOR MANNER OF CONSTRUCTION. THE ENGINEER WILL NOT BE RESPONSIBLE FOR ANY ERRORS OR OMISSIONS WHICH HAVE BEEN INCORPORATED INTO THE RECORD DRAWINGS.

REUSE OF DOCUMENTS
THIS DOCUMENT, AND THE IDEAS AND DESIGNS INCORPORATED HEREIN, AS AN INSTRUMENT OF PROFESSIONAL SERVICE, IS THE PROPERTY OF CH2M HILL AND IS NOT TO BE USED, IN WHOLE OR IN PART, FOR ANY OTHER PROJECT WITHOUT THE WRITTEN AUTHORIZATION OF CH2M HILL.
©CH2M HILL

BAR IS ONE INCH ON ORIGINAL DRAWING.
0 1"
IF NOT ONE INCH ON THIS SHEET, ADJUST SCALES ACCORDINGLY.

CITY OF BELLINGHAM, WASHINGTON
POST POINT WASTEWATER TREATMENT PLANT UPGRADE

INSTRUMENTATION AND CONTROL
P & ID
OXYGEN ACTIVATED SLUDGE BASINS

SHEET
DWG NO. 900-N-8
DATE AUG. 1990
PROJ NO. SEA22462.C1

G. SLAYTER 05-04-90
DGN NAME: H:/PROJ2/BELLINGH/BL900N-I.DGN

NOTES:
1. PANEL INSTRUMENTS ON THIS SHEET ARE PART OF THE PSA VALVE SKID PANEL, LCP-32010, UNLESS OTHERWISE NOTED.
2. THIS SHEET DEPICTS THE PRIMARY EQUIPMENT AND GENERAL FLOW FOR THE OXYGEN GENERATION FACILITY. ALL CONTROL FUNCTIONS AND INTERLOCKS MAY NOT BE SHOWN. REFER TO THE SPECIFICATIONS, DIVISION 11 FOR A DESCRIPTION OF THE CONTROL REQUIREMENTS.
3. SIGNALS INDICATED AS PSA SHUTDOWN RESULT IN A SHUTDOWN OF THE PSA FACILITY.

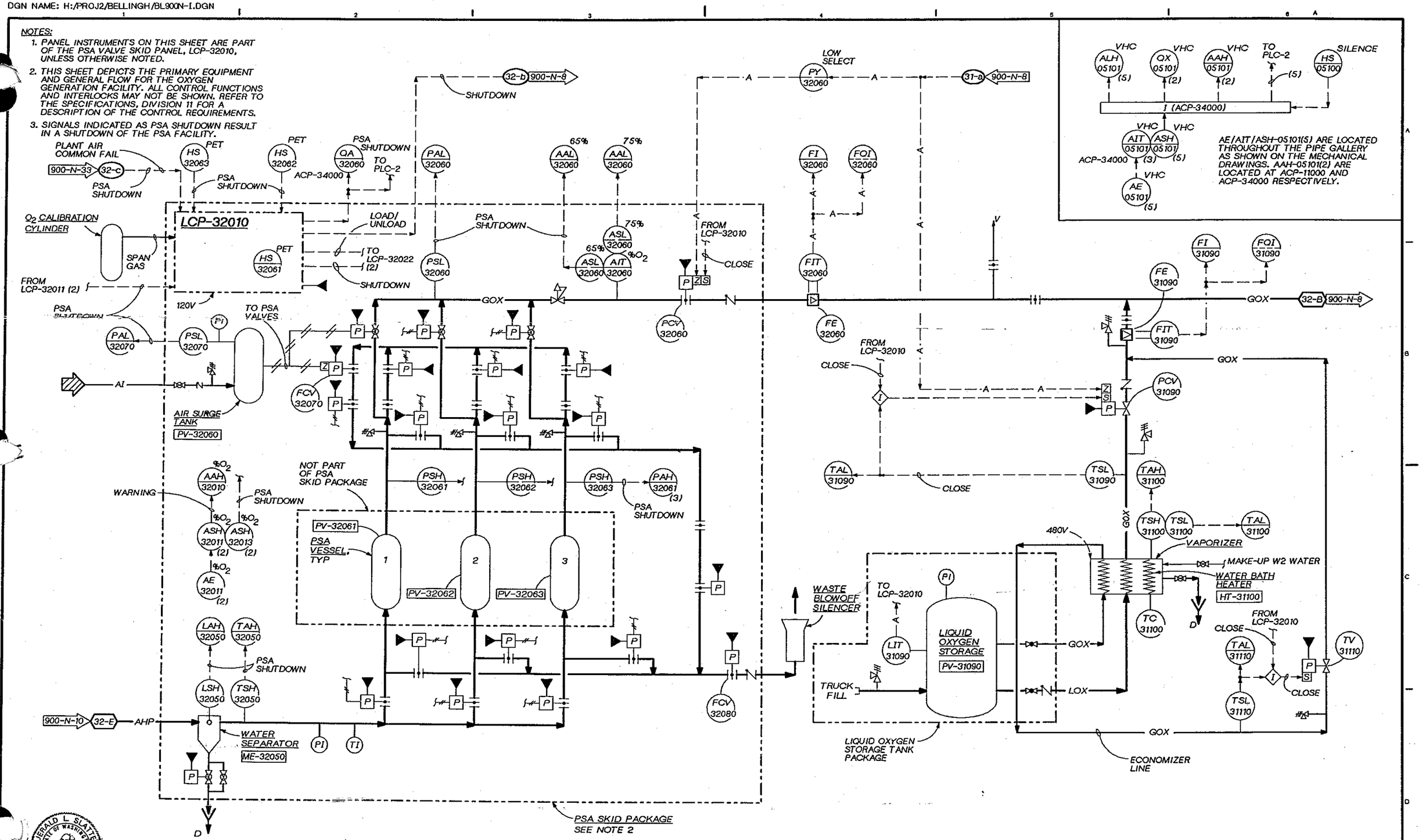

DSGN V. AUSTIN					
DR G. SLAYTER					
CHK J. BLACK					
APVD J GAUTHIER	NO.	DATE	REVISION	BY	APVD

CH2M HILL

REUSE OF DOCUMENTS
THIS DOCUMENT, AND THE IDEAS AND DESIGNS INCORPORATED HEREIN, AS AN INSTRUMENT OF PROFESSIONAL SERVICE, IS THE PROPERTY OF CH2M HILL AND IS NOT TO BE USED, IN WHOLE OR IN PART, FOR ANY OTHER PROJECT WITHOUT THE WRITTEN AUTHORIZATION OF CH2M HILL.
©CH2M HILL

BAR IS ONE INCH ON ORIGINAL DRAWING. 0 1"
IF NOT ONE INCH ON THIS SHEET, ADJUST SCALES ACCORDINGLY.

CITY OF BELLINGHAM, WASHINGTON
POST POINT WASTEWATER TREATMENT PLANT UPGRADE

INSTRUMENTATION AND CONTROL
P & ID
OXYGEN GENERATION FACILITY

DWG NO. 900-N-9
DATE AUG. 1990
PROJ. NO. SEA22462.C1

G. SLAYTER 08-24-90
DGN NAME: H:/PROJ2/BELLINGH/BL900NDD.DGN

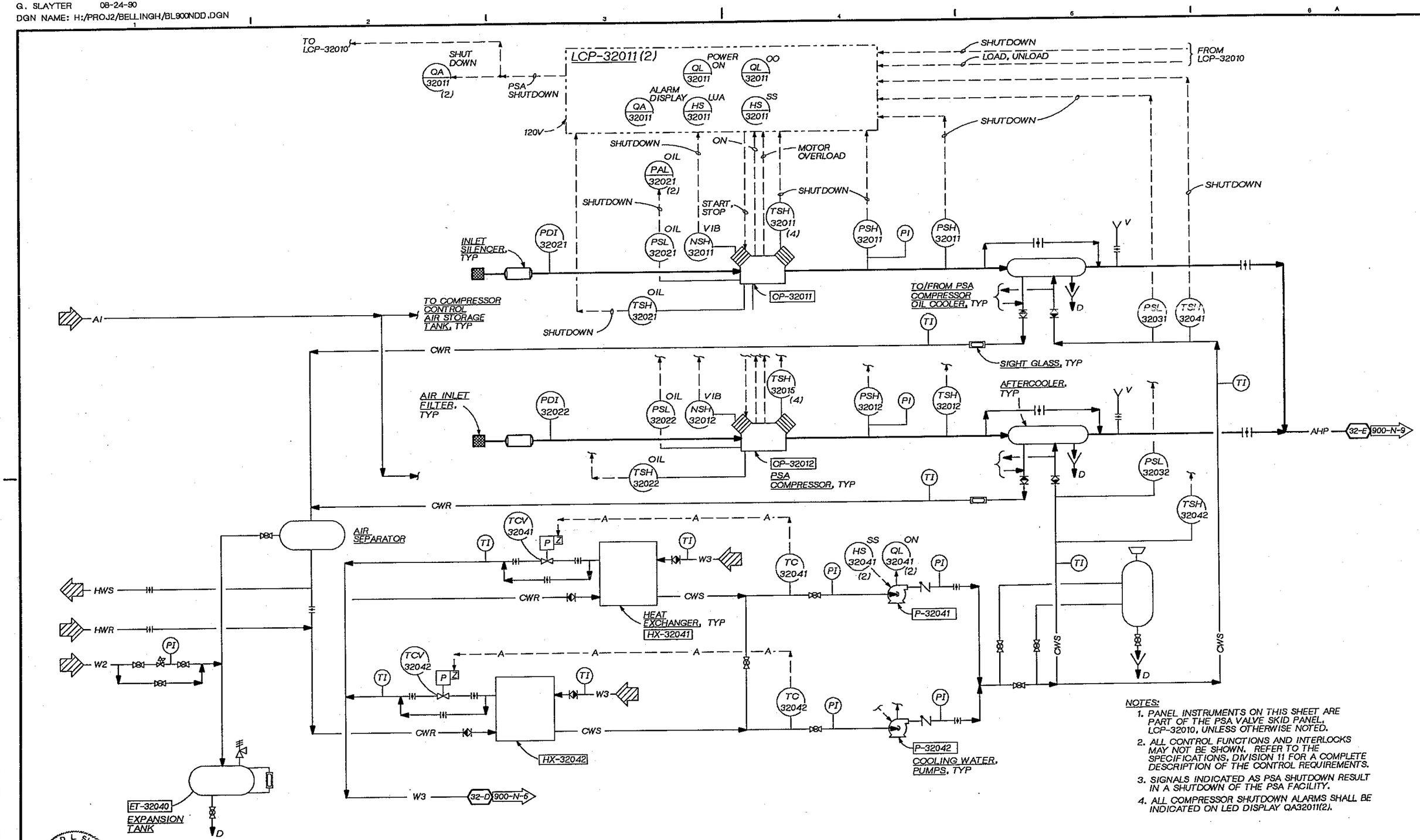

NOTES:

1. PANEL INSTRUMENTS ON THIS SHEET ARE PART OF THE PSA VALVE SKID PANEL, LCP-32010, UNLESS OTHERWISE NOTED.
2. ALL CONTROL FUNCTIONS AND INTERLOCKS MAY NOT BE SHOWN. REFER TO THE SPECIFICATIONS, DIVISION 11 FOR A COMPLETE DESCRIPTION OF THE CONTROL REQUIREMENTS.
3. SIGNALS INDICATED AS PSA SHUTDOWN RESULT IN A SHUTDOWN OF THE PSA FACILITY.
4. ALL COMPRESSOR SHUTDOWN ALARMS SHALL BE INDICATED ON LED DISPLAY QA32011(2).

GERALD L SLAYTER STATE OF WASHINGTON 17546 REGISTERED PROFESSIONAL ENGINEER

CH2M HILL

DSGN	V. AUSTIN
DR	G. SLAYTER
CHK	J. BLACK
APVD	J GAUTHIER

NO.	DATE	REVISION	BY	APVD

REUSE OF DOCUMENTS
THIS DOCUMENT, AND THE IDEAS AND DESIGNS INCORPORATED HEREIN, AS AN INSTRUMENT OF PROFESSIONAL SERVICE, IS THE PROPERTY OF CH2M HILL AND IS NOT TO BE USED, IN WHOLE OR IN PART, FOR ANY OTHER PROJECT WITHOUT THE WRITTEN AUTHORIZATION OF CH2M HILL.
©CH2M HILL

BAR IS ONE INCH ON ORIGINAL DRAWING.
0 1"
IF NOT ONE INCH ON THIS SHEET, ADJUST SCALES ACCORDINGLY.

CITY OF BELLINGHAM, WASHINGTON
POST POINT WASTEWATER TREATMENT PLANT UPGRADE

INSTRUMENTATION AND CONTROL
P & ID
PSA COMPRESSORS

DWG NO. 900-N-10
DATE AUG. 1990
PROJ NO. SEA22462.C1

G. SLAYTER 08-13-90
DGN NAME: H:/PROJ2/BELLINGH/BL900N-J.DGN

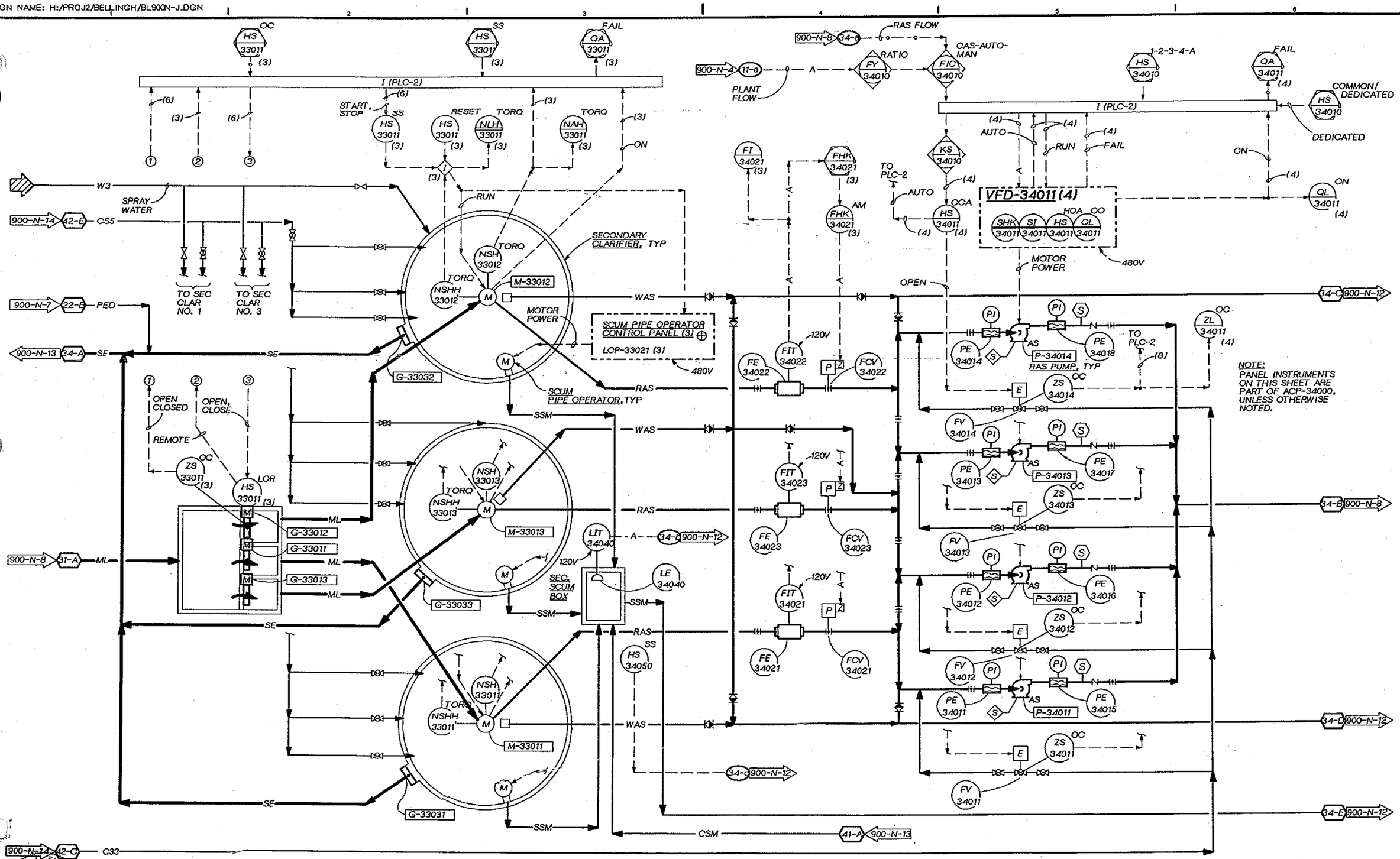

DSGN V. AUSTIN					
DR G. SLAYTER					
CHK J. BLACK					
APVD J GAUTHIER	NO.	DATE	REVISION	BY	APVD

CH2M HILL

REUSE OF DOCUMENTS
THIS DOCUMENT, AND THE IDEAS AND DESIGNS INCORPORATED HEREIN, AS AN INSTRUMENT OF PROFESSIONAL SERVICE, IS THE PROPERTY OF CH2M HILL AND IS NOT TO BE USED, IN WHOLE OR IN PART, FOR ANY OTHER PROJECT WITHOUT THE WRITTEN AUTHORIZATION OF CH2M HILL.
©CH2M HILL

BAR IS ONE INCH ON ORIGINAL DRAWING.
0 1"
IF NOT ONE INCH ON THIS SHEET, ADJUST SCALES ACCORDINGLY.

CITY OF BELLINGHAM, WASHINGTON
POST POINT WASTEWATER TREATMENT PLANT UPGRADE

INSTRUMENTATION AND CONTROL
P & ID
SECONDARY CLARIFIER / R.A.S. PUMPING

DWG NO. 900-N-11
DATE AUG. 1990
PROJ NO. SEA22462.C1

DATE: 08-24-90
DRAWN BY: G. SLAYTER DESIGNED BY: V. AUSTIN
DGN NAME: H:/PROJ2/BELLINGH/BL900N-K.DGN

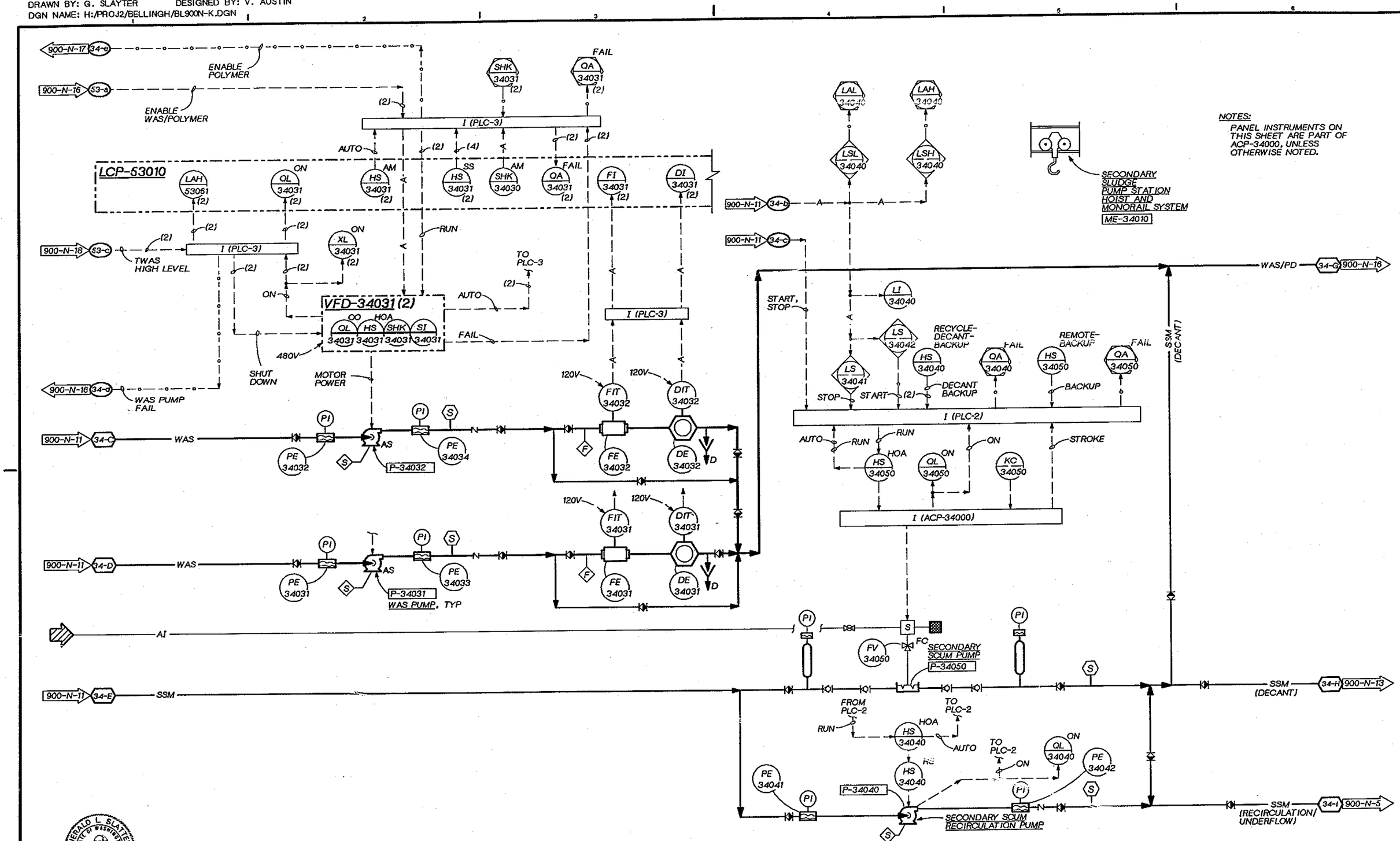

JERALD L. SLATER
STATE OF WASHINGTON
REGISTERED PROFESSIONAL ENGINEER

CH2M HILL

DSGN	V. AUSTIN				
DR	G. SLAYTER				
CHK	J. BLACK				
APVD	J GAUTHIER	NO.	DATE	REVISION	BY	APVD

REUSE OF DOCUMENTS
THIS DOCUMENT, AND THE IDEAS AND DESIGNS INCORPORATED HEREIN, AS AN INSTRUMENT OF PROFESSIONAL SERVICE, IS THE PROPERTY OF CH2M HILL AND IS NOT TO BE USED, IN WHOLE OR IN PART, FOR ANY OTHER PROJECT WITHOUT THE WRITTEN AUTHORIZATION OF CH2M HILL.
©CH2M HILL

BAR IS ONE INCH ON ORIGINAL DRAWING.
0 1"
IF NOT ONE INCH ON THIS SHEET, ADJUST SCALES ACCORDINGLY.

CITY OF BELLINGHAM, WASHINGTON
POST POINT WASTEWATER TREATMENT PLANT UPGRADE

INSTRUMENTATION AND CONTROL
P & ID
W.A.S. PUMPING / SECONDARY SCUM PUMPING

DWG NO. 900-N-[illegible]
DATE AUG. 1990
PROJ. NO. SEA22462.C1

G. SLAYTER 08-23-90
DGN NAME: H:/PROJ2/BELLINGH/BL900N-L.DGN

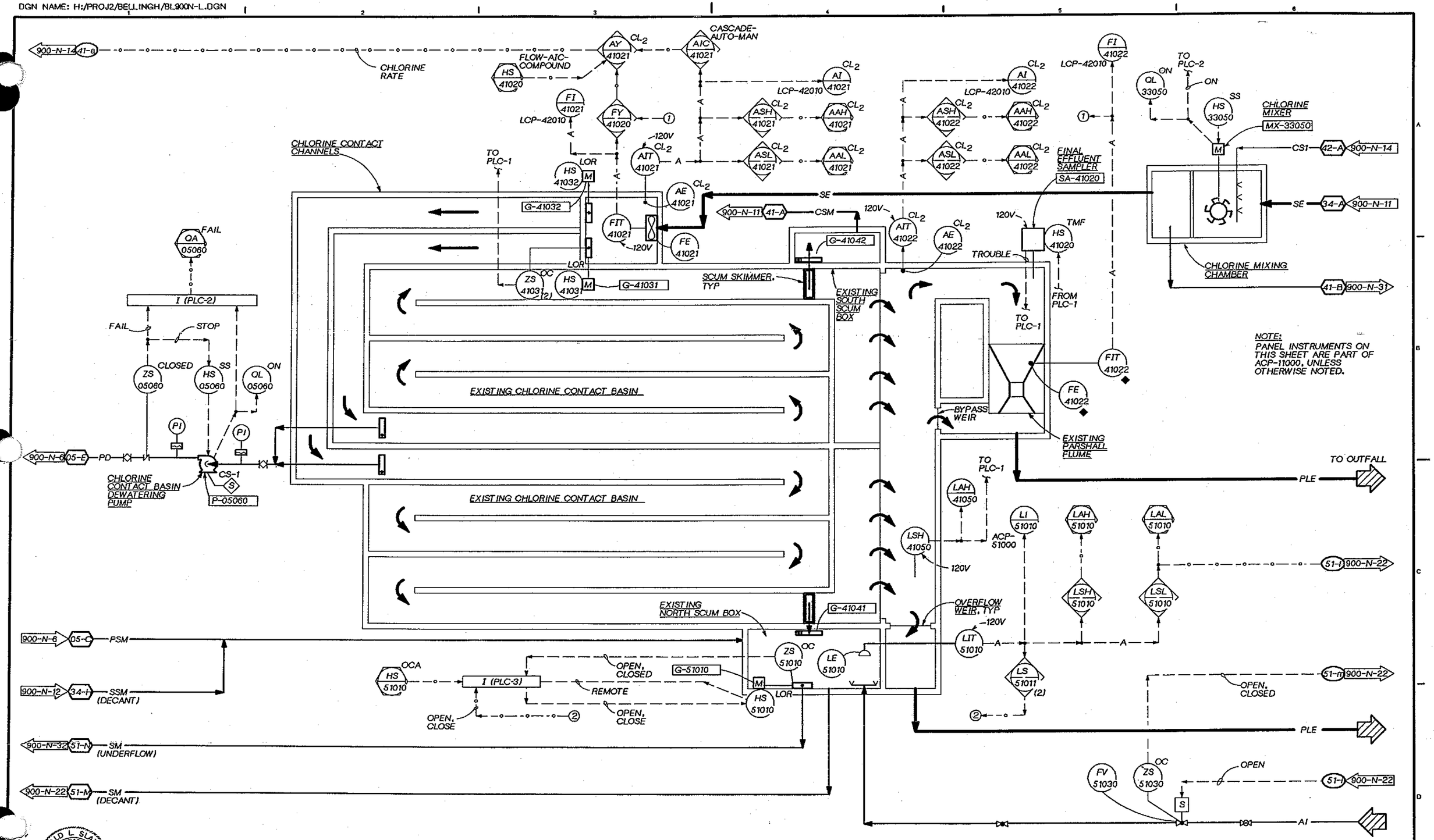

CH2M HILL

DSGN	V. AUSTIN			
DR	G. SLAYTER			
CHK	J. BLACK			
APVD	J GAUTHIER	NO.	DATE	REVISION	BY	APVD

REUSE OF DOCUMENTS
THIS DOCUMENT, AND THE IDEAS AND DESIGNS INCORPORATED HEREIN, AS AN INSTRUMENT OF PROFESSIONAL SERVICE, IS THE PROPERTY OF CH2M HILL AND IS NOT TO BE USED, IN WHOLE OR IN PART, FOR ANY OTHER PROJECT WITHOUT THE WRITTEN AUTHORIZATION OF CH2M HILL.
©CH2M HILL

BAR IS ONE INCH ON ORIGINAL DRAWING.
0 1"
IF NOT ONE INCH ON THIS SHEET, ADJUST SCALES ACCORDINGLY.

CITY OF BELLINGHAM, WASHINGTON
POST POINT WASTEWATER TREATMENT PLANT UPGRADE

INSTRUMENTATION AND CONTROL
P & ID
CHLORINE CONTACT BASIN

DWG NO. 900-N-13
DATE AUG. 1990
PROJ. NO. SEA22462.C1

G. SLAYTER 08-13-90
DGN NAME: H:/PROJ2/BELLINGH/BL900N-M.DGN

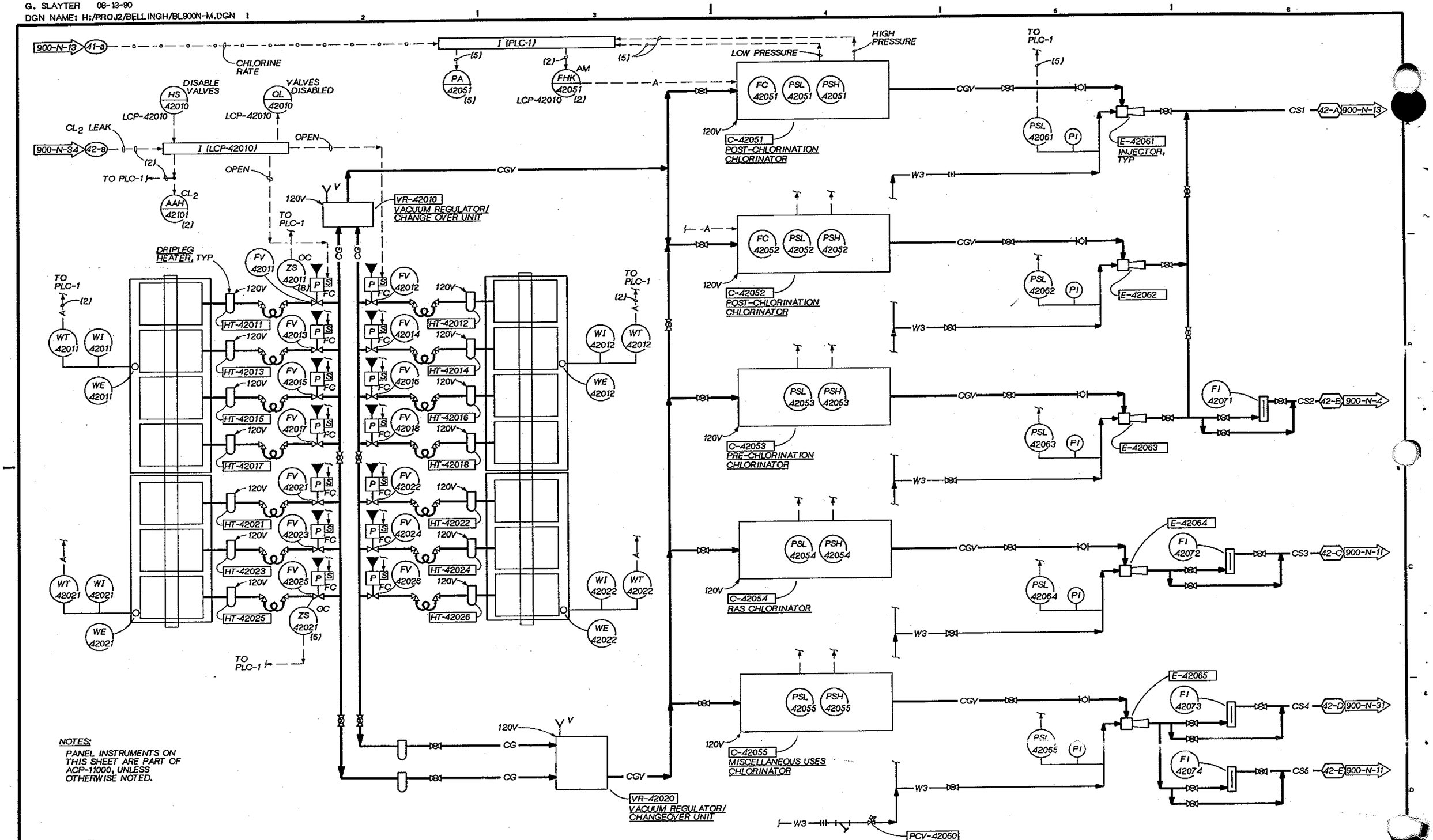

NOTES:
PANEL INSTRUMENTS ON THIS SHEET ARE PART OF ACP-11000, UNLESS OTHERWISE NOTED.

DSGN	V. AUSTIN				
DR	G. SLAYTER				
CHK	J. BLACK				
APVD	J GAUTHIER	NO.	DATE	REVISION	BY / APVD

CH2M HILL

REUSE OF DOCUMENTS
THIS DOCUMENT, AND THE IDEAS AND DESIGNS INCORPORATED HEREIN, AS AN INSTRUMENT OF PROFESSIONAL SERVICE, IS THE PROPERTY OF CH2M HILL AND IS NOT TO BE USED, IN WHOLE OR IN PART, FOR ANY OTHER PROJECT WITHOUT THE WRITTEN AUTHORIZATION OF CH2M HILL.
©CH2M HILL

VERIFY SCALE
BAR IS ONE INCH ON ORIGINAL DRAWING.
0 1"
IF NOT ONE INCH ON THIS SHEET, ADJUST SCALES ACCORDINGLY.

CITY OF BELLINGHAM, WASHINGTON
POST POINT WASTEWATER TREATMENT PLANT UPGRADE

INSTRUMENTATION AND CONTROL
P & ID
CHLORINE FEED SYSTEM

DWG NO. 900-N-14
DATE AUG. 1990
PROJ. NO. SEA22462.C1

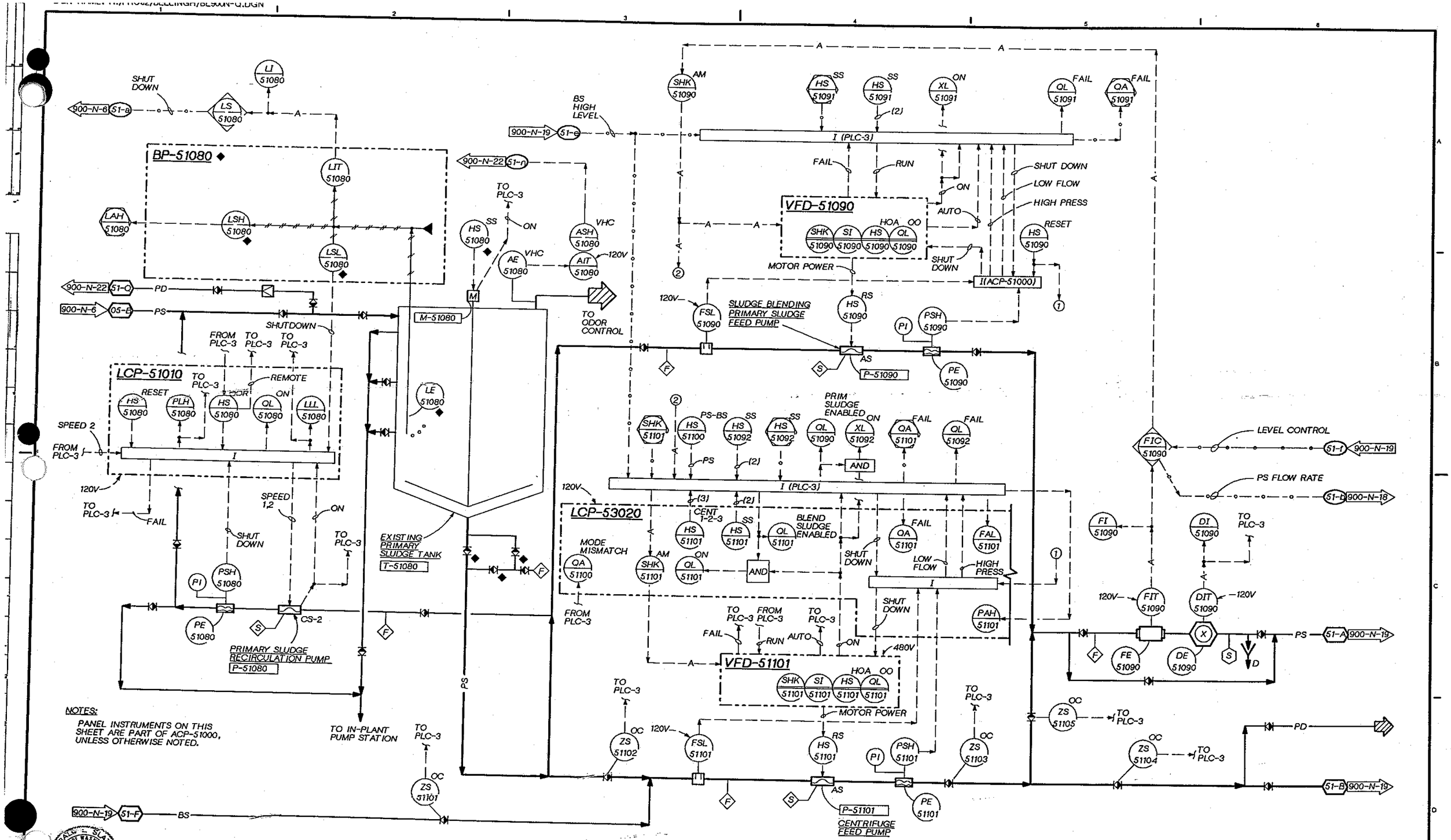

DSGN V. AUSTIN					
DR MAXEY-SUHR					
CHK J. BLACK					
APVD J GAUTHIER	NO.	DATE	REVISION	BY	APVD

REUSE OF DOCUMENTS
THIS DOCUMENT, AND THE IDEAS AND DESIGNS INCORPORATED HEREIN, AS AN INSTRUMENT OF PROFESSIONAL SERVICE, IS THE PROPERTY OF CH2M HILL AND IS NOT TO BE USED, IN WHOLE OR IN PART, FOR ANY OTHER PROJECT WITHOUT THE WRITTEN AUTHORIZATION OF CH2M HILL.
©CH2M HILL

BAR IS ONE INCH ON ORIGINAL DRAWING. 0 1"
IF NOT ONE INCH ON THIS SHEET, ADJUST SCALES ACCORDINGLY.

CITY OF BELLINGHAM, WASHINGTON
POST POINT WASTEWATER TREATMENT PLANT UPGRADE

INSTRUMENTATION AND CONTROL
P & ID
PRIMARY SLUDGE STORAGE

DWG NO. 900-N-15
DATE AUG. 1990
PROJ NO. SEA22462.C1

G SLAYTER 08-24-90
DGN NAME: H:/PROJ2/BELLINGH/BL900N-O.DGN

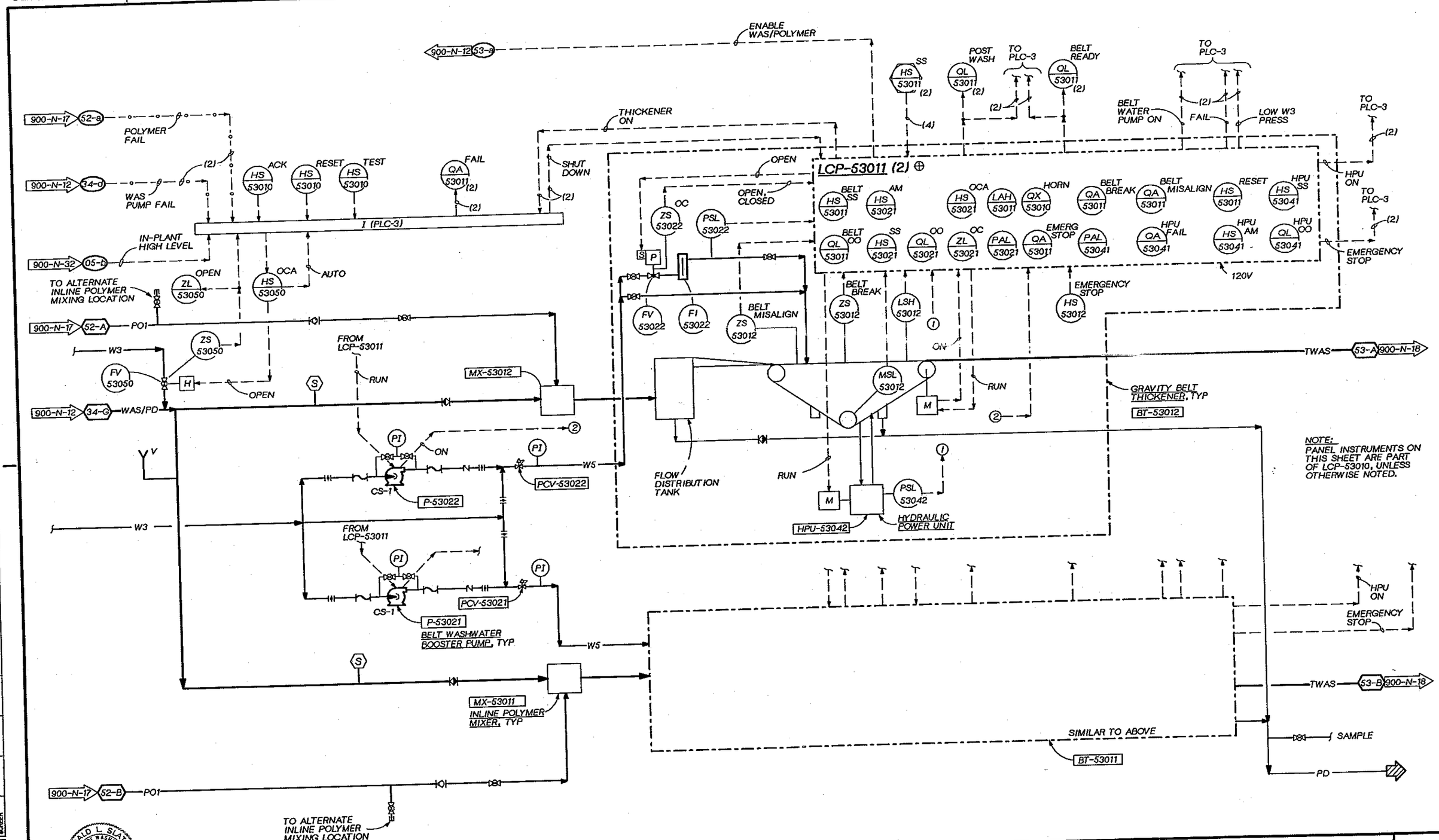

DSGN	V. AUSTIN		
DR	G. SLAYTER		
CHK	J. BLACK		
APVD	J GAUTHIER		

NO.	DATE	REVISION	BY	APVD

REUSE OF DOCUMENTS
THIS DOCUMENT, AND THE IDEAS AND DESIGNS INCORPORATED HEREIN, AS AN INSTRUMENT OF PROFESSIONAL SERVICE, IS THE PROPERTY OF CH2M HILL AND IS NOT TO BE USED, IN WHOLE OR IN PART, FOR ANY OTHER PROJECT WITHOUT THE WRITTEN AUTHORIZATION OF CH2M HILL.
©CH2M HILL

BAR IS ONE INCH ON ORIGINAL DRAWING.
0 1"
IF NOT ONE INCH ON THIS SHEET, ADJUST SCALES ACCORDINGLY.

CITY OF BELLINGHAM, WASHINGTON
POST POINT WASTEWATER TREATMENT PLANT UPGRADE

INSTRUMENTATION AND CONTROL
P & ID
W.A.S. THICKENING

DWG NO. 900-N-16
DATE AUG. 1990
PROJ NO. SEA22462.C1

JERALD L. SLAYTER, STATE OF WASHINGTON, 17546, REGISTERED PROFESSIONAL ENGINEER

OVERLAY IDENTIFICATION: CONTROL SITE, OVERLAY, SCREEN
OVERLAY: PROJRO, FILE

G. SLAYTER 08-23-90
DGN NAME: H:/PROJ2/BELLINGH/BL900N-P.DGN

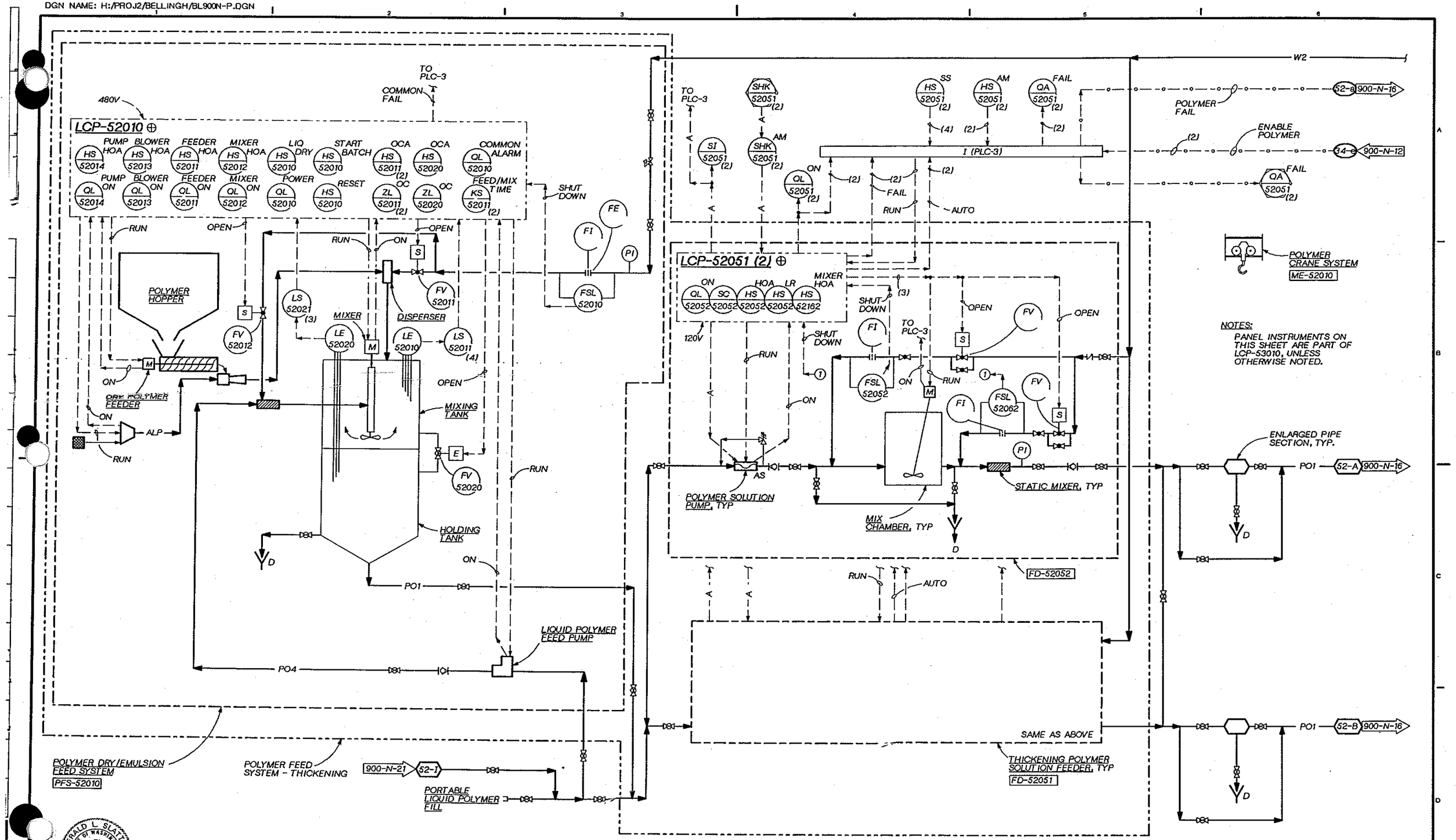

DSGN V. AUSTIN DR G. SLAYTER CHK J. BLACK APVD J GAUTHIER	NO.	DATE	REVISION	BY	APVD

REUSE OF DOCUMENTS
THIS DOCUMENT, AND THE IDEAS AND DESIGNS INCORPORATED HEREIN, AS AN INSTRUMENT OF PROFESSIONAL SERVICE, IS THE PROPERTY OF CH2M HILL AND IS NOT TO BE USED, IN WHOLE OR IN PART, FOR ANY OTHER PROJECT WITHOUT THE WRITTEN AUTHORIZATION OF CH2M HILL.
©CH2M HILL

BAR IS ONE INCH ON ORIGINAL DRAWING. 0 1"
IF NOT ONE INCH ON THIS SHEET, ADJUST SCALES ACCORDINGLY.

CITY OF BELLINGHAM, WASHINGTON
POST POINT WASTEWATER TREATMENT PLANT UPGRADE

INSTRUMENTATION AND CONTROL
P & ID
POLYMER FEED SYSTEM - THICKENING

DWG NO. 900-N-17
DATE AUG. 1990
PROJ NO. SEA22462.C1

G. SLAYTER 08-19-90
DGN NAME: H:/PROJ2/BELLINGH/BL900NCB.DGN

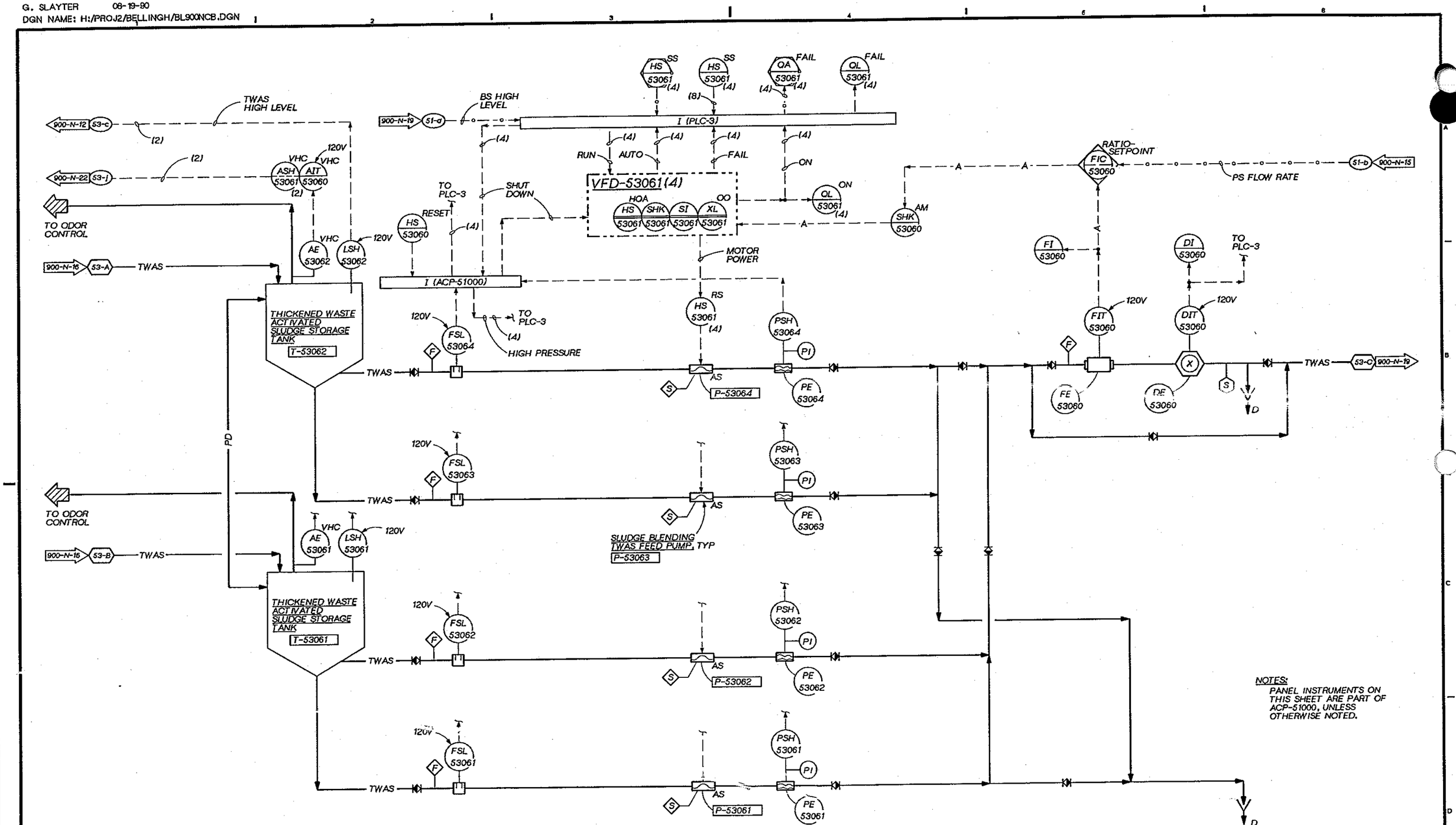

NOTES:
PANEL INSTRUMENTS ON THIS SHEET ARE PART OF ACP-51000, UNLESS OTHERWISE NOTED.

DSGN V. AUSTIN					
DR G. SLAYTER					
CHK J. BLACK					
APVD J GAUTHIER	NO.	DATE	REVISION	BY	APVD

CH2M HILL

REUSE OF DOCUMENTS
THIS DOCUMENT, AND THE IDEAS AND DESIGNS INCORPORATED HEREIN, AS AN INSTRUMENT OF PROFESSIONAL SERVICE, IS THE PROPERTY OF CH2M HILL AND IS NOT TO BE USED, IN WHOLE OR IN PART, FOR ANY OTHER PROJECT WITHOUT THE WRITTEN AUTHORIZATION OF CH2M HILL.
©CH2M HILL

VERIFY SCALE
BAR IS ONE INCH ON ORIGINAL DRAWING.
0 1"
IF NOT ONE INCH ON THIS SHEET, ADJUST SCALES ACCORDINGLY.

CITY OF BELLINGHAM, WASHINGTON
POST POINT WASTEWATER TREATMENT PLANT UPGRADE

INSTRUMENTATION AND CONTROL
P & ID
T.W.A.S. STORAGE

DWG NO. 900-N-18
DATE AUG. 1990
PROJ NO. SEA22462.C1

G. SLAYTER 08-20-90
DGN NAME: H:/PROJ2/BELLINGH/BL900NCC.DGN

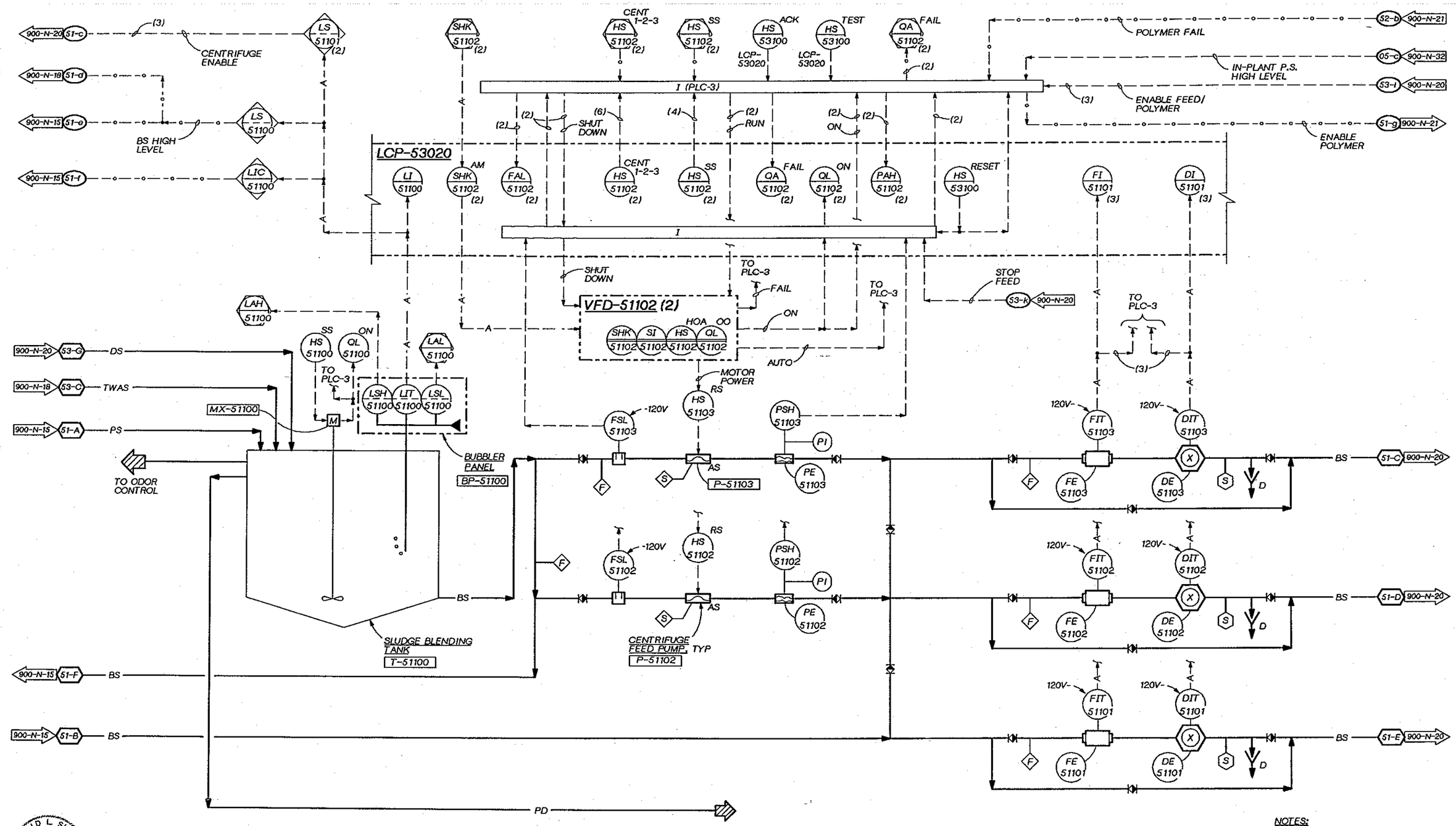

NOTES:
PANEL INSTRUMENTS ON THIS SHEET ARE PART OF ACP-51000, UNLESS OTHERWISE NOTED.

JERALD L. SLAYTER STATE OF WASHINGTON 11544 REGISTERED PROFESSIONAL ENGINEER

CH2M HILL

DSGN	V. AUSTIN
DR	G. SLAYTER
CHK	J. BLACK
APVD	J GAUTHIER

NO.	DATE	REVISION	BY	APVD

REUSE OF DOCUMENTS
THIS DOCUMENT, AND THE IDEAS AND DESIGNS INCORPORATED HEREIN, AS AN INSTRUMENT OF PROFESSIONAL SERVICE, IS THE PROPERTY OF CH2M HILL AND IS NOT TO BE USED, IN WHOLE OR IN PART, FOR ANY OTHER PROJECT WITHOUT THE WRITTEN AUTHORIZATION OF CH2M HILL.
©CH2M HILL

ORIGINAL SCALE
BAR IS ONE INCH ON ORIGINAL DRAWING.
0 1"
IF NOT ONE INCH ON THIS SHEET, ADJUST SCALES ACCORDINGLY.

CITY OF BELLINGHAM, WASHINGTON
POST POINT WASTEWATER TREATMENT PLANT UPGRADE

INSTRUMENTATION AND CONTROL
P & ID
SLUDGE BLENDING SYSTEM

DWG NO. 900-N-19
DATE AUG. 1990
PROJ. NO. SEA22462.C1

G. SLAYTER 08-23-90
DGN NAME: H:/PROJ2/BELLINGH/BL900N-R.DGN

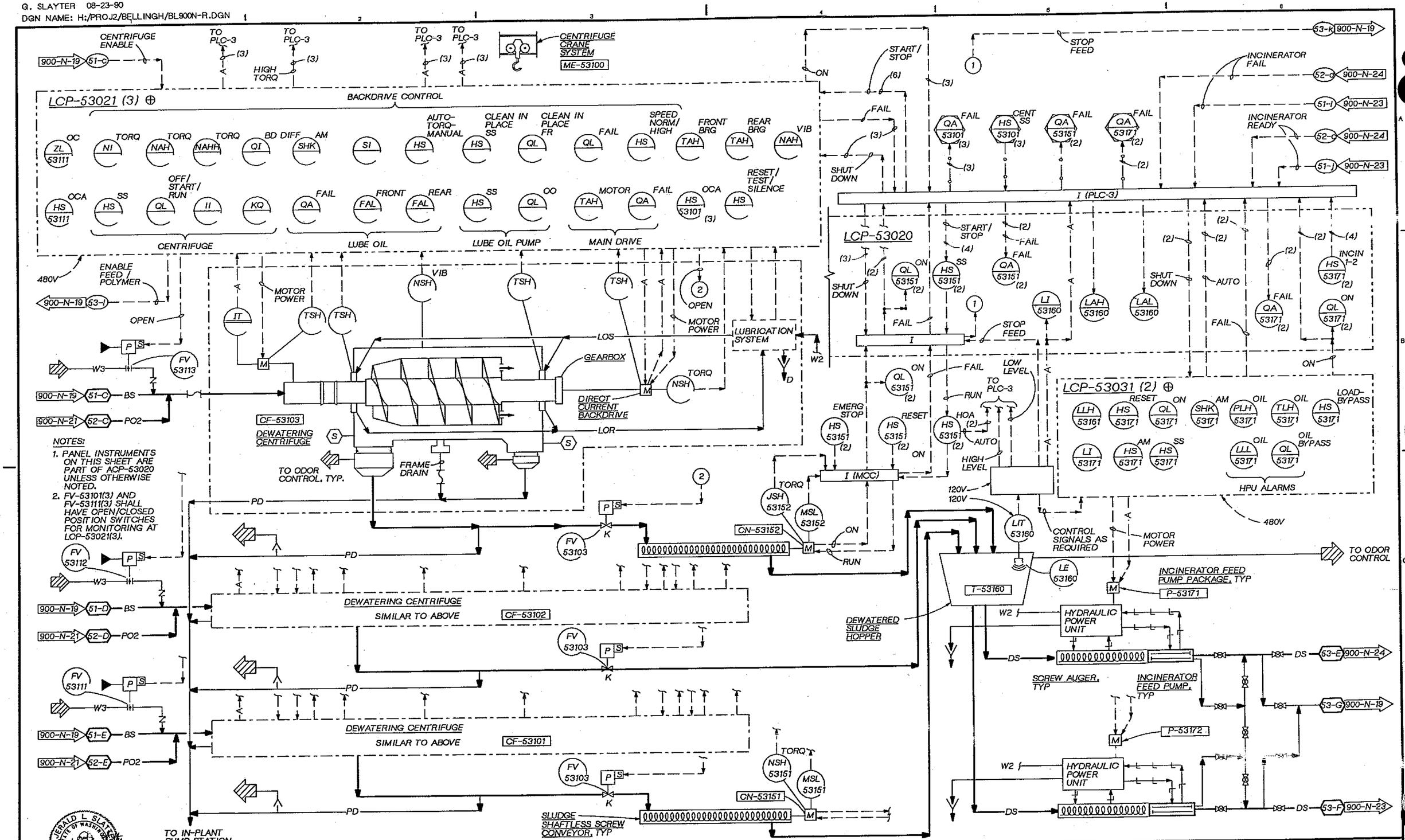

NOTES:
1. PANEL INSTRUMENTS ON THIS SHEET ARE PART OF ACP-53020 UNLESS OTHERWISE NOTED.
2. FV-53101(3) AND FV-53111(3) SHALL HAVE OPEN/CLOSED POSITION SWITCHES FOR MONITORING AT LCP-53021(3).

DSGN V. AUSTIN						
DR G. SLAYTER						
CHK J. BLACK						
APVD J GAUTHIER	NO.	DATE	REVISION	BY	APVD	

CH2M HILL

REUSE OF DOCUMENTS
THIS DOCUMENT, AND THE IDEAS AND DESIGNS INCORPORATED HEREIN, AS AN INSTRUMENT OF PROFESSIONAL SERVICE, IS THE PROPERTY OF CH2M HILL AND IS NOT TO BE USED, IN WHOLE OR IN PART, FOR ANY OTHER PROJECT WITHOUT THE WRITTEN AUTHORIZATION OF CH2M HILL.
©CH2M HILL

BAR IS ONE INCH ON ORIGINAL DRAWING.
0 1"
IF NOT ONE INCH ON THIS SHEET, ADJUST SCALES ACCORDINGLY.

CITY OF BELLINGHAM, WASHINGTON
POST POINT WASTEWATER TREATMENT PLANT UPGRADE

INSTRUMENTATION AND CONTROL
P & ID
SLUDGE DEWATERING

DWG NO. 900-N-20
DATE AUG. 1990
PROJ. NO. SEA22462.C1

G. SLAYTER 08-24-90
DGN NAME: H:/PROJ2/BELLINGH/BL900N-S.DGN

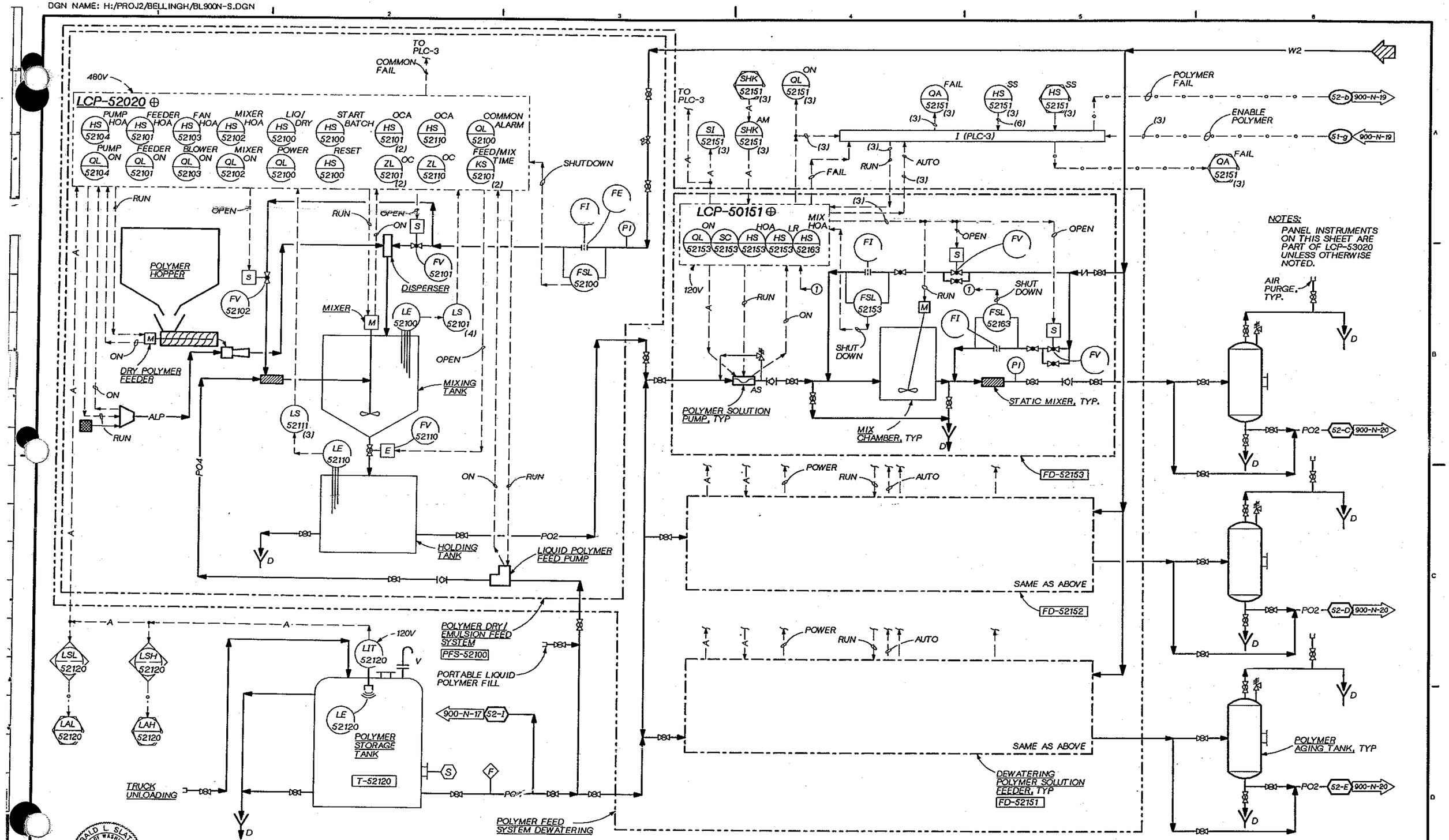

DSGN V. AUSTIN
DR G. SLAYTER
CHK J. BLACK
APVD J GAUTHIER

NO.	DATE	REVISION	BY	APVD

REUSE OF DOCUMENTS
THIS DOCUMENT, AND THE IDEAS AND DESIGNS INCORPORATED HEREIN, AS AN INSTRUMENT OF PROFESSIONAL SERVICE, IS THE PROPERTY OF CH2M HILL AND IS NOT TO BE USED, IN WHOLE OR IN PART, FOR ANY OTHER PROJECT WITHOUT THE WRITTEN AUTHORIZATION OF CH2M HILL.
©CH2M HILL

BAR IS ONE INCH ON ORIGINAL DRAWING.
0 1"
IF NOT ONE INCH ON THIS SHEET, ADJUST SCALES ACCORDINGLY.

CITY OF BELLINGHAM, WASHINGTON
POST POINT WASTEWATER TREATMENT PLANT UPGRADE

INSTRUMENTATION AND CONTROL
P & ID
POLYMER FEED SYSTEM - DEWATERING

DWG NO. 900-N-21
DATE AUG. 1990
PROJ NO. SEA22462.C1

G. SLAYTER 08-23-90
DGN NAME: H:/PROJ2/BELLINGH/BL900NCD.DGN

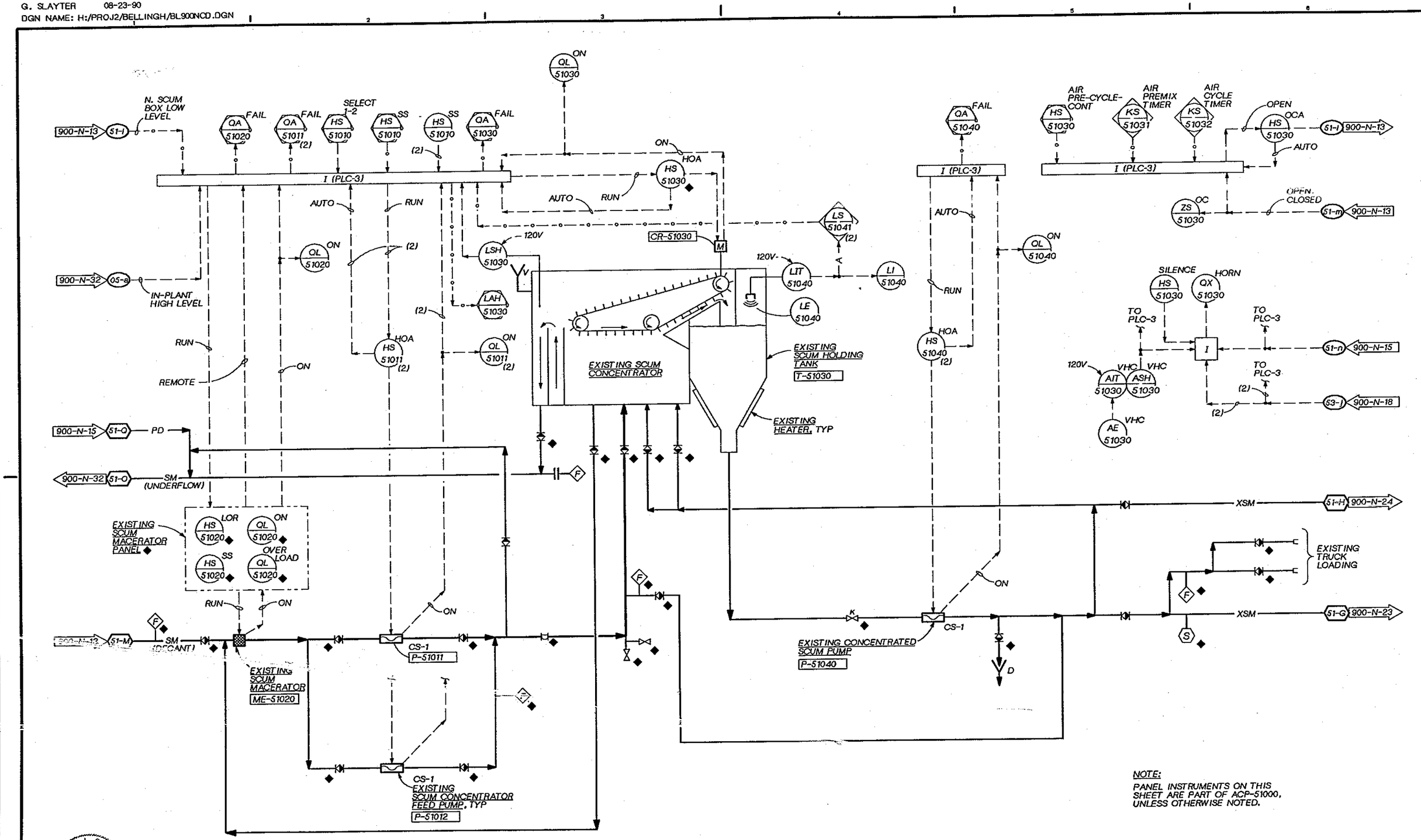

NOTE:
PANEL INSTRUMENTS ON THIS SHEET ARE PART OF ACP-51000, UNLESS OTHERWISE NOTED.

JERALD L. SLATTER, STATE OF WASHINGTON, 17596, REGISTERED PROFESSIONAL ENGINEER

CH2M HILL

DSGN	V. AUSTIN			
DR	G. SLAYTER			
CHK	J. BLACK			
APVD	J GAUTHIER	NO.	DATE	REVISION	BY	APVD

REUSE OF DOCUMENTS
THIS DOCUMENT, AND THE IDEAS AND DESIGNS INCORPORATED HEREIN, AS AN INSTRUMENT OF PROFESSIONAL SERVICE, IS THE PROPERTY OF CH2M HILL AND IS NOT TO BE USED, IN WHOLE OR IN PART, FOR ANY OTHER PROJECT WITHOUT THE WRITTEN AUTHORIZATION OF CH2M HILL.
©CH2M HILL

BAR IS ONE INCH ON ORIGINAL DRAWING.
0 1"
IF NOT ONE INCH ON THIS SHEET, ADJUST SCALES ACCORDINGLY.

CITY OF BELLINGHAM, WASHINGTON
POST POINT WASTEWATER TREATMENT PLANT UPGRADE

INSTRUMENTATION AND CONTROL
P & ID
SCUM CONCENTRATION / DISPOSAL

DWG NO. 900-N-22
DATE AUG. 1990
PROJ NO. SEA22462.C1

G. SLAYTER 08-23-90
DGN NAME: H:/PROJ2/BELLINGH/BL900NBZ.DGN

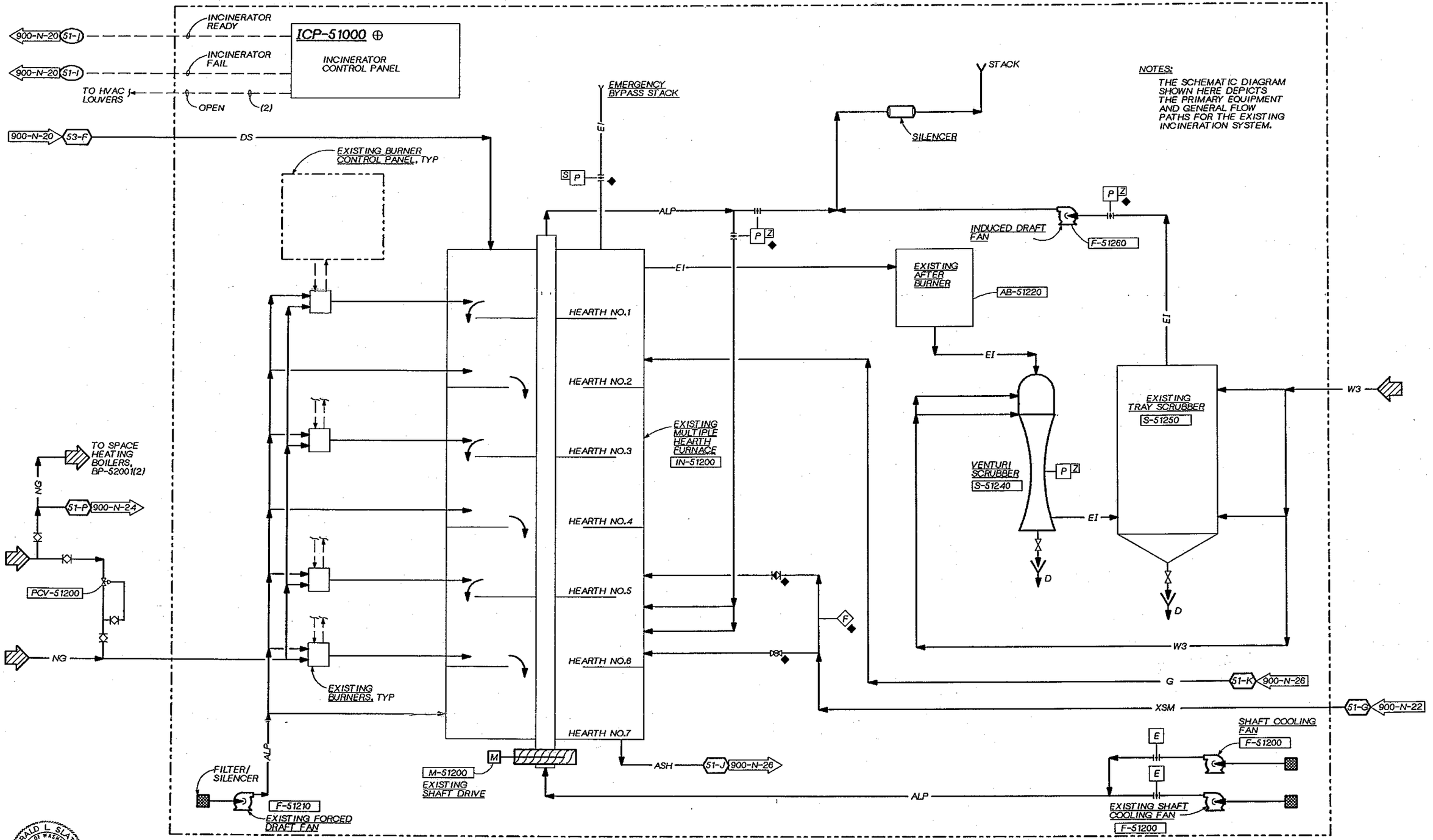

CH2M HILL

DSGN	V. AUSTIN			
DR	G. SLAYTER			
CHK	J. BLACK			
APVD	J GAUTHIER	NO.	DATE	REVISION	BY	APVD

REUSE OF DOCUMENTS
THIS DOCUMENT, AND THE IDEAS AND DESIGNS INCORPORATED HEREIN, AS AN INSTRUMENT OF PROFESSIONAL SERVICE, IS THE PROPERTY OF CH2M HILL AND IS NOT TO BE USED, IN WHOLE OR IN PART, FOR ANY OTHER PROJECT WITHOUT THE WRITTEN AUTHORIZATION OF CH2M HILL.
©CH2M HILL

BAR IS ONE INCH ON ORIGINAL DRAWING. 0 1"
IF NOT ONE INCH ON THIS SHEET, ADJUST SCALES ACCORDINGLY.

CITY OF BELLINGHAM, WASHINGTON
POST POINT WASTEWATER TREATMENT PLANT UPGRADE

INSTRUMENTATION AND CONTROL
P & ID
EXISTING INCINERATOR SYSTEM

DWG NO. 900-N-23
DATE AUG. 1990
PROJ. NO. SEA22462.C1

V A MAXEY-SUHR 08-23-90
DGN NAME: H:/PROJ2/BELLINGH/BL900N-T.DGN

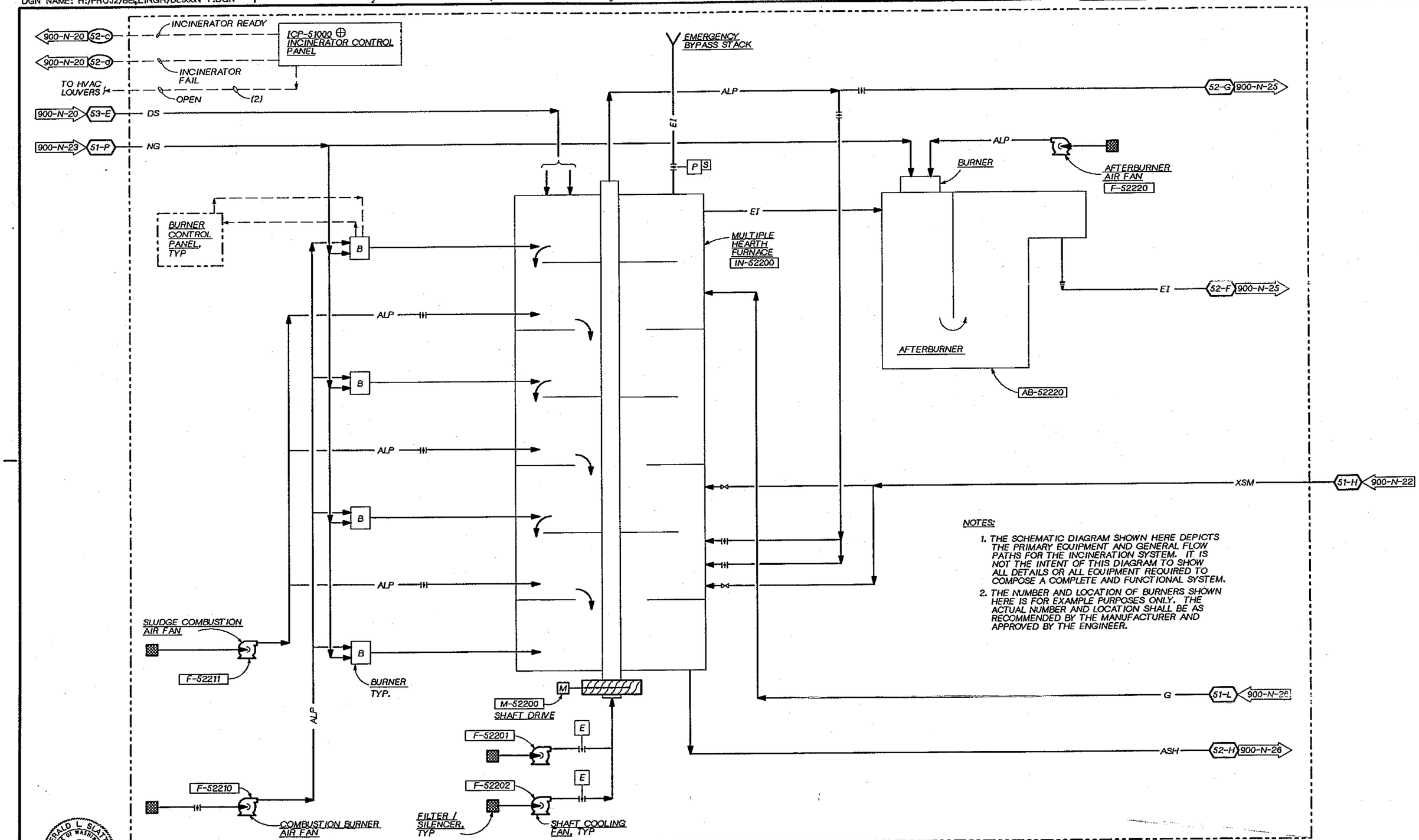

CH2M HILL	DSGN J. ARCHER				
	DR MAXEY-SUHR				
	CHK J. BLACK				
	APVD J GAUTHIER	NO.	DATE	REVISION	BY	APVD

REUSE OF DOCUMENTS
THIS DOCUMENT, AND THE IDEAS AND DESIGNS INCORPORATED HEREIN, AS AN INSTRUMENT OF PROFESSIONAL SERVICE, IS THE PROPERTY OF CH2M HILL AND IS NOT TO BE USED, IN WHOLE OR IN PART, FOR ANY OTHER PROJECT WITHOUT THE WRITTEN AUTHORIZATION OF CH2M HILL.
©CH2M HILL

BAR IS ONE INCH ON ORIGINAL DRAWING.
0 1"
IF NOT ONE INCH ON THIS SHEET, ADJUST SCALES ACCORDINGLY.

CITY OF BELLINGHAM, WASHINGTON
POST POINT WASTEWATER TREATMENT PLANT UPGRADE

INSTRUMENTATION AND CONTROL
P & ID
SLUDGE INCINERATION - COMBUSTION SYSTEM

DWG NO. 900-N-24
DATE AUG. 1990
PROJ NO. SEA22462.C1

V A MAXEY-SUHR 08-22-90
DGN NAME: H:/PROJ2/BELLINGH/BL900N-V.DGN

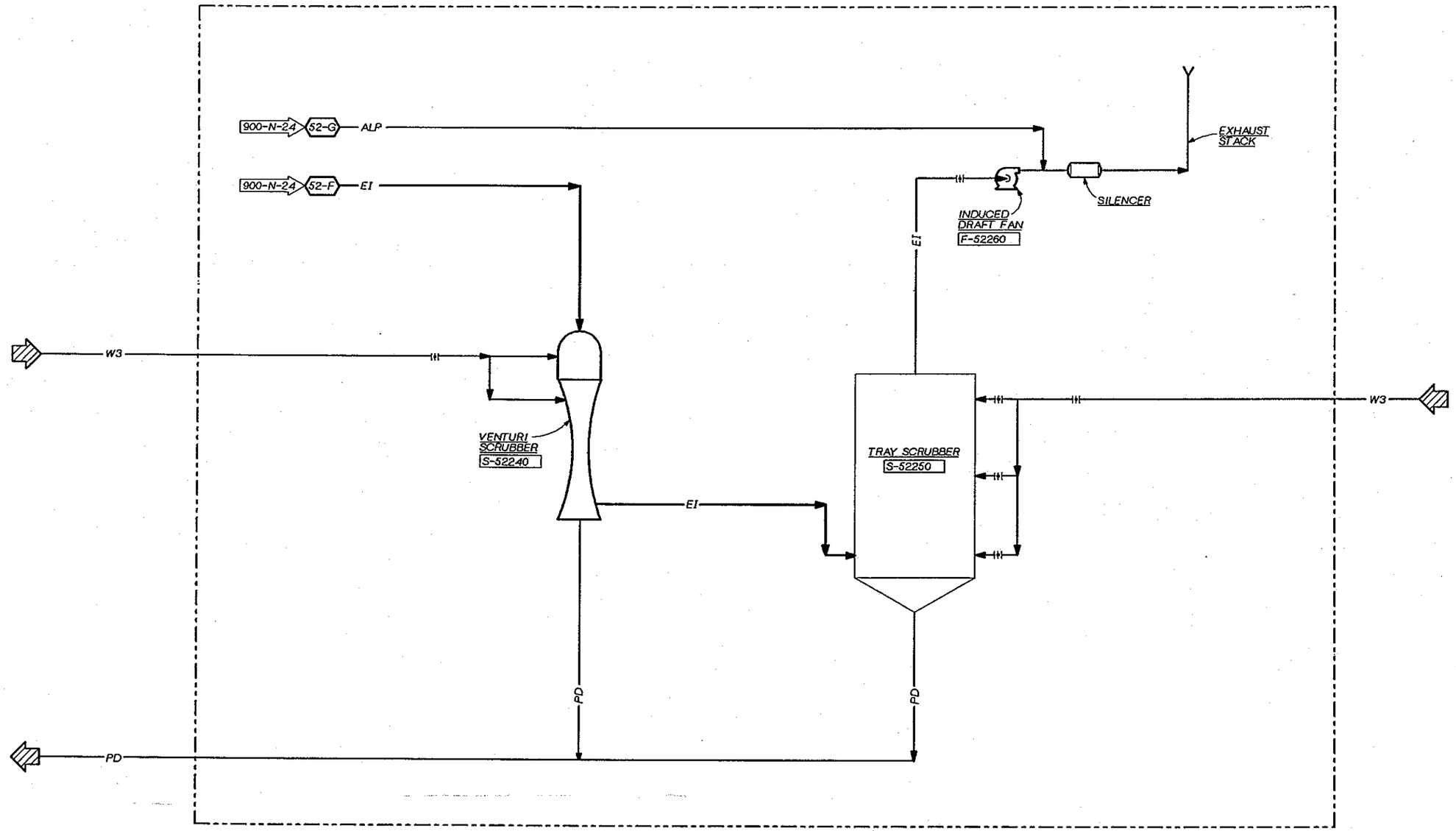

NOTES:
1. THE SCHEMATIC DIAGRAM SHOWN HERE DEPICTS THE PRIMARY EQUIPMENT AND GENERAL FLOW PATHS FOR THE INCINERATION SYSTEM. IT IS NOT THE INTENT OF THIS DIAGRAM TO SHOW ALL DETAILS OR ALL EQUIPMENT REQUIRED TO COMPOSE A COMPLETE AND FUNCTIONAL SYSTEM.

JERALD L. SLATTERY
STATE OF WASHINGTON
11846
REGISTERED PROFESSIONAL ENGINEER

CH2M HILL

DSGN	J. ARCHER
DR	MAXEY-SUHR
CHK	J. BLACK
APVD	J GAUTHIER

NO.	DATE	REVISION	BY	APVD

REUSE OF DOCUMENTS
THIS DOCUMENT, AND THE IDEAS AND DESIGNS INCORPORATED HEREIN, AS AN INSTRUMENT OF PROFESSIONAL SERVICE, IS THE PROPERTY OF CH2M HILL AND IS NOT TO BE USED, IN WHOLE OR IN PART, FOR ANY OTHER PROJECT WITHOUT THE WRITTEN AUTHORIZATION OF CH2M HILL.
©CH2M HILL

BAR IS ONE INCH ON ORIGINAL DRAWING.
0 1"
IF NOT ONE INCH ON THIS SHEET, ADJUST SCALES ACCORDINGLY.

CITY OF BELLINGHAM, WASHINGTON
POST POINT WASTEWATER TREATMENT PLANT UPGRADE

INSTRUMENTATION AND CONTROL
P & ID
SLUDGE INCINERATION EMISSION CONTROL SYSTEM

DWG NO. 900-N-25
DATE AUG. 1990
PROJ. NO. SEA22462.C1

DATE: 05-14-90
DRAWN BY: G. SLAYTER DESIGNED BY: V. AUSTIN
DGN NAME: H:/PROJ2/BELLINGH/BL900N-U.DGN

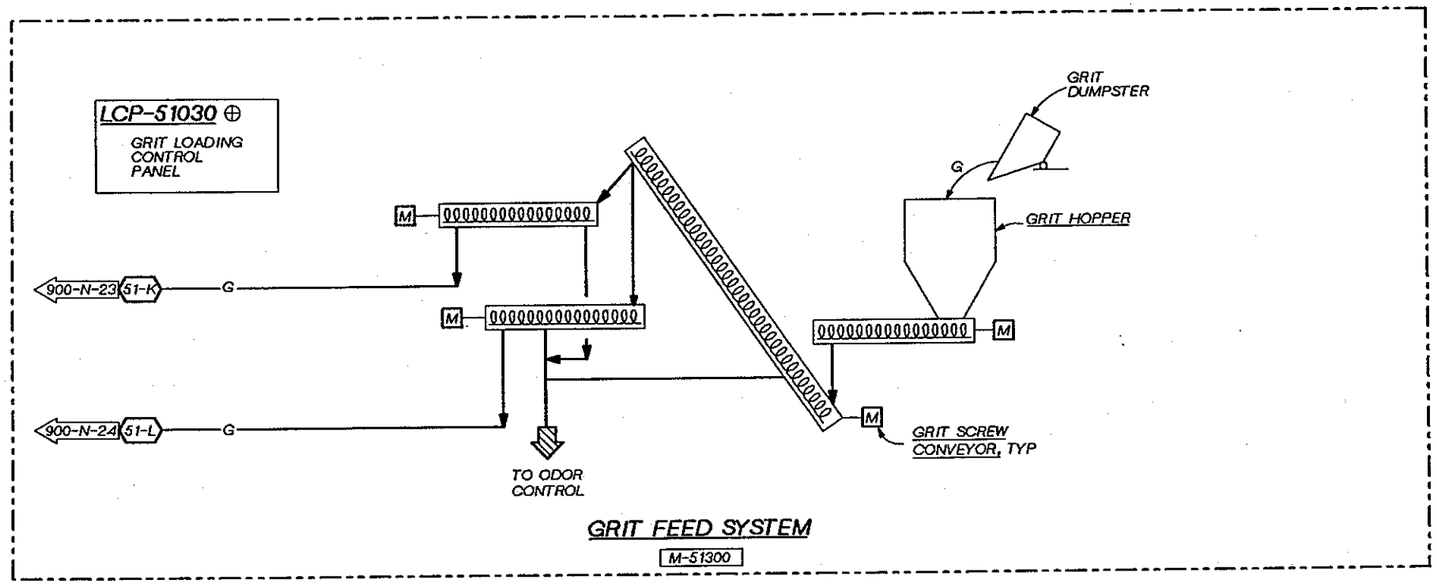

GRIT FEED SYSTEM

M-51300

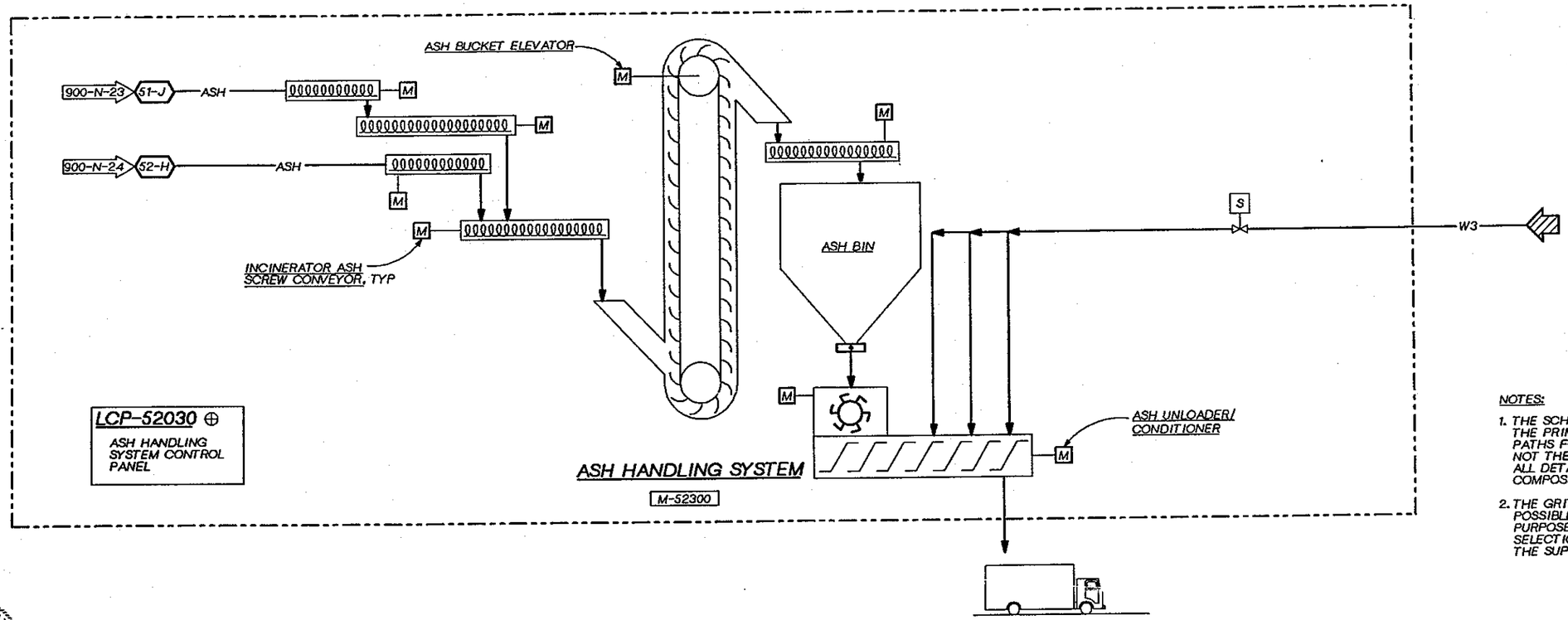

ASH HANDLING SYSTEM

M-52300

NOTES:

1. THE SCHEMATIC DIAGRAM SHOWN HERE DEPICTS THE PRIMARY EQUIPMENT AND GENERAL FLOW PATHS FOR THE INCINERATION SYSTEM. IT IS NOT THE INTENT OF THIS DIAGRAM TO SHOW ALL DETAILS OR ALL EQUIPMENT REQUIRED TO COMPOSE A COMPLETE AND FUNCTIONAL SYSTEM.

2. THE GRIT FEED SYSTEM SHOWN DEPICTS ONE POSSIBLE GRIT FEED ARRANGEMENT FOR EXAMPLE PURPOSES ONLY. THE FINAL ARRANGEMENT AND SELECTION OF EQUIPMENT SHALL BE MADE BY THE SUPPLIER. SEE SPECIFICATIONS.

JERALD L. SLATTER — STATE OF WASHINGTON — 17546 — REGISTERED PROFESSIONAL ENGINEER

CH2M HILL

DSGN	V. AUSTIN
DR	G. SLAYTER
CHK	J. BLACK
APVD	J GAUTHIER

NO.	DATE	REVISION	BY	APVD

REUSE OF DOCUMENTS
THIS DOCUMENT, AND THE IDEAS AND DESIGNS INCORPORATED HEREIN, AS AN INSTRUMENT OF PROFESSIONAL SERVICE, IS THE PROPERTY OF CH2M HILL AND IS NOT TO BE USED, IN WHOLE OR IN PART, FOR ANY OTHER PROJECT WITHOUT THE WRITTEN AUTHORIZATION OF CH2M HILL.
©CH2M HILL

BAR IS ONE INCH ON ORIGINAL DRAWING.
0 1"
IF NOT ONE INCH ON THIS SHEET, ADJUST SCALES ACCORDINGLY.

CITY OF BELLINGHAM, WASHINGTON
POST POINT WASTEWATER TREATMENT PLANT UPGRADE

INSTRUMENTATION AND CONTROL
P & ID
GRIT FEED SYSTEM / ASH HANDLING SYSTEM

DWG NO. [illegible]
DATE AUG. 1990
PROJ NO. SEA22462.C1

G. SLAYTER 08-23-90
DGN NAME: H:/PROJ2/BELLINGH/BL900N-X.DGN

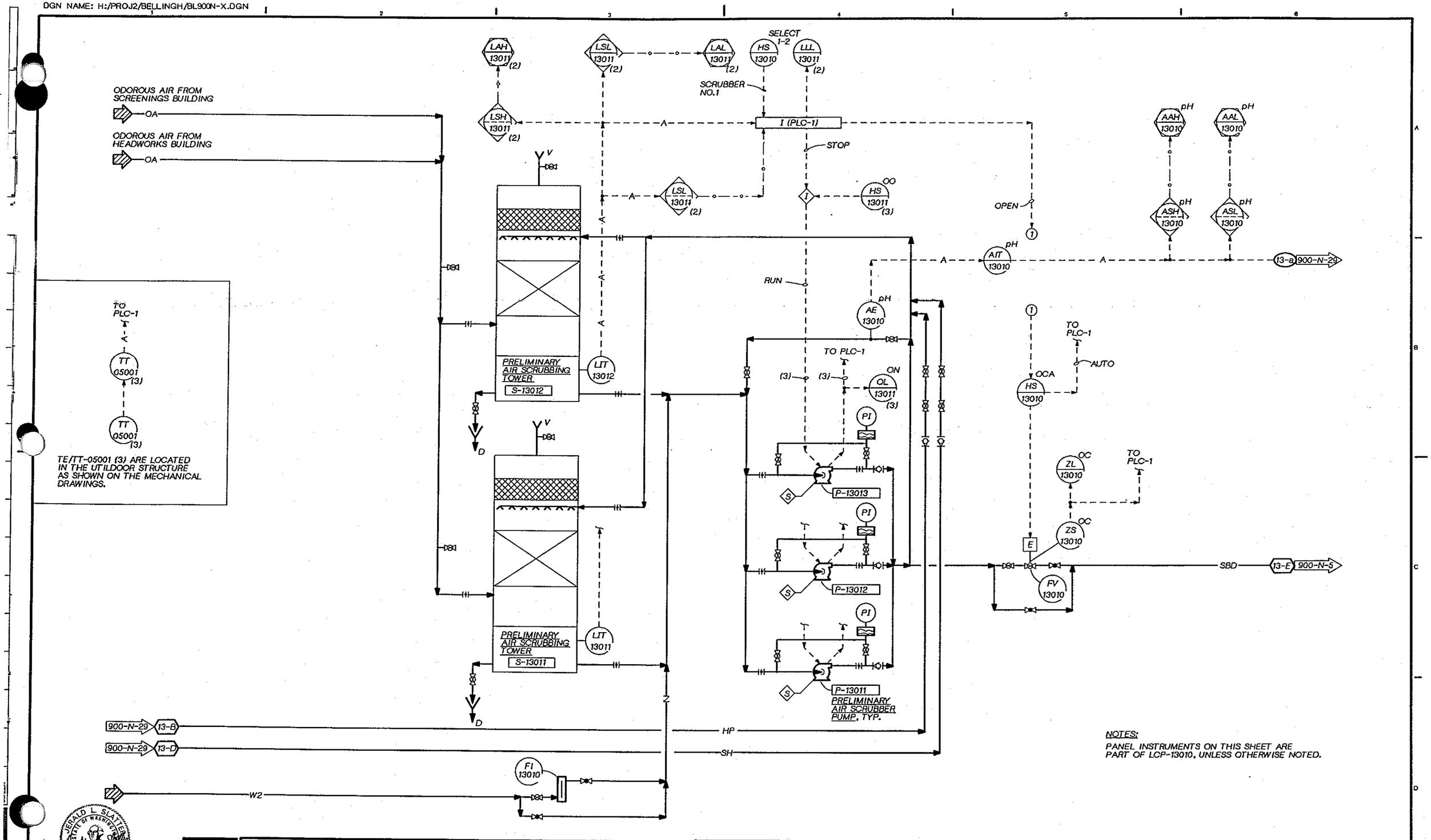

NOTES:
PANEL INSTRUMENTS ON THIS SHEET ARE PART OF LCP-13010, UNLESS OTHERWISE NOTED.

GERALD L. SLATTER STATE OF WASHINGTON 17546 REGISTERED PROFESSIONAL ENGINEER

CH2M HILL

DSGN	V. AUSTIN
DR	G. SLAYTER
CHK	J. BLACK
APVD	J GAUTHIER

NO.	DATE	REVISION	BY	APVD

REUSE OF DOCUMENTS
THIS DOCUMENT, AND THE IDEAS AND DESIGNS INCORPORATED HEREIN, AS AN INSTRUMENT OF PROFESSIONAL SERVICE, IS THE PROPERTY OF CH2M HILL AND IS NOT TO BE USED, IN WHOLE OR IN PART, FOR ANY OTHER PROJECT WITHOUT THE WRITTEN AUTHORIZATION OF CH2M HILL.
©CH2M HILL

BAR IS ONE INCH ON ORIGINAL DRAWING.
0 1"
IF NOT ONE INCH ON THIS SHEET, ADJUST SCALES ACCORDINGLY.

CITY OF BELLINGHAM, WASHINGTON
POST POINT WASTEWATER TREATMENT PLANT UPGRADE

INSTRUMENTATION AND CONTROL
P & ID
PRELIMINARY TREATMENT
ODOR CONTROL

DWG NO. 900-N-27
DATE AUG. 1990
PROJ NO. SEA22462.C1

G. SLAYTER 08-23-90
DGN NAME: H:/PROJ2/BELLINGH/BL900N-Y.DGN

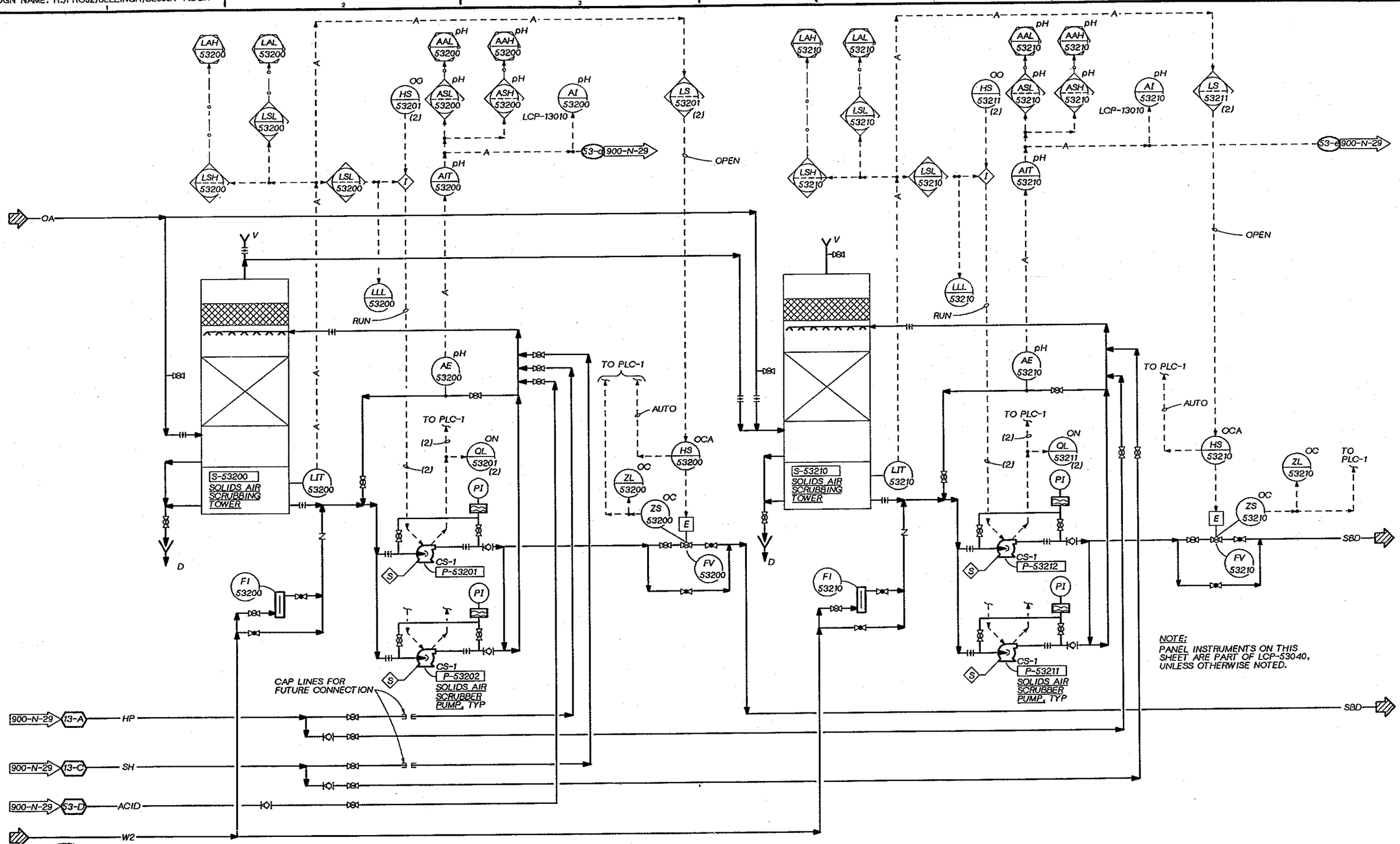

DSGN V. AUSTIN					
DR G. SLAYTER					
CHK J. BLACK					
APVD J. GAUTHIER	NO.	DATE	REVISION	BY	APVD

REUSE OF DOCUMENTS
THIS DOCUMENT, AND THE IDEAS AND DESIGNS INCORPORATED HEREIN, AS AN INSTRUMENT OF PROFESSIONAL SERVICE, IS THE PROPERTY OF CH2M HILL AND IS NOT TO BE USED, IN WHOLE OR IN PART, FOR ANY OTHER PROJECT WITHOUT THE WRITTEN AUTHORIZATION OF CH2M HILL.
©CH2M HILL

BAR IS ONE INCH ON ORIGINAL DRAWING. 0 1"
IF NOT ONE INCH ON THIS SHEET, ADJUST SCALES ACCORDINGLY.

CITY OF BELLINGHAM, WASHINGTON
POST POINT WASTEWATER TREATMENT PLANT UPGRADE

INSTRUMENTATION AND CONTROL
P & ID
SOLIDS HANDLING ODOR CONTROL

DWG NO. 900-N-28
DATE AUG. 1990
PROJ NO. SEA22462.C1

DGN NAME: H:/PROJ2/BELLINGH/BL900N-Z.DGN

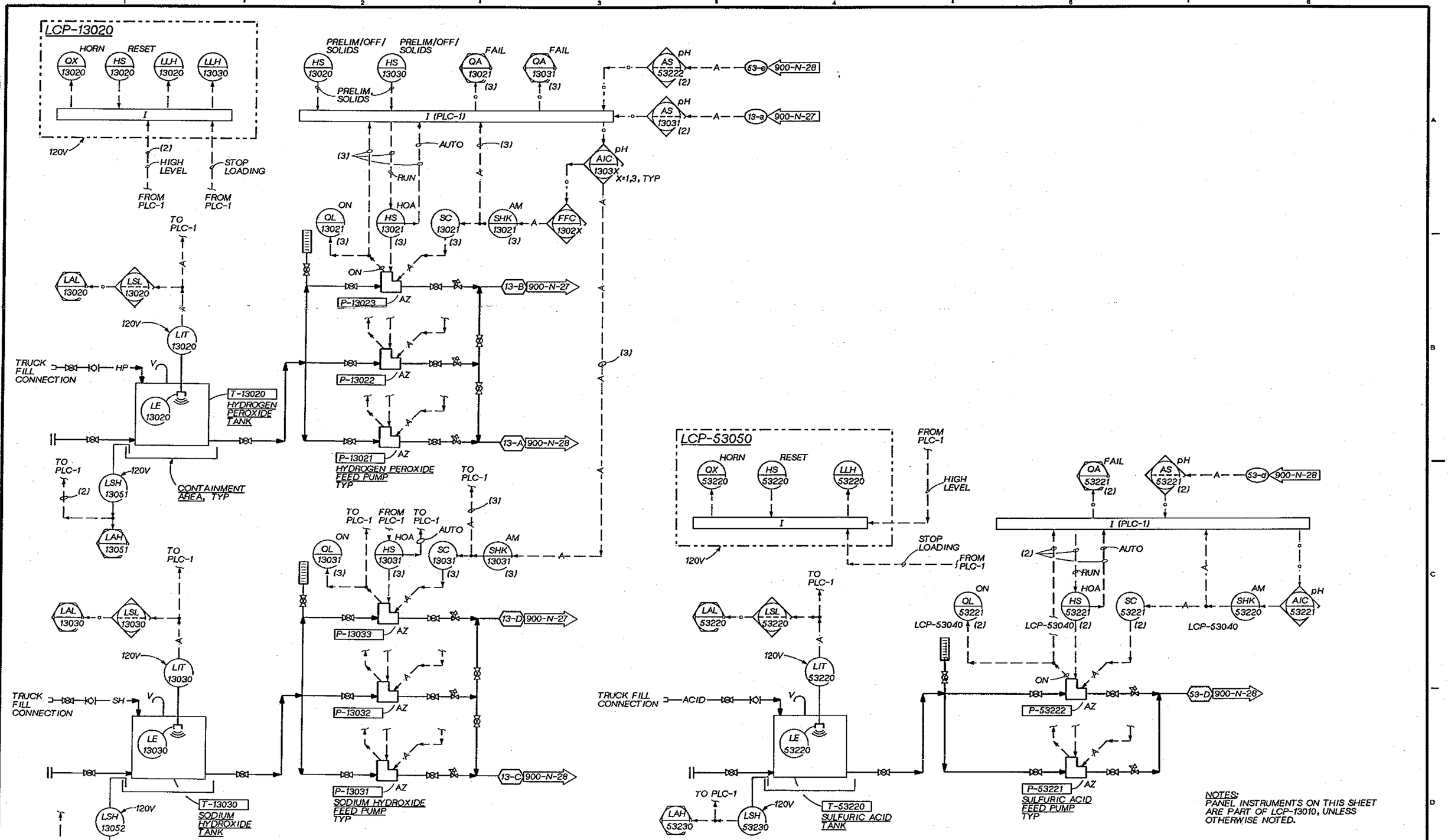

NOTES:
PANEL INSTRUMENTS ON THIS SHEET ARE PART OF LCP-13010, UNLESS OTHERWISE NOTED.

DSGN	V. AUSTIN		
DR	MAXEY-SUHR		
CHK	J. BLACK		
APVD	J GAUTHIER		

CH2M HILL

NO.	DATE	REVISION	BY	APVD

REUSE OF DOCUMENTS

THIS DOCUMENT, AND THE IDEAS AND DESIGNS INCORPORATED HEREIN, AS AN INSTRUMENT OF PROFESSIONAL SERVICE, IS THE PROPERTY OF CH2M HILL AND IS NOT TO BE USED, IN WHOLE OR IN PART, FOR ANY OTHER PROJECT WITHOUT THE WRITTEN AUTHORIZATION OF CH2M HILL.

©CH2M HILL

VERIFY SCALE
BAR IS ONE INCH ON ORIGINAL DRAWING.
0 1"
IF NOT ONE INCH ON THIS SHEET, ADJUST SCALES ACCORDINGLY.

CITY OF BELLINGHAM, WASHINGTON
POST POINT WASTEWATER TREATMENT PLANT UPGRADE

INSTRUMENTATION AND CONTROL
P & ID
CHEMICAL FEED SYSTEM

DWG NO. 900-N-29
DATE AUG. 1990
PROJ. NO. SEA22462.C1

G. SLAYTER 08-23-90
DGN NAME: H:/PROJ2/BELLINGH/BL900NAA.DGN

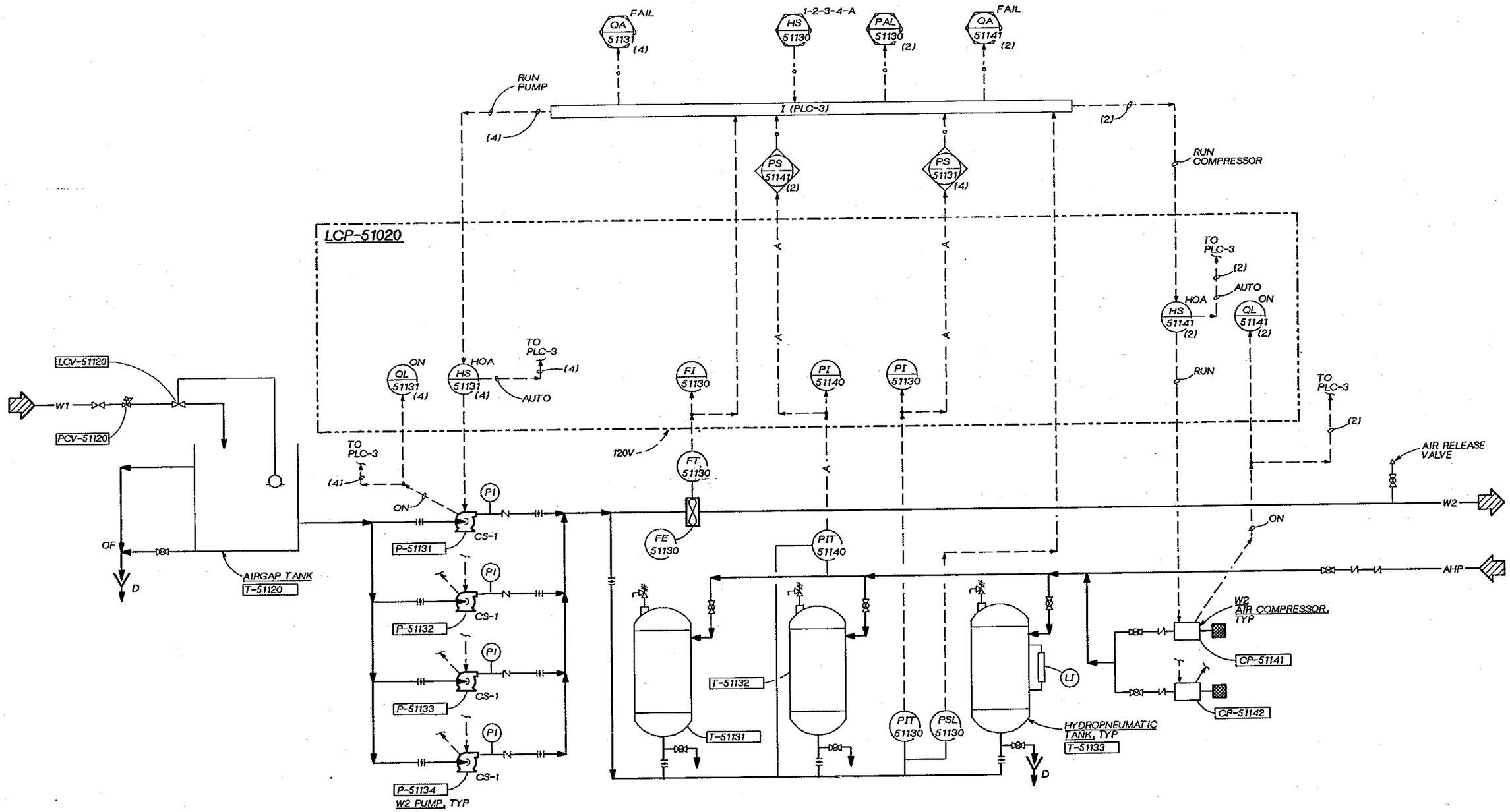

DSGN	V. AUSTIN				
DR	G. SLAYTER				
CHK	J. BLACK				
APVD	J GAUTHIER	NO.	DATE	REVISION	BY	APVD

CH2M HILL

REUSE OF DOCUMENTS
THIS DOCUMENT, AND THE IDEAS AND DESIGNS INCORPORATED HEREIN, AS AN INSTRUMENT OF PROFESSIONAL SERVICE, IS THE PROPERTY OF CH2M HILL AND IS NOT TO BE USED, IN WHOLE OR IN PART, FOR ANY OTHER PROJECT WITHOUT THE WRITTEN AUTHORIZATION OF CH2M HILL.
©CH2M HILL

BAR IS ONE INCH ON ORIGINAL DRAWING.
0 1"
IF NOT ONE INCH ON THIS SHEET, ADJUST SCALES ACCORDINGLY.

CITY OF BELLINGHAM, WASHINGTON
POST POINT WASTEWATER TREATMENT PLANT UPGRADE

INSTRUMENTATION AND CONTROL
P & ID
W2 WATER SYSTEM

DWG NO. 900-N-30
DATE AUG. 1990
PROJ NO. SEA22462.C1

G.SLAYTER 08-23-90
DGN NAME: H:/PROJ2/BELLINGH/BL900NAB.DGN

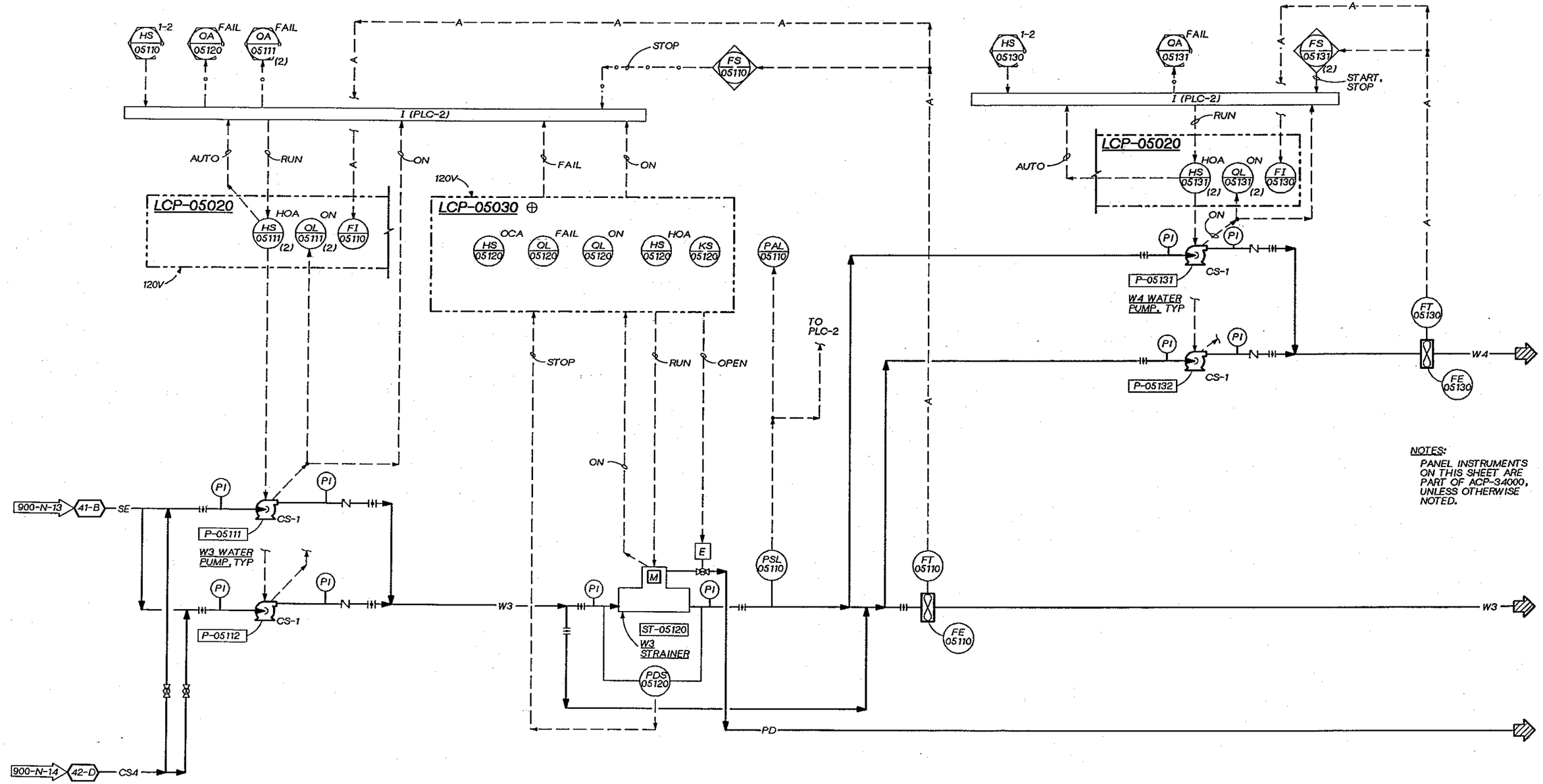

NOTES:
PANEL INSTRUMENTS ON THIS SHEET ARE PART OF ACP-34000, UNLESS OTHERWISE NOTED.

JERALD L. SLAYTER STATE OF WASHINGTON 11346 REGISTERED PROFESSIONAL ENGINEER

CH2M HILL

DSGN	V.AUSTIN				
DR	G. SLAYTER				
CHK	J. BLACK				
APVD	J GAUTHIER	NO.	DATE	REVISION	BY / APVD

REUSE OF DOCUMENTS
THIS DOCUMENT, AND THE IDEAS AND DESIGNS INCORPORATED HEREIN, AS AN INSTRUMENT OF PROFESSIONAL SERVICE, IS THE PROPERTY OF CH2M HILL AND IS NOT TO BE USED, IN WHOLE OR IN PART, FOR ANY OTHER PROJECT WITHOUT THE WRITTEN AUTHORIZATION OF CH2M HILL.
©CH2M HILL

BAR IS ONE INCH ON ORIGINAL DRAWING.
0 1"
IF NOT ONE INCH ON THIS SHEET, ADJUST SCALES ACCORDINGLY.

CITY OF BELLINGHAM, WASHINGTON
POST POINT WASTEWATER TREATMENT PLANT UPGRADE

INSTRUMENTATION AND CONTROL
P & ID
W3 & W4 WATER SYSTEM

DWG NO. 900-N-31
DATE AUG. 1990
PROJ NO. SEA22462.C1

G. SLATTER 05-22-90
DGN NAME: H:/PROJ2/BELLINGH/BL900NAC.DGN

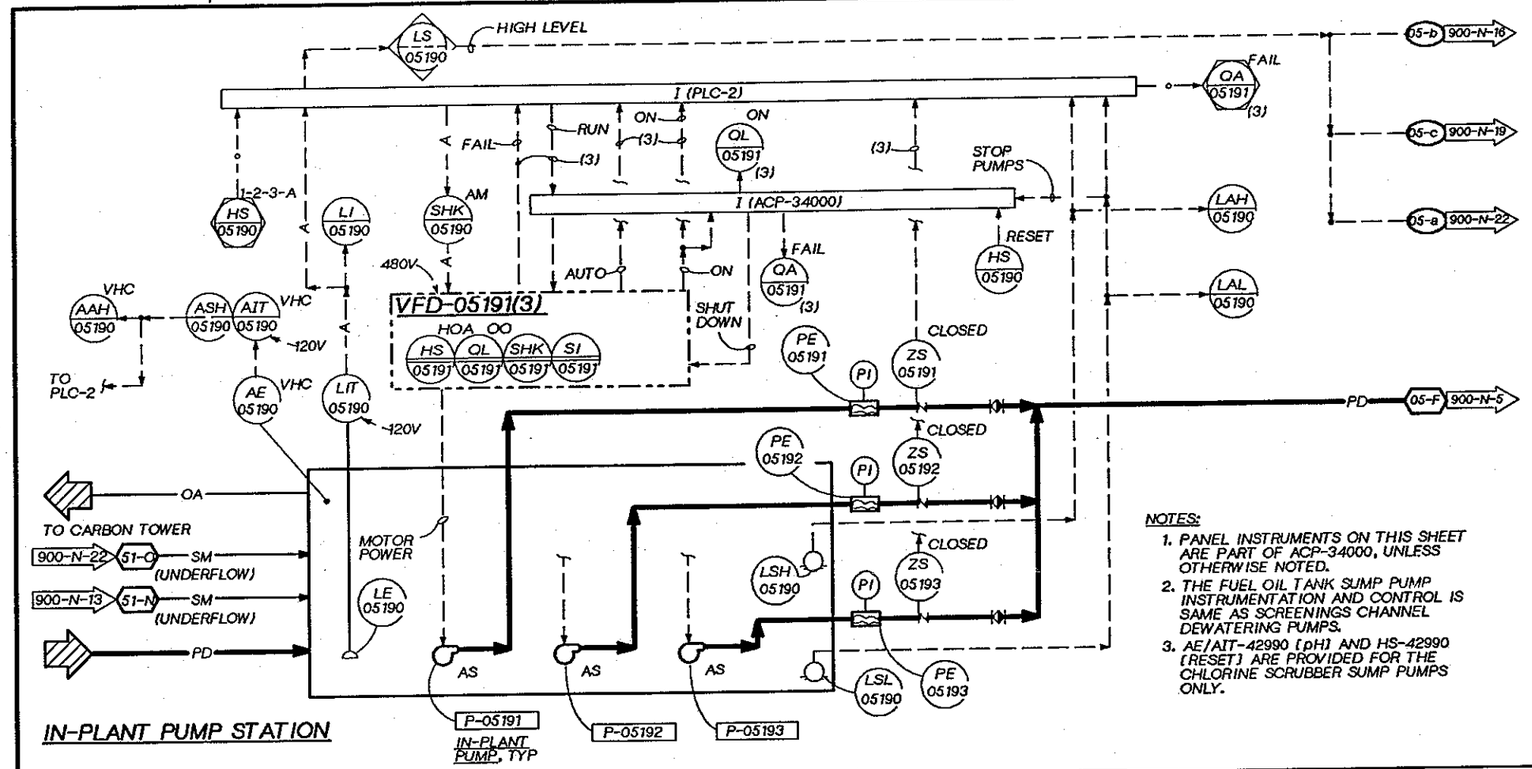

IN-PLANT PUMP STATION

NOTES:

1. PANEL INSTRUMENTS ON THIS SHEET ARE PART OF ACP-34000, UNLESS OTHERWISE NOTED.
2. THE FUEL OIL TANK SUMP PUMP INSTRUMENTATION AND CONTROL IS SAME AS SCREENINGS CHANNEL DEWATERING PUMPS.
3. AE/AIT-42990 (pH) AND HS-42990 (RESET) ARE PROVIDED FOR THE CHLORINE SCRUBBER SUMP PUMPS ONLY.

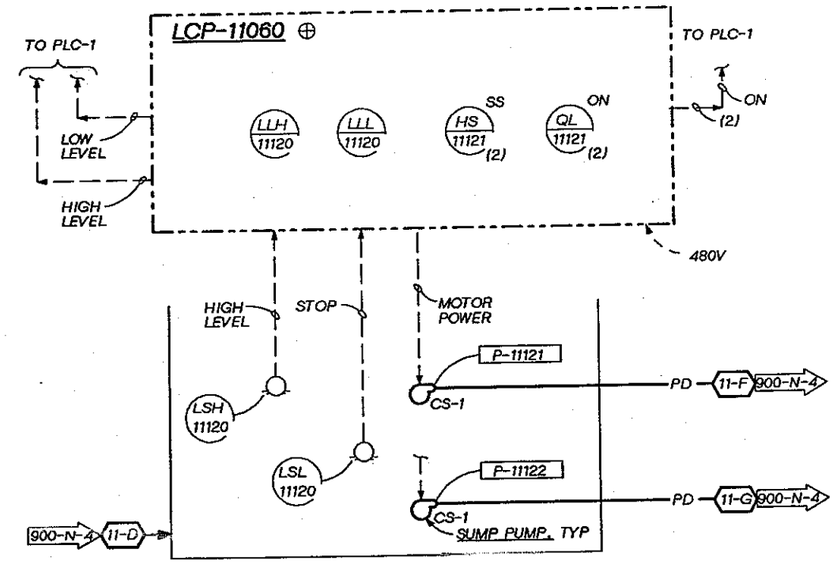

SCREENINGS CHANNEL DEWATERING PUMPS

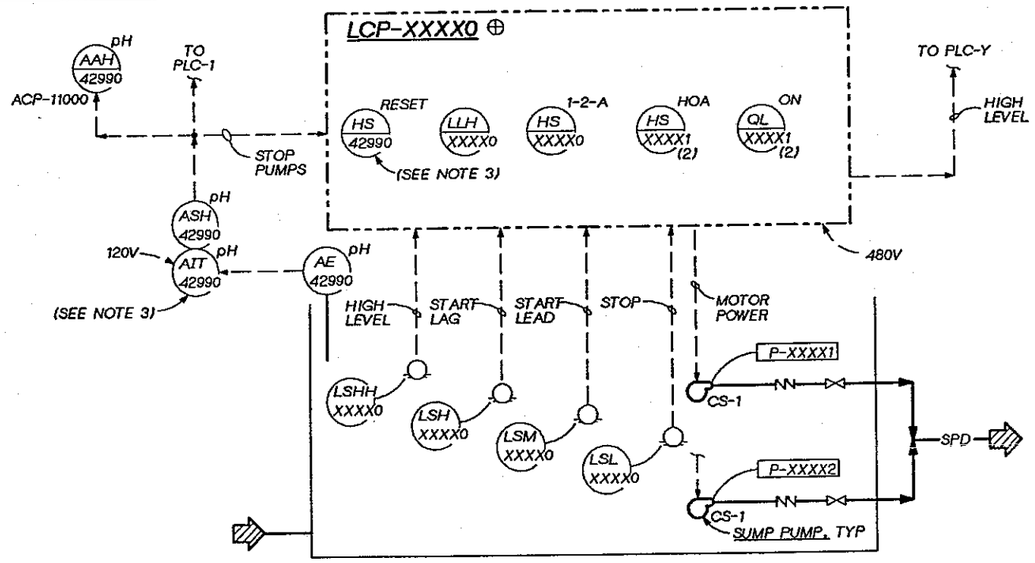

SUMP PUMPING (TYPICAL)

SUMP PUMPS

LOCATION	TAG NO. XXXX	PLC Y
SCREENINGS FACILITY	1198	1
	1199	1
PRIMARY EFFL. PUMP STATION	2299	2
SEC. SLUDGE PUMP STATION	3499	2
SOLIDS HANDLING FAC. -WEST ADD.	5299	3
SOLIDS HANDLING FAC. -EAST ADD.	5399	3
SOLIDS HANDLING FAC. -EXISTING	5199	3
PIPE GALLERY 1	0593	2
PIPE GALLERY 2	0594	2
PIPE GALLERY 3	0595	2

LOCATION	TAG NO. XXXX	PLC Y
PIPE GALLERY 4	0596	2
PIPE GALLERY 5	0597	2
PIPE GALLERY 6	0598	2
PIPE GALLERY 7	0599	2
FUEL OIL TANK	7499	1
PRELIM. TREAT. ODOR CONTROL	1399	1
CHLORINE SCRUBBER	4299	1

(SEE NOTE 2)

JERALD L. SLATTER, STATE OF WASHINGTON, 11546, REGISTERED PROFESSIONAL ENGINEER

CH2M HILL

DSGN V. AUSTIN
DR G. SLAYTER
CHK J. BLACK
APVD J GAUTHIER

NO.	DATE	REVISION	BY	APVD

REUSE OF DOCUMENTS
THIS DOCUMENT, AND THE IDEAS AND DESIGNS INCORPORATED HEREIN, AS AN INSTRUMENT OF PROFESSIONAL SERVICE, IS THE PROPERTY OF CH2M HILL AND IS NOT TO BE USED, IN WHOLE OR IN PART, FOR ANY OTHER PROJECT WITHOUT THE WRITTEN AUTHORIZATION OF CH2M HILL.
©CH2M HILL

BAR IS ONE INCH ON ORIGINAL DRAWING. IF NOT ONE INCH ON THIS SHEET, ADJUST SCALES ACCORDINGLY.

CITY OF BELLINGHAM, WASHINGTON
POST POINT WASTEWATER TREATMENT PLANT UPGRADE

INSTRUMENTATION AND CONTROL
P & ID
IN-PLANT PUMPING / SUMP PUMPING

DWG NO. 900-N-32
DATE AUG. 1990
PROJ NO. SEA22462.C1

OVERLAY IDENTIFICATION: COMPOSITE, OVERLAY, SCREEN, PROJ, FILE

V A MAXEY-SUHR 08-23-90
DGN NAME: H:/PROJ2/BELLINGH/BL900NAD.DGN

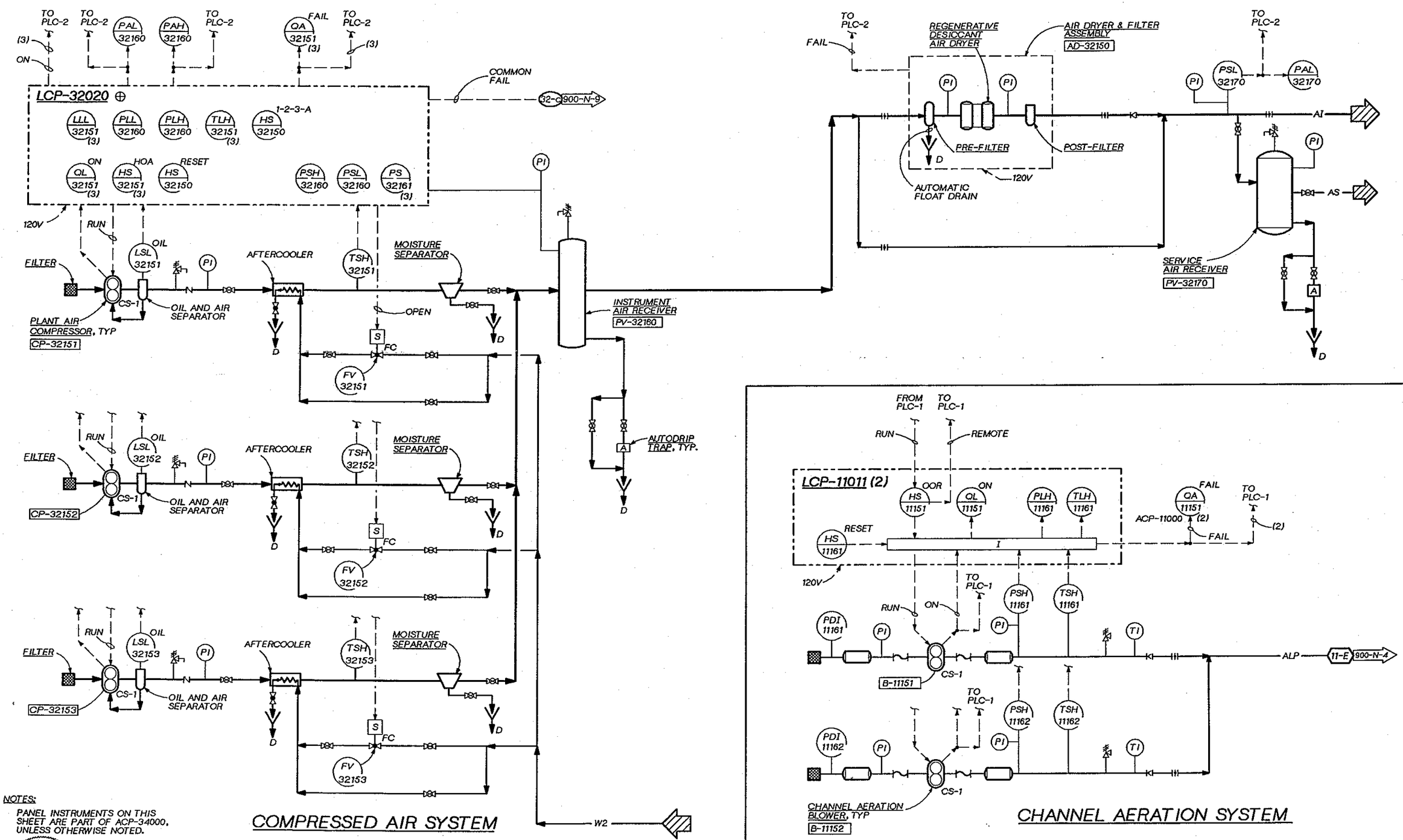

NOTES:
PANEL INSTRUMENTS ON THIS SHEET ARE PART OF ACP-34000, UNLESS OTHERWISE NOTED.

COMPRESSED AIR SYSTEM

CHANNEL AERATION SYSTEM

DSGN V. AUSTIN					
DR MAXEY-SUHR					
CHK J. BLACK					
APVD J GAUTHIER	NO.	DATE	REVISION	BY	APVD

CH2M HILL

REUSE OF DOCUMENTS
THIS DOCUMENT, AND THE IDEAS AND DESIGNS INCORPORATED HEREIN, AS AN INSTRUMENT OF PROFESSIONAL SERVICE, IS THE PROPERTY OF CH2M HILL AND IS NOT TO BE USED, IN WHOLE OR IN PART, FOR ANY OTHER PROJECT WITHOUT THE WRITTEN AUTHORIZATION OF CH2M HILL.
©CH2M HILL

BAR IS ONE INCH ON ORIGINAL DRAWING.
0 1"
IF NOT ONE INCH ON THIS SHEET, ADJUST SCALES ACCORDINGLY.

CITY OF BELLINGHAM, WASHINGTON
POST POINT WASTEWATER TREATMENT PLANT UPGRADE

INSTRUMENTATION AND CONTROL
P & ID
COMPRESSED AIR SYSTEM/
CHANNEL AERATION BLOWERS

DWG NO. 900-N-33
DATE AUG. 1990
PROJ. NO. SEA22462.C1

G. SLAYTER 08-23-90
DGN NAME: H:/PROJ2/BELLINGH/BL900N-N.DGN

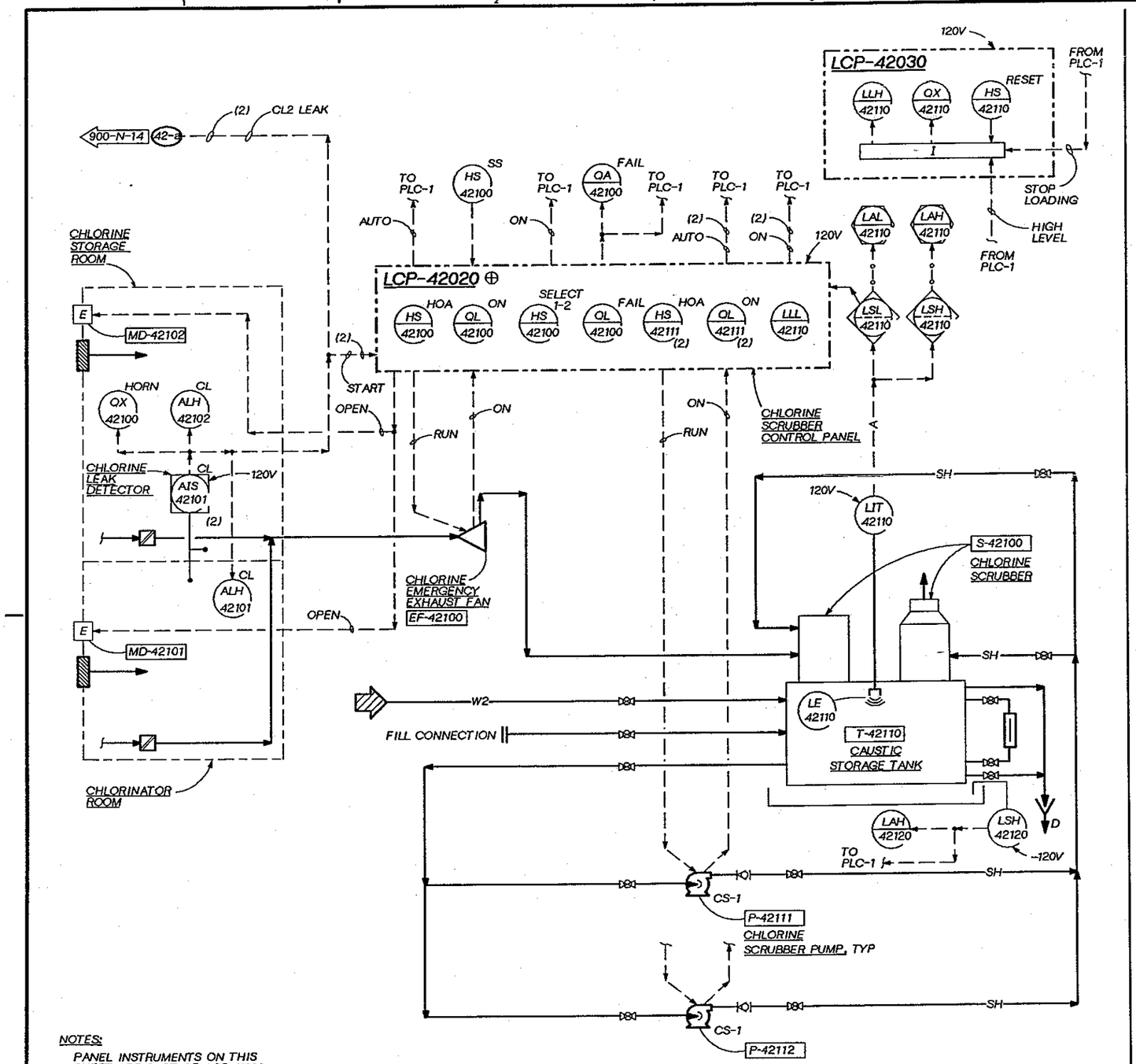

CHLORINE SCRUBBER SYSTEM

NOTES:
PANEL INSTRUMENTS ON THIS SHEET ARE PART OF ACP-11000, UNLESS OTHERWISE NOTED.

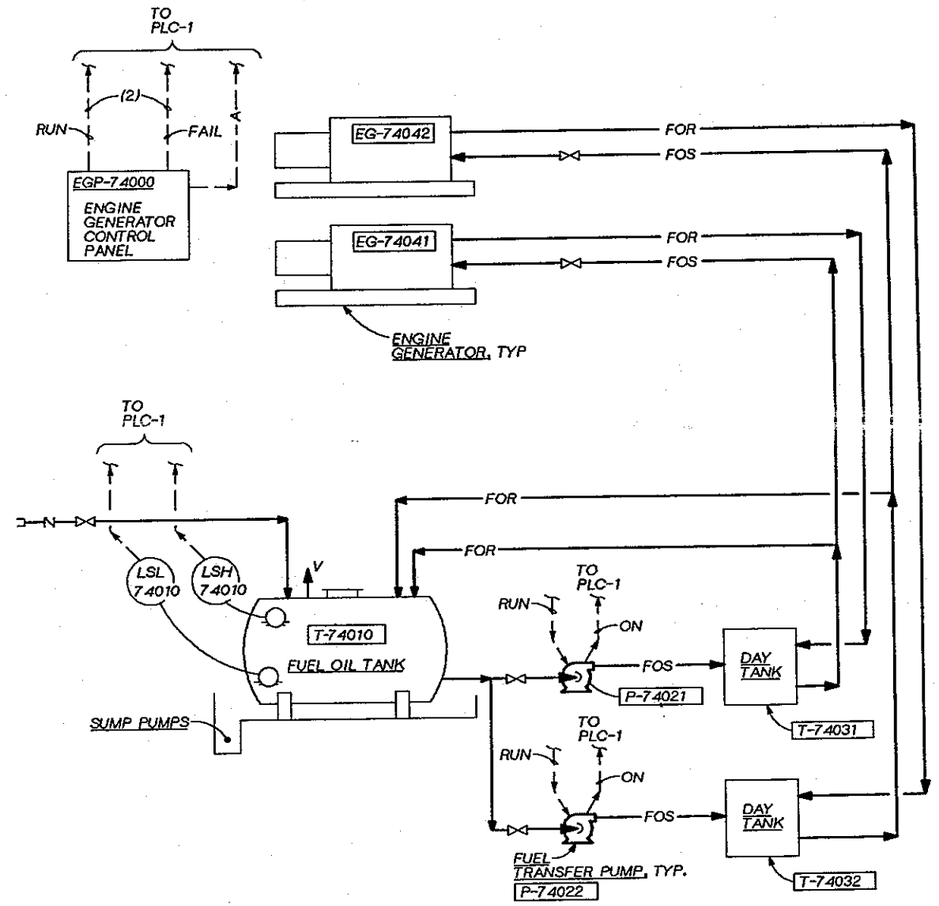

ENGINE GENERATOR

DSGN	V. AUSTIN			
DR	G. SLAYTER			
CHK	J. BLACK			
APVD	J GAUTHIER	NO.	DATE	REVISION	BY	APVD

CH2M HILL

REUSE OF DOCUMENTS
THIS DOCUMENT, AND THE IDEAS AND DESIGNS INCORPORATED HEREIN, AS AN INSTRUMENT OF PROFESSIONAL SERVICE, IS THE PROPERTY OF CH2M HILL AND IS NOT TO BE USED, IN WHOLE OR IN PART, FOR ANY OTHER PROJECT WITHOUT THE WRITTEN AUTHORIZATION OF CH2M HILL.
©CH2M HILL

BAR IS ONE INCH ON ORIGINAL DRAWING.
0 1"
IF NOT ONE INCH ON THIS SHEET, ADJUST SCALES ACCORDINGLY.

CITY OF BELLINGHAM, WASHINGTON
POST POINT WASTEWATER TREATMENT PLANT UPGRADE

INSTRUMENTATION AND CONTROL
P & ID
CHLORINE SCRUBBER SYSTEM/ ENGINE GENERATOR

DWG NO. 900-N-34
DATE AUG. 1990
PROJ NO. SEA22462.C1

DRAWN BY: G. SLAYTER DESIGNED BY: V. AUSTIN
DGN NAME: H:/PROJ2/BELLINGH/BL900NAE.DGN

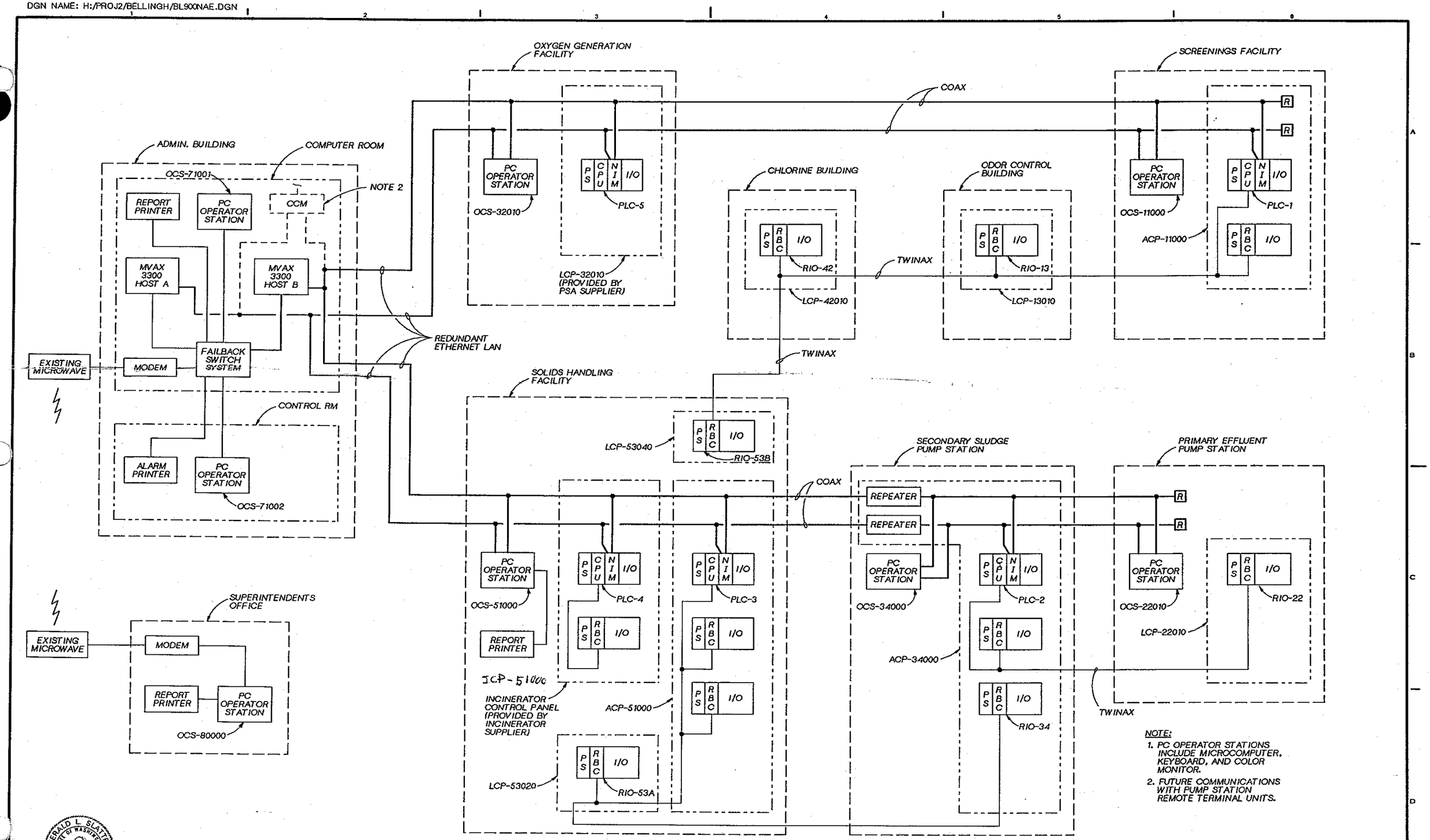

NOTE:
1. PC OPERATOR STATIONS INCLUDE MICROCOMPUTER, KEYBOARD, AND COLOR MONITOR.
2. FUTURE COMMUNICATIONS WITH PUMP STATION REMOTE TERMINAL UNITS.

GERALD L. SLAYTER STATE OF WASHINGTON 1546 REGISTERED PROFESSIONAL ENGINEER

CH2M HILL

DSGN	V. AUSTIN
DR	G. SLAYTER
CHK	J. BLACK
APVD	J GAUTHIER

NO.	DATE	REVISION	BY	APVD

REUSE OF DOCUMENTS
THIS DOCUMENT, AND THE IDEAS AND DESIGNS INCORPORATED HEREIN, AS AN INSTRUMENT OF PROFESSIONAL SERVICE, IS THE PROPERTY OF CH2M HILL AND IS NOT TO BE USED, IN WHOLE OR IN PART, FOR ANY OTHER PROJECT WITHOUT THE WRITTEN AUTHORIZATION OF CH2M HILL.
©CH2M HILL

BAR IS ONE INCH ON ORIGINAL DRAWING. 0 1"
IF NOT ONE INCH ON THIS SHEET, ADJUST SCALES ACCORDINGLY.

CITY OF BELLINGHAM, WASHINGTON
POST POINT WASTEWATER TREATMENT PLANT UPGRADE

INSTRUMENTATION AND CONTROL
CONTROL SYSTEM BLOCK DIAGRAM

DWG NO. 900-N-35
DATE AUG. 1990
PROJ. NO. SEA22462.C1

DRAWN BY: G. SLAYTER DESIGNED BY: V. AUSTIN
DGN NAME: H:/PROJ2/BELLINGH/BL900NAF.DGN

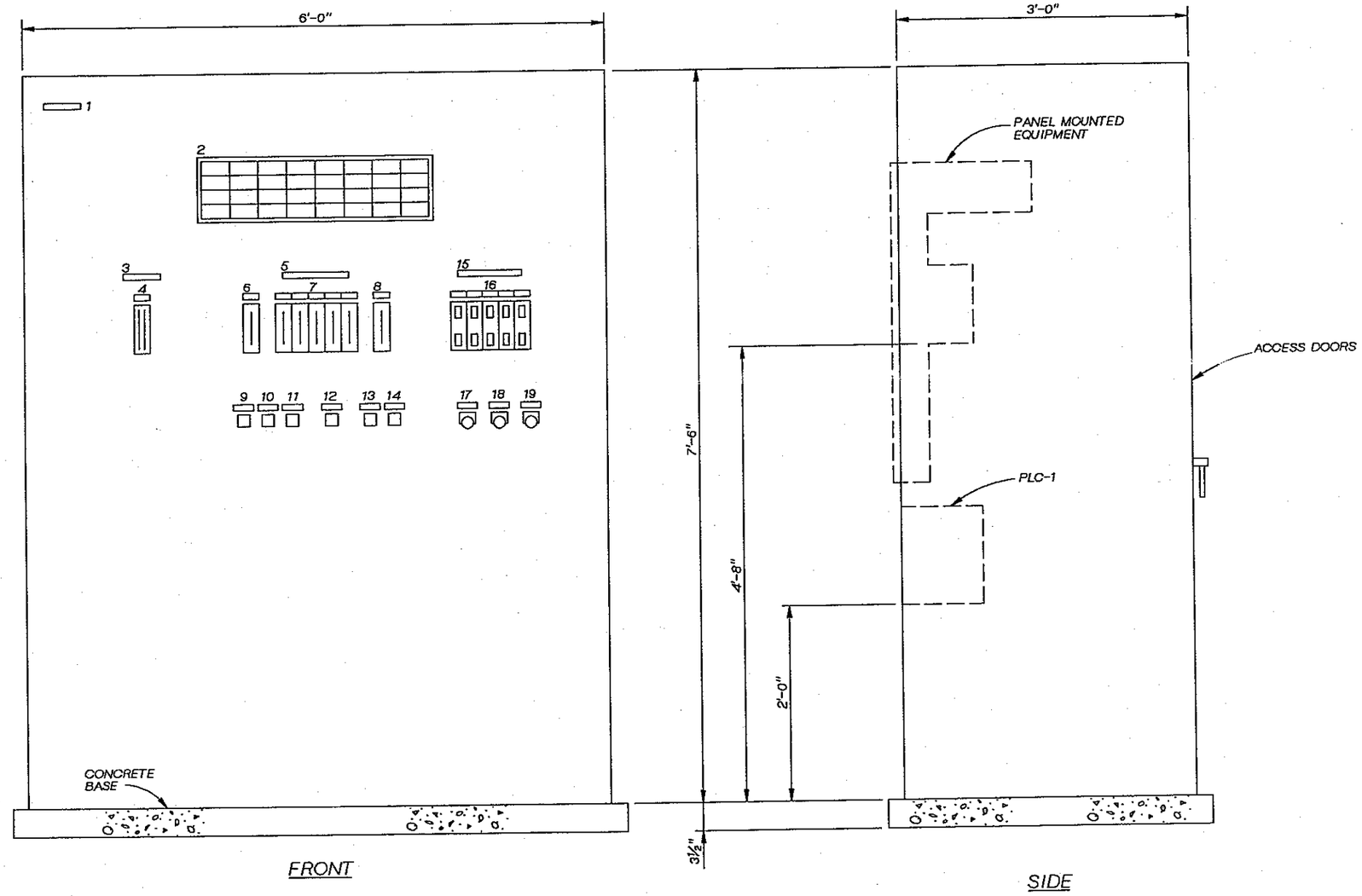

AREA CONTROL PANEL ACP-11000

1½" = 1'-0"

NOTES:

1. SECURE PANEL ENCLOSURE TO CONCRETE BASE WITH ⅜" CONCRETE ANCHORS.

JERALD L. SLAYTER STATE OF WASHINGTON REGISTERED PROFESSIONAL ENGINEER

CH2M HILL

DSGN	V. AUSTIN					
DR	G. SLAYTER					
CHK	J. BLACK					
APVD	J GAUTHIER	NO.	DATE	REVISION	BY	APVD

REUSE OF DOCUMENTS

THIS DOCUMENT, AND THE IDEAS AND DESIGNS INCORPORATED HEREIN, AS AN INSTRUMENT OF PROFESSIONAL SERVICE, IS THE PROPERTY OF CH2M HILL AND IS NOT TO BE USED, IN WHOLE OR IN PART, FOR ANY OTHER PROJECT WITHOUT THE WRITTEN AUTHORIZATION OF CH2M HILL.

©CH2M HILL

BAR IS ONE INCH ON ORIGINAL DRAWING.
0 1"
IF NOT ONE INCH ON THIS SHEET, ADJUST SCALES ACCORDINGLY.

CITY OF BELLINGHAM, WASHINGTON
POST POINT WASTEWATER TREATMENT PLANT UPGRADE

INSTRUMENTATION AND CONTROL

AREA CONTROL PANEL ACP-11000 ELEVATION

DWG NO. 900-N-36
DATE AUG. 1990
PROJ NO. SEA22462.C1

OVERLAY IDENTIFICATION: COMPOSITE, OVERLAY, SCREEN; PROJ, FILE

DRAWN BY: G. SLAYTER DESIGNED BY: V. AUSTIN
DGN NAME: H:/PROJ2/BELLINGH/BL900NAG.DGN

ACP-11000 SCHEDULE

ITEM NO.	TAG NO.	NAMEPLATE INSCRIPTION (DESCRIPTION) FIRST LINE / SECOND LINE / THIRD LINE	SPEC NO.
1	-	ACP-11000 / SCREENINGS, GRIT REMOVAL, CHLORINATION	
2	-	(ANNUNCIATOR)	M02
3	-	SEPTAGE PUMPING	
4	LI-11011	SEPT. HOPPER NO.1 / LEVEL	S26
	LI-11012	SEPT. HOPPER NO.2 / LEVEL	S26
5	-	SCREENINGS FACILITY	
6	LI-11030	BAR SCREENS / INFLUENT CHANNEL / LEVEL	S26
7	FI-11031	BAR SCREEN / NO.1 / FLOW	S26
	FI-11032	BAR SCREEN / NO.2 / FLOW	S26
	FI-11033	BAR SCREEN / NO.3 / FLOW	S26
	FI-11034	BAR SCREEN / NO.4 / FLOW	S26
	FI-11035	BAR SCREEN / NO.5 / FLOW	S26
8	FI-11030	TOTAL PLANT FLOW	S26
9	XL-11031 [ON]	MECH. / BAR SCREEN / NO.1	M06
10	XL-11034 [ON]	MECH. / BAR SCREEN / NO.4	M06
11	XL-11035 [ON]	MECH. / BAR SCREEN / NO.5	M06
12	XL-11080 [ON]	SHAFTLESS SCREW / CONVEYOR	M06
13	XL-11091 [ON]	SCREENINGS PRESS / NO.1	M06
14	XL-11092 [ON]	SCREENINGS PRESS / NO.2	M06
15	-	COMBUSTIBLE GAS ANALYZERS	
16	AIT-11011 [VHC]	SEPT. HOPPERS / AE-11011, AE-11012	A10
	AIT-11012 [VHC]	SEPT. / DRIVE - THROUGH / AE-11013	A10
	AIT-11100 [VHC]	SCREENINGS ROOM / AE-11101, AE-11102	A10
	AIT-11110 [H2S]	SCREENINGS ROOM / AE-11111, AE-11112	A10
	AIT-12070	GRIT REMOVAL / AE-12071, AE-12072	A10
17	HS-11010 [SILENCE]	SEPT. AREA / LEL ALARM / SILENCE	M16
18	HS-11100 [SILENCE]	SCREENINGS ROOM / LEL ALARM / SILENCE	M16
19	HS-12070 [SILENCE]	GRIT REMOVAL / LEL ALARM / SILENCE	M16

ANNUNCIATOR

COL-ROW	TAG NO.	WINDOW INSCRIPTION FIRST LINE / SECOND LINE / THIRD LINE
1-1	LAH-11011	SEPT. HOPPER / NO.1 / HIGH LEVEL
1-2	LAL-11011	SEPT. HOPPER / NO.1 / LOW LEVEL
1-3	QA-11011[FAIL]	SEPT. PUMP / NO.1 / FAIL
1-4	AAH-11010 [VHC]	SEPT. PUMPING / AREA / HIGH LEL
2-1	LAH-11012	SEPT. HOPPER / NO.2 / HIGH LEVEL
2-2	LAL-11012	SEPT. HOPPER / NO.2 / LOW LEVEL
2-3	QA-11012[FAIL]	SEPT. PUMP / NO.2 / FAIL
2-4	-	(SPARE)
3-1	LAH-11030	BAR SCREEN / INFL. CHANNEL / HIGH LEVEL
3-2	QA-11080 [FAIL]	SCREENINGS / CONVEYOR / FAIL
3-3	AAH-11100 [VHC]	SCREENINGS / FACILITY / HIGH LEL
3-4	-	(SPARE)
4-1	QA-11151 [FAIL]	CHANNEL AER. / BLOWER NO.1 / FAIL
4-2	QA-11152 [FAIL]	CHANNEL AER. / BLOWER NO.2 / FAIL
4-3	AAH-11110 [H2S]	SCREENINGS / FACILITY / HIGH H2S
4-4	-	(SPARE)
5-1	NAH-12011 [TORQ]	GRIT CHAMBER / NO.1 / HIGH TORQUE
5-2	NAH-12012 [TORQ]	GRIT CHAMBER / NO.2 / HIGH TORQUE
5-3	AAH-12070 [VHC]	GRIT REMOVAL / FACILITY / HIGH LEL
5-4	AAH-05101 [VHC]	PIPE GALLERY / HIGH LEL
6-1	PA-42051	POST-CHLOR. / CHLOR. NO.1 / PRESSURE ALARM
6-2	PA-42052	POST-CHLOR. / CHLOR. NO.2 / PRESSURE ALARM
6-3	PA-42053	PRE-CHLOR. / CHLOR. NO.3 / PRESSURE ALARM
6-4	PA-42054	R.A.S. / CHLOR. NO.4 / PRESSURE ALARM
7-1	PA-42055	MISC. USES / CHLOR. NO.5 / PRESSURE ALARM
7-2	LAH-41050	CHLORINE BASIN / OVERFLOW WEIR / HIGH LEVEL
7-3	LAH-42120	CAUSTIC / CONT. AREA / HIGH LEVEL
7-4	AAH-42990 [pH]	CHLOR. SCRUB. / SUMP / HIGH pH
8-1	AAH-42101 [CL2 LEAK]	CHLOR. ROOM / CHLORINE LEAK
8-2	AAH-42102 [CL2 LEAK]	CHLORINE / STORAGE ROOM / CHLORINE LEAK
8-3	QA-42100 [FAIL]	CHLORINE / SCRUBBER / SYSTEM FAIL
8-4		(ACKNOWLEDGE / RESET / TEST)

GERALD L. SLAYTER STATE OF WASHINGTON 17546 REGISTERED PROFESSIONAL ENGINEER

CH2M HILL

DSGN V. AUSTIN
DR G. SLAYTER
CHK J. BLACK
APVD J GAUTHIER

NO.	DATE	REVISION	BY	APVD

REUSE OF DOCUMENTS
THIS DOCUMENT, AND THE IDEAS AND DESIGNS INCORPORATED HEREIN, AS AN INSTRUMENT OF PROFESSIONAL SERVICE, IS THE PROPERTY OF CH2M HILL AND IS NOT TO BE USED, IN WHOLE OR IN PART, FOR ANY OTHER PROJECT WITHOUT THE WRITTEN AUTHORIZATION OF CH2M HILL.
©CH2M HILL

BAR IS ONE INCH ON ORIGINAL DRAWING.
0 1"
IF NOT ONE INCH ON THIS SHEET, ADJUST SCALES ACCORDINGLY.

CITY OF BELLINGHAM, WASHINGTON
POST POINT WASTEWATER TREATMENT PLANT UPGRADE

INSTRUMENTATION AND CONTROL
AREA CONTROL PANEL
ACP-11000 SCHEDULE

DWG NO. 900-N-37
DATE AUG. 1990
PROJ. NO. SEA22462.C1

OVERLAY IDENTIFICATION: PROJD, FILE
COMPOSITE, OVERLAY, SCREEN

DRAWN BY: G. SLAYTER DESIGNED BY: V. AUSTIN
DGN NAME: H:/PROJ2/BELLINGH/BL900NAK.DGN

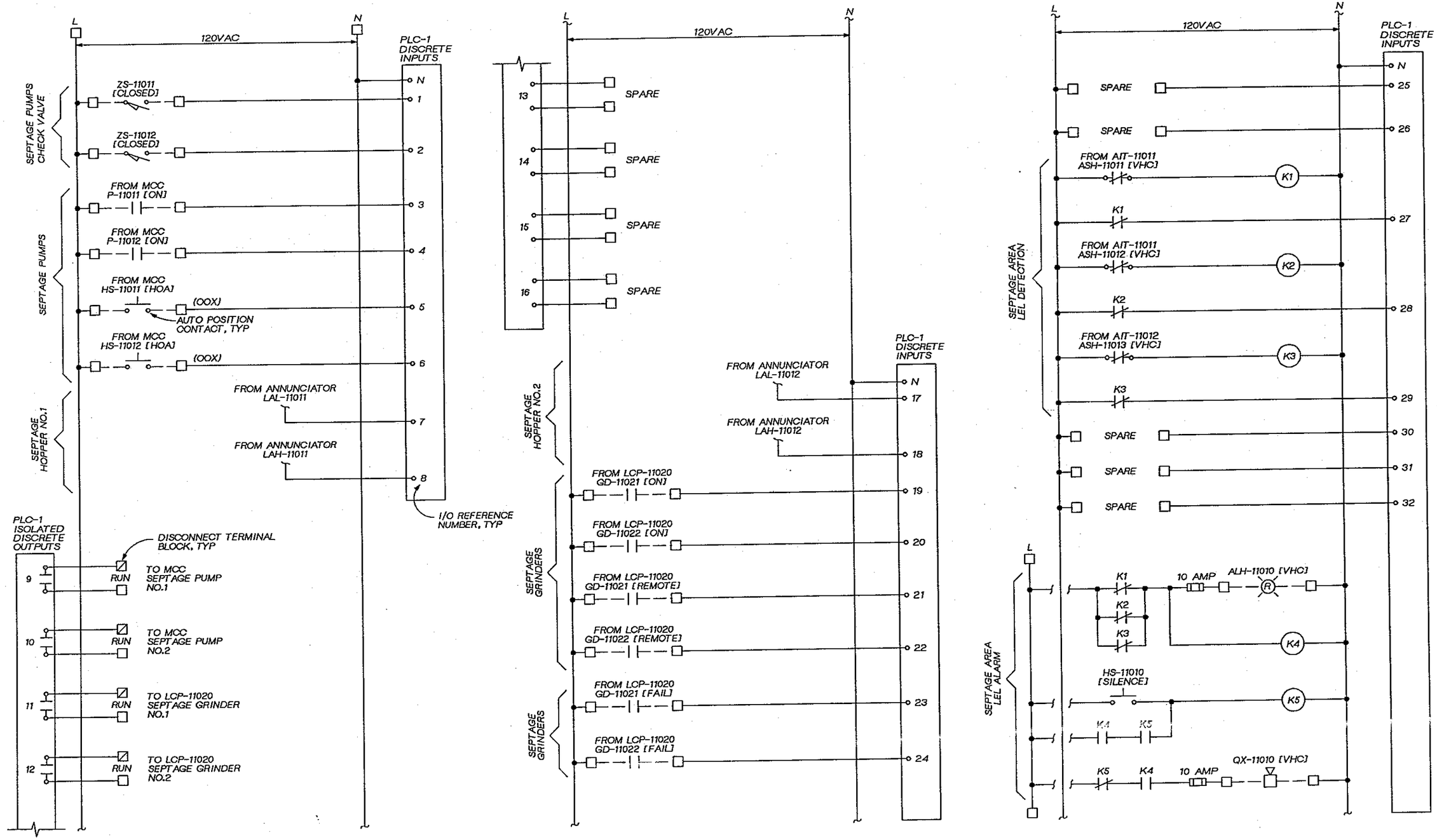

DSGN V. AUSTIN					
DR G. SLAYTER					
CHK J. BLACK					
APVD J GAUTHIER	NO.	DATE	REVISION	BY	APVD

CH2M HILL

REUSE OF DOCUMENTS
THIS DOCUMENT, AND THE IDEAS AND DESIGNS INCORPORATED HEREIN, AS AN INSTRUMENT OF PROFESSIONAL SERVICE, IS THE PROPERTY OF CH2M HILL AND IS NOT TO BE USED, IN WHOLE OR IN PART, FOR ANY OTHER PROJECT WITHOUT THE WRITTEN AUTHORIZATION OF CH2M HILL.
©CH2M HILL

BAR IS ONE INCH ON ORIGINAL DRAWING.
0 1"
IF NOT ONE INCH ON THIS SHEET, ADJUST SCALES ACCORDINGLY.

CITY OF BELLINGHAM, WASHINGTON
POST POINT WASTEWATER TREATMENT PLANT UPGRADE

INSTRUMENTATION AND CONTROL
AREA CONTROL PANEL
ACP-11000 ELEMENTARY

DWG NO. 900-N-38
DATE AUG. 1990
PROJ NO. SEA22462.C1

COMPOSITE
OVERLAY SCREEN
OVERLAY IDENTIFICATION
PROJID
FILE

DGN NAME: H:/PROJ2/BELLINGH/BL900NAL.DGN

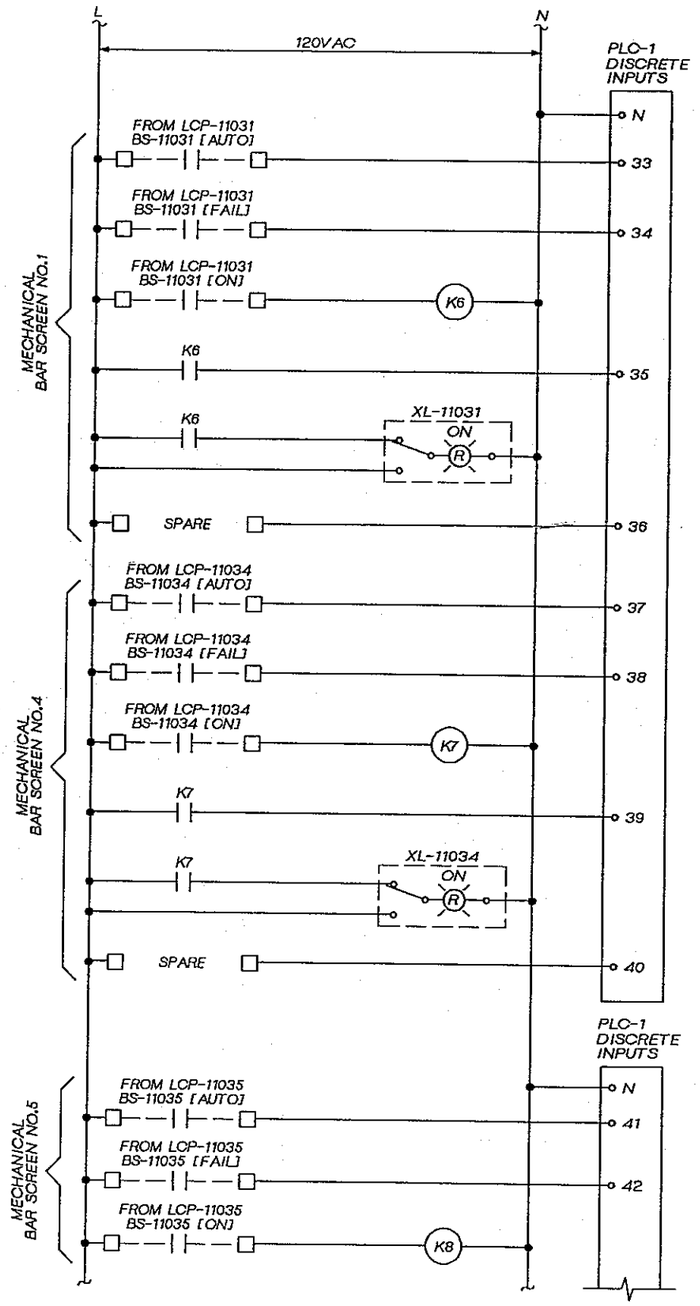

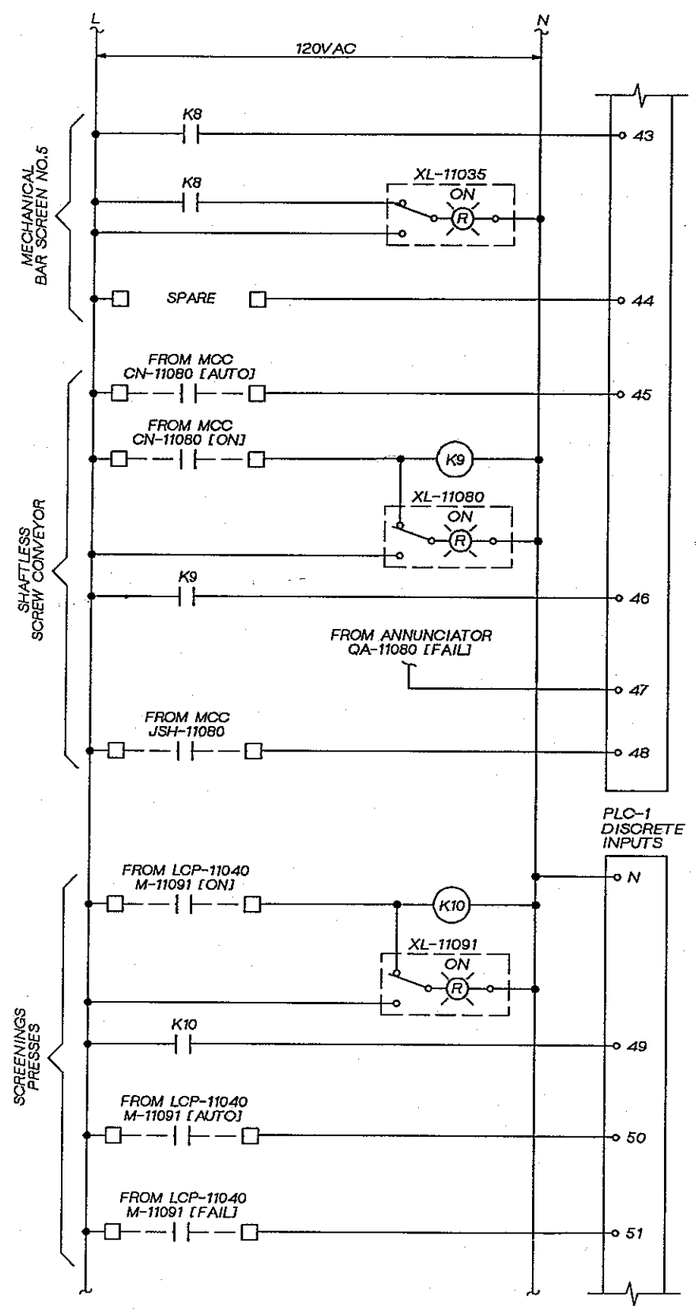

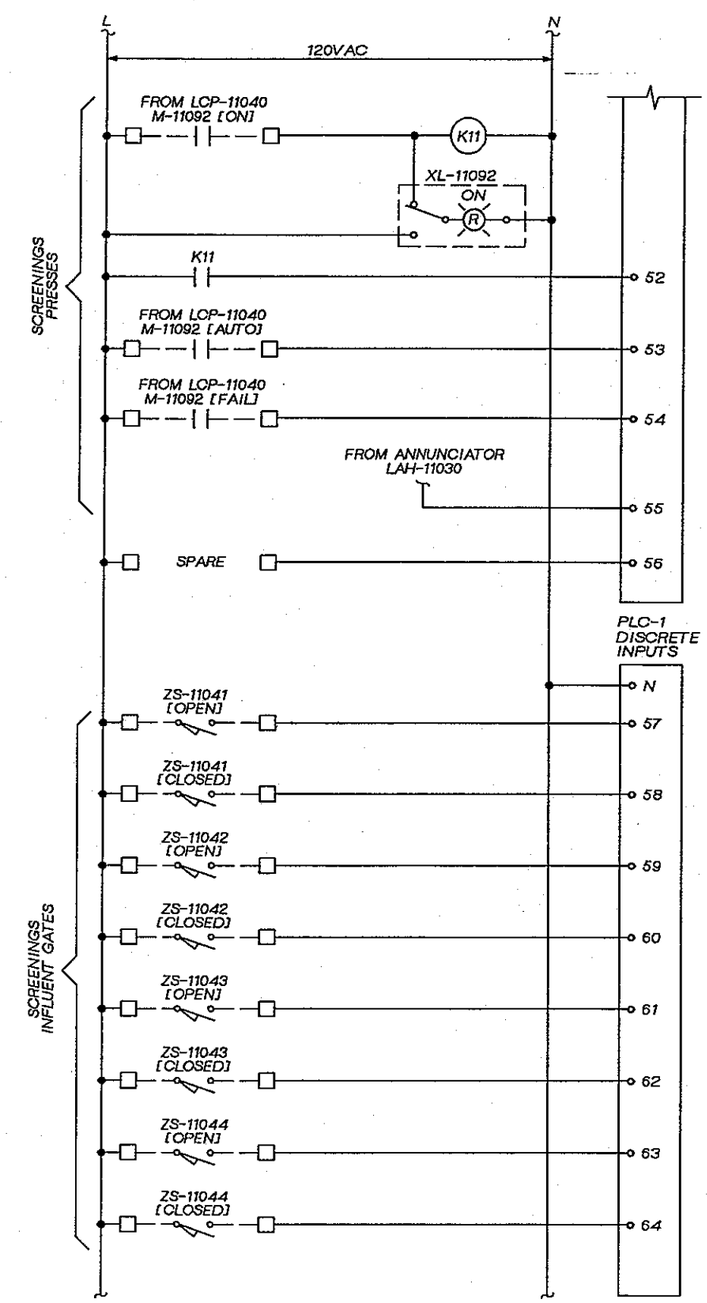

DSGN V. AUSTIN					
DR G. SLAYTER					
CHK J. BLACK					
APVD J GAUTHIER	NO.	DATE	REVISION	BY	APVD

CH2M HILL

REUSE OF DOCUMENTS
THIS DOCUMENT, AND THE IDEAS AND DESIGNS INCORPORATED HEREIN, AS AN INSTRUMENT OF PROFESSIONAL SERVICE, IS THE PROPERTY OF CH2M HILL AND IS NOT TO BE USED, IN WHOLE OR IN PART, FOR ANY OTHER PROJECT WITHOUT THE WRITTEN AUTHORIZATION OF CH2M HILL.
©CH2M HILL

BAR IS ONE INCH ON ORIGINAL DRAWING.
0 1"
IF NOT ONE INCH ON THIS SHEET, ADJUST SCALES ACCORDINGLY.

CITY OF BELLINGHAM, WASHINGTON
POST POINT WASTEWATER TREATMENT PLANT UPGRADE

INSTRUMENTATION AND CONTROL
AREA CONTROL PANEL
ACP-11000 ELEMENTARY

DWG NO. 900-N-39
DATE AUG. 1990
PROJ NO. SEA22452.C1

DRAWN BY: G. SLATTER DESIGNED BY: V. AUSTIN
DGN NAME: H:/PROJ2/BELLINGH/BL900NAM.DGN

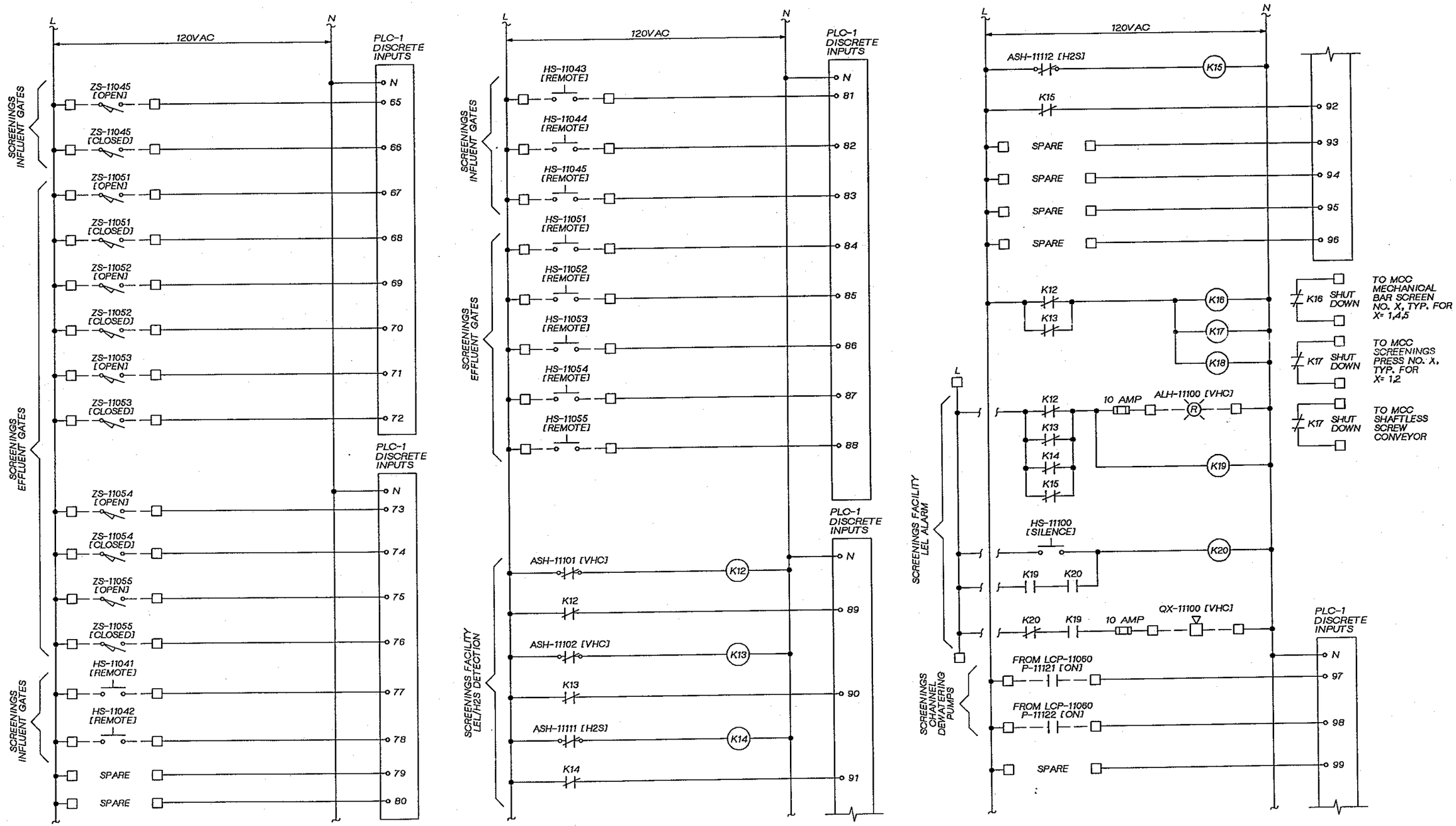

DSGN	V. AUSTIN				
DR	G. SLAYTER				
CHK	J. BLACK				
APVD	J GAUTHIER	NO.	DATE	REVISION	BY	APVD

CH2M HILL

REUSE OF DOCUMENTS
THIS DOCUMENT, AND THE IDEAS AND DESIGNS INCORPORATED HEREIN, AS AN INSTRUMENT OF PROFESSIONAL SERVICE, IS THE PROPERTY OF CH2M HILL AND IS NOT TO BE USED, IN WHOLE OR IN PART, FOR ANY OTHER PROJECT WITHOUT THE WRITTEN AUTHORIZATION OF CH2M HILL.
©CH2M HILL

BAR IS ONE INCH ON ORIGINAL DRAWING.
0 1"
IF NOT ONE INCH ON THIS SHEET, ADJUST SCALES ACCORDINGLY.

CITY OF BELLINGHAM, WASHINGTON
POST POINT WASTEWATER TREATMENT PLANT UPGRADE

INSTRUMENTATION AND CONTROL
AREA CONTROL PANEL
ACP-11000 ELEMENTARY

DWG NO. S00-N-40
DATE AUG. 1990
PROJ. NO. SEA22462.C1

COMPOSITE
OVERLAY SCREEN
OVERLAY IDENTIFICATION
PROJID
FILE

DRAWN BY: G. SLAYTER DESIGNED BY: V. AUSTIN
DGN NAME: H:/PROJ2/BELLINGH/BL900NAN.DGN

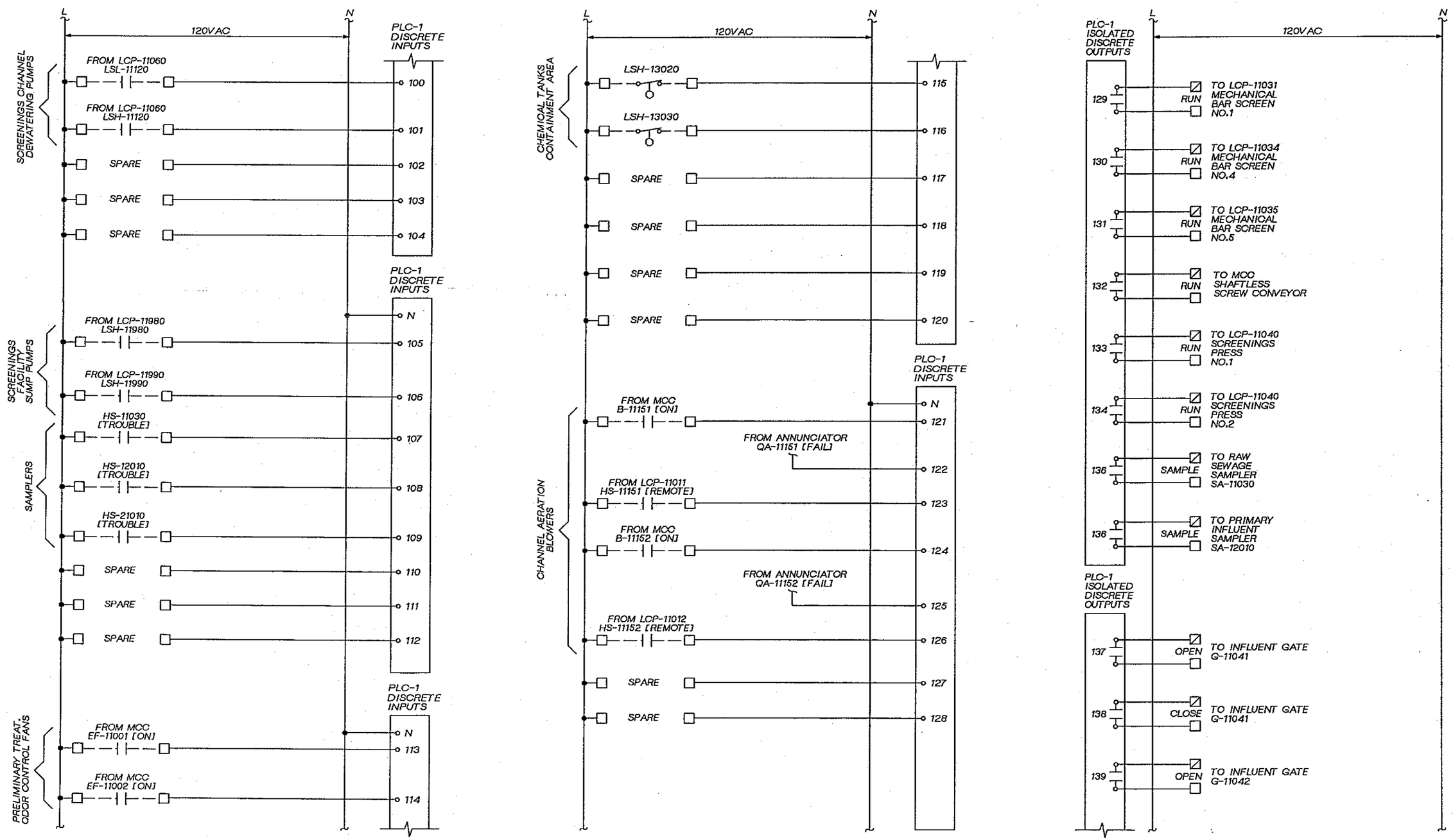

DSGN	V. AUSTIN
DR	G. SLAYTER
CHK	J. BLACK
APVD	J GAUTHIER

CH2M HILL

NO.	DATE	REVISION	BY	APVD

REUSE OF DOCUMENTS
THIS DOCUMENT, AND THE IDEAS AND DESIGNS INCORPORATED HEREIN, AS AN INSTRUMENT OF PROFESSIONAL SERVICE, IS THE PROPERTY OF CH2M HILL AND IS NOT TO BE USED, IN WHOLE OR IN PART, FOR ANY OTHER PROJECT WITHOUT THE WRITTEN AUTHORIZATION OF CH2M HILL.
©CH2M HILL

BAR IS ONE INCH ON ORIGINAL DRAWING.
0 1"
IF NOT ONE INCH ON THIS SHEET, ADJUST SCALES ACCORDINGLY.

CITY OF BELLINGHAM, WASHINGTON
POST POINT WASTEWATER TREATMENT PLANT UPGRADE

INSTRUMENTATION AND CONTROL
AREA CONTROL PANEL
ACP-11000 ELEMENTARY

DWG NO. 900-N-41
DATE AUG. 1990
PROJ. NO. SEA22462.C1

GERALD L. SLAYTER STATE OF WASHINGTON 15346 REGISTERED PROFESSIONAL ENGINEER

OVERLAY IDENTIFICATION | COMPOSITE OVERLAY SCREEN
PROJECT
FILE

DRAWN BY: G. SLAYTER DESIGNED BY: V. AUSTIN
DGN NAME: H:/PROJ2/BELLINGH/BL900NAO.DGN

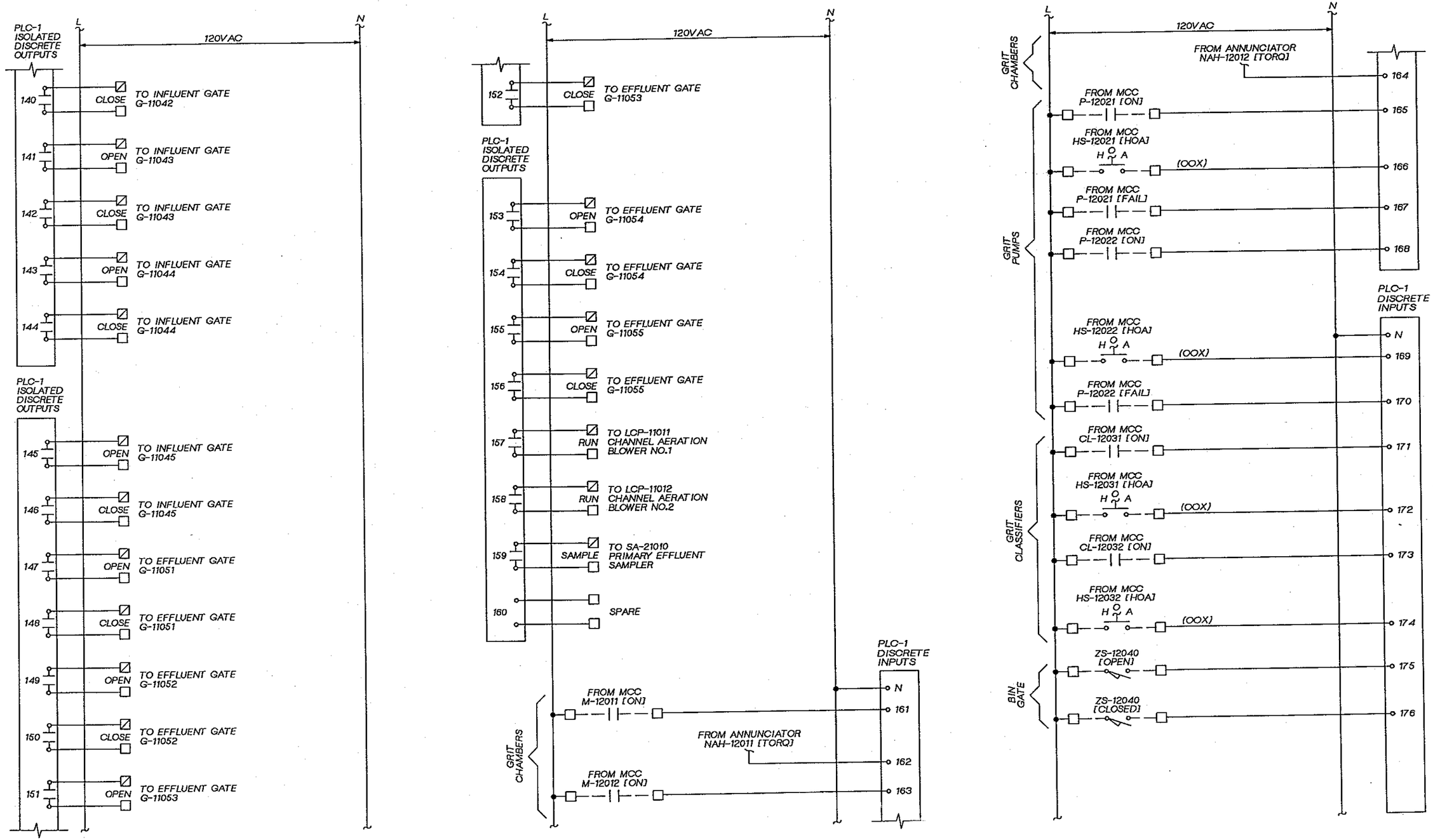

DSGN V. AUSTIN					
DR G. SLAYTER					
CHK J. BLACK					
APVD J GAUTHIER	NO.	DATE	REVISION	BY	APVD

REUSE OF DOCUMENTS
THIS DOCUMENT, AND THE IDEAS AND DESIGNS INCORPORATED HEREIN, AS AN INSTRUMENT OF PROFESSIONAL SERVICE, IS THE PROPERTY OF CH2M HILL AND IS NOT TO BE USED, IN WHOLE OR IN PART, FOR ANY OTHER PROJECT WITHOUT THE WRITTEN AUTHORIZATION OF CH2M HILL.
©CH2M HILL

BAR IS ONE INCH ON ORIGINAL DRAWING. 0 1"
IF NOT ONE INCH ON THIS SHEET, ADJUST SCALES ACCORDINGLY.

CITY OF BELLINGHAM, WASHINGTON
POST POINT WASTEWATER TREATMENT PLANT UPGRADE

INSTRUMENTATION AND CONTROL
AREA CONTROL PANEL
ACP-11000 ELEMENTARY

DWG NO. 900-N-42
DATE AUG. 1990
PROJ. NO. SEA22462.C1

COMPOSITE OVERLAY SCREEN
OVERLAY IDENTIFICATION PROJID FILE

DGN NAME: H:/PROJ2/BELLINGH/BL900NAP.DGN

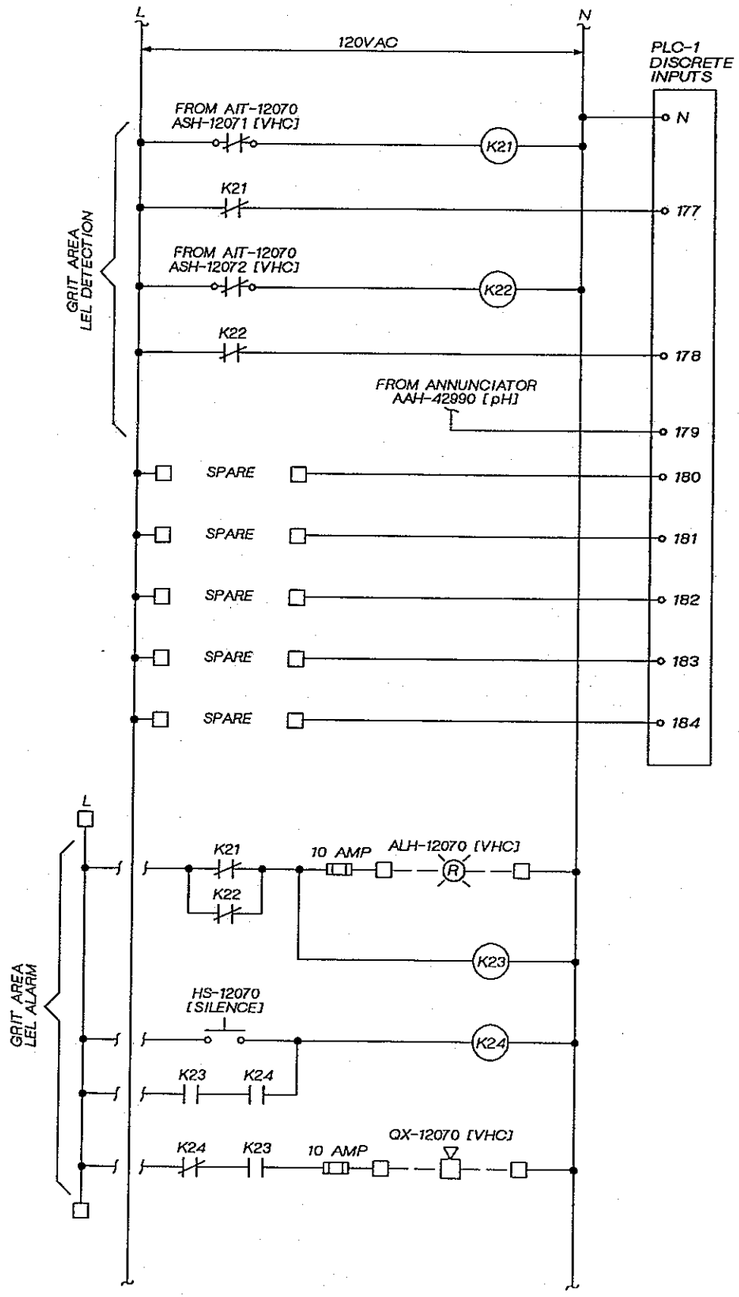

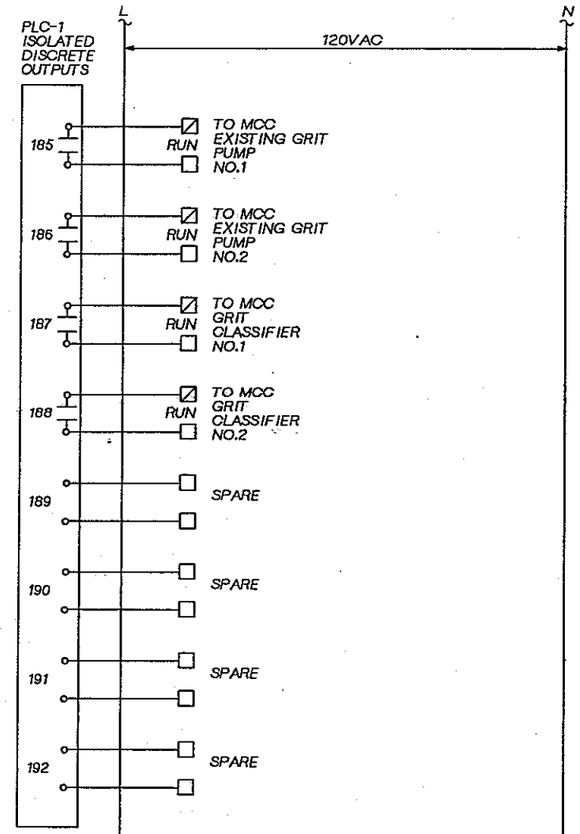

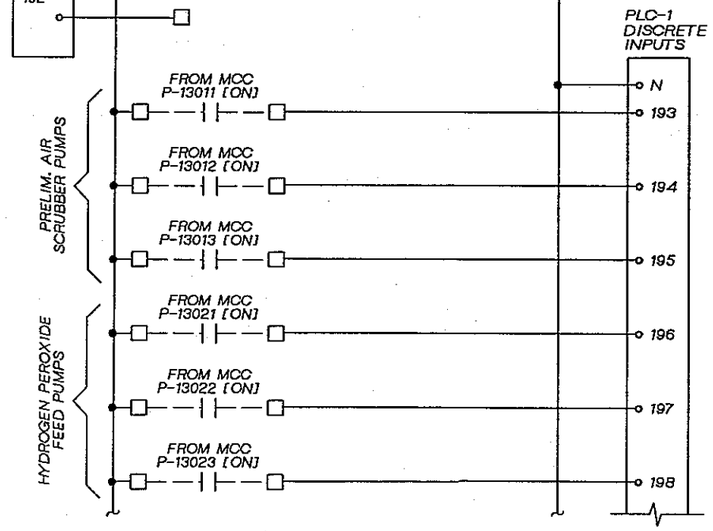

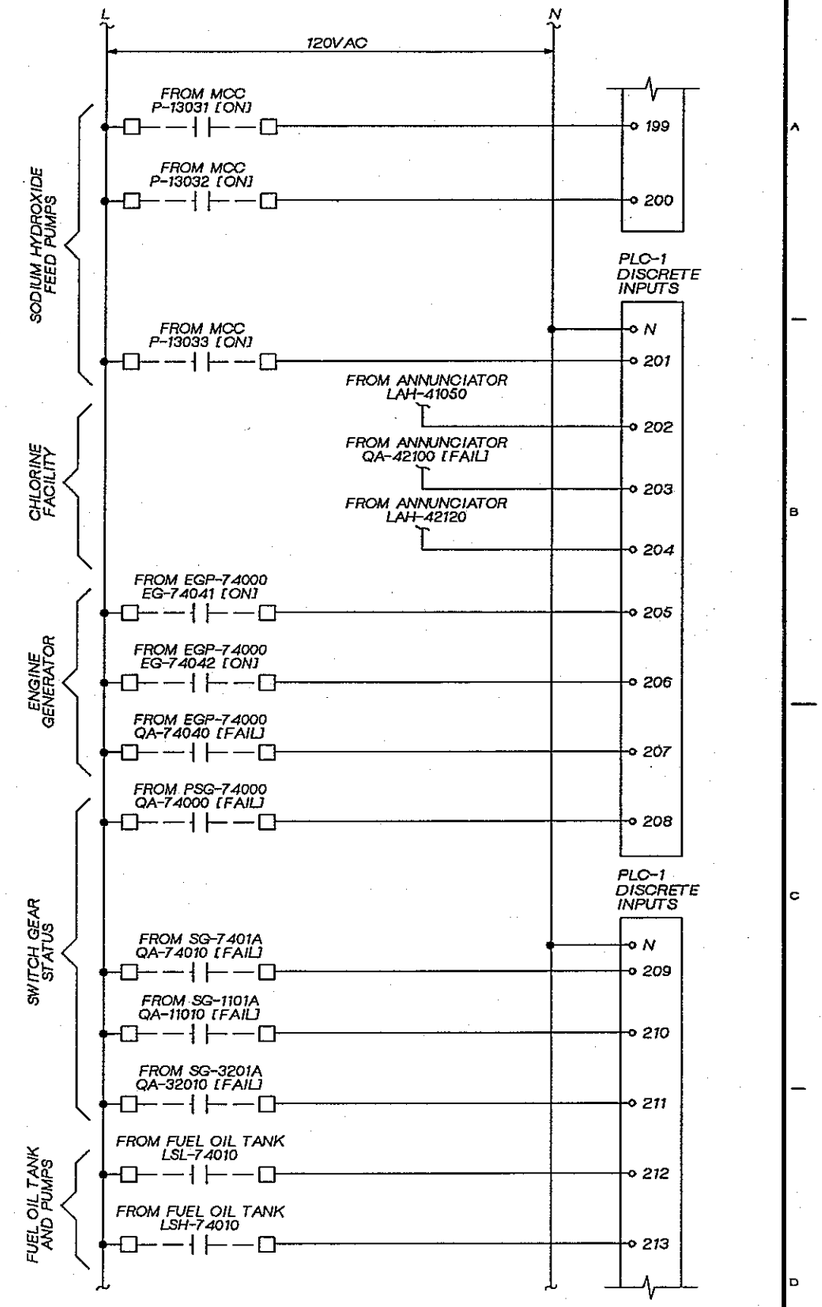

DSGN	V. AUSTIN			
DR	G. SLAYTER			
CHK	J. BLACK			
APVD	J GAUTHIER	NO.	DATE	REVISION

BY | APVD

REUSE OF DOCUMENTS
THIS DOCUMENT, AND THE IDEAS AND DESIGNS INCORPORATED HEREIN, AS AN INSTRUMENT OF PROFESSIONAL SERVICE, IS THE PROPERTY OF CH2M HILL AND IS NOT TO BE USED, IN WHOLE OR IN PART, FOR ANY OTHER PROJECT WITHOUT THE WRITTEN AUTHORIZATION OF CH2M HILL.
©CH2M HILL

BAR IS ONE INCH ON ORIGINAL DRAWING. 0 — 1"
IF NOT ONE INCH ON THIS SHEET, ADJUST SCALES ACCORDINGLY.

CITY OF BELLINGHAM, WASHINGTON
POST POINT WASTEWATER TREATMENT PLANT UPGRADE

INSTRUMENTATION AND CONTROL
AREA CONTROL PANEL
ACP-11000 ELEMENTARY

DWG NO. 900-N-43
DATE AUG. 1990
PROJ NO. SEA22452.C1

DRAWN BY: G. SLAYTER DESIGNED BY: V. AUSTIN
DGN NAME: H:/PROJ2/BELLINGH/BL900NAQ.DGN

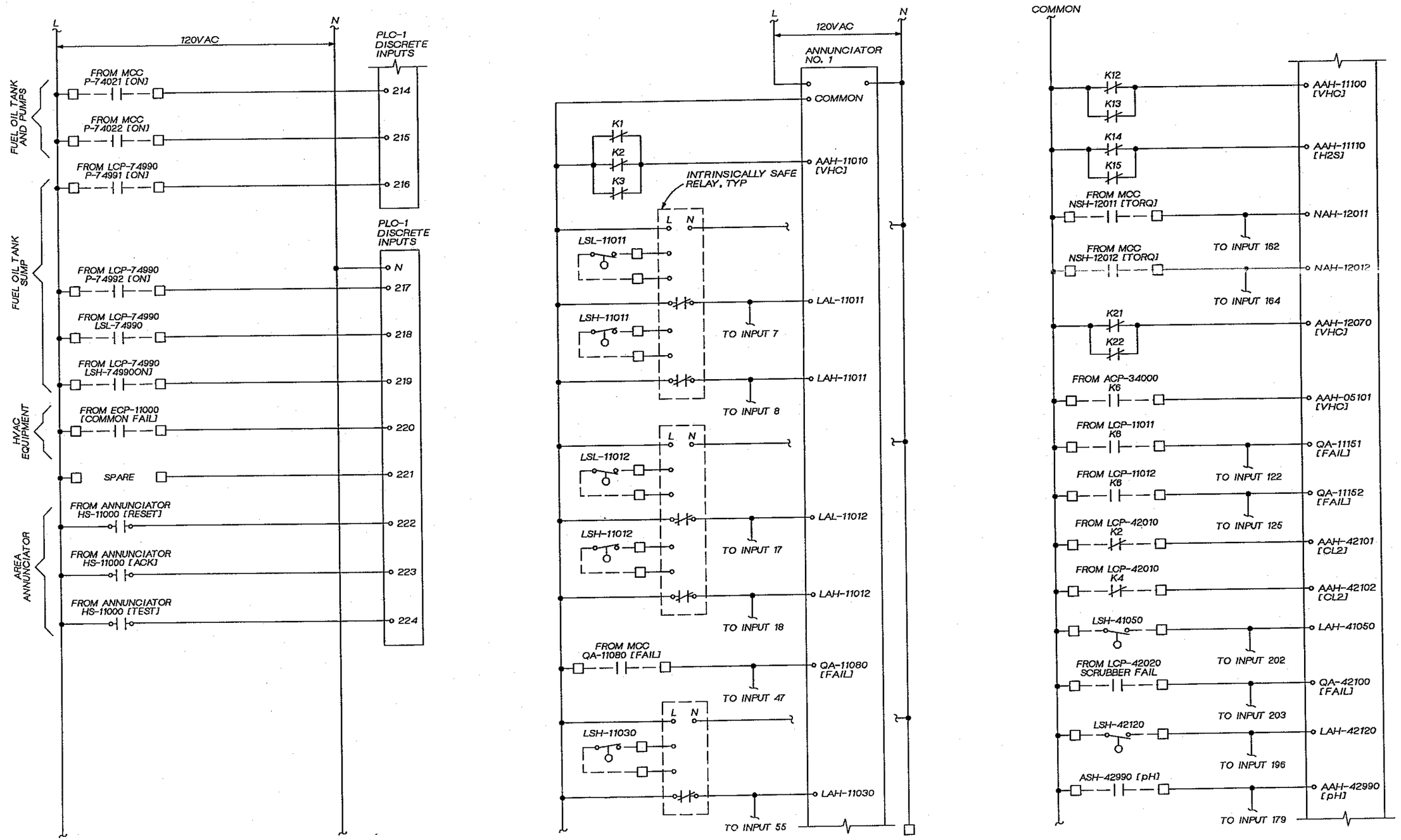

COMPOSITE OVERLAY SCREEN
OVERLAY IDENTIFICATION
PROJID
FILE

GERALD L. SLATTER STATE OF WASHINGTON 17346 REGISTERED PROFESSIONAL ENGINEER

CH2M HILL

DSGN	V. AUSTIN				
DR	G. SLAYTER				
CHK	J. BLACK				
APVD	J GAUTHIER	NO.	DATE	REVISION	BY	APVD

REUSE OF DOCUMENTS
THIS DOCUMENT, AND THE IDEAS AND DESIGNS INCORPORATED HEREIN, AS AN INSTRUMENT OF PROFESSIONAL SERVICE, IS THE PROPERTY OF CH2M HILL AND IS NOT TO BE USED, IN WHOLE OR IN PART, FOR ANY OTHER PROJECT WITHOUT THE WRITTEN AUTHORIZATION OF CH2M HILL.
©CH2M HILL

SCALE 1:1
BAR IS ONE INCH ON ORIGINAL DRAWING.
0 1"
IF NOT ONE INCH ON THIS SHEET, ADJUST SCALES ACCORDINGLY.

CITY OF BELLINGHAM, WASHINGTON
POST POINT WASTEWATER TREATMENT PLANT UPGRADE

INSTRUMENTATION AND CONTROL
AREA CONTROL PANEL ACP-11000 ELEMENTARY

DWG NO. 900-N-44
DATE AUG. 1990
PROJ NO. SEA22462.C1

DGN NAME: H:/PROJ2/BELLINGH/BL900NAR.DGN

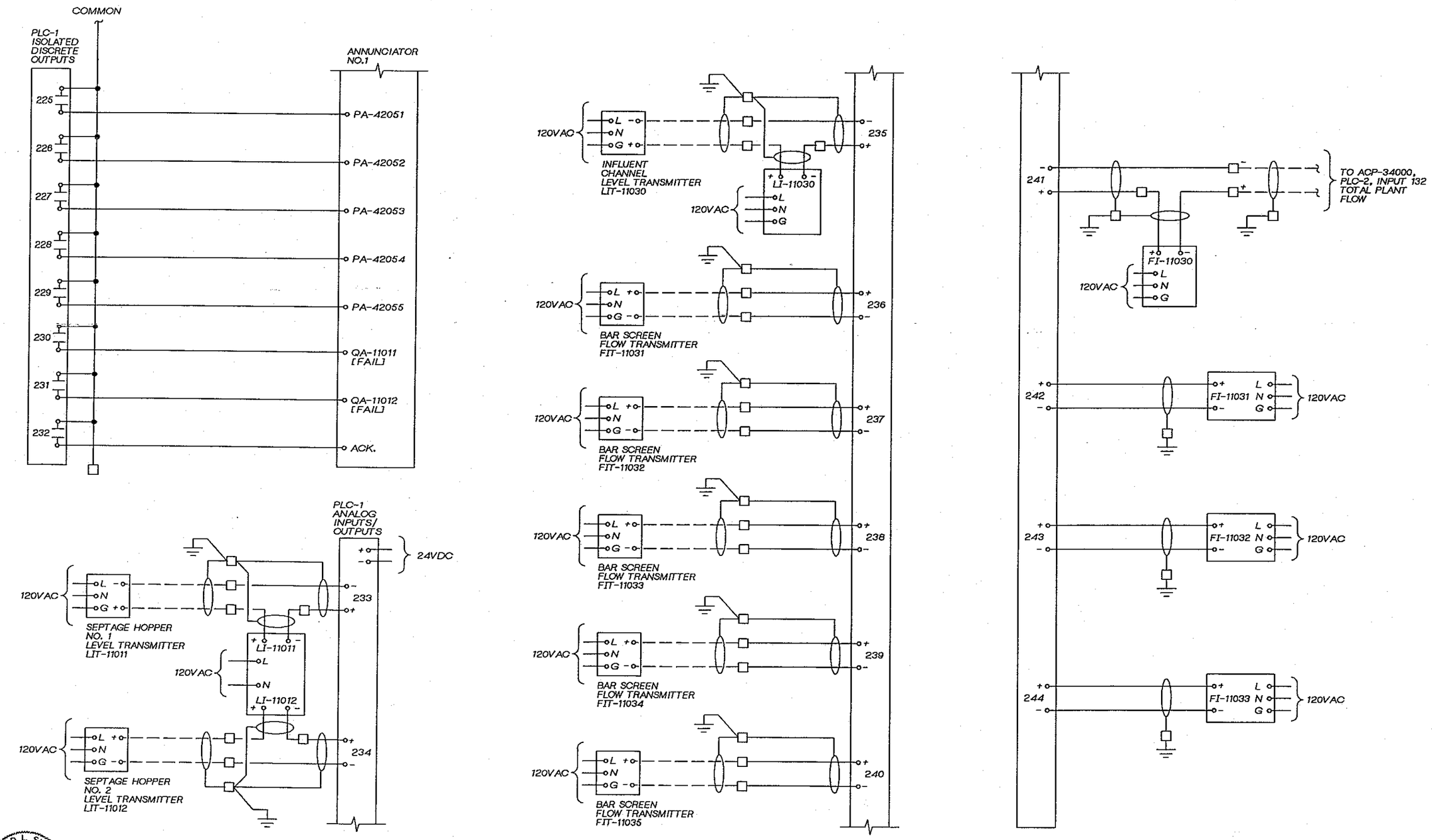

DSGN	V. AUSTIN				
DR	G. SLAYTER				
CHK	J. BLACK				
APVD	J GAUTHIER	NO.	DATE	REVISION	BY / APVD

CH2M HILL

REUSE OF DOCUMENTS

THIS DOCUMENT, AND THE IDEAS AND DESIGNS INCORPORATED HEREIN, AS AN INSTRUMENT OF PROFESSIONAL SERVICE, IS THE PROPERTY OF CH2M HILL AND IS NOT TO BE USED, IN WHOLE OR IN PART, FOR ANY OTHER PROJECT WITHOUT THE WRITTEN AUTHORIZATION OF CH2M HILL.

©CH2M HILL

BAR IS ONE INCH ON ORIGINAL DRAWING. 0 1"

IF NOT ONE INCH ON THIS SHEET, ADJUST SCALES ACCORDINGLY.

CITY OF BELLINGHAM, WASHINGTON
POST POINT WASTEWATER TREATMENT PLANT UPGRADE

INSTRUMENTATION AND CONTROL

AREA CONTROL PANEL
ACP-11000 ELEMENTARY

DWG NO. 900-N-45
DATE AUG. 1990
PROJ NO. SEA22462.C1

DRAWN BY: G. SLATTER DESIGNED BY: V. AUSTIN
DGN NAME: H:/PROJ2/BELLINGH/BL900NAS.DGN

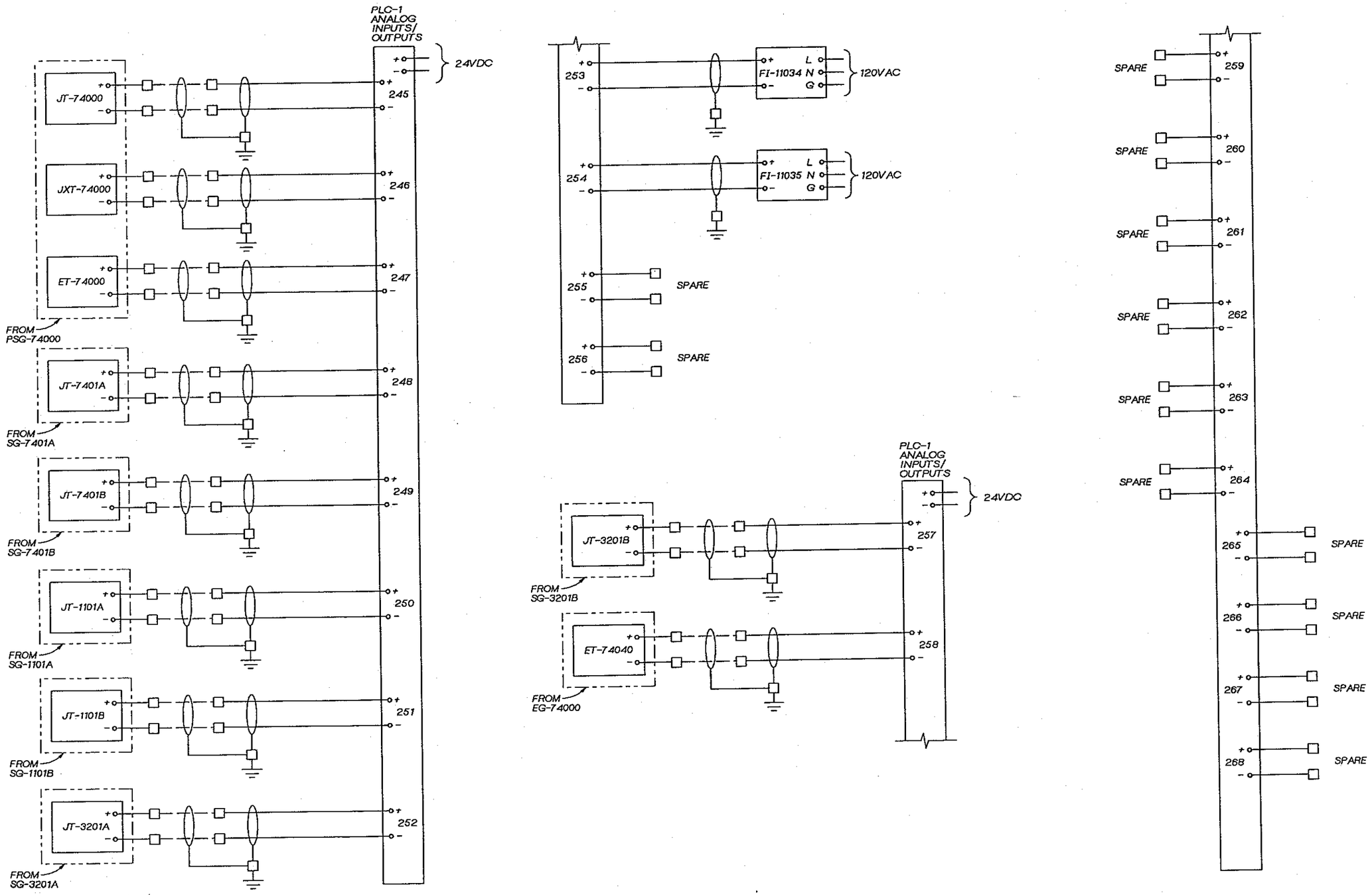

DSGN V. AUSTIN					
DR G. SLAYTER					
CHK J. BLACK					
APVD J GAUTHIER	NO.	DATE	REVISION	BY	APVD

REUSE OF DOCUMENTS
THIS DOCUMENT, AND THE IDEAS AND DESIGNS INCORPORATED HEREIN, AS AN INSTRUMENT OF PROFESSIONAL SERVICE, IS THE PROPERTY OF CH2M HILL AND IS NOT TO BE USED, IN WHOLE OR IN PART, FOR ANY OTHER PROJECT WITHOUT THE WRITTEN AUTHORIZATION OF CH2M HILL.
©CH2M HILL

BAR IS ONE INCH ON ORIGINAL DRAWING.
0 1"
IF NOT ONE INCH ON THIS SHEET, ADJUST SCALES ACCORDINGLY.

CITY OF BELLINGHAM, WASHINGTON
POST POINT WASTEWATER TREATMENT PLANT UPGRADE

INSTRUMENTATION AND CONTROL
AREA CONTROL PANEL
ACP-11000 ELEMENTARY

DWG NO. 900-N-46
DATE AUG. 1990
PROJ NO. SEA22462.C1

JERALD L. SLATTER STATE OF WASHINGTON 17546 REGISTERED PROFESSIONAL ENGINEER

OVERLAY IDENTIFICATION: COMPOSITE, OVERLAY, SCREEN, PROJID, FILE

DRAWN BY: G. SLAYTER DESIGNED BY: V. AUSTIN
DGN NAME: H:/PROJ2/BELLINGH/BL900NAH.DGN

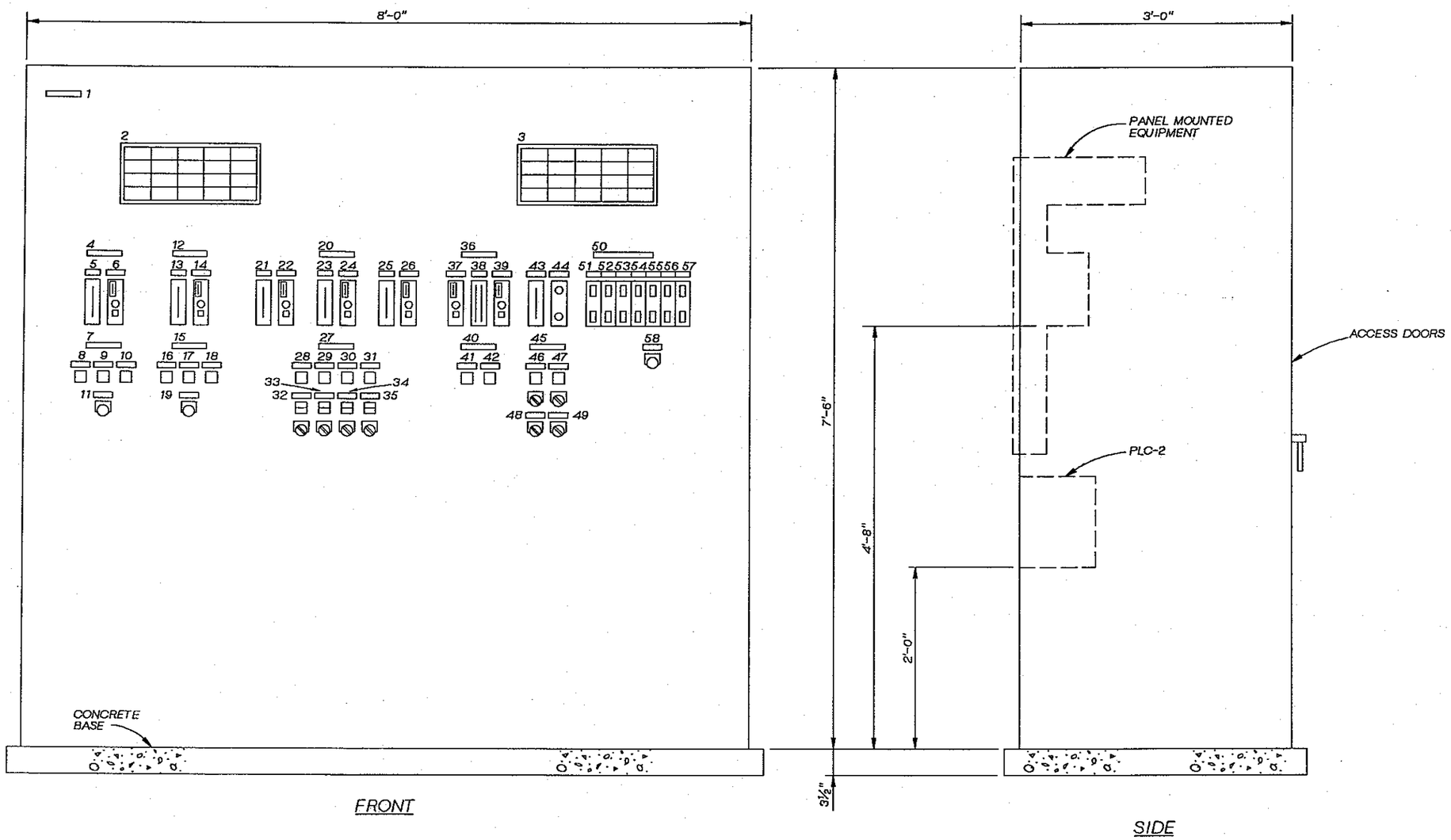

AREA CONTROL PANEL ACP-34000
1½" = 1'-0"

NOTES:
1. SECURE PANEL ENCLOSURE TO CONCRETE BASE WITH ⅜" CONCRETE ANCHORS.

DSGN V. AUSTIN					
DR G. SLAYTER					
CHK J. BLACK					
APVD J GAUTHIER	NO.	DATE	REVISION	BY	APVD

CH2M HILL

REUSE OF DOCUMENTS
THIS DOCUMENT, AND THE IDEAS AND DESIGNS INCORPORATED HEREIN, AS AN INSTRUMENT OF PROFESSIONAL SERVICE, IS THE PROPERTY OF CH2M HILL AND IS NOT TO BE USED, IN WHOLE OR IN PART, FOR ANY OTHER PROJECT WITHOUT THE WRITTEN AUTHORIZATION OF CH2M HILL.
©CH2M HILL

BAR IS ONE INCH ON ORIGINAL DRAWING.
0 1"
IF NOT ONE INCH ON THIS SHEET, ADJUST SCALES ACCORDINGLY.

CITY OF BELLINGHAM, WASHINGTON
POST POINT WASTEWATER TREATMENT PLANT UPGRADE

INSTRUMENTATION AND CONTROL
AREA CONTROL PANEL
ACP-34000 ELEVATION

DWG NO. 900-N-47
DATE AUG. 1990
PROJ NO. SEA22462.C1

DRAWN BY: G. SLATTER DESIGNED BY: V. AUSTIN
DGN NAME: H:/PROJ2/BELLINGH/BL900NAI.DGN

ACP-34000 SCHEDULE

ITEM NO.	TAG NO.	NAMEPLATE INSCRIPTION (DESCRIPTION) FIRST LINE / SECOND LINE / THIRD LINE	SPEC NO.
1	-	ACP-34000 / SECONDARY SLUDGE PUMP STATION	
2	-	(ANNUNCIATOR NO.1)	M02
3	-	(ANNUNCIATOR NO.2)	M02
4	-	RAW SEWAGE / PUMP STATION	
5	LI-05090	RAW SEWAGE / PUMP STATION / LEVEL	S26
6	SHK-05090 [AM]	RAW SEWAGE / PUMP SPEED	S12
7	-	RAW SEWAGE PUMPS	
8	QL-05091 [ON]	PUMP NO.1	M06
9	QL-05092 [ON]	PUMP NO.2	M06
10	QL-05093 [ON]	PUMP NO.3	M06
11	HS-05090 [RESET]	RAW SEWAGE P.S. / LOW LEVEL	M16
12	-	IN-PLANT / PUMP STATION	
13	LI-05190	IN-PLANT / PUMP STATION / LEVEL	S26
14	SHK-05190 [AM]	IN-PLANT / PUMP SPEED	S12
15	-	IN-PLANT / PUMPS	
16	QL-05191 [ON]	PUMP NO.1	M06
17	QL-05192 [ON]	PUMP NO.2	M06
18	QL-05193 [ON]	PUMP NO.3	M06
19	HS-05190 [RESET]	IN-PLANT P.S. / LOW LEVEL	M16
20	-	SECONDARY CLARIFIER / R.A.S. FLOW	
21	FI-34021	SEC. CLAR. NO.1 / R.A.S. FLOW	S26
22	FHK-34021 [AM]	SEC. CLAR. NO.1 / R.A.S. FLOW VALVE	S12
23	FI-34022	SEC. CLAR. NO.2 / R.A.S. FLOW	S26
24	FHK-34022 [AM]	SEC. CLAR. NO.2 / R.A.S. FLOW VALVE	S12
25	FI-34023	SEC. CLAR. NO.3 / R.A.S. FLOW	S26
26	FHK-34023 [AM]	SEC. CLAR. NO.3 / R.A.S. FLOW VALVE	S12
27	-	R.A.S. PUMPS	
28	QL-34011 [ON]	PUMP NO.1	M06
29	QL-34012 [ON]	PUMP NO.2	M06
30	QL-34013 [ON]	PUMP NO.3	M06
31	QL-34014 [ON]	PUMP NO.4	M06
32	ZL-34011 [OC]	CHLORINE / INJECTION / VALVE NO.1	M05
	HS-34011 [OCA]		M22
33	ZL-34012 [OC]	CHLORINE / INJECTION / VALVE NO.2	M05
	HS-34012 [OCA]		M22
34	ZL-34013 [OC]	CHLORINE / INJECTION / VALVE NO.3	M05
	HS-34013 [OCA]		M22
35	ZL-34014 [OC]	CHLORINE / INJECTION / VALVE NO.4	M05
	HS-34014 [OCA]		M22
36	-	OXYGEN ACTIVATED / SLUDGE BASINS / R.A.S. FLOW	
37	FHK-34011 [AM]	BASIN NO.1 / R.A.S. FLOW VALVE	S12
38	FI-34011	BASIN NO.1 / R.A.S. FLOW	S26
	FI-34012	BASIN NO.2 / R.A.S. FLOW	
39	FHK-34012 [AM]	BASIN NO.2 / R.A.S. FLOW VALVE	S12
40	-	W.A.S. PUMPS	
41	XL-34031 [ON]	PUMP NO.1	M06
42	XL-34032 [ON]	PUMP NO.2	M06
43	LI-34040	SEC. SCUM BOX / LEVEL	S26
44	KC-34050	SEC. SCUM PUMP / TIMER	K24
45	-	SECONDARY SCUM PUMPS	
46	QL-34040 [ON]	SEC. SCUM / RECIRC. PUMP	M06
	HS-34040 [HOA]		M22
47	QL-34050 [ON]	SEC. SCUM PUMP	M06
	HS-34050 [HOA]		M22
48	HS-34040 [REC-DEC-BCKUP]	SEC. SCUM / RECIRC. PUMP / OPERATING MODE	M22
49	HS-34050 [REM-BCKUP]	SEC. SCUM PUMP / OPERATING MODE	M22
50	-	COMBUSTIBLE / GAS ANALYZERS	
51	AIT-22020 [VHC]	PRIM. EFFL. / BYPASS CHANNEL / AE-22020	A10
52	AIT-22030 [VHC]	PRIM. EFFL. / WET WELL / AE-22030	A10
53	AIT-05101 [VHC]	PIPE GALLERY / AE-05101, AE-05102	A10
54	AIT-05102 [VHC]	PIPE GALLERY / AE-05103, AE-05104	A10
55	AIT-05103 [VHC]	PIPE GALLERY / AE-05105	A10
56	AIT-05090	RAW SEWAGE / PUMP STATION / AE-05090	A10
57	AIT-05190	IN-PLANT / PUMP STATION / AE-05190	A10
58	HS-05100 [SILENCE]	PIPE GALLERY / LEL ALARM / SILENCE	M16

ANNUNCIATOR NO.1

COL-ROW	TAG NO.	WINDOW INSCRIPTION FIRST LINE / SECOND LINE / THIRD LINE
1-1	LAH-05090	RAW SEWAGE / PUMP STATION / HIGH LEVEL
1-2	LAL-05090	RAW SEWAGE / PUMP STATION / LOW LEVEL
1-3	LAH-05190	IN-PLANT / PUMP STATION / HIGH LEVEL
1-4	LAL-05190	IN-PLANT / PUMP STATION / LOW LEVEL
2-1	QA-05091 [FAIL]	RAW SEWAGE / PUMP NO.1 / FAIL
2-2	QA-05092 [FAIL]	RAW SEWAGE / PUMP NO.2 / FAIL
2-3	QA-05093 [FAIL]	RAW SEWAGE / PUMP NO.3 / FAIL
2-4	-	SPARE

ANNUNCIATOR NO.1

COL-ROW	TAG NO.	WINDOW INSCRIPTION FIRST LINE / SECOND LINE / THIRD LINE
3-1	QA-05191 [FAIL]	IN-PLANT / PUMP NO.1 / FAIL
3-2	QA-05192 [FAIL]	IN-PLANT / PUMP NO.2 / FAIL
3-3	QA-05193 [FAIL]	IN-PLANT / PUMP NO.3 / FAIL
3-4	-	(SPARE)
4-1	NAH-21011 [TORQ]	PRIM. CLAR. / NO.1 / HIGH TORQUE
4-2	NAH-21012 [TORQ]	PRIM. CLAR. / NO.2 / HIGH TORQUE
4-3	LAH-22010	PRIM. EFFL. / WET WELL / HIGH LEVEL
4-4	LAL-22010	PRIM. EFFL. / WET WELL / LOW LEVEL
5-1	NAH-33011 [TORQ]	SEC. CLAR. / NO.1 / HIGH TORQUE
5-2	NAH-33012 [TORQ]	SEC. CLAR. / NO.2 / HIGH TORQUE
5-3	NAH-33013 [TORQ]	SEC. CLAR. / NO.3 / HIGH TORQUE
5-4		(ACKNOWLEDGE / RESET / TEST)

ANNUNCIATOR NO.2

COL-ROW	TAG NO.	WINDOW INSCRIPTION FIRST LINE / SECOND LINE / THIRD LINE
1-1	QA-31031 [AIR PURGE]	OXYGEN SLUDGE / BASIN NO.1 / AIR PURGE ON
1-2	QA-31032 [AIR PURGE]	OXYGEN SLUDGE / BASIN NO.2 / AIR PURGE ON
1-3	QA-32060 [PSA SHUTDOWN]	OXYGEN GEN. / FACILITY / PSA SHUTDOWN
1-4	-	(SPARE)
2-1	QA-32151 [FAIL]	PLANT AIR / COMP. NO.1 / FAIL
2-2	QA-32152 [FAIL]	PLANT AIR / COMP. NO.2 / FAIL
2-3	QA-32153 [FAIL]	PLANT AIR / COMP. NO.3 / FAIL
2-4	-	(SPARE)
3-1	PAH-32160	PLANT AIR / RECEIVER / HIGH PRESSURE
3-2	PAL-32160	PLANT AIR / RECEIVER / LOW PRESSURE
3-3	PAL-32170	PLANT AIR / DISCHARGE / LOW PRESSURE
3-4	PAL-05110	W3 WATER / LOW PRESSURE
4-1	AAH-22020 [VHC]	PRIM. EFFL. / BYPASS CHANNEL / HIGH LEL
4-2	AAH-22030 [VHC]	PRIM. EFFL. / WET WELL / HIGH LEL
4-3	AAH-05102	PIPE GALLERY / HIGH LEL
4-4	-	(SPARE)
5-1	AAH-05090 [VHC]	RAW SEWAGE / PUMP STATION / HIGH LEL
5-2	AAH-05190 [VHC]	IN-PLANT / PUMP STATION / HIGH LEL
5-3	-	(SPARE)
5-4		(ACKNOWLEDGE / RESET / TEST)

GERALD L. SLATTER, STATE OF WASHINGTON, REGISTERED PROFESSIONAL ENGINEER

CH2M HILL

DSGN V. AUSTIN
DR G. SLAYTER
CHK J. BLACK
APVD J GAUTHIER

NO.	DATE	REVISION	BY	APVD

REUSE OF DOCUMENTS
THIS DOCUMENT, AND THE IDEAS AND DESIGNS INCORPORATED HEREIN, AS AN INSTRUMENT OF PROFESSIONAL SERVICE, IS THE PROPERTY OF CH2M HILL AND IS NOT TO BE USED, IN WHOLE OR IN PART, FOR ANY OTHER PROJECT WITHOUT THE WRITTEN AUTHORIZATION OF CH2M HILL.
©CH2M HILL

BAR IS ONE INCH ON ORIGINAL DRAWING.
0 1"
IF NOT ONE INCH ON THIS SHEET, ADJUST SCALES ACCORDINGLY.

CITY OF BELLINGHAM, WASHINGTON
POST POINT WASTEWATER TREATMENT PLANT UPGRADE

INSTRUMENTATION AND CONTROL
AREA CONTROL PANEL
ACP-34000 SCHEDULE

DWG NO. 900-N-48
DATE AUG. 1990
PROJ NO. SEA22462.C1

DRAWN BY: G. SLATTER DESIGNED BY: V. AUSTIN
DGN NAME: H:/PROJ2/BELLINGH/BL900NAT.DGN

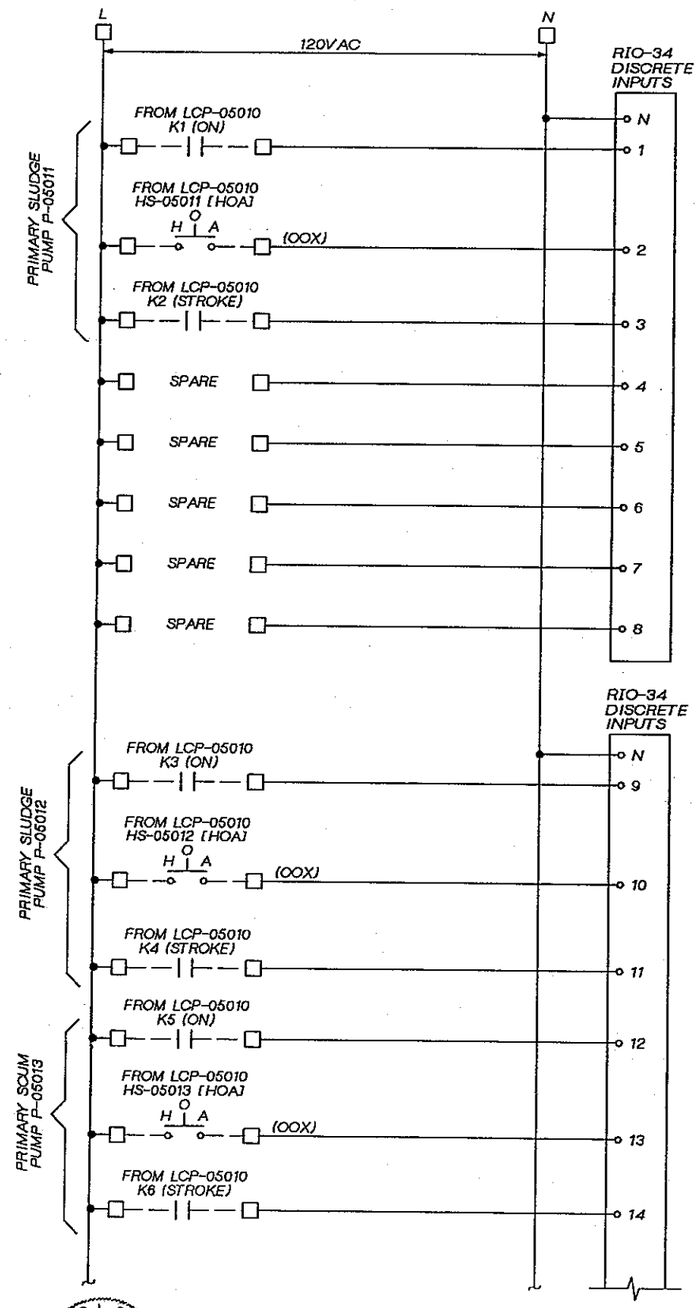

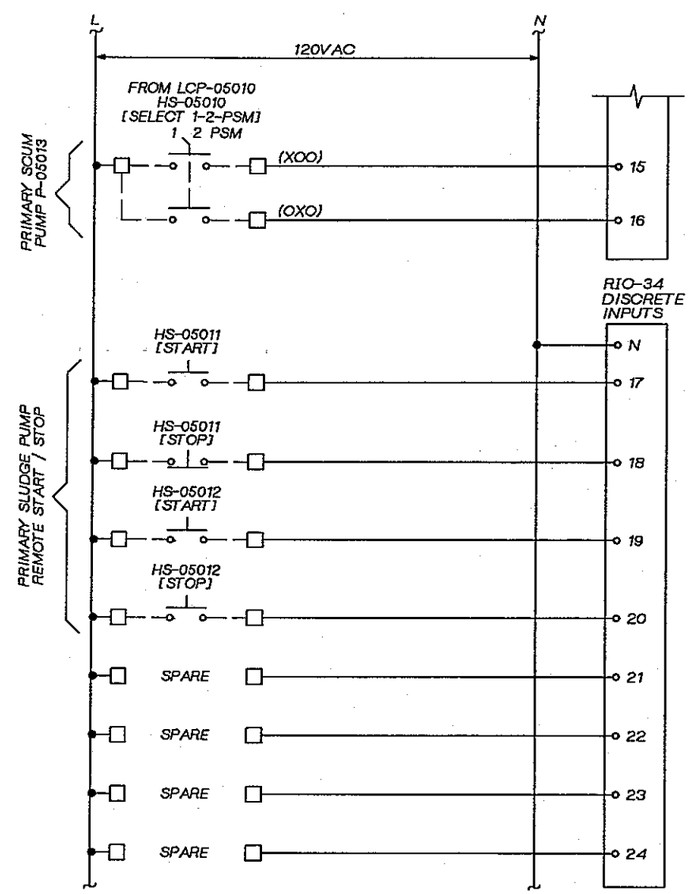

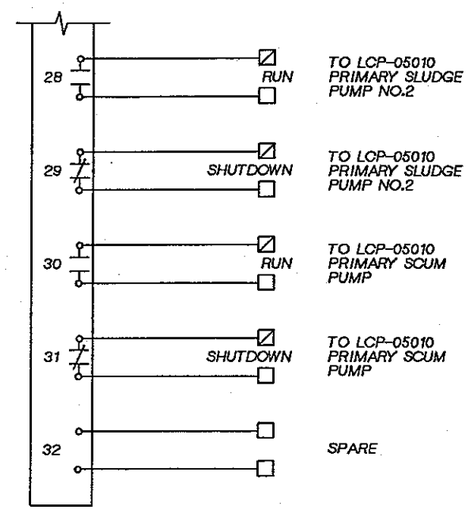

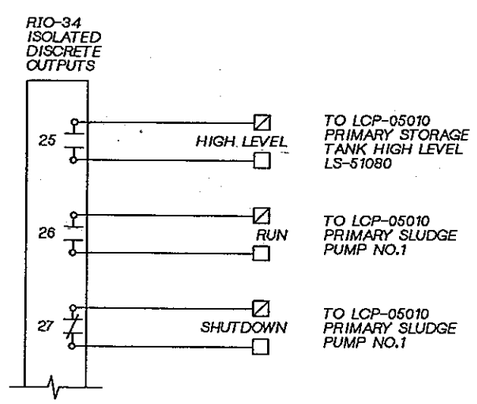

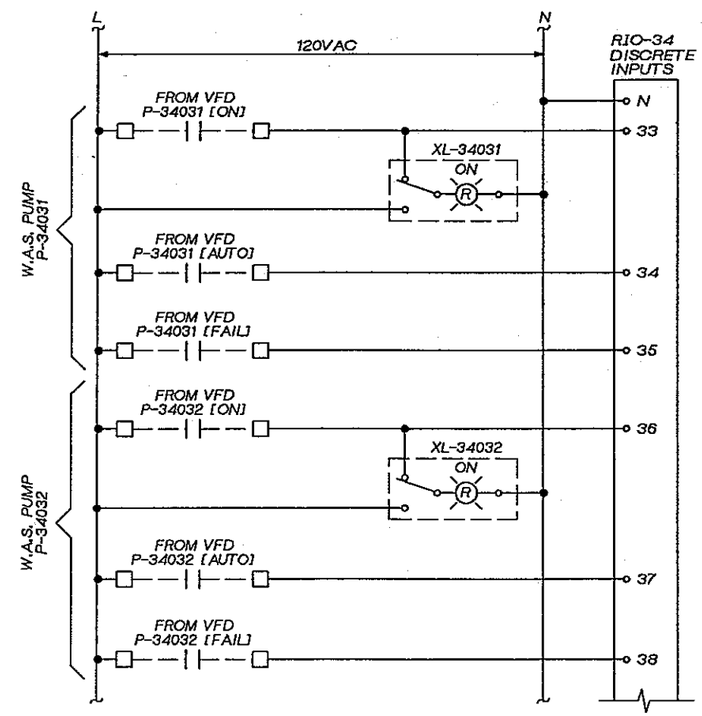

JERALD L. SLATTER STATE OF WASHINGTON 13596 REGISTERED PROFESSIONAL ENGINEER

CH2MHILL

DSGN	V. AUSTIN				
DR	G. SLAYTER				
CHK	J. BLACK				
APVD	J GAUTHIER	NO.	DATE	REVISION	BY / APVD

REUSE OF DOCUMENTS
THIS DOCUMENT, AND THE IDEAS AND DESIGNS INCORPORATED HEREIN, AS AN INSTRUMENT OF PROFESSIONAL SERVICE, IS THE PROPERTY OF CH2M HILL AND IS NOT TO BE USED, IN WHOLE OR IN PART, FOR ANY OTHER PROJECT WITHOUT THE WRITTEN AUTHORIZATION OF CH2M HILL.
©CH2M HILL

BAR IS ONE INCH ON ORIGINAL DRAWING.
0 1"
IF NOT ONE INCH ON THIS SHEET, ADJUST SCALES ACCORDINGLY.

CITY OF BELLINGHAM, WASHINGTON
POST POINT WASTEWATER TREATMENT PLANT UPGRADE

INSTRUMENTATION AND CONTROL
AREA CONTROL PANEL
ACP-34000 ELEMENTARY

DWG NO. 900-N-49
DATE AUG. 1990
PROJ NO. SEA22452.C1

DRAWN BY: G. SLAYTER DESIGNED BY: V. AUSTIN
DGN NAME: H:/PROJ2/BELLINGH/BL900NAU.DGN

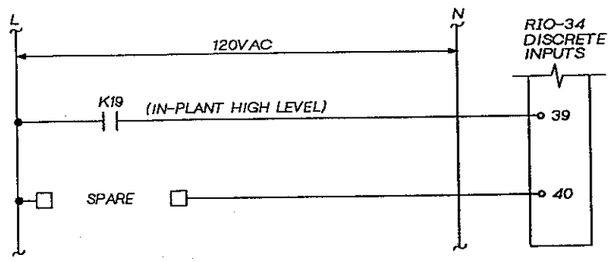

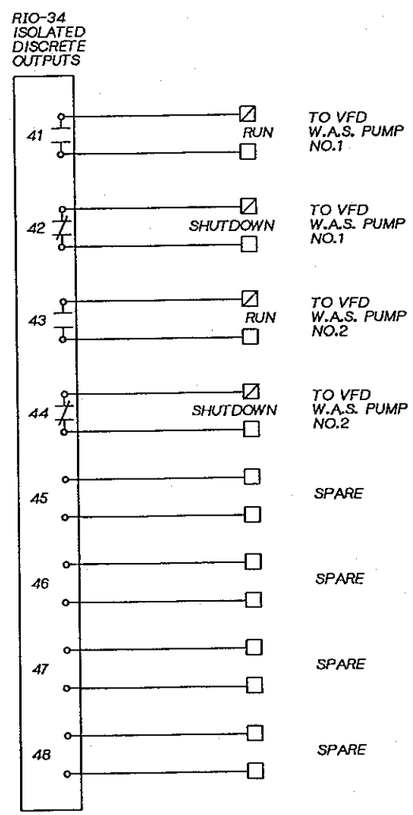

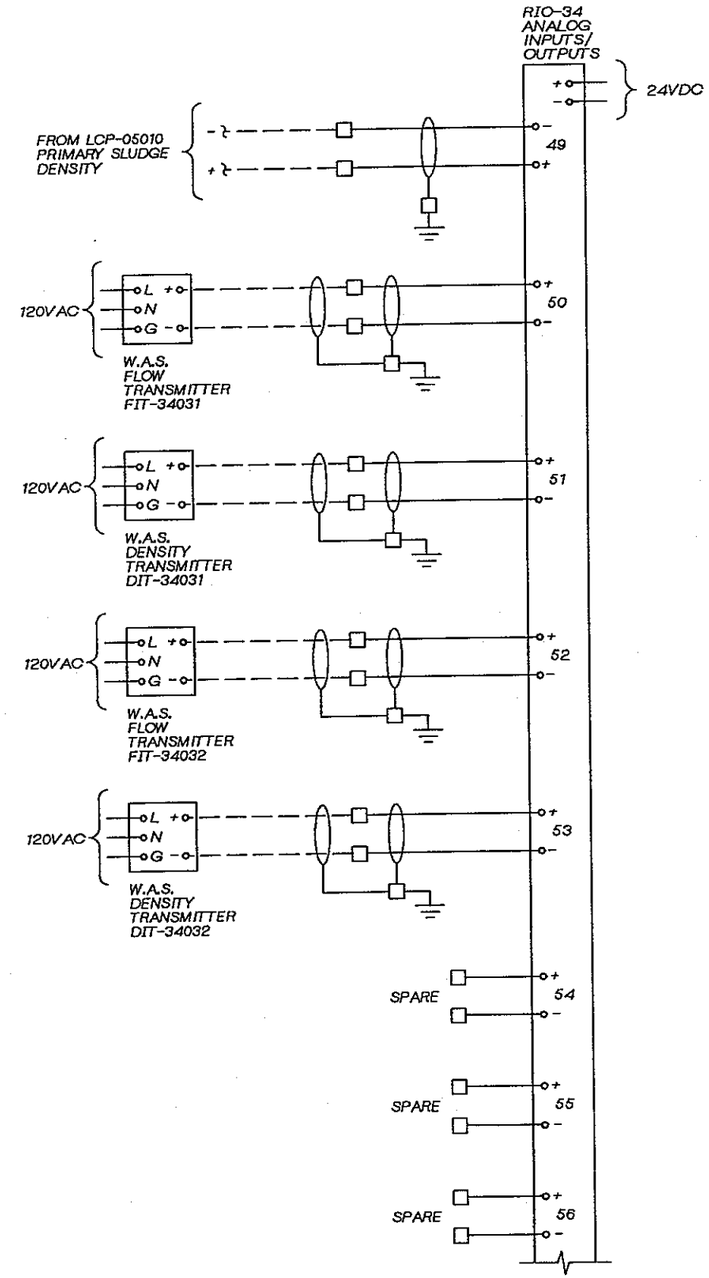

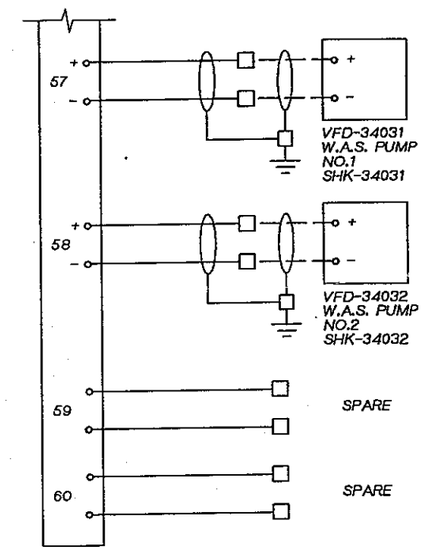

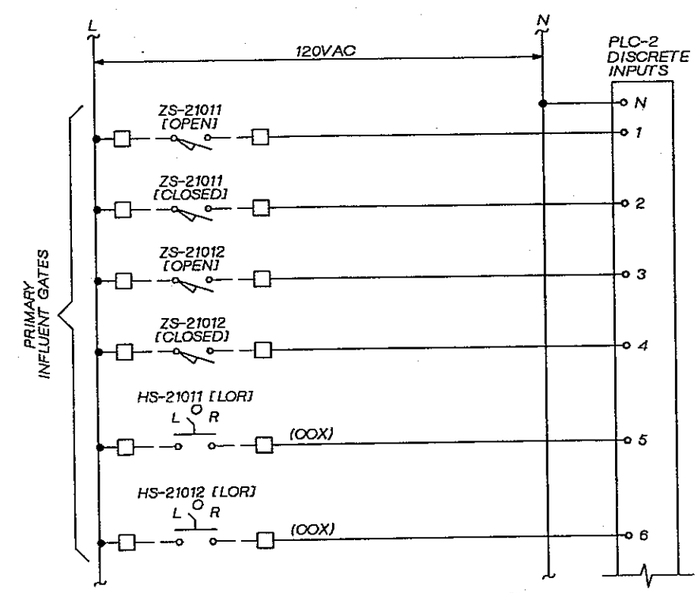

JERALD L. SLATTER
STATE OF WASHINGTON
17546
REGISTERED PROFESSIONAL ENGINEER

CH2M HILL

DSGN	V. AUSTIN
DR	G. SLAYTER
CHK	J. BLACK
APVD	J GAUTHIER

NO.	DATE	REVISION	BY	APVD

REUSE OF DOCUMENTS
THIS DOCUMENT, AND THE IDEAS AND DESIGNS INCORPORATED HEREIN, AS AN INSTRUMENT OF PROFESSIONAL SERVICE, IS THE PROPERTY OF CH2M HILL AND IS NOT TO BE USED, IN WHOLE OR IN PART, FOR ANY OTHER PROJECT WITHOUT THE WRITTEN AUTHORIZATION OF CH2M HILL.
©CH2M HILL

BAR IS ONE INCH ON ORIGINAL DRAWING.
0 1"
IF NOT ONE INCH ON THIS SHEET, ADJUST SCALES ACCORDINGLY.

CITY OF BELLINGHAM, WASHINGTON
POST POINT WASTEWATER TREATMENT PLANT UPGRADE

INSTRUMENTATION AND CONTROL
AREA CONTROL PANEL
ACP-34000 ELEMENTARY

DWG NO. 900-N-50
DATE AUG. 1990
PROJ NO. SEA22462.C1

OVERLAY IDENTIFICATION | COMPOSITE | OVERLAY | SCREEN | PROJID | FILE

DRAWN BY: G. SLAYTER DESIGNED BY: V. AUSTIN
DGN NAME: H:/PROJ2/BELLINGH/BL900NAV.DGN

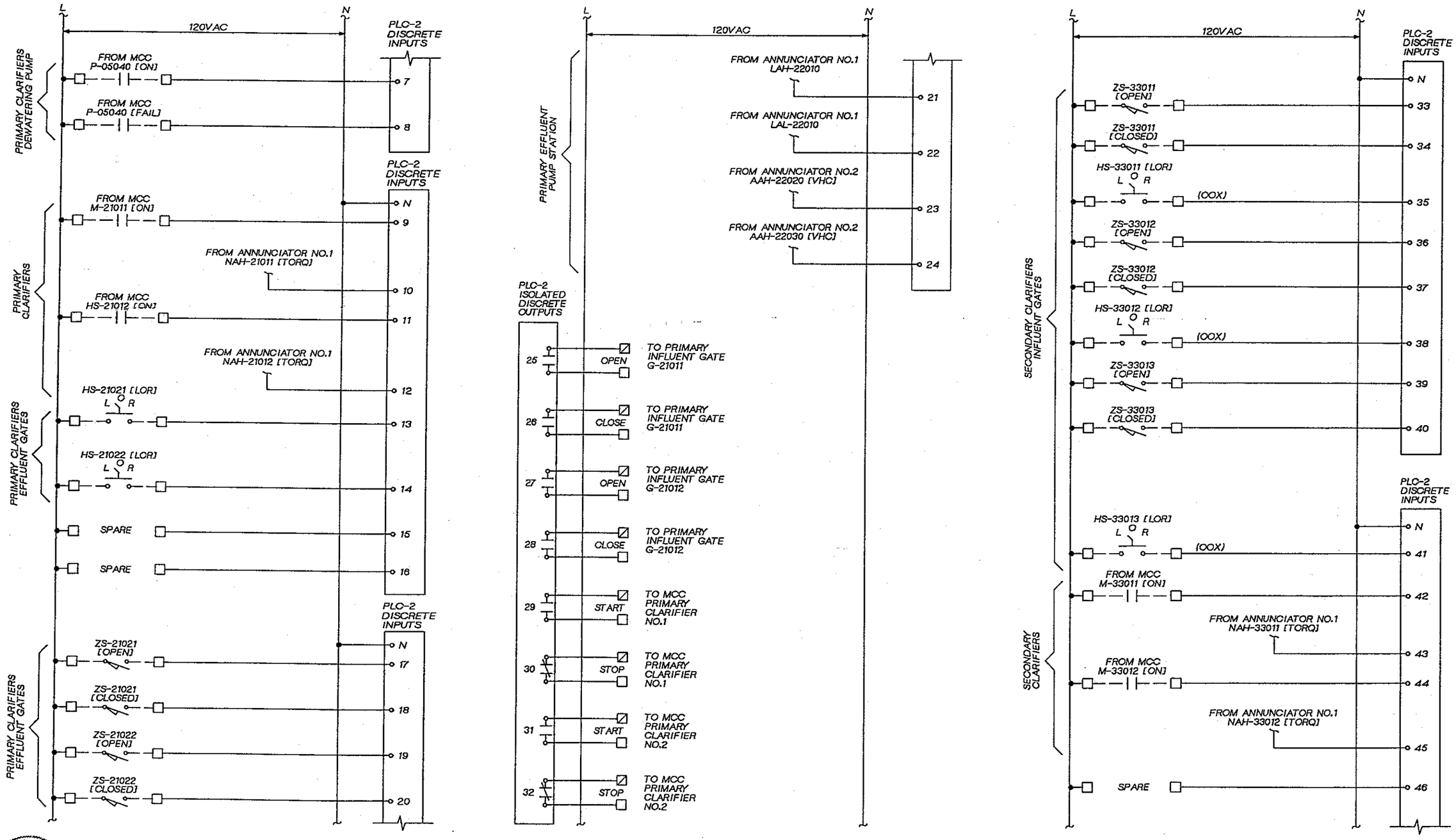

JERALD L. SLAYTER STATE OF WASHINGTON 17546 REGISTERED PROFESSIONAL ENGINEER

CH2M HILL

DSGN	V. AUSTIN				
DR	G. SLAYTER				
CHK	J. BLACK				
APVD	J GAUTHIER	NO.	DATE	REVISION	BY / APVD

REUSE OF DOCUMENTS
THIS DOCUMENT, AND THE IDEAS AND DESIGNS INCORPORATED HEREIN, AS AN INSTRUMENT OF PROFESSIONAL SERVICE, IS THE PROPERTY OF CH2M HILL AND IS NOT TO BE USED, IN WHOLE OR IN PART, FOR ANY OTHER PROJECT WITHOUT THE WRITTEN AUTHORIZATION OF CH2M HILL.
©CH2M HILL

BAR IS ONE INCH ON ORIGINAL DRAWING. 0 1"
IF NOT ONE INCH ON THIS SHEET, ADJUST SCALES ACCORDINGLY.

CITY OF BELLINGHAM, WASHINGTON
POST POINT WASTEWATER TREATMENT PLANT UPGRADE

INSTRUMENTATION AND CONTROL
AREA CONTROL PANEL
ACP-34000 ELEMENTARY

DWG NO. 900-N-51
DATE AUG. 1990
PROJ NO. SEA22462.C1

DRAWN BY: G. SLAYTER DESIGNED BY: V. AUSTIN
DGN NAME: H:/PROJ2/BELLINGH/BL900NAW.DGN

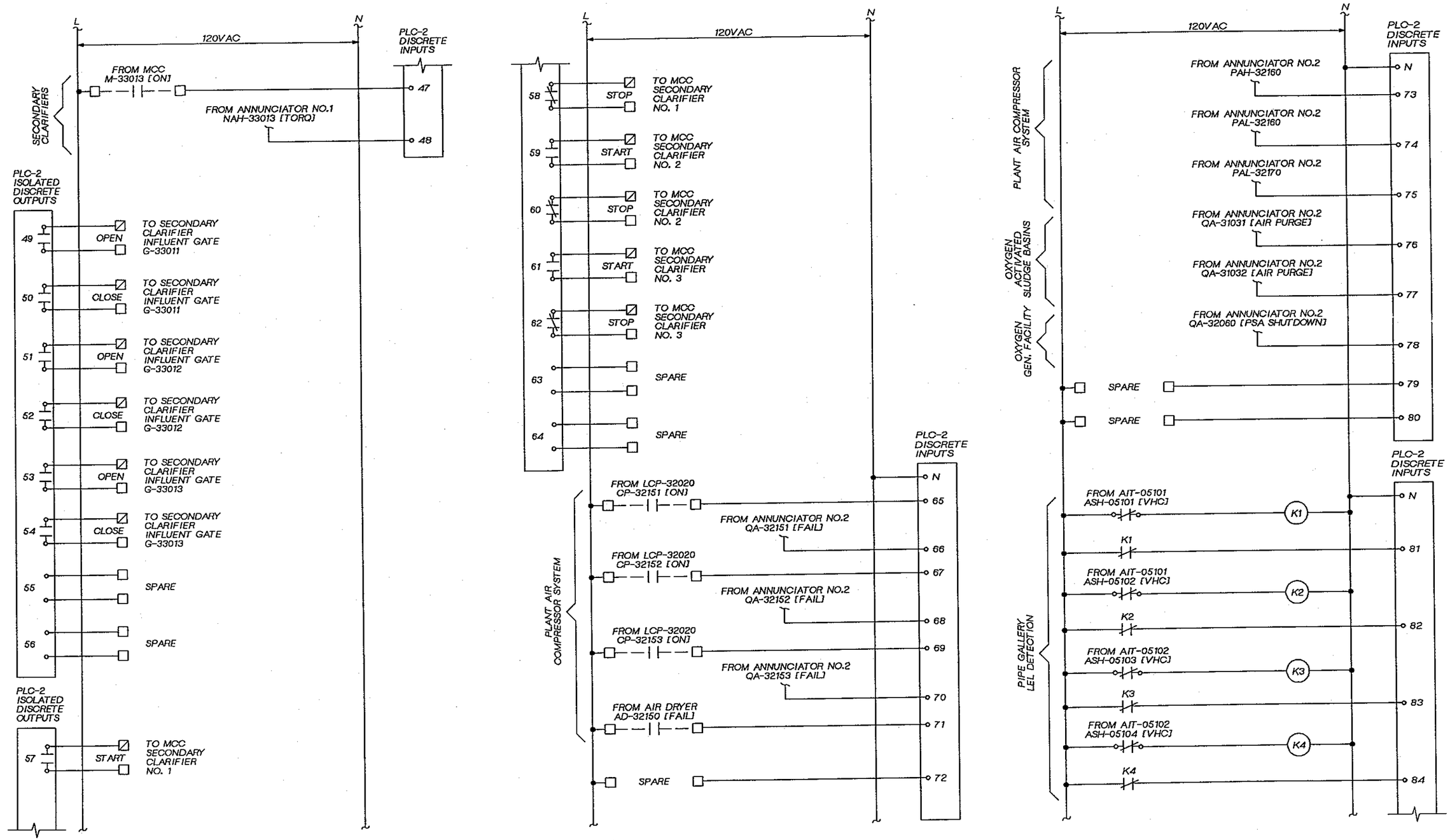

DSGN	V. AUSTIN				
DR	G. SLAYTER				
CHK	J. BLACK				
APVD	J GAUTHIER	NO.	DATE	REVISION	BY / APVD

CH2M HILL

REUSE OF DOCUMENTS
THIS DOCUMENT, AND THE IDEAS AND DESIGNS INCORPORATED HEREIN, AS AN INSTRUMENT OF PROFESSIONAL SERVICE, IS THE PROPERTY OF CH2M HILL AND IS NOT TO BE USED, IN WHOLE OR IN PART, FOR ANY OTHER PROJECT WITHOUT THE WRITTEN AUTHORIZATION OF CH2M HILL.
©CH2M HILL

BAR IS ONE INCH ON ORIGINAL DRAWING. 0 1"
IF NOT ONE INCH ON THIS SHEET, ADJUST SCALES ACCORDINGLY.

CITY OF BELLINGHAM, WASHINGTON
POST POINT WASTEWATER TREATMENT PLANT UPGRADE

INSTRUMENTATION AND CONTROL
AREA CONTROL PANEL
ACP-34000 ELEMENTARY

DWG NO. 900-N-52
DATE AUG. 1990
PROJ NO. SEA22462.C1

COMPOSITE OVERLAY SCREEN
OVERLAY IDENTIFICATION PROJID FILE

DRAWN BY: G. SLAYTER DESIGNED BY: V. AUSTIN
DGN NAME: H:/PROJ2/BELLINGH/BL900NAX.DGN

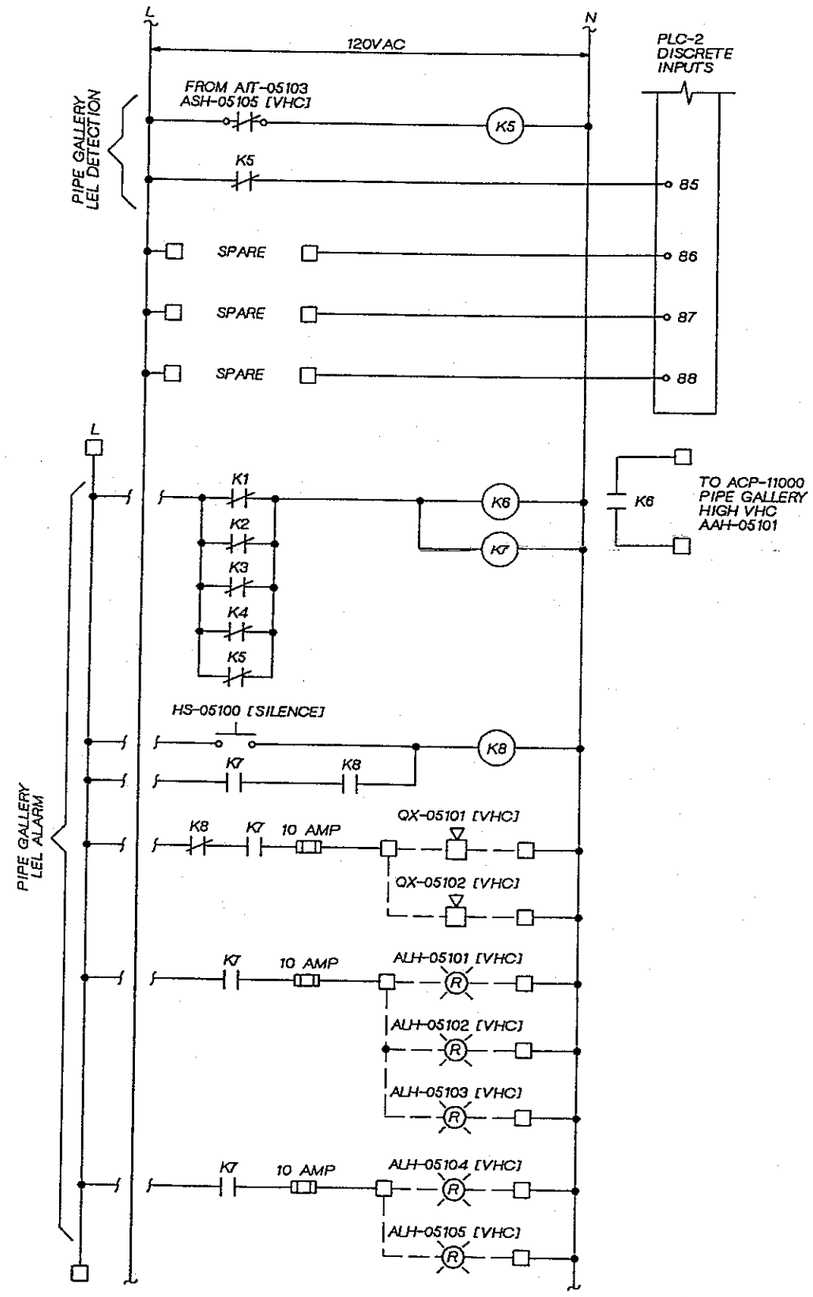

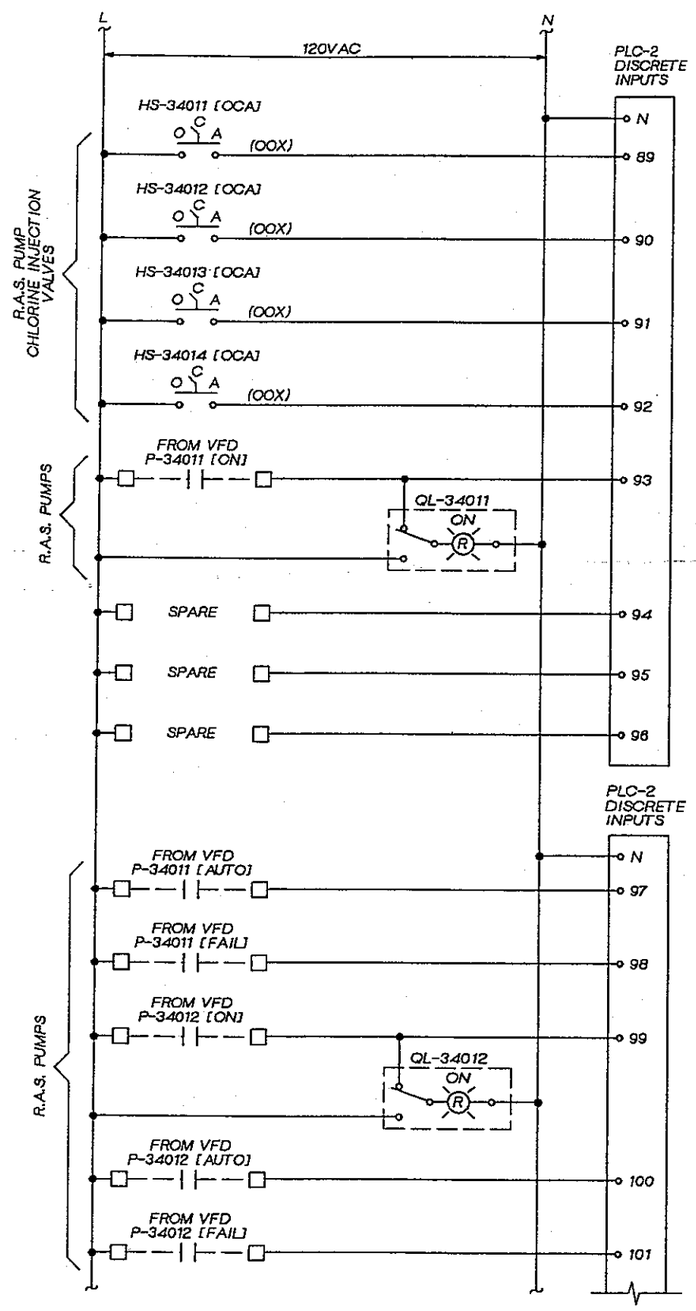

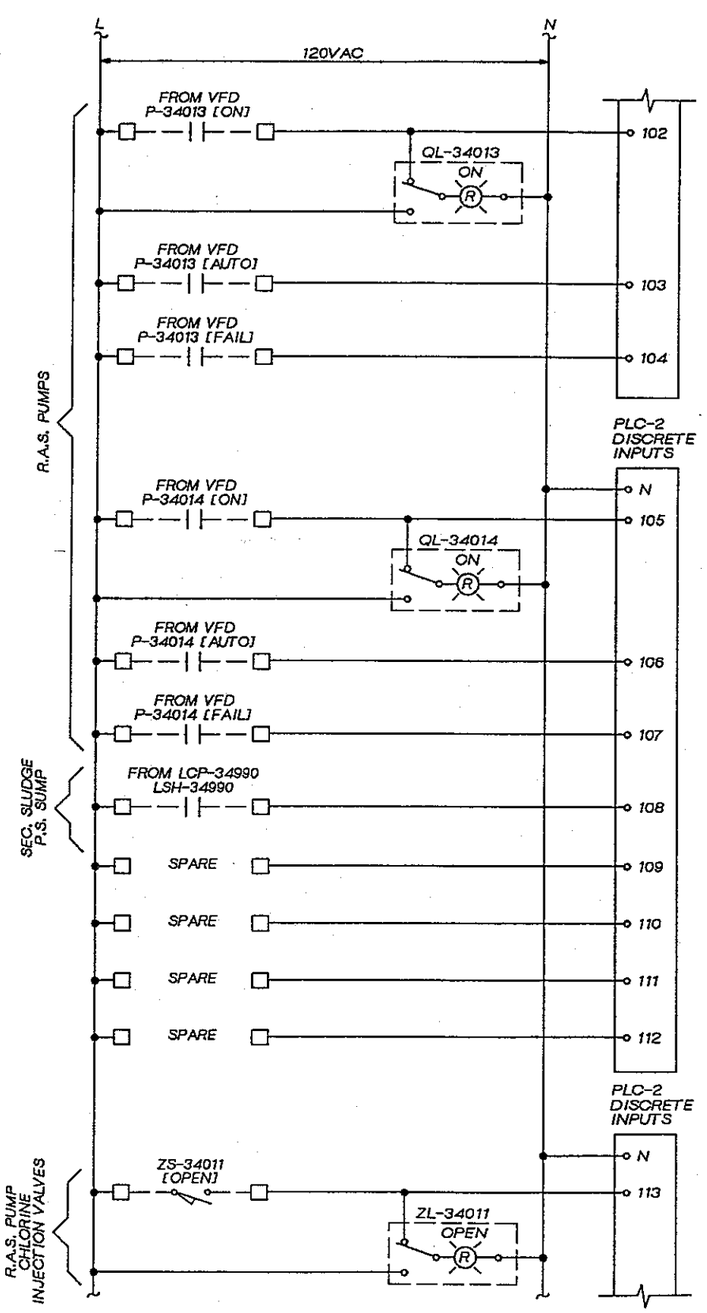

GERALD L. SLATER
STATE OF WASHINGTON
17146
REGISTERED PROFESSIONAL ENGINEER

CH2M HILL

DSGN	V. AUSTIN				
DR	G. SLAYTER				
CHK	J. BLACK				
APVD	J GAUTHIER	NO.	DATE	REVISION	BY / APVD

REUSE OF DOCUMENTS
THIS DOCUMENT, AND THE IDEAS AND DESIGNS INCORPORATED HEREIN, AS AN INSTRUMENT OF PROFESSIONAL SERVICE, IS THE PROPERTY OF CH2M HILL AND IS NOT TO BE USED, IN WHOLE OR IN PART, FOR ANY OTHER PROJECT WITHOUT THE WRITTEN AUTHORIZATION OF CH2M HILL.
©CH2M HILL

BAR IS ONE INCH ON ORIGINAL DRAWING.
0 1"
IF NOT ONE INCH ON THIS SHEET, ADJUST SCALES ACCORDINGLY.

CITY OF BELLINGHAM, WASHINGTON
POST POINT WASTEWATER TREATMENT PLANT UPGRADE

INSTRUMENTATION AND CONTROL
AREA CONTROL PANEL
ACP-34000 ELEMENTARY

DWG NO. 900-N-53
DATE AUG. 1990
PROJ NO. SEA22462.C1

DRAWN BY: G. SLAYTER DESIGNED BY: V. AUSTIN
DGN NAME: H:/PROJ2/BELLINGH/BL900NCX.DGN

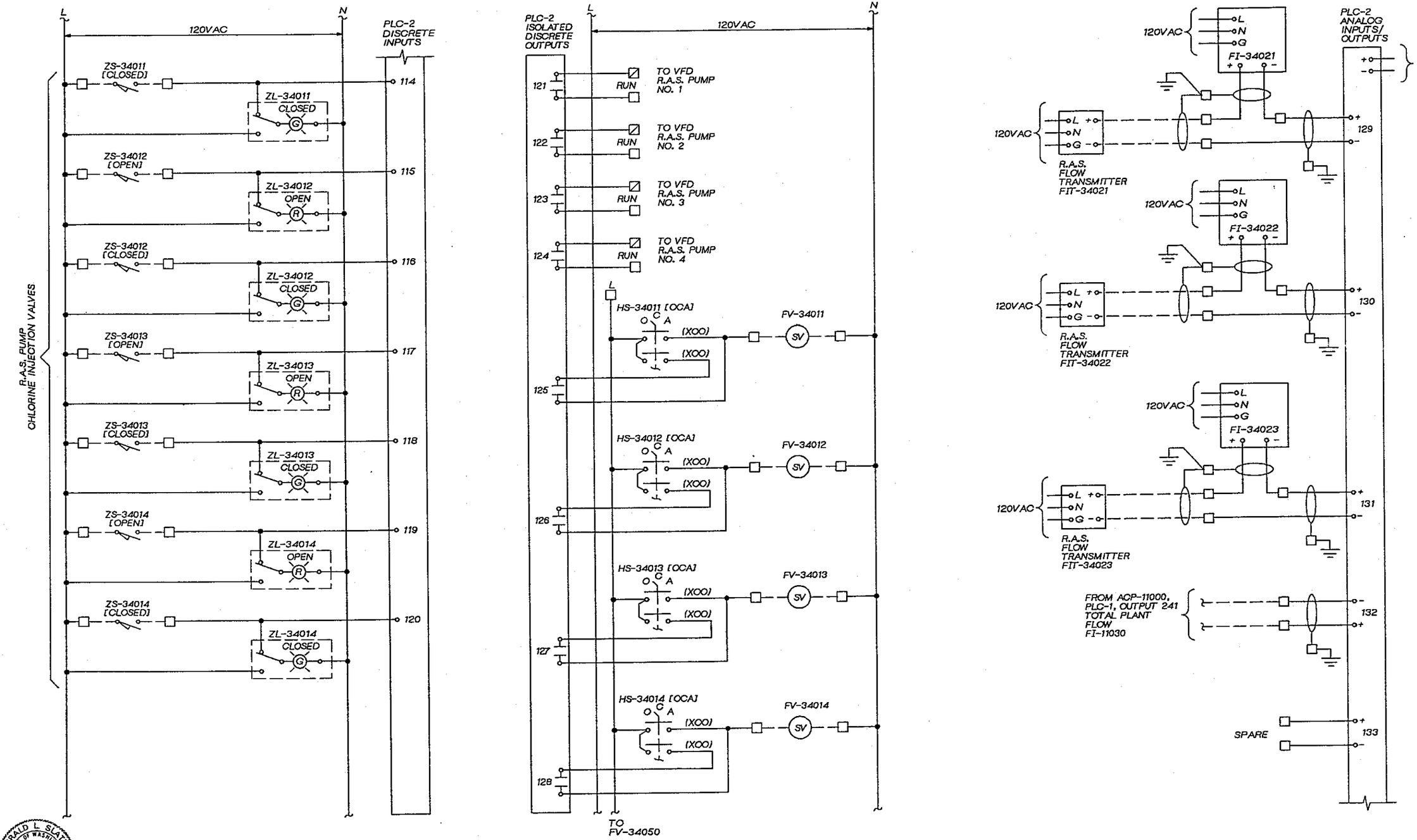

DSGN	V. AUSTIN					
DR	G. SLAYTER					
CHK	J. BLACK					
APVD	J GAUTHIER	NO.	DATE	REVISION	BY	APVD

CH2M HILL

REUSE OF DOCUMENTS
THIS DOCUMENT, AND THE IDEAS AND DESIGNS INCORPORATED HEREIN, AS AN INSTRUMENT OF PROFESSIONAL SERVICE, IS THE PROPERTY OF CH2M HILL AND IS NOT TO BE USED, IN WHOLE OR IN PART, FOR ANY OTHER PROJECT WITHOUT THE WRITTEN AUTHORIZATION OF CH2M HILL.
©CH2M HILL

BAR IS ONE INCH ON ORIGINAL DRAWING.
0 1"
IF NOT ONE INCH ON THIS SHEET, ADJUST SCALES ACCORDINGLY.

CITY OF BELLINGHAM, WASHINGTON
POST POINT WASTEWATER TREATMENT PLANT UPGRADE

INSTRUMENTATION AND CONTROL
AREA CONTROL PANEL
ACP-34000 ELEMENTARY

DWG NO. 900-N-54
DATE AUG. 1990
PROJ NO. SEA22462.C1

OVERLAY IDENTIFICATION: COMPOSITE, OVERLAY, SCREEN, PROJID, FILE

DRAWN BY: G. SLATTER DESIGNED BY: V. AUSTIN
DGN NAME: H:/PROJ2/BELLINGH/BL900NAY.DGN

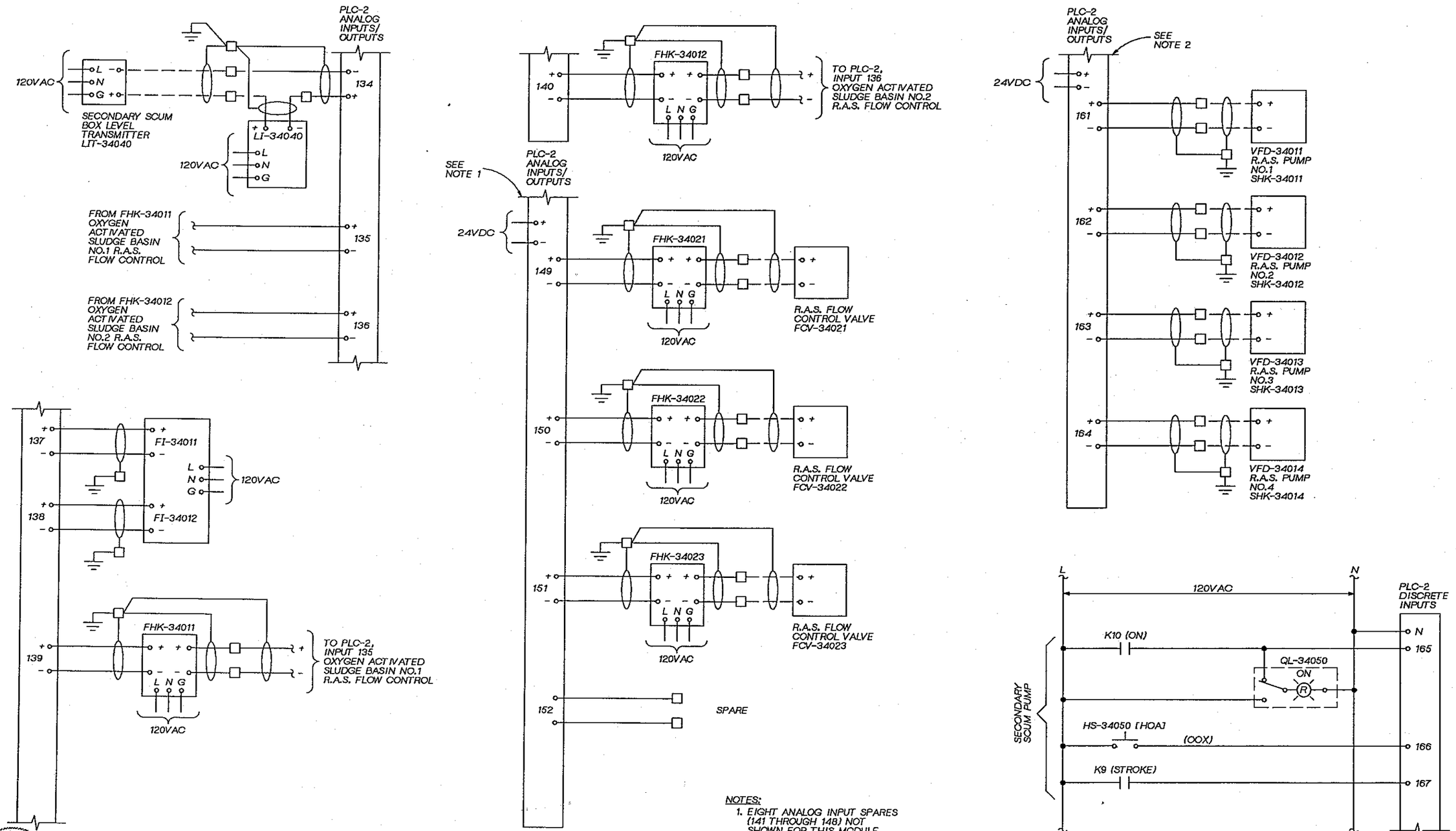

NOTES:

1. EIGHT ANALOG INPUT SPARES (141 THROUGH 148) NOT SHOWN FOR THIS MODULE.
2. EIGHT ANALOG INPUT SPARES (153 THROUGH 160) NOT SHOWN FOR THIS MODULE.

JERALD L. SLATTER STATE OF WASHINGTON 15546 REGISTERED PROFESSIONAL ENGINEER

CH2M HILL

DSGN	V. AUSTIN
DR	G. SLAYTER
CHK	J. BLACK
APVD	J GAUTHIER

NO.	DATE	REVISION	BY	APVD

REUSE OF DOCUMENTS
THIS DOCUMENT, AND THE IDEAS AND DESIGNS INCORPORATED HEREIN, AS AN INSTRUMENT OF PROFESSIONAL SERVICE, IS THE PROPERTY OF CH2M HILL AND IS NOT TO BE USED, IN WHOLE OR IN PART, FOR ANY OTHER PROJECT WITHOUT THE WRITTEN AUTHORIZATION OF CH2M HILL.
©CH2M HILL

BAR IS ONE INCH ON ORIGINAL DRAWING. 0 1"
IF NOT ONE INCH ON THIS SHEET, ADJUST SCALES ACCORDINGLY.

CITY OF BELLINGHAM, WASHINGTON
POST POINT WASTEWATER TREATMENT PLANT UPGRADE

INSTRUMENTATION AND CONTROL
AREA CONTROL PANEL
ACP-34000 ELEMENTARY

DWG NO. 900-N-55
DATE AUG. 1990
PROJ NO. SEA22452.C1

DRAWN BY: G. SLAYTER DESIGNED BY: V. AUSTIN
DGN NAME: H:/PROJ2/BELLINGH/BL900NCW.DGN

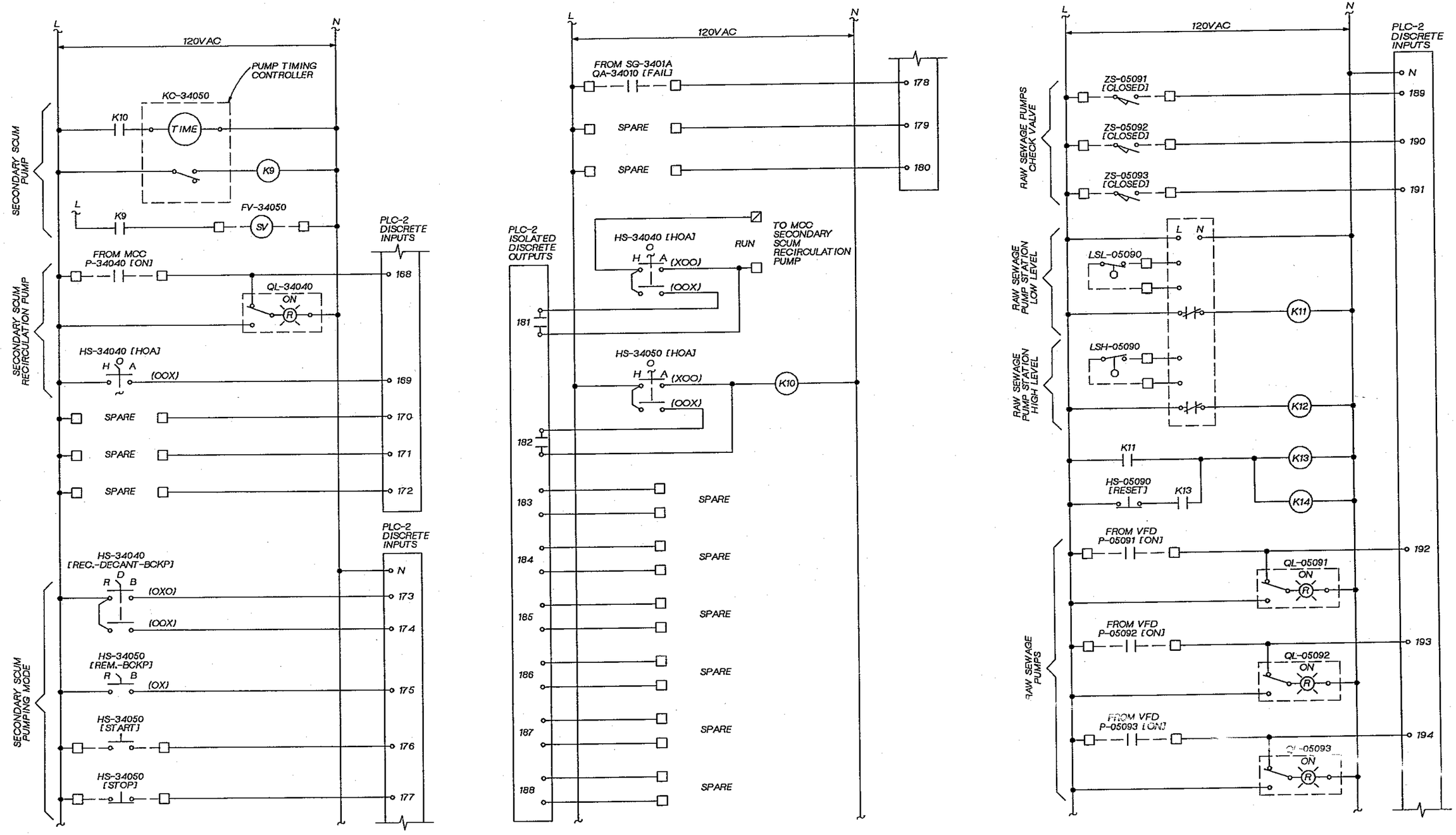

DSGN	V. AUSTIN
DR	G. SLAYTER
CHK	J. BLACK
APVD	J GAUTHIER

NO.	DATE	REVISION	BY	APVD

REUSE OF DOCUMENTS
THIS DOCUMENT, AND THE IDEAS AND DESIGNS INCORPORATED HEREIN, AS AN INSTRUMENT OF PROFESSIONAL SERVICE, IS THE PROPERTY OF CH2M HILL AND IS NOT TO BE USED, IN WHOLE OR IN PART, FOR ANY OTHER PROJECT WITHOUT THE WRITTEN AUTHORIZATION OF CH2M HILL.
©CH2M HILL

BAR IS ONE INCH ON ORIGINAL DRAWING.
0 1"
IF NOT ONE INCH ON THIS SHEET, ADJUST SCALES ACCORDINGLY.

CITY OF BELLINGHAM, WASHINGTON
POST POINT WASTEWATER TREATMENT PLANT UPGRADE

INSTRUMENTATION AND CONTROL
AREA CONTROL PANEL
ACP-34000 ELEMENTARY

DWG NO. 900-N-56
DATE AUG. 1990
PROJ NO. SEA22462.C1

GERALD L. SLATTER
STATE OF WASHINGTON
13546
REGISTERED PROFESSIONAL ENGINEER

OVERLAY IDENTIFICATION | COMPOSITE OVERLAY SCREEN
PROJ/ID
FILE

DRAWN BY: G. SLAYTER DESIGNED BY: V. AUSTIN
DGN NAME: H:/PROJ2/BELLINGH/BL900NCY.DGN

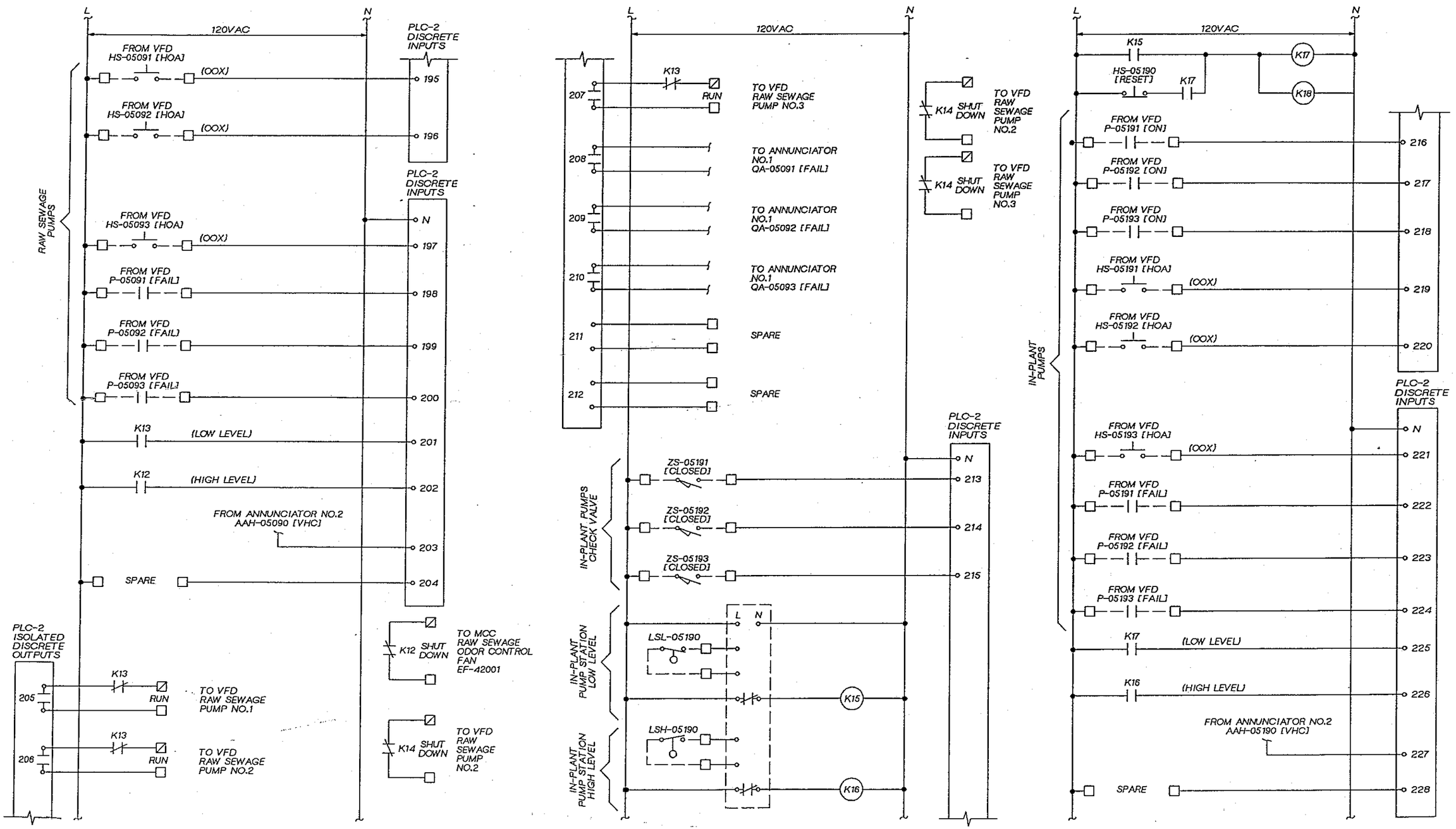

DSGN V. AUSTIN						
DR G. SLAYTER						
CHK J. BLACK						
APVD J GAUTHIER	NO.	DATE	REVISION	BY	APVD	

CH2M HILL

REUSE OF DOCUMENTS
THIS DOCUMENT, AND THE IDEAS AND DESIGNS INCORPORATED HEREIN, AS AN INSTRUMENT OF PROFESSIONAL SERVICE, IS THE PROPERTY OF CH2M HILL AND IS NOT TO BE USED, IN WHOLE OR IN PART, FOR ANY OTHER PROJECT WITHOUT THE WRITTEN AUTHORIZATION OF CH2M HILL.
©CH2M HILL

BAR IS ONE INCH ON ORIGINAL DRAWING. 0 1"
IF NOT ONE INCH ON THIS SHEET, ADJUST SCALES ACCORDINGLY.

CITY OF BELLINGHAM, WASHINGTON
POST POINT WASTEWATER TREATMENT PLANT UPGRADE

INSTRUMENTATION AND CONTROL
AREA CONTROL PANEL
ACP-34000 ELEMENTARY

DWG NO. 900-N-57
DATE AUG. 1990
PROJ NO. SEA22452.C1

DRAWN BY: G. SLAYTER DESIGNED BY: V. AUSTIN
DGN NAME: H:/PROJ2/BELLINGH/BL900NDO.DGN

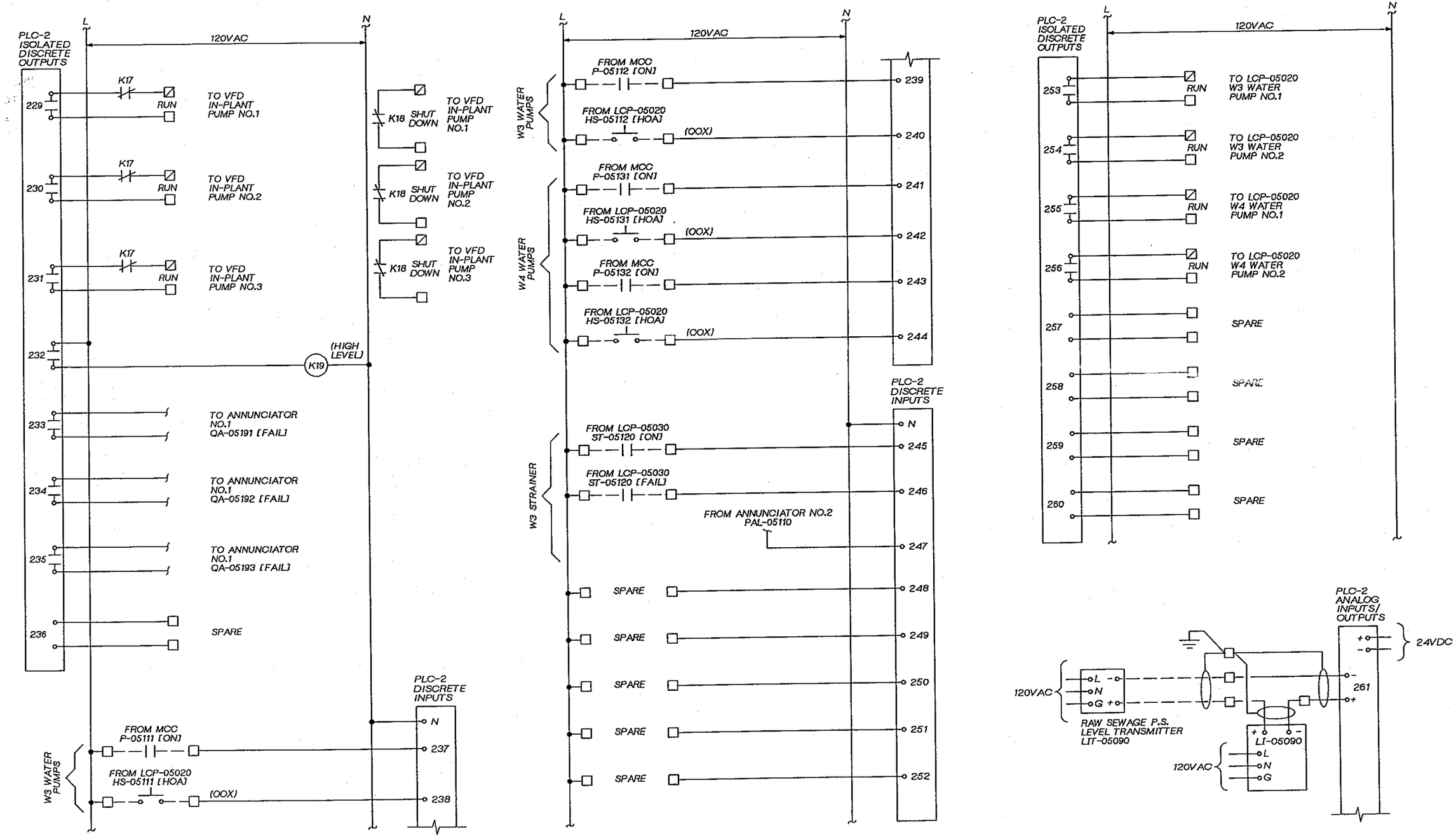

DSGN V. AUSTIN					
DR G. SLAYTER					
CHK J. BLACK					
APVD J GAUTHIER	NO.	DATE	REVISION	BY	APVD

CH2M HILL

REUSE OF DOCUMENTS
THIS DOCUMENT, AND THE IDEAS AND DESIGNS INCORPORATED HEREIN, AS AN INSTRUMENT OF PROFESSIONAL SERVICE, IS THE PROPERTY OF CH2M HILL AND IS NOT TO BE USED, IN WHOLE OR IN PART, FOR ANY OTHER PROJECT WITHOUT THE WRITTEN AUTHORIZATION OF CH2M HILL.
©CH2M HILL

BAR IS ONE INCH ON ORIGINAL DRAWING. 0 1"
IF NOT ONE INCH ON THIS SHEET, ADJUST SCALES ACCORDINGLY.

CITY OF BELLINGHAM, WASHINGTON
POST POINT WASTEWATER TREATMENT PLANT UPGRADE

INSTRUMENTATION AND CONTROL
AREA CONTROL PANEL
ACP-34000 ELEMENTARY

DWG NO. 900-N-58
DATE AUG. 1990
PROJ NO. SEA22462.C1

OVERLAY IDENTIFICATION | COMPOSITE | OVERLAY SCREEN | PROJID | FILE

DRAWN BY: G. SLAYTER DESIGNED BY: V. AUSTIN
DGN NAME: H:/PROJ2/BELLINGH/BL900NDP.DGN

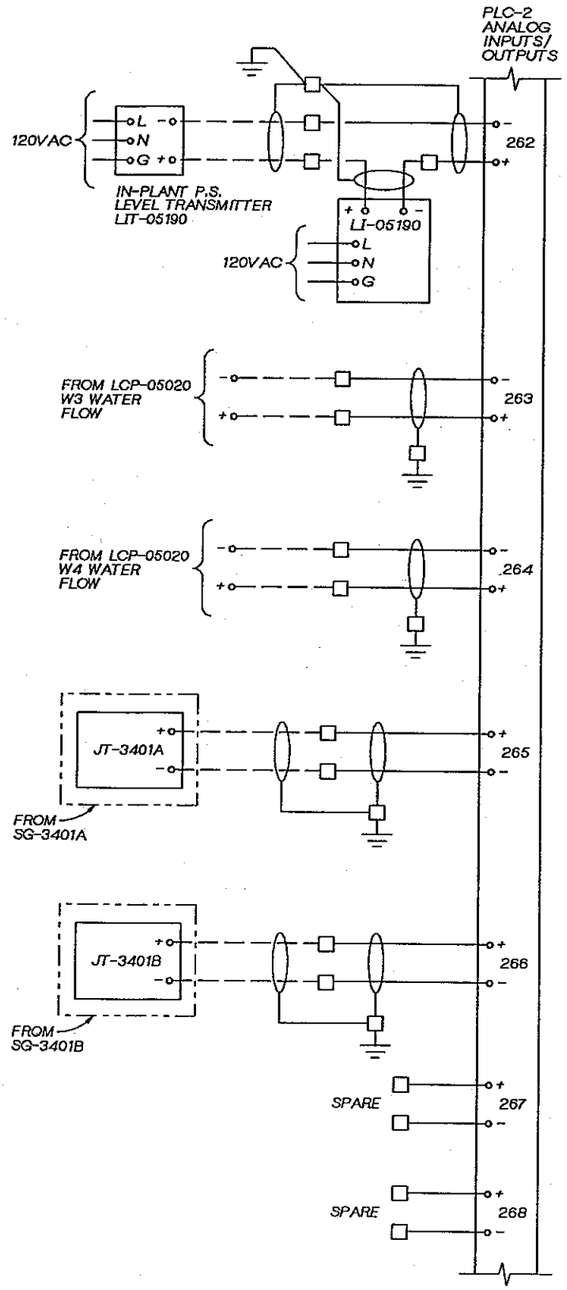

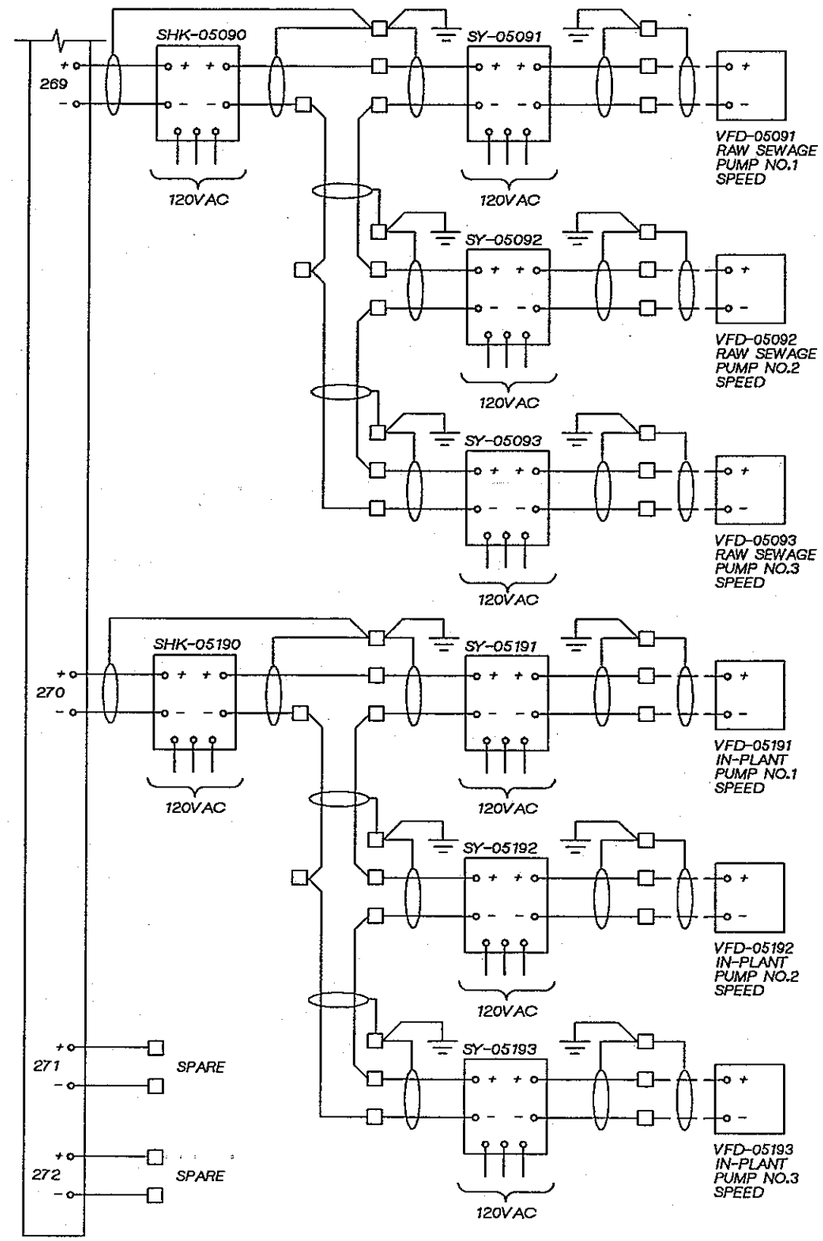

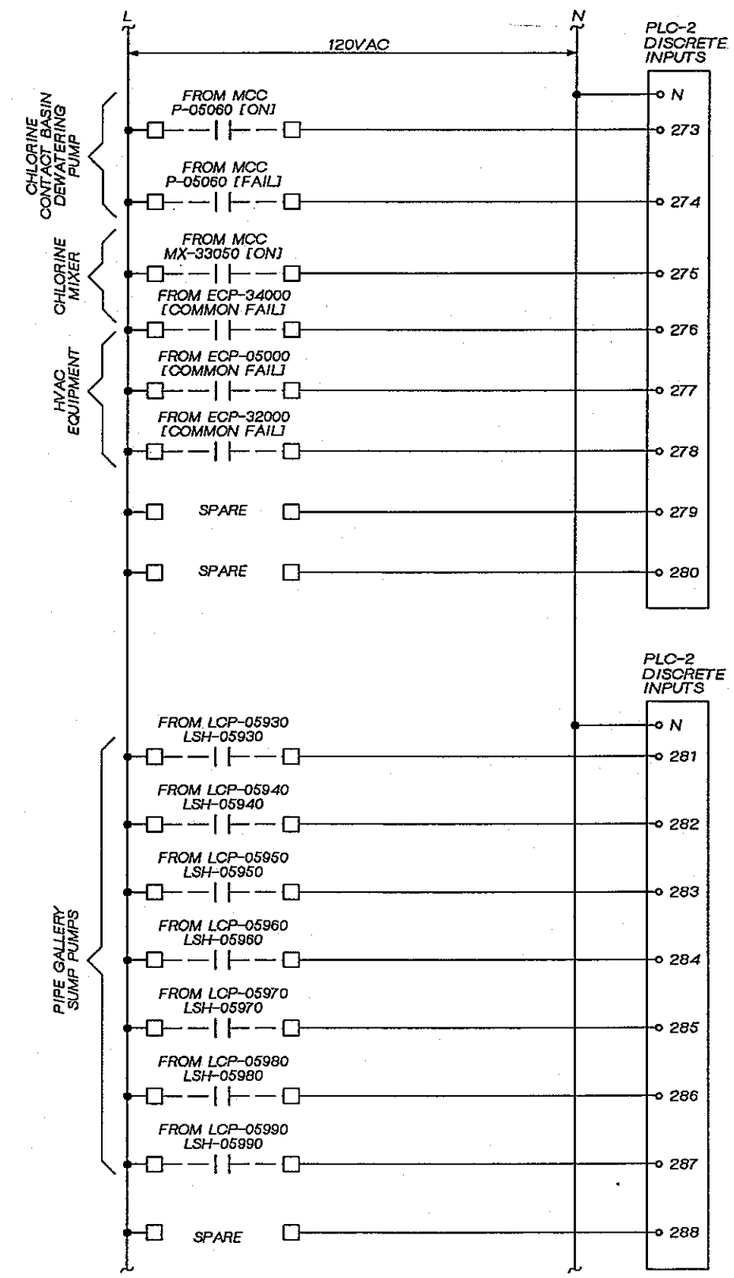

GERALD L. SLAYTER STATE OF WASHINGTON 11548 REGISTERED PROFESSIONAL ENGINEER

CH2M HILL

DSGN	V. AUSTIN				
DR	G. SLAYTER				
CHK	J. BLACK				
APVD	J GAUTHIER	NO.	DATE	REVISION	BY	APVD

REUSE OF DOCUMENTS
THIS DOCUMENT, AND THE IDEAS AND DESIGNS INCORPORATED HEREIN, AS AN INSTRUMENT OF PROFESSIONAL SERVICE, IS THE PROPERTY OF CH2M HILL AND IS NOT TO BE USED, IN WHOLE OR IN PART, FOR ANY OTHER PROJECT WITHOUT THE WRITTEN AUTHORIZATION OF CH2M HILL.
©CH2M HILL

BAR IS ONE INCH ON ORIGINAL DRAWING.
0 1"
IF NOT ONE INCH ON THIS SHEET, ADJUST SCALES ACCORDINGLY.

CITY OF BELLINGHAM, WASHINGTON
POST POINT WASTEWATER TREATMENT PLANT UPGRADE

INSTRUMENTATION AND CONTROL
AREA CONTROL PANEL
ACP-34000 ELEMENTARY

DWG NO. 900-N-59
DATE AUG. 1990
PROJ NO. SEA22452.C1

OVERLAY SCREEN
PROJ/ID
FILE

DRAWN BY: G. SLAYTER DESIGNED BY: V. AUSTIN
DGN NAME: H:/PROJ2/BELLINGH/BL900NDQ.DGN

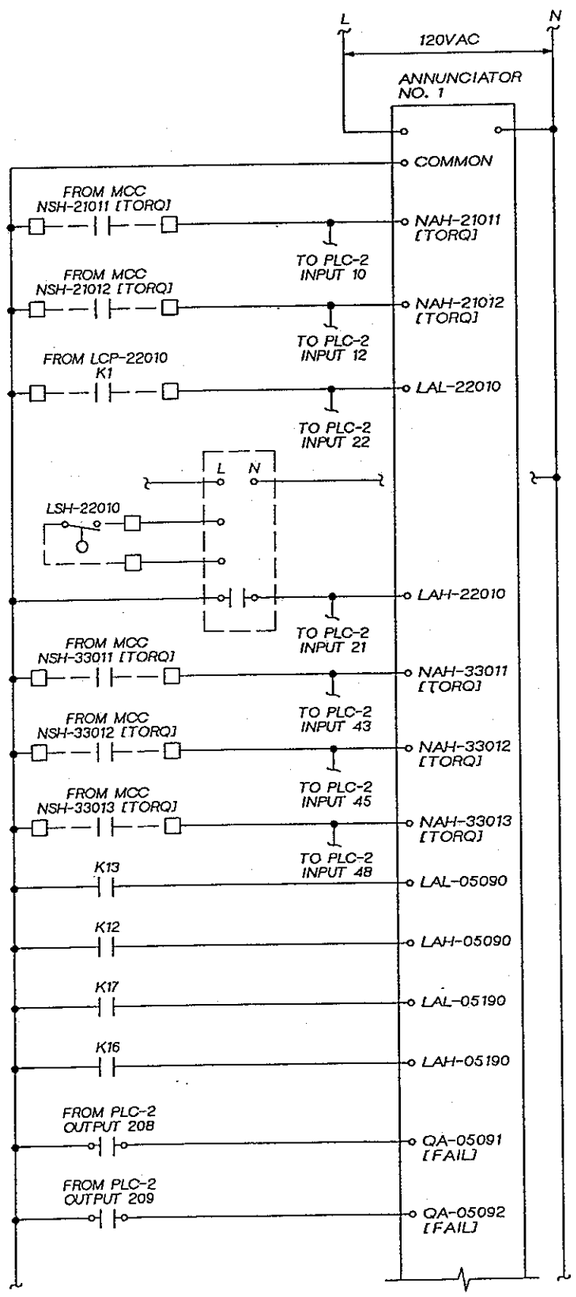

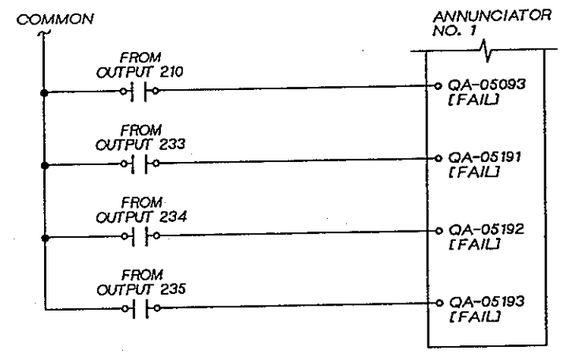

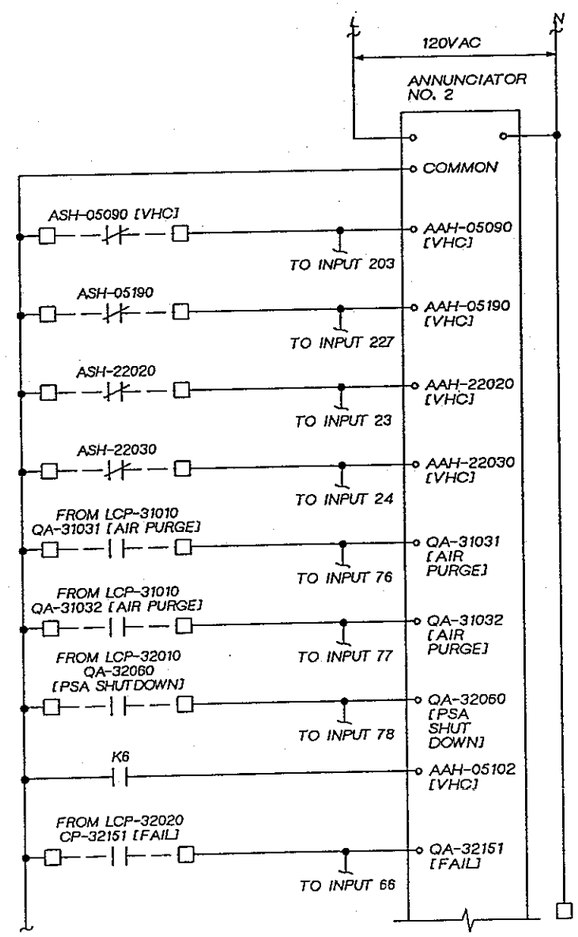

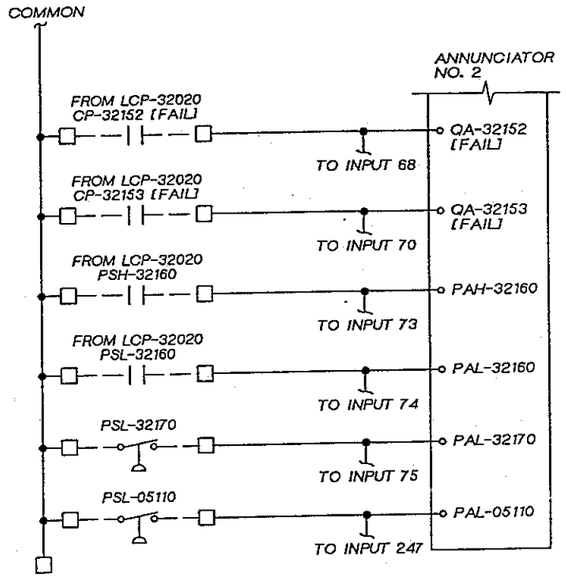

GERALD L. SLATER STATE OF WASHINGTON 1548 REGISTERED PROFESSIONAL ENGINEER

CH2M HILL

DSGN	V. AUSTIN			
DR	G. SLAYTER			
CHK	J. BLACK			
APVD	J GAUTHIER	NO.	DATE	REVISION

BY | APVD

REUSE OF DOCUMENTS
THIS DOCUMENT, AND THE IDEAS AND DESIGNS INCORPORATED HEREIN, AS AN INSTRUMENT OF PROFESSIONAL SERVICE, IS THE PROPERTY OF CH2M HILL AND IS NOT TO BE USED, IN WHOLE OR IN PART, FOR ANY OTHER PROJECT WITHOUT THE WRITTEN AUTHORIZATION OF CH2M HILL.
©CH2M HILL

BAR IS ONE INCH ON ORIGINAL DRAWING.
0 1"
IF NOT ONE INCH ON THIS SHEET, ADJUST SCALES ACCORDINGLY.

CITY OF BELLINGHAM, WASHINGTON
POST POINT WASTEWATER TREATMENT PLANT UPGRADE

INSTRUMENTATION AND CONTROL
AREA CONTROL PANEL
ACP-34000 ELEMENTARY

DWG NO. 900-N-60
DATE AUG. 1990
PROJ. NO. SEA22452.C1

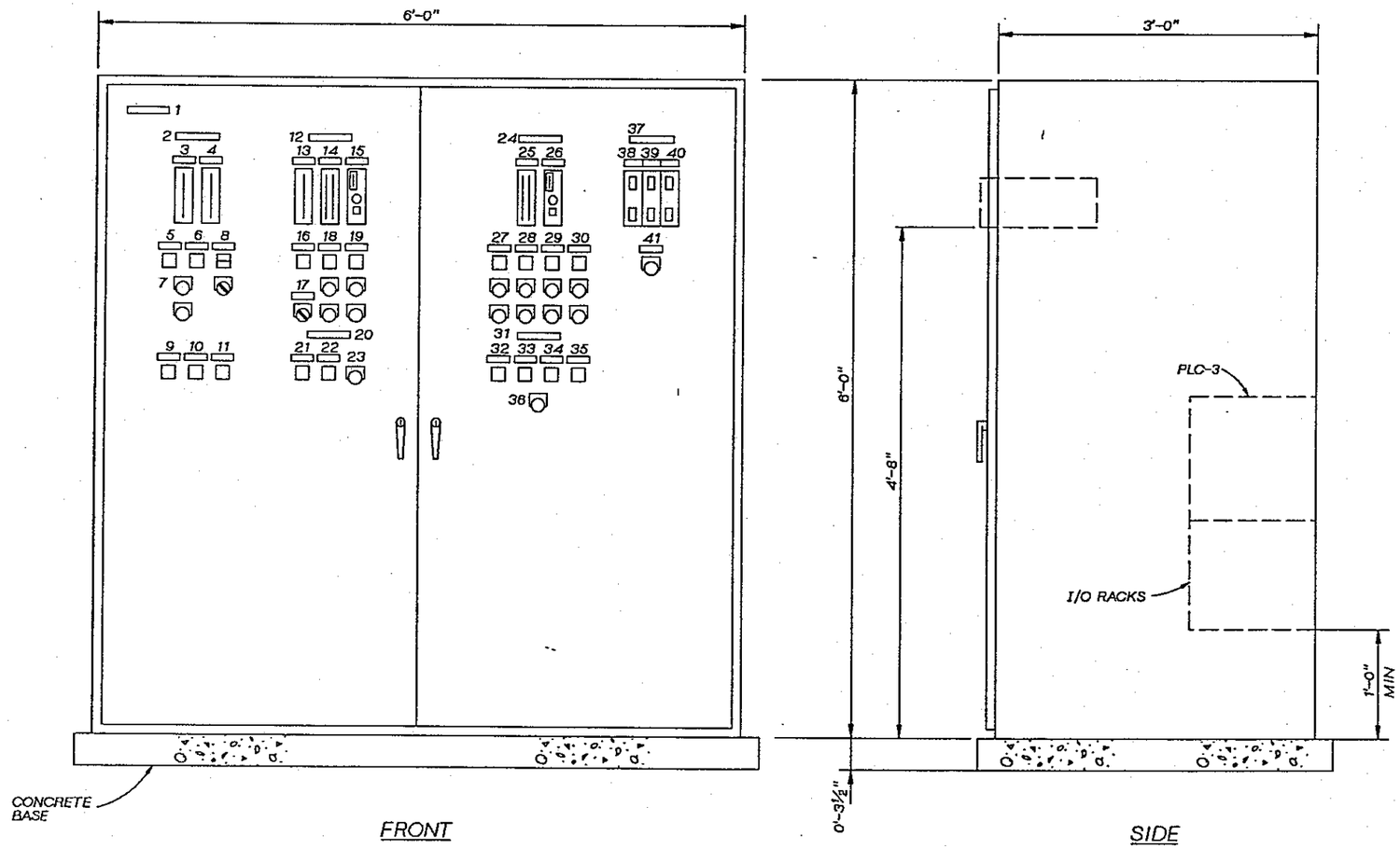

NOTE:
SECURE PANEL ENCLOSURE TO CONCRETE BASE WITH ⅜" CONCRETE ANCHORS.

AREA CONTROL PANEL ACP-51000
1½" = 1'-0"

CH2M HILL	DSGN V. AUSTIN DR G. SLAYTER CHK J. BLACK APVD J GAUTHIER	NO.	DATE	REVISION	BY	APVD

REUSE OF DOCUMENTS
THIS DOCUMENT, AND THE IDEAS AND DESIGNS INCORPORATED HEREIN, AS AN INSTRUMENT OF PROFESSIONAL SERVICE, IS THE PROPERTY OF CH2M HILL AND IS NOT TO BE USED, IN WHOLE OR IN PART, FOR ANY OTHER PROJECT WITHOUT THE WRITTEN AUTHORIZATION OF CH2M HILL.
© CH2M HILL

BAR IS ONE INCH ON ORIGINAL DRAWING.
0 1"
IF NOT ONE INCH ON THIS SHEET, ADJUST SCALES ACCORDINGLY.

CITY OF BELLINGHAM, WASHINGTON
POST POINT WASTEWATER TREATMENT PLANT UPGRADE

INSTRUMENTATION AND CONTROL
AREA CONTROL PANEL
ACP-51000 ELEVATION

DWG NO. 900-N-61
DATE AUG. 1990
PROJ. NO. SEA22462.C1

ACP-51000 SCHEDULE

ITEM NO.	TAG NO.	NAMEPLATE INSCRIPTION (DESCRIPTION) FIRST LINE / SECOND LINE / THIRD LINE	SPEC NO.
1	-	ACP-3 / SOLIDS HANDLING	
2	-	SCUM CONCENTRATION - DISPOSAL	
3	LI-51010	N. SCUM BOX / LEVEL	S26
4	LI-51040	SCUM HOLDING / TANK LEVEL	S26
5	QL-51011 [ON]	SCUM CONC. FEED / PUMP NO.1	M06
6	QL-51012 [ON]	SCUM CONC. FEED / PUMP NO.2	M06
7	HS-51010 [START]		M16
	HS-51010 [STOP]		M16
8	ZL-51030 [OPEN]	N. SCUM BOX / AER. VALVE	M05
	ZL-51030 [CLOSED]		
	HS-51030 [OCA]		M22
9	QL-51020 [ON]	SCUM MACERATOR	M06
10	QL-51030 [ON]	SCUM CONC.	M06
11	QL-51040 [ON]	CONC. SCUM PUMP	M06
12	-	PRIMARY SLUDGE PUMPING	
13	LI-51080	PRIMARY SLUDGE / STOR. TANK LEVEL	S26
14	DI-51090	PRIMARY SLUDGE / DENSITY	S26
	FI-51090	PRIMARY SLUDGE / FLOW	
15	SHK-51090 [AM]	SLUDGE BLEND. / PRIMARY SLUDGE / PUMP SPEED	S12
16	QL-51090 [ENABLED]	CENTRIFUGE / FEED PUMP / NO.1	M06
17	HS-51100 [PRIM.-BLND]	CENT. FEED / PUMP NO.1 / OPERATING MODE	M22
18	XL-51092 [ON]	CENT. FEED / PUMP NO.1	M06
	HS-51092 [START]		M16
	HS-51092 [STOP]		M16
19	XL-51091 [ON]	SLUDGE BLEND. / PRIMARY SLUDGE / PUMP	M06
	HS-51091 [START]		M16
	HS-51091 [STOP]		M16
20	-	PRIMARY SLUDGE / PUMPS FAIL	
21	QL-51092 [FAIL]	CENT. FEED / PUMP NO.1	M06
22	QL-51091 [FAIL]	SLUDGE FEED / PRIMARY SLUDGE / PUMP	M06
23	HS-51090 [RESET]		M16
24	-	T.W.A.S. PUMPING	
25	DI-53060	T.W.A.S. / DENSITY	S26
	FI-53060	T.W.A.S. / FLOW	S26
26	SHK-53060 [AM]	T.W.A.S. / PUMP SPEED	S12
27	QL-53061 [ON]	SLUDGE BLEND. / T.W.A.S. / PUMP NO.1	M06
	HS-53061 [START]		M16
	HS-53061 [STOP]		M16
28	QL-53062 [ON]	SLUDGE BLEND. / T.W.A.S. / PUMP NO.2	M06
	HS-53062 [START]		M16
	HS-53062 [STOP]		M16
29	QL-53063 [ON]	SLUDGE BLEND. / T.W.A.S. / PUMP NO.3	M06
	HS-53063 [START]		M16
	HS-53063 [STOP]		M16
30	QL-53064 [ON]	SLUDGE BLEND. / T.W.A.S. / PUMP NO.4	M06
	HS-53064 [START]		M16
	HS-53064 [STOP]		M16
31	-	T.W.A.S. PUMPS FAIL	
32	QL-53061 [FAIL]	SLUDGE BLEND. / T.W.A.S. / PUMP NO.1	M06
33	QL-53062 [FAIL]	SLUDGE BLEND. / T.W.A.S. / PUMP NO.2	M06
34	QL-53063 [FAIL]	SLUDGE BLEND. / T.W.A.S. / PUMP NO.3	M06
35	QL-53064 [FAIL]	SLUDGE BLEND. / T.W.A.S. / PUMP NO.4	M06
36	HS-53060 [RESET]		M16
37	-	COMBUSTIBLE GAS ANALYZERS	
38	AIT-51030	SCUM AREA / AE-51030	A10
39	AIT-51080	PRIM. SLUDGE TANK / AE-51080	A31
40	AIT-53060	T.W.A.S. TANKS / AE-53061, AE-53062	A31
41	HS-51030 [SILENCE]	SOLIDS HANDLING / LEL ALARM / SILENCE	M16

JERALD L. SLAYTER
STATE OF WASHINGTON
17546
REGISTERED PROFESSIONAL ENGINEER

CH2M HILL

DSGN	V. AUSTIN
DR	G. SLAYTER
CHK	J. BLACK
APVD	J GAUTHIER

NO.	DATE	REVISION	BY	APVD

REUSE OF DOCUMENTS
THIS DOCUMENT, AND THE IDEAS AND DESIGNS INCORPORATED HEREIN, AS AN INSTRUMENT OF PROFESSIONAL SERVICE, IS THE PROPERTY OF CH2M HILL AND IS NOT TO BE USED, IN WHOLE OR IN PART, FOR ANY OTHER PROJECT WITHOUT THE WRITTEN AUTHORIZATION OF CH2M HILL.
©CH2M HILL

BAR IS ONE INCH ON ORIGINAL DRAWING.
0 1"
IF NOT ONE INCH ON THIS SHEET, ADJUST SCALES ACCORDINGLY.

CITY OF BELLINGHAM, WASHINGTON
POST POINT WASTEWATER TREATMENT PLANT UPGRADE

INSTRUMENTATION AND CONTROL
AREA CONTROL PANEL
ACP-51000 SCHEDULE

DWG NO. 900-N-52
DATE AUG. 1990
PROJ NO. SEA22462.C1

OVERLAY SCREEN
PROJ/D FILE

DGN NAME: H:/PROJ2/BELLINGH/BL900NAZ.DGN

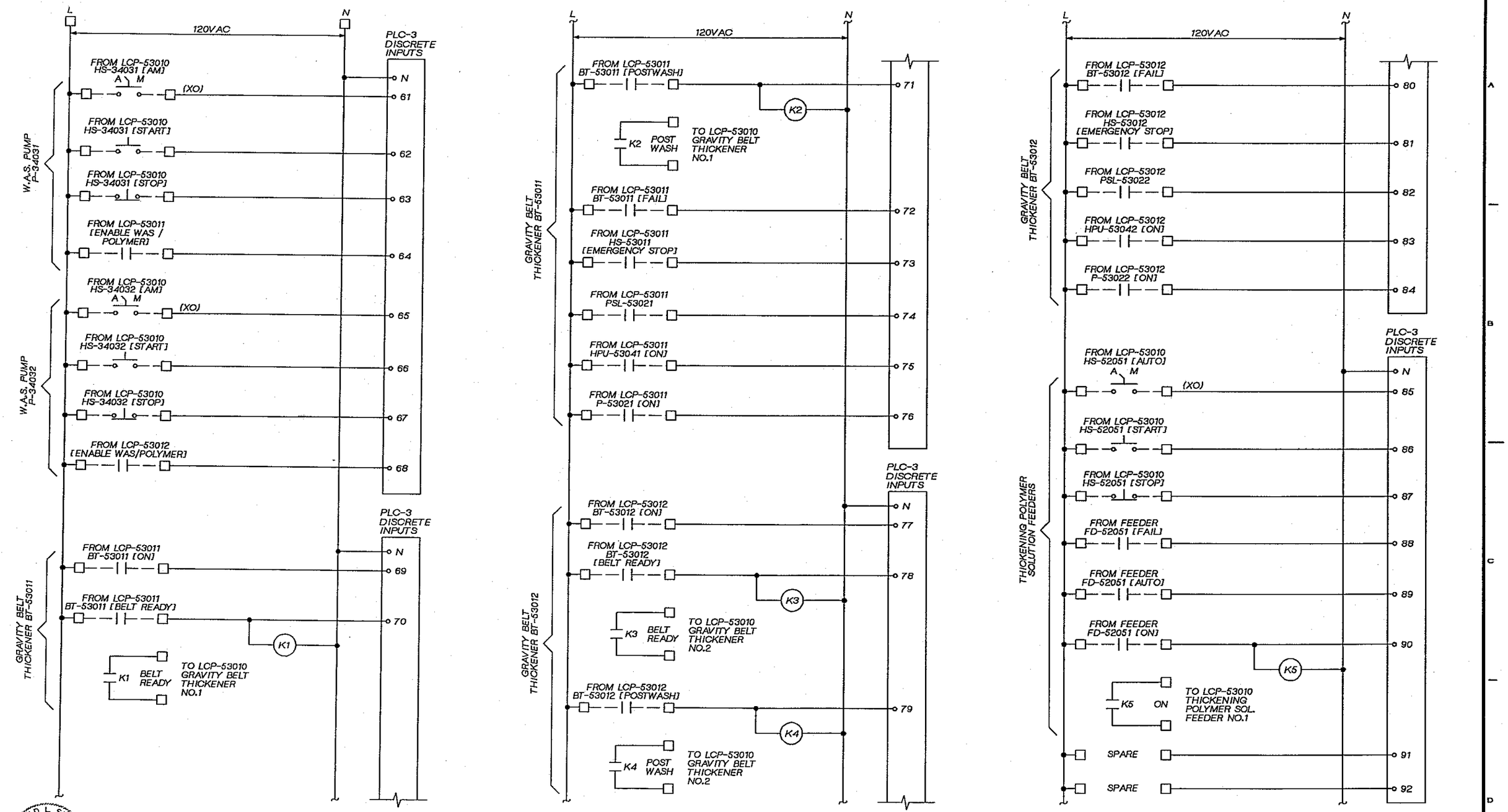

JERALD L. SLATTER
STATE OF WASHINGTON
17346
REGISTERED PROFESSIONAL ENGINEER

CH2M HILL

DSGN	V. AUSTIN
DR	G. SLAYTER
CHK	J. BLACK
APVD	J GAUTHIER

NO.	DATE	REVISION	BY	APVD

REUSE OF DOCUMENTS

THIS DOCUMENT, AND THE IDEAS AND DESIGNS INCORPORATED HEREIN, AS AN INSTRUMENT OF PROFESSIONAL SERVICE, IS THE PROPERTY OF CH2M HILL AND IS NOT TO BE USED, IN WHOLE OR IN PART, FOR ANY OTHER PROJECT WITHOUT THE WRITTEN AUTHORIZATION OF CH2M HILL.

©CH2M HILL

BAR IS ONE INCH ON ORIGINAL DRAWING.
0 1"
IF NOT ONE INCH ON THIS SHEET, ADJUST SCALES ACCORDINGLY.

CITY OF BELLINGHAM, WASHINGTON
POST POINT WASTEWATER TREATMENT PLANT UPGRADE

INSTRUMENTATION AND CONTROL

AREA CONTROL PANEL ACP-51000 ELEMENTARY

DWG NO. 900-N-63
DATE AUG. 1990
PROJ NO. SEA22452.C1

DGN NAME: H:/PROJ2/BELLINGH/BL900NBA.DGN

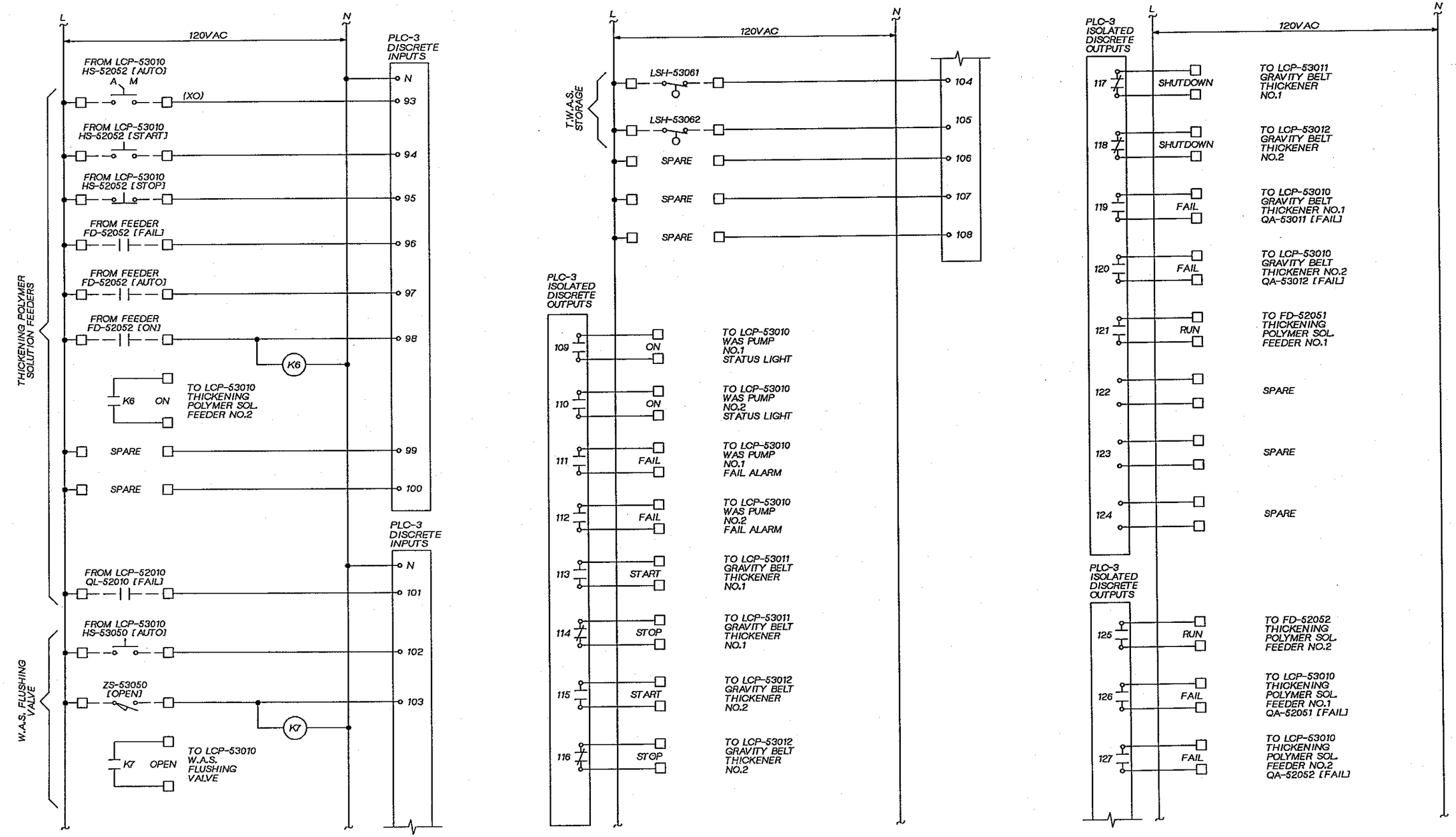

GERALD L. SLATER STATE OF WASHINGTON 17546 REGISTERED PROFESSIONAL ENGINEER

CH2M HILL

DSGN	V. AUSTIN				
DR	G. SLATER				
CHK	J. BLACK				
APVD	J GAUTHIER	NO.	DATE	REVISION	BY / APVD

REUSE OF DOCUMENTS

THIS DOCUMENT, AND THE IDEAS AND DESIGNS INCORPORATED HEREIN, AS AN INSTRUMENT OF PROFESSIONAL SERVICE, IS THE PROPERTY OF CH2M HILL AND IS NOT TO BE USED, IN WHOLE OR IN PART, FOR ANY OTHER PROJECT WITHOUT THE WRITTEN AUTHORIZATION OF CH2M HILL.

©CH2M HILL

BAR IS ONE INCH ON ORIGINAL DRAWING. 0 1"
IF NOT ONE INCH ON THIS SHEET, ADJUST SCALES ACCORDINGLY.

CITY OF BELLINGHAM, WASHINGTON
POST POINT WASTEWATER TREATMENT PLANT UPGRADE

INSTRUMENTATION AND CONTROL

AREA CONTROL PANEL ACP-51000 ELEMENTARY

DWG NO. 900-N-64
DATE AUG. 1990
PROJ. NO. SEA22462.C1

OVERLAY IDENTIFICATION PROJID FILE
COMPOSITE OVERLAY SCREEN

DGN NAME: H:/PROJ2/BELLINGH/BL900NBB.DGN

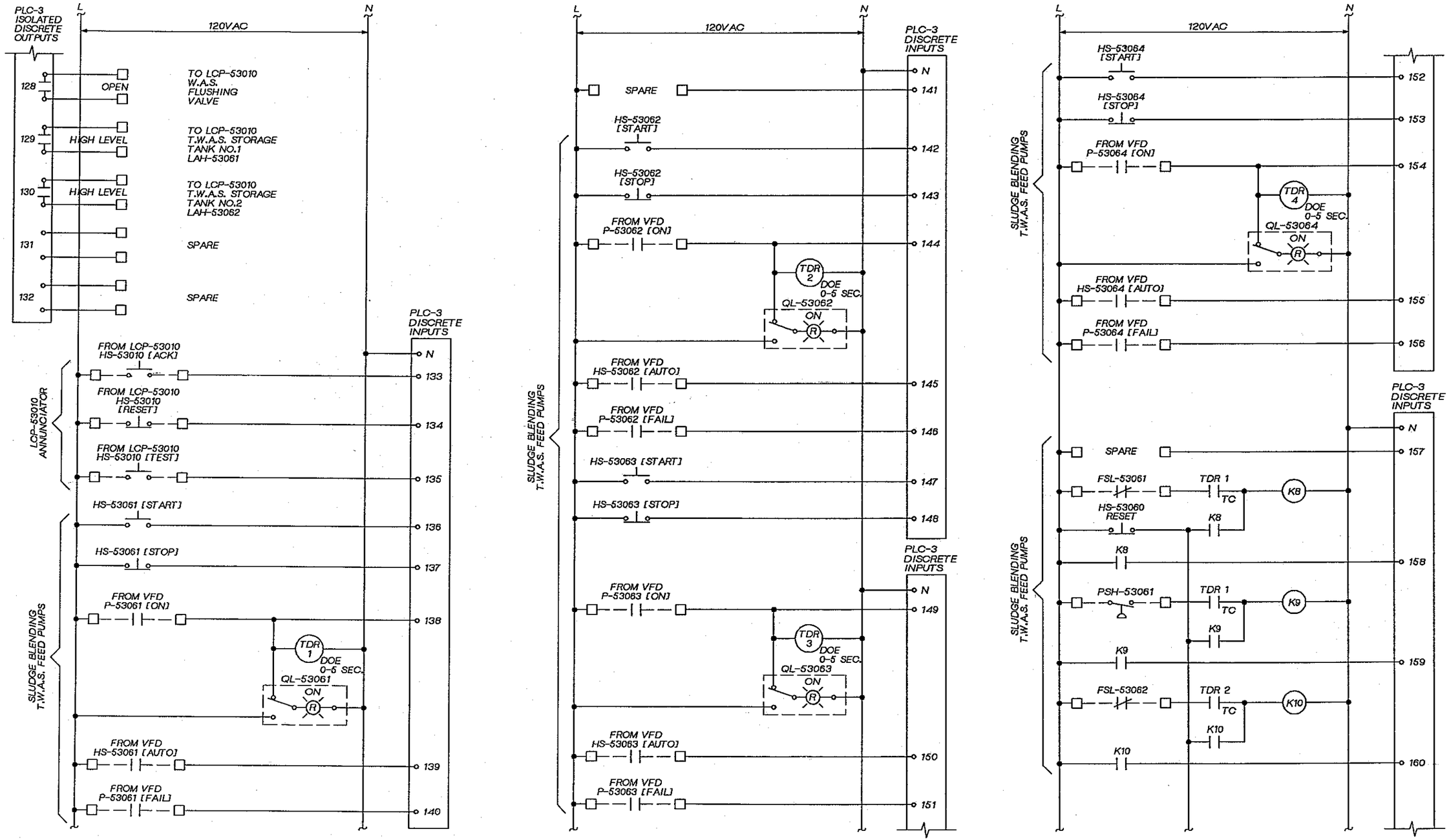

DSGN V. AUSTIN					
DR G. SLAYTER					
CHK J. BLACK					
APVD J GAUTHIER	NO.	DATE	REVISION	BY	APVD

REUSE OF DOCUMENTS
THIS DOCUMENT, AND THE IDEAS AND DESIGNS INCORPORATED HEREIN, AS AN INSTRUMENT OF PROFESSIONAL SERVICE, IS THE PROPERTY OF CH2M HILL AND IS NOT TO BE USED, IN WHOLE OR IN PART, FOR ANY OTHER PROJECT WITHOUT THE WRITTEN AUTHORIZATION OF CH2M HILL.
©CH2M HILL

BAR IS ONE INCH ON ORIGINAL DRAWING. 0 1"
IF NOT ONE INCH ON THIS SHEET, ADJUST SCALES ACCORDINGLY.

CITY OF BELLINGHAM, WASHINGTON
POST POINT WASTEWATER TREATMENT PLANT UPGRADE

INSTRUMENTATION AND CONTROL
AREA CONTROL PANEL
ACP-51000 ELEMENTARY

DWG NO. 900-N-65
DATE AUG. 1990
PROJ NO. SEA22462.C1

JERALD L. SLAYTER, STATE OF WASHINGTON, 17546, REGISTERED PROFESSIONAL ENGINEER

OVERLAY IDENTIFICATION | COMPOSITE | OVERLAY | SCREEN | PROJID | FILE

DGN NAME: H:/PROJ2/BELLINGH/BL900NBC.DGN

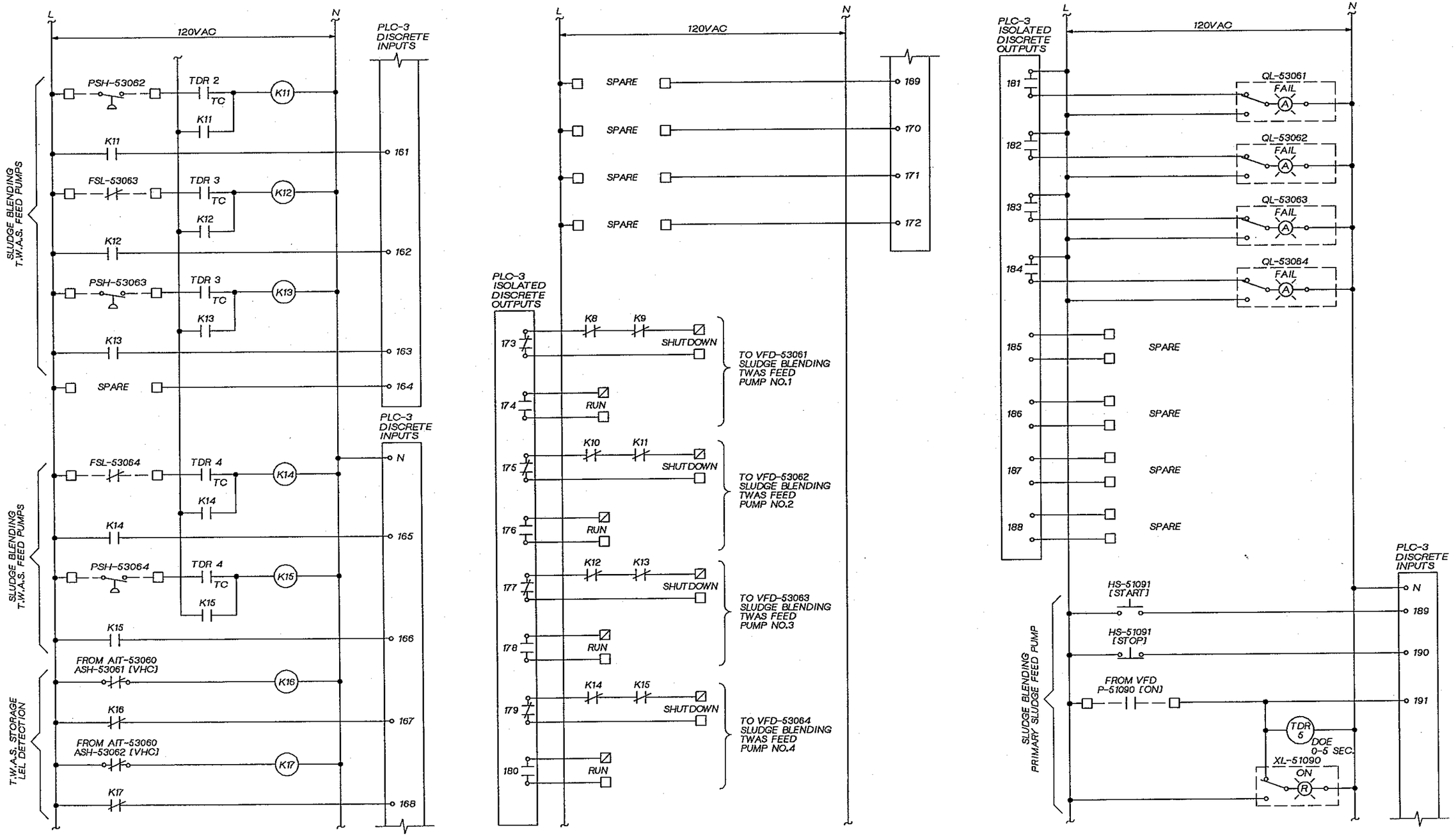

DSGN	V. AUSTIN				
DR	G. SLAYTER				
CHK	J. BLACK				
APVD	J GAUTHIER	NO.	DATE	REVISION	BY / APVD

CH2M HILL

REUSE OF DOCUMENTS
THIS DOCUMENT, AND THE IDEAS AND DESIGNS INCORPORATED HEREIN, AS AN INSTRUMENT OF PROFESSIONAL SERVICE, IS THE PROPERTY OF CH2M HILL AND IS NOT TO BE USED, IN WHOLE OR IN PART, FOR ANY OTHER PROJECT WITHOUT THE WRITTEN AUTHORIZATION OF CH2M HILL.
©CH2M HILL

SCALE: BAR IS ONE INCH ON ORIGINAL DRAWING. 0 — 1" IF NOT ONE INCH ON THIS SHEET, ADJUST SCALES ACCORDINGLY.

CITY OF BELLINGHAM, WASHINGTON
POST POINT WASTEWATER TREATMENT PLANT UPGRADE

INSTRUMENTATION AND CONTROL
AREA CONTROL PANEL
ACP-51000 ELEMENTARY

DWG NO. 900-N-66
DATE AUG. 1990
PROJ. NO. SEA22452.C1

GERALD L. SLAYTER — STATE OF WASHINGTON — 17544 — REGISTERED PROFESSIONAL ENGINEER

OVERLAY IDENTIFICATION: COMPOSITE / OVERLAY / SCREEN
PROJ.ID
FILE

DGN NAME: H:/PROJ2/BELLINGH/BL900NBD.DGN

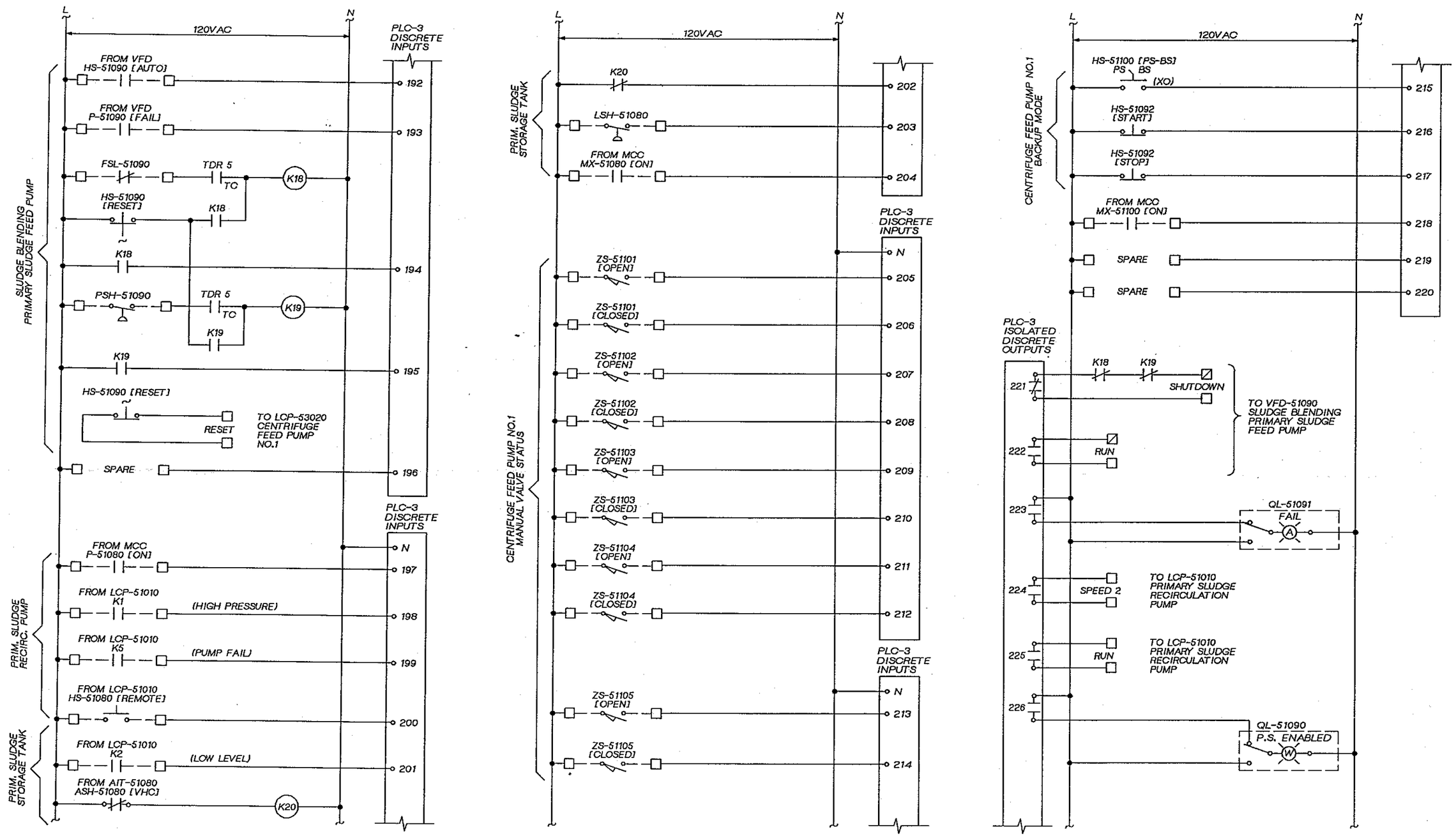

DSGN V. AUSTIN					
DR G. SLAYTER					
CHK J. BLACK					
APVD J GAUTHIER	NO.	DATE	REVISION	BY	APVD

CH2M HILL

REUSE OF DOCUMENTS

THIS DOCUMENT, AND THE IDEAS AND DESIGNS INCORPORATED HEREIN, AS AN INSTRUMENT OF PROFESSIONAL SERVICE, IS THE PROPERTY OF CH2M HILL AND IS NOT TO BE USED, IN WHOLE OR IN PART, FOR ANY OTHER PROJECT WITHOUT THE WRITTEN AUTHORIZATION OF CH2M HILL.

©CH2M HILL

BAR IS ONE INCH ON ORIGINAL DRAWING. 0 1"

IF NOT ONE INCH ON THIS SHEET, ADJUST SCALES ACCORDINGLY.

CITY OF BELLINGHAM, WASHINGTON
POST POINT WASTEWATER TREATMENT PLANT UPGRADE

INSTRUMENTATION AND CONTROL

AREA CONTROL PANEL
ACP-51000 ELEMENTARY

DWG NO. 900-N-67
DATE AUG. 1990
PROJ NO. SEA22452.C1

GERALD L. SLATTER — STATE OF WASHINGTON — 17546 — REGISTERED PROFESSIONAL ENGINEER

COMPOSITE
OVERLAY SCREEN
OVERLAY IDENTIFICATION
PROJ NO
FILE

DGN NAME: H:/PROJ2/BELLINGH/BL900NBE.DGN

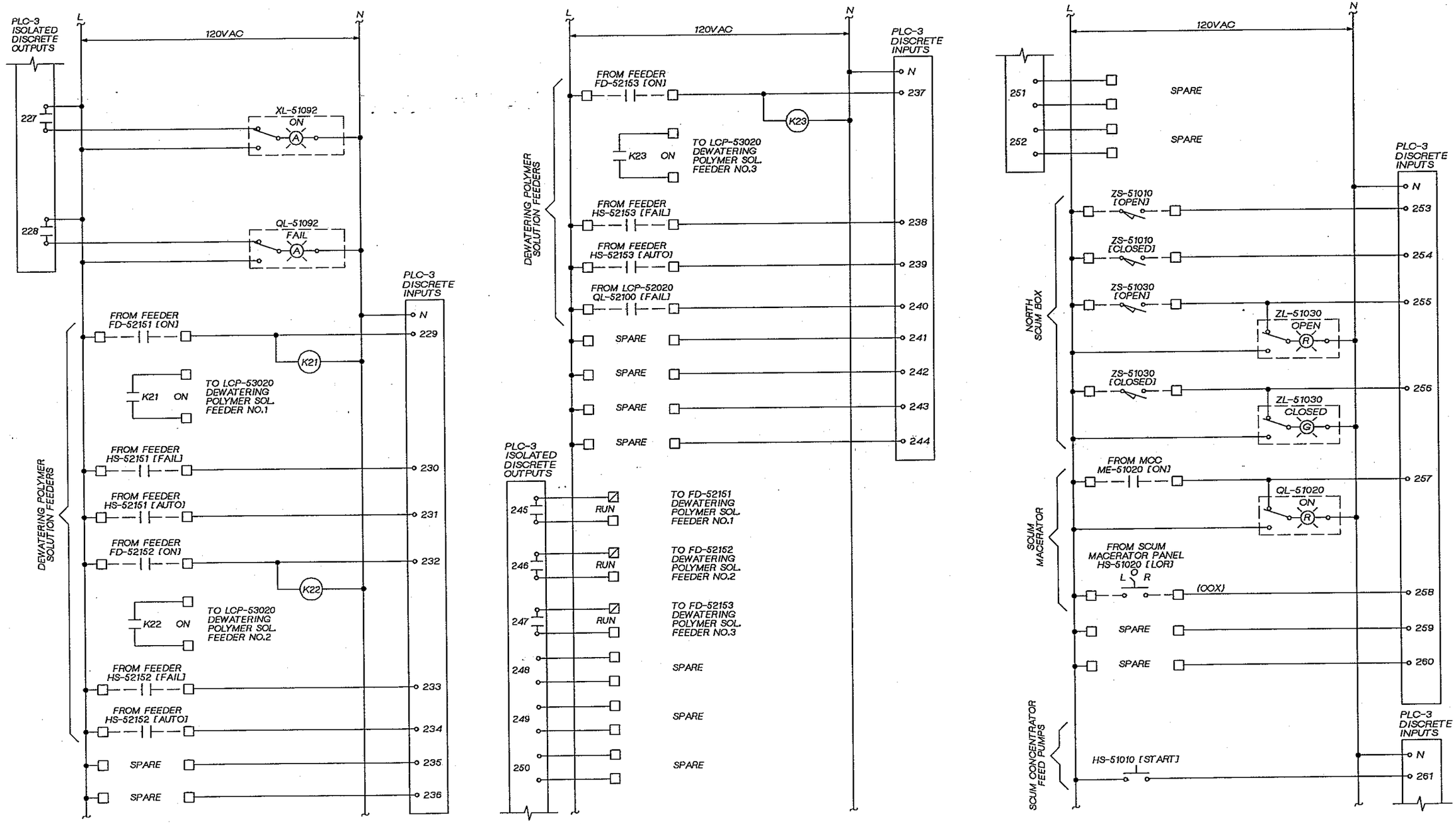

DSGN V. AUSTIN					
DR G. SLAYTER					
CHK J. BLACK					
APVD J GAUTHIER	NO.	DATE	REVISION	BY	APVD

REUSE OF DOCUMENTS
THIS DOCUMENT, AND THE IDEAS AND DESIGNS INCORPORATED HEREIN, AS AN INSTRUMENT OF PROFESSIONAL SERVICE, IS THE PROPERTY OF CH2M HILL AND IS NOT TO BE USED, IN WHOLE OR IN PART, FOR ANY OTHER PROJECT WITHOUT THE WRITTEN AUTHORIZATION OF CH2M HILL.
©CH2M HILL

BAR IS ONE INCH ON ORIGINAL DRAWING. 0 1"
IF NOT ONE INCH ON THIS SHEET, ADJUST SCALES ACCORDINGLY.

CITY OF BELLINGHAM, WASHINGTON
POST POINT WASTEWATER TREATMENT PLANT UPGRADE

INSTRUMENTATION AND CONTROL
AREA CONTROL PANEL
ACP-51000 ELEMENTARY

DWG NO. 900-N-68
DATE AUG. 1990
PROJ NO. SEA22462.C1

OVERLAY IDENTIFICATION: COMPOSITE, OVERLAY, SCREEN; PROJID; FILE

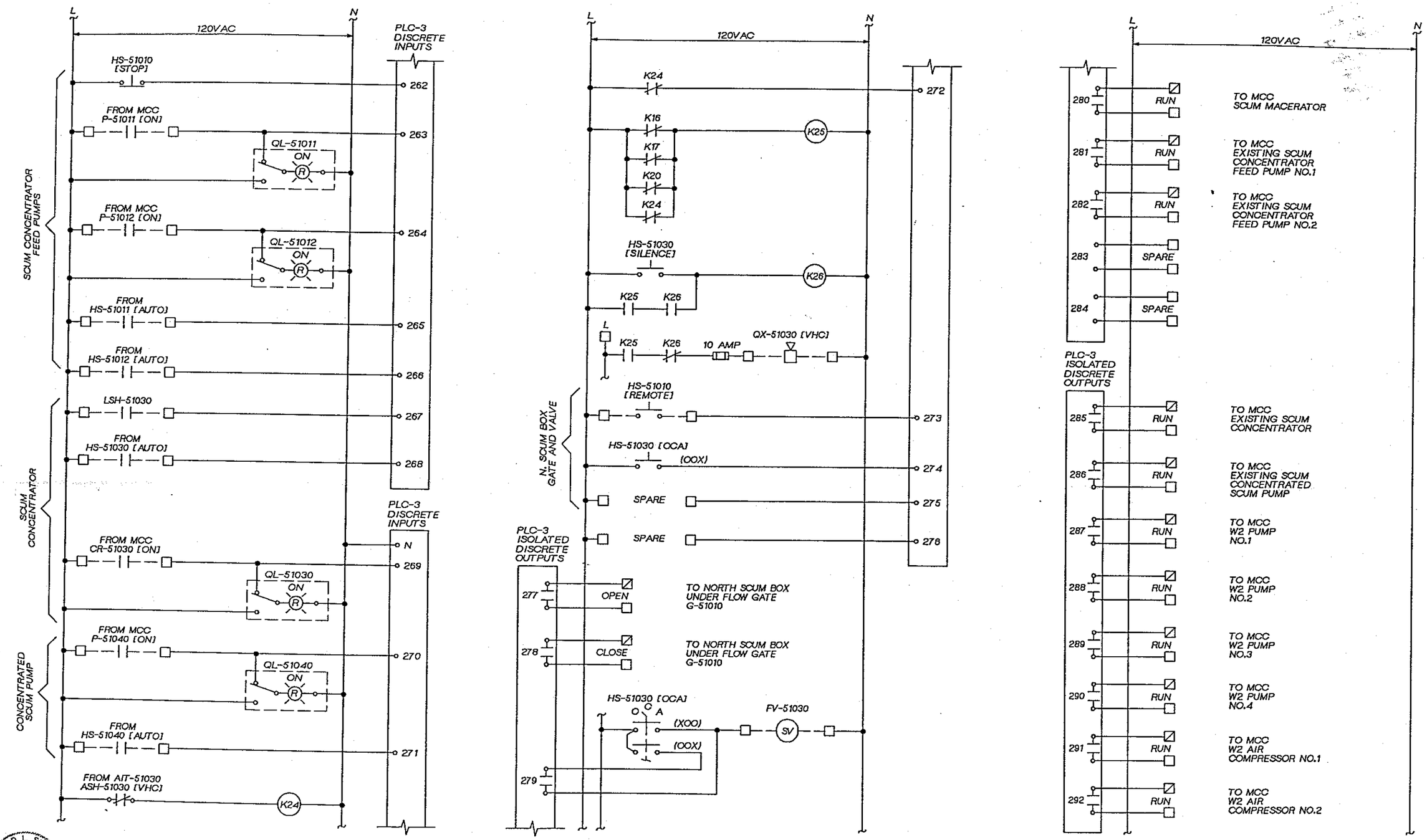

GERALD L. SLATER
STATE OF WASHINGTON
17396
REGISTERED PROFESSIONAL ENGINEER

CH2M HILL

DSGN	V. AUSTIN				
DR	G. SLAYTER				
CHK	J. BLACK				
APVD	J GAUTHIER	NO.	DATE	REVISION	BY / APVD

REUSE OF DOCUMENTS
THIS DOCUMENT, AND THE IDEAS AND DESIGNS INCORPORATED HEREIN, AS AN INSTRUMENT OF PROFESSIONAL SERVICE, IS THE PROPERTY OF CH2M HILL AND IS NOT TO BE USED, IN WHOLE OR IN PART, FOR ANY OTHER PROJECT WITHOUT THE WRITTEN AUTHORIZATION OF CH2M HILL.
©CH2M HILL

BAR IS ONE INCH ON ORIGINAL DRAWING.
0 1"
IF NOT ONE INCH ON THIS SHEET, ADJUST SCALES ACCORDINGLY.

CITY OF BELLINGHAM, WASHINGTON
POST POINT WASTEWATER TREATMENT PLANT UPGRADE

INSTRUMENTATION AND CONTROL
AREA CONTROL PANEL
ACP-51000 ELEMENTARY

DWG NO. 900-N-69
DATE AUG. 1990
PROJ NO. SEA22462.C1

DGN NAME: H:/PROJ2/BELLINGH/BL900NBH.DGN

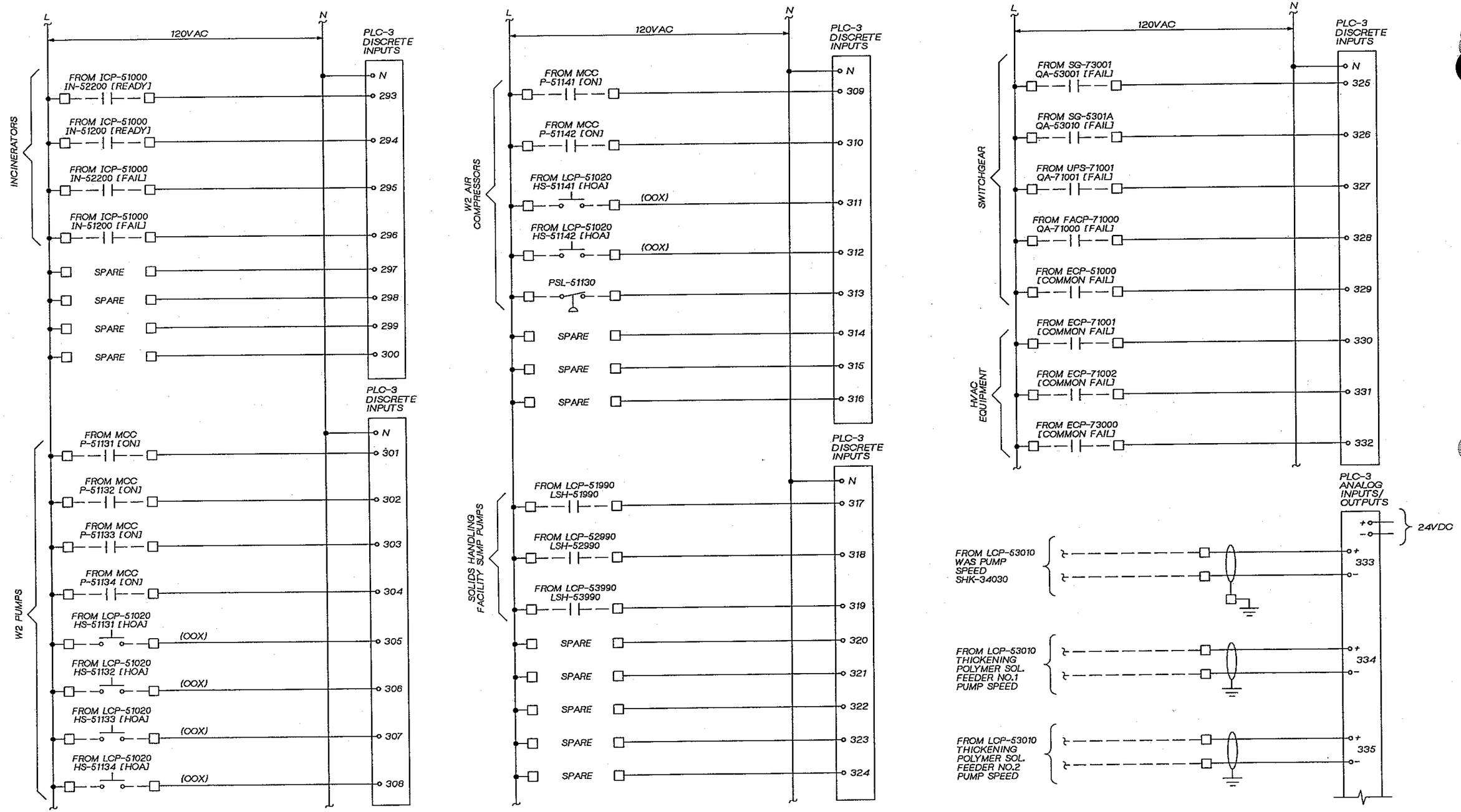

JERALD L. SLATTER STATE OF WASHINGTON 17546 REGISTERED PROFESSIONAL ENGINEER

CH2M HILL

DSGN	V. AUSTIN
DR	G. SLAYTER
CHK	J. BLACK
APVD	J GAUTHIER

NO.	DATE	REVISION	BY	APVD

REUSE OF DOCUMENTS

THIS DOCUMENT, AND THE IDEAS AND DESIGNS INCORPORATED HEREIN, AS AN INSTRUMENT OF PROFESSIONAL SERVICE, IS THE PROPERTY OF CH2M HILL AND IS NOT TO BE USED, IN WHOLE OR IN PART, FOR ANY OTHER PROJECT WITHOUT THE WRITTEN AUTHORIZATION OF CH2M HILL.

©CH2M HILL

BAR IS ONE INCH ON ORIGINAL DRAWING.
0 1"
IF NOT ONE INCH ON THIS SHEET, ADJUST SCALES ACCORDINGLY.

CITY OF BELLINGHAM, WASHINGTON
POST POINT WASTEWATER TREATMENT PLANT UPGRADE

INSTRUMENTATION AND CONTROL

AREA CONTROL PANEL ACP-51000 ELEMENTARY

DWG NO. 900-N-70
DATE AUG. 1990
PROJ. NO. SEA22462.C1

OVERLAY IDENTIFICATION | COMPOSITE | OVERLAY | SCREEN | PROJID | FILE

DGN NAME: H:/PROJ2/BELLINGH/BL900NBI.DGN

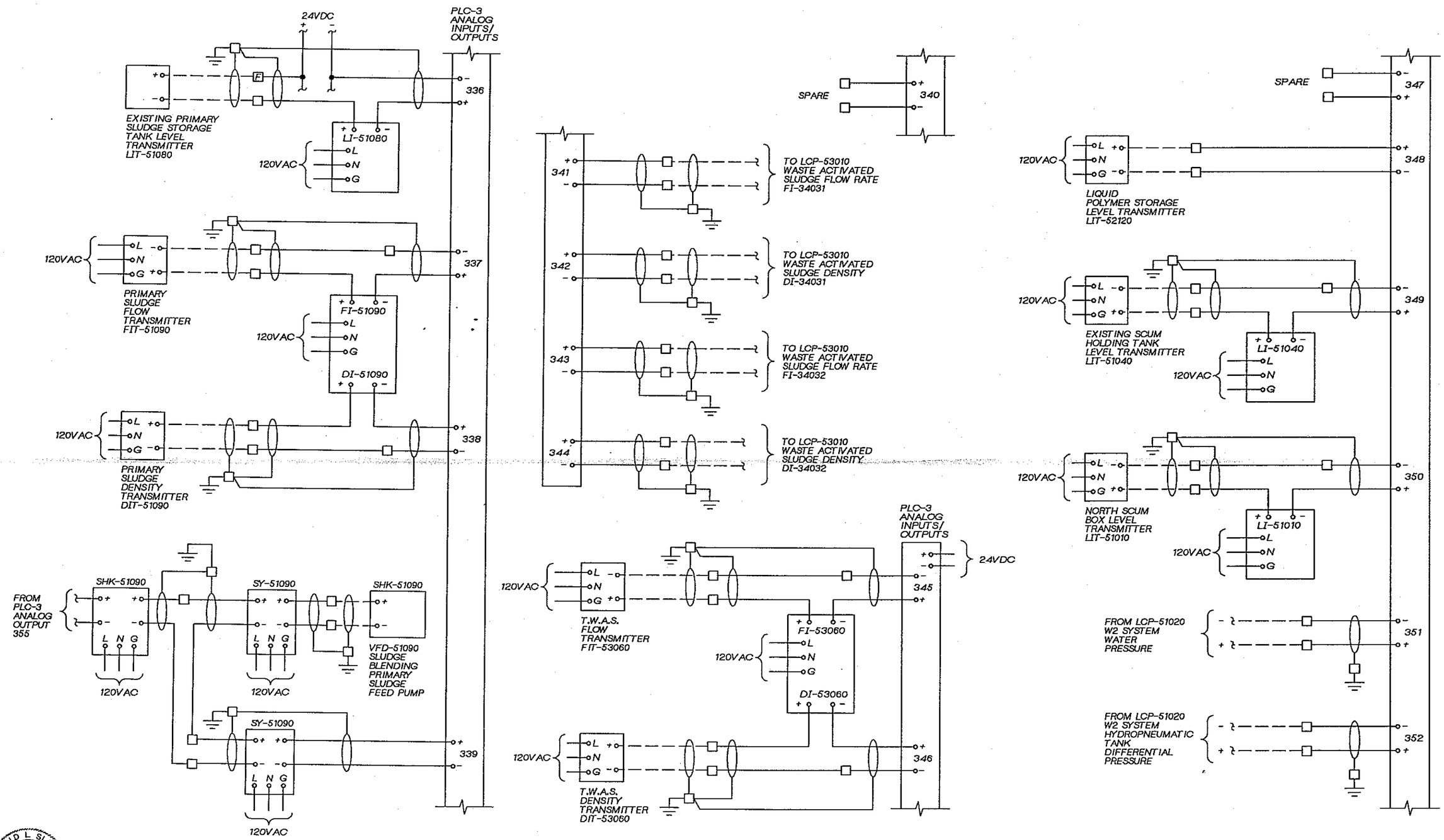

DSGN	V. AUSTIN				
DR	G. SLAYTER				
CHK	J. BLACK				
APVD	J GAUTHIER	NO.	DATE	REVISION	BY / APVD

REUSE OF DOCUMENTS
THIS DOCUMENT, AND THE IDEAS AND DESIGNS INCORPORATED HEREIN, AS AN INSTRUMENT OF PROFESSIONAL SERVICE, IS THE PROPERTY OF CH2M HILL AND IS NOT TO BE USED, IN WHOLE OR IN PART, FOR ANY OTHER PROJECT WITHOUT THE WRITTEN AUTHORIZATION OF CH2M HILL.
© CH2M HILL

BAR IS ONE INCH ON ORIGINAL DRAWING. 0 1"
IF NOT ONE INCH ON THIS SHEET, ADJUST SCALES ACCORDINGLY.

CITY OF BELLINGHAM, WASHINGTON
POST POINT WASTEWATER TREATMENT PLANT UPGRADE

INSTRUMENTATION AND CONTROL
AREA CONTROL PANEL
ACP-51000 ELEMENTARY

DWG NO. 900-N-71
DATE AUG. 1990
PROJ NO. SEA22462.C1

GERALD L SLATTER STATE OF WASHINGTON 17346 REGISTERED PROFESSIONAL ENGINEER

COMPOSITE OVERLAY SCREEN
OVERLAY IDENTIFICATION
PROJID
FILE

DGN NAME: H:/PROJ2/BELLINGH/BL900NCU.DGN

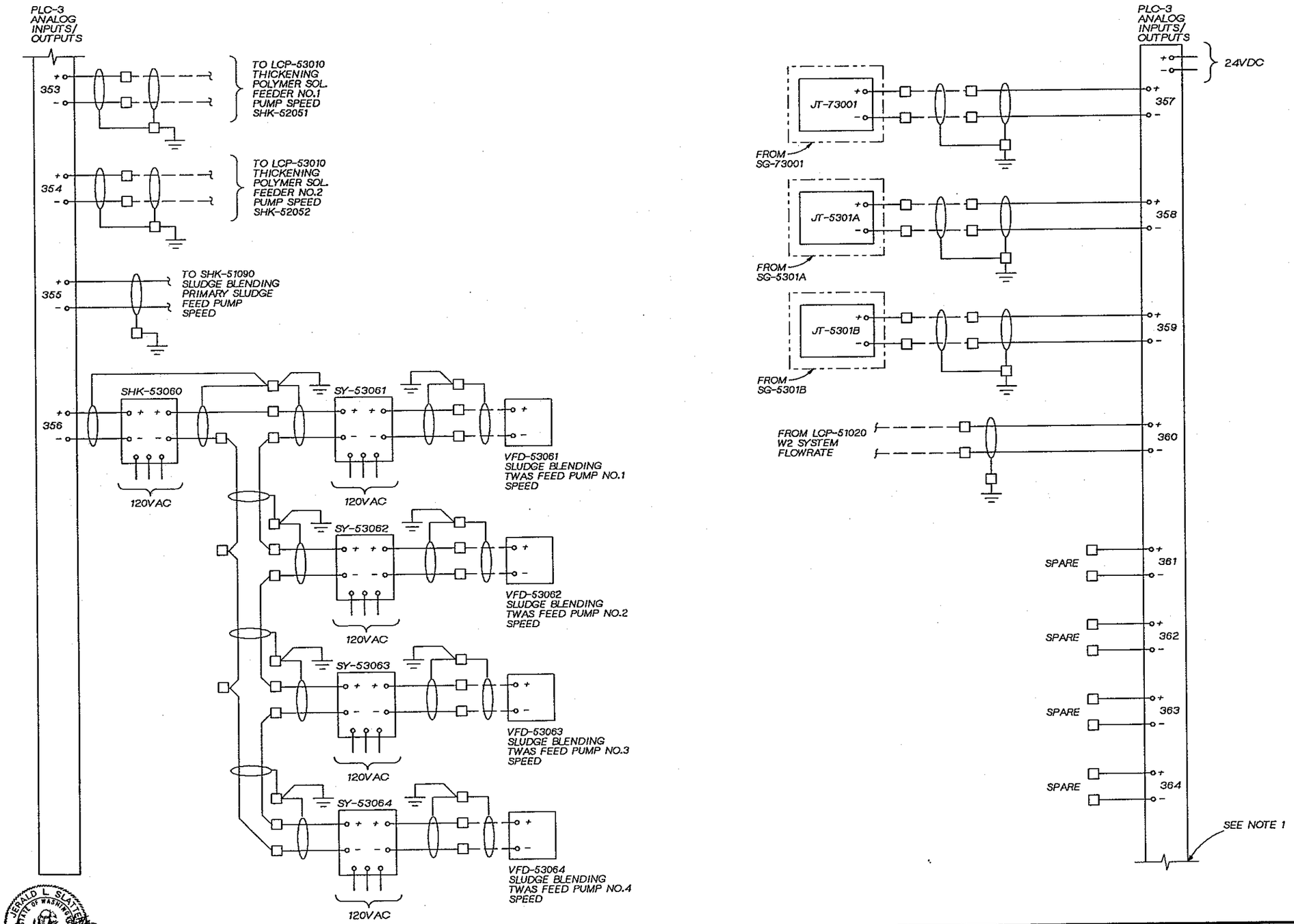

NOTE:
FOUR ANALOG OUTPUT SPARES (365 THROUGH 368) NOT SHOWN FOR THIS MODULE.

GERALD L. SLATTERY — STATE OF WASHINGTON — 17546 — REGISTERED PROFESSIONAL ENGINEER

CH2M HILL

DSGN	V. AUSTIN				
DR	G. SLAYTER				
CHK	J. BLACK				
APVD	J GAUTHIER	NO.	DATE	REVISION	BY / APVD

REUSE OF DOCUMENTS
THIS DOCUMENT, AND THE IDEAS AND DESIGNS INCORPORATED HEREIN, AS AN INSTRUMENT OF PROFESSIONAL SERVICE, IS THE PROPERTY OF CH2M HILL AND IS NOT TO BE USED, IN WHOLE OR IN PART, FOR ANY OTHER PROJECT WITHOUT THE WRITTEN AUTHORIZATION OF CH2M HILL.
©CH2M HILL

BAR IS ONE INCH ON ORIGINAL DRAWING. 0 — 1"
IF NOT ONE INCH ON THIS SHEET, ADJUST SCALES ACCORDINGLY.

CITY OF BELLINGHAM, WASHINGTON
POST POINT WASTEWATER TREATMENT PLANT UPGRADE

INSTRUMENTATION AND CONTROL
AREA CONTROL PANEL
ACP-51000 ELEMENTARY

DWG NO. 900-N-72
DATE AUG. 1990
PROJ. NO. SEA22462.C1

OVERLAY IDENTIFICATION — COMPOSITE — OVERLAY SCREEN — PROJID — FILE

DRAWN BY: G. SLAYTER DESIGNED BY: V. AUSTIN
DGN NAME: H:/PROJ2/BELLINGH/BL900NBJ.DGN

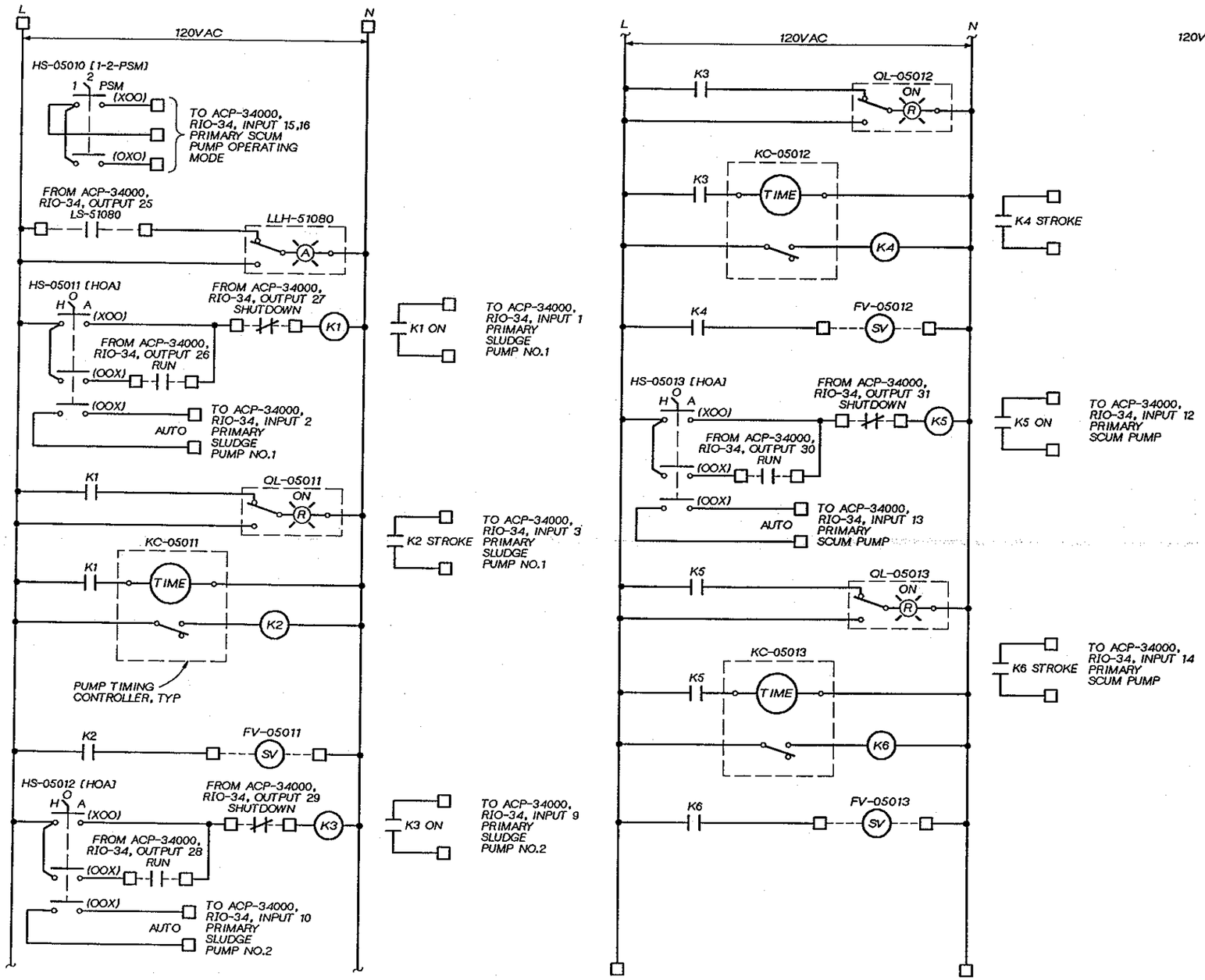

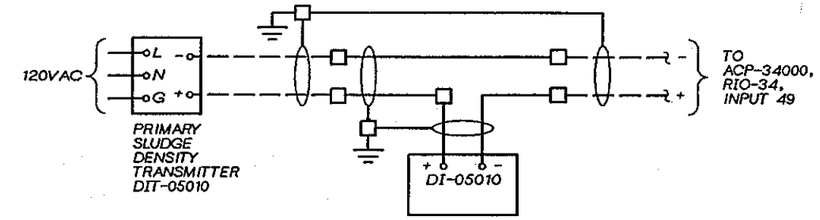

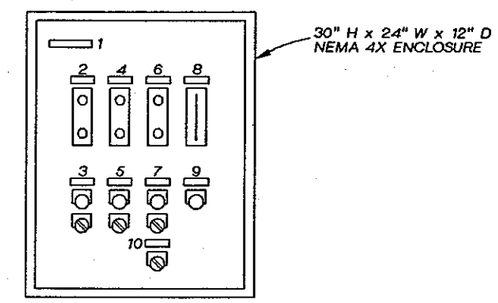

LOCAL CONTROL PANEL LCP-05010

1½" = 1'-0"

LCP-05010 SCHEDULE

ITEM NO.	TAG NO.	NAMEPLATE INSCRIPTION (DESCRIPTION) FIRST LINE / SECOND LINE / THIRD LINE	SPEC NO.
1	-	LCP-05010 / PRIMARY SLUDGE / SCUM PUMPING	
2	KC-05011		K24
3	QL-05011 [ON]	PRIM. SLUDGE / PUMP NO.1	M28
	HS-05011 [HOA]		M26
4	KC-05012		K24
5	QL-05012 [ON]	PRIM. SLUDGE / PUMP NO.2	M28
	HS-05012 [HOA]		M26
6	KC-05013		M24
7	QL-05013 [ON]	PRIM. SCUM PUMP	M28
	HS-05013 [HOA]		M26
8	DI-05010	PRIM. SLUDGE / DENSITY	S10
9	LLH-05010	PRIM. SLUDGE TANK / HIGH LEVEL	M28
10	HS-05010 [1-2-SCUM]	PRIM. SCUM PUMP / OPERATING MODE	M26

GERALD L. SLATER STATE OF WASHINGTON 17546 REGISTERED PROFESSIONAL ENGINEER

CH2M HILL

DSGN	V. AUSTIN
DR	G. SLAYTER
CHK	J.BLACK
APVD	J GAUTHIER

NO.	DATE	REVISION	BY	APVD

REUSE OF DOCUMENTS
THIS DOCUMENT, AND THE IDEAS AND DESIGNS INCORPORATED HEREIN, AS AN INSTRUMENT OF PROFESSIONAL SERVICE, IS THE PROPERTY OF CH2M HILL AND IS NOT TO BE USED, IN WHOLE OR IN PART, FOR ANY OTHER PROJECT WITHOUT THE WRITTEN AUTHORIZATION OF CH2M HILL.
©CH2M HILL

BAR IS ONE INCH ON ORIGINAL DRAWING. 0 1"
IF NOT ONE INCH ON THIS SHEET, ADJUST SCALES ACCORDINGLY.

CITY OF BELLINGHAM, WASHINGTON
POST POINT WASTEWATER TREATMENT PLANT UPGRADE

INSTRUMENTATION AND CONTROL
LCP-05010
ELEVATION AND ELEMENTARY

DWG NO. 900-N-73
DATE AUG. 1990
PROJ NO. SEA22462.C1

OVERLAY IDENTIFICATION | COMPOSITE | OVERLAY SCREEN | PROJ ID | FILE

DRAWN BY: G. SLAYTER DESIGNED BY: V. AUSTIN
DGN NAME: H:/PROJ2/BELLINGH/BL900NCH.DGN

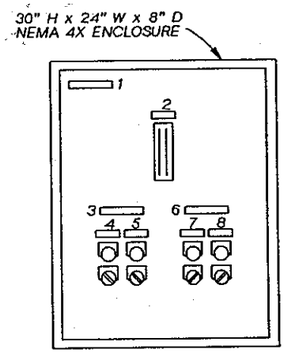

LOCAL CONTROL PANEL LCP-05020
1½" = 1'-0"

LCP-05020 SCHEDULE			
ITEM NO.	TAG NO.	NAMEPLATE INSCRIPTION (DESCRIPTION) FIRST LINE / SECOND LINE / THIRD LINE	SPEC NO.
1	-	LCP-05020 / W3 - W4 WATER SYSTEM	
2	FI-05110	W3 WATER FLOW	S10
	FI-05130	W4 WATER FLOW	
3	-	W3 WATER PUMPS	
4	QL-05111 [ON]	PUMP NO.1	M28
	HS-05111 [HOA]		M26
5	QL-05112 [ON]	PUMP NO.2	M28
	HS-05112 [HOA]		M26
6	-	W4 WATER PUMPS	
7	QL-05131 [ON]	PUMP NO.1	M28
	HS-05131 [HOA]		M26
8	QL-05132 [ON]	PUMP NO.2	M28
	HS-05132 [HOA]		M26

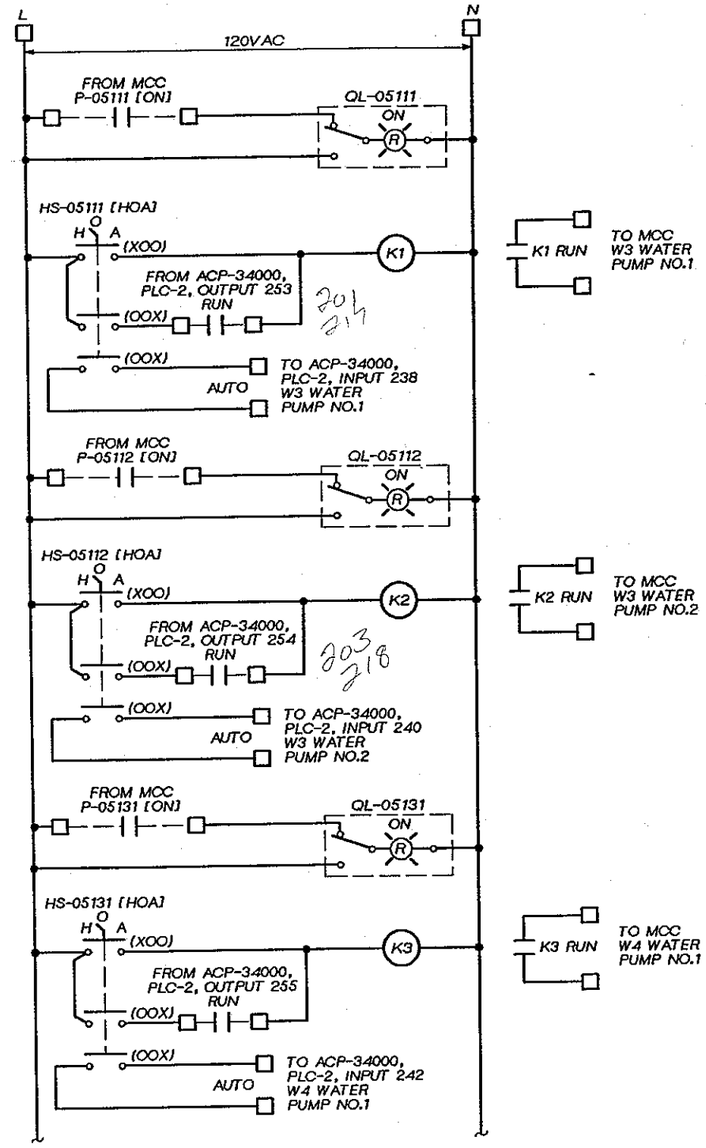

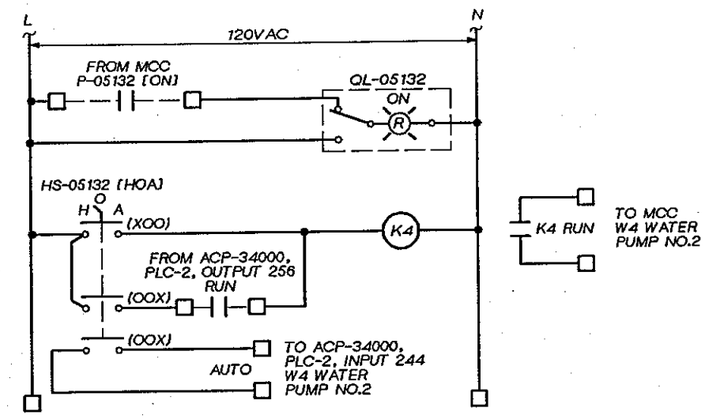

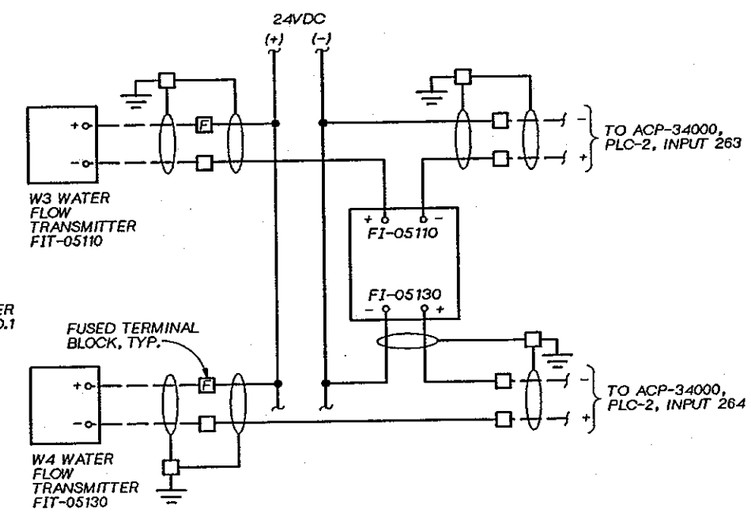

GERALD L SLATTERY
STATE OF WASHINGTON
17544
REGISTERED PROFESSIONAL ENGINEER

CH2M HILL

DSGN	V. AUSTIN
DR	G. SLAYTER
CHK	J. BLACK
APVD	J GAUTHIER

NO.	DATE	REVISION	BY	APVD

REUSE OF DOCUMENTS
THIS DOCUMENT, AND THE IDEAS AND DESIGNS INCORPORATED HEREIN, AS AN INSTRUMENT OF PROFESSIONAL SERVICE, IS THE PROPERTY OF CH2M HILL AND IS NOT TO BE USED, IN WHOLE OR IN PART, FOR ANY OTHER PROJECT WITHOUT THE WRITTEN AUTHORIZATION OF CH2M HILL.
©CH2M HILL

BAR IS ONE INCH ON ORIGINAL DRAWING.
0 1"
IF NOT ONE INCH ON THIS SHEET, ADJUST SCALES ACCORDINGLY.

CITY OF BELLINGHAM, WASHINGTON
POST POINT WASTEWATER TREATMENT PLANT UPGRADE

INSTRUMENTATION AND CONTROL
LCP-05020
ELEVATION AND ELEMENTARY

DWG NO. 900-N-74
DATE AUG. 1990
PROJ. NO. SEA22462.C1

OVERLAY IDENTIFICATION: COMPOSITE, OVERLAY, SCREEN, PROJ, FILE

DRAWN BY: G. SLAYTER DESIGNED BY: V. AUSTIN
DGN NAME: H:/PROJ2/BELLINGH/BL900NDB.DGN

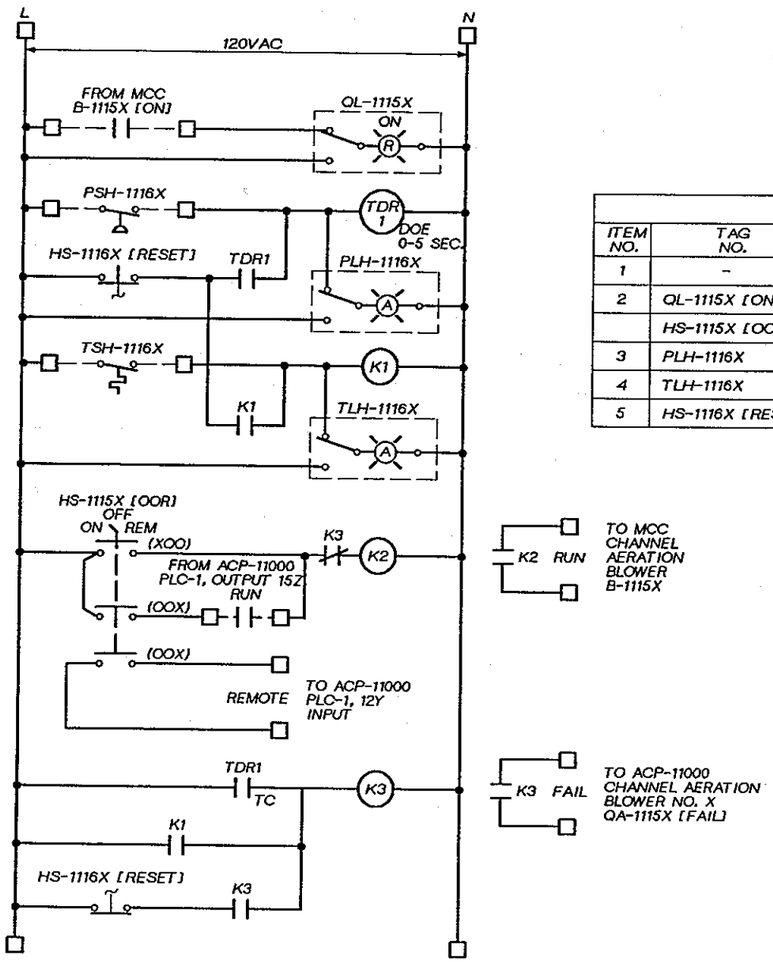

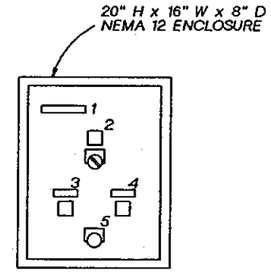

LOCAL CONTROL PANEL LCP-1101X

(TYP X=1,2; Y=3,6; Z=7,8)
1½" = 1'-0"

LCP-1101X SCHEDULE (X=1,2)			
ITEM NO.	TAG NO.	NAMEPLATE INSCRIPTION (DESCRIPTION) FIRST LINE / SECOND LINE / THIRD LINE	SPEC NO.
1	-	LCP-1101X / CHANNEL AERATION BLOWER / B-1115X	
2	QL-1115X [ON]		M06
	HS-1115X [OOR]		M22
3	PLH-1116X	CHAN. AER. BLOWER / HIGH PRESSURE	M06
4	TLH-1116X	CHAN. AER. BLOWER / HIGH TEMPERATURE	M06
5	HS-1116X [RESET]		M16

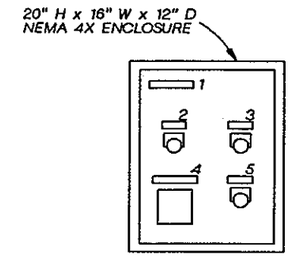

LOCAL CONTROL PANEL LCP-13020

1½" = 1'-0"

LCP-13020 SCHEDULE			
ITEM NO.	TAG NO.	NAMEPLATE INSCRIPTION (DESCRIPTION) FIRST LINE / SECOND LINE / THIRD LINE	SPEC NO.
1	-	LCP-13020 / CHEMICAL STORAGE TANKS	
2	LLH-13020	HYDROGEN PEROXIDE / HIGH LEVEL	M28
3	LLH-13030	SODIUM HYDROXIDE / HIGH LEVEL	M28
4	QX-13020	STOP LOADING	M30
5	HS-13020 [RESET]	SILENCE HORN	M27

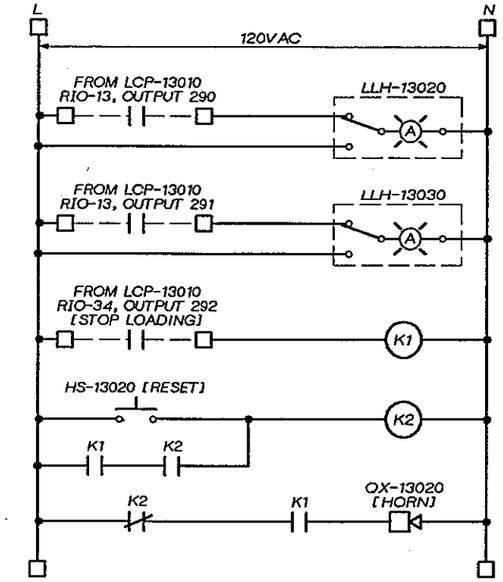

JERALD L. SLAYTER
STATE OF WASHINGTON
17946
REGISTERED PROFESSIONAL ENGINEER

CH2M HILL

DSGN	V. AUSTIN
DR	G. SLAYTER
CHK	J. BLACK
APVD	J GAUTHIER

NO.	DATE	REVISION	BY	APVD

REUSE OF DOCUMENTS
THIS DOCUMENT, AND THE IDEAS AND DESIGNS INCORPORATED HEREIN, AS AN INSTRUMENT OF PROFESSIONAL SERVICE, IS THE PROPERTY OF CH2M HILL AND IS NOT TO BE USED, IN WHOLE OR IN PART, FOR ANY OTHER PROJECT WITHOUT THE WRITTEN AUTHORIZATION OF CH2M HILL.
©CH2M HILL

BAR IS ONE INCH ON ORIGINAL DRAWING.
0 1"
IF NOT ONE INCH ON THIS SHEET, ADJUST SCALES ACCORDINGLY.

CITY OF BELLINGHAM, WASHINGTON
POST POINT WASTEWATER TREATMENT PLANT UPGRADE

INSTRUMENTATION AND CONTROL
LCP-1101X, LCP-13020
ELEVATION AND ELEMENTARY

DWG NO. 900-N-75
DATE AUG. 1990
PROJ. NO. SEA22462.C1

OVERLAY IDENTIFICATION | COMPOSITE | OVERLAY | SCREEN
PROJ/D | FILE

DRAWN BY: G. SLAYTER DESIGNED BY: V. AUSTIN
DGN NAME: H:/PROJ2/BELLINGH/BL900NBL.DGN

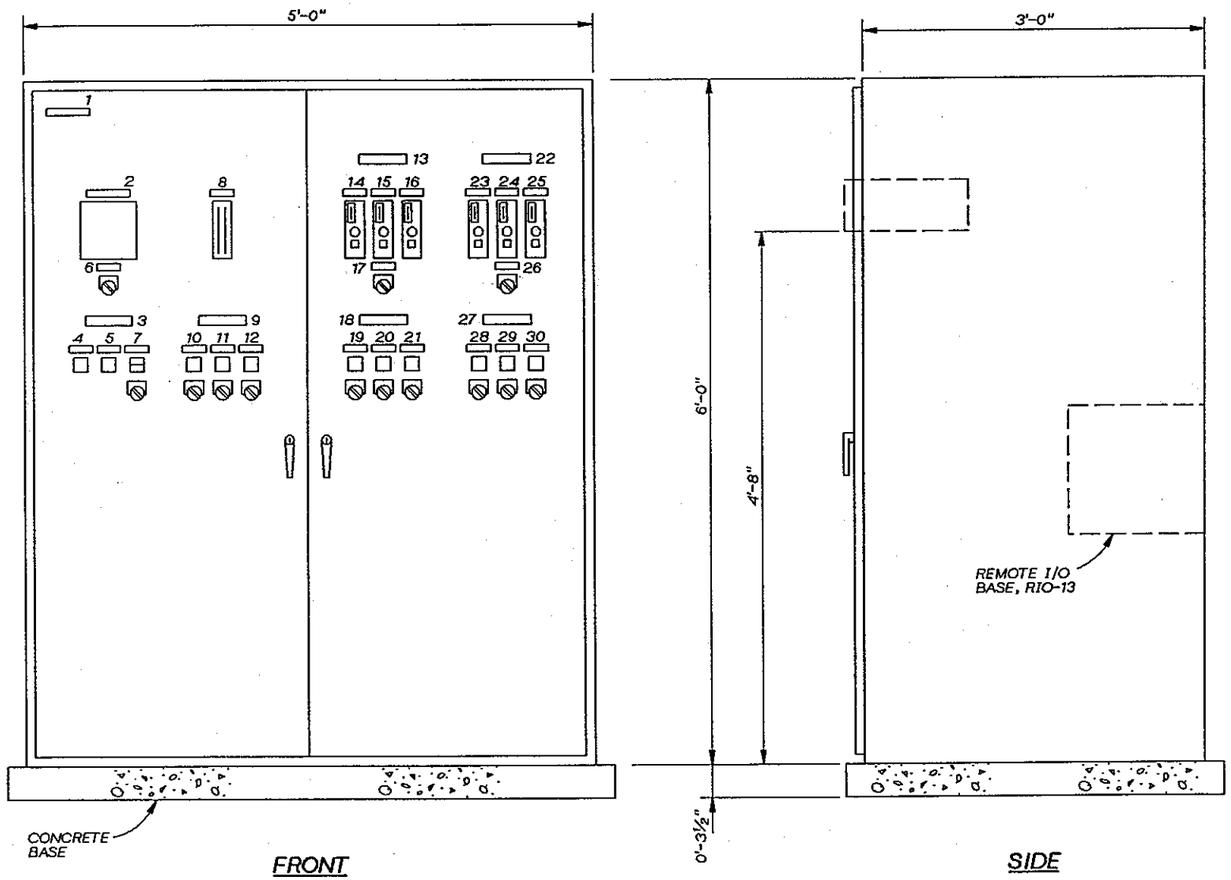

NOTE:
SECURE PANEL ENCLOSURE TO CONCRETE BASE WITH ⅜" CONCRETE ANCHORS.

LOCAL CONTROL PANEL LCP-13010
1½" = 1'-0"

LCP-13010 SCHEDULE

ITEM NO.	TAG NO.	NAMEPLATE INSCRIPTION (DESCRIPTION) FIRST LINE / SECOND LINE / THIRD LINE	SPEC NO.
1	-	LCP-13010 / PRELIMINARY TREATMENT / ODOR CONTROL	
2	AIT-13010 [pH]	SCRUBBER / RECIRCULATION pH	A07
3	-	SCRUBBER LOW LEVEL	
4	LLL-13011	SCRUBBER NO. 1	M06
5	LLL-13012	SCRUBBER NO. 2	M06
6	HS-13010 [1-2]	SCRUBBER LEVEL / CONTROL SELECTOR	M22
7	ZL-13010 [OPEN]	SCRUBBER BLOWDOWN / VALVE	M05
	ZL-13010 [CLOSED]		
	HS-13010 [OCA]		M22
8	AI-53200 [pH]	SOLIDS AIR / SCRUBBER NO.1 / pH	S26
	AI-53210 [pH]	SOLIDS AIR / SCRUBBER NO.2 / pH	
9	-	SCRUBBER RECIRCULATION PUMPS	
10	QL-13011 [ON]	PUMP NO.1	M06
	HS-13011 [OO]		M22
11	QL-13012 [ON]	PUMP NO.2	M06
	HS-13012 [OO]		M22
12	QL-13013 [ON]	PUMP NO.3	M06
	HS-13013 [OO]		M22
13	-	HYDROGEN PEROXIDE / FEED PUMPS	
14	SHK-13021 [AM]	SOLIDS HANDLING / FEED RATE	S12
15	SHK-13022	BACKUP PUMP / FEED RATE	S12
16	SHK-13023 [AM]	PRELIM. TREAT. / FEED RATE	S12
17	HS-13020 [PRELIM-OFF-SOLIDS]	HYDROGEN PEROXIDE / BACKUP PUMP / OPERATING MODE	M22
18	-	HYDROGEN PEROXIDE / FEED PUMPS	
19	QL-13021 [ON]	PUMP NO.1	M06
	HS-13021 [HOA]		M22
20	QL-13022 [ON]	PUMP NO.2 / (BACKUP)	M06
	HS-13022 [HOA]		M22
21	QL-13023 [ON]	PUMP NO.3	M06
	HS-13023 [HOA]		M22
22	-	SODIUM HYDROXIDE / FEED PUMPS	
23	SHK-13031 [AM]	SOLIDS HANDLING / FEED RATE	S12
24	SHK-13032	BACKUP PUMP / FEED RATE	S12
25	SHK-13033 [AM]	PRELIM. TREAT. / FEED RATE	S12
26	HS-13030 [PRELIM-OFF-SOLIDS]	SODIUM HYDROXIDE / BACKUP PUMP / OPERATING MODE	M22
27	-	SODIUM HYDROXIDE / FEED PUMPS	
28	QL-13031 [ON]	PUMP NO.1	M06
	HS-13031 [HOA]		M22
29	QL-13032 [ON]	PUMP NO.2 / (BACKUP)	M06
	HS-13032 [HOA]		M22
30	QL-13033 [ON]	PUMP NO.3	M06
	HS-13033 [HOA]		M22

GERALD L. SLATTER, STATE OF WASHINGTON, 17546, REGISTERED PROFESSIONAL ENGINEER

CH2M HILL

DSGN	V. AUSTIN
DR	G. SLAYTER
CHK	J. BLACK
APVD	J GAUTHIER

NO.	DATE	REVISION	BY	APVD

REUSE OF DOCUMENTS
THIS DOCUMENT, AND THE IDEAS AND DESIGNS INCORPORATED HEREIN, AS AN INSTRUMENT OF PROFESSIONAL SERVICE, IS THE PROPERTY OF CH2M HILL AND IS NOT TO BE USED, IN WHOLE OR IN PART, FOR ANY OTHER PROJECT WITHOUT THE WRITTEN AUTHORIZATION OF CH2M HILL.
©CH2M HILL

BAR IS ONE INCH ON ORIGINAL DRAWING.
0 1"
IF NOT ONE INCH ON THIS SHEET, ADJUST SCALES ACCORDINGLY.

CITY OF BELLINGHAM, WASHINGTON
POST POINT WASTEWATER TREATMENT PLANT UPGRADE

INSTRUMENTATION AND CONTROL
LCP-13010
ELEVATION

DWG NO. 900-N-76
DATE AUG. 1990
PROJ NO. SEA22462.C1

OVERLAY IDENTIFICATION | COMPOSITE | OVERLAY | SCREEN | PROJID | FILE

DRAWN BY: G. SLAYTER DESIGNED BY: V. AUSTIN
DGN NAME: H:/PROJ2/BELLINGH/BL900NBM.DGN

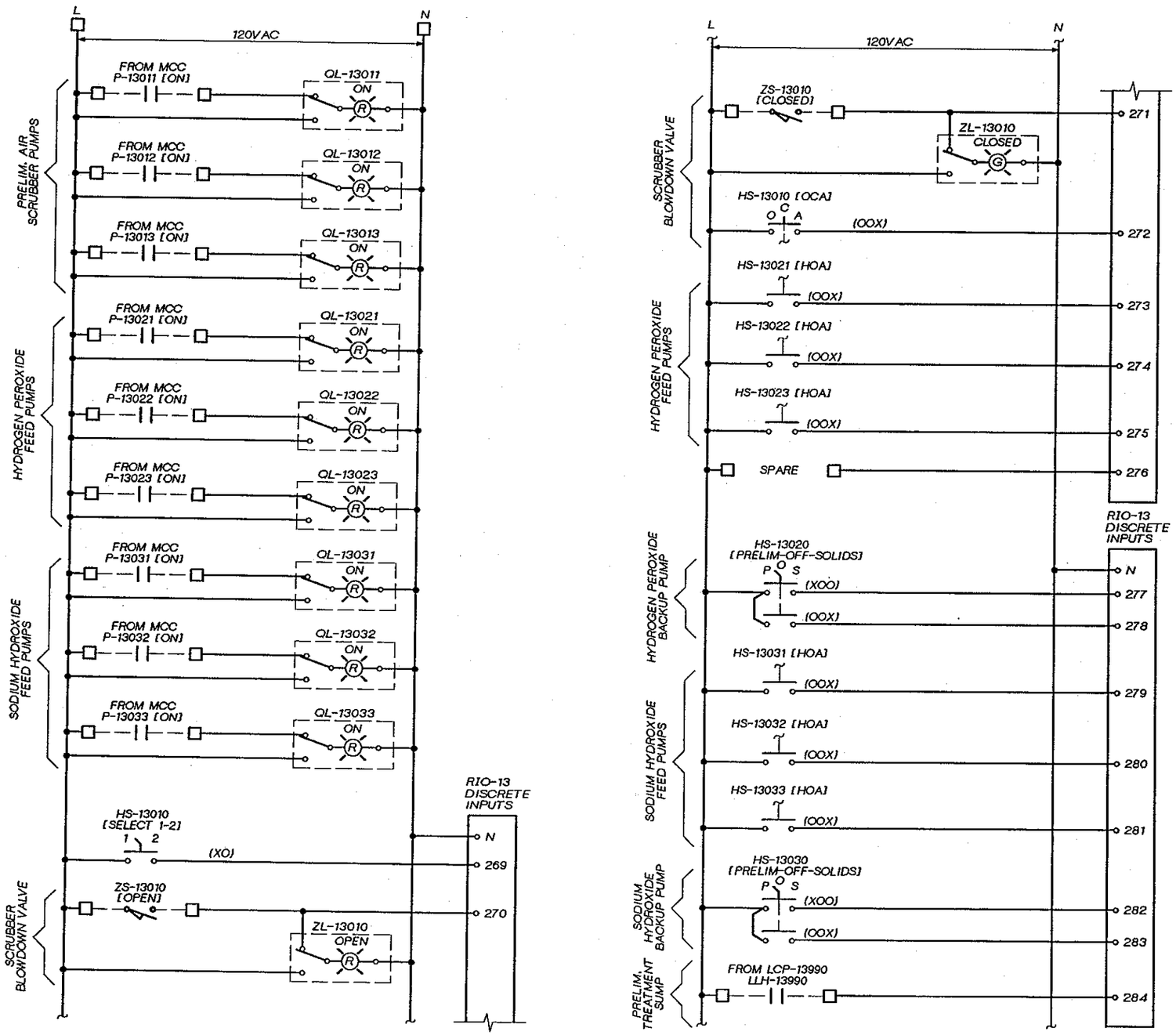

JERALD L SLATTER STATE OF WASHINGTON 11546 REGISTERED PROFESSIONAL ENGINEER

CH2M HILL

DSGN	V. AUSTIN				
DR	G. SLAYTER				
CHK	J. BLACK				
APVD	J GAUTHIER	NO.	DATE	REVISION	BY / APVD

REUSE OF DOCUMENTS
THIS DOCUMENT, AND THE IDEAS AND DESIGNS INCORPORATED HEREIN, AS AN INSTRUMENT OF PROFESSIONAL SERVICE, IS THE PROPERTY OF CH2M HILL AND IS NOT TO BE USED, IN WHOLE OR IN PART, FOR ANY OTHER PROJECT WITHOUT THE WRITTEN AUTHORIZATION OF CH2M HILL.
©CH2M HILL

BAR IS ONE INCH ON ORIGINAL DRAWING. 0 1"
IF NOT ONE INCH ON THIS SHEET, ADJUST SCALES ACCORDINGLY.

CITY OF BELLINGHAM, WASHINGTON
POST POINT WASTEWATER TREATMENT PLANT UPGRADE

INSTRUMENTATION AND CONTROL
LCP-13010
ELEMENTARY

DWG NO. 900-N-77
DATE AUG. 1990
PROJ NO. SEA22462.C1

OVERLAY IDENTIFICATION | COMPOSITE | OVERLAY | SCREEN
PROJID
FILE

DRAWN BY: G. SLAYTER DESIGNED BY: V. AUSTIN
DGN NAME: H:/PROJ2/BELLINGH/BL900NBN.DGN

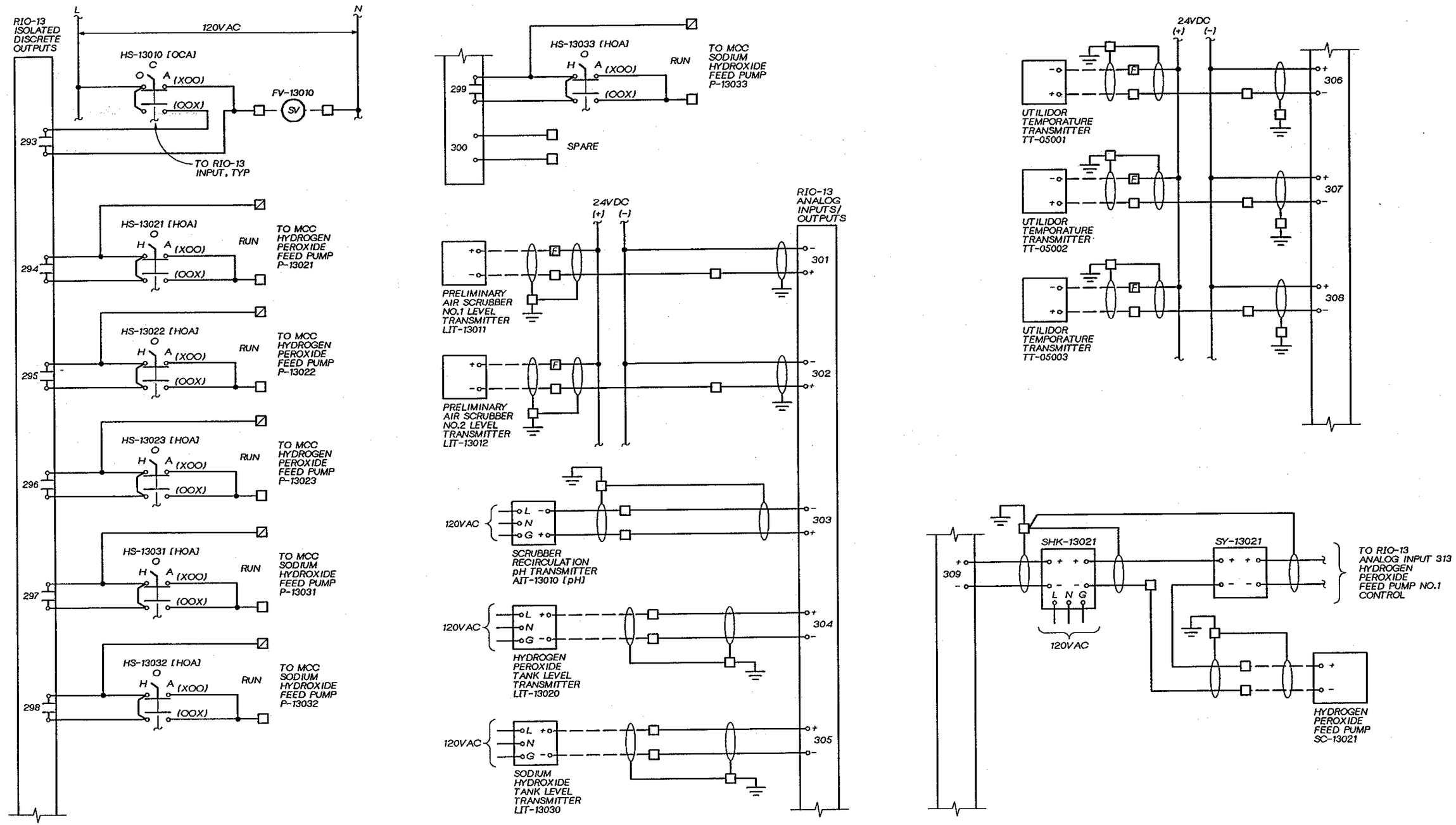

DSGN V. AUSTIN						
DR G. SLAYTER						
CHK J. BLACK						
APVD J GAUTHIER	NO.	DATE	REVISION	BY	APVD	

CH2M HILL

REUSE OF DOCUMENTS
THIS DOCUMENT, AND THE IDEAS AND DESIGNS INCORPORATED HEREIN, AS AN INSTRUMENT OF PROFESSIONAL SERVICE, IS THE PROPERTY OF CH2M HILL AND IS NOT TO BE USED, IN WHOLE OR IN PART, FOR ANY OTHER PROJECT WITHOUT THE WRITTEN AUTHORIZATION OF CH2M HILL.
©CH2M HILL

BAR IS ONE INCH ON ORIGINAL DRAWING.
0 1"
IF NOT ONE INCH ON THIS SHEET, ADJUST SCALES ACCORDINGLY.

CITY OF BELLINGHAM, WASHINGTON
POST POINT WASTEWATER TREATMENT PLANT UPGRADE

INSTRUMENTATION AND CONTROL
LCP-13010
ELEMENTARY

DWG NO. 900-N-78
DATE AUG. 1990
PROJ NO. SEA22462.C1

OVERLAY IDENTIFICATION
COMPOSITE
OVERLAY SCREEN
PROJID
FILE

DRAWN BY: G. SLAYTER DESIGNED BY: V. AUSTIN
DGN NAME: H:/PROJ2/BELLINGH/BL900NBO.DGN

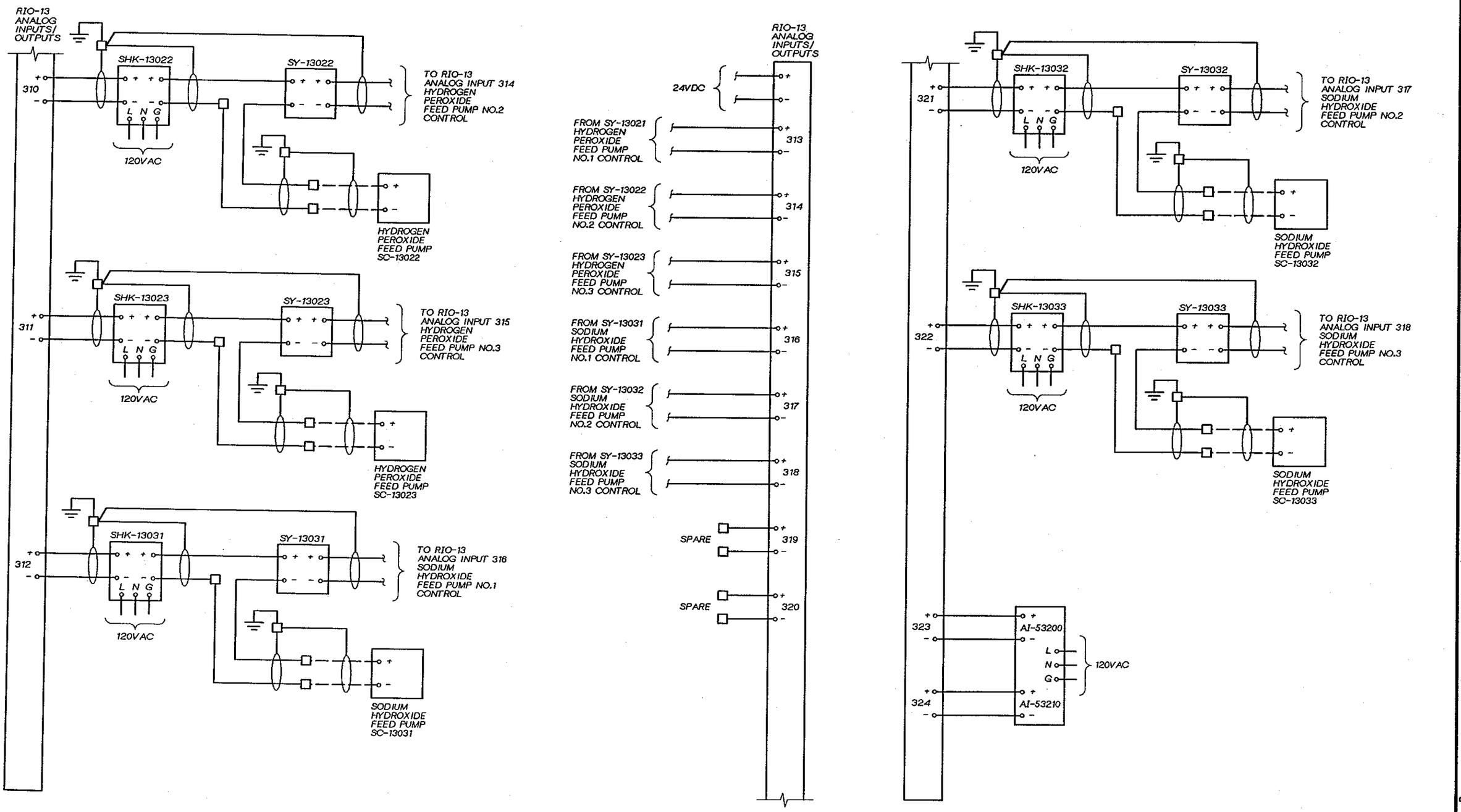

JERALD L. SLATER STATE OF WASHINGTON REGISTERED PROFESSIONAL ENGINEER

CH2M HILL

DSGN	V. AUSTIN
DR	G. SLAYTER
CHK	J. BLACK
APVD	J GAUTHIER

NO.	DATE	REVISION	BY	APVD

REUSE OF DOCUMENTS
THIS DOCUMENT, AND THE IDEAS AND DESIGNS INCORPORATED HEREIN, AS AN INSTRUMENT OF PROFESSIONAL SERVICE, IS THE PROPERTY OF CH2M HILL AND IS NOT TO BE USED, IN WHOLE OR IN PART, FOR ANY OTHER PROJECT WITHOUT THE WRITTEN AUTHORIZATION OF CH2M HILL.
©CH2M HILL

BAR IS ONE INCH ON ORIGINAL DRAWING.
0 1"
IF NOT ONE INCH ON THIS SHEET, ADJUST SCALES ACCORDINGLY.

CITY OF BELLINGHAM, WASHINGTON
POST POINT WASTEWATER TREATMENT PLANT UPGRADE

INSTRUMENTATION AND CONTROL
LCP-13010
ELEMENTARY

DWG NO. 900-N-79
DATE AUG. 1990
PROJ NO. SEA22462.C1

OVERLAY IDENTIFICATION | COMPOSITE | OVERLAY SCREEN | PROJD | FILE

DRAWN BY: G. SLAYTER DESIGNED BY: V. AUSTIN
DGN NAME: H:/PROJ2/BELLINGH/BL900NBP.DGN

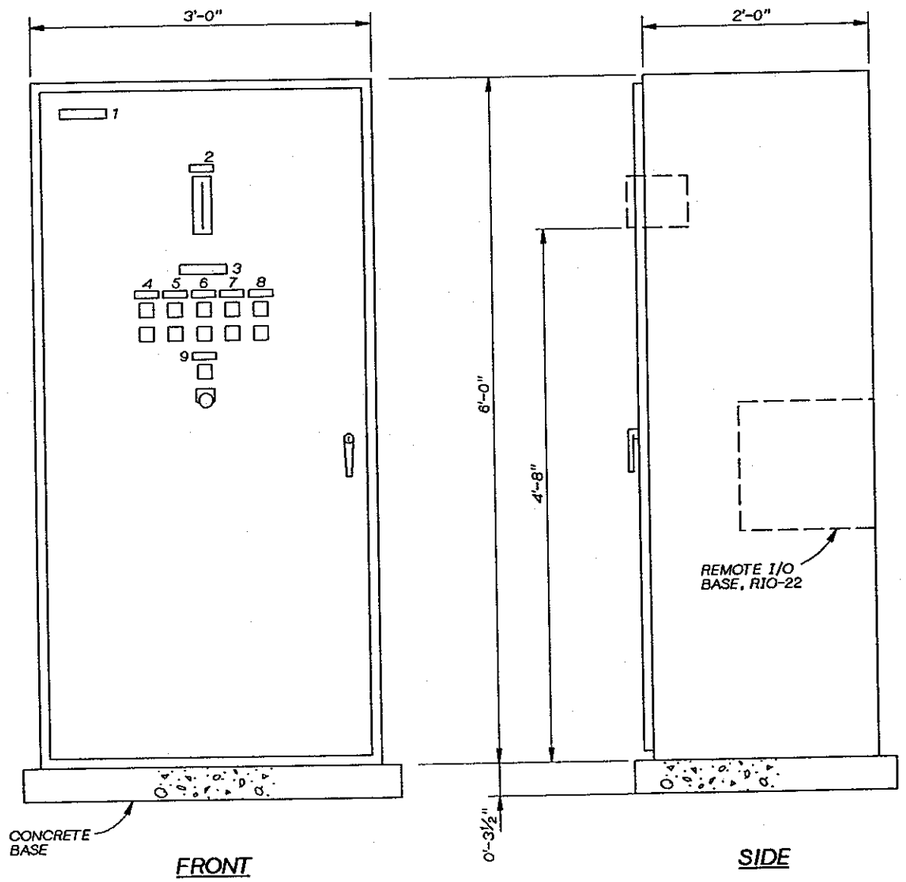

LOCAL CONTROL PANEL LCP-22010
1½" = 1'-0"

LCP-22010 SCHEDULE			
ITEM NO.	TAG NO.	NAMEPLATE INSCRIPTION (DESCRIPTION) FIRST LINE / SECOND LINE / THIRD LINE	SPEC NO.
1	-	LCP-22010 / PRIMARY EFFLUENT PUMPS	
2	LI-22010	PRIMARY EFFLUENT / WET WELL LEVEL	S26
3	-	PRIMARY EFFLUENT PUMPS	
4	XL-22011 [ON]	PUMP NO.1	M06
	QL-22011 [FAIL]		M06
5	XL-22012 [ON]	PUMP NO.2	M06
	QL-22012 [FAIL]		M06
6	XL-22013 [ON]	PUMP NO.3	M06
	QL-22013 [FAIL]		M06
7	XL-22014 [ON]	PUMP NO.4	M06
	QL-22014 [FAIL]		M06
8	XL-22015 [ON]	PUMP NO.5	M06
	QL-22015 [FAIL]		M06
9	LLL-22010	LOW LEVEL	M06
	HS-22010 [RESET]		M16

JERALD L. SLAYTER, STATE OF WASHINGTON, 17156, REGISTERED PROFESSIONAL ENGINEER

CH2M HILL

DSGN V. AUSTIN
DR G. SLAYTER
CHK J. BLACK
APVD J GAUTHIER

NO.	DATE	REVISION	BY	APVD

REUSE OF DOCUMENTS
THIS DOCUMENT, AND THE IDEAS AND DESIGNS INCORPORATED HEREIN, AS AN INSTRUMENT OF PROFESSIONAL SERVICE, IS THE PROPERTY OF CH2M HILL AND IS NOT TO BE USED, IN WHOLE OR IN PART, FOR ANY OTHER PROJECT WITHOUT THE WRITTEN AUTHORIZATION OF CH2M HILL.
©CH2M HILL

BAR IS ONE INCH ON ORIGINAL DRAWING.
0 1"
IF NOT ONE INCH ON THIS SHEET, ADJUST SCALES ACCORDINGLY.

CITY OF BELLINGHAM, WASHINGTON
POST POINT WASTEWATER TREATMENT PLANT UPGRADE

INSTRUMENTATION AND CONTROL
LCP-22010
ELEVATION

DWG NO. 900-N-80
DATE AUG. 1990
PROJ. NO. SEA22462.C1

OVERLAY IDENTIFICATION | COMPOSITE | OVERLAY SCREEN | PROJ.ID | FILE

DRAWN BY: G. SLAYTER DESIGNED BY: V. AUSTIN
DGN NAME: H:/PROJ2/BELLINGH/BL900NBT.DGN

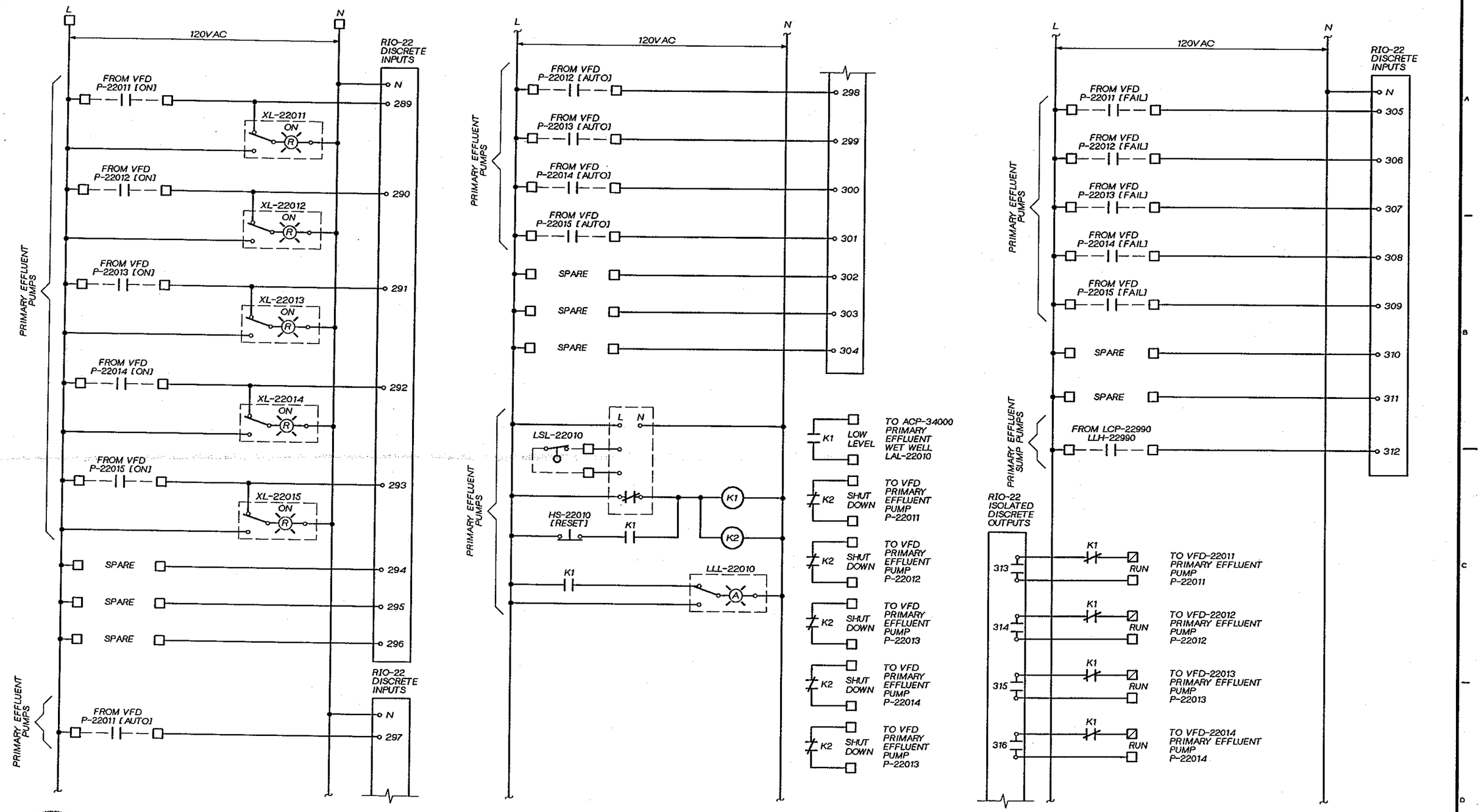

JERALD L. SLATER STATE OF WASHINGTON 15546 REGISTERED PROFESSIONAL ENGINEER

CH2M HILL

DSGN	V. AUSTIN			
DR	G. SLAYTER			
CHK	J. BLACK			
APVD	J GAUTHIER	NO.	DATE	REVISION

BY | APVD

REUSE OF DOCUMENTS
THIS DOCUMENT, AND THE IDEAS AND DESIGNS INCORPORATED HEREIN, AS AN INSTRUMENT OF PROFESSIONAL SERVICE, IS THE PROPERTY OF CH2M HILL AND IS NOT TO BE USED, IN WHOLE OR IN PART, FOR ANY OTHER PROJECT WITHOUT THE WRITTEN AUTHORIZATION OF CH2M HILL.
©CH2M HILL

BAR IS ONE INCH ON ORIGINAL DRAWING. 0 1"
IF NOT ONE INCH ON THIS SHEET, ADJUST SCALES ACCORDINGLY.

CITY OF BELLINGHAM, WASHINGTON
POST POINT WASTEWATER TREATMENT PLANT UPGRADE

INSTRUMENTATION AND CONTROL
LCP-22010
ELEMENTARY

DWG NO. 900-N-81
DATE AUG. 1990
PROJ. NO. SEA22462.C1

OVERLAY IDENTIFICATION: COMPOSITE, OVERLAY SCREEN, PROJ.ID, FILE

DRAWN BY: G. SLAYTER DESIGNED BY: V. AUSTIN
DGN NAME: H:/PROJ2/BELLINGH/BL900NBY.DGN

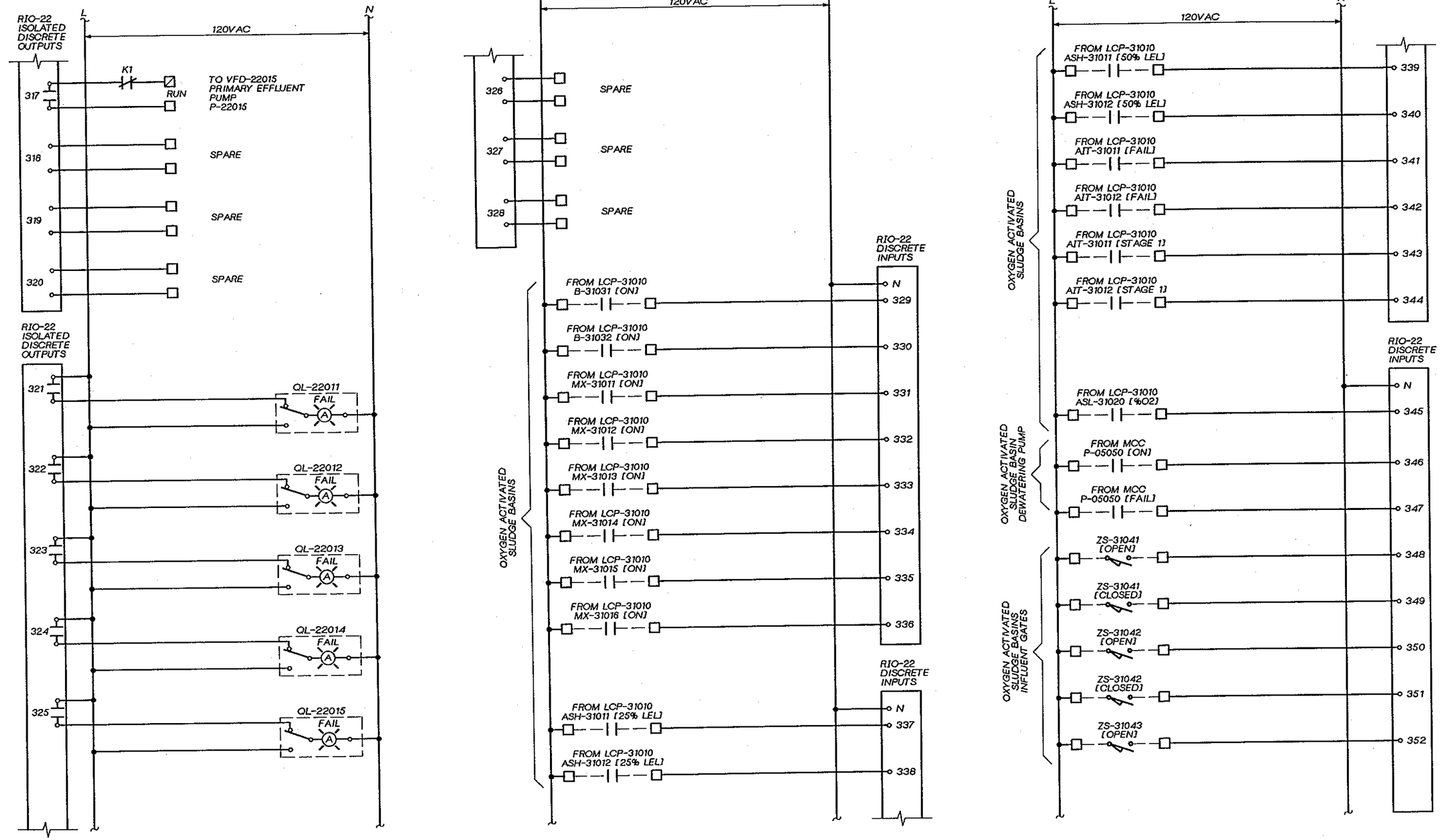

DSGN	V. AUSTIN		
DR	G. SLAYTER		
CHK	J. BLACK		
APVD	J GAUTHIER		

CH2M HILL

NO.	DATE	REVISION	BY	APVD

REUSE OF DOCUMENTS
THIS DOCUMENT, AND THE IDEAS AND DESIGNS INCORPORATED HEREIN, AS AN INSTRUMENT OF PROFESSIONAL SERVICE, IS THE PROPERTY OF CH2M HILL AND IS NOT TO BE USED, IN WHOLE OR IN PART, FOR ANY OTHER PROJECT WITHOUT THE WRITTEN AUTHORIZATION OF CH2M HILL.
©CH2M HILL

BAR IS ONE INCH ON ORIGINAL DRAWING.
0 1"
IF NOT ONE INCH ON THIS SHEET, ADJUST SCALES ACCORDINGLY.

CITY OF BELLINGHAM, WASHINGTON
POST POINT WASTEWATER TREATMENT PLANT UPGRADE

INSTRUMENTATION AND CONTROL
LCP-22010
ELEMENTARY

DWG NO. 900-N-82
DATE AUG. 1990
PROJ NO. SEA22462.C1

OVERLAY IDENTIFICATION: COMPOSITE, OVERLAY SCREEN, PROJ/D, FILE

DRAWN BY: G. SLAYTER DESIGNED BY: V. AUSTIN
DGN NAME: H:/PROJ2/BELLINGH/BL900NCA.DGN

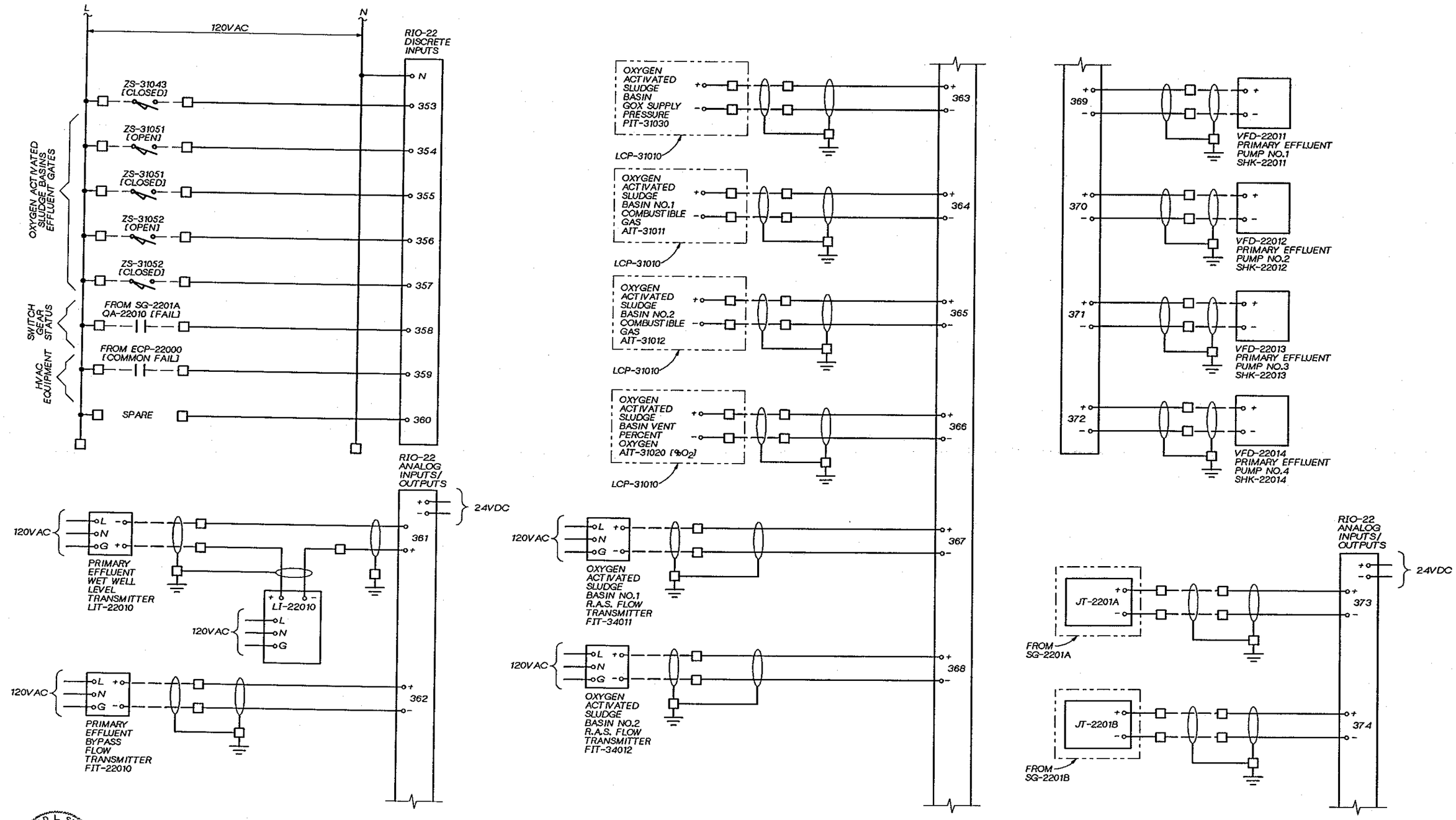

DSGN	V. AUSTIN				
DR	G. SLAYTER				
CHK	J. BLACK				
APVD	J GAUTHIER	NO.	DATE	REVISION	BY / APVD

CH2M HILL

REUSE OF DOCUMENTS
THIS DOCUMENT, AND THE IDEAS AND DESIGNS INCORPORATED HEREIN, AS AN INSTRUMENT OF PROFESSIONAL SERVICE, IS THE PROPERTY OF CH2M HILL AND IS NOT TO BE USED, IN WHOLE OR IN PART, FOR ANY OTHER PROJECT WITHOUT THE WRITTEN AUTHORIZATION OF CH2M HILL.
©CH2M HILL

BAR IS ONE INCH ON ORIGINAL DRAWING. 0 1"
IF NOT ONE INCH ON THIS SHEET, ADJUST SCALES ACCORDINGLY.

CITY OF BELLINGHAM, WASHINGTON
POST POINT WASTEWATER TREATMENT PLANT UPGRADE

INSTRUMENTATION AND CONTROL
LCP-22010
ELEMENTARY

DWG NO. 900-N-83
DATE AUG. 1990
PROJ. NO. SEA22462.C1

JERALD L. SLAYTER STATE OF WASHINGTON 11596 REGISTERED PROFESSIONAL ENGINEER

OVERLAY IDENTIFICATION: COMPOSITE, OVERLAY SCREEN, PROJD, FILE

DRAWN BY: G. SLAYTER DESIGNED BY: V. AUSTIN
DGN NAME: H:/PROJ2/BELLINGH/BL900NDS.DGN

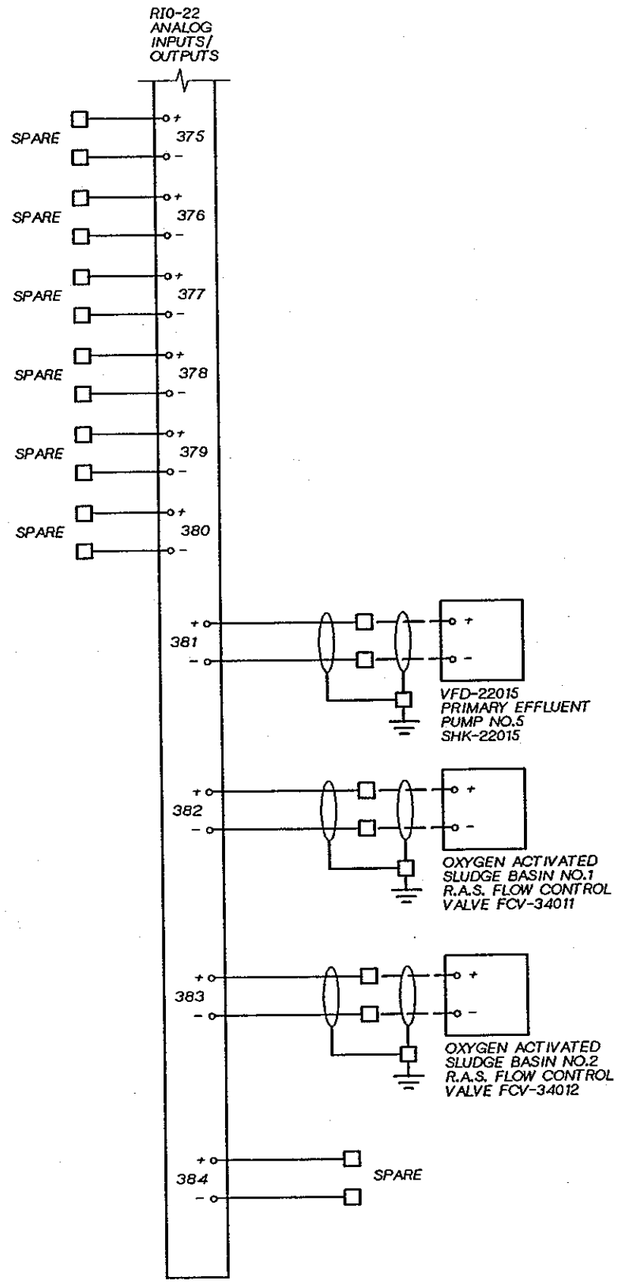

JERALD L. SLATTER
STATE OF WASHINGTON
REGISTERED
PROFESSIONAL ENGINEER

CH2M HILL

DSGN	V. AUSTIN
DR	G. SLAYTER
CHK	J. BLACK
APVD	J GAUTHIER

NO.	DATE	REVISION	BY	APVD

REUSE OF DOCUMENTS
THIS DOCUMENT, AND THE IDEAS AND DESIGNS INCORPORATED HEREIN, AS AN INSTRUMENT OF PROFESSIONAL SERVICE, IS THE PROPERTY OF CH2M HILL AND IS NOT TO BE USED, IN WHOLE OR IN PART, FOR ANY OTHER PROJECT WITHOUT THE WRITTEN AUTHORIZATION OF CH2M HILL.
©CH2M HILL

BAR IS ONE INCH ON ORIGINAL DRAWING.
0 1"
IF NOT ONE INCH ON THIS SHEET, ADJUST SCALES ACCORDINGLY.

CITY OF BELLINGHAM, WASHINGTON
POST POINT WASTEWATER TREATMENT PLANT UPGRADE

INSTRUMENTATION AND CONTROL
LCP-22010
ELEMENTARY

DWG NO. 900-N-84
DATE AUG. 1990
PROJ NO. SEA22462.C1

OVERLAY IDENTIFICATION: COMPOSITE, OVERLAY, SCREEN
PROJ ID
FILE

DRAWN BY: G. SLAYTER DESIGNED BY: V. AUSTIN
DGN NAME: H:/PROJ2/BELLINGH/BL900NCE.DGN

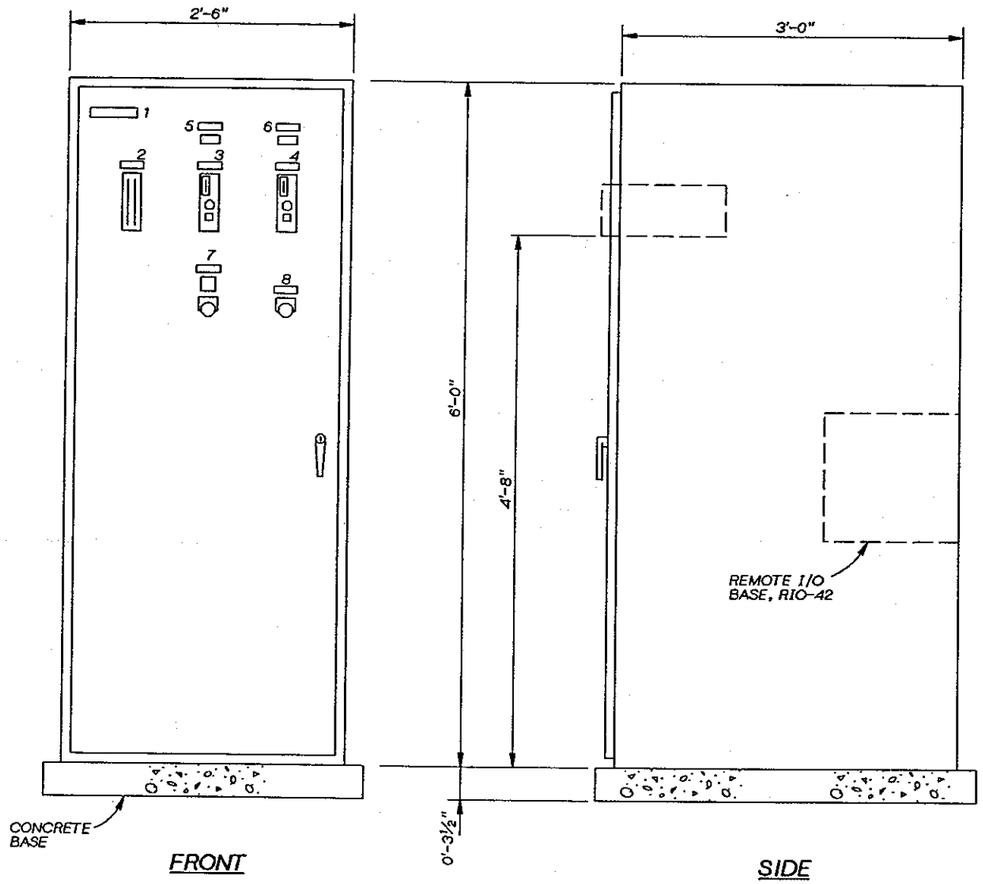

LOCAL CONTROL PANEL LCP-42010
1½" = 1'-0"

NOTES:
1. SECURE PANEL ENCLOSURE TO CONCRETE BASE WITH ⅜" CONCRETE ANCHORS.

LCP-42010 SCHEDULE

ITEM NO.	TAG NO.	NAMEPLATE INSCRIPTION (DESCRIPTION) FIRST LINE / SECOND LINE / THIRD LINE	SPEC NO.
1	-	LCP-42010 / CHLORINE CONTACT / BASIN	
2	FI-41021 FI-41022	PLANT EFFLUENT / FLOW RATE / FI-41021, FI-41022	S26
3	FHK-42051	CHLORINATOR NO.1 / CHLORINE / FEED RATE	S12
4	FHK-42052	CHLORINATOR NO.2 / CHLORINE / FEED RATE	S12
5	AI-41021 [CL2]	CHLORINE BASIN / INFLUENT / RESIDUAL CHLORINE	N31
6	AI-41022 [CL2]	CHLORINE BASIN / EFFLUENT / RESIDUAL CHLORINE	N31
7	QL-42010 [DISABLED]	CHLORINE CYLINDER / SAFETY VALVES	M08
	HS-42010 [DISABLE]		M16
8	HS-42110 [SILENCE]	CHLOR. LEAK / ALARM / SILENCE	M16

GERALD L. SLAYTER, STATE OF WASHINGTON, 13546, REGISTERED PROFESSIONAL ENGINEER

CH2M HILL

DSGN	V. AUSTIN				
DR	G. SLAYTER				
CHK	J. BLACK				
APVD	J GAUTHIER	NO.	DATE	REVISION	BY / APVD

REUSE OF DOCUMENTS
THIS DOCUMENT, AND THE IDEAS AND DESIGNS INCORPORATED HEREIN, AS AN INSTRUMENT OF PROFESSIONAL SERVICE, IS THE PROPERTY OF CH2M HILL AND IS NOT TO BE USED, IN WHOLE OR IN PART, FOR ANY OTHER PROJECT WITHOUT THE WRITTEN AUTHORIZATION OF CH2M HILL.
©CH2M HILL

BAR IS ONE INCH ON ORIGINAL DRAWING. 0 — 1"
IF NOT ONE INCH ON THIS SHEET, ADJUST SCALES ACCORDINGLY.

CITY OF BELLINGHAM, WASHINGTON
POST POINT WASTEWATER TREATMENT PLANT UPGRADE

INSTRUMENTATION AND CONTROL
LCP-42010
ELEMENTARY

DWG NO. 900-N-85
DATE AUG. 1990
PROJ. NO. SEA22462.C1

OVERLAY IDENTIFICATION | COMPOSITE | PROJID | OVERLAY SCREEN | FILE

DRAWN BY: G. SLAYTER DESIGNED BY: V. AUSTIN
DGN NAME: H:/PROJ2/BELLINGH/BL900NCF.DGN

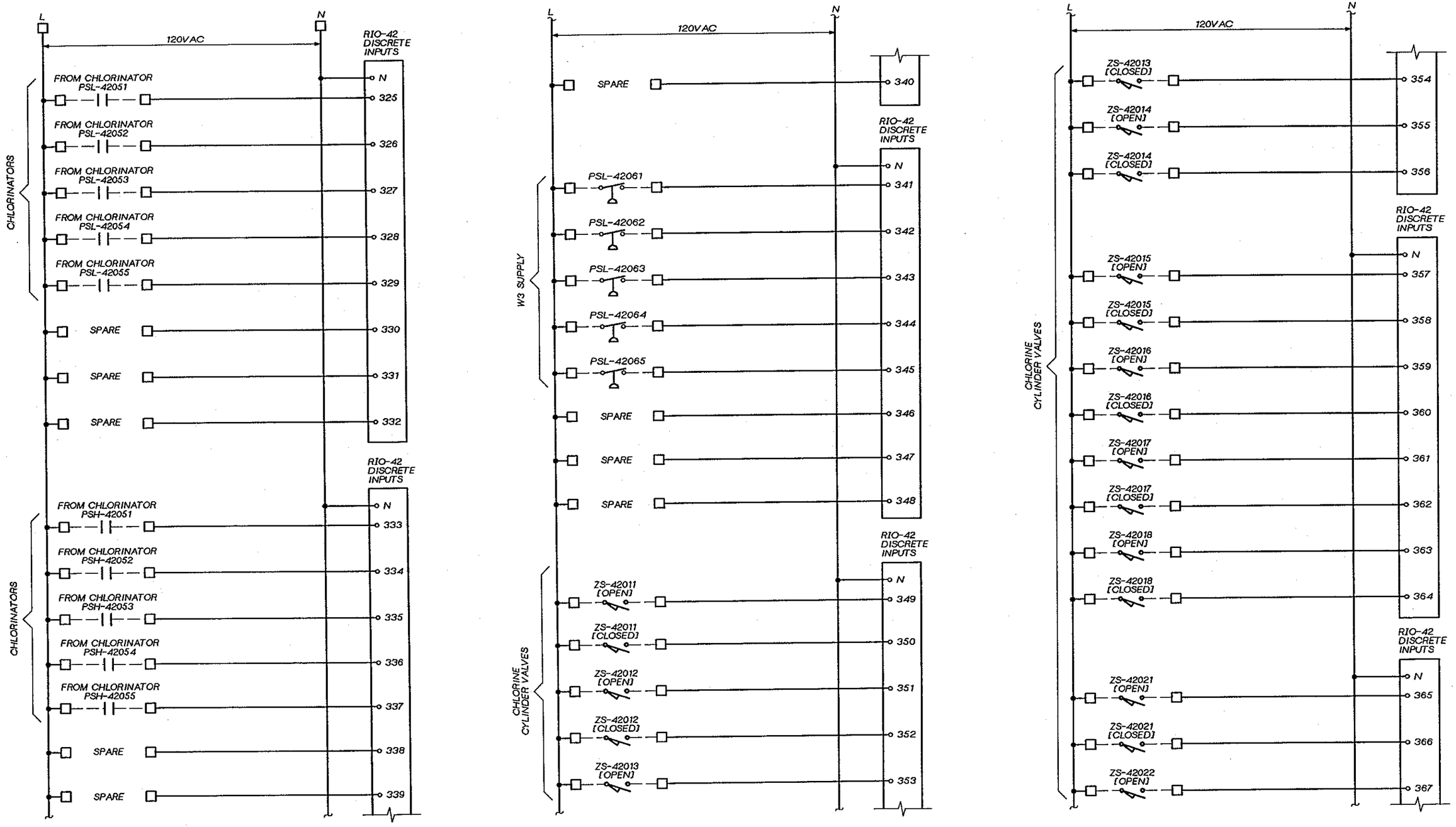

DSGN	V. AUSTIN				
DR	G. SLAYTER				
CHK	J. BLACK				
APVD	J GAUTHIER	NO.	DATE	REVISION	BY / APVD

CH2M HILL

REUSE OF DOCUMENTS
THIS DOCUMENT, AND THE IDEAS AND DESIGNS INCORPORATED HEREIN, AS AN INSTRUMENT OF PROFESSIONAL SERVICE, IS THE PROPERTY OF CH2M HILL AND IS NOT TO BE USED, IN WHOLE OR IN PART, FOR ANY OTHER PROJECT WITHOUT THE WRITTEN AUTHORIZATION OF CH2M HILL.
©CH2M HILL

BAR IS ONE INCH ON ORIGINAL DRAWING.
0 1"
IF NOT ONE INCH ON THIS SHEET, ADJUST SCALES ACCORDINGLY.

CITY OF BELLINGHAM, WASHINGTON
POST POINT WASTEWATER TREATMENT PLANT UPGRADE

INSTRUMENTATION AND CONTROL
LCP-42010
ELEMENTARY

DWG NO. 900-N-86
DATE AUG. 1990
PROJ NO. SEA22462.C1

OVERLAY IDENTIFICATION | COMPOSITE | OVERLAY | SCREEN | PROJID | FILE

DRAWN BY: G. SLAYTER DESIGNED BY: V. AUSTIN
DGN NAME: H:/PROJ2/BELLINGH/BL900NDE.DGN

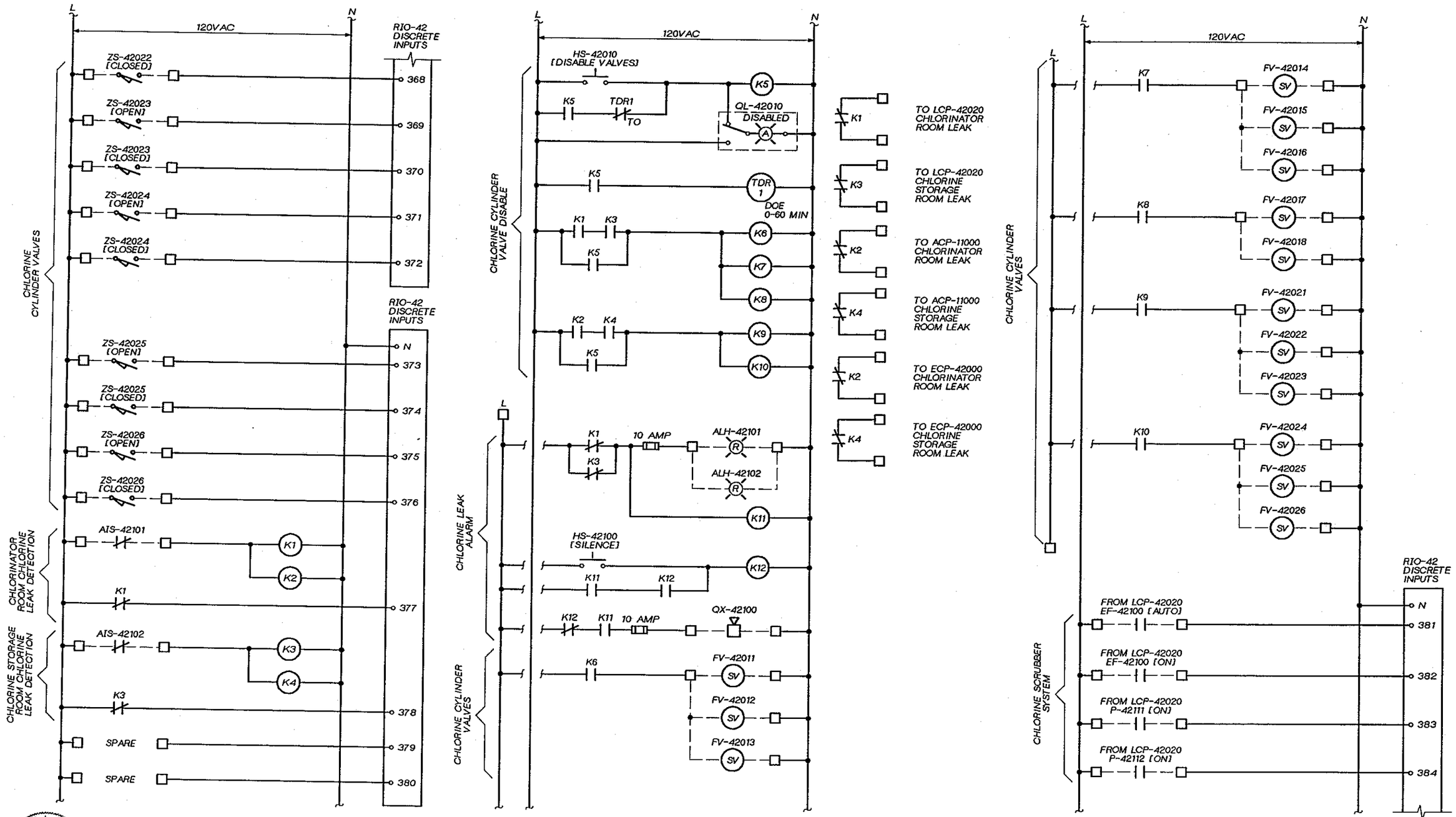

JERALD L. SLAYTER STATE OF WASHINGTON 17346 REGISTERED PROFESSIONAL ENGINEER

CH2M HILL

DSGN	V. AUSTIN
DR	G. SLAYTER
CHK	J. BLACK
APVD	J GAUTHIER

NO.	DATE	REVISION	BY	APVD

REUSE OF DOCUMENTS
THIS DOCUMENT, AND THE IDEAS AND DESIGNS INCORPORATED HEREIN, AS AN INSTRUMENT OF PROFESSIONAL SERVICE, IS THE PROPERTY OF CH2M HILL AND IS NOT TO BE USED, IN WHOLE OR IN PART, FOR ANY OTHER PROJECT WITHOUT THE WRITTEN AUTHORIZATION OF CH2M HILL.
©CH2M HILL

BAR IS ONE INCH ON ORIGINAL DRAWING.
0 1"
IF NOT ONE INCH ON THIS SHEET, ADJUST SCALES ACCORDINGLY.

CITY OF BELLINGHAM, WASHINGTON
POST POINT WASTEWATER TREATMENT PLANT UPGRADE

INSTRUMENTATION AND CONTROL
LCP-42010
ELEMENTARY

DWG NO. 900-N-87
DATE AUG. 1990
PROJ NO. SEA22462.C1

OVERLAY IDENTIFICATION | COMPOSITE OVERLAY ORIGEN
PROJID
FILE

DRAWN BY: G. SLAYTER DESIGNED BY: V. AUSTIN
DGN NAME: H:/PROJ2/BELLINGH/BL900NDF.DGN

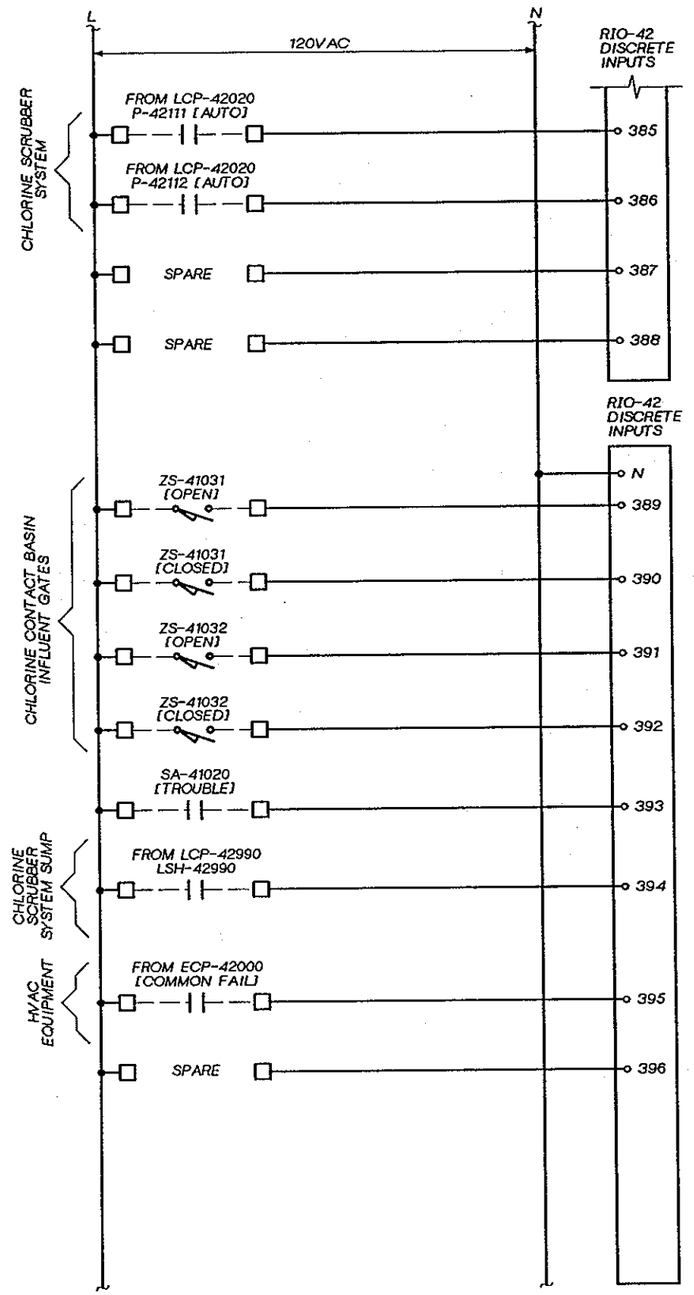

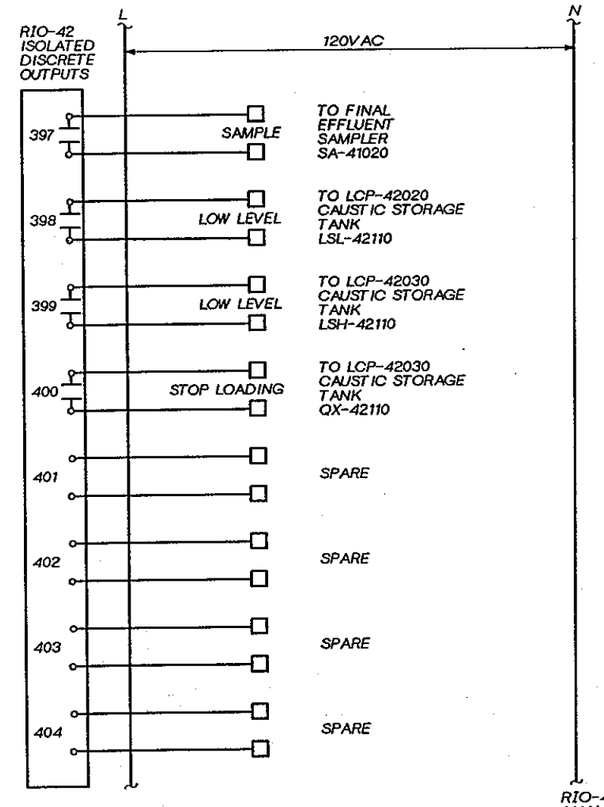

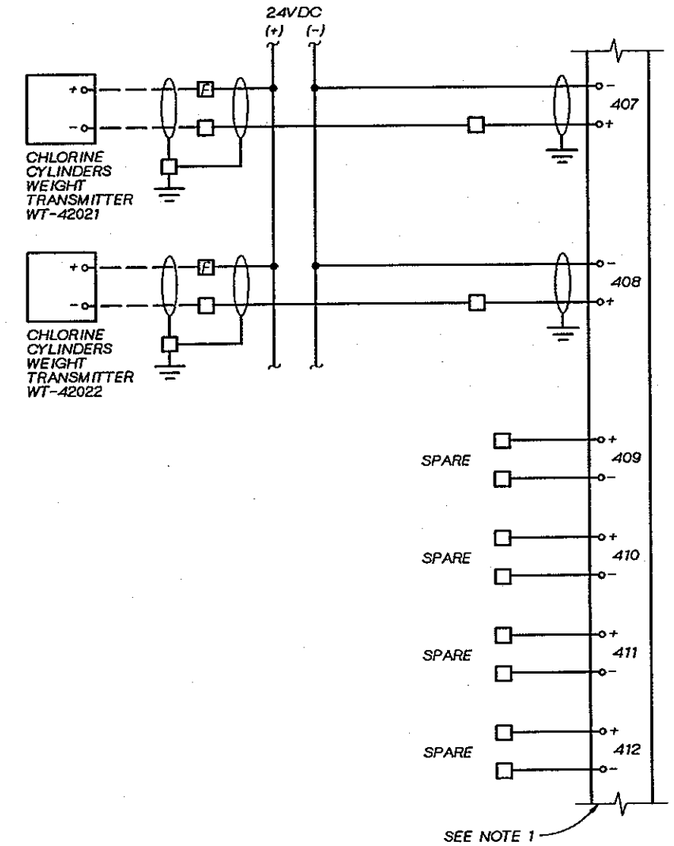

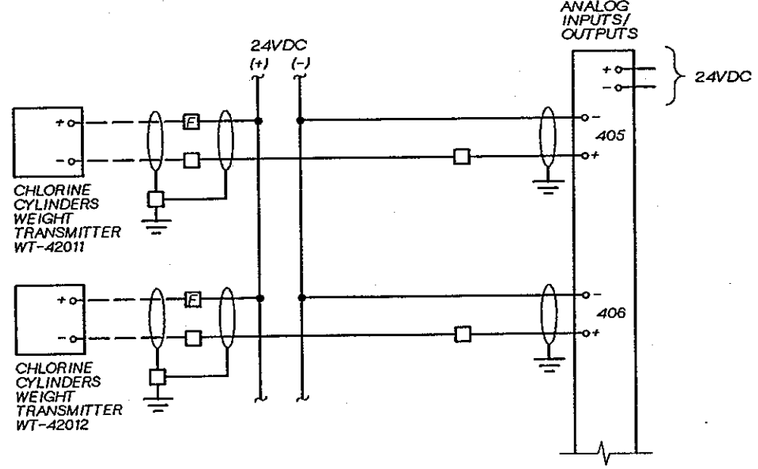

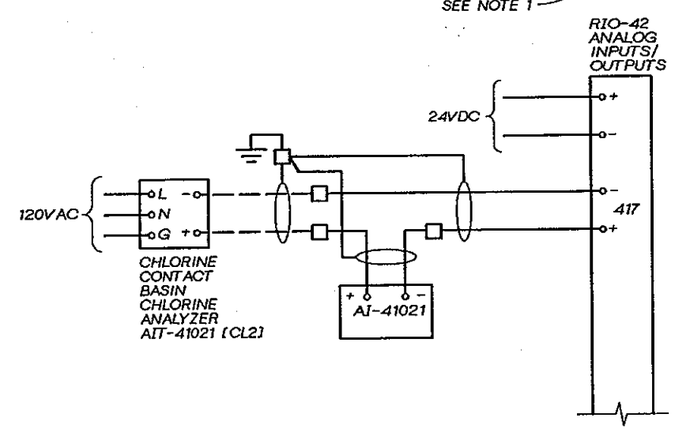

NOTES:
1. FOUR ANALOG OUTPUT SPARES (413 THROUGH 416) NOT SHOWN FOR THIS MODULE.

GERALD L. SLAYTER STATE OF WASHINGTON 17546 REGISTERED PROFESSIONAL ENGINEER

CH2M HILL

DSGN	V. AUSTIN				
DR	G. SLAYTER				
CHK	J. BLACK				
APVD	J GAUTHIER	NO.	DATE	REVISION	BY	APVD

REUSE OF DOCUMENTS
THIS DOCUMENT, AND THE IDEAS AND DESIGNS INCORPORATED HEREIN, AS AN INSTRUMENT OF PROFESSIONAL SERVICE, IS THE PROPERTY OF CH2M HILL AND IS NOT TO BE USED, IN WHOLE OR IN PART, FOR ANY OTHER PROJECT WITHOUT THE WRITTEN AUTHORIZATION OF CH2M HILL.
©CH2M HILL

BAR IS ONE INCH ON ORIGINAL DRAWING.
0 1"
IF NOT ONE INCH ON THIS SHEET, ADJUST SCALES ACCORDINGLY.

CITY OF BELLINGHAM, WASHINGTON
POST POINT WASTEWATER TREATMENT PLANT UPGRADE

INSTRUMENTATION AND CONTROL
LCP-42010
ELEMENTARY

DWG NO. 900-N-88
DATE AUG. 1990
PROJ NO. SEA22462.C1

OVERLAY IDENTIFICATION | COMPOSITE | OVERLAY | SCREEN
PROJID | FILE

DRAWN BY: G. SLAYTER DESIGNED BY: V. AUSTIN
DGN NAME: H:/PROJ2/BELLINGH/BL900NCG.DGN

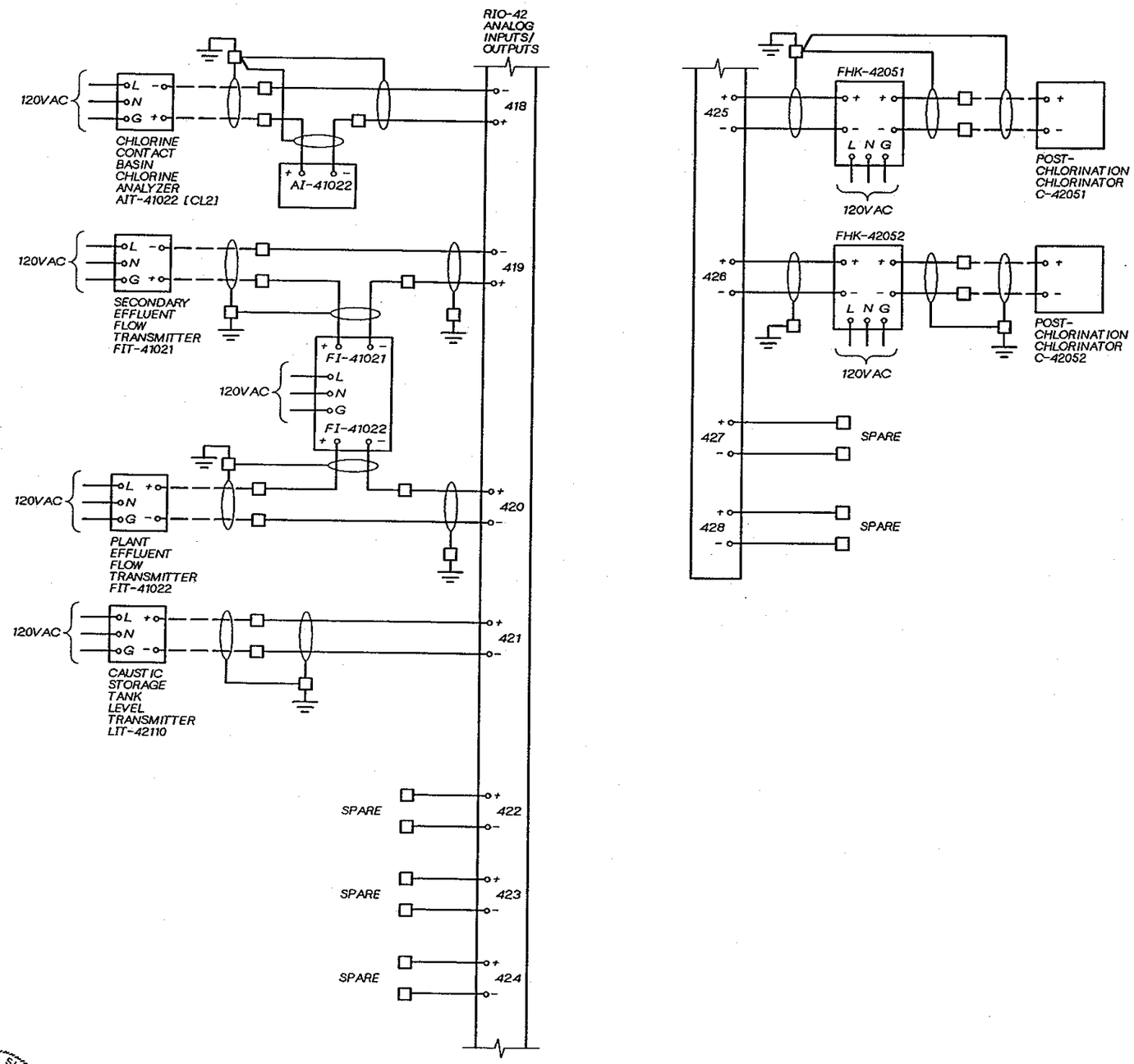

CH2M HILL

DSGN	V. AUSTIN				
DR	G. SLAYTER				
CHK	J. BLACK				
APVD	J GAUTHIER	NO.	DATE	REVISION	BY / APVD

REUSE OF DOCUMENTS
THIS DOCUMENT, AND THE IDEAS AND DESIGNS INCORPORATED HEREIN, AS AN INSTRUMENT OF PROFESSIONAL SERVICE, IS THE PROPERTY OF CH2M HILL AND IS NOT TO BE USED, IN WHOLE OR IN PART, FOR ANY OTHER PROJECT WITHOUT THE WRITTEN AUTHORIZATION OF CH2M HILL.
©CH2M HILL

BAR IS ONE INCH ON ORIGINAL DRAWING.
0 1"
IF NOT ONE INCH ON THIS SHEET, ADJUST SCALES ACCORDINGLY.

CITY OF BELLINGHAM, WASHINGTON
POST POINT WASTEWATER TREATMENT PLANT UPGRADE

INSTRUMENTATION AND CONTROL
LCP-42010
ELEMENTARY

DWG NO. 900-N-89
DATE AUG. 1990
PROJ NO. SEA22462.C1

DRAWN BY: G. SLAYTER DESIGNED BY: V. AUSTIN
DGN NAME: H:/PROJ2/BELLINGH/BL900NBK.DGN

20" H x 16" W x 12" D
NEMA 4X ENCLOSURE

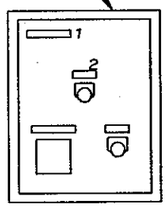

LOCAL CONTROL PANEL LCP-42030

1½" = 1'-0"

LCP-42030 SCHEDULE			
ITEM NO.	TAG NO.	NAMEPLATE INSCRIPTION (DESCRIPTION) FIRST LINE / SECOND LINE / THIRD LINE	SPEC NO.
1	-	LCP-42030 / CHEMICAL STORAGE TANK	
2	LLH-42110	CAUSTIC TANK / HIGH LEVEL	M28
	QX-42110	STOP LOADING	M30
	HS-42110 [RESET]	SILENCE HORN	M27

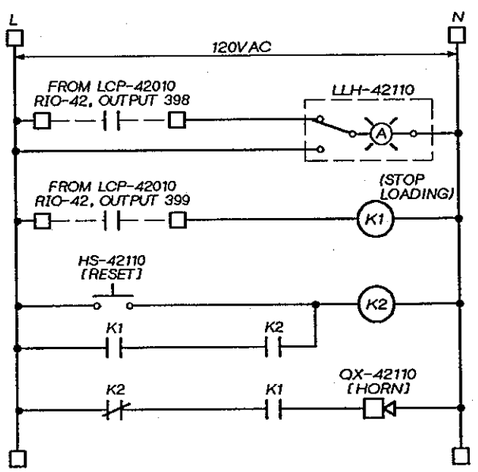

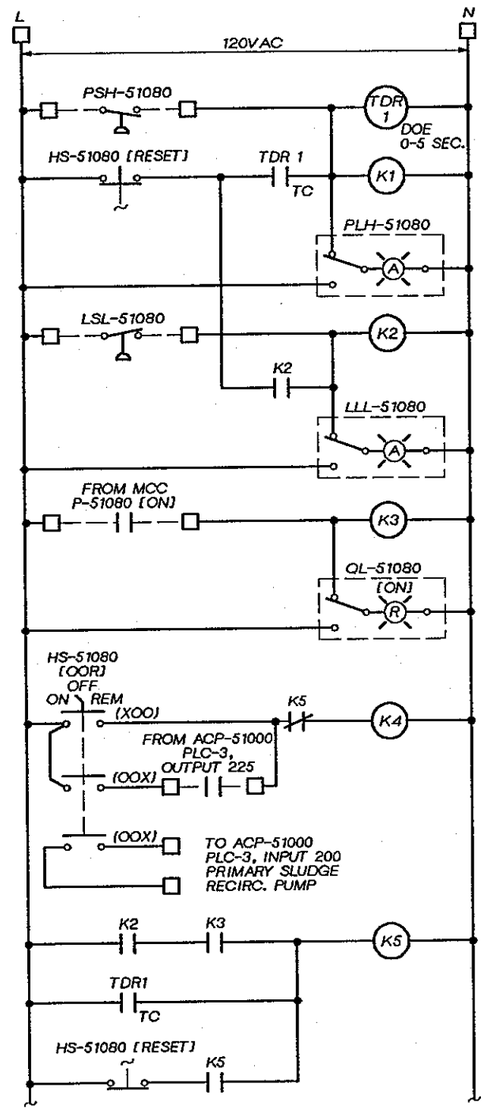

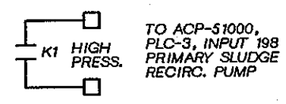

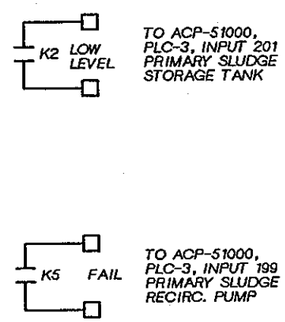

24" H x 20" W x 12" D
NEMA 4X ENCLOSURE

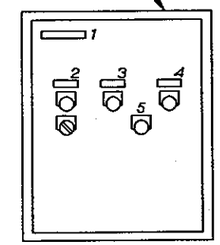

LOCAL CONTROL PANEL LCP-51010

1½" = 1'-0"

LCP-51010 SCHEDULE			
ITEM NO.	TAG NO.	NAMEPLATE INSCRIPTION (DESCRIPTION) FIRST LINE / SECOND LINE / THIRD LINE	SPEC NO.
1	-	LCP-51010 / PRIMARY SLUDGE / RECIRCULATION PUMP	
2	QL-51080 [ON]	PRIMARY SLUDGE / RECIRC. PUMP	M28
	HS-51080 [OOR]		M22
3	PLH-51080	HIGH DISCHARGE / PRESSURE	M28
4	LLL-51080	PRIMARY SLUDGE / STORAGE TANK / LOW LEVEL	M28
5	HS-51080 [RESET]		M27

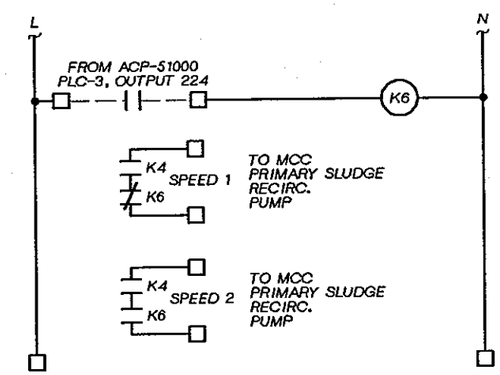

GERALD L. SLATER
STATE OF WASHINGTON
REGISTERED
PROFESSIONAL ENGINEER

CH2M HILL

DSGN	V. AUSTIN
DR	G. SLAYTER
CHK	J. BLACK
APVD	J GAUTHIER

NO.	DATE	REVISION	BY	APVD

REUSE OF DOCUMENTS
THIS DOCUMENT, AND THE IDEAS AND DESIGNS INCORPORATED HEREIN, AS AN INSTRUMENT OF PROFESSIONAL SERVICE, IS THE PROPERTY OF CH2M HILL AND IS NOT TO BE USED, IN WHOLE OR IN PART, FOR ANY OTHER PROJECT WITHOUT THE WRITTEN AUTHORIZATION OF CH2M HILL.
©CH2M HILL

BAR IS ONE INCH ON ORIGINAL DRAWING.
0 1"
IF NOT ONE INCH ON THIS SHEET, ADJUST SCALES ACCORDINGLY.

CITY OF BELLINGHAM, WASHINGTON
POST POINT WASTEWATER TREATMENT PLANT UPGRADE

INSTRUMENTATION AND CONTROL
LCP-42030, LCP-51010
ELEVATION AND ELEMENTARY

DWG NO. 900-N-90
DATE AUG. 1990
PROJ NO. SEA22462.C1

OVERLAY IDENTIFICATION | COMPOSITE | OVERLAY | SCREEN | PROJID | FILE

DRAWN BY: G. SLAYTER DESIGNED BY: V. AUSTIN
DGN NAME: H:/PROJ2/BELLINGH/BL900NDC.DGN

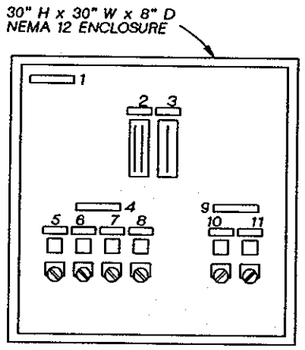

LOCAL CONTROL PANEL LCP-51020

1½" = 1'-0"

LCP-51020 SCHEDULE

ITEM NO.	TAG NO.	NAMEPLATE INSCRIPTION (DESCRIPTION) FIRST LINE / SECOND LINE / THIRD LINE	SPEC NO.
1	-	LCP-51020 / W2 WATER SYSTEM	
2	PI-51130	W2 WATER PRESSURE	S10
	PI-51140	HYDROPNEUMATIC TANK LEVEL	
3	FI-51130	W2 WATER FLOW	S10
4	-	W2 PUMPS	
5	QL-51131 [ON]	PUMP NO.1	M06
	HS-51131 [HOA]		M22
6	QL-51132 [ON]	PUMP NO.2	M06
	HS-51132 [HOA]		M22
7	QL-51133 [ON]	PUMP NO.3	M06
	HS-51133 [HOA]		M22
8	QL-51134 [ON]	PUMP NO.4	M06
	HS-51134 [HOA]		M22
9	-	W2 AIR / COMPRESSORS	
10	QL-51141 [ON]	COMPRESSOR NO.1	M06
	HS-51141 [HOA]		M22
11	QL-51142 [ON]	COMPRESSOR NO.2	M06
	HS-51142 [HOA]		M22

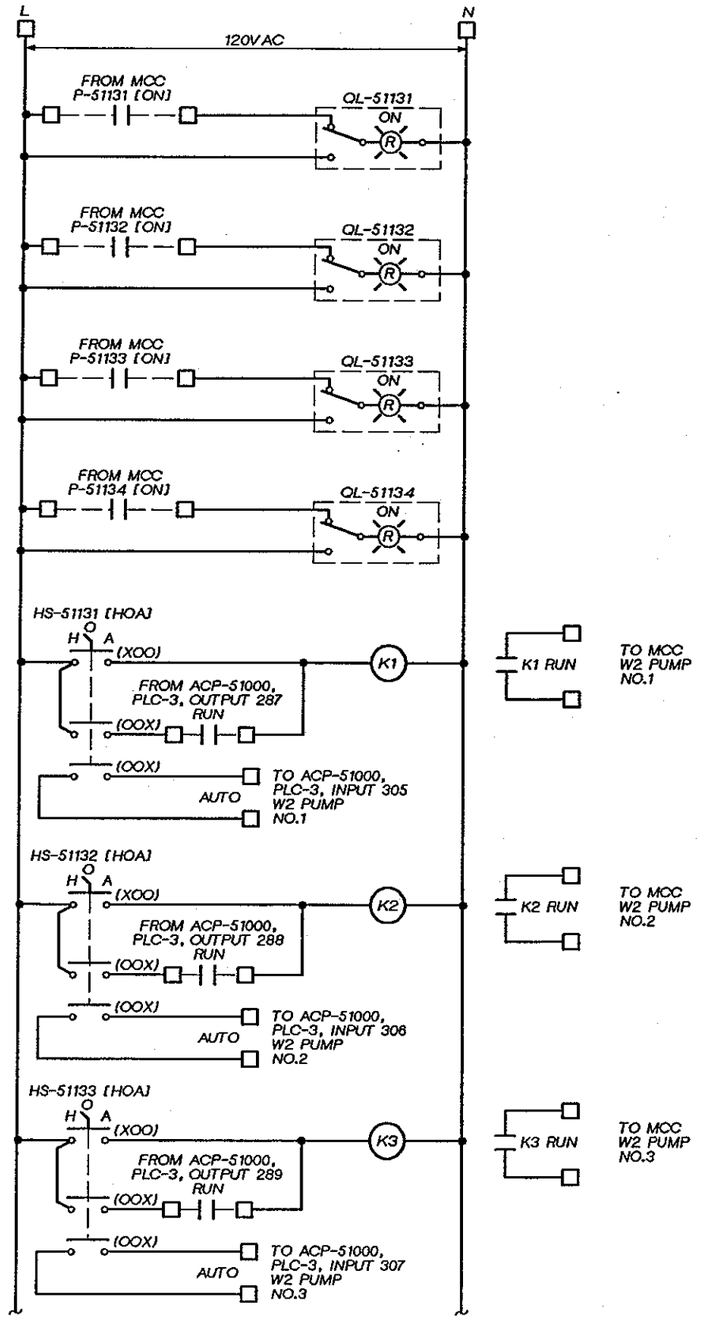

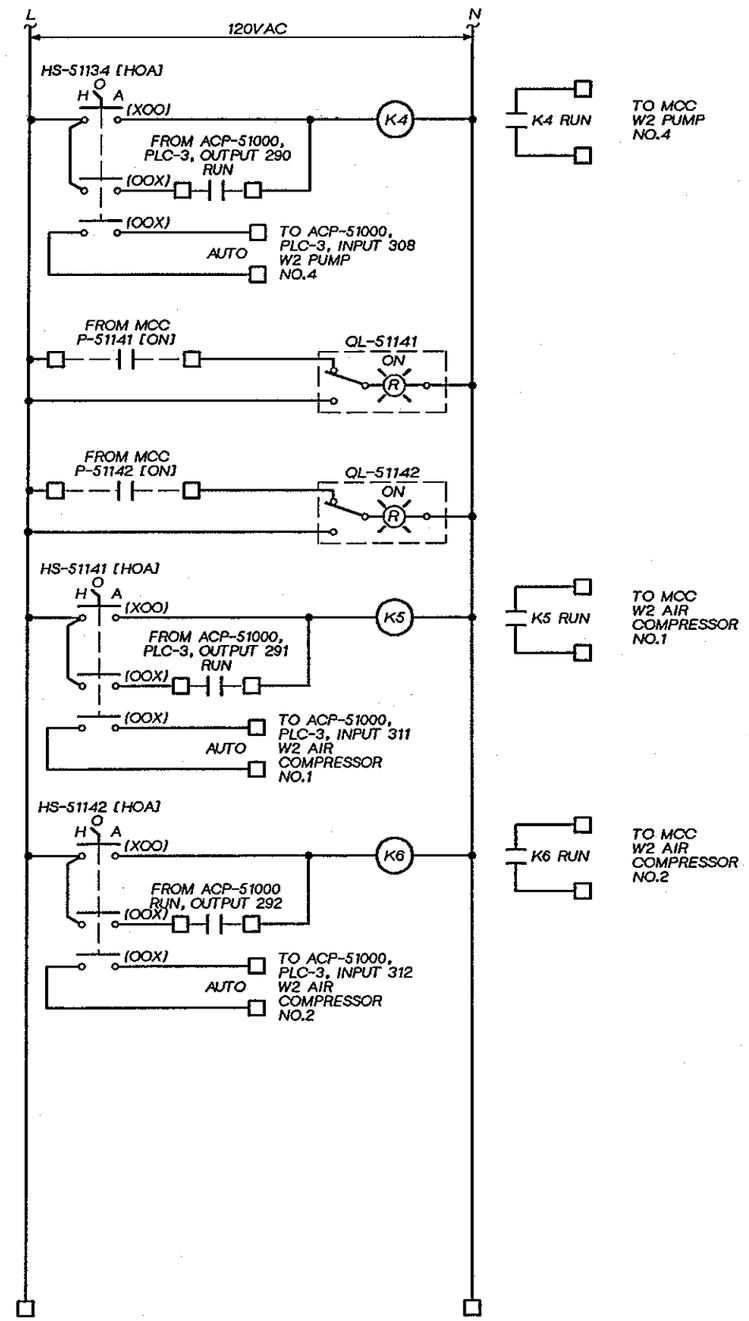

JERALD L. SLATER
STATE OF WASHINGTON
17346
REGISTERED PROFESSIONAL ENGINEER

CH2M HILL

DSGN	V. AUSTIN				
DR	G. SLAYTER				
CHK	J. BLACK				
APVD	J GAUTHIER	NO.	DATE	REVISION	BY	APVD

REUSE OF DOCUMENTS
THIS DOCUMENT, AND THE IDEAS AND DESIGNS INCORPORATED HEREIN, AS AN INSTRUMENT OF PROFESSIONAL SERVICE, IS THE PROPERTY OF CH2M HILL AND IS NOT TO BE USED, IN WHOLE OR IN PART, FOR ANY OTHER PROJECT WITHOUT THE WRITTEN AUTHORIZATION OF CH2M HILL.
©CH2M HILL

BAR IS ONE INCH ON ORIGINAL DRAWING.
0 1"
IF NOT ONE INCH ON THIS SHEET, ADJUST SCALES ACCORDINGLY.

CITY OF BELLINGHAM, WASHINGTON
POST POINT WASTEWATER TREATMENT PLANT UPGRADE

INSTRUMENTATION AND CONTROL
LCP-51020
ELEVATION AND ELEMENTARY

DWG NO. 900-N-91
DATE AUG. 1990
PROJ. NO. SEA22462.C1

DRAWN BY: G. SLAYTER DESIGNED BY: V. AUSTIN
DGN NAME: H:/PROJ2/BELLINGH/BL900NCZ.DGN

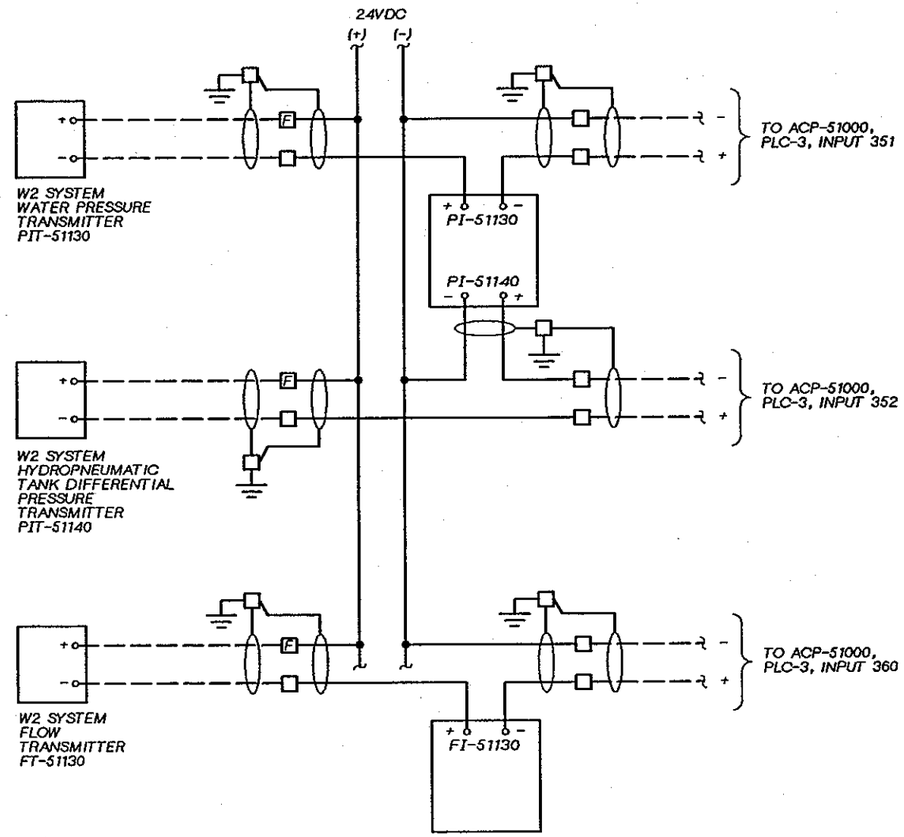

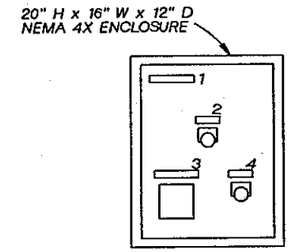

LOCAL CONTROL PANEL LCP-53050

1½" = 1'-0"

LCP-53050 SCHEDULE

ITEM NO.	TAG NO.	NAMEPLATE INSCRIPTION (DESCRIPTION) FIRST LINE / SECOND LINE / THIRD LINE	SPEC NO.
1	-	LCP-53050 / CHEMICAL STORAGE TANK	
2	LLH-53220	SULFURIC ACID / HIGH LEVEL	M28
3	QX-53220	STOP LOADING	M30
4	HS-53220 [RESET]	SILENCE HORN	M27

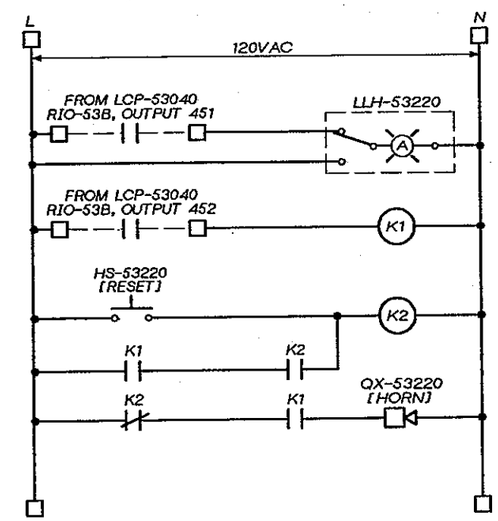

DSGN	V. AUSTIN				
DR	G. SLAYTER				
CHK	J. BLACK				
APVD	J GAUTHIER	NO.	DATE	REVISION	BY	APVD

CH2M HILL

REUSE OF DOCUMENTS
THIS DOCUMENT, AND THE IDEAS AND DESIGNS INCORPORATED HEREIN, AS AN INSTRUMENT OF PROFESSIONAL SERVICE, IS THE PROPERTY OF CH2M HILL AND IS NOT TO BE USED, IN WHOLE OR IN PART, FOR ANY OTHER PROJECT WITHOUT THE WRITTEN AUTHORIZATION OF CH2M HILL.
©CH2M HILL

BAR IS ONE INCH ON ORIGINAL DRAWING.
0 1"
IF NOT ONE INCH ON THIS SHEET, ADJUST SCALES ACCORDINGLY.

CITY OF BELLINGHAM, WASHINGTON
POST POINT WASTEWATER TREATMENT PLANT UPGRADE

INSTRUMENTATION AND CONTROL
LCP-51020, LCP-53050
ELEVATION AND ELEMENTARY

DWG NO. 900-N-92
DATE AUG. 1990
PROJ NO. SEA22462.C1

JERALD L. SLATER, STATE OF WASHINGTON, REGISTERED PROFESSIONAL ENGINEER

OVERLAY IDENTIFICATION: PROJ/D FILE
COMPOSITE: OVERLAY SCREEN

DGN NAME: H:/PROJ2/BELLINGH/BL900NCQ.DGN

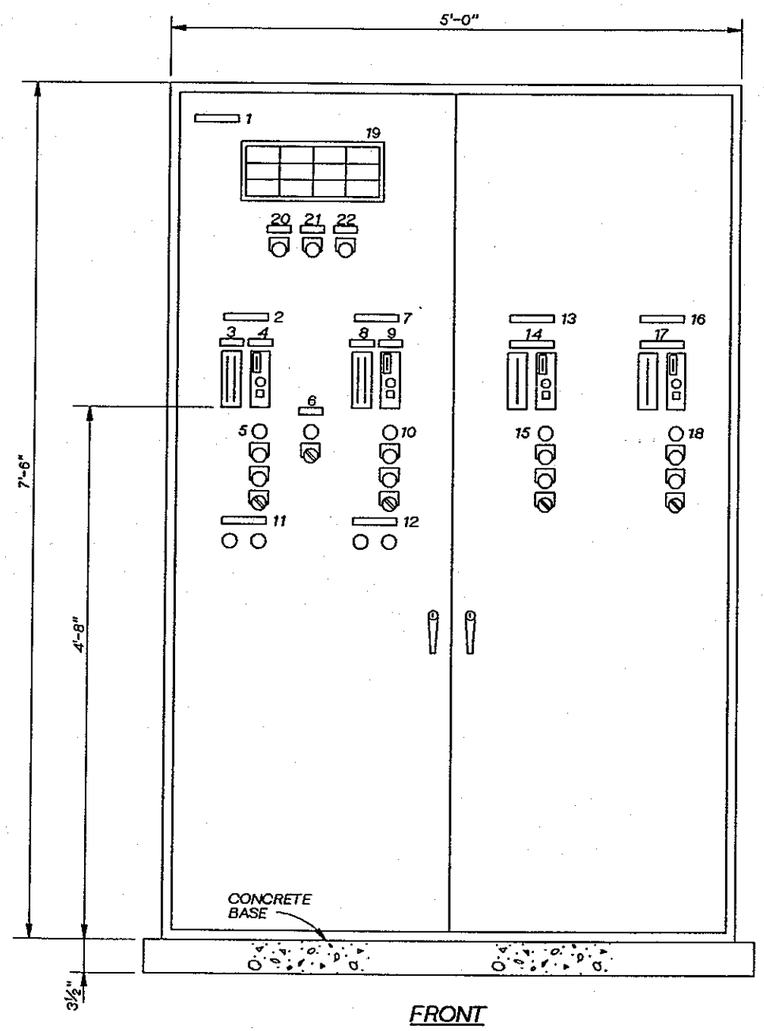

FRONT

LOCAL CONTROL PANEL LCP-53010

1½" = 1'-0"

NOTES:

1. PANEL ENCLOSURE SHALL BE 2'-0" DEEP, NEMA 4X.
2. SECURE PANEL ENCLOSURE TO CONCRETE BASE WITH ⅝" CONCRETE ANCHORS.

LCP-53010 SCHEDULE

ITEM NO.	TAG NO.	NAMEPLATE INSCRIPTION (DESCRIPTION) FIRST LINE / SECOND LINE / THIRD LINE	SPEC NO.
1	-	LCP-53010 / GRAVITY BELT THICKENERS	
2	-	WASTE ACTIVATE SLUDGE / PUMP NO.1	
3	DI-34031	W.A.S. DENSITY	S10
	FI-34031	W.A.S. FLOW RATE	
4	SHK-34031	W.A.S. PUMP / SPEED	S12
5	QL-34031 [ON]		M28
	HS-34031 [START]		M27
	HS-34031 [STOP]		M27
	HS-34031 [AM]		M26
6	ZL-53050 [OPEN]	W.A.S. LINE / FLUSHING / VALVE	M28
	HS-53050 [OCA]		M26
7	-	WASTE ACTIVATED SLUDGE / PUMP NO.2	
8	DI-34032	W.A.S. DENSITY	S10
	FI-34032	W.A.S. FLOW RATE	
9	SHK-34032	W.A.S. PUMP / SPEED	S12
10	QL-34032 [ON]		M28
	HS-34032 [START]		M27
	HS-34032 [STOP]		M27
	HS-34032 [AM]		M26
11	QL-53011 [READY]	GRAVITY BELT / THICKENER NO.1	M28
	QL-53011 [POSTWASH]		M28
12	QL-53012 [READY]	GRAVITY BELT / THICKENER NO.2	M28
	QL-53012 [POSTWASH]		M28
13	-	THICK. POLYMER / SOLUTION / FEEDER NO.1	
14	SI-52051	POLYMER / SOLUTION / PUMP SPEED	S10
	SHK-52051		S12
15	QL-52051 [ON]		M28
	HS-52051 [START]		M27
	HS-52051 [STOP]		M27
	HS-52051 [AM]		M26
16	-	THICK. POLYMER / SOLUTION / FEEDER NO.2	
17	SI-52052	POLYMER / SOLUTION / PUMP SPEED	S10
	SHK-52052		S12
18	QL-52052 [ON]		M28
	HS-52052 [START]		M27
	HS-52052 [STOP]		M27
	HS-52052 [AM]		M26
19	-	(ANNUNCIATOR NO.1)	N02
20	HS-53010 [ACK]		M27
21	HS-53010 [RESET]		M27
22	HS-53010 [TEST]		M27

GERALD L. SLAYTER STATE OF WASHINGTON 17346 REGISTERED PROFESSIONAL ENGINEER

CH2M HILL

DSGN V. AUSTIN
DR G. SLAYTER
CHK J. BLACK
APVD J GAUTHIER

NO.	DATE	REVISION	BY	APVD

REUSE OF DOCUMENTS
THIS DOCUMENT, AND THE IDEAS AND DESIGNS INCORPORATED HEREIN, AS AN INSTRUMENT OF PROFESSIONAL SERVICE, IS THE PROPERTY OF CH2M HILL AND IS NOT TO BE USED, IN WHOLE OR IN PART, FOR ANY OTHER PROJECT WITHOUT THE WRITTEN AUTHORIZATION OF CH2M HILL.
©CH2M HILL

BAR IS ONE INCH ON ORIGINAL DRAWING.
0 1"
IF NOT ONE INCH ON THIS SHEET, ADJUST SCALES ACCORDINGLY.

CITY OF BELLINGHAM, WASHINGTON
POST POINT WASTEWATER TREATMENT PLANT UPGRADE

INSTRUMENTATION AND CONTROL
LCP-53010
ELEVATION

DWG NO. 900-N-33
DATE AUG. 1990
PROJ NO. SEA22462.C1

DGN NAME: H:/PROJ2/BELLINGH/BL900NDH.DGN

ANNUNCIATOR NO.1

COL-ROW	TAG NO.	WINDOW INSCRIPTION FIRST LINE / SECOND LINE / THIRD LINE
1-1	QA-34031 [FAIL]	W.A.S. / PUMP NO.1 / FAIL
1-2	QA-34032 [FAIL]	W.A.S. / PUMP NO.2 / FAIL
1-3	-	(SPARE)
2-1	LAH-53061	T.W.A.S. / STOR. TANK NO.1 / HIGH LEVEL
2-2	LAH-53062	T.W.A.S. / STOR. TANK NO.2 / HIGH LEVEL
2-3	-	(SPARE)
3-1	QA-53011 [FAIL]	GRAVITY / BELT NO.1 / FAIL
3-2	QA-53012 [FAIL]	GRAVITY / BELT NO.2 / FAIL
3-3	-	(SPARE)
4-1	QA-52051 [FAIL]	THICK. POLYMER / SOL. FEEDER / NO. 1 FAIL
4-2	QA-52052 [FAIL]	THICK. POLYMER / SOL. FEEDER / NO.2 FAIL
4-3	-	(SPARE)

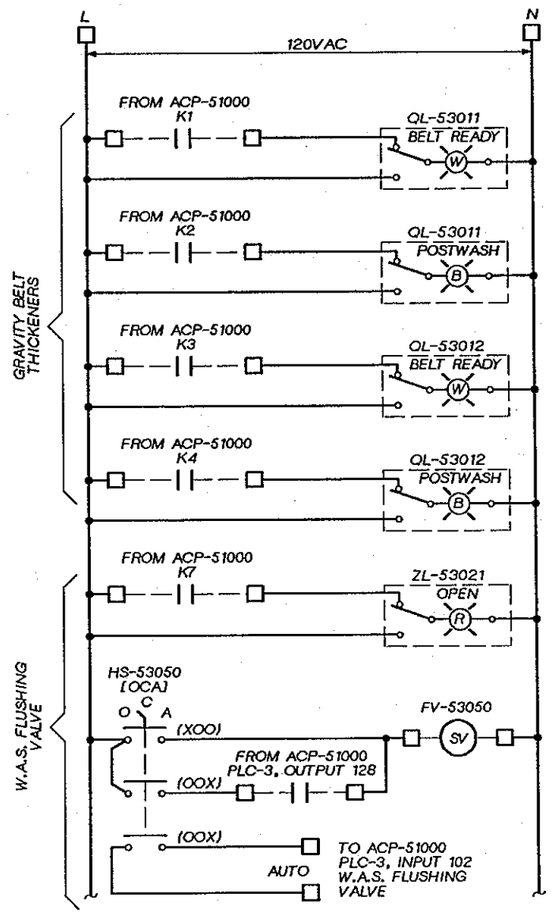

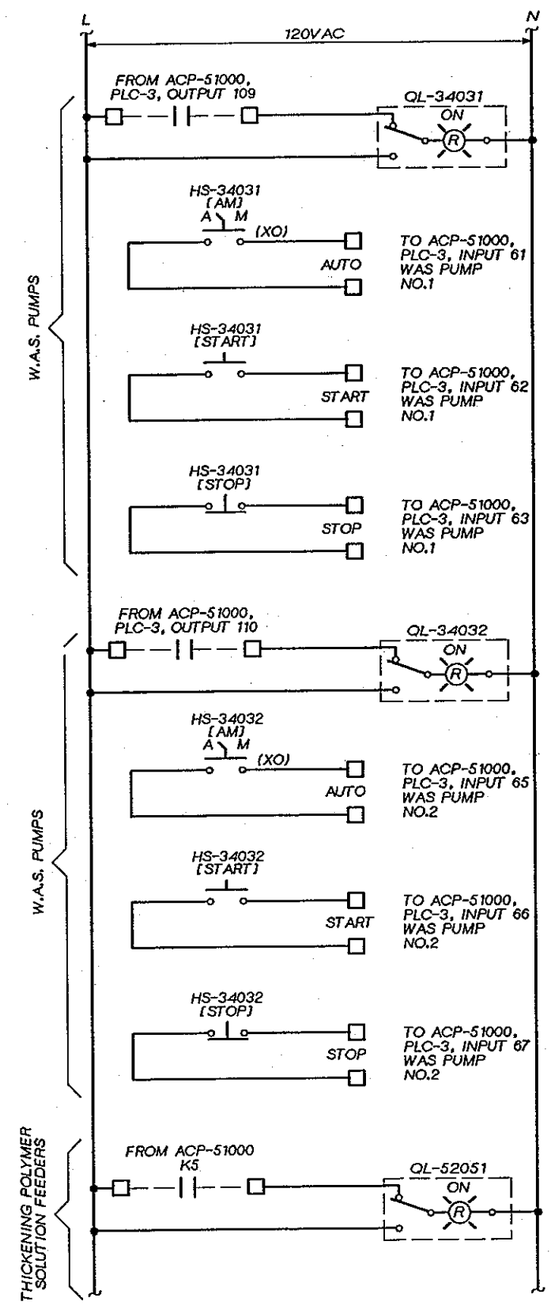

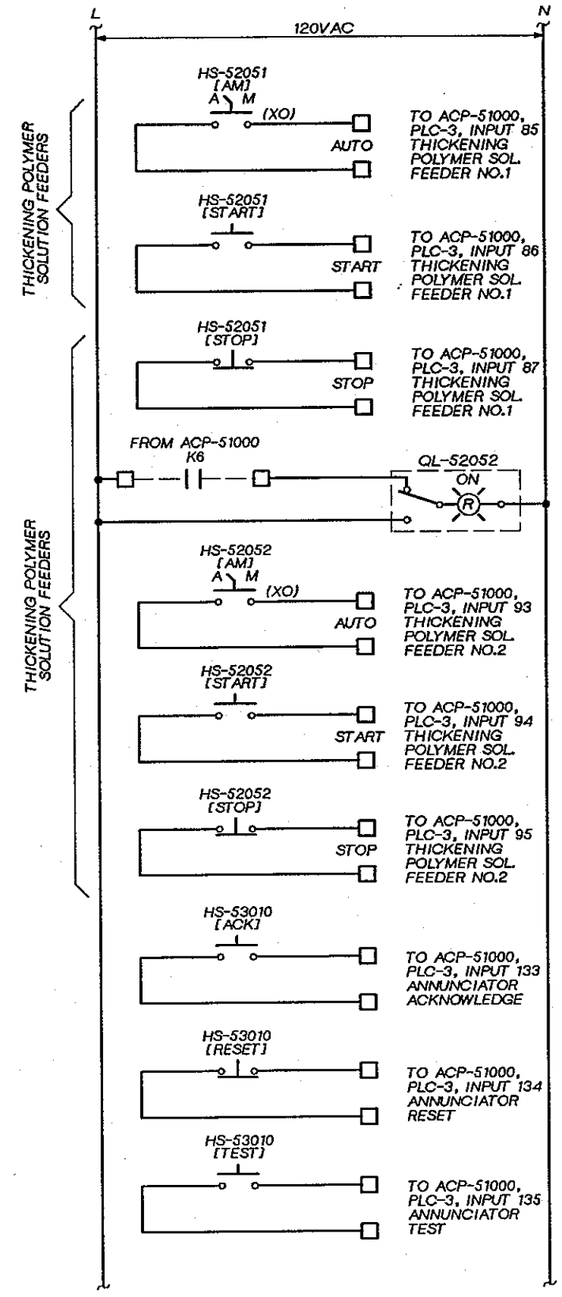

JERALD L. SLATTERY STATE OF WASHINGTON 11544 REGISTERED PROFESSIONAL ENGINEER

CH2M HILL

DSGN V. AUSTIN
DR G. SLAYTER
CHK J. BLACK
APVD J GAUTHIER

NO.	DATE	REVISION	BY	APVD

REUSE OF DOCUMENTS
THIS DOCUMENT, AND THE IDEAS AND DESIGNS INCORPORATED HEREIN, AS AN INSTRUMENT OF PROFESSIONAL SERVICE, IS THE PROPERTY OF CH2M HILL AND IS NOT TO BE USED, IN WHOLE OR IN PART, FOR ANY OTHER PROJECT WITHOUT THE WRITTEN AUTHORIZATION OF CH2M HILL.
©CH2M HILL

BAR IS ONE INCH ON ORIGINAL DRAWING.
0 1"
IF NOT ONE INCH ON THIS SHEET, ADJUST SCALES ACCORDINGLY.

CITY OF BELLINGHAM, WASHINGTON
POST POINT WASTEWATER TREATMENT PLANT UPGRADE

INSTRUMENTATION AND CONTROL
LCP-53010
SCHEDULE AND ELEMENTARY

DWG NO. 900-N-94
DATE AUG. 1990
PROJ NO. SEA22462.C1

OVERLAY IDENTIFICATION COMPOSITE OVERLAY SCREEN PROJ/O FILE

DGN NAME: H:/PROJ2/BELLINGH/BL900NCR.DGN

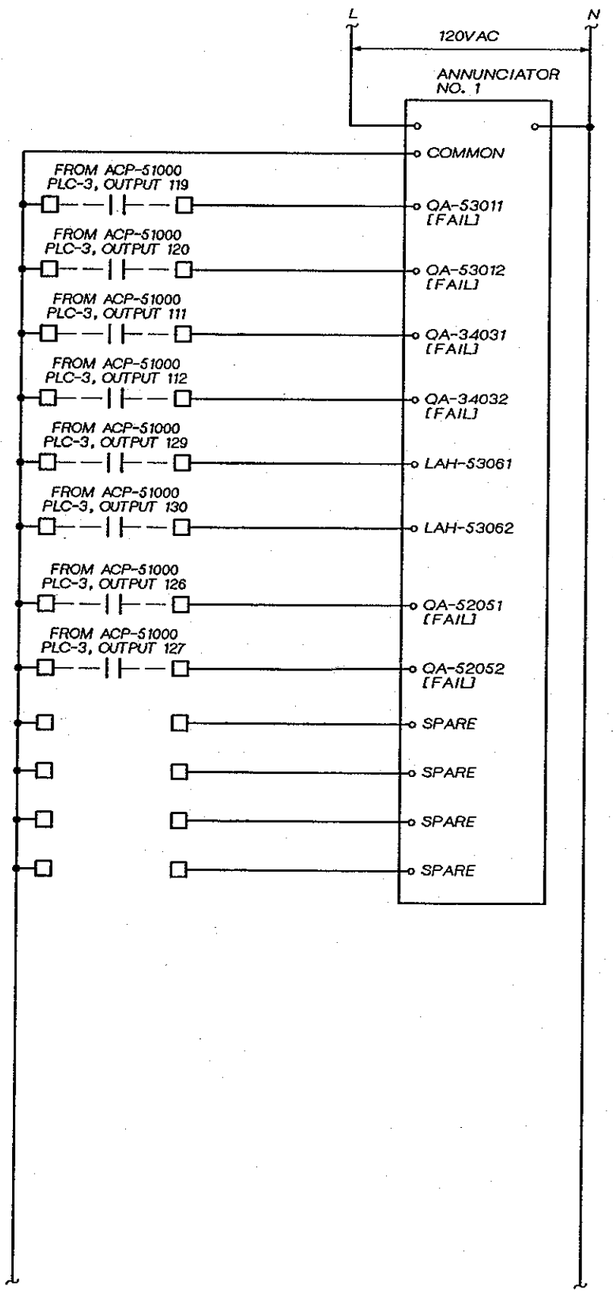

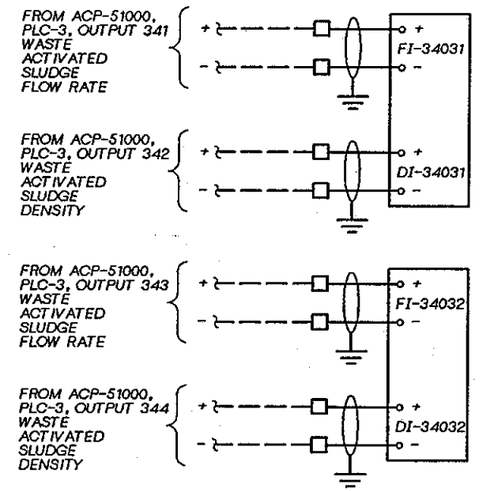

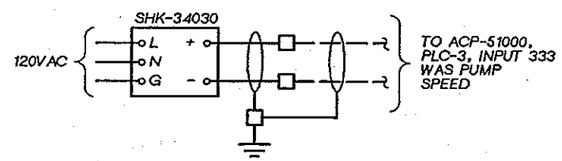

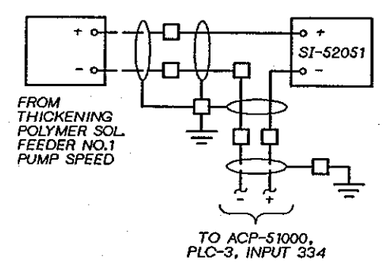

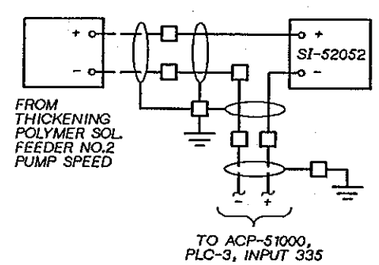

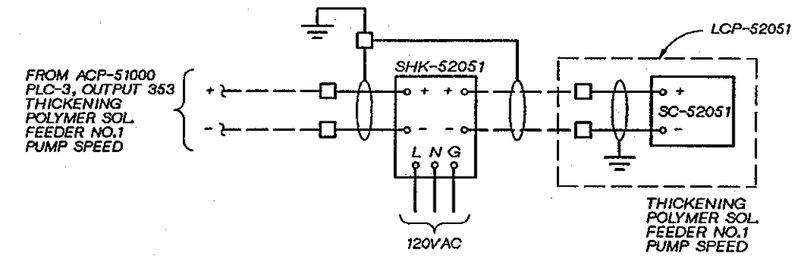

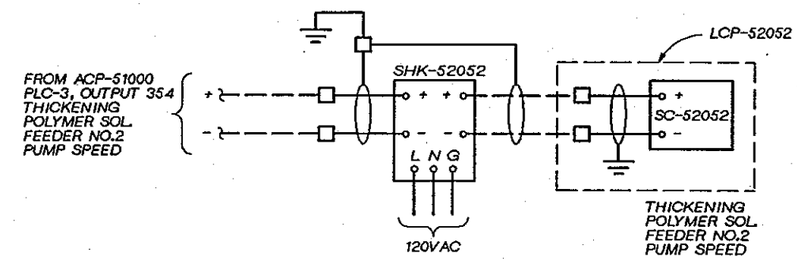

GERALD L SLATTERY
STATE OF WASHINGTON
13546
REGISTERED PROFESSIONAL ENGINEER

CH2M HILL

DSGN	V. AUSTIN				
DR	G. SLAYTER				
CHK	J. BLACK				
APVD	J GAUTHIER	NO.	DATE	REVISION	BY	APVD

REUSE OF DOCUMENTS
THIS DOCUMENT, AND THE IDEAS AND DESIGNS INCORPORATED HEREIN, AS AN INSTRUMENT OF PROFESSIONAL SERVICE, IS THE PROPERTY OF CH2M HILL AND IS NOT TO BE USED, IN WHOLE OR IN PART, FOR ANY OTHER PROJECT WITHOUT THE WRITTEN AUTHORIZATION OF CH2M HILL.
©CH2M HILL

BAR IS ONE INCH ON ORIGINAL DRAWING.
0 1"
IF NOT ONE INCH ON THIS SHEET, ADJUST SCALES ACCORDINGLY.

CITY OF BELLINGHAM, WASHINGTON
POST POINT WASTEWATER TREATMENT PLANT UPGRADE

INSTRUMENTATION AND CONTROL
LCP-53010
ELEMENTARY

DWG NO. 900-N-95
DATE AUG. 1990
PROJ NO. SEA22462.C1

OVERLAY IDENTIFICATION | COMPOSITE | OVERLAY | SCREEN
PROJ/D | FILE

DRAWN BY: G. SLAYTER DESIGNED BY: V. AUSTIN
DGN NAME: H:/PROJ2/BELLINGH/BL900NCL.DGN

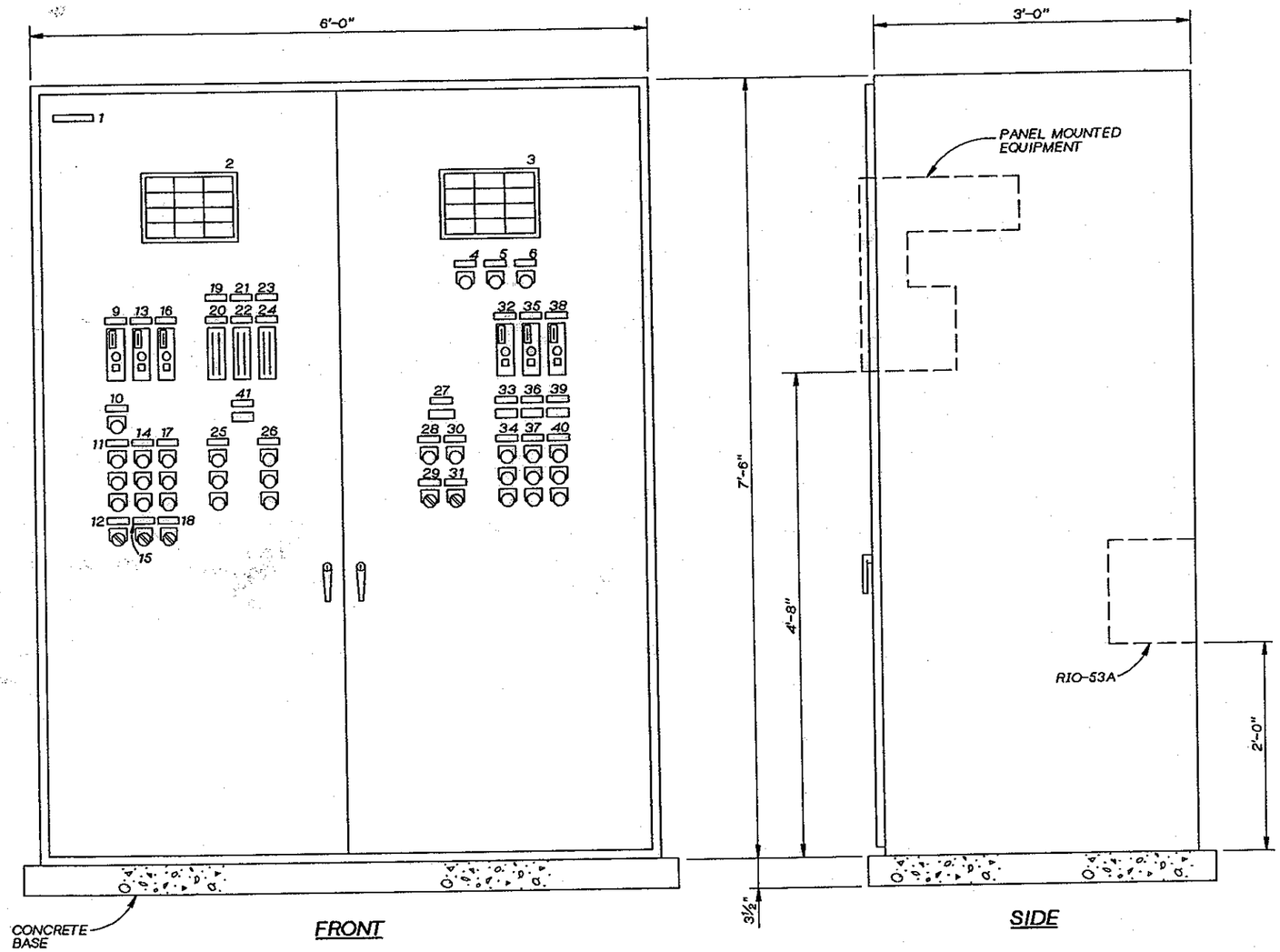

LOCAL CONTROL PANEL LCP-53020

1½" = 1'-0"

LCP-53020 SCHEDULE

ITEM NO.	TAG NO.	NAMEPLATE INSCRIPTION (DESCRIPTION) FIRST LINE / SECOND LINE / THIRD LINE	SPEC NO.
1	-	LCP-53020 / DEWATERING CENTRIFUGES	
2	-	(ANNUNCIATOR NO.1)	N02
3	-	(ANNUNCIATOR NO.2)	N02
4	HS-53100 [ACK]	ACKNOWLEDGE	M27
5	HS-53100 [RESET]	RESET	M27
6	HS-53100 [TEST]	TEST	M27
7	-	NOT USED	
8	-	NOT USED	
9	SHK-51101	CENTRIFUGE FEED / PUMP NO.1 / SPEED	S12
10	QL-51101 [ENABLED]	CENTRIFUGE FEED / PUMP NO.1	M28
11	QL-51101 [ON]	CENTRIFUGE FEED / PUMP NO.1	M28
	HS-51101 [START]		M27
	HS-51101 [STOP]		M27
12	HS-51101 [1-2-3]	CENTRIFUGE SELECTOR	M26
13	SHK-51102	CENTRIFUGE FEED / PUMP NO.2 / SPEED	S12
14	QL-51102 [ON]	CENTRIFUGE FEED / PUMP NO.2	M28
	HS-51102 [START]		M27
	HS-51102 [STOP]		M27
15	HS-51102 [1-2-3]	CENTRIFUGE SELECTOR	M26
16	SHK-51103	CENTRIFUGE FEED / PUMP NO.3 / SPEED	S12
17	QL-51103 [ON]	CENTRIFUGE FEED / PUMP NO.3	M28
	HS-51103 [START]		M27
	HS-51103 [STOP]		M27
18	HS-51103 [1-2-3]	CENTRIFUGE SELECTOR	M26
19	-	CENTRIFUGE NO.1	
20	DI-51101 FI-51101	FEED DENSITY / FEED FLOW RATE	S10
21	-	CENTRIFUGE NO.2	
22	DI-51102 FI-51102	FEED DENSITY / FEED FLOW RATE	S10
23	-	CENTRIFUGE NO.3	
24	DI-51103 FI-51103	FEED DENSITY / FEED FLOW RATE	S10
25	QL-53151 [ON]	SLUDGE SHAFTLESS / SCREW CONVEYOR / NO.1	M28
	HS-53151 [START]		M27
	HS-53151 [STOP]		M27
26	QL-53152 [ON]	SLUDGE SHAFTLESS / SCREW CONVEYOR / NO.2	M28
	HS-53152 [START]		M27
	HS-53152 [STOP]		M27
27	LI-53160	DEWATERING SLUDGE / HOPPER LEVEL	N31
28	QL-53171 [ON]	INCINERATOR FEED / PUMP NO.1	M28

NOTES:
SECURE PANEL ENCLOSURE TO CONCRETE BASE WITH ⅜" CONCRETE ANCHORS.

JERALD L. SLAYTER — STATE OF WASHINGTON — 17546 — REGISTERED PROFESSIONAL ENGINEER

CH2M HILL

DSGN	V. AUSTIN
DR	G. SLAYTER
CHK	J. BLACK
APVD	J GAUTHIER

NO.	DATE	REVISION	BY	APVD

REUSE OF DOCUMENTS
THIS DOCUMENT, AND THE IDEAS AND DESIGNS INCORPORATED HEREIN, AS AN INSTRUMENT OF PROFESSIONAL SERVICE, IS THE PROPERTY OF CH2M HILL AND IS NOT TO BE USED, IN WHOLE OR IN PART, FOR ANY OTHER PROJECT WITHOUT THE WRITTEN AUTHORIZATION OF CH2M HILL.
©CH2M HILL

BAR IS ONE INCH ON ORIGINAL DRAWING. 0 — 1"
IF NOT ONE INCH ON THIS SHEET, ADJUST SCALES ACCORDINGLY.

CITY OF BELLINGHAM, WASHINGTON
POST POINT WASTEWATER TREATMENT PLANT UPGRADE

INSTRUMENTATION AND CONTROL
LCP-53020
ELEVATION

DWG NO. 900-N-96
DATE AUG. 1990
PROJ NO. SEA22462.C1

OVERLAY IDENTIFICATION: PROJ/ID FILE
COMPOSITE OVERLAY SCREEN

DRAWN BY: G. SLAYTER DESIGNED BY: V. AUSTIN
DGN NAME: H:/PROJ2/BELLINGH/BL900NCM.DGN

LCP-53020 SCHEDULE

ITEM NO.	TAG NO.	NAMEPLATE INSCRIPTION (DESCRIPTION) FIRST LINE / SECOND LINE / THIRD LINE	SPEC NO.
29	HS-53171 [1-2]	INCINERATOR SELECTOR	M26
30	QL-53172 [ON]	INCINERATOR FEED / PUMP NO.2	M28
31	HS-53172 [1-2]	INCINERATOR SELECTOR	M26
32	SHK-52151	DEWATER. POLYMER / FEEDER NO.1	S12
33	SI-52151	POLYMER FEED / PUMP SPEED	N31
34	QL-52151 [ON]	DEWATER. POLYMER / FEEDER NO.1	M28
	HS-52151 [START]		M27
	HS-52151 [STOP]		M27
35	SHK-52152	DEWATER. POLYMER / FEEDER NO.2	S12
36	SI-52152	POLYMER FEED / PUMP SPEED	N31
37	QL-52152 [ON]	DEWATER. POLYMER / FEEDER NO.2	M28
	HS-52152 [START]		M27
	HS-52152 [STOP]		M27
38	SHK-52153	DEWATER. POLYMER / FEEDER NO.3	S12
39	SI-52153	POLYMER FEED / PUMP SPEED	N31
40	QL-52153 [ON]	DEWATER. POLYMER / FEEDER NO.3	M28
	HS-52153 [START]		M27
	HS-52153 [STOP]		M27
41	LI-51100	SLUDGE BLENDING / TANK LEVEL	N31

ANNUNCIATOR NO.1

COL-ROW	TAG NO.	WINDOW INSCRIPTION FIRST LINE / SECOND LINE / THIRD LINE
1-1	QA-51101 [FAIL]	CENTR FEED / PUMP NO.1 / FAIL
1-2	FAL-51101	CENTR FEED / PUMP NO.1 / LOW FLOW
1-3	PAH-51101	CENTR FEED / PUMP NO.1 / HIGH PRESSURE
1-4	QA-51100 [MODE MISMATCH]	CENTR FEED / PUMP NO.1 / MODE MISMATCH
2-1	QA-51102 [FAIL]	CENTR FEED / PUMP NO.2 / FAIL
2-2	FAL-51102	CENTR FEED / PUMP NO.2 / LOW FLOW
2-3	PAH-51102	CENTR FEED / PUMP NO.2 / HIGH PRESSURE
2-4	-	(SPARE)
3-1	QA-51103 [FAIL]	CENTR FEED / PUMP NO.3 / FAIL
3-2	FAL-51103	CENTR FEED / PUMP NO.3 / LOW FLOW
3-3	PAH-51103	CENTR FEED / PUMP NO.3 / HIGH PRESSURE
3-4	-	(SPARE)

ANNUNCIATOR NO.2

COL-ROW	TAG NO.	WINDOW INSCRIPTION FIRST LINE / SECOND LINE / THIRD LINE
1-1	LAL-53160	DEWATERED / SLUDGE HOPPER / LOW LEVEL
1-2	LAH-53160	DEWATERED / SLUDGE HOPPER / HIGH LEVEL
1-3	QA-53151 [FAIL]	SLUDGE / CONVEYOR NO.1 / FAIL
1-4	QA-53152 [FAIL]	SLUDGE / CONVEYOR NO.2 / FAIL
2-1	QA-53171 [FAIL]	INCINERATOR FEED / PUMP NO.1 / FAIL
2-2	QA-53172 [FAIL]	INCINERATOR FEED / PUMP NO.2 / FAIL
2-3	-	(SPARE)
2-4	-	(SPARE)
3-1	QA-52151 [FAIL]	POLYMER / FEEDER NO.1 / FAIL
3-2	QA-52152 [FAIL]	POLYMER / FEEDER NO.2 / FAIL
3-3	QA-52153 [FAIL]	POLYMER / FEEDER NO.3 / FAIL
3-4	-	(SPARE)

JERALD L. SLATTER STATE OF WASHINGTON 11546 REGISTERED PROFESSIONAL ENGINEER

CH2M HILL

DSGN V. AUSTIN
DR G. SLAYTER
CHK J. BLACK
APVD J GAUTHIER

NO.	DATE	REVISION	BY	APVD

REUSE OF DOCUMENTS
THIS DOCUMENT, AND THE IDEAS AND DESIGNS INCORPORATED HEREIN, AS AN INSTRUMENT OF PROFESSIONAL SERVICE, IS THE PROPERTY OF CH2M HILL AND IS NOT TO BE USED, IN WHOLE OR IN PART, FOR ANY OTHER PROJECT WITHOUT THE WRITTEN AUTHORIZATION OF CH2M HILL.
©CH2M HILL

BAR IS ONE INCH ON ORIGINAL DRAWING.
0 1"
IF NOT ONE INCH ON THIS SHEET, ADJUST SCALES ACCORDINGLY.

CITY OF BELLINGHAM, WASHINGTON
POST POINT WASTEWATER TREATMENT PLANT UPGRADE

INSTRUMENTATION AND CONTROL
LCP-53020
ELEMENTARY

DWG NO. 900-N-97
DATE AUG. 1990
PROJ NO. SEA22462.C1

OVERLAY IDENTIFICATION | COMPOSITE OVERLAY ORDER
PROJ/D
FILE

DGN NAME: H:/PROJ2/BELLINGH/BL900NCN.DGN

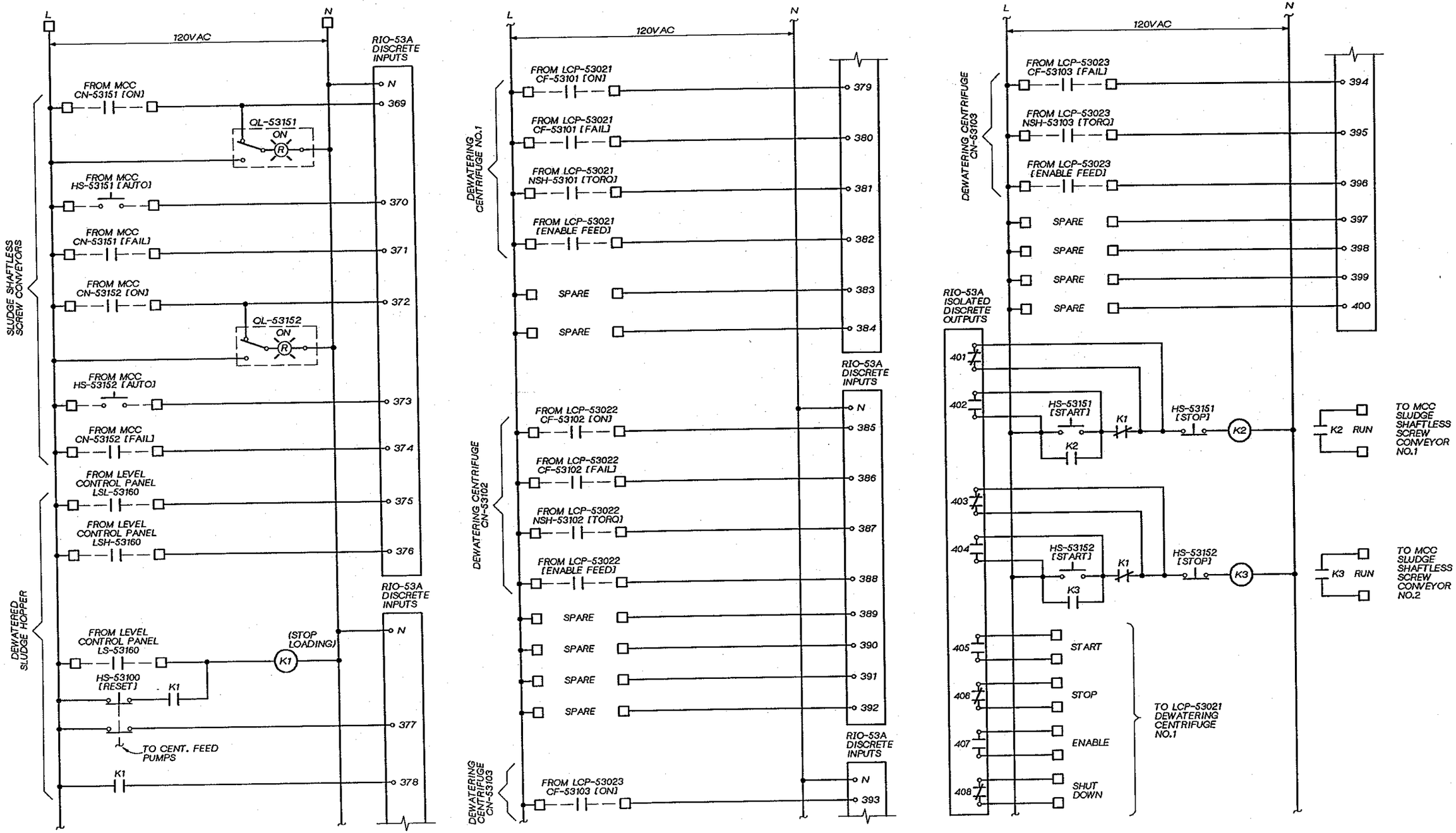

DSGN	V. AUSTIN				
DR	G. SLAYTER				
CHK	J. BLACK				
APVD	J GAUTHIER	NO.	DATE	REVISION	BY / APVD

CH2M HILL

REUSE OF DOCUMENTS

THIS DOCUMENT, AND THE IDEAS AND DESIGNS INCORPORATED HEREIN, AS AN INSTRUMENT OF PROFESSIONAL SERVICE, IS THE PROPERTY OF CH2M HILL AND IS NOT TO BE USED, IN WHOLE OR IN PART, FOR ANY OTHER PROJECT WITHOUT THE WRITTEN AUTHORIZATION OF CH2M HILL.

©CH2M HILL

BAR IS ONE INCH ON ORIGINAL DRAWING. 0 1" IF NOT ONE INCH ON THIS SHEET, ADJUST SCALES ACCORDINGLY.

CITY OF BELLINGHAM, WASHINGTON
POST POINT WASTEWATER TREATMENT PLANT UPGRADE

INSTRUMENTATION AND CONTROL

LCP-53020 ELEMENTARY

DWG NO. 900-N-98
DATE AUG. 1990
PROJ NO. SEA22462.C1

JERALD L. SLAYTER, STATE OF WASHINGTON, REGISTERED PROFESSIONAL ENGINEER

OVERLAY IDENTIFICATION | COMPOSITE | OVERLAY SCREEN | PROJ.ID | FILE

DGN NAME: H:/PROJ2/BELLINGH/BL900NCO.DGN

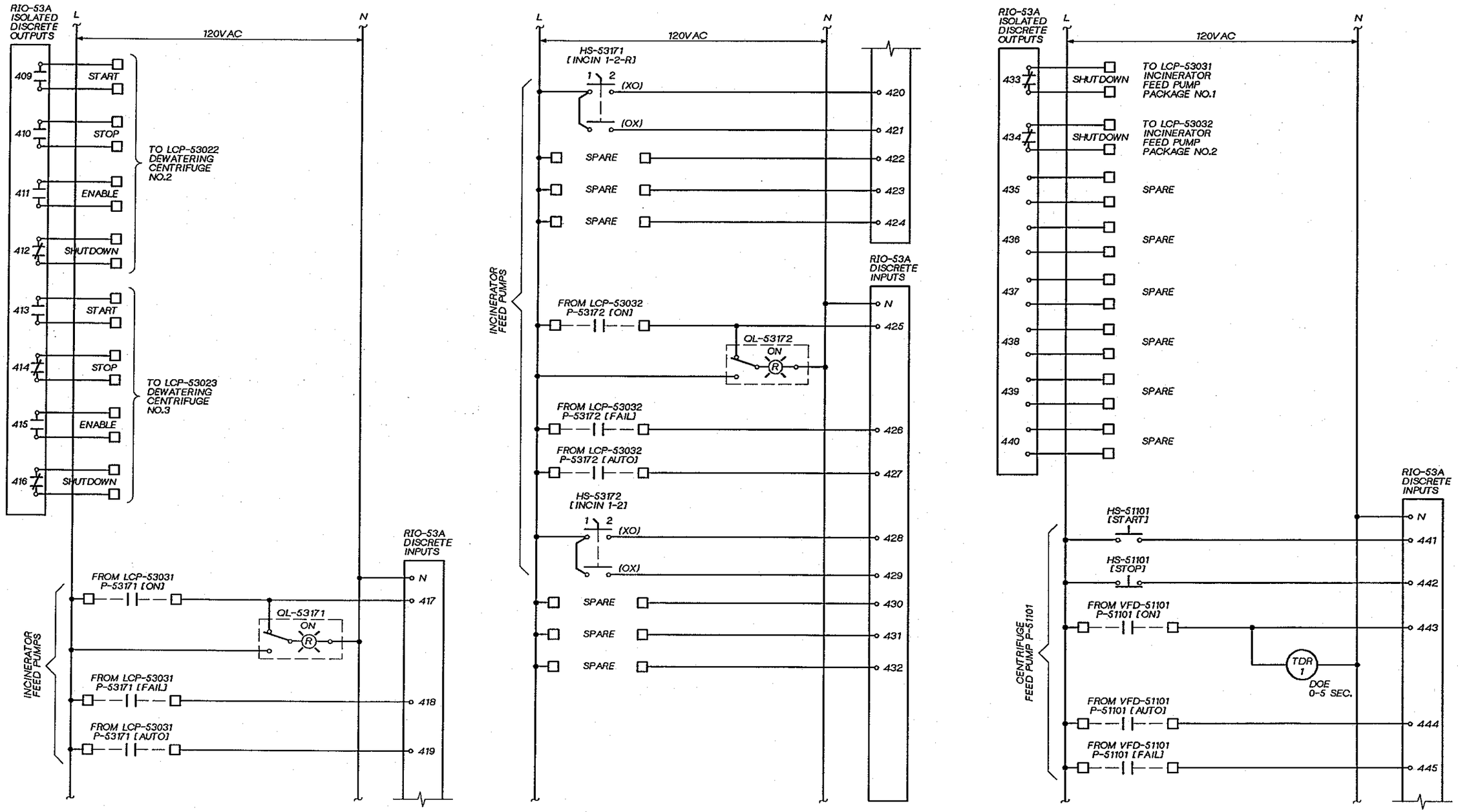

DSGN	V. AUSTIN				
DR	G. SLAYTER				
CHK	J. BLACK				
APVD	J GAUTHIER	NO.	DATE	REVISION	BY / APVD

CH2M HILL

REUSE OF DOCUMENTS

THIS DOCUMENT, AND THE IDEAS AND DESIGNS INCORPORATED HEREIN, AS AN INSTRUMENT OF PROFESSIONAL SERVICE, IS THE PROPERTY OF CH2M HILL AND IS NOT TO BE USED, IN WHOLE OR IN PART, FOR ANY OTHER PROJECT WITHOUT THE WRITTEN AUTHORIZATION OF CH2M HILL.

©CH2M HILL

BAR IS ONE INCH ON ORIGINAL DRAWING. 0 1"

IF NOT ONE INCH ON THIS SHEET, ADJUST SCALES ACCORDINGLY.

CITY OF BELLINGHAM, WASHINGTON
POST POINT WASTEWATER TREATMENT PLANT UPGRADE

INSTRUMENTATION AND CONTROL

LCP-53020
ELEMENTARY

DWG NO. 900-N-99
DATE AUG. 1990
PROJ NO. SEA22462.C1

COMPOSITE | OVERLAY SCREEN | OVERLAY IDENTIFICATION | PROJD | FILE

DRAWN BY: G. SLAYTER DESIGNED BY: V. AUSTIN
DGN NAME: H:/PROJ2/BELLINGH/BL900NCP.DGN

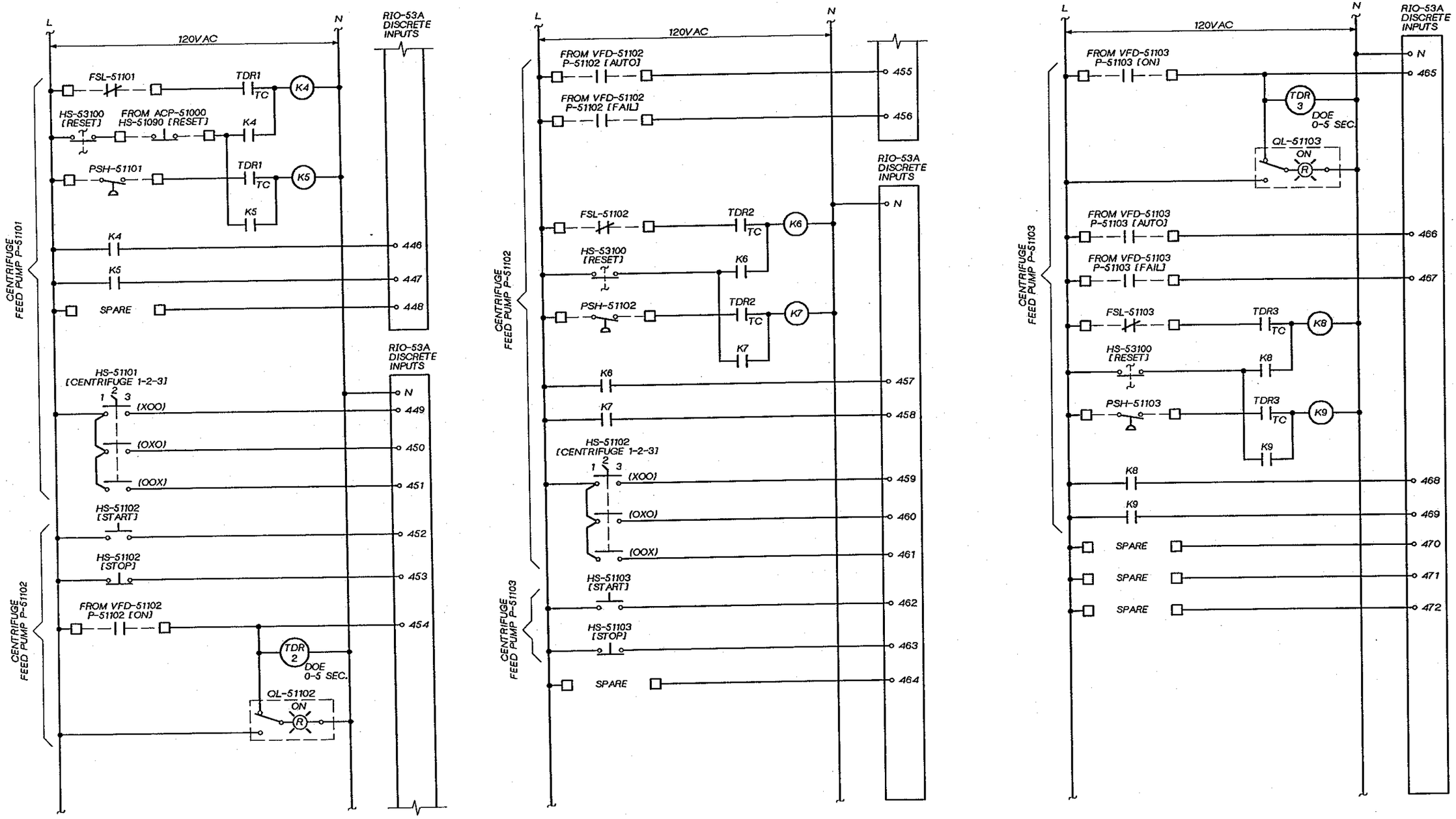

DSGN	V. AUSTIN				
DR	G. SLAYTER				
CHK	J. BLACK				
APVD	J GAUTHIER	NO.	DATE	REVISION	BY / APVD

CH2M HILL

REUSE OF DOCUMENTS
THIS DOCUMENT, AND THE IDEAS AND DESIGNS INCORPORATED HEREIN, AS AN INSTRUMENT OF PROFESSIONAL SERVICE, IS THE PROPERTY OF CH2M HILL AND IS NOT TO BE USED, IN WHOLE OR IN PART, FOR ANY OTHER PROJECT WITHOUT THE WRITTEN AUTHORIZATION OF CH2M HILL.
©CH2M HILL

BAR IS ONE INCH ON ORIGINAL DRAWING.
0 1"
IF NOT ONE INCH ON THIS SHEET, ADJUST SCALES ACCORDINGLY.

CITY OF BELLINGHAM, WASHINGTON
POST POINT WASTEWATER TREATMENT PLANT UPGRADE

INSTRUMENTATION AND CONTROL
LCP-53020
ELEMENTARY

DWG NO. 900-N-100
DATE AUG. 1990
PROJ NO. SEA22462.C1

OVERLAY IDENTIFICATION | COMPOSITE | OVERLAY | SCREEN | PROJID | FILE

DRAWN BY: G. SLAYTER DESIGNED BY: V. AUSTIN
DGN NAME: H:/PROJ2/BELLINGH/BL900NDI.DGN

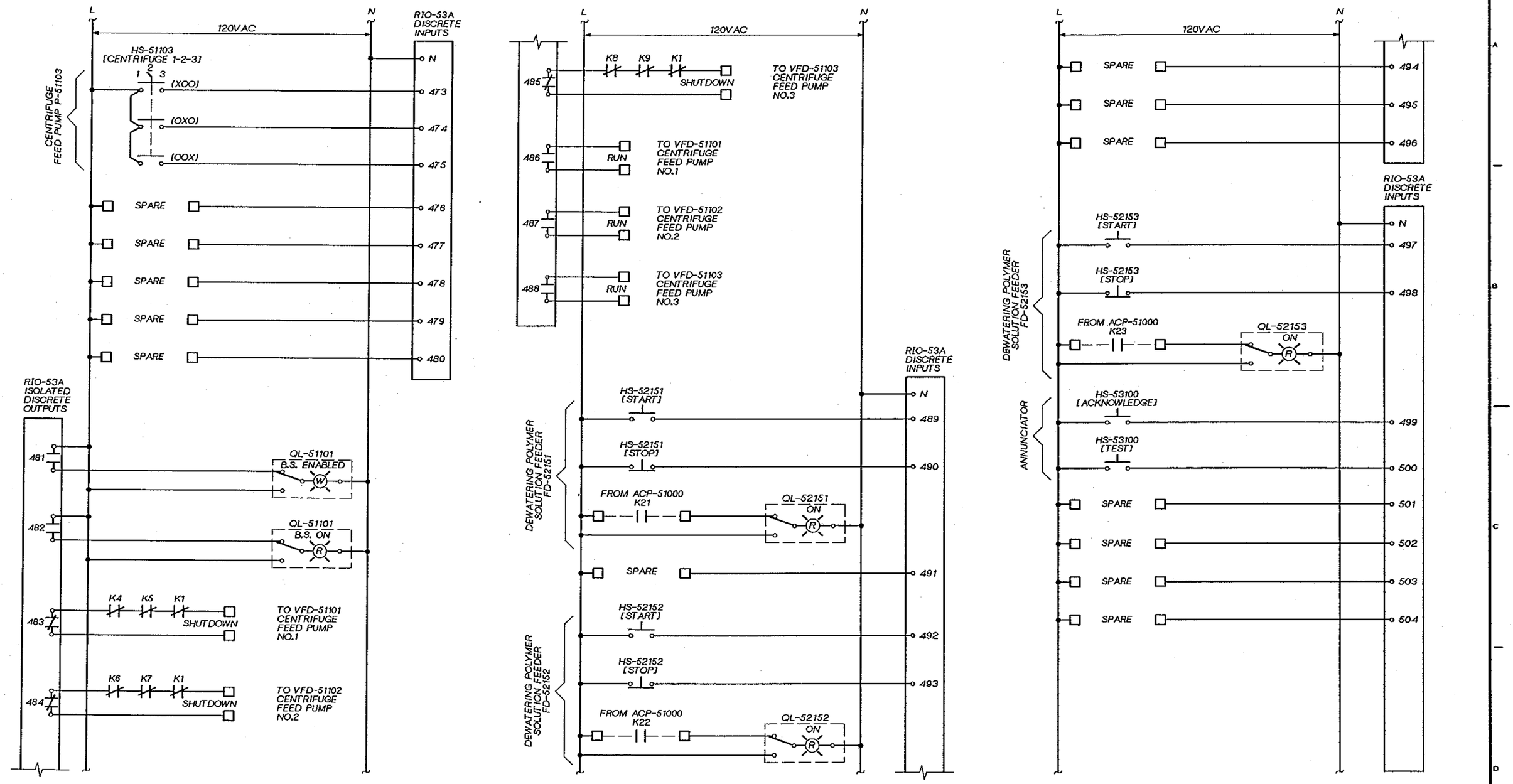

DSGN V. AUSTIN					
DR G. SLAYTER					
CHK J. BLACK					
APVD J GAUTHIER	NO.	DATE	REVISION	BY	APVD

CH2M HILL

REUSE OF DOCUMENTS
THIS DOCUMENT, AND THE IDEAS AND DESIGNS INCORPORATED HEREIN, AS AN INSTRUMENT OF PROFESSIONAL SERVICE, IS THE PROPERTY OF CH2M HILL AND IS NOT TO BE USED, IN WHOLE OR IN PART, FOR ANY OTHER PROJECT WITHOUT THE WRITTEN AUTHORIZATION OF CH2M HILL.
©CH2M HILL

BAR IS ONE INCH ON ORIGINAL DRAWING.
0 1"
IF NOT ONE INCH ON THIS SHEET, ADJUST SCALES ACCORDINGLY.

CITY OF BELLINGHAM, WASHINGTON
POST POINT WASTEWATER TREATMENT PLANT UPGRADE

INSTRUMENTATION AND CONTROL
LCP-53020
ELEMENTARY

DWG NO. 900-N-101
DATE AUG. 1990
PROJ NO. SEA22462.C1

DRAWN BY: G. SLAYTER DESIGNED BY: V. AUSTIN
DGN NAME: H:/PROJ2/BELLINGH/BL900NDJ.DGN

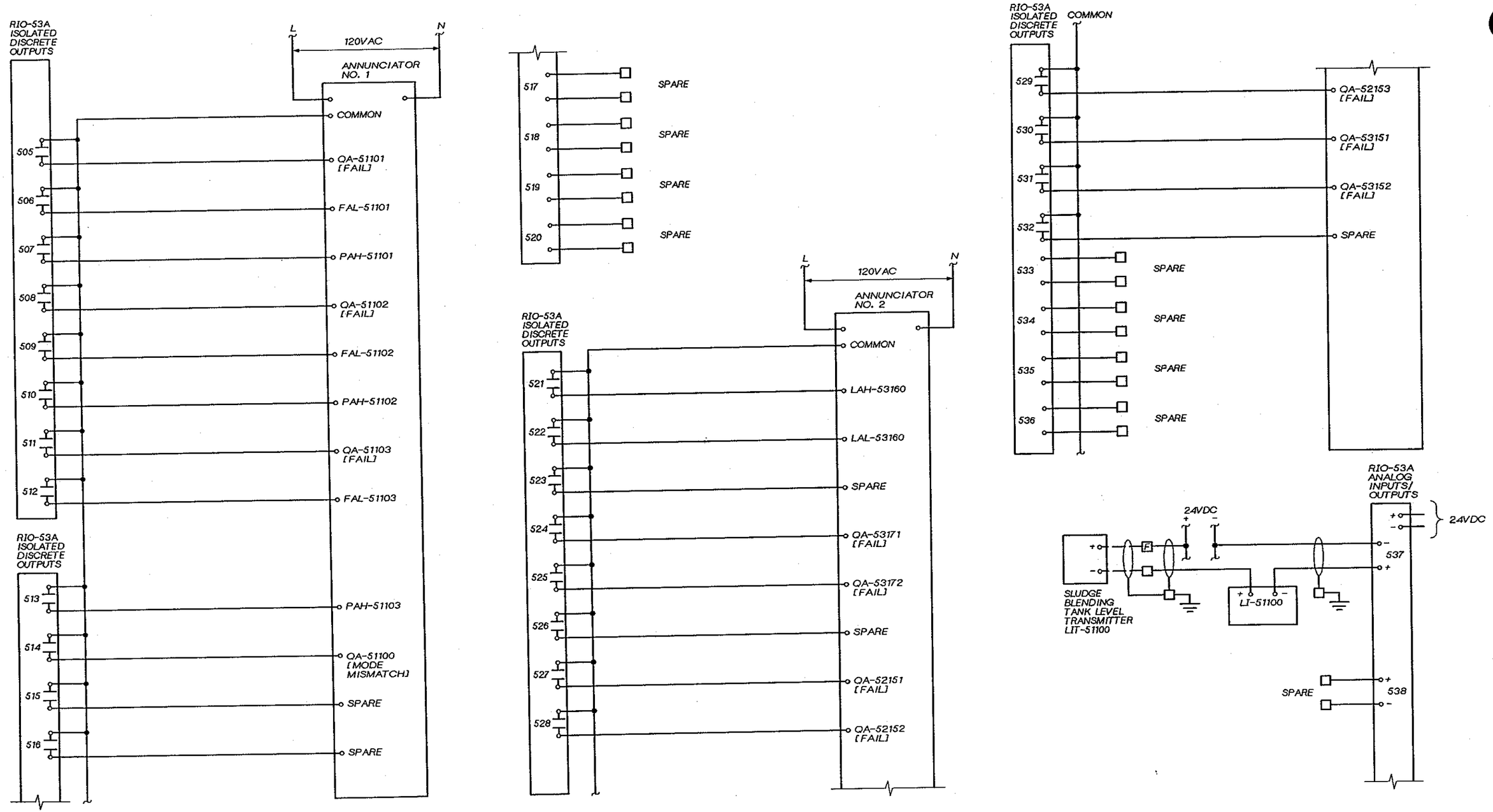

DSGN	V. AUSTIN				
DR	G. SLAYTER				
CHK	J. BLACK				
APVD	J GAUTHIER	NO.	DATE	REVISION	BY / APVD

CH2M HILL

REUSE OF DOCUMENTS
THIS DOCUMENT, AND THE IDEAS AND DESIGNS INCORPORATED HEREIN, AS AN INSTRUMENT OF PROFESSIONAL SERVICE, IS THE PROPERTY OF CH2M HILL AND IS NOT TO BE USED, IN WHOLE OR IN PART, FOR ANY OTHER PROJECT WITHOUT THE WRITTEN AUTHORIZATION OF CH2M HILL.
©CH2M HILL

BAR IS ONE INCH ON ORIGINAL DRAWING.
0 1"
IF NOT ONE INCH ON THIS SHEET, ADJUST SCALES ACCORDINGLY.

CITY OF BELLINGHAM, WASHINGTON
POST POINT WASTEWATER TREATMENT PLANT UPGRADE

INSTRUMENTATION AND CONTROL
LCP-53020
ELEMENTARY

DWG NO. 900-N-102
DATE AUG. 1990
PROJ NO. SEA22462.C1

OVERLAY IDENTIFICATION | COMPOSITE | OVERLAY | SCREEN | PROJ/D | FILE

DRAWN BY: G. SLAYTER DESIGNED BY: V. AUSTIN
DGN NAME: H:/PROJ2/BELLINGH/BL900NDK.DGN

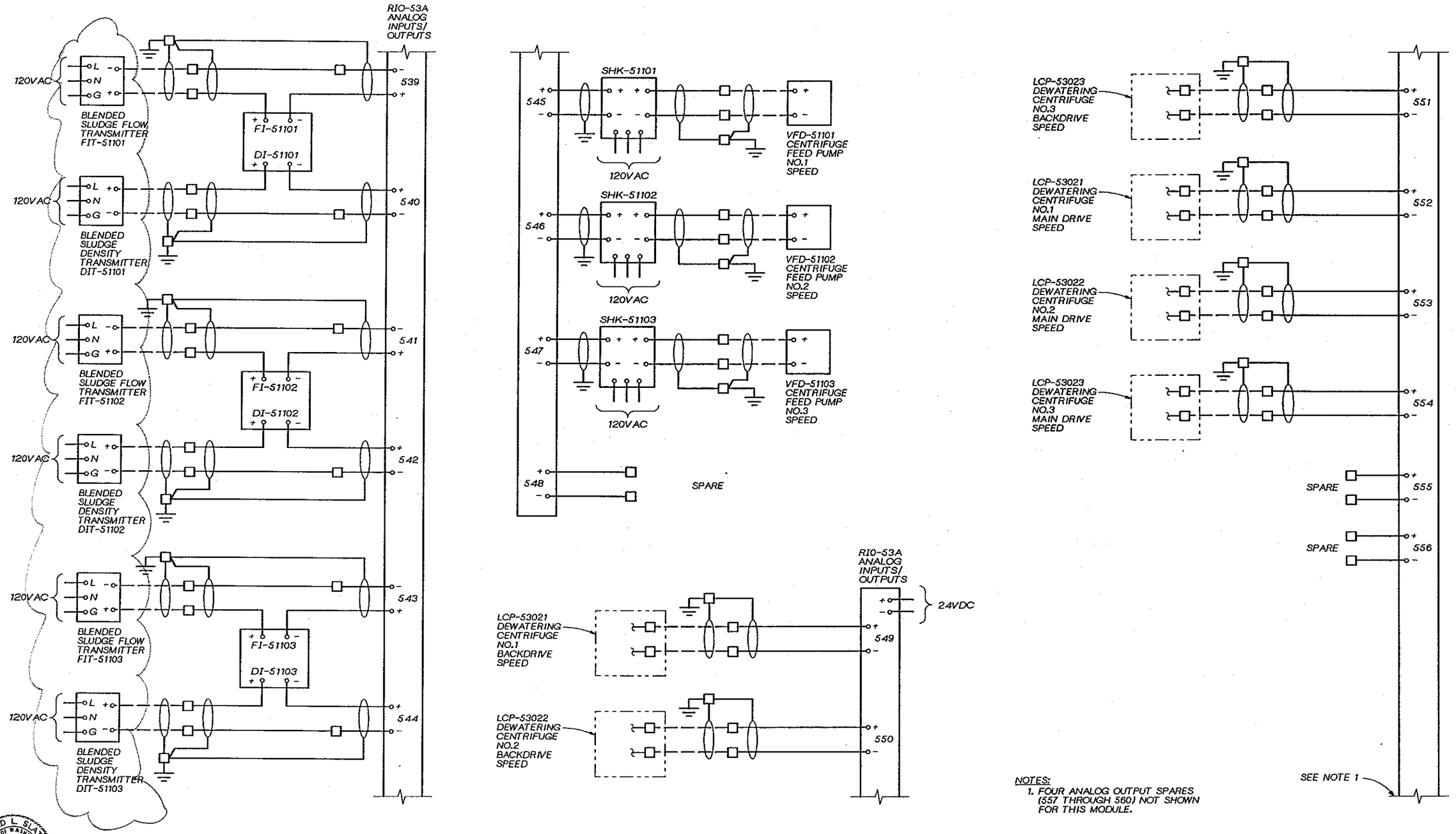

NOTES:
1. FOUR ANALOG OUTPUT SPARES (557 THROUGH 560) NOT SHOWN FOR THIS MODULE.

GERALD L. SLATER STATE OF WASHINGTON 17546 REGISTERED PROFESSIONAL ENGINEER

CH2M HILL

DSGN	V. AUSTIN				
DR	G. SLAYTER				
CHK	J. BLACK				
APVD	J GAUTHIER	NO.	DATE	REVISION	BY	APVD

REUSE OF DOCUMENTS
THIS DOCUMENT, AND THE IDEAS AND DESIGNS INCORPORATED HEREIN, AS AN INSTRUMENT OF PROFESSIONAL SERVICE, IS THE PROPERTY OF CH2M HILL AND IS NOT TO BE USED, IN WHOLE OR IN PART, FOR ANY OTHER PROJECT WITHOUT THE WRITTEN AUTHORIZATION OF CH2M HILL.
©CH2M HILL

BAR IS ONE INCH ON ORIGINAL DRAWING.
0 1"
IF NOT ONE INCH ON THIS SHEET, ADJUST SCALES ACCORDINGLY.

CITY OF BELLINGHAM, WASHINGTON
POST POINT WASTEWATER TREATMENT PLANT UPGRADE

INSTRUMENTATION AND CONTROL
LCP-53020
ELEMENTARY

DWG NO. 900-N-103
DATE AUG. 1990
PROJ NO. SEA22462.C1

OVERLAY IDENTIFICATION | COMPOSITE | OVERLAY SCREEN
PROJID | FILE

DRAWN BY: G. SLAYTER DESIGNED BY: V. AUSTIN
DGN NAME: H:/PROJ2/BELLINGH/BL900NDL.DGN

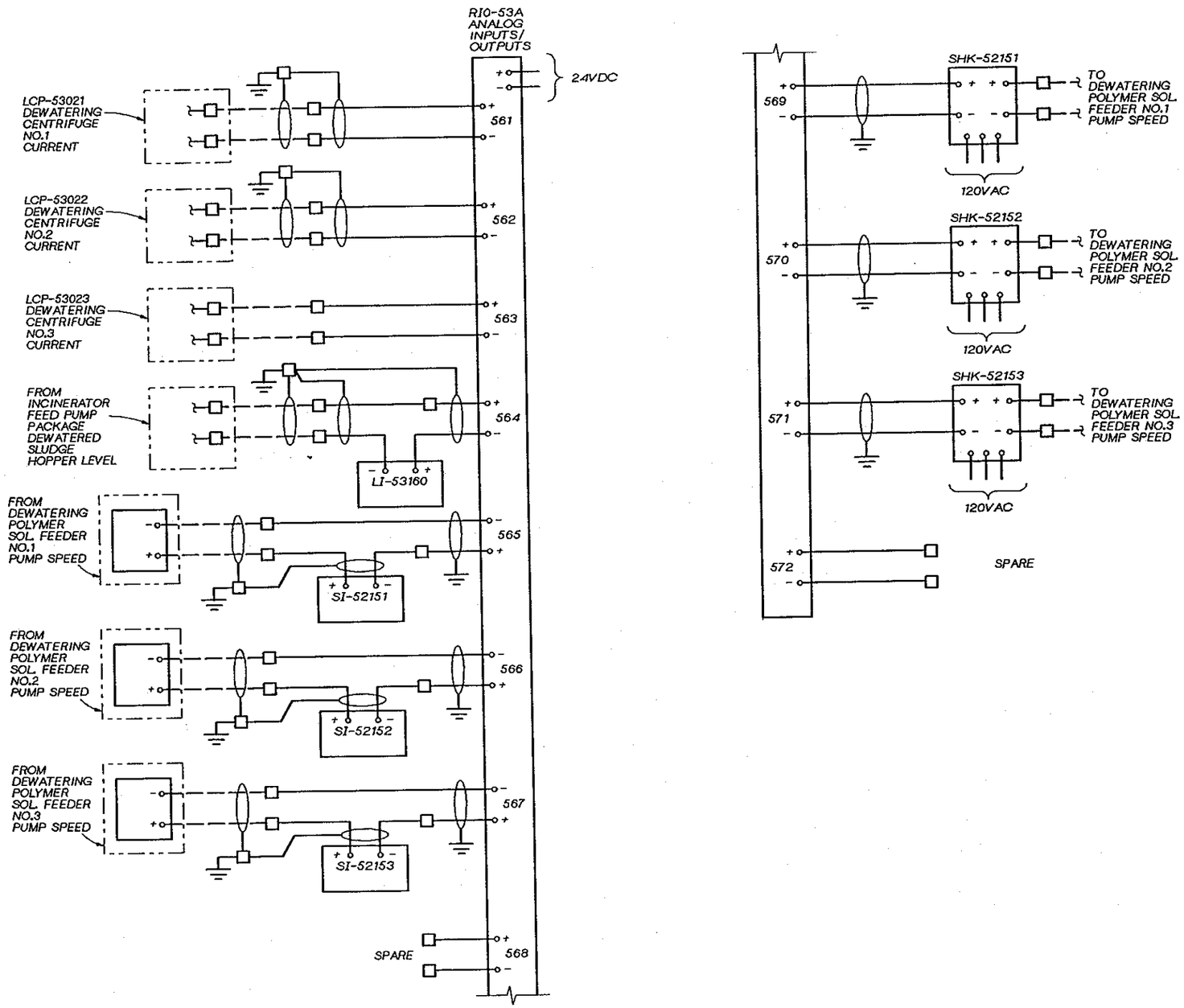

JERALD L. SLATER
STATE OF WASHINGTON
17546
PROFESSIONAL ENGINEER

CH2M HILL

DSGN	V. AUSTIN
DR	G. SLAYTER
CHK	J. BLACK
APVD	J GAUTHIER

NO.	DATE	REVISION	BY	APVD

REUSE OF DOCUMENTS
THIS DOCUMENT, AND THE IDEAS AND DESIGNS INCORPORATED HEREIN, AS AN INSTRUMENT OF PROFESSIONAL SERVICE, IS THE PROPERTY OF CH2M HILL AND IS NOT TO BE USED, IN WHOLE OR IN PART, FOR ANY OTHER PROJECT WITHOUT THE WRITTEN AUTHORIZATION OF CH2M HILL.
©CH2M HILL

BAR IS ONE INCH ON ORIGINAL DRAWING.
0 1"
IF NOT ONE INCH ON THIS SHEET, ADJUST SCALES ACCORDINGLY.

CITY OF BELLINGHAM, WASHINGTON
POST POINT WASTEWATER TREATMENT PLANT UPGRADE

INSTRUMENTATION AND CONTROL
LCP-53020
ELEMENTARY

DWG NO. 900-N-104
DATE AUG. 1990
PROJ. NO. SEA22462.C1

OVERLAY IDENTIFICATION | COMPOSITE | OVERLAY | SCREEN
PROJID
FILE

DRAWN BY: G. SLAYTER DESIGNED BY: V. AUSTIN
DGN NAME: H:/PROJ2/BELLINGH/BL900NCI.DGN

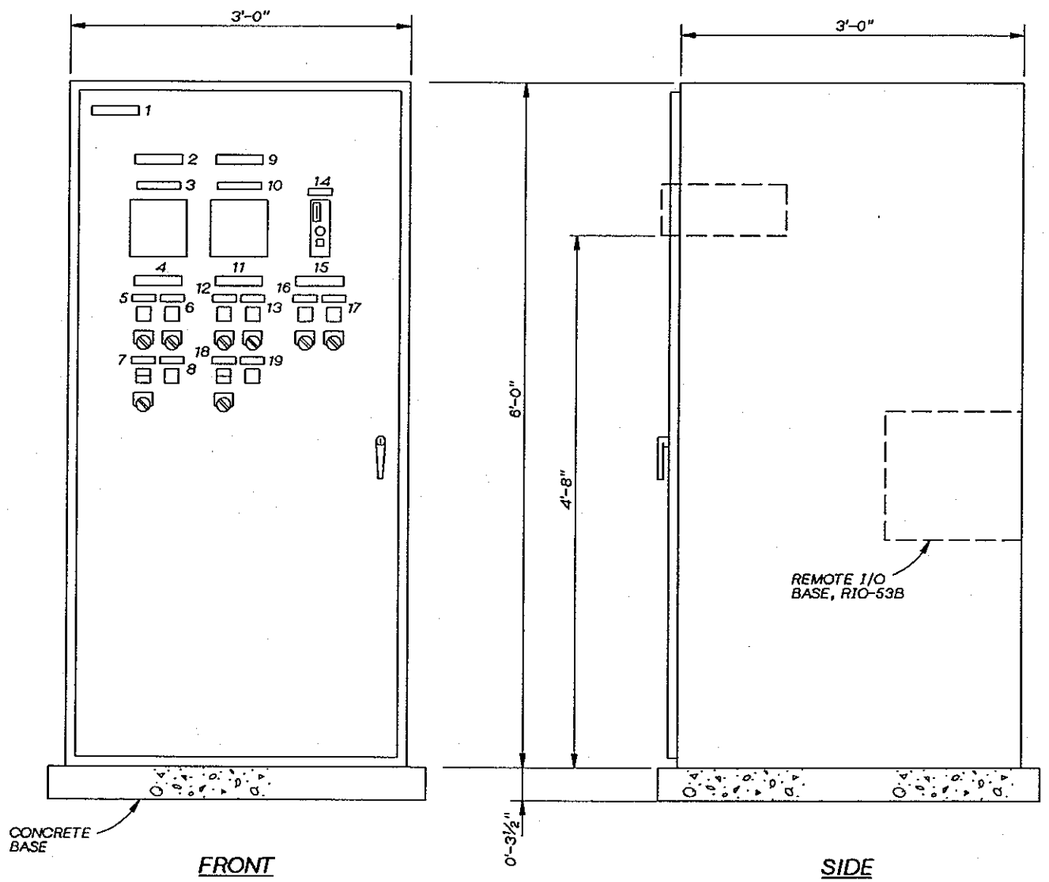

LOCAL CONTROL PANEL LCP-53040
1½" = 1'-0"

LCP-53040 SCHEDULE			
ITEM NO.	TAG NO.	NAMEPLATE INSCRIPTION (DESCRIPTION) FIRST LINE / SECOND LINE / THIRD LINE	SPEC NO.
1	-	LCP-53040 / SOLIDS HANDLING / ODOR CONTROL	
2	-	SCRUBBER STAGE NO.1	
3	AIT-53200 [pH]	SCRUBBER / RECIRCULATION pH	A07
4	-	SCRUBBER STAGE 1 / RECIRCULATION / PUMPS	
5	QL-53201 [ON]	PUMP NO.1	M06
	HS-53201 [OO]		M22
6	QL-53202 [ON]	PUMP NO.2	M06
	HS-53202 [OO]		M22
7	ZL-53200 [OPEN] ZL-53200 [CLOSED]	SCRUBBER BLOWDOWN	M05
	HS-53200 [OCA]		M22
8	LLL-53200	SCRUBBER / STAGE NO.1 / LOW LEVEL	M06
9	-	SCRUBBER STAGE NO.2	
10	AIT-53210 [pH]	SCRUBBER / RECIRCULATION pH	A07
11	-	SCRUBBER STAGE 2 / RECIRCULATION / PUMPS	
12	QL-53211 [ON]	PUMP NO.1	M06
	HS-53211 [OO]		M22
13	QL-53212 [ON]	PUMP NO.2	M06
	HS-53212 [OO]		M22
14	SHK-53220	SULFURIC ACID / FEED RATE	S12
15	-	SULFURIC ACID / FEED PUMPS	
16	QL-53221 [ON]	PUMP NO.1	M06
	HS-53221 [HOA]		M22
17	QL-53222 [ON]	PUMP NO.2	M06
	HS-53222 [HOA]		M22
18	ZL-53210 [OPEN] ZL-53210 [CLOSED]	SCRUBBER BLOWDOWN	M05
	HS-53210 [OCA]		M22
19	LLL-53210	SCRUBBER / STAGE NO.2 / LOW LEVEL	M06

NOTE:
SECURE PANEL ENCLOSURE TO CONCRETE BASE WITH ⅜" CONCRETE ANCHORS.

GERALD L. SLAYTER, STATE OF WASHINGTON, 13546, REGISTERED PROFESSIONAL ENGINEER

CH2M HILL

DSGN	V. AUSTIN
DR	G. SLAYTER
CHK	J. BLACK
APVD	J GAUTHIER

NO.	DATE	REVISION	BY	APVD

REUSE OF DOCUMENTS
THIS DOCUMENT, AND THE IDEAS AND DESIGNS INCORPORATED HEREIN, AS AN INSTRUMENT OF PROFESSIONAL SERVICE, IS THE PROPERTY OF CH2M HILL AND IS NOT TO BE USED, IN WHOLE OR IN PART, FOR ANY OTHER PROJECT WITHOUT THE WRITTEN AUTHORIZATION OF CH2M HILL.
©CH2M HILL

BAR IS ONE INCH ON ORIGINAL DRAWING.
0 1"
IF NOT ONE INCH ON THIS SHEET, ADJUST SCALES ACCORDINGLY.

CITY OF BELLINGHAM, WASHINGTON
POST POINT WASTEWATER TREATMENT PLANT UPGRADE

INSTRUMENTATION AND CONTROL
LCP-53040
ELEVATION

DWG NO. 900-N-105
DATE AUG. 1990
PROJ. NO. SEA22462.C1

OVERLAY IDENTIFICATION | COMPOSITE | PROJ'D | OVERLAY SHEET | FILE

DRAWN BY: G. SLAYTER DESIGNED BY: V. AUSTIN
DGN NAME: H:/PROJ2/BELLINGH/BL900NCJ.DGN

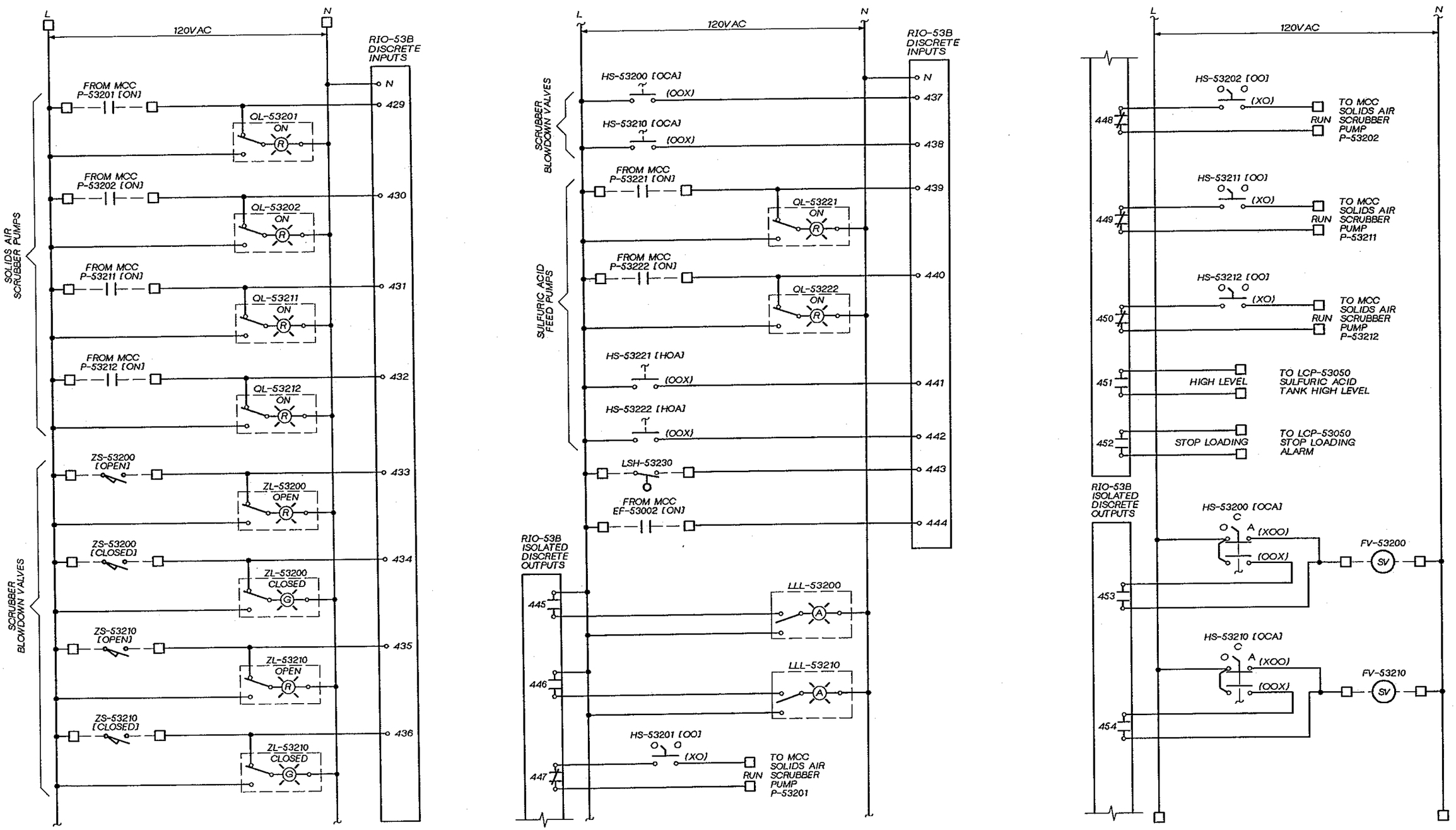

DSGN	V. AUSTIN				
DR	G. SLAYTER				
CHK	J. BLACK				
APVD	J GAUTHIER	NO.	DATE	REVISION	BY	APVD

CH2M HILL

REUSE OF DOCUMENTS
THIS DOCUMENT, AND THE IDEAS AND DESIGNS INCORPORATED HEREIN, AS AN INSTRUMENT OF PROFESSIONAL SERVICE, IS THE PROPERTY OF CH2M HILL AND IS NOT TO BE USED, IN WHOLE OR IN PART, FOR ANY OTHER PROJECT WITHOUT THE WRITTEN AUTHORIZATION OF CH2M HILL.
©CH2M HILL

BAR IS ONE INCH ON ORIGINAL DRAWING.
0 1"
IF NOT ONE INCH ON THIS SHEET, ADJUST SCALES ACCORDINGLY.

CITY OF BELLINGHAM, WASHINGTON
POST POINT WASTEWATER TREATMENT PLANT UPGRADE

INSTRUMENTATION AND CONTROL
LCP-53040
ELEMENTARY

DWG NO. 900-N-106
DATE AUG. 1990
PROJ NO. SEA22462.C1

OVERLAY IDENTIFICATION | COMPOSITE | OVERLAY SCREEN | PROJ'D | FILE

DRAWN BY: G. SLAYTER DESIGNED BY: V. AUSTIN
DGN NAME: H:/PROJ2/BELLINGH/BL900NCK.DGN

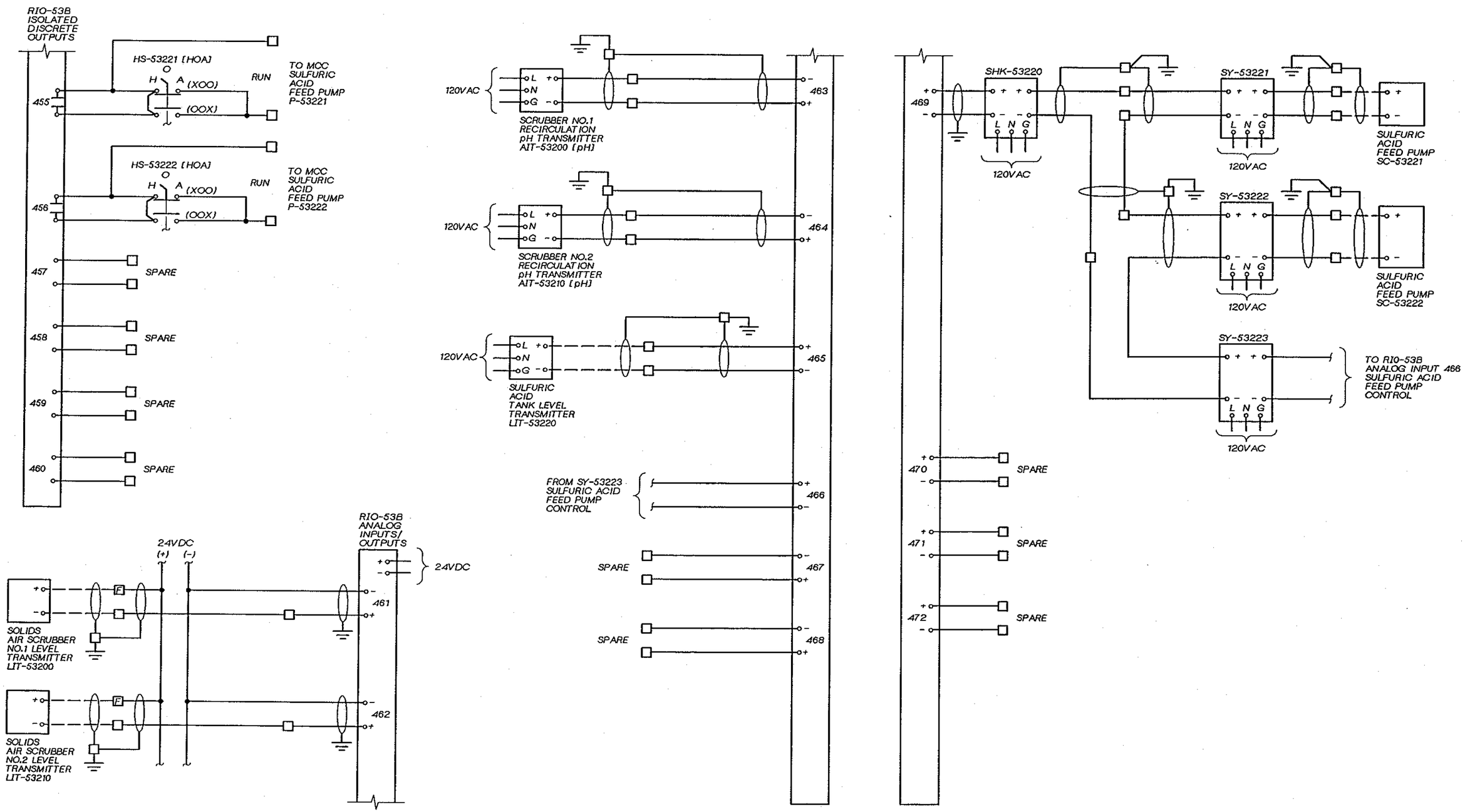

DSGN	V. AUSTIN				
DR	G. SLAYTER				
CHK	J. BLACK				
APVD	J GAUTHIER	NO.	DATE	REVISION	BY	APVD

CH2M HILL

REUSE OF DOCUMENTS
THIS DOCUMENT, AND THE IDEAS AND DESIGNS INCORPORATED HEREIN, AS AN INSTRUMENT OF PROFESSIONAL SERVICE, IS THE PROPERTY OF CH2M HILL AND IS NOT TO BE USED, IN WHOLE OR IN PART, FOR ANY OTHER PROJECT WITHOUT THE WRITTEN AUTHORIZATION OF CH2M HILL.
©CH2M HILL

BAR IS ONE INCH ON ORIGINAL DRAWING.
0 1"
IF NOT ONE INCH ON THIS SHEET, ADJUST SCALES ACCORDINGLY.

CITY OF BELLINGHAM, WASHINGTON
POST POINT WASTEWATER TREATMENT PLANT UPGRADE

INSTRUMENTATION AND CONTROL
LCP-53040
ELEMENTARY

DWG NO. 900-N-107
DATE AUG. 1990
PROJ NO. SEA22462.C1

OVERLAY IDENTIFICATION | COMPOSITE | OVERLAY | SCREEN | PROJID | FILE

DRAWN BY: G. SLAYTER DESIGNED BY: V. AUSTIN
DGN NAME: H:/PROJ2/BELLINGH/BL900NBU.DGN

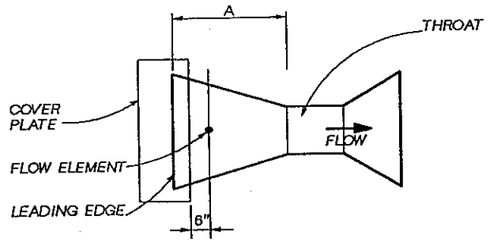

PARSHALL FLUME PLAN

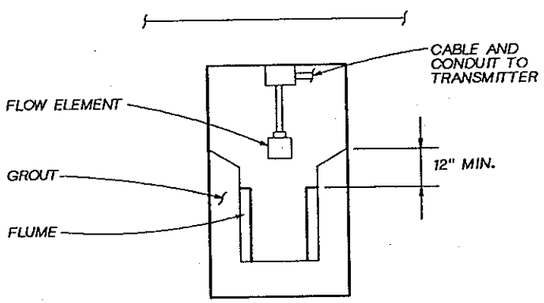

SECTION

FLUME FLOW ELEMENT INSTALLATION DETAIL (701)

NTS

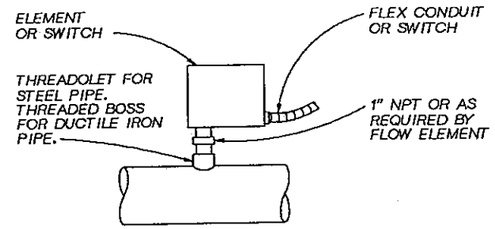

SWITCH/ELEMENT INSTALLATION (702)

NTS

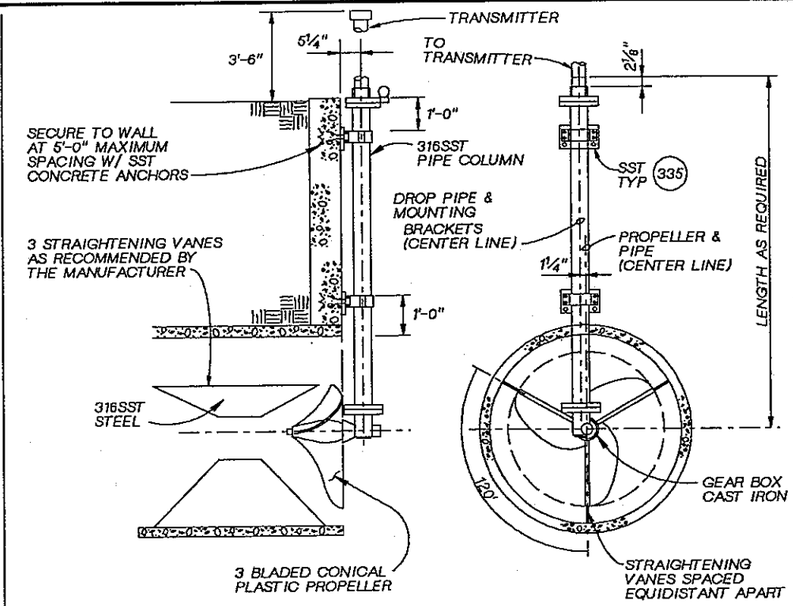

PROPELLER FLOW ELEMENT INSTALLATION (703)

NTS

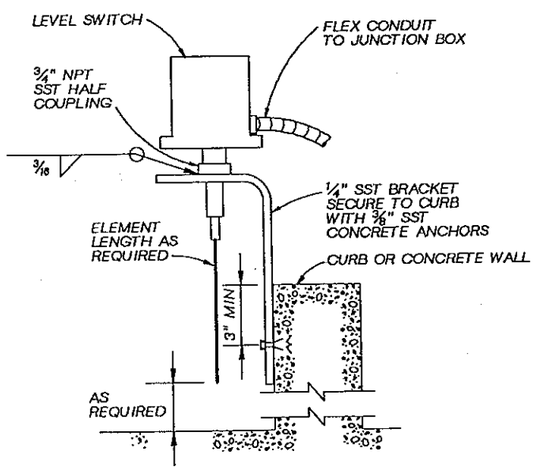

LEVEL SWITCH INSTALLATION DETAIL (704)

NTS

NOT USED (705)

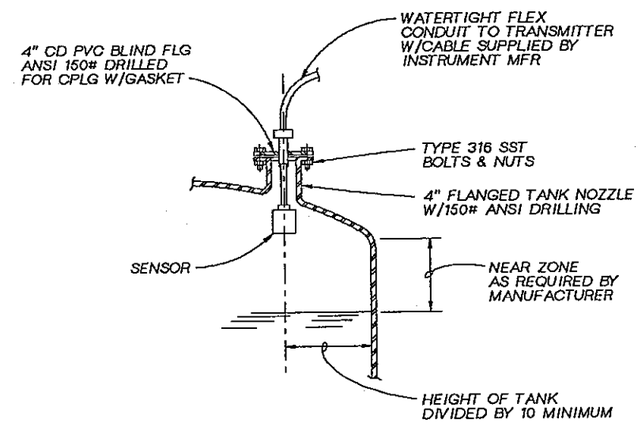

ULTRASONIC LEVEL ELEMENT INSTALLATION (706)

NTS

GERALD L SLATTER — STATE OF WASHINGTON — 17346 — REGISTERED PROFESSIONAL ENGINEER

CH2M HILL

DSGN	V. AUSTIN
DR	G. SLAYTER
CHK	J. BLACK
APVD	J GAUTHIER

NO.	DATE	REVISION	BY	APVD

REUSE OF DOCUMENTS
THIS DOCUMENT, AND THE IDEAS AND DESIGNS INCORPORATED HEREIN, AS AN INSTRUMENT OF PROFESSIONAL SERVICE, IS THE PROPERTY OF CH2M HILL AND IS NOT TO BE USED, IN WHOLE OR IN PART, FOR ANY OTHER PROJECT WITHOUT THE WRITTEN AUTHORIZATION OF CH2M HILL.
©CH2M HILL

BAR IS ONE INCH ON ORIGINAL DRAWING.
0 1"
IF NOT ONE INCH ON THIS SHEET, ADJUST SCALES ACCORDINGLY.

CITY OF BELLINGHAM, WASHINGTON
POST POINT WASTEWATER TREATMENT PLANT UPGRADE

INSTRUMENTATION AND CONTROL
INSTRUMENTATION & CONTROL STANDARD DETAILS

DWG NO. 900-N-108
DATE AUG. 1990
PROJ NO. SEA22462.C1

OVERLAY IDENTIFICATION: COMPOSITE, OVERLAY, PROJID, SCREEN, FILE

DRAWN BY: G. SLAYTER DESIGNED BY: V. AUSTIN
DGN NAME: H:/PROJ2/BELLINGH/BL900NBV.DGN

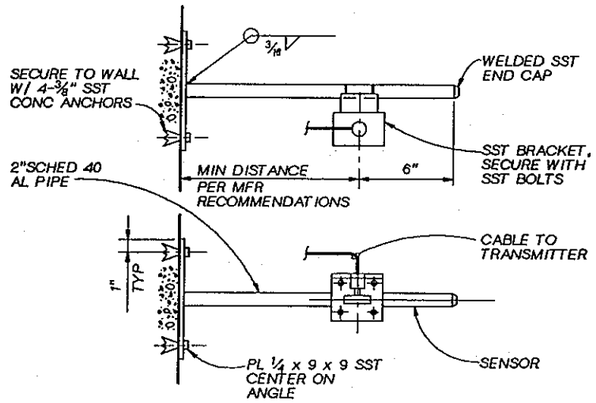

NOTES:
1. ROUND-OFF ALL EXPOSED EDGES AND CORNERS.
2. SENSOR SHALL BE MADE PLUMB PER MANUFACTURER RECOMMENDATIONS.
3. WHERE APPLICABLE, BAND GRATING OR PERFORATE CHECKERPLATE TO ALLOW REMOVAL OF GRATING OR CHECKERPLATE WITHOUT DISTURBING CABLE.

ULTRASONIC LEVEL ELEMENT, SURFACE MOUNT (707)
NTS

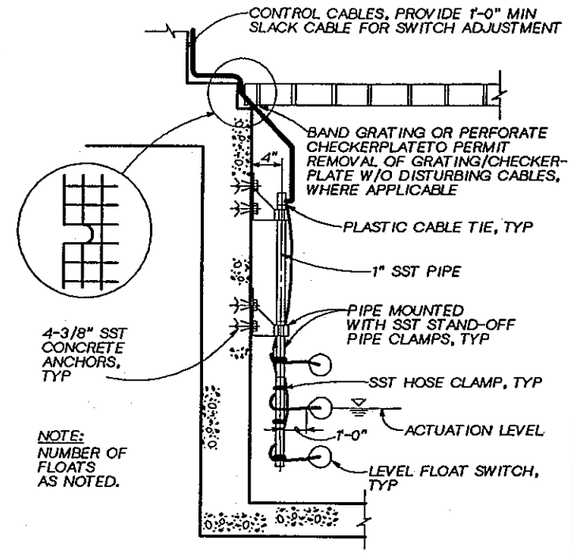

NOTE:
NUMBER OF FLOATS AS NOTED.

TYPICAL FLOAT TYPE LEVEL SWITCH INSTALLATION (708)
NTS

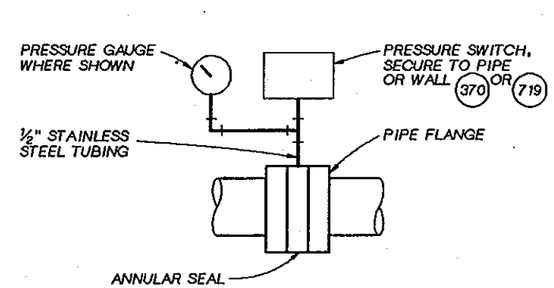

PRESSURE SWITCH INSTALLATION WITH SEAL (709)
NTS

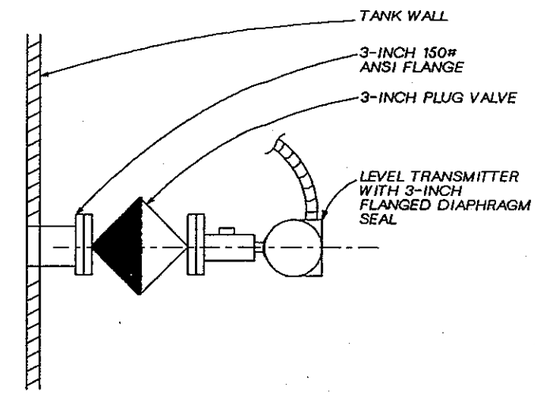

LEVEL TRANSMITTER INSTALLATION (710)
NTS

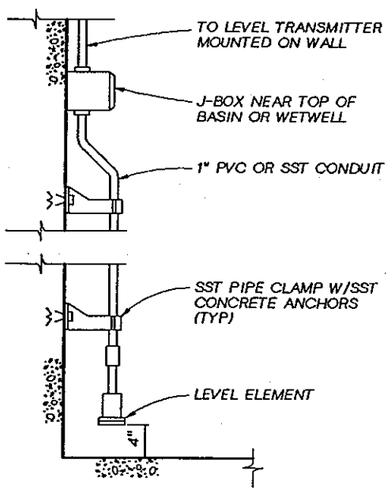

TRANSDUCER LEVEL ELEMENT INSTALLATION (711)
NTS

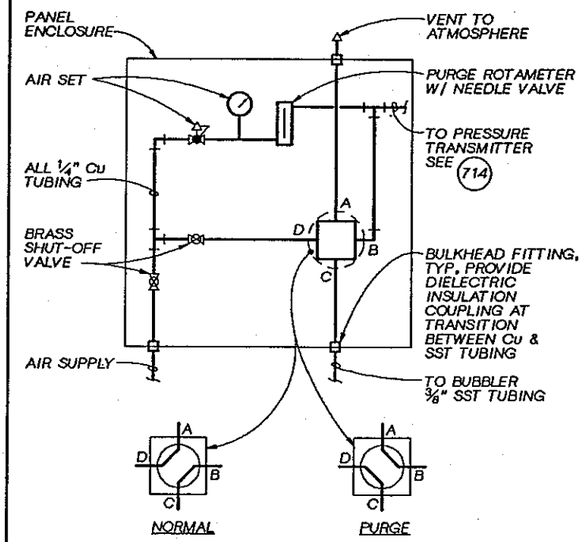

4-WAY BALL VALVE PORT ARRANGEMENT

BUBBLER PURGE STATION INSTALLATION (712)
NTS

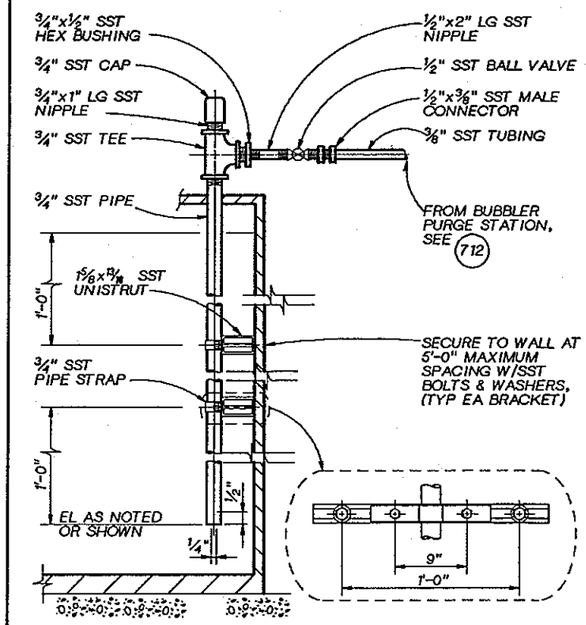

BUBBLER TUBE INSTALLATION (713)
NTS

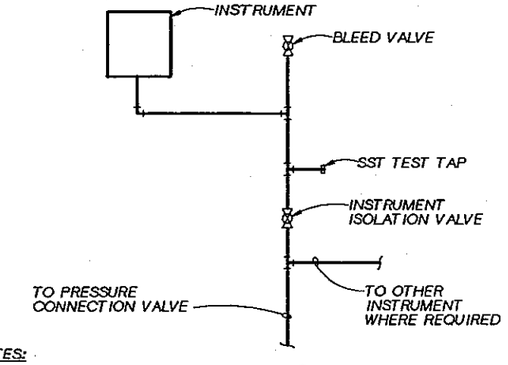

NOTES:
1. ALL TUBING AND FITTINGS SHALL BE 3/8" SST.
2. MOUNT INSTRUMENT ABOVE PRESSURE CONNECTION.
3. SLOPE ALL TUBING UP TOWARD BLEED VALVE AND INSTRUMENT AT 1/4" PER FOOT MINIMUM (1" PER FOOT MINIMUM PREFERRED).
4. MOUNT INSTRUMENT AND TUBING TO PROVIDE MAXIMUM ACCESS TO FITTINGS AND MINIMUM OBSTRUCTION TO WALKWAYS AND OTHER EQUIPMENT.
5. FOR BUBBLER APPLICATION. VENT LOW SIDE TO ATMOSPHERE.
6. THE INSTRUMENT ISOLATION VALVE IS REQUIRED EXCEPT FOR SINGLE INSTRUMENT APPLICATION WITH LESS THAN 5 FEET OF TUBING LENGTH BETWEEN THE INSTRUMENT AND A PRESSURE CONNECTION VALVE OR ELEMENT ISOLATION VALVE.
7. MOUNT INSTRUMENT, AND VALVE MANIFOLD WHERE APPLICABLE. WITH PRESSURE CONNECTION ON BOTTOM.
8. FOR BUBBLER APPLICATION, MOUNT TRANSMITTER IN BUBBLER PANEL.

PRESSURE INSTRUMENT TUBING, HIGH OFF-LINE MOUNT (714)
NTS

JERALD L SLATER, STATE OF WASHINGTON, 17546, REGISTERED PROFESSIONAL ENGINEER

CH2M HILL

DSGN	V. AUSTIN
DR	G. SLAYTER
CHK	J. BLACK
APVD	J GAUTHIER

NO.	DATE	REVISION	BY	APVD

REUSE OF DOCUMENTS
THIS DOCUMENT, AND THE IDEAS AND DESIGNS INCORPORATED HEREIN, AS AN INSTRUMENT OF PROFESSIONAL SERVICE, IS THE PROPERTY OF CH2M HILL AND IS NOT TO BE USED, IN WHOLE OR IN PART, FOR ANY OTHER PROJECT WITHOUT THE WRITTEN AUTHORIZATION OF CH2M HILL.
©CH2M HILL

BAR IS ONE INCH ON ORIGINAL DRAWING. 0 1"
IF NOT ONE INCH ON THIS SHEET, ADJUST SCALES ACCORDINGLY.

CITY OF BELLINGHAM, WASHINGTON
POST POINT WASTEWATER TREATMENT PLANT UPGRADE

INSTRUMENTATION AND CONTROL
INSTRUMENTATION & CONTROL STANDARD DETAILS

DWG NO. 900-N-109
DATE AUG. 1990
PROJ NO. SEA22462.C1

DRAWN BY: G. SLAYTER DESIGNED BY: V. AUSTIN
DGN NAME: H:/PROJ2/BELLINGH/BL900NBW.DGN

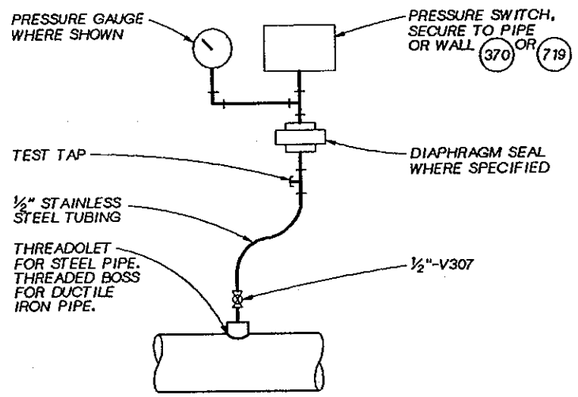

PRESSURE SWITCH INSTALLATION (715)

NTS

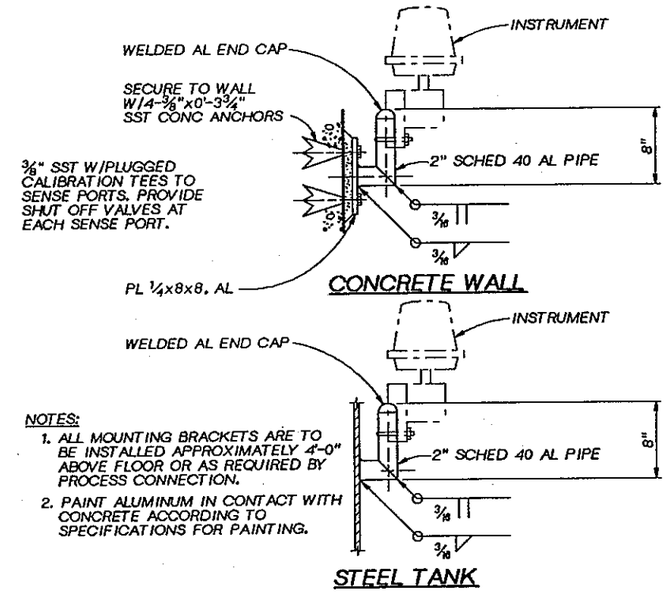

NOTES:
1. ALL MOUNTING BRACKETS ARE TO BE INSTALLED APPROXIMATELY 4'-0" ABOVE FLOOR OR AS REQUIRED BY PROCESS CONNECTION.
2. PAINT ALUMINUM IN CONTACT WITH CONCRETE ACCORDING TO SPECIFICATIONS FOR PAINTING.

INSTRUMENT INSTALLATION (716)

NTS

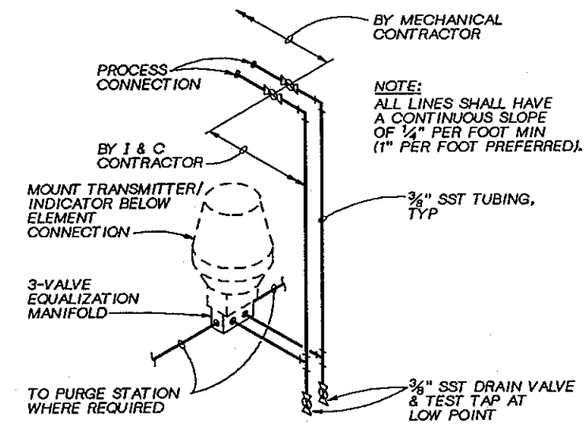

PRESSURE DIFFERENTIAL TRANSMITTER/INDICATOR FOR LEVEL SERVICE INSTALLATION (717)

NTS

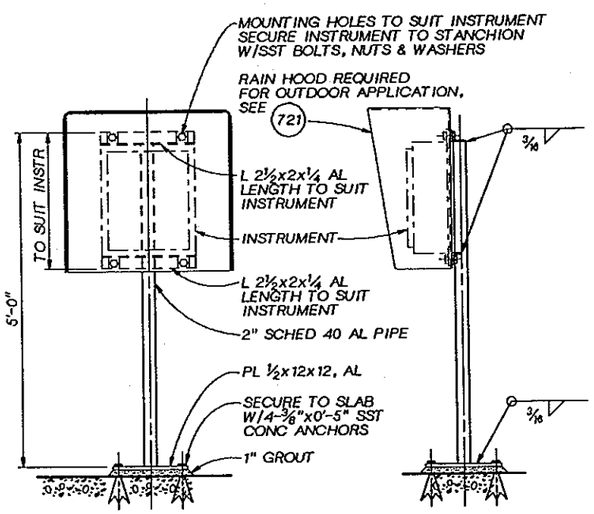

NOTES:
1. ROUND OFF ALL EXPOSED EDGES AND CORNERS.
2. PAINT ALUMINUM IN CONTACT WITH CONCRETE ACCORDING TO SPECIFICATIONS FOR PAINTING.

STANCHION SUPPORT FOR CASE MOUNTED INSTRUMENTS (718)

NTS

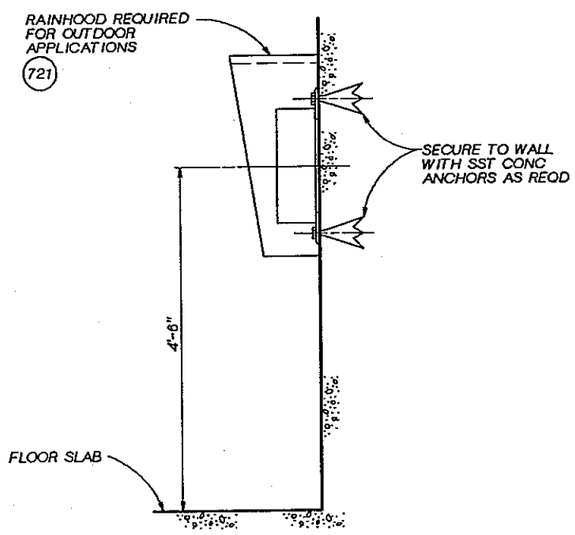

WALL MOUNTED INSTRUMENT INSTALLATION (719)

NTS

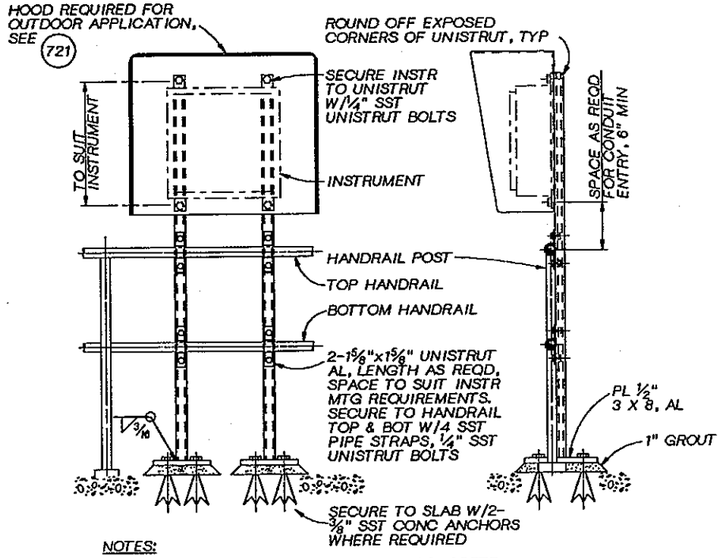

NOTES:
1. PAINT ALUMINUM IN CONTACT WITH CONCRETE ACCORDING TO SPECIFICATIONS FOR PAINTING.

CASE MOUNTED INSTRUMENT, HANDRAIL MOUNT (720)

NTS

COMPOSITE / OVERLAY / SCREEN
OVERLAY IDENTIFICATION / PROJD / FILE

GERALD L. SLAYTER, STATE OF WASHINGTON, 13546, REGISTERED PROFESSIONAL ENGINEER

CH2M HILL

DSGN	V. AUSTIN
DR	G. SLAYTER
CHK	J. BLACK
APVD	J GAUTHIER

NO.	DATE	REVISION	BY	APVD

REUSE OF DOCUMENTS
THIS DOCUMENT, AND THE IDEAS AND DESIGNS INCORPORATED HEREIN, AS AN INSTRUMENT OF PROFESSIONAL SERVICE, IS THE PROPERTY OF CH2M HILL AND IS NOT TO BE USED, IN WHOLE OR IN PART, FOR ANY OTHER PROJECT WITHOUT THE WRITTEN AUTHORIZATION OF CH2M HILL.
©CH2M HILL

BAR IS ONE INCH ON ORIGINAL DRAWING. 0 1"
IF NOT ONE INCH ON THIS SHEET, ADJUST SCALES ACCORDINGLY.

CITY OF BELLINGHAM, WASHINGTON
POST POINT WASTEWATER TREATMENT PLANT UPGRADE

INSTRUMENTATION AND CONTROL
INSTRUMENTATION & CONTROL STANDARD DETAILS

DWG NO. 900-N-110
DATE AUG. 1990
PROJ NO. SEA22462.C1

DRAWN BY: G. SLAYTER DESIGNED BY: V. AUSTIN
DGN NAME: H:/PROJ2/BELLINGH/BL900NBX.DGN

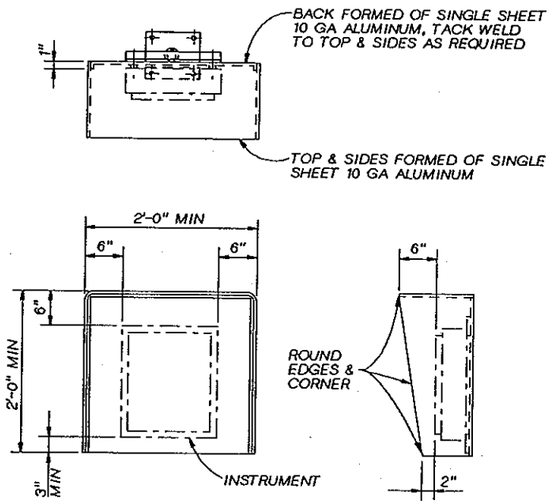

NOTES:
1. ALL EXPOSED EDGES TO BE GROUND SMOOTH AND BURR FREE.
2. MOUNT RAIN HOOD BETWEEN INSTRUMENT AND SUPPORT. DRILL HOLES IN RAIN HOOD AS PER MOUNTING HOLES FOR INSTRUMENT.
3. PAINT ALUMINUM IN CONTACT WITH CONCRETE ACCORDING TO SPECIFICATIONS FOR PAINTING.

RAIN HOOD INSTALLATION (721)
NTS

NOT USED (721)

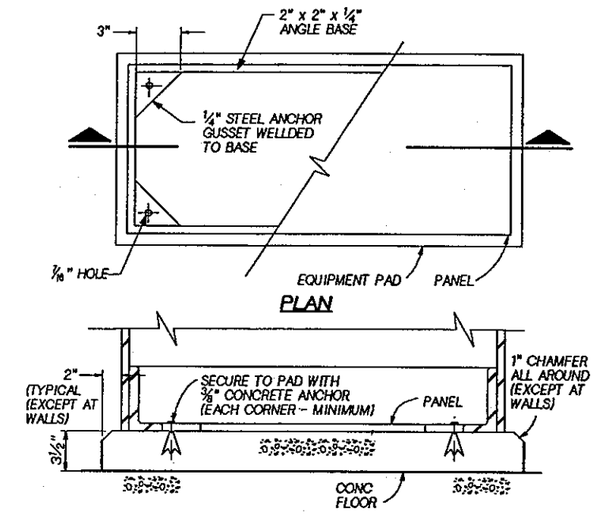

NOTES:
1. OPEN BOTTOM PANELS.
2. PROVIDE A MINIMUM OF ½" AIR SPACE BETWEEN WALL AND PANEL WHEN PANEL IS MOUNTED NEXT TO WALL.
3. PROVIDE ONE ANCHOR GUSSET AT EACH CORNER OF BASE AND AT EACH ADDITIONAL BASE BRACING MEMBER.

STANDARD PANEL MOUNTING (723)
NTS

NOTE:
TUBING SHALL HAVE CONTINUOUS SLOPE OF ¼" PER FOOT MIN DOWN TOWARD DUCT.

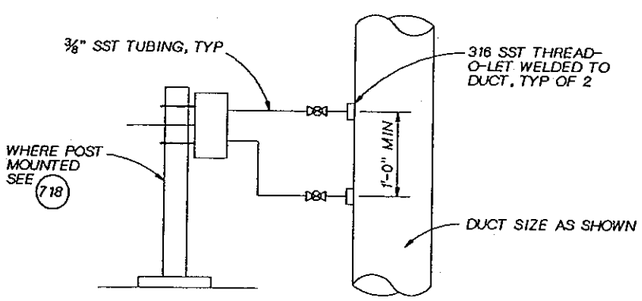

DUCT MOUNTED LEL INSTRUMENT (724)
NTS

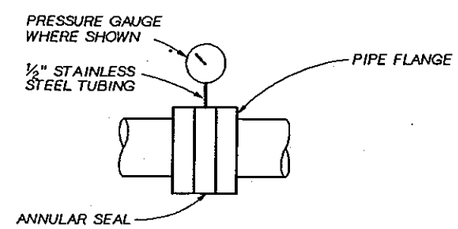

PRESSURE GAUGE INSTALLATION WITH SEAL (725)
NTS

DSGN V. AUSTIN					
DR G. SLAYTER					
CHK J. BLACK					
APVD J GAUTHIER	NO.	DATE	REVISION	BY	APVD

REUSE OF DOCUMENTS
THIS DOCUMENT, AND THE IDEAS AND DESIGNS INCORPORATED HEREIN, AS AN INSTRUMENT OF PROFESSIONAL SERVICE, IS THE PROPERTY OF CH2M HILL AND IS NOT TO BE USED, IN WHOLE OR IN PART, FOR ANY OTHER PROJECT WITHOUT THE WRITTEN AUTHORIZATION OF CH2M HILL.
©CH2M HILL

BAR IS ONE INCH ON ORIGINAL DRAWING.
0 1"
IF NOT ONE INCH ON THIS SHEET, ADJUST SCALES ACCORDINGLY.

CITY OF BELLINGHAM, WASHINGTON
POST POINT WASTEWATER TREATMENT PLANT UPGRADE

INSTRUMENTATION AND CONTROL
INSTRUMENTATION & CONTROL STANDARD DETAILS

DWG NO. 900-N-111
DATE AUG. 1990
PROJ NO. SEA22462.C1

CITY OF BELLINGHAM, WASHINGTON
30-INCH RAS EMERGENCY PIPE REPLACEMENT
CITY PROJECT NO. RAS PIPING ES-100
RECORD DRAWINGS DECEMBER 2017
VOLUME 2 OF 2

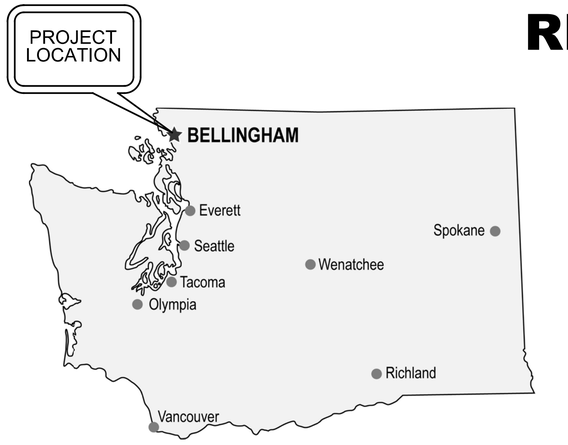

LOCATION MAP
NOT TO SCALE

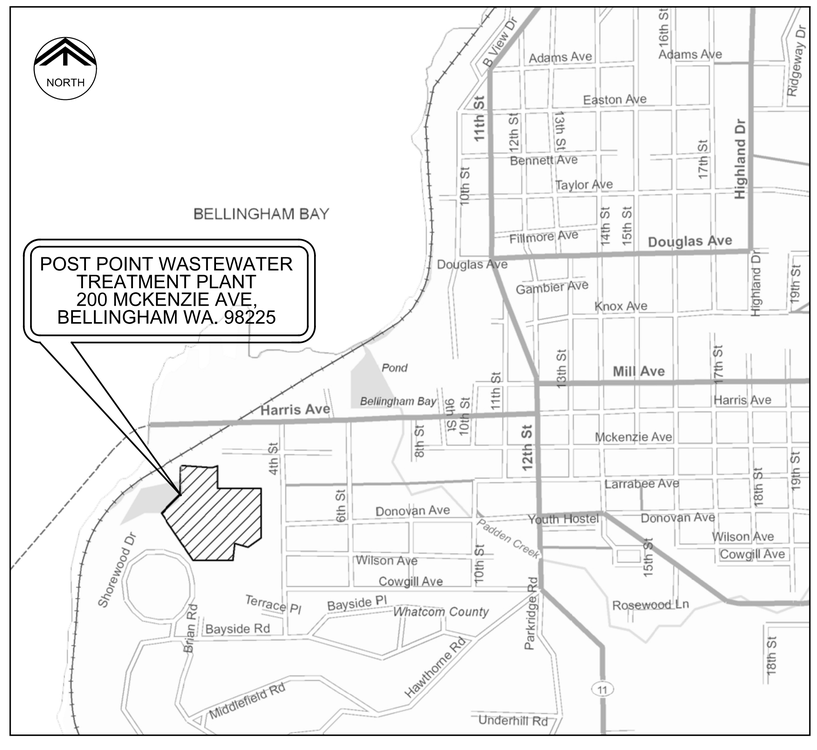

VICINITY MAP
NOT TO SCALE

INDEX OF DRAWINGS:

SHEET NO.	DRAWING NO.			DRAWING DESCRIPTION
	GENERAL			
1	010	G	101	COVER SHEET
2	010	G	102	GENERAL NOTES, LEGENDS AND ABBREVIATIONS
3	010	G	103	GENERAL STRUCTURAL NOTES
	DEMOLITION			
4	050	D	101	DEMOLITION PLAN
	MECHANICAL			
5	050	M	101	GALLERY PLAN
	STRUCTURAL			
6	050	S	101	SECTIONS AND DETAILS - 1
7	050	S	102	SECTIONS AND DETAILS - 2
8	050	S	103	SECTIONS AND DETAILS - 3
	CONTRACTOR PIPING AS-BUILT			
		P	1	30" RAS PIPE REPLACEMENT

RECORD DRAWINGS

THESE RECORD DRAWINGS HAVE BEEN PREPARED BASED IN PART ON INFORMATION PROVIDED BY OTHERS, AND IN ACCORDANCE WITH ENGINEER'S CONTRACTUAL SCOPE OF SERVICES.

THESE RECORD DRAWINGS WERE PREPARED ONLY FOR THE PROJECT AND SITE SPECIFICALLY IDENTIFIED HEREON AND IS NOT TO BE USED ELSEWHERE.

Engineer's Name: Digitally signed by Tyler James Whitehouse
Contact Info: Carollo Engineers, Inc.
Date: 2017.08.14 15:56:00-08'00'

Date:

REV	DATE	BY	DESCRIPTION
			RECORD DRAWINGS

DESIGNED TJW
DRAWN DE
CHECKED MLZ
DATE AUG 2017

** ORIGINAL SEALED BY TYLER JAMES WHITEHOUSE 08-14-2017 WA 49545 **

carollo

CITY OF BELLINGHAM WASHINGTON
DEPARTMENT OF PUBLIC WORKS

CITY OF BELLINGHAM, WASHINGTON
30-INCH RAS EMERGENCY PIPE REPLACEMENT
GENERAL
COVER SHEET

VERIFY SCALES
BAR IS ONE INCH ON ORIGINAL DRAWING
0 1"
IF NOT ONE INCH ON THIS SHEET, ADJUST SCALES ACCORDINGLY

JOB NO. 10791A.10
DRAWING NO. 010G101
SHEET NO. 1 OF 8

PROJECT NO.
FILE NAME: 10791A10010G101.dgn

Plot Date: 11-DEC-2017 2:40:17 PM
User: svcPW
Model: Layout1 ColorTable: gshade.ctb DesignScript: Carollo_Std_Pen_v0905.pen PlotScale: 1:1
LAST SAVED BY: dentiquez

GENERAL NOTES

1. CONTRACTOR SHALL VERIFY ALL DIMENSIONS BEFORE STARTING WORK AND SHALL IMMEDIATELY NOTIFY THE ENGINEER OF ANY DISCREPANCIES. CONTRACTOR SHALL BE RESPONSIBLE FOR FIELD VERIFYING ALL EXISTING CONDITIONS INCLUDING LOCATION AND DIMENSIONS OF ALL EXISTING CONSTRUCTION AND UTILITIES. CONTRACTOR SHALL NOTIFY ENGINEER IF THERE IS A CONFLICT BETWEEN THE CONTRACT DOCUMENTS AND EXISTING CONSTRUCTION BEFORE PROCEEDING WITH WORK.

2. EXISTING FACILITY AND UTILITY INFORMATION SHOWN ON THE DRAWINGS WAS OBTAINED FROM AVAILABLE RECORDS OR ELECTRONIC FILES. NEITHER THE OWNER NOR ENGINEER ASSUMES ANY RESPONSIBILITY FOR FACILITIES AND UTILITIES NOT SHOWN OR NOT IN THE LOCATION SHOWN. THE CONTRACTOR SHALL FIELD VERIFY ALL LOCATIONS, SIZES, MATERIAL TYPES, AND ELEVATIONS SHOWN AROUND OR NEAR AREAS OF NEW CONSTRUCTION PRIOR TO START OF CONSTRUCTION.

3. THE CONTRACTOR SHALL TAKE ALL PRECAUTIONARY MEASURES NECESSARY TO PROTECT FROM DAMAGE EXISTING FACILITIES AND UTILITIES SHOWN OR NOT SHOWN THAT ARE TO REMAIN IN PLACE. ALL FACILITIES DAMAGED BY THE CONTRACTOR'S OPERATIONS SHALL BE EXPEDITIOUSLY REPAIRED OR RECONSTRUCTED TO THE ORIGINAL OR BETTER CONDITION AT THE CONTRACTOR'S EXPENSE WITHOUT ADDITIONAL COMPENSATION.

4. CONTRACTOR SHALL MAKE CONNECTIONS TO EXISTING PIPE, EQUIPMENT, ETC. AS REQUIRED AND SHALL PROVIDE ALL FITTINGS, ADAPTERS, AND APPURTENANCES REQUIRED TO MAKE THE CONNECTIONS. PROVIDE ALL SUPPORTS REQUIRED FOR A RIGIDLY SUPPORTED COMPLETE AND WORKING SYSTEM.

5. CONTRACTOR SHALL VERIFY LOCATION OF ALL ARCHITECTURAL, MECHANICAL, AND ELECTRICAL ITEMS BEFORE PLACING ANY STRUCTURAL STEEL OR CONCRETE. ALSO, STRUCTURAL DIMENSIONS AND OPENINGS CONTROLLED BY ARCHITECTURAL, MECHANICAL, OR ELECTRICAL EQUIPMENT SHALL BE VERIFIED BY THE CONTRACTOR PRIOR TO CONSTRUCTION.

6. **PRECONSTRUCTION CONFERENCE**: UPON ISSUANCE OF NOTICE TO PROCEED, OR EARLIER WHEN MUTUALLY AGREEABLE, ENGINEER WILL ARRANGE PRECONSTRUCTION CONFERENCE TO BE HELD AT POST POINT WWTP. ATTENDEES SHALL INCLUDE CONTRACTOR'S PROJECT MANAGER AND SUPERINTENDENT, OWNER, ENGINEER, MAJOR SUBCONTRACTORS AND OTHERS INVOLVED IN PERFORMANCE OF THE WORK, AND OTHERS NECESSARY TO AGENDA.

7. **PROGRESS MEETINGS**: PROGRESS MEETINGS WILL BE HELD AT POST POINT WWTP AT MAXIMUM WEEKLY INTERVALS TO REVIEW WORK PERFORMED AND PLAN FOR UPCOMING WORK AND INSPECTIONS. ATTENDEES SHALL INCLUDE CONTRACTOR'S PROJECT MANAGER AND SUPERINTENDENT, OWNER, ENGINEER, MAJOR SUBCONTRACTORS AND OTHERS INVOLVED IN PERFORMANCE OF THE WORK.

8. **SCHEDULE**: CONTRACTOR SHALL SUBMIT A BASELINE SCHEDULE FOR ALL PROJECT WORK AT THE PRECONSTRUCTION CONFERENCE FOR ENGINEER AND OWNER REVIEW. IDENTIFY CRITICAL PATH AND SHOW SEQUENCE AND INTERDEPENDENCE OF ALL ACTIVITIES REQUIRED FOR COMPLETE PERFORMANCE OF ALL WORK, BEGINNING WITH DATE OF NOTICE TO PROCEED AND CONCLUDING WITH DATE OF FINAL COMPLETION OF CONTRACT. SCHEDULE SHALL BE UPDATED THROUGHOUT PERFORMANCE OF THE WORK AS REQUESTED BY THE ENGINEER OR OWNER.

9. **SAFETY**: CONTRACTOR SHALL ASSUME SOLE RESPONSIBILITY FOR EVERY ASPECT OF HEALTH AND SAFETY ON THE JOBSITE, INCLUDING THE HEALTH AND SAFETY OF SUBCONTRACTORS, SUPPLIERS, AND OTHER PERSONS ON THE JOBSITE. ALL FEDERAL, AND LOCAL HEALTH AND SAFETY LAWS, RULES AND REQUIREMENTS FOR THE DURATION OF THE CONTRACT TIMES SHALL BE ADHERED TO.

10. **SPECIAL INSPECTIONS AND TESTING**: CONTRACTOR SHALL NOTIFIY THE ENGINEER'S INDEPENDENT INSPECTION AND TESTING REPRESENTATIVE 48 HOURS IN ADVANCE OF ALL WORK REQUIRING INSPECTION AND/OR TESTING. WORK REQUIRED FOR INSPECTION AND/OR TESTING INCLUDES, BUT MAY NOT BE LIMITED TO:

    A. SHOP AND FIELD APPLIED PIPE LINING AND COATING.
    B. CONCRETE MIX, PLACEMENT AND CURING.
    C. REINFORCING STEEL.
    D. CAST-IN AND POST-INSTALLED ANCHORS.
    E. STRUCTURAL STEEL BOLTING AND WELDING.
    F. FIELD PIPE PRESSURE TESTING.

11. **RECORD DRAWINGS**: MAINTAIN AT PROJECT SITE, AVAILABLE TO OWNER AND ENGINEER, 1 FULL SIZE COPY OF THE CONTRACT DRAWINGS. MARK AND RECORD PERTINENT DIMENSIONS OF INSTALLED PIPING AND SUPPORTS, FIELD CHANGES AND DETAILED INFORMATION CONTAINED IN SUBMITTALS, RFI'S, AND CHANGE ORDERS AS THE WORK PROGRESSES. SUBMIT FOR ENGINEER AND OWNER REVIEW AND APPROVAL AT COMPLETION OF CONSTRUCTION.

12. **COMPLETION**: SUBSTANTIAL COMPLETION SHALL BE THE DAY THE ENGINEER DETERMINES THE OWNER HAS FULL AND UNRESTRICTED USE AND BENEFIT OF THE FACILITIES, BOTH FROM THE OPERATIONAL AND SAFETY STANDPOINT, AND ONLY MINOR INCIDENTAL WORK, REPLACEMENT OF TEMPORARY SUBSTITUTE FACILITIES, OR CORRECTION OR REPAIR REMAINS FOR THE PHYSICAL COMPLETION OF THE TOTAL CONTRACT. WITHIN 1 WEEK OF THE DATE OF SUBSTANTIAL COMPLETION, ENGINEER AND OWNER WILL PERFORM A WALK-THRU AND DEVELOP A PUNCH LIST OF WORK ITEMS TO BE CORRECTED/COMPLETED BY THE CONTRACTOR. CONTRACTOR SHALL COMPLETE ANY PUNCH LIST ITEMS WITHIN 1 WEEK OF RECEIPT OF THE PUNCH LIST AND THEN REQUEST A FINAL INSPECTION BY THE ENGINEER AND OWNER. UPON ACCEPTANCE OF THE WORK, PHYSICAL COMPLETION WILL BE ESTABLISHED. FINAL COMPLETION AND ACCEPTANCE BY THE OWNER SHALL BE ESTABLISHED WHEN ALL PAPERWORK AS REQUIRED BY THE CONTRACT AND LAW IS COMPLETE.

13. ELEVATIONS ARE BASED ON CITY OF BELLINGHAM VERTICAL DATUM.

PIPING SYMBOLS

DOUBLE LINE	SINGLE LINE	DESCRIPTION
		WELDED JOINT
		GROOVED END JOINT
		FLANGED JOINT
		GATE VALVE
		FLEXIBLE COUPLING WITH THRUST TIES
		ELBOW UP
		ELBOW DOWN
		ELBOW, 90 DEGREE
		ELBOW, 45 DEGREE

LINE WORK

	NEW	EXISTING
CONSTRUCTION		
CENTER LINE		
HIDDEN LINE		
REMOVE AND/OR ABANDON		
MATCH LINE	MATCH LINE SEE DWG ##X##	

SYMBOLS

BREAK LINE

PIPE BREAK PLAN VIEW

PIPE BREAK CROSS SECTION

SCALE 0 50' 100' 200'

NORTH ARROW — NORTH

PIPE TAG — PIPE SIZE — FLOW STREAM — X" XXX

PIPE CONTINUATION (SINGLE LINE)

KEY NOTE — 34

REVISION DELTA — 2

EXISTING ELEVATION — T.O.W. XXXX.X± (EXIST)

ELEVATION — TOC XXXX.XX

DETAIL REFERENCES

PLAN/TITLE — VIEW — A — **PLAN TITLE** — FILE: FILE — PLAN NOT REFERENCED

SECTION CUT — VIEW — C — - = SHOWN ON SAME DRAWING — ##X## = SEE INDICATED DRAWING

SECTION OR DETAIL TITLE W/ REFERENCE — ALPHA = SECTION — NUMERIC = DETAIL — C/1 — ##X## — **SECTION/DETAIL TITLE** — SCALE: SCALE — FILE: FILE — DRAWING CUT ORIGINATION

DRAWING REFERENCE — AREA DESIGNATOR (WHEN APPLICABLE) — DISCIPLINE DESIGNATOR — ##X## — CONSECUTIVE SHEET NUMBER

PHOTO LOCATION — # — ARROW INDICATES POINT OF VIEW

HATCH PATTERNS

CONCRETE

GENERAL ABBREVIATIONS

@	AT (MEASUREMENT)
△	DEFLECTION ANGLE, CENTRAL ANGLE
#	NUMBER (REBAR Ø)
%	PERCENT
AB	ANCHOR BOLT
AC	ASPHALTIC CONCRETE
ACI	AMERICAN CONCRETE INSTITUTE
ADDL	ADDITIONAL
AFF	ABOVE FINISHED FLOOR
ANCH	ANCHOR
ANSI	AMERICAN NATIONAL STANDARDS INSTITUTE
APPROX	APPROXIMATE, APPROXIMATELY
ASTM	AMERICAN SOCIETY FOR TESTING AND MATERIALS
BF	BLIND FLANGE
BFG	BELOW FINISHED GRADE
BLDG	BUILDING
BOTT	BOTTOM
BTWN	BETWEEN
CA	CONCRETE ANCHOR
CC	CENTER OF CURVATURE, CENTER TO CENTER
CL	CENTER LINE
CLR	CLEAR
CMU	CONCRETE MASONRY UNIT
CONC	CONCRETE
CONN	CONNECT, CONNECTION
CONST	CONSTRUCTION
CONT	CONTINUOUS OR CONTINUATION OR (D) (OUS)
CPLG	COUPLING
CS	CARBON STEEL, CIRCULATING SLUDGE
CTJ	CONTROL JOINT
CTR	CENTER, CENTERED
D	DEPTH, DIGITAL OR DISCRETE, DRAIN
DEG or °	DEGREE
DEMO	DEMOLISH, DEMOLITION
DET	DETAIL
DIA or Ø	DIAMETER
DIAG	DIAGONAL
DIM	DIMENSION
DIP	DUCTILE IRON PIPE
DN	DOWN
DWG(S)	DRAWING(S)
DWL(S)	DOWEL(S)
E	EAST
EA	EACH
EFF	EFFLUENT
EL	ELEVATION
ELEC	ELECTRICAL
ELL	ELBOW
EMBED	EMBEDMENT
EQ	EQUAL
EQUIP	EQUIPMENT
EW	EACH WAY
EWEF	EACH WAY EACH FACE
EX	EXISTING
EXIST	EXISTING
EXP	EXPANSION, EXPANSION TANK
EXPO	EXPOSED
EXT	EXTERIOR
FC	FACE OF CURB, FLEXIBLE COUPLING
FCA	FLANGE COUPLING ADAPTER
FIN	FINISH
FIN FL	FINISHED FLOOR
FIN GR	FINISHED GRADE
FL	FLOOR, FLOW LINE
FLEX	FLEXIBLE
FLG	FLANGE, OR FLANGED
FT or '	FOOT, FEET
GALV	GALVANIZE(D)
GC	GROOVED COUPLING
GE	GROOVED END
GEN	GENERAL, GENERATOR
GR	GRADE
GSP	GALVANIZED STEEL PIPE
GV	GATE VALVE
HGT	HEIGHT
HORIZ	HORIZONTAL
ID	INSIDE DIAMETER, INSIDE DIMENSION
I.F.	INSIDE FACE
IN or "	INCHES
INCL	INCLUDE, INCLUDING
INT	INTERIOR
INV	INVERT
JT	JOINT
KSI	KIPS PER SQUARE INCH
LF	LINEAL FEET
LG	LONG
LR	LONG RADIUS
MAX	MAXIMUM
MECH	MECHANICAL
MFR	MANUFACTURER
MIN	MINIMUM
MISC	MISCELLANEOUS
N	NORTH, NEUTRAL
NA	NOT APPLICABLE
NIC	NOT IN CONTRACT
NO., #	NUMBER
NOM	NOMINAL
NTS	NOT TO SCALE
OC	ON CENTER
OD	OUTSIDE DIAMETER, OUTSIDE DIMENSION
O.F.	OUTSIDE FACE
OPNG	OPENING
OPP	OPPOSITE
PL	PLATE, PROPERTY LINE
PMP	PUMP
PSF	POUNDS PER SQUARE FOOT PRESSURE GAUGE
PSI	POUNDS PER SQUARE INCH
PSIG	POUNDS PER SQUARE INCH GAUGE
PVC	POLYVINYL CHLORINE
PVMT	PAVEMENT
RAD	RADIUS, RADIAL
RAS	RETURN ACTIVATED SLUDGE
REF	REFERENCE
REINF	REINFORCE(D)(ING)(MENT)
REQD	REQUIRED
S	SOUTH, SWITCH, SLOPE
SC	SECONDARY CLARIFIER
SCH	SCHEDULE
SECT	SECTION
SHT	SHEET
SIM	SIMILAR
SPEC(S)	SPECIFICATION(S)
SQ	SQUARE
SSM	SECONDARY SCUM
SST	STAINLESS STEEL
STD(S)	STANDARDS(S)
STL	STEEL
STRUCT	STRUCTURAL
SYM	SYMMETRICAL
T&B	TOP AND BOTTOM
T.O.	TOP OF
TOC	TOP OF CONCRETE
TOG	TOP OF GRATING
TOS	TOP OF STEEL
T.O.W.	TOP OF WALL
TYP	TYPICAL
UNO	UNLESS NOTED OTHERWISE
VAR	VARIES
VERT	VERTICAL
W	WEST, WIDTH
W/	WITH
W/O	WITHOUT
WW	WASTEWATER
WWTP	WASTEWATER TREATMENT PLANT

NOTES:

1. FOR ABBREVIATIONS NOT LISTED, SEE ABBREVIATIONS FOR USE ON DRAWINGS AND TEXT, PUBLISHED BY THE AMERICAN NATIONAL STANDARDS INSTITUTE INC. (ANSI)

REV	DATE	BY	DESCRIPTION

RECORD DRAWINGS

DESIGNED TJW
DRAWN DE
CHECKED MLZ
DATE AUG 2017

** ORIGINAL SEALED BY TYLER JAMES WHITEHOUSE 08-14-2017 WA 49545 **

carollo

CITY OF BELLINGHAM WASHINGTON
DEPARTMENT OF PUBLIC WORKS

CITY OF BELLINGHAM, WASHINGTON
30-INCH RAS EMERGENCY PIPE REPLACEMENT
GENERAL
GENERAL NOTES, LEGENDS AND ABBREVIATIONS

VERIFY SCALES
BAR IS ONE INCH ON ORIGINAL DRAWING
0 1"
IF NOT ONE INCH ON THIS SHEET, ADJUST SCALES ACCORDINGLY

JOB NO. 10791A.10
DRAWING NO. 010G102
SHEET NO. 2 OF 8

PROJECT NO.
FILE NAME: 10791A10010G102.dgn

Plot Date: 11-DEC-2017 2:40:20 PM
User: svcPW
Model: Layout1 ColorTable: gshade.ctb DesignScript: Carollo_Std_Pen_v0905.pen PlotScale: 1:1
LAST SAVED BY: dennquez

GENERAL STRUCTURAL NOTES:

1. USE STRUCTURAL DRAWINGS IN CONJUNCTION WITH PROJECT DRAWINGS BY OTHER DISCIPLINES AND WITH THE SPECIFICATIONS.

2. UNLESS DETAILED, SPECIFIED, OR INDICATED OTHERWISE, CONSTRUCTION SHALL BE AS INDICATED IN THE GENERAL NOTES AND TYPICAL DETAILS.

3. PRESENTATION CONVENTIONS FOR STRUCTURAL DRAWINGS:

   A. SCREENED LINE WORK INDICATES EXISTING CONDITIONS.
   B. WRITTEN DIMENSIONS TAKE PRECEDENCE OVER SCALED SIZES.
   C. PLANS ARE TREATED AS HORIZONTAL SECTIONS. (I.E.: "PLAN AT ELEVATION 110" SHOWS CONSTRUCTION AT AND BELOW ELEVATION 110.)

4. VERIFY DIMENSIONS AND CONDITIONS BEFORE BEGINNING WORK. ADVISE ENGINEER IMMEDIATELY OF DISCREPANCIES BETWEEN EXISTING CONDITIONS AND DIMENSIONS, AND INFORMATION SHOWN ON THESE DRAWINGS. CONFIRM THE FOLLOWING BEFORE PREPARATION AND SUBMITTAL OF SHOP DRAWINGS:

   A. DIMENSIONS AND WEIGHTS FOR EQUIPMENT SELECTED.
   B. SIZES AND LOCATIONS OF EQUIPMENT PADS FOR EQUIPMENT SELECTED.

STRUCTURAL DESIGN CRITERIA - GENERAL:

SEE DRAWINGS OF INDIVIDUAL STRUCTURES FOR SPECIFIC DESIGN CRITERIA BASED ON THESE OVERALL CRITERIA FOR THE SITE.

1. BUILDING CODE:

   A. 2015 INTERNATIONAL BUILDING CODE ("IBC 2015") WITH ASCE 7-10 AND WASHINGTON STATE AMENDMENTS.

2. STRUCTURE RISK CATEGORY: III.

3. DEAD LOADS: CALCULATED FOR STRUCTURE SELF-WEIGHT.

4. FLUID PRESSURE LOADS: 63 PSF/FT (UNO).

5. EARTHQUAKE DESIGN DATA:

	0.2 SECOND	*1.0 SECOND
A. SITE CLASS: E.		
B. MAPPED SPECTRAL RESPONSE ACCELERATIONS:	Ss = 0.973 g	S1 = 0.384 g
C. SITE COEFFICIENTS:	Fa = 0.932	Fv = 2.464
D. MAXIMUM CONSIDERED ACCELERATIONS:*	Sms = 0.907 g	Sm1 = 0.946 g
E. DESIGN SPECTRAL RESPONSE ACCELERATIONS:* (* 5% DAMPED)	Sds = 0.605 g	Sd1 = 0.631 g

6. CONSTRUCTION LOADS:
   STRUCTURES AND SUPPORTS HAVE BEEN DESIGNED FOR OPERATING LOADS ON COMPLETED FACILITIES. UNTIL CONSTRUCTION IS COMPLETE AND MEMBERS HAVE ACHIEVED THEIR DESIGN STRENGTH, PROTECT STRUCTURES AND SUPPORTS AS REQUIRED BY SHORING, BRACING, AND BALANCING.

TYPICAL STRUCTURAL MATERIALS:

1. MATERIALS SHALL CONFORM TO THE FOLLOWING REQUIREMENTS UNLESS OTHERWISE INDICATED ON THE DRAWINGS.

2. SEE PROJECT SPECIFICATIONS AND NOTES ON DRAWINGS OF SPECIFIC STRUCTURES FOR DETAILED AND LOCATION-SPECIFIC REQUIREMENTS.

REINFORCING STEEL (FOR CONCRETE):

1. DEFORMED BARS:
   A. TYPICAL: ASTM A 615, GRADE 60.
   B. WHERE INDICATED ON THE DRAWINGS: ASTM A 706.

CONCRETE:

1. NORMAL DENSITY.

2. MINIMUM SPECIFIED CONCRETE COMPRESSIVE STRENGTH, (AT 28 DAYS UNO): f'c = 4,000 PSI

STRUCTURAL STEEL:

1. SECTIONS

   A. SHAPES W, WT: ASTM A 992 (Fy = 50 KSI)
   B. SHAPES S, ST, M, MT, HP, C, MC, L: ASTM A 36 (Fy = 36 KSI)
   C. PLATES AND BARS: ASTM A 36 (Fy = 36 KSI)
   D. PIPES: ASTM A 53, GRADE B (Fy = 35 KSI)
   E. HOLLOW STRUCTURAL SECTIONS:
      ROUND: ASTM A 500, GRADE B (Fy = 42 KSI)
      SQUARE AND RECTANGULAR: ASTM A 500, GRADE B (Fy = 46 KSI)

2. CONNECTIONS:

   A. BOLTS - STEEL TO-STEEL:
      ASTM A 325 HIGH-STRENGTH BOLTS, WITH LOAD INDICATOR WASHERS.
   B. BOLTS - STEEL TO CONCRETE OR MASONRY:
      ANCHOR BOLTS WITH HEX FORGED HEAD.
      ASTM A193, STAINLESS TYPE 316 (304)
      ASTM F 1554, GRADE 36 GALVANIZED.
   C. WELDS - SHIELDED METAL ARC PROCESS USING E70-XX ELECTRODES.

CONSTRUCTION:

CONFORM TO THE FOLLOWING REQUIREMENTS UNLESS OTHERWISE INDICATED ON THE DRAWINGS.

CONCRETE:

1. PROVIDE 3/4" CHAMFER AT EXPOSED EDGES OF CAST-IN-PLACE CONCRETE.

2. WELDING OF REINFORCING IS NOT PERMITTED UNLESS DETAILED ON THE DRAWINGS OR ACCEPTED IN ADVANCE BY THE ENGINEER.

3. MAINTAIN MINIMUM 3 INCHES CLEAR CONCRETE COVER BETWEEN REINFORCING AND EMBEDMENTS.

4. FINISH CONCRETE TO MATCH EXISTING.

STEEL, - CONNECTIONS:

1. BOLTED:

   A. MADE USING 3/4-INCH DIAMETER BOLTS.
   B. HAVING A MINIMUM OF 2 BOLTS, SPACED NOT CLOSER THAN 3 INCHES ON CENTER.
   C. WITH A DISTANCE OF AT LEAST 1 1/2 INCHES FROM CENTER OF BOLT TO ANY EDGE OF A PLATE OR STRUCTURAL ELEMENT.

2. WELDED:

   A. FILLET WELDS: PER AWS CODE BASED ON THE THICKNESS OF THE MATERIALS BEING JOINED, AND FULL LENGTH OF THE JOINT.

3. INTERFACE BETWEEN MATERIALS:

   A. AT BOLTED CONNECTIONS THAT INCLUDE DIFFERENT METALS (E.G.: STEEL AND STAINLESS STEEL, OR ALUMINUM AND STAINLESS STEEL) PROVIDE ISOLATING SLEEVES AND WASHERS AS SPECIFIED IN SECTION 05190.

4. POST-INSTALLED ANCHORS IN CONCRETE AND MASONRY:

   A. INSTALL IN FULL COMPLIANCE WITH ACCEPTED BUILDING CODE EVALUATION REPORT AND MANUFACTURER'S INSTRUCTIONS.
   B. DO NOT CUT, DAMAGE, OR INTERRUPT EXISTING REINFORCEMENT TO INSTALL ANCHORS. USE NON-DESTRUCTIVE TESTING EQUIPMENT TO IDENTIFY LOCATIONS OF REINFORCEMENT IN MEMBERS BEFORE DRILLING HOLES FOR ANCHORS.

SPECIAL INSPECTION:

1. SPECIAL INSPECTION IS REQUIRED FOR THE FOLLOWING STRUCTURAL MATERIALS AND CONSTRUCTION. SEE SPECIFICATION SECTION 01455 FOR DETAILS.

2. DIVISION 3 CONCRETE:

   A. LOCATIONS.
   B. FORMWORK AND MEMBER SIZES.
   C. REINFORCING STEEL.
   D. ANCHORS: CAST-IN AND POST-INSTALLED.
   E. CONCRETE MIX AND PLACEMENT.
   F. PROTECTION AND CURING PROCEDURES.

3. DIVISION 5 METALS

   A. GENERAL ALL METALS:
      1) MEMBER LOCATIONS.
      2) MEMBER SIZES/TYPES.
      3) ANCHORS - CAST-IN AND BUILT-IN ANCHOR BOLTS.
      4) ANCHORS - POST-INSTALLED MECHANICAL AND ADHESIVE.

   B. STRUCTURAL STEEL (CARBON AND STAINLESS).
      1) HIGH-STRENGTH BOLTING.
      2) WELDING.

STRUCTURAL SYMBOLS:

1. SEE SHEET 010-G-102 FOR KEY TO DRAWING TITLES AND SECTION CUTS, AND FOR DEFINITION OF MATERIALS SHADING PATTERNS.

2. WELDING: SYMBOLS: IN ACCORDANCE WITH AMERICAN WELDING SOCIETY (AWS) A2.4.

STRUCTURAL ABBREVIATIONS:

1. SEE SHEET 010-G-102 FOR GENERAL LIST OF ABBREVIATIONS USED ON DRAWINGS.

2. STRUCTURAL MEMBERS:

   A. STEEL: ABBREVIATIONS AND DESIGNATIONS ARE IN ACCORDANCE WITH THE AMERICAN INSTITUTE OF STEEL CONSTRUCTION'S STEEL CONSTRUCTION MANUAL, CURRENT EDITION.

3. ABBREVIATIONS FOR STRUCTURAL DRAWINGS:
   WHEN USED ON THE STRUCTURAL DRAWINGS, THE FOLLOWING ABBREVIATIONS HAVE THE MEANINGS LISTED.

REINFORCEMENT:		OTHER:	
BO	BOTTOM OF	L	ANGLE
EF	EACH FACE	PL	PLATE
I.F.	INSIDE FACE		
O.F.	OUTSIDE FACE		
T.O.	TOP OF		
#	NUMBER (REINFORCING BAR SIZE)		

REV	DATE	BY	DESCRIPTION
			RECORD DRAWINGS

DESIGNED JAD
DRAWN DE
CHECKED JAD
DATE AUG 2017

** ORIGINAL SEALED BY JAMES A. DOERING 08-14-2017 WA 43991 **

carollo®

CITY OF BELLINGHAM WASHINGTON
DEPARTMENT OF PUBLIC WORKS

CITY OF BELLINGHAM, WASHINGTON
30-INCH RAS EMERGENCY PIPE REPLACEMENT
GENERAL
GENERAL STRUCTURAL NOTES

VERIFY SCALES
BAR IS ONE INCH ON ORIGINAL DRAWING
0 1"
IF NOT ONE INCH ON THIS SHEET, ADJUST SCALES ACCORDINGLY

JOB NO. 10791A.10
DRAWING NO. 010G103
SHEET NO. 3 OF 8

PROJECT NO.
FILE NAME: 10791A10010G103.dgn

Model: Layout1 ColorTable: gshade.ctb DesignScript: Carollo_Std_Pen_v0905.pen PlotScale: 1:1 Plot Date: 11-DEC-2017 2:40:14 PM User: svcPW LAST SAVED BY: dentiquez

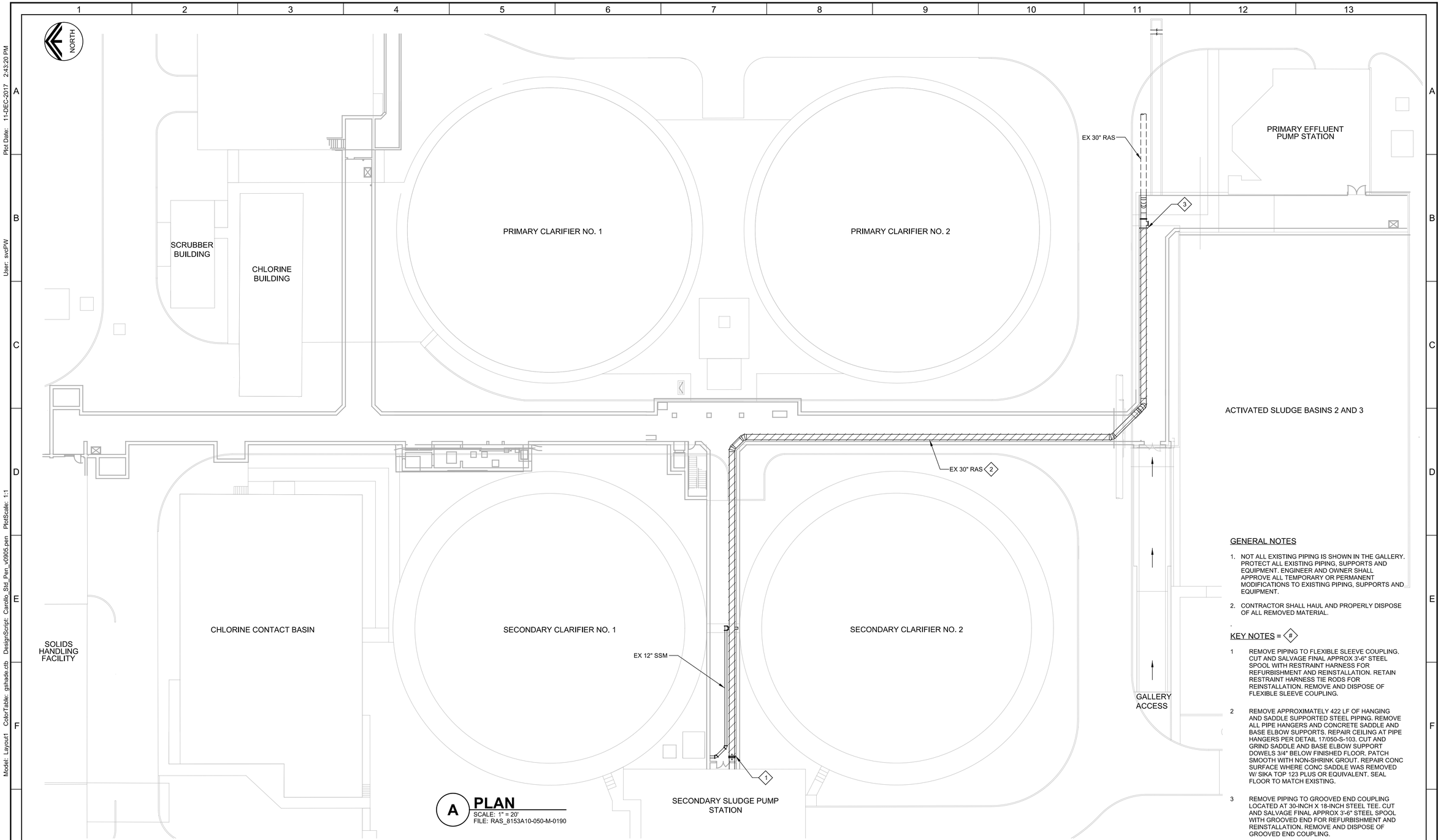

A **PLAN**
SCALE: 1" = 20'
FILE: RAS_8153A10-050-M-0190

GENERAL NOTES

1. NOT ALL EXISTING PIPING IS SHOWN IN THE GALLERY. PROTECT ALL EXISTING PIPING, SUPPORTS AND EQUIPMENT. ENGINEER AND OWNER SHALL APPROVE ALL TEMPORARY OR PERMANENT MODIFICATIONS TO EXISTING PIPING, SUPPORTS AND EQUIPMENT.
2. CONTRACTOR SHALL HAUL AND PROPERLY DISPOSE OF ALL REMOVED MATERIAL.

KEY NOTES = ◇#

1 REMOVE PIPING TO FLEXIBLE SLEEVE COUPLING. CUT AND SALVAGE FINAL APPROX 3'-6" STEEL SPOOL WITH RESTRAINT HARNESS FOR REFURBISHMENT AND REINSTALLATION. RETAIN RESTRAINT HARNESS TIE RODS FOR REINSTALLATION. REMOVE AND DISPOSE OF FLEXIBLE SLEEVE COUPLING.

2 REMOVE APPROXIMATELY 422 LF OF HANGING AND SADDLE SUPPORTED STEEL PIPING. REMOVE ALL PIPE HANGERS AND CONCRETE SADDLE AND BASE ELBOW SUPPORTS. REPAIR CEILING AT PIPE HANGERS PER DETAIL 17/050-S-103. CUT AND GRIND SADDLE AND BASE ELBOW SUPPORT DOWELS 3/4" BELOW FINISHED FLOOR. PATCH SMOOTH WITH NON-SHRINK GROUT. REPAIR CONC SURFACE WHERE CONC SADDLE WAS REMOVED W/ SIKA TOP 123 PLUS OR EQUIVALENT. SEAL FLOOR TO MATCH EXISTING.

3 REMOVE PIPING TO GROOVED END COUPLING LOCATED AT 30-INCH X 18-INCH STEEL TEE. CUT AND SALVAGE FINAL APPROX 3'-6" STEEL SPOOL WITH GROOVED END FOR REFURBISHMENT AND REINSTALLATION, REMOVE AND DISPOSE OF GROOVED END COUPLING.

REV	DATE	BY	DESCRIPTION
			RECORD DRAWINGS

DESIGNED TJW
DRAWN DE
CHECKED MLZ
DATE AUG 2017

** ORIGINAL SEALED BY TYLER JAMES WHITEHOUSE 08-14-2017 WA 49545 **

carollo

CITY OF BELLINGHAM WASHINGTON
DEPARTMENT OF PUBLIC WORKS

CITY OF BELLINGHAM, WASHINGTON
30-INCH RAS EMERGENCY PIPE REPLACEMENT
DEMOLITION
DEMOLITION PLAN

VERIFY SCALES
BAR IS ONE INCH ON ORIGINAL DRAWING
0 1"
IF NOT ONE INCH ON THIS SHEET, ADJUST SCALES ACCORDINGLY

JOB NO. 10791A.10
DRAWING NO. 050D101
SHEET NO. 4 OF 8

PROJECT NO.
FILE NAME: 10791A10050D101.dgn

Plot Date: 11-DEC-2017 2:43:20 PM
User: svcPW
Model: Layout1 ColorTable: gshade.ctb DesignScript: Carollo_Std_Pen_v0905.pen PlotScale: 1:1
LAST SAVED BY: dennquez

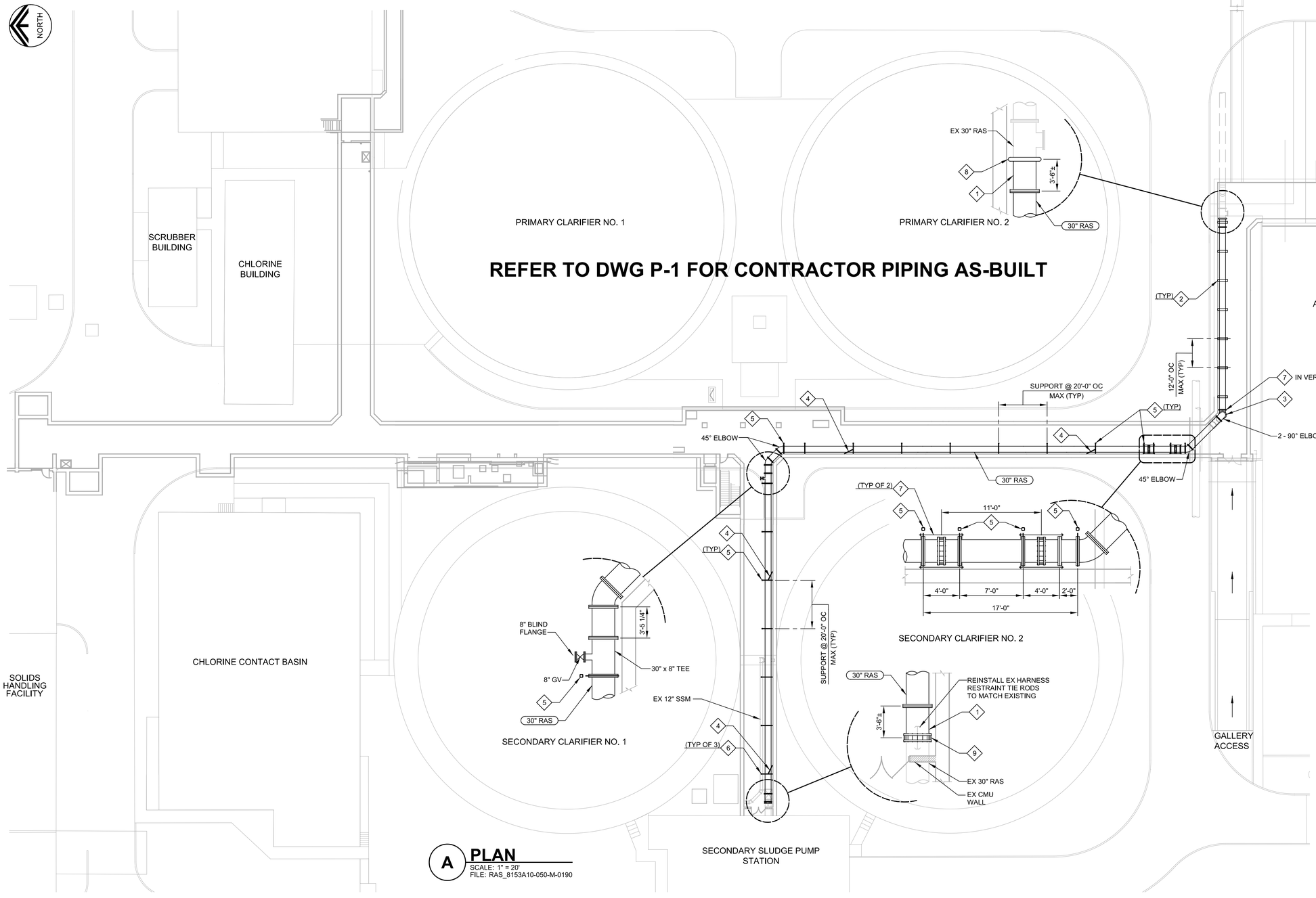

A PLAN

SCALE: 1" = 20'
FILE: RAS_8153A10-050-M-0190

GENERAL NOTES

1. NOT ALL EXISTING PIPING IS SHOWN IN THE GALLERY. PROTECT ALL EXISTING PIPING, SUPPORTS AND EQUIPMENT. ENGINEER AND OWNER SHALL APPROVE ALL TEMPORARY OR PERMANENT MODIFICATIONS TO EXISTING PIPING, SUPPORTS AND EQUIPMENT.

KEY NOTES = ◇#

1 SANDBLAST AND REMOVE INTERNAL AND EXTERNAL COATING FROM EXISTING STEEL SPOOL. SHOP WELD 30" DIA CLASS D STEEL-RING FLANGE PER AWWA C207 TO PLAIN END. FACTORY LINE AND FIELD COAT PIPE SPOOL PER SPEC SECTIONS 15052 AND 09960.

2 CONC SADDLE PIPE SUPPORT PER DETAIL 1/050-S-101 AT 12'-0" OC MAX.

3 ELBOW PIPE SUPPORT PER DETAIL 3/050-S-101.

4 LONGITUDINAL SEISMIC BRACING PER DETAIL 12/050-S-102.

5 PIPE SUPPORT PER DETAIL 7/050-S-102 AT 20'-0" OC MAX.

6 PIPE SUPPORT PER DETAIL 13/050-S-102 AT 20'-0" OC MAX.

7 FLEXIBLE COUPLING TIE DOWN PER DETAIL 18/050-S-103.

8 VICTAULIC STYLE 41 COUPLING TO MATCH EXISTING.

9 FLEXIBLE COUPLING. COORDINATE SIZING WITH EXISTING STEEL PIPE DIMENSIONS.

REV	DATE	BY	DESCRIPTION
			RECORD DRAWINGS

DESIGNED TJW
DRAWN DE
CHECKED MLZ
DATE AUG 2017

** ORIGINAL SEALED BY TYLER JAMES WHITEHOUSE 08-14-2017 WA 49545 **

carollo

CITY OF BELLINGHAM WASHINGTON
DEPARTMENT OF PUBLIC WORKS

CITY OF BELLINGHAM, WASHINGTON
30-INCH RAS EMERGENCY PIPE REPLACEMENT
MECHANICAL
GALLERY PLAN

VERIFY SCALES
BAR IS ONE INCH ON ORIGINAL DRAWING
0 1"
IF NOT ONE INCH ON THIS SHEET, ADJUST SCALES ACCORDINGLY

JOB NO. 10791A.10
DRAWING NO. 050M101
SHEET NO. 5 OF 8

PROJECT NO.
FILE NAME: 10791A10050M101.dgn

Plot Date: 14-DEC-2017 11:32:50 PM
User: svcPW
Model: Layout1 ColorTable: gshade.ctb DesignScript: Carollo_Std_Pen_v0905.pen PlotScale: 1:1
LAST SAVED BY: dennquez

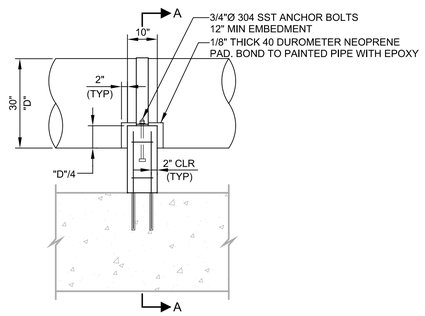

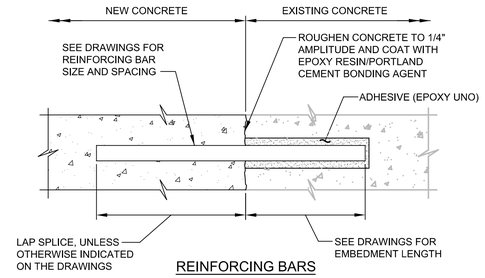

REINFORCING BARS

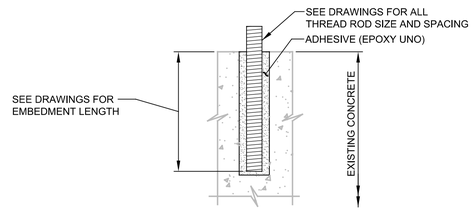

ALL-THREAD RODS

NOTE:

1. INSTALLATION OF REINFORCING BARS AND ALL THREAD RODS AS INDICATED IN THE SPECIFICATIONS.

2 DETAIL
SCALE: NTS
FILE: 8153A10-050-S-0301

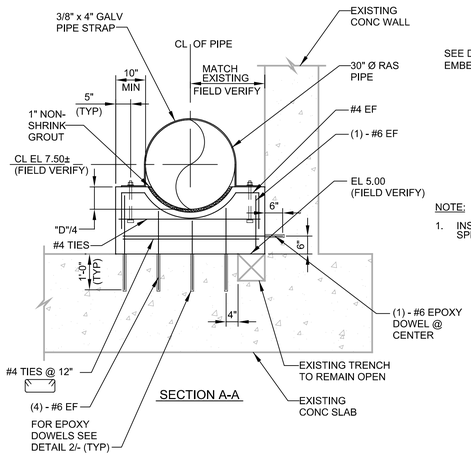

SECTION A-A

1 DETAIL
050M101
SCALE: 1/2" = 1'-0"
FILE: 8153A10-050-S-0301

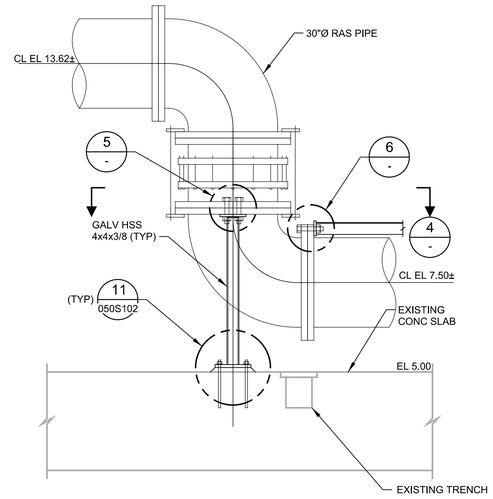

3 DETAIL
050M101
SCALE: 1/2" = 1'-0"
FILE: 8153A10-050-S-0302

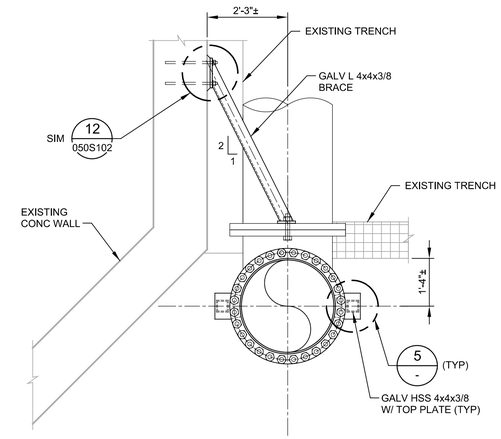

4 DETAIL
SCALE: 1/2" = 1'-0"
FILE: 8153A10-050-S-0302

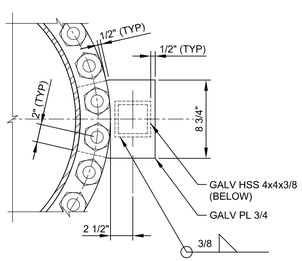

5 DETAIL
SCALE: 1 1/2" = 1'-0"
FILE: 8153A10-050-S-0302

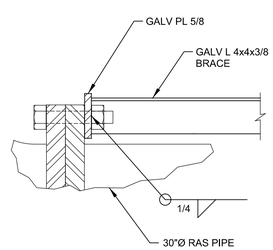

6 DETAIL
SCALE: 1 1/2" = 1'-0"
FILE: 8153A10-050-S-0302

REV	DATE	BY	DESCRIPTION
			RECORD DRAWINGS

DESIGNED JAD
DRAWN DE
CHECKED JAD
DATE AUG 2017

** ORIGINAL SEALED BY JAMES A. DOERING 08-14-2017 WA 43991 **

carollo

CITY OF BELLINGHAM WASHINGTON
DEPARTMENT OF PUBLIC WORKS

CITY OF BELLINGHAM, WASHINGTON
30-INCH RAS EMERGENCY PIPE REPLACEMENT
STRUCTURAL
SECTIONS AND DETAILS - 1

VERIFY SCALES
BAR IS ONE INCH ON ORIGINAL DRAWING
0 1"
IF NOT ONE INCH ON THIS SHEET, ADJUST SCALES ACCORDINGLY

JOB NO. 10791A.10
DRAWING NO. 050S101
SHEET NO. 6 OF 8

PROJECT NO.
FILE NAME: 10791A10050S101.dgn

Plot Date: 11-DEC-2017 2:39:54 PM
User: svcPW
Model: Layout1 ColorTable: gshade.ctb DesignScript: Carollo_Std_Pen_v0905.pen PlotScale: 1:1
LAST SAVED BY: dennquez

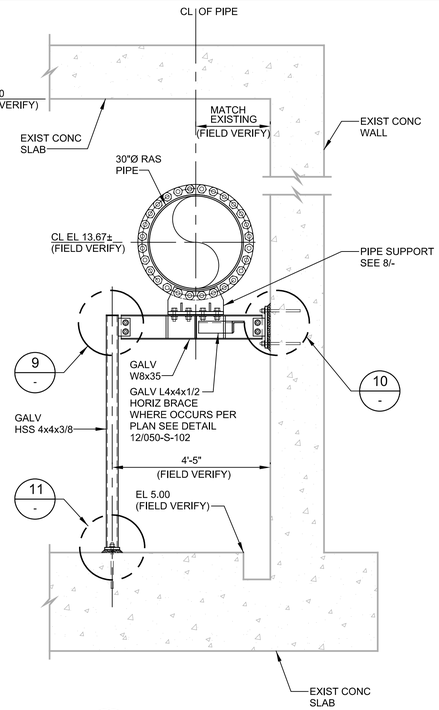

7 050M101 **DETAIL**
SCALE: 1/2" = 1'-0"
FILE: 8153A10-050-S-0301

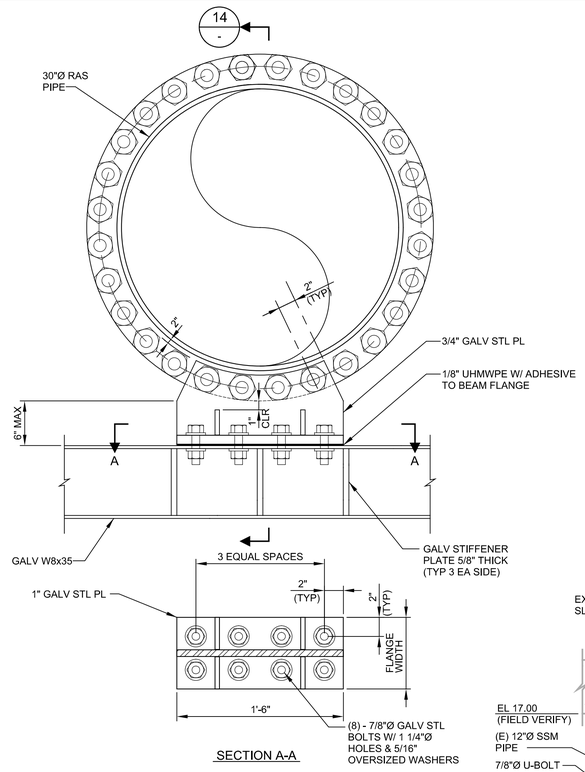

SECTION A-A

8 - **DETAIL**
SCALE: 1 1/2" = 1'-0"
FILE: 8153A10-050-S-0301

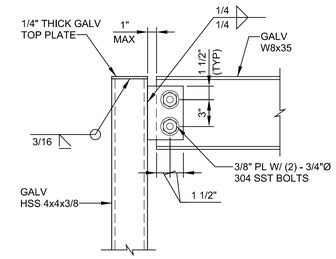

9 - **DETAIL**
SCALE: 1 1/2" = 1'-0"
FILE: 8153A10-050-S-0301

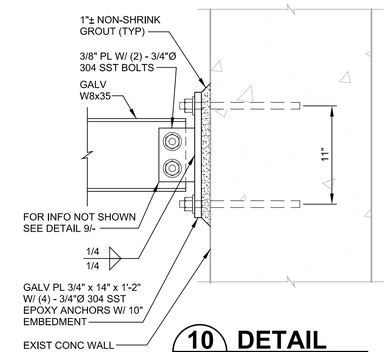

10 - **DETAIL**
SCALE: 1 1/2" = 1'-0"
FILE: 8153A10-050-S-0301

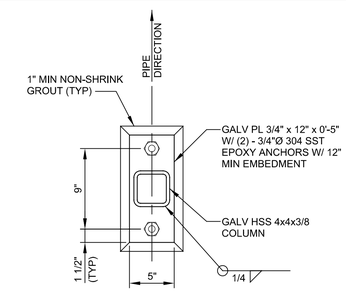

11 - **DETAIL**
SCALE: 1 1/2" = 1'-0"
FILE: 8153A10-050-S-0301

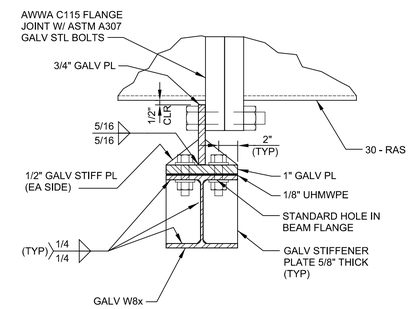

14 - **DETAIL**
SCALE: 1 1/2" = 1'-0"
FILE: 8153A10-050-S-0301

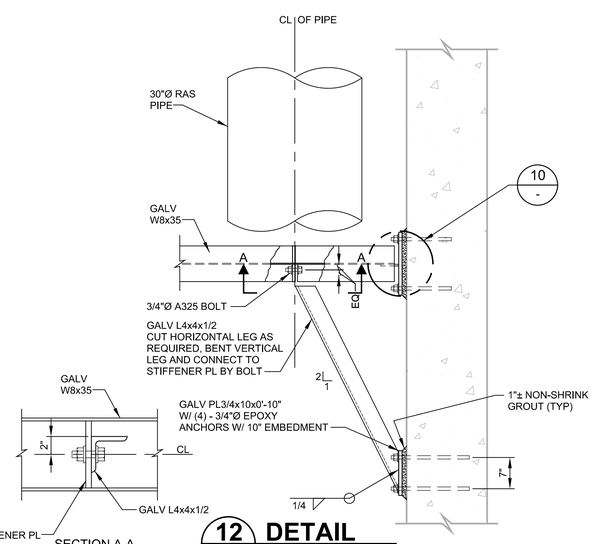

SECTION A-A

12 050M101 **DETAIL**
SCALE: 1/2" = 1'-0"
FILE: 8153A10-050-S-0301

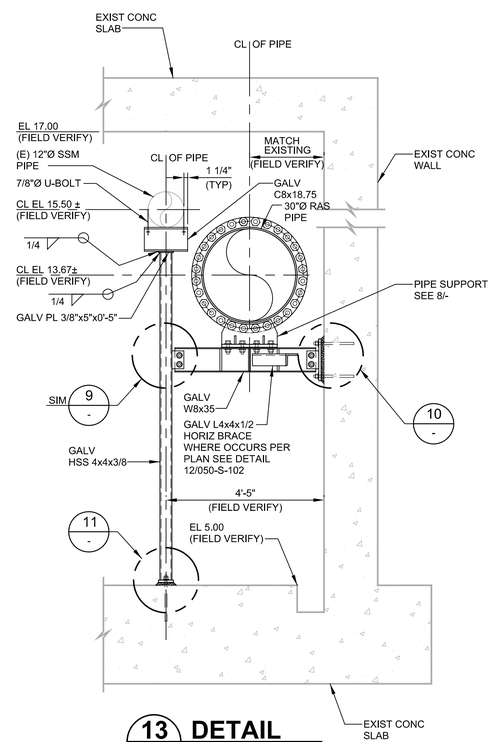

13 050M101 **DETAIL**
SCALE: 1/2" = 1'-0"
FILE: 8153A10-050-S-0301

REV	DATE	BY	DESCRIPTION
			RECORD DRAWINGS

DESIGNED JAD
DRAWN DE
CHECKED JAD
DATE AUG 2017

** ORIGINAL SEALED BY JAMES A. DOERING 08-14-2017 WA 43991 **

carollo

CITY OF BELLINGHAM, WASHINGTON
DEPARTMENT OF PUBLIC WORKS

CITY OF BELLINGHAM, WASHINGTON
30-INCH RAS EMERGENCY PIPE REPLACEMENT
STRUCTURAL
SECTIONS AND DETAILS - 2

VERIFY SCALES
BAR IS ONE INCH ON ORIGINAL DRAWING
0 1"
IF NOT ONE INCH ON THIS SHEET, ADJUST SCALES ACCORDINGLY

JOB NO. 10791A.10
DRAWING NO. 050S102
SHEET NO. 7 OF 8

PROJECT NO.
FILE NAME: 10791A10050S102.dgn

Plot Date: 11-DEC-2017 2:39:52 PM
User: svcPW
Model: Layout1 ColorTable: gshade.ctb DesignScript: Carollo_Std_Pen_v0905.pen PlotScale: 1:1
LAST SAVED BY: dmirquez

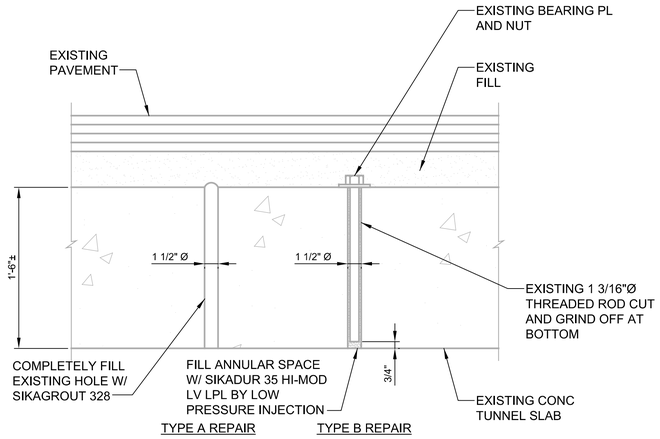

17 DETAIL

050D101 SCALE: NTS
FILE: 8153A10-050-S-301

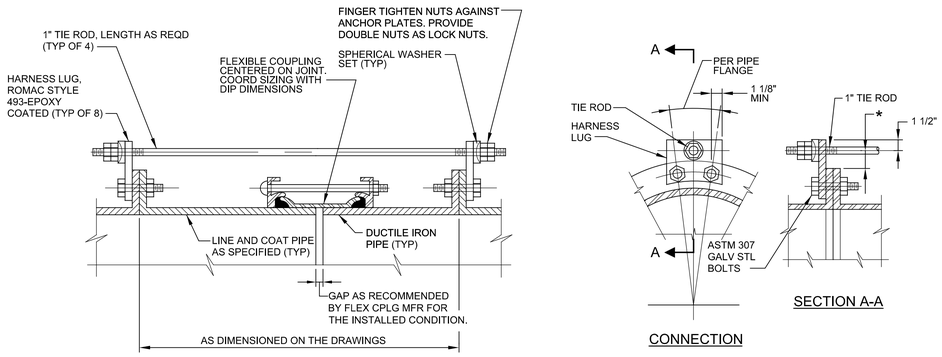

NOTES:

1. HARNESS LUG AND TIE ROD DESIGN BASED ON 32" OD PIPE AND 50 PSIG MAX PRESSURE. HARNESS LUG MFR TO CONFIRM RESTRAINT SYSTEM DESIGN.
2. MINIMUM TIE ROD YIELD = 48,000 PSI.
3. * = AS REQUIRED TO CLEAR FLEXIBLE COUPLING. 3/4" MINIMUM AND 1 1/2" MAXIMUM.

18 FLEXIBLE COUPLING TIE DOWN

050M101 SCALE: NTS
FILE: 8153A10-050-S-301

REV	DATE	BY	DESCRIPTION
			RECORD DRAWINGS

DESIGNED JAD
DRAWN DE
CHECKED JAD
DATE AUG 2017

** ORIGINAL SEALED BY TYLER JAMES WHITEHOUSE 08-14-2017 WA 49545 **

** ORIGINAL SEALED BY JAMES A. DOERING 08-14-2017 WA 43991 **

carollo®

CITY OF BELLINGHAM WASHINGTON
DEPARTMENT OF PUBLIC WORKS

CITY OF BELLINGHAM, WASHINGTON
30-INCH RAS EMERGENCY PIPE REPLACEMENT
STRUCTURAL
SECTIONS AND DETAILS - 3

VERIFY SCALES
BAR IS ONE INCH ON ORIGINAL DRAWING
0 1"
IF NOT ONE INCH ON THIS SHEET, ADJUST SCALES ACCORDINGLY

JOB NO. 10791A.10
DRAWING NO. 050S103
SHEET NO. 8 OF 8

PROJECT NO.
FILE NAME: 10791A10050S103.dgn

Model: Layout1 ColorTable: gshade.ctb DesignScript: Carollo_Std_Pen_v0905.pen PlotScale: 1:1
Plot Date: 14-DEC-2017 11:33:05 PM
User: svcPW
LAST SAVED BY: dentiquez

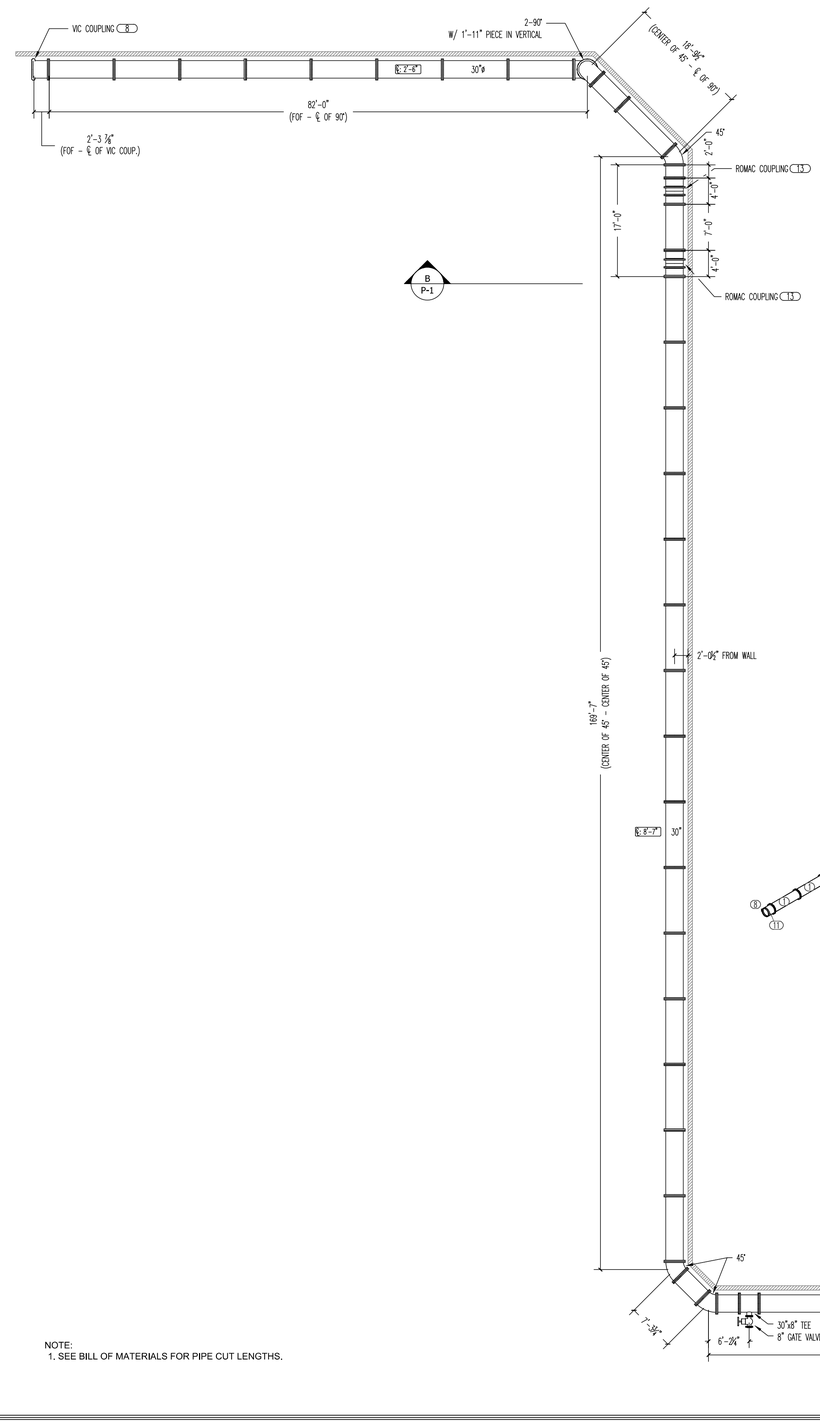

A PLAN VIEW
Scale: 1/8"=1'-0"

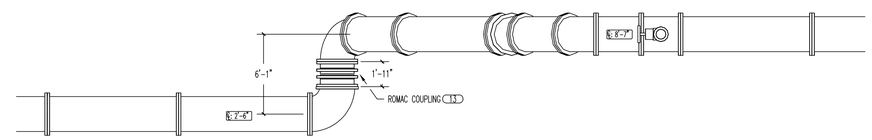

B ELEVATION VIEW
Scale: 1/4"=1'-0"

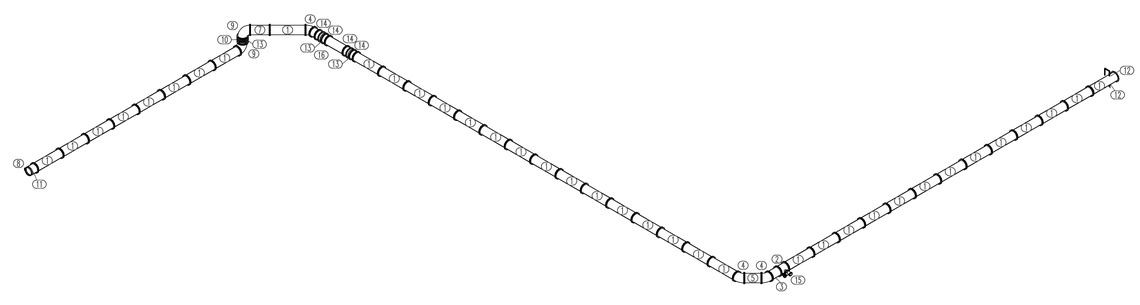

C OVERALL ISOMETRIC
Scale: NTS

NOTE:
1. SEE BILL OF MATERIALS FOR PIPE CUT LENGTHS.

BILL OF MATERIALS

TAG	Qty	Length	SIZE	DESCRIPTION	END-1	END-2
1	38	10'	30"	Pipe (FlgxFlg)	USP Tube Flange-150 PSI	USP Tube Flange-150 PSI
2	1		30"x8"	Tee (Red-Flg)		
3	1	3'-5 1/4"	30"	Pipe (FlgxFlg)	USP Tube Flange-150 PSI	USP Tube Flange-150 PSI
4	3		30"	Bend 45 (Flg)		
5	1	4'-9 5/8"	30"	Pipe (FlgxFlg)	USP Tube Flange-150 PSI	USP Tube Flange-150 PSI
6	2	3'-5 1/2"	30"	Pipe (FlgxPE)	USP Tube Flange-150 PSI	USP Tube_PE-DI
7	1	5'-5 1/4"	30"	Pipe (FlgxPE)	USP Tube Flange-150 PSI	USP Tube_PE-DI
8	1		30	Vic Style 41 Vic-Ring Cplg		
9	2		30"	Bend 90 (Flg)		
10	2	11 1/2"	30"	Pipe (FlgxPE)	USP Tube Flange-150 PSI	USP Tube_PE-DI
11	1	2'-4"	30"	Pipe (FlgxFlg)	USP Tube Flange-150 PSI	Grooved End
12	2		2x30	Figure Full Anvilet (Thread O Let)		
13	3		30	Romac Cplg		
14	4	2'-0"	30	Pipe (FlgxPE)	USP Tube Flange-150 PSI	USP Tube_PE-DI
15	1		8	Gate Valve		
16	1	7'-0"	30	Pipe (FlgxFlg)	USP Tube Flange-150 PSI	USP Tube Flange-150 PSI

3436 AIRPORT DRIVE
BELLINGHAM, WA 98226
Phone: 360-734-3600
Fax: 360-734-2849
www.DBNW.com

DIAMOND B CONSTRUCTORS

DIAMOND B CONSTRUCTORS is to be notified of any variations from the dimensions and conditions shown on the drawings, or discrepancies found within the drawings. Shop drawings, etc., and are to be submitted to DIAMOND B for review prior to fabrication and/or installation. Drawings are for use on this project only and are not intended for reuse without written approval from DIAMOND B CONSTRUCTORS.
c COPYRIGHT 2017

POST POINT WASTEWATER TREATMENT

REVISIONS	
DATE: 6-23-17	NO: 1
11-29-17	2 - AS BUILT
12-11-17	3

SCALE: 1/8" = 1'0"
DRAWN BY: DBC
DATE: 5-12-17
PROJECT NO: 4673
REFERENCE DRAWING(S): 050-M-101

TITLE.
30" RAS PIPE REPLACEMENT

DRAWING NO.
P-1

CITY OF BELLINGHAM

SLUDGE PUMP SYSTEM REPLACEMENT PROJECT

BELLINGHAM, WA

VICINITY MAP

SCALE: NONE

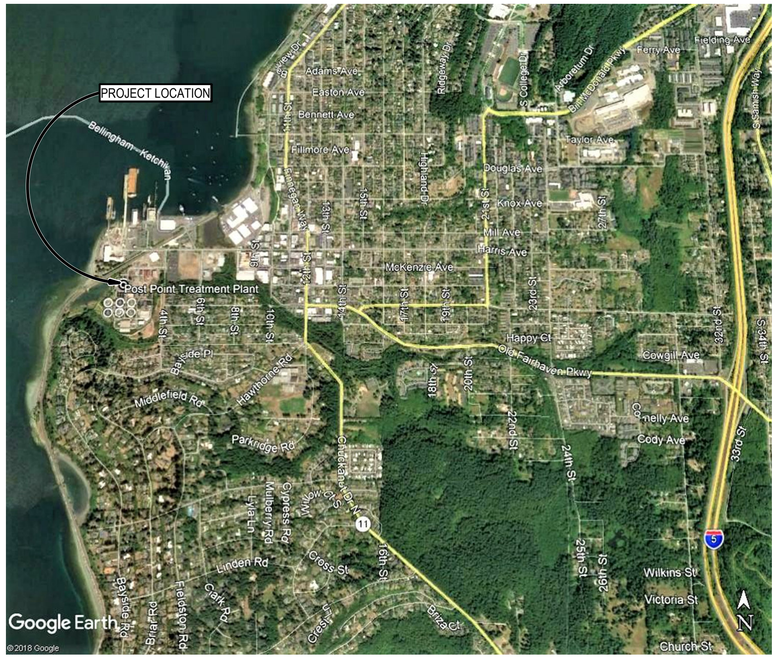

LOCATION MAP

SCALE: NONE

SHEET INDEX

SHEET NUMBER	DRAWING NUMBER	DRAWING NAME
1	G1	COVER SHEET, VICINITY, AND SHEET LIST
2	G2	GENERAL NOTES AND LEGEND
3	D1	EXISTING FACILITIES AND DEMOLITION
4	D2	EXISTING FACILITIES AND DEMOLITION
5	D3	EXISTING FACILITIES AND DEMOLITION
6	D4	EXISTING FACILITIES AND DEMOLITION
7	D5	ELECTRICAL DEMOLITION
8	M1	MECHANICAL OVERALL ISOMETRIC VIEW
9	M2	MECHANICAL DS PIPING ISOMETRIC VIEWS
10	M3	MECHANICAL DETAILS
11	M4	MECHANICAL DETAILS
12	E1	ELECTRICAL LEGEND AND ABBREVIATIONS
13	E2	ELECTRICAL SITE PLAN AND INTERCONNECTION DIAGRAM
14	E3	ELECTRICAL DETAILS

	REVISIONS	DATE	BY

DESIGNED L. ROSCOE
DRAWN A. PETERSON
CHECKED R. NICKEL
APPROVED J. HUNGERFORD

ONE INCH AT FULL SCALE. IF NOT, SCALE ACCORDINGLY

FILE NAME BellinghamPumpReplacement.rvt
JOB No. 216-2480-018
DATE JANUARY 2020

TYLER ROSCOE — STATE OF WASHINGTON — 45693 — REGISTERED PROFESSIONAL ENGINEER

JANUARY 14, 2020

Parametrix
ENGINEERING . PLANNING . ENVIRONMENTAL SCIENCES
1019 39TH AVENUE SE, SUITE 100 | PUYALLUP, WA 98374
P 253.604.6600
WWW.PARAMETRIX.COM

PROJECT NAME
CITY OF BELLINGHAM
SLUDGE PUMP SYSTEM REPLACEMENT PROJECT
BELLINGHAM, WA

COVER SHEET, VICINITY, AND SHEET LIST

DRAWING NO. 1 OF 14

G1

LEGEND

OR — EXISTING EQUIPMENT OR MATERIALS TO BE REMOVED

NEW FACILITIES (SOLID)

EXISTING (SCREENED)

HIDDEN LINE, BURIED OR FUTURE IMPROVEMENTS

CENTERLINE

PROPERTY LINE, PHANTOM LINE OR MATCH LINE

WATER SURFACE

@ AT

& AND

⌀ ROUND OR DIAMETER

∠ ANGLE

℄ CENTER LINE

1. GENERAL NOTE

(1) KEY NOTE DESIGNATION

ABBREVIATIONS

APPROX	APPROXIMATELY
ASSY	ASSEMBLY
BV	BALL VALVE
CONT	CONTINUATION
DR	DRAIN
DS	DEWATERED SLUDGE
EQUIP	EQUIPMENT
EXIST	EXISTING
EL	ELEVATION
FL	FLANGE
LR	LONG RADIUS
MFR	MANUFACTURER
MOUNT	MOUNTING
PG	PRESSURE GAUGE
PL	PLATE
PLCS	PLACES
REQ'D	REQUIRED
TYP	TYPICAL
VERT	VERTICAL
W/	WITH
W3	WATER, CITY NON-POTABLE

SHEET NAMING CONVENTION

DISCIPLINE DESIGNATOR AND DISCIPLINE ORDER

G	GENERAL
P	PIPING & INSTRUMENTATION DIAGRAM (P&ID)
D	DEMOLITION
C	CIVIL
A	ARCHITECTURAL
S	STRUCTURAL
M	MECHANICAL
E	ELECTRICAL
I	INSTRUMENTATION & CONTROL

SHEET NUMBER COMPONENTS

M1

DISCIPLINE DESIGNATOR — SHEET NUMBER

VIEW TITLES AND REFERENCES

DETAILS

INDICATES DETAIL NUMBER

SUBTITLE
DETAIL
SCALE: NONE — (1) M00-001

INDICATES DRAWING / SHEET WHERE DETAIL IS REFERRED TO

(1) M01-001 — INDICATES DETAIL NUMBER; INDICATES DRAWING / SHEET WHERE DETAIL IS SHOWN

(1 / -) — DETAIL APPEARS ON THE SAME DRAWING / SHEET

SECTIONS

INDICATES SECTION LETTER

SUBTITLE
SECTION
SCALE: NONE — (A) M00-001

INDICATES DRAWING / SHEET WHERE SECTION IS REFERRED TO

(A) M01-001 — INDICATES SECTION LETTER; INDICATES DRAWING / SHEET WHERE SECTION IS SHOWN

(A / -) — SECTION APPEARS ON THE SAME DRAWING / SHEET

SCREENING

SCREENED ELEMENTS ON AREA MAPPING AND ON PROCESS AND INSTRUMENTATION DRAWINGS REPRESENTS EXISTING FACILITIES OR ELEVATIONS.

SCREENED BACKGROUNDS ON OTHER DRAWINGS CAN REPRESENT EXISTING FACILITIES OR FACILITIES TO BE CONSTRUCTED UNDER THIS CONTRACT WHICH, IF DRAWING IN SOLID LINES, WOULD OBSCURE THE PARTICULAR DETAILS BEING SHOWN. CONSULT THE ENGINEER IF SCREENING OF ANY ELEMENTS IS NOT SELF-EXPLANATORY.

GENERAL NOTES

1. THIS IS A GENERAL NOTE SHEET AND THEREFORE NOT ALL INFORMATION FOUND MAY BE APPLICABLE TO THIS PROJECT.
2. THE LOCATIONS OF EXISTING UTILITIES, STRUCTURES, EQUIPMENT, AND OTHER ITEMS SHOWN ON DRAWINGS AREA ARE APPROXIMATE. THE CONTRACTOR SHALL VERIFY THE LOCATIONS AND ELEVATIONS OF ALL EXISTING ITEMS PRIOR TO CONSTRUCTION.
3. MATERIALS REMOVED FROM THE SITE SHALL BE DISPOSED OF PER LOCAL, STATE, AND FEDERAL REGULATIONS.
4. CONTRACTOR TO COORDINATE PARKING, MATERIAL STORAGE, EQUIPMENT STORAGE, AND STAGING AREA WITH OWNER.
5. ENTRANCE AND EXIT ROUTES TO THE PROJECT SHALL BE COORDINATED WITH OWNER.
6. ALL SITE CONSTRUCTION AND UTILITY RELOCATION ACTIVITIES SHALL BE DONE WITHOUT DISRUPTION TO THE TREATMENT FACILITIES' DAILY OPERATION. INDIVIDUAL UNIT PROCESSES MAY BE TAKEN OFF-LINE FOR A LIMITED PERIOD OF TIME TO PERFORM CONSTRUCTION ACTIVITIES AS SPECIFIED IN THE CONTRACT DOCUMENTS. ANY UNIT PROCESS TAKEN OFF-LINE WILL BE COORDINATED THROUGH THE OWNER.
7. RETAIN AND PROTECT ALL EXISTING ITEMS DESIGNATED TO BE REMOVED OR MODIFIED.
8. ALL DS PIPE ELBOWS SHALL BE LONG RADIUS ELBOWS OR EXTRA LONG RADIUS ELBOWS.
9. LATERAL WYES SHALL BE USED IN LIEU OF TEES FOR DS PIPING.
10. VALVE OPERATORS SHALL BE LOCATED AND ORIENTATED SUCH THAT THEY ARE EASILY ACCESSIBLE BY OWNER MAINTENANCE PERSONNEL. PROVIDE CHAINWHEEL OPERATORS WHERE VALVES ARE TOO HIGH TO BE EASILY ACCESSIBLE.

	REVISIONS	DATE	BY

DESIGNED: L. ROSCOE
DRAWN: A. PETERSON
CHECKED: R. NICKEL
APPROVED: J. HUNGERFORD

ONE INCH AT FULL SCALE. IF NOT, SCALE ACCORDINGLY
FILE NAME: BellinghamPumpReplacement.rvt
JOB No.: 216-2480-018
DATE: JANUARY 2020

NYLE R. ROSCOE — STATE OF WASHINGTON — 45693 — REGISTERED PROFESSIONAL ENGINEER
JANUARY 14, 2020

Parametrix
ENGINEERING . PLANNING . ENVIRONMENTAL SCIENCES
1019 39TH AVENUE SE, SUITE 100 | PUYALLUP, WA 98374
P 253.604.6600
WWW.PARAMETRIX.COM

PROJECT NAME
CITY OF BELLINGHAM
SLUDGE PUMP SYSTEM REPLACEMENT PROJECT
BELLINGHAM, WA

GENERAL NOTES AND LEGEND

DRAWING NO. 2 OF 14
G2

LEGEND:

EXISTING EQUIPMENT/ PIPING TO BE DEMOLISHED (HATCHING NOT SHOWN FOR CLARITY)

NOTES:

1. CONTRACTOR SHALL VERIFY DIMENSIONS, ELEVATIONS, AND LOCATIONS PRIOR TO CONSTRUCTION.
2. NOT ALL EQUIPMENT, PIPING, STRUCTURAL ELEMENTS, ETC. SHOWN FOR CLARITY.
3. NOTE THAT CENTRIFUGE CF-53103 IS NOT NORMALLY OPERATED.

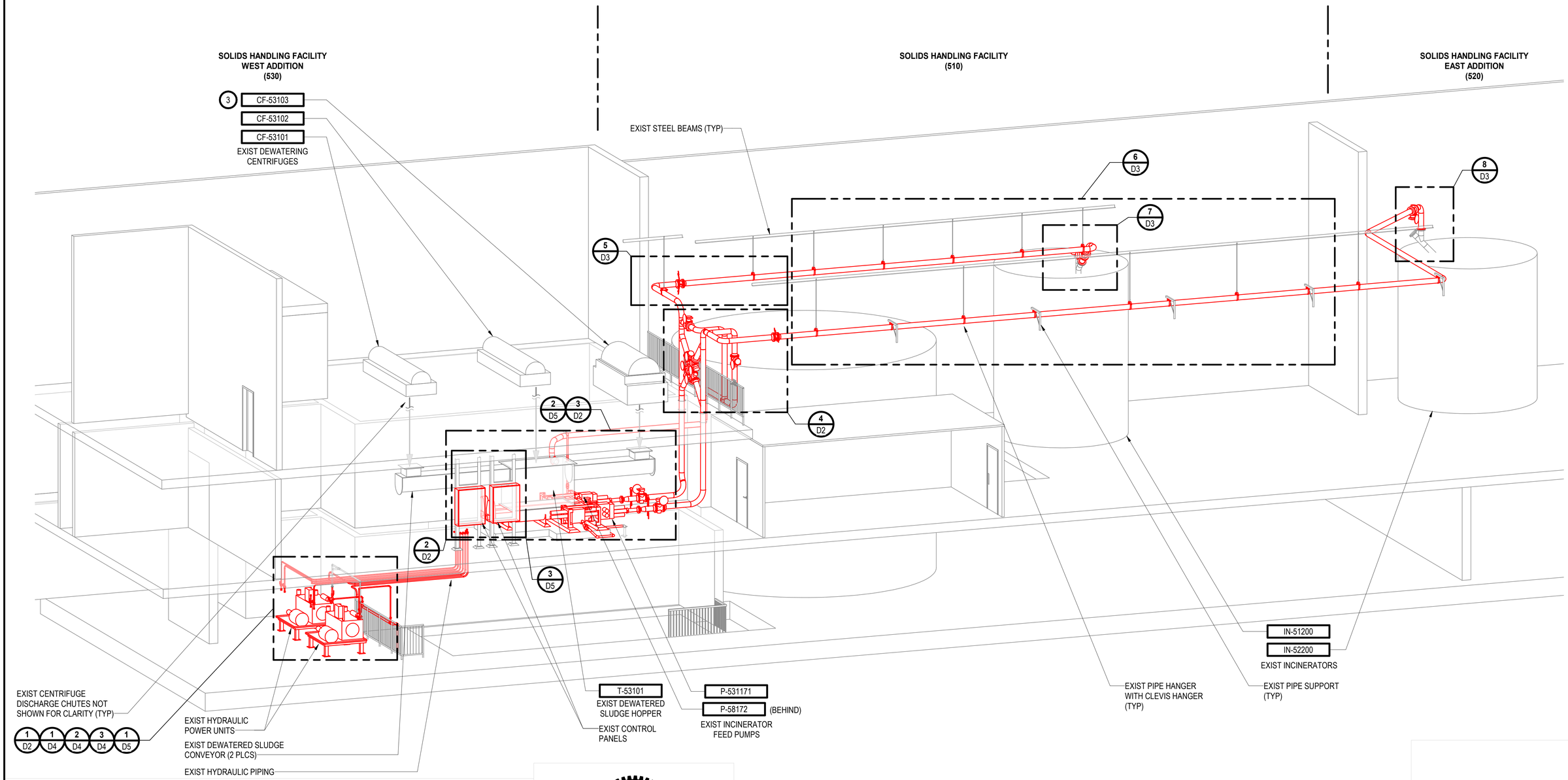

REVISIONS	DATE	BY

DESIGNED L. ROSCOE
DRAWN A. PETERSON
CHECKED R. NICKEL
APPROVED J. HUNGERFORD

ONE INCH AT FULL SCALE. IF NOT, SCALE ACCORDINGLY

FILE NAME BellinghamPumpReplacement.rvt
JOB No. 216-2480-018
DATE JANUARY 2020

TYLER ROSCOE — STATE OF WASHINGTON — 45693 — REGISTERED PROFESSIONAL ENGINEER

JANUARY 14, 2020

Parametrix
ENGINEERING . PLANNING . ENVIRONMENTAL SCIENCES
1019 39TH AVENUE SE, SUITE 100 | PUYALLUP, WA 98374
P 253.604.6600
WWW.PARAMETRIX.COM

PROJECT NAME
CITY OF BELLINGHAM
SLUDGE PUMP SYSTEM REPLACEMENT PROJECT
BELLINGHAM, WA

EXISTING FACILITIES AND DEMOLITION

DRAWING NO. 3 OF 14

D1

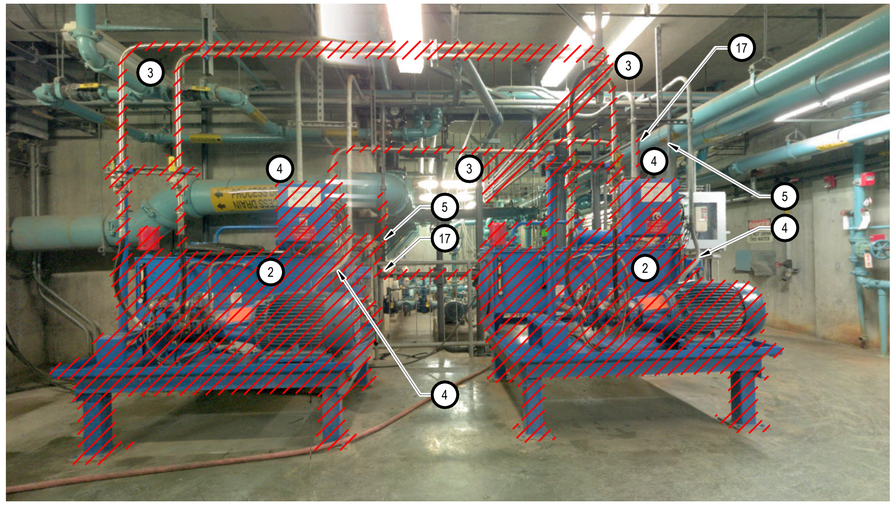

HYDRAULIC POWER UNITS DEMO
PHOTO 1 D1
SCALE: NONE

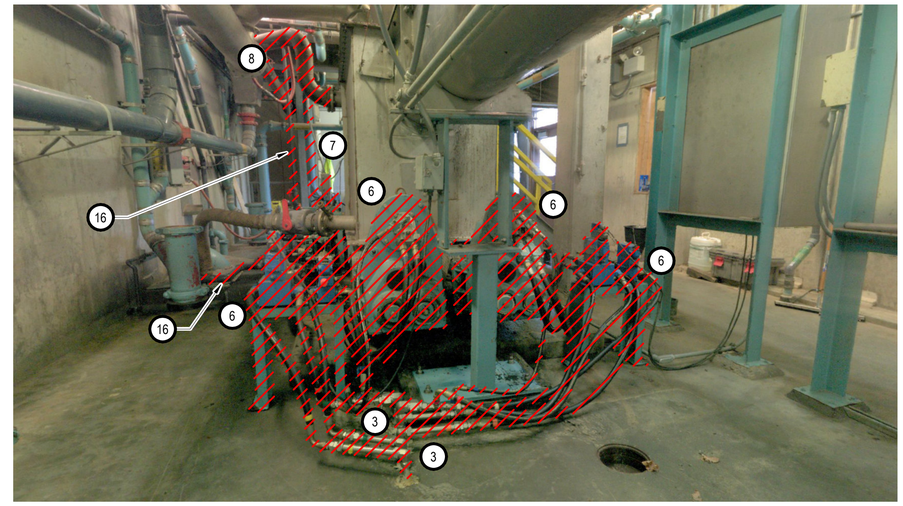

INCINERATOR FEED PUMPS DEMO
PHOTO 2 D1
SCALE: NONE

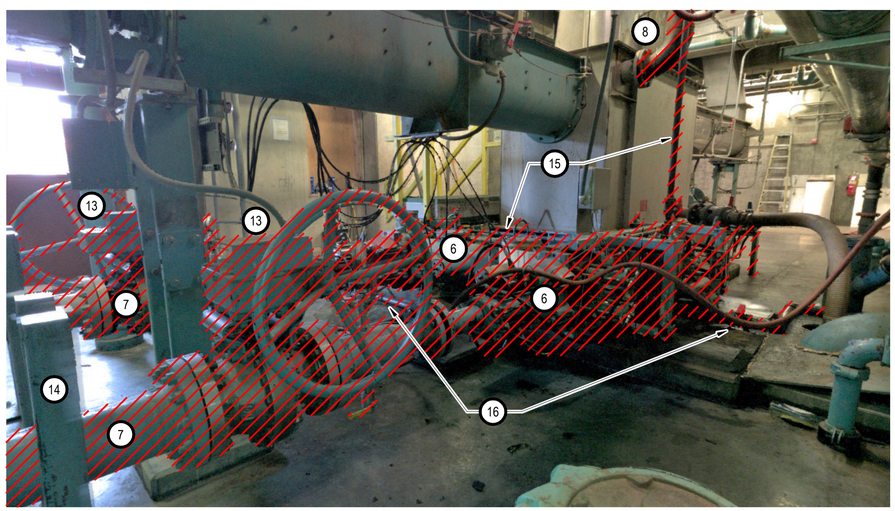

INCINERATOR FEED PUMPS DEMO
PHOTO 3 D1
SCALE: NONE

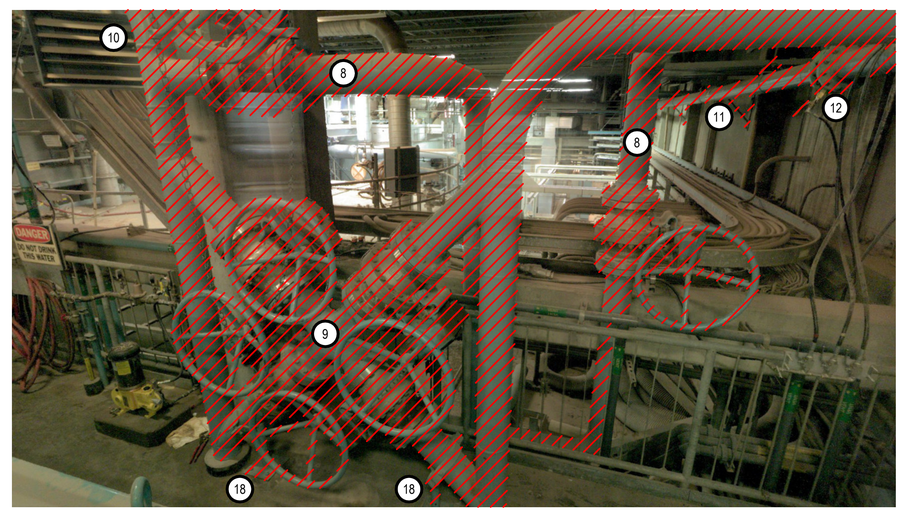

CROSSOVER VALVE TREE DEMO
PHOTO 4 D1
SCALE: NONE

NOTES:

1. CONTRACTOR SHALL VERIFY DIMENSIONS, ELEVATIONS, AND LOCATIONS PRIOR TO CONSTRUCTION.

2. DEMOLISH EXISTING HYDRAULIC POWER UNITS. CUT AND GRIND ANCHOR BOLTS FLUSH WITH FLOOR.
3. DEMOLISH EXISTING HYDRAULIC PIPING.
4. DISCONNECT/DEMOLISH EXISTING ELECTRICAL CONNECTIONS AS REQUIRED FOR EXISTING HYDRAULIC POWER UNITS DEMOLITION.
5. DEMOLISH EXISTING WATER CONNECTIONS AS REQUIRED FOR EXISTING HYDRAULIC POWER UNITS DEMOLITION. NOTE THESE WILL BE RECONNECTED TO PROPOSED EQUIPMENT. SEE PHOTOS 2 AND 3, SHEET M3 FOR MORE DETAIL.
6. DEMOLISH EXISTING INCINERATOR FEED PUMPS AND ASSOCIATED EQUIPMENT. DEMOLISH EXISTING ELECTRICAL CONNECTIONS AS REQUIRED FOR PUMP DEMOLITION.
7. DEMOLISH EXISTING DS DISCHARGE PIPING, VALVES, AND APPURTENANCES.
8. DEMOLISH EXISTING DS RETURN PIPING AND VALVES TO HOPPER AND SUPPORTS.
9. DEMOLISH EXISTING DS VALVE TREE.
10. DEMOLISH EXISTING DS PIPING AND SUPPORTS TO INCINERATOR IN-51200.
11. DEMOLISH EXISTING DS PIPING AND SUPPORTS TO INCINERATOR IN-52200.
12. DEMOLISH EXISTING WATER CONNECTIONS TO DS PIPING. SALVAGE HOSES FOR RECONNECTION.
13. DISCONNECT/DEMOLISH EXISTING ELECTRICAL CONNECTIONS AS REQUIRED FOR EXISTING VALVE DEMOLITION.
14. EXISTING FLOOR-MOUNTED SUPPORTS FOR 6" DS DISCHARGE PIPING TO REMAIN.
15. DEMOLISH EXISTING WATER SUPPLY TO EXISTING INCINERATOR FEED PUMPS. COORDINATE EXTENT OF DEMOLITION WITH M SHEETS.
16. DEMOLISH EXISTING DRAIN PIPING FROM EXISTING INCINERATOR FEED PUMPS. COORDINATE EXTENT OF DEMOLITION WITH M SHEETS.
17. DEMOLISH EXISTING DRAIN PIPING FROM EXISTING HYDRAULIC POWER UNITS. SEE PHOTOS 2, 3, AND 4, SHEET D4 FOR MORE DETAIL.
18. REMOVE AND SALVAGE PIPE SUPPORT FOR REINSTALLATION ON NEW PIPING. SEE ISOMETRIC VIEW 2, SHEET M2.

LEGEND:

DEMOLISH

	REVISIONS	DATE	BY

DESIGNED L. ROSCOE
DRAWN A. PETERSON
CHECKED R. NICKEL
APPROVED J. HUNGERFORD

ONE INCH AT FULL SCALE. IF NOT, SCALE ACCORDINGLY
FILE NAME BellinghamPumpReplacement.rvt
JOB No. 216-2480-018
DATE JANUARY 2020

TYLER ROSCOE — STATE OF WASHINGTON — 45693 — REGISTERED PROFESSIONAL ENGINEER
JANUARY 14, 2020

Parametrix
ENGINEERING . PLANNING . ENVIRONMENTAL SCIENCES
1019 39TH AVENUE SE, SUITE 100 | PUYALLUP, WA 98374
P 253.604.6600
WWW.PARAMETRIX.COM

PROJECT NAME
CITY OF BELLINGHAM
SLUDGE PUMP SYSTEM REPLACEMENT PROJECT
BELLINGHAM, WA

EXISTING FACILITIES AND DEMOLITION

DRAWING NO. 4 OF 14
D2

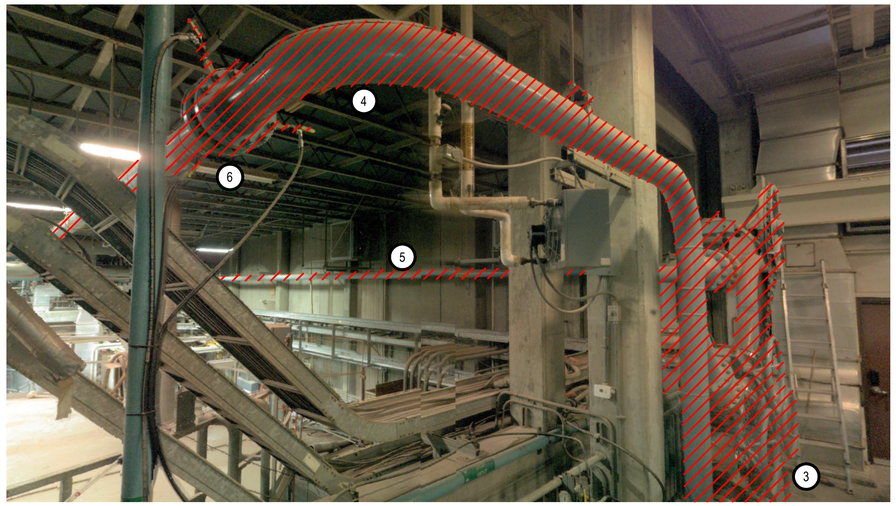

SLUDGE PIPING DEMO
PHOTO 5 / D1
SCALE: NONE

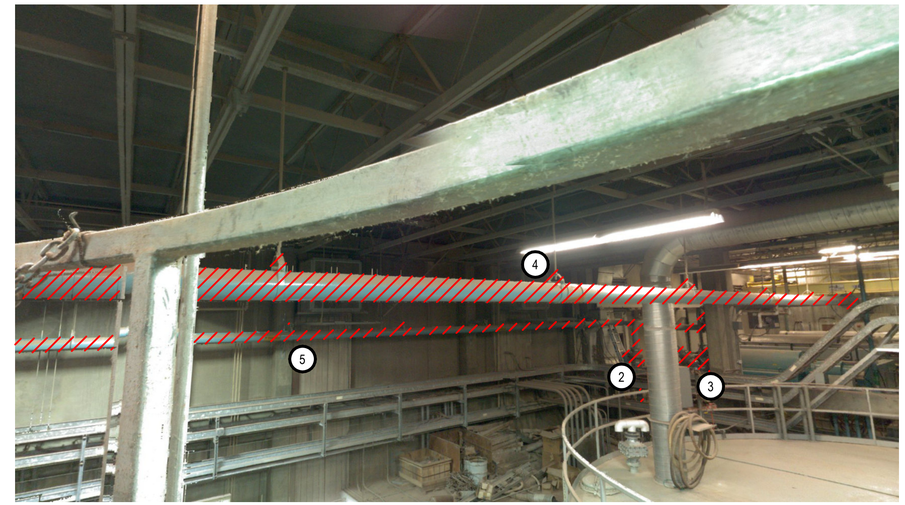

SLUDGE PIPING DEMO
PHOTO 6 / D1
SCALE: NONE

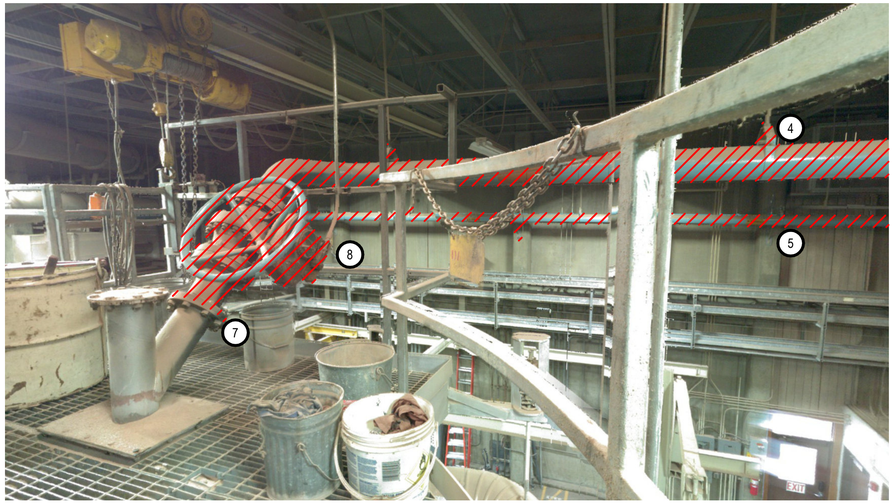

INCINERATOR 1 DEMO
PHOTO 7 / D1
SCALE: NONE

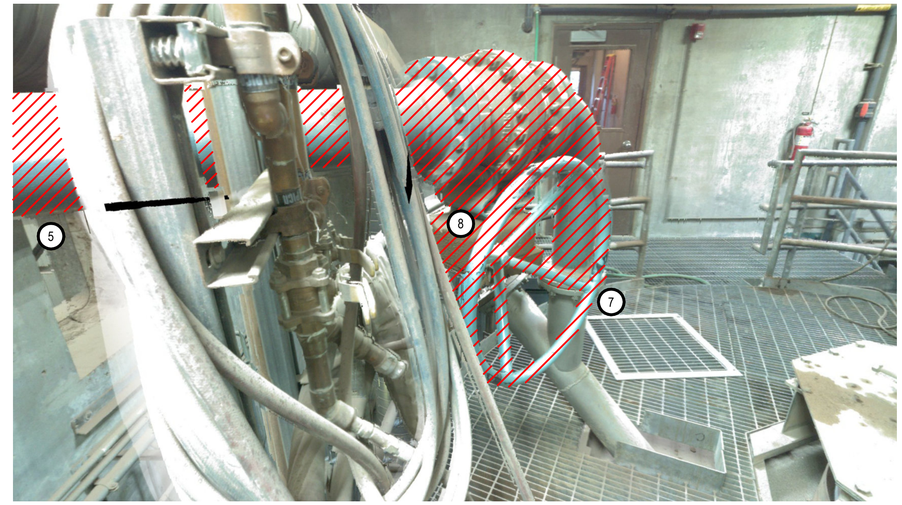

INCINERATOR 2 DEMO
PHOTO 8 / D1
SCALE: NONE

NOTES:

1. CONTRACTOR SHALL VERIFY DIMENSIONS, ELEVATIONS, AND LOCATIONS PRIOR TO CONSTRUCTION.

2. DEMOLISH EXISTING DS RETURN PIPING AND VALVES TO HOPPER AND SUPPORTS.

3. DEMOLISH EXISTING DS VALVE TREE.

4. DEMOLISH EXISTING DS PIPING TO INCINERATOR IN-51200. DEMOLISH EXISTING CLEVIS HANGERS ON PIPE SUPPORTS. EXISTING HANGER RODS TO REMAIN.

5. DEMOLISH EXISTING DS PIPING TO INCINERATOR IN-52200. DEMOLISH EXISTING CLEVIS HANGERS AND TRAPEZE HANGERS ON PIPE SUPPORTS. EXISTING WALL BRACKETS, ANGLE BRACKET SUPPORT (NOT SHOWN), AND PIPE STANCHION SUPPORT (NOT SHOWN) TO REMAIN.

6. DEMOLISH EXISTING WATER CONNECTIONS TO DS PIPING. SALVAGE HOSES FOR RECONNECTION.

7. DEMOLISH EXISTING DS PIPING TO WYE CONNECTION AT THE INCINERATOR. EXISTING WYE TO REMAIN.

8. DISCONNECT/DEMOLISH EXISTING ELECTRICAL CONNECTIONS AS REQUIRED FOR EXISTING VALVE DEMOLITION. NOTE THESE WILL BE RECONNECTED TO PROPOSED VALVES.

LEGEND:

DEMOLISH

	REVISIONS	DATE	BY

DESIGNED L. ROSCOE
DRAWN A. PETERSON
CHECKED R. NICKEL
APPROVED J. HUNGERFORD

ONE INCH AT FULL SCALE. IF NOT, SCALE ACCORDINGLY
FILE NAME BellinghamPumpReplacement.rvt
JOB No. 216-2480-018
DATE JANUARY 2020

TYLER R. ROSCOE — STATE OF WASHINGTON — 45693 — REGISTERED PROFESSIONAL ENGINEER
JANUARY 14, 2020

Parametrix
ENGINEERING . PLANNING . ENVIRONMENTAL SCIENCES
1019 39TH AVENUE SE, SUITE 100 | PUYALLUP, WA 98374
P 253.604.6600
WWW.PARAMETRIX.COM

PROJECT NAME
CITY OF BELLINGHAM
SLUDGE PUMP SYSTEM REPLACEMENT PROJECT
BELLINGHAM, WA

EXISTING FACILITIES AND DEMOLITION

DRAWING NO. 5 OF 14
D3

NOTES:

1. CONTRACTOR SHALL VERIFY DIMENSIONS, ELEVATIONS, AND LOCATIONS PRIOR TO CONSTRUCTION.

(2) SEE PHOTO 1, SHEET D2 FOR MORE DEMOLITION IN THIS AREA.

(3) DEMOLISH WATER SUPPLY TO EXISTING HYDRAULIC POWER UNIT TO UNION.

(4) DEMOLISH EXISTING DRAIN PIPING TO SUMP.

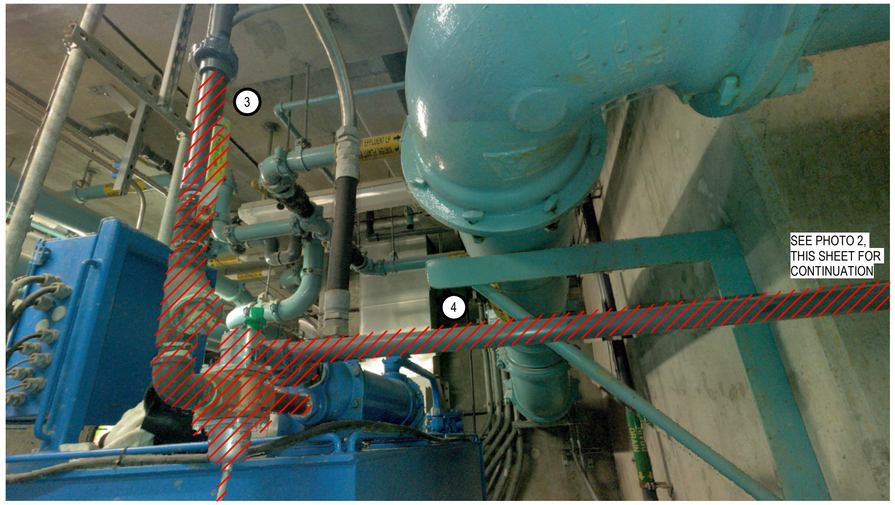

HYDRAULIC POWER UNIT 1 PIPING DEMO
PHOTO 1 D2 (2)
SCALE: 3" = 1'-0"

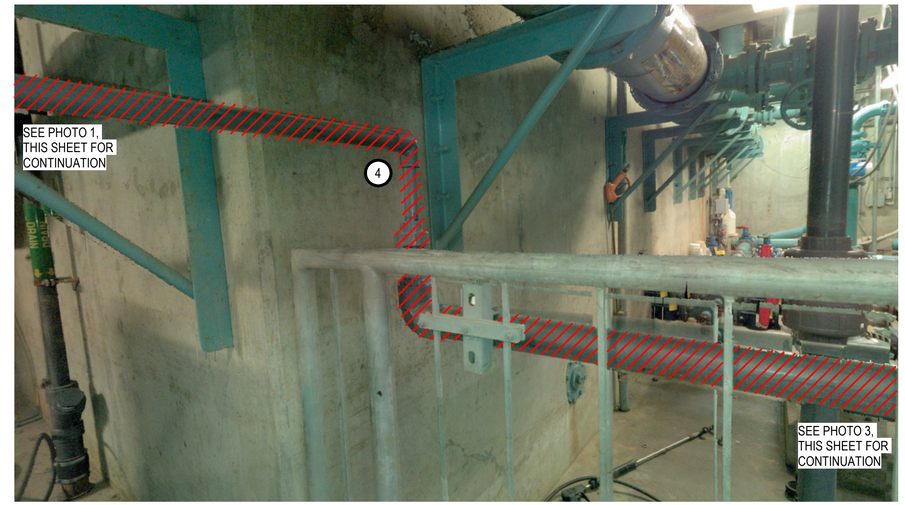

HYDRAULIC POWER UNIT 1 PIPING DEMO
PHOTO 2 -
SCALE: NONE

HYDRAULIC POWER UNIT 2 PIPING DEMO
PHOTO 3 D2 (2)
SCALE: NONE

	REVISIONS	DATE	BY

DESIGNED L. ROSCOE
DRAWN A. PETERSON
CHECKED R. NICKEL
APPROVED J. HUNGERFORD

ONE INCH AT FULL SCALE. IF NOT, SCALE ACCORDINGLY
FILE NAME BellinghamPumpReplacement.rvt
JOB No. 216-2480-018
DATE JANUARY 2020

LYLE R. ROSCOE — STATE OF WASHINGTON — 45693 — REGISTERED PROFESSIONAL ENGINEER
JANUARY 14, 2020

Parametrix
ENGINEERING . PLANNING . ENVIRONMENTAL SCIENCES
1019 39TH AVENUE SE, SUITE 100 | PUYALLUP, WA 98374
P 253.604.6600
WWW.PARAMETRIX.COM

PROJECT NAME
CITY OF BELLINGHAM
SLUDGE PUMP SYSTEM REPLACEMENT PROJECT
BELLINGHAM, WA

EXISTING FACILITIES AND DEMOLITION

DRAWING NO. 6 OF 14
D4

HYDRAULIC POWER UNITS DEMO
PHOTO 1
SCALE: NONE

EMERGENCY STOP DEMO
PHOTO 2
SCALE: NONE

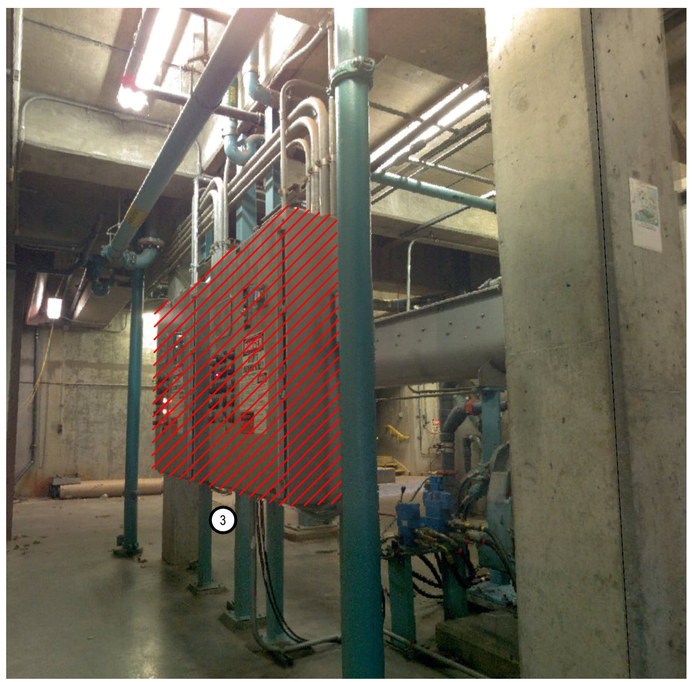

POWER & CONTROL PANELS
PHOTO 3
SCALE: NONE

NOTES:

1. DEMO EXISTING CONDUIT FROM MOTOR TO TEE IN CEILING.
2. DEMO EXISTING CONDUIT BACK TO NEW SKID LOCATION FOR RE-ROUTING PURPOSES.
3. DEMO BOTH CONTROL PANELS, AND INTERNAL COMPONENTS. CONTRACTOR TO CUT, CAP AND SEAL ANY ABANDONED CONDUIT. STUB BACK ANY CABLE TO BE REUSED DURING THE CONSTRUCTION PHASE.
4. DEMO BACK TO NEAREST JUNCTION BOX, FOR BOTH E-STOPS.
5. CONTRACTOR TO REUSE AS MUCH EXISTING CONDUIT AS POSSIBLE. REUSED CONDUIT AND FILL SHALL MEET OR EXCEED NEC REQUIREMENTS AND RUNS SHOWN ON SHEET E2.

LEGEND:

DEMOLISH

	REVISIONS	DATE	BY

DESIGNED C. CARLSON
DRAWN J. VONDERAHE
CHECKED A. STOKES
APPROVED J. HUNGERFORD

ONE INCH AT FULL SCALE. IF NOT, SCALE ACCORDINGLY
FILE NAME BellinghamPumpReplacement.rvt
JOB No. 216-2480-018
DATE JANUARY 2020

ARTHUR G. STOKES
STATE OF WASHINGTON
34736
REGISTERED PROFESSIONAL ENGINEER
JANUARY 14, 2020

Parametrix
ENGINEERING . PLANNING . ENVIRONMENTAL SCIENCES
1019 39TH AVENUE SE, SUITE 100 | PUYALLUP, WA 98374
P 253.604.6600
WWW.PARAMETRIX.COM

PROJECT NAME
CITY OF BELLINGHAM
SLUDGE PUMP SYSTEM REPLACEMENT PROJECT
BELLINGHAM, WA

ELECTRICAL DEMOLITION

DRAWING NO.
7 OF 14
D5

NOTES:

1. CONTRACTOR SHALL VERIFY DIMENSIONS, ELEVATIONS, AND LOCATIONS PRIOR TO CONSTRUCTION.
2. NOT ALL EQUIPMENT, PIPING, STRUCTURAL ELEMENTS, ETC. SHOWN FOR CLARITY.
3. DS AND HYDRAULIC PIPING ROUTING SHALL CLOSELY RESEMBLE PREVIOUSLY DEMOLISHED DS AND HYDRAULIC PIPING ROUTING. REUSE EXISTING FLOOR PENETRATIONS. CONTRACTOR SHALL COORDINATE ANY SIGNIFICANT DEVIATIONS WITH THE OWNER.
4. ALL DS PIPE ELBOWS SHALL BE LONG RADIUS ELBOWS OR EXTRA LONG RADIUS ELBOWS.
5. SUPPORT ALL PROPOSED PIPING AS REQUIRED. PROVIDE SEISMIC BRACING WHERE REQUIRED.
6. PROVIDE FLANGED JOINTS AT CERTAIN LOCATIONS IN DS PIPING SIMILAR TO INDICATED LAYOUT, SO AS TO FACILITATE THE FABRICATION, TRANSPORTATION, AND INSTALLATION OF THE DS PIPING.

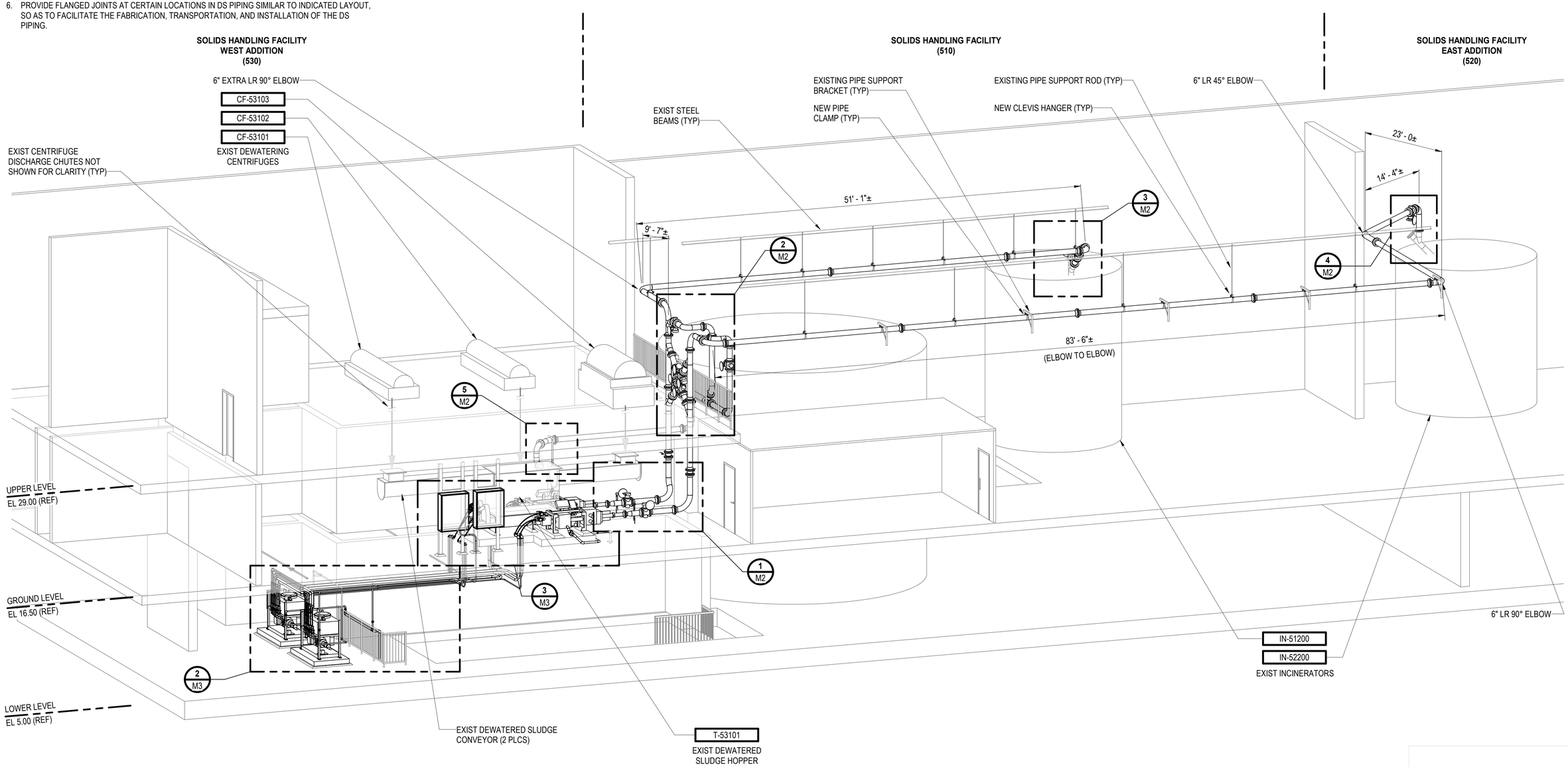

	REVISIONS	DATE	BY

DESIGNED L. ROSCOE
DRAWN A. PETERSON
CHECKED R. NICKEL
APPROVED J. HUNGERFORD

ONE INCH AT FULL SCALE. IF NOT, SCALE ACCORDINGLY
FILE NAME BellinghamPumpReplacement.rvt
JOB No. 216-2480-018
DATE JANUARY 2020

JAMES ROSCOE, STATE OF WASHINGTON, 45693, REGISTERED PROFESSIONAL ENGINEER
JANUARY 14, 2020

Parametrix
ENGINEERING . PLANNING . ENVIRONMENTAL SCIENCES
1019 39TH AVENUE SE, SUITE 100 | PUYALLUP, WA 98374
P 253.604.6600
WWW.PARAMETRIX.COM

PROJECT NAME
CITY OF BELLINGHAM
SLUDGE PUMP SYSTEM REPLACEMENT PROJECT
BELLINGHAM, WA

MECHANICAL OVERALL ISOMETRIC VIEW

DRAWING NO.
8 OF 14
M1

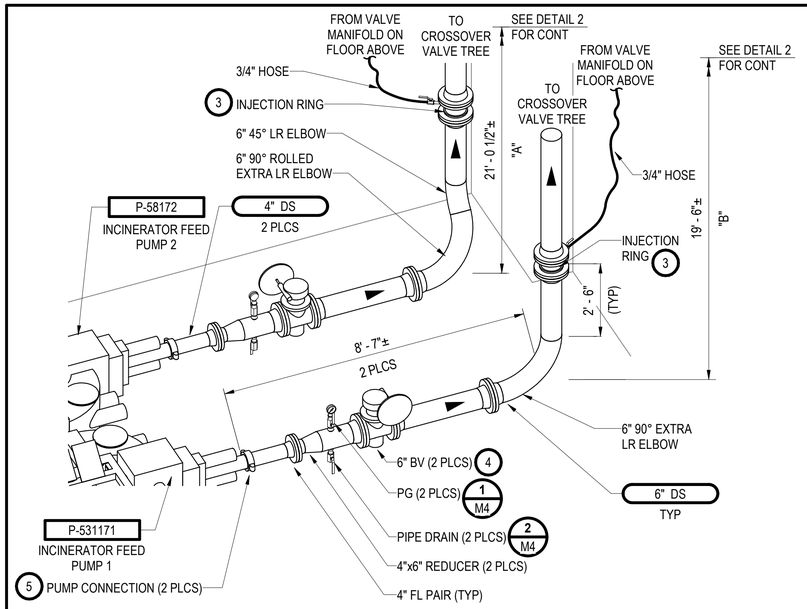

PUMP CONNECTION
ISOMETRIC VIEW 1 M1
SCALE: NONE

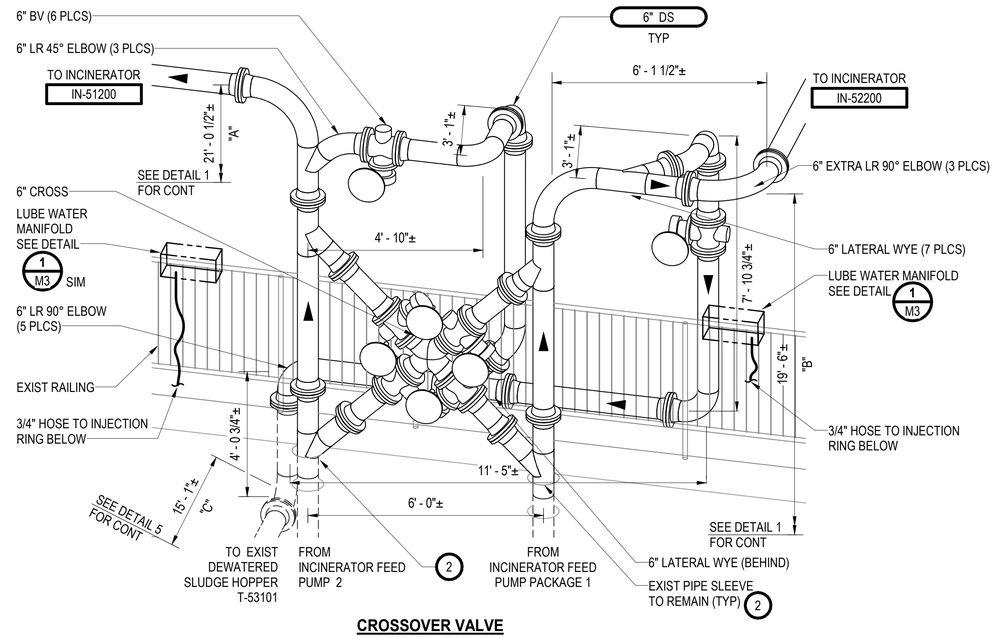

CROSSOVER VALVE TREE
ISOMETRIC VIEW 2 M1
SCALE: NONE

NOTES:

1. CONTRACTOR SHALL VERIFY DIMENSIONS, ELEVATIONS, AND LOCATIONS PRIOR TO CONSTRUCTION. NOT ALL EQUIPMENT, PIPING, STRUCTURAL ELEMENTS, ETC. SHOWN FOR CLARITY.

2. CHIP OUT AND REPLACE GROUT INSIDE EXISTING PIPE SLEEVE AS REQUIRED TO REMOVE AND INSTALL DS PIPING.

3. CONNECT HYDRAULIC HOSES TO INJECTION RINGS WITH STAINLESS STEEL HOSE ADAPTERS, BALL VALVE AND FITTINGS AS REQUIRED.

4. PROVIDE NEW LIMIT SWITCH ON BALL VALVE. CONNECT TO EXISTING FLEX CONDUIT AND CONDUCTORS.

5. CONNECT 4" DS PIPING TO PUMP (CONNECTION ADAPTER BY PUMP MANUFACTURER.

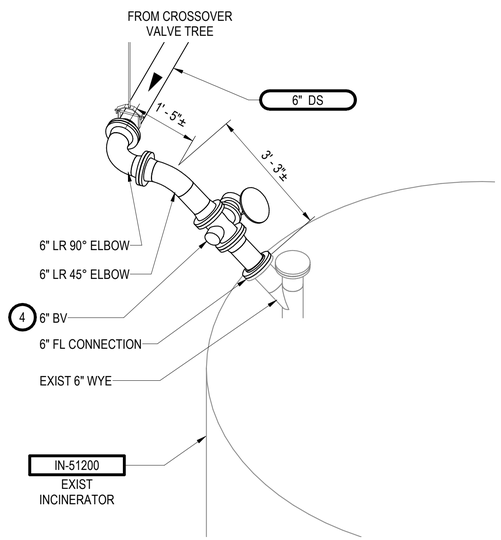

INCINERATOR IN-51200 CONNECTION
ISOMETRIC VIEW 3 M1
SCALE: NONE

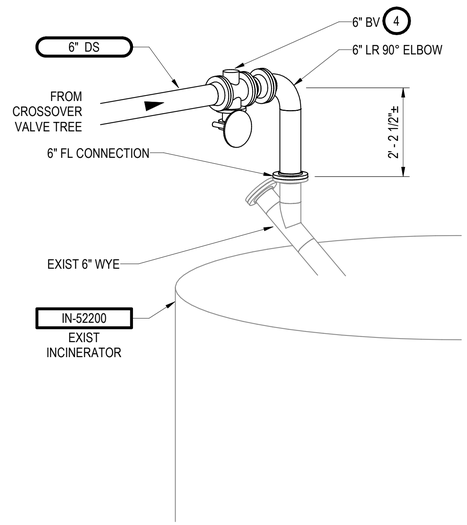

INCINERATOR IN-52200 CONNECTION
ISOMETRIC VIEW 4 M1
SCALE: NONE

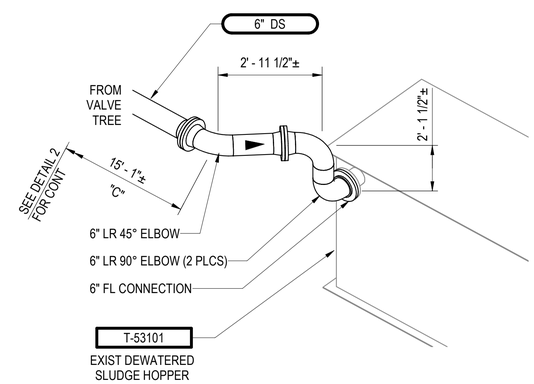

HOPPER CONNECTION
ISOMETRIC VIEW 5 M1
SCALE: NONE

	REVISIONS	DATE	BY

DESIGNED L. ROSCOE
DRAWN A. PETERSON
CHECKED R. NICKEL
APPROVED J. HUNGERFORD

ONE INCH AT FULL SCALE. IF NOT, SCALE ACCORDINGLY
FILE NAME BellinghamPumpReplacement.rvt
JOB No. 216-2480-018
DATE JANUARY 2020

TYLER R. ROSCOE — STATE OF WASHINGTON — 45693 — REGISTERED PROFESSIONAL ENGINEER
JANUARY 14, 2020

Parametrix
ENGINEERING . PLANNING . ENVIRONMENTAL SCIENCES
1019 39TH AVENUE SE, SUITE 100 | PUYALLUP, WA 98374
P 253.604.6600
WWW.PARAMETRIX.COM

PROJECT NAME
CITY OF BELLINGHAM
SLUDGE PUMP SYSTEM REPLACEMENT PROJECT
BELLINGHAM, WA

MECHANICAL DS PIPING ISOMETRIC VIEWS

DRAWING NO. 9 OF 14
M2

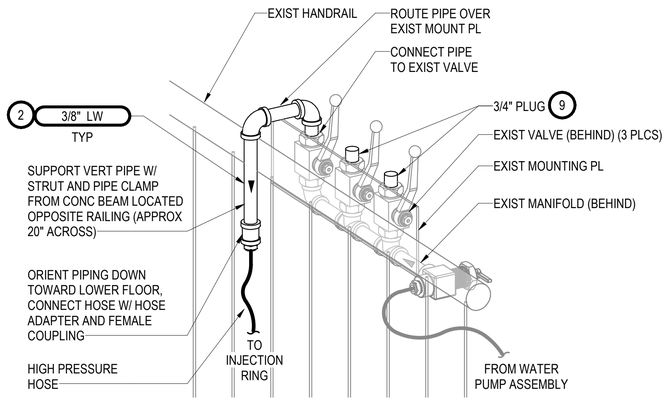

VALVE MANIFOLD
ISOMETRIC VIEW 1 M1
SCALE: NONE

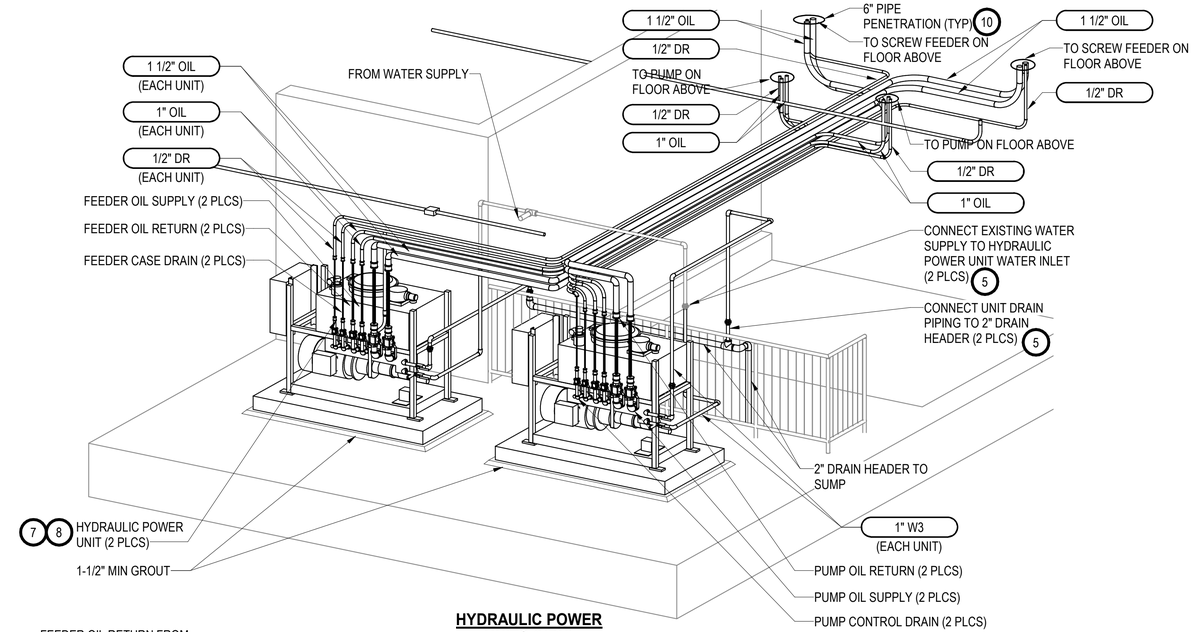

HYDRAULIC POWER UNITS (HPU)
ISOMETRIC VIEW 2 M1
SCALE: NONE

NOTES:

1. CONTACTOR SHALL VERIFY LOCATIONS, DIMENSIONS, AND ELEVATIONS PRIOR TO CONSTRUCTION.
2. CONTRACTOR SHALL VERIFY AND MATCH SIZE OF EXISTING MANIFOLD PIPING. PIPING SHALL BE RATED FOR MIN 3000 PSI PRESSURE.
3. PROVIDE SHUTOFF BALL VALVE IN ACCESSIBLE LOCATION.
4. PROVIDE ADEQUATE HOSE AS REQUIRED FOR FINAL CONNECTION TO EQUIPMENT. HOSE SHALL NOT KINK. HOSE SHALL BE NO LONGER THAN 3 FEET.
5. CONTRACTOR SHALL SUPPORT PIPING AS REQUIRED. PIPING MAY BE SUPPORTED BY EXISTING SUPPORTS, ADEQUATE NEW SUPPORTS, OR A COMBINATION OF BOTH.
6. CONNECT INCINERATOR FEED PUMPS TO EXIST DEWATERED SLUDGE HOPPER (NOT SHOWN FOR CLARITY).
7. LOCATE PROPOSED HYDRAULIC UNITS IN SIMILAR ORIENTATION TO DEMOLISHED HYDRAULIC UNITS. SEE PHOTO 1, SHEET D2. PROVIDE REQUIRED SPACE AROUND UNITS FOR MAINTENANCE.
8. RECONNECT EXISTING WATER SUPPLY TO PROPOSED HYDRAULIC POWER UNITS. SEE NOTE 5, SHEET D2 FOR DISCONNECTION/DEMOLITION. RECONNECT EXISTING ELECTRICAL CONNECTIONS TO PROPOSED HYDRAULIC POWER UNITS. SEE ELECTRICAL SHEETS. SEE NOTE 4, SHEET D2 FOR DISCONNECTION/DEMOLITION.
9. PROVIDE 3/4" PLUG (RATED FOR 600 PSI) ON EXISTING VALVES (TYP - 2 LOCATIONS/MANIFOLD). ONLY ONE HOSE WILL SERVE EACH INJECTION RING.
10. PROVIDE NEW PIPE PENETRATION AT ALL TUBING FLOOR PENETRATIONS (4 PLCS). SEE DETAIL 3, SHEET M4.
11. PROVIDE TUBING SUPPORTS SPACED AT MAXIMUM 6 FEET APART.
12. PROVIDE BULKHEAD TYPE FITTINGS AT ALL POINTS WHERE HOSE CONNECTS TO RIGID TUBING.

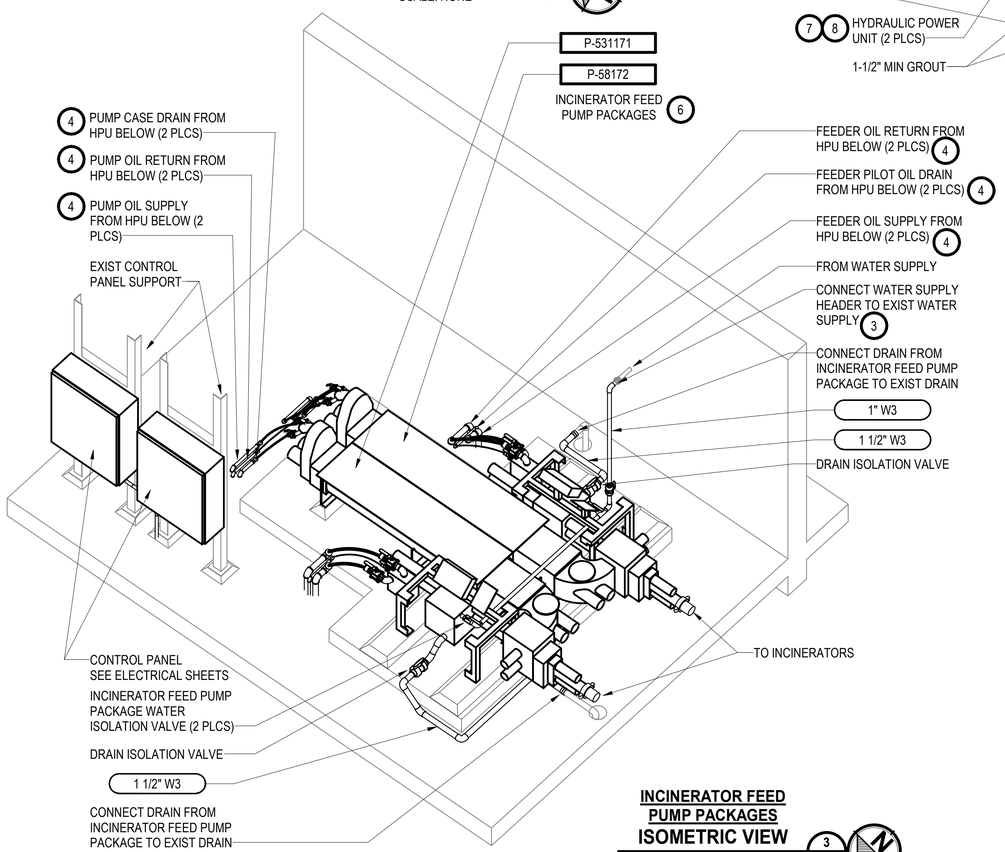

INCINERATOR FEED PUMP PACKAGES
ISOMETRIC VIEW 3 M1
SCALE: NONE

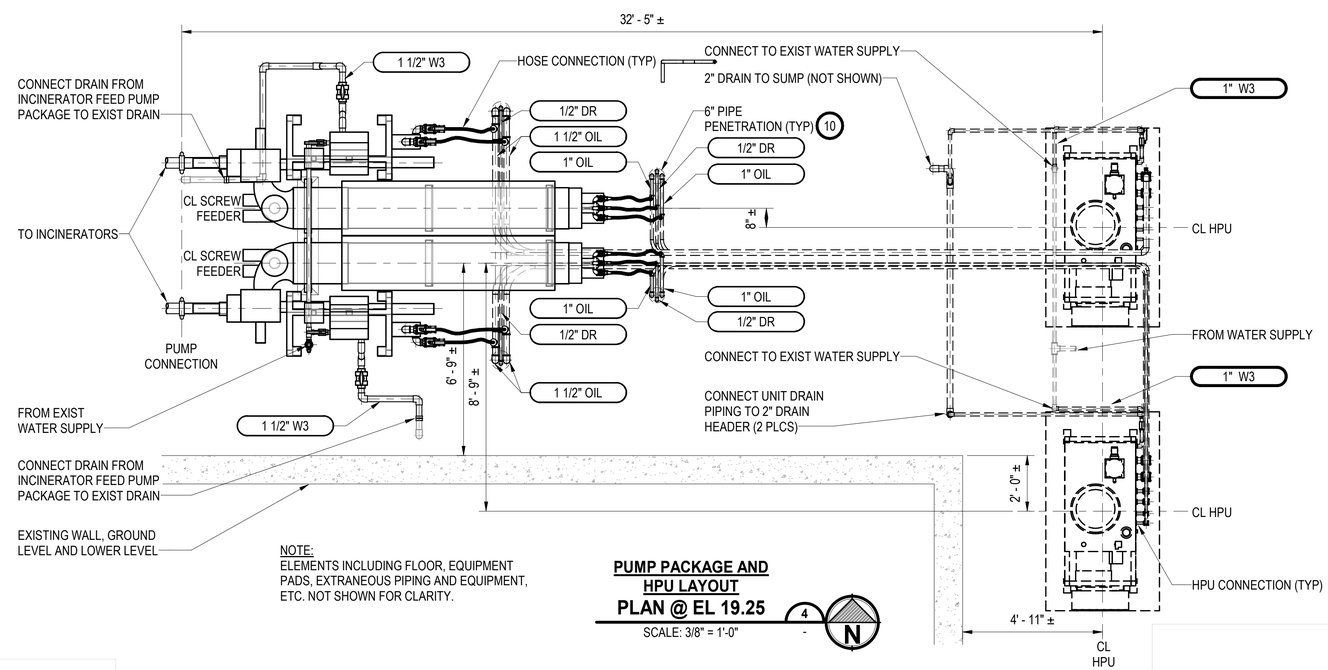

NOTE:
ELEMENTS INCLUDING FLOOR, EQUIPMENT PADS, EXTRANEOUS PIPING AND EQUIPMENT, ETC. NOT SHOWN FOR CLARITY.

PUMP PACKAGE AND HPU LAYOUT
PLAN @ EL 19.25 4 -
SCALE: 3/8" = 1'-0"

	REVISIONS	DATE	BY

DESIGNED L. ROSCOE
DRAWN A. PETERSON
CHECKED R. NICKEL
APPROVED J. HUNGERFORD

ONE INCH AT FULL SCALE. IF NOT, SCALE ACCORDINGLY
FILE NAME BellinghamPumpReplacement.rvt
JOB No. 216-2480-018
DATE JANUARY 2020

TYLER R. ROSCOE — STATE OF WASHINGTON — 45693 — REGISTERED PROFESSIONAL ENGINEER
JANUARY 14, 2020

Parametrix
ENGINEERING . PLANNING . ENVIRONMENTAL SCIENCES
1019 39TH AVENUE SE, SUITE 100 | PUYALLUP, WA 98374
P 253.604.6600
WWW.PARAMETRIX.COM

PROJECT NAME
CITY OF BELLINGHAM
SLUDGE PUMP SYSTEM REPLACEMENT PROJECT
BELLINGHAM, WA

MECHANICAL DETAILS

DRAWING NO. 10 OF 14
M3

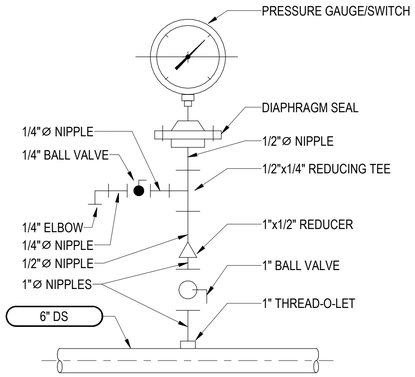

NOTE:
ALL SMALL DIAMETER PIPING, FITTINGS, AND VALVES SHALL BE CARBON STEEL.

PRESSURE GAUGE DETAIL 1 -
SCALE: NONE

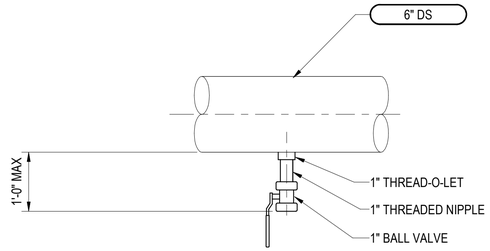

PIPE DRAIN DETAIL 2 -
SCALE: 1" = 1'-0"

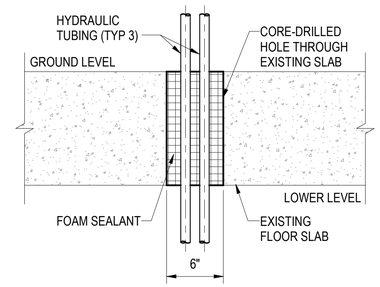

PIPE PENETRATION DETAIL 3 -
SCALE: 1 1/2" = 1'-0"

	REVISIONS	DATE	BY

DESIGNED L. ROSCOE
DRAWN A. PETERSON
CHECKED R. NICKEL
APPROVED J. HUNGERFORD

ONE INCH AT FULL SCALE.
IF NOT, SCALE ACCORDINGLY
FILE NAME BellinghamPumpReplacement.rvt
JOB No. 216-2480-018
DATE JANUARY 2020

LYLE R. ROSCOE
STATE OF WASHINGTON
45693
REGISTERED PROFESSIONAL ENGINEER
JANUARY 14, 2020

Parametrix
ENGINEERING . PLANNING . ENVIRONMENTAL SCIENCES
1019 39TH AVENUE SE, SUITE 100 | PUYALLUP, WA 98374
P 253.604.6600
WWW.PARAMETRIX.COM

PROJECT NAME
CITY OF BELLINGHAM
SLUDGE PUMP SYSTEM REPLACEMENT PROJECT
BELLINGHAM, WA

MECHANICAL DETAILS

DRAWING NO.
11 OF 14
M4

PLAN SYMBOLS

CONDUIT SYMBOLS

- X-### — CONDUIT ID TAG P = POWER C = CONTROL S = SIGNAL X = SPARE
- 3/4"C-(3)#12 — CALLOUT INDICATING CONDUIT SIZE, NUMBER OF WIRES, AND WIRE SIZE.
- X-### — CALLOUT INDICATING CONDUIT NUMBER AND WIRE PER SCHEDULE.
- EXPOSED CONDUIT
- CONCEALED CONDUIT
- CAP ON CONDUIT STUB
- CONDUIT TURNING UP
- CONDUIT TURNING DOWN
- CONDUIT WITH SEAL FITTING
- UNDERGROUND DIRECT BURIAL CONDUITS
- FLEXIBLE CONDUIT
- INDICATES REMOVAL
- GROUND CONDUCTOR
- HEAT TRACE
- CONDUIT RUN, BROKEN AND CONTINUED ON SAME SHEET OR AS NOTED
- HOME RUN TO PANELBOARD OR AS INDICATED
- CABLE TRAY
- J — JUNCTION BOX LOCATION

EQUIPMENT AND INSTRUMENT SYMBOLS

- XXX##-### — EQUIPMENT ID TAG
- G, xxKW — GENERATOR xxKW = SIZE
- xx — MOTOR xx = HORSEPOWER
- EQUIPMENT CONNECTION
- INSTRUMENT LOCATION
- T — THERMOSTAT LOCATION
- xxA — DISCONNECT SWITCH, UNFUSED xxA = AMPERAGE RATING
- xxAF xxAT F — DISCONNECT SWITCH, FUSED xxAF = FRAME RATING xxAT = TRIP RATING
- xxAF xxAT CB — ENCLOSED CIRCUIT BREAKER xxAF = FRAME RATING xxAT = TRIP RATING
- MH — MANHOLE
- HH — HANDHOLE
- GROUND ROD
- GROUND ROD AND BOX
- WALL-MOUNTED CONTROL PANEL, PANELBOARD, OR TERMINAL CABINET. SHOWN WITH EQUIPMENT ID TAG.
- FLOOR-STANDING DISTRIBUTION ASSEMBLY, SUCH AS MCC, SWITCHBOARD, OR XFMR. SHOWN WITH EQUIPMENT ID TAG. — PNL-100

UTILITIES SYMBOLS

- M — ELECTRICITY UTILITY METER AND SOCKET
- PLYWOOD BACKBOARD

RECEPTACLE AND SWITCH SYMBOLS

- CKT TYPE — DUPLEX WALL RECEPTACLE, 120V CKT = CIRCUIT NUMBER TYPE: WP = WEATHERPROOF G = GROUNDED IG = ISOLATED GROUND GF = GROUND FAULT CIRCUIT INTERRUPTOR
- DUPLEX RECEPTACLE, EMERGENCY/STAND-BY
- SINGLE RECEPTACLE, 120V
- SINGLE RECEPTACLE, EMERGENCY/STAND-BY
- DOUBLE DUPLEX RECEPTACLE, 120V
- DOUBLE DUPLEX RECEPTACLE, EMERGENCY/STAND-BY
- SPECIAL PURPOSE WALL RECEPTACLE, RATING AS NOTED.
- DUPLEX FLOOR RECEPTACLE, 120V TYPE: F = FLUSH S = SURFACE
- $ (a,b) * — SINGLE POLE SWITCH (SEE NOTE S1). * = SINGLE POLE 2 = 2 POLE 3 = 3 WAY 4 = 4 WAY M = HP RATED, LOCKABLE OS = OCCUPANCY SENSOR P = SWITCH WITH PILOT LIGHT WP = WEATHERPROOF

NOTES:

S1 LOWER CASE LETTERS IN PARENTHESIS ADJACENT TO A SWITCH OR LIGHT FIXTURE INDICATE A SWITCHED CIRCUIT AND IDENTIFY THE FIXTURE/SWITCH COMBINATIONS. FOR FOUR LAMP FLUORESECENT FIXTURES WIRED IN PAIRS WITHIN EACH FIXTURE, THE "a" SWITCH CONTROLS THE OUTER LAMPS AND THE "b" SWITCH CONTROLS THE INNER LAMPS. WIRE 3 LAMP FIXTURES SIMILARLY.

S2 NUMBERS IN PARENTHESIS ADJACENT TO A LIGHT FIXTURE OR RECEPTACLE INDICATE THE LIGHTING PANEL BRANCH CIRCUIT FEEDING THE DEVICE.

LIGHTING SYMBOLS

- ID NL (a) (LPXX/X) — LUMINAIRE WITH IDENTIFICATION TAG ID = TYPE, PER LIGHTING SCHEDULE NL = UNSWITCHED NIGHT LIGHT a = SWITCH CONTROL LPXX/X = POWER SOURCE PANEL AND CIRCUIT NUMBER
- SURFACE MOUNTED LUMINAIRE
- WALL MOUNTED LUMINAIRE
- POLE MOUNTED LUMINAIRE
- WALL/CEILING MOUNTED EXIT LIGHT - DIRECTIONAL ARROW WHERE INDICATED, SHADED AREA INDICATES ILLUMINATED FACE.
- PE — PHOTOELECTRIC CELL
- EMERGENCY LIGHT WITH SELF-CONTAINED BATTERY

FIRE ALARM SYMBOLS

- FACP — FIRE ALARM CONTROL PANEL
- SH — COMBINATION SMOKE/HEAT DETECTOR
- F — HORN AND STROBE
- F — MANUAL PULL STATION

ONE-LINE SYMBOLS

- XXX##-### — EQUIPMENT ID TAG
- X-### — CONDUIT ID TAG P = POWER C = CONTROL S = SIGNAL X = SPARE
- G, xxKW — GENERATOR xxKW = SIZE
- xx — MOTOR xx = HORSEPOWER
- xxAF xxAT — WITH DRAWOUT; xxAF xxAT — NO DRAWOUT — POWER CIRCUIT BREAKER, 3 POLE, ABOVE 1500V. xxAF = FRAME SIZE xxAT = TRIP RATING
- xxAF xxAT — WITH DRAWOUT; xxAF xxAT — NO DRAWOUT — CIRCUIT BREAKER, 3 POLE UNLESS OTHERWISE NOTED. xxAF = FRAME SIZE xxAT = TRIP RATING
- xxKVA XXV-yyV — POWER OR DISTRIBUTION TRANSFORMER, 3 PHASE UNLESS OTHERWISE NOTED. xxKVA = SIZE xxV = PRIMARY VOLTAGE yyV = SECONDARY VOLTAGE
- ATS — TRANSFER SWITCH, ATS OR MTS AS INDICATED. 3 POLE UNLESS OTHERWISE NOTED. xxAF = RATING
- * — MOTOR STARTER WITH THERMAL OVERLOAD. 3 PHASE UNLESS OTHERWISE NOTED. * = NEMA SIZE
- VFD ### — VARIABLE FREQUENCY DRIVE. 3 PHASE UNLESS OTHERWISE NOTED. ### = DEVICE ID NUMBER
- SS ### — ELECTRONIC SOFT STARTER WITH BYPASS. 3 PHASE UNLESS OTHERWISE NOTED. ### = DEVICE ID NUMBER
- LINE OR LOAD REACTOR
- K — KIRK KEY INTERLOCK
- ST — SHUNT TRIP
- FUSE
- CURRENT TRANSFORMER
- VOLTAGE TRANSFORMER
- SURGE ARRESTOR
- X — SENSOR X INDICATES DEVICE TYPE: A = AMMETER AS = CURRENT SWITCH V = VOLTMETER VS = VOLT SWITCH WH = WATTHOUR METER PM = POWER QUALITY METER
- POWER RECEPTACLE
- CAPACITOR
- VACUUM BREAK SWITCH
- TERMINATOR OR POTHEAD
- X — ELEMENTARY DIAGRAM REFERENCE X= DIAGRAM NUMBER
- GROUND CONNECTION

SCHEMATIC SYMBOLS

- TAG, xxAF — DISCONNECT SWITCH, 3 POLE. TAG = DEVICE TAG ID xxAF = SWITCH RATING IN AMPERES
- TAG, xxA — CIRCUIT BREAKER, 3 POLE. TAG = DEVICE TAG ID xxA = TRIP RATING IN AMPERES
- M, OL — MOTOR STARTER WITH THERMAL OVERLOAD, 3 POLE.
- M — MOTOR, 3 PHASE. VOLTAGE AND HORSEPOWER AS INDICATED.
- M — MOTOR, SINGLE PHASE. VOLTAGE AND HORSEPOWER AS INDICATED.
- BUS STAB ON MCC OR SWITCHGEAR, OR CORD AND PLUG CONNECTION.
- TAG, xxxVA, xxV-yyV — CONTROL POWER TRANSFORMER. TAG = DEVICE TAG ID xxxVA = SIZE xxV = PRIMARY VOLTAGE yyV = SECONDARY VOLTAGE
- TAG, xxA — CIRCUIT BREAKER, SINGLE POLE. TAG = DEVICE TAG ID xxA = TRIP RATING, IN AMPERES
- TAG, xxA — FUSE TAG = DEVICE TAG ID xxA = TRIP RATING, IN AMPERES
- PUMP 1, O, H, A, XOO, OXO, OOX — SELECTOR SWITCH ASSEMBLY, 3-POSITION TYPICAL CONFIGURATIONS: H O A - HAND/OFF/AUTO L O R - LOCAL/OFF/REMOTE
- PUSHBUTTON, NORMALLY OPEN AND NORMALLY CLOSED
- X — INDICATING LIGHT, X INDICATES COLOR: A = AMBER B = BLUE C = CLEAR G = GREEN R = RED W = WHITE Y = YELLOW
- X — INDICATING LIGHT, PUSH-TO-TEST
- XXX ### — CONTROL DEVICE COIL XXX INDICATES TYPE ALT = ALTERNATING RELAY CR = CONTROL RELAY LR = LATCHING RELAY TR/TDR = TIMING RELAY/ TIME-DELAY RELAY M = MOTOR STARTER CONTACTOR ### = DEVICE ID NUMBER

STANDARD RELAY CONTACTS

- TAG — CONTACTS, NORMALLY OPEN AND NORMALLY CLOSED. TAG = DEVICE TAG ID

TIMING RELAY CONTACTS

- TAG — NORMALLY OPEN, CLOSES AFTER TIME DELAY (NOTC). TAG = DEVICE TAG ID
- NORMALLY CLOSED, OPENS AFTER TIME DELAY (NCTO).
- NORMALLY OPEN, INSTANTANEOUS CLOSE, OPENS AFTER TIME DELAY (NOTO).
- NORMALLY CLOSED, INSTANTANEOUS OPEN, CLOSES AFTER TIME DELAY (NCTC).

SENSING DEVICE CONTACTS

CLOSES RISING	CLOSES FALLING	DEVICE TYPE
		FLOW SWITCH
		LEVEL/FLOAT SWITCH
		PRESSURE SWITCH
		TEMPERATURE SWITCH

LIMIT SWITCH CONTACTS

- NORMALLY OPEN, CLOSES ON REACHING LIMIT
- NORMALLY CLOSED, OPENS ON REACHING LIMIT

WIRE, CABLE, AND TERMINAL SYMBOLS

- WIRING INSIDE ENCLOSURE
- FIELD WIRING
- CONDUCTORS CONNECTED
- CONDUCTORS NOT CONNECTED
- SPLICE OR TERMINATION
- TERMINAL BLOCK
- DEVICE TERMINAL
- SHORTING BLOCK

MISCELLANEOUS DEVICES

- ETM — ELAPSED TIME METER/ HOURMETER
- SOLENOID
- H — HORN
- B — BELL
- BUZZER
- RESISTOR OR HEATER ELEMENT

ABBREVIATIONS

A	AMPERES	LCP	LOCAL CONTROL PANEL
AC	ALTERNATING CURRENT	LCS	LOCAL CONTROL STATION
A/D	ANALOG TO DIGITAL	LTG	LIGHTING
ADJ	ADJUSTABLE	LTS	LIGHTS
AF	AMPERE FRAME	LP	LIGHTING PANEL
AFD	ADJUSTABLE FREQUENCY DRIVE	(M)	MODIFIED
AFF	ABOVE FINISHED FLOOR	mA	MILLIAMPERES
AFG	ABOVE FINISHED GRADE	MCC	MOTOR CONTROL CENTER
AIC	AMPERES INTERRUPTING CAPACITY	MCP	MOTOR CIRCUIT PROTECTION OR MAIN CONTROL PANEL
AMP	AMPERES		
ANN	ANNUNCIATOR	MCM	THOUSAND CIRCULAR MILS (KCMIL)
AS	AMMETER SWITCH	MON	MONITOR
AT	AMMETER TRIP	MOV	MOTOR OPERATED VALVE
ATS	AUTOMATIC TRANSFER SWITCH	MS	MOTOR STARTER
AUTO	AUTOMATIC	MTD	MOUNTED
AWG	AMERICAN WIRE GAUGE	MTG	MOUNTING
BCG	BARE COPPER GROUND	MTS	MANUAL TRANSFER SWITCH
C	CONDUIT	(N)	NEW
CAB	CABINET	NC	NORMALLY CLOSED
CAP	CAPACITOR	NEG	NEGATIVE
CB	CIRCUIT BREAKER	NEMA	NATIONAL ELECTRICAL MANUFACTURER'S ASSOCIATION
CC	CONTROL CABLE, CLOSING COIL		
CHH	COMMUNICATION HANDHOLE	NEUT	NEUTRAL
CKT	CIRCUIT	NO	NORMALLY OPEN, NUMBER
CMH	COMMUNICATION MANHOLE	OL	OVERLOAD
CO	CONDUIT ONLY	OT	OVER TEMPERATURE
COMM	COMMUNICATION	OIT	OPERATOR INTERFACE TERMINAL
COND	CONDUCTOR	P	POLE, PUMP
CPT	CONTROL POWER TRANSFORMER	PB	PULLBOX
CP	CONTROL PANEL	PBSW	PUSHBUTTON SWITCH
CR	CONTROL RELAY	PEC	PHOTOELECTRIC CELL
CS	CONTROL STATION	PF	POWER FACTOR
CT	CURRENT TRANSFORMER	PGRS	PVC COATED GALVANIZED RIGID STEEL
DB	DIRECT BURIAL		
DC	DIRECT CURRENT	pH	MEASURE OF ACIDITY OR ALKALINITY
DIAG	DIAGRAM		
DISC	DISCONNECT	PH	PHASE
DISTR	DISTRIBUTION	PLC	PROGRAMMABLE LOGIC CONTROLLER
DIV	DIVISION		
DP	DISTRIBUTION PANEL	PNL	PANEL
DPDT	DOUBLE POLE, DOUBLE THROW	PNLBD	PANELBOARD
DPST	DOUBLE POLE, SINGLE THROW	POS	POSITION, POSITIVE
(E)	EXISTING	POT	POTENTIOMETER
EE	ELECTRICAL ENCLOSURE	PPS	PACKAGED POWER SUPPLY
EHH	ELECTRICAL HANDHOLE	PRI	PRIMARY
ELEM	ELEMENTARY	PWR	POWER
EMERG	EMERGENCY	(R)	RELOCATED
ENCL	ENCLOSURE	RCPT	RECEPTACLE
EFFL	EFFLUENT	RCT	REPEAT CYCLE TIMER
EGC	EQUIPMENT GROUND CONDUCTOR	RT	RESET TIMER
EQPT	EQUIPMENT	SCCR	SHORT CIRCUIT CURRENT RATING
ETM	ELAPSED TIME METER	SCHD80	SCHEDULE 80 PVC
FDR	FEEDER	SCR	SILICON CONTROLLED RECTIFIER
FE	FLOW ELEMENT	SD	SMOKE DETECTOR
FIT	FLOW INDICATION TRANSMITTER	SG	SWITCHGEAR
FLEX	FLEXIBLE	SIG	SIGNAL
FLUOR	FLUORESCENT	SN	SOLID NEUTRAL
FO	FIBER OPTIC	SPD	SURGE PROTECTIVE DEVICE
FREQ	FREQUENCY	SPDT	SINGLE POLE, DOUBLE THROW
FSH	FLOAT SWITCH HIGH	SST	STAINLESS STEEL
FSO	FLOAT SWITCH OVERFLOW	SV	SOLENOID VALVE
FU	FUSE	SW	SWITCH
FUT,(F)	FUTURE	SWBD	SWITCHBOARD
FVNR	FULL VOLTAGE, NON-REVERSING	SYNC	SYNCHRONIZING
FVR	FULL VOLTAGE, REVERSING	TB	TERMINAL BOX
FWD	FORWARD	TC	TIMED CLOSING
GEN	GENERATOR	TEL	TELEPHONE
GFCI	GROUND FAULT CIRCUIT INTERRUPTER	TERM	TERMINAL
		TO	TIMED OPENING
GND	GROUND	TSP	TWISTED SHIELDED PAIR
GRS	GALVANIZED RIGID STEEL	TST	TWISTED SHIELDED TRIAD
H	HYDROGEN PYROXIDE	UGND	UNDERGROUND
HH	HANDHOLE	UV	ULTRAVIOLET
HOA	HAND-OFF-AUTOMATIC	VA	VOLT-AMPERES
HOR	HAND-OFF-REMOTE	VAR	VOLT-AMPERES REACTIVE
HPS	HIGH PRESSURE SODIUM	VFD	VARIABLE FREQUENCY DRIVE
HPU	HYDRAULIC POWER UNIT	VH	VAR-HOUR
HT	HEAT TAPE	VS	VOLTMETER SWITCH
HTR	HEATER	W	WIRE, WATTS
HV	HIGH VOLTAGE	WH	WATTHOUR METER
HZ	HERTZ (CYCLES PER SECOND)	WHDM	WATTHOUR DEMAND METER
IND LT	INDICATING LIGHT	WP	WEATHERPROOF
INCAND	INCANDESCENT	WR	WEATHER RESISTANT
INSTR	INSTRUMENT, INSTRUMENTATION	WT	WATER TIGHT
I/O	INPUT/OUTPUT	XFMR	TRANSFORMER
ISB	INTRINSICALLY SAFE BARRIER		
ISR	INTRINSICALLY SAFE RELAY		
JB	JUNCTION BOX		
KA	KILOAMPERES		
KCMIL	THOUSANDS OF CIRCULAR MILS		
KV	KILOVOLTS		
KVA	KILOVOLT AMPERES		
KVAR	KILOVOLT AMPERES REACTIVE		
KWH	KILOWATT HOURS		

GENERAL NOTES

1. THE INSTALLATION OF ALL EQUIPMENT SHOWN ON THESE DRAWINGS OR DESCRIBED IN THE SPECIFICATIONS SHALL CONFORM TO THE REQUIREMENTS SET FORTH IN THE LATEST EDITIONS OF ALL APPLICABLE CODES AND UTILITY COMPANY STANDARDS. CONTACT THE UTILITY COMPANY REPRESENTATIVES AND VERIFY THEIR REQUIREMENTS.
2. THIS IS A GENERALIZED LEGEND SHEET. THIS CONTRACT MAY NOT USE ALL INFORMATION SHOWN.
3. NOTIFY THE ENGINEER IMMEDIATELY IF CONFLICTS IN EQUIPMENT LOCATIONS ARE DISCOVERED, OR IF PROBLEMS ARISE DUE TO FIELD CONDITIONS, LACK OF INFORMATION, OR ANY OTHER REASON.
4. INFOMATION SHOWN MAY NOT BE ALL INCLUSIVE. SEE ALSO ANSI C37.3, Y1.1, Y32.2, AND Y32.9.
5. REFER TO THE MECHANICAL DRAWINGS FOR EXACT LOCATIONS OF MECHANICAL EQUIPMENT AND FOR CERTAIN CONNECTIONS TO BE MADE TO ELECTRICAL CIRCUITS.
6. EQUIPMENT SHOWN IN HALF TONE OR GREY TONE ARE EXISTING OR BY OTHERS.
7. VERIFY ALL COLOR REQUIREMENTS BEFORE ORDERING MATERIALS.
8. CONDUIT SIZE AND FILL SHALL BE AS INDICATED. WHERE NO SIZE IS SHOWN, THE CONDUIT SHALL BE SIZED IN ACCORDANCE WITH THE EDITION OF THE NATIONAL ELECTRIC CODE ADOPTED BY THE AUTHORITY HAVING CODE ENFORCEMENT JURISDICTION. WHERE NO FILL IS INDICATED, PROVIDE (3) #12 WIRES. PROVIDE 3/16" INCH NYLON PULL ROPE IN EACH EMPTY CONDUIT.

REVISIONS	DATE	BY

DESIGNED C. CARLSON
DRAWN J. VONDERAHE
CHECKED A. STOKES
APPROVED J. HUNGERFORD

ONE INCH AT FULL SCALE. IF NOT, SCALE ACCORDINGLY
FILE NAME BellinghamPumpReplacement.rvt
JOB No. 216-2480-018
DATE JANUARY 2020

ARTHUR G. STOKES — STATE OF WASHINGTON — 34736 — REGISTERED PROFESSIONAL ENGINEER
JANUARY 15, 2020

Parametrix
ENGINEERING . PLANNING . ENVIRONMENTAL SCIENCES
1019 39TH AVENUE SE, SUITE 100 | PUYALLUP, WA 98374
P 253.604.6600
WWW.PARAMETRIX.COM

PROJECT NAME
CITY OF BELLINGHAM
SLUDGE PUMP SYSTEM REPLACEMENT PROJECT
BELLINGHAM, WA

ELECTRICAL LEGEND AND ABBREVIATIONS

DRAWING NO. 12 OF 14
E1

NOTES:

1. CONDUIT ROUTING IS SHOWN DIAGRAMMATICALLY. NEW ROUTING SHALL BE DETERMINED BY CONTRACTOR.
2. PANELS LCP-53031 & LCP-530312 TO CONNECT TO EXISTING CONDUIT TO MCC
3. CONTRACTOR SHALL PROVIDE EXTRA 25% CONTROL AND SIGNAL CONDUCTORS PER CONDUIT.
4. CONTRACTOR TO REUSE AS MUCH EXISTING CONDUIT AS POSSIBLE. REUSED CONDUIT AND FILL SHALL MEET OR EXCEED NEC REQUIREMENTS AND RUNS SHOWN ON THIS SHEET.

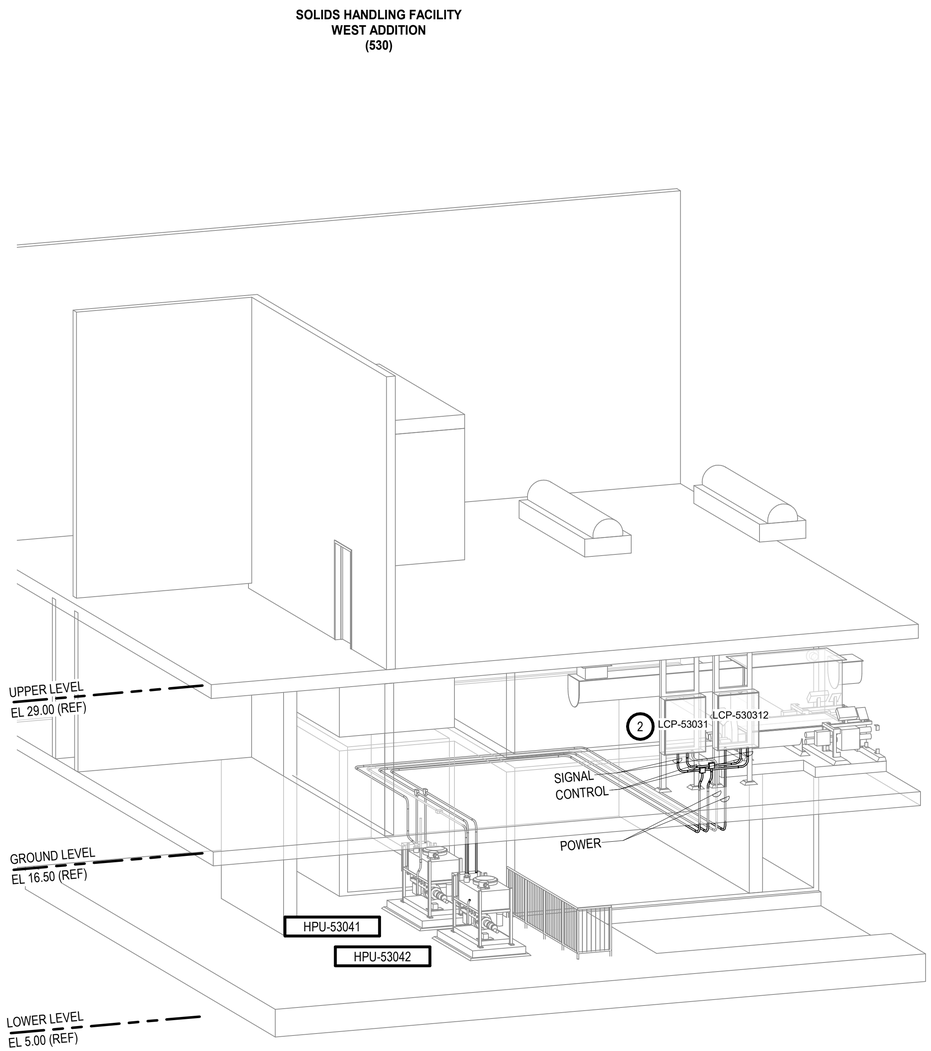

ELECTRICAL ILLUSTRATIVE VIEW
SITE PLAN (1)
SCALE:

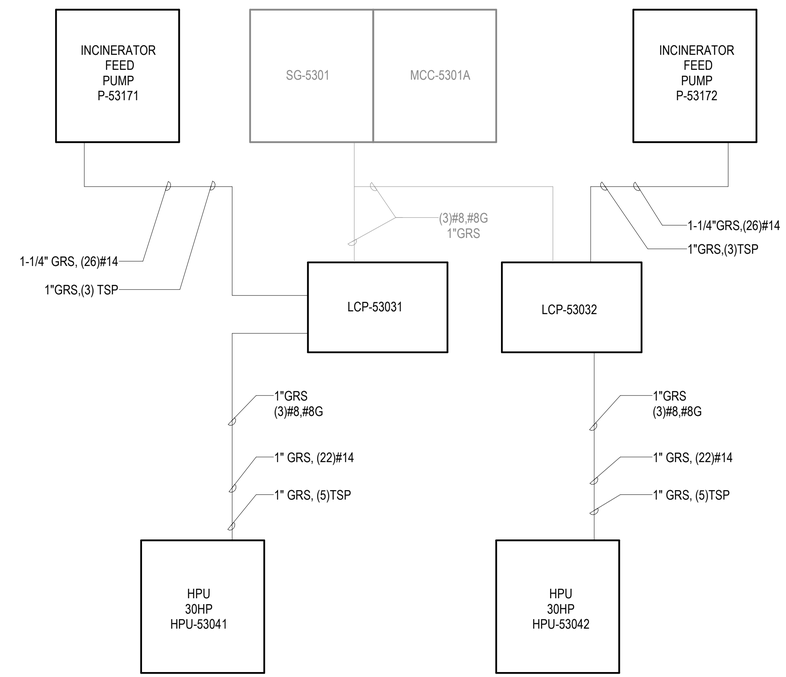

INTERCONNECTION DIAGRAM (2)
SCALE: NONE

	REVISIONS	DATE	BY

DESIGNED C. CARLSON
DRAWN J. VONDERAHE
CHECKED A. STOKES
APPROVED J. HUNGERFORD

ONE INCH AT FULL SCALE. IF NOT, SCALE ACCORDINGLY
FILE NAME BellinghamPumpReplacement.rvt
JOB No. 216-2480-018
DATE JANUARY 2020

ARTHUR G. STOKES — STATE OF WASHINGTON — 34736 — REGISTERED PROFESSIONAL ENGINEER
JANUARY 15, 2020

Parametrix
ENGINEERING . PLANNING . ENVIRONMENTAL SCIENCES
1019 39TH AVENUE SE, SUITE 100 | PUYALLUP, WA 98374
P 253.604.6600
WWW.PARAMETRIX.COM

PROJECT NAME
CITY OF BELLINGHAM
SLUDGE PUMP SYSTEM REPLACEMENT PROJECT
BELLINGHAM, WA

ELECTRICAL SITE PLAN AND INTERCONNECTION DIAGRAM

DRAWING NO. 13 OF 14
E2

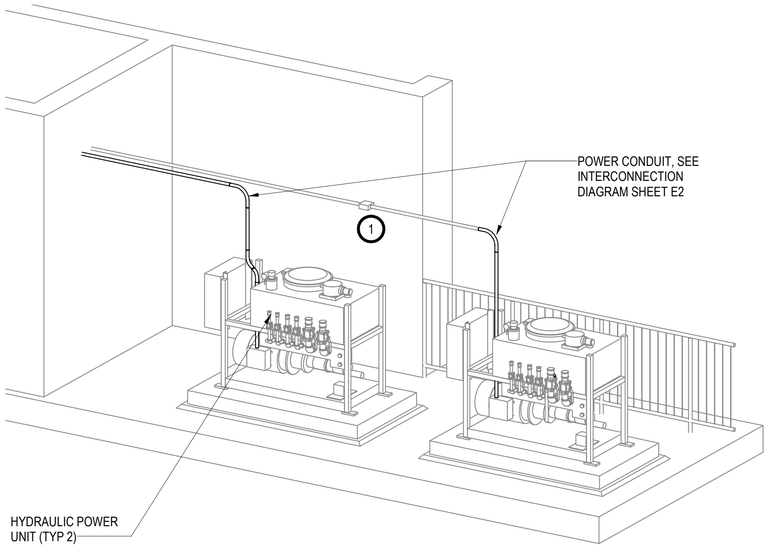

HYDRAULIC POWER UNIT POWER DETAIL 1

SCALE:

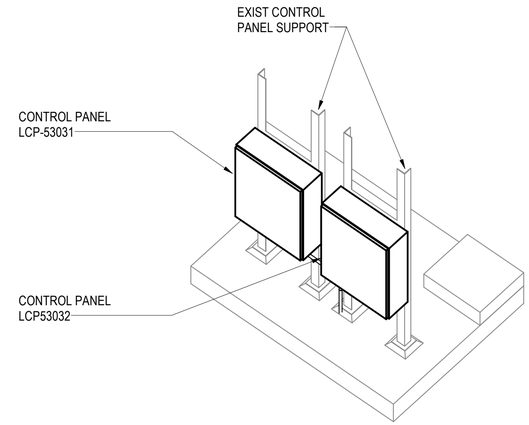

CONTROL PANEL DETAIL 3

SCALE:

NOTES:

1. CONTRACTOR TO REPLACE TEE WITH JUNCTION BOX SIZE ACCORDINGLY.
2. CONDUIT ROUTING IS SHOWN DIAGRAMATICALLY. NEW ROUTING SHALL BE DETERMINED BY CONTRACTOR.
3. CONTRACTOR SHALL VERIFY DIMENSIONS, ELEVATIONS, AND LOCATIONS PRIOR TO CONSTRUCTION. SEE SHEET E3 FOR FURTHER DETAIL.
4. CONTRACTOR SHALL PROVIDE EXTRA 25% CONTROL AND SIGNAL CONDUCTORS PER CONDUIT.
5. CONTRACTOR TO REUSE AS MUCH EXISTING CONDUIT AS POSSIBLE. REUSED CONDUIT AND FILL SHALL MEET OR EXCEED NEC REQUIREMENTS AND RUNS SHOWN ON SHEET E2.

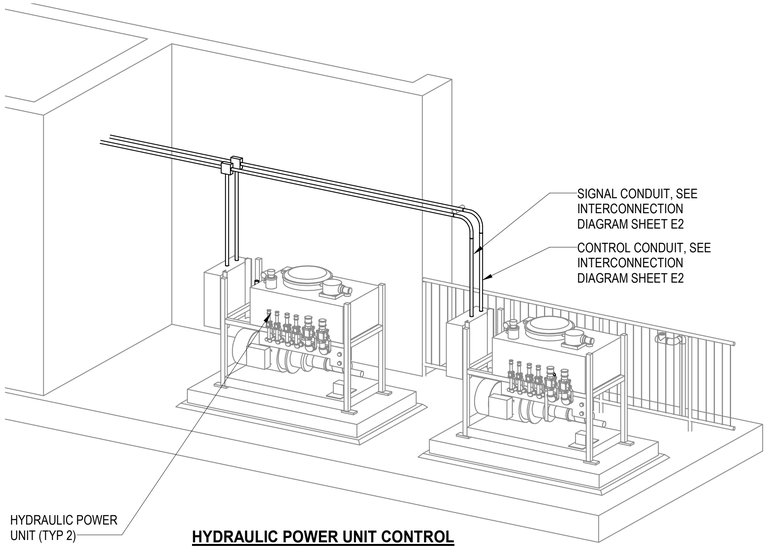

HYDRAULIC POWER UNIT CONTROL AND SIGNAL DETAIL 2

SCALE:

	REVISIONS	DATE	BY

DESIGNED C. CARLSON
DRAWN J. VONDERAHE
CHECKED A. STOKES
APPROVED J. HUNGERFORD

ONE INCH AT FULL SCALE. IF NOT, SCALE ACCORDINGLY

FILE NAME BellinghamPumpReplacement.rvt
JOB NO. 216-2480-018
DATE JANUARY 2020

ARTHUR G. STOKES — STATE OF WASHINGTON — 34736 — REGISTERED PROFESSIONAL ENGINEER

JANUARY 14, 2020

Parametrix
ENGINEERING . PLANNING . ENVIRONMENTAL SCIENCES
1019 39TH AVENUE SE, SUITE 100 | PUYALLUP, WA 98374
P 253.604.6600
WWW.PARAMETRIX.COM

PROJECT NAME
CITY OF BELLINGHAM
SLUDGE PUMP SYSTEM REPLACEMENT PROJECT
BELLINGHAM, WA

ELECTRICAL DETAILS

DRAWING NO. 14 OF 14

E3