CITY OF BELLINGHAM, WASHINGTON
POST POINT RESOURCE RECOVERY PLANT
SLUDGE TANK REPLACEMENT PROJECT

CITY PROJECT NO. EU194

CITY BID NUMBER 3B-2026

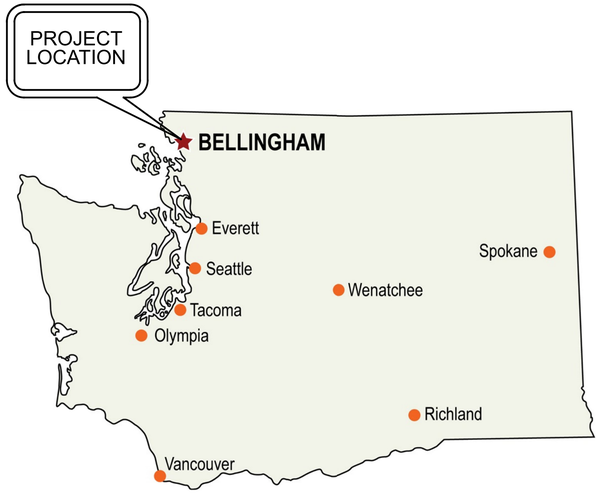

LOCATION MAP

NOT TO SCALE

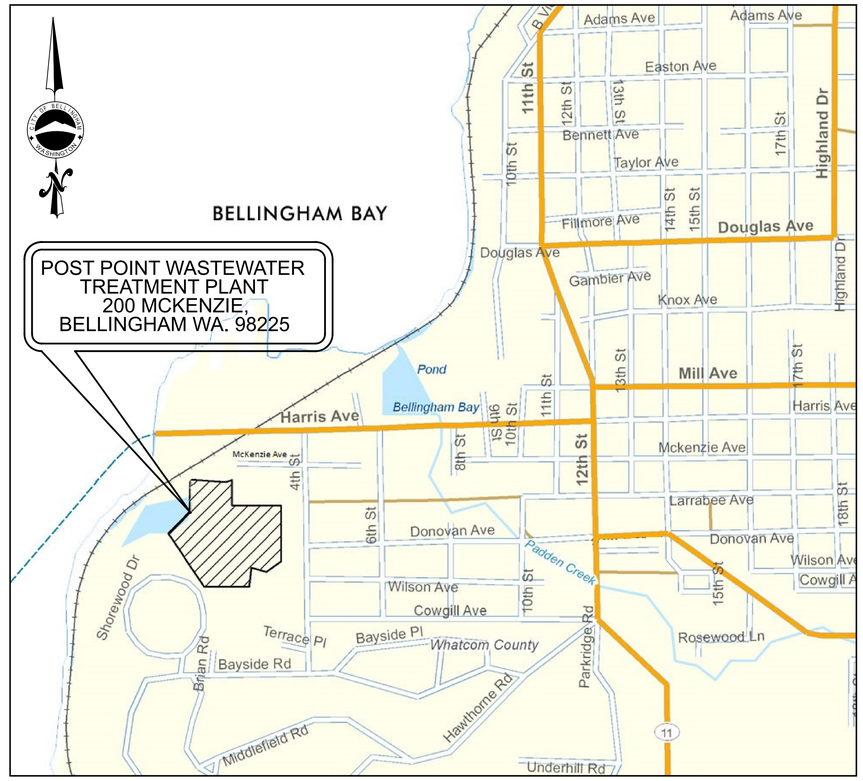

VICINITY MAP

NOT TO SCALE

NOTE: Plans have not been reviewed for electrical code compliance (2020 NEC or WAC 296-46B). Separate electrical permit(s) required. Each person performing electrical work (electrical contractor or property owner) is responsible for applying for their own permit(s) online at www.cob.org/epermits.

Note: An appeal of the land use decisions has been submitted by an appellant. Legal staff representing the planning staff submitted a motion for the Hearing Examiner to dismiss the appeal. As of 2/23/26 the Hearing Examiner has not made a decision on the motion to dismiss the appeal. Pursuance of construction permits and/or associated construction activity prior to a formal determination on the appeal are at the applicants own risk.

JUNE 2026

NOTE: PER IEBC 301.3.1:301.3.1 Prescriptive Compliance method – Alterations, additions, and changes of occupancy complying with Chapter 5 of this code [2021 Washington State Existing Building Code] in buildings complying with the
International Fire Code shall be considered with the provisions of this code.

503.1 General – Alterations to any building or structure shall comply with the requirements of the International Building Code for new construction. Alterations shall be such that the existing building or structure is not less complying with the provisions of the International Building Code than the existing building or structure was prior to the alteration.

As the occupancies type of the newly created rooms are F-1 and S-1, there is no required separation of occupancies per table 508.4 of the 2021 Washington State Building Code. They will be separated by 2-hour fire barrier CMU walls nevertheless. The electrical room will be provided 2 exits and panic hardware per 1010.2.9.2.

GENERAL NOTES: 1 2

1. PLANS HAVE NOT BEEN REVIEWED FOR ELECTRICAL CODE COMPLIANCE (2020 NEC OR WAC 296-46B). SEPARATE ELECTRICAL PERMIT(S) REQUIRED. EACH PERSON PERFORMING ELECTRICAL WORK (ELECTRICAL CONTRACTOR OR PROPERTY OWNER) IS RESPONSIBLE FOR APPLYING FOR THEIR OWN PERMIT(S) ONLINE AT WWW.COB.ORG/EPERMITS.

   AN APPEAL OF THE LAND USE DECISIONS HAS BEEN SUBMITTED BY AN APPELANT. LEGAL STAFF REPRESENTING THE PLANNING STAFF SUBMITTED A MOTION FOR THE HEARING EXAMINER TO DISMISS THE APPEAL. AS OF 2/23/26 THE HEARING EXAMINER HAS NOT MADE A DECISION OF THE MOTION TO DISMISS THE APPEAL. PURSUANCE OF CONSTRUCTION PERMITS AND/OR ASSOCIATED CONSTRUCTION ACTIVITY PRIOR TO A FORMAL DETERMINATION ON THE APPEAL ARE AT THE APPLICANTS OWN RISK.

The undersigned has approved this document for and on behalf of Carollo Engineers INC.
Digitally signed by Susanna Leung
Contact Info: Carollo Engineers, Inc.
Date: 2026.06.29 [illegible]
Susanna Leung
Vice President

The undersigned has approved this document for and on behalf of Carollo Engineers INC.
Digitally signed by Matthew Sprick
Contact Info: Carollo Engineers, Inc.
Date: 2026.06.29 [illegible]
Matt Sprick
Associate Vice President

APPROVED
Subject to Field Inspection
07/29/2026
4:38:15 PM

RECEIVED
07/13/2026
CITY OF BELLINGHAM
PERMIT CENTER

BLD2025-0832 200 MCKENZIE AVE
MEC2025-0796
PLM2025-0426

KING ARCHITECTURE

carollo

WILSON ENGINEERING

Digitally signed by Matthew Sprick
Contact Info: Carollo Engineers, Inc.
Date: 2026.06.29 [illegible]
MATTHEW SCOTT SPRICK
STATE OF WASHINGTON
29659
REGISTERED
PROFESSIONAL ENGINEER

Date	No	Revision	By
	4		
	3		
06-17-26	2		
12-22-25	1	PERMIT REVISIONS	

JOB NO. 202021

DRAWING NO. 010G101

SHEET NO. 1 OF 198

DRAWING INDEX

SHEET NO.	DRAWING NO.	SHEET TITLE
		(G) - GENERAL
1	010G101	COVER SHEET
2	010G102	SHEET INDEX
3	010G103	SOLIDS STREAM PROCESS FLOW DIAGRAM
4	010G104	DESIGN CRITERIA
5	010G105	FACILITY CODE PLAN AND AREA CLASSIFICATION TABLE
6	010G106	STAGING AREA AND SITE ACCESS PLAN
7	010G107	ABBREVIATIONS
8	010G108	NOTES, LEGENDS, AND SYMBOLS
		(D) - DEMOLITION
9	020D101	OVERALL SITE DEMOLITION PLAN
10	020D102	SITE DEMOLITION PLAN
11	030D101	YARD PIPING DEMOLITION PLAN
12	050D101	OVERALL GALLERY DEMOLITION PLAN
13	050D102	GALLERY DEMOLITION PLAN AND SECTIONS 1
14	050D103	GALLERY DEMOLITION PLAN AND SECTIONS 2
15	050D104	GALLERY DEMOLITION PLAN AND SECTIONS 3
16	050D105	GALLERY DEMOLITION PHOTOGRAPHS
17	340D101	SECONDARY SLUDGE PUMP STATION DEMOLITION PLAN AND SECTIONS 1
18	340D102	SECONDARY SLUDGE PUMP STATION DEMOLITION PLAN AND SECTIONS 2
19	340D103	SECONDARY SLUDGE PUMP STATION DEMOLITION PHOTOGRAPHS
20	420D101	SCRUBBER BUILDING DEMOLITION LOWER LEVEL PLANS
21	420D102	SCRUBBER BUILDING DEMOLITION GROUND LEVEL PLANS
22	420D103	CHLORINE BUILDING DEMOLITION PLANS
23	420D104	CHLORINE BUILDING DEMOLITION PLANS AND SECTIONS
24	510D101	SOLIDS HANDLING BUILDING DEMOLITION BASEMENT PLAN
25	530D101	SOLIDS HANDLING BUILDING EAST DEMOLITION BASEMENT PLAN
		(C) - CIVIL
26	020C101	W.A.C. 332-130-145 COMPLIANCE EXHIBIT
27	020C102	TOPOGRAPHIC EXHIBIT
28	020C103	2023 TOPOGRAPHIC MAP WITH RECORD BACKGROUND
29	020C104	TEMPORARY EROSION AND SEDIMENT CONTROL PLAN
30	020C105	TEMPORARY EROSION AND SEDIMENT CONTROL NOTES
31	020C106	TEMPORARY EROSION AND SEDIMENT CONTROL DETAILS
32	020C107	GRADING AND DRAINAGE PLAN
33	020C108	SURFACE RESTORATION AND DIMENSION PLAN
34	020C109	SITE RESTORATION DETAILS 1
35	020C110	SITE RESTORATION DETAILS 2
36	030C001	CIVIL LEGEND AND SYMBOLS
37	030C101	OVERALL YARD PIPING PLAN
38	030C102	YARD PIPING PLAN
39	030C103	EXCAVATION PLAN
		(A) - ARCHITECTURAL
40	420A101	ROOF DEMO PLAN, ROOF PLAN & DRAWING INDEX
41	420A102	ROOF DETAILS
42	420A103	PROJECT PHOTOS & TYP CARLISLE TPO ROOFING DETS
43	420A104	TYP CARLISLE TPO ROOFING DETAILS
		(S) - STRUCTURAL
44	010S101	GENERAL STRUCTURAL NOTES
45	010S102	AUGER CAST PILE SCHEDULE AND DETAILS
46	420S101	SLUDGE STORAGE BUILDING CODE SUMMARY PLAN
47	420S102	SLUDGE STORAGE BUILDING GROUND LEVEL PLAN
48	420S103	SLUDGE STORAGE BUILDING SECTIONS 1
		(S) - STRUCTURAL - CONT'D
49	420S104	SLUDGE STORAGE BUILDING SECTIONS 2
50	420S105	SLUDGE STORAGE BUILDING ELEVATIONS
51	420S106	SLUDGE STORAGE BUILDING DETAILS
52	440S101	SLUDGE STORAGE TANKS BOTTOM PLAN
53	440S102	SLUDGE STORAGE TANKS TOP PLAN
54	440S103	SLUDGE STORAGE TANKS SECTIONS
55	440S104	SLUDGE STORAGE TANKS SECTION AND DETAILS
56	510S101	SOLIDS HANDLING BUILDING BASEMENT PLAN
57	510S102	SOLIDS HANDLING BUILDING PLAN AT EL 32.50
58	510S103	SOLIDS HANDLING BUILDING SECTIONS
59	510S104	SOLIDS HANDLING BUILDING SECTIONS
		(M) - MECHANICAL
60	010M101	GENERAL MECHANICAL LEGEND AND SYMBOLS
61	050M101	OVERALL PIPING PLAN
62	050M102	PIPING PLAN AND SECTIONS 1
63	050M103	PIPING PLAN AND SECTIONS 2
64	050M104	PIPING PLAN AND SECTIONS 3
65	050M105	PIPING PLAN AND SECTIONS 4
66	050M106	WAS PUMPS PLAN AND SECTIONS
67	340M101	SECONDARY SLUDGE PUMP STATION LOWER LEVEL PLAN AND SECTION
68	340M102	SECONDARY SLUDGE PUMP STATION SECTION AND DETAILS
69	420M101	SLUDGE STORAGE BUILDING LOWER LEVEL PLAN
70	420M102	SLUDGE STORAGE BUILDING SECTIONS
71	440M101	SLUDGE STORAGE TANKS BOTTOM PLAN
72	440M102	SLUDGE STORAGE TANKS TOP PLAN
73	440M103	SLUDGE STORAGE TANKS SECTIONS 1
74	440M104	SLUDGE STORAGE TANKS SECTIONS 2
75	440M105	SLUDGE STORAGE TANKS ODOR CONTROL SCHEMATIC
76	440M106	SLUDGE STORAGE TANKS ODOR CONTROL PLAN AND SECTION
77	530M101	SOLIDS HANDLING BUILDING EAST BASEMENT PLAN
78	530M102	SOLIDS HANDLING BUILDING SECTIONS
79	530M103	SOLIDS HANDLING BUILDING EAST PHOTOGRAPHS
		(H) - HVAC
80	010H101	GENERAL SHEET
81	010H102	HVAC SCHEDULES
82	420H101	SLUDGE STORAGE BUILDING BASEMENT PLAN
83	420H102	SLUDGE STORAGE BUILDING GROUND LEVEL PLAN
84	420H103	SLUDGE STORAGE BUILDING AIRFLOW SCHEMATIC
		(E) - ELECTRICAL
85	010E101	LEGEND
86	010E102	ABBREVIATIONS
87	030E101	OVERALL ELECTRICAL SITE PLAN
88	030E102	ENLARGED ELECTRICAL SITE PLAN
89	030E105	ELECTRICAL DUCT BANK SECTIONS
90	030E106	340 PANELBOARD AND DISCONNECT SCHEDULES
91	030E107	420 PANELBOARD AND DISCONNECT SCHEDULES
92	030E108	530 PANELBOARD SCHEDULES
93	030E110	LUMINAIRE SCHEDULE
94	050E101	GALLERY POWER AND CONTROL PLAN
95	050E102	WAS PUMPS POWER AND CONTROL PLAN
96	320DE001	SG-3201A/B DEMOLITION ONE-LINE DIAGRAM
97	320E001	SG-3201A/B MODIFIED ONE-LINE DIAGRAM
98	340DE001	SG-3401 DEMOLITION ONE-LINE DIAGRAM 1
99	340DE002	SG-3401 DEMOLITION ONE-LINE DIAGRAM 2
100	340E001	SG-3401 MODIFIED ELEVATION
		(E) - ELECTRICAL - CONT'D
101	340E002	SG-3401 MODIFIED ONE-LINE DIAGRAM 1
102	340E003	SG-3401 MODIFIED ONE-LINE DIAGRAM 2
103	340E004	MCC-3401 MODIFIED ELEVATION
104	340E005	MCC-3401 MODIFIED ONE-LINE DIAGRAM 1
105	340E006	MCC-3401 MODIFIED ONE-LINE DIAGRAM 2
106	340E101	SECONDARY SLUDGE PUMP STATION PUMP ROOM POWER AND CONTROL PLAN
107	340E102	SECONDARY SLUDGE PUMP STATION MOTOR ROOM POWER AND CONTROL PLAN
108	420E001	MCC-42001 ELEVATION
109	420E002	MCC-42001 ONE-LINE DIAGRAM
110	420E101	SLUDGE STORAGE BUILDING OVERALL PLAN
111	420E102	SLUDGE STORAGE BUILDING UPPER LEVEL POWER AND CONTROL PLAN
112	420E103	SLUDGE STORAGE BUILDING UPPER LEVEL LIGHTING AND GROUNDING PLAN
113	420E104	SLUDGE STORAGE BUILDING LOWER LEVEL POWER AND CONTROL PLAN
114	420E105	SLUDGE STORAGE BUILDING LOWER LEVEL LIGHTING AND GROUNDING PLAN
115	420E106	SLUDGE STORAGE BUILDING ELECTRICAL ROOM POWER AND CONTROL PLAN
116	440E101	SLUDGE STORAGE TANKS OVERALL PLAN
117	440E102	SLUDGE STORAGE TANKS UPPER LEVEL POWER AND CONTROL PLAN
118	440E103	SLUDGE STORAGE TANKS UPPER LEVEL LIGHTING AND GROUNDING PLAN
119	530E001	SG-5301A/B MODIFIED ONE-LINE DIAGRAM 1
120	530E002	SG-5301A/B MODIFIED ONE-LINE DIAGRAM 2
121	530E101	SOLIDS HANDLING BUILDING EAST GROUND LEVEL POWER AND CONTROL PLAN
122	530E102	SOLIDS HANDLING BUILDING EAST BASEMENT LEVEL POWER AND CONTROL PLAN
		(N) - INSTRUMENTATION
123	010N101	SYMBOLS AND ABBREVIATIONS 1
124	010N102	SYMBOLS AND ABBREVIATIONS 2
125	010N103	SYMBOLS AND ABBREVIATIONS 3
126	010N104	SYMBOLS AND ABBREVIATIONS 4
127	010N105	SCHEMATIC SYMBOLS
128	010N106	SAMPLE LOOP DRAWING
129	010N107	EQUIPMENT TAGGING SYSTEM
130	010N108	NETWORK BLOCK DIAGRAM 1
131	010N109	NETWORK BLOCK DIAGRAM 2
132	010N201	LCP-42020 EXTERNAL ELEVATION
133	010N202	LCP-42020 INTERNAL ELEVATION
134	010N203	LCP-53012 ELEVATIONS
135	010N204	TYPICAL LCP ELEVATIONS
136	010N301	LCP-42020 WIRING DIAGRAM
137	010N302	WAS PUMP WIRING DIAGRAM
138	010N303	DEWATERING PUMP WIRING DIAGRAM
139	010N304	SLUDGE STORAGE PUMP WIRING DIAGRAM
140	010N305	SLUDGE STORAGE TANK MIXER WIRING DIAGRAM
141	010N306	THICKENED SLUDGE PUMP WIRING DIAGRAM
142	010N307	FAN WIRING DIAGRAM
143	010N308	GO/NO-GO SYSTEM WIRING DIAGRAM
144	010N309	LCP-53012 WIRING DIAGRAM
145	050N101	GALLERY PIPING P&ID
146	050N102	WAS PUMPS P&ID
147	340N101	SECONDARY CLARIFIER DEWATERING PUMP P&ID
148	420N101	SLUDGE STORAGE PUMP 1 P&ID
149	420N102	SLUDGE STORAGE PUMP 2 P&ID
150	420N801	SUMP PUMPS
151	420N802	HVAC P&ID 1
152	420N803	HVAC P&ID 2
153	420N804	GO/NO-GO SYSTEM P&ID
154	420N901	ELECTRICAL EQUIPMENT
155	420N902	LCP-42020 MONITORING P&ID
156	440N101	SLUDGE STORAGE TANK 1 P&ID
157	440N102	SLUDGE STORAGE TANK 2 P&ID
158	440N801	ODOR CONTROL SYSTEM P&ID
159	530N101	THICKENED SLUDGE TANKS P&ID
		(N) - INSTRUMENTATION - CONT'D
160	530N102	THICKENED SLUDGE PUMP 1 P&ID
161	530N103	THICKENED SLUDGE PUMP 2 P&ID
162	530N104	THICKENED SLUDGE PIPING P&ID
163	530N801	SUMP PUMPS
		(T) - TYPICAL DETAILS
164	800TA001	ARCHITECTURAL TYPICAL DETAILS 1
165	800TA002	ARCHITECTURAL TYPICAL DETAILS 2
166	800TA003	ARCHITECTURAL TYPICAL DETAILS 3
167	800TA004	ARCHITECTURAL TYPICAL DETAILS 4
168	800TA005	ARCHITECTURAL TYPICAL DETAILS 5
169	800TC001	CIVIL TYPICAL DETAILS 1
170	800TC002	CIVIL TYPICAL DETAILS 2
171	800TE001	ELECTRICAL TYPICAL DETAILS 1
172	800TE002	ELECTRICAL TYPICAL DETAILS 2
173	800TE003	ELECTRICAL TYPICAL DETAILS 3
174	800TE004	ELECTRICAL TYPICAL DETAILS 4
175	800TE005	ELECTRICAL TYPICAL DETAILS 5
176	800TE006	ELECTRICAL TYPICAL DETAILS 6
177	800TE007	ELECTRICAL TYPICAL DETAILS 7
178	800TE008	ELECTRICAL TYPICAL DETAILS 8
179	800TH001	HVAC TYPICAL DETAILS 1
180	800TH002	HVAC TYPICAL DETAILS 2
181	800TH003	HVAC TYPICAL DETAILS 3
182	800TM001	MECHANICAL TYPICAL DETAILS 1
183	800TM002	MECHANICAL TYPICAL DETAILS 2
184	800TM003	MECHANICAL TYPICAL DETAILS 3
185	800TM004	MECHANICAL TYPICAL DETAILS 4
186	800TM005	MECHANICAL TYPICAL DETAILS 5
187	800TN001	INSTRUMENTATION TYPICAL DETAILS 1
188	800TN002	INSTRUMENTATION TYPICAL DETAILS 2
189	800TN003	INSTRUMENTATION TYPICAL DETAILS 3
190	800TN004	INSTRUMENTATION TYPICAL DETAILS 4
191	800TN005	INSTRUMENTATION TYPICAL DETAILS 5
192	800TN006	INSTRUMENTATION TYPICAL DETAILS 6
193	800TS001	STRUCTURAL TYPICAL DETAILS 1
194	800TS002	STRUCTURAL TYPICAL DETAILS 2
195	800TS003	STRUCTURAL TYPICAL DETAILS 3
196	800TS004	STRUCTURAL TYPICAL DETAILS 4
197	800TS005	STRUCTURAL TYPICAL DETAILS 5
198	800TS006	STRUCTURAL TYPICAL DETAILS 6

X - INDICATES DRAWING NOT INCLUDED IN THIS SUBMITTAL

Plot Date: 10/5/2024 10:54:44 AM

LAST SAVED BY: dlee

carollo®

Date	No	Revision	By
	4		
	3		
	2		
	1		

PROJECT ENGINEER MSS
DESIGNED/DRAWN MSS/SCR
INSPECTOR CC

DIRECTOR PUBLIC WORKS MAO
CITY ENGINEER MLW
ASSISTANT DIRECTOR MAO

CITY OF BELLINGHAM, WASHINGTON
PUBLIC WORKS DEPARTMENT
ENGINEERING DIVISION

SCALE
Horiz. AS SHOWN
Vert. AS SHOWN

DATUM
H: NAD 83/98
V: NAVD 88

Job. No. EU194
Date JAN 2026
Field Bk.

POST POINT RESOURCE RECOVERY PLANT
GENERAL
SHEET INDEX

DRAWING NO. 010G102
SHEET NO. 2 OF 198

CONTACT PERSON: STEPHEN DAY, PE SE , PROJECT ENGINEER AT 360-778-7944

PROJECT NO. 202021-100000 FILE NAME: 202021010G102.dwg

Plot Date: 8/21/2024 8:30:32 PM

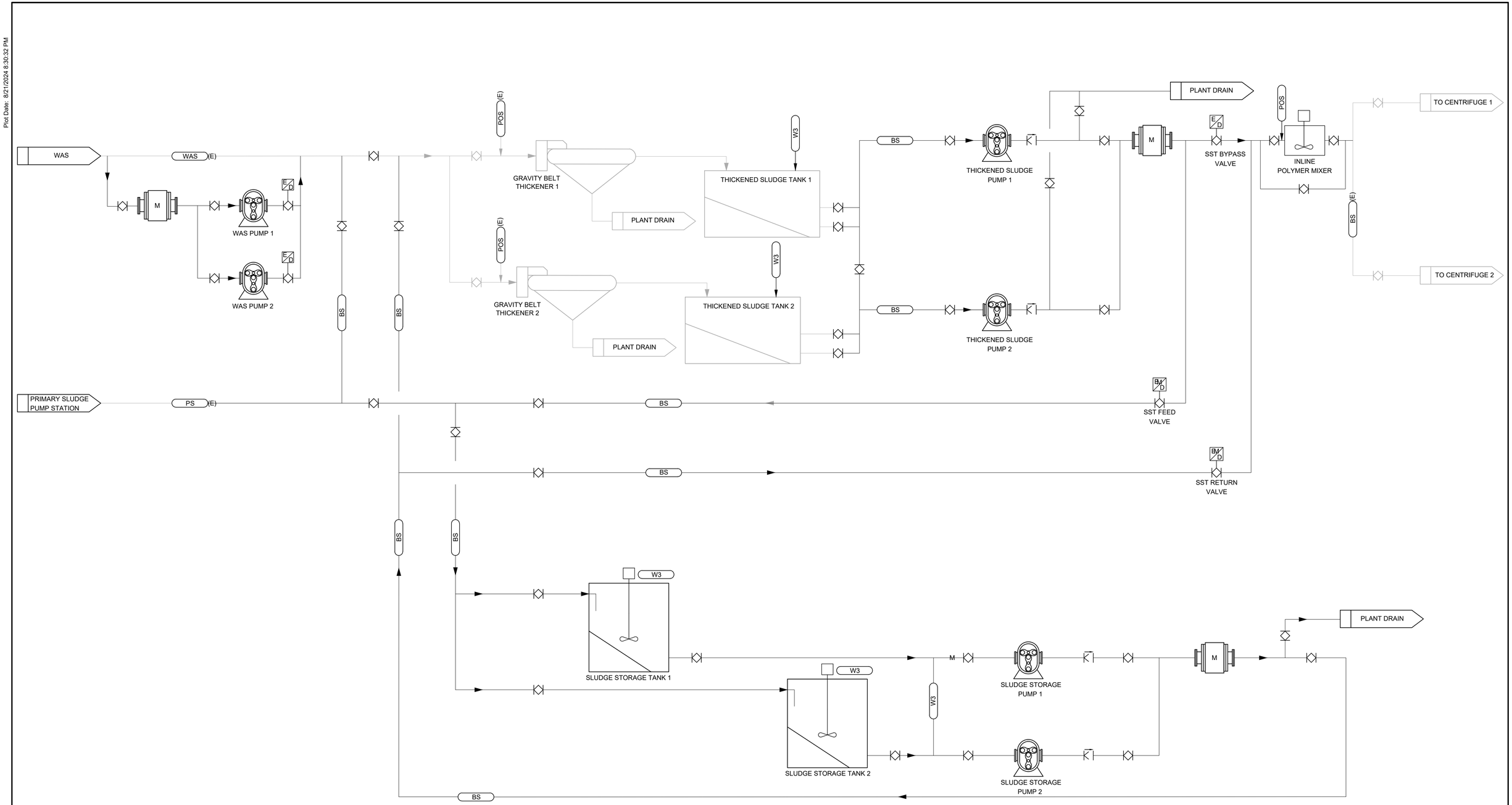

carollo®

LAST SAVED BY: lveloz

Date	No	Revision	By
	4		
	3		
	2		
	1		

PROJECT ENGINEER MSS
DESIGNED/DRAWN MSS/SCR
INSPECTOR CC

DIRECTOR PUBLIC WORKS
CITY ENGINEER
ASSISTANT DIRECTOR

CITY OF BELLINGHAM, WASHINGTON
PUBLIC WORKS DEPARTMENT
ENGINEERING DIVISION

SCALE
Horiz. AS SHOWN
Vert. AS SHOWN

DATUM
H: NAD 83/98
V: NAVD 88

Job. No. EU194
Date JAN 2026
Field Bk.

POST POINT RESOURCE RECOVERY PLANT
GENERAL
SOLIDS STREAM PROCESS FLOW DIAGRAM

DRAWING NO. 010G103
SHEET NO. 3 OF 198

CONTACT PERSON: STEPHEN DAY, PE SE , PROJECT ENGINEER AT 360-778-7944

PROJECT NO. 202021-100000 FILE NAME: 202021010G103.dwg

DESCRIPTION	UNITS	EXISTING	NEW
WASTE ACTIVATED SLUDGE PUMPING			
WAS PUMPS			P-34033, P-34034
NUMBER OF UNITS		2	2
TYPE		NON-CLOG CENTRIFUGAL	ROTARY LOBE
CAPACITY, EACH	GPM	200 - 400	150-440
DRIVE CONTROL		VARIABLE FREQUENCY	VARIABLE FREQUENCY
DRIVE SIZE	HP	7.5	20
RETURN ACTIVATED SLUDGE PUMPING			
RAS PUMPS			P-34011, 34012, 34013, 34014
NUMBER OF UNITS		4	2 (2 EXISTING)
TYPE		NON-CLOG CENTRIFUGAL	NON-CLOG CENTRIFUGAL
CAPACITY, EACH	GPM	1,750-3,475	1,750-3,475
DRIVE CONTROL		VARIABLE FREQUENCY	VARIABLE FREQUENCY
DRIVE SIZE	HP	50	50
SLUDGE STORAGE HANDLING			
SLUDGE STORAGE TANKS			
NUMBER OF UNITS		1	2
TYPE		STEEL, CIRCULAR	CONCRETE, RECTANGULAR
VOLUME, EACH	GALLONS	73,700	50,000
SIDE WATER DEPTH	FEET	16	26
SURFACE AREA, EACH	SQ. FT	616 (28 FT DIA)	324 (18x18)
MIXER			MIX-44001, 44005
TYPE		SLUDGE MIXER	SUBMERSIBLE IMPELLER
DRIVE CONTROL		FIXED	VARIABLE FREQUENCY
DRIVE SIZE	HP		10
SLUDGE STORAGE PUMPS			P-42001, 42004
NUMBER OF UNITS			2
TYPE			ROTARY LOBE
THICKENED SLUDGE CAPACITY, EACH	GPM		20-130
THICKENED SLUDGE CONCENTRATION	PERCENT		<6
UNTHICKENED SLUDGE CAPACITY, EACH	GPM		20-250
UNTHICKENED SLUDGE CONCENTRATION	PERCENT		<2
DRIVE CONTROL			VARIABLE FREQUENCY
DRIVE SIZE	HP		30
SLUDGE CO-THICKENING			
SLUDGE THICKENERS			
NUMBER OF UNITS		2	
TYPE		GRAVITY BELT	
SIZE (NOMINAL)	METERS	2	
SLUDGE FEED CONCENTRATION	PERCENT	0.75	
SOLIDS LOADING (MAX WEEK)	LB DRY SOLIDS/HR	1,480	
HYDRAULIC LOADING (MAX)	GPM	500	
POLYMER USAGE	LB/DRY TON	7	
THICKENED SLUDGE PUMPS			P-53061, 53062
NUMBER OF UNITS		3	2
TYPE		ROTARY LOBE	ROTARY LOBE
THICKENED SLUDGE CAPACITY, EACH	GPM	100	20-130
THICKENED SLUDGE CONCENTRATION	PERCENT	4-8	6
UNTHICKENED SLUDGE CAPACITY, EACH			20-250
UNTHICKENED SLUDGE CONCENTRATION			0-2
DRIVE CONTROL		VARIABLE FREQUENCY	VARIABLE FREQUENCY
DRIVE SIZE	HP		30
SLUDGE DEWATERING			
CENTRIFUGE			
NUMBER OF UNITS		1	
FEED SOLIDS CONCENTRATION	PERCENT	2-6	
SOLIDS LOADING (MAX)	LBS/HR	2,000	
HYDRAULIC LOADING (MAX)	GPM/UNIT	100	
POLYMER USAGE	LBS/DRY TON	15	
DISCHARGE SOLIDS CONCENTRATION	PERCENT	28	
CENTRIFUGE FEED POLYMER MIXER			MIX-53012
NUMBER OF UNITS			1
TYPE			INLINE, MECHANICAL
CAPACITY, EACH	GPM		250
DIAMETER	INCHES		4
DRIVE CONTROL			VARIABLE FREQUENCY
DRIVE SIZE	HP		3
FACILITY DEWATERING PUMPS			
SECONDARY CLARIFIER DEWATERING PUMP			P-33088
NUMBER OF UNITS			1
TYPE			NON-CLOG, CENTRIFUGAL
CAPACITY, EACH	GPM		800
DRIVE CONTROL			FIXED
DRIVE SIZE	HP		15
SLUDGE STORAGE TANKS ODOR CONTROL			
ODOR CONTROL FAN			F-44020
VENTILATION RATE	CFM		1200
ODOR CONTROL UNIT			VCP-44020
NUMBER OF UNITS			1
TYPE			BIOTRICKLING FILTER
DIAMETER	FEET		6
HEIGHT OF VESSEL	FEET		20
MAXIMUM PRESSURE DROP	IN W.C.		2
MINIMUM EMPTY BED RESIDENCE TIME	SEC		15

Digitally signed by Matthew Scott Spinck
Contact Info: Cell: 360-778-7944
Date: 2026.01.05 15:29:-08'00'

MATTHEW SCOTT SPINCK
STATE OF WASHINGTON
29659
REGISTERED
PROFESSIONAL ENGINEER

carollo®

Date	No	Revision	By
	4		
	3		
	2		
	1		

PROJECT ENGINEER MSS
DESIGNED/DRAWN MSS/SCR
INSPECTOR CC

DIRECTOR PUBLIC WORKS
CITY ENGINEER
ASSISTANT DIRECTOR

CITY OF BELLINGHAM, WASHINGTON
PUBLIC WORKS DEPARTMENT
ENGINEERING DIVISION

SCALE
Horiz. AS SHOWN
Vert. AS SHOWN

DATUM
H: NAD 83/98
V: NAVD 88

Job. No. EU194
Date JAN 2026
Field Bk.

POST POINT RESOURCE RECOVERY PLANT
GENERAL
DESIGN CRITERIA

DRAWING NO. 010G104
SHEET NO. 4 OF 198

CONTACT PERSON: STEPHEN DAY, PE SE , PROJECT ENGINEER AT 360-778-7944

PROJECT NO. 202021-100000 FILE NAME: 202021010G104.dwg

Plot Date: 9/30/2024 3:52:57 PM

LAST SAVED BY: lveloz

Plot Date: 12/23/2025 2:51:01 PM

0 30' 60' 120'

NOTE:

All NFPA 704 and any required Hazard signage shall be updated to reflect current operations.

NOTE:

FIRE DEPT. CONNECTION (FDC)

shall be updated with permanent signage, RED background WHITE lettering, min. 1" stroke defining what buildings or areas are served by fire sprinklers. This signage shall be replicated in the appropriate fire sprinkler riser room(s).

Note: The applicant shall be required to prioritize timing of the proposed construction outside of the critical January 15 to September 1 timeframe to minimize impacts to the heron colony as recommended in the Post Point Heron Colony Management Plan prepared by Nahkeeta in 2019 to the extent reasonably practical.

Note: Construction noise including use of temporary and permanent generators shall not exceed the 92 dB thresholds as recommended in the Post Point Heron Colony Management Plan prepared by Nahkeeta in 2019.

Note: Exterior lighting associated with temporary and permanent construction shall be directed away from the heron colony as recommended in the Post Point Heron Colony Management Plan prepared by Nahkeeta in 2019. Additionally, the placement of temporary generators shall be located to minimize noise impacts on the heron colony to the extent reasonably practical.

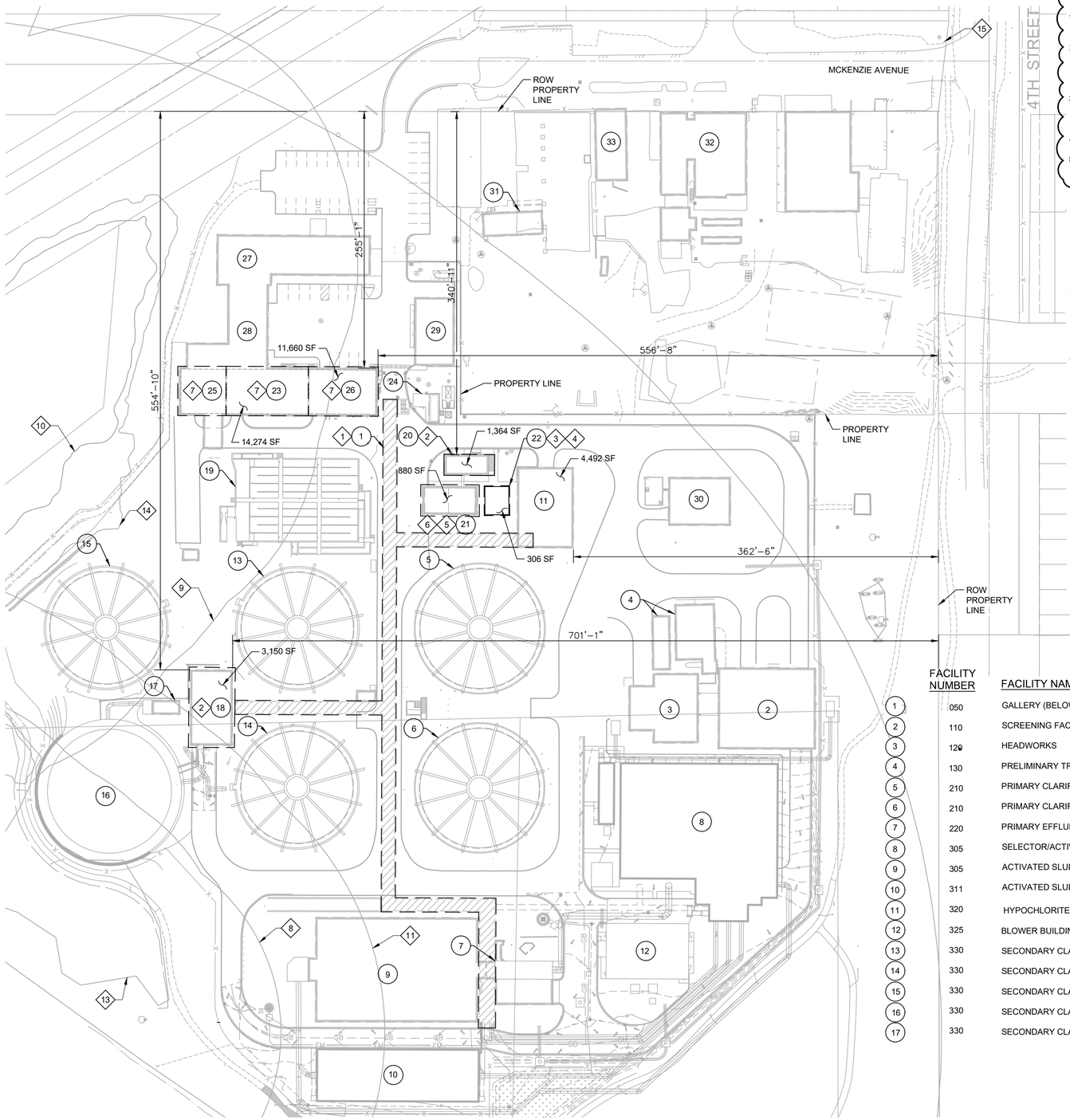

GENERAL NOTES:

1. CONSTRUCTION NOISE, INCLUDING USE OF TEMPORARY AND PERMANENT GENERATORS SHALL NOT EXCEED THE 92db THRESHOLDS AS RECOMMENDED IN THE POST POINT HERON COLONY MANAGEMENT PLAN PREPARED BY NAHKEETA IN 2019.
2. EXTERIOR LIGHTING ASSOCIATED WITH TEMPORARY AND PERMANENT CONSTRUCTION SHALL BE DIRECTED AWAY FROM THE HERON COLONY AS RECOMMENDED IN THE POST POINT HERON COLONY MANAGEMENT PLAN PREPARED BY NAHKEETA IN 2019 ADDITIONALLY, THE PLACEMENT OF TEMPORARY GENERATORS SHALL BE LOCATED TO MINIMIZE NOISE IMPACTS ON THE HERO COLONY TO THE EXTENT REASONABLY PRACTICAL.
3. THE CONTRACTOR SHALL BE REQUIRED TO PRIORITIZE TIMING OF THE PROPOSED CONSTRUCTION OUTSIDE OF THE CRITICAL JANUARY 15 TO SEPTEMBER 1 TIME FRAME TO MINIMIZE IMPACTS TO THE HERON COLONY AS RECOMMENDED IN THE POST POINT HERON COLONY MANAGEMENT PLAN PREPARED BY NAHKEETA IN 2019 TO THE EXTENT REASONABLY PRACTICAL.
4. ALL NFPA 704 AND ANY REQUIRED HAZARD SIGNAGE SHALL BE UPDATED TO REFLECT CURRENT OPERATIONS.
5. FIRE DEPT. CONNECTION (FDC) SHALL BE UPDATED WITH PERMANENT SIGNAGE, RED BACKGROUND WHITE LETTERING, MIN. 1" STROKE DEFINING WHAT BUILDINGS OR AREAS ARE SERVED BY FIRE SPRINKLERS. THE SIGNAGE SHALL BE REPLICATED IN THE APPROPRIATE FIRE SPRINKLER RISER ROOM(S).

KEY NOTES:

1. UNCLASSIFIED PER NFPA 820-2020, TABLE 6.2.2(a), ROW 9(b).
2. UNCLASSIFIED PER NFPA 820-2020, TABLE 6.2.2(a), ROW 9(b).
3. AREAS WITHIN 3 FT OF VESSELS AND DUCTING: CLASS 1, DIVISION 2 PER NFPA 820-2020, TABLE 4.2.2, ROW 18(d).
4. AREAS OUTSIDE OF 3 FT OF VESSELS AND DUCTING: UNCLASSIFIED PER NFPA 820-2020, TABLE 4.2.2, ROW 18(e).
5. INTERIOR OF TANK IS CLASS 1, DIVISION 1 PER NFPA 820-2020, TABLE 6.2.2(a) ROW 11(a).
6. AREA WITHIN 10FT OF WALLS HORIZONTALLY AND 18 INCHES ABOVE WATER SURFACE IS CLASS 1, DIVISION 2 PER NFPA 820-2020, TABLE 6.2.2(a) ROW 11(c).
7. UNCLASSIFIED PER NFPA 820-2020, TABLE 6.2.2(a) ROW 8(c) AND 9(b).
8. POST POINT HERON COLONY 2023 197 FOOT YEAR-ROUND CORE ZONE PROTECTION BUFFER. SEE POST POINT HERON COLONY MANAGEMENT RECOMMENDATIONS UPDATE IN APPENDICES OF SPECIFICATION SECTION 01_14_00 - WORK RESTRICTIONS.
9. SHORELINE BUFFER FOR SHORELINE JURISDICTION MARINE 13. CONTRACTOR SHALL NOT PERFORM WORK OUTSIDE OF STRUCTURES BEYOND THIS LINE WITHOUT EXPRESS PERMISSION FROM OWNER.
10. ORDINARY HIGH WATER MARK
11. POST POINT HERON COLONY 2023 300 FOOT SEASONAL (MARCH 1 TO SEPTEMBER 1) CORE ZONE DISTURBANCE BUFFER. SEE POST POINT HERON COLONY MANAGEMENT RECOMMENDATIONS UPDATE IN APPENDICES OF SPECIFICATION SECTION 01_14_00- WORK RESTRICTIONS.
12. POST POINT HERON COLONY 850' BUFFER.
13. WETLAND
14. 100 YEAR FLOOD PLANE.
15. INSTALL NEW SIGN DISPLAYING ADDRESS OF SITE. SIGN SHALL BE PAINTED WOOD TO MATCH EXISTING SIGN, MOUNTED IN YARD WITH MINIMUM 6-INCH LETTERS.

	FACILITY NUMBER	FACILITY NAME
1	050	GALLERY (BELOW GRADE)
2	110	SCREENING FACILITY
3	120	HEADWORKS
4	130	PRELIMINARY TREATMENT ODOR CONTROL
5	210	PRIMARY CLARIFIER 1
6	210	PRIMARY CLARIFIER 2
7	220	PRIMARY EFFLUENT PUMP STATION
8	305	SELECTOR/ACTIVATED SLUDGE BASIN 1
9	305	ACTIVATED SLUDGE BASIN 2 AND 3
10	311	ACTIVATED SLUDGE BASIN 4
11	320	HYPOCHLORITE GENERATION BUILDING
12	325	BLOWER BUILDING
13	330	SECONDARY CLARIFIER 1
14	330	SECONDARY CLARIFIER 2
15	330	SECONDARY CLARIFIER 3
16	330	SECONDARY CLARIFIER 4
17	330	SECONDARY CLARIFIER ML SPLITTER

	FACILITY NUMBER	FACILITY NAME
12	325	BLOWER BUILDING
13	330	SECONDARY CLARIFIER 1
14	330	SECONDARY CLARIFIER 2
15	330	SECONDARY CLARIFIER 3
16	330	SECONDARY CLARIFIER 4
17	330	SECONDARY CLARIFIER ML SPLITTER
18	340	SECONDARY SLUDGE PUMP STATION
19	410	CHLORINE CONTACT BASIN
20	420	SLUDGE STORAGE BUILDING
21	440	SLUDGE STORAGE TANKS
22	440	SLUDGE STORAGE TANKS ODOR CONTROL
23	510	SOLIDS HANDLING BUILDING
24	510	SOLIDS HANDLING ODOR CONTROL
25	520	SOLIDS HANDLING BUILDING WEST
26	530	SOLIDS HANDLING BUILDING EAST
27	710	ADMINISTRATION AND LABORATORY
28	720	SHOP/MAINTENANCE
29	730	STORAGE BUILDING
30	740	EMERGENCY GENERATOR BUILDING
31		MAINTENANCE OFFICES
32		MAINTENANCE SHOP
33		MAINTENANCE STORAGE

carollo®

Date	No	Revision	By
	4		
	3		
	2		
12-22-2025	1	PERMIT REVISIONS	

PROJECT ENGINEER MSS
DESIGNED/DRAWN MSS/SCR
INSPECTOR CC

DIRECTOR PUBLIC WORKS
CITY ENGINEER
ASSISTANT DIRECTOR

CITY OF BELLINGHAM, WASHINGTON
PUBLIC WORKS DEPARTMENT
ENGINEERING DIVISION

SCALE
Horiz. AS SHOWN
Vert. AS SHOWN

DATUM
H: NAD 83/98
V: NAVD 88

Job. No. EU194
Date JAN 2026
Field Bk.

POST POINT RESOURCE RECOVERY PLANT
GENERAL
FACILITY CODE PLAN AND
AREA CLASSIFICATION TABLE

DRAWING NO. 010G105
SHEET NO. 5 OF 198

LAST SAVED BY: lveloz

CONTACT PERSON: STEPHEN DAY, PE SE , PROJECT ENGINEER AT 360-778-7944

PROJECT NO. 202021-100000 FILE NAME: 202021010G105.dwg

Plot Date: 10/9/2024 11:05:34 AM

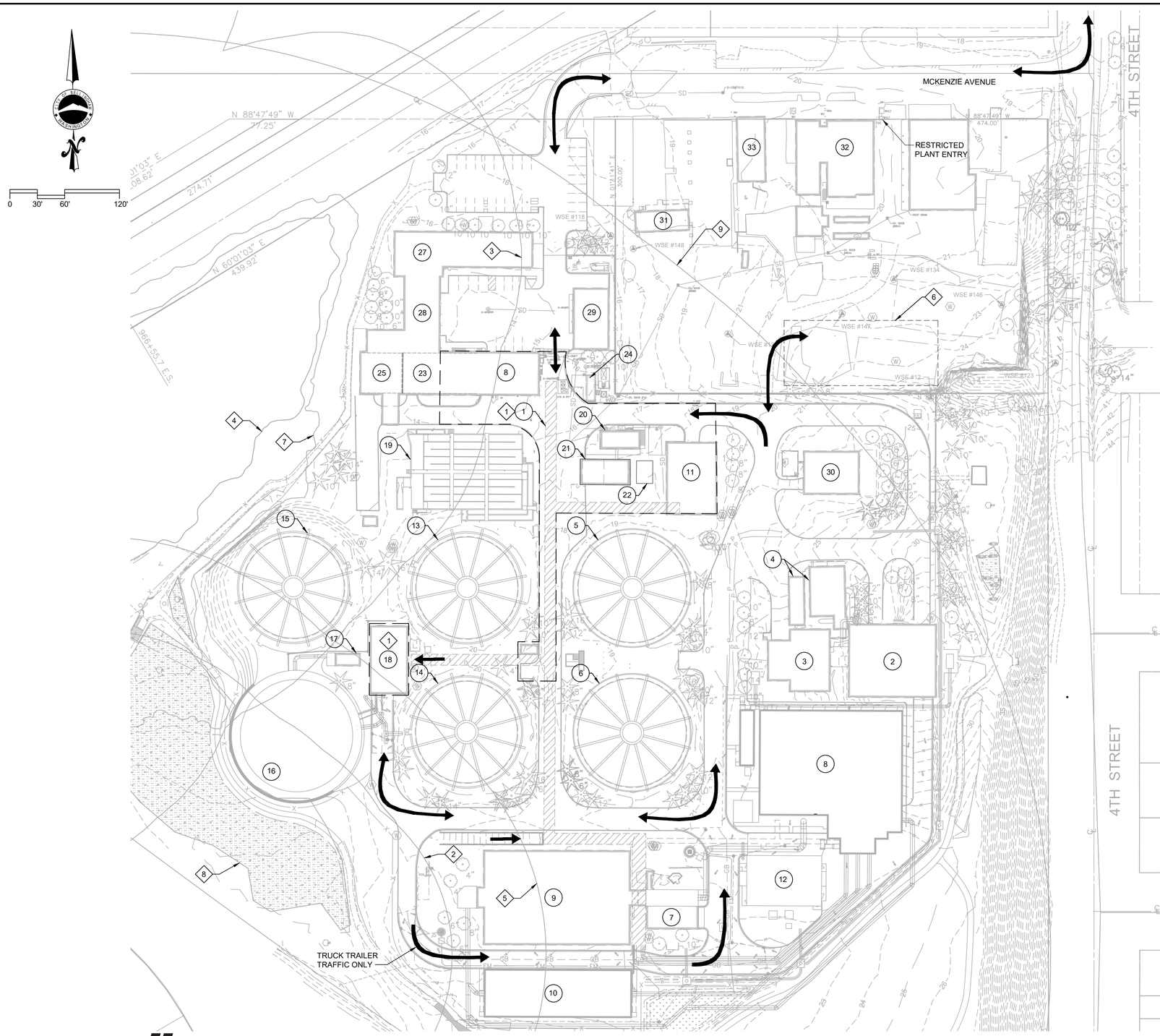

GENERAL NOTES:

1. TYPICAL DELIVERY TRUCK TRAFFIC ROUTE ROADWAY TO BE KEPT ACCESSIBLE AT ALL TIMES.
2. THE CONTRACTOR SHALL USE THE DESIGNATED ROADS AS SHOWN.
3. THE CONTRACTOR SHALL COORDINATE PROJECT TRAFFIC ON THE WASTE WATER TREATMENT PLANT SITE WITH THE OWNER.
4. CONTRACTOR SHALL LIMIT VEHICLES SPEEDS TO A MAXIMUM OF 10 MPH.
5. CONTRACTOR SHALL PROVIDE DETAILED TRAFFIC, STAGING, PARKING PLAN TO OWNER FOR APPROVAL PRIOR TO MOBILIZATION, PLAN SHALL INCLUDE PROPOSED SIGNAGE WITH KEY MAP OF LOCATION.
6. CONTRACTOR SHALL ESTABLISH AND MAINTAIN STAGING AND CONSTRUCTION ENTRANCE CONSTRUCTION FENCING ACCESS ROAD FOR DURATION OF PROJECT.
7. CONTRACTOR PERSONNEL VEHICLES MUST BE PARKED OUTSIDE OF THE FENCED PLANT PERIMETER.

KEY NOTES:

1. UPPER LEVEL TO LOWER LEVEL ACCESS IS PROVIDED VIA 3'-6" WIDE STAIRCASE AND/OR 4'-0" ACCESS HATCH.
2. POST POINT HERON COLONY 2023 197 FOOT YEAR-ROUND CORE ZONE PROTECTION BUFFER. SEE POST POINT HERON COLONY MANAGEMENT RECOMMENDATIONS UPDATE IN APPENDICES OF SPECIFICATION SECTION 01_14_00 - WORK RESTRICTIONS.
3. SHORELINE BUFFER FOR SHORELINE JURISDICTION MARINE 13. CONTRACTOR SHALL NOT OUTSIDE OF STRUCTURES PERFORM WORK BEYOND THIS LINE WITHOUT EXPRESS PERMISSION FROM OWNER.
4. ORDINARY HIGH WATER MARK.
5. POST POINT HERON COLONY 2023 300 FOOT SEASONAL (MARCH 1 TO SEPTEMBER 1) CORE ZONE DISTURBANCE BUFFER. SEE POST POINT HERON COLONY MANAGEMENT RECOMMENDATIONS UPDATE IN APPENDICES OF SPECIFICATION SECTION 01_14_00- WORK RESTRICTIONS.
6. CONTRACTOR STAGING AREA, APPROXIMATELY 60' X 150'. FINAL STAGING AREA LAYOUT AND LOCATION TO BE COORDINATED WITH OWNER. STAGING AREA IS NON-EXCLUSIVE SPACE AND SHALL BE COORDINATED WITH OTHER PROJECT ACTIVITIES BY OTHERS PER 01_11_00 - SUMMARY OF WORK.
7. 100 YEAR FLOOD PLANE.
8. WETLAND.
9. POST POINT HERON COLONY 850' BUFFER.

	FACILITY NUMBER	FACILITY NAME
1	050	GALLERY (BELOW GRADE)
2	110	SCREENING FACILITY
3	120	HEADWORKS
4	130	PRELIMINARY TREATMENT ODOR CONTROL
5	210	PRIMARY CLARIFIER 1
6	210	PRIMARY CLARIFIER 2
7	220	PRIMARY EFFLUENT PUMP STATION
8	305	SELECTOR/ACTIVATED SLUDGE BASIN 1
9	305	ACTIVATED SLUDGE BASIN 2 AND 3
10	311	ACTIVATED SLUDGE BASIN 4
11	320	HYPOCHLORITE GENERATION BUILDING
12	325	BLOWER BUILDING
13	330	SECONDARY CLARIFIER 1
14	330	SECONDARY CLARIFIER 2
15	330	SECONDARY CLARIFIER 3
16	330	SECONDARY CLARIFIER 4
17	330	SECONDARY CLARIFIER ML SPLITTER
18	340	SECONDARY SLUDGE PUMP STATION
19	410	CHLORINE CONTACT BASIN
20	420	SLUDGE STORAGE BUILDING
21	440	SLUDGE STORAGE TANKS
22	440	SLUDGE STORAGE TANKS ODOR CONTROL
23	510	SOLIDS HANDLING BUILDING
24	510	SOLIDS HANDLING ODOR CONTROL
25	520	SOLIDS HANDLING BUILDING WEST
26	530	SOLIDS HANDLING BUILDING EAST
27	710	ADMINISTRATION AND LABORATORY
28	720	SHOP/MAINTENANCE
29	730	STORAGE BUILDING
30	740	EMERGENCY GENERATOR BUILDING
31		MAINTENANCE OFFICES
32		MAINTENANCE SHOP
33		MAINTENANCE STORAGE

MATTHEW SCOTT SPICK
STATE OF WASHINGTON
29658
REGISTERED PROFESSIONAL ENGINEER

carollo®

LAST SAVED BY: lveloz

Date	No	Revision	By
	4		
	3		
	2		
	1		

PROJECT ENGINEER MSS
DESIGNED/DRAWN MSS/SCR
INSPECTOR CC

DIRECTOR PUBLIC WORKS
CITY ENGINEER
ASSISTANT DIRECTOR

CITY OF BELLINGHAM, WASHINGTON
PUBLIC WORKS DEPARTMENT
ENGINEERING DIVISION

SCALE
Horiz. AS SHOWN
Vert. AS SHOWN

DATUM
H: NAD 83/98
V: NAVD 88

Job. No. EU194
Date JAN 2026
Field Bk.

POST POINT RESOURCE RECOVERY PLANT
GENERAL
STAGING AREA AND SITE ACCESS PLAN

DRAWING NO. 010G106
SHEET NO. 6 OF 198

CONTACT PERSON: STEPHEN DAY, PE SE , PROJECT ENGINEER AT 360-778-7944

PROJECT NO. 202021-100000 FILE NAME: 202021010G106.dwg

	@	AT (MEASUREMENT)
	△	DEFLECTION ANGLE, CENTRAL ANGLE
	#	NUMBER (REBAR Ø)
A	AB	ANCHOR BOLT
	ABC	AGGREGATE BASE COURSE
	ABS	ACRYLONITRILE BUTADIENE STYRENE
	AC	ASPHALTIC CONCRETE
	ACB	AIR CIRCUIT BREAKER
	ACI	AMERICAN CONCRETE INSTITUTE
	ACP	ASBESTOS CEMENT PIPE
	ACU	AIR CONDITIONING UNIT
	AD	AREA DRAIN
	ADDL	ADDITIONAL
	ADJ	ADJACENT, ADJUST, ADJUSTABLE
	ADMIN	ADMINISTRATION
	ADR	ACCESS DOOR
	AED	AREA EQUIPMENT DRAIN
	AER	AERAT(ION)(OR)
	AFC	AFTERCOOLER
	AFF	ABOVE FINISHED FLOOR
	AFM	AIR FLOW MONITOR
	AHU	AIR HANDLING UNIT
	AIC	AIR COMPRESSOR
	AIL	AIR INTAKE LOUVER
	ALT	ALTERNATE
	AL	ALUMINUM
	ANCH	ANCHOR
	ANV	ANGLE VALVE
	APPROX	APPROXIMATE, APPROXIMATELY
	ARCH	ARCHITECTURAL
	ARV	AIR RELEASE VALVE
	ASSY	ASSEMBLY
	ASTM	AMERICAN SOCIETY FOR TESTING AND MATERIALS
	AV	ACID VENT
	AVG	AVERAGE
	AVV	AIR AND VACUUM VALVE
	AW	ACID WASTE
B	BC	BEGIN CURVE, BRASS CAP, BACK OF CURB, BOLT CIRCLE
	BCKR	BACKER BOARD
	BCM	BATCHMETER
	BD	BOARD
	BDD	BACKDRAFT DAMPER
	BDR	BASIN DRAIN LINE
	BF	BLIND FLANGE
	BFG	BELOW FINISHED GRADE
	BFP	BELT FILTER PRESS
	BFV	BUTTERFLY VALVE
	BG	BREAK GLASS HAND SWITCH
	BKW	BACKWASH
	BLDG	BUILDING
	BLK	BLOCK
	BLKHD	BULKHEAD
	BLR	PROCESS BLOWER
	BM	BEAM, BENCH MARK
	BO	BOTTOM OF
	BOTT	BOTTOM
	BOTTS	BOTTOM SLUDGE
	BPV	BACK PRESSURE VALVE
	BRG	BEARING
	BSP	BLACK STEEL PIPE
	BTU	BRITISH THERMAL UNITS
	BTWN	BETWEEN
	BV	BALL VALVE
	BWCCP	BAR-WRAPPED CONCRETE CYLINDER PIPE
C	C	CLOSE, CONDUIT CHANNEL (STRUCTURAL)
	CA	CONCRETE ANCHOR
	CAUSTIC	CAUSTIC SOLUTION (CONCENTRATED OR DILUTE)
	CB	CATCH BASIN
	CC	CENTER OF CURVATURE, CENTER TO CENTER
	CCB	CHLORINE CONTACT BASIN
	CD	CEILING DIFFUSER, CONDENSATE DRAIN
	CDL	CHEMICAL DRAIN LINE
	CDT	CONDUIT
	CEF	CEILING EXHAUST FAN
	CF	CUBIC FEET
	CFM	CUBIC FEET PER MINUTE
	CFS	CUBIC FEET PER SECOND
	CHEMD	CHEMICAL DRAIN
	CHF	CHEMICAL FEEDER
	CHKD PL	CHECKERED PLATE
	CI	CAST IRON
	CIP	CAST IRON PIPE
	CIRC	CIRCUMFERENTIAL/CIRCUMFERENCE
	CJ	CONSTRUCTION JOINT
	CKA	CHECK VALVE, ANGLE
	CKB	CHECK VALVE, BALL
	CKF	CHECK VALVE, FLAP
	CKS	CHECK VALVE, SWING
	CL	CENTER LINE
	CLK	CHAIN LINK
	CLD	CHLORINE LEAK DETECTOR
	CLL	CHLORINE LIQUID
	CLP	CHLORINE GAS (PRESSURE)
	CLR	CLEAR
	CLS	CHLORINE SOLUTION
	CLSM	CONTROLLED LOW STRENGTH MATERIAL
	CLV	CHLORINE GAS (VACUUM)
	CML	CEMENT MORTAR LINED
	CMLC	CEMENT MORTAR LINED AND COATED
	CMP	CORRUGATED METAL PIPE
	CMU	CONCRETE MASONRY UNIT
	CNV	CONVEYOR
	CO	CLEANOUT
	COL(S)	COLUMN(S)
	CONC	CONCRETE
	CONN	CONNECT, CONNECTION
	CONST	CONSTRUCTION
	CONT	CONTINUOUS OR CONTINUATION OR (D) (OUS)
	CORR	CORRUGATE(D), CORROSION
	CP	CONTROL POINT
	CPLG	COUPLING
	CPT	CARPET
	CPVC	CHLORINATED POLYVINYL CHLORIDE
	CS	CARBON STEEL, CIRCULATING SLUDGE
	CSP	CHEMICAL SUMP PUMP, CORRUGATED STEEL PIPE
	CT	CURRENT TRANSFORMER, CERAMIC TILE
	CTJ	CONTROL JOINT
	CTL	CONTROL
	CTR	CENTER, CENTERED
	CTSK	COUNTERSUNK
	CU	CUBIC
	CUP	COPPER PIPE
	CV	CHECK VALVE
	CW	COLD WATER
	CWV	COMBINATION WASTE AND VENT
	CY	CUBIC YARD
D	D	DEPTH, DIGITAL OR DISCRETE, DRAIN
	D/W	DRIVEWAY
	DBL	DOUBLE
	DDR	DESICCANT DRYER
	DEG or °	DEGREE
	DEMO	DEMOLISH, DEMOLITION
	DET	DETAIL
	DFL	DECANT/FILTRATE
	DG	DOOR GRILLE
	DIA or Ø	DIAMETER
	DIAG	DIAGONAL
	DIF	DIFFUSER
	DIG	DIGESTER
	DIM	DIMENSION
	DIP	DUCTILE IRON PIPE
	DISCH	DISCHARGE
	DIW	DEIONIZED WATER
	DL	DEAD LOAD, DRAIN LINE
	DLV	DOOR LOUVER
	DMJT	DISMANTLING JOINT
	DMP	DAMPER
	DMS	DIAPHRAGM SEAL
	DN	DOWN
	do	DITTO
	DO	DOOR OPENING
	DP	DEEP (OR DEPTH)
	DPV	DIAPHRAGM VALVE
	DR	DOOR, DRAIN
	DRT	DRIP TRAP
	DRV	DRAIN VALVE
	DS	DIGESTED SLUDGE, DOWN SPOUT
	DSW	DISTILLED WATER, DOOR SWITCH
	DUC	DUST COLLECTOR
	DUH	DUCT HEATER UNIT
	DW	DISTILLED WATER
	DWD	DEWATERING DRAIN
	DWG(S)	DRAWING(S)
	DWL(S)	DOWEL(S)
E	E	EAST, EXISTING
	EA	EACH
	EC	END OF CURVE
	ECC RED	ECCENTRIC REDUCER
	ECF	EQUIPMENT CONNECTION FITTING
	ECU	EVAPORATOR COOLING UNIT
	ED	EQUIPMENT DRAIN
	EF	EXHAUST FAN, EACH FACE
	EFF	EFFLUENT
	EG	EXHAUST GRILLE
	EIFS	EXTERIOR INSULATION AND FINISH SYSTEM
	EJ	EXPANSION JOINT
	EJR	INJECTOR/EDUCTOR
	EL	ELEVATION
	ELEC	ELECTRICAL
	ELL	ELBOW
	EMBED	EMBEDMENT
	EMH	ELECTRICAL MANHOLE
	EP	EDGE OF PAVEMENT
	EPS	EXPANDED POLYSTYRENE
	EPV	ECCENTRIC PLUG VALVE
	EQ	EQUAL
	EQUIP	EQUIPMENT
	ER	EXHAUST REGISTER
	ES	EACH SIDE
	ESEW	EMERGENCY SHOWER AND EYE WASH
	ESMT	EASEMENT
	ESS	EMERGENCY HAND SWITCH
	ET	ELECTRICALLY HEAT TRACED
	EUH	ELECTRIC UNIT HEATER
	EVR	EVAPORATOR
	EW	EACH WAY
	EWC	ELECTRIC WATER COOLER
	EWEF	EACH WAY EACH FACE
	EWH	ELECTRIC WATER HEATER, EXHAUST
	EX	EXISTING
	EXIST	EXISTING
	EXP	EXPANSION, EXPANSION TANK
	EXPO	EXPOSED
	EXT	EXTERIOR
F	F	FUTURE
	FACT	FACTORY
	FAD	FOUL AIR DUCT
	FB	FLAT BAR
	FBW	FILTER BACKWASH
	FC	FACE OF CURB, FLEXIBLE COUPLING
	FCA	FLANGE COUPLING ADAPTER
	FCO	FLOOR CLEANOUT
	FCU	FAN COIL UNIT
	FD	FIRE DAMPER, FLOOR DRAIN, FOUND
	FDC	FIRE DEPARTMENT CONNECTION
	FDL	FLOOR DRAIN LINE
	FDR	FEEDER
	FEFF	FINAL EFFLUENT
	FG	FLAP GATE
	FH	FIRE HYDRANT
	FILT	FILTRATE
	FIN	FINISH
	FIN FL	FINISHED FLOOR
	FIN GR	FINISHED GRADE
	FL	FLOOR, FLOW LINE
	FLA	FOUL AIR
	FLD	FILTER DRAIN
	FLE	FILTER EFFLUENT
	FLEX	FLEXIBLE
	FLG	FLANGE, OR FLANGED
	FLR	FILTER
	FM	FORCE MAIN
	FND	FOUNDATION
	FO	FUEL OIL
	FOB	FLAT ON BOTTOM
	FOT	FLAT ON TOP
	FPM	FEET PER MINUTE
	FPP	FLEXIBLE PLASTIC PIPE
	FRP	FIBERGLASS REINFORCED PLASTIC
	FRPP	FIBERGLASS REINFORCED PLASTIC PIPE
	FRS	FROTH SPRAY
	FS	FAR SIDE
	FSTN	FASTEN(ED)
	FT or '	FOOT, FEET
	FTG	FOOTING
	FUP	FUEL DISPENSER
	FV	FLAP VALVE
	FW	FLUSHING WATER, FINISHED WATER
	FX	FIRE EXTINGUISHER
	FXC	FIRE EXTINGUISHER CABINET
	FXE	FIRE EXTINGUISHER - ELECTRICAL
G	G	GAS, GROUND, GUTTER
	GA	GAUGE or GAGE
	GAL	GALLONS
	GALV	GALVANIZE(D)
	GAV	GRAVITY VENTILATOR
	GB	GRADE BREAK
	GBT	GRAVITY BELT THICKENER
	GC	GROOVED COUPLING
	GEL	GRAVITY EXHAUST LOUVER
	GEN	GENERAL, GENERATOR
	GL	GLASS
	GLV	GLOBE VALVE
	GM	GAS METER
	GND	GROUND
	GPD	GALLONS PER DAY
	GPM	GALLONS PER MINUTE
	GR	GRADE
	GRTG	GRATING
	GRV	GRAVITY VENTILATOR
	GSP	GALVANIZED STEEL PIPE
	GV	GATE VALVE
	GYP	GYPSUM
H	H	EXPLOSION-PROOF, HIGH, HORIZONTAL
	H1E	HOOK ONE END
	H2E	HOOK TWO ENDS
	HAS	HEADED ANCHOR STUD
	HB	HOSE BIBB
	HDPE	HIGH DENSITY POLYETHYLENE
	HDW	HARDWARE
	HDWL	HEADWALL
	HEF	HOOD EXHAUST FAN
	HGT	HEIGHT
	HORIZ	HORIZONTAL
	HP	HEAT PUMP, HORSEPOWER, HIGH PRESSURE
	HPA	HIGH PRESSURE AIR
	HPT	HIGH POINT
	HPU	HEAT PUMP UNIT AIR
	HR	HANDRAIL, HOSE REEL, HOUR
	HSF	HOOD SUPPLY FAN
	HSS	HOLLOW STRUCTURAL SECTION (STEEL)
	HTX	HEAT EXCHANGER
	HV	HOSE VALVE
	HW	HOT WATER
	HWL	HIGH WATER LEVEL
	HWR	HOT WATER RETURN
	HWS	HOT WATER SUPPLY
	HxW	HEIGHT BY WIDTH
	HYD	HYDRANT
I	IA	INSTRUMENT AIR
	ID	INSIDE DIAMETER, INSIDE DIMENSION, IDENTIFICATION
	I.F.	INSIDE FACE
	IN or "	INCHES
	INCL	INCLUDE, INCLUDING
	INF	INFLUENT
	INJ	INJECTOR
	INSTR	INSTRUMENTATION
	INSUL	INSULAT(E)(ED)(ING)(ION)
	INT	INTERIOR
	INV	INVERT
	IP	IRON PIPE
	ISR	INTRINSICALLY SAFE RELAY
J	JST	JOIST
	JT	JOINT
K	KGV	KNIFE GATE VALVE
L	L	ANGLE (STRUCTURAL), LENGTH, LOUVER
	LAB	LABORATORY
	LAV	LAVATORY
	LB(S)	POUND(S)
	LDF	LIQUID DIESEL FUEL
	LDFR	LIQUID DIESEL FUEL RETURN
	LF	LINEAL FEET
	LG	LONG
	LH	LEFT HAND
	LHR	LEFT HAND REVERSE
	LHRA	LEFT HAND REVERSE ACTIVE
	LHRB	LEFT HAND REVERSE BEVEL
	LL	LIVE LOAD
	LLH	LONG LEG HORIZONTAL
	LLV	LONG LEG VERTICAL
	LP	LOW PRESSURE
	LPA	LOW PRESSURE AIR
	LPG	LIQUIFIED PROPANE GAS
	LPT	LOW POINT
	LR	LONG RADIUS
	LS	LAB SINK
	LT	LEFT
	LWL	LOW WATER LEVEL
M	M	MOTOR
	MAINT	MAINTENANCE
	MAN	MANUAL
	MASY	MASONRY
	MATL	MATERIAL
	MAU	MAKE-UP AIR UNIT
	MAX	MAXIMUM
	MB	MACHINE BOLT
	MC	MECHANICAL COUPLING
	MCJ	MASONRY CONTROL JOINT
	MD	MOTORIZED DAMPER
	MECH	MECHANICAL
	MET	METAL
	MFR	MANUFACTURER
	MG/L	MILLIGRAMS PER LITER
	MGD	MILLION GALLONS PER DAY
	MH	MANHOLE
	MIN	MINIMUM
	MISC	MISCELLANEOUS
	MIX	MIXER
	MJ	MECHANICAL JOINT
	MK	MARK
	ML	MIXED LIQUOR
	MO	MASONRY OPENING
	MOD	MODIFIED
	MOIST	MOISTURE
	MON	MONUMENT
	MOS	MOISTURE SEPARATOR
	MPM	METERING PUMP
	MS	MOP SINK
	MTD	MOUNTED
N	N	NORTH, NEUTRAL
	NA	NOT APPLICABLE
	NC	NORMALLY CLOSED
	NEV	VALVE, NEEDLE
	NG	NATURAL GRADE, NATURAL OR LP GAS
	NIC	NOT IN CONTRACT
	NO., #	NUMBER
	NOM	NOMINAL
	NPT	NATIONAL PIPE THREAD
	NPW	NON-POTABLE WATER
	NS	NEAR SIDE
	NTS	NOT TO SCALE
O	O	OPEN
	OBD	OPPOSED BLADE DAMPER
	OC	ON CENTER
	OD	OUTSIDE DIAMETER, OUTSIDE DIMENSION
	OED	OPEN EQUIPMENT DRAIN
	O.F.	OUTSIDE FACE
	OFL	OVERFLOW
	OPNG	OPENING
	OPP	OPPOSITE
	OPP HND	OPPOSITE HAND
	OZ	OUNCE
P	P	POLE
	PBL	POLYMER BLENDER
	PC	POINT OF CURVATURE
	PCC	PLANT CONTROL CENTER
	PCCP	PRESTRESSED CONCRETE CYLINDER PIPE
	PCP	PROGRESSIVE CAVITY PUMP
	PD	POSITIVE DISPLACEMENT, PLANT DRAIN
	PD, PLD	PULSATION DAMPENER
	PDP	POSITIVE DISPLACEMENT PUMP
	PE	PLAIN END
	PERP	PERPENDICULAR
	PG	PRESSURE GAUGE
	PH	PHASE, PHYSICALLY HANDICAPPED
	PI	POINT OF INTERSECTION
	PIV	POST INDICATOR VALVE
	PL	PLATE, PROPERTY LINE
	PLAS	PLASTIC
	PLCS	PLACES
	PLS	POLYMER SOLUTION
	PLWD	PLYWOOD
	PMP	PUMP
	PNL(S)	PANEL(S)
	POL	POLYMER
	POLY	POLYETHYLENE
	POS	POSITION
	POW	POTABLE WATER
	PP	POWER POLE
	PPMV	PARTS PER MILLION (VOLUME)
	PRC	POINT OF REVERSE CURVATURE
	PREFAB	PREFABRICATED
	PRG	PRESSURE REGULATOR
	PRI	PRIMARY
	PROJ	PROJECTION
	PRR	PRESSURE OR VACUUM RELIEF VALVE
	PRV	PRESSURE REDUCING VALVE, PRESSURE REGULATION VALVE, PRESSURE RELIEF VALVE
	PS	PUMP STATION, PIPE SUPPORT
	PSF	POUNDS PER SQUARE FOOT
	PSG	PRESSURE GAUGE
	PSI	POUNDS PER SQUARE INCH
	PSIG	POUNDS PER SQUARE INCH GAUGE
	PT	POINT, POINT OF TANGENCY
	PV	PLUG VALVE
	PVC	POINT OF VERTICAL CURVATURE, POLYVINYL CHLORIDE
	PVDF	POLYVINYLIDENE FLUORIDE
	PVI	POINT OF VERTICAL INTERSECTION
	PVMT	PAVEMENT
	PVT	POINT OF VERTICAL TANGENCY
	PLW	PLANT WATER
Q	QTY	QUANTITY
R	R	RISER
	R/W or R.O.W.	RIGHT OF WAY
	RAD	RADIUS, RADIAL
	RAS	RETURN ACTIVATED SLUDGE
	RCP	REINFORCED CONCRETE PIPE
	RCCP	REINFORCED CONCRETE CYLINDER PIPE
	RD	ROOF DRAIN
	RDL	ROOF DRAIN LINE
	RDOF	ROOF DRAIN OVERFLOW
	RECIRC	RECIRCULATING
	RED	REDUCER, ROOF EQUIPMENT DRAIN
	REF	REFERENCE
	REG	REGULATOR, REGULATING
	REINF	REINFORCE(D)(ING)(MENT)
	REJ	RUBBER EXPANSION JOINT
	REQD	REQUIRED
	RER	REACTOR
	RES	RESERVOIR
	REV	REVISION, REVERSE
	RF	RETURN FAN
	RFCA	RESTRAINED FLANGE COUPLING ADAPTER
	RG	RETURN GRILLE RUBBER GASKET
	RH	RIGHT HAND
	RHR	RIGHT HAND REVERSE
	RHRA	RIGHT HAND REVERSE ACTIVE
	RHRB	RIGHT HAND REVERSE BEVEL
	RLS	REGISTERED LAND SURVEYOR
	RM	ROOM
	RO	ROUGH OPENING
	ROT	ROTAMETER
	RP	RADIUS POINT
	RPM	REVOLUTIONS PER MINUTE
	RPMP	REINFORCED PLASTIC MORTAR PIPE
	RR	RETURN REGISTER
	RT	RIGHT
	RTF	ROTARY FEEDER
	RTU	ROOF TOP UNIT
	RUD	RUPTURE DISK
	RW	RECLAIMED WATER, REUSE WATER
	RWR	RECLAIMED WATER RETURN
	RWW	RAW WASTEWATER
S	S/W	SIDEWALK
	S	SOUTH, SWITCH, SLOPE
	SA	SAMPLE
	SC	SECONDARY CLARIFIER
	SCB	SCRUBBER
	SCD	SMOKE CONTROL DAMPER
	SCV	SWING CHECK VALVE
	SCFM	STANDARD CUBIC FEET PER MINUTE
	SCH	SCHEDULE
	SCO	SURFACE CLEANOUT
	SCR	BAR SCREEN
	SCR	SILICON CONTROL RECTIFIER
	SD	SMOKE DETECTOR, SPLITTER DAMPER, STORM DRAIN
	SDL	SUMP DISCHARGE DRAIN LINE
	SDO	SLUDGE DRAWOFF
	SE	SECONDARY EFFLUENT
	SEC	SECONDARY, SECOND
	SECT	SECTION
	SED	SEDIMENTATION
	SEP	SEPTAGE
	SF	SUPPLY FAN
	SFW	SOFTENED WATER
	SG	SUPPLY GRILLE
	SGS	STORE FRONT GLAZING SYSTEM
	SHD	SHOWER DRAIN
	SHDR	SOLIDS HANDLING-RECYCLE
	SHR	SHOWER
	SHT	SHEET
	SIM	SIMILAR
	SK	SKIMMINGS
	SL	SLOPE, SLUDGE
	SLC	SLUDGE COLLECTOR DRIVE
	SLG	SLIDE GATE
	SLV	SLEEVE VALVE
	SMP	SAMPLER, SUMP PUMP
	SN	SUPERNATANT OR SUBNATANT
	SOL	SOLUTION
	SP	STATIC PRESSURE, SET POINT
	SPD	SUMP PUMP DRAIN
	SPDT	SINGLE POLE DOUBLE THROW
	SPEC(S)	SPECIFICATION(S)
	SPL	SPLITTER BOX
	SPR	SPARE
	SPS	SAMPLE SINK
	SPW	SAMPLE WATER
	SQ	SQUARE
	SQ FT	SQUARE FEET
	SQ IN(S)	SQUARE INCH(ES)
	SR	SHORT RADIUS, SUPPLY REGISTER
	SRL	SCRUBBER RECIRCULATION LIQUID (CAUSTIC)
	SS	SANITARY SEWER, SELECTOR SWITCH
	SSK	SERVICE SINK
	SSL	SECONDARY SLUDGE
	SST	STAINLESS STEEL
	ST	SLUDGE TRANSFER
	STA	STATION
	STB	STABILIZER
	STD(S)	STANDARDS(S)
	STIFF	STIFFENER
	STIR	STIRRUPS
	STL	STEEL
	STM	STEAM
	STP	STEEL PIPE
	STR	STRAINER
	STRUCT	STRUCTURAL
	SUG	SLUICE GATE
	SUPT	PIPE SUPPORT, SUPPORT
	SV	SERVICE VALVE, SHUTOFF VALVE, SOLENOID VALVE
	SW	SANITARY WASTE
	SWR	SEAL WATER
	SYM	SYMMETRICAL
	SYN	SYNTHETIC
T	T	TANGENT LENGTH, THERMOSTAT, TIMER, TREAD
	T&B	TOP AND BOTTOM
	TAS	THREADED ANCHOR STUD
	TBM	TEMPORARY BENCHMARK
	TC	TOP OF CURB
	TCV	TEMPERATURE CONTROL VALVE
	TDH	TOTAL DYNAMIC HEAD
	TDR	TIME DELAY RELAY, TOWEL DISPENSER/RECEPTACLE
	TEL	TELEPHONE
	TH	TEST HOLE
	THK	THICKENER, THICKNESS, THICK
	TKS	THICKENED SLUDGE
	TLV	TELESCOPING VALVE
	TMH	TELEPHONE MANHOLE
	TMP	TEMPERATURE
	TNK	TANK
	T.O.	TOP OF
	TOC	TOP OF CONCRETE
	TOG	TOP OF GRATING
	TOM	TOP OF MASONRY
	TOS	TOP OF STEEL
	T.O.W.	TOP OF WALL
	TR	TRIAD (THREE CONDUCTOR SHIELDED CABLE), TIMING RELAY
	TS	THICKENER SUPERNATANT OR SUBNATANT
	TSD	THICKENED SLUDGE DECANT
	TSPL	TURBIDIMETER SAMPLE
	TSTAT	THERMOSTAT
	TTB	TELEPHONE TERMINAL BOARD
	TUR	TURBINE
	TV	TURNING VANES
	TWV	THREE-WAY VALVE
	TYP	TYPICAL
U	UC	UNDERCUT
	UG	UNDERGROUND
	UHMWPE	ULTRA HIGH MOLECULAR WEIGHT POLYETHYLENE
	UHMW	ULTRA HIGH MOLECULAR WEIGHT
	UNO	UNLESS NOTED OTHERWISE
	US	UTILITY SINK
V	V	VALVE
	VAR	VARIES
	VB	VALVE BOX
	VCP	VITRIFIED CLAY PIPE
	VEC	VINYL ESTER COATING
	VERT	VERTICAL
	VFR	VOLUMETRIC FEEDER
	VG	VACUUM GAUGE, VALLEY GUTTER
	VOL	VOLUME
	VRV	VACUUM REGULATING VALVE
	VTR	VENT THROUGH ROOF
W	W	WEST, WIDTH
	W/	WITH
	W/O	WITHOUT
	WAS	WASTE ACTIVATED SLUDGE
	WCO	WALL CLEANOUT
	WEF	WALL EXHAUST FAN
	WF	WALL FITTING, WASH FOUNTAIN
	WH	WATER HEATER
	WI	WEIGHT INDICATOR
	WL	WALL LOUVER, WATER LEVEL
	WM	WATER METER
	WOD	WASTE OIL DRAIN
	WP	WEATHERPROOF, WATERPROOF
	WPT	WORKING POINT
	WRG	WEIR GATE
	WRS	WATER SOFTENER
	WS	WATER SURFACE
	WSTP	WATERSTOP
	WT	WALK THROUGH, WEIGHT
	WTF	WATER TREATMENT FACILITY
	WTP	WATER TREATMENT PLANT
	WTR	WATER
	WV	WATER CONTROL VALVE
	WW	WASTEWATER
	WWF	WELDED WIRE FABRIC
	WWTF	WASTEWATER TREATMENT FACILITY
	WWTP	WASTEWATER TREATMENT PLANT
Y	Y	WYE
	YCO	YARD CLEANOUT
	YH	YARD HYDRANT

Digitally signed by Matthew Sprick
Contact Info: Carollo Engineers
Date: 2026.01.16 14:29:42 -08'00'

MATTHEW SCOTT SPRICK
STATE OF WASHINGTON
29659
REGISTERED
PROFESSIONAL ENGINEER

carollo®

Date	No	Revision	By
	4		
	3		
	2		
	1		

PROJECT ENGINEER MSS
DESIGNED/DRAWN MSS/SCR
INSPECTOR CC

DIRECTOR PUBLIC WORKS
CITY ENGINEER
ASSISTANT DIRECTOR

CITY OF BELLINGHAM, WASHINGTON
PUBLIC WORKS DEPARTMENT
ENGINEERING DIVISION

SCALE
Horiz. AS SHOWN
Vert. AS SHOWN

DATUM
H: NAD 83/98
V: NAVD 88

Job. No. EU194
Date JAN 2026
Field Bk.

POST POINT RESOURCE RECOVERY PLANT
GENERAL
ABBREVIATIONS

DRAWING NO. 010G107
SHEET NO. 7 OF 198

CONTACT PERSON: STEPHEN DAY, PE SE , PROJECT ENGINEER AT 360-778-7944

PROJECT NO. 202021-100000 FILE NAME: 202021010G107.dwg

LAST SAVED BY: dlee

Plot Date: 10/4/2024 2:01:28 PM

10/4/2024 2:46:10 PM

GENERAL NOTES

1. FOLLOWING NOTES ARE GENERAL AND APPLY TO ALL SHEETS OF THESE CONTRACT DOCUMENTS AS IF THEY WERE WRITTEN IN THEIR ENTIRETY ON EACH SHEET.
2. CONTRACTOR SHALL VERIFY ALL DIMENSIONS BEFORE STARTING WORK AND SHALL IMMEDIATELY NOTIFY THE ENGINEER OF ANY DISCREPANCIES. CONTRACTOR SHALL BE RESPONSIBLE FOR FIELD VERIFYING ALL EXISTING CONDITIONS INCLUDING LOCATION AND DIMENSIONS OF ALL EXISTING CONSTRUCTION AND UTILITIES. CONTRACTOR SHALL NOTIFY ENGINEER IF THERE IS A CONFLICT BETWEEN THE CONTRACT DOCUMENTS AND EXISTING CONDITIONS BEFORE PROCEEDING WITH WORK.
3. UNLESS DETAILED, SPECIFIED, OR OTHERWISE INDICATED ON THE DRAWINGS, CONSTRUCTION SHALL BE AS INDICATED IN THE APPLICABLE TYPICAL DETAILS AND GENERAL NOTES. TYPICAL DETAILS SHALL APPLY EVEN THOUGH NOT REFERENCED AT SPECIFIC LOCATIONS ON DRAWINGS.
4. WHERE NO CONSTRUCTION DETAILS ARE SHOWN OR NOTED FOR ANY PART OF WORK. DETAILS SHALL BE IN THE SAME AS FOR OTHER SIMILAR WORK.
5. CONTRACTOR SHALL COMPLY WITH LOCAL CONSTRUCTION STORM WATER DISCHARGE REGULATIONS AND REQUIREMENTS.
6. PRIOR TO EXCAVATION FOR NEW STRUCTURES, ELECTRICAL CONDUIT, FABRICATION OF NEW PIPING AND/OR OTHER PROPOSED UTILITIES, CONTRACTOR SHALL BE RESPONSIBLE FOR FIELD VERIFYING THE LOCATION OF ALL EXISTING PIPING AND UTILITIES IN THE CONSTRUCTION AREA. THE CONTRACTOR SHALL TEMPORARILY RELOCATE CONFLICTING EXISTING UTILITIES AT TIE-IN/CONNECTION LOCATIONS AND REINSTALL THEM AS REQUIRED TO ELIMINATE THE CONFLICT AT NO ADDITIONAL COST TO THE OWNER.
7. ALL PIPELINES 12" AND LARGER SHALL HAVE A MINIMUM COVER OF 36" UNLESS THE COVER DEPTH IS SPECIFICALLY INDICATED ON THE DRAWINGS. PIPE SMALLER THAN 12" SHALL HAVE A MINIMUM COVER OF 30" UNLESS NOTED OTHERWISE. PIPES SHALL BE ROUTED AS SHOWN UNLESS MINOR REVISIONS ARE NECESSARY TO MISS EXISTING PIPES, STRUCTURES, ETC. CONTRACTOR SHALL BE RESPONSIBLE FOR FURNISHING ALL FITTINGS AND ADAPTERS REQUIRED TO MAKE THE ROUTING CHANGES AT NO ADDITIONAL COST TO THE OWNER. CONTRACTOR SHALL INCLUDE COST FOR THIS IN THE BID.
8. EXISTING FACILITY AND UTILITY INFORMATION SHOWN ON THE DRAWINGS WAS OBTAINED FROM AVAILABLE RECORDS OR ELECTRONIC FILES. NEITHER THE OWNER NOR ENGINEER ASSUMES ANY RESPONSIBILITY FOR FACILITIES AND UTILITIES NOT SHOWN OR NOT IN THE LOCATION SHOWN. THE CONTRACTOR SHALL FIELD VERIFY ALL LOCATIONS, SIZES, MATERIAL TYPES, AND ELEVATIONS SHOWN AROUND OR NEAR AREAS OF NEW CONSTRUCTION PRIOR TO START OF CONSTRUCTION.
9. THE CONTRACTOR SHALL TAKE ALL PRECAUTIONARY MEASURES NECESSARY TO PROTECT FROM DAMAGE EXISTING FACILITIES AND UTILITIES SHOWN OR NOT SHOWN THAT ARE TO REMAIN IN PLACE. ALL FACILITIES DAMAGED BY THE CONTRACTOR'S OPERATIONS SHALL BE EXPEDITIOUSLY REPAIRED OR RECONSTRUCTED TO THE ORIGINAL OR BETTER CONDITION AT THE CONTRACTOR'S EXPENSE WITHOUT ADDITIONAL COMPENSATION.
10. CONTRACTOR SHALL MAKE CONNECTIONS TO EXISTING PIPE, EQUIPMENT, ETC. AS REQUIRED AND SHALL PROVIDE ALL FITTINGS, ADAPTERS, AND APPURTENANCES REQUIRED TO MAKE THE CONNECTIONS. PROVIDE ALL SUPPORTS REQUIRED FOR A RIGIDLY SUPPORTED COMPLETE AND WORKING SYSTEM.
11. ADJUST ALL VALVE BOXES, VAULTS, PULL BOXES, AND MANHOLES TO FINISHED GRADE UNLESS OTHERWISE SHOWN OR DIRECTED. MANHOLES IN OPEN FIELDS SHALL BE SET TWELVE INCHES ABOVE FINISHED GRADE AND VAULTS SHALL BE SIX INCHES ABOVE FINISHED GRADE.
12. THE CONTRACTOR SHALL CONTACT THE PROPER UTILITY REPRESENTATIVE AS FOLLOWS FOR QUESTIONS OR COORDINATION OF CONSTRUCTION RELATED TO EXISTING UTILITIES.

    PUGET SOUND ENERGY: 1-888-225-5773
    CASCADE NATURAL GAS: 1-888-522-1130
13. CONTRACTOR SHALL VERIFY THAT PIPING SHOWN TO BE ABANDONED OR AS ABANDONED PREVIOUSLY IS NO LONGER IN SERVICE. LINES IN SERVICE SHALL BE MAINTAINED UNTIL NO LONGER REQUIRED BY THE STATION.
14. ALL EXISTING PIPES THAT ARE TO BE ABANDONED IN PLACE OR REMOVED MAY NOT BE SHOWN. WHERE PIPING IS TO BE ABANDONED AND MUST REMAIN IN SERVICE UNTIL COMPLETION OF OTHER PHASES OF WORK, AND IT CONFLICTS WITH NEW PIPING, TEMPORARILY RELOCATE PIPING AS REQUIRED TO MAINTAIN SERVICE BY THE STATION.
15. THE CONTRACTOR SHALL TAKE SPECIAL PRECAUTIONS IN THE VICINITY OF ANY OVERHEAD ELECTRIC LINES. CONTRACTOR SHALL ABIDE BY THE NATIONAL ELECTRIC CODE AND ANY REQUIREMENT BY THE OWNER OF THE ELECTRIC LINES.
16. PROVIDE ALL SHEETING/SHORING REQUIRED TO PROTECT EXISTING STRUCTURES, PIPES AND FACILITIES.
17. CONTRACTOR SHALL VERIFY LOCATION OF ALL ARCHITECTURAL, MECHANICAL, AND ELECTRICAL ITEMS BEFORE PLACING ANY STRUCTURAL STEEL OR CONCRETE. ALSO, STRUCTURAL DIMENSIONS AND OPENINGS CONTROLLED BY ARCHITECTURAL, MECHANICAL, OR ELECTRICAL EQUIPMENT SHALL BE VERIFIED BY THE CONTRACTOR PRIOR TO CONSTRUCTION.
18. MECHANICAL AND ELECTRICAL EQUIPMENT SUPPORTS, ANCHORAGES, OPENINGS, RECESSES, AND REVEALS NOT SHOWN ON THE STRUCTURAL DRAWINGS, THAT ARE REQUIRED BY OTHER CONTRACT DRAWINGS, SHALL BE PROVIDED PRIOR TO CASTING CONCRETE.
19. CONTRACTOR SHALL SUPPLY ONE MATCHING SPOOL PIECE FOR EACH SIZE (DIAMETER AND LENGTH) OF MAGNETIC FLOW METER AND DENSITY METER WHICH CAN BE USED TO REPLACE THE METER WHEN MAINTENANCE IS REQUIRED. EACH SPARE SPOOL PIECE SHALL BE CLEARLY LABELED BY SIZE AND SERVICE.
20. FLEXIBLE COUPLINGS SHALL BE RESTRAINED PER APPLICABLE TYPICAL DETAILS MP310 UNLESS SPECIFICALLY NOTED OTHERWISE.
21. SUCTION AND DISCHARGE PIPING/DUCT OF EQUIPMENT SHALL BE INSTALLED AND SUPPORTED IN SUCH MANNER SO THAT THEY SHALL NOT IMPART STRAIN ON EQUIPMENT.
22. ALL REQUIRED PIPE GUIDES, SUPPORTS, ANCHORS, AND PROVISIONS FOR EXPANSION MAY NOT NECESSARILY BE SPECIFICALLY CALLED OUT ON THE DRAWINGS. ALL SUPPORTS AND APPURTENANCES REQUIRED FOR A COMPLETE SYSTEM SHALL BE PROVIDED BY THE CONTRACTOR WHETHER SPECIFICALLY SHOWN ON THE DRAWINGS OR NOT AND ARE TO INCLUDE ALL NECESSARY AND APPROPRIATE PROVISIONS FOR SUPPORT, SEISMIC RESTRAINT AND BRACING OF PIPES PER SPECIFICATION SECTIONS 40_05_00.01 AND 45_05_07.01.
23. REFER TO THE P&ID DRAWINGS FOR INSTRUMENTS AND INSTRUMENTATION INSTALLATION DETAILS FOR ALL INSTRUMENTS.
24. OVERALL PHYSICAL SIZE OF THE EQUIPMENT SELECTED BY THE CONTRACTOR SHALL NOT EXCEED THE SIZE SHOWN ON THE DRAWINGS OR SPECIFIED IN THE SPECIFICATIONS. CLEARANCES, DIMENSIONS OR SCALED DISTANCES SHOWN ON THE DRAWINGS SHALL BE MAINTAINED. ALL CHANGES AND ADDITIONS SHALL BE SUBMITTED FOR THE OWNER'S REVIEW AND SHALL BE DONE AFTER OWNER'S APPROVAL AT NO ADDITIONAL COST TO THE OWNER.
25. IN ACCORDANCE WITH THE RECOMMENDATION FROM TAMELA SMART WITH THE LUMMI NATION, THE APPLICANT SHALL BE INCORPORATE INADVERTENT DISCOVERY OF ARCHAEOLOGICAL RESOURCE PLAN (IDP) (PREPARED BY ESA DATED MARCH 2025) TRAINING FROM THE PROJECT ARCHAEOLOGIST WITH STAFF AND OR CONSULTANTS ASSOCIATED WITH THE PROJECT. THE IDP SHALL BE ON-SITE AT ALL TIMES DURING THE PROJECT AND FOLLOWED SHOULD CULTURAL RESOURCES OR HUMAN REMAINS BE ENCOUNTERED. THE THPO SHOULD REVIEW ANY CHANGES RELATED TO THE PROPOSED PROJECT. THE APPLICANT SHALL BE REQUIRED TO HAVE THE FOLLOWING INADVERTENT DISCOVERY PLAN ON-SITE AND FOLLOWED SHOULD ARCHAEOLOGICAL RESOURCES OR HUMAN REMAINS BE ENCOUNTERED:INADVERTENT. THE WASHINGTON STATE DEPARTMENT OF ARCHAEOLOGY AND HISTORIC PRESERVATION (STEPHANIE JOLIVETTE, LOCAL PRESERVATION OFFICE (LENA TSO, THPO 360-961-7752; TAMELA SMART, DEPUTY THPO 360-927-2944) SHOULD BE CONTACTED IMMEDIATELY IN ORDER TO HELP ASSESS THE SITUATION AND DETERMINE HOW TO PRESERVE THE RESOURCE(S).COMPLIANCE WITH ALL APPLICABLE LAWS PERTAINING TO ARCHAEOLOGICAL RESOURCES IS REQUIRED. INADVERTENT DISCOVERY OF HUMAN SKELETAL REMAINS ON NON-FEDERAL AND NON-TRIBAL LAND IN THE STATE OF WASHINGTON (RCWS 68.50.645,27.44.055, AND 68.606055) "IF GROUND DISTURBING ACTIVITIES ENCOUNTER HUMAN SKELETAL REMAINS DURING THE COURSE OF CONSTRUCTION, THEN ALL ACTIVITY WILL CEASE THAT MAY CAUSE FURTHER DISTURBANCE TO THOSE REMAINS. THE AREA OF THE FIND WILL BE SECURED AND PROTECTED FROM FURTHER DISTURBANCE UNTIL THE STATE PROVIDES NOTICE TO PROCEED. THE FINDING OF HUMAN SKELETAL REMAINS WILL BE REPORTED TO THE COUNTY MEDICAL EXAMINER/CORONER AND LOCAL LAW ENFORCEMENT IN THE MOST EXPEDITIOUS MANNER POSSIBLE. THE REMAINS WILL NOT BE TOUCHED, MOVED OR FURTHER DISTURBED. THE COUNTY MEDICAL EXAMINER/CORONER WILL ASSUME JURISDICTION OVER THE HUMAN SKELETAL REMAINS AND MAKE A DETERMINATION OF WHETHER THOSE REMAINS ARE FORENSIC OR NON - FORENSIC. IF THE COUNTY MEDICAL EXAMINER/CORONER DETERMINES THE REMAINS ARE NON - FORENSIC, THEN THEY WILL REPORT THAT FINDING TO THE DEPARTMENT OF ARCHAEOLOGY AND HISTORIC PRESERVATION (DAHP) WHO WILL THEN TAKE JURISDICTION OVER THE REMAINS. THE DAHP WILL NOTIFY ANY APPROPRIATE CEMETERIES AND ALL AFFECTED TRIBES OF THE FIND. THE STATE PHYSICAL ANTHROPOLOGIST WILL MAKE A DETERMINATION OF WHETHER THE REMAINS ARE INDIAN OR NON - INDIAN AND REPORT THAT FINDING TO ANY APPROPRIATE CEMETERIES AND THE AFFECTED TRIBES. THE DAHP WILL THEN HANDLE ALL CONSULTATION WITH THE AFFECTED PARTIES AS TO THE FUTURE PRESERVATION, EXCAVATION, AND DISPOSITION OF THE REMAINS" (DAHP).

SYMBOLS

BRACKET

BREAK LINE

PIPE BREAK PLAN VIEW

PIPE BREAK CROSS SECTION

SCALE — 0 50' 100' 200'

NORTH ARROW

EQUIPMENT/DEVICE TAG AND NUMBER — XXX-XX-XXXX (E)or (F) — EQUIPMENT
(E) = EXISTING EQUIPMENT
(F) = FUTURE EQUIPMENT

PIPE TAG — PIPE SIZE — FLOW STREAM — X" XXX (E)or (F)
SIZE FLOW STREAM
(E) = EXISTING FLOW STREAM
(F) = FUTURE FLOW STREAM

PIPE CONTINUATION (SINGLE LINE)

KEY NOTE — 34

REVISION DELTA — 2

EXISTING ELEVATION — T.O.W. XXXX.X± (EXIST)

ELEVATION — TOC XXXX.XX

Call before you Dig
Avoid cutting underground utility lines. It's costly.

UNDERGROUND/ OVERHEAD WARNING (STATE/REGION SPECIFIC)

Call 811 OR 1-800-432-4770

DETAIL REFERENCES

PLAN/TITLE — VIEW — A — PLAN TITLE — FILE: FILE — PLAN NOT REFERENCED

SECTION CUT — C / - — VIEW — - = SHOWN ON SAME DRAWING — ##X## = SEE INDICATED DRAWING

SECTION OR DETAIL TITLE W/ REFERENCE — C/1 ##X## — ALPHA = SECTION — NUMERIC = DETAIL — SECTION/DETAIL TITLE — SCALE: SCALE — FILE: FILE — DRAWING CUT ORIGINATION

DETAIL CALL-OUT (ENLARGED) — 1 ##X## — VIEW — SEE INDICATED DRAWING

DRAWING REFERENCE — ##X## — AREA DESIGNATOR (WHEN APPLICABLE) — DISCIPLINE DESIGNATOR — CONSECUTIVE SHEET NUMBER

TYPICAL DETAIL REFERENCE — ? TYP — TYPICAL DETAIL #

EXTERIOR ELEVATION VIEWS — A ##X##

PHOTO LOCATION — # - — ARROW INDICATES POINT OF VIEW

GRID BUBBLE — A 1

? TYP — TYPICAL DETAIL NUMBER — LINE 3 — LINE 1 — LINE 2 — TYPICAL DETAIL TITLE
MOD — MODIFICATION NOTE — S = STANDARD — J = JOB SPECIFIC — R = REVISED — N = NOTE TO TYPICAL DETAIL USER
SHT # OF # — SHEETS IN DETAIL
VER DATE — DATE CREATED (REVISED)

HATCH PATTERNS

AGGREGATE BASE COURSE (ABC)
ALUMINUM
ASPHALT PAVING
BEDROCK
BRICK OR BLOCK
CAST IRON OR FIBERGLASS
CLSM
CONCRETE (ALL CLASSES)
DRAIN ROCK
DEMOLITION
GRAVEL
GRATING — SPAN
LANDSCAPING
RUBBER
SAND
EXISTING/ UNDISTURBED SOIL
STRUCTURAL FILL OR BACKFILL
STEEL
TREAD PLATE
WOOD

PROCESS TAGS

PIPE/DUCT PROCESS TAGS

AI	INSTRUMENT AIR
AS	AIR, SERVICE
BS	BLENDED SLUDGE
CG	CHLORINE GAS, PRESSURE
CGE	CHLORINE GAS, EXHAUST
CGV	CHLORINE GAS, VACUUM
CS1	CHLORINE SOLUTION, DISINFECTION
CS2	CHLORINE SOLUTION, HEADWORKS
CS3	CHLORINE SOLUTION, RAS
CS4	CHLORINE SOLUTION, PLANT WATER
CSM	CHLORINE SCUM
D	DRAIN, PLUMBING
DS	DEWATERED SLUDGE
FA	FOUL AIR
FS	FIRE SPRINKLER
FW	FIRE WATER
GOX	GASEOUS OXYGEN
HP	HYDROGEN PEROXIDE
LOX	LIQUID OXYGEN
NG	NATURAL GAS
OA	ODOROUS AIR
PD	PLANT, PROCESS, AND OVERFLOW DRAIN
POS	POLYMER SOLUTION
PS/PSL	PRIMARY SLUDGE
PSM	PRIMARY SCUM
RAS	RETURN ACTIVATED SLUDGE
RD	ROOF DRAIN
RS	RAW SEWAGE
SA	SAMPLE
SD	STORM DRAIN
SE	SECONDARY EFFLUENT
SEP	SEPTAGE
SG	SANITARY SEWER (GRAVITY)
SH	SODIUM HYPOCHLORITE
SM	SCUM (COMBINED)
SPD	SUMP PUMP DISCHARGE
SSM	SECONDARY SCUM
W1	WATER, CITY POTABLE
W2	WATER, CITY NON-POTABLE
W3	WATER, PLANT EFFLUENT LOW PRESSURE
W4	WATER, PLANT EFFLUENT HIGH PRESSURE
WAS	WASTE ACTIVATED SLUDGE

Digitally signed by Matthew Scott Sarick
Contact Info: Cas
Date: 2024

MATTHEW SCOTT SARICK — STATE OF WASHINGTON — 29659 — REGISTERED PROFESSIONAL ENGINEER

carollo®

LAST SAVED BY: lveloz

Date	No	Revision	By
	4		
	3		
	2		
12-22-2025	1	PERMIT REVISIONS	

PROJECT ENGINEER MSS
DESIGNED/DRAWN MSS/SCR
INSPECTOR CC

DIRECTOR PUBLIC WORKS
CITY ENGINEER
ASSISTANT DIRECTOR

CITY OF BELLINGHAM, WASHINGTON
PUBLIC WORKS DEPARTMENT
ENGINEERING DIVISION

SCALE — Horiz. AS SHOWN — Vert. AS SHOWN
DATUM — H: NAD 83/98 — V: NAVD 88
Job. No. EU194
Date JAN 2026
Field Bk.

POST POINT RESOURCE RECOVERY PLANT
GENERAL
NOTES, LEGENDS AND SYMBOLS

DRAWING NO. 010G108
SHEET NO. 8 OF 198

CONTACT PERSON: STEPHEN DAY, PE SE , PROJECT ENGINEER AT 360-778-7944

PROJECT NO. 202021-100000 FILE NAME: 202021010G108.dwg

Plot Date: 4/15/2025 11:37:15 AM

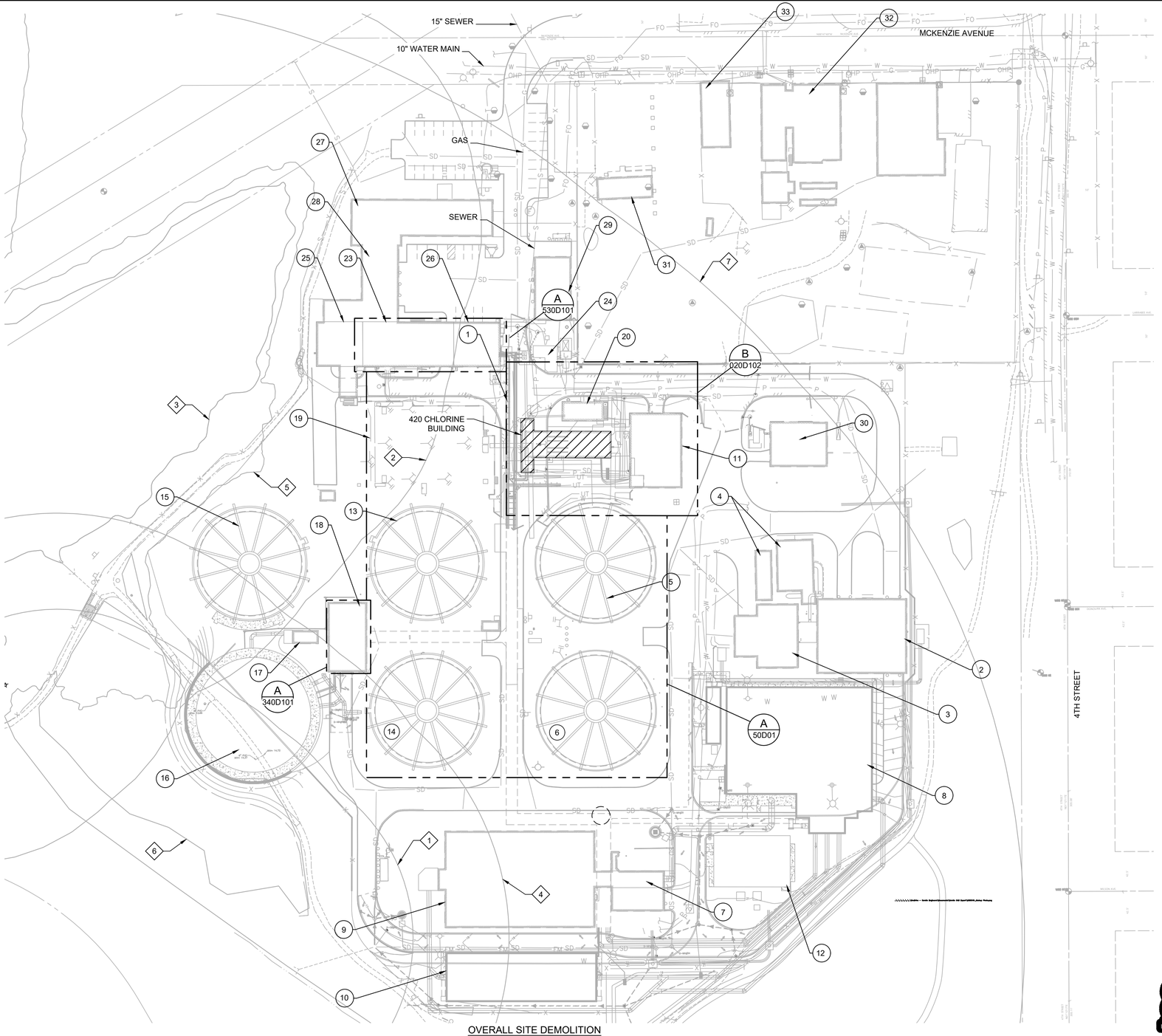

	FACILITY NUMBER	FACILITY NAME
1	050	GALLERY (BELOW GRADE)
2	110	SCREENING FACILITY
3	120	HEADWORKS
4	130	PRELIMINARY TREATMENT ODOR CONTROL
5	210	PRIMARY CLARIFIER 1
6	210	PRIMARY CLARIFIER 2
7	220	PRIMARY EFFLUENT PUMP STATION
8	305	SELECTOR/ACTIVATED SLUDGE BASIN 1
9	305	ACTIVATED SLUDGE BASIN 2 AND 3
10	311	ACTIVATED SLUDGE BASIN 4
11	320	HYPOCHLORITE GENERATION BUILDING
12	325	BLOWER BUILDING
13	330	SECONDARY CLARIFIER 1
14	330	SECONDARY CLARIFIER 2
15	330	SECONDARY CLARIFIER 3
16	330	SECONDARY CLARIFIER 4
17	330	SECONDARY CLARIFIER ML SPLITTER
18	340	SECONDARY SLUDGE PUMP STATION
19	410	CHLORINE CONTACT BASIN
20	420	SLUDGE STORAGE BUILDING
21		NOT USED
22		NOT USED
23	510	SOLIDS HANDLING BUILDING
24	510	SOLIDS HANDLING ODOR CONTROL
25	520	SOLIDS HANDLING BUILDING WEST
26	530	SOLIDS HANDLING BUILDING EAST
27	710	ADMINISTRATION AND LABORATORY
28	720	SHOP/MAINTENANCE
29	730	STORAGE BUILDING
30	740	EMERGENCY GENERATOR BUILDING
31		MAINTENANCE OFFICES
32		MAINTENANCE SHOP
33		MAINTENANCE STORAGE

KEY NOTES:

1. POST POINT HERON COLONY 2023 197 FOOT YEAR-ROUND CORE ZONE PROTECTION BUFFER. SEE POST POINT HERON COLONY MANAGEMENT RECOMMENDATIONS UPDATE IN APPENDICES OF SPECIFICATION SECTION 01_14_00 - WORK RESTRICTIONS.
2. SHORELINE BUFFER FOR SHORELINE JURISDICTION MARINE 13. CONTRACTOR SHALL NOT PERFORM WORK OUTSIDE OF STRUCTURES BEYOND THIS LINE WITHOUT EXPRESS PERMISSION FROM OWNER.
3. ORDINARY HIGH WATER MARK.
4. POST POINT HERON COLONY 2023 300 FOOT SEASONAL (MARCH 1 TO SEPTEMBER 1) CORE ZONE DISTURBANCE BUFFER. SEE POST POINT HERON COLONY MANAGEMENT RECOMMENDATIONS UPDATE IN APPENDICES OF SPECIFICATION SECTION 01_14_00- WORK RESTRICTIONS.
5. 100 YEAR FLOOD PLANE.
6. WETLAND.
7. POST POINT HERON COLONY 850' BUFFER.

OVERALL SITE DEMOLITION

A **PLAN**

SCALE: 1" = 60'-0"
FILE: 202021020D101.DWG

Know what's below. Call before you dig. usanorth811.org

Digitally signed by Matthew Scott Spinck
Contact Info: d@carollo.com
Date: 2025.04.15 11:37:15 -07'00'

MATTHEW SCOTT SPINCK
STATE OF WASHINGTON
29659
REGISTERED PROFESSIONAL ENGINEER

SCALE

0 30' 60' 120'

SCALE: 1" = 60'

carollo®

Date	No	Revision	By
	4		
	3		
	2		
	1		

PROJECT ENGINEER MSS
DESIGNED/DRAWN MSS/JJC
INSPECTOR MB

DIRECTOR PUBLIC WORKS
CITY ENGINEER
ASSISTANT DIRECTOR

CITY OF BELLINGHAM, WASHINGTON
PUBLIC WORKS DEPARTMENT
ENGINEERING DIVISION

SCALE
Horiz. AS SHOWN
Vert. AS SHOWN

DATUM
H: NAD 83/98
V: NAVD 88

Job. No. EU194
Date JAN 2026
Field Bk.

POST POINT RESOURCE RECOVERY PLANT
DEMOLITION
OVERALL SITE DEMOLITION PLAN

DRAWING NO. 020D101
SHEET NO. 9 OF 198

CONTACT PERSON: STEPHEN DAY, PE SE , PROJECT ENGINEER AT 360-778-7944

LAST SAVED BY: JCOMBEL

PROJECT NO. 202021 FILE NAME: 202021020D101.DWG

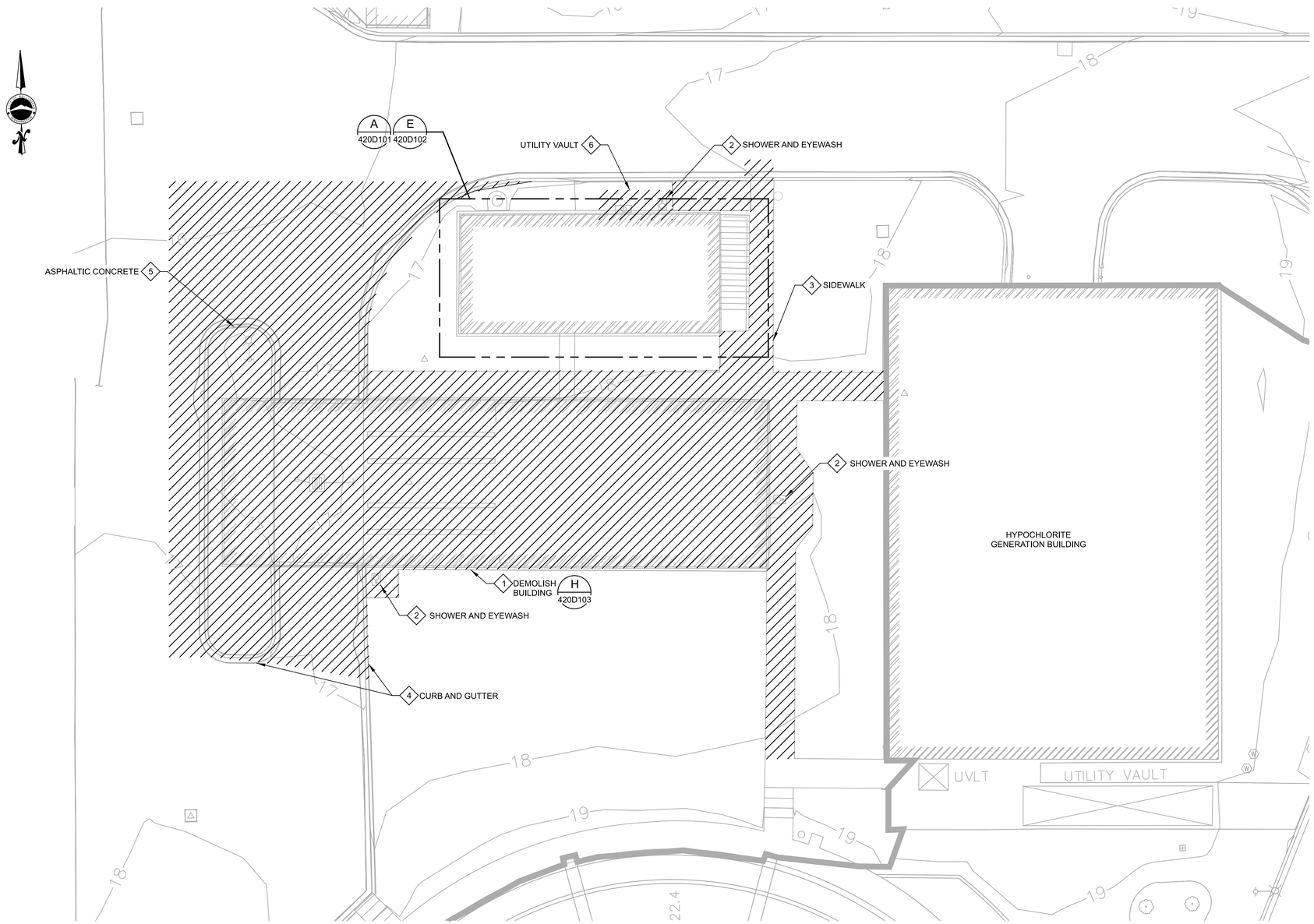

B ENLARGED PLAN

020D101

SCALE: 1" = 10'-0"
FILE: 2021-0126-C-000SVV20.dwg

0 5' 10' 20'

GENERAL NOTES:

1. DRAWING INFORMATION IS BASED ON A COMBINATION OF RECORD DRAWINGS AND FIELD OBSERVATION. ACTUAL CONDITIONS MAY DIFFER. FIELD VERIFY LOCATIONS, ELEVATIONS, AND SIZE OF EXISTING ITEMS.
2. ALL FEATURES NOT DESIGNATED TO BE DEMOLISHED MUST BE PROTECTED AND SUPPORTED AS NECESSARY TO MAINTAIN OPERATION.

KEY NOTES:

1. DEMOLISH CHLORINE BUILDING AND ASSOCIATED ISLAND, CURBING, AND ROADWAY STRUCTURES.
2. DEMOLISH EMERGENCY SHOWER AND EYEWASH STATIONS.
3. DEMOLISH SIDEWALK AS REQUIRED TO ACCOMMODATE EXCAVATION FOR NEW WORK.
4. DEMOLISH CURB AND GUTTER AS REQUIRED TO ACCOMMODATE EXCAVATION FOR NEW WORK.
5. DEMOLISH ASPHALTIC CONCRETE AS REQUIRED TO ACCOMMODATE EXCAVATION FOR NEW WORK.
6. DEMOLISH AND REMOVE UTILITY VAULT IN ITS ENTIRETY. FILL WITH ABC AND BRING TO GRADE.

Digitally Signed by Contact: MATTHEW SCOTT SPRICK Date: 2026.01.13 15:50:42 -08'00'

MATTHEW SCOTT SPRICK
STATE OF WASHINGTON
29659
REGISTERED
PROFESSIONAL ENGINEER

carollo®

Date	No	Revision	By
	4		
	3		
	2		
	1		

PROJECT ENGINEER MSS
DESIGNED/DRAWN MSS
INSPECTOR CC

DIRECTOR PUBLIC WORKS
CITY ENGINEER
ASSISTANT DIRECTOR

CITY OF BELLINGHAM, WASHINGTON
PUBLIC WORKS DEPARTMENT
ENGINEERING DIVISION

SCALE
Horiz. AS SHOWN
Vert. AS SHOWN

DATUM
H: NAD 83/98
V: NAVD 88

Job. No. EU194
Date JAN 2026
Field Bk.

POST POINT RESOURCE RECOVERY PLANT
DEMOLITION
SITE DEMOLITION PLAN

DRAWING NO. 020D102
SHEET NO. 10 OF 198

CONTACT PERSON: STEPHEN DAY, PE SE , PROJECT ENGINEER AT 360-778-7944

PROJECT NO. 202021-100000 FILE NAME: 202021020D102.dgn

Plot Date: 13-JAN-2026 3:51:29 PM
User: svcPW
Model: Layout1 ColorTable: gshade.ctb DesignScript: Carollo_Std_Pen_v0905.pen PlotScale: 1:1
LAST SAVED BY: lveloz

Plot Date: 10/9/2024 1:54:22 PM

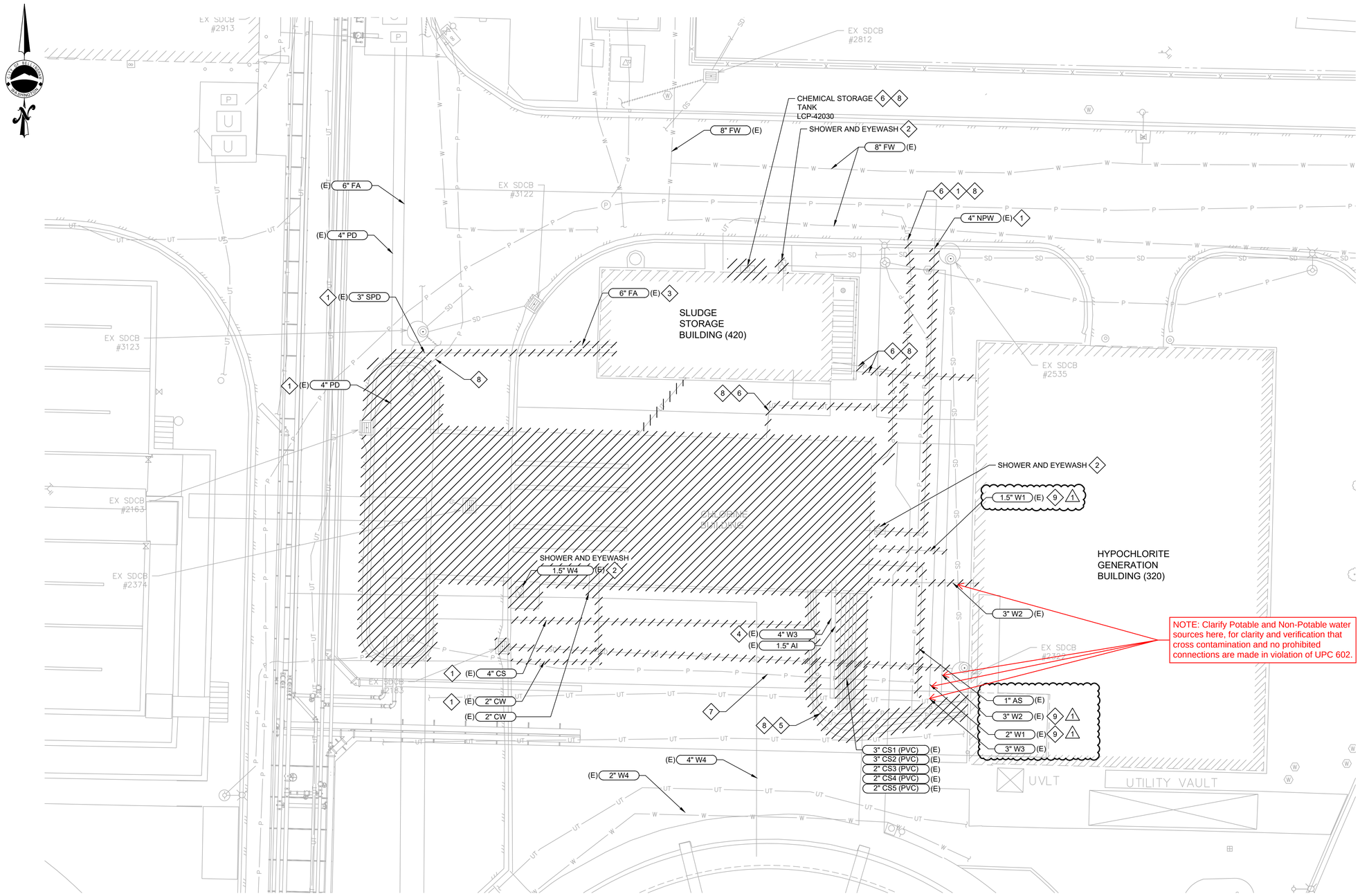

NOTE: Clarify Potable and Non-Potable water sources here, for clarity and verification that cross contamination and no prohibited connections are made in violation of UPC 602.

GENERAL NOTES:

1. CENTERLINE ELEVATIONS (CL) OF PIPES ARE SHOWN WITH +/- DUE TO UNCERTAINTY IN THE RECORD DRAWINGS AND SURVEY THAT THEY WERE GATHERED FROM. CONTRACTOR TO FIELD VERIFY.
2. PIPE 12-INCH AND LESS SHALL BE FILLED WITH GROUT AND ABANDONED IN-PLACE UNLESS NEW WORK REQUIRES REMOVAL OF THE PIPE.
3. ALL FEATURES NOT DESIGNATED TO BE DEMOLISHED MUST BE PROTECTED AND SUPPORTED AS NECESSARY TO MAINTAIN OPERATION.
4. DRAWING INFORMATION IS BASED ON A COMBINATION OF RECORD DRAWINGS AND FIELD OBSERVATION. ACTUAL CONDITIONS MAY DIFFER. FIELD VERIFY LOCATIONS, ELEVATIONS, AND SIZE OF EXISTING ITEMS.

X KEY NOTES:

1. UTILITY WILL BE DEMOLISHED UP TO THE ROAD AND CAPPED. PIPE MARKED AS DEMOLISHED IN ROADWAY MAY BE ABANDONED IN PLACE.
2. CAP AND ABANDON IN PLACE YARD PIPING ASSOCIATED WITH SHOWER AND EYEWASH STATIONS.
3. EXISTING 6" OA PIPE WILL BE PARTIALLY DEMOLISHED, STARTING AT THE SCRUBBER BUILDING WALL, EXTENDING APPROXIMATELY 6 FT INTO THE YARD. THIS DEMOLITION WILL ALLOW ADDITION OF NEW 6" OA PIPE SHOWN ON 30C102. CONTRACTOR TO FIELD VERIFY AND DEMO AS NEEDED.
4. EXISTING 4" W3 PIPE WILL BE PARTIALLY DEMOLISHED IN THE YARD AND REUSED FOR PROCESS LINES SHOWN ON 30C102. CONTRACTOR TO FIELD VERIFY AND DEMO AS NEEDED.
5. DEMOLISH EXISTING CONDUIT AND WIRES BETWEEN CHLORINE BUILDING (420) AND HYPOCHLORITE GENERATION BUILDING (320).
6. EXISTING ELECTRICAL UTILITIES. COORDINATE DEMOLITION WITH ELECTRICAL SUBCONTRACTOR. FIELD VERIFY PRIOR TO DEMOLITION.
7. PROTECT EXISTING ELECTRICAL INFRASTRUCTURE.
8. CAP/PLUG CONDUIT IN YARD AND AT NEAREST LOCATION EXPOSED WITHIN STRUCTURE WHERE CONDUIT TERMINATES.
9. POTABLE. VERIFY THAT CROSS CONTAMINATION AND NO PROHIBITED CONNECTIONS ARE MADE IN VIOLATION OF UPC602.

811 Know what's below. Call before you dig. usanorth811.org

SCALE

0 10' 20' 40'

SCALE: 1" = 20'

MATTHEW SCOTT SPRICK — STATE OF WASHINGTON — 29659 — REGISTERED PROFESSIONAL ENGINEER

carollo

LAST SAVED BY: sraustad

Date	No	Revision	By
	4		
	3		
	2		
06-17-26	1	PERMIT REVISIONS	

PROJECT ENGINEER MSS
DESIGNED/DRAWN MSS/SCR
INSPECTOR CC

DIRECTOR PUBLIC WORKS
CITY ENGINEER
ASSISTANT DIRECTOR

CITY OF BELLINGHAM, WASHINGTON
PUBLIC WORKS DEPARTMENT
ENGINEERING DIVISION

SCALE
Horiz. AS SHOWN
Vert. AS SHOWN

DATUM
H: NAD 83/98
V: NAVD 88

Job. No. EU194
Date JAN 2026
Field Bk.

POST POINT RESOURCE RECOVERY PLANT
CIVIL
YARD PIPING DEMOLITION PLAN

DRAWING NO. 030D101
SHEET NO. 11 OF 198

CONTACT PERSON: STEPHEN DAY, PE SE , PROJECT ENGINEER AT 360-778-7944

PROJECT NO. 202021-100000 FILE NAME: 202021010G102.dwg

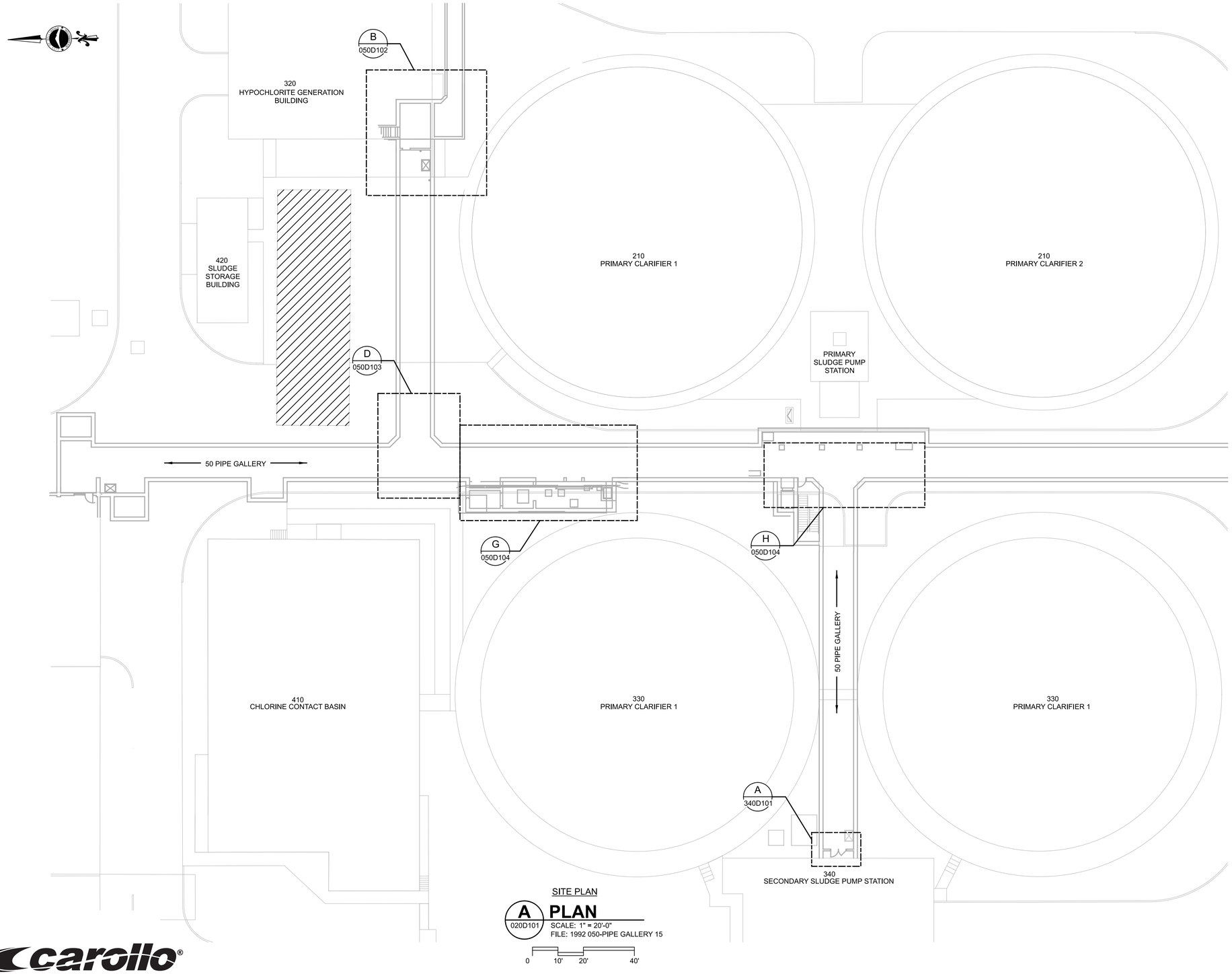

SITE PLAN

A 020D101 **PLAN**

SCALE: 1" = 20'-0"
FILE: 1992 050-PIPE GALLERY 15

0 10' 20' 40'

GENERAL NOTES:

1. REFER TO SPECIFICATION SECTION 01_14_00 AND 01_35_21 FOR WORK RESTRICTIONS, CONSTRAINTS, SELECTIVE DEMOLITION AND SALVAGING INSTRUCTIONS.
2. DRAWING INFORMATION IS BASED ON A COMBINATION OF RECORD DRAWINGS AND FIELD OBSERVATION. ACTUAL CONDITIONS MAY DIFFER. FIELD VERIFY LOCATIONS, ELEVATIONS, AND SIZE OF EXISTING ITEMS.

MATTHEW SCOTT SPRICK
STATE OF WASHINGTON
29659
REGISTERED
PROFESSIONAL ENGINEER

carollo®

Date	No	Revision	By
	4		
	3		
	2		
	1		

PROJECT ENGINEER MSS
DESIGNED/DRAWN NJ/JJC
INSPECTOR CC

DIRECTOR PUBLIC WORKS
CITY ENGINEER
ASSISTANT DIRECTOR

CITY OF BELLINGHAM, WASHINGTON
PUBLIC WORKS DEPARTMENT
ENGINEERING DIVISION

SCALE
Horiz. AS SHOWN
Vert. AS SHOWN

DATUM
H: NAD 83/98
V: NAVD 88

Job. No. EU194
Date JAN 2026
Field Bk.

POST POINT RESOURCE RECOVERY PLANT
DEMOLITION
OVERALL GALLERY PIPE DEMOLITION PLAN

DRAWING NO. 050D101
SHEET NO. 12 OF 198

CONTACT PERSON: STEPHEN DAY, PE SE , PROJECT ENGINEER AT 360-778-7944

PROJECT NO. 202021-100000 FILE NAME: 202021050D101.dgn

Model: Layout1 ColorTable: gshade.ctb DesignScript: Carollo_Std_Pen_v0905.pen PlotScale: 1:1
Plot Date: 14-JAN-2026 2:14:10 PM
User: svcPW
LAST SAVED BY: lveloz

Plot Date: 13-JAN-2026 3:52:06 PM
User: svcPW
Model: Layout1 ColorTable: gshade.ctb DesignScript: Carollo_Std_Pen_v0905.pen PlotScale: 1:1
LAST SAVED BY: lveloz

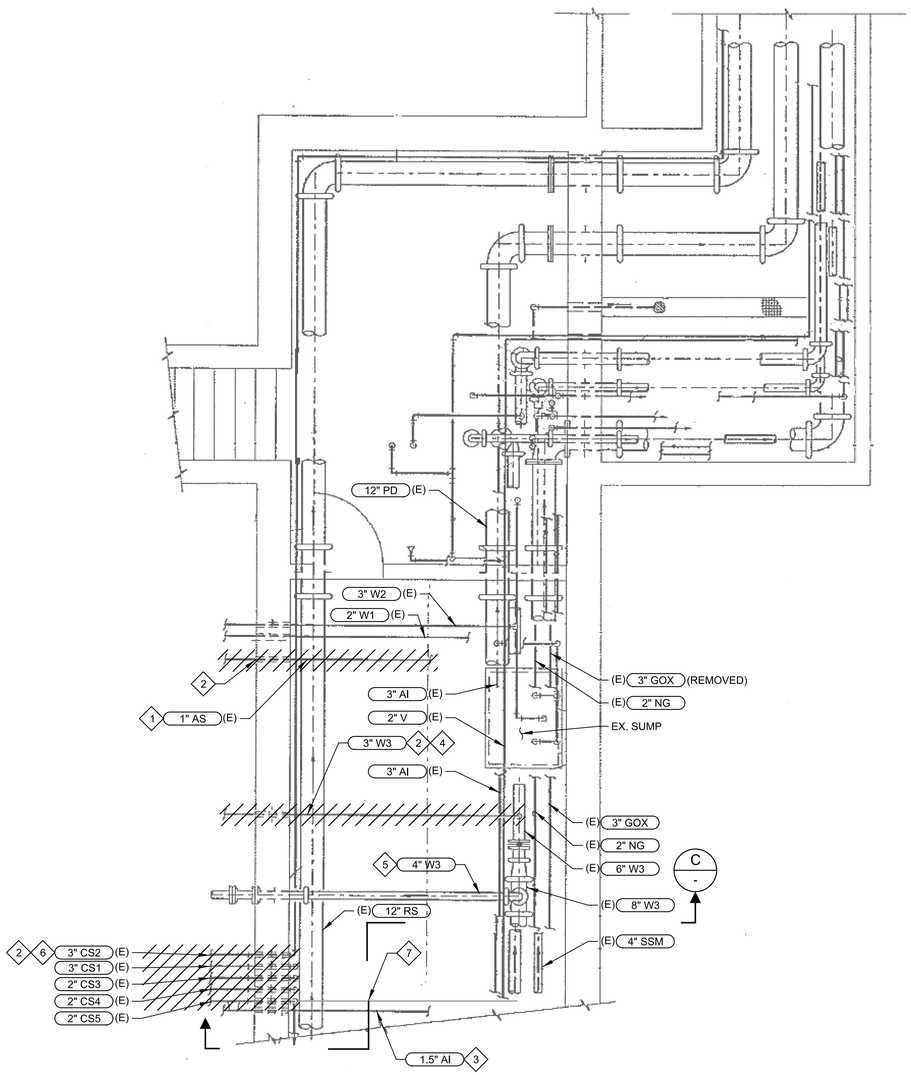

B PLAN
050D101
SCALE: NO SCALE
FILE: 1992 050-PIPE GALLERY 25

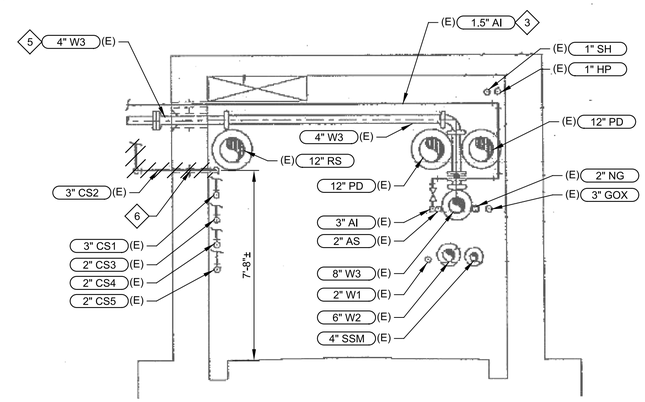

C SECTION
-
SCALE: NO SCALE
FILE: 1992 050-PIPE GALLERY 26

GENERAL NOTES:

1. REFER TO SPECIFICATION SECTION 01_14_00 AND 01_35_21 FOR WORK RESTRICTIONS, CONSTRAINTS, SELECTIVE DEMOLITION AND SALVAGING INSTRUCTIONS.
2. DRAWING INFORMATION IS BASED ON THE 1992 RECORD DRAWINGS. ACTUAL CONDITIONS MAY DIFFER. FIELD VERIFY LOCATIONS, ELEVATIONS, AND SIZES OF EXISTING ITEMS WITHIN BUILDING.
3. WHERE EQUIPMENT IS CALLED OUT TO BE DEMOLISHED, DEMOLISH ALL ASSOCIATED SUPPORTS, CONDUIT, DUCT, PIPING, GROUT PADS, AND CONCRETE EQUIPMENT PADS. GRIND CONCRETE/GROUT PADS DOWN TO EXISTING FINISH FLOOR ELEVATION AND PATCH PER SD810/TYP AND SD820/TYP.
4. WHERE PIPING IS TO BE DEMOLISHED, DEMOLISH ALL ASSOCIATED SUPPORTS, VALVES, AND INSTRUMENTS. CAP OR BLIND FLANGE CONNECTIONS AT DEMOLITION LIMITS.
5. WHERE CONDUIT IS TO BE DEMOLISHED, DEMOLISH ALL ASSOCIATED SUPPORTS. CAP CONDUIT THAT PENETRATES WALL OR SLAB.
6. REPAIR CONCRETE, PIPING, EQUIPMENT, INSTRUMENTS, CONDUITS AND WIRING DAMAGED DURING CONSTRUCTION ACTIVITIES.

KEY NOTES:

1. DEMOLISH 1" AS (AIR SPARGE) PIPE AND CAP AT WALL INSIDE PIPE GALLERY.
2. FILL IN HOLE LEFT BY PIPE DEMOLITION WITH NON-SHRINK GROUT.
3. 1-1/2" AI PIPE WILL BE RETAINED AND IN SERVICE DURING CONSTRUCTION.
4. DEMOLISH 3" W3 PIPE AND CAP AT SOURCE PIPE.
5. 4" W3 (WATER PLANT EFFLUENT) PIPE WILL BE REUSED TO SUPPLY WATER TO AREAS 420 AND 440. REFER TO DRAWING 440M101.
6. CHLORINE LINES WILL BE DEMOLISHED AND CAPPED AT WALL INSIDE PIPE GALLERY.
7. EXISTING SHC POST TREATMENT PIPE WILL BE RETAINED AND IN SERVICE DURING CONSTRUCTION. CAP TEE THAT CONNECTS TO CS PIPE TO BE DEMOLISHED.

carollo®

Date	No	Revision	By
	4		
	3		
	2		
	1		

PROJECT ENGINEER MSS
DESIGNED/DRAWN NJ/HV
INSPECTOR CC

DIRECTOR PUBLIC WORKS
CITY ENGINEER
ASSISTANT DIRECTOR

CITY OF BELLINGHAM, WASHINGTON
PUBLIC WORKS DEPARTMENT
ENGINEERING DIVISION

SCALE
Horiz. AS SHOWN
Vert. AS SHOWN

DATUM
H: NAD 83/98
V: NAVD 88

Job. No. EU194
Date JAN 2026
Field Bk.

POST POINT RESOURCE RECOVERY PLANT
DEMOLITION
GALLERY PIPE DEMOLITION PLAN AND SECTION 1

DRAWING NO. 050D102
SHEET NO. 13 OF 198

CONTACT PERSON: STEPHEN DAY, PE SE , PROJECT ENGINEER AT 360-778-7944

PROJECT NO. 202021-100000 FILE NAME: 202021050D102.dgn

Model: Layout1 ColorTable: gshade.ctb DesignScript: Carollo_Std_Pen_v0905.pen PlotScale: 1:1
Plot Date: 23-JAN-2026 1:24:39 PM
User: svcPW
LAST SAVED BY: Iveloz

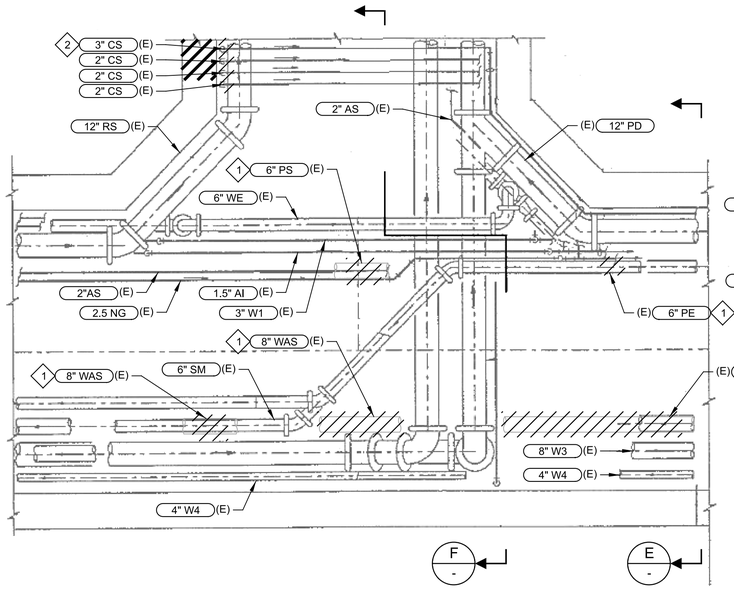

D PLAN
050D101
SCALE: NO SCALE
FILE: 1992 050-PIPE GALLERY 18

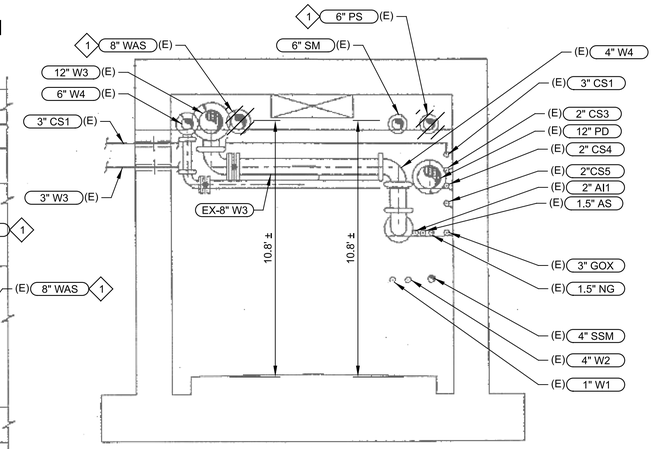

E SECTION
-
SCALE: NTS
FILE: 1992 050-PIPE GALLERY 18

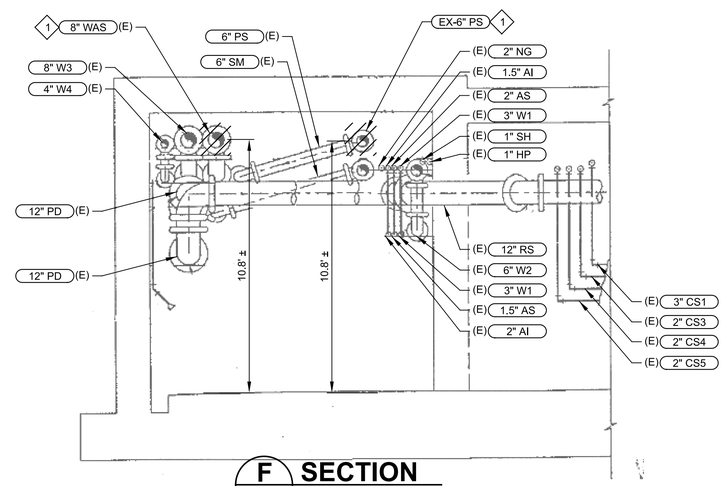

F SECTION
-
SCALE: NO SCALE
FILE: 1992 050-PIPE GALLERY 18

GENERAL NOTES:

1. REFER TO SPECIFICATION SECTION 01_14_00 AND 01_35_21 FOR WORK RESTRICTIONS, CONSTRAINTS, SELECTIVE DEMOLITION AND SALVAGING INSTRUCTIONS.
2. DRAWING INFORMATION IS BASED ON THE 1992 RECORD DRAWINGS. ACTUAL CONDITIONS MAY DIFFER. FIELD VERIFY LOCATIONS, ELEVATIONS, AND SIZES OF EXISTING ITEMS WITHIN BUILDING.
3. WHERE EQUIPMENT IS CALLED OUT TO BE DEMOLISHED, DEMOLISH ALL ASSOCIATED SUPPORTS, CONDUIT, DUCT, PIPING, GROUT PADS, AND CONCRETE EQUIPMENT PADS. GRIND CONCRETE/GROUT PADS DOWN TO EXISTING FINISH FLOOR ELEVATION AND PATCH PER SD810/TYP AND SD820/TYP.
4. WHERE PIPING IS TO BE DEMOLISHED, DEMOLISH ALL ASSOCIATED SUPPORTS, VALVES, AND INSTRUMENTS. CAP OR BLIND FLANGE CONNECTIONS AT DEMOLITION LIMITS.
5. WHERE CONDUIT IS TO BE DEMOLISHED, DEMOLISH ALL ASSOCIATED SUPPORTS. CAP CONDUIT THAT PENETRATES WALL OR SLAB.
6. REPAIR CONCRETE, PIPING, EQUIPMENT, INSTRUMENTS, CONDUITS AND WIRING DAMAGED DURING CONSTRUCTION ACTIVITIES.

KEY NOTES:

1. DEMOLISH PIPE TO NEAREST JOINT TO ACCOMMODATE NEW WORK. EXTENT OF DEMOLITION IS NOT FULLY SHOWN ON THIS DEMOLITION SHEET DUE TO AS BUILT LIMITATION
2. DEMOLISH CS PIPES AS INDICATED.

carollo®

Date	No	Revision	By
	4		
	3		
	2		
	1		

PROJECT ENGINEER MSS
DESIGNED/DRAWN NJ/HV
INSPECTOR CC

DIRECTOR PUBLIC WORKS
CITY ENGINEER
ASSISTANT DIRECTOR

CITY OF BELLINGHAM, WASHINGTON
PUBLIC WORKS DEPARTMENT
ENGINEERING DIVISION

SCALE
Horiz. AS SHOWN
Vert. AS SHOWN

DATUM
H: NAD 83/98
V: NAVD 88

Job. No. EU194
Date JAN 2026
Field Bk.

POST POINT RESOURCE RECOVERY PLANT
DEMOLITION
GALLERY PIPE DEMOLITION PLAN AND SECTIONS 2

DRAWING NO. 050D103
SHEET NO. 14 OF 198

CONTACT PERSON: STEPHEN DAY, PE SE , PROJECT ENGINEER AT 360-778-7944

PROJECT NO. 202021-100000 FILE NAME: 202021050D103.dgn

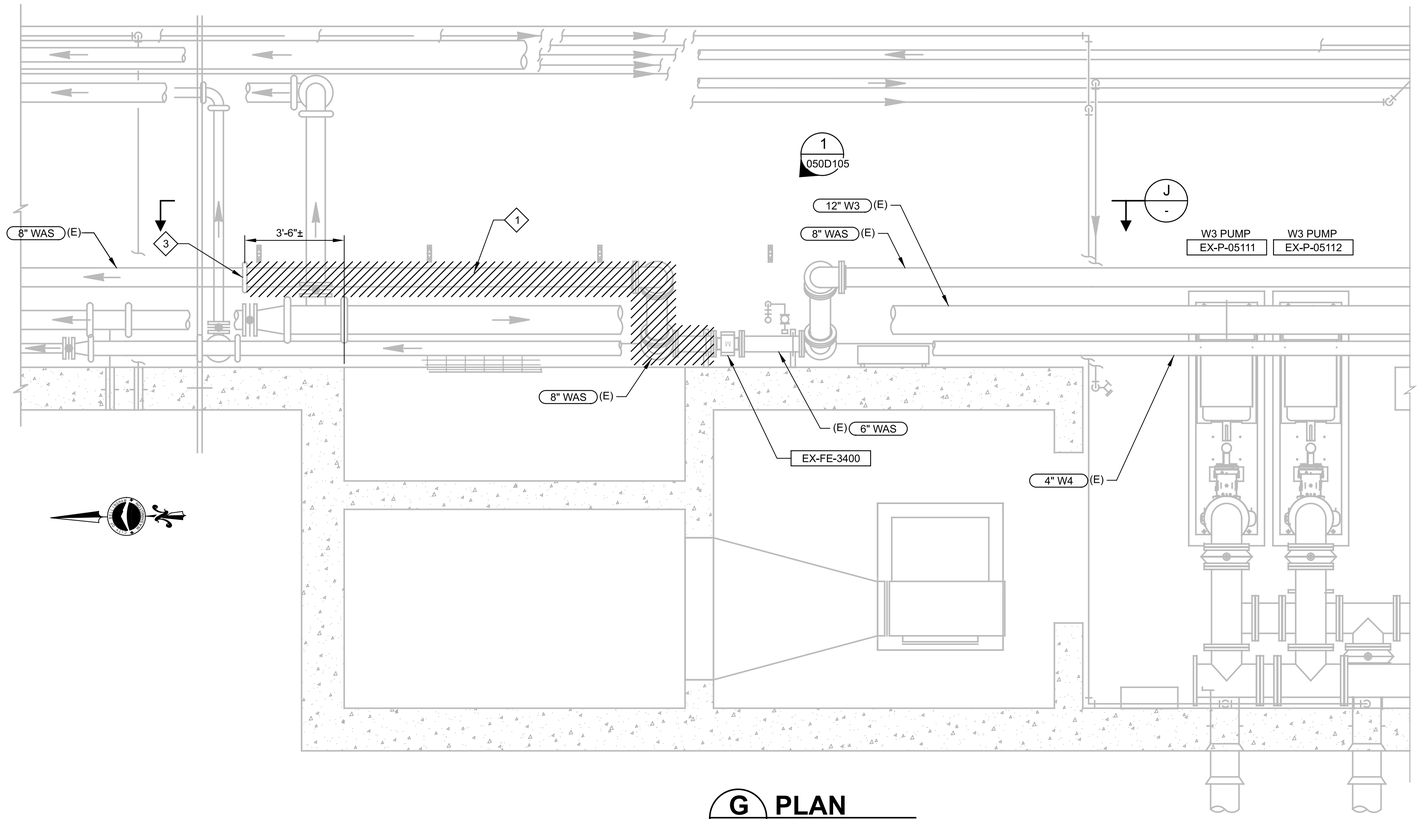

G PLAN

050D101 SCALE: 3/8" = 1'-0"
FILE: 8153A30050D9101

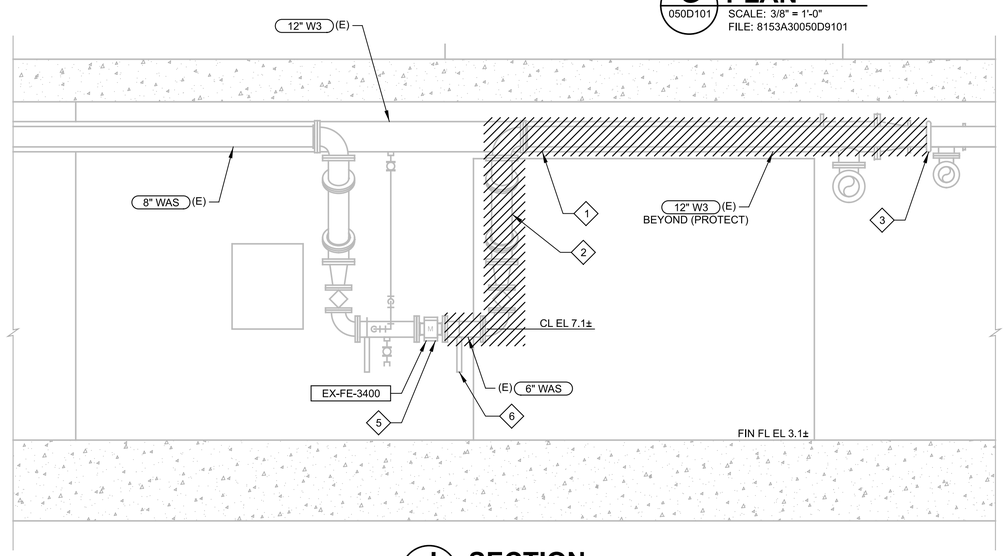

J SECTION

- SCALE: 3/8" = 1'-0"
FILE: 8153A30050D9301

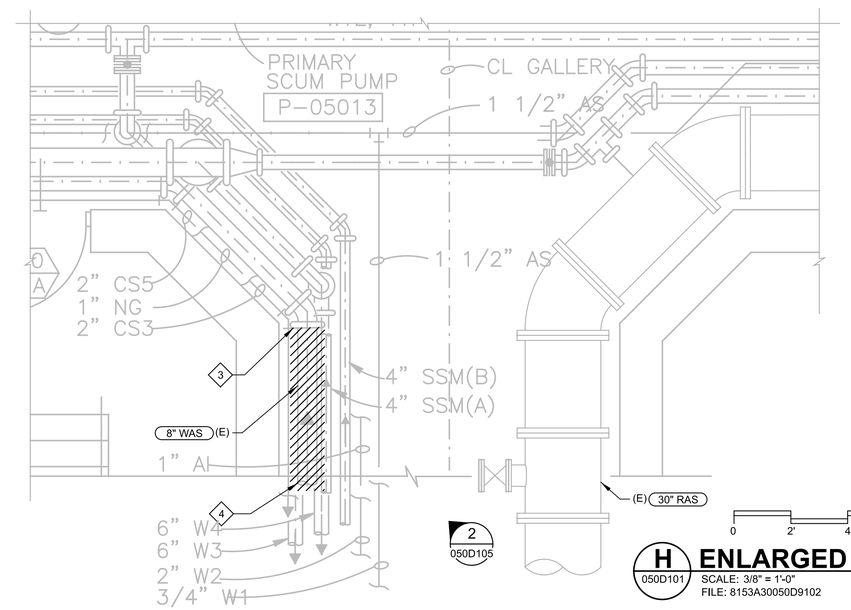

H ENLARGED PLAN

050D101 SCALE: 3/8" = 1'-0"
FILE: 8153A30050D9102

GENERAL NOTES

1. PROTECT ALL ITEMS BEING KEPT IN PLACE OR REMOVED AND SALVAGED DURING DEMOLITION. SALVAGE EQUIPMENT THAT HAS BEEN DAMAGED SHALL BE REPAIRED AT NO ADDITIONAL COST TO THE OWNER.
2. PERFORM ALL DEMOLITION AND SALVAGE EXISTING EQUIPMENT AS DIRECTED BY THE ENGINEER AND IN ACCORDANCE WITH SECTION 01_14_00.

KEY NOTES

1 REMOVE 8" DI WAS PIPING FROM FLOWMETER TO GROOVED END COUPLING.

2 SALVAGE AND RE-INSTALL FITTINGS AND VALVES IN NEW INSTALLATION AS APPROPRIATE.

3 SALVAGE AND RE-INSTALL GROOVED COUPLING, REPLACE COUPLING GASKET IN KIND.

4 REMOVE 8" DI WAS TO SECONDARY SLUDGE PUMP STATION. SEE SHEET 340D101 FOR CONTINUATION.

5 TEMPORARILY SUPPORT FLOWMETER PRIOR TO PIPE DEMO.

6 PROTECT AND RE-USE EXISTING PIPE SUPPORT.

carollo®

Date	No	Revision	By
	4		
	3		
	2		
	1		

PROJECT ENGINEER MSS
DESIGNED/DRAWN TW/HV
INSPECTOR CC

DIRECTOR PUBLIC WORKS
CITY ENGINEER
ASSISTANT DIRECTOR

CITY OF BELLINGHAM, WASHINGTON
PUBLIC WORKS DEPARTMENT
ENGINEERING DIVISION

SCALE
Horiz. AS SHOWN
Vert. AS SHOWN

DATUM
H: NAD 83/98
V: NAVD 88

Job. No. EU194
Date JAN 2026
Field Bk.

POST POINT RESOURCE RECOVERY PLANT
DEMOLITION
GALLERY PIPE DEMOLITION PLAN, ENLARGED PLAN AND SECTION 3

DRAWING NO. 050D104
SHEET NO. 15 OF 198

CONTACT PERSON: STEPHEN DAY, PE SE , PROJECT ENGINEER AT 360-778-7944

PROJECT NO. 202021-100000 FILE NAME: 202021050D104.dgn

Plot Date: 23-JAN-2026 1:24:34 PM
User: svcPW
Model: Layout1 ColorTable: gshade.ctb DesignScript: Carollo_Std_Pen_v0905.pen PlotScale: 1:1
LAST SAVED BY: lveloz

1 050D104 **PHOTO DETAIL**
SCALE: NO SCALE
FILE: 8153A30050D102A

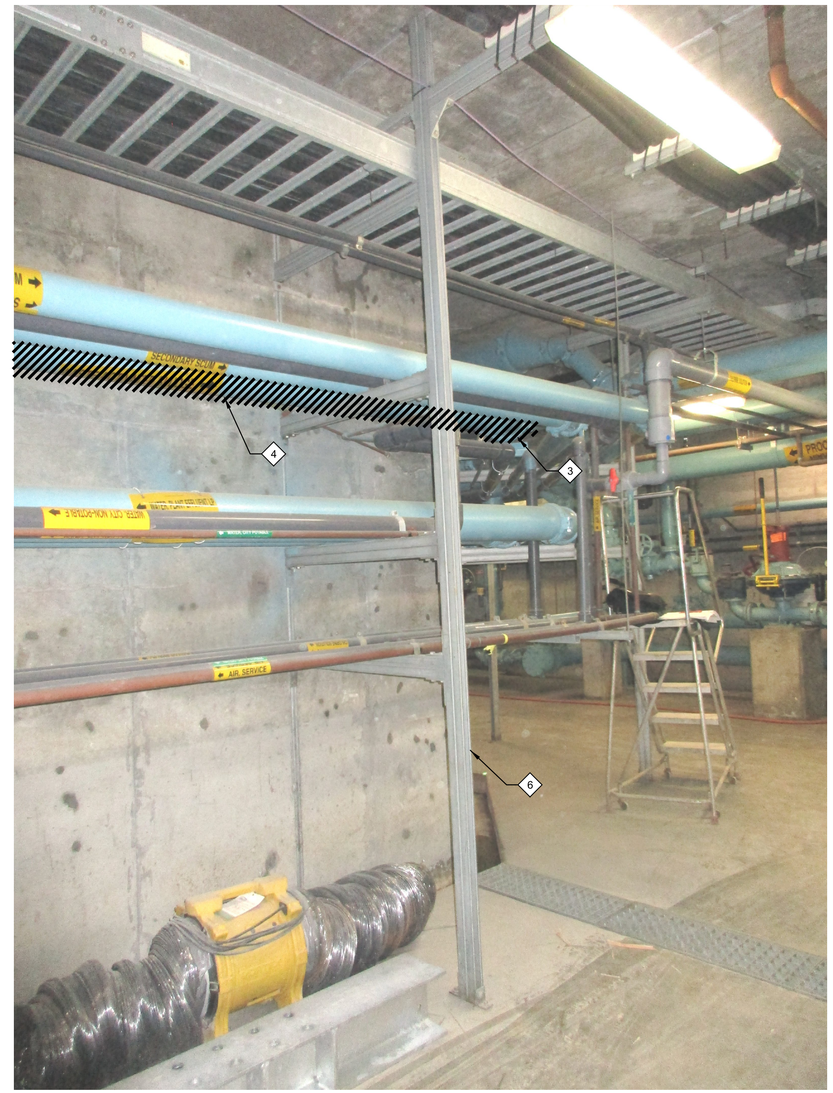

2 050D104 **PHOTO DETAIL**
SCALE: NO SCALE
FILE: 8153A30050D102B

GENERAL NOTES

1. PROTECT ALL ITEMS BEING KEPT IN PLACE OR REMOVED AND SALVAGED DURING DEMOLITION. SALVAGE EQUIPMENT THAT HAS BEEN DAMAGED SHALL BE REPAIRED AT NO ADDITIONAL COST TO THE OWNER.
2. PERFORM ALL DEMOLITION AND SALVAGE EXISTING EQUIPMENT AS DIRECTED BY THE ENGINEER AND IN ACCORDANCE WITH SECTION 01_14_00.

.

KEY NOTES

1 REMOVE 8" DI WAS PIPING FROM FLOWMETER TO GROOVED END COUPLING.

2 SALVAGE AND RE-INSTALL FITTINGS AND VALVES IN NEW INSTALLATION AS APPROPRIATE.

3 SALVAGE AND RE-INSTALL GROOVED COUPLING, REPLACE COUPLING GASKET IN KIND.

4 REMOVE 8" DI WAS TO SECONDARY SLUDGE PUMP STATION. SEE SHEET 340D101 FOR CONTINUATION.

5 TEMPORARILY SUPPORT FLOWMETER PRIOR TO PIPE DEMO.

6 PROTECT AND RE-USE EXISTING PIPE SUPPORT.

.

MATTHEW SCOTT SPRICK
STATE OF WASHINGTON
29659
REGISTERED
PROFESSIONAL ENGINEER

carollo®

Date	No	Revision	By
	4		
	3		
	2		
	1		

PROJECT ENGINEER MSS
DESIGNED/DRAWN TW/HV
INSPECTOR CC

DIRECTOR PUBLIC WORKS
CITY ENGINEER
ASSISTANT DIRECTOR

CITY OF BELLINGHAM, WASHINGTON
PUBLIC WORKS DEPARTMENT
ENGINEERING DIVISION

SCALE
Horiz. AS SHOWN
Vert. AS SHOWN

DATUM
H: NAD 83/98
V: NAVD 88

Job. No. EU194
Date JAN 2026
Field Bk.

POST POINT RESOURCE RECOVERY PLANT
DEMOLITION
GALLERY DEMOLITION PHOTOGRAPHS

DRAWING NO. 050D105
SHEET NO. 16 OF 198

CONTACT PERSON: STEPHEN DAY, PE SE , PROJECT ENGINEER AT 360-778-7944

PROJECT NO. 202021-100000 FILE NAME: 202021050D105.dgn

LAST SAVED BY: lveloz Model: Layout1 ColorTable: gshade.ctb DesignScript: Carollo_Std_Pen_v0905.pen PlotScale: 1:1 User: svcPW Plot Date: 13-JAN-2026 3:51:22 PM

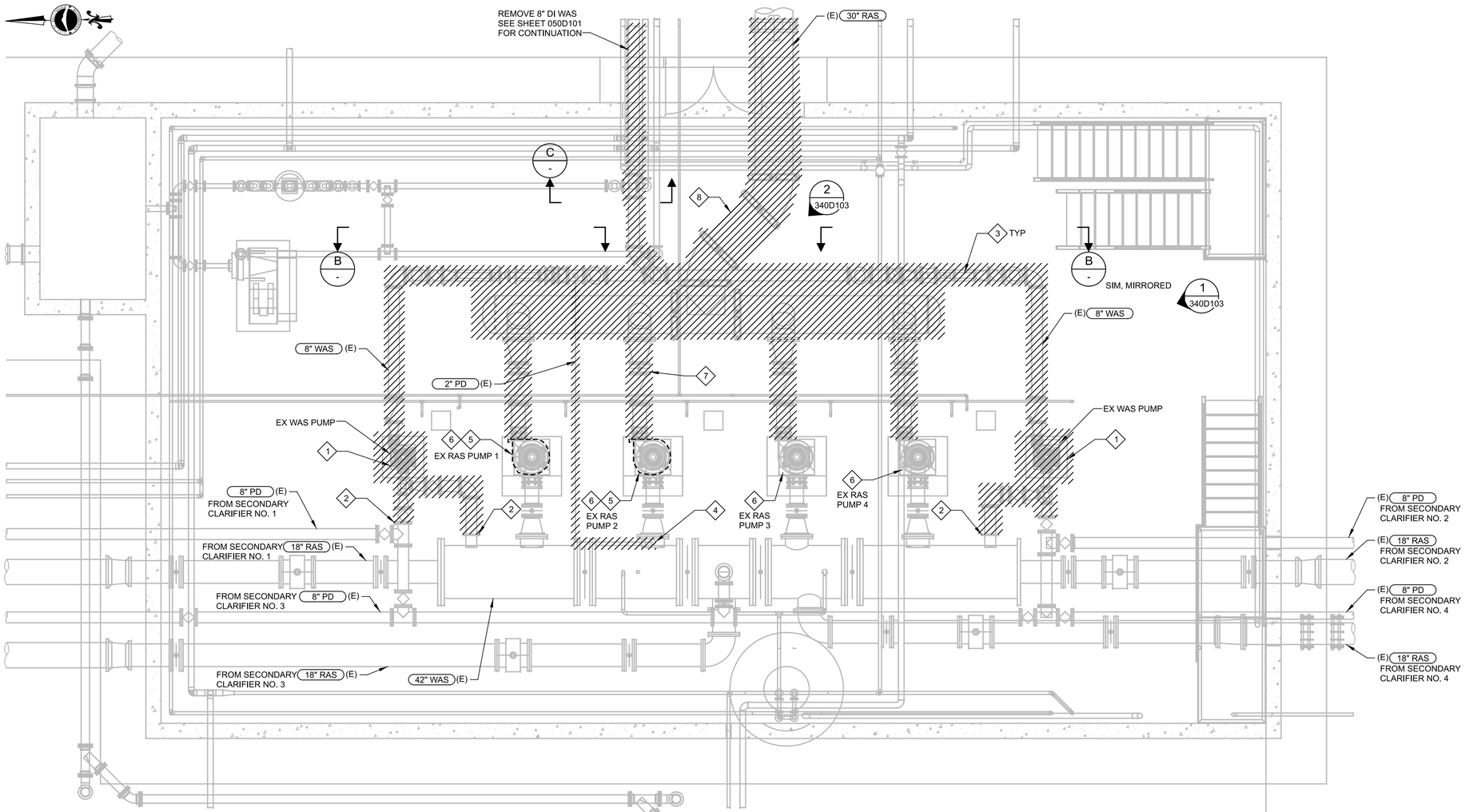

LOWER LEVEL PLAN

A PLAN
020D101
SCALE: 1/4" = 1'-0"
FILE: 8153A30340D9101
0 2' 4' 8'

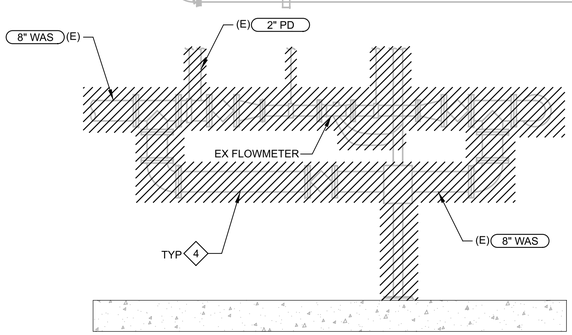

B SECTION
-
SCALE: 3/8" = 1'-0"
FILE: 8153A30340D9301
0 2' 4' 6'

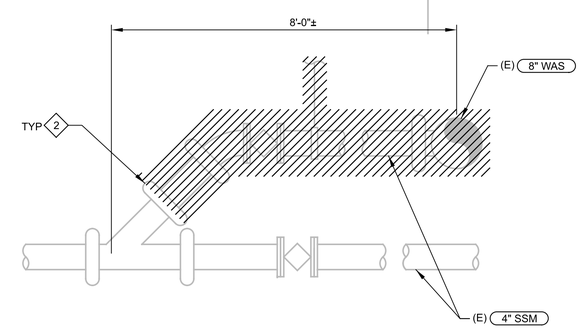

C SECTION
-
SCALE: 1" = 1'-0"
FILE: 8153A30340D9301
0 6" 1' 2'

GENERAL NOTES

1. WHERE EXISTING PIPE HANGER RODS, ANCHOR BOLTS, REBAR AND/OR CONDUITS TO BE DEMOLISHED ENTER SLAB, WALL OR CEILING AND ARE NOT TO BE RE-USED, GRIND AND REMOVE A MINIMUM OF ONE INCH BELOW FINISHED SURFACE AND FILL VOIDS WITH EPOXY GROUT TO PROVIDE SMOOTH SURFACE.

KEY NOTES

1 DEMOLISH EXISTING WAS PUMP AND EQUIPMENT PAD. DEMOLISH ASSOCIATED SOLENOID VALVE. REMOVE ALL ASSOCIATED POWER AND CONTROL CONDUCTORS BACK TO VFD. DEMOLISH ALL ASSOCIATED EXPOSED CONDUIT FOR PAD REMOVAL EXTENT AND CONC REPAIR, SEE SD820/TYP.

2 BLIND FLANGE EXISTING CONNECTION. PROVIDE FLANGE ADAPTER FOR GROOVED END PIPE AS REQUIRED.

3 DEMOLISH EXISTING 8" DI WAS PIPING, VALVES, HANGERS, SUPPORTS, FLOWMETERS, AND APPURTENANCES. DEMOLISH ALL ASSOCIATED FLOW METER EXPOSED CONDUIT AND ACCESSORIES.

4 CAP PROCESS DRAIN CONNECTION WITH 2" GALVANIZED STEEL SQUARE HEAD PLUG.

5 REMOVE AND SALVAGE COMPONENTS OF TWO EX RAS PUMPS (VOLUTE, ROTATING ASSEMBLY, AND BEARING FRAME ONLY). DISCONNECT AND PROTECT ALL OTHER PUMP PIPING AND COMPONENTS FOR REINSTALLATION. RAS PUMPS 1 & 2 ARE DEPICTED FOR REMOVAL, HOWEVER, CONTRACTOR MAY REMOVE ANY TWO PUMPS TO FACILITATE CONTRACTOR'S PREFERRED INSTALLATION AND SEQUENCING METHODS. DELIVER SALVAGED PUMP COMPONENTS TO OWNER.

6 SEE SECTION 01_14_00 FOR SEASONAL RAS PUMPING RESTRICTIONS. THREE (3) RAS PUMPS SHALL REMAIN ONLINE DURING RAS PUMP AND PIPING REPLACEMENT.

7 DEMOLISH RAS DISCHARGE PIPING, VALVES, COUPLINGS, AND PIPE SUPPORTS (TYP 4 PUMPS).

8 DEMOLISH RAS PIPING AND SUPPORTS.

carollo®

Date	No	Revision	By
	4		
	3		
	2		
	1		

PROJECT ENGINEER MSS
DESIGNED/DRAWN TW/HV
INSPECTOR CC

DIRECTOR PUBLIC WORKS
CITY ENGINEER
ASSISTANT DIRECTOR

CITY OF BELLINGHAM, WASHINGTON
PUBLIC WORKS DEPARTMENT
ENGINEERING DIVISION

SCALE
Horiz. AS SHOWN
Vert. AS SHOWN

DATUM
H: NAD 83/98
V: NAVD 88

Job. No. EU194
Date JAN 2026
Field Bk.

POST POINT RESOURCE RECOVERY PLANT
DEMOLITION
SECONDARY SLUDGE PUMP STATION DEMOLITION PLAN AND SECTION 1

DRAWING NO. 340D101
SHEET NO. 17 OF 198

CONTACT PERSON: STEPHEN DAY, PE SE , PROJECT ENGINEER AT 360-778-7944

PROJECT NO. 202021-100000 FILE NAME: 202021340D101.dgn

Model: Layout1 ColorTable: gshade.ctb DesignScript: Carollo_Std_Pen_v0905.pen PlotScale: 1:1 Plot Date: 13-JAN-2026 3:51:21 PM User: svcPW LAST SAVED BY: lveloz

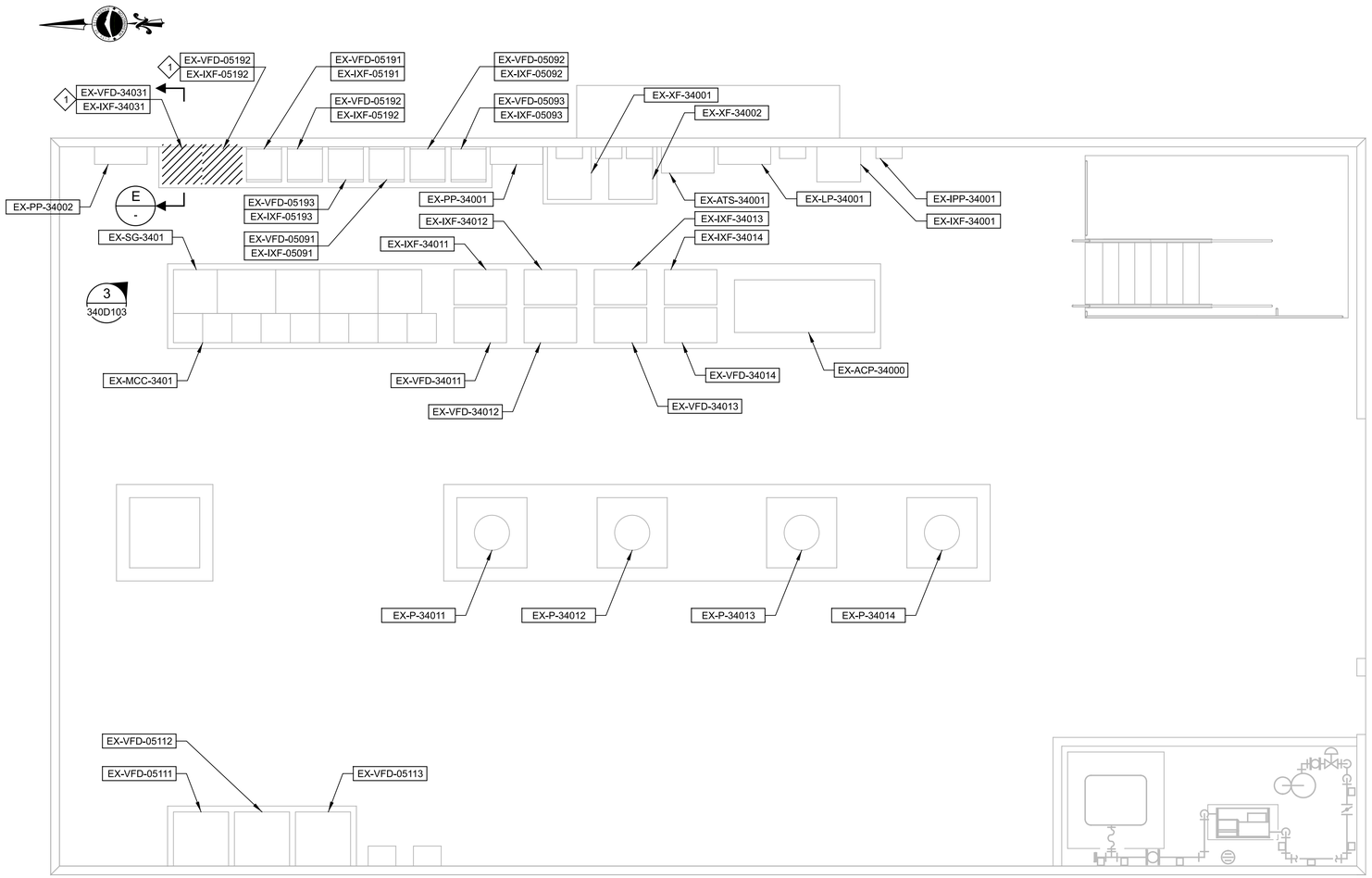

UPPER LEVEL PLAN

D PLAN

SCALE: 1/4" = 1'-0"
FILE: 8153A30340D902

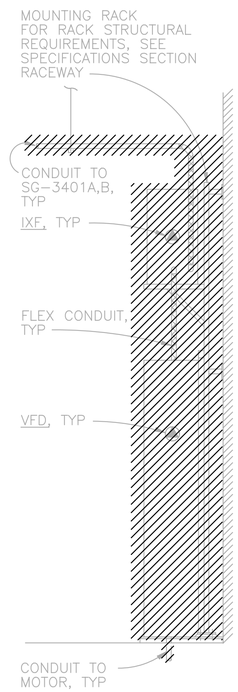

E - SECTION

SCALE: NO SCALE
FILE: 8153A30340D302

GENERAL NOTES

1. WHERE EXISTING PIPE HANGER RODS, ANCHOR BOLTS, REBAR AND/OR CONDUITS TO BE DEMOLISHED ENTER SLAB, WALL OR CEILING AND ARE NOT TO BE RE-USED, GRIND AND REMOVE A MINIMUM OF ONE INCH BELOW FINISHED SURFACE AND FILL VOIDS WITH EPOXY GROUT TO PROVIDE SMOOTH SURFACE.

KEY NOTES

1 DEMOLISH EXISTING WAS PUMP VFD AND ISOLATION TRANSFORMER, REMOVE ALL POWER CONDUCTORS ASSOCIATED WITH THE VFD AND DEMOLISH ALL EXPOSED CONDUIT BETWEEN VFD, ISOLATION TRANSFORMER, AND SWITCHGEAR SG-3401. REMOVE ALL DISCRETE AND ANALOG CONTROL CONDUCTORS ASSOCIATED WITH THE VFD AND DEMOLISH ALL EXPOSED DISCRETE AND ANALOG CONTROL CONDUITS FROM THE VFD TO ACP-34000.

carollo®

Date	No	Revision	By
	4		
	3		
	2		
	1		

PROJECT ENGINEER MSS
DESIGNED/DRAWN TT/HV
INSPECTOR CH

DIRECTOR PUBLIC WORKS
CITY ENGINEER
ASSISTANT DIRECTOR

CITY OF BELLINGHAM, WASHINGTON
PUBLIC WORKS DEPARTMENT
ENGINEERING DIVISION

SCALE
Horiz. AS SHOWN
Vert. AS SHOWN

DATUM
H: NAD 83/98
V: NAVD 88

Job. No. EU194
Date JAN 2026
Field Bk.

POST POINT RESOURCE RECOVERY PLANT
DEMOLITION
SECONDARY SLUDGE PUMP STATION DEMOLITION PLAN AND SECTION 2

DRAWING NO. 340D102
SHEET NO. 18 OF 198

CONTACT PERSON: STEPHEN DAY, PE SE , PROJECT ENGINEER AT 360-778-7944

PROJECT NO. 202021-100000 FILE NAME: 202021340D102.dgn

Model: Layout1 ColorTable: gshade.ctb DesignScript: Carollo_Std_Pen_v0905.pen PlotScale: 1:1 Plot Date: 13-JAN-2026 3:51:38 PM User: svcPW LAST SAVED BY: lveloz

1 PHOTO DETAIL
340D101 SCALE: NO SCALE
FILE: 8153A30340D103A

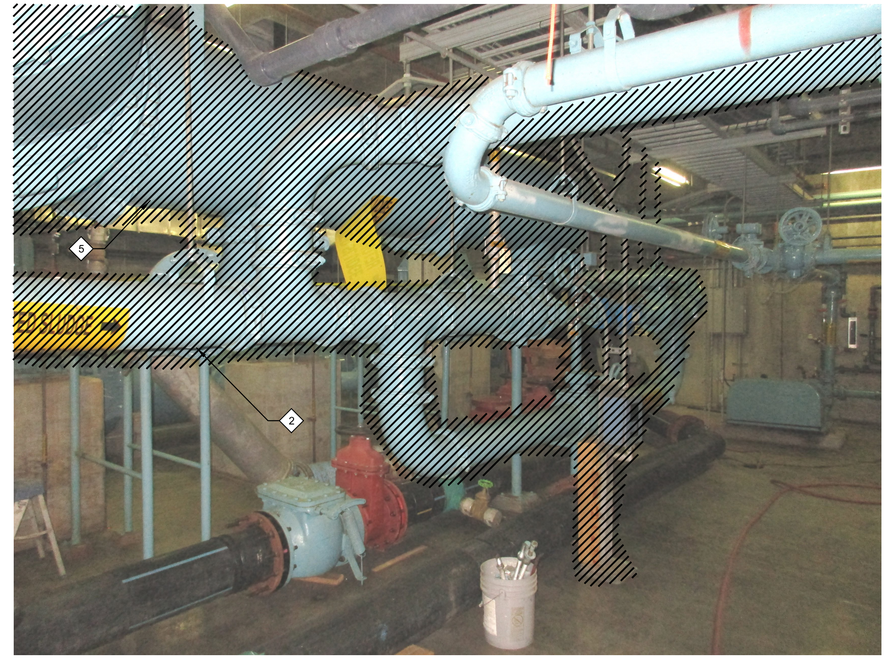

2 PHOTO DETAIL
340D101 SCALE: NO SCALE
FILE: 8153A30340D103A

3 PHOTO DETAIL
340D101 SCALE: NO SCALE
FILE: 8153A30340D103A

GENERAL NOTES

1. WHERE EXISTING PIPE HANGER RODS, ANCHOR BOLTS, REBAR AND/OR CONDUITS TO BE DEMOLISHED ENTER SLAB, WALL OR CEILING AND ARE NOT TO BE RE-USED, GRIND AND REMOVE A MINIMUM OF ONE INCH BELOW FINISHED SURFACE AND FILL VOIDS WITH EPOXY GROUT TO PROVIDE SMOOTH SURFACE.

.

KEY NOTES

1 DEMOLISH EXISTING WAS PUMP AND EQUIPMENT PAD. DEMOLISH ASSOCIATED SOLENOID VALVE. REMOVE ALL ASSOCIATED POWER AND CONTROL CONDUCTORS BACK TO VFD. DEMOLISH ALL ASSOCIATED EXPOSED CONDUIT FOR PAD REMOVAL EXTENT AND CONC REPAIR, SEE SD820/TYP.

2 DEMOLISH EXISTING 8" DI WAS PIPING, VALVES, HANGERS, SUPPORTS, FLOWMETERS, AND APPURTENANCES. DEMOLISH ALL ASSOCIATED FLOW METER EXPOSED CONDUIT AND ACCESSORIES.

3 DEMOLISH EXISTING WAS PUMP VFD AND ISOLATION TRANSFORMER, REMOVE ALL POWER CONDUCTORS ASSOCIATED WITH THE VFD AND DEMOLISH ALL EXPOSED CONDUIT BETWEEN VFD, ISOLATION TRANSFORMER, AND SWITCHGEAR SG-3401. REMOVE ALL DISCRETE AND ANALOG CONTROL CONDUCTORS ASSOCIATED WITH THE VFD AND DEMOLISH ALL EXPOSED DISCRETE AND ANALOG CONTROL CONDUITS FROM THE VFD TO ACP-34000.

4 DEMOLISH RAS DISCHARGE PIPING, VALVES, COUPLINGS, AND PIPE SUPPORTS (TYP 4 PUMPS).

5 DEMOLISH RAS PIPING AND SUPPORTS.

carollo®

Date	No	Revision	By
	4		
	3		
	2		
	1		

PROJECT ENGINEER MSS
DESIGNED/DRAWN TW/HV
INSPECTOR CC

DIRECTOR PUBLIC WORKS
CITY ENGINEER
ASSISTANT DIRECTOR

CITY OF BELLINGHAM, WASHINGTON
PUBLIC WORKS DEPARTMENT
ENGINEERING DIVISION

SCALE
Horiz. AS SHOWN
Vert. AS SHOWN

DATUM
H: NAD 83/98
V: NAVD 88

Job. No. EU194
Date JAN 2026
Field Bk.

POST POINT RESOURCE RECOVERY PLANT
DEMOLITION
SECONDARY SLUDGE PUMP STATION DEMOLITION PHOTOGRAPHS

DRAWING NO. 340D103
SHEET NO. 19 OF 198

CONTACT PERSON: STEPHEN DAY, PE SE , PROJECT ENGINEER AT 360-778-7944

PROJECT NO. 202021-100000 FILE NAME: 202021340D103.dgn

Plot Date: 13-JAN-2026 3:51:49 PM User: svcPW
Model: Layout1 ColorTable: gshade.ctb DesignScript: Carollo_Std_Pen_v0905.pen PlotScale: 1:1
LAST SAVED BY: Iveloz

Plot Date: 23-JAN-2026 1:24:53 PM
User: svcPW
Model: Layout1 ColorTable: gshade.ctb DesignScript: Carollo_Std_Pen_v0905.pen PlotScale: 1:1
LAST SAVED BY: Ivelez

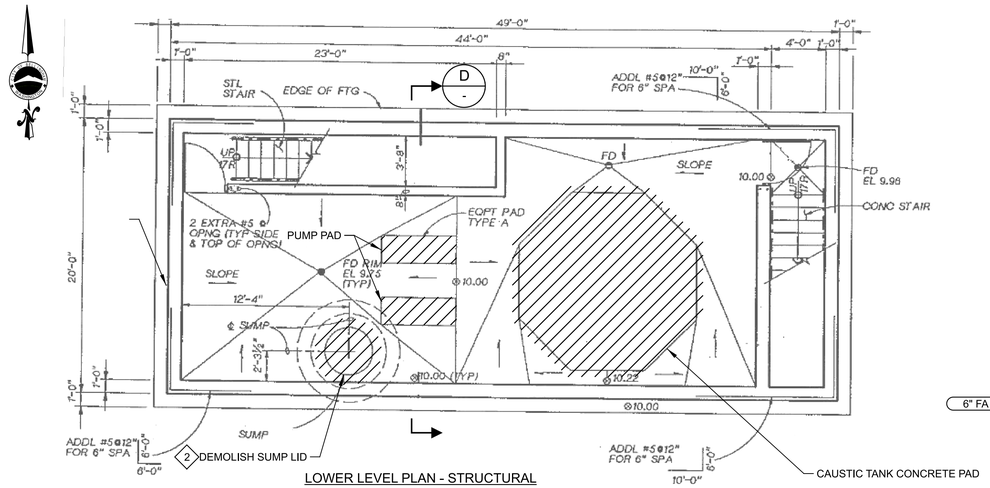

LOWER LEVEL PLAN - STRUCTURAL

A PLAN

SCALE: NO SCALE
FILE: 1992 420-CHLORINE BUILDING MODIFICATIONS 5(420D101).jpg

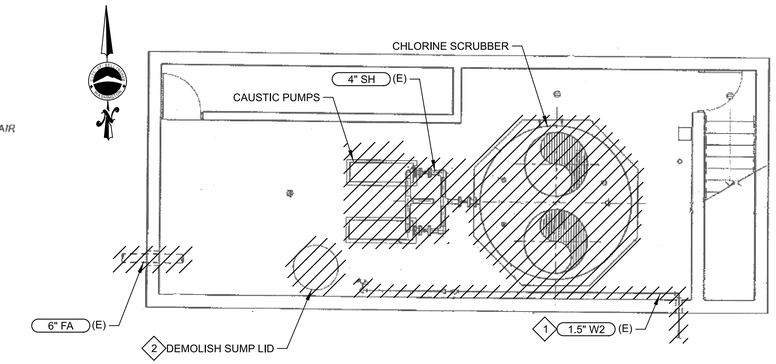

LOWER LEVEL PLAN - PROCESS

B PLAN

SCALE: NO SCALE
FILE: 1992 420-CHLORINE BUILDING MODIFICATIONS 7(420D101).jpg

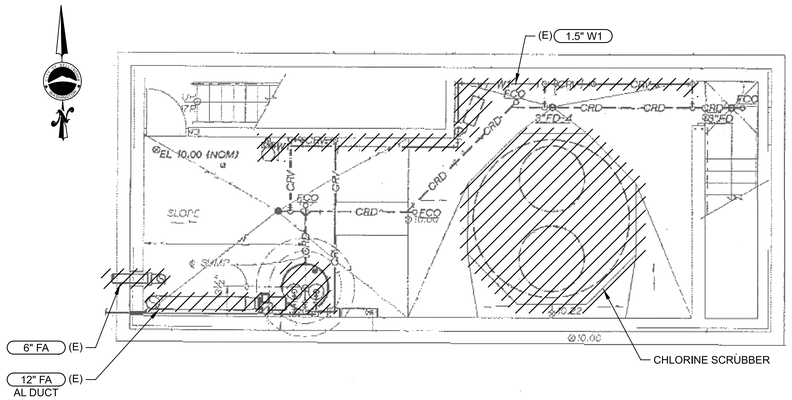

LOWER LEVEL PLAN - BUILDING MECHANICAL

C PLAN

SCALE: NO SCALE
FILE: 1992 420-CHLORINE BUILDING MODIFICATIONS 9(420D101).jpg

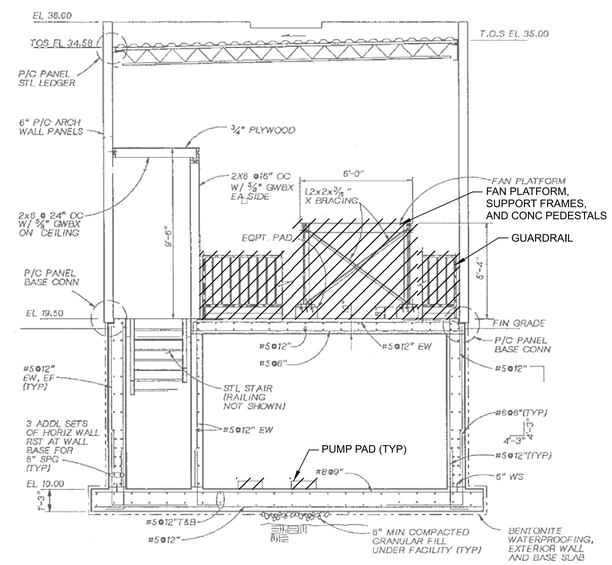

STRUCTURAL SECTION

D SECTION

SCALE: NO SCALE
FILE: FILE

GENERAL NOTES:

1. REFER TO SPECIFICATION SECTION 01_14_00 AND 01_35_21 FOR WORK RESTRICTIONS, CONSTRAINTS, SELECTIVE DEMOLITION AND SALVAGING INSTRUCTIONS.
2. DRAWING INFORMATION IS BASED ON THE 1992 RECORD DRAWINGS. ACTUAL CONDITIONS MAY DIFFER. FIELD VERIFY LOCATIONS, ELEVATIONS, AND SIZES OF EXISTING ITEMS WITHIN BUILDING.
3. WHERE EQUIPMENT IS CALLED OUT TO BE DEMOLISHED, DEMOLISH ALL ASSOCIATED SUPPORTS, CONDUIT, DUCT, PIPING, GROUT PADS, AND CONCRETE EQUIPMENT PADS. GRIND CONCRETE/GROUT PADS DOWN TO EXISTING FINISH FLOOR ELEVATION AND PATCH PER SD810/TYP AND SD820/TYP.
4. WHERE PIPING IS TO BE DEMOLISHED, DEMOLISH ALL ASSOCIATED SUPPORTS, VALVES, AND INSTRUMENTS. CAP OR BLIND FLANGE CONNECTIONS AT DEMOLITION LIMITS.
5. WHERE CONDUIT IS TO BE DEMOLISHED, DEMOLISH ALL ASSOCIATED SUPPORTS. CAP CONDUIT THAT PENETRATES WALL OR SLAB.
6. REPAIR CONCRETE, PIPING, EQUIPMENT, INSTRUMENTS, CONDUITS AND WIRING DAMAGED DURING CONSTRUCTION ACTIVITIES.
7. DEMOLISH ALL LIGHTING, RECEPTACLES, ASSOCIATED CONDUIT AND WIRING.
8. DEMOLISH ALL CONDUIT AND WIRING ASSOCIATED WITH EXISTING MECHANICAL AND HVAC EQUIPMENT.
9. CUT-OFF EXPOSED REINFORCING BARS, ANCHORS, AND/OR METALS 1" DEEP INTO CONCRETE AND FILL WITH EPOXY.
10. WHERE SLAB AND/OR WALL PENETRATIONS OCCUR AFTER DEMOLITION WORK, FILL OPENINGS WITH EPOXY GROUT, UNLESS NOTED OTHERWISE.

KEY NOTES:

1. DEMOLISH EXISTING 1-1/2 INCH AND 1 INCH W2 PIPING THROUGH WALL AND INTO YARD.
2. DEMOLISH EXISTING SUMP PUMP SUMP LID AND REPLACE WITH NEW LID THAT ACCOMMODATES NEW PIPING AND PUMPS.

carollo®

Date	No	Revision	By
	4		
	3		
	2		
	1		

PROJECT ENGINEER MSS
DESIGNED/DRAWN NJ/HV
INSPECTOR CC

DIRECTOR PUBLIC WORKS
CITY ENGINEER
ASSISTANT DIRECTOR

CITY OF BELLINGHAM, WASHINGTON
PUBLIC WORKS DEPARTMENT
ENGINEERING DIVISION

SCALE
Horiz. AS SHOWN
Vert. AS SHOWN

DATUM
H: NAD 83/98
V: NAVD 88

Job. No. EU194
Date JAN 2026
Field Bk.

POST POINT RESOURCE RECOVERY PLANT
DEMOLITION
SCRUBBER BUILDING DEMOLITION LOWER LEVEL PLANS AND SECTION

DRAWING NO. 420D101
SHEET NO. 20 OF 198

CONTACT PERSON: STEPHEN DAY, PE SE , PROJECT ENGINEER AT 360-778-7944

PROJECT NO. 202021-100000 FILE NAME: 202021420D101.dgn

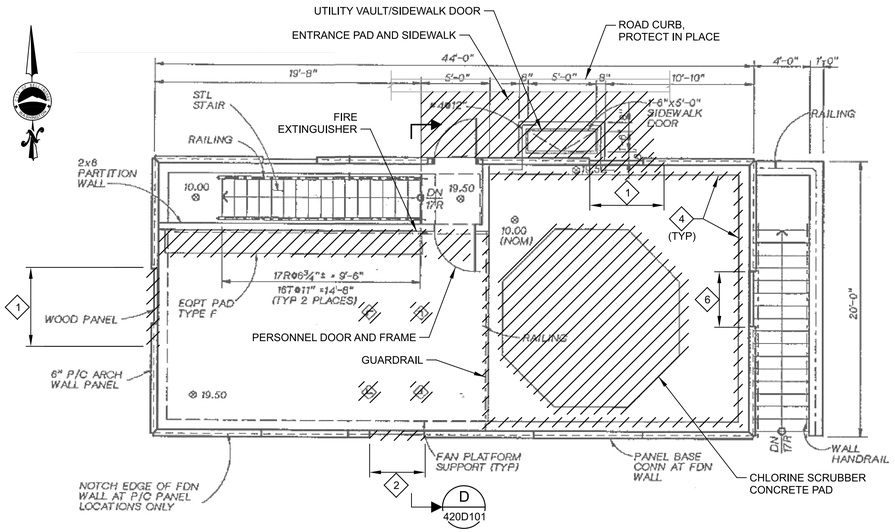

GROUND LEVEL PLAN - STRUCTURAL

E PLAN

SCALE: NO SCALE
FILE: 1992 420-CHLORINE BUILDING MODIFICATIONS 5(420D101)

GENERAL NOTES:

1. REFER TO SPECIFICATION SECTION 01_14_00 AND 01_35_21 FOR WORK RESTRICTIONS, CONSTRAINTS, SELECTIVE DEMOLITION AND SALVAGING INSTRUCTIONS.
2. DRAWING INFORMATION IS BASED ON THE 1992 RECORD DRAWINGS. ACTUAL CONDITIONS MAY DIFFER. FIELD VERIFY LOCATIONS, ELEVATIONS, AND SIZES OF EXISTING ITEMS WITHIN BUILDING.
3. WHERE EQUIPMENT IS CALLED OUT TO BE DEMOLISHED, DEMOLISH ALL ASSOCIATED SUPPORTS, CONDUIT, DUCT, PIPING, GROUT PADS, AND CONCRETE EQUIPMENT PADS. GRIND CONCRETE/GROUT PADS DOWN TO EXISTING FINISH FLOOR ELEVATION AND PATCH PER SD810/TYP AND SD820/TYP.
4. WHERE PIPING IS TO BE DEMOLISHED, DEMOLISH ALL ASSOCIATED SUPPORTS, VALVES, AND INSTRUMENTS. CAP OR BLIND FLANGE CONNECTIONS AT DEMOLITION LIMITS.
5. WHERE CONDUIT IS TO BE DEMOLISHED, DEMOLISH ALL ASSOCIATED SUPPORTS. CAP CONDUIT THAT PENETRATES WALL OR SLAB.
6. REPAIR CONCRETE, PIPING, EQUIPMENT, INSTRUMENTS, CONDUITS AND WIRING DAMAGED DURING CONSTRUCTION ACTIVITIES.
7. DEMOLISH ALL LIGHTING, RECEPTACLES, ASSOCIATED CONDUIT AND WIRING.
8. DEMOLISH ALL CONDUIT AND WIRING ASSOCIATED WITH EXISTING MECHANICAL AND HVAC EQUIPMENT.
9. CUT-OFF EXPOSED REINFORCING BARS, ANCHORS, AND/OR METALS 1" DEEP INTO CONCRETE AND FILL WITH EPOXY.
10. WHERE SLAB AND/OR WALL PENETRATIONS OCCUR AFTER DEMOLITION WORK, FILL OPENINGS WITH EPOXY GROUT, UNLESS NOTED OTHERWISE.

KEY NOTES:

1. DEMOLISH WOOD PANEL AND CONCRETE WALL AS REQUIRED FOR NEW DOOR.
2. DEMOLISH WOOD PANEL AS REQUIRED FOR NEW DOOR.
3. DEMOLISH VERTICAL DUCT AND SEAL ROOF OPENING PER DETAIL 11/420S106.
4. DEMOLISH TOP INSIDE CORNER OF EXISTING BASEMENT WALLS TO PROVIDE REBATE FOR NEW CONCRETE SLAB.
5. SEAL EXISTING ROOF PENETRATIONS PER SN638/TYP. PROVIDE ROOFING MATCHING TO EXISTING.
6. DEMOLISH EXISTING WOOD PANEL AS REQUIRED FOR NEW LOUVER.

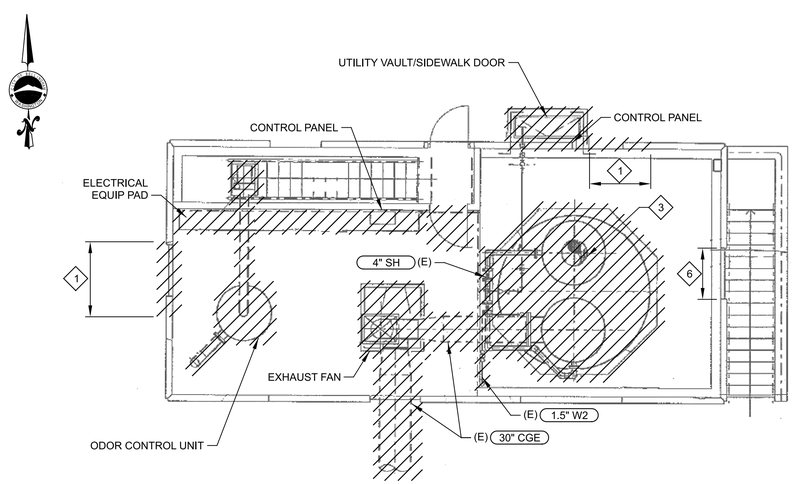

GROUND LEVEL PLAN - PROCESS

F PLAN

SCALE: NO SCALE
FILE: 1992 420-CHLORINE BUILDING MODIFICATIONS 7(420D101)

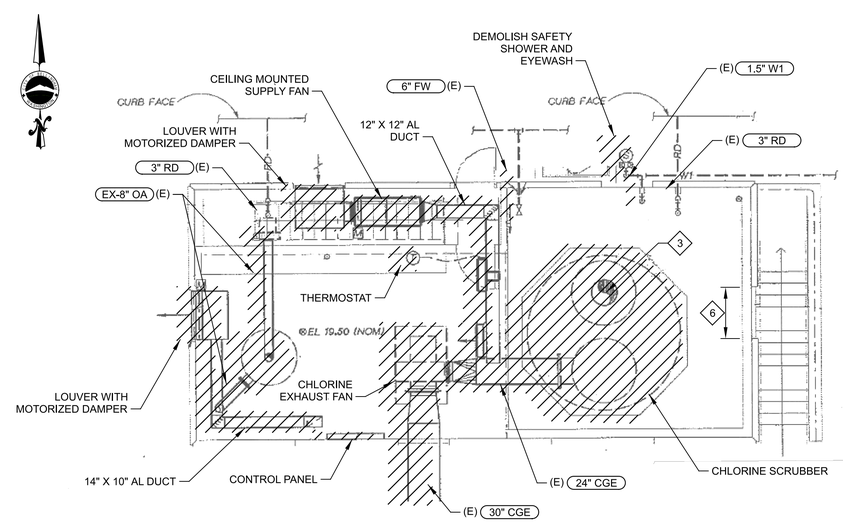

GROUND LEVEL PLAN - BUILDING MECHANICAL

G PLAN

SCALE: NO SCALE
FILE: 1992 420-CHLORINE BUILDING MODIFICATIONS 10(420D102)

carollo®

Date	No	Revision	By
	4		
	3		
	2		
	1		

PROJECT ENGINEER MSS
DESIGNED/DRAWN NJ/HV
INSPECTOR CC

DIRECTOR PUBLIC WORKS
CITY ENGINEER
ASSISTANT DIRECTOR

CITY OF BELLINGHAM, WASHINGTON
PUBLIC WORKS DEPARTMENT
ENGINEERING DIVISION

SCALE
Horiz. AS SHOWN
Vert. AS SHOWN

DATUM
H: NAD 83/98
V: NAVD 88

Job. No. EU194
Date JAN 2026
Field Bk.

POST POINT RESOURCE RECOVERY PLANT
DEMOLITION
SCRUBBER BUILDING DEMOLITION GROUND LEVEL PLANS

DRAWING NO. 420D102
SHEET NO. 21 OF 198

CONTACT PERSON: STEPHEN DAY, PE SE , PROJECT ENGINEER AT 360-778-7944

PROJECT NO. 202021-100000 FILE NAME: 202021420D102.dgn

Plot Date: 13-JAN-2026 3:50:39 PM
User: svcPW
Model: Layout1 ColorTable: gshade.ctb DesignScript: Carollo_Std_Pen_v0905.pen PlotScale: 1:1
LAST SAVED BY: lveloz

Plot Date: 13-JAN-2026 3:50:26 PM
User: svcPW
Model: Layout1 ColorTable: gshade.ctb DesignScript: Carollo_Std_Pen_v0905.pen PlotScale: 1:1
LAST SAVED BY: lveloz

GENERAL NOTES:

1. REFER TO SPECIFICATION SECTION 01_14_00 AND 01_35_21 FOR WORK RESTRICTIONS, CONSTRAINTS, SELECTIVE DEMOLITION AND SALVAGING INSTRUCTIONS.
2. DRAWING INFORMATION IS BASED ON THE 1992 RECORD DRAWINGS. ACTUAL CONDITIONS MAY DIFFER. FIELD VERIFY LOCATIONS, ELEVATIONS, AND SIZES OF EXISTING ITEMS WITHIN BUILDING.
3. WHERE EQUIPMENT IS CALLED OUT TO BE DEMOLISHED, DEMOLISH ALL ASSOCIATED SUPPORTS, CONDUIT, DUCT, PIPING, GROUT PADS, AND CONCRETE EQUIPMENT PADS. GRIND CONCRETE/GROUT PADS DOWN TO EXISTING FINISH FLOOR ELEVATION AND PATCH PER SD810/TYP AND SD820/TYP.
4. WHERE PIPING IS TO BE DEMOLISHED, DEMOLISH ALL ASSOCIATED SUPPORTS, VALVES, AND INSTRUMENTS. CAP OR BLIND FLANGE CONNECTIONS AT DEMOLITION LIMITS.
5. WHERE CONDUIT IS TO BE DEMOLISHED, DEMOLISH ALL ASSOCIATED SUPPORTS. CAP CONDUIT THAT PENETRATES WALL OR SLAB.
6. REPAIR CONCRETE, PIPING, EQUIPMENT, INSTRUMENTS, CONDUITS AND WIRING DAMAGED DURING CONSTRUCTION ACTIVITIES.
7. DEMOLISH ALL LIGHTING, RECEPTACLES, ASSOCIATED CONDUIT AND WIRING.
8. DEMOLISH ALL CONDUIT AND WIRING ASSOCIATED WITH EXISTING MECHANICAL AND HVAC EQUIPMENT.

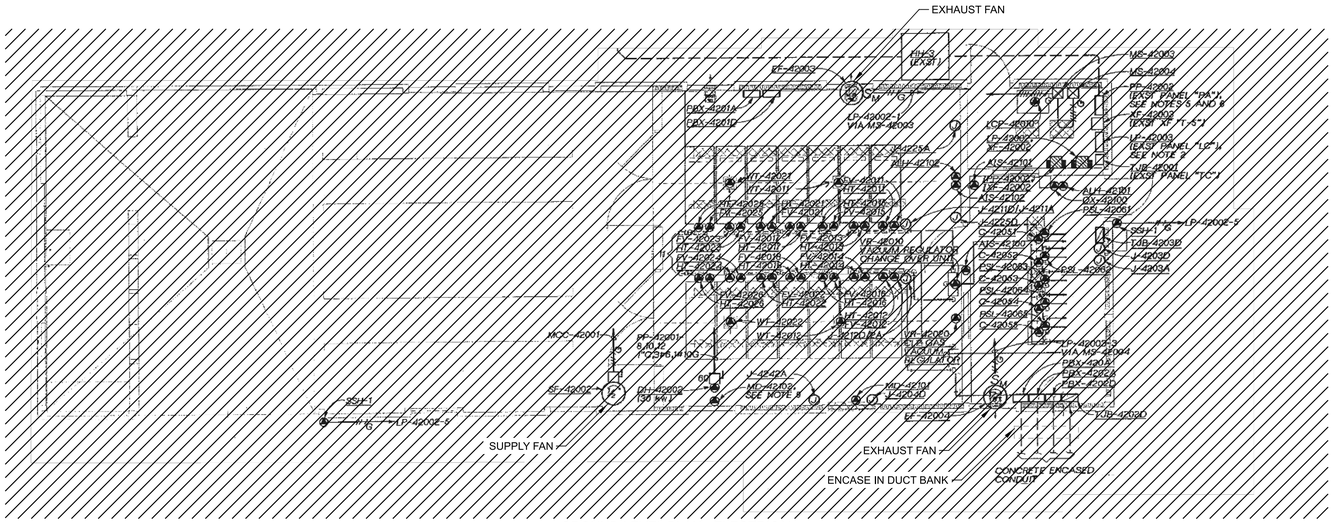

GROUND LEVEL PLAN - ELECTRICAL

H - PLAN

SCALE: NO SCALE
FILE: 1992 910-ELECTRICAL -E-51-109 6 (420D103)

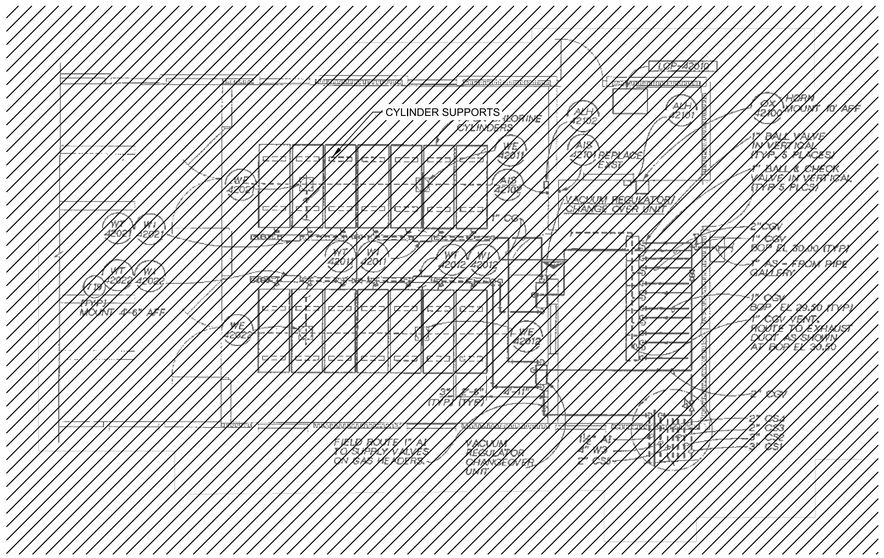

GROUND LEVEL PLAN - PROCESS

J - PLAN

SCALE: NO SCALE
FILE: 1992 420-CHLORINE BUILDING MODIFICATIONS 7(420D101)

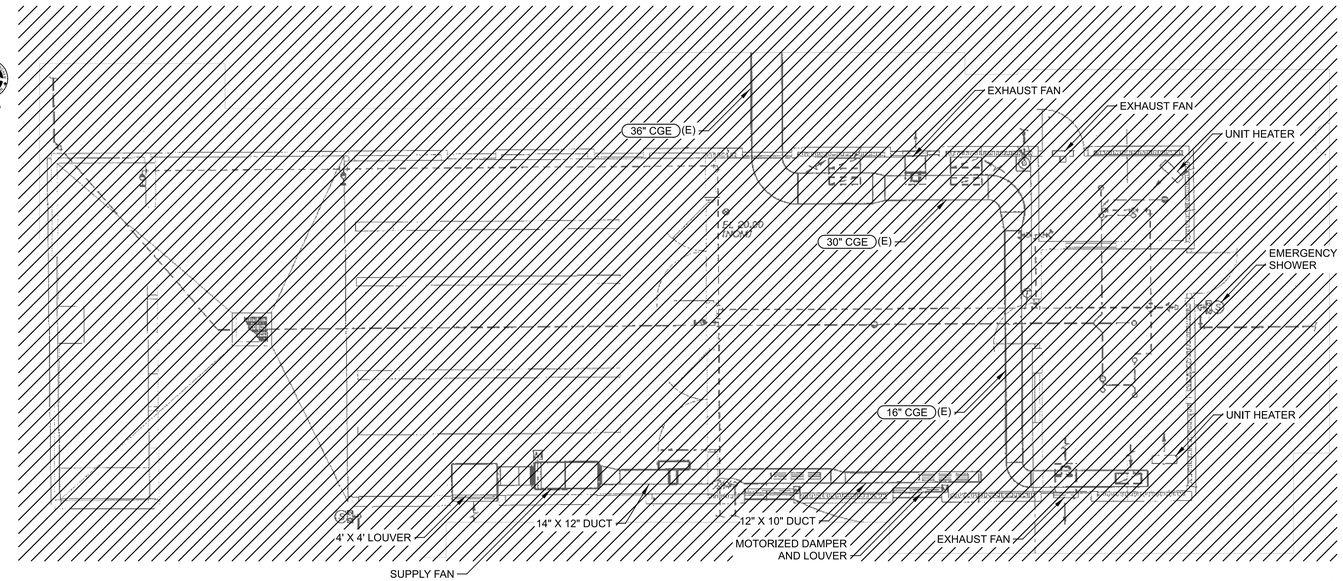

GROUND LEVEL PLAN - BUILDING MECHANICAL

K - PLAN

SCALE: NO SCALE
FILE: 1992 420-CHLORINE BUILDING MODIFICATIONS 10(420D102)

carollo®

Date	No	Revision	By
	4		
	3		
	2		
	1		

PROJECT ENGINEER MSS
DESIGNED/DRAWN NJ/HV
INSPECTOR CC

DIRECTOR PUBLIC WORKS
CITY ENGINEER
ASSISTANT DIRECTOR

CITY OF BELLINGHAM, WASHINGTON
PUBLIC WORKS DEPARTMENT
ENGINEERING DIVISION

SCALE
Horiz. AS SHOWN
Vert. AS SHOWN

DATUM
H: NAD 83/98
V: NAVD 88

Job. No. EU194
Date JAN 2026
Field Bk.

POST POINT RESOURCE RECOVERY PLANT
DEMOLITION
CHLORINE BUILDING DEMOLITION PLANS

DRAWING NO. 420D103
SHEET NO. 22 OF 198

CONTACT PERSON: STEPHEN DAY, PE SE , PROJECT ENGINEER AT 360-778-7944

PROJECT NO. 202021-100000 FILE NAME: 202021420D103.dgn

Model: Layout1 ColorTable: gshade.ctb DesignScript: Carollo_Std_Pen_v0905.pen PlotScale: 1:1
LAST SAVED BY: lveloz
User: svcPW
Plot Date: 13-JAN-2026 3:51:07 PM

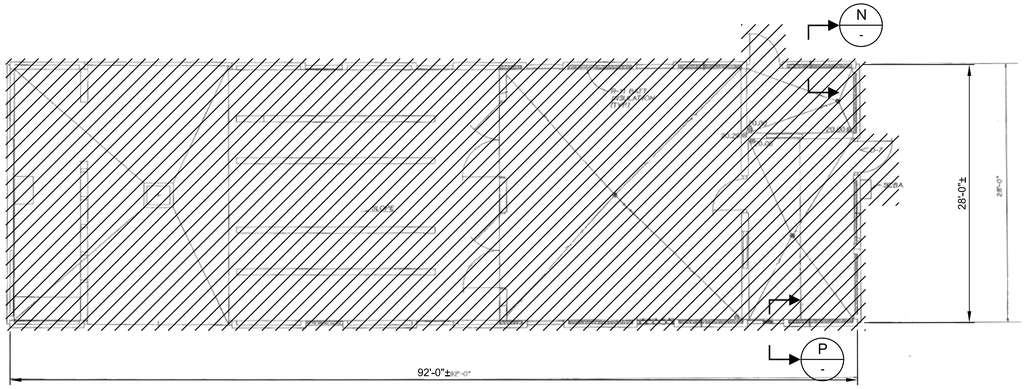

CHLORINE BUILDING - FLOOR PLAN

L - PLAN
SCALE: NO SCALE
FILE:

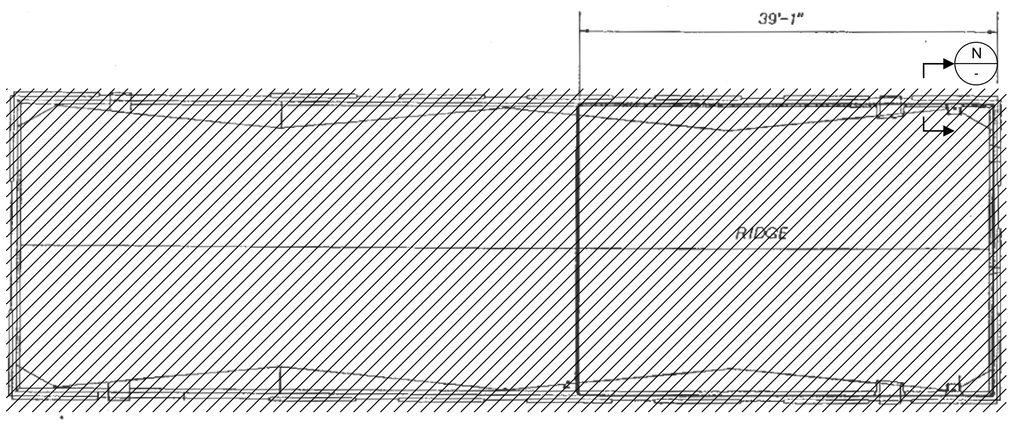

CHLORINE BUILDING - ROOF PLAN

M - PLAN
SCALE: NO SCALE
FILE:

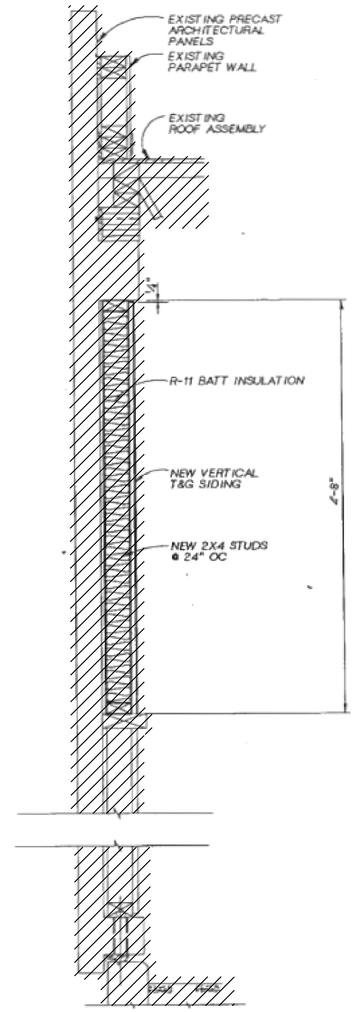

CHLORINE BUILDING - WALL SECTION - TYPICAL

N - SECTION
SCALE: NO SCALE
FILE: FILE

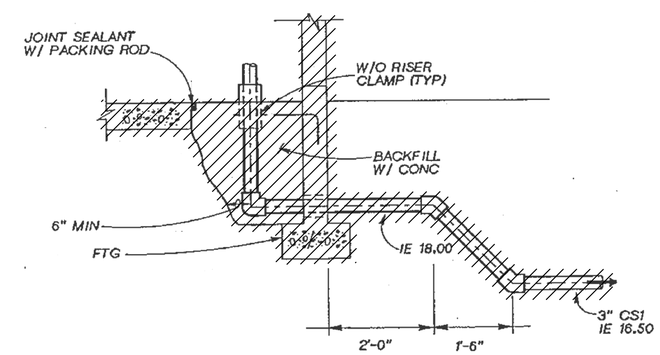

CHLORINE BUILDING - FOOTING SECTION - TYPICAL

P - SECTION
SCALE: NO SCALE
FILE: FILE

GENERAL NOTES:

1. REFER TO SPECIFICATION SECTION 01_14_00 AND 01_35_21 FOR WORK RESTRICTIONS, CONSTRAINTS, SELECTIVE DEMOLITION AND SALVAGING INSTRUCTIONS.
2. DRAWING INFORMATION IS BASED ON THE 1992 RECORD DRAWINGS. ACTUAL CONDITIONS MAY DIFFER. FIELD VERIFY LOCATIONS, ELEVATIONS, AND SIZES OF EXISTING ITEMS WITHIN BUILDING.
3. WHERE EQUIPMENT IS CALLED OUT TO BE DEMOLISHED, DEMOLISH ALL ASSOCIATED SUPPORTS, CONDUIT, DUCT, PIPING, GROUT PADS, AND CONCRETE EQUIPMENT PADS. GRIND CONCRETE/GROUT PADS DOWN TO EXISTING FINISH FLOOR ELEVATION AND PATCH PER SD810/TYP AND SD820/TYP.
4. WHERE PIPING IS TO BE DEMOLISHED, DEMOLISH ALL ASSOCIATED SUPPORTS, VALVES, AND INSTRUMENTS. CAP OR BLIND FLANGE CONNECTIONS AT DEMOLITION LIMITS.
5. WHERE CONDUIT IS TO BE DEMOLISHED, DEMOLISH ALL ASSOCIATED SUPPORTS. CAP CONDUIT THAT PENETRATES WALL OR SLAB.
6. REPAIR CONCRETE, PIPING, EQUIPMENT, INSTRUMENTS, CONDUITS AND WIRING DAMAGED DURING CONSTRUCTION ACTIVITIES.
7. DEMOLISH ALL LIGHTING, RECEPTACLES, ASSOCIATED CONDUIT AND WIRING.
8. DEMOLISH ALL CONDUIT AND WIRING ASSOCIATED WITH EXISTING MECHANICAL AND HVAC EQUIPMENT.

carollo®

Date	No	Revision	By
	4		
	3		
	2		
	1		

PROJECT ENGINEER MSS
DESIGNED/DRAWN NJ/HV
INSPECTOR CC

DIRECTOR PUBLIC WORKS
CITY ENGINEER
ASSISTANT DIRECTOR

CITY OF BELLINGHAM, WASHINGTON
PUBLIC WORKS DEPARTMENT
ENGINEERING DIVISION

SCALE
Horiz. AS SHOWN
Vert. AS SHOWN

DATUM
H: NAD 83/98
V: NAVD 88

Job. No. EU194
Date JAN 2026
Field Bk.

POST POINT RESOURCE RECOVERY PLANT
DEMOLITION
CHLORINE BUILDING DEMOLITION PLANS AND SECTIONS

DRAWING NO. 420D104
SHEET NO. 23 OF 198

CONTACT PERSON: STEPHEN DAY, PE SE , PROJECT ENGINEER AT 360-778-7944

PROJECT NO. 202021-100000 FILE NAME: 202021420D104.dgn

Plot Date: 13-JAN-2026 3:50:38 PM
User: svcPW
Model: Layout1 ColorTable: gshade.ctb DesignScript: Carollo_Std_Pen_v0905.pen PlotScale: 1:1
LAST SAVED BY: lveloz

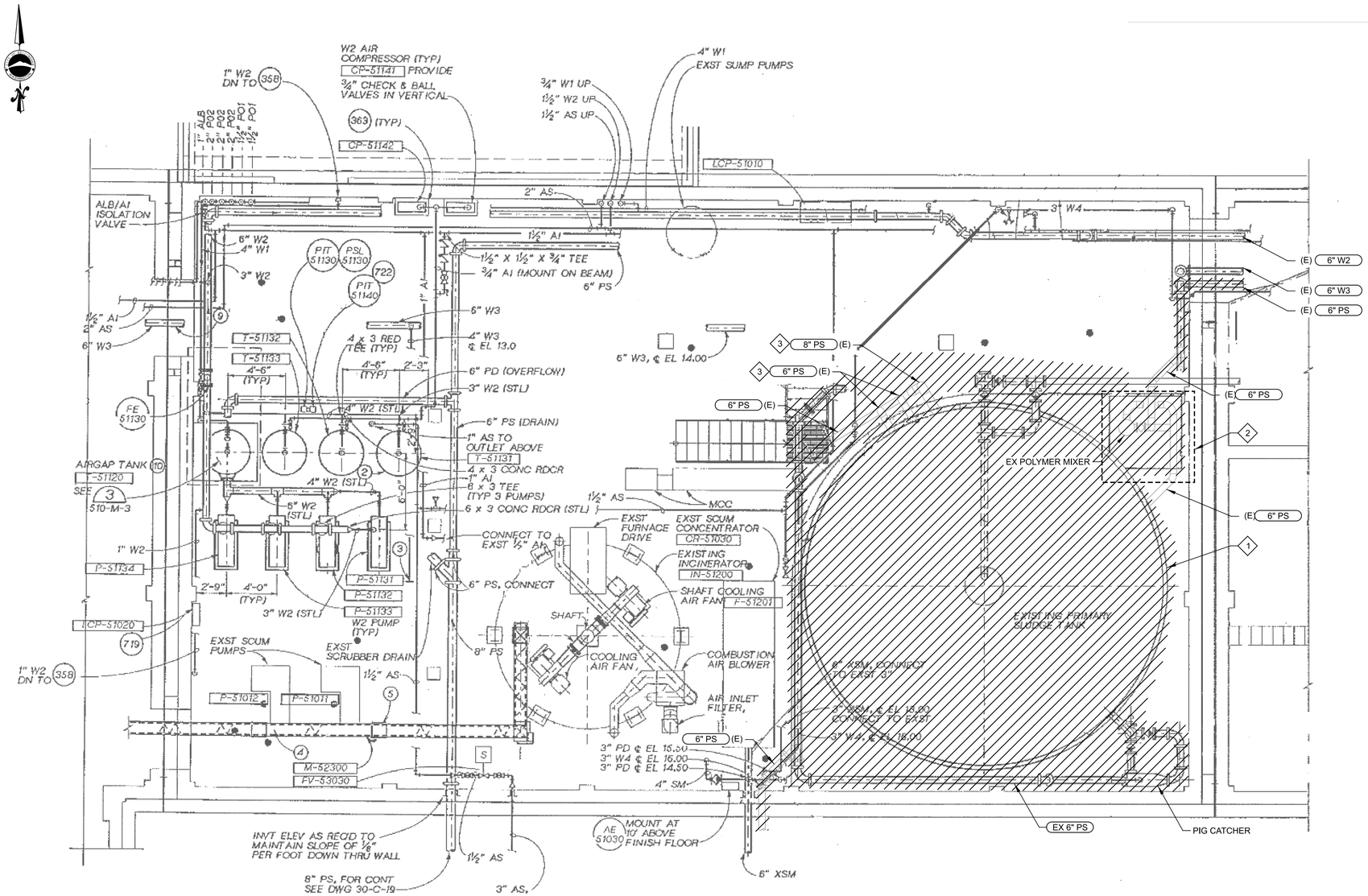

A PLAN

SCALE: NO SCALE
FILE: 1992 510-SOLIDS HANDLING FACILITY MODIFICATIONS 13(510D101)

GENERAL NOTES:

1. CONTRACTOR MUST REFER TO SPECIFICATION SECTION 01_14_00 AND 01_35_21 FOR WORK RESTRICTIONS, CONSTRAINTS, SELECTIVE DEMOLITION AND SALVAGING INSTRUCTIONS.
2. DRAWING INFORMATION IS BASED ON THE 1992 RECORD DRAWINGS. ACTUAL CONDITIONS MAY DIFFER. CONTRACTOR MUST FIELD VERIFY LOCATIONS, ELEVATIONS, AND SIZES OF EXISTING ITEMS WITHIN BUILDING.
3. WHERE EQUIPMENT IS CALLED OUT TO BE DEMOLISHED, DEMOLISH ALL ASSOCIATED SUPPORTS, CONDUIT, DUCT, PIPING, GROUT PADS, AND CONCRETE EQUIPMENT PADS. GRIND CONCRETE/GROUT PADS DOWN TO EXISTING FINISH FLOOR ELEVATION AND PATCH PER SD810/TYP AND SD820/TYP.
4. WHERE PIPING IS TO BE DEMOLISHED, DEMOLISH ALL ASSOCIATED SUPPORTS, VALVES, AND INSTRUMENTS. CAP OR BLIND FLANGE CONNECTIONS AT DEMOLITION LIMITS.
5. WHERE CONDUIT IS TO BE DEMOLISHED, DEMOLISH ALL ASSOCIATED SUPPORTS. CAP CONDUIT THAT PENETRATES WALL OR SLAB.
6. CONTRACTOR MUST REPAIR CONCRETE, PIPING, EQUIPMENT, INSTRUMENTS, CONDUITS AND WIRING DAMAGED DURING CONSTRUCTION ACTIVITIES.

KEY NOTES:

1. DEMOLISH TANK. TANK DIMENSIONS ARE 28 FT DIAMETER BY 23 FT 4 INCH HEIGHT. TANK IS CONSTRUCTED OF STEEL. DEMOLISH ALL ASSOCIATED CONCRETE PADS, SUPPORTS, INSTRUMENTS AND VALVING.
2. DEMOLISH EXISTING POLYMER MIXER AND ASSOCIATED PIPING, VALVES, CONDUITS, CONCRETE PAD AND SUPPORTS.
3. DEMOLISH EXISTING PIPING. CONTRACTOR TO ASSUME PIPING RISERS ARE APPROXIMATELY 15 FEET VERTICALLY ALONG TANK WALL. DEMOLISH ASSOCIATED VALVES AND SUPPORTS.

carollo

Date	No	Revision	By
	4		
	3		
	2		
	1		

PROJECT ENGINEER MSS
DESIGNED/DRAWN NJ/HV
INSPECTOR CC

DIRECTOR PUBLIC WORKS
CITY ENGINEER
ASSISTANT DIRECTOR

CITY OF BELLINGHAM, WASHINGTON
PUBLIC WORKS DEPARTMENT
ENGINEERING DIVISION

SCALE
Horiz. AS SHOWN
Vert. AS SHOWN

DATUM
H: NAD 83/98
V: NAVD 88

Job. No. EU194
Date JAN 2026
Field Bk.

POST POINT RESOURCE RECOVERY PLANT
DEMOLITION
SOLIDS HANDLING BUILDING DEMOLITION BASEMENT PLAN

DRAWING NO. 510D101
SHEET NO. 24 OF 198

CONTACT PERSON: STEPHEN DAY, PE SE , PROJECT ENGINEER AT 360-778-7944

PROJECT NO. 202021-100000 FILE NAME: 202021510D101.dgn

Plot Date: 13-JAN-2026 3:50:52 PM
User: svcPW
Model: Layout1 ColorTable: gshade.ctb DesignScript: Carollo_Std_Pen_v0905.pen PlotScale: 1:1
LAST SAVED BY: lveloz

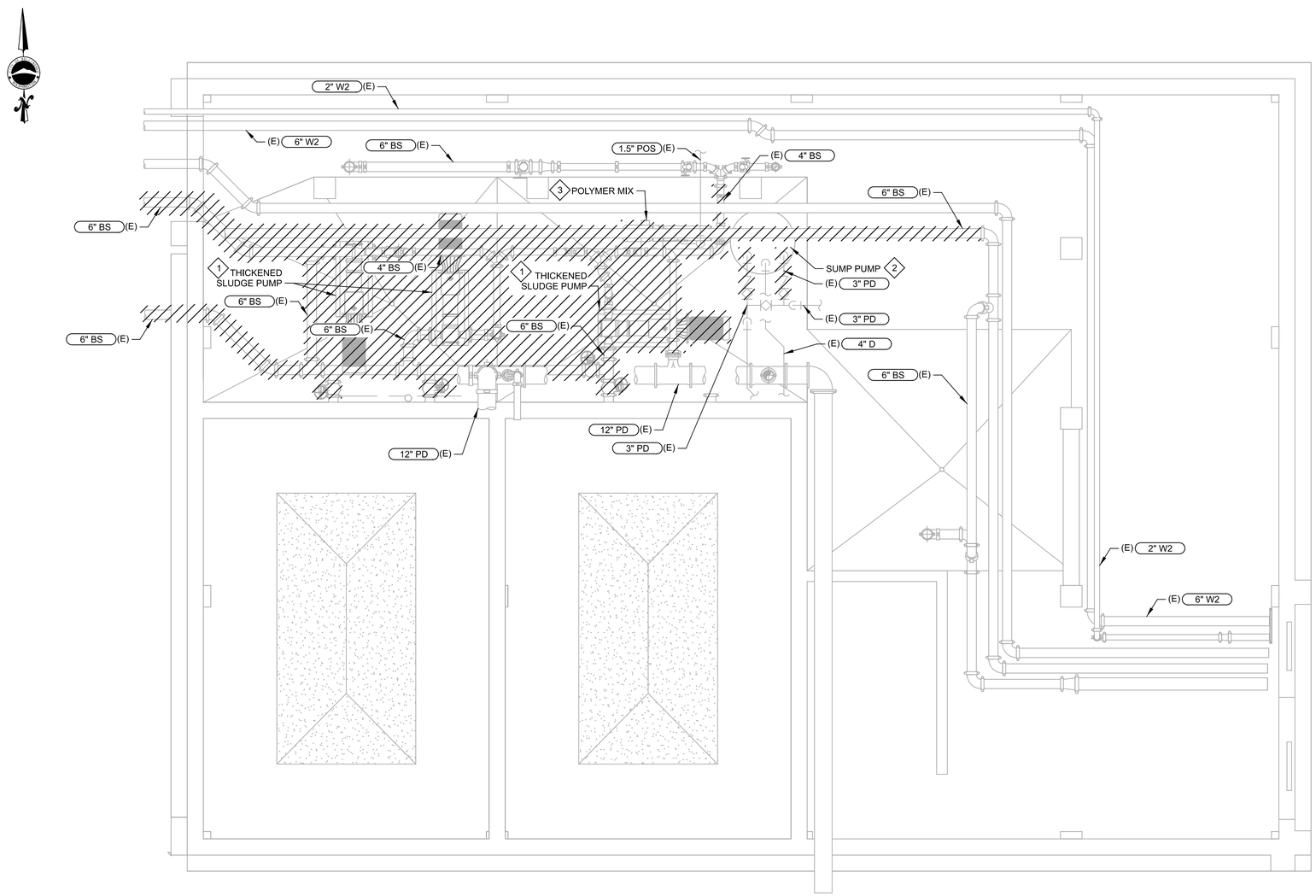

PLAN AT FLOOR EL 5.0

A PLAN
SCALE: NO SCALE
FILE: 1992 530-SOLIDS HANDLING FACILITY - EAST ADDITION 13(530D101)

GENERAL NOTES:

1. REFER TO SPECIFICATION SECTION 01_14_00 AND 01_35_21 FOR WORK RESTRICTIONS, CONSTRAINTS, SELECTIVE DEMOLITION AND SALVAGING INSTRUCTIONS.
2. DRAWING INFORMATION IS BASED ON THE 1992 RECORD DRAWINGS. ACTUAL CONDITIONS MAY DIFFER. FIELD VERIFY LOCATIONS, ELEVATIONS, AND SIZES OF EXISTING ITEMS WITHIN BUILDING.
3. WHERE EQUIPMENT IS CALLED OUT TO BE DEMOLISHED, DEMOLISH ALL ASSOCIATED SUPPORTS, CONDUIT, DUCT, PIPING, GROUT PADS, AND CONCRETE EQUIPMENT PADS. GRIND CONCRETE/GROUT PADS DOWN TO EXISTING FINISH FLOOR ELEVATION AND PATCH PER SD810/TYP AND SD820/TYP.
4. WHERE PIPING IS TO BE DEMOLISHED, DEMOLISH ALL ASSOCIATED SUPPORTS, VALVES, AND INSTRUMENTS. CAP OR BLIND FLANGE CONNECTIONS AT DEMOLITION LIMITS.
5. WHERE CONDUIT IS TO BE DEMOLISHED, DEMOLISH ALL ASSOCIATED SUPPORTS. CAP CONDUIT THAT PENETRATES WALL OR SLAB.
6. REPAIR CONCRETE, PIPING, EQUIPMENT, INSTRUMENTS, CONDUITS AND WIRING DAMAGED DURING CONSTRUCTION ACTIVITIES.

KEY NOTES:

1. DEMOLISH THICKENED SLUDGE PUMPS. REMOVAL OF THESE PUMPS FROM SERVICE MUST BE STAGED. SEE SPECIFICATION SECTION 01_35_21 WORK RESTRICTIONS FOR RESTRICTIONS.
2. DEMOLISH SUMP PUMPS AND ASSOCIATED DISCHARGE PIPING TO LIMITS SHOWN. SUMP WILL BE REUSED WITH NEW PUMPS.
3. DEMOLISH POLYMER MIXER. PROTECT POLYMER PIPING IN AREA T BE REUSED.

MATTHEW SCOTT SPRUCK
STATE OF WASHINGTON
29659
REGISTERED
PROFESSIONAL ENGINEER

carollo®

Date	No	Revision	By
	4		
	3		
	2		
	1		

PROJECT ENGINEER MSS
DESIGNED/DRAWN NJ/HV
INSPECTOR CC

DIRECTOR PUBLIC WORKS
CITY ENGINEER
ASSISTANT DIRECTOR

CITY OF BELLINGHAM, WASHINGTON
PUBLIC WORKS DEPARTMENT
ENGINEERING DIVISION

SCALE
Horiz. AS SHOWN
Vert. AS SHOWN

DATUM
H: NAD 83/98
V: NAVD 88

Job. No. EU194
Date JAN 2026
Field Bk.

POST POINT RESOURCE RECOVERY PLANT
DEMOLITION
SOLIDS HANDLING BUILDING EAST DEMOLITION BASEMENT PLAN

DRAWING NO. 530D101
SHEET NO. 25 OF 198

CONTACT PERSON: STEPHEN DAY, PE SE , PROJECT ENGINEER AT 360-778-7944

PROJECT NO. 202021-100000 FILE NAME: 202021530D101.dgn

SURVEY EFFECTIVE DATE:
THIS SURVEY WAS PERFORMED IN JULY AND AUGUST OF 2023 AND IS AN ACCURATE DEPICTION OF SITE CONDITIONS AS OF **AUGUST 8, 2023**, BUT MAY NO LONGER ACCURATELY REPRESENT EXISTING CONDITIONS.

POST POINT WASTEWATER TREATMENT PLANT

PRIMARY SLUDGE TANK REPLACEMENT PROJECT
W.A.C. 332-130 COMPLIANCE SHEET

SECTIONAL INDEX DATA

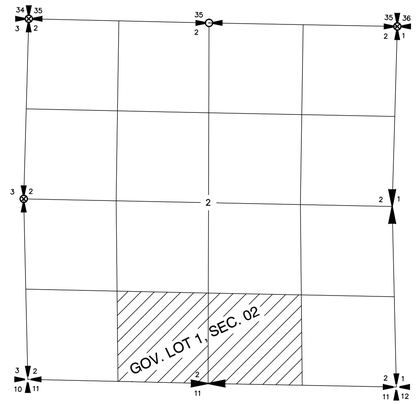

GOV. LOT 1, SEC. 02, TWNSHP 37 NORTH, R 02 EAST, W.M.
SW QTR -SE QTR, SEC. 02, TWNSHP 37 NORTH, R 02 EAST, W.M.
SE QTR - SE QTR, SEC. 02, TWNSHP 37 NORTH, R 02 EAST, W.M.

VICINITY MAP - NOT TO SCALE

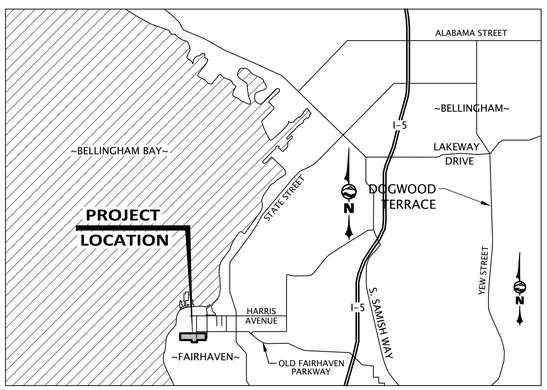

ON-SITE SURVEY CONTROL TABLE

POINT #	NORTHING	EASTING	ELEV.	DESCRIPTION
100	631602.49	1235313.58	20.28	DISK SURFACE MON 4TH& McKENZIE
102	630684.89	1235294.39	66.03	DISK SURFACE MON 4TH & WILSON
18	631122.32	1234716.46	17.93	WILSON CONTROL SPIKE
151	631225.91	1234685.34	15.73	WILSON HUB/MAG NAIL
152	631235.79	1234562.43	14.21	WILSON CONTROL MAG NAIL
164	631303.18	1234556.47	14.67	WILSON SCRIBED "X"
172	631198.69	1234758.03	17.46	WILSON HUB/MAG NAIL
173	631190.87	1234839.07	18.67	WILSON SET SCRIBED "X"
174	631121.68	1234824.18	18.38	WILSON HUB/MAG NAIL
175	631177.96	1234754.86	17.72	WILSON SET SCRIBED "X"
176	631256.44	1234837.66	17.57	WILSON CONTROL BAR/CAP

INDEX TO DRAWINGS

SHEET 1 W.A.C. 332-130 COMPLIANCE SHEET
SHEET 2 2023 TOPOGRAPHIC MAP
EXHIBIT 1 2023 TOPOGRAPHIC MAP W/ 2020 BACKGROUND

W.A.C. 332-130-145 REQUIRED DATA

1.E: THIS SURVEY WAS PREPARED UNDER THE DIRECT SUPERVISION OF:

J. THOMAS BREWSTER, WA PLS #44335
SURVEY MANAGER / PRINCIPAL
WILSON ENGINEERING LLC
805 DUPONT STREET, SUITE 7
BELLINGHAM, WA 98225
360-733-6100 (EXT. 231)
tbrewster@wilsonengineering.com

2.A: BASIS OF ELEVATIONS: ELEVATION VALUES AND CONTOURS DEPICTED ON THIS SURVEY ARE BASED UPON HOLDING AS FIXED THE CITY OF BELLINGHAM'S RECORD NAVD88 DATUM, PER BENCHMARK NO.797, ACCORDING TO THE CITY OF BELLINGHAM'S 2009 HEIGHT MODERNIZATION SURVEY, AND PUBLISHED DATABASE.

2.B: PURPOSE OF SURVEY: WILSON ENGINEERING PERFORMED THIS SURVEY DURING FEBRUARY OF 2023, AT THE REQUEST OF CAROLLO ENGINEERS PURSUANT TO PLANNING AND DESIGN OF A PROPOSED WASTEWATER TREATMENT SLUDGE HOLDING FACILITIES WITHIN THE DEPICTED "2023 SURVEY EXTENTS" BOUNDARY. PER CLIENT REQUEST AND DIRECTION, DATA FROM LEGACY SURVEYS PERFORMED IN 2008, 2009, AND 2020 MAY BE VISIBLE ADJACENT TO THE CURRENT AREA OF SURVEY, HOWEVER, DATA OUTSIDE THE CURRENT "SURVEY EXTENTS" HAS NOT BEEN VERIFIED, AND DEPICTED FEATURES MAY NO LONGER BE ACCURATE. THIS SURVEY WAS PREPARED WITHOUT THE BENEFIT OF A CURRENT TITLE REPORT, AND THE DEPICTED PARCEL MAY BE SUBJECT TO ENCUMBRANCES OF RECORD WHICH ARE NOT HEREON DEPICTED, BUT WHICH MIGHT HAVE BEEN DISCLOSED, HAD A CURRENT TITLE REPORT BEEN AVAILABLE.

2.C: SOURCE OF CONTOURS: THE CONTOURS, IF ANY, DEPICTED ON THIS SURVEY ARE BASED ON FIELD OBSERVATIONS PERFORMED IN FEBRUARY, 2020. SOME DEPICTED ELEVATION INFORMATION WAS ORIGINALLY CAPTURED IN 2008, SUBJECT TO FIELD VERIFICATION UNDER THE CURRENT SCOPE OF EFFORT. DEPICTED ELEVATION VALUES AND CONTOURS WITHIN THE "SURVEY EXTENTS" BOUNDARY, REGARDLESS OF SOURCE, SHOULD BE CONSIDERED AUTHORITATIVE.

2.D: CONTOUR INTERVAL LABELING: MAJOR CONTOURS AT 5-FOOT INTERVALS HAVE BEEN EXPLICITLY LABELED.

2.E: DESCRIPTION OF BENCHMARKS SET PURSUANT TO THIS SURVEY: REFER TO THE ACCOMPANYING "CONTROL TABLE" FOR COORDINATES, ELEVATION, AND DESCRIPTION OF ON-SITE CONTROL SET PURSUANT TO THIS SURVEY.

2.F: ELEVATION AND/OR CONTOUR ACCURACY: IF CONTOURS HAVE BEEN DEPICTED ON THE FACE OF THIS SURVEY, IT IS ANTICIPATED THAT 90% OF ANY MEASURED ELEVATION VALUE, IF OBSERVED RELATIVE TO THE CONTROL POINTS SPECIFICALLY ENUMERATED IN THE ACCOMPANYING CONTROL TABLE, WILL BE, IN FACT, WITHIN ONE-HALF OF THE MINOR-CONTOUR INTERVAL DEPICTED HEREON. SPECIFIC ELEVATIONS DEPICTED HEREON, IF ANY, ARE EXPECTED TO BE WITHIN ONE INTEGRAL VALUE OF THE FINAL DEPICTED SIGNIFICANT FIGURE. THAT IS, 90% OF ELEVATIONS EXPRESSED TO THE TENTH-FOOT, SHOULD BE WITHIN 0.1 FEET OF THAT VALUE, IF OBSERVED RELATIVE TO THE SURVEY CONTROL SPECIFICALLY ENUMERATED IN THE ACCOMPANYING CONTROL TABLE. IF OFF-SITE OR THIRD-PARTY CONTROL IS EMPLOYED, EVEN CONTROL PURPORTING TO BE ON THE SAME DATUM OR BASED ON THE SAME OFF-SITE BENCHMARK, THEN NO ABSOLUTE STATEMENT REGARDING THE ACCURACY OF THE DEPICTED POINTS CAN BE MADE, AND VALUES SO OBSERVED ARE OUTSIDE OF THIS SURVEY'S AUTHORITY OR INTEREST.

2.G: STATEMENT OF USE: AS NOTED IN SECTION 2.B, THIS SURVEY WAS PREPARED FOR THE SPECIFIC PURPOSE OF PLANNING AND DESIGN OF A PROPOSED WASTEWATER TREATMENT SLUDGE HOLDING FACILITIES WITHIN THE DEPICTED "2023 SURVEY EXTENTS" BOUNDARY. IN THE COURSE OF PREPARING THIS SURVEY, PURSUANT TO THIS PURPOSE, ANCILLARY DATA NECESSARY TO ACCOMPLISH THIS SURVEYS INTENDED PURPOSE MAY HAVE BEEN CAPTURED. IN THE CASE OF THIS SURVEY TOPOGRAPHIC INFORMATION ORIGINALLY CAPTURED IN 2008, 2009, AND 2020 IS INCLUDED IN THIS SURVEY DELIVERABLE, BUT THE DEPICTION OF SAME, LYING ANYWHERE OUTSIDE THE CURRENT "SURVEY EXTENTS" BOUNDARY SHOULD NOT BE CONSIDERED AUTHORITATIVE.

2.H: SOURCE OF CONTROLLING BOUNDARY INFORMATION: THE OWNERSHIP BOUNDARIES DEPICTED ON THIS SURVEY ARE BASED UPON SOME, OR ALL, OF THE DOCUMENTS ENUMERATED IN THE ACCOMPANYING "REFERENCE DOCUMENTS" AS THEREIN CHARACTERIZED. BEARINGS HAVE BEEN TRANSLATED AND/OR ROTATED FROM THE RECORD VALUES TO COHERE WITH THE DESIGNATED PROECT BASIS OF BEARINGS. THIS ADJUSTMENT WILL DIFFER FOR EACH CITED RECORD DOCUMENT.

3.A: SOURCE OF DEPICTED UTILITY INFORMATION: UTILITY LINES DEPICTED ON THIS SURVEY ARE BASED UPON PAINT MARKS SET BY UTILITY-LOCATE PROFESSIONALS, AS ACQUIRED THROUGH THE "ONE-CALL" UTILITY-LOCATE SERVICE AND BY APS CONSULTANTS.

3.B: ACCURACY OF DEPICTED UTILITY INFORMATION: WILSON ENGINEERING DOES NOT PROVIDE FOR-HIRE UTILITY LOCATION AND/OR MARKING SERVICES, AND CAN NOT INDEPENDENTLY ASCERTAIN THE ACCURACY OF ANY DEPICTED UTILITY THAT WAS NOT DIRECTLY OBSERVED IN THE COURSE OF THIS SURVEY.

3.C: STATEMENT OF LIMITATIONS REGARDING UTILITY-DEPICTION ACCURACY: CAROLLO HAS BEEN NOTIFIED THAT WILSON CAN NOT, AND DOES NOT, GUARANTEE THE ACCURACY, AT ANY LEVEL, OF DEPICTED UTILITIES BASED ON THIRD-PARTY PAINT MARKS OR RECORD INFORMATION.

NOTICE TO USER

EFFECTIVE JANUARY 13, 2019, ALL TOPOGRAPHIC MAPS PREPARED BY A LICENSED SURVEYOR IN THE STATE OF WASHINGTON, AND SUBJECT TO THE LICENSURE AND PRACTICE REQUIREMENTS ESTABLISHED BY THE WASHINGTON STATE BOARD OF REGISTRATION FOR ENGINEERS AND LAND SURVEYORS, MUST INCLUDE THE DESCRIPTIVE NOTES AND METADATA ENUMERATED UNDER W.A.C 332-130-145 AND ITS APPURTENANT SECTIONS OF 332-130. THIS EXHIBIT IS INTENDED TO ADDRESS THE STATUTORY REQUIREMENTS STIPULATED BY THIS W.A.C DIRECTIVE. THIS EXHIBIT CONTAINS DATA THAT IS CRUCIAL TO THE INTERPRETATION OF THE ACCOMP,ANYING SURVEY, AND THIS EXHIBIT MUST ACCOMPANY ANY TRANSMISSION OF SAID SURVEY.

CONTROL NOTES

HORIZONTAL DATUM:
WASHINGTON STATE PLANE NAD83(1998) GROUND-LEVEL US-FOOT VALUES, PER THE CITY OF BELLINGHAM 2005 HORIZONTAL CONTROL NETWORK, ACCORDING TO THE RECORD OF SURVEY OF SAME RECORDED UNDER WHATCOM COUNTY AUDITOR'S FILE NO. 2071002449.

BASIS OF COORDINATES: COORDINATION AND MENSURATION ARE LOCAL GROUND VALUES, BASED UPON HOLDING THE PUBLISHED NAD83(1991) POSITION FOR THE CASED BRONZE-DISK MONUMENT **DONOVAN**, LOCATED IN THE LAWN WEST OF FOURTH STREET NEAR THE INTERSECTION OF FOURTH & DONOVAN STREETS, PUBLISHED AS CITY OF BELLINGHAM CADASTRAL CONTROL POINT AND NATIONAL GEODETIC SURVEY POINT #DH3744. SAID MONUMENT HAS THE FOLLOWING PUBLISHED POSITION:

NORTHING = 630,920.10 USFT
EASTING = 1,235,270.13 USFT
SCALE FACTOR : 0.99999705
CONV. ANGLE : -01° 14' 58"

BASIS OF BEARINGS: BEARINGS ARE WASHINGTON STATE PLANE NAD83(1998) GRID, BASED UPON HOLDING THE PUBLISHED POSITIONS MONUMENTED BY CITY OF BELLINGHAM CADASTRAL CONTROL POINTS **DONOVAN** AND **#797**, SAID CONTROL POINT #797 BEING A BRONZE-DISK MONUMENT AT THE INTERSECTION OF FOURTH STREET AND HARRIS AVENUE.

THE DERIVED INVERSE BETWEEN SAID MONUMENTS **DONOVAN** AND **#797** IS:
NORTH 02° 53' 43" EAST, AT A DISTANCE OF **973.43X USFT**. THE PUBLISHED POSITION FOR THE CITY OF BELLINGHAM CADASTRAL SURVEY MONUMENT # 797 IS:

NORTHING = 631,892.29 USFT
EASTING = 1,235,319.30 USFT
SCALE FACTOR: 0.99999754
CONV. ANGLE: -1° 14' 58"

VERTICAL DATUM:
NAVD88, PER THE CITY OF BELLINGHAM ELEVATION DATUM AND CONTROL BENCHMARK DATABASE AT THE TIME OF THE ORIGINAL 2009 TOPOGRAPHIC SURVEY OF THE POST-POINT WWTP. (SEE SURVEYOR'S NOTE #4)

BASIS OF ELEVATIONS: ELEVATIONS ARE NAVD88 VALUES, BASED UPON HOLDING THE PUBLISHED ELEVATION FOR CITY OF BELLINGHAM REFERENCE BENCHMARK **#797**, BEING A BRONZE-DISK MONUMENT AT THE INTERSECTION OF FOURTH STREET AND HARRIS AVENUE, AS OF THE ORIGINAL SURVEY OF THE POST POINT WWTP IN 2009. SAID MONUMENT HAD THE FOLLOWING PUBLISHED NAVD88 ELEVATION AT THE TIME: ELEVATION = 12.52 FEET

GEODETIC REFERENCE SYSTEM AND GEODETIC RELATIVE ACCURACY -- CONTROL FOR THIS SURVEY WAS PERFORMED RELATIVE TO THE CITY OF BELLINGHAM NAD83(1998 EPOCH) WASHINGTON NORTH ZONE STATE PLANE COORDINATE SYSTEM, WITH ALL COORDINATION AND MENSURATION USING THE FACTOR OF 3.2808333333 TO CONVERT MEASURED DISTANCES AND COORDINATES FROM METERS TO THE DEPICTED (US SURVEY-FOOT) EQUIVALENT. CONTROL POINTS DEPICTED HEREON WERE ACQUIRED RELATIVE TO PUBLISHED CITY OF BELLINGHAM REFERENCE NETWORK STATIONS HAVING A REPORTED AMBIGUITY OF +/-5 CM (+/-0.16') IN THE HORIZONTAL PLANE, AND +/- 5 CM IN THE VERTICAL PLANE. LOCAL CONTROL WAS ESTABLISHED USING LOOPED RTK TECHNIQUES RESULTING IN AN APPARENT MEASURED POSITIONAL AMBIGUITY RELATIVE TO CAPTURED GEODETIC CONTROL OF +/-2 CM (+/- 0.06') FOR A PROBABLE (95% CERTAINTY) GLOBAL POSITIONAL AMBIGUITY OF +/- 5.2 CM (+/- 0.17').

SURVEYOR'S CERTIFICATE

I HEREBY CERTIFY THAT I AM A LICENSED LAND SURVEYOR IN THE STATE OF WASHINGTON, THAT THIS MAP IS BASED ON AN ACTUAL FIELD SURVEY DONE BY ME OR UNDER MY DIRECT SUPERVISION AND THAT ALL DATA SHOWN HEREON ACTUALLY EXISTS IN THE LOCATIONS SHOWN AT THE TIME OF THIS SURVEY. THIS TOPOGRAPHIC MAP WAS DONE AT THE REQUEST OF CAROLLO ENGINEERS IN 2023.

JOHN THOMAS BREWSTER, P.L.S. NO. 44335 DATE 01-14-2026

SURVEYOR'S NOTES

1. THIS TOPOGRAPHIC SURVEY IS AUTHORITATIVE ONLY WITHIN THE EXTENTS OF THE DEPICTED "SURVEY EXTENTS" LINE. LEGACY INFORMATION ORIGINALLY CAPTURED IN 2008/2009/2020 IS INCLUDED IN THE DEPICTION, HOWEVER THAT DATA HAS NOT BEEN FIELD VERIFIED AND MAY NO LONGER BE ACCURATE.
2. THIS BOUNDARY COMPONENT OF THIS SURVEY OF THE POST POINT WASTE WATER TREATMENT PLANT WAS PERFORMED IN FEBRUARY THROUGH MARCH OF 2009, AND FEBRUARY OF 2020. ALL MONUMENTS SHOWN HEREON WERE VISITED DURING THE COURSE OF THIS SURVEY UNLESS OTHERWISE NOTED.
3. LOCAL HORIZONTAL DATUM NAD83/98 IS BASED UPON HORIZONTAL CONTROL POINTS PROVIDED BY THE CITY OF BELLINGHAM AND VISITED DURING THE COURSE OF THIS SURVEY.
4. LOCAL VERTICAL DATUM NAVD88 IS BASED UPON BENCHMARKS PROVIDED BY THE CITY OF BELLINGHAM TO WILSON ENGINEERING IN 2009. DIFFERENTIAL LEVELS WERE RUN THROUGH WILSON ENGINEERING CONTROL POINTS USING THE ORIGINAL 2009 VALUES. SUBSEQUENT TO ADOPTION OF THE 2009 CONTROL, THE CITY OF BELLINGHAM REVISED THE ELEVATION VALUES FOR SEVERAL CONTROLLING OFF-SITE BENCHMARKS. IN THE INTEREST OF MAINTAINING LEGACY VALUES, THE BENCHMARK VALUES AS ORIGINALLY PROVIDED HAVE BEEN MAINTAINED, RESULTING IN A POTENTIAL SOURCE OF DISCREPANCY AT THE +/- 0.07' LEVEL WHEN MEASURED RELATIVE TO THE REVISED BENCHMARK VALUES.
5. ANGULAR AND LINEAR MEASUREMENTS WERE MADE WITH A TRIMBLE S7 ROBOTIC 3" TOTAL STATION AND A LEICA TCR405 5" TOTAL STATION CALIBRATED AT AN N.G.S. BASELINE WITHIN THE LAST YEAR. ADDITIONAL CONTROL WORK WAS PERFORMED USING TRIMBLE R7 SURVEY-GRADE GPS RECEIVERS OPERATING IN VRS/RTK MODE WITH CORRECTIONS PROVIDED BY THE WSRN. POSITIONAL AMBIGUITY FOR ALL DEPICTED CONTROL IS EXPECTED TO BE AT THE +/- 0.03' LEVEL OF PRECISION A,D VERTICAL AMGIBIGUITY IS EXPECTED TO BE AT THE +/- 0.05' LEVEL OF PRECISION.
6. PROCEDURES USED IN THIS SURVEY WERE FIELD TRAVERSE MEASUREMENTS MEETING OR EXCEEDING STANDARDS SET BY W.A.C. 332-130-090, DEPICTION OF TOPOGRAPHIC DATA HAS BEEN PREPARED IN ACCORDANCE WITH W.A.C 332-130-145.
7. THIS SURVEY WAS PERFORMED WITHOUT THE BENEFIT OF A CURRENT TITLE REPORT, AND WILSON CANNOT, AND DOES NOT, GUARANTEE THAT ALL EXTANT INTERESTS-- WHICH MIGHT HAVE BEEN REVEALED BY A CURRENT TITLE REPORT-- ARE HEREON DEPICTED.
8. UTILITY LOCATIONS DEPICTED HEREON ARE BASED UPON OBSERVATIONS OF PAINTED MARKINGS SET BY OTHERS, AND WILSON CAN NOT AND DOES NOT GUARANTEE THEIR ACCURACY RELATIVE TO THE PURPORTED FACILITIES .

ABBREVIATIONS USED

AF = AUDITOR'S FILE
AFN = AUDITOR'S FILE NUMBER
ASM = ALUMINUM SURFACE MONUMENT
℄ = CENTERLINE
CONC = CONCRETE
CPP = CORRUGATED POLYETHYLENE PIPE
DLC = DONATION LAND CLAIM
E = EAST
ELEV = ELEVATION
FND = FOUND
INT = INTERSECTION
INV = INVERT
L = LENGTH
MON = MONUMENT
N = NORTH
NE = NORTHEAST
NW = NORTHWEST
R = RADIUS
R/W = RIGHT-OF-WAY
S = SOUTH
SE = SOUTHEAST
SW = SOUTHWEST
TYP = TYPICAL
W = WEST
WAC = WASHINGTON ADMINISTRATIVE CODE
WSE = WILSON SURVEY/ENGINEERING

DOCUMENTS USED FOR PARCEL BOUNDARY DETERMINATION

1. RECORD OF SURVEY A.F.N. 94063010 SHOWING 3.3 ACRE TRACT.
2. RECORD OF SURVEY A.F.N. 921217119 SHOWING MONUMENTED SOUTH PROPERTY LINE.
3. RECORD OF SURVEY A.F.N. 2020801815 SHOWING GOVERNMENT MEANDER LINE AND CALCULATED INNER HARBOR LINE.
4. GREAT NORTHERN RAILWAY, WESTERN DISTRICT COAST LINE "SOUTH BELLINGHAM NO. 3" DECEMBER 1917. MAP ON FILE AT PORT OF BELLINGHAM ARCHIVES.

DATUM CONVERSION SCALE
(PER NOAA STATION DATA SHEET #9449211)

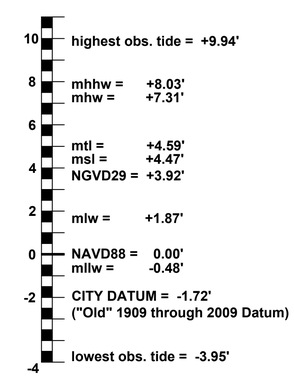

Call 811 two business days before you dig

NAD83/NAVD88 DATUM

WILSON ENGINEERING

Date	No	Revision	By
	4		
	3		
	2		
	1		

PROJECT ENGINEER _____
DESIGNED/DRAWN _____
INSPECTOR _____

DIRECTOR PUBLIC WORKS MAO
CITY ENGINEER MLW
ASSISTANT DIRECTOR MAO

CITY OF BELLINGHAM, WASHINGTON
PUBLIC WORKS DEPARTMENT
ENGINEERING DIVISION

SCALE: Horiz. AS SHOWN; Vert. AS SHOWN
DATUM: H: NAD 83/98; V: NAVD 88
Job. No. EU194
Date JAN 2026
Field Bk. _____

POST POINT RESOURCE RECOVERY PLANT
W.A.C. 332-130-145 COMPLIANCE EXHIBIT

DRAWING NO. 020C101
SHEET NO. 26 OF 198

CONTACT PERSON: STEPHEN DAY, PE SE , PROJECT ENGINEER AT 360-778-7944

PLOT SETTINGS: WE AutoCAD PDF (General Documentation).pc3, WILSON 22X34, Portrait, 1:1, WE APWA_UNSCREENED.ctb
W:\2023\2023-070 COB WWTP CAROLLO\DWG\2022_2023-070 SV00_NAVD88.DWG - 1/14/2026 12:32 PM - Benton Seay

SURVEY EFFECTIVE DATE:
THIS SURVEY WAS PERFORMED IN JULY AND AUGUST OF 2023 AND IS AN ACCURATE DEPICTION OF SITE CONDITIONS AS OF **AUGUST 8, 2023**, BUT MAY NO LONGER ACCURATELY REPRESENT EXISTING CONDITIONS.

JOHN THOMAS FOERSTER — STATE OF WASHINGTON — 53335 — REGISTERED PROFESSIONAL LAND SURVEYOR — 01-14-2026

Call 811 two business days before you dig

NAD83/NAVD88
DATUM

WILSON ENGINEERING

ON-SITE SURVEY CONTROL TABLE

POINT #	NORTHING	EASTING	ELEV.	DESCRIPTION
100	631602.49	1235313.58	20.28	DISK SURFACE MON 4TH& McKENZIE
102	630684.89	1235294.39	66.03	DISK SURFACE MON 4TH & WILSON
18	631122.32	1234716.46	17.93	WSE CONTROL SPIKE
151	631225.91	1234685.34	15.73	WSE HUB/MAG NAIL
152	631235.79	1234562.43	14.21	WSE CONTROL MAG NAIL
164	631303.18	1234556.47	14.67	WSE SET SCRIBED "X"
172	631198.69	1234758.03	17.46	WSE HUB/MAG NAIL
173	631190.87	1234839.07	18.67	WSE SET SCRIBED "X"
174	631121.68	1234824.18	18.38	WSE HUB/MAG NAIL
175	631177.96	1234754.86	17.72	WSE SET SCRIBED "X"
176	631256.44	1234837.66	17.57	WSE CONTROL BAR/CAP

SANITARY SEWER STRUCTURE TABLE

EX SSMH #2912
RIM=14.96
FL @ ℄ STRUCTURE=2.3
FLOW IS SOUTH

EX SSMH #3342
RIM=13.39
COULD NOT OPEN STRUCTURE
PLANT OPERATOR WILL SEND PREVIOUS
AS-BUILT DATA (17AUG23)

TOPOGRAPHIC SURVEY LEGEND & ABBREVIATIONS - SIZE AND SCALE MAY VARY

- 100 = MAJOR CONTOUR
- = MINOR CONTOUR
- = RIGHT-OF-WAY
- = RIGHT-OF-WAY CENTERLINE
- = PROPERTY BOUNDARY
- = CALC SECTION LINE
- = EASEMENT
- = EXISTING GRAVEL EDGE
- = EXISTING ASPHALT EDGE
- = EXISTING CONCRETE EDGE
- = EXISTING HAND RAILING
- = EXISTING BUILDING
- = EXISTING BUILDING OVERHANG
- SD = EXISTING STORM DRAIN LINE
- S = EXISTING SANITARY SEWER LINE
- W = EXISTING WATER LINE
- = EXISTING CULVERT
- X = EXISTING FENCE
- P = EXISTING BURIED POWER LINE
- UT = MISC BURIED UTILITY
- OHP = EXISTING AERIAL POWER LINE
- = LINE DRAWN PER LOCATES (COULD NOT FIELD LOCATE)
- T = EXISTING BURIED TELEPHONE/COMM
- = EXISTING DITCH CENTERLINE
- = EXISTING TREE OR SHRUB LINE
- = EXISTING GUARDRAIL
- = EXISTING GRATING
- = FOUND SECTION CORNER
- = FOUND CONCRETE MON
- = FOUND PROPERTY CORNER
- = FOUND BRASS DISK
- = SET 3D SCAN CONTROL
- = TEMPORARY BENCH MARK
- = TRAVERSE POINT
- = POWER SWITCH OR FUSE PANEL
- P = EXISTING POWER VAULT
- = EXISTING POWER TRANSFORMER
- = EXISTING POWER METER
- = EXISTING UTILITY POLE
- = EXISTING POWER JUNCTION BOX
- = EXISTING TELE/COMM JUNCTION BOX
- = EXISTING TELE/COMM PEDESTAL
- = EXISTING WATER VALVE
- = EXISTING IRRIGATION VALVE/BOX
- = EXISTING WATER METER
- = EXISTING FIRE HYDRANT
- = EXISTING SIGN
- = EXISTING BOLLARD
- = EXISTING GATE POST
- = EXISTING BOULDER
- = EXISTING STORM DRAIN CATCH BASIN
- = EXISTING SANITARY SEWER MANHOLE
- = EXISTING STUMP
- 2" = EXISTING 2" (ETC) CONIFEROUS TREE
- 2" = EXISTING 2" (ETC) DECIDUOUS TREE
- 2" = EXISTING UNDERGROUND GALLERY

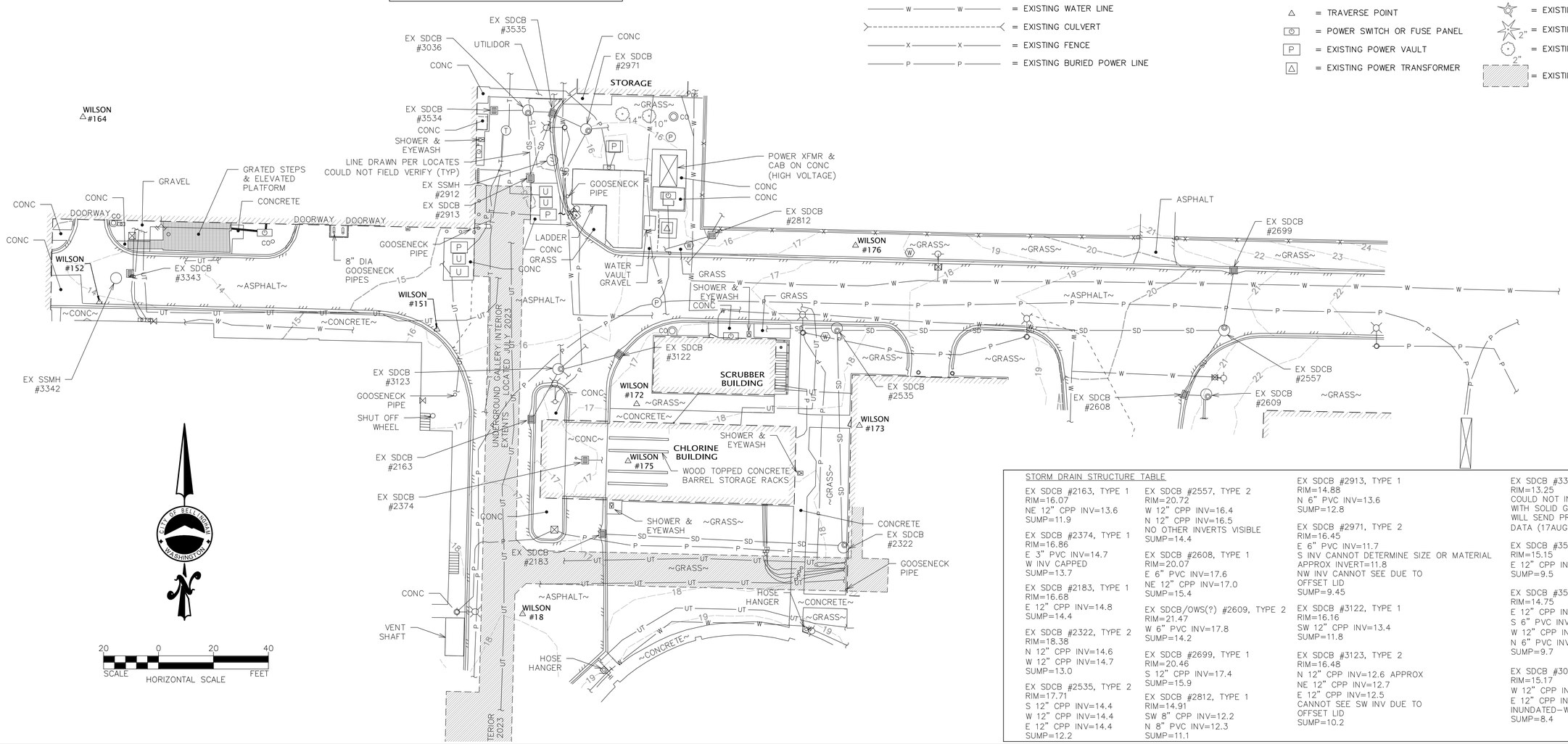

STORM DRAIN STRUCTURE TABLE

EX SDCB #2163, TYPE 1
RIM=16.07
NE 12" CPP INV=13.6
SUMP=11.9

EX SDCB #2374, TYPE 1
RIM=16.86
E 3" PVC INV=14.7
W INV CAPPED
SUMP=13.7

EX SDCB #2183, TYPE 1
RIM=16.68
E 12" CPP INV=14.8
SUMP=14.4

EX SDCB #2322, TYPE 2
RIM=18.38
N 12" CPP INV=14.6
W 12" CPP INV=14.7
SUMP=13.0

EX SDCB #2535, TYPE 2
RIM=17.71
S 12" CPP INV=14.4
W 12" CPP INV=14.4
E 12" CPP INV=14.4
SUMP=12.2

EX SDCB #2557, TYPE 2
RIM=20.72
W 12" CPP INV=16.4
N 12" CPP INV=16.5
NO OTHER INVERTS VISIBLE
SUMP=14.4

EX SDCB #2608, TYPE 1
RIM=20.07
E 6" PVC INV=17.6
NE 12" CPP INV=17.0
SUMP=15.4

EX SDCB/OWS(?) #2609, TYPE 2
RIM=21.47
W 6" PVC INV=17.8
SUMP=14.2

EX SDCB #2699, TYPE 1
RIM=20.46
S 12" CPP INV=17.4
SUMP=15.9

EX SDCB #2812, TYPE 1
RIM=14.91
SW 8" CPP INV=12.2
N 8" PVC INV=12.3
SUMP=11.1

EX SDCB #2913, TYPE 1
RIM=14.88
N 6" PVC INV=13.6
SUMP=12.8

EX SDCB #2971, TYPE 2
RIM=16.45
E 6" PVC INV=11.7
S INV CANNOT DETERMINE SIZE OR MATERIAL
APPROX INVERT=11.8
NW INV CANNOT SEE DUE TO
OFFSET LID
SUMP=9.45

EX SDCB #3122, TYPE 1
RIM=16.16
SW 12" CPP INV=13.4
SUMP=11.8

EX SDCB #3123, TYPE 2
RIM=16.48
N 12" CPP INV=12.6 APPROX
NE 12" CPP INV=12.7
E 12" CPP INV=12.5
CANNOT SEE SW INV DUE TO
OFFSET LID
SUMP=10.2

EX SDCB #3343, TYPE 1
RIM=13.25
COULD NOT INSPECT – INSERT FILLED
WITH SOLID GROUT? PLANT OPERATOR
WILL SEND PREVIOUS AS-BUILT
DATA (17AUG23)

EX SDCB #3534, TYPE 1
RIM=15.15
E 12" CPP INV=11.2
SUMP=9.5

EX SDCB #3535, TYPE 1
RIM=14.75
E 12" CPP INV=11.5
S 6" PVC INV=11.8
W 12" CPP INV=11.4
N 6" PVC INV=13.0
SUMP=9.7

EX SDCB #3036, TYPE 2
RIM=15.17
W 12" CPP INV=11.1
E 12" CPP INV=10.8
INUNDATED-WATER LEVEL=10.3
SUMP=8.4

Date	No	Revision	By
	4		
	3		
	2		
	1		

PROJECT ENGINEER _____
DESIGNED/DRAWN _____
INSPECTOR _____

DIRECTOR PUBLIC WORKS MAO
CITY ENGINEER MLW
ASSISTANT DIRECTOR MAO

CITY OF BELLINGHAM, WASHINGTON
PUBLIC WORKS DEPARTMENT
ENGINEERING DIVISION

SCALE: Horiz. AS SHOWN; Vert. AS SHOWN
DATUM: H: NAD 83/98; V: NAVD 88
Job. No. EU194
Date JAN 2026
Field Bk. _____

POST POINT RESOURCE RECOVERY PLANT
TOPOGRAPHIC EXHIBIT

DRAWING NO. 020C102
SHEET NO. 27 OF 198

CONTACT PERSON: STEPHEN DAY, PE SE , PROJECT ENGINEER AT 360-778-7944

PLOT SETTINGS: WE AutoCAD PDF (General Documentation).pc3, WILSON 22X34, Portrait, 1:1, WE APWA_LINSCREENED.ctb
W:\2023\2023-070 CCB WWTP CAROLLO\DWG\V2022_2023-070 SV00_NAVD88.DWG – 1/14/2026 12:32 PM – Benton Seay

SURVEY EFFECTIVE DATE:
THIS SURVEY WAS PERFORMED IN JULY AND AUGUST OF 2023 AND IS AN ACCURATE DEPICTION OF SITE CONDITIONS AS OF **AUGUST 8, 2023**, BUT MAY NO LONGER ACCURATELY REPRESENT EXISTING CONDITIONS.

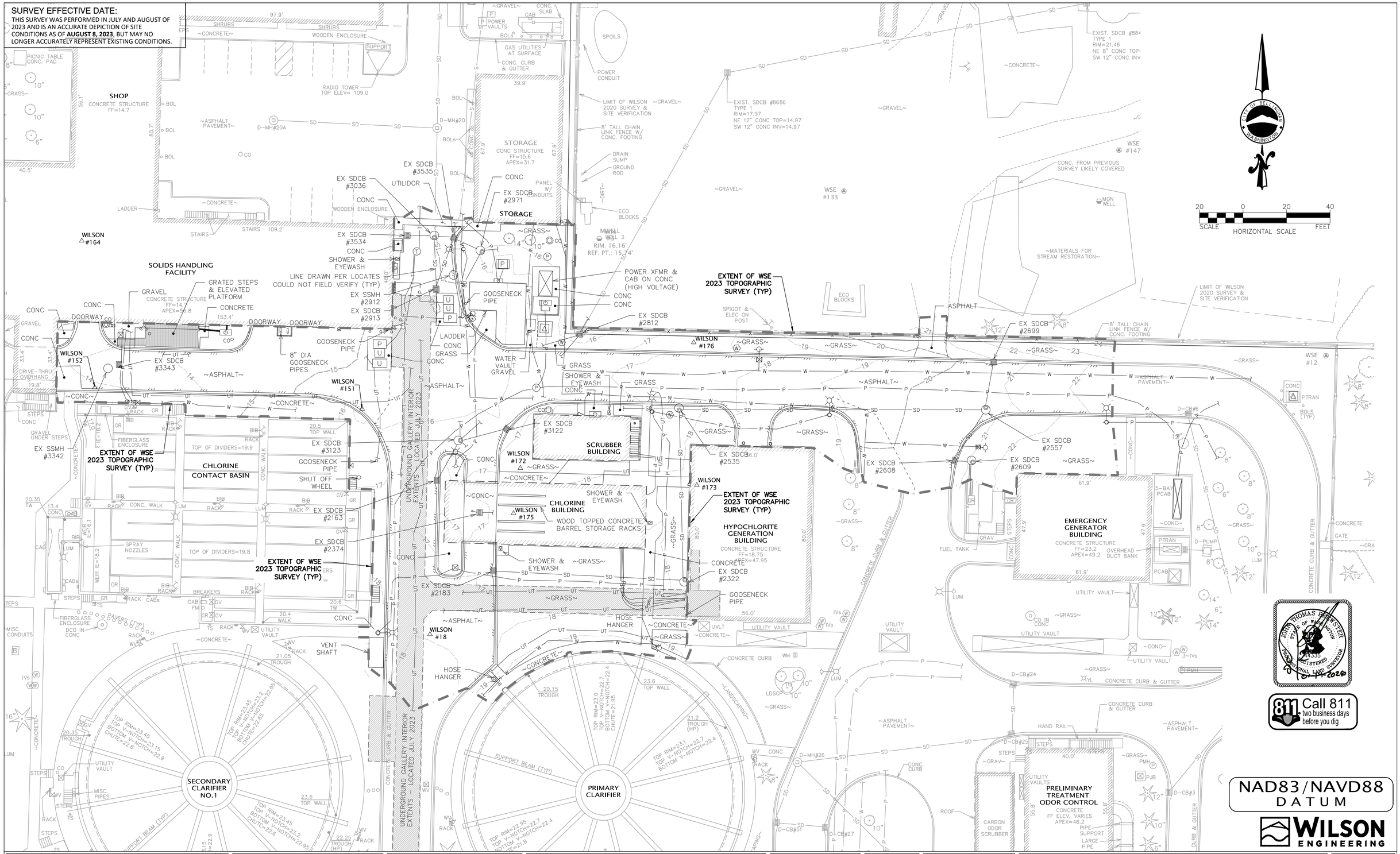

NAD83/NAVD88
DATUM

WILSON ENGINEERING

Date	No	Revision	By
	4		
	3		
	2		
	1		

PROJECT ENGINEER _____
DESIGNED/DRAWN _____
INSPECTOR _____

DIRECTOR PUBLIC WORKS MAO
CITY ENGINEER MLW
ASSISTANT DIRECTOR MAO

CITY OF BELLINGHAM, WASHINGTON
PUBLIC WORKS DEPARTMENT
ENGINEERING DIVISION

SCALE
Horiz. AS SHOWN
Vert. AS SHOWN

DATUM
H: NAD 83/98
V: NAVD 88

Job. No. EU194
Date JAN 2026
Field Bk. _____

POST POINT RESOURCE RECOVERY PLANT
2023 TOPOGRAPHIC SURVEY WITH RECORD BACKGROUND

DRAWING NO. 020C103
SHEET NO. OF 198

CONTACT PERSON: STEPHEN DAY, PE SE , PROJECT ENGINEER AT 360-778-7944

PLOT SETTINGS: WE AutoCAD PDF (General Documentation).pc3, WILSON 22X34, Portrait, 1:1, WE APWA_LINSCREENED.ctb
W:\2023\2023-070 CGB WWTP CAROLLO\DWG\V2022_2023-070 SV00_NAVD88.DWG - 1/14/2026 12:32 PM - Benton Seay

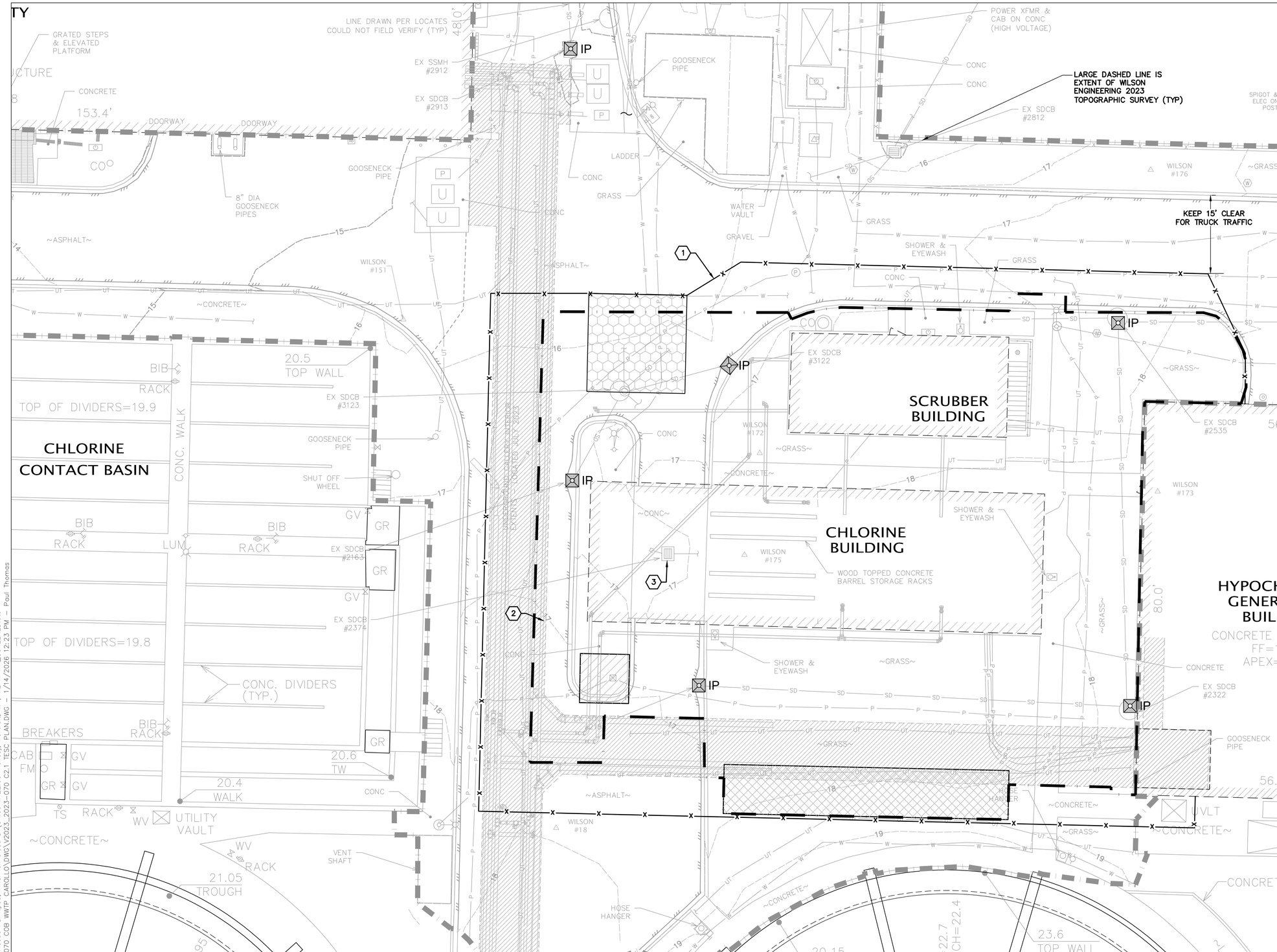

TESC LEGEND

- IP = INLET PROTECTION PER 3 / 020C106
- = TEMPORARY 6' CHAINLINK FENCE
- = CONSTRUCTION ENTRANCE PER 1 / 020C106
- = CONCRETE WASHOUT AND CONTAINMENT
- = STAGING AREA
- = LIMITS OF DISTURBANCE

KEYED NOTES

1. PROJECT BOUNDARY, INSTALL TEMPORARY 6" CHAINLINK FENCE
2. PROTECT EXISTING UTILITY GALLERY DURING DEMOLITION
3. ABANDON EXIST CATCH BASIN IN PLACE AND PLUG PIPES. USE CDF AS NEEDED.

SCALE 10 0 10 20 FEET
HORIZONTAL SCALE

Call 811 two business days before you dig

PAUL M. THOMAS STATE OF WASHINGTON 22017120 REGISTERED PROFESSIONAL ENGINEER
1/14/2026

WILSON ENGINEERING

Date	No	Revision	By
	4		
	3		
	2		
	1		

PROJECT ENGINEER _____
DESIGNED/DRAWN MLW
INSPECTOR _____

DIRECTOR PUBLIC WORKS MAO
CITY ENGINEER _____
ASSISTANT DIRECTOR MAO

CITY OF BELLINGHAM, WASHINGTON
PUBLIC WORKS DEPARTMENT
ENGINEERING DIVISION

SCALE
Horiz. AS SHOWN
Vert. AS SHOWN

DATUM
H: NAD 83/98
V: NAVD 88

Job. No. EU194
Date JAN 2026
Field Bk. _____

POST POINT RESOURCE RECOVERY PLANT
TEMPORARY EROSION AND SEDIMENT CONTROL PLAN

DRAWING NO. 020C104
SHEET NO. 29 OF 198

CONTACT PERSON: STEPHEN DAY, PE SE , PROJECT ENGINEER AT 360-778-7944

PLOT SETTINGS: Adobe PDF1.pc3, ANSI full bleed D (34.00 x 22.00 Inches), Portrait, 1:1, WE APWA_SCREENED.ctb
W:\2023\2023-070 COB WWTP CAROLLO\DWG\2023_2023-070 C2.1 TESC PLAN.DWG - 1/14/2026 12:23 PM - Paul Thomas

CONSTRUCTION STORMWATER POLLUTION PREVENTION PLAN (SWPPP)
PER BELLINGHAM MUNICIPAL CODE 15.42.060 F. 2. E.

ELEMENTS OF CONSTRUCTION STORMWATER POLLUTION PREVENTION.

I. ELEMENT 1 – PRESERVE VEGETATION/MARK CLEARING LIMITS. PRIOR TO BEGINNING LAND–DISTURBING ACTIVITIES, INCLUDING CLEARING AND GRADING, ALL CLEARING LIMITS, SENSITIVE AREAS AND THEIR BUFFERS, AND TREES THAT ARE TO BE PRESERVED WITHIN THE CONSTRUCTION AREA SHOULD BE CLEARLY MARKED, BOTH IN THE FIELD AND ON THE PLANS, TO PREVENT DAMAGE AND OFF–SITE IMPACTS. PLASTIC, METAL, OR STAKE WIRE FENCE MAY BE USED TO MARK THE CLEARING LIMITS. RETAIN THE DUFF LAYER, NATIVE TOP SOIL, AND NATURAL VEGETATION IN AN UNDISTURBED STATE TO THE MAXIMUM DEGREE PRACTICABLE.

II. ELEMENT 2 – ESTABLISH CONSTRUCTION ACCESS.

(A) CONSTRUCTION VEHICLE ACCESS AND EXIT SHALL BE LIMITED TO ONE ROUTE IF POSSIBLE.

(B) ACCESS POINTS SHALL BE STABILIZED WITH QUARRY SPALL OR CRUSHED ROCK TO MINIMIZE THE TRACKING OF SEDIMENT ONTO PUBLIC ROADS.

(C) WHEEL WASH OR TIRE BATHS SHOULD BE LOCATED ON SITE, IF APPLICABLE.

(D) PUBLIC ROADS SHALL AT A MINIMUM BE CLEANED THOROUGHLY AT THE END OF EACH DAY. SEDIMENT SHALL BE REMOVED FROM ROADS BY SHOVELING OR PICKUP SWEEPING AND SHALL BE TRANSPORTED TO A CONTROLLED SEDIMENT DISPOSAL AREA. STREET WASHING WILL BE ALLOWED ONLY AFTER SEDIMENT IS REMOVED IN THIS MANNER.

(E) STREET WASH WASTEWATER SHALL BE CONTROLLED BY PUMPING BACK ON SITE, OR OTHERWISE BE PREVENTED FROM DISCHARGING INTO SYSTEMS TRIBUTARY TO STATE SURFACE WATERS.

(F) CONTROL STREET WASH WASTEWATER BY PUMPING BACK ON SITE, OR OTHERWISE PREVENT IT FROM DISCHARGING INTO SYSTEMS TRIBUTARY TO WATERS OF THE STATE.

III. ELEMENT 3 – CONTROL FLOW RATES.

(A) PROTECT PROPERTIES AND WATERWAYS DOWNSTREAM OF DEVELOPMENT SITES FROM EROSION AND THE ASSOCIATED DISCHARGE OF TURBID WATERS DUE TO INCREASES IN THE VELOCITY AND PEAK VOLUMETRIC FLOW RATE OF STORMWATER RUNOFF FROM THE PROJECT SITE.

(B) PROPERTIES SUBJECT TO MINIMUM REQUIREMENT NO. 5 AND/OR NO. 7 SHALL IMPLEMENT CONTROLS AS EARLY IN THE DEVELOPMENT AS IS PRACTICABLE TO MITIGATE FOR FLOW RATES.

(C) WHERE NECESSARY TO COMPLY WITH MINIMUM REQUIREMENT NO. 7, STORMWATER RETENTION/DETENTION FACILITIES SHALL BE CONSTRUCTED AS ONE OF THE FIRST STEPS IN GRADING. DETENTION FACILITIES SHALL BE FUNCTIONAL PRIOR TO CONSTRUCTION OF SITE IMPROVEMENTS (E.G., IMPERVIOUS SURFACES).

(D) IF PERMANENT INFILTRATION PONDS ARE USED FOR FLOW CONTROL DURING CONSTRUCTION, THESE FACILITIES SHOULD BE PROTECTED FROM SILTATION DURING THE CONSTRUCTION PHASE.

IV. ELEMENT 4 – INSTALL SEDIMENT CONTROLS.

(A) DESIGN, INSTALL, AND MAINTAIN EFFECTIVE EROSION CONTROLS AND SEDIMENT CONTROLS TO MINIMIZE THE DISCHARGE OF POLLUTANTS.

(B) CONSTRUCT SEDIMENT CONTROL BMPS (SEDIMENT PONDS, TRAPS, FILTERS, ETC.) AS ONE OF THE FIRST STEPS IN GRADING. THESE BMPS SHALL BE FUNCTIONAL BEFORE OTHER LAND–DISTURBING ACTIVITIES TAKE PLACE.

(C) MINIMIZE SEDIMENT DISCHARGES FROM THE SITE. THE DESIGN, INSTALLATION AND MAINTENANCE OF EROSION AND SEDIMENT CONTROLS MUST ADDRESS FACTORS SUCH AS THE AMOUNT, FREQUENCY, INTENSITY AND DURATION OF PRECIPITATION, THE NATURE OF RESULTING STORMWATER RUNOFF, AND SOIL CHARACTERISTICS, INCLUDING THE RANGE OF SOIL PARTICLE SIZES EXPECTED TO BE PRESENT ON THE SITE.

(D) DIRECT STORMWATER RUNOFF FROM DISTURBED AREAS THROUGH A SEDIMENT POND OR OTHER APPROPRIATE SEDIMENT REMOVAL BMP, BEFORE THE RUNOFF LEAVES A CONSTRUCTION SITE OR BEFORE DISCHARGE TO AN INFILTRATION FACILITY. RUNOFF FROM FULLY STABILIZED AREAS MAY BE DISCHARGED WITHOUT A SEDIMENT REMOVAL BMP, BUT MUST MEET THE FLOW CONTROL PERFORMANCE STANDARD IN SUBSECTION (F)(2)(E)(III)(A) OF THIS SECTION.

(E) LOCATE BMPS INTENDED TO TRAP SEDIMENT ON SITE IN A MANNER TO AVOID INTERFERENCE WITH THE MOVEMENT OF JUVENILE SALMONIDS ATTEMPTING TO ENTER OFF–CHANNEL AREAS OR DRAINAGES.

(F) WHERE FEASIBLE, DESIGN OUTLET STRUCTURES THAT WITHDRAW IMPOUNDED STORMWATER FROM THE SURFACE TO AVOID DISCHARGING SEDIMENT THAT IS STILL SUSPENDED LOWER IN THE WATER COLUMN.

V. ELEMENT 5 – STABILIZE SOILS.

(A) ALL EXPOSED AND UNWORKED SOILS SHALL BE STABILIZED BY APPLICATION OF EFFECTIVE BMPS THAT PROTECT THE SOIL FROM THE EROSIVE FORCES OF RAINDROP IMPACT AND FLOWING WATER, AND WIND EROSION. APPLICABLE BMPS INCLUDE, BUT ARE NOT LIMITED TO: TEMPORARY AND PERMANENT SEEDING, SODDING, MULCHING, PLASTIC COVERING, EROSION CONTROL FABRICS AND MATTING, SOIL APPLICATION OF POLYACRYLAMIDE (PAM), THE EARLY APPLICATION OF GRAVEL BASE EARLY ON AREAS TO BE PAVED, AND DUST CONTROL.

(B) CONTROL STORMWATER VOLUME AND VELOCITY WITHIN THE SITE TO MINIMIZE SOIL EROSION.

(C) CONTROL STORMWATER DISCHARGES, INCLUDING BOTH PEAK FLOW RATES AND TOTAL STORMWATER VOLUME, TO MINIMIZE EROSION AT OUTLETS AND TO MINIMIZE DOWNSTREAM CHANNEL AND STREAM BANK EROSION.

(D) FROM OCTOBER 1ST THROUGH APRIL 30TH OF EACH YEAR, NO SOILS SHALL REMAIN EXPOSED AND UNWORKED FOR MORE THAN TWO DAYS. FROM MAY 1ST TO SEPTEMBER 30TH OF EACH YEAR, NO SOILS SHALL REMAIN EXPOSED AND UNWORKED FOR MORE THAN SEVEN DAYS. THIS CONDITION APPLIES TO ALL SOILS ON SITE, WHETHER AT FINAL GRADE OR NOT.

(E) STABILIZE SOILS AT THE END OF THE SHIFT BEFORE A HOLIDAY OR WEEKEND IF NEEDED BASED ON THE WEATHER FORECAST.

(F) MINIMIZE THE AMOUNT OF SOIL EXPOSED DURING CONSTRUCTION ACTIVITY.

(G) MINIMIZE THE DISTURBANCE OF STEEP SLOPES.

(H) MINIMIZE SOIL COMPACTION AND, UNLESS INFEASIBLE, PRESERVE TOPSOIL.

(I) APPLICABLE PRACTICES INCLUDE, BUT ARE NOT LIMITED TO, TEMPORARY AND PERMANENT SEEDING, SODDING, MULCHING, PLASTIC COVERING, SOIL APPLICATION OF POLYACRYLAMIDE (PAM), EARLY APPLICATION OF GRAVEL BASE ON AREAS TO BE PAVED, AND DUST CONTROL.

(J) SOIL STABILIZATION MEASURES SELECTED SHOULD BE APPROPRIATE FOR THE TIME OF YEAR, SITE CONDITIONS, ESTIMATED DURATION OF USE, AND POTENTIAL WATER QUALITY IMPACTS THAT STABILIZATION AGENTS MAY HAVE ON DOWNSTREAM WATERS OR GROUND WATER.

(K) SOIL STOCKPILES MUST BE STABILIZED AND PROTECTED WITH SEDIMENT TRAPPING MEASURES AND, WHERE POSSIBLE, LOCATE AWAY FROM STORM DRAIN INLETS, WATERWAYS AND DRAINAGE CHANNELS.

(L) WORK ON LINEAR CONSTRUCTION SITES AND ACTIVITIES, INCLUDING RIGHT–OF–WAY AND EASEMENT CLEARING, ROADWAY DEVELOPMENT, PIPELINES, AND TRENCHING FOR UTILITIES, SHALL NOT EXCEED THE CAPABILITY OF THE INDIVIDUAL CONTRACTOR FOR HIS PORTION OF THE PROJECT TO INSTALL THE BEDDING MATERIALS, ROADBEDS, STRUCTURES, PIPELINES, AND/OR UTILITIES, AND TO RESTABILIZE THE DISTURBED SOILS, MEETING THE TIMING CONDITIONS LISTED ABOVE.

(M) IN ADDITION, AT THE DISCRETION OF THE PUBLIC WORKS DIRECTOR, THOSE SITES UNABLE TO MAINTAIN THE QUALITY OF THEIR STORMWATER DISCHARGE MAY BE REQUIRED TO PROVIDE SOIL STABILIZATION TO ALL EXPOSED SOIL AREAS REGARDLESS OF THE WORKING STATUS OF THE AREA. UPON WRITTEN NOTIFICATION, THE PROPERTY OWNER SHALL PROVIDE FULL STABILIZATION OF ALL EXPOSED SOIL AREAS WITHIN 24 HOURS.

VI. ELEMENT 6 – PROTECT SLOPES.

(A) CUT AND FILL SLOPES SHALL BE DESIGNED AND CONSTRUCTED IN A MANNER THAT WILL MINIMIZE EROSION. APPLICABLE PRACTICES INCLUDE, BUT ARE NOT LIMITED TO, REDUCING CONTINUOUS LENGTH OF SLOPE WITH TERRACING AND DIVERSIONS, REDUCING SLOPE STEEPNESS, AND ROUGHENING SLOPE SURFACES (FOR EXAMPLE, TRACK WALKING).

(B) CONSIDER SOIL TYPE AND ITS POTENTIAL FOR EROSION.

(C) REDUCE SLOPE RUNOFF VELOCITIES BY REDUCING THE CONTINUOUS LENGTH OF SLOPE WITH TERRACING AND DIVERSIONS, REDUCE SLOPE STEEPNESS, AND ROUGHEN SLOPE SURFACE.

(D) DIVERT UPSLOPE DRAINAGE AND RUN–ON WATERS FROM OFF SITE WITH INTERCEPTORS AT TOP OF SLOPE. OFF–SITE STORMWATER SHOULD BE HANDLED SEPARATELY FROM STORMWATER GENERATED ON THE SITE. DIVERSION OF OFF–SITE STORMWATER AROUND THE SITE MAY BE A VIABLE OPTION. DIVERTED FLOWS SHALL BE REDIRECTED TO THE NATURAL DRAINAGE LOCATION AT OR BEFORE THE PROPERTY BOUNDARY.

(E) CONTAIN DOWN SLOPE COLLECTED FLOWS IN PIPES, SLOPE DRAINS, OR PROTECTED CHANNELS TO PREVENT EROSION. TEMPORARY PIPE SLOPE DRAINS MUST HANDLE THE PEAK VOLUMETRIC FLOW RATE CALCULATED USING A 10–MINUTE TIME STEP FROM A TYPE 1A, 10–YEAR, 24–HOUR FREQUENCY STORM FOR THE DEVELOPED CONDITION. ALTERNATIVELY, THE 10–YEAR ONE–HOUR FLOW RATE PREDICTED BY AN APPROVED CONTINUOUS RUNOFF MODEL, INCREASED BY A FACTOR OF 1.6, MAY BE USED. THE HYDROLOGIC ANALYSIS MUST USE THE EXISTING LAND COVER CONDITION FOR PREDICTING FLOW RATES FROM TRIBUTARY AREAS OUTSIDE THE PROJECT LIMITS. FOR TRIBUTARY AREAS ON THE PROJECT SITE, THE ANALYSIS MUST USE THE TEMPORARY OR PERMANENT PROJECT LAND COVER CONDITION, WHICHEVER WILL PRODUCE THE HIGHEST FLOW RATES. IF USING THE WESTERN WASHINGTON HYDROLOGY MODEL TO PREDICT FLOWS, BARE SOIL AREAS SHOULD BE MODELED AS "LANDSCAPED AREA."

(F) PROVIDE DRAINAGE TO REMOVE GROUND WATER INTERSECTING THE SLOPE SURFACE OF EXPOSED SOIL AREAS.

(G) EXCAVATED MATERIAL SHALL BE PLACED ON THE UPHILL SIDE OF TRENCHES, CONSISTENT WITH SAFETY AND SPACE CONSIDERATIONS.

(H) CHECK DAMS SHALL BE PLACED AT REGULAR INTERVALS WITHIN TRENCHES THAT ARE CUT DOWN A SLOPE.

(I) STABILIZE SOILS ON SLOPES, AS SPECIFIED IN ELEMENT NO. 5.

VII. ELEMENT 7 – PROTECT DRAIN INLETS.

(A) ALL STORM DRAIN INLETS MADE OPERABLE DURING CONSTRUCTION SHALL BE PROTECTED SO THAT STORMWATER RUNOFF SHALL NOT ENTER THE CONVEYANCE SYSTEM WITHOUT FIRST BEING FILTERED OR TREATED TO REMOVE SEDIMENT.

(B) ALL APPROACH ROADS SHALL BE KEPT CLEAN, AND ALL SEDIMENT AND STREET WASH WATER SHALL NOT BE ALLOWED TO ENTER STORM DRAINS WITHOUT PRIOR AND ADEQUATE TREATMENT UNLESS TREATMENT IS PROVIDED BEFORE THE STORM DRAIN DISCHARGES TO WATERS OF THE STATE.

VIII. ELEMENT 8 – STABILIZE CHANNELS AND OUTLETS.

(A) ALL TEMPORARY ON–SITE CONVEYANCE CHANNELS SHALL BE DESIGNED, CONSTRUCTED AND STABILIZED TO PREVENT EROSION FROM EXPECTED PEAK FLOWS. CHANNELS MUST HANDLE THE PEAK VOLUMETRIC FLOW RATE CALCULATED USING A 10–MINUTE TIME STEP FROM A TYPE 1A, 10–YEAR, 24–HOUR FREQUENCY STORM FOR THE DEVELOPED CONDITION. ALTERNATIVELY, THE 10–YEAR PEAK FLOW RATE, AS DETERMINED BY AN APPROVED CONTINUOUS RUNOFF MODEL WITH A 15–MINUTE TIME STEP, MAY BE USED. THE HYDROLOGIC ANALYSIS MUST USE THE EXISTING LAND COVER CONDITION FOR PREDICTING FLOW RATES FROM TRIBUTARY AREAS OUTSIDE THE PROJECT LIMITS. FOR TRIBUTARY AREAS ON THE PROJECT SITE, THE ANALYSIS SHALL USE THE TEMPORARY OR PERMANENT PROJECT LAND COVER CONDITION, WHICHEVER WILL PRODUCE THE HIGHEST FLOW RATES. IF USING THE WESTERN WASHINGTON HYDROLOGY MODEL TO PREDICT FLOWS, BARE SOIL AREAS SHOULD BE MODELED AS "LANDSCAPED AREA."

(B) STABILIZATION, INCLUDING ARMORING MATERIAL, ADEQUATE TO PREVENT EROSION OF OUTLETS, ADJACENT STREAM BANKS, SLOPES AND DOWNSTREAM REACHES SHALL BE PROVIDED AT THE OUTLETS OF ALL CONVEYANCE SYSTEMS.

IX. ELEMENT 9 – CONTROL POLLUTANTS.

(A) DESIGN, INSTALL, IMPLEMENT AND MAINTAIN EFFECTIVE POLLUTION PREVENTION MEASURES TO MINIMIZE THE DISCHARGE OF POLLUTANTS.

(B) ALL POLLUTANTS, INCLUDING WASTE MATERIALS AND DEMOLITION DEBRIS, THAT OCCUR ON SITE DURING CONSTRUCTION SHALL BE HANDLED AND DISPOSED OF IN A MANNER THAT DOES NOT CAUSE CONTAMINATION OF STORMWATER.

(C) COVER, CONTAINMENT, AND PROTECTION FROM VANDALISM SHALL BE PROVIDED FOR ALL CHEMICALS, LIQUID PRODUCTS, PETROLEUM PRODUCTS, AND NONINERT WASTES PRESENT ON THE SITE (SEE CHAPTER 173–304 WAC, AS CURRENTLY ENACTED OR HEREAFTER MODIFIED, FOR THE DEFINITION OF INERT WASTE, WHICH IS INCORPORATED HEREIN BY THIS REFERENCE).

(D) MAINTENANCE AND REPAIR OF HEAVY EQUIPMENT AND VEHICLES INVOLVING OIL CHANGES, HYDRAULIC SYSTEM DRAIN DOWN, SOLVENT AND DE–GREASING CLEANING OPERATIONS, FUEL TANK DRAIN DOWN AND REMOVAL, AND OTHER ACTIVITIES WHICH MAY RESULT IN DISCHARGE OR SPILLAGE OF POLLUTANTS TO THE GROUND OR INTO STORMWATER RUNOFF MUST BE CONDUCTED USING SPILL PREVENTION MEASURES, SUCH AS DRIP PANS. CONTAMINATED SURFACES SHALL BE CLEANED IMMEDIATELY FOLLOWING ANY DISCHARGE OR SPILL INCIDENT. EMERGENCY REPAIRS MAY BE PERFORMED ON SITE USING TEMPORARY PLASTIC PLACED BENEATH AND, IF RAINING, OVER THE VEHICLE.

(E) WHEEL WASH, OR TIRE BATH WASTEWATER, SHALL BE DISCHARGED TO A SEPARATE ON–SITE TREATMENT SYSTEM OR TO THE SANITARY SEWER.

(F) APPLICATION OF AGRICULTURAL CHEMICALS, INCLUDING FERTILIZERS AND PESTICIDES, SHALL BE CONDUCTED IN A MANNER AND AT APPLICATION RATES THAT WILL NOT RESULT IN LOSS OF CHEMICAL TO STORMWATER RUNOFF. MANUFACTURERS' RECOMMENDATIONS SHALL BE FOLLOWED FOR APPLICATION RATES AND PROCEDURES.

(G) MANAGEMENT OF PH–MODIFYING SOURCES SHALL PREVENT CONTAMINATION OF RUNOFF AND STORMWATER COLLECTED ON THE SITE. THESE SOURCES INCLUDE, BUT ARE NOT LIMITED TO, BULK CEMENT, CEMENT KILN DUST, FLY ASH, NEW CONCRETE WASHING AND CURING WATERS, WASTE STREAMS GENERATED FROM CONCRETE GRINDING AND SAWING, EXPOSED AGGREGATE PROCESSES, AND CONCRETE PUMPING AND MIXER WASHOUT WATERS.

(H) ADJUST THE PH OF STORMWATER IF NECESSARY TO PREVENT VIOLATIONS OF WATER QUALITY STANDARDS.

(I) ASSURE THAT WASHOUT OF CONCRETE TRUCKS IS PERFORMED OFF SITE OR IN DESIGNATED CONCRETE WASHOUT AREAS ONLY. DO NOT WASH OUT CONCRETE TRUCKS ONTO THE GROUND, OR INTO STORM DRAINS, OPEN DITCHES, STREETS, OR STREAMS. DO NOT DUMP EXCESS CONCRETE ON SITE, EXCEPT IN DESIGNATED CONCRETE WASHOUT AREAS. CONCRETE SPILLAGE OR CONCRETE DISCHARGE TO SURFACE WATERS OF THE STATE IS PROHIBITED. DO NOT WASH OUT TO FORMED AREAS AWAITING INFILTRATION BMPS.

(J) OBTAIN WRITTEN APPROVAL FROM ECOLOGY BEFORE USING CHEMICAL TREATMENT OTHER THAN CO2, DRY ICE, OR FOOD GRADE VINEGAR TO ADJUST PH.

(K) UNCONTAMINATED WATER FROM WATER–ONLY BASED SHAFT DRILLING FOR CONSTRUCTION OF BUILDING, ROAD, AND BRIDGE FOUNDATIONS MAY BE INFILTRATED PROVIDED THE WASTEWATER IS MANAGED IN A WAY THAT PROHIBITS DISCHARGE TO SURFACE WATERS. PRIOR TO INFILTRATION, WATER FROM WATER–ONLY BASED SHAFT DRILLING THAT COMES INTO CONTACT WITH CURING CONCRETE MUST BE NEUTRALIZED UNTIL PH IS IN THE RANGE OF 6.5 TO 8.5 (SU).

X. ELEMENT 10 – CONTROL DEWATERING.

(A) ALL FOUNDATION, VAULT, AND TRENCH DEWATERING WATER, WHICH HAVE SIMILAR CHARACTERISTICS TO STORMWATER RUNOFF AT THE SITE, SHALL BE DISCHARGED INTO A CONTROLLED CONVEYANCE SYSTEM, PRIOR TO DISCHARGE TO A SEDIMENT TRAP OR SEDIMENT POND. CHANNELS MUST BE STABILIZED, AS SPECIFIED IN ELEMENT NO. 8.

(B) CLEAN, NONTURBID DEWATERING WATER, SUCH AS WELL–POINT GROUND WATER, CAN BE DISCHARGED TO SYSTEMS TRIBUTARY TO STATE SURFACE WATERS, AS SPECIFIED IN ELEMENT NO. 8, PROVIDED THE DEWATERING FLOW DOES NOT CAUSE EROSION OR FLOODING OF THE RECEIVING WATERS. THESE CLEAN WATERS SHOULD NOT BE ROUTED THROUGH SEDIMENT PONDS WITH STORMWATER.

(C) HIGHLY TURBID OR OTHERWISE CONTAMINATED DEWATERING WATER, SUCH AS FROM CONSTRUCTION EQUIPMENT OPERATION, CLAMSHELL DIGGING, CONCRETE TREMIE POUR, OR WORK INSIDE A COFFERDAM, SHALL BE HANDLED SEPARATELY FROM STORMWATER AT THE SITE.

(D) OTHER DISPOSAL OPTIONS, DEPENDING ON SITE CONSTRAINTS, MAY INCLUDE, BY WAY OF EXAMPLE: (1) INFILTRATION, (2) TRANSPORT OFF SITE IN VEHICLE, SUCH AS A VACUUM FLUSH TRUCK, FOR LEGAL DISPOSAL IN A MANNER THAT DOES NOT POLLUTE STATE WATERS, (3) ON–SITE TREATMENT USING ECOLOGY APPROVED CHEMICAL TREATMENT OR OTHER SUITABLE TREATMENT TECHNOLOGIES, (4) SANITARY OR COMBINED SEWER DISCHARGE WITH LOCAL SEWER DISTRICT APPROVAL, OR IF THERE IS NO OTHER OPTION, (5) USE OF A SEDIMENTATION BAG THAT DISCHARGES TO A DITCH OR SWALE FOR SMALL VOLUMES OF LOCALIZED DEWATERING.

XI. ELEMENT 11 – MAINTAIN BMPS.

(A) ALL TEMPORARY AND PERMANENT EROSION AND SEDIMENT CONTROL BMPS SHALL BE MAINTAINED AND REPAIRED AS NEEDED TO ASSURE CONTINUED PERFORMANCE OF THEIR INTENDED FUNCTION. ALL MAINTENANCE AND REPAIR SHALL BE CONDUCTED IN ACCORDANCE WITH BMPS.

(B) SEDIMENT CONTROL BMPS SHALL BE INSPECTED WEEKLY OR AFTER A RUNOFF–PRODUCING STORM EVENT DURING THE DRY SEASON AND DAILY DURING THE WET SEASON. ALL PROJECTS THAT DISTURB AN AREA GREATER THAN ONE ACRE SHALL HAVE A CERTIFIED EROSION CONTROL LEAD AVAILABLE TO THE SITE. THIS EROSION CONTROL LEAD SHALL BE RESPONSIBLE TO PROVIDE OVERVIEW OF ONGOING DAY–TO–DAY EROSION CONTROL REQUIREMENTS. THE EROSION CONTROL LEAD SHALL (WITHIN 24 HOURS) REPORT TO THE CITY AND DEPARTMENT OF ECOLOGY ANY SITE DISCHARGES THAT EXCEED STATE WATER QUALITY STANDARDS THAT HAVE OR ARE LIKELY TO HAVE ENTERED WATERS OF THE STATE.

(C) ALL TEMPORARY EROSION AND SEDIMENT CONTROL BMPS SHALL BE REMOVED WITHIN 30 DAYS AFTER FINAL SITE STABILIZATION IS ACHIEVED OR AFTER THE TEMPORARY BMPS ARE NO LONGER NEEDED. TRAPPED SEDIMENT SHALL BE REMOVED OR STABILIZED ON SITE. DISTURBED SOIL AREAS RESULTING FROM REMOVAL OF BMPS OR VEGETATION SHALL BE PERMANENTLY STABILIZED.

XII. ELEMENT 12 – MANAGE THE PROJECT.

(A) PHASING OF CONSTRUCTION. DEVELOPMENT PROJECTS SHALL BE PHASED WHERE FEASIBLE IN ORDER TO PREVENT, TO THE MAXIMUM EXTENT PRACTICABLE, THE TRANSPORT OF SEDIMENT FROM THE DEVELOPMENT SITE DURING CONSTRUCTION. REVEGETATION OF EXPOSED AREAS AND MAINTENANCE OF THAT VEGETATION SHALL BE AN INTEGRAL PART OF THE CLEARING ACTIVITIES FOR ANY PHASE.

(B) WHEN ESTABLISHING THESE PERMITTED CLEARING AND GRADING AREAS, CONSIDERATION SHOULD BE GIVEN TO MINIMIZING REMOVAL OF EXISTING TREES AND MINIMIZING DISTURBANCE/COMPACTION OF NATIVE SOILS EXCEPT AS NEEDED FOR BUILDING PURPOSES. PERMITTED CLEARING AND GRADING AREAS AND ANY OTHER AREAS REQUIRED TO PRESERVE CRITICAL OR SENSITIVE AREAS, BUFFERS, NATIVE GROWTH PROTECTION EASEMENTS, OR TREE RETENTION AREAS, SHALL BE DELINEATED ON THE SITE PLANS AND THE DEVELOPMENT SITE.

(C) COORDINATION WITH UTILITIES AND OTHER CONTRACTORS. THE PRIMARY PROJECT PROPONENT SHALL EVALUATE, WITH INPUT FROM UTILITIES AND OTHER CONTRACTORS, THE STORMWATER MANAGEMENT REQUIREMENTS FOR THE ENTIRE PROJECT, INCLUDING THE UTILITIES, WHEN PREPARING THE CONSTRUCTION SWPPP.

(D) INSPECTION AND MONITORING. ALL BMPS SHALL BE INSPECTED, MAINTAINED, AND REPAIRED AS NEEDED TO ASSURE CONTINUED PERFORMANCE OF THEIR INTENDED FUNCTION.

(E) FOR ANY PROJECT DISTURBING MORE THAN ONE ACRE, A CERTIFIED PROFESSIONAL IN EROSION AND SEDIMENT CONTROL SHALL BE IDENTIFIED IN THE CONSTRUCTION SWPPP AND SHALL BE ON SITE OR ON CALL AT ALL TIMES. CERTIFICATION MAY BE THROUGH THE WASHINGTON STATE DEPARTMENT OF TRANSPORTATION/ASSOCIATED GENERAL CONTRACTORS (WSDOT/AGC) CONSTRUCTION SITE EROSION AND SEDIMENT CONTROL CERTIFICATION PROGRAM OR ANY EQUIVALENT LOCAL OR NATIONAL CERTIFICATION AND/OR TRAINING PROGRAM, IN THE CITY'S DISCRETION.

(F) WHENEVER INSPECTION AND/OR MONITORING REVEALS THAT THE BMPS IDENTIFIED IN THE CONSTRUCTION SWPPP ARE INADEQUATE, DUE TO THE ACTUAL DISCHARGE OF OR POTENTIAL TO DISCHARGE A SIGNIFICANT AMOUNT OF ANY POLLUTANT, THE SWPPP SHALL BE MODIFIED, AS APPROPRIATE, IN A TIMELY MANNER.

(G) MAINTENANCE OF THE CONSTRUCTION SWPPP. THE CONSTRUCTION SWPPP SHALL BE RETAINED ON SITE. THE CONSTRUCTION SWPPP SHALL BE MODIFIED WHENEVER THERE IS A SIGNIFICANT CHANGE IN THE DESIGN, CONSTRUCTION, OPERATION, OR MAINTENANCE OF ANY BMP.

XIII. ELEMENT 13 – PROTECT LOW IMPACT DEVELOPMENT BMPS.
(A) PROTECT ALL BIORETENTION AND RAIN GARDEN BMPS FROM SEDIMENTATION THROUGH INSTALLATION AND MAINTENANCE OF EROSION AND SEDIMENT CONTROL BMPS ON PORTIONS OF THE SITE THAT DRAIN INTO THEM. RESTORE THE BMPS TO THEIR FULLY FUNCTIONING CONDITION IF THEY ACCUMULATE SEDIMENT DURING CONSTRUCTION. RESTORING THE BMP MUST INCLUDE REMOVAL OF SEDIMENT AND ANY SEDIMENT–LADEN BIORETENTION/RAIN GARDEN SOILS, AND REPLACING THE REMOVED SOILS WITH SOILS MEETING THE DESIGN SPECIFICATION.

(B) PREVENT COMPACTING BIORETENTION AND RAIN GARDEN BMPS BY EXCLUDING CONSTRUCTION EQUIPMENT AND FOOT TRAFFIC. PROTECT COMPLETED LAWN AND LANDSCAPED AREAS FROM COMPACTION BY CONSTRUCTION EQUIPMENT.

(C) CONTROL EROSION AND AVOID INTRODUCING SEDIMENT FROM SURROUNDING LAND USES ONTO PERMEABLE PAVEMENTS. DO NOT ALLOW MUDDY CONSTRUCTION EQUIPMENT ON THE BASE MATERIAL OR PAVEMENT. DO NOT ALLOW SEDIMENT–LADEN RUNOFF ONTO PERMEABLE PAVEMENTS OR BASE MATERIALS. PAVEMENTS FOULED WITH SEDIMENTS OR NO LONGER PASSING AN INITIAL INFILTRATION TEXT MUST BE CLEANED USING PROCEDURES FROM BOOK 4 OR THE MANUFACTURER'S PROCEDURES.

(D) KEEP ALL HEAVY EQUIPMENT OFF EXISTING SOILS UNDER LID FACILITIES THAT HAVE BEEN EXCAVATED TO FINAL GRADE TO RETAIN THE INFILTRATION RATE OF THE SOILS.

2. PROJECT DESCRIPTION

a. TOTAL PROJECT AREA. 0.43 ACRES

b. TOTAL PROPOSED IMPERVIOUS AREA. 0.17 ACRES

c. TOTAL PROPOSED AREA TO BE DISTURBED. 0.43 ACRES

3. EXISTING SITE CONDITIONS

a. DESCRIPTION OF EXISTING TOPOGRAPHY. EXISTING SLOPES THROUGHOUT THE PROJECT AREA ARE RELATIVE FLAT WITH SLOPES BETWEEN 1–3%.

b. DESCRIPTION OF EXISTING VEGETATION. THE MAJORITY OF THE SITE HAS BEEN DEVELOPED AND IS MADE UP OF IMPERVIOUS AREA. THERE ARE SOME EXISTING GRASSED AREAS THAT WILL BE RESTORED.

c. DESCRIPTION OF EXISTING DRAINAGE. THE PROJECT SITE IS LOCATED AT THE EXISTING POST POINT WASTEWATER TREATMENT PLANT. EXISTING STORMWATER ENTERS CATCH BASINS WHERE IT DISCHARGES ACCORDING TO ITS PERMIT

4. ADJACENT AREAS

a. DESCRIPTION OF ADJACENT AREAS WHICH MAY BE AFFECTED BY SITE DISTURBANCE:

i. STREAMS. THERE ARE NO STREAMS LOCATED NEARBY

ii. LAKES. THERE ARE NO LAKES LOCATED NEARBY.

iii. WETLANDS. THERE ARE NO WETLANDS WITHIN THE SITE.

iv. RESIDENTIAL AREAS. THERE ARE RESIDENTIAL AREAS LOCATED TO THE EAST OF THE SITE.

v. ROADS. THE PROJECT TAKES PLACE AT THE TREATMENT PLANT ADJACENT ROADS ARE MCKENZIE AVE AND 4TH ST.

DESCRIPTION OF THE DOWNSTREAM DRAINAGE PATH LEADING FROM THE SITE TO THE RECEIVING BODY OF WATER (MINIMUM DISTANCE OF 400 YARDS.) DRAINAGE PATTERNS ARE UNCHANGED FROM EXISTING CONDITIONS. THE CHANGES TO THE SITE WILL ALLOW FOR LESS PONDING.

5. CRITICAL AREAS

a. DESCRIPTION OF CRITICAL AREAS THAT ARE ON OR ADJACENT TO THE SITE. BELLINGHAM BAY IS LOCATED TO THE WEST OF THE SITE.

6. DESCRIPTION OF ONSITE SOILS SEE FINAL GEOTECH REPORT PREPARED BY GEONGINEERS, DATED _____.

7. EROSION PROBLEM AREAS. THERE ARE NO EROSION PROBLEM AREAS WITHIN THE PROJECT WORK AREA.

8. CONSTRUCTION PHASING.

CONSTRUCTION PHASING. TBD

STANDARD NOTES

1. APPROVAL OF THIS EROSION CONTROL (ESC) PLAN DOES NOT CONSTITUTE AN APPROVAL OF PERMANENT ROAD OR DRAINAGE DESIGN (E.G. SIZE AND LOCATION OF ROADS, PIPES, RESTRICTORS, CHANNELS, RETENTION FACILITIES, UTILITIES, ETC.).
2. THE IMPLEMENTATION OF THESE ESC PLANS AND THE CONSTRUCTION, MAINTENANCE, REPLACEMENT, AND UPGRADING OF THESE ESC FACILITIES IS THE RESPONSIBILITY OF THE CONTRACTOR UNTIL ALL CONSTRUCTION IS COMPLETED AND APPROVED AND VEGETATION/LANDSCAPING IS ESTABLISHED.
3. THE BOUNDARIES OF THE CLEARING LIMITS SHOWN ON THIS PLAN SHALL BE CLEARLY FLAGGED IN THE FIELD PRIOR TO CONSTRUCTION. DURING THE CONSTRUCTION PERIOD, NO DISTURBANCE BEYOND THE FLAGGED CLEARING LIMITS SHALL BE PERMITTED. THE FLAGGING SHALL BE MAINTAINED BY THE CONTRACTOR FOR THE DURATION OF CONSTRUCTION.
4. THE ESC FACILITIES SHOWN ON THIS PLAN MUST BE CONSTRUCTED IN CONJUNCTION WITH ALL CLEARING AND GRADING ACTIVITIES, AND IN SUCH A MANNER AS TO ENSURE THAT SEDIMENT AND SEDIMENT LADEN WATER DO NOT ENTER THE DRAINAGE SYSTEM, ROADWAYS, OR VIOLATE APPLICABLE WATER STANDARDS.
5. THE ESC FACILITIES SHOWN ON THIS PLAN ARE THE MINIMUM REQUIREMENTS FOR ANTICIPATED SITE CONDITIONS. DURING THE CONSTRUCTION PERIOD, THESE ESC FACILITIES SHALL BE UPGRADED AS NEEDED FOR UNEXPECTED STORM EVENTS AND TO ENSURE THAT SEDIMENT AND SEDIMENT LADEN WATER DO NOT LEAVE THE SITE.
6. THE ESC FACILITIES SHALL BE INSPECTED DAILY BY THE CONTRACTOR AND MAINTAINED AS NECESSARY TO ENSURE THEIR CONTINUED FUNCTIONING.
7. THE ESC FACILITIES ON INACTIVE SITES SHALL BE INSPECTED AND MAINTAINED A MINIMUM OF ONCE A MONTH OR WITHIN THE 48 HOURS FOLLOWING A MAJOR STORM EVENT.
8. AT NO TIME SHALL MORE THAN ONE FOOT OF TRAPPED SEDIMENT BE ALLOWED TO ACCUMULATE WITHIN A CATCH BASIN. ALL CATCH BASINS AND CONVEYANCE LINES SHALL BE CLEANED PRIOR TO PAVING. THE CLEANING OPERATION SHALL NOT FLUSH SEDIMENT LADEN WATER INTO THE DOWNSTREAM SYSTEM.
9. STABILIZED CONSTRUCTION ENTRANCES SHALL BE INSTALLED AT THE BEGINNING OF CONSTRUCTION AND MAINTAINED FOR THE DURATION OF THE PROJECT. ADDITIONAL MEASURES MAY BE REQUIRED TO ENSURE THAT ALL PAVED AREAS ARE KEPT CLEAN FOR THE DUR

EROSION CONTROL GENERAL NOTES

1. BMPS: BEST MANAGEMENT PRACTICES (BMPS) REFERRED TO ON THIS PLAN AND IN THESE NOTES SHALL BE CONSTRUCTED AND MAINTAINED AS DESCRIBED IN DEPARTMENT OF ECOLOGY'S STORMWATER MANAGEMENT MANUAL FOR WESTERN WASHINGTON, VOL II, CONSTRUCTION STORMWATER POLLUTION PREVENTION.
2. EXTENT: THE EXTENT OF EROSION AND SEDIMENTATION CONTROL MEASURES IS DEPENDENT ON WEATHER CONDITIONS, SITE SLOPES, LENGTH OF TIME GROUND IS LEFT EXPOSED, AND THE AREA OF EXPOSED GROUND. THE CONTRACTOR SHALL AT ALL TIMES MINIMIZE THE RISK OF SITE EROSION BY CAREFUL SCHEDULING AND BY IMPLEMENTING AND MAINTAINING BMPS UNTIL THE SITE IS PERMANENTLY STABILIZED.
3. VEGETATION: EXISTING VEGETATION SHALL BE PRESERVED WHERE ATTAINABLE.
4. ADJACENT PROPERTIES: PROPERTIES ADJACENT TO THE PROJECT SHALL BE PROTECTED FROM SEDIMENT DEPOSITION.
5. REMOVAL OF BMPS: ALL TEMPORARY EROSION AND SEDIMENT CONTROL BMPS SHALL BE REMOVED WITHIN 30 DAYS AFTER FINAL SITE STABILIZATION IS ACHIEVED OR AFTER THE TEMPORARY BMPS ARE NO LONGER NEEDED. TRAPPED SEDIMENT SHALL BE REMOVED OR STABILIZED ON-SITE. DISTURBED SOIL AREAS RESULTING FROM REMOVAL SHALL BE PERMANENTLY STABILIZED.
6. OTHER REQUIREMENTS: THE ENGINEER, OWNER, CITY OF BELLINGHAM, DEPARTMENT OF ECOLOGY, OR OTHER AGENCIES MAY REQUIRE BMPS IN ADDITION TO WHAT IS SHOWN ON THIS PLAN IF NECESSARY TO PREVENT VIOLATIONS OF SURFACE WATER QUALITY. THE CONTRACTOR SHALL IMPLEMENT THE BMPS AS REQUIRED.
7. THE IMPLEMENTATION OF THESE ESC PLANS AND THE CONSTRUCTION, MAINTENANCE, REPLACEMENT, AND UPGRADING OF THESE ESC FACILITIES IS THE RESPONSIBILITY OF THE APPLICANT/CONTRACTOR UNTIL ALL CONSTRUCTION IS COMPLETED AND APPROVED AND VEGETATION/LANDSCAPING IS ESTABLISHED.
8. THE ESC FACILITIES SHOWN ON THIS PLAN MUST BE CONSTRUCTED IN CONJUNCTION WITH ALL CLEARING AND GRADING ACTIVITIES, AND IN SUCH A MANNER AS TO INSURE THAT SEDIMENT AND SEDIMENT LADEN WATER DO NOT ENTER THE DRAINAGE SYSTEM, ROADWAYS, OR VIOLATE APPLICABLE WATER STANDARDS.
9. THE ESC FACILITIES SHOWN ON THIS PLAN ARE THE MINIMUM REQUIREMENTS FOR ANTICIPATED SITE CONDITIONS. DURING THE CONSTRUCTION PERIOD, THESE ESC FACILITIES SHALL BE UPGRADED AS NEEDED FOR UNEXPECTED STORM EVENTS AND TO ENSURE THAT SEDIMENT AND SEDIMENT LADEN WATER DO NOT LEAVE THE SITE.
10. OBTAIN PERMISSION AND/OR PERMIT APPROVAL AS REQUIRED FROM CITY OF BELLINGHAM PRIOR TO ANY DISCHARGES TO THE SANITARY SEWER SYSTEM.
11. WHERE CONFLICTING REQUIREMENTS WITHIN THE CONSTRUCTION ELEMENTS ARE PRESENT, THE MORE RESTRICTIVE REQUIREMENT SHALL HAVE PRECEDENCE.
12. CONVEYANCE BYPASS: IF REQUIRED, PROVISION FOR BYPASS OF STORMWATER CONVEYANCE SHALL BE PROVIDED. BYPASS SHALL BE INSTALLED FOR THE DURATION OF THE WORK. MATERIALS FOR BYPASS NEED NOT BE INSTALLED WHILE WORK IS IN PROGRESS AT A PARTICULAR LOCATION, BUT MATERIALS AND EQUIPMENT FOR IMMEDIATE INSTALLATION SHALL BE ON HAND. BYPASS SHALL BE IN PLACE WHILE SITE IS UNATTENDED FOR GREATER THAN 12 HOURS. A TRENCH MAY BE DUG FOR THE BYPASS PRIOR TO INSTALLATION OF BYPASS IF NECESSARY AND FEASIBLE. ANY PIPING USED FOR BYPASS SHALL BE OF A DIAMETER AT LEAST 2/3 OF THE EXISTING PIPE/CULVERT DIAMETER.
13. PUBLIC RIGHTS-OF WAY SHALL BE KEPT IN A CLEAN AND SERVICEABLE CONDITION AT ALL TIMES. IN THE EVENT MATERIALS ARE INADVERTENTLY DEPOSITED ON ROADWAYS, THE MATERIAL SHALL BE PROMPTLY REMOVED. MATERIALS ARE TO BE SWEPT AND REMOVED PRIOR TO ANY STREET FLUSHING. PUBLIC AND PRIVATE DRAINAGE WAYS SHALL BE PROTECTED FROM POLLUTION. NO MATERIAL IS TO BE DISCHARGED TO OR DEPOSITED IN STORMWATER SYSTEMS THAT MAY RESULT IN VIOLATION OF STATE OR FEDERAL WATER QUALITY STANDARDS.
14. THE CONTRACTOR SHALL BE RESPONSIBLE FOR CONSTRUCTING AND MAINTAINING EROSION CONTROL MEASURES (SILT FENCE, SILT PONDS, CATCH BASIN FILTERS, ETC.) THROUGHOUT THE DURATION OF THE PROJECT. ALL EROSION CONTROL WORK IS CONSIDERED INCIDENTAL TO THE ITEMS OF WORK IN THE CONTRACT FOR THIS PROJECT.
15. ALL CATCH BASINS WITHIN THE PROJECT LIMITS SHALL BE CLEANED OUT AT THE COMPLETION OF THE PROJECT AND ANY MATERIAL REMOVED SHALL BE PROPERLY DISPOSED OF. IN ADDITION, INLET PROTECTION MUST BE PROVIDED FOR ALL EXISTING CATCH BASINS DURING CONSTRUCTION.
16. DURING ANY DITCH, CREEK & DRAINAGE WORK WATER SHALL BE DIVERTED AROUND THE PROJECT WITH A PUMP OR OTHER ADEQUATE METHOD APPROVED BY THE ENGINEER.
17. CONCRETE PROCESS WATER AND SLURRY FROM PAVEMENT CUTTINGS SHALL NOT BE ALLOWED TO ENTER ANY DRAINAGE CONVEYANCE. SLURRY/CUTTINGS SHALL NOT REMAIN ON PAVEMENT OVERNIGHT. ALL SAWCUTTING AND SURFACING OPERATIONS SHALL USE BMP C152 FOR POLLUTION PREVENTION.
18. CAREFULLY PLACE PROPOSED BEST MANAGEMENT PRACTICES TO MAINTAIN UNRESTRICTED ACCESS TO RESIDENTIAL, PEDESTRIAN, AND BUSINESS USES IN THIS AREA THROUGHOUT CONSTRUCTION. CLOSURES TO BE COORDINATED THROUGH PROJECT ENGINEER

BMP C105 – STABILIZED CONSTRUCTION ENTRANCE:

PURPOSE: CONSTRUCTION ENTRANCES ARE STABILIZED TO REDUCE THE AMOUNT OF SEDIMENT TRANSPORTED ONTO PAVED ROADS BY VEHICLES OR EQUIPMENT BY CONSTRUCTING A STABILIZED PAD OF QUARRY SPALLS AT ENTRANCES TO THE CONSTRUCTION SITES.

INSTALLATION: A SEPARATIONS GEOTEXTILE SHALL BE PLACED UNDER THE SPALLS TO PREVENT FINE SEDIMENT FROM PUMPING UP INTO THE ROCK PAD. THE GEOTEXTILE SHALL MEET THE FOLLOWING STANDARDS: GRAB TENSILE STRENGTH (ASTM D4751) = 200 PSI MINIMUM, GRAB TENSILE ELONGATION (ASTM D4632) = 30% MAXIMUM, MULLEN BURST STRENGTH (ASTM D3786-80A) = 400 PSI MINIMUM, AOS (ASTM D4751) = 20-45 (U.S. STANDARD SIEVE SIZE).

MAINTENANCE: QUARRY SPALLS SHALL BE ADDED IF THE PAD IS NO LONGER IN ACCORDANCE WITH SPECIFICATIONS.

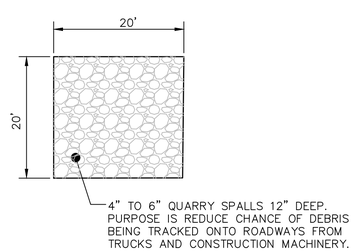

1 BMP C105 CONSTRUCTION ENTRANCE

NOT TO SCALE

BMP C123 – PLASTIC COVERING

PURPOSE: Plastic covering provides immediate, short-term erosion protection for emergency protection of slopes during heavy rains.

INSTALLATION: Place plastic up and down, not across slope with a minimum 8-inch overlap at seams. Place plastic end in a small (12-inch wide by 6-inch deep) slot trench at the top of the slope and backfill with soil to keep water from flowing underneath. Sandbags shall be placed ever 3 to 6 feet along seams and a wooden stake pounded in each to hold in place. If erosion of the toe is likely, a gravel berm riprap, or on the suitable protection shall be installed at the toe of the slope in order to reduce the velocity of runoff. Plastic sheeting shall have a minimum thickness of 0.06 millimeters.

MAINTENANCE. Torn sheet must be replaced and open seams repaired. When plastic is no longer needed, it shall be completely removed.

BMP C152: SAWCUTTING AND SURFACING POLLUTION PREVENTION

Purpose: Sawcutting and surfacing operations generate slurry and process water that contains fine particles and high pH (concrete cutting), both of which can violate the water quality standards in the receiving water. This BMP is intended to minimize and eliminate process water and slurry from entering waters of the State.

- Conditions of Use: Anytime sawcutting or surfacing operations take place, these management practices shall be utilized. Sawcutting and surfacing operations include, but are not limited to: sawing, coring, grinding, roughening, hydro-demolition, and bridge and road surfacing.

Design and Installation Specifications:

- Slurry and cuttings shall not remain on permanent concrete or asphalt pavement overnight.
- Slurry and cuttings shall not drain to any natural or constructed drainage conveyance.
- Collected slurry and cuttings shall be disposed of in a manner that does not violate groundwater or surface water quality standards.
- Process water that is generated during hydro-demolition, surface roughening or similar operations shall not drain to any natural or constructed drainage conveyance and shall be disposed of in a manner that does not violate groundwater or surface water quality standards.
- Cleaning waste material and demolition debris shall be handled and disposed of in a manner that does not cause contamination of water. If the area is swept with a pick-up sweeper, the material must be hauled out of the area to an appropriate disposal site.

Maintenance Standards: Continually monitor operations to determine whether slurry, cuttings, or process water could enter waters of the state. If inspections show that a violation of water quality standards could occur, stop operations and immediately implement preventive measures such as berms, barriers, secondary containment, and vacuum trucks.

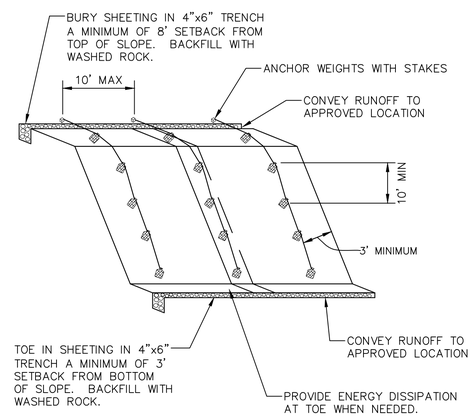

NOTES:

1. TIRES, SANDBAGS, OR EQUIVALENT MAY BE USED TO WEIGH DOWN PLASTIC SHEETING.
2. SEAMS BETWEEN SHEETS MUST OVERLAP A MINIMUM OF 12" AND BE WEIGHTED OR TAPED.
3. PLASTIC SHEETING SHALL HAVE A MINIMUM THICKNESS OF 6 MIL.
4. DUE TO RAPID RUNOFF CAUSED BY PLASTIC SHEETING, THIS METHOD SHALL NOT BE USED UPSLOPE OF AREAS THAT MIGHT BE ADVERSELY IMPACTED BY CONCENTRATED RUNOFF.
5. CONSTRUCT BERM OR SWALE AT TOP OF SLOPE AS DIRECTED BY THE CLEARING AND GRADING INSPECTOR.
6. CONSTRUCT DITCH AT BASE OF SLOPE AS REQUIRED BY CITY, AND DISCHARGE TO APPROVED LOCATION.

2 BMP C123 – PLASTIC COVERING FOR SLOPES & STOCKPILES

NOT TO SCALE

BMP C151: CONCRETE HANDLING

Purpose: Concrete work can generate process water and slurry that contain fine particles and high pH, both of which can violate water quality standards in the receiving water. This BMP is intended to minimize and eliminate concrete process water and slurry from entering waters of the state.

- Conditions of Use: Any time concrete is used, these management practices shall be utilized. Concrete construction projects include, but are not limited to: curbs, sidewalks, roads, bridges, foundations, floors, and runways.

Design and Installation Specifications:

- Concrete truck chutes, pumps, and internals shall be washed out only into formed areas awaiting installation of concrete or asphalt.
- Unused concrete remaining in the truck and pump shall be returned to the originating batch plant for recycling.
- Hand tools including, but not limited to, screeds, shovels, rakes, floats, and trowels shall be washed off only into formed areas awaiting installation of concrete or asphalt.
- Equipment that cannot be easily moved, such as concrete pavers, shall only be washed in areas that do not directly drain to natural or constructed stormwater conveyances.
- Washdown from areas such as concrete aggregate driveways shall not drain directly to natural or constructed stormwater conveyances.
- When no formed areas are available, washwater and leftover product shall be contained in a lined container. Contained concrete shall be disposed of in a manner that does not violate groundwater or surface water quality standards.

Maintenance Standards: Containers shall be checked for holes in the liner daily during concrete pours and repaired the same day.

BMP C220 – STORM DRAIN INLET PROTECTION

PURPOSE: To prevent coarse sediment from entering drainage system prior to permanent stabilization of the disturbed area.

INSTALLATION: Block and Gravel Filters or Gravel and Wire Mesh Filters shall be installed on catch basins within the construction limits where erosion is a risk. Catch Basin Filters (inserts) shall be installed in existing catch basins outside of the project limits where sedimentation is a risk.

Block and Gravel Filters / Gravel and Wire Mesh Filters. Install to a height of 1 to 2 feet above the inlet. Recess the first row 2 inches into the ground for stability. Support subsequent courses by placing a 2x4 through the block opening. Do not use mortar. Lay some blocks in the bottom row on their side for dewatering the pool. Place hardware cloth or comparable wire mesh with 1/2-inch openings over all block openings.

Catch Basin Filters. Filters inserted in catch basins just below the grating shall be designed by the manufacturer for use at construction sites. The limited sediment storage capacity increases the amount of inspection and maintenance required, which may be daily for heavy sediment loads. Inserts shall have 5 cubic feet of sediment storage, dewatering provisions, and a high-flow bypass that will not clog under normal use at a construction site.

Through Curb Inlets. Install sand bags to prevent flow from entering curb-cut inlet in addition to installing catch basin insert.

MAINTENANCE: Catch basin filters shall be inspected frequently, especially after storm events. If it becomes clogged, it shall be cleaned or replaced. For gravel filters, when the stone becomes clogged with sediment, the stones must be pulled away from the inlet and cleaned or replaced. Do not wash sediment into storm drains while cleaning.

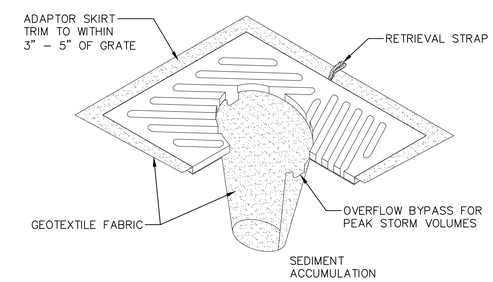

NOTES:

1. INSERT SHALL BE INSTALLED PRIOR TO CLEARING AND GRADING ACTIVITY, OR UPON PLACEMENT OF A NEW CATCH BASIN.
2. SEDIMENT SHALL BE REMOVED FROM THE UNIT WHEN IT BECOMES HALF FULL .
3. SEDIMENT REMOVAL SHALL BE ACCOMPLISHED BY REMOVING THE INSERT, EMPTYING, AND RE-INSERTING IT INTO THE CATCH BASIN.

3 BMP C220 – CATCH BASIN INSERT

NOT TO SCALE

PAUL M. THOMAS — STATE OF WASHINGTON — 22017120 — REGISTERED PROFESSIONAL ENGINEER

1/14/2026

Call 811 two business days before you dig

WILSON ENGINEERING

Date	No	Revision	By
	4		
	3		
	2		
	1		

PROJECT ENGINEER _____
DESIGNED/DRAWN _____
INSPECTOR _____

DIRECTOR PUBLIC WORKS MAO
CITY ENGINEER MLW
ASSISTANT DIRECTOR MAO

CITY OF BELLINGHAM, WASHINGTON
PUBLIC WORKS DEPARTMENT
ENGINEERING DIVISION

SCALE: Horiz. AS SHOWN; Vert. AS SHOWN

DATUM: H: NAD 83/98; V: NAVD 88

Job. No. EU194
Date JAN 2026
Field Bk. _____

POST POINT RESOURCE RECOVERY PLANT
TEMPORARY EROSION AND SEDIMENT CONTROL DETAILS

DRAWING NO. 020C106
SHEET NO. 31 OF 198

CONTACT PERSON: STEPHEN DAY, PE SE , PROJECT ENGINEER AT 360-778-7944

PLOT SETTINGS: Adobe PDF1.pc3, ANSI full bleed D (34.00 x 22.00 Inches), Portrait, 1:1, WE APWA_SCREENED.ctb
W:\2023\2023-070 COB WWTP CAROLLO\DWG\2023_2023-070 C2.1 TESC PLAN.DWG - 1/14/2026 12:23 PM - Paul Thomas

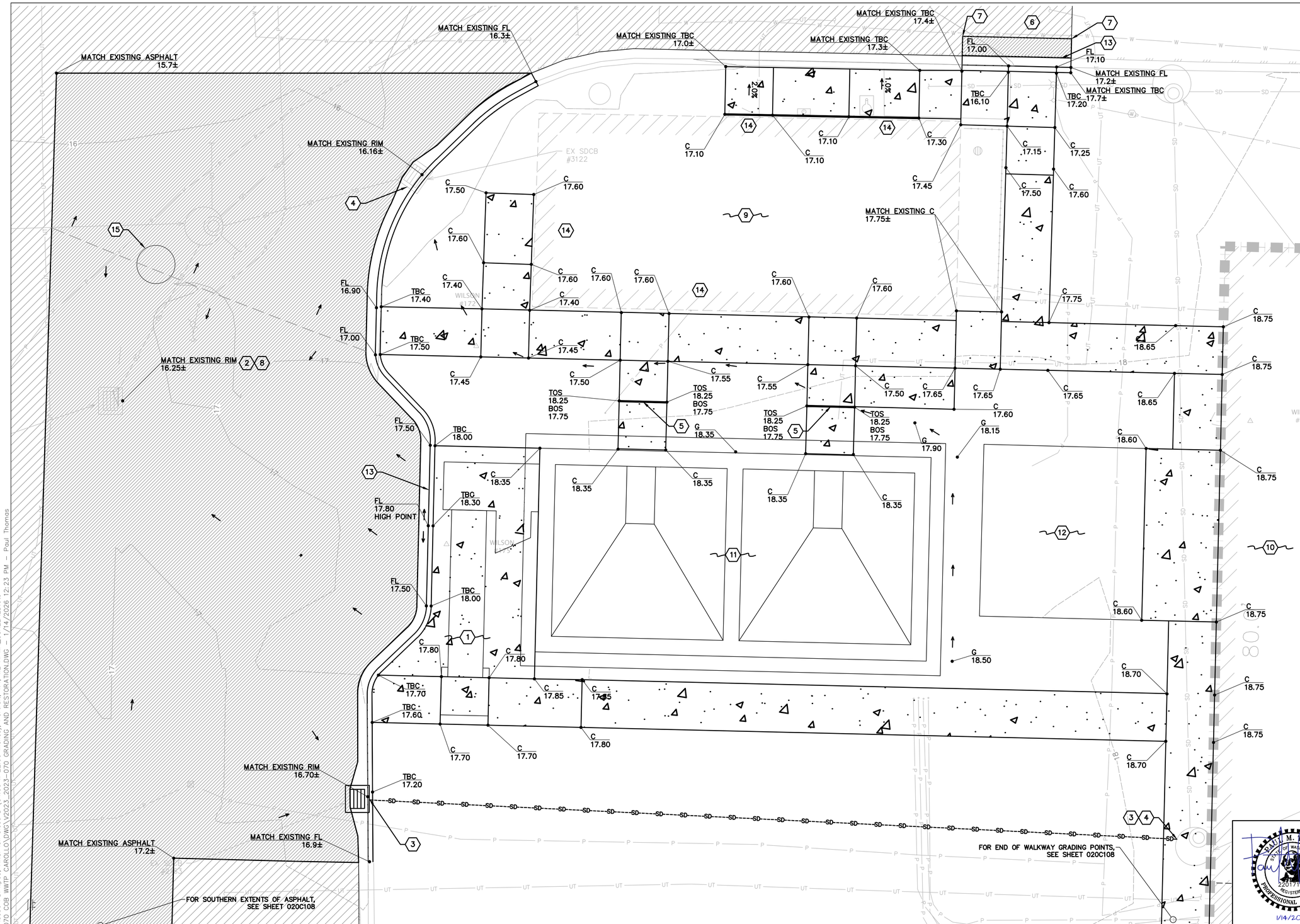

LEGEND

TBC = TOP BACK OF CURB
FL = GUTTER FLOW LINE
C = CONCRETE
FG = FINISHED GRADE
BOS = BOTTOM OF STAIR
TOS = TOP OF STAIR
G = LANDSCAPING
→ = DRAINAGE DIRECTION

KEYED NOTES

1. STAIR ACCESS SEE SHEET 440S101 FOR DETAILS
2. REPLACE EXISTING FRAME AND GRATE (2 / 020C110)
3. INSTALL WSDOT TYPE 1 INLET. MATCH INLET AND PIPE TO PRE-CONSTRUCTION ELEVATIONS (1 / 020C110)
4. PROTECT EXISTING STORM STRUCTURE DURING CONSTRUCTION. USE GRADE RINGS TO MATCH PROPOSED GRADE AS NECESSARY.
5. STEP – 6" RISE
6. CURB CUT
7. MATCH EXISTING ASPHALT ELEVATION
8. CONTRACTOR TO ENSURE NEW ASPHALT EXTENTS DRAIN TO INLET
9. EXISTING SLUDGE STORAGE BUILDING FF = 17.60
10. EXISTING HYPOCHLORITE GENERATION BUILDING FF = 18.76
11. PROPOSED SLUDGE STORAGE TANKS SHEET 440S101 AND SHEET 440S102 FOR DETAILS
12. PROPOSED ODOR CONTROL SEE SHEET 440S101 FOR PAD GRADING
13. CURB AND GUTTER PER (2 / 020C109)
14. STEP UP INTO DOOR THRESHOLD. SEE SHEET 420S102 (CR314 / 800TC101)
15. PROPOSED MANHOLE. SEE CAROLLO PLANS FOR DETAILS AND CONNECTIVITY

SCALE HORIZONTAL SCALE FEET (5 0 5 10)

Call 811 two business days before you dig

PAUL M. THOMAS — STATE OF WASHINGTON — 22017120 — REGISTERED PROFESSIONAL ENGINEER — 1/14/2026

WILSON ENGINEERING

Date	No	Revision	By
	4		
	3		
	2		
	1		

PROJECT ENGINEER
DESIGNED/DRAWN
INSPECTOR

DIRECTOR PUBLIC WORKS MAO
CITY ENGINEER MLW
ASSISTANT DIRECTOR MAO

CITY OF BELLINGHAM, WASHINGTON
PUBLIC WORKS DEPARTMENT
ENGINEERING DIVISION

SCALE: Horiz. AS SHOWN; Vert. AS SHOWN
DATUM: H: NAD 83/98; V: NAVD 88
Job. No. EU194
Date JAN 2026
Field Bk.

POST POINT RESOURCE RECOVERY PLANT
GRADING AND DRAINAGE PLAN

DRAWING NO. 020C107
SHEET NO. 32 OF 198

CONTACT PERSON: STEPHEN DAY, PE SE , PROJECT ENGINEER AT 360-778-7944

PLOT SETTINGS: Adobe PDF1.pc3, ANSI full bleed D (34.00 x 22.00 Inches), Portrait, 1:1, WE APWA_SCREENED.ctb
W:\2023\2023-070 COB WWTP CAROLLO\DWG\2023_2023-070 GRADING AND RESTORATION.DWG – 1/14/2026 12:23 PM – Paul Thomas

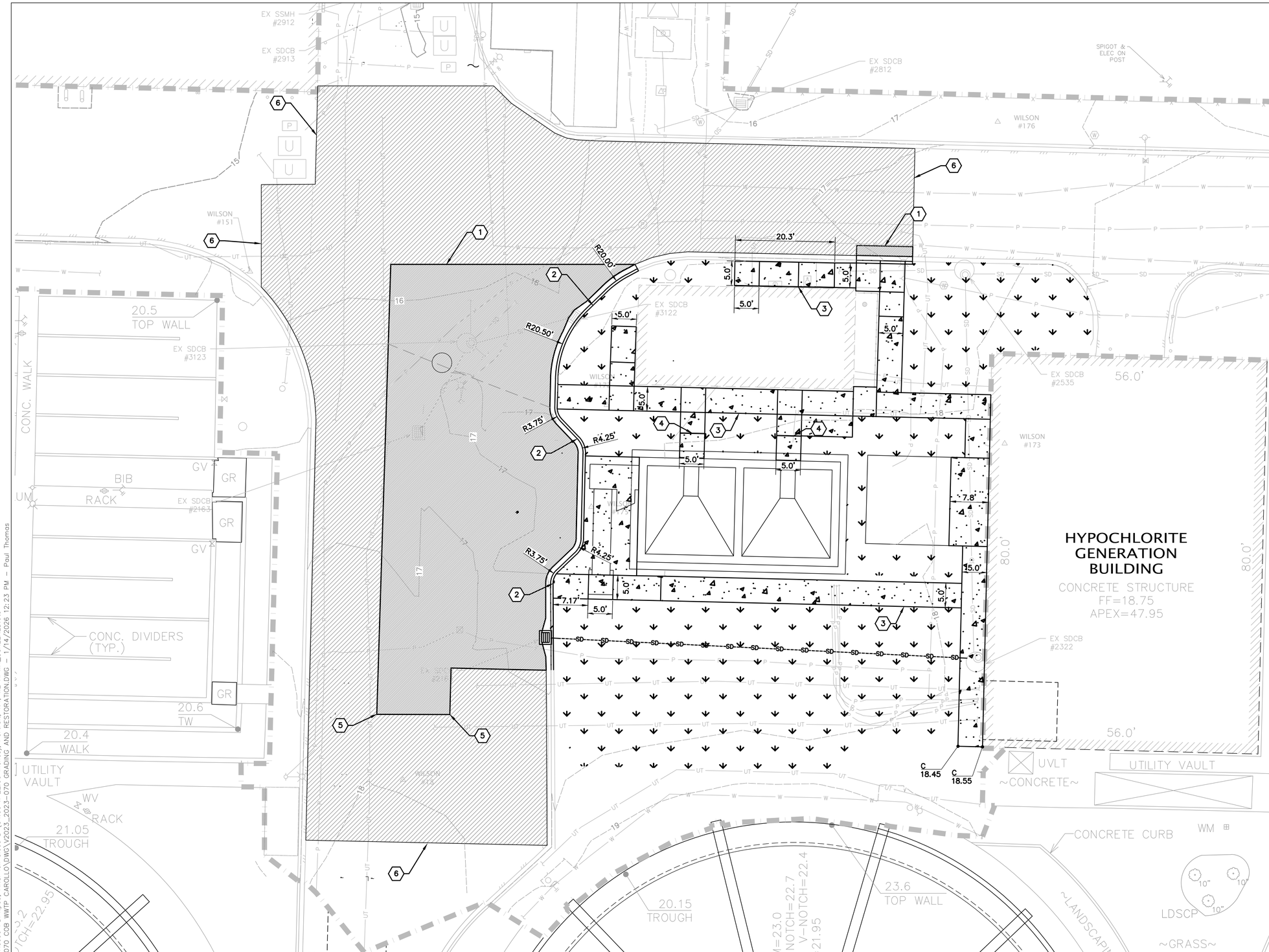

TESC LEGEND

= HOT MIX ASPHALT PER 3 / 020C110

= 2" MILL AND OVERLAY

= PERMANENT SEEDING, FERTILIZING, AND MULCHING FOR ALL DISTURBED AREAS NOT COVERED WITH HARD SURFACING PER SPECIFICATIONS

= CONCRETE SIDEWALK COB RCA CONCRETE MIX GSP 8-04

KEYED NOTES

1. REPLACED ASPHALT EXTENTS 3 / 020C110 3 / 020C109
2. CURB AND GUTTER PER DETAIL 2 / 020C109
3. SIDEWALK PER 5 / 020C110
4. STAIR – 6" RISE
5. MATCH ELEVATION OF EXISTING ASPHALT
6. 2" MILL AND OVERLAY OF EXISTING ASPHALT 1 / 020C109 3 / 020C109

10 0 10 20
SCALE HORIZONTAL SCALE FEET

Call 811 two business days before you dig

STATE OF WASHINGTON PAUL M. THOMAS 22017120 REGISTERED PROFESSIONAL ENGINEER
1/14/2026

WILSON ENGINEERING

Date	No	Revision	By
	4		
	3		
	2		
	1		

PROJECT ENGINEER _____
DESIGNED/DRAWN _____
INSPECTOR _____

DIRECTOR PUBLIC WORKS MAO
CITY ENGINEER MLW
ASSISTANT DIRECTOR MAO

CITY OF BELLINGHAM, WASHINGTON
PUBLIC WORKS DEPARTMENT
ENGINEERING DIVISION

SCALE
Horiz. AS SHOWN
Vert. AS SHOWN

DATUM
H: NAD 83/98
V: NAVD 88

Job. No. EU194
Date JAN 2026
Field Bk. _____

POST POINT RESOURCE RECOVERY PLANT
SURFACE RESTORATION AND DIMENSION PLAN

DRAWING NO. 020C108
SHEET NO. 33 OF 198

CONTACT PERSON: STEPHEN DAY, PE SE , PROJECT ENGINEER AT 360-778-7944

PLOT SETTINGS: Adobe PDF1.pc3, ANSI full bleed D (34.00 x 22.00 Inches), Portrait, 1:1, WE APWA_SCREENED.ctb
W:\2023\2023-070 COB WWTP CAROLLO\DWG\2023_2023-070 GRADING AND RESTORATION.DWG – 1/14/2026 12:23 PM – Paul Thomas

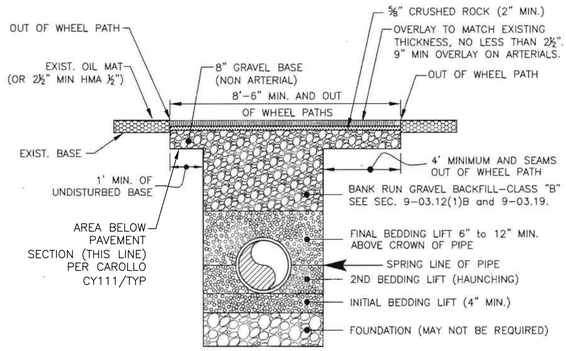

NOTES:

ALL WORK SHALL BE DONE IN ACCORDANCE WITH THE CITY OF BELLINGHAM'S "STANDARD SPECIFICATIONS FOR UTILITY CUTS IN STREET AREA".

PAVEMENT OVERLAYS No.2, AND 3, TACK ALL EDGES AND HMA BASE SURFACE BEFORE PLACING HMA PAVEMENT. SEAL ALL JOINTS WITH HOT ASPHALT (AR-4000W) BETWEEN EXISTING AND NEW HMA PAVEMENT IMMEDIATELY AFTER FINISH ROLLING.

CONTRACTOR SHALL MATCH EXISTING SURFACES THAT ARE COLORED, TEXTURED, STAMPED OR INLAID WITH BRICK.

GRINDING FOR HMA BUTT JOINTS MAY START 4' MINIMUM FROM FACE OF GUTTER.

APPROVED	CITY OF BELLINGHAM	DRAWING
City Engineer — 12/10/09 Date	LONGITUDINAL PAVEMENT REPAIR	ST-182

1 PAVEMENT REPAIR
NOT TO SCALE

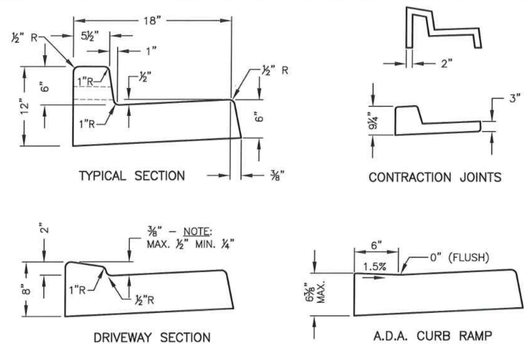

GENERAL NOTES:

1. CONTRACTION JOINTS OF ONE OF THE TYPES SHOWN ABOVE TO BE PLACED 10' C/C. JOINTS MUST COMPLETELY SEVER THE STRUCTURE TO THE POINTS SHOWN. JOINTS MAY BE MADE BY INSERTING MIN. 3/16" BITUMINOUS FILLER DUMMY JOINTS. JOINTS SHALL BE CLEANED AND EDGED.
2. ALL RADII LESS THAN 100' SHALL USE FLEXIBLE WOOD OR METAL FORMS TO ELIMINATE ANGULAR POINTS AT 10' SECTION POINTS.
3. 2"ø PVC SCHD 40 WEEP HOLES TO BE PLACED ON EACH SIDE OF DRIVEWAY SECTION AND AT MAX. OF 60' C/C IN CUT SECTIONS WHERE SIDEWALK DRAIN NOT REQUIRED BY CITY ENGINEER.
4. ¾" EXPANSION JOINTS TO BE PLACED AT DRIVEWAY SECTIONS, CURB RETURNS, CURB RAMPS, & COLD JOINTS OR A MAX. OF 80' C/C. EXPANSION JOINTS SHALL PROTRUDE 1" BELOW THE BOTTOM OF GUTTER.
5. CONCRETE SHALL BE COMMERCIAL CONCRETE CLASS 3000 PER WSDOT SPEC. 6-02.3(2)B.
6. FINISHED WORK SHALL NOT VARY MORE THAN 1/16-INCH IN GRADE AND ¼-INCH IN ALIGNMENT WHEN CHECKED WITH A 10-FOOT STRAIGHT EDGE.
7. EXPOSED SURFACES SHALL BE BRUSHED WITH A FIBER HAIR BRUSH.
8. WHITE PIGMENTED OR TRANSPARENT CURING COMPOUND SHALL BE APPLIED AS OUTLINED IN THE STANDARD SPECIFICATIONS.
9. FURTHER REQUIREMENTS SHALL BE AS SPECIFIED IN THE STANDARD SPECIFICATIONS.

APPROVED	CITY OF BELLINGHAM	DRAWING
City Engineer — 24 MAY 2018 Date	TYPE 'A' MODIFIED CURB AND GUTTER	CG-200

2 COB CURB AND GUTTER
NOT TO SCALE

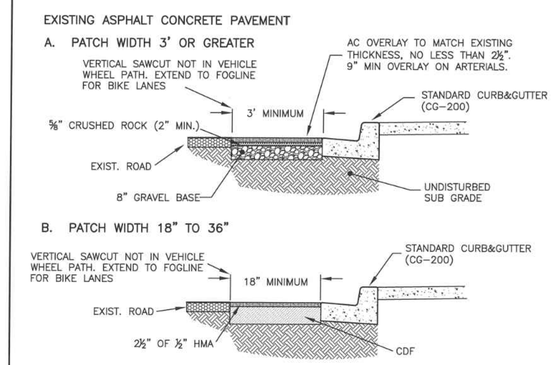

NOTES:

ALL WORK SHALL BE DONE IN ACCORDANCE WITH THE CITY OF BELLINGHAM'S STANDARD SPECIFICATIONS FOR UTILITY CUTS IN STREET AREA.

FOR ASPHALT CONCRETE PAVEMENT, TACK ALL EDGES AND HMA BASE SURFACE BEFORE PLACING HMA PAVEMENT. SEAL ALL JOINTS WITH HOT ASPHALT (AR-4000W) BETWEEN EXISTING AND NEW HMA PAVEMENT IMMEDIATELY AFTER FINISH ROLLING.

CONTRACTOR SHALL MATCH EXISTING SURFACES THAT ARE COLORED, TEXTURED, STAMPED OR INLAID WITH BRICK.

APPROVED	CITY OF BELLINGHAM	DRAWING
City Engineer — 15 JUNE 2016 Date	PAVEMENT REPAIR (CURB REPLACEMENT)	CG-218

3 COB PAVEMENT REPAIR
NOT TO SCALE

SEAN M. THOMAS — STATE OF WASHINGTON — 22017120 — REGISTERED PROFESSIONAL ENGINEER
1/14/2026

Call 811 two business days before you dig

WILSON ENGINEERING

Date	No	Revision	By
	4		
	3		
	2		
	1		

PROJECT ENGINEER _____
DESIGNED/DRAWN _____
INSPECTOR _____

DIRECTOR PUBLIC WORKS MAO
CITY ENGINEER MLW
ASSISTANT DIRECTOR MAO

CITY OF BELLINGHAM, WASHINGTON
PUBLIC WORKS DEPARTMENT
ENGINEERING DIVISION

SCALE: Horiz. AS SHOWN; Vert. AS SHOWN
DATUM: H: NAD 83/98; V: NAVD 88
Job. No. EU194; Date JAN 2026; Field Bk. _____

POST POINT RESOURCE RECOVERY PLANT
SITE RESTORATION DETAILS (1)

DRAWING NO. 020C109
SHEET NO. 34 OF 198

CONTACT PERSON: STEPHEN DAY, PE SE , PROJECT ENGINEER AT 360-778-7944

PLOT SETTINGS: Adobe PDF1.pc3, ANSI full bleed D (34.00 x 22.00 Inches), Portrait, 1:1, WE APWA_SCREENED.ctb
W:\2023\2023-070 COB WWTP CAROLLO\DWG\V2023_2023-070 C4.X DETAILS.DWG - 1/14/2026 12:23 PM - Paul Thomas

BEDDING SPECIFICATIONS FOR PVC PIPE

THE FOLLOWING SUPPLEMENTAL SPECIFICATIONS ARE TO BE USED IN CONJUNCTION WITH THE STANDARD SPECIFICATIONS FOR ROAD, BRIDGE AND MUNICIPAL CONSTRUCTION, CURRENT EDITION:

BEDDING FOR SEWERS, DRAINS AND CULVERTS FOR PVC PIPE–

BEDDING MATERIAL FOR PVC PIPE SHALL BE PEA GRAVEL CONFORMING TO THE FOLLOWING SPECIFICATIONS.

PEA GRAVEL -- PEA GRAVEL BEDDING SHALL BE A CLEAN MIXTURE FREE FROM ORGANIC MATTER AND CONFORMING TO THE FOLLOWING GRADATION WHEN TESTED IN ACCORDANCE WITH ASTM D422:

U.S. STANDARD SIEVE SIZE	PERCENT PASSING, BY WT.
½"	100
⅜"	95–100
#8	0–10
#200	0–3

BACKFILL – WHEREVER A TRENCH IS EXCAVATED IN THE EXISTING OR PROPOSED ROADWAY, SIDEWALK OR OTHER AREAS WHERE SETTLEMENT WOULD BE DETRIMENTAL, THE ENTIRE TRENCH SHALL BE BACKFILLED WITH IMPORTED GRAVEL AND COMPACTED TO 95% OF MAXIMUM DENSITY.

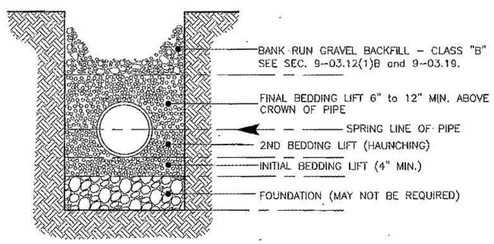

APPROVED		CITY OF BELLINGHAM	DRAWING
City Engineer	1/8/07 Date	PVC PIPE BEDDING DETAILS	DR–538

1 PVC PIPE BEDDING
NOT TO SCALE

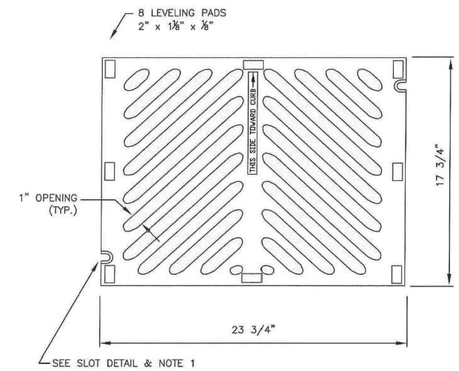

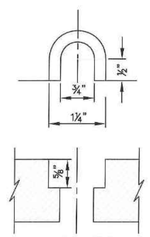

SLOT DETAIL

NOTES

1. WHEN BOLT DOWN GRATES ARE SPECIFIED IN THE CONTRACT, PROVIDE TWO SLOTS IN THE GRATE THAT ARE VERTICALLY ALIGNED WITH THE HOLES IN THE FRAME. LOCATION OF BOLT DOWN SLOTS VARIES AMONG DIFFERENT MANUFACTURERS.
2. REFER TO STANDARD SPECIFICATION 9–05.15(2) FOR ADDITIONAL REQUIREMENTS.
3. FOR FRAME DETAILS, SEE STANDARD PLAN B–2A.
4. THE THICKNESS OF THE GRATE SHALL NOT EXCEED 1⅝"

APPROVED		CITY OF BELLINGHAM	DRAWING
City Engineer	5/29/14 Date	HERRINGBONE GRATE FOR CATCH BASINS AND INLETS	DR–502

2 CATCH BASIN GRATE
NOT TO SCALE

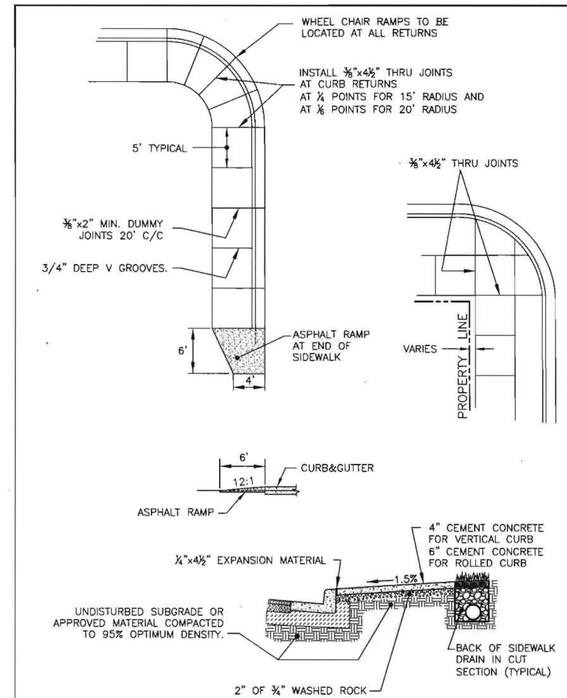

APPROVED		CITY OF BELLINGHAM	DRAWING
City Engineer	10/19/09 Date	SIDEWALK	CG–230

5 SIDEWALK
NOT TO SCALE

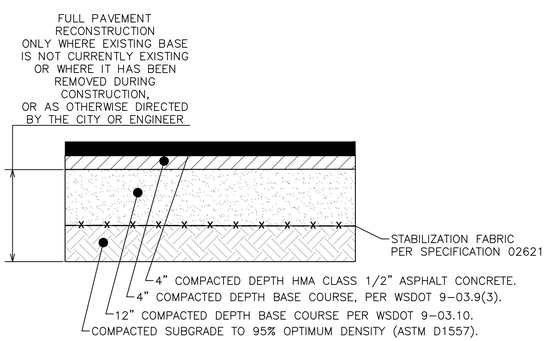

3 HEAVY TRUCK ROUTE ASPHALT CONCRETE PAVEMENT SECTION
NOT TO SCALE

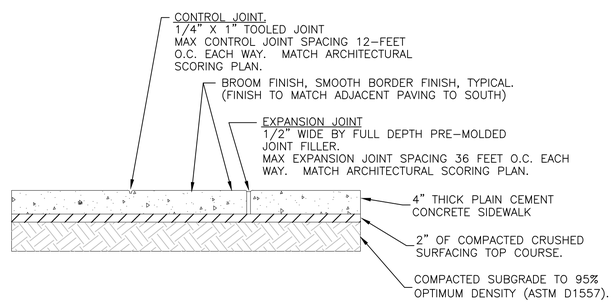

4 PEDESTRIAN PLAIN CEMENT CONCRETE PAVEMENT
NOT TO SCALE

Call 811 two business days before you dig

WILSON ENGINEERING

Date	No	Revision	By
	4		
	3		
	2		
	1		

PROJECT ENGINEER ____
DESIGNED/DRAWN ____
INSPECTOR ____

DIRECTOR PUBLIC WORKS MAO
CITY ENGINEER MLW
ASSISTANT DIRECTOR MAO

CITY OF BELLINGHAM, WASHINGTON
PUBLIC WORKS DEPARTMENT
ENGINEERING DIVISION

SCALE
Horiz. AS SHOWN
Vert. AS SHOWN

DATUM
H: NAD 83/98
V: NAVD 88

Job. No. EU194
Date JAN 2026
Field Bk. ____

POST POINT RESOURCE RECOVERY PLANT
SITE RESTORATION DETAILS (2)

DRAWING NO. 020C110
SHEET NO. 35 OF 198

CONTACT PERSON: STEPHEN DAY, PE SE , PROJECT ENGINEER AT 360-778-7944

PLOT SETTINGS: Adobe PDF1.pc3, ANSI full bleed D (34.00 x 22.00 Inches), Portrait, 1:1, WE APWA_SCREENED.ctb
W:\2023\2023-070 COB WWTP CAROLLO\DWG\V2023_2023-070 C4.X DETAILS.DWG – 1/14/2026 12:23 PM – Paul Thomas

DETAIL REFERENCES

PLAN/TITLE — VIEW — VIEW TITLE
DESCRIPTION
A PLAN
SCALE: SCALE
FILE: FILE
PLAN NOT REFERENCED

SECTION CUT — VIEW
A
##X##
- = SHOWN ON SAME DRAWING
##X## = SEE INDICATED DRAWING

SECTION OR DETAIL — ALPHA = SECTION
NUMERIC = DETAIL — VIEW TITLE
DESCRIPTION
C/1 ELEVATION
##X##
SCALE: SCALE
FILE: FILE
TITLE W/ REFERENCE — DRAWING CUT ORIGINATION

DETAIL CALL-OUT (ENLARGED) — VIEW
1
##X##
SEE INDICATED DRAWING

DRAWING REFERENCE — AREA DESIGNATOR (WHEN APPLICABLE)
DISCIPLINE DESIGNATOR
##X##
CONSECUTIVE SHEET NUMBER

TYPICAL DETAIL REFERENCE — TYPICAL DETAIL #
?
TYP

EXTERIOR ELEVATION VIEWS
A
##X##

PHOTO LOCATION — #
-
ARROW INDICATES POINT OF VIEW

GRID BUBBLE — A 1

TYPICAL DETAIL #
?
TYP
LINE 3
LINE 1 — TYPICAL DETAIL TITLE
LINE 2
S
MODIFICATION NOTE
S = STANDARD
J = JOB SPECIFIC
R = REVISED
N = NOTE TO TYPICAL DETAIL USER
SHT X OF X — SHEETS IN DETAIL
XX/XX/20XX — DATE CREATED (REVISED)

carollo®

LINE WORK

NEW STRUCTURES OR EDGE OF PAVEMENT
EXISTING STRUCTURES (SCREENED)
NEW PIPING (TRIPLE LINES)
NEW PIPING (SINGLE LINE)
EXISTING PIPING (TRIPLE LINES) (SCREENED)
EXISTING PIPING (SINGLE LINE)(SCREENED)
HIDDEN LINE OR TRAIL EDGE
CENTER, MONUMENT, OR SURVEY LINE
GUARDRAIL
EXISTING CONTOURS (SCREENED) — 310
NEW CONTOURS — 310
NEW FENCE — X
EXISTING FENCE (SCREENED) — X
REMOVE OR ABANDONED (CROSS HATCHING: FENCE SHOWN AS EXAMPLE)
POWER POLE & LINE — OHE — PP OHE
CABLE TV (UNDERGROUND) — CTV
FIBER OPTIC — FO
FUEL — F
NATURAL GAS — G
UNDERGROUND ELECTRIC — UGE
SANITARY SEWER — SS
FORCEMAIN SANITARY SEWER — FM
STORM DRAIN — SD
TELEPHONE — TEL
WATER — W
PROPERTY LINE OR RIGHT OF WAY
SLOPE
NEW ROAD
EXISTING ROAD (SCREENED)
FUTURE ROAD, WATER EDGE OR RIDGE
CURB & GUTTER
CURB
SWALE
FLOWLINE
SHORING
RAILROAD TRACKS
LIMITS OF CONSTRUCTION — LOC
SILT FENCE — SF
EASEMENT
EXISTING EASEMENT
CITY LIMITS
EXISTING GRADE (PROFILE)
PROPOSED GRADE (PROFILE)
MATCH LINE — MATCH LINE STA XXX SEE DWG XXX

COORDINATES / ELEVATION

COORDINATES — XX — N 1600000 E 1000000
N XXXXXXX.XX
E XXXXXXX.XX

CONTROL POINT — XX

SPOT ELEVATION — FG XX.XX
ANY SPECIFIC DESIGNATIONS NOTED WILL NEED TO REFER TO ABBREVIATIONS

EXISTING SPOT ELEVATION — X 1325.00

SLOPE CALLOUT — 2:1 — 2 / 1 — 2.0% — S=0.0020

ROADWAY / PIPE CURVES

ROADWAY / PIPE CURVE

(SEE TABLE ON EACH PAVING AND GRADING OR CIVIL PIPING DWG WITH ROADWAY / PIPE CURVES.)

LENGTH — CURVE NUMBER — CXX
PC — CLOCKWISE — ANGLE — RADIUS — PT
EDGE OF PVMT OR OUTSIDE FACE OF CURB
RADIUS POINT

HATCH PATTERNS

AGGREGATE BASE COURSE (ABC)
ASPHALT PAVING
OR
(WITH AERIAL)
BEDROCK
CLSM
CONCRETE (ALL CLASSES)
DRAIN ROCK
GRAVEL
GRATING — SPAN
LANDSCAPING
RIPRAP
EXISTING/ UNDISTURBED SOIL
STRUCTURAL FILL OR BACKFILL
STEEL
STAGING AREA
TREAD PLATE

SYMBOLS

SYMBOL	DESCRIPTION	SYMBOL	DESCRIPTION	SYMBOL	DESCRIPTION
	EXISTING CONTROL POINT	CTV	CABLE TV	CO	CLEANOUT
	EXISTING MONUMENT		POWER TOWER		AIR RELEASE VALVE
XX	CONTROL POINT		GATE		BLOW OFF VALVE
B-XX	SOIL BORING LOCATIONS		GUARD POST		HOSE BIBB / YARD HYDRANT
PH	POTHOLE		HEADWALL		SERVICE CONNECTION
PHXX	POTHOLE NUMBER		ROCK WALL		BURIED VALVE
	FLOW/SLOPE DIRECTION		SHRUB/HEDGE		FLANGE
	MANHOLE (PLAN)		TREE		BALL VALVE
	CATCH BASIN		SIGN/SIGN POST		BUTTERFLY VALVE
E	ELECTRICAL MANHOLE AND PULL BOX		LIGHT		CHECK VALVE
M	METER BOX		UTILITY POLE		GATE VALVE
P	PULL BOX		UTILITY POLE GUY WIRE		PLUG VALVE
T	TELEPHONE PEDESTAL	PP	POWER POLE		PIPE CAP OR CONNECTION
			FIRE HYDRANT		REDUCER

NOTE: ALL SYMBOLS SHOWN AS NEW. EXISTING SYMBOLS ARE SCREENED.

BRACKET
BREAK LINE
PIPE BREAK PLAN VIEW
PIPE BREAK CROSS SECTION
SCALE — 0 10' 20' 40' — SCALE: 1" = 20'
PIPE CONTINUATION (SINGLE LINE)
KEY NOTE — 34

REVISION DELTA — 2
EXISTING ELEVATION — EX TOW XXXX.X±
ELEVATION — TOC XXXX.XX
EQUIPMENT/DEVICE KEY TAG — 1
EQUIPMENT/DEVICE NUMBER — XXX-XX-XXX
PIPE TAG
*PIPE SIZE — "X" XXX — (E) — FLOW STREAM
FUTURE PIPING (WHERE APPLICABLE) — FUTURE — EXISTING PIPING
* FOR EXISTING PIPING SHOW AS EX *SIZE FLOW STREAM*

811 Know what's below. Call before you dig. usanorth811.org

Avoid overhead power line contact. It's costly.
Call before you OVERHEAD

NORTH ARROW/ PLANT NORTH

MATTHEW SCOTT SPACK — STATE OF WASHINGTON — 29659 — REGISTERED PROFESSIONAL ENGINEER

Date	No	Revision	By
	4		
	3		
	2		
	1		

PROJECT ENGINEER MSS
DESIGNED/DRAWN MSS/JJC
INSPECTOR MD

DIRECTOR PUBLIC WORKS
CITY ENGINEER
ASSISTANT DIRECTOR

CITY OF BELLINGHAM, WASHINGTON
PUBLIC WORKS DEPARTMENT
ENGINEERING DIVISION

SCALE — Horiz. AS SHOWN — Vert. AS SHOWN
DATUM — H: NAD 83/98 — V: NAVD 88
Job. No. EU194
Date JAN 2026
Field Bk.

POST POINT RESOURCE RECOVERY PLANT
CIVIL
CIVIL LEGEND AND SYMBOLS

DRAWING NO. 030C001
SHEET NO. 36 OF 198

CONTACT PERSON: STEPHEN DAY, PE SE , PROJECT ENGINEER AT 360-778-7944

PROJECT NO. 202121 FILE NAME: 202021010C101.DWG

Plot Date: 9/5/2024 3:53:07 PM
LAST SAVED BY: JCOMBEL

Plot Date: 5/1/2025 4:56:24 PM

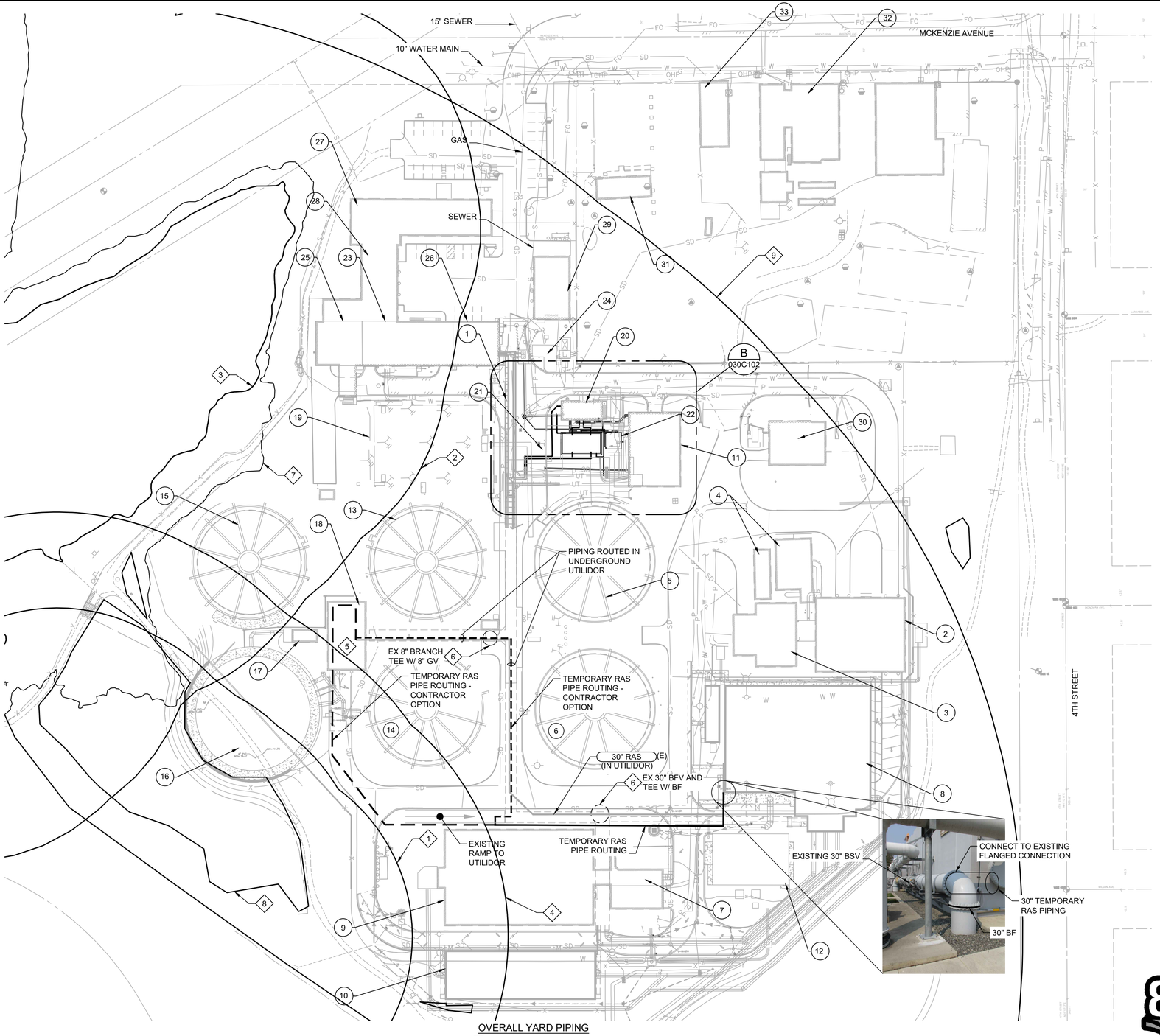

OVERALL YARD PIPING

A PLAN

SCALE: 1" = 60'-0"
FILE: 030C101.DWG

	FACILITY NUMBER	FACILITY NAME
1	050	GALLERY (BELOW GRADE)
2	110	SCREENING FACILITY
3	120	HEADWORKS
4	130	PRELIMINARY TREATMENT ODOR CONTROL
5	210	PRIMARY CLARIFIER 1
6	210	PRIMARY CLARIFIER 2
7	220	PRIMARY EFFLUENT PUMP STATION
8	305	SELECTOR/ACTIVATED SLUDGE BASIN 1
9	305	ACTIVATED SLUDGE BASIN 2 AND 3
10	311	ACTIVATED SLUDGE BASIN 4
11	320	HYPOCHLORITE GENERATION BUILDING
12	325	BLOWER BUILDING
13	330	SECONDARY CLARIFIER 1
14	330	SECONDARY CLARIFIER 2
15	330	SECONDARY CLARIFIER 3
16	330	SECONDARY CLARIFIER 4
17	330	SECONDARY CLARIFIER ML SPLITTER
18	340	SECONDARY SLUDGE PUMP STATION
19	410	CHLORINE CONTACT BASIN
20	420	SLUDGE STORAGE BUILDING
21	440	SLUDGE STORAGE TANKS
22	440	SLUDGE STORAGE TANKS ODOR CONTROL
23	510	SOLIDS HANDLING BUILDING
24	510	SOLIDS HANDLING ODOR CONTROL
25	520	SOLIDS HANDLING BUILDING WEST
26	530	SOLIDS HANDLING BUILDING EAST
27	710	ADMINISTRATION AND LABORATORY
28	720	SHOP/MAINTENANCE
29	730	STORAGE BUILDING
30	740	EMERGENCY GENERATOR BUILDING
31		MAINTENANCE OFFICES
32		MAINTENANCE SHOP
33		MAINTENANCE STORAGE

KEY NOTES:

1. POST POINT HERON COLONY 2023 197 FOOT YEAR-ROUND CORE ZONE PROTECTION BUFFER. SEE POST POINT HERON COLONY MANAGEMENT RECOMMENDATIONS UPDATE IN APPENDICES OF SPECIFICATION SECTION 01_14_00 - WORK RESTRICTIONS.
2. SHORELINE BUFFER FOR SHORELINE JURISDICTION MARINE 13. CONTRACTOR SHALL NOT PERFORM WORK OUTSIDE OF STRUCTURES BEYOND THIS LINE WITHOUT EXPRESS PERMISSION FROM OWNER.
3. ORDINARY HIGH WATER MARK.
4. POST POINT HERON COLONY 2023 300 FOOT SEASONAL (MARCH 1 TO SEPTEMBER 1) CORE ZONE DISTURBANCE BUFFER. SEE POST POINT HERON COLONY MANAGEMENT RECOMMENDATIONS UPDATE IN APPENDICES OF SPECIFICATION SECTION 01_14_00- WORK RESTRICTIONS.
5. UTILIZE EXISTING RAS PUMPS FOR BYPASS PUMPING. EXISTING RAS CHECK AND ISOLATION VALVES MAY ALSO BE USED AS PART OF TEMPORARY PIPING SETUP IF APPROPRIATE. SEE SECTION 01_14_00 - WORK RESTRICTIONS AND SECTION 01_50_00 - TEMPORARY FACILITIES AND CONTROLS FOR ADDITIONAL REQUIREMENTS.
6. REFER TO 30" RAS ASBUILTS INCLUDED AS AN APPENDIX TO THE SPECIFICATIONS FOR ADDITIONAL INFORMATION.
7. 100 YEAR FLOOD PLANE.
8. WETLAND.
9. POST POINT HERON COLONY 850' BUFFER.

SCALE

0 30' 60' 120'

SCALE: 1" = 60'

Know what's below. Call before you dig. usanorth811.org

Digitally signed by MATTHEW SCOTT SPANCK
Contact: matthew.spanck@carollo.com
Date: 2025.05.01 16:56:24 -07'00'
STATE OF WASHINGTON 29659 REGISTERED PROFESSIONAL ENGINEER

carollo

Date	No	Revision	By
	4		
	3		
	2		
	1		

PROJECT ENGINEER MSS
DESIGNED/DRAWN MSS/JJC
INSPECTOR MB

DIRECTOR PUBLIC WORKS
CITY ENGINEER
ASSISTANT DIRECTOR

CITY OF BELLINGHAM, WASHINGTON
PUBLIC WORKS DEPARTMENT
ENGINEERING DIVISION

SCALE
Horiz. AS SHOWN
Vert. AS SHOWN

DATUM
H: NAD 83/98
V: NAVD 88

Job. No. EU194
Date JAN 2026
Field Bk.

POST POINT RESOURCE RECOVERY PLANT
CIVIL
OVERALL YARD & TEMPORARY RAS PIPING PLAN

DRAWING NO. 030C101
SHEET NO. 37 OF 198

CONTACT PERSON: STEPHEN DAY, PE SE , PROJECT ENGINEER AT 360-778-7944

LAST SAVED BY: LVELOZ

PROJECT NO. 202021 FILE NAME: 030C101.DWG

Plot Date: 2/28/2025 5:26:23 PM

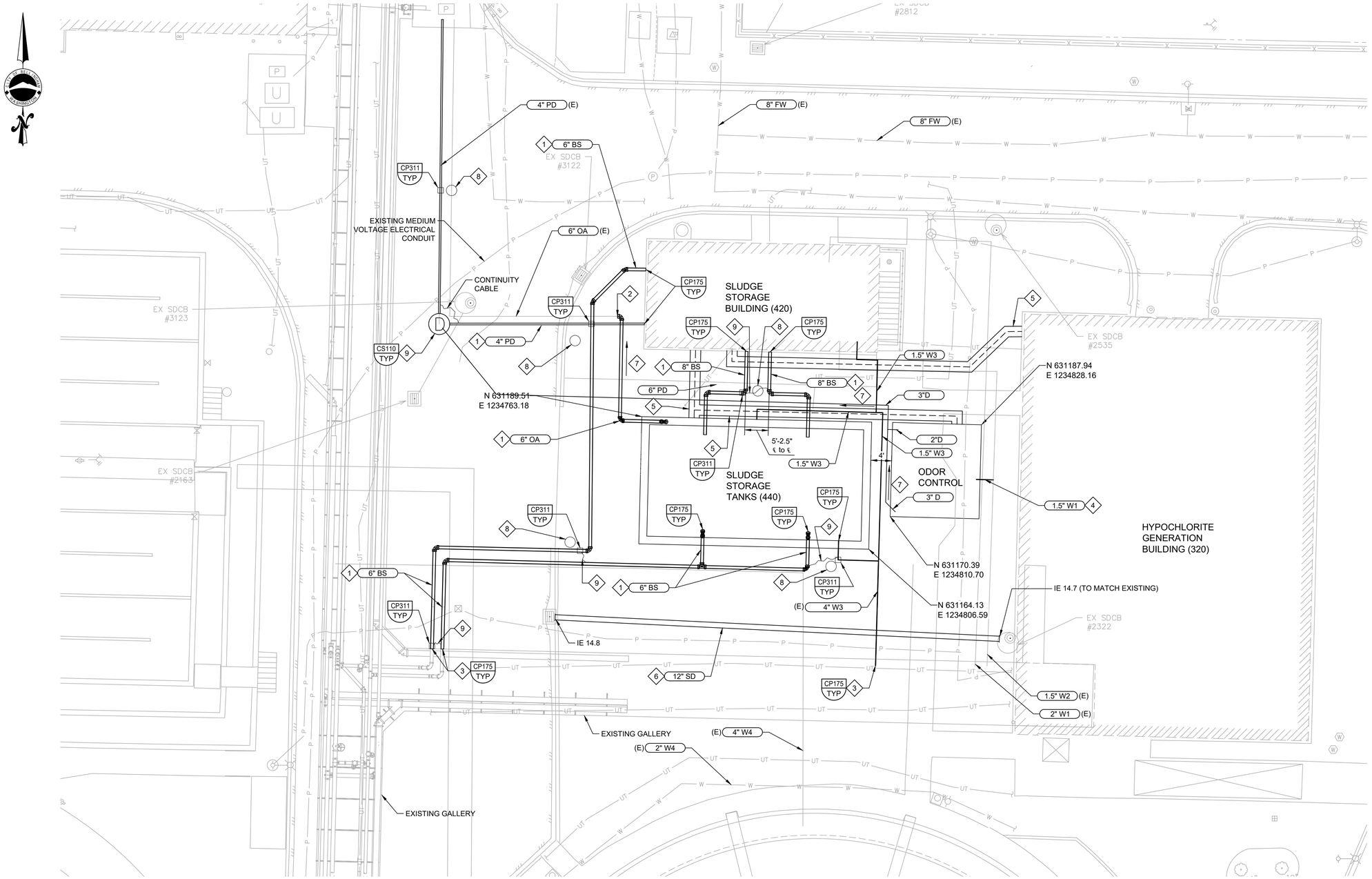

YARD PIPING

B **PLAN**

SCALE: 1" = 10'
FILE: 20202102C01.DWG

GENERAL NOTES:

1. ELEVATIONS OF PIPES ARE SHOWN WITH ± DUE TO UNCERTAINTY IN THE RECORD DRAWINGS AND SURVEY THAT THEY WERE GATHERED FROM. FIELD VERIFY PRIOR TO SUBMITTING SHOP DRAWINGS.
2. CATHODIC PROTECTION NOTES:
   A. DIP MUST BE JOINT BONDED PER CP150.
   B. ENSURE DUCTILE IRON PIPES DO NOT COME IN CONTACT WITH REBAR.

X KEY NOTES:

1. INSTALL THE FIRST TWO MECHANICAL JOINTS FROM ALL STRUCTURE WALLS WITHIN 1' OF STRUCTURE AND AT 6' FROM FIRST JOINT. TYPICAL FOR EACH STRUCTURE.
2. TRANSITION COUPLING FROM EXISTING 6" PVC PIPE TO NEW SST PIPE WILL BE REQUIRED TO RETROFIT EX-6" OA PIPE.
3. PIPE CONTINUES IN GALLERY. SEE AREA 050 DRAWINGS FOR CONTINUATION.
4. ROUTE TO ODOR CONTROL MAKEUP WATER SYSTEM AS NECESSARY.
5. SEE ELECTRICAL DRAWINGS FOR ADDITIONAL INFORMATION.
6. REPLACE EXISTING 12-INCH STORM DRAIN PIPING WITH NEW. INVERT ELEVATION TO MATCH EXISTING.
7. SLOPE PIPE DOWNWARD WITH MINIMUM 2% SLOPE IN DIRECTION INDICATED.
8. ANODE CONNECTED TO TEST STATION.
9. CONTINUITY CABLE INTO TEST STATION.

Know what's below. Call before you dig.
usanorth811.org

SCALE

0 5' 10' 20'
SCALE: 1" = 10'

carollo

Date	No	Revision	By
	4		
	3		
	2		
	1		

PROJECT ENGINEER NJ
DESIGNED/DRAWN JJC
INSPECTOR

DIRECTOR PUBLIC WORKS
CITY ENGINEER
ASSISTANT DIRECTOR

CITY OF BELLINGHAM, WASHINGTON
PUBLIC WORKS DEPARTMENT
ENGINEERING DIVISION

SCALE
Horiz. AS SHOWN
Vert. AS SHOWN

DATUM
H: NAD 83/98
V: NAVD 88

Job. No. EU194
Date JAN 2026
Field Bk.

POST POINT RESOURCE RECOVERY PLANT
CIVIL
YARD PIPING PLAN

DRAWING NO. 030C102
SHEET NO. 38 OF 198

CONTACT PERSON: STEPHEN DAY, PE SE , PROJECT ENGINEER AT 360-778-7944

LAST SAVED BY: JCOMBEL

PROJECT NO. 202021 FILE NAME: 20202102C01.dwg

Plot Date: 10/7/2024 5:11:06 PM

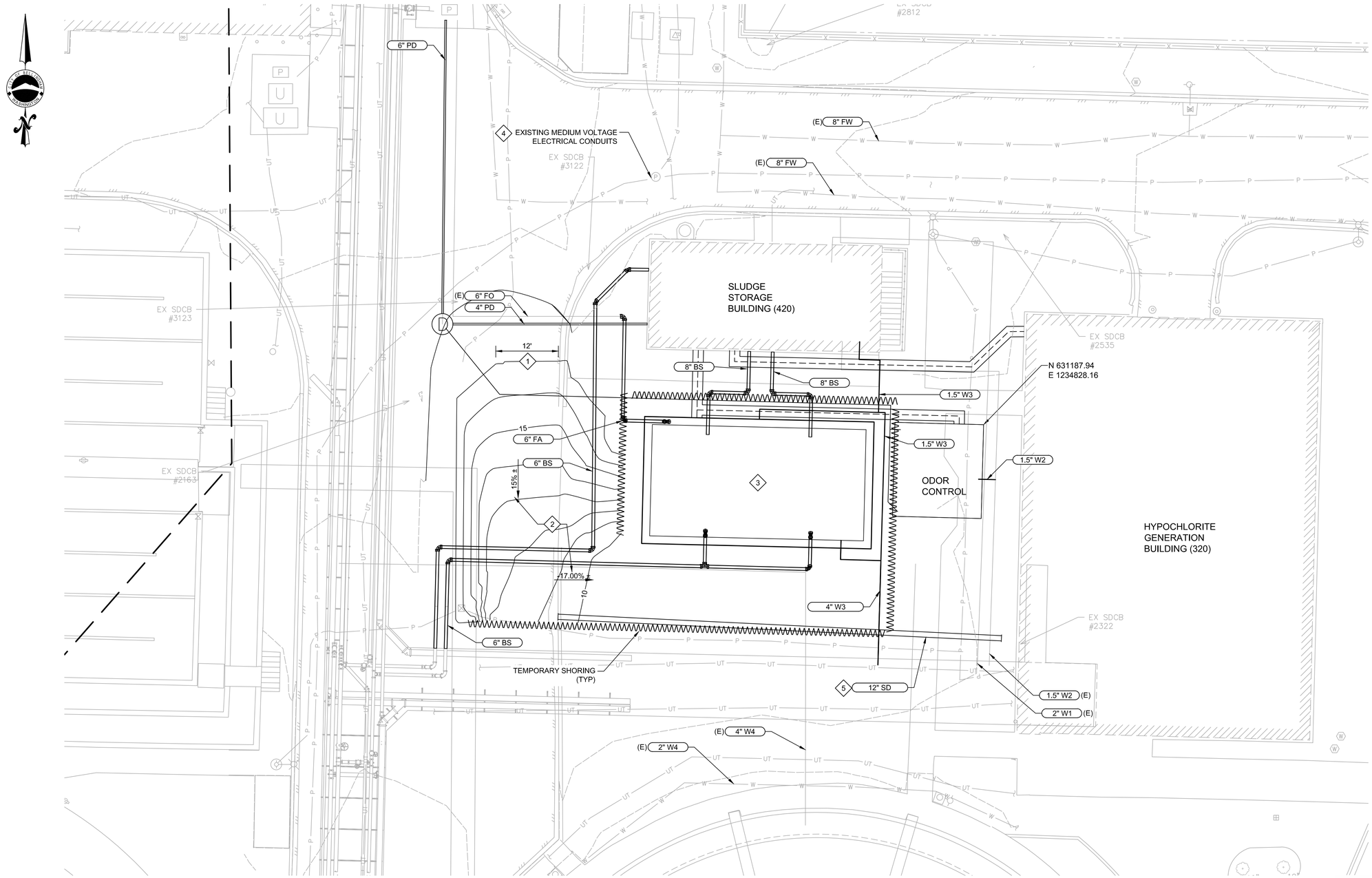

YARD PIPING

B **PLAN**

SCALE: 1" = 10'
FILE: 202021030C103.DWG

GENERAL NOTES:

1. ELEVATIONS OF PIPES ARE SHOWN WITH ± DUE TO UNCERTAINTY IN THE RECORD DRAWINGS AND SURVEY THAT THEY WERE GATHERED FROM. FIELD VERIFY PRIOR TO SUBMITTING SHOP DRAWINGS.
2. NEW AND EXISTING YARD PIPING ARE SHOWN FOR INFORMATIONAL PURPOSES ONLY. NEW PIPING IS SCREENED BACK FOR CLARITY.
3. CONTRACTOR IS RESPONSIBLE FOR ALL SHORING REQUIRED FOR WORK SAFETY AND SITE STABILIZATION AND PROTECTION. ALL SHORING MUST ABIDE BY REQUIREMENTS PRESENTED IN SPECIFICATION SECTION 31_50_00. SHORING AND EXCAVATION SHOWN IS ENGINEER'S RECOMMENDATION. SHORING, EXCAVATION, AND DEWATERING REQUIREMENTS MUST BE COORDINATED WITH NEW AND EXISTING STRUCTURES, PIPING, CONDUITS AND OTHER APPURTENANCES. EXISTING STRUCTURES AND UTILITIES LIMIT USE OF TIEBACK OR SOIL ANCHORS.
4. PROPOSED EXCAVATION SLOPES MUST BE VERIFIED BY CONTRACTOR TO MEET OSHA REQUIREMENTS. BENCHING NOT SHOWN; CONTRACTOR TO ESTABLISH BENCHES AS REQUIRED FOR THE WORK.
5. CONTRACTOR SHALL DETERMINE THE SEQUENCE OF CONSTRUCTION FOR THE INSTALLATION OF AUGER CAST PILES THAT SUPPORT THE NEW ODOR CONTROL FACILITY AND THE EXCAVATION /STRUCTURAL WORK OF THE NEW ADJACENT SLUDGE HOLDING TANK, WHICH IS ALSO SUPPORTED WITH AUGER CAST PILES.
6. ALL EXISTING UTILITIES SHALL BE LOCATED PRIOR TO EXCAVATION AND SHORING INSTALLATION ACTIVITIES. DO NOT INTERRUPT EXISTING UTILITIES THAT ARE IN PLACE WITHOUT ADVANCE WRITTEN PERMISSION FROM THE OWNER AS SPECIFIED IN 01_14_00 - WORK RESTRICTIONS.

X KEY NOTES:

1. EXCAVATION ACCESS RAMP. ACTUAL WIDTH TO BE DETERMINED BY CONTRACTOR FOR CONSTRUCTION VEHICLES UTILIZED. MAINTAIN A MINIMUM OF 15 FT CLEAR ON ADJOINING ROADWAY TO ALLOW FOR TRUCK TRAFFIC.
2. APPROXIMATE SLOPE SHOWN. ACTUAL EXCAVATION TO BE DETERMINED BY CONTRACTOR AND INCLUDED IN THE DETAILS OF EXCAVATION SUPPORT AND PROTECTION PLAN SUBMITTAL OUTLINED IN SPECIFICATION 31_50_00.
3. BOTTOM OF EXCAVATION FOR SLUDGE HOLDING TANK AT ELEVATION 5.32'.
4. PROTECT IN PLACE. DO NOT DISTURB OR DISRUPT.
5. EXISTING STORM DRAIN TO BE REPLACED AFTER SHORING IS REMOVED. EXTENT OF STORM DRAIN NOT COMPLETELY SHOWN FOR CLARITY.

811 Know what's below. Call before you dig. usanorth811.org

SCALE

0 5' 10' 20'
SCALE: 1" = 10'

carollo

Date	No	Revision	By
	4		
	3		
	2		
	1		

PROJECT ENGINEER MSS
DESIGNED/DRAWN MSS/JJC
INSPECTOR MB

DIRECTOR PUBLIC WORKS
CITY ENGINEER
ASSISTANT DIRECTOR

CITY OF BELLINGHAM, WASHINGTON
PUBLIC WORKS DEPARTMENT
ENGINEERING DIVISION

SCALE
Horiz. AS SHOWN
Vert. AS SHOWN

DATUM
H: NAD 83/98
V: NAVD 88

Job. No. EU194
Date JAN 2026
Field Bk.

POST POINT RESOURCE RECOVERY PLANT
CIVIL
EXCAVATION PLAN

DRAWING NO. 030C103
SHEET NO. 39 OF 198

CONTACT PERSON: STEPHEN DAY, PE SE , PROJECT ENGINEER AT 360-778-7944

LAST SAVED BY: JCOMBEL

PROJECT NO. 202021 FILE NAME: 202021030C103.dwg

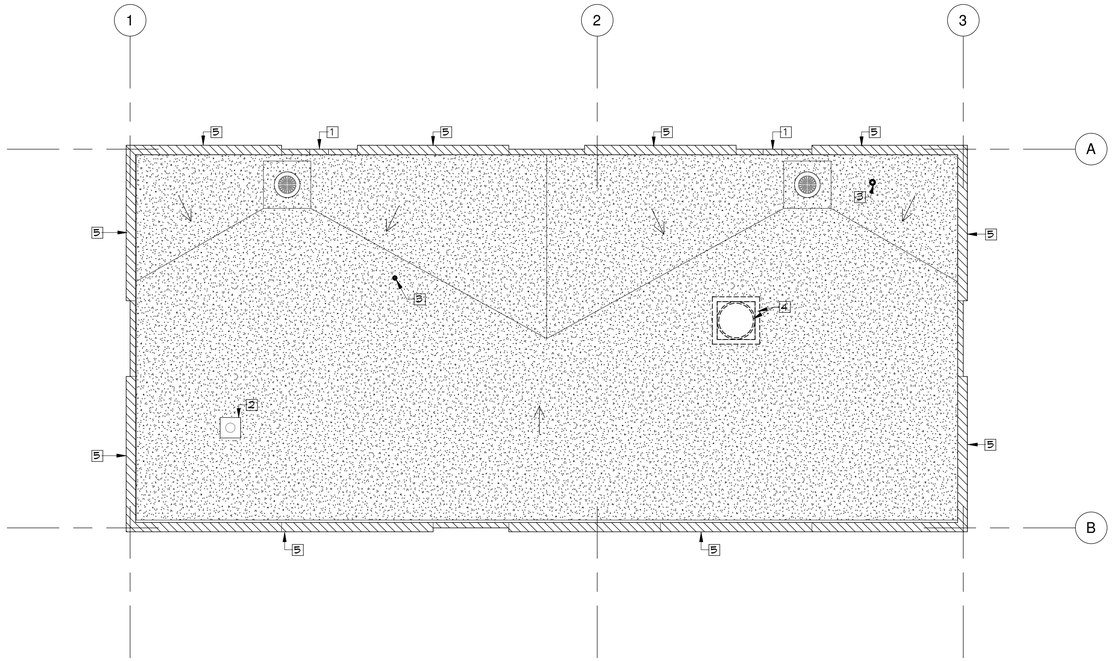

1 ROOF DEMO PLAN
420A101 1/4" = 1'-0"

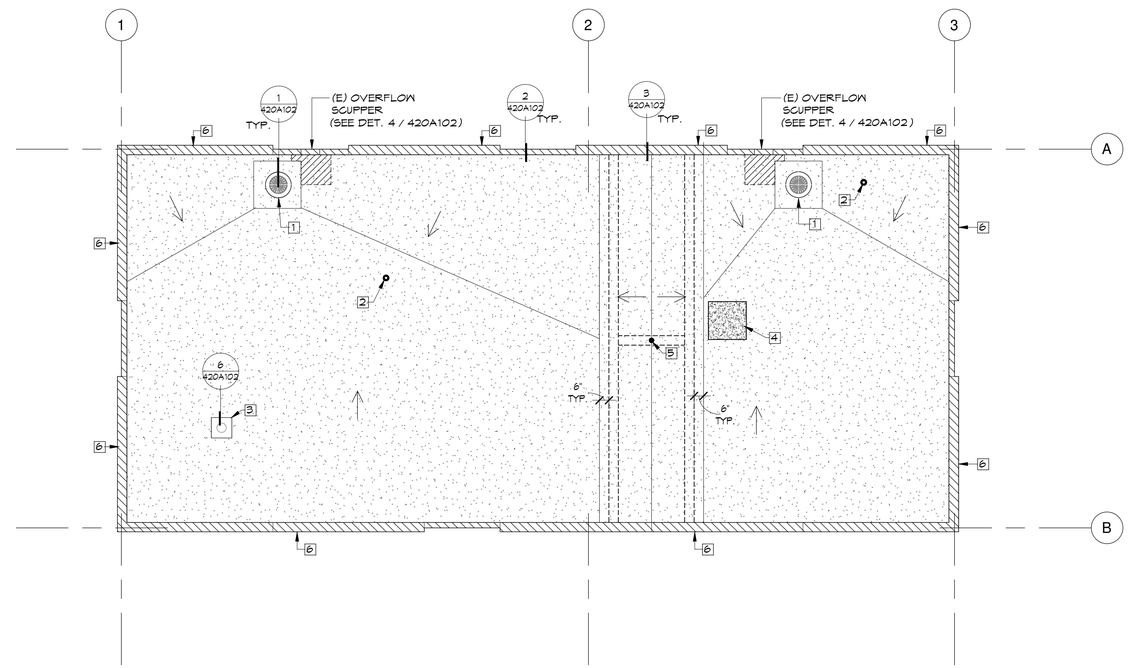

NOTE: USE TAPERED INSULATION AS REQ'D TO CREATE CRICKETS SHOWN ON PLAN

2 ROOF PLAN
420A101 1/4" = 1'-0"

DEMOLITION KEY

- = REMOVE (E) ROOF MEMBRANE & RIGID INSUL. AS REQ'D
- = REMOVE & REPLACE (E) S.M. FLASHING & TERMINATION BARS AS REQ'D TO INSTALL (N) WORK
- = REMOVE (E) ROOF DRAIN & CLAMP RING AS REQ'D FOR INSTALLATION OF (N) ROOF MEMBRANE. INSTALL (N) ZURN - RD 2150-SS4 REPLACEMENT ROOF DRAIN INCLUDING (N) DOME STRAINER.
- 1 = (E) SCUPPER TO REMAIN
- 2 = REMOVE & REINSTALL (E) EXHAUST FLASHING AS REQ'D TO INSTALL (N) ROOFING.
- 3 = REMOVE & REPLACE (E) VTR AS REQ'D TO INSTALL (N) ROOFING.
- 4 = REMOVE (E) VENT STACK AND CURB ASSEMBLY AS REQ'D. TO INSTALL (N) ROOFING (COORD. W/ MECH)
- 5 = REMOVE (E) VERTICAL EXPANSION JOINTS @ ALL (E) CONC. PANELS AS REQ'D. TYP.

NOTE: Provide the appropriate construction safeguards to protect pedestrians, adjacent properties, and against fire during construction as required per Ch. 15 of the IEBC and applicable sections of IBC.

https://up.codes/viewer/washington/wa-existing-building-code-2021/chapter/15/construction-safeguards#15

NOTE: Per IEBC 403.1 Repairs shall be done in a manner that maintains the level of fire protection provided.

KEY

- = INSTALL (N) 6.6" RIGID INSUL. & INSTALL (N) TPO ROOF MEMBRANE AS REQ'D.
- = (N) S.M. CAP FLASHING
- = SLOPE (N) INSULATION TO (E) SCUPPERS AS REQ'D.
- = (N) ZURN - RD 2150-SS4 REPLACEMENT ROOF DRAIN INCLUDING (N) DOME STRAINER.
- 1 = N) ZURN - RD 2150-SS4 REPLACEMENT ROOF DRAIN INCLUDING (N) DOME STRAINER
- 2 = MAINTAIN (E) VTR, EXTEND 6" HIGHER AS REQ'D (SEE PIC. R1/A4.2 & DET. 5 / 420A102)
- 3 = REINSTALL (E) EXHAUST FLASHING AS REQ'D. (SEE PIC. R2/A4.2 & DET. 6 / 420A102)
- 4 = PATCH & INFILL ROOF AS REQ'D TO INSTALL (N) ROOFING. (SEE PIC. R3/A4.2)
- 5 = (N) FALL PROTECTION ANCHOR CB-12 & (N) RIGID INSUL. SLOPE 4" @ CENTER TO 3" @ EDGE OF (N) ANCHOR MTL. FRAMING. (SEE DET. 7 / 420A102)
- 6 = INSTALL (N) VERTICAL EXPASION JOINTS @ ALL (E) CONC. PANELS AS REQ'D. TYP.

1 GENERAL NOTES: 1. PROVIDE THE APPROPRIATE CONSTRUCTION SAFEGUARDS TO PROTECT PEDESTRIANS, ADJACENT PROPERTIES, AND AGAINST FIRE DURING CONSTRUCTION AS REQUIRED PER CH. 15 OF THE IEBC AND APPLICABLE SECTIONS OF IBC.

2. PER IEBC 403.1 REPAIRS SHALL BE DONE IN A MANNER THAT MAINTAINS THE LEVEL OF FIRE PROTECTION PROVIDED.

2 PER WEBC (IEBC) 705.4, EXISTING VENT FLASHING, METAL EDGINGS, DRAIN OUTLETS, COLLARS AND METAL COUNTERFLASHINGS SHALL NOT BE REINSTALLED WHERE RUSTED, DAMAGED OR DETERIORATED. HTTPS://UP.CODES/VIEWER/WASHINGTON/WA-EXISTING-BUILDING-CODE-2021/CHAPTER/7/ALTERATIONS-LEVEL-1#705.4

NOTE: Per WEBC (IEBC) 705.4, existing vent flashing, metal edgings, drain outlets, collars and metal counterflashings shall not be reinstalled where rusted, damaged or deteriorated.

https://up.codes/viewer/washington/wa-existing-building-code-2021/chapter/7/alterations-level-1#705.4

ARCHITECTURAL DRAWING INDEX

420A101	SLUDGE STORAGE BLDG. - ROOF DEMO PLAN, ROOF PLAN & DRAWING INDEX
420A102	ROOF DETAILS
420A103	PROJECT PHOTOS & TYP. CARLISLE TPO ROOFING DETS.
420A104	TYP. CARLISLE TPO ROOFING DETAILS

VERIFY SCALES

BAR IS ONE INCH ON ORIGINAL DRAWING

0 1"

IF NOT ONE INCH ON THIS SHEET, ADJUST SCALES ACCORDINGLY

8819 REGISTERED ARCHITECT TIMOTHY P. FABER STATE OF WASHINGTON

PLOT DATE: 6/17/2026 2:24:39 PM

carollo®

Date	No	Revision	By
06-17-26	2	PERMIT REVS	
12-22-25	1	PERMIT REVS	

PROJECT ENGINEER	TF	DIRECTOR PUBLIC WORKS	MAO	CITY OF BELLINGHAM, WASHINGTON PUBLIC WORKS DEPARTMENT ENGINEERING DIVISION	
DESIGNED/DRAWN	FD	CITY ENGINEER	MLW		
INSPECTOR	TF	ASSISTANT DIRECTOR	MAO		

SCALE: Horiz. AS SHOWN; Vert. AS SHOWN

DATUM: H: NAD 83/98; V: NAVD 88

Job. No. EU194; Date JAN 2026; Field Bk.

POST POINT RESOURCE RECOVERY PLANT

SLUDGE STORAGE BLDG. - ROOF DEMO PLAN, ROOF PLAN & DRAWING INDEX

DRAWING NO. 420A101

SHEET NO. 40 OF 198

CONTACT PERSON: STEPHEN DAY, PE SE, PROJECT ENGINEER AT 360-778-7944 FILE NAME: F:\BELLINGHAM_CITY OF\COB Re-Roof - Carollo\COB WWTP Bldg.420 Re-Roof 2025.rvt

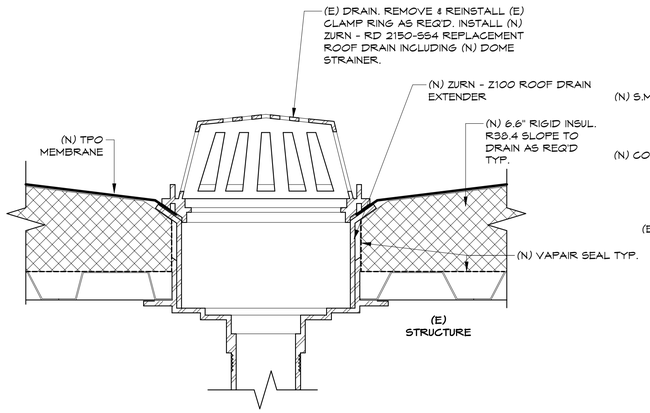

1 420A102 TYP. ROOF DRAIN DETAIL
3" = 1'-0"

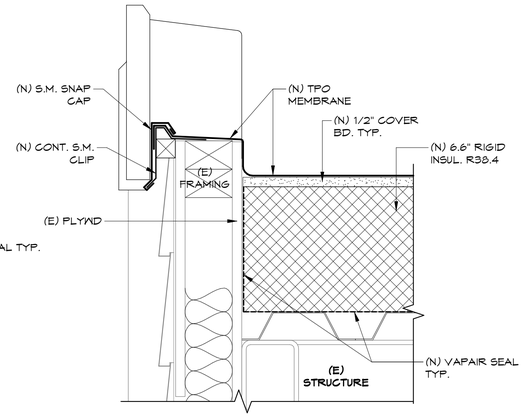

2 420A102 TYP. FLASHING DETAIL
3" = 1'-0"

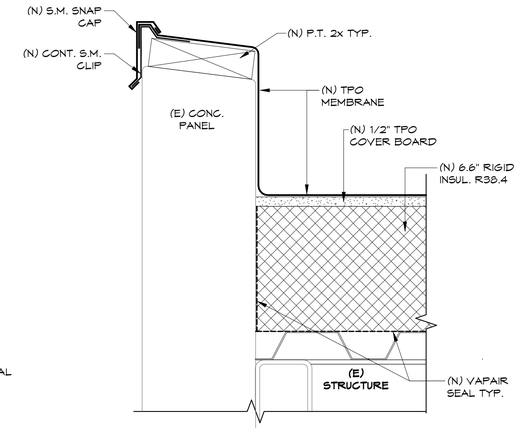

3 420A102 TYP FLASHING DETAIL
3" = 1'-0"

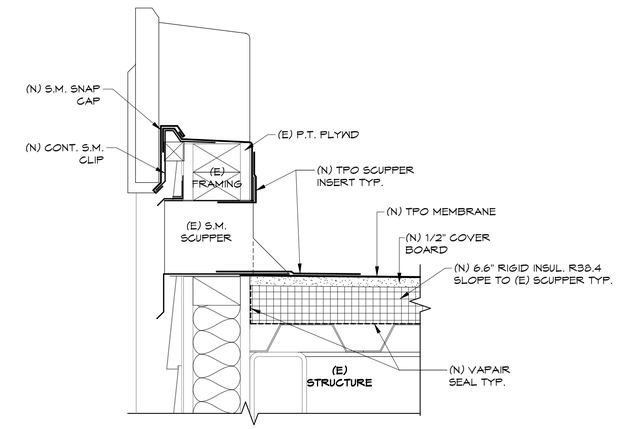

4 420A102 TYP. FLASHING @ SCUPPER
3" = 1'-0"

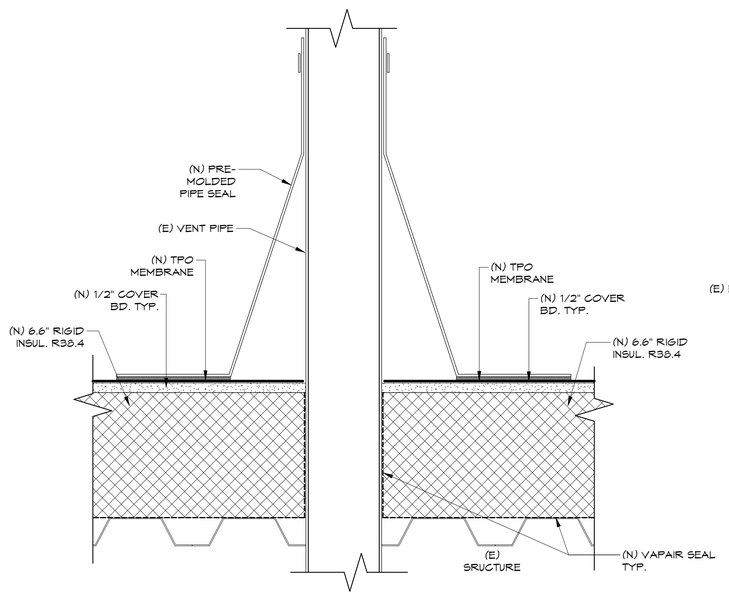

5 420A102 TYP. VENT PIPE DET.
3" = 1'-0"

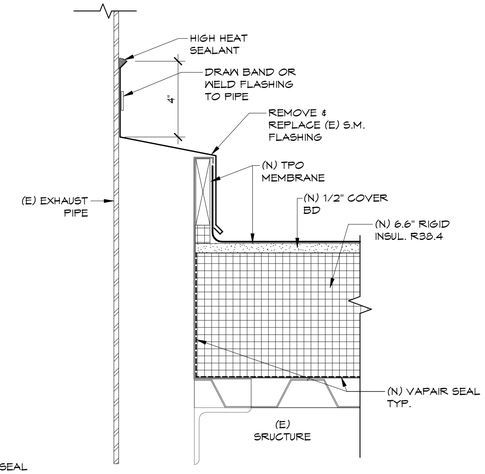

6 420A102 TYP. EXHAUST PIPE DET.
3" = 1'-0"

NOTE:
COORDINATE HSS 4X4X1/4 & C10X30 MEMBERS WITH STRUCTURAL DRAWINGS.

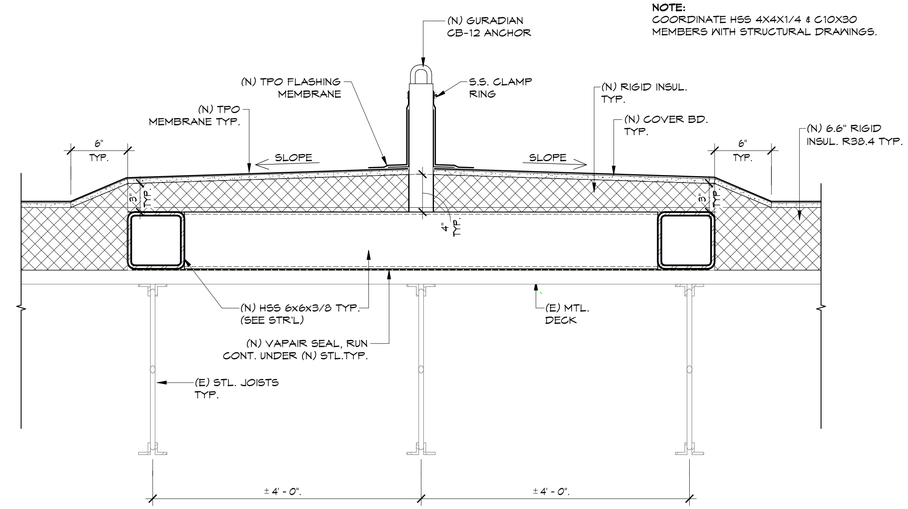

7 420A102 TYP. FALL PROTECTION ANCHOR DETAIL
1 1/2" = 1'-0"

VERIFY SCALES
BAR IS ONE INCH ON ORIGINAL DRAWING
0 1"
IF NOT ONE INCH ON THIS SHEET, ADJUST SCALES ACCORDINGLY

8819 REGISTERED ARCHITECT
TIMOTHY P. FABER
STATE OF WASHINGTON

carollo®

Date	No	Revision	By

PROJECT ENGINEER Designer
DESIGNED/DRAWN Author
INSPECTOR Checker

DIRECTOR PUBLIC WORKS MAO
CITY ENGINEER MLW
ASSISTANT DIRECTOR MAO

CITY OF BELLINGHAM, WASHINGTON
PUBLIC WORKS DEPARTMENT
ENGINEERING DIVISION

SCALE
Horiz. AS SHOWN
Vert. AS SHOWN

DATUM
H: NAD 83/98
V: NAVD 88

Job. No. EU194
Date JAN 2026
Field Bk.

POST POINT RESOURCE RECOVERY PLANT
ROOF DETAILS

DRAWING NO. 420A102
SHEET NO. 41 OF 198

PLOT DATE: 1/20/2026 8:04:55 AM

CONTACT PERSON: STEPHEN DAY, PE SE , PROJECT ENGINEER AT 360-778-7944 FILE NAME: F:\BELLINGHAM_CITY OF\COB Re-Roof - Carollo\COB WWTP Bldg.420 Re-Roof 2025.rvt

THERMOPLASTIC MEMBRANE — PVC/TPO

9A MECHANICAL TERMINATION WITH COUNTER FLASHING

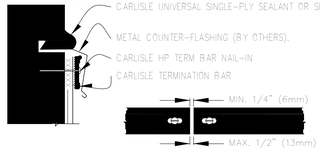

NOTES:

1. APPLY ON HARD SMOOTH SURFACE ONLY; NOT FOR USE ON EXPOSED WOOD.
2. DO NOT WRAP TERMINATION BAR AROUND CORNERS.
3. DETAIL REQUIRED FOR USE ON WARRANTY PROJECTS EXCEEDING 20-YEARS. MAY BE USED FOR ANY PROJECT REGARDLESS OF WARRANTY.

9B SHEET METAL COPING (BY OTHERS)

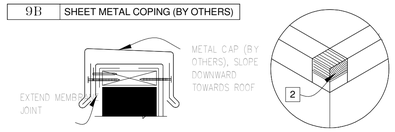

NOTES:

1. FOR CARLISLE SecurEdge COPING, REFER TO INSTALLATION INSTRUCTIONS PUBLISHED SEPARATELY.
2. MEMBRANE MUST BE EXTENDED TO CORNERS TO PROVIDE COMPLETE COVERAGE OF THE TOP WALL SURFACE.

9C COUNTER FLASHING TERMINATION

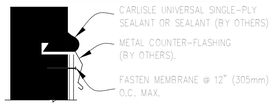

NOTES:

1. WHEN MECHANICAL FASTENERS ARE USED TO PENETRATE THE METAL COUNTER-FLASHING, USE EPDM WASHERS, APPLY WATER CUT-OFF MASTIC UNDER THE COUNTER-FLASHING OR CAULK THE FASTENER HEADS.
2. DETAIL NOT FOR USE ON WARRANTY PROJECTS EXCEEDING 10-YEARS.

9D MECHANICAL TERMINATION

NOTES:

1. APPLY ON HARD SMOOTH SURFACE ONLY; NOT FOR USE ON EXPOSED WOOD.
2. DO NOT WRAP COMPRESSION TERMINATION BAR AROUND CORNERS.
3. DETAIL NOT FOR USE ON WARRANTY PROJECTS EXCEEDING 20-YEARS.

APPLICABLE BONDING ADHESIVE. USE OF CAV-GRIP MAY ALSO BE USED FOR UP TO 20 YEAR WARRANTY

XXX WATER CUT-OFF MASTIC- MUST BE HELD UNDER CONSTANT COMPRESSION.

THERMOPLASTIC REINFORCED MEMBRANE — APPROVED INSULATION — SEE NOTE(S)

MEMBRANE TERMINATIONS PAGE 1 OF 2

For additional information, refer to Specifications

DETAIL NO. U-9 — THERMOPLASTIC UNIVERSAL

© 2017 Carlisle SynTec a division of Carlisle Construction Materials Incorporated

THERMOPLASTIC MEMBRANE — PVC/TPO

9E MECHANICAL TERMINATION AT VERTICAL JOINT

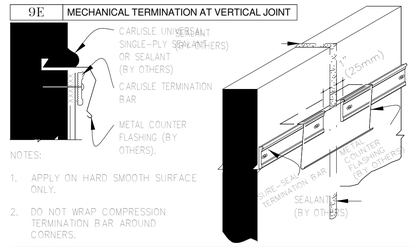

NOTES:

1. APPLY ON HARD SMOOTH SURFACE ONLY.
2. DO NOT WRAP COMPRESSION TERMINATION BAR AROUND CORNERS.
3. VERTICAL JOINTS IN THE PRE-CAST PANEL AS WELL AS ALL GAPS AT THE JUNCTION OF THE TILT-UP PANEL AND ROOF DECK MUST BE FULLY SEALED TO PREVENT AIR INFILTRATION.
4. CONTINUOUS COUNTER FLASHING REQUIRED FOR WARRANTY PROJECTS EXCEEDING 20-YEARS.
5. DETAIL REQUIRED FOR USE ON WARRANTY PROJECTS EXCEEDING 20-YEARS. THIS DETAIL MAY BE USED FOR ANY PROJECT REGARDLESS OF WARRANTY.

9F SecurEDGE COPING

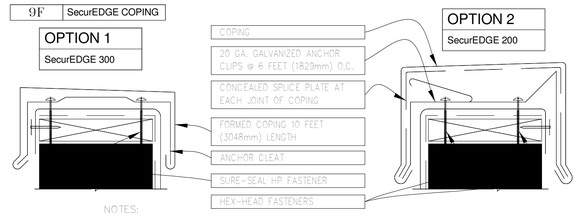

NOTES:

1. MEMBRANE MUST BE EXTENDED AT CORNERS TO PROVIDE COMPLETE COVERAGE OF THE TOP WALL SURFACE. REFER DETAIL U-9B.
2. REFER TO SecurEdge COPING INSTALLATION INSTRUCTION MANUAL FOR STEP-BY-STEP INSTRUCTION PROCEDURES.

9G COPING STONE TERMINATION

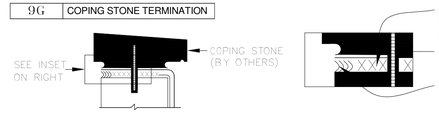

APPLICABLE BONDING ADHESIVE. USE OF CAV-GRIP MAY ALSO BE USED FOR UP TO 20 YEAR WARRANTY

XXX WATER CUT-OFF MASTIC- MUST BE HELD UNDER CONSTANT COMPRESSION.

THERMOPLASTIC REINFORCED MEMBRANE — APPROVED INSULATION — SEE NOTE(S)

MEMBRANE TERMINATIONS PAGE 2 OF 2

For additional information, refer to Specifications

DETAIL NO. U-9 — THERMOPLASTIC UNIVERSAL

© 2017 Carlisle SynTec a division of Carlisle Construction Materials Incorporated

THERMOPLASTIC MEMBRANE — PVC/TPO

CAUTION: WHEN A WARRANTY WIND SPEED GREATER THAN 90MPH IS SPECIFIED, CARLISLE FASTENERS AND SEAM FASTENING PLATES SHALL NOT EXCEED 6" (152mm) ON CENTER FOR ADHERED MEMBRANE ASSEMBLIES.

FASTENER TYPES ON MECHANICALLY FASTENED ROOF ASSEMBLY		
DECK TYPE	FASTENERS	PLATES
STEEL & WOOD DECK	HP-X OR HP-XTRA	PIRANHA / PIRANHA XTRA
CONCRETE DECK	CD-10 OR HD 14-10	PIRANHA

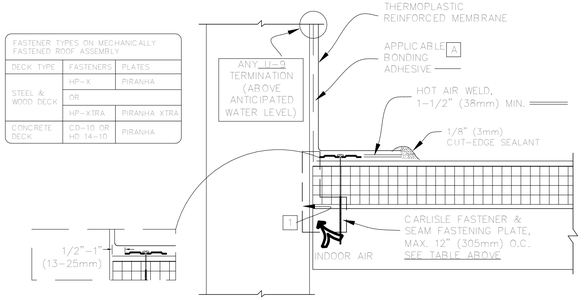

NOTES:

1. REFER TO SPEC SUPPLEMENTS:
   1.1. TO BLOCK INDOOR AIR INFILTRATION AND HUMIDITY AT THE JUNCTION (G-01-11).
   1.2. WHERE ROOF SYSTEM IS DESIGNED WITH A VAPOR RETARDER (G-08-11).

IN CASE WHERE FASTENERS MUST BE FASTENED INTO THE VERTICAL SURFACE, CARE MUST BE TAKEN TO CREASE THE MEMBRANE TIGHTLY INTO THE ANGLE CHANGE. PLACING THE PLATES TIGHT INTO THE ANGLE CHANGE WILL HELP HOLD THE MEMBRANE IN THE PROPER POSITION.

A TPO MEMBRANE ONLY USE OF CAV-GRIP ADHESIVE MAY ALSO BE USED FOR UP TO 20 YEAR WARRANTY

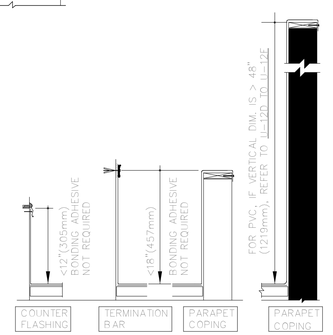

THERMOPLASTIC REINFORCED MEMBRANE — APPROVED INSULATION — SEE NOTE(S)

PARAPET FLASHING - FASTENED INTO DECK

For additional information, refer to Specifications

DETAIL NO. U-12A — THERMOPLASTIC UNIVERSAL

© 2017 Carlisle SynTec a division of Carlisle Construction Materials Incorporated

THERMOPLASTIC MEMBRANE — PVC/TPO

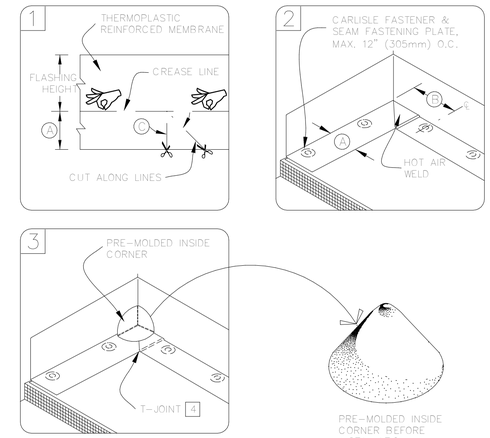

NOTES:

1. POSITION FASTENING PLATES 6" TO 9" (152 TO 229mm) FROM THE CORNER AND 1/2" TO 1" (13 TO 25mm) FROM EDGE OF MEMBRANE.
2. APPROXIMATELY 1/8" (3mm) DIAMETER BEAD OF CUT-EDGE SEALANT IS REQUIRED ON CUT EDGES OF REINFORCED TPO MEMBRANE AND RECOMMENDED ON CUT EDGES OF SURE-FLEX PVC MEMBRANE.
3. REFER TO CARLISLE SPECIFICATIONS FOR ACCEPTABLE CARLISLE FASTENERS AND PLATES.
4. WHEN USING 60 OR 80-MIL MEMBRANE, APPLY A 4-1/2" (114mm) DIAMETER "T-JOINT" COVER AT ALL FIELD SPLICE INTERSECTIONS.

DIMENSIONS	mm	
A 6"	152	APPROX.
B 6"-9"	152-229	
C 45-DEGREES APPROX.		

THERMOPLASTIC REINFORCED MEMBRANE — APPROVED INSULATION — SEE NOTE(S)

PRE-MOLDED INSIDE CORNER FLASHING

For additional information, refer to Specifications

DETAIL NO. U-15A — THERMOPLASTIC UNIVERSAL

© 2017 Carlisle SynTec a division of Carlisle Construction Materials Incorporated

R1

R2

R3

VERIFY SCALES

BAR IS ONE INCH ON ORIGINAL DRAWING

0 — 1"

IF NOT ONE INCH ON THIS SHEET, ADJUST SCALES ACCORDINGLY

8819 REGISTERED ARCHITECT TIMOTHY P FABER STATE OF WASHINGTON

carollo®

PLOT DATE: 1/20/2026 8:04:55 AM

Date	No	Revision	By

PROJECT ENGINEER	Designer	DIRECTOR PUBLIC WORKS	MAO
DESIGNED/DRAWN	Author	CITY ENGINEER	MLW
INSPECTOR	Checker	ASSISTANT DIRECTOR	MAO

CITY OF BELLINGHAM, WASHINGTON
PUBLIC WORKS DEPARTMENT
ENGINEERING DIVISION

SCALE: Horiz. AS SHOWN; Vert. AS SHOWN

DATUM: H: NAD 83/98; V: NAVD 88

Job. No. EU194; Date JAN 2026; Field Bk.

POST POINT RESOURCE RECOVERY PLANT

PROJECT PHOTOS & TYP. CARLISLE TPO ROOFING DETS.

DRAWING NO. 420A103

SHEET NO. 42 OF 198

CONTACT PERSON: STEPHEN DAY, PE SE, PROJECT ENGINEER AT 360-778-7944

FILE NAME: F:\BELLINGHAM_CITY OF\COB Re-Roof - Carollo\COB WWTP Bldg.420 Re-Roof 2025.rvt

THERMOPLASTIC Mmembrane — **PVC/TPO**

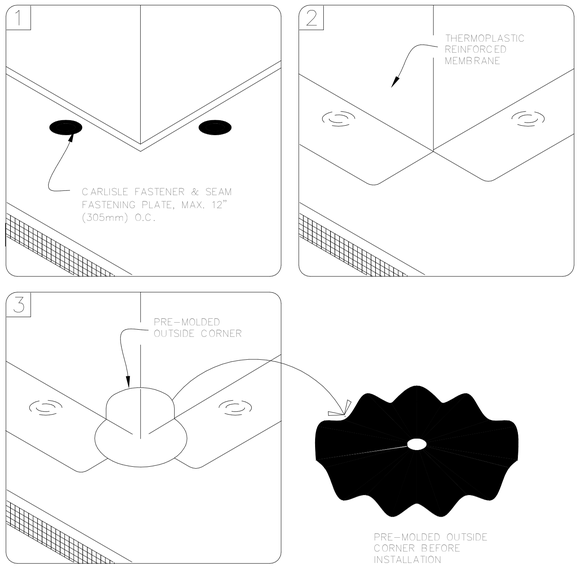

NOTES:

1. POSITION FASTENING PLATES 6"(152mm) FROM THE CORNER AND 1/2" TO 1" (13 TO 25mm) FROM EDGE OF MEMBRANE.
2. APPROXIMATELY 1/8" (3mm) DIAMETER BEAD OF CUT-EDGE SEALANT IS REQUIRED ON CUT EDGES OF REINFORCED TPO MEMBRANE AND RECOMMENDED ON CUT EDGES OF SURE-FLEX PVC MEMBRANE.
3. REFER TO CARLISLE SPECIFICATIONS FOR ACCEPTABLE CARLISLE FASTENERS AND PLATES.

THERMOPLASTIC REINFORCED MEMBRANE
APPROVED INSULATION
0 SEE NOTE(S)

PRE-MOLDED OUTSIDE CORNER FLASHING

For additional information, refer to Specifications

DETAIL NO. U-15D

THERMOPLASTIC UNIVERSAL

© 2017 Carlisle SynTec a division of Carlisle Construction Materials Incorporated

THERMOPLASTIC MembraNE — **PVC/TPO**

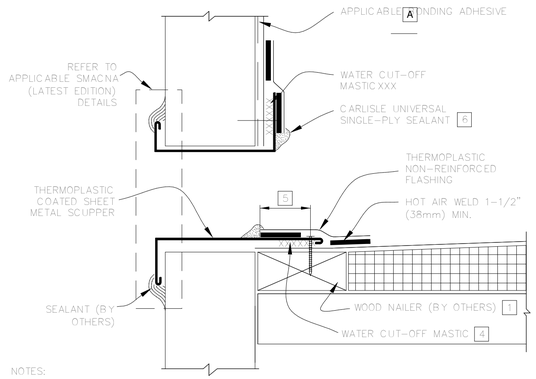

NOTES:

1. WOOD NAILERS ARE INSTALLED ONLY AT SCUPPERS TO SECURE METAL SLEEVE AND MUST EXTEND PAST THE WIDTH OF METAL SLEEVE FLANGE.
2. INSTALL WALL FLASHING PRIOR TO SCUPPER INSTALLATION.
3. METAL SCUPPER BOX MUST HAVE CONTINUOUS FLANGES WITH ROUNDED CORNERS.
4. WATER CUT-OFF MASTIC UNDER SCUPPER FLANGE MUST BE UNDER CONSTANT COMPRESSION.
5. SCUPPER FLANGES MUST BE TOTALLY COVERED BY NON-REINFORCED FLASHING WITH MINIMUM 2" (51mm) COVERAGE PAST NAIL HEAD.
6. UNIVERSAL SINGLE-PLY SEALANT IS REQUIRED AT FLASHING EDGES ON SCUPPER EDGE. WHEN USING TPO MEMBRANE, TPO PRIMER MUST BE USED TO PREPARE SURFACES PRIOR TO THE APPLICATION OF SEALANT.

A TPO MEMBRANE ONLY USE OF CAV-GRIP ADHESIVE MAY ALSO BE USED FOR UP TO 20 YEAR WARRANTY

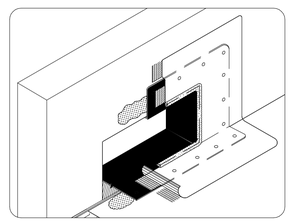

THERMOPLASTIC REINFORCED MEMBRANE
APPROVED INSULATION
0 SEE NOTE(S)

SCUPPER WITH COATED METAL

For additional information, refer to Specifications

DETAIL NO. U-18A

THERMOPLASTIC UNIVERSAL

© 2017 Carlisle SynTec a division of Carlisle Construction Materials Incorporated

THERMOPLASTIC MembraNE — **PVC/TPO**

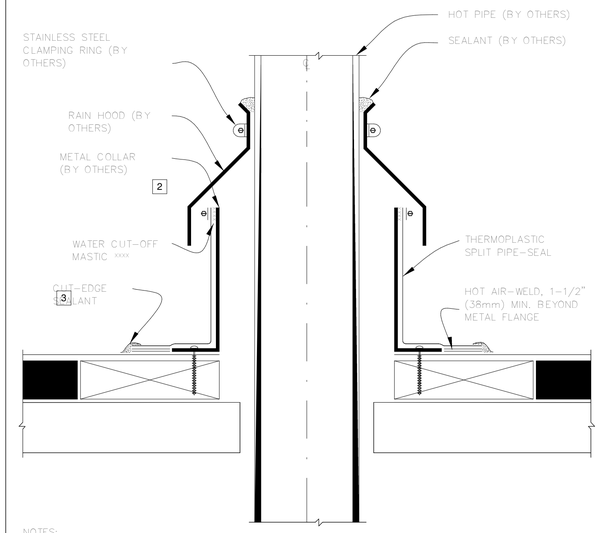

NOTES:

1. REMOVE ALL EXISTING LEAD AND FLASHING MATERIAL BEFORE INSTALLING PIPE FLASHING.
2. TEMPERATURE OF THE METAL COLLAR MUST NOT EXCEED 140° F (60° C) WHEN USING PVC AND 160° F (71° C) WHEN USING TPO.
3. APPROXIMATELY 1/8" (3mm) DIAMETER BEAD OF CUT-EDGE SEALANT IS REQUIRED ON CUT EDGES OF REINFORCED TPO MEMBRANE AND RECOMMENDED ON CUT EDGES OF SURE-FLEX PVC MEMBRANE.
4. REGARDLESS OF THE FIELD MEMBRANE THICKNESS, THERMOPLASTIC "T-JOINT" COVERS ARE REQUIRED OVER THE SPLICE INTERSECTIONS OF THE SPLIT PIPE SEAL. IF PRE-FABRICATED SPLIT PIPE SEAL IS A "CFA" LABELED PART, NO "T-JOINT" COVERS ARE REQUIRED.

THERMOPLASTIC REINFORCED MEMBRANE
APPROVED INSULATION
0 SEE NOTE(S)

HOT PIPE FLASHING

For additional information, refer to Specifications

DETAIL NO. U-8F

THERMOPLASTIC UNIVERSAL

© 2017 Carlisle SynTec a division of Carlisle Construction Materials Incorporated

VERIFY SCALES

BAR IS ONE INCH ON ORIGINAL DRAWING

0 1"

IF NOT ONE INCH ON THIS SHEET, ADJUST SCALES ACCORDINGLY

8819 REGISTERED ARCHITECT TIMOTHY P FABER STATE OF WASHINGTON

carollo®

PLOT DATE: 1/20/2026 8:04:56 AM

Date	No	Revision	By

PROJECT ENGINEER Designer
DESIGNED/DRAWN Author
INSPECTOR Checker

DIRECTOR PUBLIC WORKS MAO
CITY ENGINEER MLW
ASSISTANT DIRECTOR MAO

CITY OF BELLINGHAM, WASHINGTON
PUBLIC WORKS DEPARTMENT
ENGINEERING DIVISION

SCALE
Horiz. AS SHOWN
Vert. AS SHOWN

DATUM
H: NAD 83/98
V: NAVD 88

Job. No. EU194
Date JAN 2026
Field Bk.

POST POINT RESOURCE RECOVERY PLANT
TYP. CARLISLE TPO ROOFING DETAILS

DRAWING NO. 420A104
SHEET NO. 43 OF 198

CONTACT PERSON: STEPHEN DAY, PE SE , PROJECT ENGINEER AT 360-778-7944 FILE NAME: F:\BELLINGHAM_CITY OF\COB Re-Roof - Carollo\COB WWTP Bldg.420 Re-Roof 2025.rvt

GENERAL NOTES:

1. USE STRUCTURAL DRAWINGS IN CONJUNCTION WITH PROJECT DRAWINGS BY OTHER DISCIPLINES AND WITH THE SPECIFICATIONS.

2. UNLESS DETAILED, SPECIFIED, OR INDICATED OTHERWISE, CONSTRUCTION SHALL BE AS INDICATED IN THE GENERAL NOTES AND TYPICAL DETAILS.

3. PRESENTATION CONVENTIONS FOR STRUCTURAL DRAWINGS:

   A. SCREENED LINE WORK INDICATES EXISTING CONDITIONS.
   B. WRITTEN DIMENSIONS TAKE PRECEDENCE OVER SCALED SIZES.
   C. PLANS ARE TREATED AS HORIZONTAL SECTIONS. (I.E.: "PLAN AT ELEVATION 110" SHOWS CONSTRUCTION AT AND BELOW ELEVATION 110.)

4. VERIFY DIMENSIONS AND CONDITIONS BEFORE BEGINNING WORK. ADVISE ENGINEER IMMEDIATELY OF DISCREPANCIES BETWEEN EXISTING CONDITIONS AND DIMENSIONS, AND INFORMATION SHOWN ON THESE DRAWINGS. CONFIRM THE FOLLOWING BEFORE PREPARATION AND SUBMITTAL OF SHOP DRAWINGS:

   A. DIMENSIONS AND WEIGHTS FOR EQUIPMENT SELECTED.
   B. SIZES AND LOCATIONS OF EQUIPMENT PADS FOR EQUIPMENT SELECTED.

5. TYPICAL DETAILS ARE INCLUDED ON THE "800T" DRAWINGS.

   A. TYPICAL DETAILS ARE INTENDED TO APPLY AT LOCATIONS DESCRIBED BY THEIR TITLES, EVEN WHEN NOT SPECIFICALLY REFERENCED ON THE DRAWINGS.
   B. IN STRUCTURAL TYPICAL DETAILS, ORIENTATION OF BARS IN EACH MAT OF REINFORCEMENT (WHETHER "LINES" OR "DOTS"ARE CLOSER TO THE FACE OF THE CONCRETE) IS GENERALLY ARBITRARY. SEE DRAWINGS OF EACH STRUCTURE FOR ORIENTATION REQUIRED AT THAT STRUCTURE.

6. SEE CIVIL DRAWINGS FOR STRUCTURE COORDINATES. POINTS ON THE STRUCTURES TO WHICH SITE COORDINATES REFER ARE SHOWN ON THE STRUCTURAL PLANS.

7. DRAWINGS PREPARED BY OTHER DISCIPLINES INCLUDE OPENINGS, ANCHORS, PIPES, CONDUITS, AND OTHER ITEMS THAT ARE EMBEDDED INTO OR PASS THROUGH STRUCTURES.

   A. CONFIRM SIZE AND LOCATIONS OF OPENINGS, PENETRATIONS AND EMBEDMENT FOR ITEMS AND EQUIPMENT FURNISHED.
   B. IN GENERAL, OPENINGS, EMBEDMENTS, AND PENETRATIONS LESS THAN 12 INCHES IN DIAMETER ARE NOT SHOWN ON THE STRUCTURAL DRAWINGS.
   C. SEE MECHANICAL DRAWINGS FOR DETAILS OF PIPE PENETRATIONS, PIPE SUPPORTS, AND ASSOCIATED STRUCTURAL REQUIREMENTS.
   D. SEE MECHANICAL DRAWINGS FOR EQUIPMENT PADS AND PIPE SUPPORTS.

8. SEE ARCHITECTURAL DRAWINGS FOR LOCATIONS AND SIZES OF DOOR AND WINDOW OPENINGS.

STRUCTURAL DESIGN CRITERIA - GENERAL:

SEE DRAWINGS OF INDIVIDUAL STRUCTURES FOR SPECIFIC DESIGN CRITERIA BASED ON THESE OVERALL CRITERIA FOR THE SITE.

1. BUILDING CODE:

   A. 2021 WASHINGTON STATE BUILDING CODE ("WSBC 2021").
   B. BELLINGHAM MUNICIPAL CODE CHAPTER 17.

2. STRUCTURE RISK CATEGORY: III.

3. DEAD LOADS: CALCULATED FOR STRUCTURE SELF-WEIGHT.

4. LIVE LOADS:

   A. FLOOR LIVE LOAD: SEE PLANS.
   B. GRATING AND CHECKERED PLATE: 100 PSF (UNO).
   C. ROOF LIVE LOAD: SEE PLANS (20 PSF MINIMUM).
   D. EQUIPMENT LOADS: SEE PLANS.
   E. CONCENTRATED AND IMPACT LOADS: SEE PLANS.

5. FLUID PRESSURE LOADS: 63 PSF/FT (UNO).

6. SNOW LOAD DATA:

   A. GROUND SNOW LOAD, Pg = 15 PSF.
   B. SNOW EXPOSURE FACTOR, Ce = 1.0.
   C. FLAT ROOF SNOW LOAD: 12 PSF (MINIMUM).

7. WIND DESIGN DATA:

   A. SPECIAL WIND REGION: NO
   B. WIND-BORNE DEBRIS REGION: NO
   C. BASIC WIND SPEED (3 SEC GUST, 33 FEET ABOVE GROUND): 105 MPH.

8. EARTHQUAKE DESIGN DATA:

		*0.2 SECOND	*1.0 SECOND
A.	SITE CLASS: D.		
B.	MAPPED SPECTRAL RESPONSE ACCELERATIONS:	Ss = 1.018 g	S1 = 0.358 g
C.	SITE COEFFICIENTS:	Fa = 1.093	Fv = 1.942
D.	MAXIMUM CONSIDERED ACCELERATIONS:	Sms = 1.113 g	Sm1 = 0.695 g
E.	DESIGN SPECTRAL RESPONSE ACCELERATIONS:	Sds = 0.742 g	Sd1 = 0.463 g
F.	SEISMIC DESIGN CATEGORY (SDC): D		

   (* 5% DAMPED)

9. FLOOD LOADS:

   A. FLOOD HAZARD AREA: NO
      1) REFERENCE MAP ("FIRM"): 53073C1634E

10. RAIN LOADS:

    A. DESIGN RAINFALL INTENSITY: i = 1 INCHES / HOUR. (100 YEAR/1 HOUR EVENT)

11. ICE LOADS:

    A. NOMINAL UNIFORM ICE THICKNESS W/ 3-SECOND WIND GUST: 1 INCHES / 30 MPH.
    B. ICE DENSITY FOR CALCULATING ICE WEIGHT: 56 PCF (MIN)

12. CONSTRUCTION LOADS:
    STRUCTURES HAVE BEEN DESIGNED FOR OPERATING LOADS ON COMPLETED FACILITIES. UNTIL CONSTRUCTION IS COMPLETE AND MEMBERS HAVE ACHIEVED THEIR DESIGN STRENGTH, PROTECT STRUCTURES AS REQUIRED BY SHORING, BRACING, AND BALANCING.

GEOTECHNICAL REPORT / FOUNDATION DESIGN CRITERIA:

1. GEOTECHNICAL INVESTIGATION REPORT:

   TITLE: POST POINT PRIMARY SLUDGE TANK REPLACEMENT.
   PREPARED BY: GEOENGINEERS.
   REPORT NO: 0356-185-00 DATED: MAY 8, 2024.

2. FOUNDATION DESIGNS ARE BASED ON RECOMMENDATIONS IN THE GEOTECHNICAL INVESTIGATION REPORT.

   A. DESIGN GROUNDWATER (GW) 5 FT BELOW FINISHED GRADE.

   B. FROST DEPTH: 12"

   C. LATERAL EARTH PRESSURE (UNO):
      SURCHARGE: EQUIVALENT TO 2 FEET OF SOIL ABOVE FINISHED GRADE.

ACTIVE (PSF/FT):	35 (80 BELOW GW)
AT REST (PSF/FT):	55 (90 BELOW GW)
LATERAL SURCHARGE LIVE LOAD (PSF):	70 (UNIFORM PRESSURE)
LATERAL SURCHARGE SEISMIC (PSF)	9H (UNIFORM PRESSURE)
PASSIVE (PSF/FT):	300 (150 BELOW GW)
BASE SLIDING COEFFICIENT OF FRICTION:	0.45 (N/A AT PILE SUPPORT BASE)
SIDE COEFFICIENT OF FRICTION:	0.35 x 35 PCF (0.35 x 18 PCF BELOW GW)

TYPICAL STRUCTURAL MATERIALS:

1. MATERIALS SHALL CONFORM TO THE FOLLOWING REQUIREMENTS UNLESS OTHERWISE INDICATED ON THE DRAWINGS.

2. SEE PROJECT SPECIFICATIONS AND NOTES ON DRAWINGS OF SPECIFIC STRUCTURES FOR DETAILED AND LOCATION-SPECIFIC REQUIREMENTS.

REINFORCING STEEL (FOR CONCRETE AND MASONRY):

1. DEFORMED BARS:
   A. TYPICAL: ASTM A 615, GRADE 60.
   B. WHERE INDICATED ON THE DRAWINGS: ASTM A 706.

CONCRETE:

1. NORMAL DENSITY.

2. MINIMUM SPECIFIED CONCRETE COMPRESSIVE STRENGTH, f'c (AT 28 DAYS UNO).

   A. STRUCTURES: "CLASS A" f'c = 4500 PSI.
   B. FILL AND THRUST BLOCKS: "CLASS C" f'c = 2500 PSI.
   C. PIPE ENCASEMENT: "CLASS A" f'c = 4500 PSI.
   D. ELECTRICAL DUCT ENCASEMENT: "CLASS CE" f'c = 3000 PSI.

STRUCTURAL STEEL:

1. SECTIONS

   A. SHAPES W, WT: ASTM A 992 (Fy = 50 KSI)
   B. SHAPES S, ST, M, MT, HP, C, MC, L: ASTM A 36 (Fy = 36 KSI)
   C. PLATES AND BARS: ASTM A 36 (Fy = 36 KSI)
   D. PIPES: ASTM A 53, GRADE B (Fy = 35 KSI)
   E. HOLLOW STRUCTURAL SECTIONS:
      ROUND: ASTM A 500, GRADE B (Fy = 42 KSI)
      SQUARE AND RECTANGULAR: ASTM A 500, GRADE B (Fy = 46 KSI)

2. CONNECTIONS:

   A. BOLTS - STEEL TO-STEEL:
      ASTM F 3125 GRADE A325 HIGH-STRENGTH BOLTS, WITH LOAD INDICATOR WASHERS.
   B. BOLTS - STEEL TO CONCRETE OR MASONRY:
      ANCHOR BOLTS WITH HEX FORGED HEAD.
      ASTM F 593, STAINLESS TYPE 316 (304)
      ASTM F 1554, GRADE 36 GALVANIZED.
   C. WELDS - SHIELDED METAL ARC PROCESS USING E70-XX ELECTRODES.

STAINLESS STEEL:

1. ANSI TYPE 316/316L EXCEPT WHERE TYPE 304/304L IS INDICATED ON THE DRAWINGS.

2. SECTIONS: SHAPES AND BARS: ASTM A 276.

3. BOLTED CONNECTIONS - BOLTS AND ANCHOR BOLTS:

   A. MATCH ALLOY OF THE STRUCTURAL MEMBERS CONNECTED.
   B. TYPE 316/316L: ASTM F 593, GRADE B8M, CLASS 1, HEAVY HEX.
   C. TYPE 304/304L: ASTM F 593, GRADE B8, CLASS 1, HEAVY HEX.

4. WELDED CONNECTIONS:

   A. TYPE 316L: E316L-15 ELECTRODES.
   B. TYPE 304L: E304L-15 ELECTRODES.

STRUCTURAL ALUMINUM:

1. SECTIONS

   A. SHAPES: ASTM B 308, ALLOY 6061-T6.
   B. SHEET AND PLATE: ASTM B 209, ALLOY 6061-T6.

2. BOLTED CONNECTIONS - BOLTS AND ANCHOR BOLTS:

   A. STAINLESS STEEL - TYPE 316, ASTM F 593, GRADE B8M, CLASS 1, HEAVY HEX.

3. WELDED CONNECTIONS:

   A. GAS METAL ARC (MIG) OR GAS TUNGSTEN ARC (TIG) PROCESS USING FILLER ALLOY 4043 ELECTRODES.

CONSTRUCTION:

CONFORM TO THE FOLLOWING REQUIREMENTS UNLESS OTHERWISE INDICATED ON THE DRAWINGS.

EXCAVATION AND BACKFILLING:

1. EXPOSE AND PREPARE SUBGRADE AS SHOWN ON THE DRAWINGS AND SPECIFIED. OBTAIN ENGINEER'S OBSERVATION OF SUBGRADE SURFACES, AS EXPOSED AND AS PREPARED, BEFORE PROCEEDING WITH FOUNDATION CONSTRUCTION.

2. DO NOT PLACE BACKFILL AGAINST WALLS UNTIL STRUCTURES SUPPORTING THE TOP OF THE WALL ARE IN PLACE, ARE COMPLETE, AND (IN THE CASE OF CONCRETE) HAVE CURED TO THEIR MINIMUM SPECIFIED 28-DAY COMPRESSIVE STRENGTH.

3. WHERE BACKFILL MUST BE PLACED AGAINST WALLS BEFORE STRUCTURES ABOVE ARE COMPLETE, PROVIDE BRACING FOR WALLS. KEEP BRACING IN PLACE UNTIL THE STRUCTURE ABOVE IS COMPLETE AND (IN THE CASE OF CONCRETE) HAS CURED TO ITS MINIMUM SPECIFIED 28-DAY COMPRESSIVE STRENGTH.

CONCRETE:

1. SEE SC001/TYP FOR CONCRETE NOTES, INCLUDING CLEAR COVER AND LAP SPLICE LENGTH REQUIREMENTS FOR REINFORCING.

2. SUBMIT LOCATIONS OF CONSTRUCTION JOINTS NOT SHOWN ON THE DRAWINGS FOR ACCEPTANCE BY THE ENGINEER BEFORE FORM LAYOUT.

3. PROVIDE CHAMFER AT EXPOSED EDGES OF CAST-IN-PLACE CONCRETE. SEE SPECIFICATION 03_11_07 FOR CHAMFERS.

4. PROVIDE REINFORCING:

   A. AT CORNERS AND JUNCTIONS - AS INDICATED IN SC310/TYP, SUPPLEMENT WITH ADDED BARS WHERE INDICATED ON THE DRAWINGS.
   B. AT OPENINGS - AS INDICATED IN SC012/TYP.

5. WELDING OF REINFORCING IS NOT PERMITTED UNLESS DETAILED ON THE DRAWINGS OR ACCEPTED IN ADVANCE BY THE ENGINEER.

6. MAINTAIN MINIMUM 3 INCHES CLEAR CONCRETE COVER BETWEEN REINFORCING AND EMBEDMENTS.

7. FINISH CONCRETE AS SPECIFIED IN SECTION 03_35_29.

8. CONCRETE PADS

   A. (E) EQUIPMENT PAD SEE SD512/TYP.

   B. (H) HOUSEKEEPING PAD FOR ELECTRICAL EQUIPMENT SEE SD702/TYP.

STEEL, STAINLESS STEEL, AND ALUMINUM - CONNECTIONS:

1. BOLTED:

   A. MADE USING 3/4-INCH DIAMETER BOLTS.
   B. HAVING A MINIMUM OF 2 BOLTS, SPACED NOT CLOSER THAN 3 INCHES ON CENTER.
   C. WITH A DISTANCE OF AT LEAST 1 1/2 INCHES FROM CENTER OF BOLT TO ANY EDGE OF A PLATE OR STRUCTURAL ELEMENT.

2. WELDED:

   A. FILLET WELDS: PER AWS CODE BASED ON THE THICKNESS OF THE MATERIALS BEING JOINED, AND FULL LENGTH OF THE JOINT.

3. INTERFACE BETWEEN MATERIALS:

   A. AT BOLTED CONNECTIONS THAT INCLUDE DIFFERENT METALS (E.G.: STEEL AND STAINLESS STEEL, OR ALUMINUM AND STEEL) PROVIDE ISOLATING SLEEVES AND WASHERS AS SPECIFIED IN SECTION 05_05_24.
   B. WHERE ALUMINUM IS IN CONTACT WITH MASONRY OR CONCRETE, COAT ALUMINUM SURFACES AS SPECIFIED IN SECTION 09_96_01.

4. POST-INSTALLED ANCHORS IN CONCRETE AND MASONRY:

   A. INSTALL IN FULL COMPLIANCE WITH ACCEPTED BUILDING CODE EVALUATION REPORT AND MANUFACTURER'S INSTRUCTIONS.
   B. DO NOT CUT, DAMAGE, OR INTERRUPT EXISTING REINFORCEMENT TO INSTALL ANCHORS. USE NON-DESTRUCTIVE TESTING EQUIPMENT TO IDENTIFY LOCATIONS OF REINFORCEMENT IN MEMBERS BEFORE DRILLING HOLES FOR ANCHORS.

METAL FABRICATIONS:

1. HANDRAILS AND GUARDRAILS:

   A. ALUMINUM, EXCEPT WHERE OTHER MATERIALS ARE NOTED.

2. GRATING:

   A. ALUMINUM WITH TYPE 316 STAINLESS STEEL FASTENERS, UNLESS OTHERWISE NOTED.
   B. GRATING AND ITS SEATS OR SUPPORTS SHALL BE OF THE SAME MATERIAL.
   C. UNLESS INDICATED ON THE DRAWINGS AS "REMOVABLE GRATING", SECURELY FASTEN GRATING TO SUPPORTS AS INDICATED IN SR601/TYP.

3. COVER PLATES:

   A. ALUMINUM WITH TYPE 316 STAINLESS STEEL FASTENERS, UNLESS OTHERWISE NOTED.
   B. COVER PLATE AND ITS SEATS OR SUPPORTS SHALL BE OF THE SAME MATERIAL.

SPECIAL INSPECTION:

1. SPECIAL INSPECTION IS REQUIRED FOR THE FOLLOWING STRUCTURAL MATERIALS AND CONSTRUCTION. SEE SPECIFICATION SECTION 01_45_24 FOR DETAILS.

2. DIVISION 31 EARTHWORK

   A. EXCAVATION DEPTH.
   B. ADEQUACY OF EXPOSED SURFACE TO PROVIDE REQUIRED SUPPORT.
   C. PREPARATION OF SOILS/SURFACES SUPPORTING CONSTRUCTION.
   D. FILL AND BACKFILL.
   E. DEEP FOUNDATIONS AUGERCAST PILES.

3. DIVISION 03 CONCRETE:

   A. LOCATIONS.
   B. FORMWORK AND MEMBER SIZES.
   C. REINFORCING STEEL.
   D. ANCHORS: CAST-IN AND POST-INSTALLED.
   E. CONCRETE MIX AND PLACEMENT.
   F. PROTECTION AND CURING PROCEDURES.
   G. PRECAST CONCRETE.

4. DIVISION 05 METALS

   A. GENERAL ALL METALS:
      1) MEMBER LOCATIONS.
      2) MEMBER SIZES/TYPES.
      3) ANCHORS - CAST-IN AND BUILT-IN ANCHOR BOLTS.
      4) ANCHORS - POST-INSTALLED MECHANICAL AND ADHESIVE.

   B. STRUCTURAL STEEL (CARBON AND STAINLESS).
      1) HIGH-STRENGTH BOLTING.
      2) WELDING.

   C. STRUCTURAL ALUMINUM.
      1) BOLTING.
      2) WELDING.

   D. STEEL DECKING.
      1) CONNECTIONS TO SUPPORTS.
      2) SIDE CONNECTIONS BETWEEN ADJACENT SHEETS.

STRUCTURAL OBSERVATION:

1. STRUCTURAL OBSERVATION IS REQUIRED DURING AND AT SPECIFIC STAGES OF CONSTRUCTION. SEE SPECIFICATION SECTION 01_45_24 FOR DETAILS.

STRUCTURAL SYMBOLS:

1. SEE DRAWING 010G108 FOR KEY TO DRAWING TITLES AND SECTION CUTS, AND FOR DEFINITION OF MATERIALS SHADING PATTERNS.

2. WELDING: SYMBOLS: IN ACCORDANCE WITH AMERICAN WELDING SOCIETY (AWS) A2.4.

STRUCTURAL ABBREVIATIONS:

1. SEE DRAWING 010G107 FOR GENERAL LIST OF ABBREVIATIONS USED ON DRAWINGS.

2. ABBREVIATIONS FOR NAMES OF TECHNICAL GROUPS MAY BE FOUND IN THE PROJECT SPECIFICATIONS.

3. STRUCTURAL MEMBERS:

   A. STEEL: ABBREVIATIONS AND DESIGNATIONS ARE IN ACCORDANCE WITH THE AMERICAN INSTITUTE OF STEEL CONSTRUCTION'S STEEL CONSTRUCTION MANUAL, CURRENT EDITION.

   B. ALUMINUM: ABBREVIATIONS AND DESIGNATIONS ARE IN ACCORDANCE WITH THE ALUMINUM ASSOCIATION'S ALUMINUM DESIGN MANUAL, CURRENT EDITION.

4. ABBREVIATIONS FOR STRUCTURAL DRAWINGS:
   WHEN USED ON THE STRUCTURAL DRAWINGS, THE FOLLOWING ABBREVIATIONS HAVE THE MEANINGS LISTED.

REINFORCEMENT:		OTHER:	
BO	BOTTOM OF	L	ANGLE
EF	EACH FACE	PL	PLATE
I.F.	INSIDE FACE		
O.F.	OUTSIDE FACE		
T.O.	TOP OF		
#	NUMBER (REINFORCING BAR SIZE)		

DEFERRED DESIGN SUBMITTALS

AS DEFINED IN THE BUILDING CODE, DEFERRED DESIGN SUBMITTALS ARE PORTIONS OF THE DESIGN THAT ARE NOT SUBMITTED AT THE TIME OF PERMIT APPLICATION, AND THAT ARE TO BE REVIEWED BY THE REGISTERED DESIGN PROFESSIONAL AND SUBSEQUENTLY SUBMITTED TO THE BUILDING OFFICIAL.

DEFERRED DESIGN SUBMITTALS FOR THIS PROJECT INCLUDE:

1. DIVISIONS 03 CONCRETE:

   A. SECTION 03_30_00 – CONCRETE MIX DESIGN AND TEST RESULTS.

2. DIVISION 05 METALS:

   A. SECTION 05_50_00 – HANDRAILS, GUARDRAILS, AND GRATING.

3. DIVISION 31 EARTHWORK:

   A. SECTION 31_50_00 – EXCAVATION SUPPORTS.
   B. SECTION 31_63_14 – BORED AND AUGERED PILES.
   C. SECTION 31_63_17 – AUGERED PRESSURE-GROUTED PILES.

4. ALL OTHER DIVISIONS:
   A. SECTION 08_31_14 – FLOOR ACCESS DOORS.
   B. SECTION 41_22_24 – MONORAIL SYSTEM.
   C. SECTION 40_05_07.03 – PREFORMED CHANNEL PIPE SUPPORT SYSTEM DESIGN AND ANCHORAGE.
   D. ALL SECTIONS: EQUIPMENT SUPPORT DESIGN AND ANCHORAGE DESIGN.
   E. ALL SECTIONS: PIPE AND HANGER SUPPORT SYSTEM AND ANCHORAGE DESIGN.

Digitally signed by HIPOM CHE
Contact info: hipom.che@carollo.com
Date: 2026.01.15 14:50:57 -08'00'
STATE OF WASHINGTON 21258 REGISTERED PROFESSIONAL ENGINEER

carollo®

No	Revision	By
4		
3		
2		
1		

Date

PROJECT ENGINEER HCC
DESIGNED/DRAWN DE
INSPECTOR JAD / KA

DIRECTOR PUBLIC WORKS
CITY ENGINEER
ASSISTANT DIRECTOR

CITY OF BELLINGHAM, WASHINGTON
PUBLIC WORKS DEPARTMENT
ENGINEERING DIVISION

SCALE
Horiz. AS SHOWN
Vert. AS SHOWN

DATUM
H: NAD 83/98
V: NAVD 88

Job. No. EU194
Date JAN 2026
Field Bk.

POST POINT RESOURCE RECOVERY PLANT
STRUCTURAL
GENERAL STRUCTURAL NOTES

DRAWING NO. 010S101
SHEET NO. 44 OF 198

CONTACT PERSON: STEPHEN DAY, PE SE , PROJECT ENGINEER AT 360-778-7944

PROJECT NO. 202021-100000 FILE NAME: 202021010S101.dgn

LAST SAVED BY: lveloz
Model: Layout1 ColorTable: gshade.ctb DesignScript: Carollo_Std_Pen_v0905.pen PlotScale: 1:1
User: svcPW Plot Date: 15-JAN-2026 2:50:57 PM

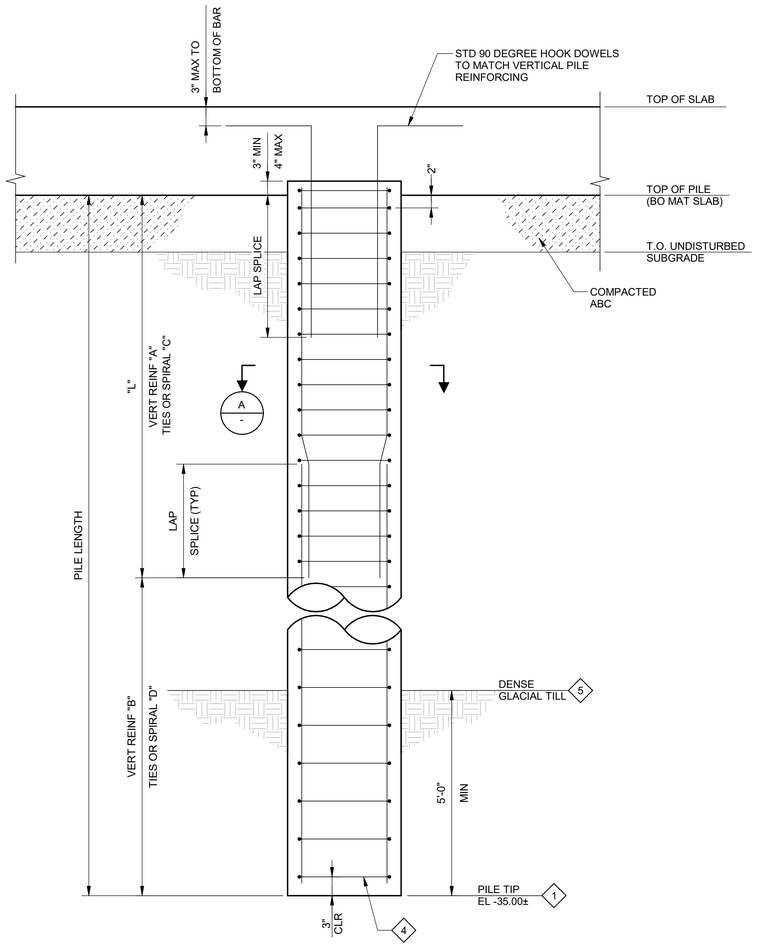

1 DETAIL
SCALE:NO SCALE

AUGERCAST PILE FOUNDATION REINFORCING SCHEDULE							
LABEL	DIAMETER	TOP OF PILE (BO MAT SLAB)	REINFORCING				
			"L"	VERT "A" REINF	VERT "B" REINF	UPPER "C" TIES OR SPIRAL ◇2	"D" TIES OR SPIRAL ◇2
P1	2'-0"	EL 6.83	37'-0"	(10) #9	(5) #9	#4@4"	#4@12"
P2	2'-0"	EL 16.50	37'-0"	(10) #9	(5) #9	#4@4"	#4@12"

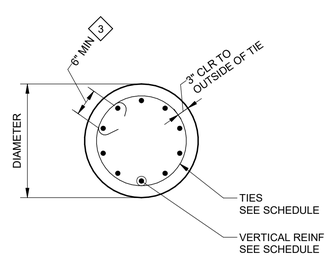

A SECTION
SCALE:NO SCALE

GENERAL NOTES:

1. FOR GENERAL STRUCTURAL NOTES SEE DRAWING 010S101.
2. FOR AUGERCAST PILE REQUIREMENTS SEE SPECIFICATIONS 31_63_14 AND 31_63_17.
3. ALL EXISTING UTILITIES SHALL BE LOCATED PRIOR TO DRILLING OF PILES. DO NOT INTERRUPT EXISTING UTILITIES THAT ARE IN PLACE. IF CONFLICT(S) SHOULD OCCUR, NOTIFY THE ENGINEER FOR DIRECTION(S) PRIOR TO ANY FURTHER WORK.

KEY NOTES:

1. FINAL PILE BEARING TIP ELEVATION SHALL BE VERIFIED IN THE FIELD AND APPROVED BY THE GEOTECHNICAL ENGINEER OF RECORD.
2. SPIRALS MAY BE USED IN LIEU OF HORIZONTAL TIES SHOWN, FABRICATED SPIRALS TO CONFORM TO ACI 318 REQUIREMENTS. IF LAPS ARE REQUIRED, LAP AND TIE IN ACCORDANCE WITH ACI 318 REQUIREMENTS AND AS APPROVED BY THE ENGINEER.
3. TIE ENDS SHALL TERMINATE WITH 135 DEGREE MINIMUM STANDARD HOOKS AND ENGAGE A LONGITUDINAL BAR WITH 6" MINIMUM OVERLAP. ENDS OF ADJACENT CIRCULAR TIES SHALL BE STAGGERED AROUND THE PERIMETER ENCLOSING THE LONGITUDINAL BAR.
4. FOR REBAR CAGES THAT ARE REDUCED IN LENGTH ON SITE PER NEW PILE LENGTHS, ENSURE THAT THE SPIRAL IS TERMINATED WITH (2) EXTRA TURNS AND A 135 DEGREE HOOK BEND INTO THE CONCRETE CORE AT ENDS.
5. THE CONTRACTOR SHALL COORDINATE WITH THE GEOTECHNICAL ENGINEER OF RECORD AND FIELD VERIFY DEPTH TO TOP OF "DENSE GLACIAL TILL" DEPOSIT. IF TOP OF "DENSE GLACIAL TILL" LAYER IS ENCOUNTERED AT LOWER DEPTH THAN ASSUMED, EXTEND PILE LENGTH AND REINFORCING BARS AS REQUIRED.

VERIFY SCALES
BAR IS ONE INCH ON ORIGINAL DRAWING
0 1"
IF NOT ONE INCH ON THIS SHEET, ADJUST SCALES ACCORDINGLY

Digitally signed by Chiyom Che
CHIYOM CHE
STATE OF WASHINGTON
21258
REGISTERED PROFESSIONAL ENGINEER

carollo®

PLOT DATE: 1/15/2026 12:34:49 PM

Date	No	Revision	By
		PERMIT SUBMITTAL	

PROJECT ENGINEER BS / HCC
DESIGNED/DRAWN DE
INSPECTOR JAD / KA

DIRECTOR PUBLIC WORKS MAO
CITY ENGINEER MLW
ASSISTANT DIRECTOR MAO

CITY OF BELLINGHAM, WASHINGTON
PUBLIC WORKS DEPARTMENT
ENGINEERING DIVISION

SCALE
Horiz. AS SHOWN
Vert. AS SHOWN

DATUM
H: NAD 83/98
V: NAVD 88

Job. No. EU194
Date AUG 2025
Field Bk.

POST POINT RESOURCE RECOVERY PLANT
STRUCTURAL
AUGERCAST PILE SCHEDULE AND DETAILS

DRAWING NO. 010S102
SHEET NO. 45 OF 198

CONTACT PERSON: STEPHEN DAY, PE SE , PROJECT ENGINEER AT 360-778-7944 FILE NAME: Autodesk Docs://Bellingham 202021-100000 Primary Sludge Tank Replacement/202021440S0801.rvt

ROOM FINISH SCHEDULE

ROOM NUMBER	ROOM NAME	FLOOR		BASE	NORTH		SOUTH		EAST		WEST		CEILING			REMARKS
		MATL	FINISH	MATL	MATL	FINISH	MATL	FINISH	MATL	FINISH	MATL	FINISH	MATL	INT CLR	FINISH	
101	SLUDGE PUMP ROOM	EXIST	EXIST	EXIST	EXIST CONC	COATING	EXIST CONC	COATING	EXIST CONC	COATING	EXIST CONC	COATING	EXIST	EXIST	COATING	
201	ELECTRICAL ROOM	EXIST	EXIST	EXIST	EXIST PRECAST	COATING	EXIST PRECAST	COATING	EXIST PRECAST	COATING	EXIST PRECAST	COATING	EXIST	EXIST	COATING	
202	STORAGE ROOM	CONC	SEALER	EXIST	EXIST PRECAST	COATING	EXIST PRECAST	COATING	EXIST PRECAST	COATING	EXIST PRECAST	COATING	EXIST	EXIST	COATING	

NOTE: REFER TO SPECIFICATION SECTION 09_96_01 FOR INTERIOR PAINT

DOOR & HARDWARE SCHEDULE

DOOR NUMBER	POSITION INT/EXT	DOOR						FRAME						DETAILS			UL LABEL	LOUVER SIZE	CARD READER	PANIC HARDWARE REQ/PROVIDED	HARDWARE GROUP
		WIDTH	HEIGHT	THICK	TYPE (AJ103/TYP)	MATL	FINISH	WIDTH	HEIGHT	DEPTH	TYPE (AJ100/TYP)	MATL	FINISH	HEAD	JAMB (AJ107/TYP)	SILL (AJ109/TYP)					
201-01	EXT	PR@3'-0"	7' - 2"	1 3/4"	N & T	ALUM	ANODIZED	6'-4"	9'-4"	6"	T	ALUM	ANODIZED	8/420S106	D (EXIST)	E	NR	NR	NR	REQ'D/PROV	HW-2
201-02	EXT	3' - 8"	7' - 2"	1 3/4"	N	ALUM	ANODIZED	4'-0"	7'-4"	6"	R	ALUM	ANODIZED	8/420S106	D (EXIST)	E	NR	NR	NR	REQ'D/PROV	HW-1
202-01	EXT	PR@3'-0"	7' - 2"	1 3/4"	N & T	ALUM	ANODIZED	6'-4"	9'-4"	6"	T	ALUM	ANODIZED	8/420S106	D (EXIST)	E	NR	NR	NR	REQ'D/PROV	HW-2

OCCUPANCY CHANGE

EXIST ROOM	EXIST	NEW ROOM	NEW	NOTE
CHLORINE SCRUBBER ROOM	H-7	SLUDGE PUMP ROOM	F-1	
CHLORINE SCRUBBER AND ELECTRICAL ROOM	H-3	ELECTRICAL ROOM	F-1	
		STORAGE ROOM	S-1	PUMP AND VALVE SPARES AND PARTS WILL BE STORED

2021 WASHINGTON STATE BUILDING CODE

BUILDING NAME, ROOM #, & ROOM WITHIN STRUCTURE: ROOM NUMBER	ROOM NAME	CONST. TYPE	OCCUPANCY CLASSIFICATION	ALLOW. STORIES/ HEIGHT	ACTUAL STORIES/ HEIGHT	ALLOW. AREA (EA. FLOOR)	ACTUAL FLOOR AREA (EA. FLOOR)	OCCUPANT LOAD FACTOR	ACTUAL OCCUPANT LOAD	NO. OF EXITS REQ/PROVIDED	OCCUPANCY SEPARATION	FIRE SUPPRESSION	ACCESSIBILITY
101	SLUDGE PUMP ROOM	V-B	F-1	1/40'-0"	1/17'-0"	8,500	653 SF	300	3	2/2	NR	NR	NR (1)
201	ELECTRICAL ROOM	V-B	F-1	1/40'-0"	1/17'-0"	8,500	353 SF	300	2	2/2	NR	NR	NR (1)
202	STORAGE ROOM	V-B	S-1	1/40'-0"	1/17'-0"	8,500	358 SF	300	2	1/1	NR	NR	NR (1)
BUILDING ACTUAL/TOTAL						TOTALS	1,364 SF		7	5			

(1) SPACES VISITED ONLY BE SERVICE PERSONNEL FOR MAINTENANCE, REPAIR OR OCCASIONAL MONITORING OF EQUIPMENT SHALL NOT BE REQUIRED TO COMPLY WITH SECTION 1103.2.9 EQUIPMENT SPACES IN THE 2021 WASHINGTON STATE BUILDING CODE

2021 WASHINGTON STATE ENERGY CODE - COMMERCIAL PROVISIONS

BUILDING ENVELOPE REQUIREMENTS - CLIMATE ZONE:4C - COUNTY: WHATCOM COUNTY

ENVELOPE COMPONENT	REQUIRED	PROVIDED
CHLORINE SCRUBBER ROOM	H-7	SLUDGE PUMP ROOM
CHLORINE SCRUBBER AND ELECTRICAL ROOM	H-3	ELECTRICAL ROOM
		STORAGE ROOM

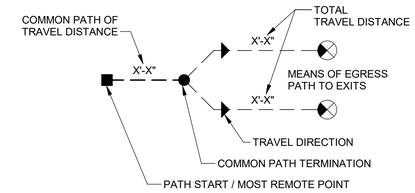

KEY TO SYMBOLS

EGRESS ABBREVIATION & SYMBOLS LIST:

OCC:	OCCUPANCY
SF:	SQUARE FEET
OLF:	OCCUPANT LOAD FACTOR
OL:	OCCUPANT LOAD
SPR:	AUTOMATIC SPRINKLER REQD
NA:	NOT APPLICABLE
NR:	NOT REQUIRED
TD:	TOTAL TRAVEL DISTANCE (ACTUAL)
MTD:	MAX TRAVEL DISTANCE (ALLOWABLE)
	EXIT, REFERENCE ELECTRICAL DRAWINGS FOR LOCATION OF ILLUMINATED SIGNS
FX FXE	FIRE EXTINGUISHER, TYPE AS INDICATED, REFERENCE DETAIL AN400/TYP AND SPECIFICATION SECTION 10_44_00
#	FIRE RATED WALL: HOUR AS # INDICATES

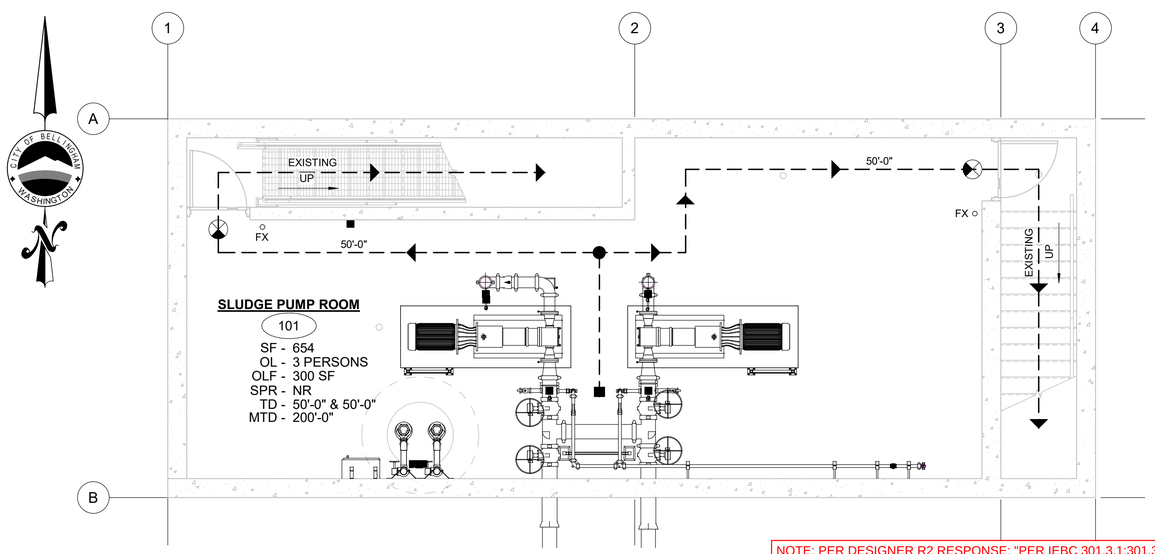

EGRESS - LOWER LEVEL

A PLAN
SCALE: 1/4" = 1'-0"

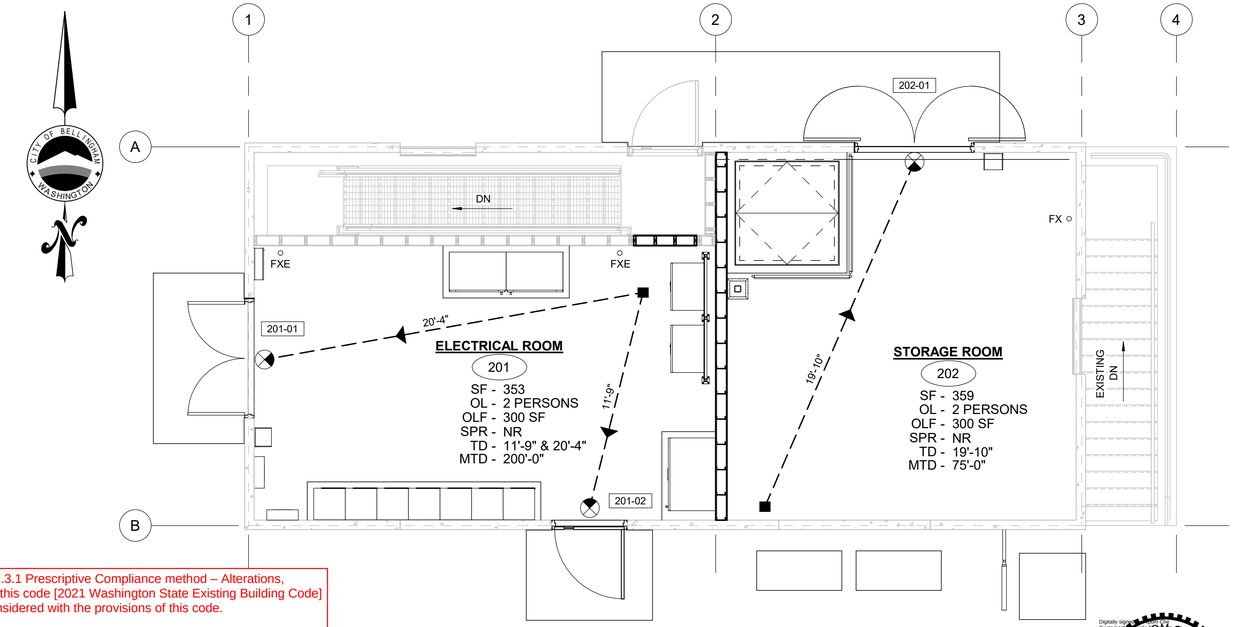

EGRESS - FLOOR LEVEL

B PLAN
SCALE: 1/4" = 1'-0"

NOTE: PER DESIGNER R2 RESPONSE: "PER IEBC 301.3.1:301.3.1 Prescriptive Compliance method – Alterations, additions, and changes of occupancy complying with Chapter 5 of this code [2021 Washington State Existing Building Code] in buildings complying with the International Fire Code shall be considered with the provisions of this code.

503.1 General – Alterations to any building or structure shall comply with the requirements of the International Building Code for new construction. Alterations shall be such that the existing building or structure is not less complying with the provisions of the International Building Code than the existing building or structure was prior to the alteration.

As the occupancies type of the newly created rooms are F-1 and S-1, there is no required separation of occupancies per table 508.4 of the 2021 Washington State Building Code. They will be separated by 2-hour fire barrier CMU walls nevertheless. The electrical room will be provided 2 exits and panic hardware per 1010.2.9.2. "

VERIFY SCALES
BAR IS ONE INCH ON ORIGINAL DRAWING
0 1"
IF NOT ONE INCH ON THIS SHEET, ADJUST SCALES ACCORDINGLY

carollo

PLOT DATE: 1/23/2026 1:09:51 PM

Date	No	Revision	By
12-22-2025	1	PERMIT REVISIONS	DE

PROJECT ENGINEER MEH
DESIGNED/DRAWN DE
INSPECTOR JAD / KA

DIRECTOR PUBLIC WORKS MAO
CITY ENGINEER MLW
ASSISTANT DIRECTOR MAO

CITY OF BELLINGHAM, WASHINGTON
PUBLIC WORKS DEPARTMENT
ENGINEERING DIVISION

SCALE
Horiz. AS SHOWN
Vert. AS SHOWN

DATUM
H: NAD 83/98
V: NAVD 88

Job. No. EU194
Date JAN 2026
Field Bk.

POST POINT RESOURCE RECOVERY PLANT
STRUCTURAL
SLUDGE STORAGE BUILDING CODE SUMMARY PLANS

DRAWING NO. 420S101
SHEET NO. 46 OF 198

CONTACT PERSON: STEPHEN DAY, PE SE , PROJECT ENGINEER AT 360-778-7944 FILE NAME: Autodesk Docs://Bellingham 202021-100000 Primary Sludge Tank Replacement/202021420S9802.rvt

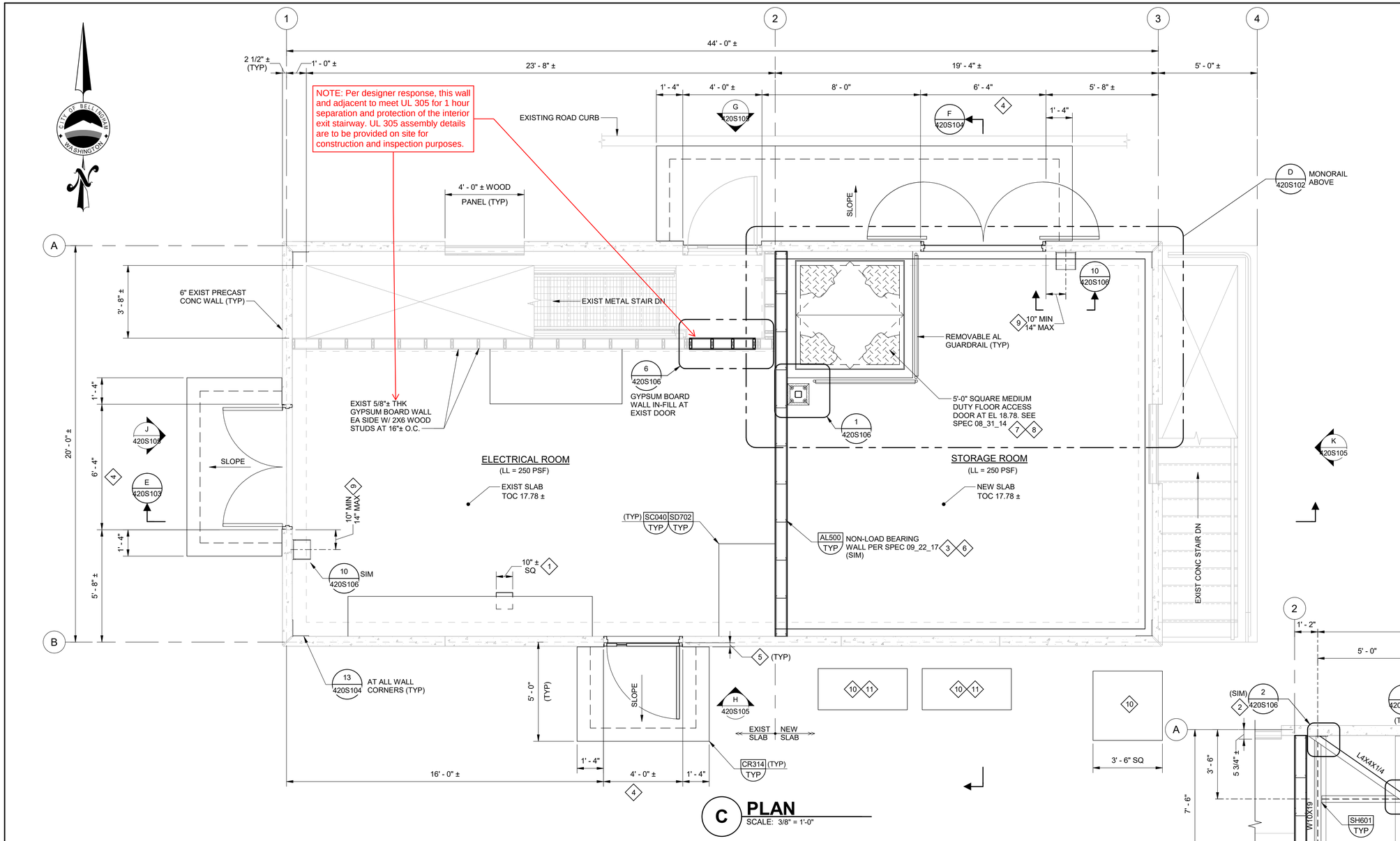

C PLAN

SCALE: 3/8" = 1'-0"

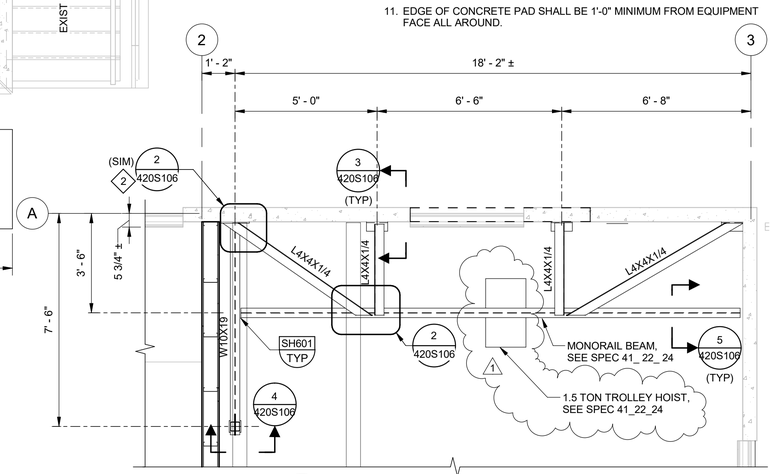

D MONORAIL PLAN

SCALE: 3/8" = 1'-0"

GENERAL NOTES:

1. FOR GENERAL STRUCTURAL NOTES SEE DRAWING 010S101.
2. CONTRACTOR SHALL FIELD VERIFY ALL DIMENSIONS AND ELEVATIONS.
3. NOT ALL STRUCTURAL PENETRATIONS ARE SHOWN AND/OR DIMENSIONED. COORDINATE ALL PENETRATIONS AND/OR CONNECTIONS WITH ELECTRICAL, HVAC, AND MECHANICAL DRAWINGS.
4. SEE ELECTRICAL, HVAC, AND MECHANICAL DRAWINGS FOR LOCATION AND SIZE OF EQUIPMENT PADS. CONTRACTOR SHALL COORDINATE WITH EQUIPMENT MANUFACTURER FOR EXACT LOCATION AND SIZES OF EQUIPMENT PADS. PROVIDE EQUIPMENT PADS PER SD512/TYP (NEW SLAB) & SD530/TYP (EXISTING SLAB), UNLESS OTHERWISE NOTED.
5. FOR DOOR SCHEDULE SEE DRAWING 420S101.
6. FOR ALUMINUM GUARDRAIL/HANDRAIL SEE DETAILS AC500/TYP, AC504/TYP, & AC510/TYP.
7. DO NOT INTERRUPT EXISTING REINFORCING BARS FOR INSTALLATION OF POST-INSTALLED ANCHORS/DOWELS.
8. PROVIDE MECHANICAL CONCRETE ANCHORS WITH 4" MINIMUM EMBEDMENT, UNLESS NOTED OTHERWISE.
9. WHERE SLAB AND/OR WALL PENETRATIONS OCCUR AFTER DEMOLITION WORK, FILL OPENINGS WITH EPOXY GROUT, UNLESS NOTED OTHERWISE.

KEY NOTES:

1. GROUT FILL AT EXISTING DUCT OPENING.
2. WELD L4x4 BRACE TO TOP OF BEAM AND EXTEND HORIZONTAL LEG TO WELD TO BEAM CONNECTION WALL PLATE.
3. NEW 5/8" GYPSUM BOARD WALL AT EACH FACE WITH 6" METAL STUDS AT 24" SPACING ON CENTER. TOP FASTENER AT 12" SPACING INTO BOTTOM FLUTE OF EXISTING STEEL DECK.
4. PROVIDE STEEL BEAM ABOVE DOOR OPENING, SEE DRAWING 420S105.
5. NOTCH CORNERS OF ENTRANCE PADS AS REQUIRED TO CLEAR EXISTING PRECAST WALLS WHERE INTERFERES. FILL GAP BETWEEN ENTRANCE PADS AND BASEMENT WALLS BELOW EXISTING PRECAST WALLS WITH EXPANSION JOINT MATERIAL.
6. PROVIDE UNDERSIDE NEOPRENE CLOSURE BETWEEN TOP TRACK AND EXISTING HSB-36 STEEL DECK.
7. 8" WIDE CONCRETE CURB AROUND FLOOR ACCESS DOOR PER SD470/TYP.
8. ADDITIONAL REINFORCING BARS AROUND OPENING PER SC012/TYP. HOOK BARS WHERE INTERRUPTED AT NEW SLAB ENDS.
9. LOCATE AS REQUIRED FOR PLATE ANCHORS TO CLEAR EXISTING REINFORCING BARS.
10. 1'-6" THICK CONCRETE PAD WITH #5@12" EACH WAY, TOP & BOTTOM. SET BOTTOM OF PAD 1'-0" MINIMUM BELOW FINISHED GRADE.
11. EDGE OF CONCRETE PAD SHALL BE 1'-0" MINIMUM FROM EQUIPMENT FACE ALL AROUND.

VERIFY SCALES

BAR IS ONE INCH ON ORIGINAL DRAWING

0 1"

IF NOT ONE INCH ON THIS SHEET, ADJUST SCALES ACCORDINGLY

HIPOM CHEN — STATE OF WASHINGTON — 21258 — REGISTERED PROFESSIONAL ENGINEER

carollo®

PLOT DATE: 6/26/2026 11:36:12 AM

Date	No	Revision	By
6-17-26	1	PERMIT REVISIONS	

PROJECT ENGINEER HCC
DESIGNED/DRAWN GAC
INSPECTOR JAD / KA

DIRECTOR PUBLIC WORKS MAO
CITY ENGINEER MLW
ASSISTANT DIRECTOR MAO

CITY OF BELLINGHAM, WASHINGTON
PUBLIC WORKS DEPARTMENT
ENGINEERING DIVISION

SCALE
Horiz. AS SHOWN
Vert. AS SHOWN

DATUM
H: NAD 83/98
V: NAVD 88

Job. No. EU194
Date JAN 2026
Field Bk.

POST POINT RESOURCE RECOVERY PLANT
STRUCTURAL
STORAGE BUILDING - GROUND LEVEL PLAN, AND ENLARGED PLAN

DRAWING NO. 420S102
SHEET NO. 47 OF 198

CONTACT PERSON: STEPHEN DAY, PE SE , PROJECT ENGINEER AT 360-778-7944 FILE NAME: Autodesk Docs://Bellingham 202021-100000 Primary Sludge Tank Replacement/202021420S9802.rvt

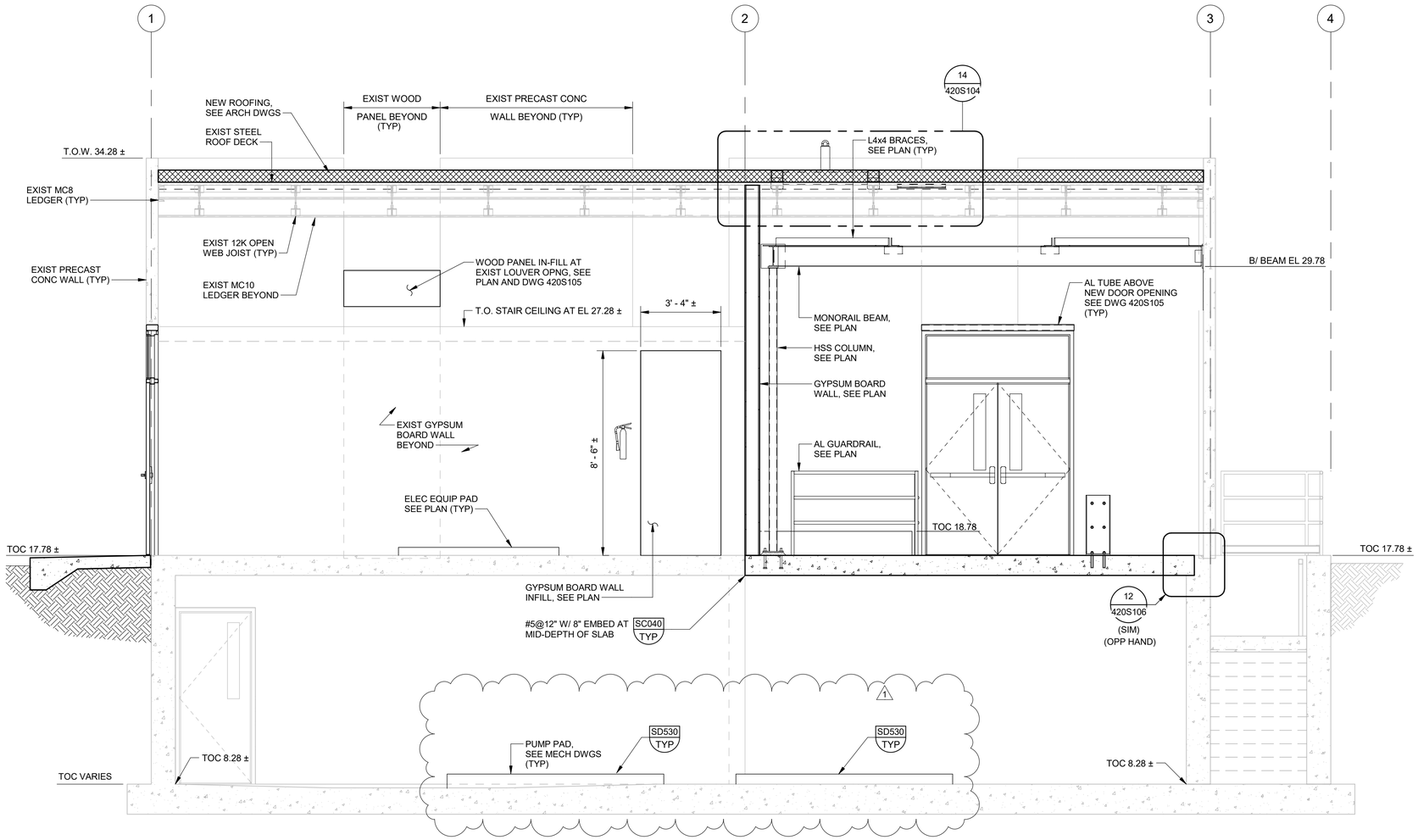

E SECTION

420S102

SCALE: 3/8" = 1'-0"

GENERAL NOTES:

1. FOR GENERAL STRUCTURAL NOTES SEE DRAWING 010S101.
2. CONTRACTOR SHALL FIELD VERIFY ALL DIMENSIONS AND ELEVATIONS.
3. NOT ALL STRUCTURAL PENETRATIONS ARE SHOWN AND/OR DIMENSIONED. COORDINATE ALL PENETRATIONS AND/OR CONNECTIONS WITH ELECTRICAL, HVAC, AND MECHANICAL DRAWINGS.

VERIFY SCALES

BAR IS ONE INCH ON ORIGINAL DRAWING

0 1"

IF NOT ONE INCH ON THIS SHEET, ADJUST SCALES ACCORDINGLY

carollo®

PLOT DATE: 1/23/2026 1:12:49 PM

Date	No	Revision	By
12-22-2025	1	PERMIT REVISIONS	DE

PROJECT ENGINEER HCC
DESIGNED/DRAWN GAC
INSPECTOR JAD / KA

DIRECTOR PUBLIC WORKS MAO
CITY ENGINEER MLW
ASSISTANT DIRECTOR MAO

CITY OF BELLINGHAM, WASHINGTON
PUBLIC WORKS DEPARTMENT
ENGINEERING DIVISION

SCALE
Horiz. AS SHOWN
Vert. AS SHOWN

DATUM
H: NAD 83/98
V: NAVD 88

Job. No. EU194
Date JAN 2026
Field Bk.

POST POINT RESOURCE RECOVERY PLANT
STRUCTURAL
SLUDGE STORAGE BUILDING SECTION 1

DRAWING NO. 420S103
SHEET NO. 48 OF 198

CONTACT PERSON: STEPHEN DAY, PE SE , PROJECT ENGINEER AT 360-778-7944 FILE NAME: Autodesk Docs://Bellingham 202021-100000 Primary Sludge Tank Replacement/202021420S9802.rvt

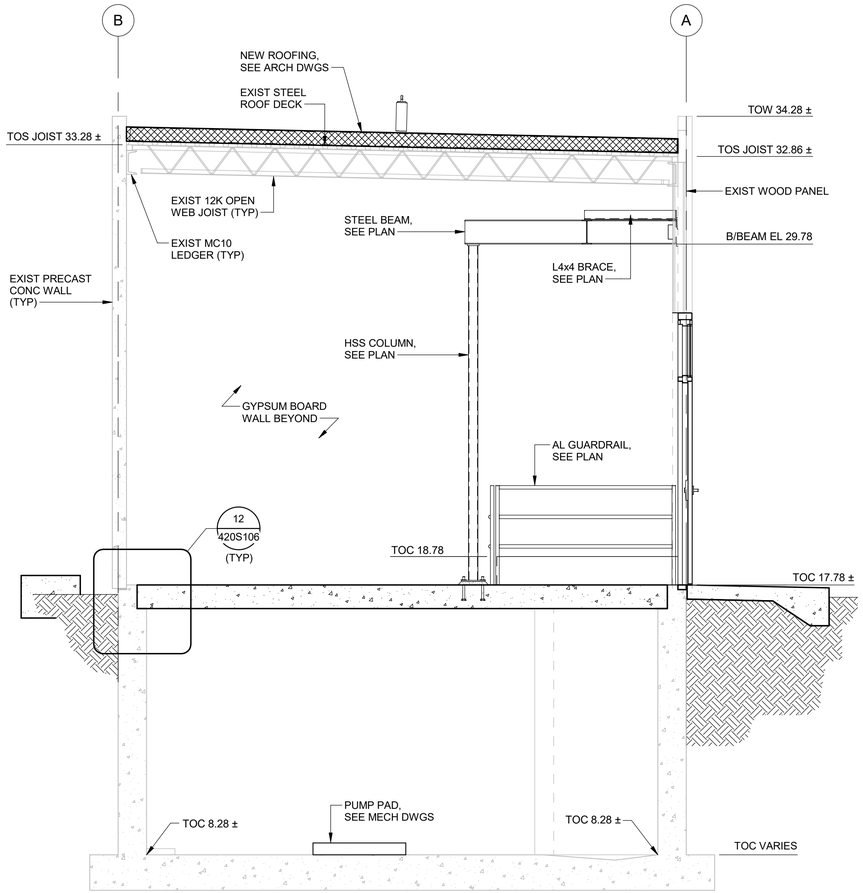

F 420S102 **SECTION**
SCALE: 3/8" = 1'-0"

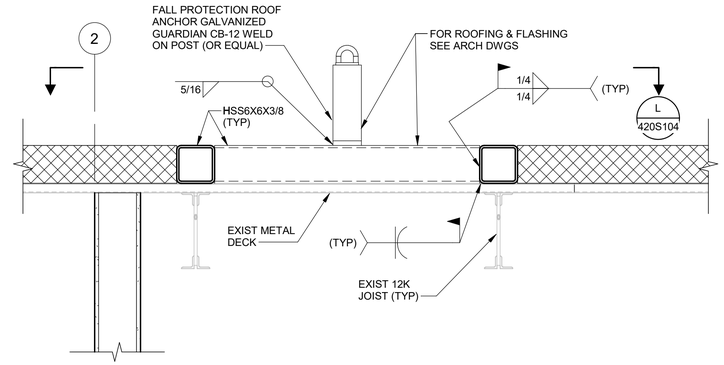

14 420S103 **DETAIL**
SCALE: 1" = 1'-0"

GENERAL NOTES:

1. FOR GENERAL STRUCTURAL NOTES SEE DRAWING 00GS01.
2. CONTRACTOR SHALL FIELD VERIFY ALL DIMENSIONS AND ELEVATIONS.
3. NOT ALL STRUCTURAL PENETRATIONS ARE SHOWN AND/OR DIMENSIONED. COORDINATE ALL PENETRATIONS AND/OR CONNECTIONS WITH ELECTRICAL, HVAC, AND MECHANICAL DRAWINGS.

KEY NOTES:

1. METALS AND ANCHORS SHALL BE HOT-DIP GALVANIZED AFTER FABRICATION.
2. DO NOT INTERRUPT EXISTING WALL REINFORCING BARS FOR INSTALLATION OF POST-INSTALLED ANCHORS. COORDINATE AND FIELD DRILL ANCHOR HOLES AS REQUIRED TO CLEAR EXISTING REINFORCING BARS.

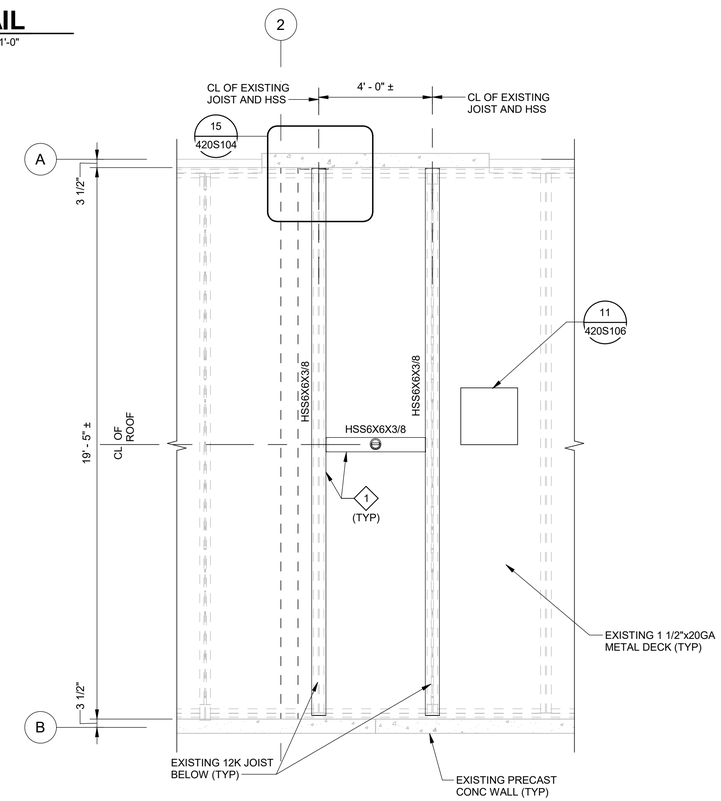

PARTIAL ROOF PLAN

L 420S104 **SECTION**
SCALE: 3/8" = 1'-0"

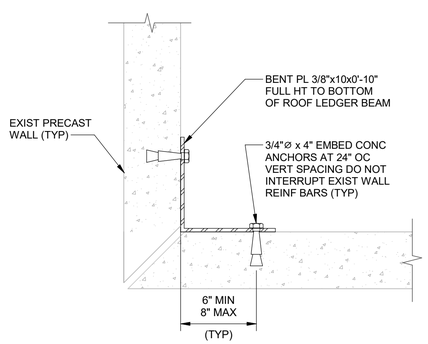

13 420S102 **DETAIL**
SCALE: 1 1/2" = 1'-0"

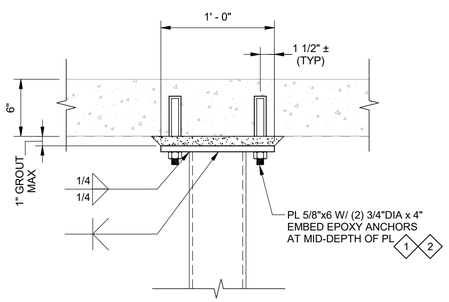

15 420S104 **DETAIL**
SCALE: 1 1/2" = 1'-0"

VERIFY SCALES

BAR IS ONE INCH ON ORIGINAL DRAWING

0 1"

IF NOT ONE INCH ON THIS SHEET, ADJUST SCALES ACCORDINGLY

carollo®

PLOT DATE: 1/15/2026 12:22:01 PM

Date	No	Revision	By

PROJECT ENGINEER	HCC
DESIGNED/DRAWN	GAC
INSPECTOR	JAD / KA
DIRECTOR PUBLIC WORKS	MAO
CITY ENGINEER	MLW
ASSISTANT DIRECTOR	MAO

CITY OF BELLINGHAM, WASHINGTON
PUBLIC WORKS DEPARTMENT
ENGINEERING DIVISION

SCALE: Horiz. AS SHOWN; Vert. AS SHOWN

DATUM: H: NAD 83/98; V: NAVD 88

Job. No. EU194
Date JAN 2026
Field Bk.

POST POINT RESOURCE RECOVERY PLANT
STRUCTURAL
SLUDGE STORAGE BUILDING SECTIONS 2

DRAWING NO. 420S104
SHEET NO. 49 OF 198

CONTACT PERSON: STEPHEN DAY, PE SE , PROJECT ENGINEER AT 360-778-7944 FILE NAME: Autodesk Docs://Bellingham 202021-100000 Primary Sludge Tank Replacement/202021420S9802.rvt

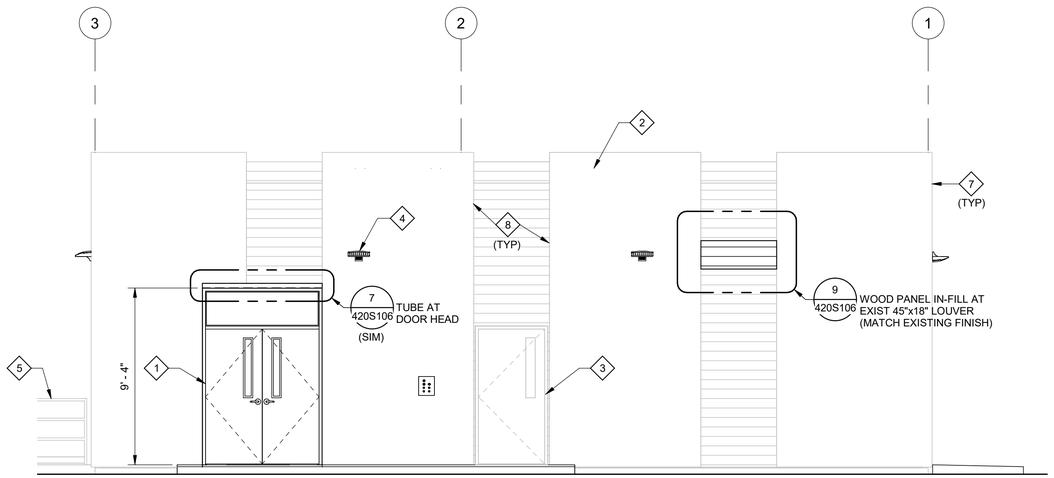

G NORTH ELEVATION
420S102 SCALE: 1/4" = 1'-0"

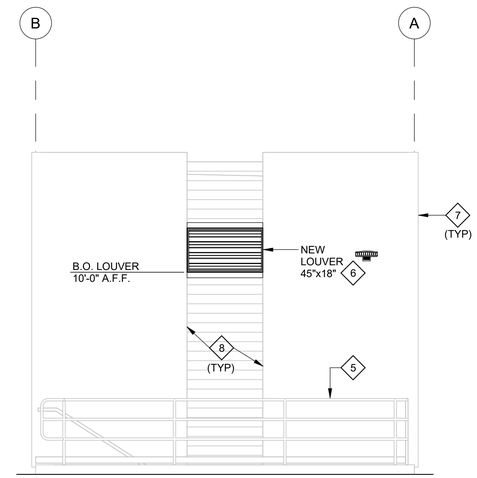

K EAST ELEVATION
420D102 SCALE: 1/4" = 1'-0"

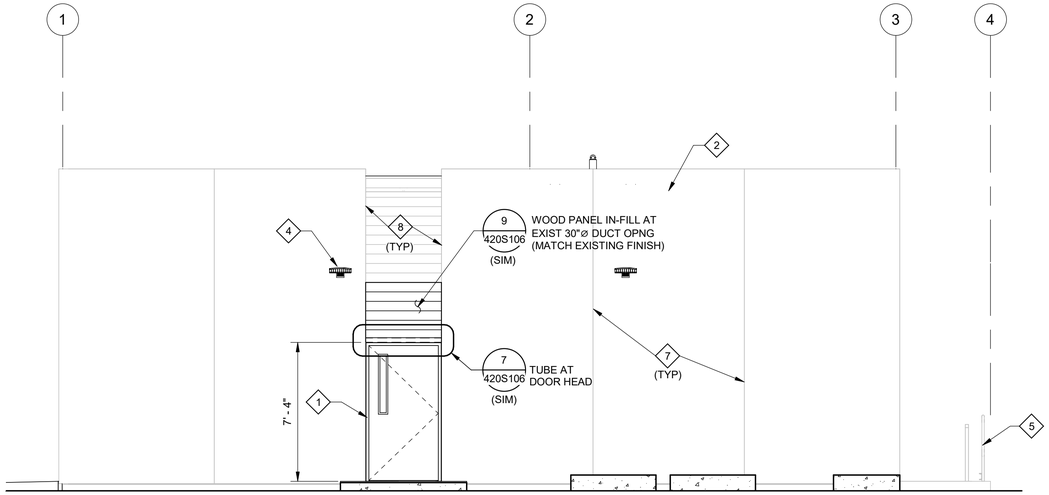

H SOUTH ELEVATION
420D102 SCALE: 1/4" = 1'-0"

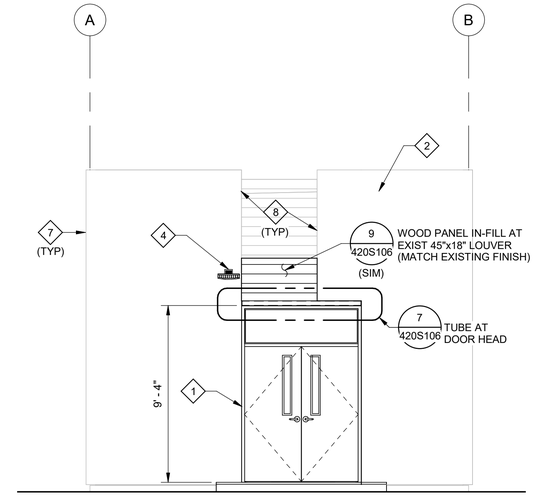

J WEST ELEVATION
420D102 SCALE: 1/4" = 1'-0"

GENERAL NOTES:

1. FOR GENERAL STRUCTURAL NOTES SEE DRAWING 010S101.
2. FOR BUILDING CODE COMPLIANCE TABLE, DOOR AND HARDWARE SCHEDULE, AND ROOM FINISH SCHEDULE, REFERENCE DRAWINGS 420S101.
3. COORDINATE DEMOLITION ACTIVITIES AND CONSTRUCTION SEQUENCING WITH THE PROCESS, MECHANICAL AND ELECTRICAL DISCIPLINES PRIOR PROCEEDING WITH THE WORK.
4. ALL THE DIMENSIONS SHALL BE FIELD VERIFIED, EXISTING CONSTRUCTION SHOWN IS BASED ON EXISTING CONSTRUCTION DOCUMENTS AND IS SCREENED TO INDICATE EXTENT TO REMAIN.
5. REPAIR ADJACENT EXISTING CONSTRUCTION TO REMAIN THAT IS DAMAGED BY DEMOLITION.
6. DRAWINGS DO NOT SHOW THE EXTENT OF ALL EXISTING EQUIPMENT, CONDUIT, PIPING AND SIMILAR ITEMS MOUNTED ON THE EXISTING SUBSTRATE. CONTRACTOR SHALL FIELD VERIFY THE EXTENT AND LOCATION OF ALL SUCH ITEMS.

KEY NOTES:

1. ALUMINUM DOORS AND FRAMES REFERENCE SPECIFICATION SECTION 08_11_17.
2. EXISTING 6" PRECAST ARCHITECTURAL WALL PANELS, FIELD VERIFY CONDITION, DIMENSION AND ATTACHMENT.
3. EXISTING DOOR AND FRAME TO REMAIN.
4. LIGHT FIXTURE REFERENCE ELECTRICAL.
5. EXISTING GUARDRAIL TO REMAIN.
6. PROVIDE 4x4 AT TOP AND BOTTOM OF NEW LOUVER OPENING. EACH END CONNECTION TO EXISTING 2x4 WITH CONCEALED JOIST HANGER AND A34 CLIP BY SIMPSON (OR EQUAL).
7. REMOVE EXISTING SEALANT AT ALL PRECAST PANEL JOINTS. CLEAN CONCRETE, INSTALL SIKA PRIMER ON CONCRETE, REPLACE EXISTING BACKER ROD AS REQUIRED & REINSTALL WITH NEW. SIKAFLEX HY150 ELASTOMERIC SEALANT. GAP OF EXISTING JOINTS 3/4"±.
8. REMOVE EXISTING SEALANT AT EDGES OF ALL WOOD PANELS TO EXISTING CONCRETE PANELS. CLEAN CONCRETE, INSTALL SIKA PRIMER ON CONCRETE, REPLACE EXISTING BACKER ROD AS REQUIRED & REINSTALL WITH NEW SIKAFLEX HY150 ELASTOMERIC SEALANT. WIDTH OF EXISTING SEALANTS 3/8"±.

VERIFY SCALES
BAR IS ONE INCH ON ORIGINAL DRAWING
0 1"
IF NOT ONE INCH ON THIS SHEET, ADJUST SCALES ACCORDINGLY

Digitally signed by Jason Chie
Contact info: jchie@carollo.com
Date: 2026.01.15 12:23:11 -08'00'
JASON CHIE
STATE OF WASHINGTON
21258
REGISTERED
PROFESSIONAL ENGINEER

carollo®

PLOT DATE: 1/15/2026 12:23:11 PM

Date	No	Revision	By

PROJECT ENGINEER MEH
DESIGNED/DRAWN DE
INSPECTOR JAD / KA

DIRECTOR PUBLIC WORKS MAO
CITY ENGINEER MLW
ASSISTANT DIRECTOR MAO

CITY OF BELLINGHAM, WASHINGTON
PUBLIC WORKS DEPARTMENT
ENGINEERING DIVISION

SCALE
Horiz. AS SHOWN
Vert. AS SHOWN

DATUM
H: NAD 83/98
V: NAVD 88

Job. No. EU194
Date JAN 2026
Field Bk.

POST POINT RESOURCE RECOVERY PLANT
STRUCTURAL
SLUDGE STORAGE BUILDING ELEVATIONS

DRAWING NO. 420S105
SHEET NO. 50 OF 198

CONTACT PERSON: STEPHEN DAY, PE SE , PROJECT ENGINEER AT 360-778-7944 FILE NAME: Autodesk Docs://Bellingham 202021-100000 Primary Sludge Tank Replacement/202021420S9802.rvt

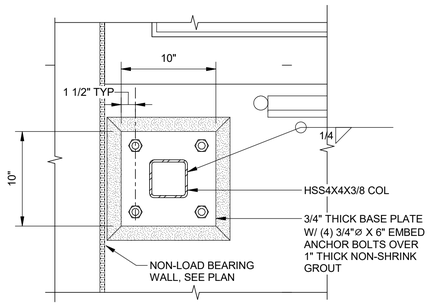

1 DETAIL 420S102
SCALE: 1 1/2" = 1'-0"

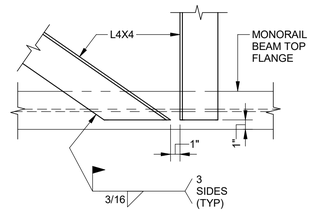

2 DETAIL 420S102
SCALE: 1 1/2" = 1'-0"

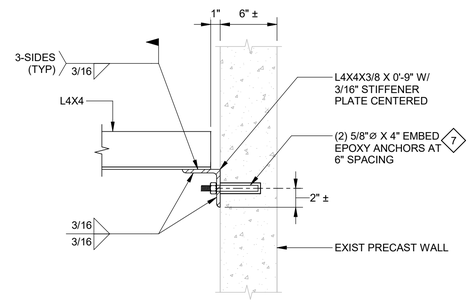

3 DETAIL 420S102
SCALE: 1 1/2" = 1'-0"

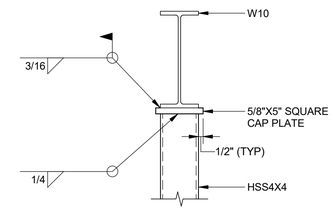

4 DETAIL 420S102
SCALE: 1 1/2" = 1'-0"

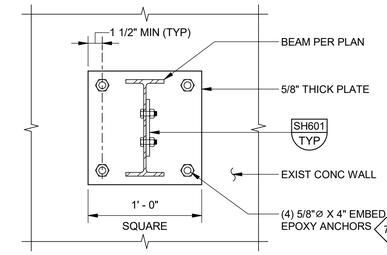

5 DETAIL 420S102
SCALE: 1 1/2" = 1'-0"

GENERAL NOTES:

1. FOR GENERAL STRUCTURAL NOTES SEE DRAWING 010S101.
2. CONTRACTOR SHALL FIELD VERIFY ALL DIMENSIONS AND ELEVATIONS.
3. DO NOT INTERRUPT EXISTING REINFORCING BARS FOR INSTALLATION OF POST-INSTALLED ANCHORS/DOWELS.
4. ALL STAINLESS STEEL SHALL BE TYPE 316 (316L FOR WELDED MEMBERS).

KEY NOTES:

1. PROVIDE 4" WIDE SUPPORT BRACKET. CONTRACTOR SHALL COORDINATE DOOR JAMB THROAT DIMENSION TO CLEAR SUPPORT BRACKET.
2. CUT AND REMOVE EXISTING SIDINGS AS REQUIRED FOR NEW WORK. REPLACE SIDINGS TO MATCH EXISTING.
3. ATTACH TO RESILIENT CHANNELS. DO NOT NAIL.
4. FIELD VERIFY LOCATIONS OF EXISTING HORIZONTAL RESILIENT CHANNELS. PROVIDE NEW RESILIENT CHANNELS AS REQUIRED TO MATCH EXISTING.
5. NEW STEEL DECK COVER AT EXISTING 24"Ø DUCT OPENING AT ROOF. NEW STEEL DECK TO MATCH EXISTING (1 1/2" x GA 20 VERCO HSB-36). (4) - 5/8"Ø PUDDLE WELD PATTERN WITH 12" SPACING PARALLEL WELDING.
6. PROVIDE 1 1/2" RIGID INSULATION AND ROOFING OVER NEW STEEL DECK MATCHING EXISTING.
7. FIELD DRILL ANCHOR HOLES AS REQUIRED TO CLEAR EXIST WALL REINFORCING BARS.

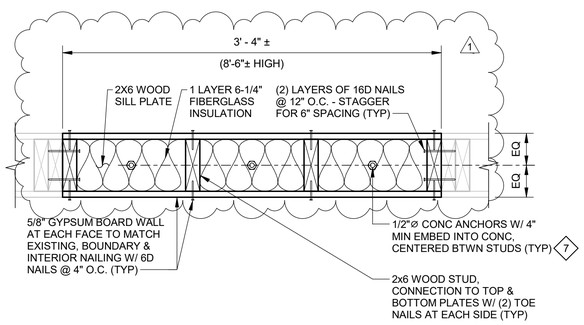

6 DETAIL 420S102
SCALE: 1 1/2" = 1'-0"

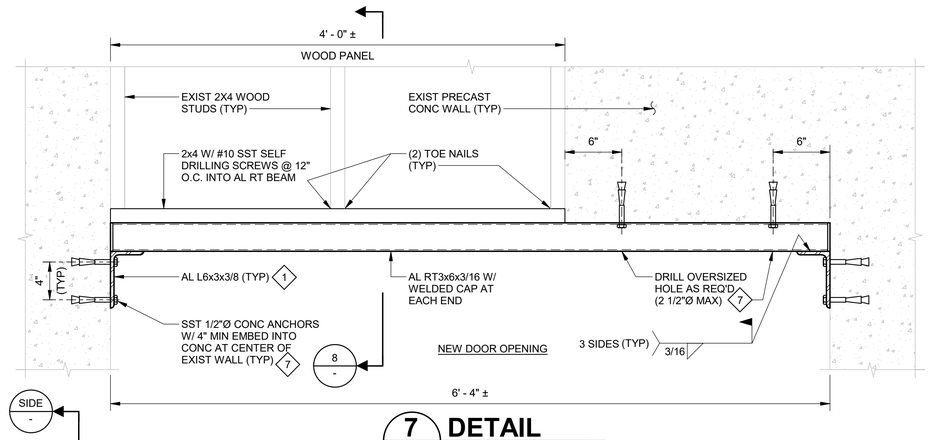

7 DETAIL 420S105
SCALE: 1 1/2" = 1'-0"

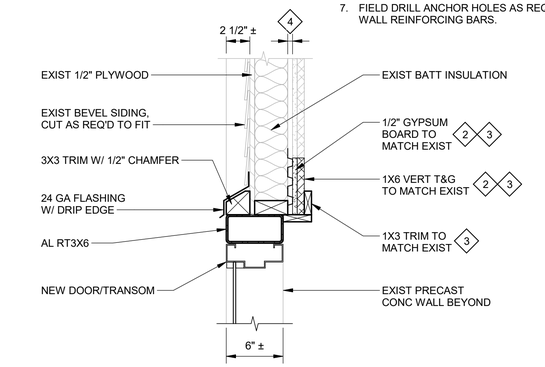

8 DETAIL 420S106
SCALE: 1 1/2" = 1'-0"

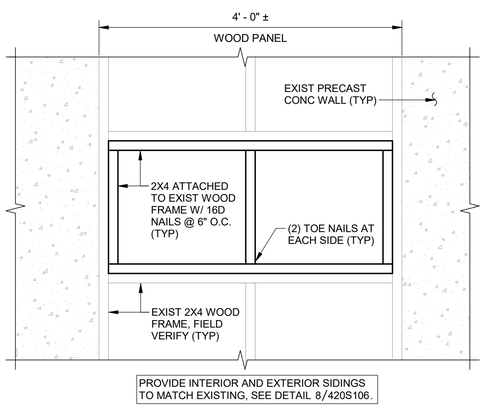

9 DETAIL 420S105
SCALE: 1" = 1'-0"

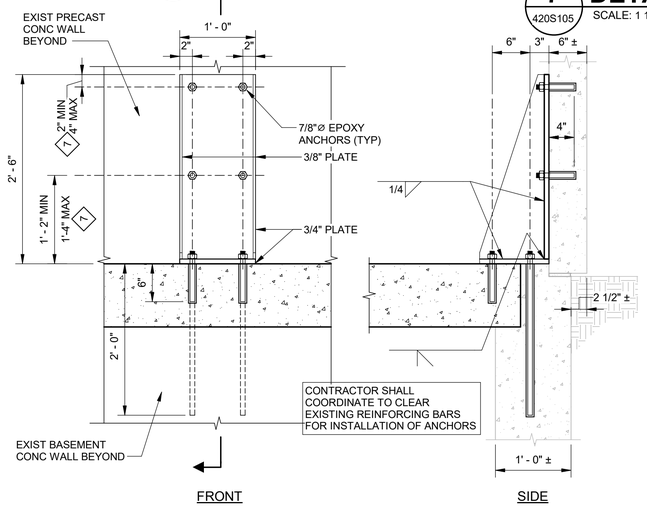

10 DETAIL 420S102
SCALE: 1" = 1'-0"

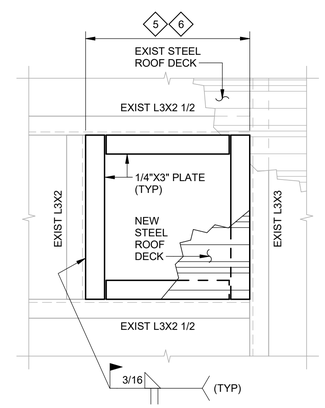

11 DETAIL 420D102
SCALE: 1" = 1'-0"

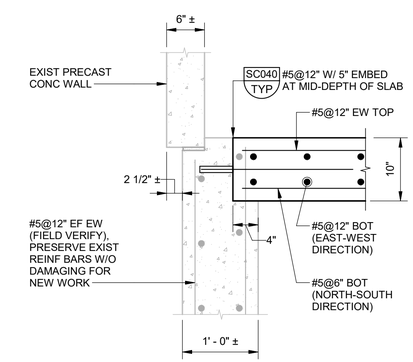

12 DETAIL 420S103
SCALE: 1" = 1'-0"

VERIFY SCALES
BAR IS ONE INCH ON ORIGINAL DRAWING
0 1"
IF NOT ONE INCH ON THIS SHEET, ADJUST SCALES ACCORDINGLY

carollo®

Date	No	Revision	By
6-17-26	1	PERMIT REVISIONS	

PROJECT ENGINEER HCC
DESIGNED/DRAWN ADT
INSPECTOR JAD / KA

DIRECTOR PUBLIC WORKS MAO
CITY ENGINEER MLW
ASSISTANT DIRECTOR MAO

CITY OF BELLINGHAM, WASHINGTON
PUBLIC WORKS DEPARTMENT
ENGINEERING DIVISION

SCALE
Horiz. AS SHOWN
Vert. AS SHOWN

DATUM
H: NAD 83/98
V: NAVD 88

Job. No. EU194
Date JAN 2026
Field Bk.

POST POINT RESOURCE RECOVERY PLANT
STRUCTURAL
SLUDGE STORAGE BUILDING DETAILS

DRAWING NO. 420S106
SHEET NO. 51 OF 198

PLOT DATE: 6/26/2026 11:33:59 AM

CONTACT PERSON: STEPHEN DAY, PE SE , PROJECT ENGINEER AT 360-778-7944 FILE NAME: Autodesk Docs://Bellingham 202021-100000 Primary Sludge Tank Replacement/202021420S9802.rvt

KEY NOTES:

1. GRATING SUPPORT ALUMINUM BEAMS AND BRACES SIMILAR TO AC130/TYP. PROVIDE CAST-IN-PLACE ANCHOR BOLTS.
2. STAIR TOP TREAD.
3. 42"Ø 316L SST WATER TIGHT MANWAY WITH BUNA-N GASKET. MODEL CM1 BY CHASE ASSOCIATES OR EQUAL.
4. COORDINATE LANDING PAD WITH EQUIPMENT LADDER LOCATION.
5. PROVIDE CONTINUOUS BARS ALONG PERIMETER OF CONCRETE PAD.
6. COORDINATE CONTROL POINT, SEE CIVIL DRAWINGS.
7. TOP CONNECTION OF VERTICAL BRACES AT MID-SPAN OF BEAM.
8. COAT ALL EXPOSED INTERIOR CONCRETE SURFACES, EXCEPT FLOORS, PER SPECIFICATION 09_96_01. THE EXPOSED INTERIOR CONCRETE SURFACES INCLUDE THE BOTTOM SIDE OF THE TOP SLAB, THE WALLS AND THE SIDES OF OPENINGS THAT PENETRATE THE TOP SLABS AND WALLS.

GENERAL NOTES:

1. FOR GENERAL STRUCTURAL NOTES SEE DRAWING 010S101.
2. P#: INDICATES AUGERCAST PILE LABEL. FOR PILE SCHEDULE SEE DRAWING 010S102 .
3. NOT ALL STRUCTURAL PENETRATIONS ARE SHOWN AND/OR DIMENSIONED. COORDINATE ALL PENETRATIONS AND/OR CONNECTIONS WITH MECHANICAL DRAWINGS. PROVIDE ADDITIONAL REINFORCING BARS PER SC012/TYP.
4. SEE MECHANICAL DRAWINGS FOR LOCATION AND SIZE OF EQUIPMENT PADS. CONTRACTOR SHALL COORDINATE WITH EQUIPMENT MANUFACTURER FOR EXACT LOCATION AND SIZES OF EQUIPMENT PADS. PROVIDE EQUIPMENT PADS PER SD512/TYP, UNLESS OTHERWISE NOTED.
5. CONCRETE JOINTS ARE DESIGNATED AS FOLLOWS:
   - EXP JT = EXPANSION JOINT, SEE SD382/TYP.
   - WCJ = WALL CONSTRUCTION JOINT, SEE SD102/TYP.
   - REINFORCING BAR LAP SPLICING LOCATIONS SHALL CLEAR CONSTRUCTION JOINTS.
6. ODOR CONTROL SLAB FLOOR LIVE LOAD = 250 PSF.
7. GRATING & STAIR LIVE LOAD = 100 PSF. PROVIDE GRATING STOP AND FASTENERS PER SR601/TYP & SR615/TYP, UNLESS NOTED OTHERWISE.
8. FOR ALUMINUM STAIR AND CONCRETE LANDING PAD SEE DETAIL AC101/TYP. STAIR TREAD RISERS SHALL BE AT EQUAL SPACING.
9. FOR ALUMINUM GUARDRAIL/HANDRAIL SEE DETAILS AC500/TYP, AC504/TYP & AC510/TYP.
10. PROVIDE CONCRETE ANCHORS WITH 8" MINIMUM EMBEDMENT, UNLESS NOTED OTHERWISE.
11. DO NOT INTERRUPT EXISTING REINFORCING BARS FOR INSTALLATION OF POST-INSTALLED ANCHORS.

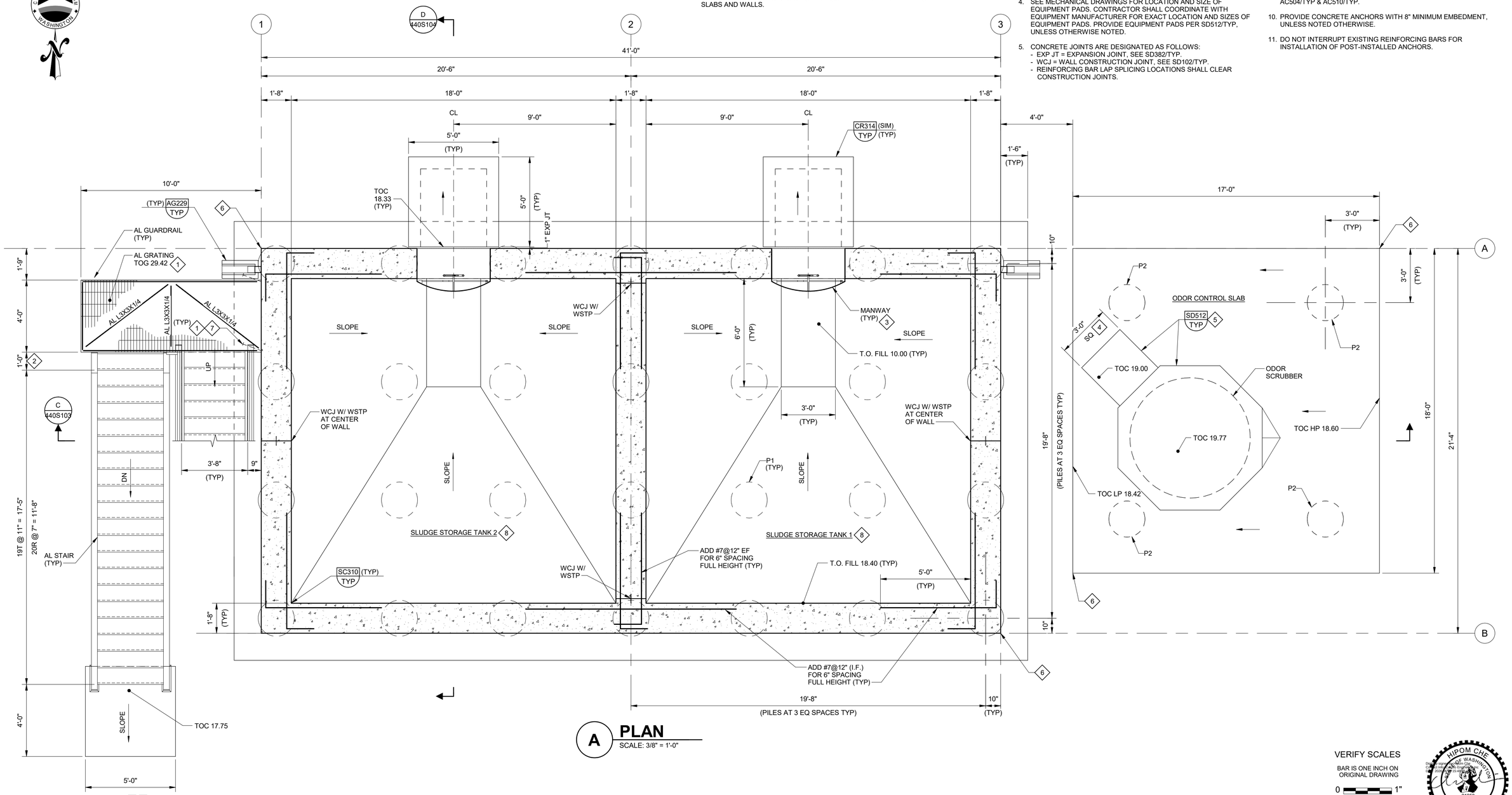

A PLAN
SCALE: 3/8" = 1'-0"

VERIFY SCALES

BAR IS ONE INCH ON ORIGINAL DRAWING

0 1"

IF NOT ONE INCH ON THIS SHEET, ADJUST SCALES ACCORDINGLY

HIPOM CHE
STATE OF WASHINGTON
21258
REGISTERED PROFESSIONAL ENGINEER

carollo

PLOT DATE: 6/25/2026 2:35:13 PM

Date	No	Revision	By

PROJECT ENGINEER BS / HCC
DESIGNED/DRAWN DE
INSPECTOR JAD / KA

DIRECTOR PUBLIC WORKS MAO
CITY ENGINEER MLW
ASSISTANT DIRECTOR MAO

CITY OF BELLINGHAM, WASHINGTON
PUBLIC WORKS DEPARTMENT
ENGINEERING DIVISION

SCALE
Horiz. AS SHOWN
Vert. AS SHOWN

DATUM
H: NAD 83/98
V: NAVD 88

Job. No. EU194
Date JAN 2026
Field Bk.

POST POINT RESOURCE RECOVERY PLANT
STRUCTURAL
SLUDGE STORAGE TANKS BOTTOM PLAN

DRAWING NO. 440S101
SHEET NO. 52 OF 198

CONTACT PERSON: STEPHEN DAY, PE SE , PROJECT ENGINEER AT 360-778-7944 FILE NAME: Autodesk Docs://Bellingham 202021-100000 Primary Sludge Tank Replacement/202021440S0801.rvt

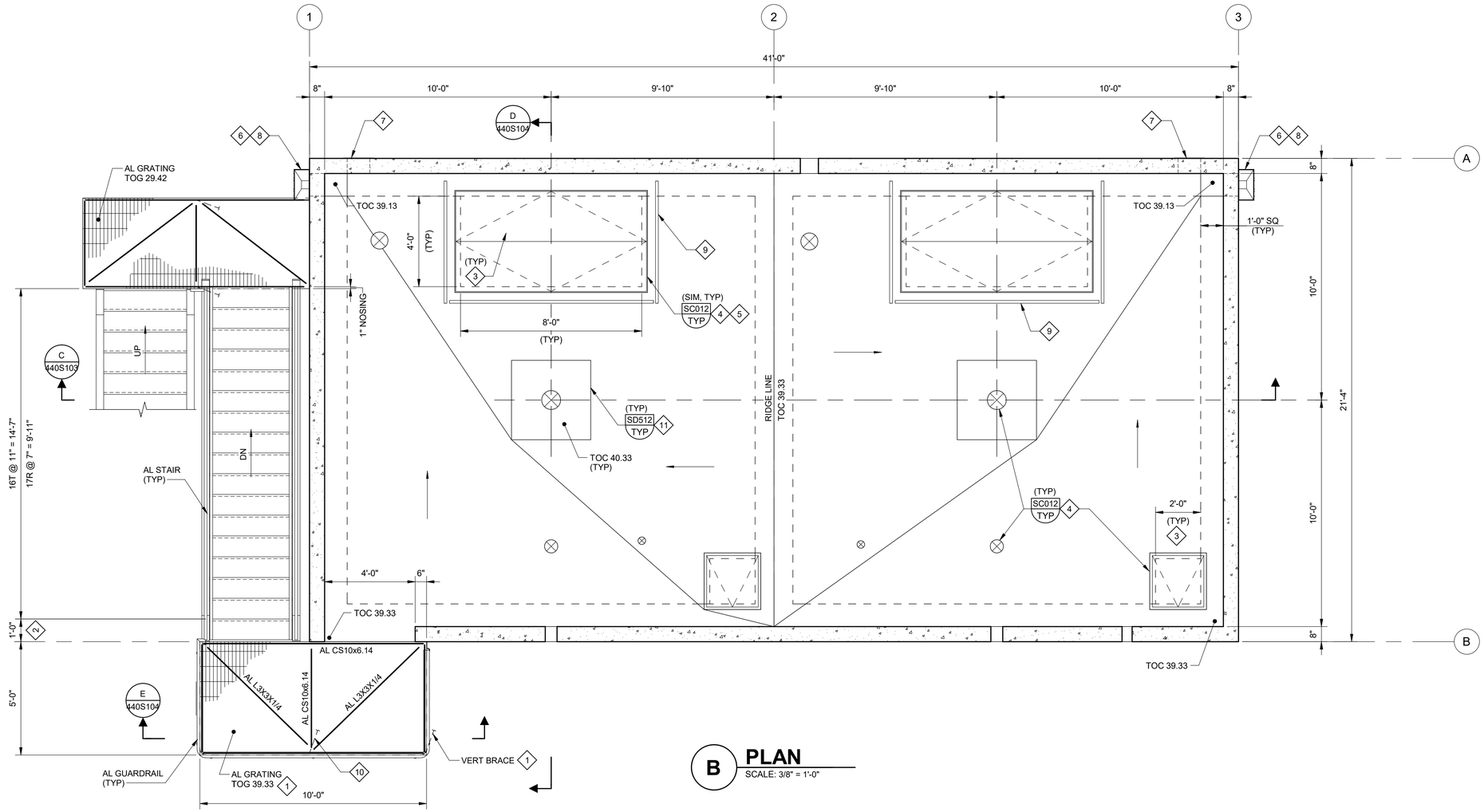

B PLAN

SCALE: 3/8" = 1'-0"

GENERAL NOTES:

1. FOR GENERAL STRUCTURAL NOTES SEE DRAWING 010S101.
2. NOT ALL STRUCTURAL PENETRATIONS ARE SHOWN AND/OR DIMENSIONED. COORDINATE ALL PENETRATIONS AND/OR CONNECTIONS WITH MECHANICAL DRAWINGS. PROVIDE ADDITIONAL REINFORCING BARS PER SC012/TYP.
3. SEE MECHANICAL DRAWINGS FOR LOCATION AND SIZE OF EQUIPMENT PADS. CONTRACTOR SHALL COORDINATE WITH EQUIPMENT MANUFACTURER FOR EXACT LOCATION AND SIZES OF EQUIPMENT PADS. PROVIDE EQUIPMENT PADS PER SD512/TYP, UNLESS OTHERWISE NOTED.
4. FLOOR LIVE LOAD = 250 PSF.
5. GRATING & STAIR LIVE LOAD = 100 PSF. PROVIDE GRATING STOP AND FASTENERS PER SR601/TYP & SR615/TYP, UNLESS NOTED OTHERWISE.
6. FOR ALUMINUM STAIR AND CONCRETE LANDING PAD SEE DETAIL AC101/TYP. STAIR TREAD RISERS SHALL BE AT EQUAL SPACING.
7. FOR ALUMINUM GUARDRAIL/HANDRAIL SEE DETAILS AC500/TYP, AC504/TYP & AC510/TYP.
8. PROVIDE CONCRETE ANCHORS WITH 8" MINIMUM EMBEDMENT, UNLESS NOTED OTHERWISE.
9. DO NOT INTERRUPT EXISTING REINFORCING BARS FOR INSTALLATION OF POST-INSTALLED ANCHORS.

KEY NOTES:

1. GRATING SUPPORT ALUMINUM BEAMS AND BRACES SIMILAR TO AC130/TYP. PROVIDE CAST-IN-PLACE ANCHOR BOLTS.
2. STAIR TOP TREAD.
3. MEDIUM DUTY FLOOR ACCESS DOOR PER SPECIFICATION 08_31_14. FRAME DRAIN SHALL DRAIN INTO TANK. SET TOP OF SLAB FLAT AROUND FLOOR ACCESS DOOR.
4. HOOK ADDITIONAL SLAB BARS WHERE INTERRUPTED AT SLAB EDGE. SEE WALL SECTIONS FOR ADDITIONAL TOP OF WALL VERTICAL REINFORCING BARS.
5. PROVIDE CORNER BARS AND (2) ADDITIONAL BARS AROUND OPENING, TOP AND BOTTOM.
6. PRIMARY SCUPPER, ALUMINUM CONDUCTOR HEAD, AND ALUMINUM DOWNSPOUT PER TYPICAL DETAILS: AG223/TYP, AG225/TYP, AG227/TYP.
7. SECONDARY OVERFLOW SCUPPER PER AG222/TYP.
8. PROVIDE CONCRETE SPLASH BLOCK AT BELOW FINISHED GRADE, SEE BOTTOM PLAN.
9. PROVIDE ONE SET OF REMOVABLE GUARDRAILS FOR USE AT ANY FLOOR ACCESS DOORS. COORDINATE RAIL POST SUPPORT SLEEVE LOCATIONS FOR COMMON GUARDRAILS.
10. VERTICAL BRACE BOTTOM CONNECTION PER DETAIL 2/440S104.
11. CONTRACTOR SHALL COORDINATE FINAL DIMENSIONS OF CONCRETE PAD WITH EQUIPMENT MANUFACTURER.

VERIFY SCALES

BAR IS ONE INCH ON ORIGINAL DRAWING

0 1"

IF NOT ONE INCH ON THIS SHEET, ADJUST SCALES ACCORDINGLY

HIPOM CHE
STATE OF WASHINGTON
21258
REGISTERED PROFESSIONAL ENGINEER

carollo

Date	No	Revision	By

PROJECT ENGINEER	BS/HCC
DESIGNED/DRAWN	DE
INSPECTOR	JAD / KA

DIRECTOR PUBLIC WORKS	MAO
CITY ENGINEER	MLW
ASSISTANT DIRECTOR	MAO

CITY OF BELLINGHAM, WASHINGTON
PUBLIC WORKS DEPARTMENT
ENGINEERING DIVISION

SCALE
Horiz. AS SHOWN
Vert. AS SHOWN

DATUM
H: NAD 83/98
V: NAVD 88

Job. No. EU194
Date JAN 2026
Field Bk.

POST POINT RESOURCE RECOVERY PLANT

STRUCTURAL
SLUDGE STORAGE TANKS TOP PLAN

DRAWING NO. 440S102
SHEET NO. 53 OF 198

PLOT DATE: 6/25/2026 2:34:41 PM

CONTACT PERSON: STEPHEN DAY, PE SE , PROJECT ENGINEER AT 360-778-7944 FILE NAME: Autodesk Docs://Bellingham 202021-100000 Primary Sludge Tank Replacement/202021440S0801.rvt

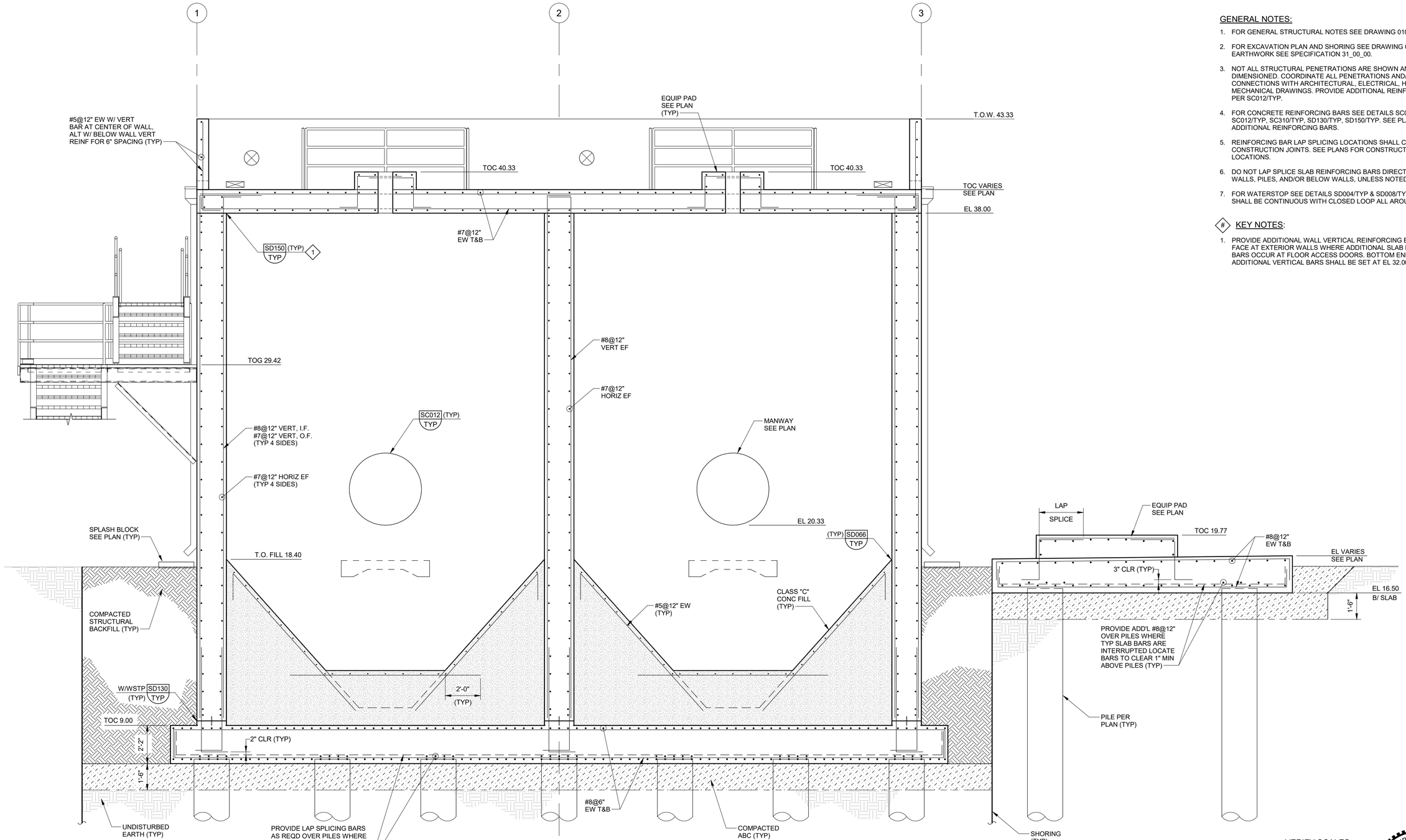

C 440S101 **SECTION**
SCALE: 3/8" = 1'-0"

GENERAL NOTES:

1. FOR GENERAL STRUCTURAL NOTES SEE DRAWING 010S101.
2. FOR EXCAVATION PLAN AND SHORING SEE DRAWING 030C103. FOR EARTHWORK SEE SPECIFICATION 31_00_00.
3. NOT ALL STRUCTURAL PENETRATIONS ARE SHOWN AND/OR DIMENSIONED. COORDINATE ALL PENETRATIONS AND/OR CONNECTIONS WITH ARCHITECTURAL, ELECTRICAL, HVAC, AND MECHANICAL DRAWINGS. PROVIDE ADDITIONAL REINFORCING BARS PER SC012/TYP.
4. FOR CONCRETE REINFORCING BARS SEE DETAILS SC001/TYP, SC012/TYP, SC310/TYP, SD130/TYP, SD150/TYP. SEE PLAN FOR ADDITIONAL REINFORCING BARS.
5. REINFORCING BAR LAP SPLICING LOCATIONS SHALL CLEAR CONSTRUCTION JOINTS. SEE PLANS FOR CONSTRUCTION JOINT LOCATIONS.
6. DO NOT LAP SPLICE SLAB REINFORCING BARS DIRECTLY ABOVE WALLS, PILES, AND/OR BELOW WALLS, UNLESS NOTED OTHERWISE.
7. FOR WATERSTOP SEE DETAILS SD004/TYP & SD008/TYP. WATERSTOP SHALL BE CONTINUOUS WITH CLOSED LOOP ALL AROUND JOINTS.

KEY NOTES:

1. PROVIDE ADDITIONAL WALL VERTICAL REINFORCING BARS (EACH FACE AT EXTERIOR WALLS WHERE ADDITIONAL SLAB REINFORCING BARS OCCUR AT FLOOR ACCESS DOORS. BOTTOM END OF ADDITIONAL VERTICAL BARS SHALL BE SET AT EL 32.00.

VERIFY SCALES
BAR IS ONE INCH ON ORIGINAL DRAWING
0 1"
IF NOT ONE INCH ON THIS SHEET, ADJUST SCALES ACCORDINGLY

HIPOM CHE — WASHINGTON — 21258 — REGISTERED PROFESSIONAL ENGINEER

carollo®

PLOT DATE: 6/25/2026 2:34:11 PM

Date	No	Revision	By

PROJECT ENGINEER	BS/HCC
DESIGNED/DRAWN	DE
INSPECTOR	JAD / KA
DIRECTOR PUBLIC WORKS	MAO
CITY ENGINEER	MLW
ASSISTANT DIRECTOR	MAO

CITY OF BELLINGHAM, WASHINGTON
PUBLIC WORKS DEPARTMENT
ENGINEERING DIVISION

SCALE: Horiz. AS SHOWN; Vert. AS SHOWN
DATUM: H: NAD 83/98; V: NAVD 88
Job. No. EU194; Date JAN 2026; Field Bk.

POST POINT RESOURCE RECOVERY PLANT
STRUCTURAL
SLUDGE STORAGE TANKS SECTIONS 1

DRAWING NO. 440S103
SHEET NO. 54 OF 198

CONTACT PERSON: STEPHEN DAY, PE SE, PROJECT ENGINEER AT 360-778-7944 FILE NAME: Autodesk Docs://Bellingham 202021-100000 Primary Sludge Tank Replacement/202021440S0801.rvt

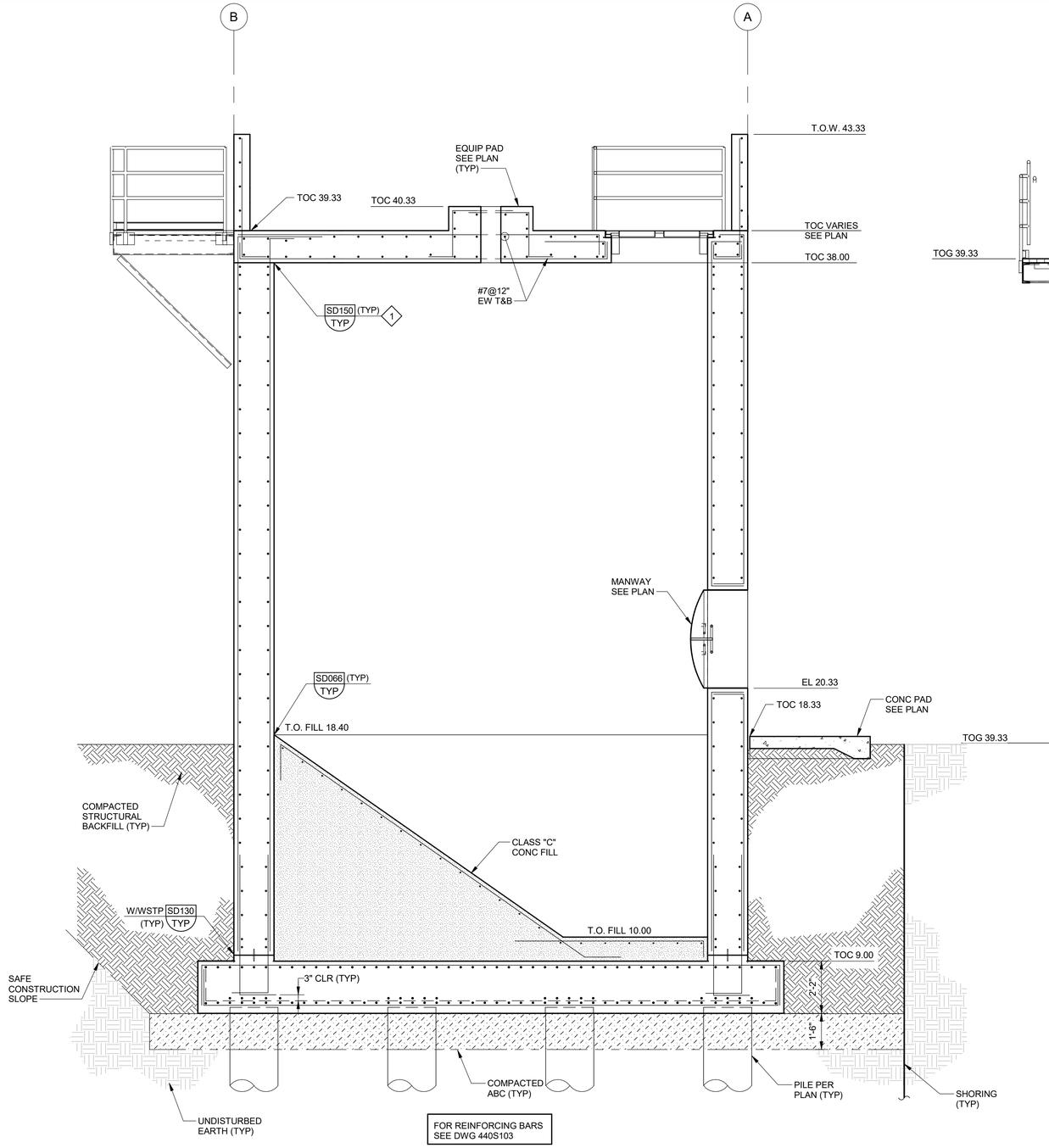

D 440S101 **SECTION**
SCALE: 3/8" = 1'-0"

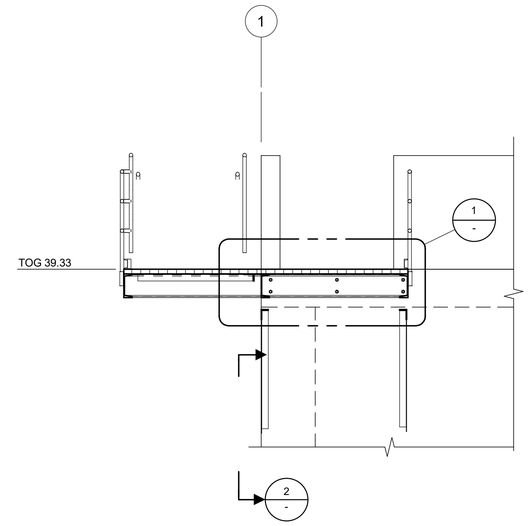

E 440S102 **SECTION**
SCALE: 3/8" = 1'-0"

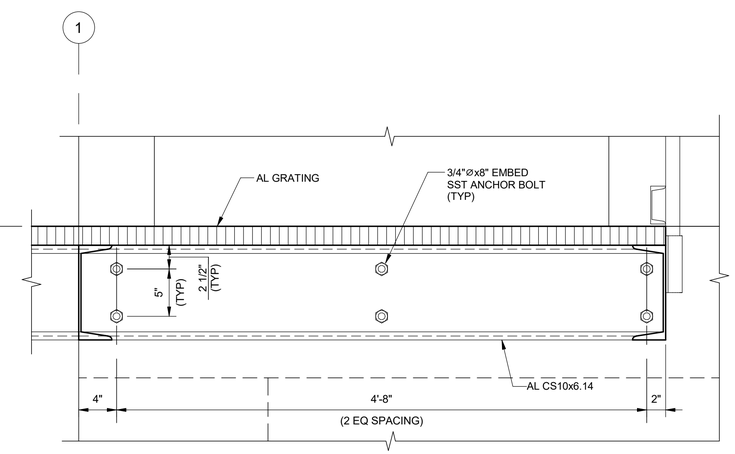

1 440S104 **DETAIL**
SCALE: 1 1/2" = 1'-0"

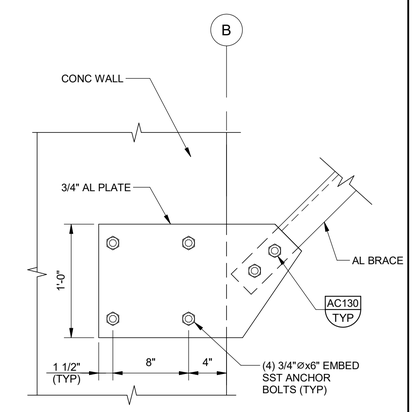

2 440S104 **DETAIL**
SCALE: 1 1/2" = 1'-0"

GENERAL NOTES:

1. FOR GENERAL STRUCTURAL NOTES SEE DRAWING 010S101.
2. FOR EXCAVATION PLAN AND SHORING SEE DRAWING 030C103. FOR EARTHWORK SEE SPECIFICATION 31_00_00.
3. NOT ALL STRUCTURAL PENETRATIONS ARE SHOWN AND/OR DIMENSIONED. COORDINATE ALL PENETRATIONS AND/OR CONNECTIONS WITH ARCHITECTURAL, ELECTRICAL, HVAC, AND MECHANICAL DRAWINGS. PROVIDE ADDITIONAL REINFORCING BARS PER SC012/TYP.
4. FOR CONCRETE REINFORCING BARS SEE DETAILS SC001/TYP, SC012/TYP, SC310/TYP, SD130/TYP, SD150/TYP. SEE PLAN FOR ADDITIONAL REINFORCING BARS.
5. REINFORCING BAR LAP SPLICING LOCATIONS SHALL CLEAR CONSTRUCTION JOINTS. SEE PLANS FOR CONSTRUCTION JOINT LOCATIONS.
6. DO NOT LAP SPLICE SLAB REINFORCING BARS DIRECTLY ABOVE WALLS, PILES, AND/OR BELOW WALLS, UNLESS NOTED OTHERWISE.
7. FOR WATERSTOP SEE DETAILS SD004/TYP & SD008/TYP. WATERSTOP SHALL BE CONTINUOUS WITH CLOSED LOOP ALL AROUND JOINTS.

KEY NOTES:

1. PROVIDE ADDITIONAL WALL VERTICAL REINFORCING BARS (EACH FACE) AT EXTERIOR WALLS WHERE ADDITIONAL SLAB REINFORCING BARS OCCUR AT FLOOR ACCESS DOORS. BOTTOM END OF ADDITIONAL VERTICAL BARS SHALL BE SET AT EL 32.00.

VERIFY SCALES
BAR IS ONE INCH ON ORIGINAL DRAWING
0 — 1"
IF NOT ONE INCH ON THIS SHEET, ADJUST SCALES ACCORDINGLY

HIPOM CHE — STATE OF WASHINGTON — 21258 — REGISTERED PROFESSIONAL ENGINEER

carollo®

Date	No	Revision	By

PROJECT ENGINEER	BS/HCC
DESIGNED/DRAWN	DE
INSPECTOR	JAD / KA
DIRECTOR PUBLIC WORKS	MAO
CITY ENGINEER	MLW
ASSISTANT DIRECTOR	MAO

CITY OF BELLINGHAM, WASHINGTON
PUBLIC WORKS DEPARTMENT
ENGINEERING DIVISION

SCALE: Horiz. AS SHOWN; Vert. AS SHOWN
DATUM: H: NAD 83/98; V: NAVD 88
Job. No. EU194; Date JAN 2026; Field Bk.

POST POINT RESOURCE RECOVERY PLANT
STRUCTURAL
SLUDGE STORAGE TANKS SECTION AND DETAILS 2

DRAWING NO. 440S104
SHEET NO. 55 OF 198

PLOT DATE: 6/25/2026 2:33:11 PM

CONTACT PERSON: STEPHEN DAY, PE SE, PROJECT ENGINEER AT 360-778-7944 FILE NAME: Autodesk Docs://Bellingham 202021-100000 Primary Sludge Tank Replacement/202021440S0801.rvt

GENERAL NOTES:

1. FOR GENERAL STRUCTURAL NOTES SEE DRAWING 010S101.
2. CONTRACTOR SHALL FIELD VERIFY ALL DIMENSIONS AND ELEVATIONS.
3. ALL STEEL SHALL BE HOT-DIP GALVANIZED AFTER FABRICATION.
4. DO NOT INTERRUPT EXISTING REINFORCING BARS FOR INSTALLATION OF POST-INSTALLED ANCHORS/DOWELS.

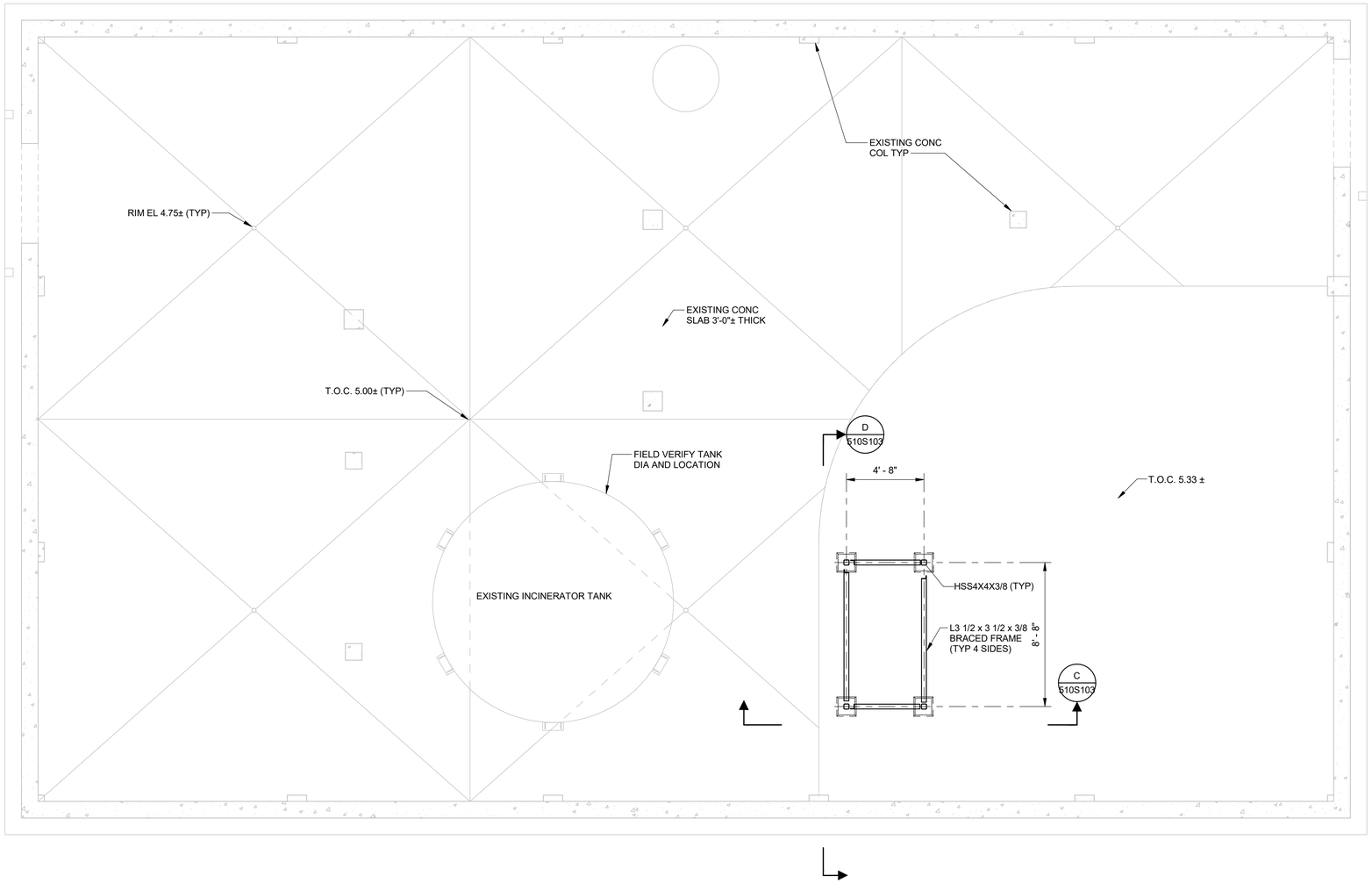

A **PLAN**
SCALE: 1/4" = 1'-0"

VERIFY SCALES
BAR IS ONE INCH ON ORIGINAL DRAWING
0 1"
IF NOT ONE INCH ON THIS SHEET, ADJUST SCALES ACCORDINGLY

HIPOM CHE
STATE OF WASHINGTON
21258
REGISTERED PROFESSIONAL ENGINEER

PLOT DATE: 6/25/2026 2:28:49 PM

carollo®

Date	No	Revision	By

PROJECT ENGINEER	HCC
DESIGNED/DRAWN	DE
INSPECTOR	AM

DIRECTOR PUBLIC WORKS	MAO
CITY ENGINEER	MLW
ASSISTANT DIRECTOR	MAO

CITY OF BELLINGHAM, WASHINGTON
PUBLIC WORKS DEPARTMENT
ENGINEERING DIVISION

SCALE
Horiz. AS SHOWN
Vert. AS SHOWN

DATUM
H: NAD 83/98
V: NAVD 88

Job. No. EU194
Date AUG 2025
Field Bk.

POST POINT RESOURCE RECOVERY PLANT
STRUCTURAL
SOLIDS HANDLING BUILDING BASEMENT PLAN

DRAWING NO. 510S101
SHEET NO. 56 OF 198

CONTACT PERSON: STEPHEN DAY, PE SE , PROJECT ENGINEER AT 360-778-7944 FILE NAME: Autodesk Docs://Bellingham 202021-100000 Primary Sludge Tank Replacement/202021510S9801.rvt

GENERAL NOTES:

1. FOR GENERAL STRUCTURAL NOTES SEE DRAWING 010S101.
2. CONTRACTOR SHALL FIELD VERIFY ALL DIMENSIONS AND ELEVATIONS.
3. GRATING & STAIR LL = 100 PSF. PROVIDE GRATING STOP AND FASTENERS PER SR601/TYP & SR615/TYP, UNLESS NOTED OTHERWISE.
4. ALL STEEL SHALL BE HOT-DIP GALVANIZED AFTER FABRICATION.
5. DO NOT INTERRUPT EXISTING REINFORCING BARS FOR INSTALLATION OF POST-INSTALLED ANCHORS/DOWELS.

1 KEY NOTES:

1. WIDTH AND LOCATIONS OF NEW STAIRS SHALL MATCH EXISTING DEMOLISHED STAIRS.
2. STAIR SIMILAR TO AC101/TYP WITH STEEL MATERIAL. STRINGER BEAMS SHALL BE WELDED C-SHAPE 10" DEEP x 3" WIDE x 3/8" THICK OR C10x15.3.
3. STAIR TOP TREAD.
4. GUARDRAIL/HANDRAIL SIMILAR TO AC500/TYP, AC504/TYP & AC510/TYP WITH STANDARD STEEL PIPE MEMBERS.
5. STAIR CONNECTIONS TO LANDINGS SIMILAR TO AC130/TYP WITH STEEL MATERIAL.

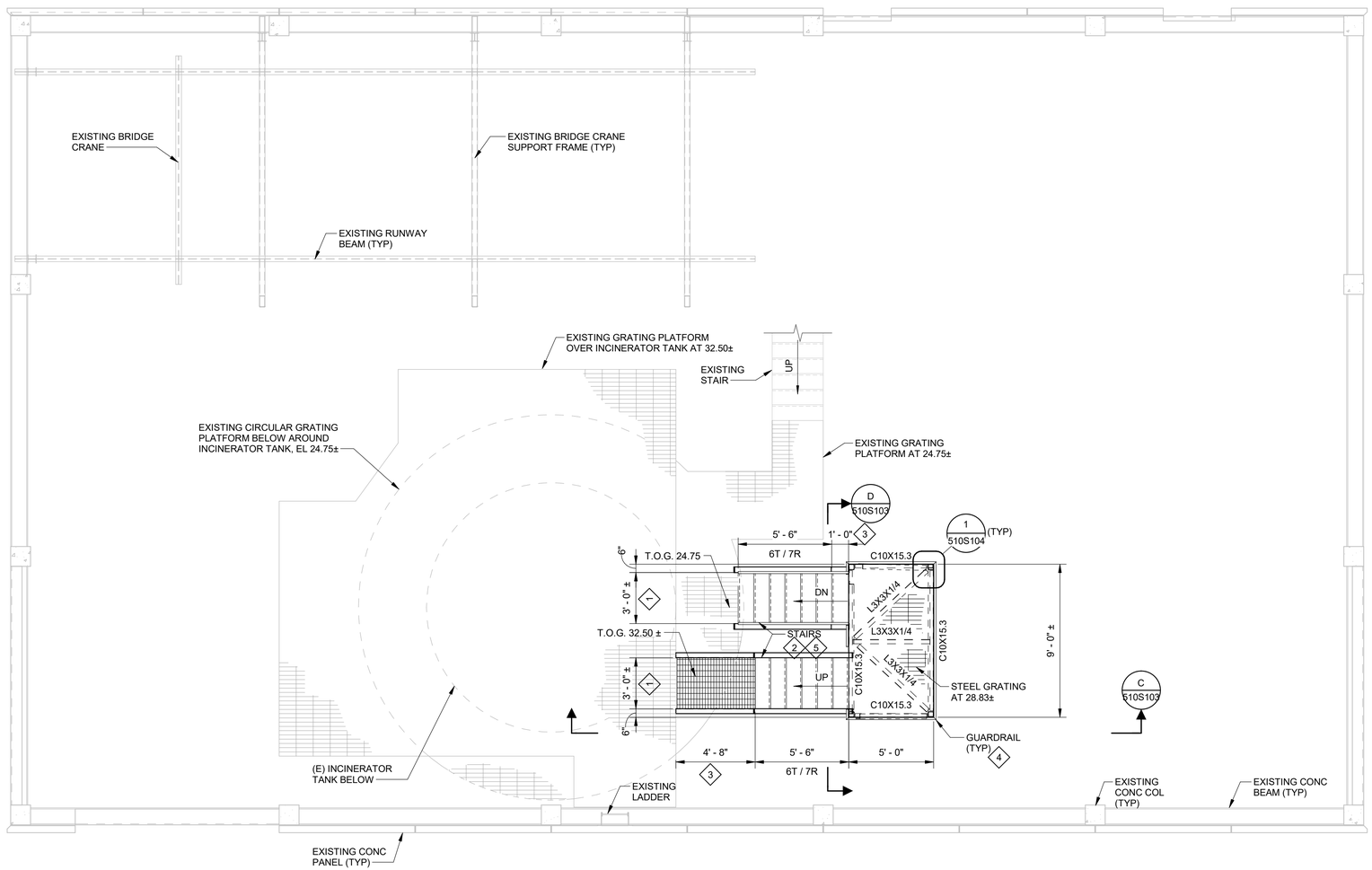

B PLAN
SCALE: 1/4" = 1'-0"

VERIFY SCALES

BAR IS ONE INCH ON ORIGINAL DRAWING

0 1"

IF NOT ONE INCH ON THIS SHEET, ADJUST SCALES ACCORDINGLY

HIPOM CHE
STATE OF WASHINGTON
21258
REGISTERED PROFESSIONAL ENGINEER

carollo®

PLOT DATE: 6/25/2026 2:29:28 PM

Date	No	Revision	By

PROJECT ENGINEER	HCC
DESIGNED/DRAWN	DE
INSPECTOR	AM
DIRECTOR PUBLIC WORKS	MAO
CITY ENGINEER	MLW
ASSISTANT DIRECTOR	MAO

CITY OF BELLINGHAM, WASHINGTON
PUBLIC WORKS DEPARTMENT
ENGINEERING DIVISION

SCALE: Horiz. AS SHOWN; Vert. AS SHOWN

DATUM: H: NAD 83/98; V: NAVD 88

Job. No. EU194
Date AUG 2025
Field Bk.

POST POINT RESOURCE RECOVERY PLANT
STRUCTURAL
SOLIDS HANDLING BUILDING PLAN AT EL 32.50±

DRAWING NO. 510S102
SHEET NO. 57 OF 198

CONTACT PERSON: STEPHEN DAY, PE SE , PROJECT ENGINEER AT 360-778-7944 FILE NAME: Autodesk Docs://Bellingham 202021-100000 Primary Sludge Tank Replacement/202021510S9801.rvt

GENERAL NOTES:

1. FOR GENERAL STRUCTURAL NOTES SEE DRAWING 010S101.
2. CONTRACTOR SHALL FIELD VERIFY ALL DIMENSIONS AND ELEVATIONS.
3. ALL STEEL SHALL BE HOT-DIP GALVANIZED AFTER FABRICATION.
4. DO NOT INTERRUPT EXISTING REINFORCING BARS FOR INSTALLATION OF POST-INSTALLED ANCHORS/DOWELS.

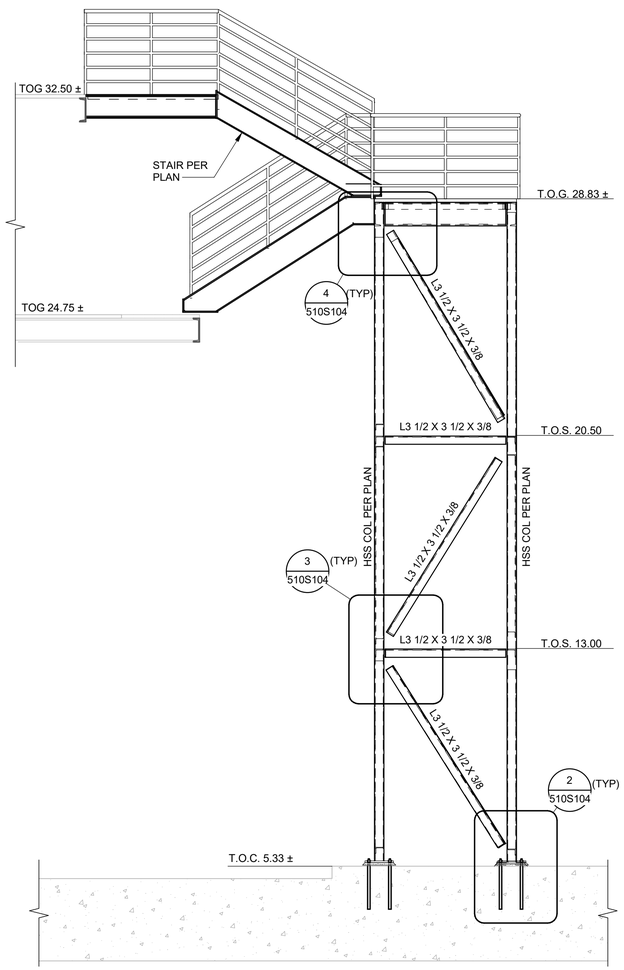

BRACED FRAME IN SHORT DIRECTION (2-SIDES)

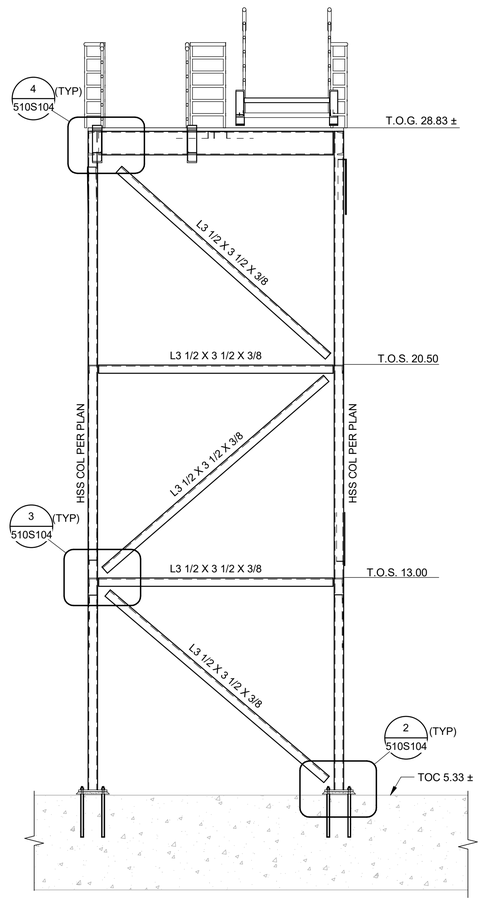

BRACED FRAME IN LONG DIRECTION (2-SIDES)

C 510S101 **SECTION**
SCALE: 3/8" = 1'-0"

D 510S101 **SECTION**
SCALE: 3/8" = 1'-0"

VERIFY SCALES

BAR IS ONE INCH ON ORIGINAL DRAWING

0 1"

IF NOT ONE INCH ON THIS SHEET, ADJUST SCALES ACCORDINGLY

HIPOM CHE — STATE OF WASHINGTON — 21258 — REGISTERED PROFESSIONAL ENGINEER

carollo®

Date	No	Revision	By

PROJECT ENGINEER	HCC
DESIGNED/DRAWN	DE
INSPECTOR	AM
DIRECTOR PUBLIC WORKS	MAO
CITY ENGINEER	MLW
ASSISTANT DIRECTOR	MAO

CITY OF BELLINGHAM, WASHINGTON
PUBLIC WORKS DEPARTMENT
ENGINEERING DIVISION

SCALE: Horiz. AS SHOWN; Vert. AS SHOWN

DATUM: H: NAD 83/98; V: NAVD 88

Job. No. EU194
Date AUG 2025
Field Bk.

POST POINT RESOURCE RECOVERY PLANT
STRUCTURAL
SOLIDS HANDLING BUILDING SECTIONS

DRAWING NO. 510S103
SHEET NO. 58 OF 198

PLOT DATE: 6/25/2026 2:29:52 PM

CONTACT PERSON: STEPHEN DAY, PE SE , PROJECT ENGINEER AT 360-778-7944 FILE NAME: Autodesk Docs://Bellingham 202021-100000 Primary Sludge Tank Replacement/202021510S9801.rvt

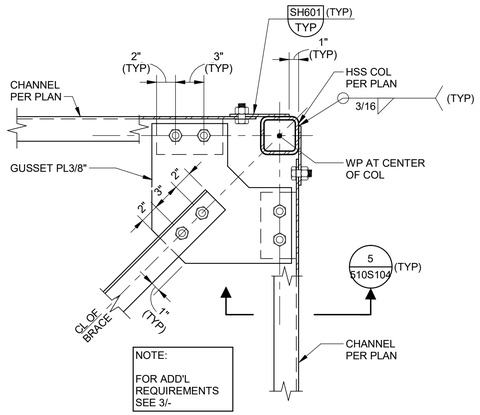

1 DETAIL
510S102 SCALE: 1 1/2" = 1'-0"

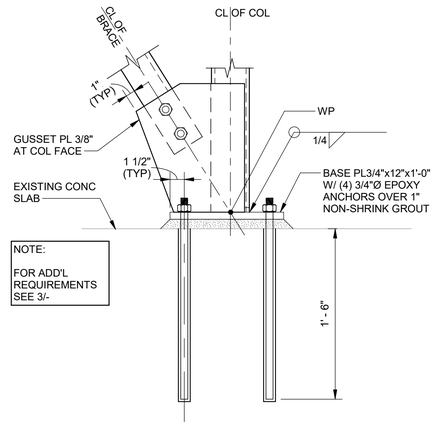

2 DETAIL
510S103 SCALE: 1 1/2" = 1'-0"

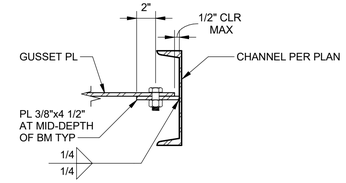

5 DETAIL
510S104 SCALE: 1 1/2" = 1'-0"

GENERAL NOTES:

1. FOR GENERAL STRUCTURAL NOTES SEE DRAWING 010S101.
2. CONTRACTOR SHALL FIELD VERIFY ALL DIMENSIONS AND ELEVATIONS.
3. ALL STEEL SHALL BE HOT-DIP GALVANIZED AFTER FABRICATION.
4. DO NOT INTERRUPT EXISTING REINFORCING BARS FOR INSTALLATION OF POST-INSTALLED ANCHORS/DOWELS.

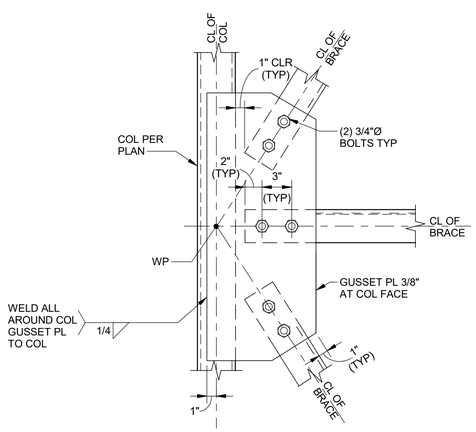

3 DETAIL
510S103 SCALE: 1 1/2" = 1'-0"

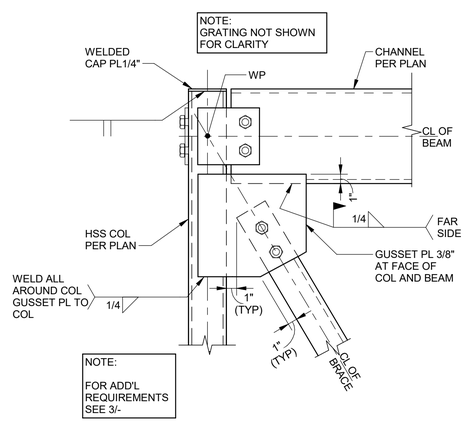

4 DETAIL
510S103 SCALE: 1 1/2" = 1'-0"

VERIFY SCALES

BAR IS ONE INCH ON ORIGINAL DRAWING

0 1"

IF NOT ONE INCH ON THIS SHEET, ADJUST SCALES ACCORDINGLY

HIPOM CHE STATE OF WASHINGTON 21258 REGISTERED PROFESSIONAL ENGINEER

Digitally signed by Hipom Che
Date: 2025.08.25 15:03:49 -08'00'

carollo®

PLOT DATE: 6/25/2026 2:30:21 PM

Date	No	Revision	By

PROJECT ENGINEER	HCC
DESIGNED/DRAWN	DE
INSPECTOR	AM
DIRECTOR PUBLIC WORKS	MAO
CITY ENGINEER	MLW
ASSISTANT DIRECTOR	MAO

CITY OF BELLINGHAM, WASHINGTON
PUBLIC WORKS DEPARTMENT
ENGINEERING DIVISION

SCALE: Horiz. AS SHOWN; Vert. AS SHOWN

DATUM: H: NAD 83/98; V: NAVD 88

Job. No. EU194
Date AUG 2025
Field Bk.

POST POINT RESOURCE RECOVERY PLANT
STRUCTURAL
SOLIDS HANDLING BUILDING SECTIONS

DRAWING NO. 510S104
SHEET NO. 59 OF 198

CONTACT PERSON: STEPHEN DAY, PE SE , PROJECT ENGINEER AT 360-778-7944 FILE NAME: Autodesk Docs://Bellingham 202021-100000 Primary Sludge Tank Replacement/202021510S9801.rvt

PIPING SYMBOLS

DOUBLE LINE	SINGLE LINE	DESCRIPTION
		WELDED JOINT
		GROOVED END JOINT
		FLANGED JOINT
		HUB & SPIGOT JOINT (RUBBER GASKET)
		PUSH-ON JOINT (RESTRAINED)
		ADAPTER SIDE GROOVED END ADAPTER FLANGE
		FLANGED COUPLING ADAPTER
		FLANGED COUPLING ADAPTER WITH THRUST TIES
		FLEXIBLE COUPLING
		FLEXIBLE COUPLING WITH THRUST TIES
		METAL BELLOWS EXP JOINT
		ELASTOMER BELLOWS EXP JOINT
		FLEXIBLE COUPLING ADAPTER
		DISMANTLING JOINT
		EXPANSION COMPENSATOR
		ELBOW UP
		ELBOW DOWN
		TEE UP
		TEE DOWN
		LATERAL UP
		LATERAL DOWN
		CONCENTRIC REDUCER
		ECCENTRIC REDUCER (FOT. FOB)
		UNION
		CAP
		ANCHOR
		ELBOW, 90 DEGREE
		CROSS
		TEE
		ELBOW, 45 DEGREE
		ELBOW, 22.5 DEGREE
		ELBOW, 11.25 DEGREE
		LATERAL

DOUBLE LINE	SINGLE LINE	DESCRIPTION
		GATE VALVE
	K	KNIFE GATE VALVE
		BUTTERFLY VALVE
V	V	CHARACTERIZED BALL CONTROL VALVE
		BALL VALVE
		GLOBE VALVE
		3-WAY GLOBE TYPE MIXING VALVE
		FOUR WAY VALVE
		DIAPHRAGM VALVE
		PLUG VALVE
		LUBRICATED PLUG VALVE
		ECCENTRIC PLUG VALVE
		CONCENTRIC PLUG VALVE
		SWING CHECK VALVE
		WAFER CHECK VALVE
		PINCH VALVE
		BALL CHECK VALVE
		DUAL CHECK VALVE
		SILENT CHECK VALVE
		MUD VALVE (PLAN VIEW)
		NEEDLE VALVE
		CHECK BACKFLOW PREVENTER
		PIPE MATERIAL CHANGE

MECHANICAL SYMBOLS

SINGLE LINE	DESCRIPTION
	AIR OR CHEMICAL DIFFUSER
	QUICK DISCONNECT HIGH PRESSURE AIR OR FLUSHING
	BATCHMETER
	AIR VENT
	BASKET STRAINER
	BLOWER
	CALIBRATION COLUMN
	COMPRESSOR/TURBINE
	COMPRESSOR: RECIPROCATING
	DIAPHRAGM SEAL
	DRAIN
	EJECTOR OR EDUCTOR
M	ELECTRIC MOTOR
	EQUIPMENT DRAIN
	EXPANSION JOINT, FLEXIBLE VIBRATION JOINT
	FAN: EXHAUST/SUPPLY
	FILTER
	FIRE HYDRANT
	FLAME ARRESTER
	FLAME ARRESTER WITH THERMALLY OPERATED VALVE
	FLOOR DRAIN
	FLOW SWITCH
	GAUGE: PRESSURE
	GAUGE: DIFFERENTIAL PRESSURE
	WEIR
	MIXER
	OIL OR MOISTURE TRAP
	PRIMARY LEVEL ELEMENT: BUBBLER
	PRIMARY LEVEL ELEMENT: ELECTRODE
	PRIMARY LEVEL ELEMENT: FLOAT SWITCH
	PRIMARY LEVEL ELEMENT: FLUID
	PRIMARY LEVEL ELEMENT: INVERTED COLUMN

SINGLE LINE	DESCRIPTION
	PRIMARY LEVEL ELEMENT: RADAR
	PRIMARY LEVEL ELEMENT: ULTRASONIC
	PRIMARY FLOW ELEMENT: FLUME
X	PRIMARY FLOW ELEMENT: X = C - CORIOLIS X = M - MAGNETIC X = P - PROPELLER X = PT - PITOT TUBE X = R - ROTAMETER X = T - TURBINE X = TH - THERMAL X = U - ULTRASONIC X = D - DENSITY
	PRIMARY FLOW ELEMENT: ORIFICE PLATE
	PRIMARY FLOW ELEMENT: VENTURI TUBE
	PRIMARY FLOW ELEMENT: WEIR
	PULSATION DAMPENER
	PUMP: CENTRIFUGAL
	PUMP: DIAPHRAGM
	PUMP: METERING
	PUMP: PLUNGER
	PUMP: PERISTALTIC TUBE METERING
	PUMP: PROGRESSIVE CAVITY
	PUMP: RECIPROCATING
	PUMP: ROTARY
	PUMP: SCREW
	PUMP: SUBMERSIBLE
	PUMP: VERTICAL LIFT
	PIPE REDUCER: CONCENTRIC
	PIPE REDUCER: ECCENTRIC (FOT, FOB)
	ROTARY CHEMICAL FEEDER
	RUPTURE DISK
	SAMPLE PORT
	SIGHT GLASS
	SLIDE GATE
	SLUICE GATE
	STRAINER: WYE TYPE

SINGLE LINE	DESCRIPTION
	STRAINER: WYE TYPE WITH BLOWOFF
	THERMOMETER
	VALVE: ANGLE
	VALVE: AIR RELIEF
	VALVE: CONE
	VALVE: FLAPPER CHECK
	VALVE: FOUR WAY
	VALVE: HOSE
	VALVE: PLUG CONCENTRIC
	VALVE: PRESSURE RELIEF PRESSURE-REDUCING REGULATOR
	VALVE: TELESCOPING
	VALVE: THREE WAY AIR OPERATED
M	VALVE: THREE WAY MOTOR OPERATED
S	VALVE: THREE WAY SOLENOID OPERATED
	VALVE: VACUUM
	BACKPRESSURE REGULATOR SELF-CONTAINED
	BACKPRESSURE REGULATOR W/ EXTERNAL PRESSURE TAP
	PRESSURE-REDUCING REGULATOR: SELF-CONTAINED
	PRESSURE-REDUCING REGULATOR W/EXTERNAL PRESSURE TAP

IDENTIFICATION SYMBOLS

CHEMICAL INJECTION POINT	CHEMICAL
PIPE DESIGNATOR	DWG NO. PIPE SIZE — FLOW STREAM X" XXX
CONTINUATION TAG	UNIQUE IDENTIFIER CONTINUATION FROM DWG NO. CONTINUATION TO DWG NO. A B C
EQUIPMENT / VALVE TAG	XXX-XX-XXXX
KEY TAG	X

LINE SYMBOLS

PIPE ABOVE OR BELOW GROUND	
PIPE UNDERNEATH SLAB OR STRUCTURE	
FUTURE	
EXISTING	
DEMO	

PROCESS LINE SYMBOLS

PRIMARY PROCESS FLOW IN PIPE	
SECONDARY PROCESS FLOW IN PIPE	
PRIMARY PROCESS FLOW IN CHANNEL	
SECONDARY PROCESS FLOW IN CHANNEL	

MATTHEW SCOTT SEPACK
STATE OF WASHINGTON
29659
REGISTERED
PROFESSIONAL ENGINEER

carollo®

Date	No	Revision	By
	4		
	3		
	2		
	1		

PROJECT ENGINEER CE
DESIGNED/DRAWN CE
INSPECTOR CE

DIRECTOR PUBLIC WORKS
CITY ENGINEER
ASSISTANT DIRECTOR

CITY OF BELLINGHAM, WASHINGTON
PUBLIC WORKS DEPARTMENT
ENGINEERING DIVISION

SCALE
Horiz. AS SHOWN
Vert. AS SHOWN

DATUM
H: NAD 83/98
V: NAVD 88

Job. No. EU194
Date JAN 2026
Field Bk.

POST POINT RESOURCE RECOVERY PLANT
MECHANICAL
GENERAL MECHANICAL LEGEND AND SYMBOLS

DRAWING NO. 010M101
SHEET NO. 60 OF 198

CONTACT PERSON: STEPHEN DAY, PE SE , PROJECT ENGINEER AT 360-778-7944

PROJECT NO. 202021-100000 FILE NAME: 202021010M101.dwg

LAST SAVED BY: dlee
8/14/2025 11:39:38 AM

GENERAL NOTES:

1. SEE DWG 050E101 FOR GALLERY POWER AND CONTROL PLAN

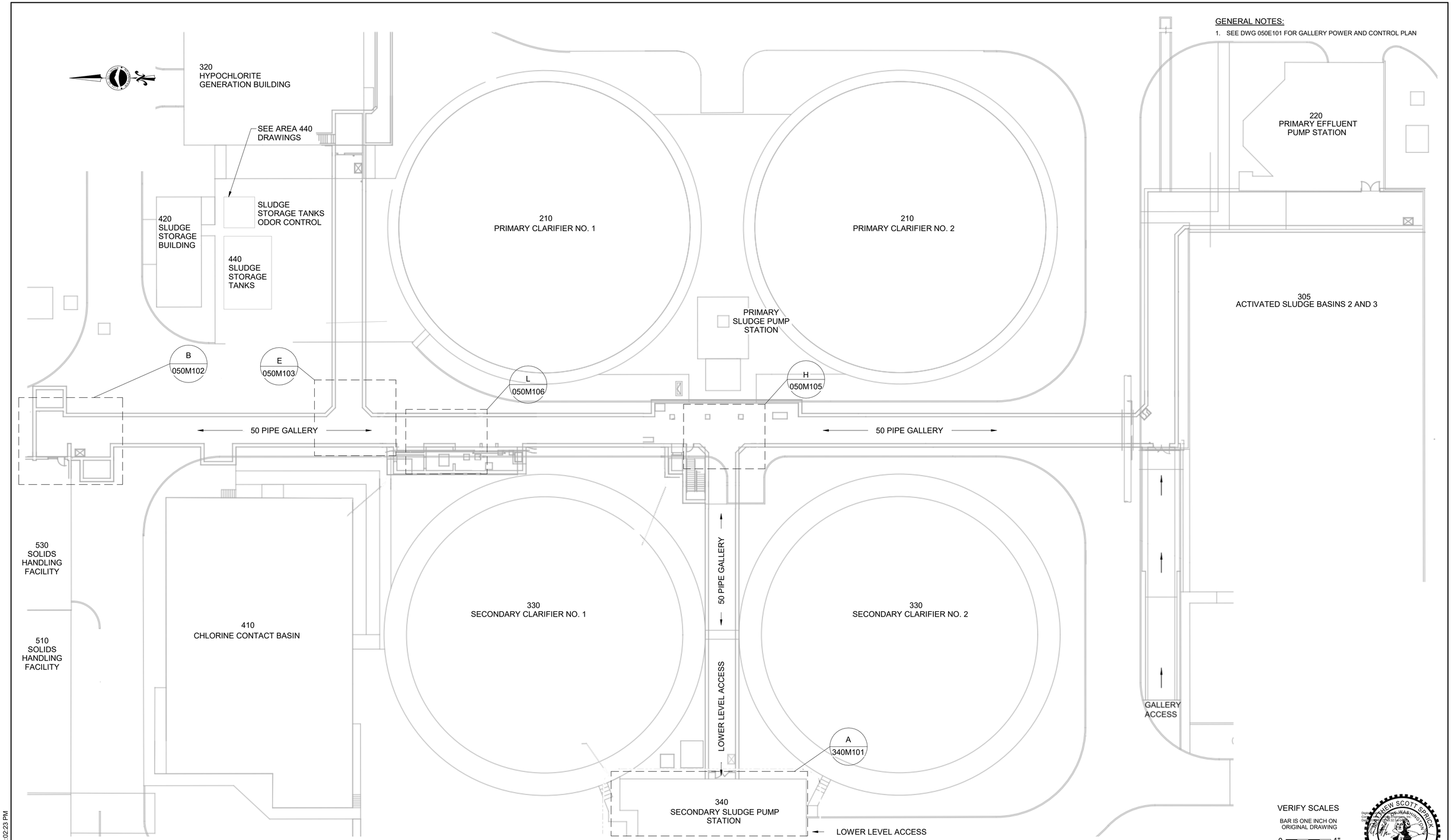

A PLAN
SCALE: 1/8" = 1'-0"

VERIFY SCALES

BAR IS ONE INCH ON ORIGINAL DRAWING

0 1"

IF NOT ONE INCH ON THIS SHEET, ADJUST SCALES ACCORDINGLY

MATTHEW SCOTT SPRICK
STATE OF WASHINGTON
29659
REGISTERED
PROFESSIONAL ENGINEER

carollo®

PLOT DATE: 6/25/2026 1:02:23 PM

Date	No	Revision	By

PROJECT ENGINEER	MSS
DESIGNED/DRAWN	MSS/DJL
INSPECTOR	CC
DIRECTOR PUBLIC WORKS	MAO
CITY ENGINEER	MLW
ASSISTANT DIRECTOR	MAO

CITY OF BELLINGHAM, WASHINGTON
PUBLIC WORKS DEPARTMENT
ENGINEERING DIVISION

SCALE
Horiz. AS SHOWN
Vert. AS SHOWN

DATUM
H: NAD 83/98
V: NAVD 88

Job. No. EU194
Date AUG 2025
Field Bk.

POST POINT RESOURCE RECOVERY PLANT
MECHANICAL
OVERALL PIPING PLAN

DRAWING NO. 050M101
SHEET NO. 61 OF 198

CONTACT PERSON: STEPHEN DAY, PE SE , PROJECT ENGINEER AT 360-778-7944 FILE NAME: Autodesk Docs://Bellingham 202021-100000 Primary Sludge Tank Replacement/202021050M9801.rvt

GENERAL NOTES:

1. ALL 90 DEGREE ELBOWS ON BLENDED SLUDGE AND PRIMARY SLUDGE PIPING SHALL BE LONG RADIUS

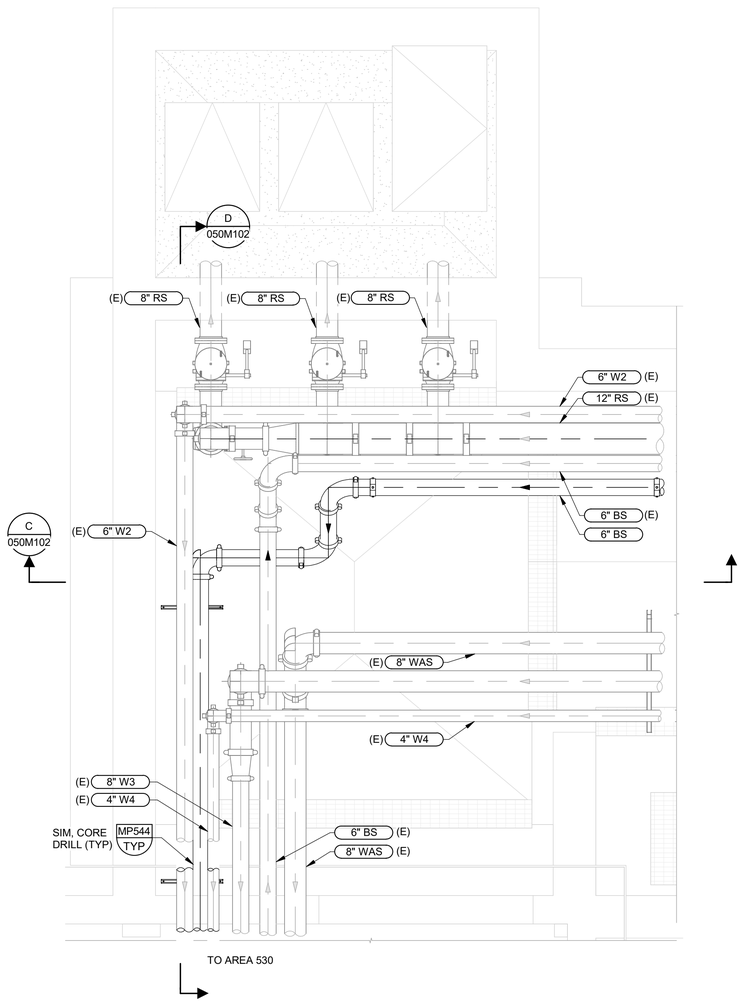

B ENLARGED PLAN
(50M101) SCALE: 3/8" = 1'-0"

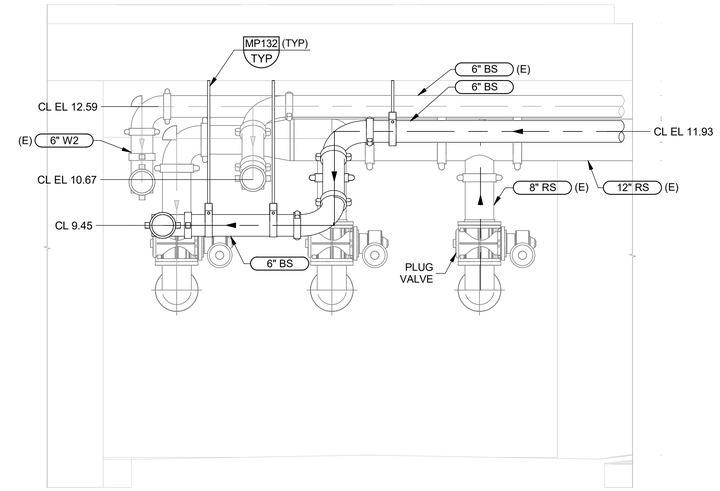

C SECTION
050M102 SCALE: 1/2" = 1'-0"

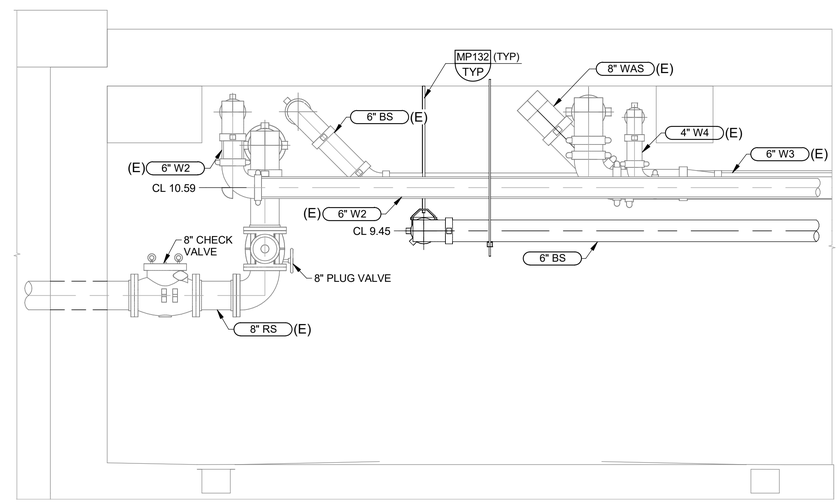

D SECTION
050M102 SCALE: 1/2" = 1'-0"

VERIFY SCALES

BAR IS ONE INCH ON ORIGINAL DRAWING

0 1"

IF NOT ONE INCH ON THIS SHEET, ADJUST SCALES ACCORDINGLY

MATTHEW SCOTT SPRICK, STATE OF WASHINGTON, 29659, REGISTERED PROFESSIONAL ENGINEER

carollo

PLOT DATE: 6/25/2026 1:04:44 PM

Date	No	Revision	By

PROJECT ENGINEER	MS
DESIGNED/DRAWN	MSS/DJL
INSPECTOR	CC
DIRECTOR PUBLIC WORKS	MAO
CITY ENGINEER	MLW
ASSISTANT DIRECTOR	MAO

CITY OF BELLINGHAM, WASHINGTON
PUBLIC WORKS DEPARTMENT
ENGINEERING DIVISION

SCALE: Horiz. AS SHOWN; Vert. AS SHOWN

DATUM: H: NAD 83/98; V: NAVD 88

Job. No. EU194
Date AUG 2025
Field Bk.

POST POINT RESOURCE RECOVERY PLANT
MECHANICAL
PIPING PLAN AND SECTIONS 1

DRAWING NO. 050M102
SHEET NO. 62 OF 198

CONTACT PERSON: STEPHEN DAY, PE SE , PROJECT ENGINEER AT 360-778-7944 FILE NAME: Autodesk Docs://Bellingham 202021-100000 Primary Sludge Tank Replacement/202021050M9801.rvt

GENERAL NOTES:

1. ALL 90 DEGREE ELBOWS ON BLENDED SLUDGE AND PRIMARY SLUDGE PIPING SHALL BE LONG RADIUS

KEY NOTES:

1. INSTALL 6" TEE WITH BRANCH ROTATED TO 45 DEGREES AND PLUG VALVE AND CAMLOCK CONNECTION TO FACILITATE DRAINING OF PIPELINE. COORDINATE CAMLOCK TYPE WITH OWNER.

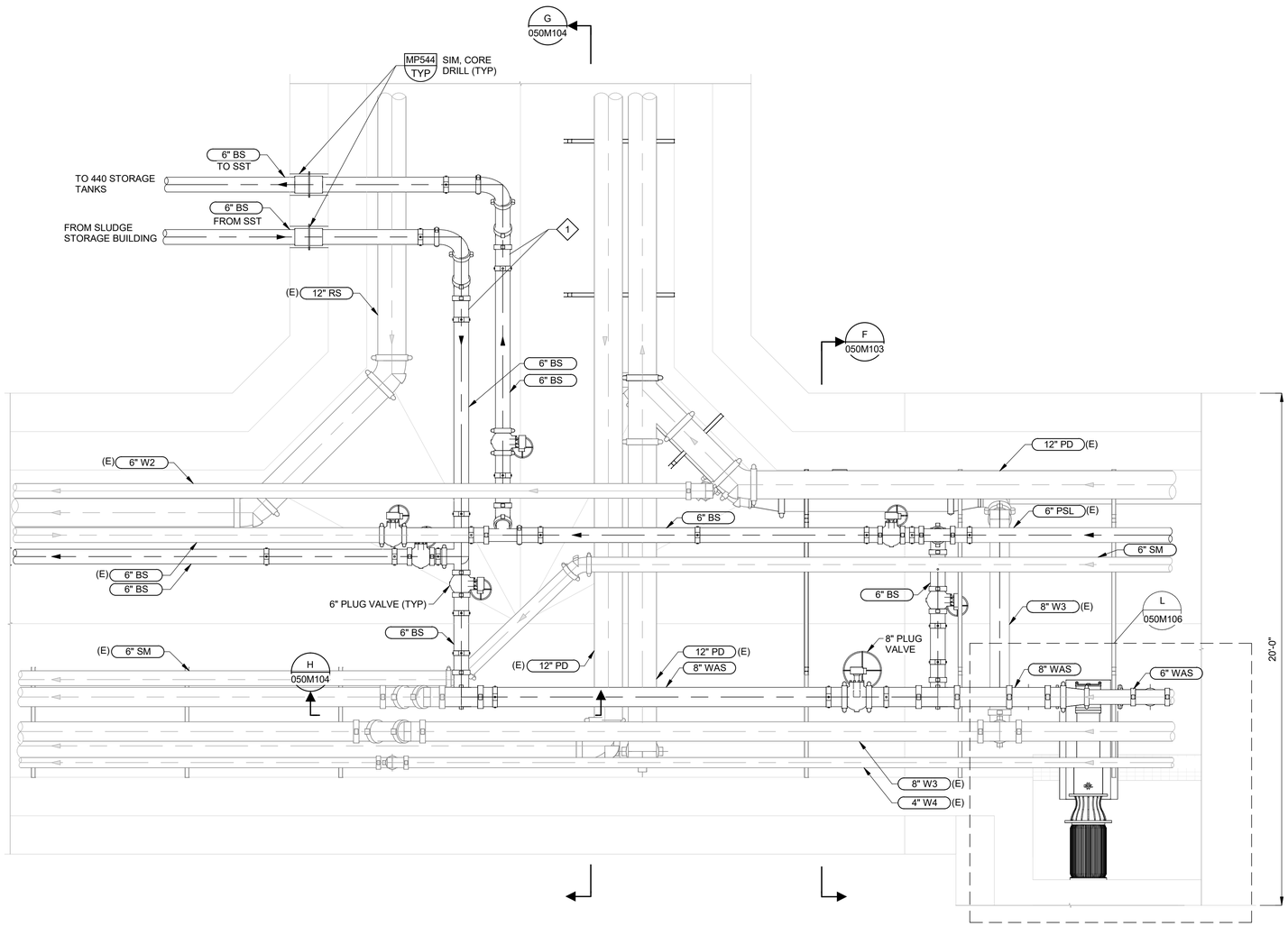

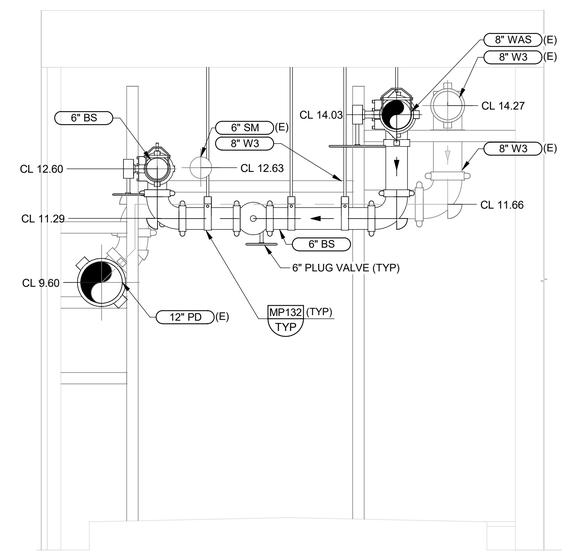

H 50M101 ENLARGED PLAN

SCALE: 3/8" = 1'-0"

F 050M103 SECTION

SCALE: 1/2" = 1'-0"

VERIFY SCALES

BAR IS ONE INCH ON ORIGINAL DRAWING

0 1"

IF NOT ONE INCH ON THIS SHEET, ADJUST SCALES ACCORDINGLY

carollo®

PLOT DATE: 6/25/2026 1:05:26 PM

Date	No	Revision	By

PROJECT ENGINEER	MS
DESIGNED/DRAWN	MSS/DJL
INSPECTOR	CC
DIRECTOR PUBLIC WORKS	MAO
CITY ENGINEER	MLW
ASSISTANT DIRECTOR	MAO

CITY OF BELLINGHAM, WASHINGTON
PUBLIC WORKS DEPARTMENT
ENGINEERING DIVISION

SCALE: Horiz. AS SHOWN; Vert. AS SHOWN

DATUM: H: NAD 83/98; V: NAVD 88

Job. No. EU194
Date AUG 2025
Field Bk.

POST POINT RESOURCE RECOVERY PLANT
MECHANICAL
PIPING PLAN AND SECTIONS 2

DRAWING NO. 050M103
SHEET NO. 63 OF 198

CONTACT PERSON: STEPHEN DAY, PE SE , PROJECT ENGINEER AT 360-778-7944 FILE NAME: Autodesk Docs://Bellingham 202021-100000 Primary Sludge Tank Replacement/202021050M9801.rvt

GENERAL NOTES:

1. ALL 90 DEGREE ELBOWS ON BLENDED SLUDGE AND PRIMARY SLUDGE PIPING SHALL BE LONG RADIUS

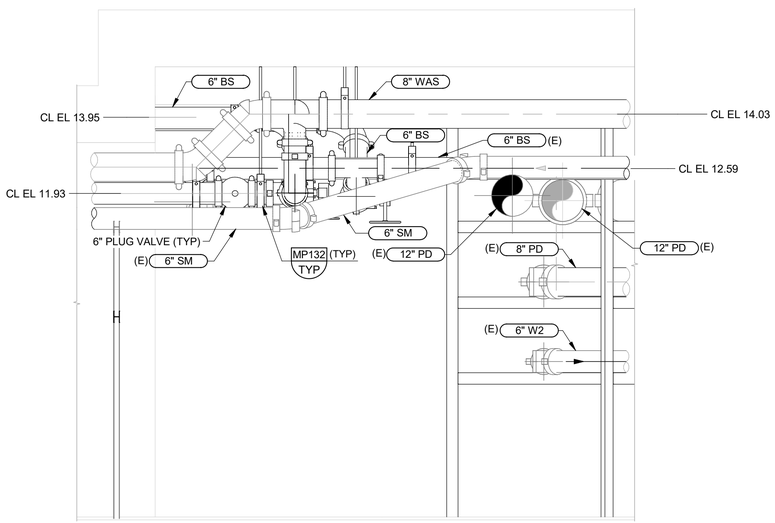

H 050M103 **SECTION**
SCALE: 1/2" = 1'-0"

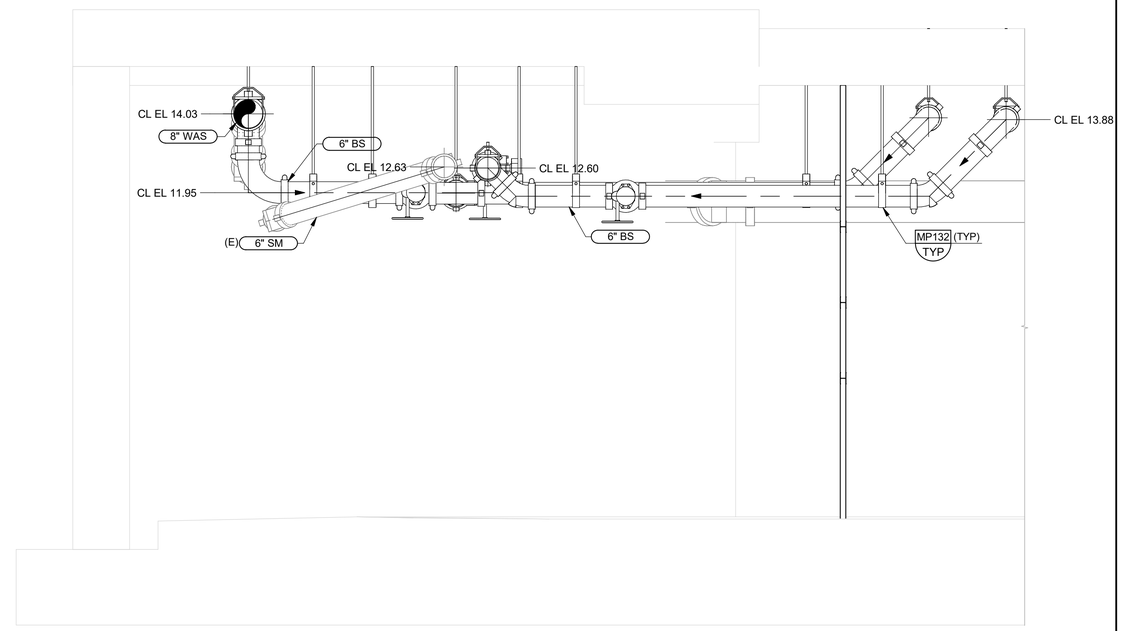

G 050M103 **SECTION**
SCALE: 1/2" = 1'-0"

VERIFY SCALES
BAR IS ONE INCH ON ORIGINAL DRAWING
0 1"
IF NOT ONE INCH ON THIS SHEET, ADJUST SCALES ACCORDINGLY

MATTHEW SCOTT SPRICK
STATE OF WASHINGTON
29659
REGISTERED
PROFESSIONAL ENGINEER

carollo®

PLOT DATE: 6/25/2026 1:06:04 PM

Date	No	Revision	By

PROJECT ENGINEER	MS
DESIGNED/DRAWN	MSS/DJL
INSPECTOR	CC
DIRECTOR PUBLIC WORKS	MAO
CITY ENGINEER	MLW
ASSISTANT DIRECTOR	MAO

CITY OF BELLINGHAM, WASHINGTON
PUBLIC WORKS DEPARTMENT
ENGINEERING DIVISION

SCALE
Horiz. AS SHOWN
Vert. AS SHOWN

DATUM
H: NAD 83/98
V: NAVD 88

Job. No. EU194
Date AUG 2025
Field Bk.

POST POINT RESOURCE RECOVERY PLANT
MECHANICAL
PIPING PLAN AND SECTIONS 3

DRAWING NO. 050M104
SHEET NO. 64 OF 198

CONTACT PERSON: STEPHEN DAY, PE SE , PROJECT ENGINEER AT 360-778-7944 FILE NAME: Autodesk Docs://Bellingham 202021-100000 Primary Sludge Tank Replacement/202021050M9801.rvt

$$$$DATE$$$$ Plot Date: 10/3/2024 2:15:58 PM
$$$$USER$$$$
$$$$PLOT_INFO$$$$
lveloz LAST SAVED BY:

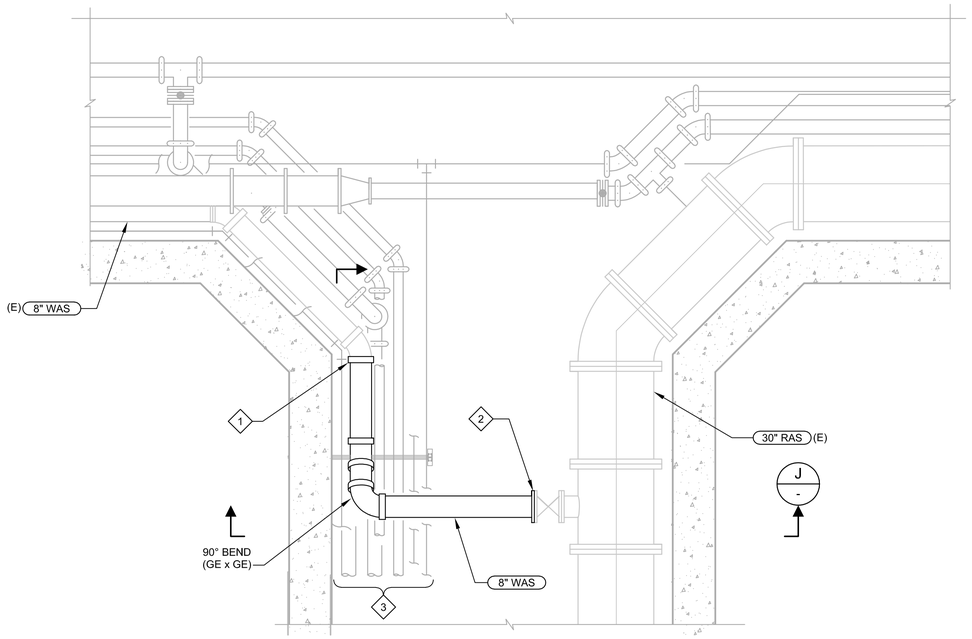

H ENLARGED PLAN
050M101 SCALE: 3/8" = 1'-0"

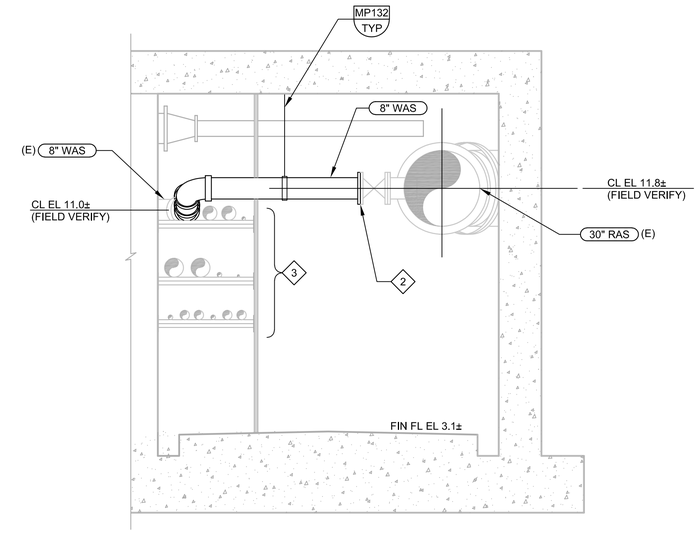

J SECTION
SCALE: 3/8" = 1'-0"
FILE: 8153A30050M0306

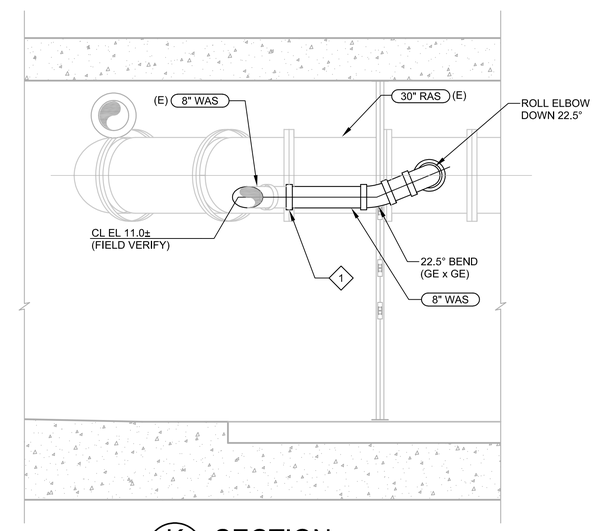

K SECTION
SCALE: 3/8" = 1'-0"
FILE: 8153A30050M0307

KEY NOTES = #

1 CONNECT TO EXISTING PIPE AT GROOVED END FITTING WITH EXISTING GROOVED COUPLING AND NEW COUPLING GASKET.

2 REMOVE BLIND FLANGE AND CONNECT TO EX 8" GATE VALVE.

3 EXISTING PIPING DEPICTED IN THIS AREA MAY NOT BE ACCURATE. FIELD VERIFY LOCATION, SIZE AND SERVICE OF EXISTING PIPING PRIOR TO INSTALLATION TO AVOID CONFLICT WITH NEW 8" WAS PIPING. SEE DETAIL 2/050D105 FOR PHOTO OF EXISTING PIPING.

MATTHEW SCOTT SPRINK
STATE OF WASHINGTON
29659
REGISTERED
PROFESSIONAL ENGINEER
Digitally Signed
Contact
Date

carollo®

Date	No	Revision	By
	4		
	3		
	2		
	1		

PROJECT ENGINEER TJW
DESIGNED/DRAWN DE
INSPECTOR AJS

DIRECTOR PUBLIC WORKS
CITY ENGINEER
ASSISTANT DIRECTOR

CITY OF BELLINGHAM, WASHINGTON
PUBLIC WORKS DEPARTMENT
ENGINEERING DIVISION

SCALE
Horiz. AS SHOWN
Vert. AS SHOWN

DATUM
H: NAD 83/98
V: NAVD 88

Job. No. EU194
Date JAN 2026
Field Bk.

POST POINT RESOURCE RECOVERY PLANT
MECHANICAL
PIPING PLAN AND SECTIONS 4

DRAWING NO. 050M105
SHEET NO. 65 OF 198

CONTACT PERSON: STEPHEN DAY, PE SE , PROJECT ENGINEER AT 360-778-7944

PROJECT NO. 202021-100000 FILE NAME: 202021050M105.dwg

$$$$DATE$$$$
Plot Date: 8/14/2025 12:25:58 PM
$$$$USER$$$$
$$$$PLOT_INFO$$$$
lveloz
LAST SAVED BY:

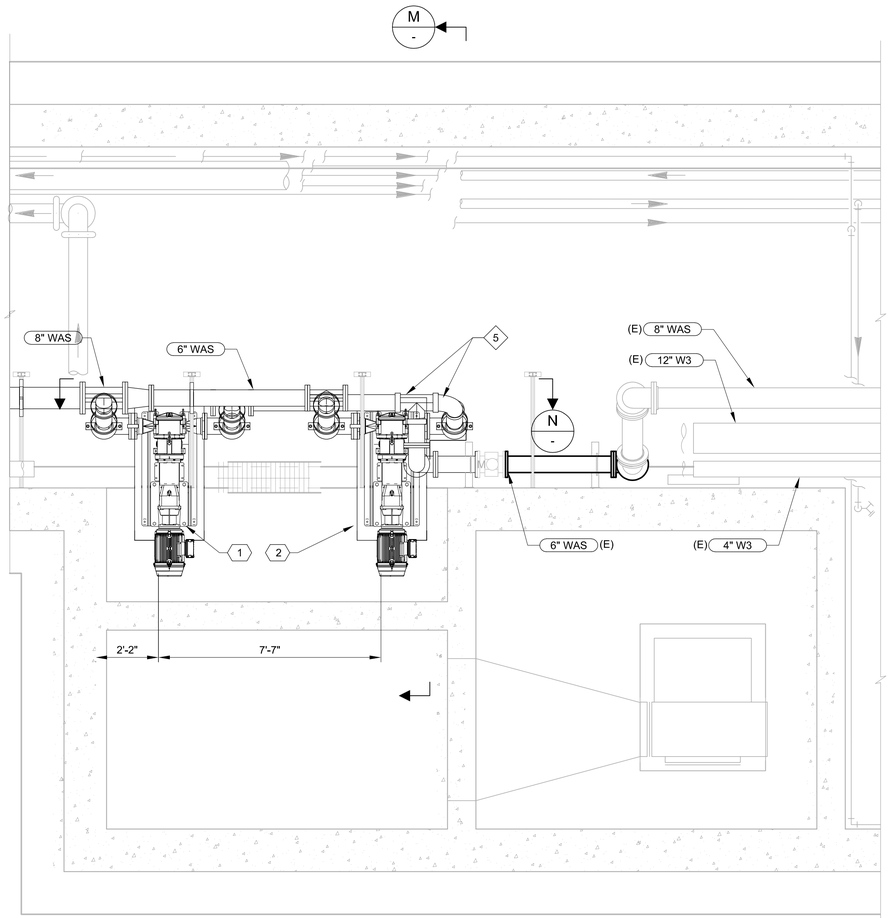

L 50M101 ENLARGED PLAN
SCALE: 3/8" = 1'-0"

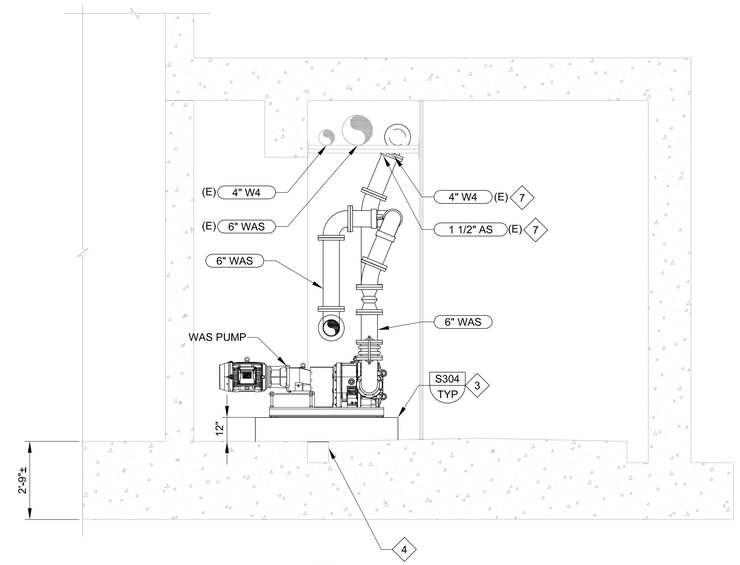

M - SECTION
SCALE: 3/8" = 1'-0"
FILE: 8153A30050M0301

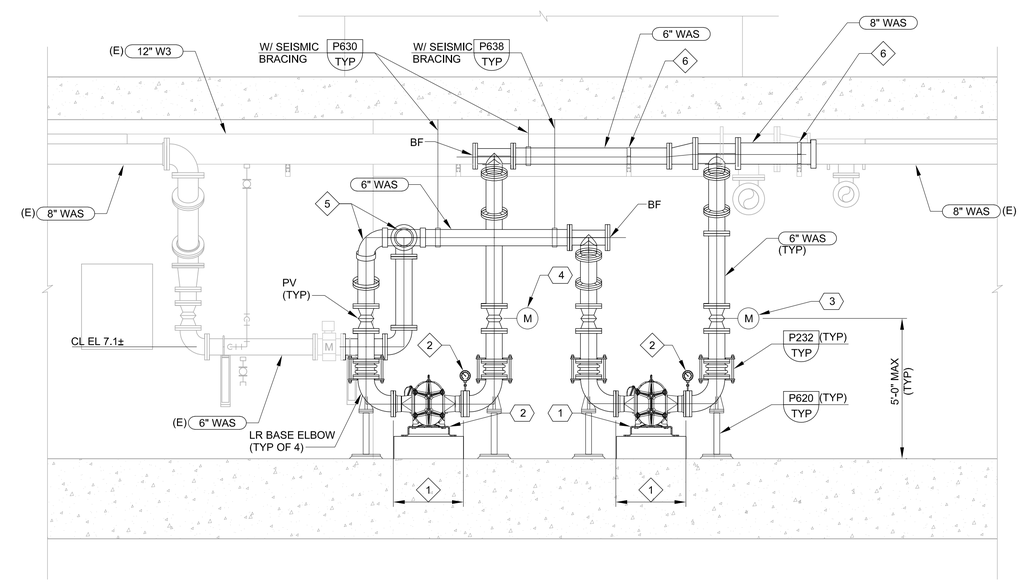

N - SECTION
SCALE: 3/8" = 1'-0"
FILE: 8153A30050M0302

GENERAL NOTES

1. REFER TO THE PROCESS & INSTRUMENTATION DRAWINGS (P&IDS) FOR INSTALLATION DETAILS FOR ALL INSTRUMENTS.
2. PROVIDE GROOVED END PIPE JOINTS AND FITTINGS WHERE INDICATED. ALL OTHER PIPE AND FITTING JOINTS MAY BE GROOVED END OR FLANGED.

.

KEY NOTES =

1 MAX 30" FROM FACE OF PUMP INLET FLANGE TO FACE OF PUMP OUTLET FLANGE.

2 ANNULAR SEAL WITH PRESSURE GAUGE AND SWITCH, SEE INSTRUMENTATION DRAWINGS.

3 PROVIDE BOTTOM MAT OF REINFORCING, #5 @12" OC EW T&B LOCATED 2" CLEAR OF FINISHED FLOOR.

4 CUT AND REMOVE GRATING THE WIDTH OF THE PUMP PAD. PUMP PAD TO SPAN TRENCH DRAIN.

5 TEE AND ELBOW TO BE GROOVED END TO FACILITATE ANGLES REQUIRED BY PIPING LAYOUT.

6 SUPPORT PIPE ON EXISTING UNISTRUT WITH PIPE STRAP.

7 REMOVE AND REROUTE COPPER AIR PIPING TO AVOID NEW PIPING IMPROVEMENTS. INSTALL NEW COPPER PIPE, FITTINGS, AND SUPPORTS TO MATCH EXISTING.

KEY TAGS:

1	P-34033	WAS PUMP 1
2	P-34034	WAS PUMP 2
3	EDR-34033	ELECTRIC DISCRETE VALVE
4	EDR-34034	ELECTRIC DISCRETE VALVE

carollo®

Date	No	Revision	By
	4		
	3		
	2		
	1		

PROJECT ENGINEER TJW
DESIGNED/DRAWN DE
INSPECTOR AJS

DIRECTOR PUBLIC WORKS
CITY ENGINEER
ASSISTANT DIRECTOR

CITY OF BELLINGHAM, WASHINGTON
PUBLIC WORKS DEPARTMENT
ENGINEERING DIVISION

SCALE
Horiz. AS SHOWN
Vert. AS SHOWN

DATUM
H: NAD 83/98
V: NAVD 88

Job. No. EU194
Date JAN 2026
Field Bk.

POST POINT RESOURCE RECOVERY PLANT
MECHANICAL
WAS PUMPS PLAN AND SECTIONS

DRAWING NO. 050M106
SHEET NO. 66 OF 198

CONTACT PERSON: STEPHEN DAY, PE SE , PROJECT ENGINEER AT 360-778-7944

PROJECT NO. 202021-100000 FILE NAME: 202021050M106.dwg

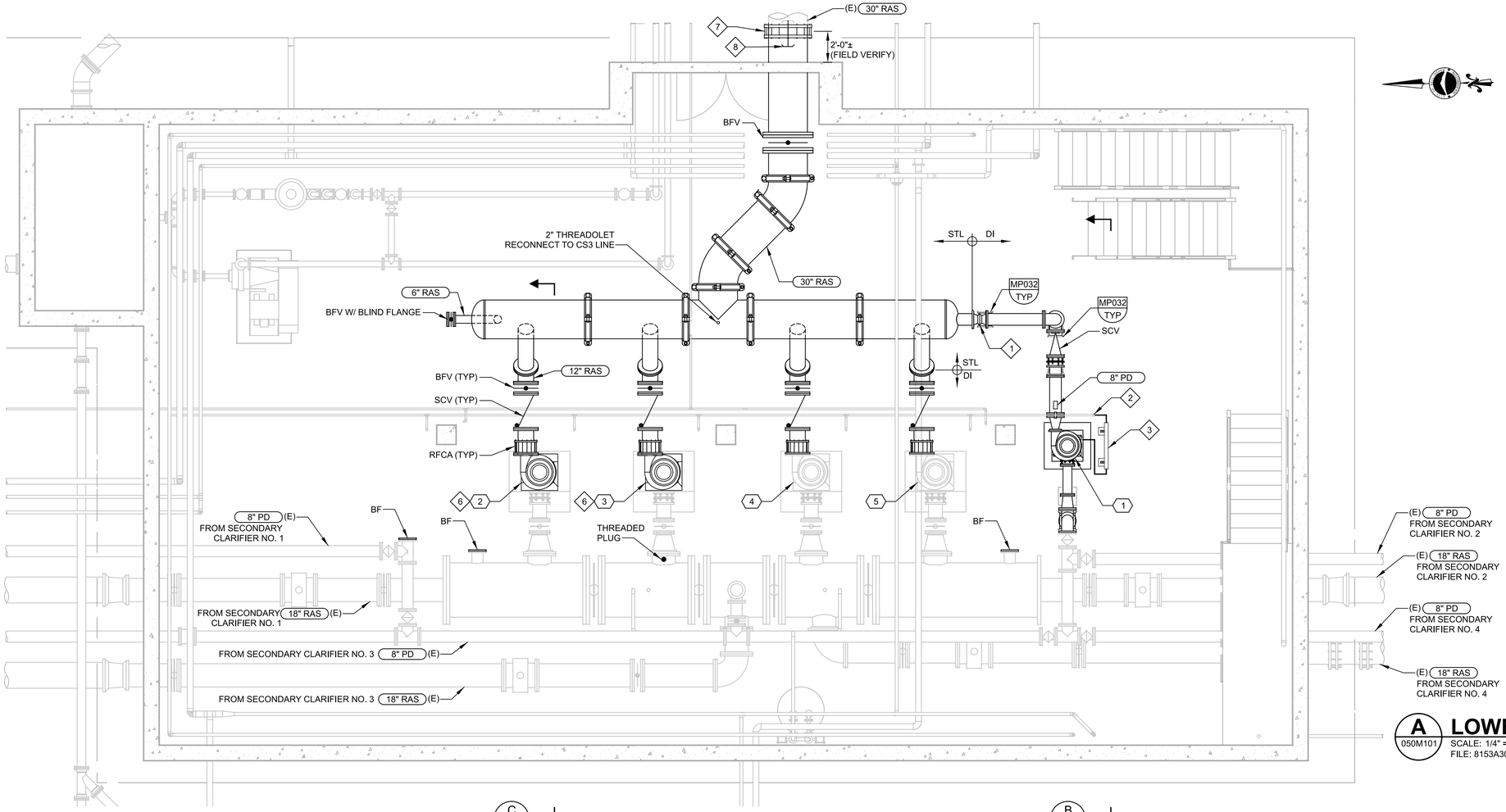

A LOWER LEVEL PLAN

050M101 SCALE: 1/4" = 1'-0"
FILE: 8153A30340M0101

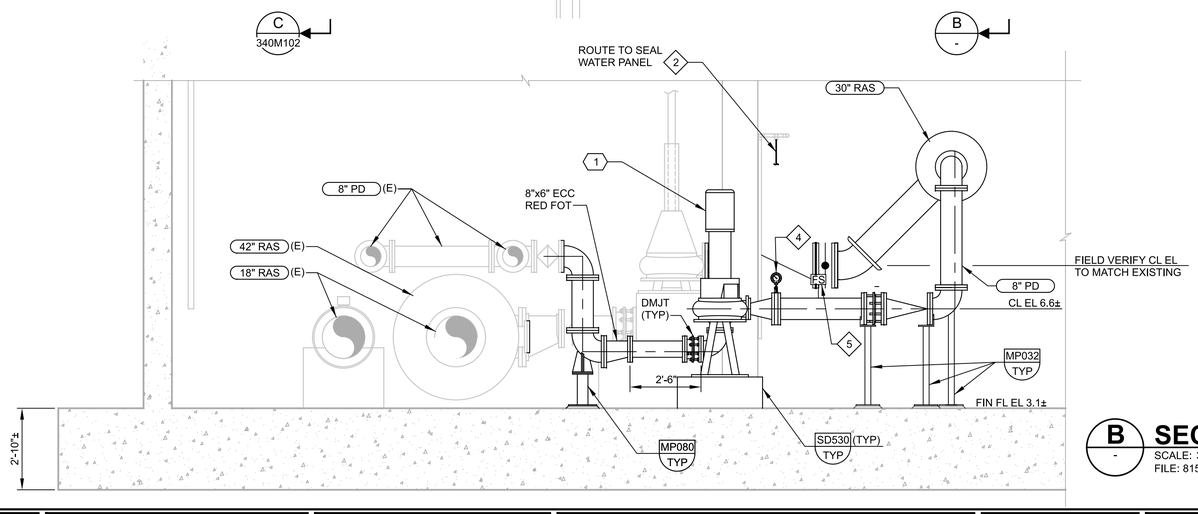

B SECTION

B - SCALE: 3/8" = 1'-0"
FILE: 8153A30340M301

GENERAL NOTES

1. REFER TO THE PROCESS & INSTRUMENTATION DRAWINGS (P&IDS) FOR INSTALLATION DETAILS FOR ALL INSTRUMENTS.

KEY NOTES = (#)

1 PLUG VALVE WITH CHAIN OPERATOR.

2 CONNECT TO EXISTING SEAL WATER.

3 SEAL WATER PIPING EQUIPMENT PER MA301/TYP MOUNTED ON EQUIPMENT STAND 4'-0" AFF PER EM210/TYP.

4 ANNULAR SEAL WITH PRESSURE GAUGE AND SWITCH, SEE INSTRUMENTATION DRAWINGS

5 FLOW SWITCH, SEE INSTRUMENTATION DRAWINGS.

6 RAS PUMPS 1 & 2 ARE DEPICTED FOR REPLACEMENT, HOWEVER, CONTRACTOR MAY REMOVE ANY TWO PUMPS TO FACILITATE CONTRACTOR'S PREFERRED INSTALLATION AND SEQUENCING METHODS. RECONNECT ALL PUMP PIPING AND COMPONENTS TO MATCH EXISTING. SEE SECTION 43_23_31.31 FOR ADDITIONAL REQUIREMENTS.

7 CONNECT TO EXISTING WITH FLEXIBLE COUPLING. COORDINATE COUPLING SIZING WITH EXISTING PIPE DIAMETER.

8 FABRICATE HARNESS RESTRAINT TO MATCH EXISTING AND INSTALL NEW TIE RODS.

KEY TAGS = (#)

1.	SECONDARY CLARIFIER DEWATERING PUMP	P-33088
2.	RAS PUMP NO. 1	P-34011
3.	RAS PUMP NO. 2	P-34012
4.	RAS PUMP NO. 3	P-34013
5.	RAS PUMP NO. 4	P-34014

carollo®

Date	No	Revision	By
	4		
	3		
	2		
	1		

PROJECT ENGINEER MSS
DESIGNED/DRAWN TJW/DL
INSPECTOR CC

DIRECTOR PUBLIC WORKS
CITY ENGINEER
ASSISTANT DIRECTOR

CITY OF BELLINGHAM, WASHINGTON
PUBLIC WORKS DEPARTMENT
ENGINEERING DIVISION

SCALE
Horiz. AS SHOWN
Vert. AS SHOWN

DATUM
H: NAD 83/98
V: NAVD 88

Job. No. EU194
Date JAN 2026
Field Bk.

POST POINT RESOURCE RECOVERY PLANT
MECHANICAL
SECONDARY SLUDGE PUMP STATION LOWER LEVEL PLAN AND SECTION

DRAWING NO. 340M101
SHEET NO. 67 OF 198

CONTACT PERSON: STEPHEN DAY, PE SE , PROJECT ENGINEER AT 360-778-7944

PROJECT NO. 202021-100000 FILE NAME: 202021340M101.dgn

Plot Date: 16-JAN-2026 3:45:30 PM
User: svcPW
Model: Layout1 ColorTable: gshade.ctb DesignScript: Carollo_Std_Pen_v0905.pen PlotScale: 1:1
LAST SAVED BY: lveloz

GENERAL NOTES

1. REFER TO THE PROCESS & INSTRUMENTATION DRAWINGS (P&IDS) FOR INSTALLATION DETAILS FOR ALL INSTRUMENTS.

KEY NOTES = ◇#

1 INSTALL SPACER FLANGE AS REQUIRED TO PERMIT UNOBSTRUCTED OPENING OF ADJACENT VALVES.

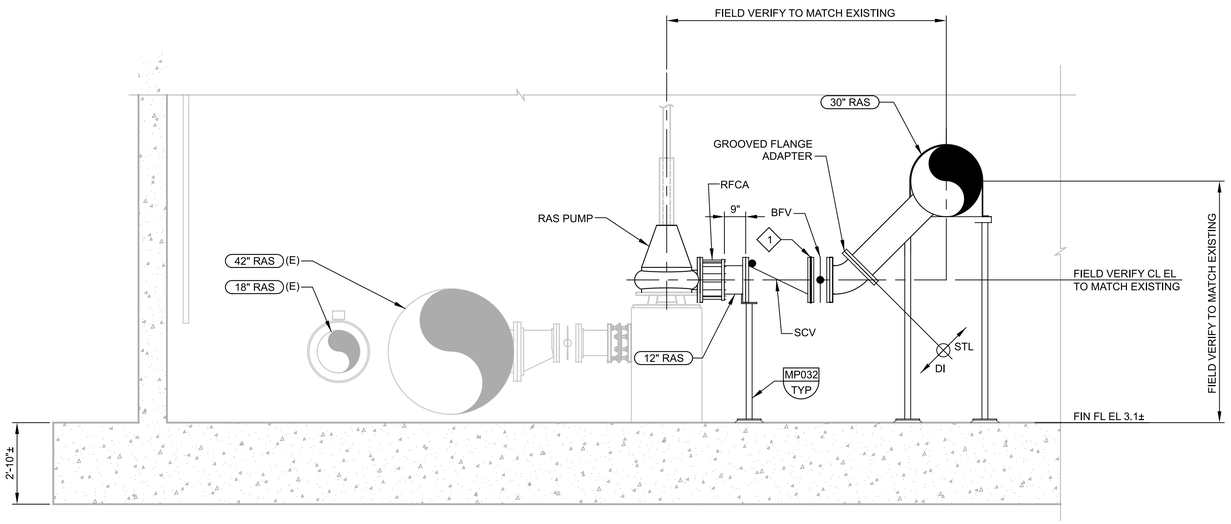

C 340M101 **SECTION**
SCALE: 3/8" = 1'-0"
FILE: 8153A30340M301

carollo®

Date	No	Revision	By
	4		
	3		
	2		
	1		

PROJECT ENGINEER MSS
DESIGNED/DRAWN TJW/DL
INSPECTOR CC

DIRECTOR PUBLIC WORKS
CITY ENGINEER
ASSISTANT DIRECTOR

CITY OF BELLINGHAM, WASHINGTON
PUBLIC WORKS DEPARTMENT
ENGINEERING DIVISION

SCALE
Horiz. AS SHOWN
Vert. AS SHOWN

DATUM
H: NAD 83/98
V: NAVD 88

Job. No. EU194
Date JAN 2026
Field Bk.

POST POINT RESOURCE RECOVERY PLANT
MECHANICAL
SECONDARY SLUDGE PUMP STATION LOWER LEVEL SECTION AND DETAILS

DRAWING NO. 340M102
SHEET NO. 68 OF 198

CONTACT PERSON: STEPHEN DAY, PE SE , PROJECT ENGINEER AT 360-778-7944

PROJECT NO. 202021-100000 FILE NAME: 202021340M102.dgn

Plot Date: 16-JAN-2026 3:45:24 PM User: svcPW Model: Layout1 ColorTable: gshade.ctb DesignScript: Carollo_Std_Pen_v0905.pen PlotScale: 1:1 LAST SAVED BY: lveloz

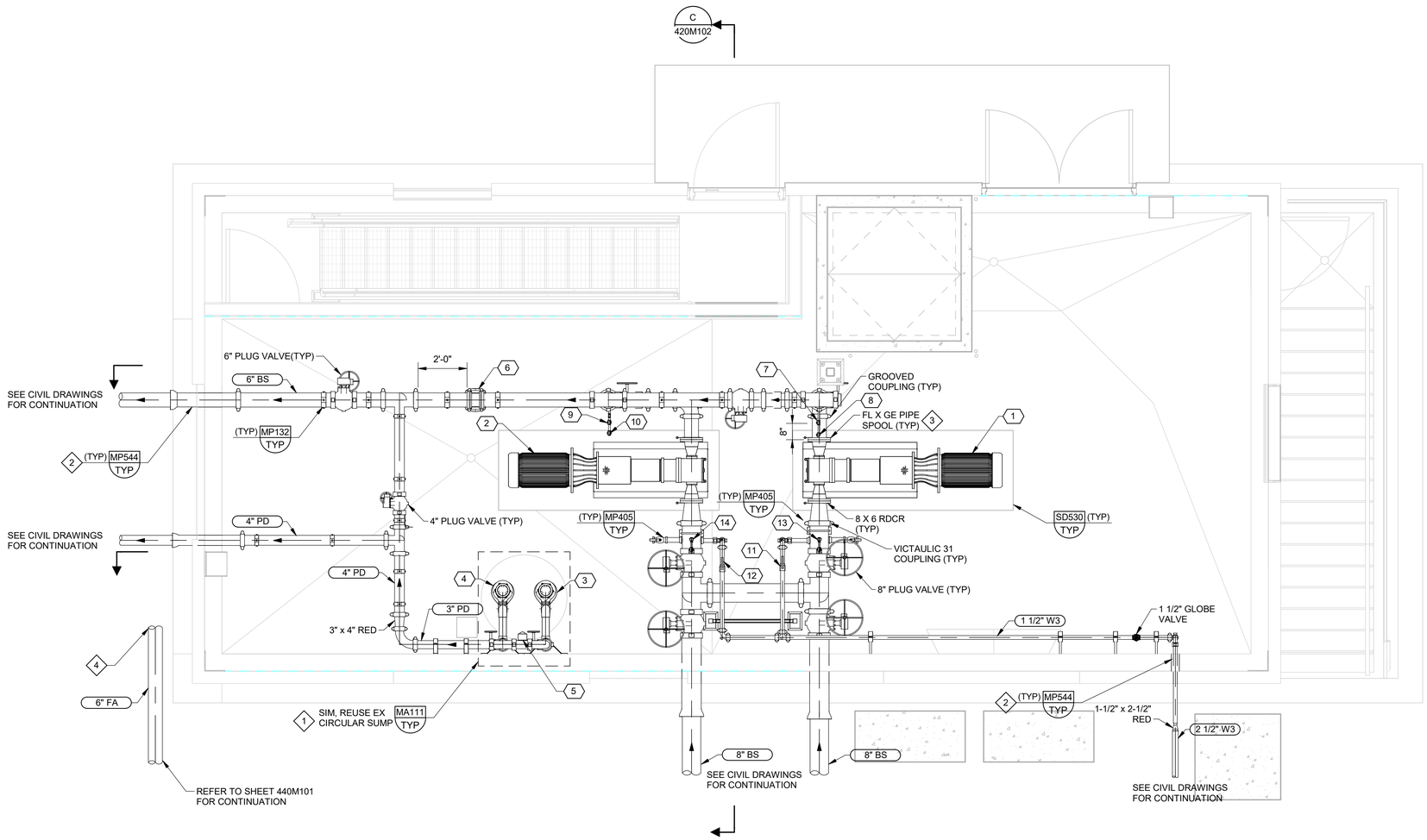

A PLAN

SCALE: 3/8" = 1'-0"

GENERAL NOTES:

1. ALL 90 DEGREE ELBOWS ON BLENDED SLUDGE AND PRIMARY SLUDGE PIPING SHALL BE LONG RADIUS

KEY NOTES:

1. FIELD MEASURE EXISTING SUMP AND CONFIRM PROPOSED PUMPS WILL FIT INTO THE EXISTING SUMP. SUBMIT MEASUREMENTS IN PUMP SUBMITTAL FOR ENGINEER APPROVAL.
2. CORE-DRILL THROUGH WALL. LOCATE CORE DRILL SUCH THAT ONLY A MAXIMUM OF ONE REINFORCEMENT BAR IN EACH DIRECTION IS DAMAGED. LINK-SEAL AROUND PIPE.
3. INSTALL FLANGE/GE SPOOL ON DISCHARGE AND SUCTION SIDE OF PUMP TO ALLOW FOR PUMP REMOVAL.
4. TIE INTO EXISTING PVC ODOR CONTROL PIPING IN APPROXIMATE LOCATION. INSTALL PVC VANSTONE FLANGE ON EXISTING PIPE AND CONNECT TO NEW FRP CIRCULAR DUCT WITH EXPANSION JOINT.

KEY TAGS:

1	P-42001	SLUDGE STORAGE PUMP 1
2	P-42002	SLUDGE STORAGE PUMP 2
3	P-42010	SLUDGE STORAGE SUMP PUMP 1
4	P-42011	SLUDGE STORAGE SUMP PUMP 2
5	LE-42010	LEVEL FLOAT SWITCHES
6	FE-42003	MAGNETIC FLOW METER
7	PE1-42002	PRESSURE SWITCH HIGH
8	PE2-42002	PRESSURE TRANSDUCER
9	PE1-42005	PRESSURE SWITCH HIGH
10	PE2-42005	PRESSURE TRANSDUCER
11	SV-42001	SOLENOID VALVE
12	SV-42002	SOLENOID VALVE
13	PE-42001	PRESSURE SWITCH LOW
14	PE-42004	PRESSURE SWITCH LOW

VERIFY SCALES

BAR IS ONE INCH ON ORIGINAL DRAWING

0 1"

IF NOT ONE INCH ON THIS SHEET, ADJUST SCALES ACCORDINGLY

MATTHEW SCOTT SPRICK
STATE OF WASHINGTON
29659
REGISTERED PROFESSIONAL ENGINEER

carollo®

PLOT DATE: 6/25/2026 1:09:06 PM

Date	No	Revision	By

PROJECT ENGINEER MSS
DESIGNED/DRAWN NJ/DJL
INSPECTOR CC

DIRECTOR PUBLIC WORKS MAO
CITY ENGINEER MLW
ASSISTANT DIRECTOR MAO

CITY OF BELLINGHAM, WASHINGTON
PUBLIC WORKS DEPARTMENT
ENGINEERING DIVISION

SCALE
Horiz. AS SHOWN
Vert. AS SHOWN

DATUM
H: NAD 83/98
V: NAVD 88

Job. No. EU194
Date JAN 2026
Field Bk.

POST POINT RESOURCE RECOVERY PLANT
MECHANICAL
SLUDGE STORAGE BUILDING LOWER LEVEL PLAN

DRAWING NO. 420M101
SHEET NO. 69 OF 198

CONTACT PERSON: STEPHEN DAY, PE SE , PROJECT ENGINEER AT 360-778-7944 FILE NAME: Autodesk Docs://Bellingham 202021-100000 Primary Sludge Tank Replacement/202021420M9801.rvt

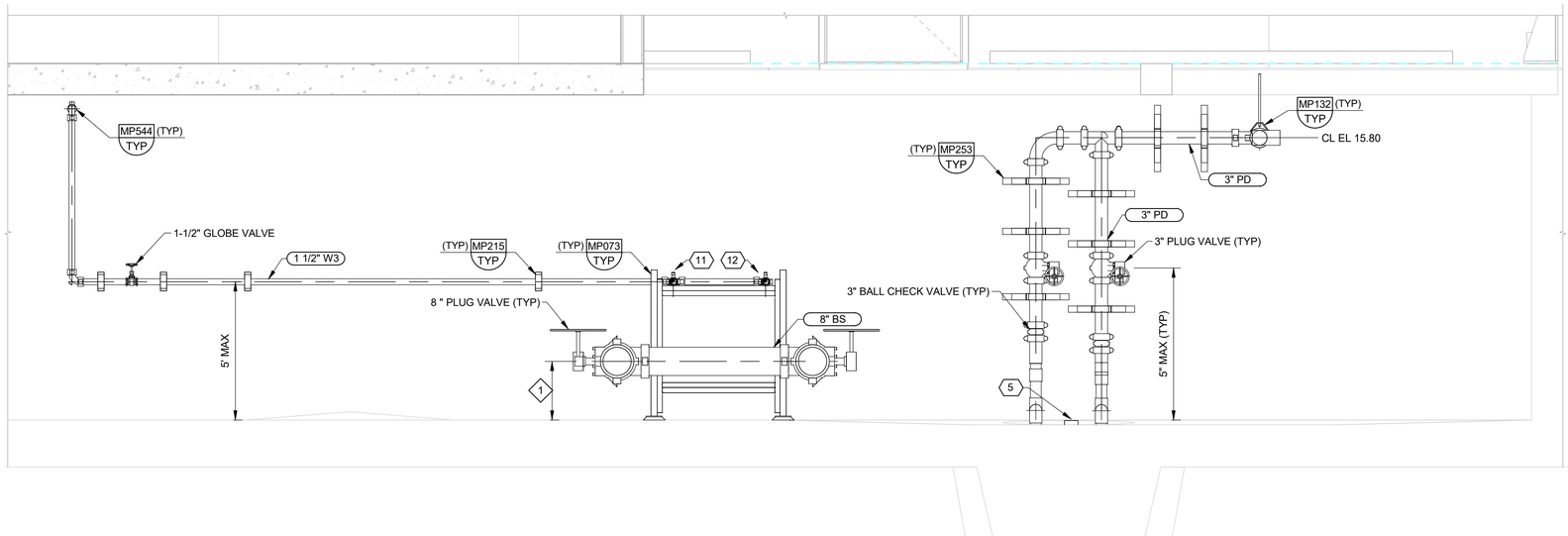

B SECTION
420M101
SCALE: 1/2" = 1'-0"

GENERAL NOTES:

1. ALL 90 DEGREE ELBOWS ON BLENDED SLUDGE AND PRIMARY SLUDGE PIPING SHALL BE LONG RADIUS

KEY NOTES:

1. PIPE ELEVATION TO BE COORDINATED WITH PUMP MANUFACTURER. PIPE CENTER MUST BE A MINIMUM OF 15 INCH FROM FINISHED FLOOR.

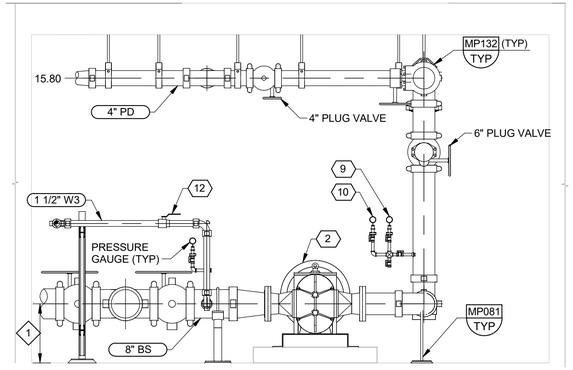

C SECTION
420M101
SCALE: 1/2" = 1'-0"

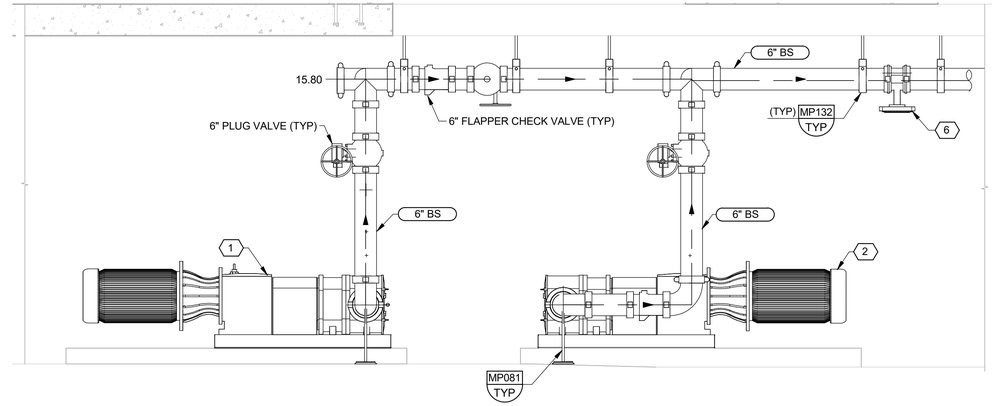

D SECTION
420M101
SCALE: 1/2" = 1'-0"

VERIFY SCALES

BAR IS ONE INCH ON ORIGINAL DRAWING

0 1"

IF NOT ONE INCH ON THIS SHEET, ADJUST SCALES ACCORDINGLY

MATTHEW SCOTT SPRICK
STATE OF WASHINGTON
29659
REGISTERED
PROFESSIONAL ENGINEER

carollo®

PLOT DATE: 6/25/2026 1:08:23 PM

Date	No	Revision	By

PROJECT ENGINEER MSS
DESIGNED/DRAWN NJ/DL
INSPECTOR CC

DIRECTOR PUBLIC WORKS MAO
CITY ENGINEER MLW
ASSISTANT DIRECTOR MAO

CITY OF BELLINGHAM, WASHINGTON
PUBLIC WORKS DEPARTMENT
ENGINEERING DIVISION

SCALE
Horiz. AS SHOWN
Vert. AS SHOWN

DATUM
H: NAD 83/98
V: NAVD 88

Job. No. EU194
Date JAN 2026
Field Bk.

POST POINT RESOURCE RECOVERY PLANT
MECHANICAL
SLUDGE STORAGE BUILDING SECTIONS

DRAWING NO. 420M102
SHEET NO. 70 OF 198

CONTACT PERSON: STEPHEN DAY, PE SE , PROJECT ENGINEER AT 360-778-7944 FILE NAME: Autodesk Docs://Bellingham 202021-100000 Primary Sludge Tank Replacement/202021420M9801.rvt

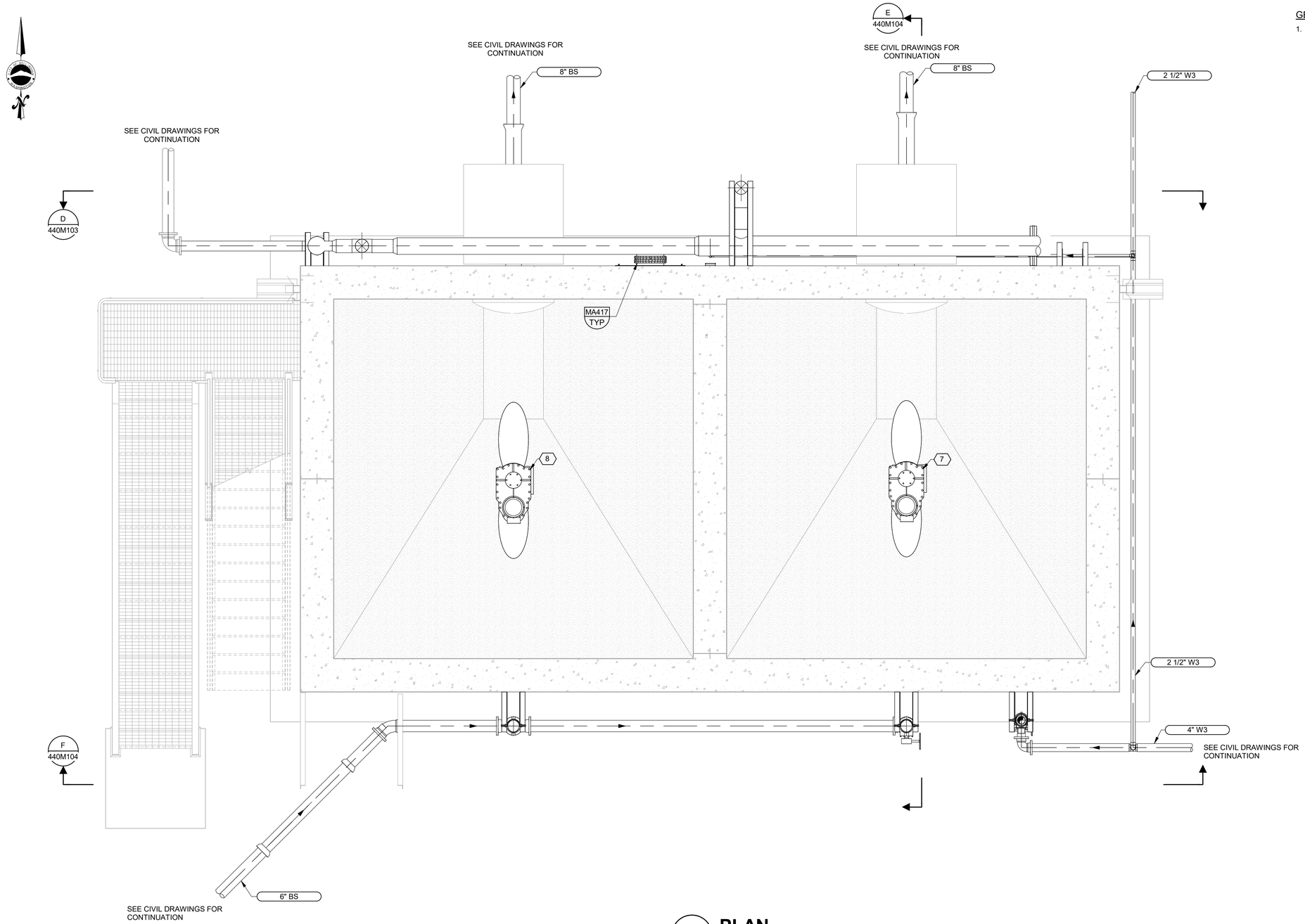

A **PLAN**
SCALE: 3/8" = 1'-0"

GENERAL NOTES:

1. ALL 90 DEGREE ELBOWS ON BLENDED SLUDGE AND PRIMARY SLUDGE PIPING SHALL BE LONG RADIUS

VERIFY SCALES

BAR IS ONE INCH ON ORIGINAL DRAWING

0 1"

IF NOT ONE INCH ON THIS SHEET, ADJUST SCALES ACCORDINGLY

MATTHEW SCOTT SPRICK
STATE OF WASHINGTON
29659
REGISTERED PROFESSIONAL ENGINEER

carollo®

PLOT DATE: 6/25/2026 1:13:49 PM

Date	No	Revision	By

PROJECT ENGINEER MSS
DESIGNED/DRAWN NJ/DJL
INSPECTOR CC

DIRECTOR PUBLIC WORKS MAO
CITY ENGINEER MLW
ASSISTANT DIRECTOR MAO

CITY OF BELLINGHAM, WASHINGTON
PUBLIC WORKS DEPARTMENT
ENGINEERING DIVISION

SCALE
Horiz. AS SHOWN
Vert. AS SHOWN

DATUM
H: NAD 83/98
V: NAVD 88

Job. No. EU194
Date AUG 2025
Field Bk.

POST POINT RESOURCE RECOVERY PLANT
MECHANICAL
SLUDGE STORAGE TANKS BOTTOM PLAN

DRAWING NO. 440M101
SHEET NO. 71 OF 198

CONTACT PERSON: STEPHEN DAY, PE SE , PROJECT ENGINEER AT 360-778-7944 FILE NAME: Autodesk Docs://Bellingham 202021-100000 Primary Sludge Tank Replacement/202021440M9801.rvt

KEY TAGS:

#		
1	LIT-44001	LEVEL TRANSDUCER
2	LIT-44002	LEVEL TRANSDUCER
3	LIT-44005	LEVEL TRANSDUCER
4	LIT-44006	LEVEL TRANSDUCER
5	SV-44001	SOLENOID VALVE
6	SV-44005	SOLENOID VALVE
7	MIX-44001	SLUDGE STORAGE TANK MIXER 1
8	MIX-44005	SLUDGE STORAGE TANK MIXER 2

GENERAL NOTES:

1. ALL 90 DEGREE ELBOWS ON BLENDED SLUDGE AND PRIMARY SLUDGE PIPING SHALL BE LONG RADIUS
2. ELEVATED SLAB PENETRATIONS FOR DUCT AND PIPE SHALL BE PER DETAIL MP514/TYP.
3. INSULATE AND HEAT TRACE ALL EXPOSED W3 AND BS PIPING

KEY NOTES:

1. PROVIDE OPENING IN WALL WITH SONO TUBE OR EQUIVALENT TO ALLOW FO PIPE PENETRATION.
2. CENTER MIXER IMPELLER IN CENTER OF RESPECTIVE TANK
3. ELBOW PIPE/DUCT INTO TANK AND TERMINATE PIPE/DUCT 4-INCH BELOW UNDERSIDE OF TANK TOP SLAB.
4. 1-INCH BOSS TAP ON ELBOW. CONNECT W3 PIPING TO BOSS.
5. ROUTE 1-INCH W3 FLUSH PIPE FROM W3 HEADER AND SUPPORT PER DETAIL MP253/TYP.

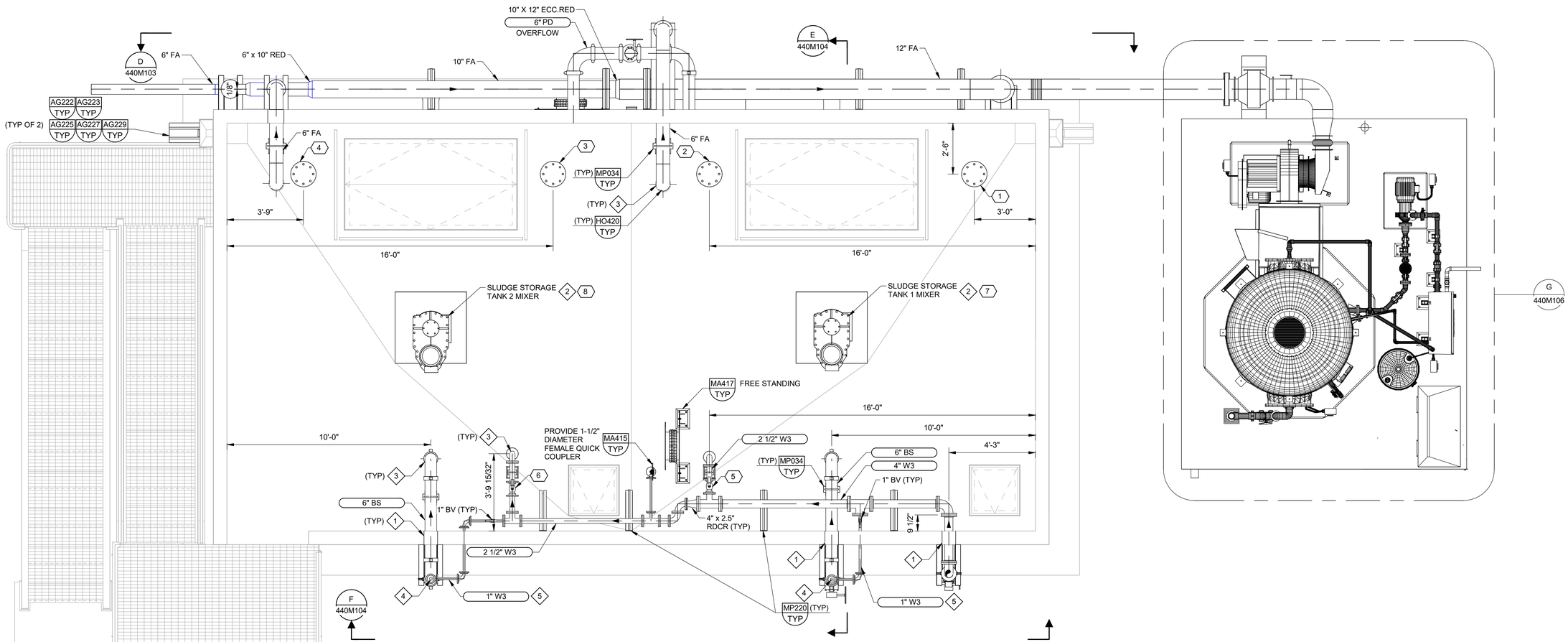

B PLAN

SCALE: 3/8" = 1'-0"

VERIFY SCALES

BAR IS ONE INCH ON ORIGINAL DRAWING

0 1"

IF NOT ONE INCH ON THIS SHEET, ADJUST SCALES ACCORDINGLY

MATTHEW SCOTT SPRICK
STATE OF WASHINGTON
29658
REGISTERED PROFESSIONAL ENGINEER

PLOT DATE: 6/25/2026 1:14:34 PM

carollo

Date	No	Revision	By

PROJECT ENGINEER	MS
DESIGNED/DRAWN	NJ/DJL
INSPECTOR	JW

DIRECTOR PUBLIC WORKS	MAO
CITY ENGINEER	MLW
ASSISTANT DIRECTOR	MAO

CITY OF BELLINGHAM, WASHINGTON
PUBLIC WORKS DEPARTMENT
ENGINEERING DIVISION

SCALE
Horiz. AS SHOWN
Vert. AS SHOWN

DATUM
H: NAD 83/98
V: NAVD 88

Job. No. EU194
Date AUG 2025
Field Bk.

POST POINT RESOURCE RECOVERY PLANT

MECHANICAL
SLUDGE STORAGE TANKS TOP PLAN

DRAWING NO. 440M102
SHEET NO. 72 OF 198

CONTACT PERSON: STEPHEN DAY, PE SE , PROJECT ENGINEER AT 360-778-7944 FILE NAME: Autodesk Docs://Bellingham 202021-100000 Primary Sludge Tank Replacement/202021440M9801.rvt

GENERAL NOTES:

1. ALL 90 DEGREE ELBOWS ON BLENDED SLUDGE AND PRIMARY SLUDGE PIPING SHALL BE LONG RADIUS
2. INSULATE AND HEAT TRACE ALL EXPOSED W3 AND BS PIPING

KEY NOTES:

1. INSTALL 42 INCH DIAMETER 316L STAINLESS STEEL WATER TIGHT MANWAY WITH BUNA-N GASKET. MODEL CM1 BY CHASE ASSOCIATED OR EQUAL

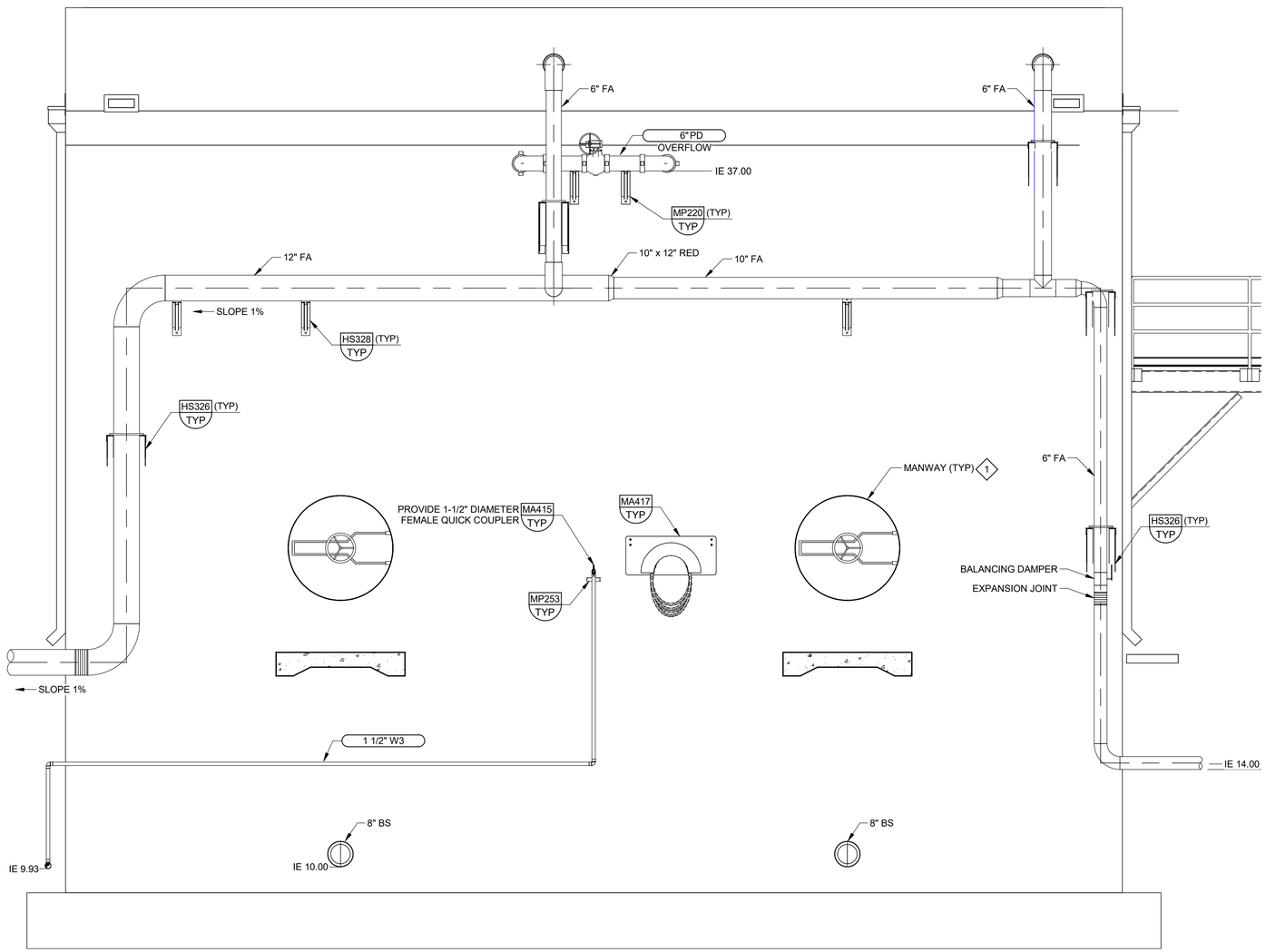

D 440M101 SECTION

SCALE: 3/8" = 1'-0"

VERIFY SCALES

BAR IS ONE INCH ON ORIGINAL DRAWING

0 1"

IF NOT ONE INCH ON THIS SHEET, ADJUST SCALES ACCORDINGLY

STEPHEN SCOTT SPRICK
STATE OF WASHINGTON
29659
REGISTERED PROFESSIONAL ENGINEER

PLOT DATE: 6/25/2026 1:15:14 PM

carollo®

Date	No	Revision	By

PROJECT ENGINEER	MSS
DESIGNED/DRAWN	NJ / DL
INSPECTOR	CC
DIRECTOR PUBLIC WORKS	MAO
CITY ENGINEER	MLW
ASSISTANT DIRECTOR	MAO

CITY OF BELLINGHAM, WASHINGTON
PUBLIC WORKS DEPARTMENT
ENGINEERING DIVISION

SCALE: Horiz. AS SHOWN; Vert. AS SHOWN

DATUM: H: NAD 83/98; V: NAVD 88

Job. No. EU194
Date AUG 2025
Field Bk.

POST POINT RESOURCE RECOVERY PLANT
MECHANICAL
SLUDGE STORAGE TANKS SECTION 1

DRAWING NO. 440M103
SHEET NO. 73 OF 198

CONTACT PERSON: STEPHEN DAY, PE SE , PROJECT ENGINEER AT 360-778-7944

FILE NAME: Autodesk Docs://Bellingham 202021-100000 Primary Sludge Tank Replacement/202021440M9801.rvt

GENERAL NOTES:

1. ALL 90 DEGREE ELBOWS ON BLENDED SLUDGE AND PRIMARY SLUDGE PIPING SHALL BE LONG RADIUS
2. ELEVATED SLAB PENETRATIONS FOR DUCT AND PIPE SHALL BE PER DETAIL MP514/TYP.
3. INSULATE AND HEAT TRACE ALL EXPOSED W 3 PIPING

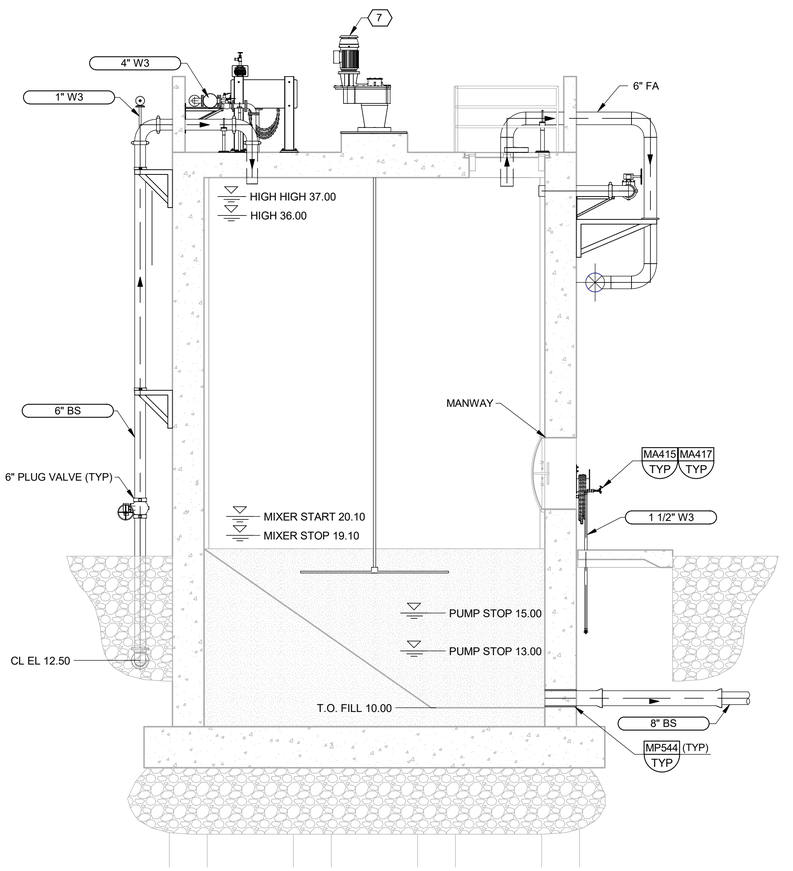

E 440M101 **SECTION**
SCALE: 1/4" = 1'-0"

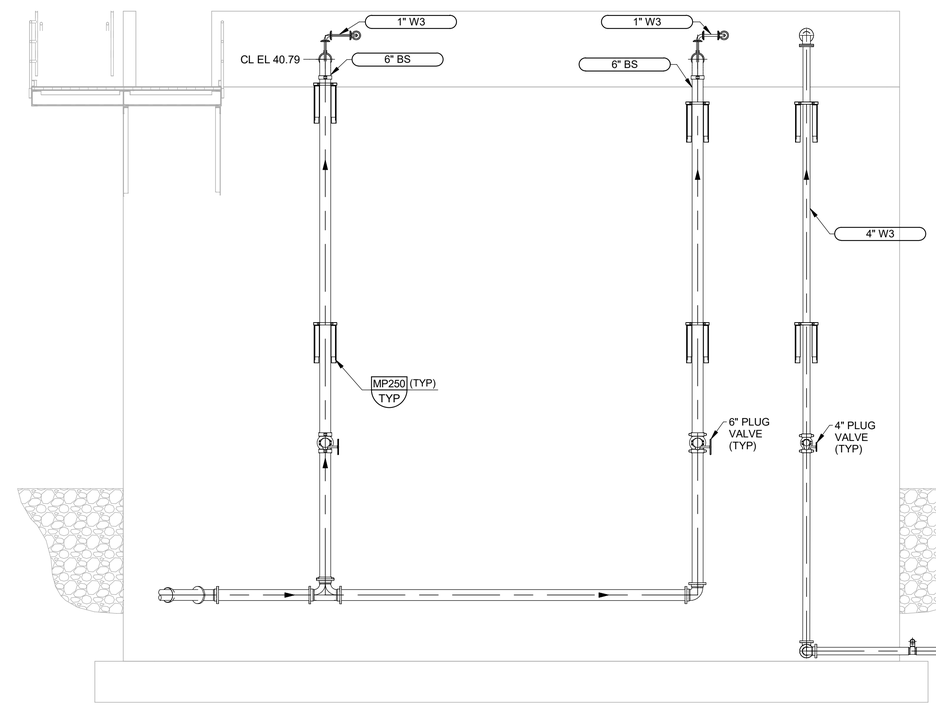

F 440M101 **SECTION**
SCALE: 1/4" = 1'-0"

VERIFY SCALES
BAR IS ONE INCH ON ORIGINAL DRAWING
0 1"
IF NOT ONE INCH ON THIS SHEET, ADJUST SCALES ACCORDINGLY

MATTHEW SCOTT SPRICK
STATE OF WASHINGTON
29659
REGISTERED PROFESSIONAL ENGINEER

PLOT DATE: 6/25/2026 1:15:51 PM

carollo®

Date	No	Revision	By

PROJECT ENGINEER MSS
DESIGNED/DRAWN NJ/DJL
INSPECTOR CC

DIRECTOR PUBLIC WORKS MAO
CITY ENGINEER MLW
ASSISTANT DIRECTOR MAO

CITY OF BELLINGHAM, WASHINGTON
PUBLIC WORKS DEPARTMENT
ENGINEERING DIVISION

SCALE
Horiz. AS SHOWN
Vert. AS SHOWN

DATUM
H: NAD 83/98
V: NAVD 88

Job. No. EU194
Date AUG 2025
Field Bk.

POST POINT RESOURCE RECOVERY PLANT
MECHANICAL
SLUDGE STORAGE TANKS SECTIONS 2

DRAWING NO. 440M104
SHEET NO. 74 OF 198

CONTACT PERSON: STEPHEN DAY, PE SE , PROJECT ENGINEER AT 360-778-7944 FILE NAME: Autodesk Docs://Bellingham 202021-100000 Primary Sludge Tank Replacement/202021440M9801.rvt

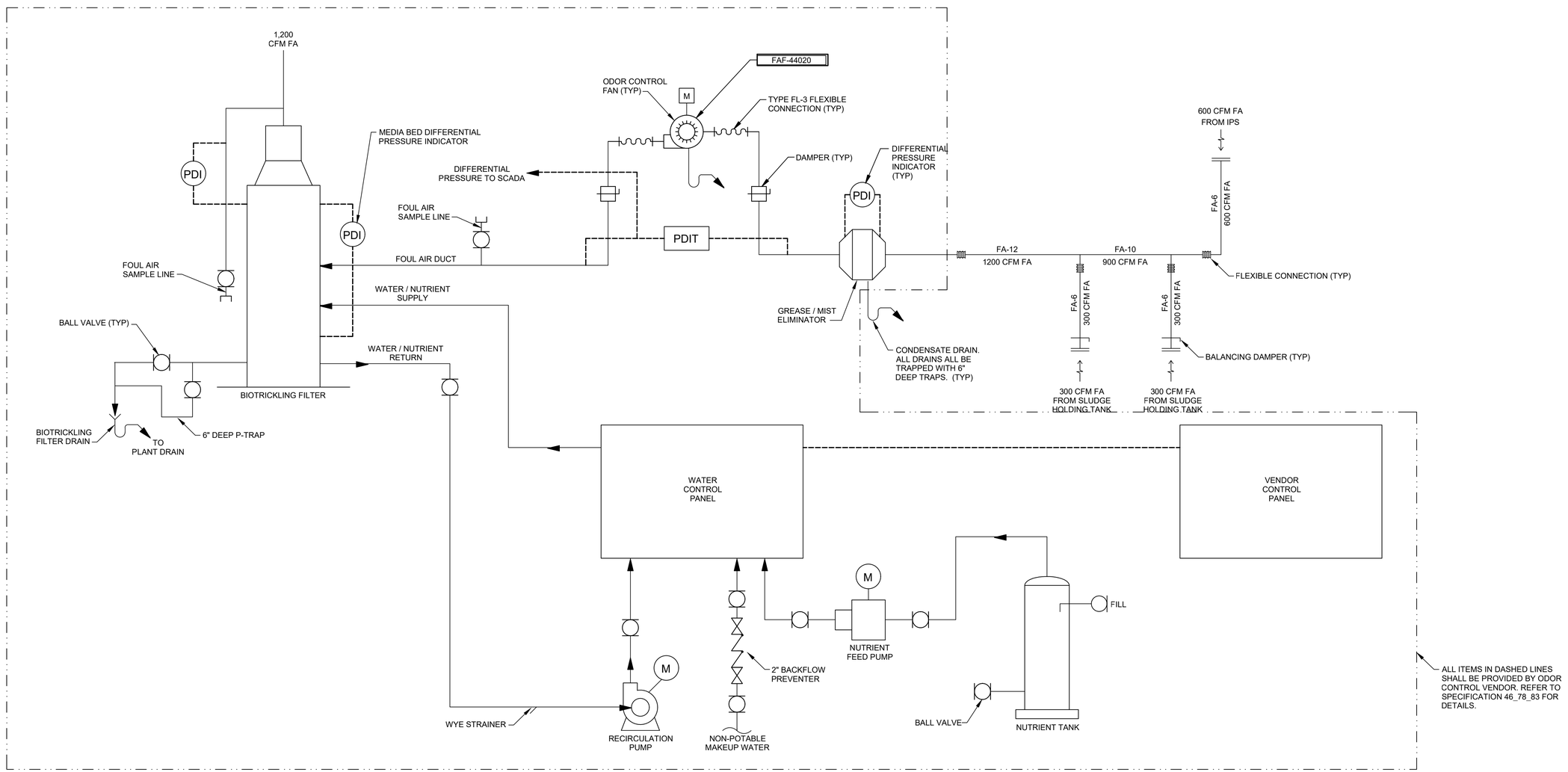

carollo®

Date	No	Revision	By
	4		
	3		
	2		
	1		

PROJECT ENGINEER MSS
DESIGNED/DRAWN MSS/SCR
INSPECTOR CC

DIRECTOR PUBLIC WORKS
CITY ENGINEER
ASSISTANT DIRECTOR

CITY OF BELLINGHAM, WASHINGTON
PUBLIC WORKS DEPARTMENT
ENGINEERING DIVISION

SCALE
Horiz. AS SHOWN
Vert. AS SHOWN

DATUM
H: NAD 83/98
V: NAVD 88

Job. No. EU194
Date JAN 2026
Field Bk.

POST POINT RESOURCE RECOVERY PLANT
MECHANICAL
SLUDGE STORAGE TANKS ODOR CONTROL SCHEMATIC

DRAWING NO. 440M105
SHEET NO. 75 OF 198

CONTACT PERSON: STEPHEN DAY, PE SE , PROJECT ENGINEER AT 360-778-7944

PROJECT NO. 202021-100000 FILE NAME: 202021_440M105.dwg

LAST SAVED BY: lveloz

1/22/2026 2:09:39 PM

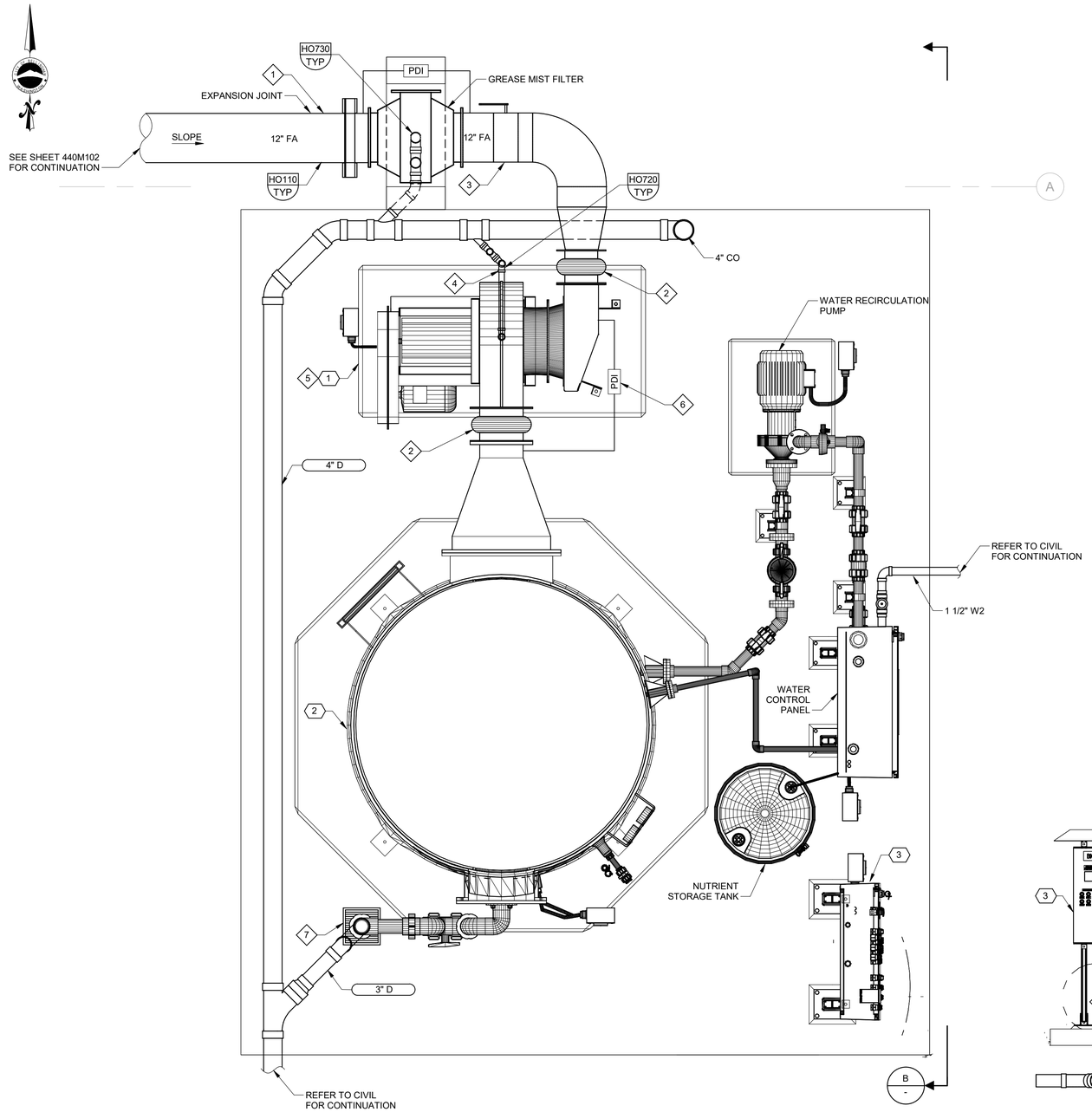

A PLAN
SCALE: 3/4" = 1'-0"

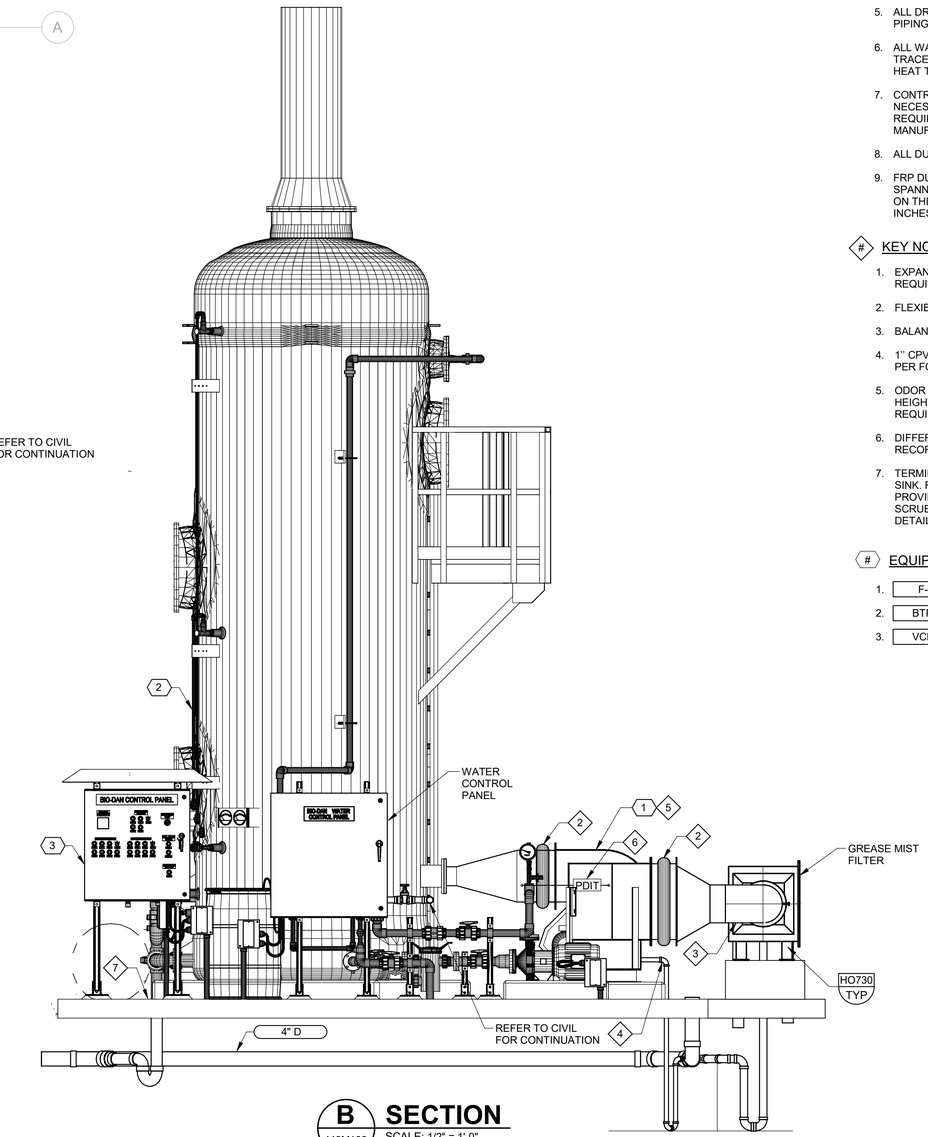

B 440M106 SECTION
SCALE: 1/2" = 1'-0"

GENERAL NOTES:

1. COORDINATE FINAL ODOR CONTROL SYSTEM DIMENSIONS WITH THE SELECTED EQUIPMENT MANUFACTURER. ANY MODIFICATIONS TO THE LAYOUT OF THE SYSTEM SHALL BE INCLUDED AT NO ADDITIONAL COST TO THE OWNER.
2. REFER TO SITE PLANS FOR FOUL AIR (FA) DUCT AND DRAIN CONTINUATION.
3. SLOPE FRP DUCT AT A MINIMUM OF 1/8'' PER FOOT IN THE DIRECTION INDICATED.
4. REFER TO SECTION 46_78_83 FOR MORE INFORMATION ON THE BIOTRICKLING FILTER ODOR CONTROL SYSTEM.
5. ALL DRAIN PIPING SHALL BE CPVC. PROVIDE INSULATION FOR ALL PIPING PER SPECIFICATION 23_05_00.
6. ALL WATER PIPING AND EXPOSED DRAIN PIPING SHALL BE HEAT TRACED AND INSULATED. REFER TO ELECTRICAL DRAWINGS FOR HEAT TRACING INFORMATION.
7. CONTRACTOR SHALL ROUTE WATER (NPW) LOOP AND PROVIDE NECESSARY CONNECTION TO THE ODOR CONTROL SYSTEM AS REQUIRED BY THE MANUFACTURER. COORDINATE WITH THE MANUFACTURER FOR THE PLANT WATER REQUIREMENTS.
8. ALL DUCTWORK SHALL BE FRP.
9. FRP DUCT MANUFACTURER SHALL DESIGN FRP DUCT LENGTHS SPANNING BETWEEN TRUSSES TO SPAN DISTANCES AS SHOWN ON THE DRAWINGS WITH A DEFLECTION OF LESS THAN 0.5 INCHES. REFER TO SECTION 23_31_17 FOR REQUIREMENTS.

KEY NOTES:

1. EXPANSION JOINT. REFER TO SPECIFICATION 46_78_83 FOR REQUIREMENTS.
2. FLEXIBLE CONNECTION (FL-3).
3. BALANCING DAMPER (BD-14).
4. 1'' CPVC CONDENSATE DRAIN FROM FAN. SLOPE DRAIN AT ¼'' PER FOOT IN THE DIRECTION OF FLOW.
5. ODOR CONTROL FAN LOCATED ON CONCRETE EQUIPMENT PAD. HEIGHT OF PAD PER ODOR CONTROL SYSTEM MANUFACTURER REQUIREMENTS.
6. DIFFERENTIAL PRESSURE TRANSMITTER. TRANSMITTER SHALL RECORD DIFFERENTIAL PRESSURE ACROSS FANS.
7. TERMINATE 3'' CPVC DRAIN PIPE AT 3'' ABOVE 12''x12'' FLOOR SINK. FLOOR SINK SHALL BE ZURN ZN1900-HD-6 WITH 6'' FUNNEL. PROVIDE 6'' DEEP P-TRAP ON CPVC DRAIN PIPE OUT OF SCRUBBER WITH BYPASS. REFER TO SCHEMATIC FOR FURTHER DETAIL.

EQUIPMENT TAGS:

1.	F-44020	FOUL AIR FAN
2.	BTF-44020	BIOTRICKLING FILTER
3.	VCP-44020	VENDOR CONTROL PANEL

VERIFY SCALES

BAR IS ONE INCH ON ORIGINAL DRAWING

0 1"

IF NOT ONE INCH ON THIS SHEET, ADJUST SCALES ACCORDINGLY

CHAD GREEN — STATE OF WASHINGTON — 53635 — REGISTERED PROFESSIONAL ENGINEER

carollo®

PLOT DATE: 6/26/2026 2:42:42 PM

Date	No	Revision	By

PROJECT ENGINEER	SAW
DESIGNED/DRAWN	JKA
INSPECTOR	CAG
DIRECTOR PUBLIC WORKS	MAO
CITY ENGINEER	MLW
ASSISTANT DIRECTOR	MAO

CITY OF BELLINGHAM, WASHINGTON
PUBLIC WORKS DEPARTMENT
ENGINEERING DIVISION

SCALE: Horiz. AS SHOWN; Vert. AS SHOWN

DATUM: H: NAD 83/98; V: NAVD 88

Job. No. EU194
Date JAN 2026
Field Bk.

POST POINT RESOURCE RECOVERY PLANT
PLUMBING
SLUDGE STORAGE TANKS ODOR CONTROL PLAN

DRAWING NO. 440M106
SHEET NO. 76 OF 198

CONTACT PERSON: STEPHEN DAY, PE SE , PROJECT ENGINEER AT 360-778-7944 FILE NAME: Autodesk Docs://Bellingham 202021-100000 Primary Sludge Tank Replacement/202021440H0801.rvt

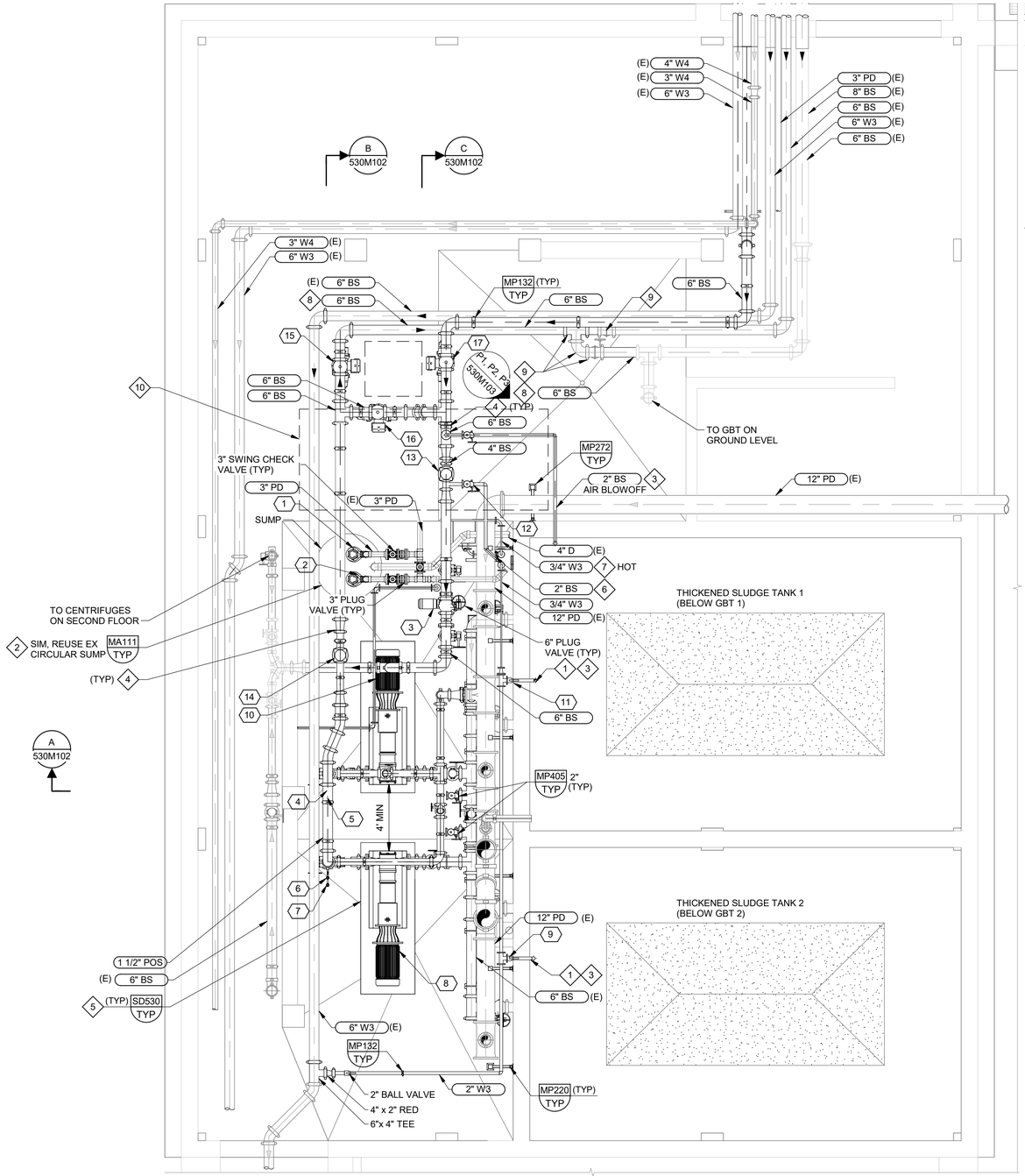

A PLAN
SCALE: 1/4" = 1'-0"

GENERAL NOTES:

1. ALL 90 DEGREE ELBOWS ON BLENDED SLUDGE AND PRIMARY SLUDGE PIPING SHALL BE LONG RADIUS

KEY NOTES:

1. ROUTE WATER PIPING INTO TANK EQUAL DISTANCE BETWEEN OUTLET PIPES. INSTALL WITH ELBOW AND TRUE WYE TO DIRECT SPRAY AT OUTLETS.
2. FIELD MEASURE EXISTING SUMP AND CONFIRM PROPOSED PUMPS WILL FIT INTO THE EXISTING SUMP. SUBMIT MEASUREMENTS IN PUMP SUBMITTAL FOR ENGINEER APPROVAL.
3. CORE-DRILL THROUGH WALL. LOCATE CORE DRILL SUCH THAT A MAXIMUM OF ONE REINFORCEMENT BAR IN EACH DIRECTION IS DAMAGED. LINK SEAL AROUND PIPE.
4. 4" x 6" ECCENTRIC REDUCER.
5. FIELD LOCATE PUMP TO AVOID IMPACTING AREA DRAIN WITH PUMP EQUIPMENT PAD. SUBMIT PROPOSED LOCATION TO ENGINEER FOR APPROVAL.
6. SUPPLY REDUCER WITH FLANGED BOSS TAP. CONNECT BS PIPE FOR SAMPLING.
7. INSULATE HEATED W3 PIPING.
8. PRIOR TO PROCURING NEW PIPE, DETERMINE RELOCATION OF EXISTING TEE AND ASSEMBLY PER KEYNOTE 9.
9. RELOCATE TEE, ELBOW, AND VALVES TO APPROXIMATE LOCATION SHOWN.
10. HYDRAULIC POWER UNITS, LOCATED ON FLOOR IN THIS AREA, ARE NOT SHOWN FOR CLARITY. TO ROUTE THE BS PIPE AS SHOWN, THE FOLLOWING FIELD ADJUSTMENT OF PIPING AND CONDUITS SHOULD BE ASSUMED:

    1X 2 INCH CONDUIT
    1X 3 INCH GBT 2 BELT WASH PVC PIPING AND PRESSURE REDUCER ASSEMBLY
    3X 1-INCH HPU HYDRAULIC PIPING
    1X 1-INCH HP WATER PIPING

KEY TAGS:

1	P-53020	SUMP PUMP 1
2	P-53021	SUMP PUMP 2
3	MIX-53012	INLINE POLYMER MIXER
4	PE1- 53061	PRESSURE SWITCH HIGH
5	PE2- 53061	PRESSURE TRANSMITTER
6	PE1- 53062	PRESSURE SWITCH HIGH
7	PE1- 53062	PRESSURE TRANSMITTER
8	P-53062	THICKENED SLUDGE PUMP 2
9	SV-53002	SOLENOID VALVE
10	P-53061	THICKENED SLUDGE PUMP 1
11	SV-53001	SOLENOID VALVE
12	EDR-53010	TSL SAMPLE VALVE
13	AE-53011	SLUDGE DENSITY METER
14	FE-53013	MAGNETIC FLOW METER
15	EDR-53015	SST FEED VALVE
16	EDR-53014	SST BYPASS VALVE
17	EDR-53016	SST RETURN VALVE

VERIFY SCALES
BAR IS ONE INCH ON ORIGINAL DRAWING
0 1"
IF NOT ONE INCH ON THIS SHEET, ADJUST SCALES ACCORDINGLY

MATTHEW SCOTT SPRICK, STATE OF WASHINGTON, 29659, REGISTERED PROFESSIONAL ENGINEER

carollo

PLOT DATE: 6/25/2026 1:34:36 PM

Date	No	Revision	By

PROJECT ENGINEER	MSS
DESIGNED/DRAWN	DJL
INSPECTOR	CC
DIRECTOR PUBLIC WORKS	MAO
CITY ENGINEER	MLW
ASSISTANT DIRECTOR	MAO

CITY OF BELLINGHAM, WASHINGTON
PUBLIC WORKS DEPARTMENT
ENGINEERING DIVISION

SCALE: Horiz. AS SHOWN; Vert. AS SHOWN
DATUM: H: NAD 83/98; V: NAVD 88
Job. No. EU194; Date AUG 2025; Field Bk.

POST POINT RESOURCE RECOVERY PLANT
MECHANICAL
SOLIDS HANDLING BUILDING EAST BASEMENT PLAN

DRAWING NO. 530M101
SHEET NO. 77 OF 198

CONTACT PERSON: STEPHEN DAY, PE SE , PROJECT ENGINEER AT 360-778-7944 FILE NAME: Autodesk Docs://Bellingham 202021-100000 Primary Sludge Tank Replacement/202021530M9801.rvt

GENERAL NOTES:

1. ALL 90 DEGREE ELBOWS ON BLENDED SLUDGE AND PRIMARY SLUDGE PIPING SHALL BE LONG RADIUS

KEY NOTES:

1. TOP BRANCH OF TEE MUST HAVE A TAPPED BLIND FLANGE/GROOVED END ASSEMBLY. ATTACH 2-INCH BS PIPE AS SHOWN TO TAPPED FLANGE TO ALLOW FOR AIR VENTING
2. INSTALL DRAIN ON BOTTOM OF PIPE.
3. INSTALL BLOWOFF LINE WITH 2-INCH PLUG VALVE.
4. INSTALL SOLENOID VALVE NEAR WALL AND CONNECT VALVE TO FLUSHING CONNECTION OF DENSITY METER WITH REINFORCED FLEXIBLE TUBING.
5. FIELD LOCATE 10-GALLON 1.5kW, 120V WATER HEATER. RHEEM OR EQUIVALENT. MOUNT TANK ON FLOOR IN SPILL TRAY. SECURE TANK TO WALL WITH SEISMIC STRAPS. COORDINATE PIPING CONNECTION WITH TANK PROCURED. COORDINATE LOCATION WITH OWNER
6. INLINE Y STRAINER
7. PER PUMP MANUFACTURER
8. INSULATE HEATED W3 PIPING.
9. INLINE 5 MICRON FILTER.
10. PROVIDED BY DENSITY METER MANUFACTURER
11. ROUTE BS SAMPLE PIPING ALONG WALL AS SHOWN AND FIELD TERMINATE IN A LOCATION AND HEIGHT DETERMINED BY OWNER TO FACILITATE EASY SAMPLING. TERMINATE SAMPLE WITH ANGLED GATE VALVE SIMILAR TO A HOSE BIBB. COORDINATE ROUTE WITH OWNER.
12. INSTALL FLANGE/GE SPOOL ON DISCHARGE AND SUCTION SIDE OF PUMP TO ALLOW FOR PUMP REMOVAL.
13. COORDINATE CONNECTION SIZE, TYPE AND EXTRACT LOCATION WITH POLYMER MIXER PROVIDED.

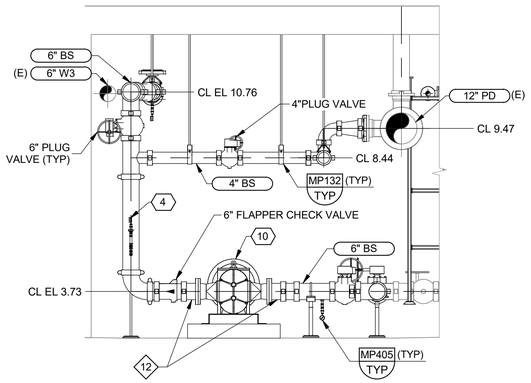

A SECTION 530M101
SCALE: 3/8" = 1'-0"

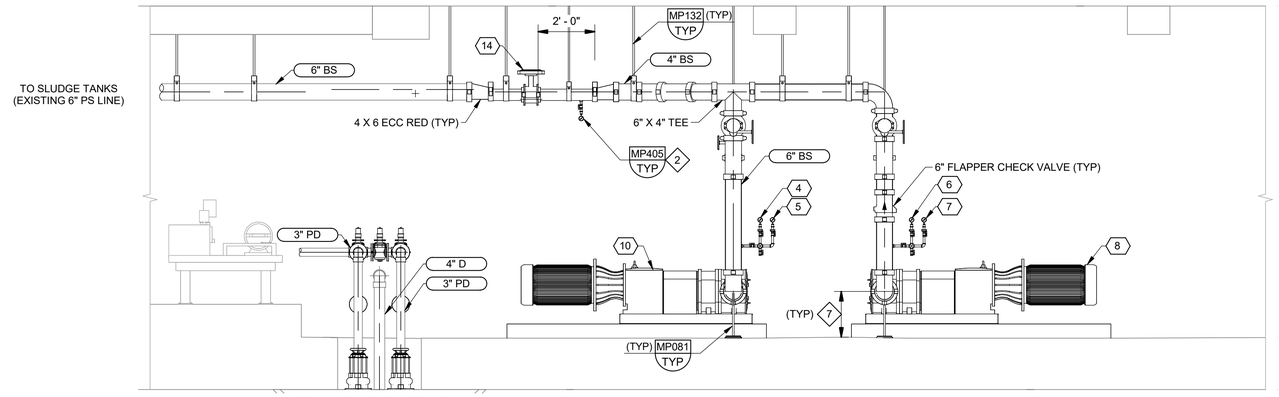

B SECTION 530M101
SCALE: 3/8" = 1'-0"

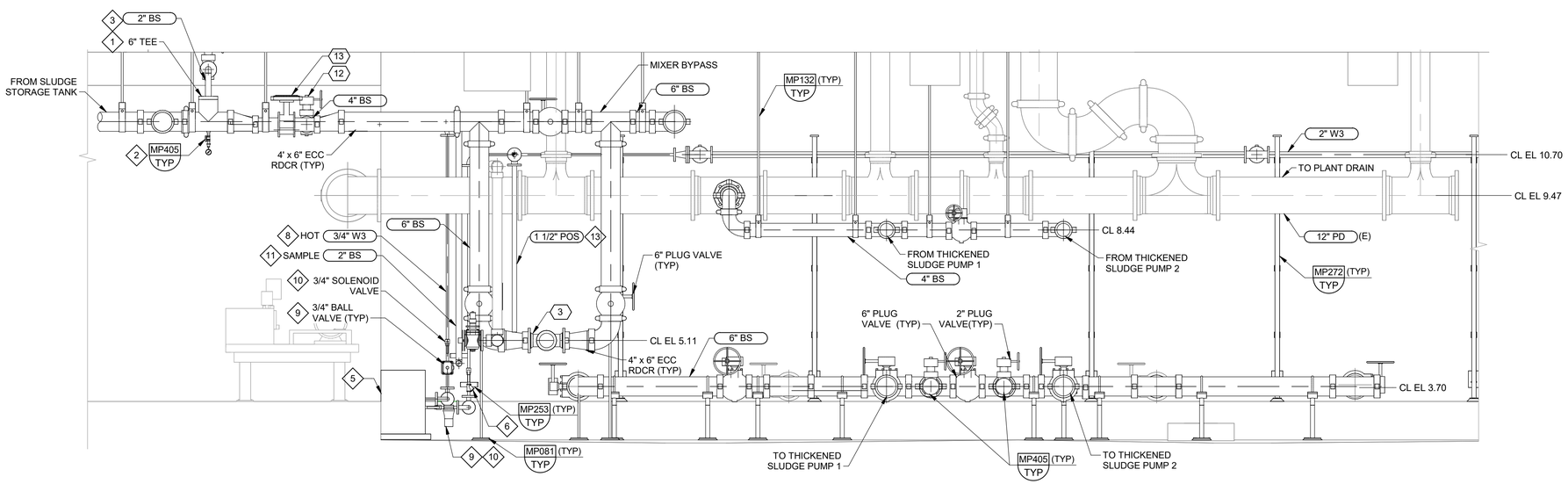

C SECTION 530M101
SCALE: 1/2" = 1'-0"

VERIFY SCALES

BAR IS ONE INCH ON ORIGINAL DRAWING

0 1"

IF NOT ONE INCH ON THIS SHEET, ADJUST SCALES ACCORDINGLY

MATTHEW SCOTT SPRICK
Digitally signed by Matthew Sprick
Email: matthew@carollo.com
Date: 2025.08.15 10:37:00 -07'00'
Carollo Engineers, Inc.
State of Washington
29659
REGISTERED PROFESSIONAL ENGINEER

PLOT DATE: 6/25/2026 1:35:11 PM

carollo®

Date	No	Revision	By

PROJECT ENGINEER	MSS
DESIGNED/DRAWN	DJL
INSPECTOR	CC
DIRECTOR PUBLIC WORKS	MAO
CITY ENGINEER	MLW
ASSISTANT DIRECTOR	MAO

CITY OF BELLINGHAM, WASHINGTON
PUBLIC WORKS DEPARTMENT
ENGINEERING DIVISION

SCALE: Horiz. AS SHOWN; Vert. AS SHOWN

DATUM: H: NAD 83/98; V: NAVD 88

Job. No. EU194
Date AUG 2025
Field Bk.

POST POINT RESOURCE RECOVERY PLANT
MECHANICAL
SOLIDS HANDLING BUILDING EAST SECTIONS

DRAWING NO. 530M102
SHEET NO. 78 OF 198

CONTACT PERSON: STEPHEN DAY, PE SE , PROJECT ENGINEER AT 360-778-7944 FILE NAME: Autodesk Docs://Bellingham 202021-100000 Primary Sludge Tank Replacement/202021530M9801.rvt

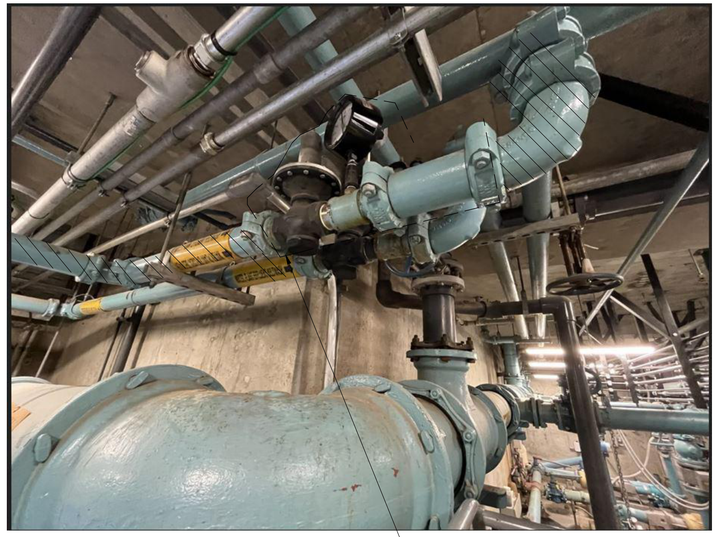

RELOCATE REDUCING PRESSURE VALVE ASSEMBLY

1 PHOTO
530M101 SCALE: NO SCALE

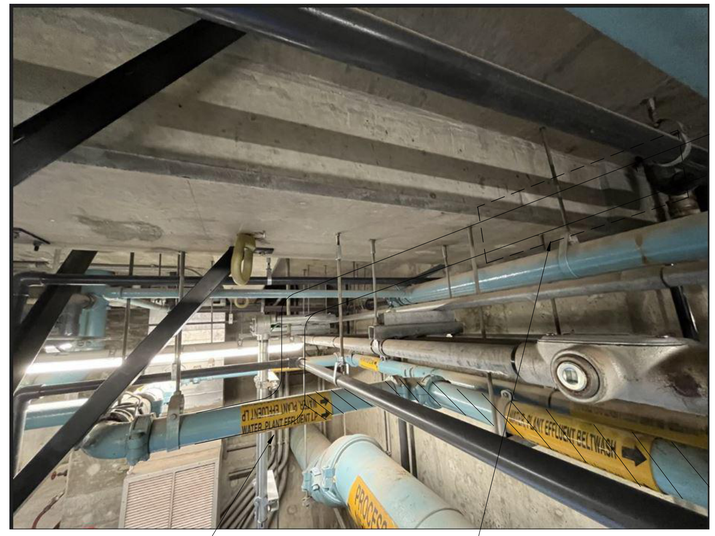

3-INCH ELBOW

INSTALL REDUCING PRESSURE VALVE ASSEMBLY

2 PHOTO
530M101 SCALE: NO SCALE

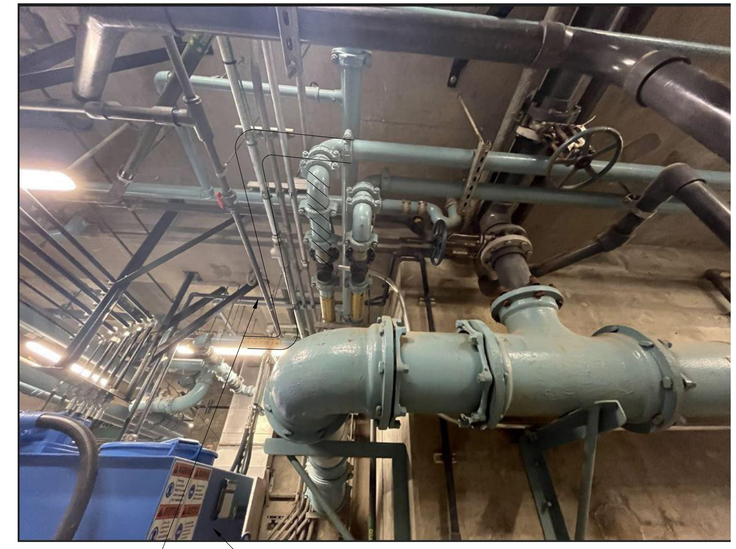

RELOCATE 1-INCH HPU WATER PIPING

HPU

3 PHOTO
530M101 SCALE: NO SCALE

PLOT DATE: 6/25/2026 1:37:51 PM

carollo®

VERIFY SCALES

BAR IS ONE INCH ON ORIGINAL DRAWING

0 1"

IF NOT ONE INCH ON THIS SHEET, ADJUST SCALES ACCORDINGLY

MATTHEW SCOTT SPRICK — STATE OF WASHINGTON — 29659 — REGISTERED PROFESSIONAL ENGINEER

Date	No	Revision	By

PROJECT ENGINEER MSS
DESIGNED/DRAWN DJL
INSPECTOR CC

DIRECTOR PUBLIC WORKS MAO
CITY ENGINEER MLW
ASSISTANT DIRECTOR MAO

CITY OF BELLINGHAM, WASHINGTON
PUBLIC WORKS DEPARTMENT
ENGINEERING DIVISION

SCALE
Horiz. AS SHOWN
Vert. AS SHOWN

DATUM
H: NAD 83/98
V: NAVD 88

Job. No. EU194
Date AUG 2025
Field Bk.

POST POINT RESOURCE RECOVERY PLANT
MECHANICAL
SOLIDS HANDLING BUILDING EAST PHOTOGRAPHS

DRAWING NO. 530M103
SHEET NO. 79 OF 198

CONTACT PERSON: STEPHEN DAY, PE SE , PROJECT ENGINEER AT 360-778-7944 FILE NAME: Autodesk Docs://Bellingham 202021-100000 Primary Sludge Tank Replacement/202021530M9801.rvt

NOTES

1. SIZES OF EQUIPMENT PADS INDICATED ON THE DRAWINGS ARE APPROXIMATE. EXACT DIMENSIONS SHALL BE DETERMINED BY THE CONTRACTOR FOR THE EQUIPMENT FURNISHED. ALL FLOOR MOUNTED EQUIPMENT SHALL BE SET ON CONCRETE PADS CONFORMING TO DETAILS SHOWN ON THE TYPICAL STRUCTURAL DRAWINGS.
2. DIELECTRIC COUPLINGS, FLANGES OR UNIONS SHALL BE INSTALLED AT ALL CONNECTIONS OF COPPER PIPE TO OTHER TYPES OF METALLIC PIPING.
3. HVAC PIPING AND DUCTWORK DRAWINGS DO NOT SHOW ALL DRAINS, VENTS, OFFSETS AND FITTINGS ETC. REQUIRED FOR THE COMPLETE SYSTEM. SMALL PIPING IS SHOWN APPROXIMATELY TO SCALE BUT NOT EVERY FITTING AND OFFSET IS SHOWN. THE CONTRACTOR SHALL FURNISH, INSTALL AND TEST ALL HVAC SYSTEMS TO PROVIDE THE COMPLETE SYSTEM.
4. UNLESS OTHERWISE SHOWN ON THE DRAWINGS ALL FLOOR SLAB AND WALL PENETRATIONS SHALL BE AS SHOWN ON THE TYPICAL DETAILS.
5. NOT ALL AND ONLY CERTAIN TYPES OF SUPPORTS ARE SHOWN ON THE HVAC DRAWINGS. UNLESS OTHERWISE DETAILED ON THE DRAWINGS ALL PIPE AND DUCT SUPPORTS SHALL BE DESIGNED, FURNISHED AND INSTALLED BY THE CONTRACTOR AS SPECIFIED.
6. THIS IS A GENERAL LIST OF SYMBOLS. NOT ALL ITEMS SHOWN HERE APPEAR ON CONTRACT DRAWINGS.
7. TYPICAL DETAILS SHALL BE USED FOR ALL PERMANENT WORK EVEN THOUGH THEY ARE NOT CALLED OUT AT ALL LOCATIONS WHERE THEY APPLY.
8. COORDINATE FINAL LOUVER SIZE AND LOCATION WITH ARCHITECTURAL AND STRUCTURAL DRAWINGS.
9. PROVIDE TURNING VANES IN ALL ELBOWS. (SHOWN OR NOT)

ABBREVIATIONS

A	@	AT
	AC	AIR CONDITIONING
	AFF	ABOVE FINISHED FLOOR
	AFS	AIR FLOW SWITCH
	AHU	AIR HANDLING UNIT
B	BD	BALANCING DAMPER
	BDD	BACKDRAFT DAMPER
	BLR	BOILER
	BOD	BOTTOM OF DUCT
C	CH	CHILLER
	CO	CARBON MONOXIDE DETECTOR
	CT	COOLING TOWER
	CS	CURRENT SENSOR
	CU	CONDENSING UNIT
D	DG	DOOR GRILLE
	DP	DIFFERENTIAL PRESSURE
E	EA	EXHAUST AIR
	ECU	EVAPORATIVE COOLING UNIT
	EF	EXHAUST FAN
	EUH	ELECTRIC UNIT HEATER
F	FA	FOUL AIR
	FCU	FAN COIL UNIT
	FD	FIRE DAMPER
G	GUH	GAS UNIT HEATER
H	HP	HEAT PUMP
M	MAU	MAKEUP AIR UNIT
	MD	MOTORIZED DAMPER
N	NC	NORMALLY CLOSED
	NO	NORMALLY OPEN
O	OA	OUTSIDE AIR
	OCF	ODOR CONTROL FAN
P	PPU	POSITIVE PRESSURIZATION UNIT
R	RA	RETURN AIR
	RR	RETURN REGISTER OR GRILLE
S	SA	SUPPLY AIR
	SD	SMOKE DAMPER OR SMOKE DETECTOR
	SF	SUPPLY FAN
	SFD	SMOKE & FIRE DAMPER COMBINATION
	SR	SUPPLY REGISTER, GRILLE OR DIFFUSER
V	VAV	VARIABLE AIR VOLUME
W	WUH	WATER UNIT HEATER

DUCTWORK SYMBOLS

FEATURE	SYMBOL
DIRECTION OF FLOW	
DUCT SIZE- FIRST NUMBER IS SIDE SHOWN	12x20
ROUND DUCT	12 DIA OR 12"Ø
DUCT SECTION, POSITIVE PRESS FIRST NUMBER IS TOP	20x12
DUCT SECTION, NEGATIVE PRESS FIRST NUMBER IS TOP	20x12
SIDE MOUNT DEVICE	
ELEVATION CHANGE (R) RISE, (D) DROP	R
ACCESS DOOR	AD / AD
BOTTOM MOUNT DEVICE REGISTER, GRILLE, DIFFUSER OR DUCT TAKEOFF	
FLEXIBLE CONNECTION	
FLEXIBLE DUCT	OR
DUCT INSULATION (INSIDE) OR (OUTSIDE) SIZE VARIES	XX" INSULATION (INSIDE) / XX" INSULATION (OUTSIDE)
TURNING VANES	
RECTANGULAR TO RECTANGULAR TRANSITION	20x12 / 16x8
RECTANGULAR TO ROUND TRANSITION	20x12 / 16 DIA
POSITIVE PRESSURE DUCT - ELBOW TURNED UP (USE ONE DIAGONAL FOR NEGATIVE PRESSURE)	
POSITIVE PRESSURE DUCT - ELBOW TURNED DOWN (USE ONE DIAGONAL FOR NEGATIVE PRESSURE)	
SMOKE DETECTOR CONFIRM ORIENTATION OF INSTALLATION	
DAMPERS	
BACKDRAFT	
BALANCING	
FIRE W/ ACCESS DOOR	FD
MOTORIZED	M
SMOKE CONFIRM ORIENTATION OF INSTALLATION	
COMBINATION SMOKE AND FIRE CONFIRM ORIENTATION OF INSTALLATION	

EQUIPMENT SYMBOLS

FEATURE	SYMBOL
A/C OR HEAT PUMP COMPRESSOR	
CENTRIFUGAL FAN	
CONTROL PANEL	
COOLING COIL	C / C
CURRENT SENSOR	CS
DIRECT EXPANSION COIL	D / X
DUCT SMOKE DETECTOR	
ELECTRIC HEATER	
FILTER	
AIR FLOW SWITCH	AFS
GAS HEATER	
HUMIDISTAT	H
INLINE/AXIAL FAN	
MOTOR OPERATED VALVE	M
PRESSURE DIFFERENTIAL SWITCH	PD
ROOF/SIDEWALL FAN	
ROOF VENT OR ROOF FAN	
SOLENOID VALVE	S
THERMOSTAT 60" ABOVE FINISH FLOOR	T
UNIT HEATER (HORIZONTAL TYPE)	
UNIT HEATER (VERTICAL TYPE)	

NOTE: THIS IS A GENERAL LIST OF SYMBOLS AND ABBREVIATIONS. NOT ALL ITEMS SHOWN HERE APPEAR ON THE CONTRACT DRAWINGS.

REGISTERS, GRILLES & LOUVERS SYMBOLS

FEATURE	SYMBOL
LOUVER/BRICK VENT - FIXED	
LOUVER/BRICK VENT - OPERABLE	
TRANSFER GRILLE	
TO SPACE	
FROM SPACE	
SUPPLY DIFFUSER OR GRILLE ARROWS INDICATE FLOW DIRECTION	
RETURN DIFFUSER OR GRILLE ARROWS INDICATE FLOW DIRECTION	
EXHAUST DIFFUSER OR GRILLE ARROWS INDICATE FLOW DIRECTION	

LEGEND FOR REGISTERS & GRILLES

TYPE OF REGISTER OR GRILLE (AS DESCRIBED IN SPECIFICATIONS) — BOOT (IF REQ'D) — NECK SIZE

SR-1(B)/12x12

400/4

CFM — FLOW PATTERN; SIDEWALL-ADJUSTABLE; C-CORNER

	SUPPLY	RETURN	EXHAUST
DUCT UP THRU ROOF OR FLOOR			
DUCT UP			

RECTANGLE DUCT:

	SUPPLY	RETURN	EXHAUST
DUCT DOWN			
DUCT UP THRU ROOF OR FLOOR			
DUCT UP			
DUCT DOWN			

ROUND DUCT:

DUCT UP THRU ROOF OR FLOOR			
DUCT UP			
DUCT DOWN			

carollo®

Date	No	Revision	By
	4		
	3		
	2		
	1		

PROJECT ENGINEER MSS
DESIGNED/DRAWN MSS/SCR
INSPECTOR CC

DIRECTOR PUBLIC WORKS
CITY ENGINEER
ASSISTANT DIRECTOR

CITY OF BELLINGHAM, WASHINGTON
PUBLIC WORKS DEPARTMENT
ENGINEERING DIVISION

SCALE
Horiz. AS SHOWN
Vert. AS SHOWN

DATUM
H: NAD 83/98
V: NAVD 88

Job. No. EU194
Date JAN 2026
Field Bk.

POST POINT RESOURCE RECOVERY PLANT
HVAC
GENERAL SHEET

DRAWING NO. 010H101
SHEET NO. 80 OF 198

CONTACT PERSON: STEPHEN DAY, PE SE , PROJECT ENGINEER AT 360-778-7944

PROJECT NO. 202021-100000 FILE NAME: 202021_010H101.dwg

10/9/2024 4:41:20 PM

LAST SAVED BY: lveloz

10/9/2024 4:48:50 PM

AIR CONDITIONING / HEAT PUMP SCHEDULE

EQUIPMENT TAG	AREA SERVED	AIRFLOW (CFM)	WEIGHT (LB)	COOLING DATA							HEATING DATA			FILTER DATA		ELECTRICAL DATA			BASIS OF DESIGN	NOTES
				OA DB (°F)	EAT DB (°F)	EAT WB (°F)	LAT DB (°F)	LAT WB (°F)	NET TOTAL CAPACITY (MBH)	NET SENSIBLE CAPACITY (MBH)	OA DB (°F)	EAT DB (°F)	MECHANICAL HEATING CAPACITY (MBH)	TYPE	THICKNESS (IN.)	VOLTAGE	PHASE	MCA (AMPS)		
AHU-42030	ELECTRICAL ROOM	1200	67	95	80	67	55	54	36	31	47	55	38	MERV 13	2	208	1	1	MITSUBISHI PLA-A36	2, 3,
AHU-42031	ELECTRICAL ROOM	1200	67	95	80	67	55	54	36	31	47	55	38	MERV 13	2	208	1	1	MITSUBISHI PLA-A36	2, 3,
CDU-42030	ELECTRICAL ROOM	-	214	-	-	-	-	-	-	-	-	-	-	-	-	208	1	25	MITSUBISHI PUZ-A36	1, 4, 5
CDU-42031	ELECTRICAL ROOM	-	214	-	-	-	-	-	-	-	-	-	-	-	-	208	1	25	MITSUBISHI PUZ-A36	1, 4, 5

NOTES:

1 MINI SPLIT HEAT PUMP UNIT TO POWER ASSOCIATED AIR HANDLER.
2 PROVIDE WITH INTEGRAL CONDENSATE DRAIN LIFT PUMP.
3 HARD-WIRED THERMOSTAT PROVIDED BY AC UNIT MANUFACTURER.
4 ELECTRICAL CONTRACTOR WILL PROVIDE A NEMA 4X DISCONNECT.
5 GRADE MOUNTED SPLIT SYSTEM HEAT PUMP

FAN SCHEDULE

EQUIPMENT TAG	AREA SERVED	AIR FLOW (CFM)	WEIGHT (LB)	ESP (IN. W.C.)	FAN RPM	NOISE (SONES)	MOTOR			DRIVE TYPE	ELECTRICAL DATA		BASIS OF DESIGN	NOTES
							HP	RPM	ENCLOSURE		VOLTAGE	PHASE		
EF-42032	PUMP ROOM	1320	182	0.5	937	9.4	1/4	1725	TEFC	BELT	480	3	GREENHECK USF-15	1, 3, 4
SF-42033	PUMP ROOM	1200	104	0.75	1140	9.4	1/2	1140	TEFC	BELT	480	3	GREENHECK SQ-140	1, 3, 4

NOTES:

1 PROVIDE BIRD SCREEN.
2 PROVIDE INSECT SCREEN.
3 PROVIDE BACKDRAFT DAMPER, COUNTERBALANCED FOR MINIMUM PRESSURE LOSS.
4 PROVIDE VIBRATION ISOLATORS.

ELECTRIC UNIT HEATER SCHEDULE

EQUIPMENT TAG	AREA SERVED	WEIGHT (LB)	HEATING CAPACITY (KW)	HEATING CAPACITY (MBH)	AIRFLOW (CFM)	MCA (AMPS)	VOLTAGE	PHASE	BASIS OF DESIGN	NOTES
HT-42015	PUMP ROOM	56	10	34130	1450	10	480	3	INDEECO TRIAD	1, 2, 3

NOTES:

1 THERMOSTAT PROVIDED BY HEATER MANUFACTURER.
2 WALL MOUNTED.
3 PROVIDE UNIT SUITABLE FOR CLASS I, DIV. 2 LOCATIONS.

Digitally signed by Chad Green
Contact info: chad@carollo.com
Date: 2026.01.14 15:42:08 -08'00'

CHAD GREEN
STATE OF WASHINGTON
53635
REGISTERED
PROFESSIONAL ENGINEER

carollo®

LAST SAVED BY: lveloz

Date	No	Revision	By
	4		
	3		
	2		
	1		

PROJECT ENGINEER SAW
DESIGNED/DRAWN KHB
INSPECTOR CAG

DIRECTOR PUBLIC WORKS
CITY ENGINEER
ASSISTANT DIRECTOR

CITY OF BELLINGHAM, WASHINGTON
PUBLIC WORKS DEPARTMENT
ENGINEERING DIVISION

SCALE
Horiz. AS SHOWN
Vert. AS SHOWN

DATUM
H: NAD 83/98
V: NAVD 88

Job. No. EU194
Date JAN 2026
Field Bk.

POST POINT RESOURCE RECOVERY PLANT
HVAC
SCHEDULES

DRAWING NO. 010H102
SHEET NO. 81 OF 198

CONTACT PERSON: STEPHEN DAY, PE SE , PROJECT ENGINEER AT 360-778-7944

PROJECT NO. 202021-100000 FILE NAME: 202021_010H102.dwg

GENERAL NOTES:

1. EXISTING CONDITIONS:
   - A. FIELD VERIFY ALL EXISTING DIMENSIONS, ELEVATIONS, AND CONDITIONS PRIOR TO DEMOLITION, SHOP DRAWING PREPARATION, AND FABRICATION.
   - B. NOTIFY ENGINEER IMMEDIATELY IF CONDITIONS NOT COVERED BY THESE DRAWINGS ARE EXPOSED DURING CONSTRUCTION INCLUDING, BUT NOT LIMITED TO:
     1. ELEVATIONS, SIZES, OR DIMENSIONS DIFFERING FROM THE CONTRACT DOCUMENTS.
     2. DAMAGE OR DETERIORATION TO MATERIALS AND COMPONENTS.
     3. CONDITIONS OR DETAILS DIFFERENT FROM THOSE SHOWN ON THE DRAWINGS.
2. MOUNT THERMOSTATS AT 48" AFF AND LABEL WITH ITS CONTROLLING DEVICE.
3. DUCT SUPPORTS SHOWN FOR REFERENCE ONLY. REFER TO SPECIFICATION SECTION 23_31_13, TYPICAL DETAILS, AND SMACNA FOR ADDITIONAL REQUIREMENTS.
4. DUCTWORK TO BE ALUMINUM PER SECTION 23_31_13. DO NOT ROUTE ABOVE ELECTRICAL EQUIPMENT.
5. ALL DUCTWORK AND SUPPORTS SHALL BE CONSTRUCTED PER SMACNA.
6. ALL SUPPLY AND RETURN REGISTERS SHALL HAVE OPPOSED BLADE BALANCING DAMPERS.
7. DUCT SHALL BE FIELD ROUTED TO AVOID PROCESS EQUIPMENT, ELECTRICAL EQUIPMENT, AND OTHER TRADES AS NECESSARY.

KEY NOTES:

1. WALL MOUNTED ELECTRIC UNIT HEATER. HEATER TO BE MOUNTED AT 9'-0" AFF.
2. 14" SUPPLY AIR DUCT DOWN FROM STORAGE ROOM ABOVE.
3. 14" EXHAUST AIR DUCT DOWN TO 12" AFF. TERMINATE OPENING WITH 1/2"x1/2" ALUMINUM MESH SCREEN IN REMOVABLE FRAME.

EQUIPMENT TAGS:

1. HT-42015 — ELECTRIC UNIT HEATER NO. 1

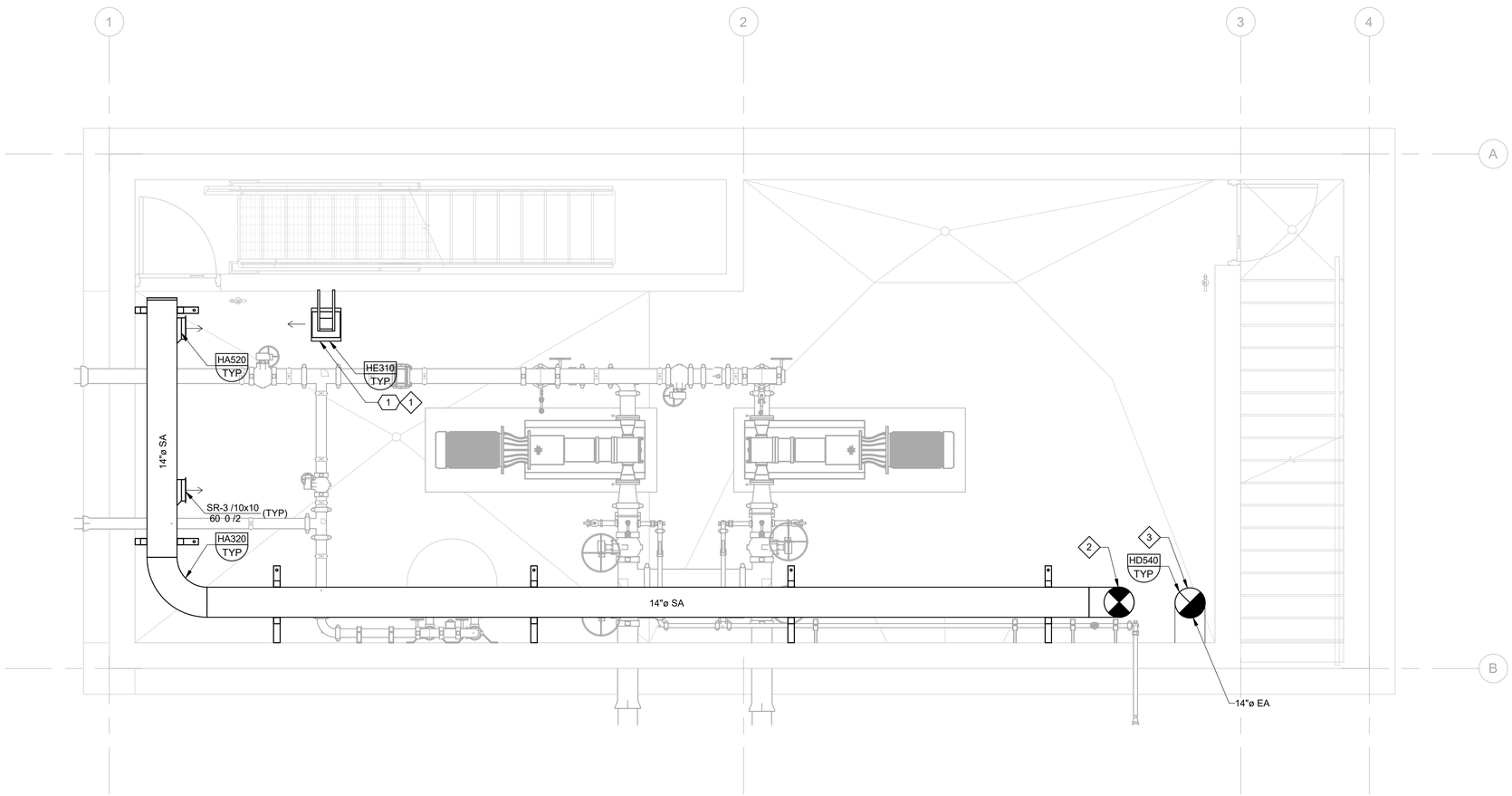

A PLAN
SCALE: 3/8" = 1'-0"

VERIFY SCALES
BAR IS ONE INCH ON ORIGINAL DRAWING
0 1"
IF NOT ONE INCH ON THIS SHEET, ADJUST SCALES ACCORDINGLY

CHAD GREEN — STATE OF WASHINGTON — 53635 — REGISTERED PROFESSIONAL ENGINEER

carollo®

PLOT DATE: 6/25/2026 1:43:52 PM

Date	No	Revision	By

PROJECT ENGINEER	SAW
DESIGNED/DRAWN	JKA
INSPECTOR	CAG
DIRECTOR PUBLIC WORKS	MAO
CITY ENGINEER	MLW
ASSISTANT DIRECTOR	MAO

CITY OF BELLINGHAM, WASHINGTON
PUBLIC WORKS DEPARTMENT
ENGINEERING DIVISION

SCALE: Horiz. AS SHOWN; Vert. AS SHOWN
DATUM: H: NAD 83/98; V: NAVD 88
Job. No. EU194; Date JAN 2026; Field Bk.

POST POINT RESOURCE RECOVERY PLANT
HVAC
SLUDGE STORAGE BUILDING
BASEMENT PLAN

DRAWING NO. 420H101
SHEET NO. 82 OF 198

CONTACT PERSON: STEPHEN DAY, PE SE , PROJECT ENGINEER AT 360-778-7944 FILE NAME: Autodesk Docs://Bellingham 202021-100000 Primary Sludge Tank Replacement/2020214210H0801.rvt

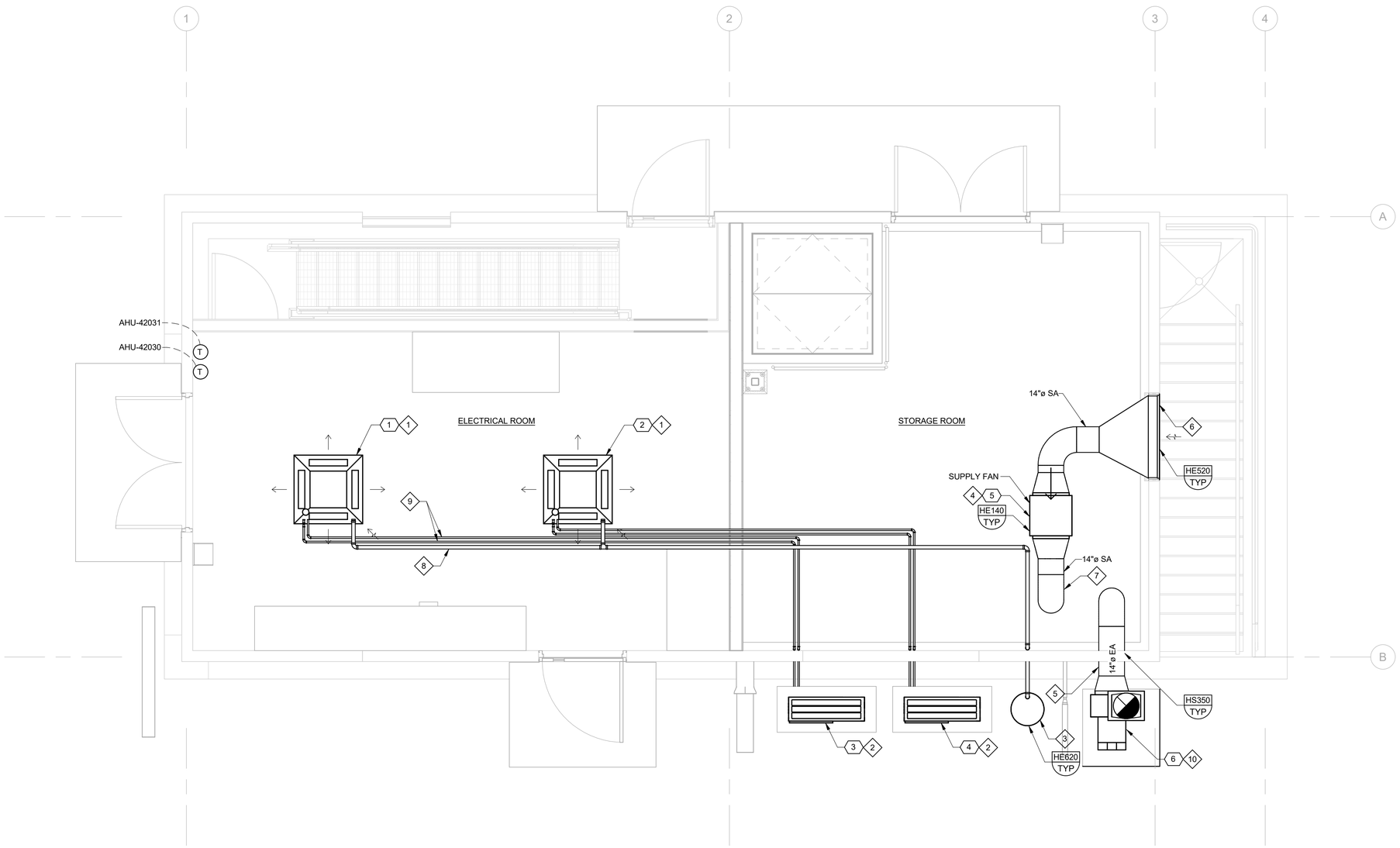

B PLAN

SCALE: 3/8" = 1'-0"

GENERAL NOTES:

1. EXISTING CONDITIONS:
   - A. FIELD VERIFY ALL EXISTING DIMENSIONS, ELEVATIONS, AND CONDITIONS PRIOR TO DEMOLITION, SHOP DRAWING PREPARATION, AND FABRICATION.
   - B. NOTIFY ENGINEER IMMEDIATELY IF CONDITIONS NOT COVERED BY THESE DRAWINGS ARE EXPOSED DURING CONSTRUCTION INCLUDING, BUT NOT LIMITED TO:
     1. ELEVATIONS, SIZES, OR DIMENSIONS DIFFERING FROM THE CONTRACT DOCUMENTS.
     2. DAMAGE OR DETERIORATION TO MATERIALS AND COMPONENTS.
     3. CONDITIONS OR DETAILS DIFFERENT FROM THOSE SHOWN ON THE DRAWINGS.
2. MOUNT THERMOSTATS AT 48" AFF AND LABEL WITH ITS CONTROLLING DEVICE.
3. DUCT SUPPORTS SHOWN FOR REFERENCE ONLY. REFER TO SPECIFICATION SECTION 23_31_13, TYPICAL DETAILS, AND SMACNA FOR ADDITIONAL REQUIREMENTS.
4. DUCTWORK TO BE ALUMINUM PER SECTION 23_31_13. DO NOT ROUTE ABOVE ELECTRICAL EQUIPMENT.
5. ALL DUCTWORK AND SUPPORTS SHALL BE CONSTRUCTED PER SMACNA.
6. ALL SUPPLY AND RETURN REGISTERS SHALL HAVE OPPOSED BLADE BALANCING DAMPERS.
7. DUCT SHALL BE FIELD ROUTED TO AVOID PROCESS EQUIPMENT, ELECTRICAL EQUIPMENT, AND OTHER TRADES AS NECESSARY.

KEY NOTES:

1. CEILING SUSPENDED MINI SPLIT AHU. BOTTOM OF UNIT TO BE MOUNTED AT 9'-0" AFF.
2. PAD MOUNTED CONDENSING UNIT. UNIT TO BE MOUNTED ON 4" CONCRETE EQUIPMENT PAD.
3. 18" DRY WELL INSTALLED PER DETAIL HE620.
4. CEILING MOUNTED CENTRIFUGAL SUPPLY FAN. CENTERLINE ELEVATION OF FAN SHALL BE 10'-6" AFF.
5. 14" EXHAUST DUCT ROUTED THROUGH WALL BELOW GRADE TO SLUDGE PUMP ROOM.
6. 45"x18" INTAKE LOUVER TO BE MOUNTED AT 10'-0" AFF. PROVIDE INTAKE LOUVER WITH BDD-1.
7. 14" SUPPLY DUCT ROUTED DOWN TO SLUDGE PUMP ROOM.
8. 3/4" PVC CONDENSATE DRAIN. ROUTE TO 18" DRY WELL. SLOPE DRAIN AT ¼" PER FOOT IN THE DIRECTION OF FLOW.
9. REFRIGERANT LINES TO BE ROUTED PER MANUFACTURER REQUIREMENTS AND EXIT BUILDING AT NO MORE THAN 1'-0" AFF. INSULATE PER CONTRACT DOCUMENT REQUIREMENTS. DO NOT ROUTE ABOVE ELECTRICAL EQUIPMENT.
10. PAD MOUNTED EXHAUST FAN. FAN SHALL BE MOUNTED ON 6" CONCRETE PAD PER MANUFACTURER REQUIREMENTS.

EQUIPMENT TAGS:

1.	AHU-42030	AIR HANDLING UNIT
2.	AHU-42031	AIR HANDLING UNIT
3.	CDU-42030	CONDENSING UNIT
4.	CDU-42031	CONDENSING UNIT
5.	SF-42033	SUPPLY FAN
6.	EF-42032	EXHAUST FAN

VERIFY SCALES

BAR IS ONE INCH ON ORIGINAL DRAWING

0 1"

IF NOT ONE INCH ON THIS SHEET, ADJUST SCALES ACCORDINGLY

Digitally signed by Chad Green
CHAD GREEN
STATE OF WASHINGTON
53635
REGISTERED PROFESSIONAL ENGINEER

carollo®

PLOT DATE: 6/25/2026 1:44:23 PM

Date	No	Revision	By

PROJECT ENGINEER	SAW
DESIGNED/DRAWN	JKA
INSPECTOR	CAG
DIRECTOR PUBLIC WORKS	MAO
CITY ENGINEER	MLW
ASSISTANT DIRECTOR	MAO

CITY OF BELLINGHAM, WASHINGTON
PUBLIC WORKS DEPARTMENT
ENGINEERING DIVISION

SCALE
Horiz. AS SHOWN
Vert. AS SHOWN

DATUM
H: NAD 83/98
V: NAVD 88

Job. No. EU194
Date JAN 2026
Field Bk.

POST POINT RESOURCE RECOVERY PLANT
HVAC
SLUDGE STORAGE BUILDING
GROUND LEVEL PLAN

DRAWING NO. 420H102
SHEET NO. 83 OF 198

CONTACT PERSON: STEPHEN DAY, PE SE , PROJECT ENGINEER AT 360-778-7944 FILE NAME: Autodesk Docs://Bellingham 202021-100000 Primary Sludge Tank Replacement/2020214210H0801.rvt

10/9/2024 4:56:29 PM

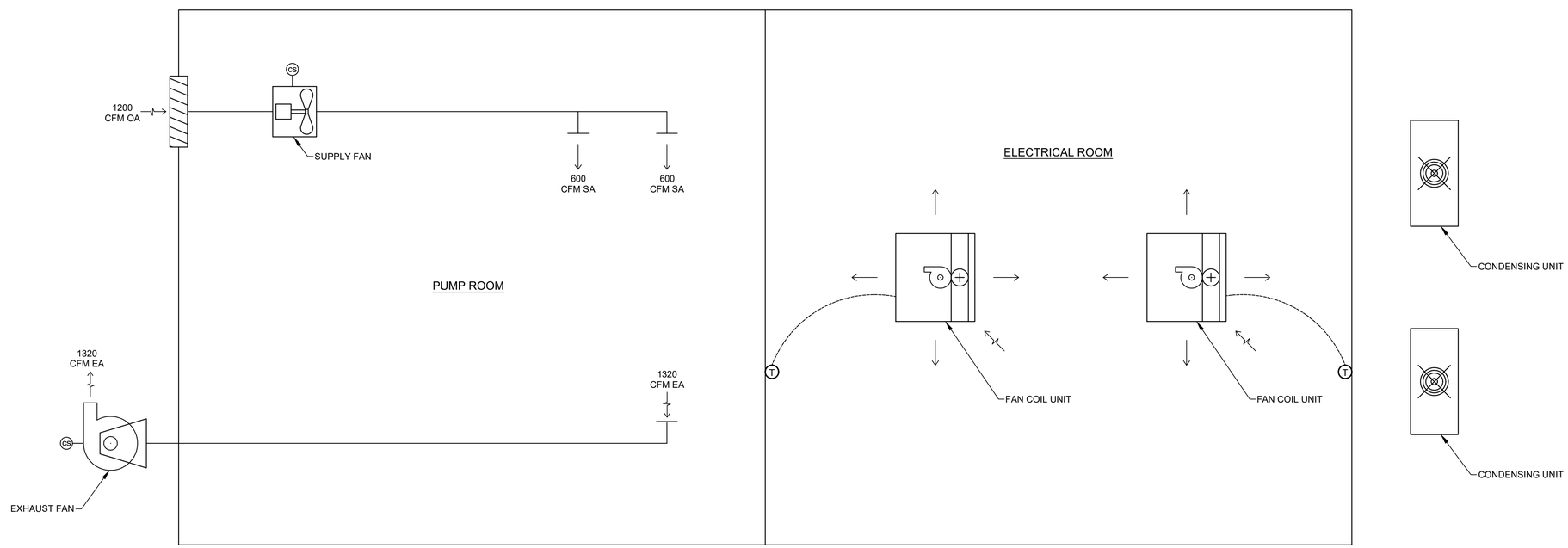

carollo®

LAST SAVED BY: lveloz

Date	No	Revision	By
	4		
	3		
	2		
	1		

PROJECT ENGINEER SAW
DESIGNED/DRAWN KHB
INSPECTOR CAG

DIRECTOR PUBLIC WORKS
CITY ENGINEER
ASSISTANT DIRECTOR

CITY OF BELLINGHAM, WASHINGTON
PUBLIC WORKS DEPARTMENT
ENGINEERING DIVISION

SCALE
Horiz. AS SHOWN
Vert. AS SHOWN

DATUM
H: NAD 83/98
V: NAVD 88

Job. No. EU194
Date JAN 2026
Field Bk.

POST POINT RESOURCE RECOVERY PLANT
HVAC
SLUDGE STORAGE BUILDING AIRFLOW SCHEMATIC

DRAWING NO. 420H103
SHEET NO. 84 OF 198

CONTACT PERSON: STEPHEN DAY, PE SE , PROJECT ENGINEER AT 360-778-7944

PROJECT NO. 202021-100000 FILE NAME: 202021_420H103.dwg

ELECTRICAL PLAN SYMBOLS

IDENTIFICATION SYMBOLS

EQUIP # — EQUIPMENT AND INSTRUMENT IDENTIFICATION

EQUIPMENT/INSTRUMENT LOCATOR

LUMINAIRE IDENTIFICATION
a = CIRCUIT DESIGNATION
b = DEVICE SWITCHED FROM
c = MOUNTING HEIGHT IN FEET TO BOTTOM OF FIXTURE
X = LUMINAIRE TYPE, REFER TO THE LUMINAIRE SCHEDULE

XXXX — CONDUIT IDENTIFICATION
XXXX = CONDUIT NUMBER, REFER TO CONDUIT SCHEDULE
UNLESS OTHERWISE NOTED, GROUPED CONDUITS ARE LABELED LEFT TO RIGHT OR TOP TO BOTTOM.

INDICATES KEYNOTE X
(PERTAINS ONLY TO SHEET WHERE NOTE IS FOUND)

DISCONNECT SWITCH
A = TYPE, REFER TO DISCONNECT SCHEDULE

CAMERA

LUMINAIRES

LINEAR FIXTURE

2' X 2' LAY-IN TROFFER

2' X 4' LAY-IN TROFFER

LUMINAIRE POLE MOUNTED

LUMINAIRE, EMERGENCY BATTERY-POWERED

LUMINAIRE, EMERGENCY/EXIT BATTERY-POWERED

LUMINAIRE, EMERGENCY BATTERY-POWERED REMOTE

LUMINAIRE, SURFACE OR PENDANT MOUNTED

LUMINAIRE, WALL MOUNTED

LUMINAIRE, FLOOD/SPOT

LUMINAIRE, EXIT ONE OR TWO FACES AS INDICATED. ARROW POINTS IN DIRECTION OF EGRESS.

SWITCHES/RECEPTACLES

SINGLE POLE SWITCH
a = CIRCUIT DESIGNATION
b = DEVICE SWITCHED DESIGNATION
c = TYPE
2 = DOUBLE POLE SWITCH
3 = THREE-WAY SWITCH
3P = THREE POSITION SWITCH
4 = FOUR-WAY SWITCH
K = KEY OPERATED SWITCH
F = SWITCH AND FUSESTAT HOLDER
P = SWITCH AND PILOT LIGHT
T = THERMOSTAT
D = DIMMER SWITCH
L = LOW VOLTAGE LIGHT SWITCH
M = MANUAL MOTOR STARTER
N = NETWORKED SINGLE OR MULTIPLE SWITCH LOCATIONS
WP = WEATHER PROOF

REFER TO ABBREVIATIONS LEGEND FOR ALL OTHER DESIGNATIONS.

OCCUPANCY SENSOR
X = REFERENCE LIGHTING CONTROL COMPONENT SCHEDULE
a = CIRCUIT DESIGNATION
b = DEVICE SWITCHED DESIGNATION
c = MOUNTING HEIGHT IN FEET TO BOTTOM OF SENSOR

PE — PHOTOCELL

SWITCH AND SINGLE RECEPTACLE
a = CIRCUIT DESIGNATION
b = DEVICE TYPE DESIGNATION

DUPLEX RECEPTACLE

QUADRUPLEX RECEPTACLE

IN FLOOR DUPLEX RECEPTACLE

IN FLOOR QUADRUPLEX RECEPTACLE

DUPLEX RECEPTACLE w/SPLIT WIRE

DEDICATED RECEPTACLE

SPECIAL PURPOSE RECEPTACLE

WELDING RECEPTACLE
a = CIRCUIT DESIGNATION
b = DISCONNECT TYPE

TWIST LOCK RECEPTACLE
a = AMP RATING

TELEPHONE OUTLET

DATA COMMUNICATIONS OUTLET
a = NETWORK SWITCH

FIRE ALARM

FACP — FIRE ALARM CONTROL PANEL

RACEWAY

EXPOSED CONDUIT

BREAK AND CONTINUATION IN CONDUIT RUN

EXPOSED CONDUIT HIDDEN BEHIND WALLS, FLOORS OR OTHER STRUCTURES

UNDERGROUND CONDUIT, DIRECT BURIED OR IN DUCT BANK

CONDUIT IN SLAB

CONDUIT VERTICAL CHANGE IN DIRECTION

CONDUIT CAP

J — JUNCTION BOX

CONDUIT SEAL

CONDUIT TEE

DUCT BANK
APPROXIMATE DIMENSIONS SHOWN ON DUCT BANK SECTIONS

CONDUIT SIZE AND CONDUCTORS

INDIVIDUAL CONDUCTORS

W"C-(3-X (Ø), 1-Y (N) & 1-Z (G))

W"C (WHERE INDICATED): W = CONDUIT TRADE SIZE

3-X (Ø):
3 = QUANTITY
X = SIZE OF CONDUCTORS
(Ø) = DESIGNATES PHASE CONDUCTORS

1-Y (N) (WHERE INDICATED):
1 = QUANTITY
Y = SIZE OF CONDUCTORS
(N) = DESIGNATES NEUTRAL CONDUCTORS

1-Z (G) (WHERE INDICATED):
1 = QUANTITY
Z = SIZE OF CONDUCTORS
(G) = DESIGNATES GROUND CONDUCTORS

U{3-X (Ø) & 1-X (G)}
U = NUMBER OF PARALLEL RUNS

VFD CONDUCTORS

U{[N/C-X (Ø) & INTEGRAL (G)]:VFD}
U = NUMBER OF PARALLEL RUNS
N/C = NUMBER OF PHASE CONDUCTORS IN CABLE
X = SIZE OF CONDUCTORS
VFD = VFD CABLE

MULTI CONDUCTOR CABLES

K/2/C#16S
K (WHERE INDICATED) = NUMBER OF PAIRS
2/C#16S = TWO CONDUCTOR, 16 GAUGE, TWISTED SHIELDED PAIR

K/3/C#16S
K (WHERE INDICATED) = NUMBER OF TRIPLETS
3/C#16S = THREE CONDUCTOR, 16 GAUGE, TWISTED SHIELDED TRIPLETS

U{[N/C-X (Ø) & INTEGRAL (G)]:MC}
U = NUMBER OF PARALLEL RUNS
MC = MULTICONDUCTOR CABLE
N/C = NUMBER OF PHASE CONDUCTORS IN THE CABLE
X = SIZE OF CONDUCTORS

FIBER OPTIC CABLES

FO/N
N = NUMBER OF INDIVIDUAL FIBERS

GROUNDING

UNDERGROUND GROUND CABLE
#4/0 SDBC UNLESS OTHERWISE NOTED

GROUND ROD

GROUND ROD AND GROUND WELL

ELECTRICAL ONE-LINE SYMBOLS

MEDIUM VOLTAGE

52 — CIRCUIT BREAKER, MEDIUM VOLTAGE
a = CIRCUIT BREAKER NUMBER
b = FRAME SIZE

ANSI RELAY DEVICE
a = ANSI DEVICE FUNCTION
b = QUANTITY

MEDIUM VOLTAGE DISCONNECT SWITCH NON-FUSED CUT OUT

MEDIUM VOLTAGE DISCONNECTING FUSE SINGLE FUSE CUT OUT

MEDIUM VOLTAGE DISCONNECTING FUSE DOUBLE FUSE CUT OUT

MEDIUM VOLTAGE SINGLE FUSE

MEDIUM VOLTAGE DOUBLE FUSE

MEDIUM VOLTAGE LIVE FRONT TERMINATOR

MEDIUM VOLTAGE ELBOW

MEDIUM VOLTAGE TEE

MEDIUM VOLTAGE CONTACTOR

MEDIUM VOLTAGE STARTER

MOV-ELBOW ARRESTER

LOW VOLTAGE

LOW VOLTAGE CIRCUIT BREAKER
a = TYPE
MCP = MOTOR CIRCUIT PROTECTOR
TM = THERMAL MAGNETIC
SS = SOLID STATE
b = FRAME SIZE (MANUFACTURER TO DETERMINE FRAME SIZE UNLESS INDICATED)
c = NUMBER OF POLES
d = TRIP SETTING (AT = AMP TRIP)
(AC = MCP CONTINUOUS RATING)
e = DESIGNATION
f = INTERRUPTING RATING

LOW VOLTAGE CIRCUIT BREAKER AUXILIARY OPERATOR
* = S = SHUNT TRIP
= G = GROUND FAULT INTERRUPTER
= V = SOLENOID KEY RELEASE

DISCONNECT SWITCH
A = TYPE, REFER TO DISCONNECT SCHEDULE

FUSED DISCONNECT SWITCH
B = TYPE, REFER TO DISCONNECT SCHEDULE
b = FUSE RATING

FUSE

COMBINATION STARTER WITH CONTROL POWER TRANSFORMER
a = CIRCUIT BREAKER DISCONNECT, TYPE AS NOTED
b = STARTER TYPE
REFER TO THE SPECIFICATIONS FOR STARTER DEFINITIONS.
c = NEMA STARTER SIZE
d = OVERLOAD

MOTOR STARTER/DRIVES:
a = DEVICE TYPE
VFD-6 = 6-PULSE VFD
VFD-18 = 18-PULSE VFD
VFD-RH = REDUCED HARMONIC VFD (18-PULSE OR ACTIVE FRONT END AS DEFINED IN THE SPECIFICATIONS)
RVSS = REDUCED VOLTAGE SOLID STATE STARTER
RVAT = REDUCED VOLTAGE AUTO TRANSFORMER
a/B = DEVICE WITH BYPASS STARTER. REFER TO THE SPECIFICATIONS

b = INPUT OPTIONS
LL = LINE REACTOR
PHF = PASSIVE HARMONIC FILTER

c = OUTPUT OPTIONS
LR = LOAD REACTOR
DV/DT = Dv/dt FILTER
SWF = SINE WAVE FILTER

EQUIPMENT ENCLOSURE

MISCELLANEOUS

HP — MOTOR
HP = HORSEPOWER RATING
FULL LOAD AMPS AS NOTED

PACKAGED EQUIPMENT LOAD RATING AS INDICATED
a = RATED LOAD
b = UNIT(HP, KW, KVA) AS INDICATED

TRANSFORMER
a = DEVICE I.D.
b = KVA RATING
c = NUMBER OF PHASES
d = PRIMARY VOLTAGE
e = SECONDARY VOLTAGE
f,g = CONNECTION TYPE SYMBOL
h = IMPEDANCE

GROUNDED WYE CONNECTION

DELTA CONNECTION

G — ENGINE-GENERATOR RATINGS AS INDICATED ON THE DRAWINGS
a = KVA/KW
b = VOLTAGE/CONNECTION
c = PHASE
d = WIRE
e = PF

CURRENT TRANSFORMER WITH SHORTING TERMINAL BLOCK
a = QUANTITY
b = RATIO

POTENTIAL TRANSFORMER
a = QUANTITY
b = RATIO
c,d = CONNECTION TYPE SYMBOL

SSM — SOLID STATE MULTIFUNCTION METER

ATP — AMPERE TEST POINT

VTP — VOLTAGE TEST POINT

UTILITY METER

LIGHTNING ARRESTER

SPD — SURGE PROTECTIVE DEVICE

DRAWOUT CONNECTION

GROUND

CAPACITOR

BATTERY

K — KIRK KEY INTERLOCK

LOAD BANK

Digitally Signed by Douglas Lloyd
Date: 2026.01.14 11:55:24 PM
DOUGLAS LLOYD
STATE OF WASHINGTON
24031376
REGISTERED
PROFESSIONAL ENGINEER

8/14/2025 11:55:24 AM

LAST SAVED BY: lveloz

carollo®

Date	No	Revision	By
	4		
	3		
	2		
	1		

PROJECT ENGINEER CE
DESIGNED/DRAWN CE
INSPECTOR

DIRECTOR PUBLIC WORKS
CITY ENGINEER
ASSISTANT DIRECTOR

CITY OF BELLINGHAM, WASHINGTON
PUBLIC WORKS DEPARTMENT
ENGINEERING DIVISION

SCALE
Horiz. AS SHOWN
Vert. AS SHOWN

DATUM
H: NAD 83/98
V: NAVD 88

Job. No. EU194
Date JAN 2026
Field Bk.

POST POINT RESOURCE RECOVERY PLANT
ELECTRICAL
LEGEND

DRAWING NO. 010E101
SHEET NO. 85 OF 198

CONTACT PERSON: STEPHEN DAY, PE SE , PROJECT ENGINEER AT 360-778-7944

PROJECT NO. 202021-100000 FILE NAME: 202021010E101.dwg

1/23/2026 3:27:51 PM

ABBREVIATIONS

A	AMP
ABS	ABSOLUTE
AC	ALTERNATING CURRENT
ACK	ACKNOWLEDGE
ACTR	ACTUATOR
AF	AMP FRAME
AFC	AUTOMATIC FREQUENCY CONTROL
AIC	AMP INTERRUPTING CAPACITY
AM	AMMETER
ANN	ANNUNCIATOR
ANT	ANTENNA
APU	AUXILIARY POWER UNIT
ARM	ARMORED CABLE
AS	AMMETER SWITCH
ASYM	ASYMMETRICAL
AT	AMP TRIP
ATO	AUTOMATIC THROW OVER
ATP	AMMETER TEST POINT
ATS	AUTOMATIC TRANSFER SWITCH
AUTO XFMR	AUTOMATIC TRANSFORMER
AUX	AUXILIARY
AWG	AMERICAN WIRE GAGE
B	BELL
BAT	BATTERY
BFG	BELOW FINISHED GRADE
BHP	BRAKE HORSEPOWER
BKR	BREAKER
BRF	BELOW RAISED FLOOR
C	CONDUIT / CONTINUOUS LOAD
CB	CIRCUIT BREAKER
CCTV	CLOSED CIRCUIT TELEVISION
CCW	COUNTER CLOCKWISE
CKT	CIRCUIT
COAX	COAXIAL CABLE
COM	COMMON
COMM	COMMUNICATION
CPT	CONTROL POWER TRANSFORMER
CR	CONTROLLED RECEPTACLE
CS	CONTROL SWITCH
CT	CURRENT TRANSFORMER
CV	CONTROL VALVE
CW	CLOCKWISE / COOL WHITE
DC	DIRECT CURRENT
DCS	DISTRIBUTED CONTROL SYSTEM
DCU - X	DISTRIBUTED CONTROL UNIT NO. X
DEMO	DEMOLITION
DISC	DISCONNECT SWITCH
DM	DEMAND METER
DPDT	DOUBLE POLE DOUBLE THROW
DPST	DOUBLE POLE SINGLE THROW
DS	DOOR SWITCH
E/G	EMERGENCY GENERATOR
EM	EMERGENCY
EMT	ELECTRICAL METALLIC TUBING
ENCL	ENCLOSURE
ENG	ENGINE
ENT	ELECTRICAL NON-METALLIC TUBING
EP	EXPLOSION PROOF
ETM	ELAPSED TIME METER
F	SUB-FED
FA	FIRE ALARM
FACP	FIRE ALARM CONTROL PANEL
FDR	FEEDER
FLA	FULL LOAD AMPS
FLX	FLEXIBLE CONDUIT
FO	FIBER OPTIC
FRC	FIBERGLASS RIGID CONDUIT
FREQ	FREQUENCY
FU	FUSE
FU SW	FUSED SWITCH
FVNR	FULL VOLTAGE NON-REVERSING
FVR	FULL VOLTAGE REVERSING
FWD	FORWARD
G	GROUND / EQUIPMENT GROUND / GROUND FAULT
GEN	GENERATOR
GRC	GALVANIZED STEEL RIGID CONDUIT
GFCI	GROUND FAULT CIRCUIT INTERRUPTER (RECEPTACLE)
GFI	GROUND FAULT INTERRUPTER (BREAKER)
GFR	GROUND FAULT RELAY
H	HOT-LEG
HF	HIGH FREQUENCY
HP	HORSEPOWER
HPS	HIGH PRESSURE SODIUM
HR	HOUR
HSTAT	HUMIDISTAT
HV	HIGH VOLTAGE
HVAC	HEATING/VENTILATION/AIR CONDITIONING
HZ	HERTZ
I	INSTANTANEOUS / INTERMITTENT LOAD
IC	INTERRUPTING CAPACITY
IJB	INSTRUMENT JUNCTION BOX
IMC	INTERMEDIATE METAL CONDUIT
INST	INSTANTANEOUS
INT	INTERLOCK
INTERCOM	INTERCOMMUNICATION
J	JUNCTION BOX
K	KEY INTERLOCK
KA	KILOAMP
KV	KILOVOLT
KVA	KILOVOLT AMPERE
KVAR	KILOVAR (REACTANCE)
KW	KILOWATT
KWD	KILOWATT DEMAND
KWH	KILOWATT HOUR
L	LONG-TIME
L-B	LINE-BUS
L-G	LINE-GROUND
LA	LIGHTNING ARRESTOR
LBL	LABEL
LC	LIGHTING CONTACTOR
LCP- X	LOCAL CONTROL PANEL NO. X
LL	LEAD-LAG LOAD REACTOR
LP	LIGHT POLE
LP - X	LIGHTING PANEL NO. X
LTG	LIGHTING
LV	LOW VOLTAGE
LVL	LEVEL
M-X	MOTOR CONTROLLER NO. X
MA	MILLIAMPERE
MCA	MOTOR CIRCUIT AMPS
MCC - X	MOTOR CONTROL CENTER NO. X
MCP	MOTOR CIRCUIT PROTECTOR
MH	MANHOLE / MOUNTING HEIGHT
MLO	MAIN LUGS ONLY
MOD	MOTOR OPERATED DAMPER
MOV	METAL OXIDE VARISTOR
MPR	MOTOR PROTECTION RELAY
MS-X	MOTOR STARTER NO. X
MSP	MOTOR STARTING PANEL
MTO	MANUAL THROW OVER
MTR-X	MOTOR NO. X
MTS	MANUAL TRANSFER SWITCH
MV	MEGAVOLT
MVA	MEGAVOLT-AMPERES
MVS	MEDIUM VOLTAGE SWITCH
MW	MEGAWATT
N	NEUTRAL
NC	NORMALLY CLOSED
NEC	NATIONAL ELECTRICAL CODE
NFC	NONMETALLIC FLEXIBLE CONDUIT
NL	NIGHT LIGHT
NO	NORMALLY OPEN
NP	NAMEPLATE
O	OPEN OR OPENED
OH	OVERHEAD
OL	OVERLOAD RELAY
P	POLE
PA	PUBLIC ADDRESS
PB	PUSHBUTTON / PULL BOX
PCS	PVC COATED GALVANIZED STEEL CONDUIT
PCM	PROCESS CONTROL MODULE
PE	PHOTOCELL
PF	POWER FACTOR
PFCC	POWER FACTOR CORRECTION CAPACITOR
PFR	PHASE FAILURE RELAY
PH	PHASE
PNL	PANEL
PPX	POWER PANEL NO. X
PRI	PRIMARY
PT	POTENTIAL TRANSFORMER
PVC	POLYVINYL CHLORIDE RIGID PLASTIC CONDUIT
PWR	POWER
RAC	RIGID ALUMINUM CONDUIT
RECPT	RECEPTACLE
REV	REVERSE
RF	RADIO FREQUENCY
RMS	ROOT MEAN SQUARED
RVAT	REDUCED VOLTAGE AUTO TRANSFORMER
RVNR	REDUCED VOLTAGE NON-REVERSING
RVSS	REDUCED VOLTAGE SOLID STATE
S	SHIELD / SHORT-TIME
SA	SURGE ARRESTER
SC	SHORT CIRCUIT
SDBC	SOFT DRAWN BARE COPPER
SFL	SUB FEED LUGS
SLT	SEALTIGHT LIQUIDTIGHT FLEXIBLE CONDUIT
SM	SURFACE MOUNTED
SP	SINGLE POLE
SPD	SURGE PROTECTIVE DEVICE
SPDT	SINGLE POLE DOUBLE THROW
SPST	SINGLE POLE SINGLE THROW
SPKR	SPEAKER
SS	SOLID STATE
STB	SHORTING TERMINAL BLOCK
SW	SWITCH
SWBD	SWITCHBOARD
SWGR	SWITCHGEAR
SYM	SYMMETRICAL
TACH	TACHOMETER
TB - X	TERMINAL BLOCK - UNIT X
TC	THERMOCOUPLE / TIME CLOCK / TRAY CABLE
TD	TEMPERATURE DETECTOR RELAY
TE	TOTALLY ENCLOSED
TEFC	TOTALLY ENCLOSED FAN COOLED
TENV	TOTALLY ENCLOSED NON-VENTILATED
TERM	TERMINAL
TJB	TERMINAL JUNCTION BOX
TM	THERMAL MAGNETIC
TP	TWISTED PAIR
TS	TEMPERATURE SWITCH
TS1W	TWO SPEED CONSEQUENT POLE, ONE WINDING
TS2W	TWO SPEED SEPARATE WINDING
TSTAT	THERMOSTAT
UHF	ULTRA HIGH FREQUENCY
UNG	UNGROUNDED
UPS	UNINTERRUPTIBLE POWER SUPPLY
UVR	UNDER VOLTAGE RELAY
V	VOLT
VA	VOLT AMPERE
VAR	VARMETER
VCP	VENDOR CONTROL PANEL
VFD	VARIABLE FREQUENCY DRIVE
VHF	VERY HIGH FREQUENCY
VM	VOLTMETER
VP	VAPORPROOF
VR	VOLTAGE REGULATOR
VS	VOLTAGE SWITCH
VT	VOLTAGE TRANSFORMER
VTP	VOLTAGE TEST POINT
W	WATT / WEST
WT	WATER TIGHT
WP	WEATHER PROOF
XFMR	TRANSFORMER

NOTES:

1. REFER TO SPECIFICATIONS AND OTHER DRAWINGS FOR ADDITIONAL ABBREVIATIONS.

POWER DEVICE FUNCTION NUMBERS

1	MASTER ELEMENT
2	TIME-DELAY STARTING OR CLOSING RELAY
3	CHECKING OR INTERLOCKING RELAY
4	MASTER CONTACTOR
5	STOPPING DEVICE
6	STARTING CIRCUIT BREAKER
7	ANODE CIRCUIT BREAKER
8	CONTROL POWER DISCONNECTING DEVICE
9	REVERSING DEVICE
10	UNIT SEQUENCE SWITCH
11	MULTIFUNCTION DEVICE
12	OVER-SPEED DEVICE
13	SYNCHRONOUS-SPEED DEVICE
14	UNDER-SPEED DEVICE
15	SPEED OR FREQUENCY MATCHING DEVICE
16	DATA COMMUNICATIONS DEVICE
17	SHUNTING OR DISCHARGE SWITCH
18	ACCELERATING OR DECELERATING DEVICE
19	STARTING-TO-RUNNING TRANSITION CONTACTOR
20	ELECTRICALLY OPERATED VALVE
21	DISTANCE RELAY
22	EQUALIZER CIRCUIT BREAKER
23	TEMPERATURE CONTROL DEVICE
24	VOLTS PER HERTZ RELAY
25	SYNCHRONIZING OR SYNCHRONISM-CHECK DEVICE
26	APPARATUS THERMAL DEVICE
27	UNDERVOLTAGE RELAY
27N	GROUND FAULT UNDERVOLTAGE RELAY
28	FLAME DETECTOR
29	ISOLATING CONTACTOR
30	ANNUNCIATOR RELAY
31	SEPARATE EXCITATION DEVICE
32	DIRECTIONAL POWER RELAY
33	POSITION SWITCH
34	MASTER SEQUENCE DEVICE
35	BRUSH-OPERATING OR SLIP-RING SHORT-CIRCUITING DEVICE
36	POLARITY DEVICE
37	UNDERCURRENT OR UNDERPOWER RELAY
38	BEARING PROTECTIVE DEVICE
39	MECHANICAL CONDITION MONITOR
40	FIELD RELAY
41	FIELD CIRCUIT BREAKER
42	RUNNING CIRCUIT BREAKER
43	MANUAL TRANSFER OR SELECTOR DEVICE
44	UNIT SEQUENCE STARTING RELAY
45	ABNORMAL ATMOSPHERIC CONDITION MONITOR
46	REVERSE-PHASE OR BALANCE CURRENT RELAY
47	PHASE-BALANCE OR PHASE-SEQUENCE VOLTAGE RELAY
48	INCOMPLETE SEQUENCE RELAY
49	MACHINE OR TRANSFORMER THERMAL RELAY
50	INSTANTANEOUS OVERCURRENT RELAY
51	AC TIME OVERCURRENT RELAY
52	AC CIRCUIT BREAKER
53	FIELD EXCITATION RELAY
54	TURNING GEAR ENGAGING DEVICE
55	POWER FACTOR RELAY
56	FIELD APPLICATION RELAY
57	SHORT-CIRCUITING OR GROUNDING DEVICE
58	RECTIFICATION FAILURE RELAY
59	OVERVOLTAGE RELAY
60	VOLTAGE OR CURRENT BALANCE RELAY
61	DENSITY SWITCH OR SENSOR
62	TIME-DELAY STOPPING OR OPENING RELAY
63	PRESSURE SWITCH
64	GROUND DETECTOR RELAY
65	GOVERNOR
66	NOTCHING OR JOGGING DEVICE
67	AC DIRECTIONAL OVERCURRENT RELAY
68	BLOCKING OR OUT OF STEP RELAY
69	PERMISSIVE CONTROL DEVICE
70	RHEOSTAT
71	LIQUID LEVEL SWITCH
72	DC CIRCUIT BREAKER
73	LOAD-RESISTOR CONTACTOR
74	ALARM RELAY
75	POSITION CHANGING MECHANISM
76	DC OVERCURRENT RELAY
77	TELEMETERING DEVICE
78	PHASE-ANGLE MEASURING RELAY
79	AC RECLOSING RELAY
80	FLOW SWITCH
81	FREQUENCY RELAY
82	DC LOAD MEASURING RECLOSING RELAY
83	AUTOMATIC SELECTIVE CONTROL OR TRANSFER RELAY
84	OPERATING MECHANISM
85	PILOT COMMUNICATIONS, CARRIER OR PILOT-WIRE RELAY
86	LOCKOUT RELAY
87	DIFFERENTIAL PROTECTIVE RELAY
88	AUXILIARY MOTOR OR MOTOR GENERATOR
89	LINE SWITCH
90	REGULATING DEVICE
91	VOLTAGE DIRECTIONAL RELAY
92	VOLTAGE AND POWER DIRECTIONAL RELAY
93	FIELD-CHANGING CONTACTOR
94	TRIPPING OR TRIP-FREE RELAY

COMMONLY USED SUFFIX LETTER APPLIED TO POWER DEVICE FUNCTION NUMBERS

A	ALARM ONLY
B	BUS PROTECTION
G	GROUND FAULT PROTECTION (RELAY CT IN A SYSTEM NEUTRAL CIRCUIT OR GENERATOR PROTECTION)
GS	GROUND FAULT PROTECTION (RELAY CT IN TOROIDAL OR GROUND SENSOR TYPE)
L	LINE PROTECTION
M	MOTOR PROTECTION
N	GROUND FAULT PROTECTION (RELAY COIL CONNECTED IN RESIDUAL CT CIRCUIT)
T	TRANSFORMER PROTECTION
V	VOLTAGE
P	PHASE PROTECTION

ABBREVIATIONS

AFD	ARC FLASH DETECTOR
CLK	CLOCK OR RIMING SOURCE
DDR	DYNAMIC DISTURBANCE RECORDER
DFR	DIGITAL FAULT RECORDER
ENV	ENVIRONMENTAL DATA
HIZ	HIGH IMPEDANCE FAULT DETECTOR
HMI	HUMAN MACHINE INTERFACE
HST	HISTORIAN
LGC	SCHEME LOGIC
MET	SUBSTATION METERING
PDC	PHASOR DATA CONCENTRATOR
PMU	PHASOR MEASUREMENT UNIT
PQM	POWER QUALITY MONITOR
RIO	REMOTE I/O DEVICE
RTU	REMOTE TELEMETRY UNIT/REMOTE TERMINAL UNIT
SER	SEQUENCE OF EVENTS RECORDER
TCM	TRIP CIRCUIT MONITOR

Digitally Signed by Lynn Douglas Group
Date: 2026.01.23 15:27:51 -08'00'
LYNN DOUGLAS GROUP
STATE OF WASHINGTON
24031376
REGISTERED
PROFESSIONAL ENGINEER

carollo®

LAST SAVED BY: lveloz

Date	No	Revision	By
	4		
	3		
	2		
	1		

PROJECT ENGINEER CE
DESIGNED/DRAWN CE
INSPECTOR

DIRECTOR PUBLIC WORKS
CITY ENGINEER
ASSISTANT DIRECTOR

CITY OF BELLINGHAM, WASHINGTON
PUBLIC WORKS DEPARTMENT
ENGINEERING DIVISION

SCALE
Horiz. AS SHOWN
Vert. AS SHOWN

DATUM
H: NAD 83/98
V: NAVD 88

Job. No. EU194
Date JAN 2026
Field Bk.

POST POINT RESOURCE RECOVERY PLANT
ELECTRICAL
ABBREVIATIONS

DRAWING NO. 010E102
SHEET NO. 86 OF 198

CONTACT PERSON: STEPHEN DAY, PE SE , PROJECT ENGINEER AT 360-778-7944

PROJECT NO. 202021-100000 FILE NAME: 202021010E102.dwg

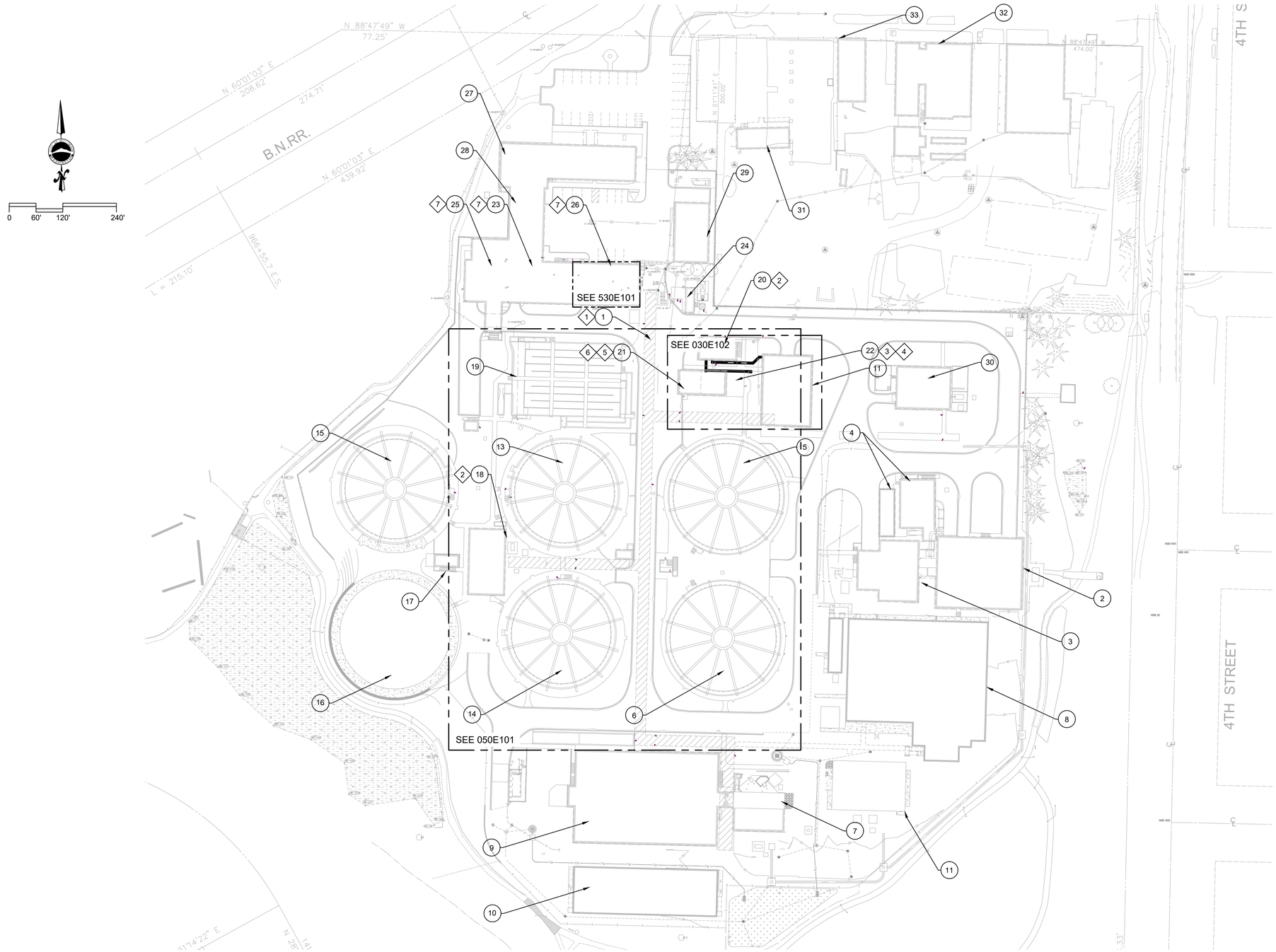

GENERAL NOTES:

1. THIS DRAWING SHOWS ALL HAZARDOUS AREA CLASSIFICATIONS PER NFPA 820-2020 AND AS SHOWN ON DRAWING 010G105.
2. REFER TO DRAWING 010G106 FOR STAGING AREA AND SITE ACCESS.

KEY NOTES:

1. UNCLASSIFIED PER NFPA 820-2020, TABLE 6.2.2(a), ROW 9(b).
2. UNCLASSIFIED PER NFPA 820-2020, TABLE 6.2.2(a), ROW 9(b).
3. AREAS WITHIN 3 FT OF VESSELS AND DUCTING: CLASS I, DIVISION 2 GROUP D PER NFPA 820-2020, TABLE 4.2.2, ROW 18(d).
4. AREAS OUTSIDE OF 3 FT OF VESSELS AND DUCTING: UNCLASSIFIED PER NFPA 820-2020, TABLE 4.2.2, ROW 18(e).
5. INTERIOR OF TANK IS CLASS I, DIVISION 1 GROUP D PER NFPA 820-2020, TABLE 6.2.2(a) ROW 11(a).
6. AREA WITHIN 10FT OF WALLS HORIZONTALLY AND 18 INCHES ABOVE WATER SURFACE IS CLASS I, DIVISION 2 GROUP D PER NFPA 820-2020, TABLE 6.2.2(a) ROW 11(c).
7. UNCLASSIFIED PER NFPA 820-2020, TABLE 6.2.2(a) ROW 8 (c) AND 9(b).

	FACILITY NUMBER	FACILITY NAME
1	050	GALLERY (BELOW GRADE)
2	110	SCREENING FACILITY
3	120	HEADWORKS
4	130	PRELIMINARY TREATMENT ODOR CONTROL
5	210	PRIMARY CLARIFIER 1
6	210	PRIMARY CLARIFIER 2
7	220	PRIMARY EFFLUENT PUMP STATION
8	305	SELECTOR/ACTIVATED SLUDGE BASIN 1
9	305	ACTIVATED SLUDGE BASIN 2 AND 3
10	311	ACTIVATED SLUDGE BASIN 4
11	320	HYPOCHLORITE GENERATION BUILDING
12	325	BLOWER BUILDING
13	330	SECONDARY CLARIFIER 1
14	330	SECONDARY CLARIFIER 2
15	330	SECONDARY CLARIFIER 3
16	330	SECONDARY CLARIFIER 4
17	330	SECONDARY CLARIFIER ML SPLITTER
18	340	SECONDARY SLUDGE PUMP STATION
19	410	CHLORINE CONTACT BASIN
20	420	SLUDGE STORAGE BUILDING
21	440	SLUDGE STORAGE TANKS
22	440	SLUDGE STORAGE TANKS ODOR CONTROL
23	510	SOLIDS HANDLING BUILDING
24	510	SOLIDS HANDLING ODOR CONTROL
25	520	SOLIDS HANDLING BUILDING WEST
26	530	SOLIDS HANDLING BUILDING EAST
27	710	ADMINISTRATION AND LABORATORY
28	720	SHOP/MAINTENANCE
29	730	STORAGE BUILDING
30	740	EMERGENCY GENERATOR BUILDING
31		MAINTENANCE OFFICES
32		MAINTENANCE SHOP
33		MAINTENANCE STORAGE

Digitally signed by Tyler Douglas Group
Contact info: tdg@tdgpe.com
Date: 2026.01.27 14:31:42 -08'00'
TYLER DOUGLAS GROUP
STATE OF WASHINGTON
24031376
REGISTERED
PROFESSIONAL ENGINEER

carollo®

Date	No	Revision	By
	4		
	3		
	2		
	1		

PROJECT ENGINEER _____
DESIGNED/DRAWN TDT/BLS
INSPECTOR _____

DIRECTOR PUBLIC WORKS _____
CITY ENGINEER _____
ASSISTANT DIRECTOR _____

CITY OF BELLINGHAM, WASHINGTON
PUBLIC WORKS DEPARTMENT
ENGINEERING DIVISION

SCALE
Horiz. AS SHOWN
Vert. AS SHOWN

DATUM
H: NAD 83/98
V: NAVD 88

Job. No. EU194
Date JAN 2026
Field Bk. _____

POST POINT RESOURCE RECOVERY PLANT
ELECTRICAL
OVERALL ELECTRICAL SITE PLAN

DRAWING NO. 030E101
SHEET NO. 87 OF 198

CONTACT PERSON: STEPHEN DAY, PE SE , PROJECT ENGINEER AT 360-778-7944

PROJECT NO. 202021-100000 FILE NAME: 202021030E201.dwg

LAST SAVED BY: bshepard

GENERAL NOTES:

1. REFER TO DRAWING 30D101 FOR ADDITIONAL SITE DEMOLITION REQUIREMENTS. FIELD VERIFY ALL EXISTING CONDITIONS AND EXISTING UTILITIES PRIOR TO DEMOLITION.

KEY NOTES:

1. REFER TO DEMOLITION DRAWINGS FOR ADDITIONAL DEMOLITION REQUIREMENTS FOR THE EXISTING CHLORINE STORAGE BUILDING (LOCATED WHERE NEW 440 SLUDGE STORAGE TANKS ARE SHOWN) AND EXISTING CHLORINE SCRUBBER BUILDING (WILL BECOME 420 SLUDGE STORAGE BUILDING).
2. DEMOLISH EXISTING BUILDING 420 CHLORINE SCRUBBER BUILDING DUCT BANK FROM BUILDING 320 TO FACILITATE INSTALLATION OF NEW DUCT BANK FROM 420 SLUDGE STORAGE BUILDING. CAP AND ABANDON UNDER BUILDING 320.
3. CORE DRILLS FOR NEW CONDUITS SHALL BE LOCATED ABOVE EXISTING XF-32001 AND XF-32002. FIELD VERIFY EXISTING CONDITIONS TO COORDINATE CORE DRILL LOCATIONS TO MINIMIZE CONFLICTS WITH EXISTING LIGHTING/RACEWAY/EQUIPMENT INSIDE 320 ELECTRICAL ROOM.
4. RELOCATE AND RE-INSTALL EXISTING LIGHTING FIXTURES AS REQUIRED TO INSTALL NEW CONDUITS. ROUTE NEW CONDUITS UNDER EXISTING CABLE TRAYS SOUTH OF MCC-3201A/B (NOT SHOWN). FIELD VERIFY.
5. PROVIDE NEW PULL BOX MOUNTED ABOVE EXISTING 480V SWITCHGEAR TO FACILITATE ROUTING OF NEW CONDUCTORS INTO EXISTING EQUIPMENT FEEDER SECTIONS. PROVIDE SEPARATE PULL BOXES FOR A AND B CIRCUITS. ENCLOSURE SHALL BE NEMA 1 AND SIZED IN ACCORDANCE WITH NEC.
6. APPROXIMATE LOCATION OF EXISTING BUILDING 320 COMPUTER NETWORK CABINET. FIELD VERIFY EXISTING CONDITIONS.
7. LOCATE EXISTING C-CHANNEL STRUCTURAL MEMBERS (SPACED EVERY 24 INCHES). UTILIZE STRUCTURAL MEMBERS TO MOUNT NEW PREFORMED CHANNEL SUPPORTS.

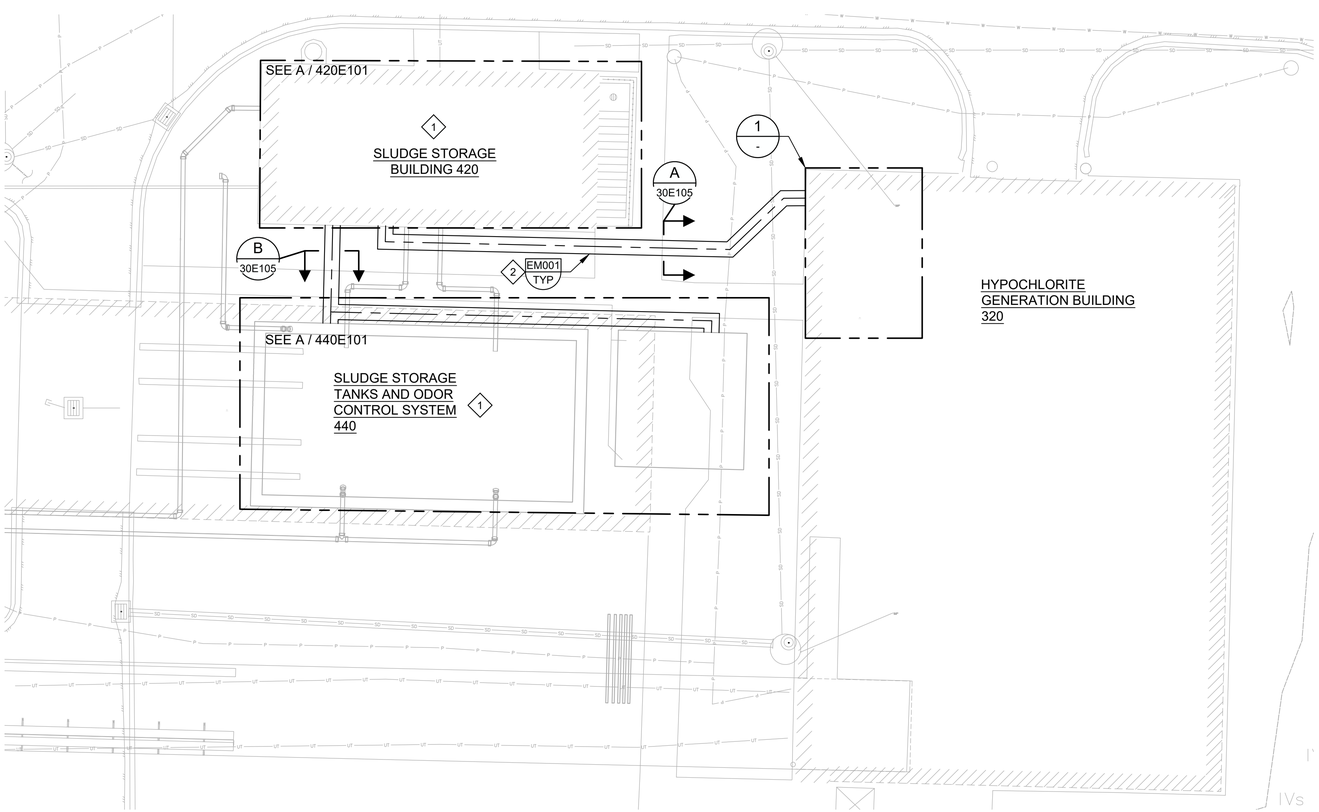

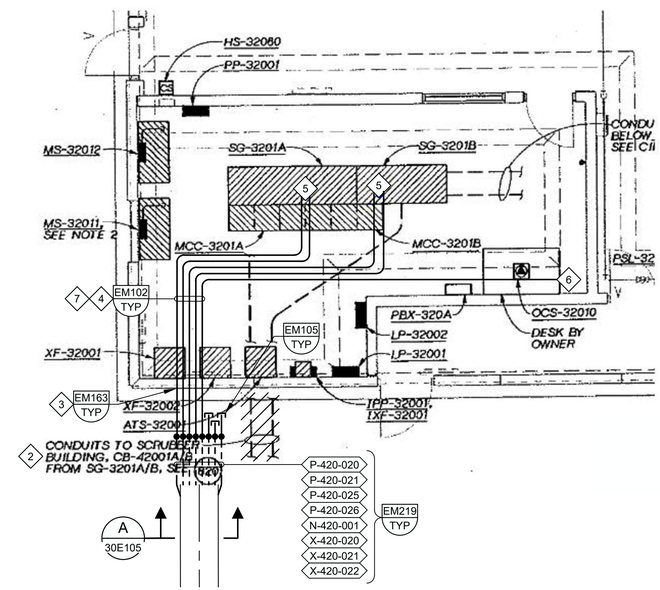

1 DETAIL
-
SCALE: 1/4" = 1'-0"
FILE: 201021030E0104.dwg

carollo

Date	No	Revision	By
	4		
	3		
	2		
	1		

PROJECT ENGINEER
DESIGNED/DRAWN TDT/BLS
INSPECTOR

DIRECTOR PUBLIC WORKS
CITY ENGINEER
ASSISTANT DIRECTOR

CITY OF BELLINGHAM, WASHINGTON
PUBLIC WORKS DEPARTMENT
ENGINEERING DIVISION

SCALE
Horiz. AS SHOWN
Vert. AS SHOWN

DATUM
H: NAD 83/98
V: NAVD 88

Job. No. EU194
Date JAN 2026
Field Bk.

POST POINT RESOURCE RECOVERY PLANT
ELECTRICAL
ENLARGED ELECTRICAL SITE PLAN

DRAWING NO. 030E102
SHEET NO. 88 OF 198

CONTACT PERSON: STEPHEN DAY, PE SE , PROJECT ENGINEER AT 360-778-7944

LAST SAVED BY: bshepard

PROJECT NO. 202021-100000 FILE NAME: 202021030E201.dwg

8/15/2025 8:30:12 AM

GENERAL NOTES:

1. CONSTRUCT DUCT BANK PER DETAIL EM001/TYP UNLESS OTHERWISE INDICATED.

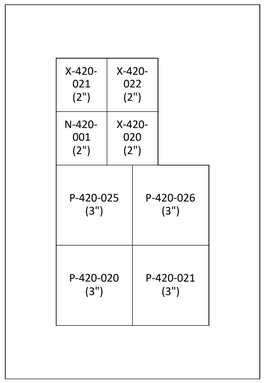

Width: 1'-9"
Height: 3'-1"

A DUCT BANK SECTION

030E102, 420E104, 420E105

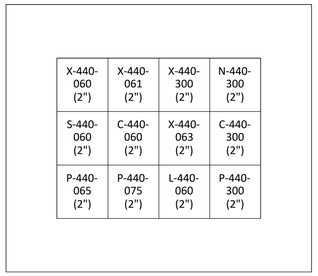

Width: 2'-4"
Height: 2'-2"

B DUCT BANK SECTION

030E102, 420E104, 420E105, 440E102

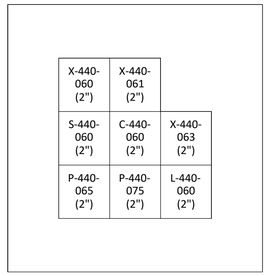

Width: 1'-11"
Height: 2'-2"

C DUCT BANK SECTION

440E102, 440E103

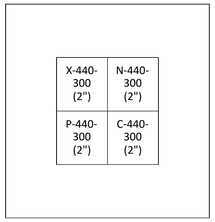

Width: 1'-7"
Height: 1'-9"

D DUCT BANK SECTION

440E102, 440E103

carollo®

LAST SAVED BY: lveloz

Date	No	Revision	By
	4		
	3		
	2		
	1		

PROJECT ENGINEER MSS
DESIGNED/DRAWN TDT/QGS
INSPECTOR CH

DIRECTOR PUBLIC WORKS
CITY ENGINEER
ASSISTANT DIRECTOR

CITY OF BELLINGHAM, WASHINGTON
PUBLIC WORKS DEPARTMENT
ENGINEERING DIVISION

SCALE
Horiz. AS SHOWN
Vert. AS SHOWN

DATUM
H: NAD 83/98
V: NAVD 88

Job. No. EU194
Date JAN 2026
Field Bk.

POST POINT RESOURCE RECOVERY PLANT
ELECTRICAL
ELECTRICAL DUCT BANK SECTIONS

DRAWING NO. 030E105
SHEET NO. 89 OF 198

CONTACT PERSON: STEPHEN DAY, PE SE , PROJECT ENGINEER AT 360-778-7944

PROJECT NO. 202021-100000 FILE NAME: 202021030E105.dwg

8/15/2025 8:53:25 AM

PP-34001 (EXISTING)

10/2/2024

LOCATION:	MCC-3401 ROOM	NEMA:	1	PH A WEIGHTED VA	14566
VOLTS:	480	FEED:	TOP	PH B WEIGHTED VA	14191
PHASE & WIRE:	3PH 3W	MTG.	SURFACE	PH C WEIGHTED VA	15504
INTERRUPT:	25 KAIC	BUS RATING:	100		
		MAIN:	CB	EQUIP SIZING VA	46512
		MAIN RATING:	100 AF 100 AT	PANEL AMPS	55.9

I/C/F	DESCRIPTION	LOAD (VA)	BKR	CIR	Ø	CIR	BKR	LOAD (VA)	DESCRIPTION	I/C/F
C		968		1	A	2		968		C
C	LCP-05980 SUMP PUMP CONTROL PANEL	968	20A-3P	3	B	4	20A-3P	968	LCP-34990 SUMP PUMP CONTROL PANEL	C
C		968		5	C	6		968		C
C		968		7	A	8		900		C
C	LCP-05950 SUMP PUMP CONTROL PANEL	968	20A-3P	9	B	10	20A-3P	900	MONORAIL	C
C		968		11	C	12		900		C
C		968		13	A	14		184		C
C	LCP-05940 SUMP PUMP CONTROL PANEL	968	20A-3P	15	B	16	20A-3P	184	ROLL UP DOOR	C
C		968		17	C	18		184		C
C		968		19	A	20		582		C
C	LCP-05960 SUMP PUMP CONTROL PANEL	968	20A-3P	21	B	22	15A-3P	582	EAM-34024	C
C		968		23	C	24		582		C
I		582		25	A	26		582		I
I	EDR-33014	582	15A-3P	27	B	28	15A-3P	582	EDR-34034	I
I		582		29	C	30		582		I
I		582		31	A	32		1350		C
I	EDR-34033	582	15A-3P	33	B	34	30A-3P	1350	LC-3401A SITE LIGHTING	C
I		582		35	C	36				
				37	A	38		2400		C
C	LC-3401C SITE LIGHTING	2100	30A-3P	39	B	40	30A-3P		LC-3401B SITE LIGHTING	
C		2100		41	C	42		2400		C

1

1

KEY NOTES:

1. NEW LOADS. PROVIDE UPDATED PANELBOARD SCHEDULE FOR INSIDE OF DOOR.

carollo

LAST SAVED BY: lveloz

Date	No	Revision	By
	4		
	3		
	2		
	1		

PROJECT ENGINEER MSS
DESIGNED/DRAWN TDT/QGS
INSPECTOR CH

DIRECTOR PUBLIC WORKS
CITY ENGINEER
ASSISTANT DIRECTOR

CITY OF BELLINGHAM, WASHINGTON
PUBLIC WORKS DEPARTMENT
ENGINEERING DIVISION

SCALE
Horiz. AS SHOWN
Vert. AS SHOWN

DATUM
H: NAD 83/98
V: NAVD 88

Job. No. EU194
Date JAN 2026
Field Bk.

POST POINT RESOURCE RECOVERY PLANT
ELECTRICAL
340 PANELBOARD AND DISCONNECT SCHEDULES

DRAWING NO. 030E106
SHEET NO. 90 OF 198

CONTACT PERSON: STEPHEN DAY, PE SE , PROJECT ENGINEER AT 360-778-7944

PROJECT NO. 202021-100000 FILE NAME: 202021030E106.dwg

PANEL LP-42001

10/7/2024

LOCATION:	SLUDGE STORAGE BUILDING	NEMA:	1	PH A WEIGHTED VA	8954
VOLTS:	208/120	FEED:	TOP	PH B WEIGHTED VA	7748
PHASE & WIRE:	3 PH 4W	MTG.	SURFACE	PH C WEIGHTED VA	9300
INTERRUPT:	22 KAIC	BUS RATING:	150		
OPTIONS:	SPD	MAIN:	CB	EQUIP SIZING VA	27900
		MAIN RATING:	150 AF 150 AT	PANEL AMPS	77.4

I/C/S	DESCRIPTION	LOAD (VA)	BKR	CIR	Ø	CIR	BKR	LOAD (VA)	DESCRIPTION	I/C/S
C	CDU-42030 ELECTRICAL ROOM CONDENSING UNIT 1	2600	30A-2P	1	A	2	20A-1P		SPARE	
C		2600		3	B	4	20A-1P	600	LCP-42020 POWER	C
C	CDU-42031 ELECTRICAL ROOM CONDENSING UNIT 2	2600	30A-2P	5	C	6	20A-1P	1800	LCP-42020 UPS POWER	C
C		2600		7	A	8	20A-1P		SPARE	
C	HTC-44021 W2 ODOR CONTROL HEAT TRACE CONTROLLER	500	20A-1P GFI	9	B	10	20A-1P	600	FACP-42001	C
C	HTC-44004 W3 SLUDGE TANK HEAT TRACE CONTROLLER	600	20A-1P GFI	11	C	12	20A-1P		SPARE	
	SPARE		20A-1P	13	A	14	20A-1P		SPARE	
	SPARE		20A-1P	15	B	16	20A-1P	284	ELECTRICAL ROOM LIGHTS	C
	SPARE		20A-1P	17	C	18	20A-1P	900	ELECTRICAL ROOM RECEPTACLES	I
	SPARE		20A-1P	19	A	20	20A-1P	355	STORAGE ROOM LIGHTS	C
	SPARE		20A-1P	21	B	22	20A-1P	720	STORAGE ROOM RECEPTACLES	I
	SPARE		20A-1P	23	C	24	20A-1P	568	PUMP ROOM LIGHTS	C
	SPARE		20A-1P	25	A	26	20A-1P	540	PUMP ROOM RECEPTACLES 1	I
	SPARE		20A-1P	27	B	28	20A-1P	174	SLUDGE STORAGE BUILDING EXTERIOR LIGHTS	C
	SPARE		20A-1P	29	C	30	20A-1P	900	SLUDGE STORAGE BUILDING EXTERIOR RECEPTACLES	I
	SPARE		20A-1P	31	A	32	20A-1P	600	SLUDGE STORAGE TANK LIGHTS	C
	SPARE		20A-1P	33	B	34	20A-1P	1080	SLUDGE STORAGE TANK RECEPTACLES 1	I
	SPARE		20A-1P	35	C	36	20A-1P	540	PUMP ROOM RECEPTACLES 2	I
	SPARE		20A-1P	37	A	38	20A-1P	720	SLUDGE STORAGE TANK RECEPTACLES 2	I
	SPARE		20A-1P	39	B	40	20A-1P		SPARE	
	SPARE		20A-1P	41	C	42	20A-1P		SPARE	

PANEL PP-42001

8/14/2024

LOCATION:	SLUDGE STORAGE BUILDING	NEMA:	1	PH A WEIGHTED VA	9643
VOLTS:	480	FEED:	TOP	PH B WEIGHTED VA	9643
PHASE & WIRE:	3 PH 3W	MTG.	SURFACE	PH C WEIGHTED VA	9643
INTERRUPT:	65 KAIC	BUS RATING:	150		
OPTIONS:	SPD	MAIN:	CB	EQUIP SIZING VA	28928
		MAIN RATING:	150 AF 150 AT	PANEL AMPS	34.8

I/C/S	DESCRIPTION	LOAD (VA)	BKR	CIR	Ø	CIR	BKR	LOAD (VA)	DESCRIPTION	I/C/S
C		1331		1	A	2			SPARE	
C	SLUDGE STORAGE BUILDING STORAGE ROOM MONORAIL	1331	20A-3P	3	B	4	20A-3P		SPARE	
C		1331		5	C	6			SPARE	
C		3334		7	A	8			SPARE	
C	EUH-42015 SLUDGE STORAGE BUILDING HEATER	3334	20A-3P	9	B	10	20A-3P		SPARE	
C		3334		11	C	12			SPARE	
C		3049		13	A	14			SPARE	
C	VCP-42010 SLUDGE STORAGE BUILDING SUMP PUMP CONTROL PANEL	3049	25A-3P	15	B	16	20A-3P		SPARE	
C		3049		17	C	18			SPARE	
	SPARE			19	A	20			SPARE	
	SPARE		20A-3P	21	B	22	20A-3P		SPARE	
	SPARE			23	C	24			SPARE	
	SPARE			25	A	26			SPARE	
	SPARE		20A-3P	27	B	28	20A-3P		SPARE	
	SPARE			29	C	30			SPARE	
	SPARE			31	A	32			SPARE	
	SPARE		20A-3P	33	B	34	20A-3P		SPARE	
	SPARE			35	C	36			SPARE	
	SPARE			37	A	38			SPARE	
	SPARE		20A-3P	39	B	40	20A-3P		SPARE	
	SPARE			41	C	42			SPARE	

DISCONNECT SCHEDULE

10/2/2024

TAG	VOLTAGE	POLES	AMPS	NEMA TYPE	TYPE	HORSEPOWER	FUSE SIZE	BREAKER AF/AT	ACCESSORIES
A	600 VAC	3P	30A	4	NON-FUSED				
B	600 VAC	3P	30A	4X-SS	NON-FUSED				
C	600 VAC	3P	30A	12	NON-FUSED				

ACCESSORIES
1= "B" TYPE ELECTRICAL INTERLOCK FOR POSITION INDICATION
2= INSULATED GROUNDABLE NEUTRAL KIT
3= DRAIN AND BREATHER KIT WHEN OUTDOORS
4= EARLY BREAK AUXILIARY CONTACT

8/15/2025 9:12:29 AM

LAST SAVED BY: lveloz

carollo

Date	No	Revision	By
	4		
	3		
	2		
	1		

PROJECT ENGINEER MSS
DESIGNED/DRAWN TDT/QGS
INSPECTOR CH

DIRECTOR PUBLIC WORKS
CITY ENGINEER
ASSISTANT DIRECTOR

CITY OF BELLINGHAM, WASHINGTON
PUBLIC WORKS DEPARTMENT
ENGINEERING DIVISION

SCALE
Horiz. AS SHOWN
Vert. AS SHOWN

DATUM
H: NAD 83/98
V: NAVD 88

Job. No. EU194
Date JAN 2026
Field Bk.

POST POINT RESOURCE RECOVERY PLANT
ELECTRICAL
420 PANELBOARD AND DISCONNECT SCHEDULES

DRAWING NO. 030E107
SHEET NO. 91 OF 198

CONTACT PERSON: STEPHEN DAY, PE SE , PROJECT ENGINEER AT 360-778-7944

PROJECT NO. 202021-100000 FILE NAME: 202021030E107.dwg

8/15/2025 9:35:33 AM

PANEL PP-53002

8/21/2024

LOCATION:	SOLIDS HANDLING BUILDING - EAST	NEMA:	4X	PH A WEIGHTED VA	21176
VOLTS:	480	FEED:	TOP	PH B WEIGHTED VA	21176
PHASE & WIRE:	3 PH 3W	MTG.	SURFACE	PH C WEIGHTED VA	21176
INTERRUPT:	65 KAIC	BUS RATING:	600		
OPTIONS:	SPD	MAIN:	CB	EQUIP SIZING VA	63529
		MAIN RATING:	600 AF 600 AT	PANEL AMPS	76.4

I/C/S	DESCRIPTION	LOAD (VA)	BKR	CIR	Ø	CIR	BKR	LOAD (VA)	DESCRIPTION	I/C/S
C		3049		1	A	2		305		I
C	VCP-53020 SOLIDS HANDLING BUILDING EAST SUMP PUMP CONTROL PANEL	3049	30A-3P	3	B	4	15A-3P	305	EDR-53010 TSL SAMPLE VALVE	I
C		3049		5	C	6		305		I
C		11085		7	A	8		500		C
C	PMP-53061 THICKENED SLUDGE PUMP 1	11085	60A-3P	9	B	10	15A-3P	500	SOLIDS HANDLING BUILDING EAST BASEMENT WATER HEATER	C
C		11085		11	C	12		500		C
S		11085		13	A	14			SPARE	
S	PMP-53062 THICKENED SLUDGE PUMP 2	11085	60A-3P	15	B	16	20A-3P		SPARE	
S		11085		17	C	18			SPARE	
C		1331		19	A	20			SPARE	
C	MIX-53012 INLINE POLYMER MIXER	1331	20A-3P	21	B	22	20A-3P		SPARE	
C		1331		23	C	24			SPARE	
I		305		25	A	26			SPARE	
I	EDR-53014 SST BYPASS VALVE	305	15A-3P	27	B	28	20A-3P		SPARE	
I		305		29	C	30			SPARE	
I		305		31	A	32			SPARE	
I	EDR-53015 SST FEED VALVE	305	15A-3P	33	B	34	20A-3P		SPARE	
I		305		35	C	36			SPARE	
I		305		37	A	38			SPARE	
I	EDR-53016 SST RETURN VALVE	305	15A-3P	39	B	40	20A-3P		SPARE	
I		305		41	C	42			SPARE	

1 6 10N306

KEY NOTES:

1. PROVIDE 6-PULSE VFD WITH INTEGRAL LINE AND LOAD REACTORS. REFER TO SECTION 26_29_24 FOR ADDITIONAL VFD REQUIREMENTS.

carollo®

LAST SAVED BY: lveloz

Date	No	Revision	By
	4		
	3		
	2		
	1		

PROJECT ENGINEER MSS
DESIGNED/DRAWN TDT/QGS
INSPECTOR CH

DIRECTOR PUBLIC WORKS
CITY ENGINEER
ASSISTANT DIRECTOR

CITY OF BELLINGHAM, WASHINGTON
PUBLIC WORKS DEPARTMENT
ENGINEERING DIVISION

SCALE
Horiz. AS SHOWN
Vert. AS SHOWN

DATUM
H: NAD 83/98
V: NAVD 88

Job. No. EU194
Date JAN 2026
Field Bk.

POST POINT RESOURCE RECOVERY PLANT
ELECTRICAL
530 PANELBOARD SCHEDULES

DRAWING NO. 030E108
SHEET NO. 92 OF 198

CONTACT PERSON: STEPHEN DAY, PE SE , PROJECT ENGINEER AT 360-778-7944

PROJECT NO. 202021-100000 FILE NAME: 202021030E108.dwg

8/15/2025 1:39:38 PM

LUMINAIRE SCHEDULE

10/3/2024

ITEM	DESCRIPTION	MOUNTING METHOD	LAMP QUANTITY	LAMP TYPE	LUMINAIRE SPECIFICATIONS MANUFACTURER	CATALOG	VOLTS	VA
A	SEALED, AND GASKETED LED LUMINAIRE, CLEAR POLYCARBONATE LENS 80 CRI, SUITABLE FOR WET LOCATIONS, w/ HIGH EFFICIENCY LEDs FOR AMBIENT TEMPERATURES -29 TO 40 DEG C, L80 AT 75,000 HOURS 0-10V DIMMING	CEILING MOUNT OR SUSPENDED AS NEEDED	N/A	LED 4000K CCT 6,643 LUMENS	HOLOPHANE	EVT4 6000LM PCL WD MVOLT GZ10 40K 80 CRI	120	71
B	SEALED, AND GASKETED LED LUMINAIRE, CLEAR POLYCARBONATE LENS 80 CRI, SUITABLE FOR WET LOCATIONS, w/ HIGH EFFICIENCY LEDs FOR AMBIENT TEMPERATURES 0 TO 30 DEG C, L80 AT 75,000 HOURS 0-10V DIMMING WITH BODINE EMERGENCY BATTERY PACK	CEILING MOUNT OR SUSPENDED AS NEEDED	N/A	LED 4000K CCT 6,643 LUMENS	HOLOPHANE	EVT4 6000LM PCL WD MVOLT GZ10 40K 80 CRI BSL722	120	71
C	DELEON TL SINGLE FACE EXIT SIGN, UL WET LOCATION LISTED, SELF DIAGNOSTICS AMBIENT TEMPERATURES -40 TO 45 DEG C DUAL VOLTAGE 120/277 w/GREEN EXIT LETTERS SELF-CONTAINED, SEALED MAINTENANCE FREE NICKEL CADMIUM BATTERIES	WALL OR CEILING MOUNT		LED	HOLOPHANE	LNTLL NC W SG S	120	5
D	BUILDING-MOUNTED LUMINAIRE WITH ALUMINUM HOUSING SEALED AGAINST MOISTURE AND ENVIRONMENTAL CONTAMINANTS 70 CRI, TYPE IV LIGHT DISTRIBUTION, HIGH EFFICIENCY LEDs w/ MOTION/AMBIENT LIGHT SENSOR, BLACK FINISH, BATTERY PACK	WALL MOUNT	N/A	LED 4000K CCT 1,959 LUMENS	LITHONIA	MRW LED 1 10A700/40K SR4 MVOLT PIR ELCW DBLXD	120	29
E	PREDATOR SMALL LED WIDE FLOOD IP66, WET LOCATION LISTED, A360 DIECAST ALUMINUM HOUSING, BLACK FINISH DLC LISTED , BOROSILICATE PRISMATIC GLASS LENS, TENON SLIPFITTER- KNUCKL nLIGHT AIR OCCUPANCY AND DAYLIGHT SENSOR, BIRD SPIKES ACCESSORY UPPER VISOR BLACK PAINT	WALL MOUNT	N/A	LED 4000K CCT 7,643 LUMENS	HOLOPHANE	PSLED P2 40K MVOLT 66 KM BKSDP 20KV WL 04 23 LRSBOR PSLEDUBV BKSDP	120	50
1 F	EXPLOSION PROOF LED LOW BAY AND FLOODLIGHT IP66, UL1598 WET LOCATION LISTED, UL1598A MARINE OUTSIDE LISTED, COPPER-FREE ALUMINUM HOUSING, POWDER COAT BLACK FINISH DIFFUSED GLASS LENS, SLIP FITTER MOUNT BRACKET	WALL MOUNT	N/A	LED 4000K CCT 5,300 LUMENS	HOLOPHANE	HEXF1 P2 MV 4K T5M FG HEXFSF	120	40

KEY NOTES:

1. PROVIDE SWIVEL POLE FOR TYPE F LUMINAIRES LOCATED ON SLUDGE STORAGE TANK DECK PER DRAWING 440E103 AND AS SPECIFIED ON DRAWING 800TE003 EL901/TYP.

Digitally Signed: Connor Hayes Date: 8/15/2025

PAUL S. DOUGLAS GROUP
STATE OF WASHINGTON
24031376
REGISTERED
PROFESSIONAL ENGINEER

carollo®

lveloz

LAST SAVED BY:

Date	No	Revision	By
	4		
	3		
	2		
	1		

PROJECT ENGINEER MSS
DESIGNED/DRAWN TDT/QGS
INSPECTOR CH

DIRECTOR PUBLIC WORKS
CITY ENGINEER
ASSISTANT DIRECTOR

CITY OF BELLINGHAM, WASHINGTON
PUBLIC WORKS DEPARTMENT
ENGINEERING DIVISION

SCALE
Horiz. AS SHOWN
Vert. AS SHOWN

DATUM
H: NAD 83/98
V: NAVD 88

Job. No. EU194
Date JAN 2026
Field Bk.

POST POINT RESOURCE RECOVERY PLANT
ELECTRICAL
LUMINAIRE SCHEDULE

DRAWING NO. 030E110
SHEET NO. 93 OF 198

CONTACT PERSON: STEPHEN DAY, PE SE , PROJECT ENGINEER AT 360-778-7944

PROJECT NO. 202021-100000 FILE NAME: 202021030E110.dwg

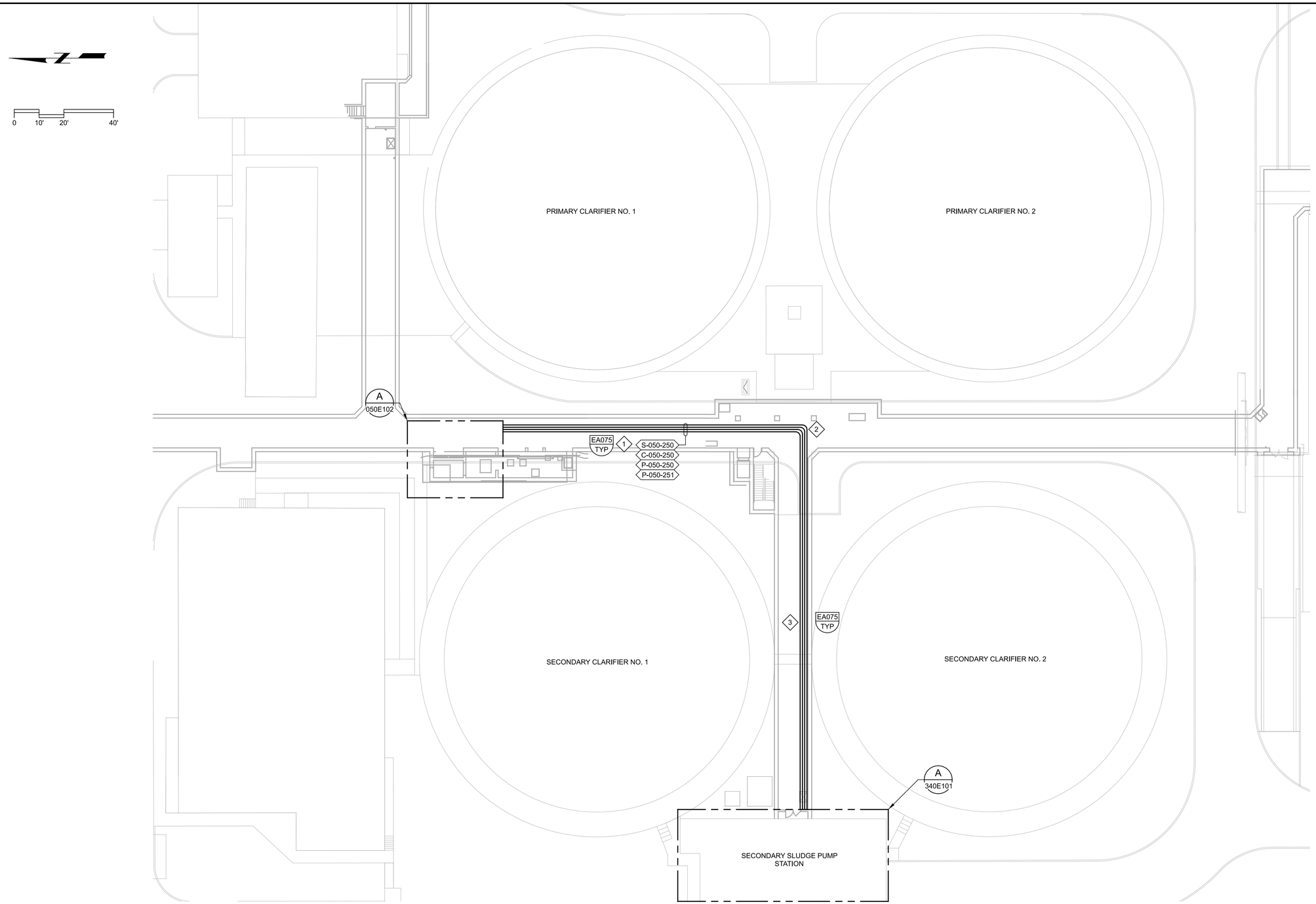

GENERAL NOTES:

1. CONDUITS SHOWN OFFSET FROM WALL AND EACH OTHER FOR DRAWING CLARITY.

KEY NOTES:

1. ROUTE CONDUIT ON EAST SIDE OF CEILING NEAR EAST WALL ABOVE PIPING. CONTRACTOR IS ENCOURAGED TO FIELD VERIFY EXISTING CONDITIONS PRIOR TO BIDDING.
2. PROVIDE LARGE RADIUS ELBOWS WITH MINIMUM RADIUS OF 18 INCHES.
3. ROUTE CONDUIT ON SOUTH SIDE OF CEILING NEAR SOUTH WALL ABOVE PIPING. CONTRACTOR IS ENCOURAGED TO FIELD VERIFY EXISTING CONDITIONS PRIOR TO BIDDING.

carollo®

Date	No	Revision	By
	4		
	3		
	2		
	1		

PROJECT ENGINEER MSS
DESIGNED/DRAWN MJP/LP
INSPECTOR CH

DIRECTOR PUBLIC WORKS
CITY ENGINEER
ASSISTANT DIRECTOR

CITY OF BELLINGHAM, WASHINGTON
PUBLIC WORKS DEPARTMENT
ENGINEERING DIVISION

SCALE
Horiz. AS SHOWN
Vert. AS SHOWN

DATUM
H: NAD 83/98
V: NAVD 88

Job. No. EU194
Date JAN 2026
Field Bk.

POST POINT RESOURCE RECOVERY PLANT
ELECTRICAL
GALLERY POWER AND CONTROL PLAN

DRAWING NO. 050E101
SHEET NO. 94 OF 198

CONTACT PERSON: STEPHEN DAY, PE SE , PROJECT ENGINEER AT 360-778-7944

PROJECT NO. FILE NAME: 8153A30050E101.dgn

Model: Layout1 ColorTable: gshade.ctb DesignScript: Carollo_Std_Pen_v0905.pen PlotScale: 1:1
Plot Date: 24-JAN-2026 1:30:10 PM
User: svcPW
LAST SAVED BY: LPitcHey

Plot Date: 24-JAN-2026 1:30:16 PM
User: svcPW
Model: Layout1 ColorTable: gshade.ctb DesignScript: Carollo_Std_Pen_v0905.pen PlotScale: 1:1
LAST SAVED BY: LPitchley

GENERAL NOTES:

1. CONDUITS SHOWN OFFSET FROM WALL AND EACH OTHER FOR DRAWING CLARITY.

KEY NOTES:

1. ROUTE CONDUIT ON EAST SIDE OF CEILING NEAR EAST WALL ABOVE PIPING. CONTRACTOR IS ENCOURAGED TO FIELD VERIFY EXISTING CONDITIONS PRIOR TO BIDDING. REFER TO 050E101 FOR GALLERY CONTINUATION.
2. ROUTE CONDUIT OVERHEAD TO WEST WALL.

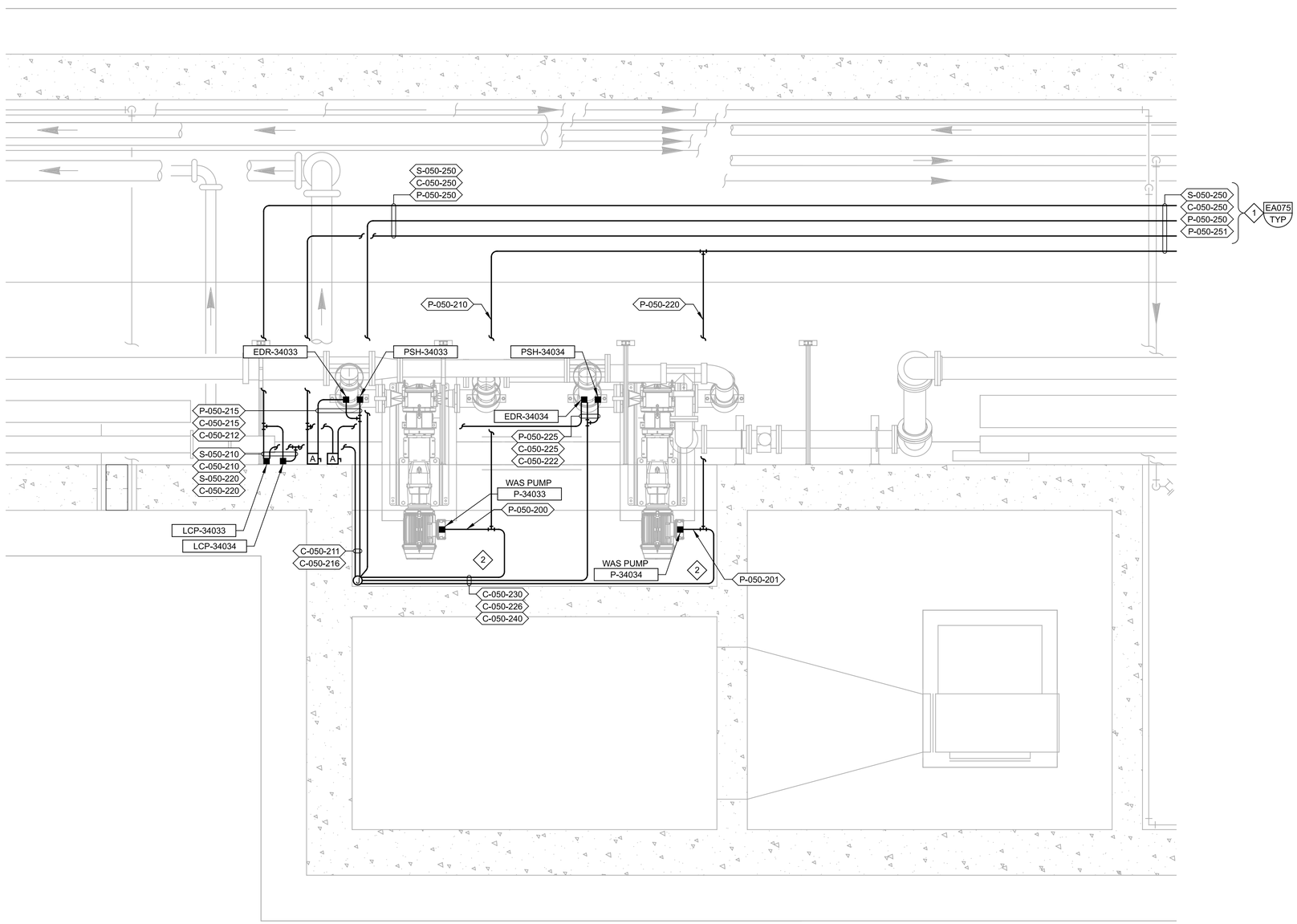

A PLAN
SCALE: 1/2" = 1'-0"
FILE: 202021050E102

carollo

Date	No	Revision	By
	4		
	3		
	2		
	1		

PROJECT ENGINEER MSS
DESIGNED/DRAWN MJP/LP
INSPECTOR CH

DIRECTOR PUBLIC WORKS
CITY ENGINEER
ASSISTANT DIRECTOR

CITY OF BELLINGHAM, WASHINGTON
PUBLIC WORKS DEPARTMENT
ENGINEERING DIVISION

SCALE
Horiz. AS SHOWN
Vert. AS SHOWN

DATUM
H: NAD 83/98
V: NAVD 88

Job. No. EU194
Date JAN 2026
Field Bk.

POST POINT RESOURCE RECOVERY PLANT
ELECTRICAL
WAS PUMPS POWER AND CONTROL PLAN

DRAWING NO. 050E102
SHEET NO. 95 OF 198

CONTACT PERSON: STEPHEN DAY, PE SE , PROJECT ENGINEER AT 360-778-7944

PROJECT NO. FILE NAME: 8153A30050E102.dgn

GENERAL NOTES:

1. THE 420 CHLORINE STORAGE BUILDING IS BEING DEMOLISHED. THE 420 CHLORINE SCRUBBER BUILDING IS BEING RETAINED BUT ALL THE EXISTING ELECTRICAL EQUIPMENT AND LIGHTING TO BE DEMOLISHED AS INDICATED ON THIS DRAWING.
2. ALL EXISTING BUILDING 420 CHLORINE SCRUBBER AND CHLORINE STORAGE ELECTRICAL EQUIPMENT TO BE DEMOLISHED AS INDICATED ON THE DRAWING. REFER TO BUILDING 420 DEMOLITION PLAN DRAWINGS FOR ADDITIONAL ELECTRICAL DEMOLITION REQUIREMENTS.

KEY NOTES:

1. LOCATED IN 420 CHLORINE SCRUBBER BUILDING.

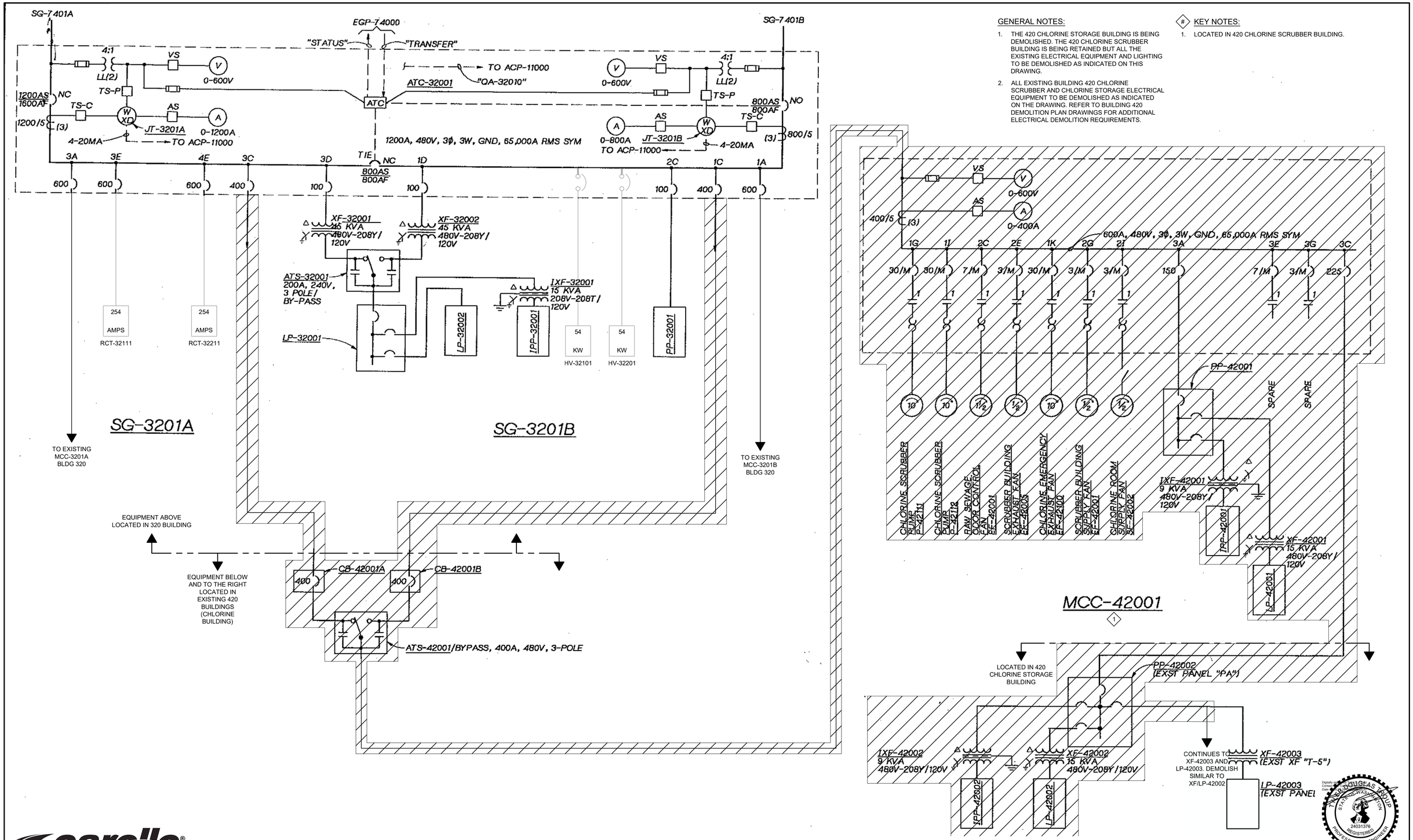

carollo®

Date	No	Revision	By
	4		
	3		
	2		
	1		

PROJECT ENGINEER _____
DESIGNED/DRAWN TDT/NCS
INSPECTOR _____

DIRECTOR PUBLIC WORKS _____
CITY ENGINEER _____
ASSISTANT DIRECTOR _____

CITY OF BELLINGHAM, WASHINGTON
PUBLIC WORKS DEPARTMENT
ENGINEERING DIVISION

SCALE
Horiz. AS SHOWN
Vert. AS SHOWN

DATUM
H: NAD 83/98
V: NAVD 88

Job. No. EU194
Date JAN 2026
Field Bk. _____

POST POINT RESOURCE RECOVERY PLANT
ELECTRICAL
SG-3201A/B DEMOLITION ONE-LINE DIAGRAM

DRAWING NO. 320DE001
SHEET NO. 96 OF 198

CONTACT PERSON: STEPHEN DAY, PE SE , PROJECT ENGINEER AT 360-778-7944

PROJECT NO. 202021-100000 FILE NAME: 202021320DE001.dwg

Plot Date: 10/5/2022 11:09:47 AM

LAST SAVED BY: lveloz

10/9/2024 12:09:07 PM

GENERAL NOTES:

1. SWITCHBOARD SG-3201 IS EXISTING:
   - MANUFACTURER: GENERAL ELECTRIC
   - MODEL: AV-LINE
   - PRODUCT TYPE: AV2
   - JOB NUMBER: 59744
   - VOLTAGE: 480V
   - PHASE: 3
   -WIRE: 3
   - FREQUENCY: 60HZ

KEY NOTES:

1. PROVIDE NEW NAMEPLATE.

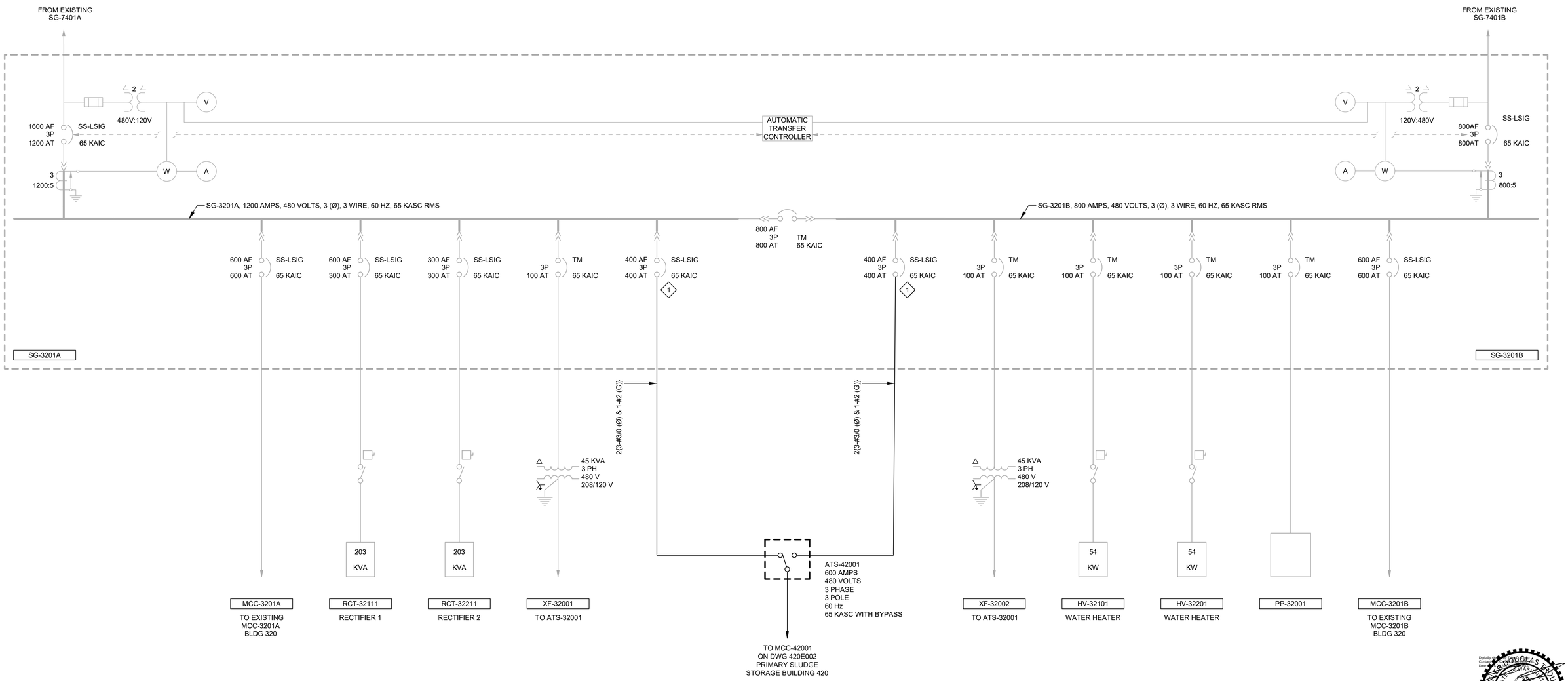

carollo®

LAST SAVED BY: lveloz

Date	No	Revision	By
	4		
	3		
	2		
	1		

PROJECT ENGINEER MSS
DESIGNED/DRAWN TDT/BLS
INSPECTOR CH

DIRECTOR PUBLIC WORKS
CITY ENGINEER
ASSISTANT DIRECTOR

CITY OF BELLINGHAM, WASHINGTON
PUBLIC WORKS DEPARTMENT
ENGINEERING DIVISION

SCALE
Horiz. AS SHOWN
Vert. AS SHOWN

DATUM
H: NAD 83/98
V: NAVD 88

Job. No. EU194
Date JAN 2026
Field Bk.

POST POINT RESOURCE RECOVERY PLANT

ELECTRICAL
SG-3201A/B MODIFIED ONE-LINE DIAGRAM

DRAWING NO. 320E001
SHEET NO. 97 OF 198

CONTACT PERSON: STEPHEN DAY, PE SE , PROJECT ENGINEER AT 360-778-7944

PROJECT NO. 202021-100000 FILE NAME: 202021320E001.dwg

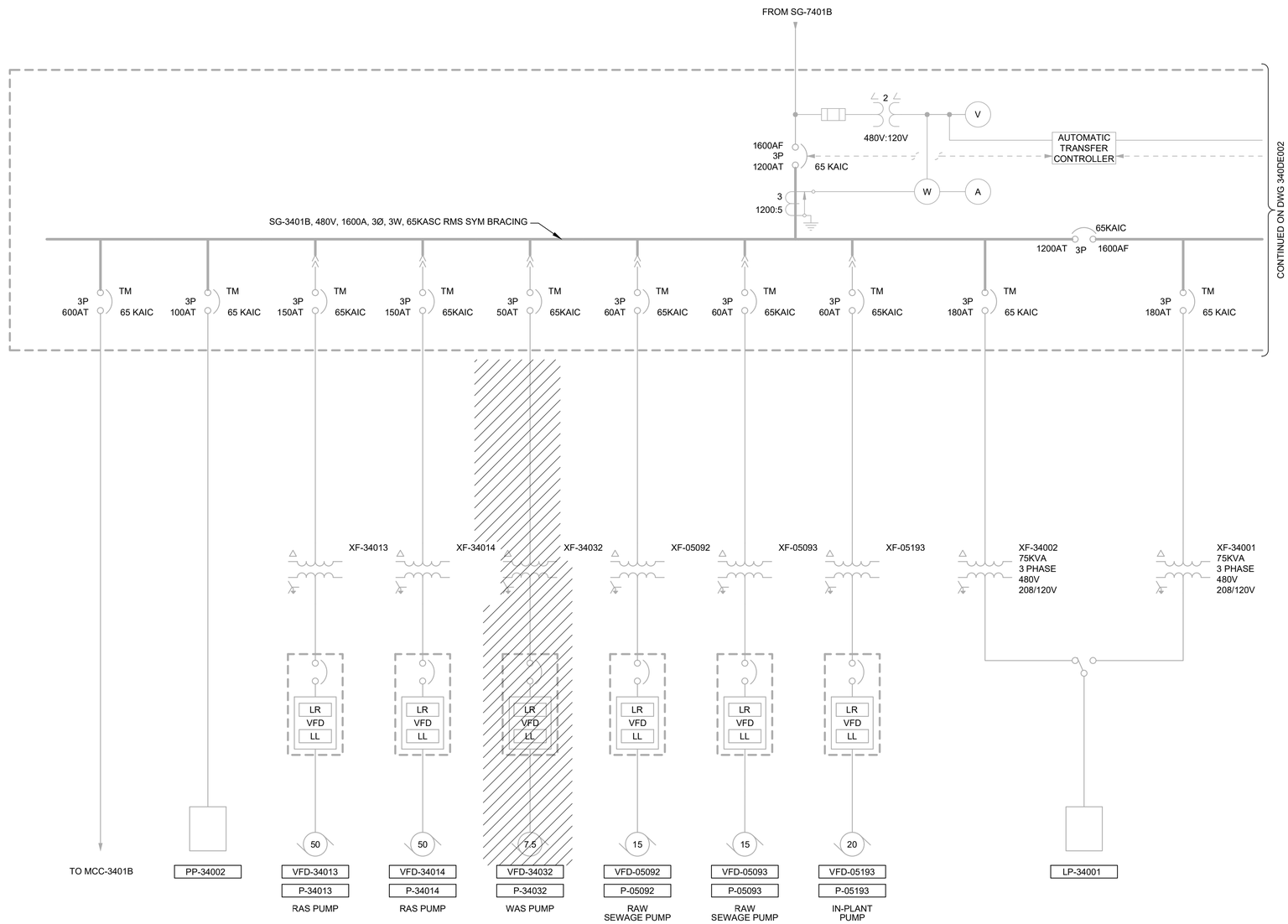

carollo

Date	No	Revision	By
	4		
	3		
	2		
	1		

PROJECT ENGINEER _____
DESIGNED/DRAWN TDT/BLS
INSPECTOR _____

DIRECTOR PUBLIC WORKS _____
CITY ENGINEER _____
ASSISTANT DIRECTOR _____

CITY OF BELLINGHAM, WASHINGTON
PUBLIC WORKS DEPARTMENT
ENGINEERING DIVISION

SCALE
Horiz. AS SHOWN
Vert. AS SHOWN

DATUM
H: NAD 83/98
V: NAVD 88

Job. No. EU194
Date JAN 2026
Field Bk. _____

POST POINT RESOURCE RECOVERY PLANT
ELECTRICAL
SG-3401 DEMOLITION ONE-LINE DIAGRAM 1

DRAWING NO. 340DE001
SHEET NO. 98 OF 198

LAST SAVED BY: tveloz

CONTACT PERSON: STEPHEN DAY, PE SE , PROJECT ENGINEER AT 360-778-7944

PROJECT NO. 202021-100000 FILE NAME: 202021340DE001.dwg

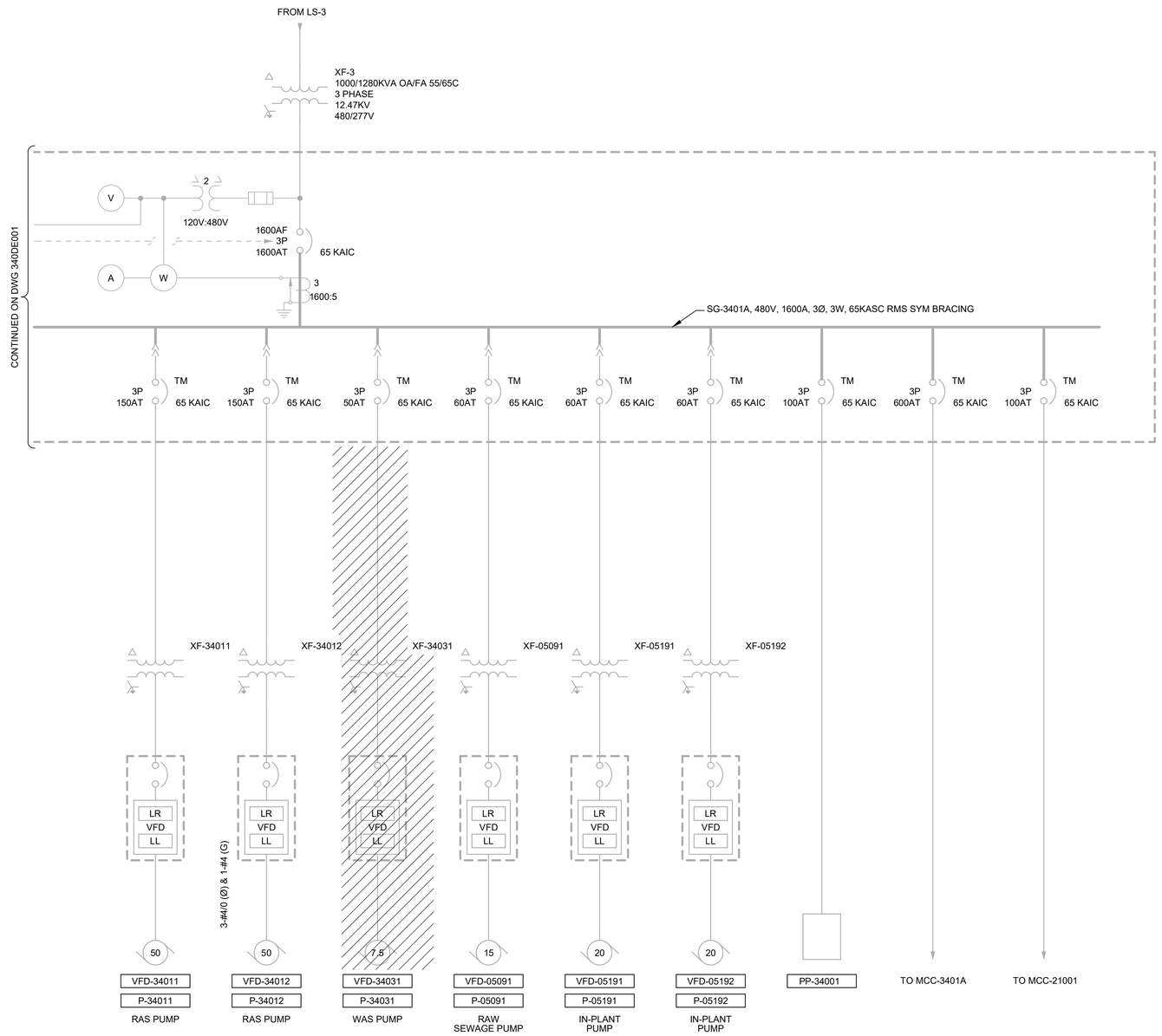

carollo®

Date	No	Revision	By
	4		
	3		
	2		
	1		

PROJECT ENGINEER _____
DESIGNED/DRAWN TDT/BLS
INSPECTOR _____

DIRECTOR PUBLIC WORKS _____
CITY ENGINEER _____
ASSISTANT DIRECTOR _____

CITY OF BELLINGHAM, WASHINGTON
PUBLIC WORKS DEPARTMENT
ENGINEERING DIVISION

SCALE
Horiz. AS SHOWN
Vert. AS SHOWN

DATUM
H: NAD 83/98
V: NAVD 88

Job. No. EU194
Date JAN 2026
Field Bk. _____

POST POINT RESOURCE RECOVERY PLANT
ELECTRICAL
SG-3401 DEMOLITION ONE-LINE DIAGRAM 2

DRAWING NO. 340DE002
SHEET NO. 99 OF 198

LAST SAVED BY: lveloz

CONTACT PERSON: STEPHEN DAY, PE SE , PROJECT ENGINEER AT 360-778-7944

PROJECT NO. 202021-100000 FILE NAME: 202021340DE002.dwg

GENERAL NOTES:

1. SWITCHBOARD SG-3401 IS EXISTING:
   - MANUFACTURER: GENERAL ELECTRICAL
   - MODEL: AV LINE
   - PRODUCT TYPE: AV2
   - JOB NUMBER: 59744
   - VOLTAGE: 480V
   - HORIZ BUS: 1600A
   - PHASE: 3
   - FREQUENCY: 60HZ

KEY NOTES:

1. PROVIDE NEW NAMEPLATE.

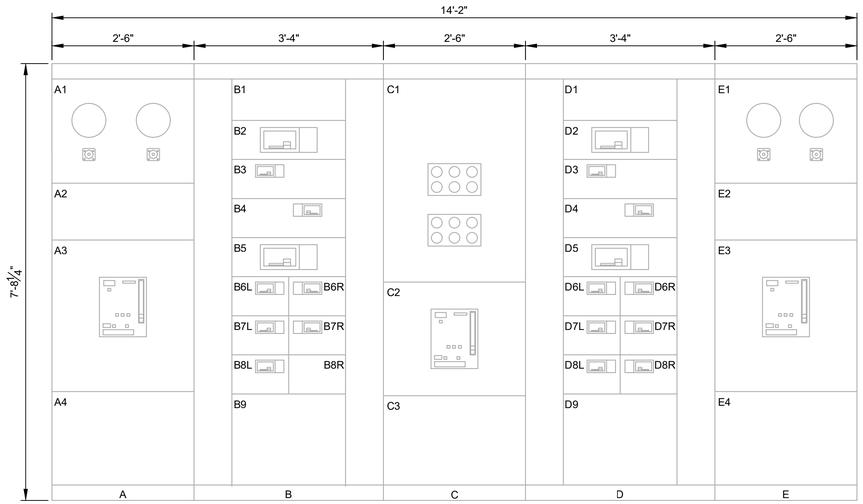

EXISTING FRONT

SCALE: 3/4"=1'-0"
FILE: FILE

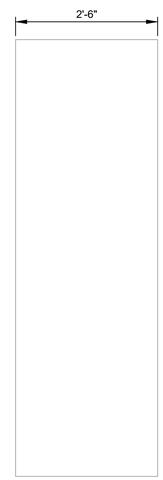

SIDE

SCALE: 3/4"=1'-0"
FILE: FILE

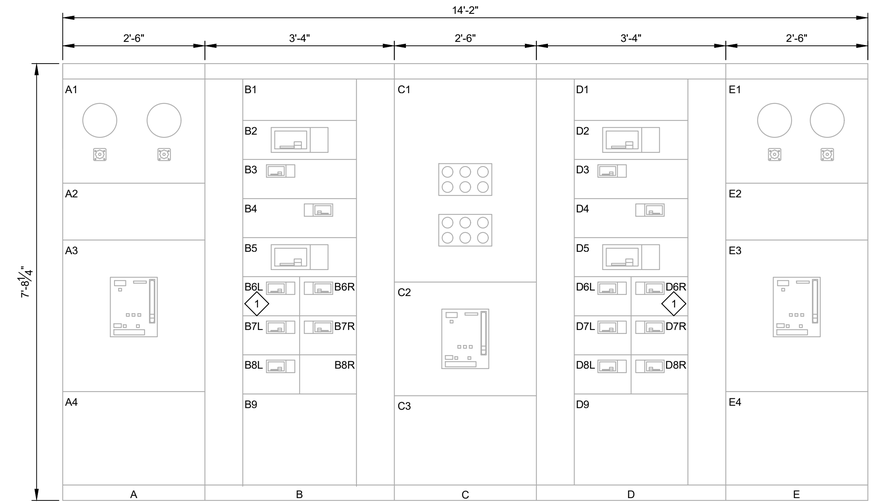

MODIFIED FRONT

SCALE: 3/4"=1'-0"
FILE: FILE

A1 - METERING
A2 - BLANK
A3 - MAIN BREAKER
A4 - PULL SECTION

B1 - BLANK
B2 - MCC-3401B
B3 - VFD-34013 P-34013 RAS PUMP
B4 - VFD-34014 P-34014 RAS PUMP
B5 - XF-34002
B6L - VFD-34032 P-34032 WAS PUMP
B6R- VFD-05092/P-05092 RAW SEWAGE PUMP
B7L - VFD-05093/P-05093 RAW SEWAGE PUMP
B7R- VFD-05093/P-05093 IN-PLANT PUMP
B8L - PP-34002
B8R- SPACE
B9 - BLANK

C1 - AUTOMATIC TRANSFER CONTROLLER
C2 - TIE BREAKER
C3 - BLANK

D1 - BLANK
D2 - XF-34001
D3 - VFD-34011 P-34011 RAS PUMP
D4 - VFD-34012 P-34012 RAS PUMP
D5 - MCC-3401A
D6L - MCC-21001
D6R- VFD-34031 P-34031 WAS PUMP
D7L - VFD-05091/P-05091 RAW SEWAGE PUMP
D7R- VFD-05091/P-05091 IN-PLANT PUMP
D8L - VFD-05092/P-05092 IN-PLANT PUMP
D8R- PP-34001
D9 - BLANK

F1 - METERING
F2 - BLANK
F3 - MAIN BREAKER
F4 - PULL SECTION

A1 - METERING
A2 - BLANK
A3 - MAIN BREAKER
A4 - PULL SECTION

B1 - BLANK
B2 - MCC-3401B
B3 - VFD-34013 P-34013 RAS PUMP
B4 - VFD-34014 P-34014 RAS PUMP
B5 - XF-34002
B6L - VFD-34034 P-34034 WAS PUMP
B6R- VFD-05092/P-05092 RAW SEWAGE PUMP
B7L - VFD-05093/P-05093 RAW SEWAGE PUMP
B7R- VFD-05093/P-05093 IN-PLANT PUMP
B8L - PP-34002
B8R- SPACE
B9 - BLANK

C1 - AUTOMATIC TRANSFER CONTROLLER
C2 - TIE BREAKER
C3 - BLANK

D1 - BLANK
D2 - XF-34001
D3 - VFD-34011 P-34011 RAS PUMP
D4 - VFD-34012 P-34012 RAS PUMP
D5 - MCC-3401A
D6L - MCC-21001
D6R- VFD-34033 P-34033 WAS PUMP
D7L - VFD-05091/P-05091 RAW SEWAGE PUMP
D7R- VFD-05091/P-05091 IN-PLANT PUMP
D8L - VFD-05092/P-05092 IN-PLANT PUMP
D8R- PP-34001
D9 - BLANK

F1 - METERING
F2 - BLANK
F3 - MAIN BREAKER
F4 - PULL SECTION

carollo®

Date	No	Revision	By
	4		
	3		
	2		
	1		

PROJECT ENGINEER MSS
DESIGNED/DRAWN TDT/BLS
INSPECTOR CH

DIRECTOR PUBLIC WORKS
CITY ENGINEER
ASSISTANT DIRECTOR

CITY OF BELLINGHAM, WASHINGTON
PUBLIC WORKS DEPARTMENT
ENGINEERING DIVISION

SCALE
Horiz. AS SHOWN
Vert. AS SHOWN

DATUM
H: NAD 83/98
V: NAVD 88

Job. No. EU194
Date JAN 2026
Field Bk.

POST POINT RESOURCE RECOVERY PLANT
ELECTRICAL
SG-3401 MODIFIED ELEVATION

DRAWING NO. 340E001
SHEET NO. 100 OF 198

CONTACT PERSON: STEPHEN DAY, PE SE , PROJECT ENGINEER AT 360-778-7944

PROJECT NO. 202021-100000 FILE NAME: 202021340E001.dwg

LAST SAVED BY: lveloz

KEY NOTES:

1. CONSTANT TORQUE MOTOR LOAD. UPSIZE VFD AS REQUIRED BY SECTION 26_29_24.

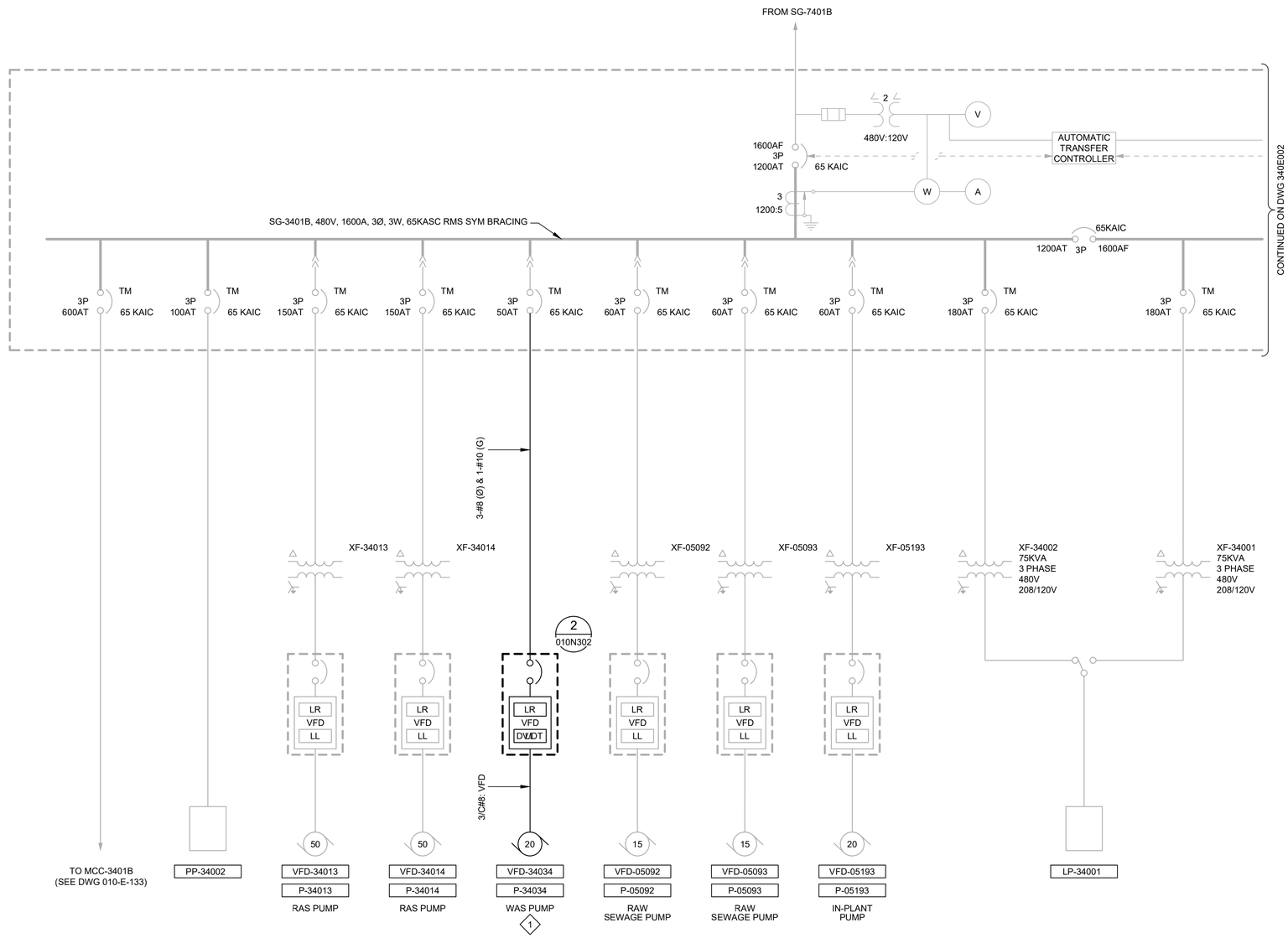

carollo®

Date	No	Revision	By
	4		
	3		
	2		
	1		

PROJECT ENGINEER MSS
DESIGNED/DRAWN TDT/BLS
INSPECTOR CH

DIRECTOR PUBLIC WORKS
CITY ENGINEER
ASSISTANT DIRECTOR

CITY OF BELLINGHAM, WASHINGTON
PUBLIC WORKS DEPARTMENT
ENGINEERING DIVISION

SCALE
Horiz. AS SHOWN
Vert. AS SHOWN

DATUM
H: NAD 83/98
V: NAVD 88

Job. No. EU194
Date JAN 2026
Field Bk.

POST POINT RESOURCE RECOVERY PLANT
ELECTRICAL
SG-3401 MODIFIED ONE-LINE DIAGRAM 1

DRAWING NO. 340E002
SHEET NO. 101 OF 198

CONTACT PERSON: STEPHEN DAY, PE SE , PROJECT ENGINEER AT 360-778-7944

LAST SAVED BY: tveloz

PROJECT NO. 202021-100000 FILE NAME: 202021340E002.dwg

KEY NOTES:

1. CONSTANT TORQUE MOTOR LOAD. UPSIZE VFD AS REQUIRED BY SECTION 26_29_24.

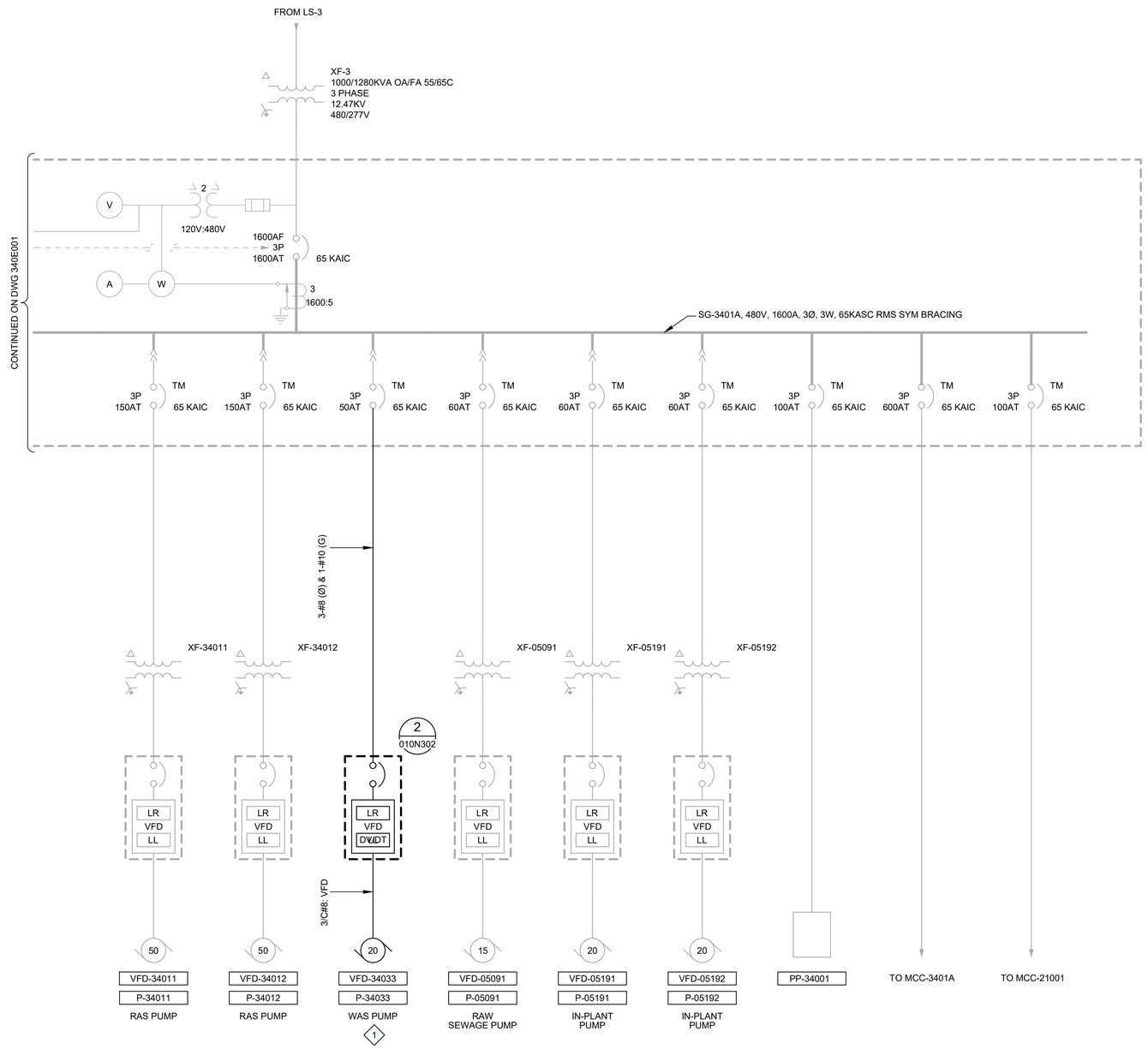

carollo®

Date	No	Revision	By
	4		
	3		
	2		
	1		

PROJECT ENGINEER MSS
DESIGNED/DRAWN TDT/BLS
INSPECTOR CH

DIRECTOR PUBLIC WORKS
CITY ENGINEER
ASSISTANT DIRECTOR

CITY OF BELLINGHAM, WASHINGTON
PUBLIC WORKS DEPARTMENT
ENGINEERING DIVISION

SCALE
Horiz. AS SHOWN
Vert. AS SHOWN

DATUM
H: NAD 83/98
V: NAVD 88

Job. No. EU194
Date JAN 2026
Field Bk.

POST POINT RESOURCE RECOVERY PLANT
ELECTRICAL
SG-3401 MODIFIED ONE-LINE DIAGRAM 2

DRAWING NO. 340E003
SHEET NO. 102 OF 198

LAST SAVED BY: Iveloz

CONTACT PERSON: STEPHEN DAY, PE SE , PROJECT ENGINEER AT 360-778-7944

PROJECT NO. 202021-100000 FILE NAME: 202021340E003.dwg

GENERAL NOTES:

1. MOTOR CONTROL CENTER MCC-3401 IS EXISTING.
   - -MANUFACTURER: GENERAL ELECTRIC
   - -MODEL: 8000 LINE
   - -CATALOG NUMBER: 591X0246M06
   - -DIAGRAM NUMBER: 264B6816
   - -VOLTAGE: 480 V
   - -HORIZ BUS: 600A
   - -PHASE: 3

KEY NOTES:

1. PROVIDE NEW STARTER IN EXISTING SPACE.

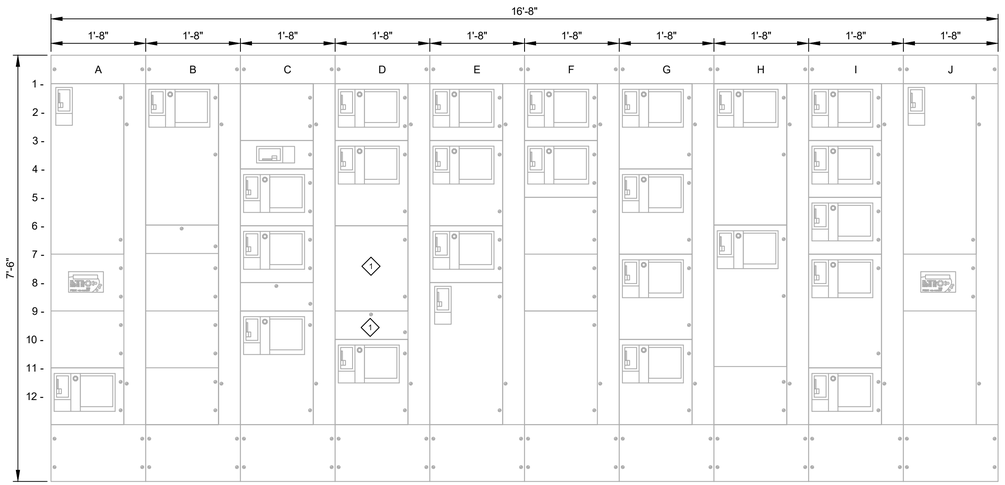

EXISTING FRONT

SCALE: 3/4"=1'-0"
FILE: FILE

A1- MCC-3401B MAIN BREAKER
A7 - MCC-3401B METERING
A9 - BLANK
A11- SPARE STARTER

B1 - VFD-05111 P-05111 W3 PUMP
B6 - SPACE
B7 - SPACE
B9 - SPACE
B11 - SPACE

C1 - SPACE
C3 - VCP-05120 W3 STRAINER
C4 - EF-05000 GALLERY EXHAUST FAN
C6 - EF-34001 PUMP ROOM EXHAUST FAN
C8 - SPACE
C9 - P-05060 CHLORINE CB DEWATERING PUMP

D1 - MX-41072 SODIUM BISULFITE MIXER
D3 - M-33011 SECONDARY CLARIFIER
D6 - SPACE
D9 - SPACE
D10 - MX-33050 CHLORINE MIXER

E1 - EF-34002 GALLERY EXHAUST FAN
E3 - M-21021 PRIMARY CLARIFIER
E6 - MUFFIN MONSTER
E8 - TIE BREAKER

F1 - SF-34001 MOTOR ROOM SUPPLY FAN
F3 - SF-34002 PUMP ROOM SUPPLY FAN
F5 - SPACE
F7 - SPACE
F9 - TIE LUGS

G1 - M-33014 SECONDARY CLARIFIER
G4 - M-33012 SECONDARY CLARIFIER
G7 - M-33013 SECONDARY CLARIFIER
G10 - M-21022 PRIMARY CLARIFIER

H1 - VFD-05112 P-05112 W3 PUMP
H6 - VFD-05113 P-05113 W3 PUMP
H11 - SPACE

I1 - P-34040 SEC SCUM RECIRC PUMP
I3 - ASU-34000 MOTOR ROOM AIR SUPPLY UNIT
I5 - P-05132 W4 PUMP
I7 - P-05040 PRI CLARIFIER DEWATERING PUMP
I10 - MX-41071 SODIUM BISULFITE MIXER

J1 - MCC-3401A MAIN BREAKER
J7 - MCC-3401A METERING
J9 - BLANK

SIDE

SCALE: 3/4"=1'-0"
FILE: FILE

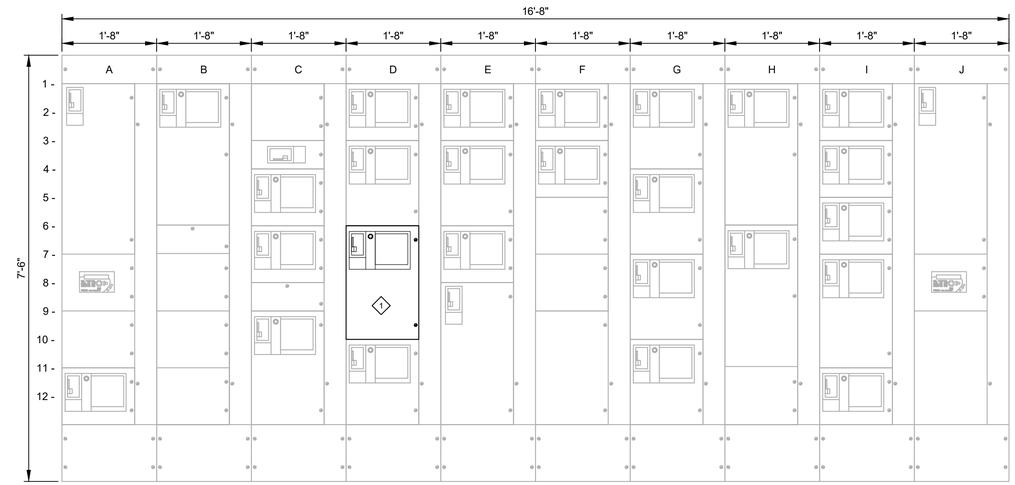

MODIFIED FRONT

SCALE: 3/4"=1'-0"
FILE: FILE

A1- MCC-3401B MAIN BREAKER
A7 - MCC-3401B METERING
A9 - BLANK
A11- SPARE STARTER

B1 - VFD-05111 P-05111 W3 PUMP
B6 - SPACE
B7 - SPACE
B9 - SPACE
B11 - SPACE

C1 - SPACE
C3 - VCP-05120 W3 STRAINER
C4 - EF-05000 GALLERY EXHAUST FAN
C6 - EF-34001 PUMP ROOM EXHAUST FAN
C9 - P-05060 CHLORINE CB DEWATERING PUMP

D1 - MX-41072 SODIUM BISULFITE MIXER
D3 - M-33011 SECONDARY CLARIFIER
D6 - P-33088 SEC CLARIFIER DEWATERING PUMP
D9 - SPACE
D10 - MX-33050 CHLORINE MIXER

E1 - EF-34002 GALLERY EXHAUST FAN
E3 - M-21021 PRIMARY CLARIFIER
E6 - MUFFIN MONSTER
E8 - TIE BREAKER

F1 - SF-34001 MOTOR ROOM SUPPLY FAN
F3 - SF-34002 PUMP ROOM SUPPLY FAN
F5 - SPACE
F7 - SPACE
F9 - TIE LUGS

G1 - M-33014 SECONDARY CLARIFIER
G4 - M-33012 SECONDARY CLARIFIER
G7 - M-33013 SECONDARY CLARIFIER
G10 - M-21022 PRIMARY CLARIFIER

H1 - VFD-05112 P-05112 W3 PUMP
H6 - VFD-05113 P-05113 W3 PUMP
H11 - SPACE

I1 - P-34040 SEC SCUM RECIRC PUMP
I3 - ASU-34000 MOTOR ROOM AIR SUPPLY UNIT
I5 - P-05132 W4 PUMP
I7 - P-05040 PRI CLARIFIER DEWATERING PUMP
I10 - MX-41071 SODIUM BISULFITE MIXER

J1 - MCC-3401A MAIN BREAKER
J7 - MCC-3401A METERING
J9 - BLANK

carollo®

Date	No	Revision	By
	4		
	3		
	2		
	1		

PROJECT ENGINEER MSS
DESIGNED/DRAWN TDT/BLS
INSPECTOR CH

DIRECTOR PUBLIC WORKS
CITY ENGINEER
ASSISTANT DIRECTOR

CITY OF BELLINGHAM, WASHINGTON
PUBLIC WORKS DEPARTMENT
ENGINEERING DIVISION

SCALE
Horiz. AS SHOWN
Vert. AS SHOWN

DATUM
H: NAD 83/98
V: NAVD 88

Job. No. EU194
Date JAN 2026
Field Bk.

POST POINT RESOURCE RECOVERY PLANT
ELECTRICAL
MCC-3401 MODIFIED ELEVATION

DRAWING NO. 340E004
SHEET NO. 103 OF 198

CONTACT PERSON: STEPHEN DAY, PE SE , PROJECT ENGINEER AT 360-778-7944

LAST SAVED BY: lveloz

PROJECT NO. 202021-100000 FILE NAME: 202021340E004.dwg

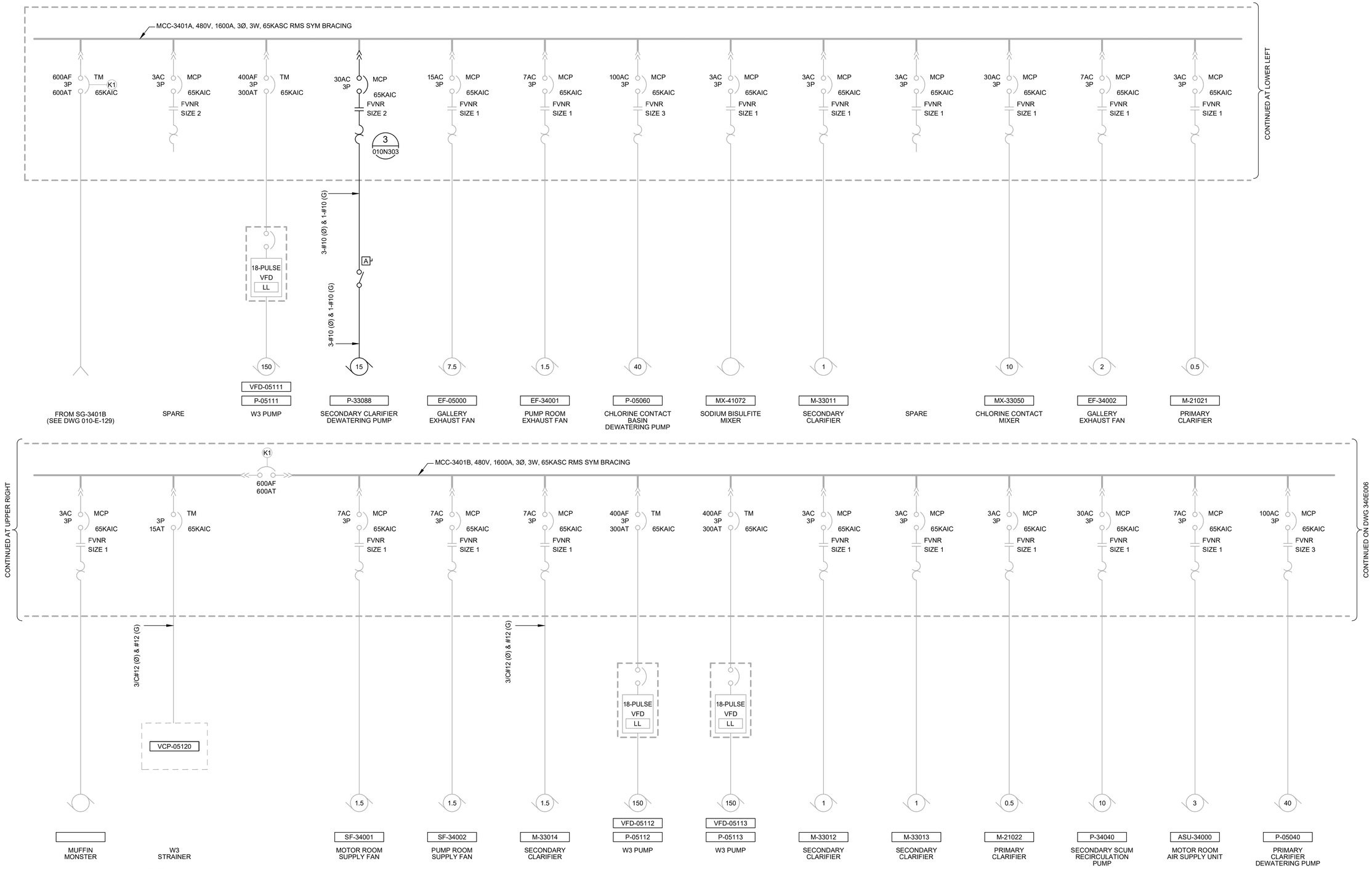

carollo®

Date	No	Revision	By
	4		
	3		
	2		
	1		

PROJECT ENGINEER MSS
DESIGNED/DRAWN TDT/BLS
INSPECTOR CH

DIRECTOR PUBLIC WORKS
CITY ENGINEER
ASSISTANT DIRECTOR

CITY OF BELLINGHAM, WASHINGTON
PUBLIC WORKS DEPARTMENT
ENGINEERING DIVISION

SCALE
Horiz. AS SHOWN
Vert. AS SHOWN

DATUM
H: NAD 83/98
V: NAVD 88

Job. No. EU194
Date JAN 2026
Field Bk.

POST POINT RESOURCE RECOVERY PLANT
ELECTRICAL
MCC-3401 MODIFIED ONE-LINE DIAGRAM 1

DRAWING NO. 340E005
SHEET NO. 104 OF 198

CONTACT PERSON: STEPHEN DAY, PE SE , PROJECT ENGINEER AT 360-778-7944

LAST SAVED BY: lveloz

PROJECT NO. 202021-100000 FILE NAME: 202021340E005.dwg

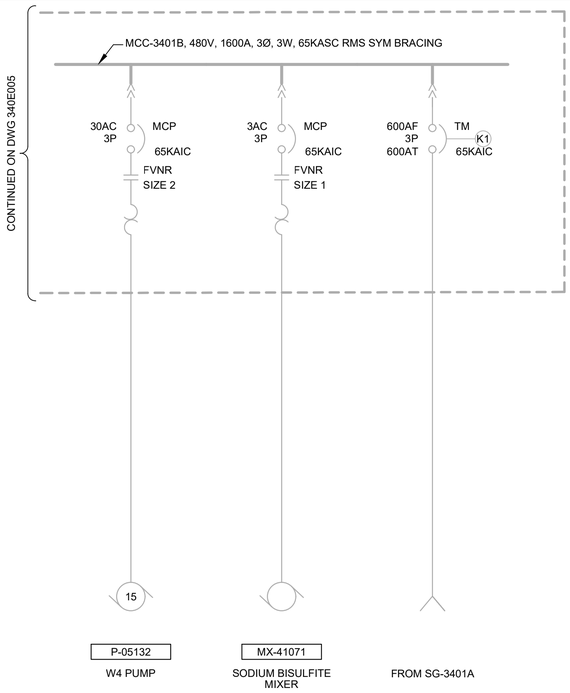

carollo

Date	No	Revision	By
	4		
	3		
	2		
	1		

PROJECT ENGINEER MSS
DESIGNED/DRAWN TDT/BLS
INSPECTOR CH

DIRECTOR PUBLIC WORKS
CITY ENGINEER
ASSISTANT DIRECTOR

CITY OF BELLINGHAM, WASHINGTON
PUBLIC WORKS DEPARTMENT
ENGINEERING DIVISION

SCALE
Horiz. AS SHOWN
Vert. AS SHOWN

DATUM
H: NAD 83/98
V: NAVD 88

Job. No. EU194
Date JAN 2026
Field Bk.

POST POINT RESOURCE RECOVERY PLANT
ELECTRICAL
MCC-3401 MODIFIED ONE-LINE DIAGRAM 2

DRAWING NO. 340E006
SHEET NO. 105 OF 198

LAST SAVED BY: Iveloz

CONTACT PERSON: STEPHEN DAY, PE SE , PROJECT ENGINEER AT 360-778-7944

PROJECT NO. 202021-100000 FILE NAME: 202021340E006.dwg

Plot Date: 24-JAN-2026 2:19:12 PM
User: svcPW
Model: Layout1 ColorTable: gshade.ctb DesignScript: Carollo_Std_Pen_v0905.pen PlotScale: 1:1
LAST SAVED BY: LPritchley

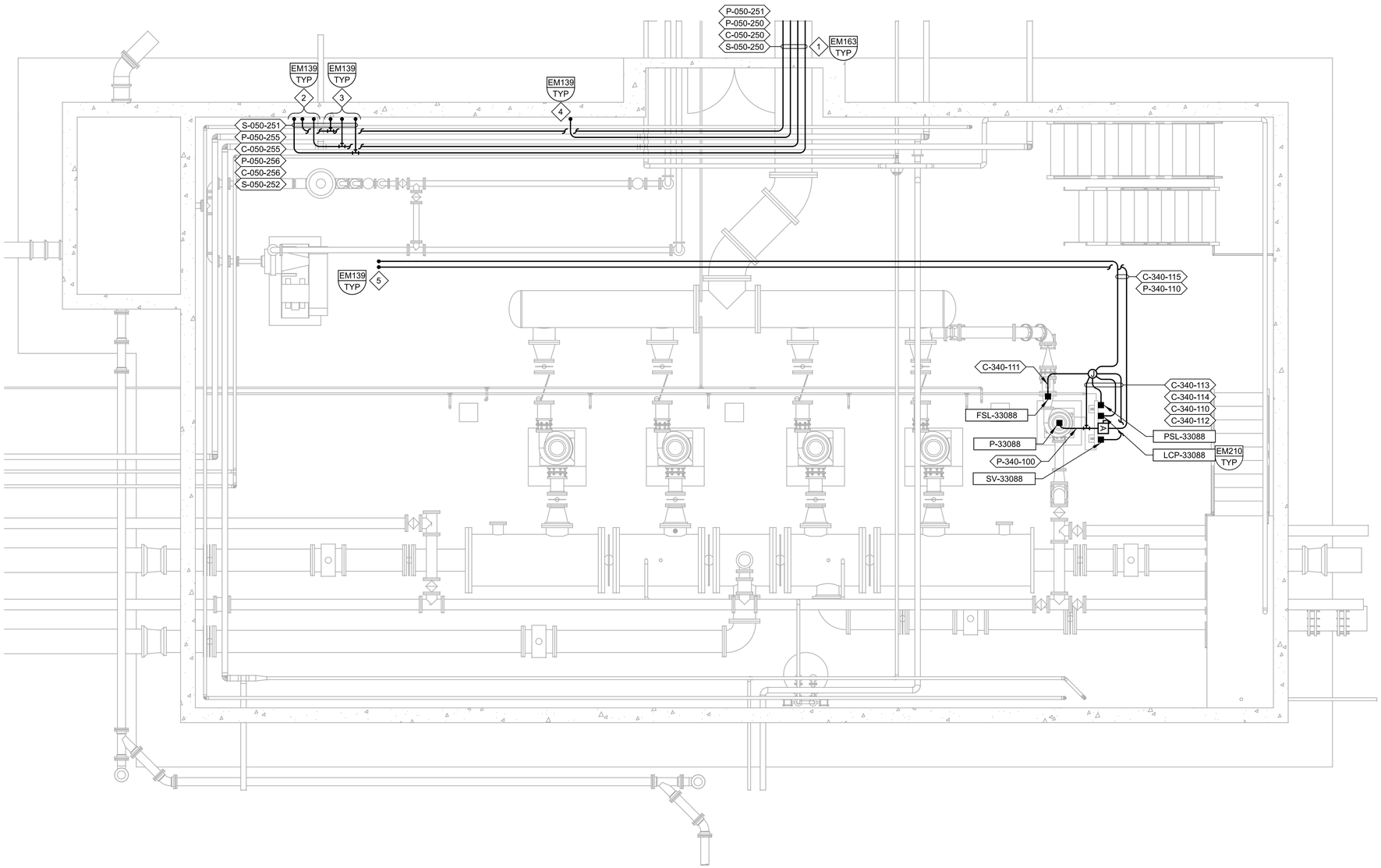

A PLAN

SCALE: 1/4" = 1'-0"
FILE: 8153A300340E102

GENERAL NOTES:

1. CONDUITS SHOWN OFFSET FROM WALL AND EACH OTHER FOR DRAWING CLARITY.

KEY NOTES:

1. CORE DRILL THROUGH EAST WALL TO ROUTE CONDUIT FROM GALLERY TO SECONDARY SLUDGE PUMP STATION. REFER TO 050E101 FOR GALLERY CONTINUATION.
2. CONTINUE CONDUIT TO VFD-34033 LOCATED ABOVE IN SECONDARY SLUDGE PUMP STATION MOTOR ROOM. CORE DRILL THROUGH CEILING TO EQUIPMENT.
3. CONTINUE TO VFD-34034 LOCATED ABOVE IN SECONDARY SLUDGE PUMP STATION MOTOR ROOM. CORE DRILL THROUGH CEILING TO EQUIPMENT.
4. CONTINUE CONDUIT TO PP-34001 LOCATED ABOVE IN SECONDARY SLUDGE PUMP STATION MOTOR ROOM. CORE DRILL THROUGH CEILING TO EQUIPMENT.
5. CONTINUE CONDUIT TO MCC-3401 LOCATED ABOVE IN SECONDARY SLUDGE PUMP STATION MOTOR ROOM. CORE DRILL THROUGH CEILING TO EQUIPMENT.

carollo®

Date	No	Revision	By
	4		
	3		
	2		
	1		

PROJECT ENGINEER MSS
DESIGNED/DRAWN MJP/LP
INSPECTOR CH

DIRECTOR PUBLIC WORKS
CITY ENGINEER
ASSISTANT DIRECTOR

CITY OF BELLINGHAM, WASHINGTON
PUBLIC WORKS DEPARTMENT
ENGINEERING DIVISION

SCALE
Horiz. AS SHOWN
Vert. AS SHOWN

DATUM
H: NAD 83/98
V: NAVD 88

Job. No. EU194
Date JAN 2026
Field Bk.

ELECTRICAL
POST POINT RESOURCE RECOVERY PLANT
SECONDARY SLUDGE PUMP STATION
PUMP ROOM POWER AND CONTROL PLAN

DRAWING NO. 340E101
SHEET NO. 106 OF 198

CONTACT PERSON: STEPHEN DAY, PE SE , PROJECT ENGINEER AT 360-778-7944

PROJECT NO. FILE NAME: 8153A30340E101.dgn

Model: Layout1 ColorTable: gshade.ctb DesignScript: Carollo_Std_Pen_v0905.pen PlotScale: 1:1 Plot Date: 26-JAN-2026 11:56:08 AM User: svcPW LAST SAVED BY: LPitchley

GENERAL NOTES:

1. CONDUITS SHOWN OFFSET FROM WALL AND EACH OTHER FOR DRAWING CLARITY.

KEY NOTES:

1. REFER TO 340E101 FOR CONDUIT ROUTING UP THROUGH FLOOR INTO EQUIPMENT SHOWN IN SECONDARY SLUDGE PUMP MOTOR ROOM.

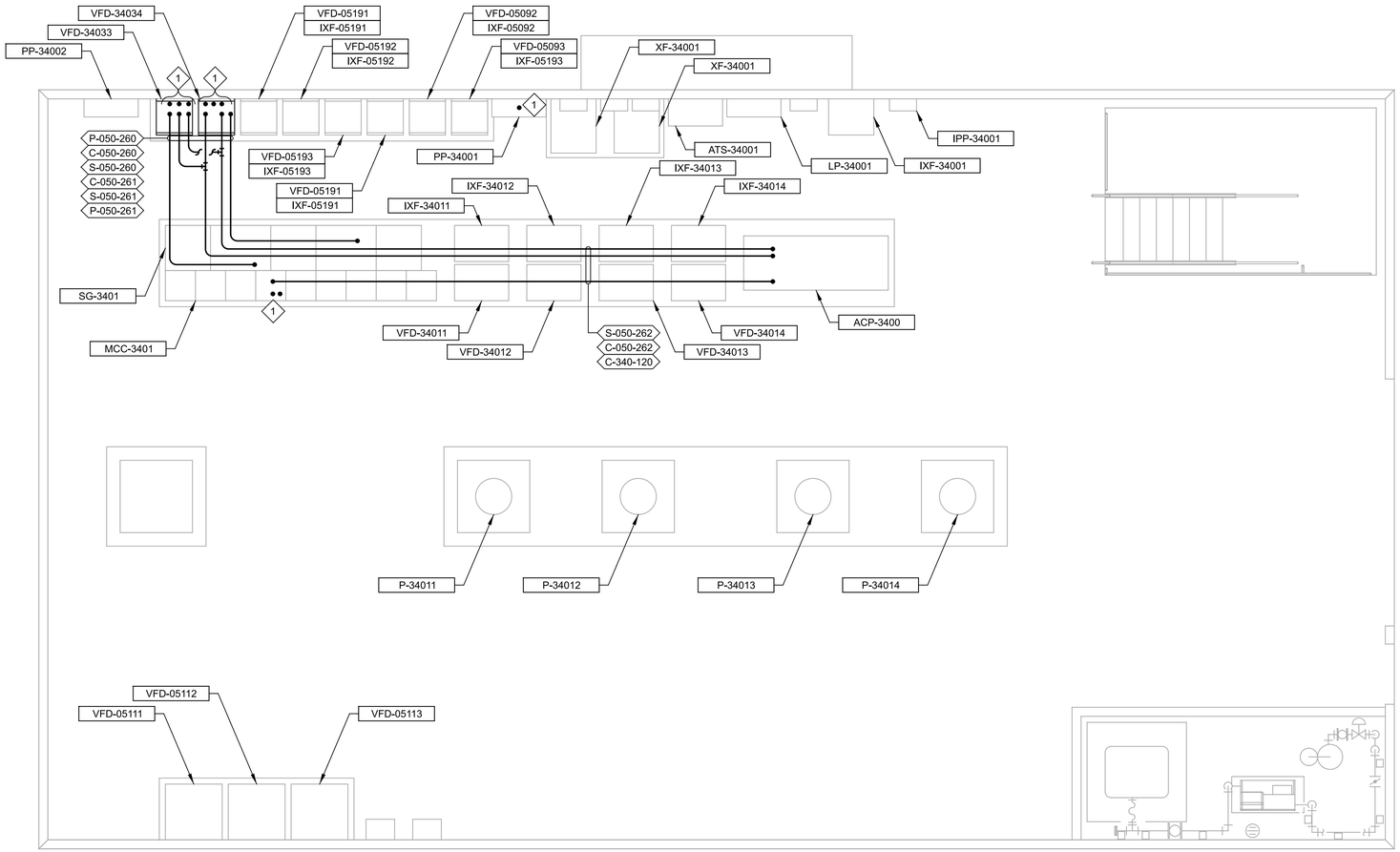

A **PLAN**
SCALE: 1/4" = 1'-0"
FILE: 8153A30340E102

carollo®

Date	No	Revision	By
	4		
	3		
	2		
	1		

PROJECT ENGINEER MSS
DESIGNED/DRAWN MJP/LP
INSPECTOR CH

DIRECTOR PUBLIC WORKS
CITY ENGINEER
ASSISTANT DIRECTOR

CITY OF BELLINGHAM, WASHINGTON
PUBLIC WORKS DEPARTMENT
ENGINEERING DIVISION

SCALE
Horiz. AS SHOWN
Vert. AS SHOWN

DATUM
H: NAD 83/98
V: NAVD 88

Job. No. EU194
Date JAN 2026
Field Bk.

POST POINT RESOURCE RECOVERY PLANT
ELECTRICAL
SECONDARY SLUDGE PUMP STATION
MOTOR ROOM POWER AND CONTROL PLAN

DRAWING NO. 340E102
SHEET NO. 107 OF 198

CONTACT PERSON: STEPHEN DAY, PE SE , PROJECT ENGINEER AT 360-778-7944

PROJECT NO. FILE NAME: 8153A30340E102.dgn

KEY NOTES:

1. PROVIDE MCC-42001 WITH ABSENCE/PRESCENCE OF VOLTAGE DETECTION AND IR WINDOWS ON MAIN BREAKER SECTION. REFER TO SECTIONS 26_24_20 AND 26_43_10 FOR ADDITIONAL REQUIREMENTS.
2. PROVIDE PROVISIONS IN MCC SUCH THAT MCC CAN BE EXTENDED FOR FUTURE UNDEFINED LOADS.

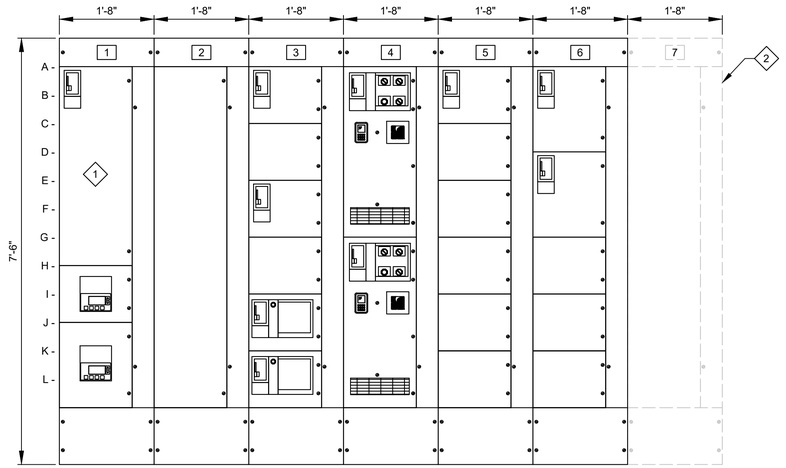

FRONT VIEW

SCALE: 3/4" = 1'-0"

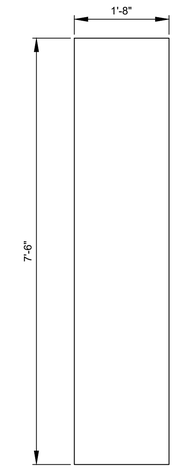

SIDE VIEW

SCALE: 3/4" = 1'-0"

1A- MAIN BREAKER

1H- POWER METER

1J- SPD

2A- SPACE PROVISION FOR ACTIVE HARMONIC FILTER

3A- SLUDGE STORAGE PUMP 1 VFD VFD-42001

3C- SPACE

3E- SLUDGE STORAGE PUMP 2 VFD VFD-42004

3G- SPACE

3I- SLUDGE STORAGE BUILDING EXHAUST FAN EF-42032

3K- SLUDGE STORAGE BUILDING SUPPLY FAN SF-42033

4A- SLUDGE STORAGE TANK 1 MIXER MIX-44001

4G- SLUDGE STORAGE TANK 2 MIXER MIX-44005

5A- SLUDGE STORAGE TANK ODOR CONTROL SYSTEM VCP-44020

5C- SPACE

5E- SPACE

5G- SPACE

5I- SPACE

5K- SPACE

6A- XF-42001 LP-42001 SLUDGE STORAGE BUILDING TRANSFORMER AND LIGHTING PANEL

6D- PP-42001 SLUDGE STORAGE BUILDING POWER PANEL

6G- SPACE

6I- SPACE

6K- SPACE

carollo®

Date	No	Revision	By
	4		
	3		
	2		
	1		

PROJECT ENGINEER MSS
DESIGNED/DRAWN TDT/NCS
INSPECTOR CH

DIRECTOR PUBLIC WORKS
CITY ENGINEER
ASSISTANT DIRECTOR

CITY OF BELLINGHAM, WASHINGTON
PUBLIC WORKS DEPARTMENT
ENGINEERING DIVISION

SCALE
Horiz. AS SHOWN
Vert. AS SHOWN

DATUM
H: NAD 83/98
V: NAVD 88

Job. No. EU194
Date JAN 2026
Field Bk.

POST POINT RESOURCE RECOVERY PLANT
ELECTRICAL
MCC-42001 ELEVATION

DRAWING NO. 420E001
SHEET NO. 108 OF 198

LAST SAVED BY: lveloz

CONTACT PERSON: STEPHEN DAY, PE SE , PROJECT ENGINEER AT 360-778-7944

PROJECT NO. 202021-100000 FILE NAME: 202021420E001.dwg

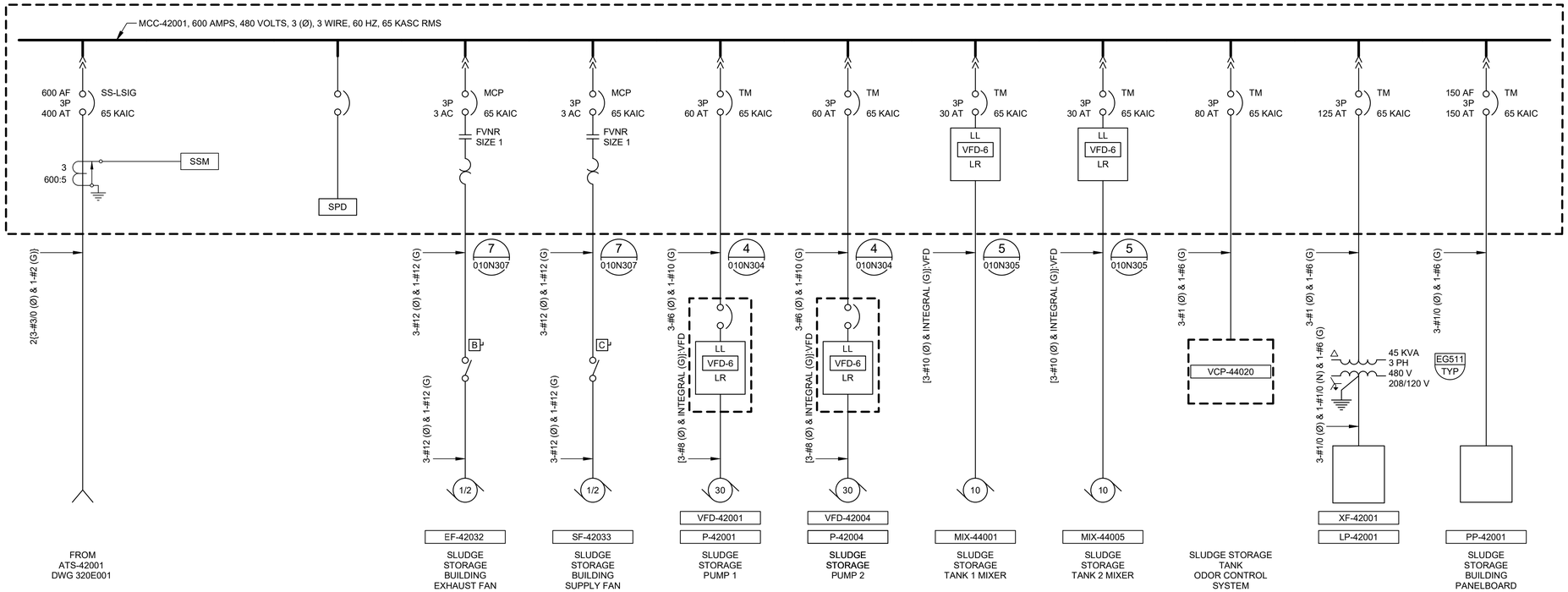

carollo

Date	No	Revision	By
	4		
	3		
	2		
	1		

PROJECT ENGINEER MSS
DESIGNED/DRAWN TDT/NCS
INSPECTOR CH

DIRECTOR PUBLIC WORKS
CITY ENGINEER
ASSISTANT DIRECTOR

CITY OF BELLINGHAM, WASHINGTON
PUBLIC WORKS DEPARTMENT
ENGINEERING DIVISION

SCALE
Horiz. AS SHOWN
Vert. AS SHOWN

DATUM
H: NAD 83/98
V: NAVD 88

Job. No. EU194
Date JAN 2026
Field Bk.

POST POINT RESOURCE RECOVERY PLANT
ELECTRICAL
MCC-42001 ONE-LINE DIAGRAM

DRAWING NO. 420E002
SHEET NO. 109 OF 198

CONTACT PERSON: STEPHEN DAY, PE SE , PROJECT ENGINEER AT 360-778-7944

LAST SAVED BY: Iveloz

PROJECT NO. 202021-100000 FILE NAME: 202021420E002.dwg

GENERAL NOTES:

1. SEE DRAWING 030E102 FOR LOCATION OF FACILITY ON SITE PLAN.

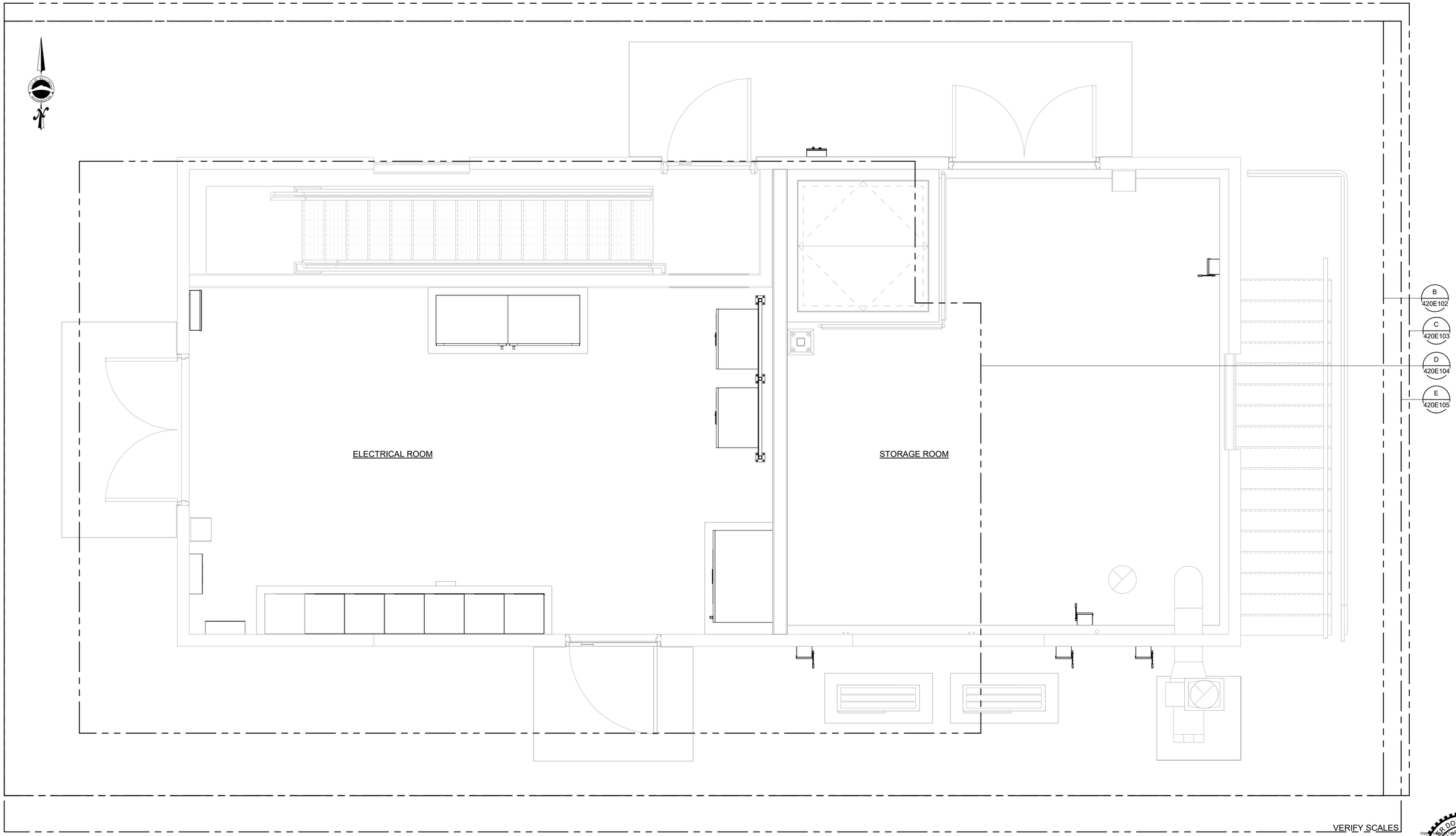

A PLAN
SCALE: 1/2" = 1'-0"

VERIFY SCALES

BAR IS ONE INCH ON ORIGINAL DRAWING

0 1"

IF NOT ONE INCH ON THIS SHEET, ADJUST SCALES ACCORDINGLY

PLOT DATE: 6/25/2026 2:11:40 PM

carollo

Date	No	Revision	By

PROJECT ENGINEER
DESIGNED/DRAWN TDT/BLS
INSPECTOR

DIRECTOR PUBLIC WORKS MAO
CITY ENGINEER MLW
ASSISTANT DIRECTOR MAO

CITY OF BELLINGHAM, WASHINGTON
PUBLIC WORKS DEPARTMENT
ENGINEERING DIVISION

SCALE
Horiz. AS SHOWN
Vert. AS SHOWN

DATUM
H: NAD 83/98
V: NAVD 88

Job. No. EU194
Date JAN 2026
Field Bk.

POST POINT RESOURCE RECOVERY PLANT
ELECTRICAL
SLUDGE STORAGE BUILDING OVERALL PLAN

DRAWING NO. 420E101
SHEET NO. 110 OF 198

CONTACT PERSON: STEPHEN DAY, PE SE , PROJECT ENGINEER AT 360-778-7944 FILE NAME: Autodesk Docs://Bellingham 202021-100000 Primary Sludge Tank Replacement/202021420E9801.rvt

GENERAL NOTES:

1. WALL MOUNT GO/NO-GO SYSTEM CONTROL PANEL. TOP OF PANEL APPROXIMATELY 5.5 FEET ABOVE FINISHED GRADE. WALL MOUNT GO/NO-GO SYSTEM BEACONS 8.5 FEET ABOVE FINISHED FLOOR OR GRADE.

KEY NOTES:

1. INDOOR AIR HANDLING UNIT IS POWERED FROM OUTDOOR UNIT. PROVIDE CONDUIT AND UTILIZE MANUFACTURER PROVIDED CABLING FOR POWER INTERCONNECTION BETWEEN INDOOR AND OUTDOOR UNITS.
2. ROUTE CONDUITS ALONG JOISTS TO AVOID CONFLICTS WITH MONORAIL BEAM.
3. DO NOT MOUNT CONDUITS, EQUIPMENT, OR DEVICES FROM EXISTING WOOD FRAME WALL OR NEW METAL STUD WALL WITHOUT WRITTEN APPROVAL FROM ENGINEER. UTILIZE STEEL JOISTS, CONCRETE WALLS, AND FLOOR SUPPORTS FOR NEW CONDUIT, EQUIPMENT, AND DEVICES.

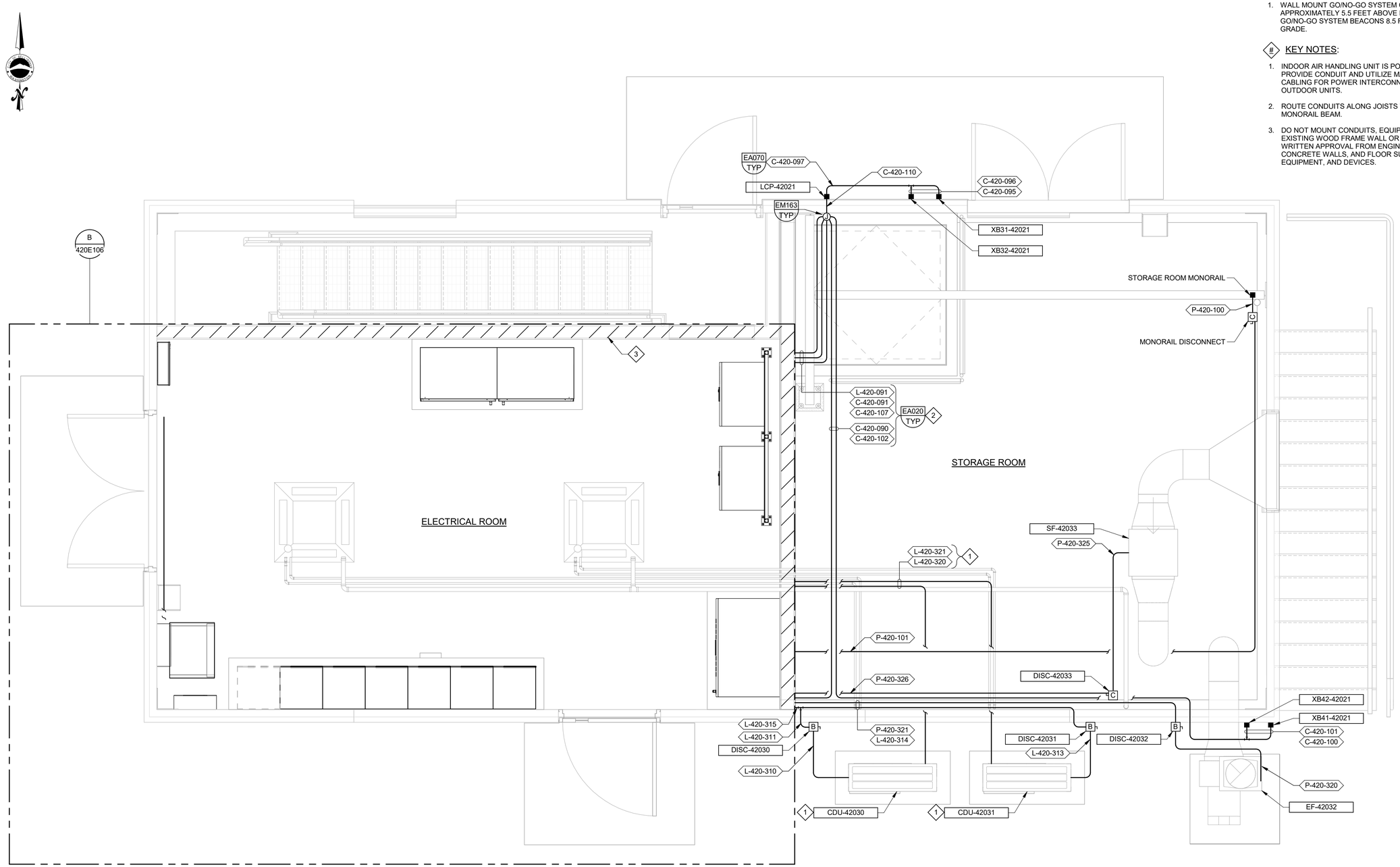

B 420E101 **PLAN**
SCALE: 1/2" = 1'-0"

VERIFY SCALES
BAR IS ONE INCH ON ORIGINAL DRAWING
0 1"
IF NOT ONE INCH ON THIS SHEET, ADJUST SCALES ACCORDINGLY

TYLER DOUGLAS TROUT
STATE OF WASHINGTON
24031376
REGISTERED PROFESSIONAL ENGINEER

carollo®

PLOT DATE: 6/25/2026 2:12:51 PM

Date	No	Revision	By

PROJECT ENGINEER
DESIGNED/DRAWN TDT/BLS
INSPECTOR

DIRECTOR PUBLIC WORKS MAO
CITY ENGINEER MLW
ASSISTANT DIRECTOR MAO

CITY OF BELLINGHAM, WASHINGTON
PUBLIC WORKS DEPARTMENT
ENGINEERING DIVISION

SCALE
Horiz. AS SHOWN
Vert. AS SHOWN

DATUM
H: NAD 83/98
V: NAVD 88

Job. No. EU194
Date JAN 2026
Field Bk.

POST POINT RESOURCE RECOVERY PLANT
ELECTRICAL
SLUDGE STORAGE BUILDING UPPER LEVEL POWER AND CONTROL PLAN

DRAWING NO. 420E102
SHEET NO. 111 OF 198

CONTACT PERSON: STEPHEN DAY, PE SE , PROJECT ENGINEER AT 360-778-7944 FILE NAME: Autodesk Docs://Bellingham 202021-100000 Primary Sludge Tank Replacement/202021420E9801.rvt

GENERAL NOTES:

1. ALL NEW GROUNDING CONDUCTOR SHOWN IN ELECTRICAL ROOM SHALL BE ROUTED HIGH ON WALLS OR ALONG CEILING JOISTS IN ELECTRICAL ROOM AND INTO TOP OF NEW ELECTRICAL EQUIPMENT. PROVIDE SCHEDULE 80 PVC CONDUIT FOR GROUND CONDUCTORS WHERE EXPOSED TO DAMAGE.
2. PROVIDE EXPOSED CONDUIT FOR ALL LIGHTING FIXTURES AND WIRING DEVICES.

KEY NOTES:

1. MOUNT GROUND BUS ASSEMBLY HIGH ON WALL.
2. PROVIDE CONDUIT AND WIRE FROM PHOTOCELL TO THREE POSITION SWITCH IN ELECTRICAL ROOM.
3. TRANSITION BURIED GROUND CONDUCTOR TO EXPOSED. PROVIDE SCHEDULE 80 PVC CONDUIT FOR EXPOSED GROUND CONDUCTOR. CORE DRILL WALL APPROXIMATELY 24 INCHES ABOVE GRADE TO ROUTE GROUND CONDUCTOR INTO BUILDING AND TO GROUND BUS ASSEMBLY AS INDICATED.
4. WALL MOUNT NEW LIGHTING FIXTURES. ABOVE STAIR LANDING.
5. LOCATE FIXTURE ABOVE BOTTOM STAIR LANDING/FINISHED FLOOR AT ELEVATION SHOWN.

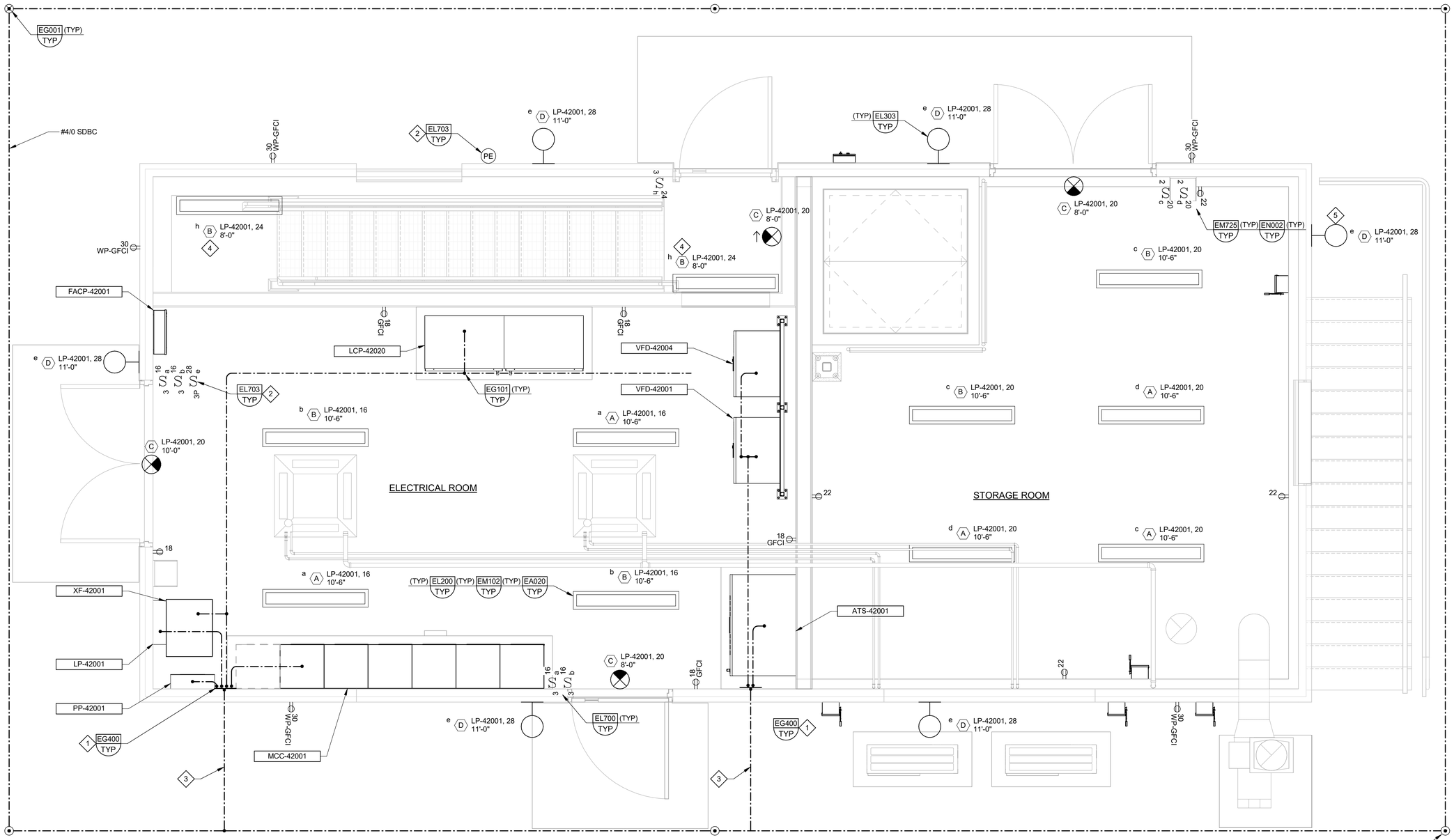

C PLAN
420E101
SCALE: 1/2" = 1'-0"

VERIFY SCALES
BAR IS ONE INCH ON ORIGINAL DRAWING
0 1"
IF NOT ONE INCH ON THIS SHEET, ADJUST SCALES ACCORDINGLY

TYLER DOUGLAS TROYER
STATE OF WASHINGTON
24031376
REGISTERED PROFESSIONAL ENGINEER

carollo

PLOT DATE: 6/25/2026 2:13:30 PM

Date	No	Revision	By

PROJECT ENGINEER
DESIGNED/DRAWN TDT/BLS
INSPECTOR

DIRECTOR PUBLIC WORKS MAO
CITY ENGINEER MLW
ASSISTANT DIRECTOR MAO

CITY OF BELLINGHAM, WASHINGTON
PUBLIC WORKS DEPARTMENT
ENGINEERING DIVISION

SCALE
Horiz. AS SHOWN
Vert. AS SHOWN

DATUM
H: NAD 83/98
V: NAVD 88

Job. No. EU194
Date JAN 2026
Field Bk.

POST POINT RESOURCE RECOVERY PLANT
ELECTRICAL
SLUDGE STORAGE BUILDING UPPER LEVEL LIGHTING AND GROUNDING PLAN

DRAWING NO. 420E103
SHEET NO. 112 OF 198

CONTACT PERSON: STEPHEN DAY, PE SE , PROJECT ENGINEER AT 360-778-7944 FILE NAME: Autodesk Docs://Bellingham 202021-100000 Primary Sludge Tank Replacement/202021420E9801.rvt

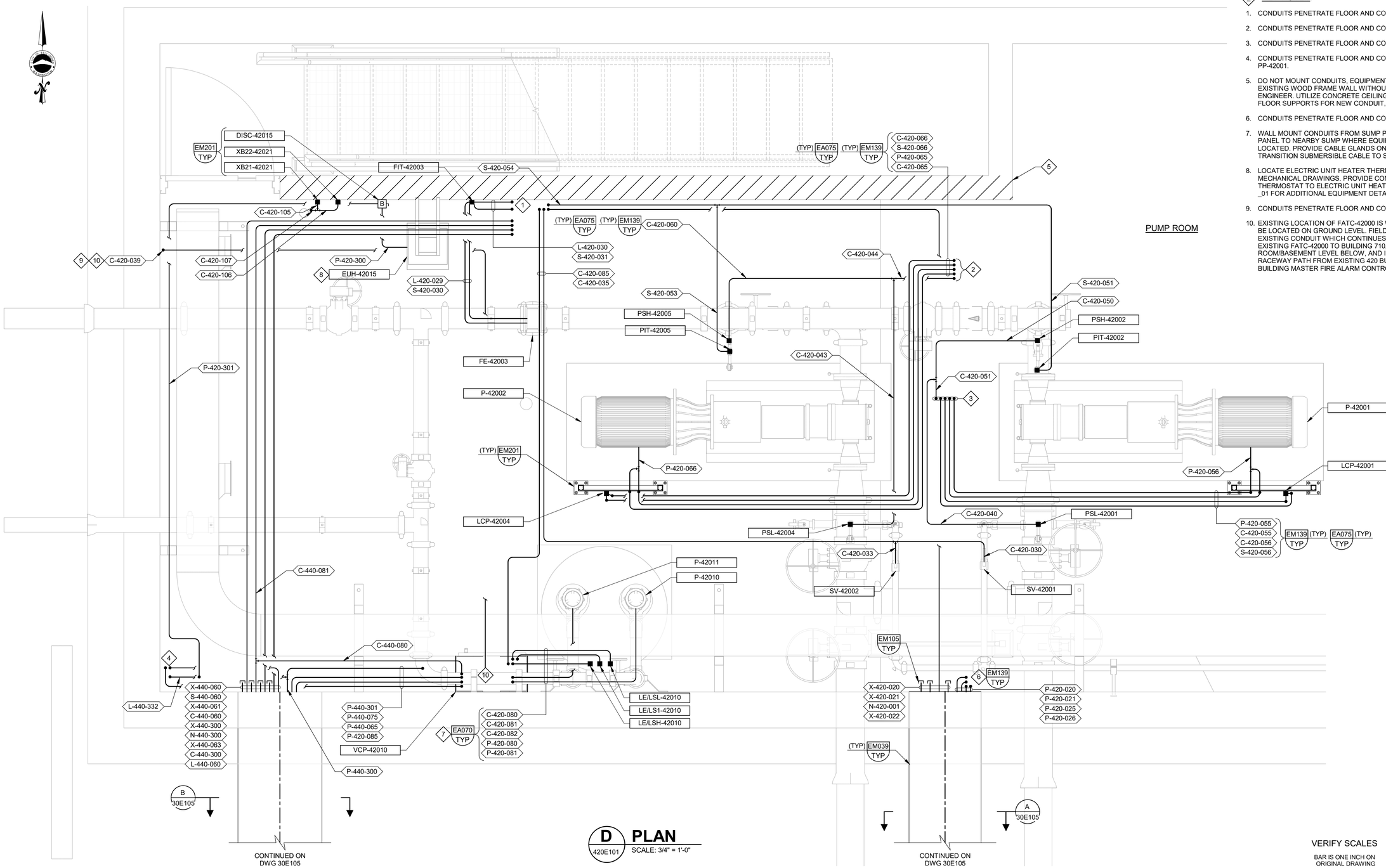

KEY NOTES:

1. CONDUITS PENETRATE FLOOR AND CONTINUE TO LCP-42020.
2. CONDUITS PENETRATE FLOOR AND CONTINUE TO VFD-42004.
3. CONDUITS PENETRATE FLOOR AND CONTINUE TO VFD-42001.
4. CONDUITS PENETRATE FLOOR AND CONTINUE TO LP-42001 AND PP-42001.
5. DO NOT MOUNT CONDUITS, EQUIPMENT, OR DEVICES FROM EXISTING WOOD FRAME WALL WITHOUT WRITTEN APPROVAL FROM ENGINEER. UTILIZE CONCRETE CEILING, CONCRETE WALLS, AND FLOOR SUPPORTS FOR NEW CONDUIT, EQUIPMENT, AND DEVICES.
6. CONDUITS PENETRATE FLOOR AND CONTINUE TO ATS-42001.
7. WALL MOUNT CONDUITS FROM SUMP PUMP VENDOR CONTROL PANEL TO NEARBY SUMP WHERE EQUIPMENT/INSTRUMENTS ARE LOCATED. PROVIDE CABLE GLANDS ON CONDUIT SEGMENT TO TRANSITION SUBMERSIBLE CABLE TO SUMP.
8. LOCATE ELECTRIC UNIT HEATER THERMOSTAT AS REQUIRED BY MECHANICAL DRAWINGS. PROVIDE CONDUIT AND WIRING FROM THERMOSTAT TO ELECTRIC UNIT HEATER. REFER TO SECTION 23_83 _01 FOR ADDITIONAL EQUIPMENT DETAILS.
9. CONDUITS PENETRATE FLOOR AND CONTINUE TO FACP-42001.
10. EXISTING LOCATION OF FATC-42000 IS WHERE NEW MCC-42001 IS TO BE LOCATED ON GROUND LEVEL. FIELD VERIFY LOCATION OF EXISTING CONDUIT WHICH CONTINUES FROM BUILDING 420 EXISTING FATC-42000 TO BUILDING 710. PROTECT IN PLACE IN PUMP ROOM/BASEMENT LEVEL BELOW, AND INTERCEPT TO REUSE RACEWAY PATH FROM EXISTING 420 BUILDING TO EXISTING 710 BUILDING MASTER FIRE ALARM CONTROL PANEL.

D PLAN

420E101

SCALE: 3/4" = 1'-0"

VERIFY SCALES

BAR IS ONE INCH ON ORIGINAL DRAWING

0 1"

IF NOT ONE INCH ON THIS SHEET, ADJUST SCALES ACCORDINGLY

carollo

PLOT DATE: 6/25/2026 2:14:13 PM

Date	No	Revision	By

PROJECT ENGINEER
DESIGNED/DRAWN TDT/BLS
INSPECTOR

DIRECTOR PUBLIC WORKS MAO
CITY ENGINEER MLW
ASSISTANT DIRECTOR MAO

CITY OF BELLINGHAM, WASHINGTON
PUBLIC WORKS DEPARTMENT
ENGINEERING DIVISION

SCALE
Horiz. AS SHOWN
Vert. AS SHOWN

DATUM
H: NAD 83/98
V: NAVD 88

Job. No. EU194
Date JAN 2026
Field Bk.

POST POINT RESOURCE RECOVERY PLANT
ELECTRICAL
SLUDGE STORAGE BUILDING LOWER LEVEL POWER AND CONTROL PLAN

DRAWING NO. 420E104
SHEET NO. 113 OF 198

CONTACT PERSON: STEPHEN DAY, PE SE , PROJECT ENGINEER AT 360-778-7944 FILE NAME: Autodesk Docs://Bellingham 202021-100000 Primary Sludge Tank Replacement/202021420E9801.rvt

KEY NOTES:

1. GROUND MAGNETIC FLOW METER AND REMOTE FLOW METER TRANSMITTER AS INDICATED.
2. ROUTE GROUND CONDUCTOR FROM MAGNETIC FLOW TUBE TO GROUND BUS ASSEMBLY LOCATED IN ELECTRICAL ROOM. PENETRATE CONCRETE CEILING PER EM139/TYP AND ROUTE EXPOSED GROUND CONDUCTOR IN SCHEDULE 80 PVC CONDUIT WHERE EXPOSED TO DAMAGE.
3. SWITCHES LIGHT FIXTURES IN STAIRWELL. SEE DRAWING 420E103.

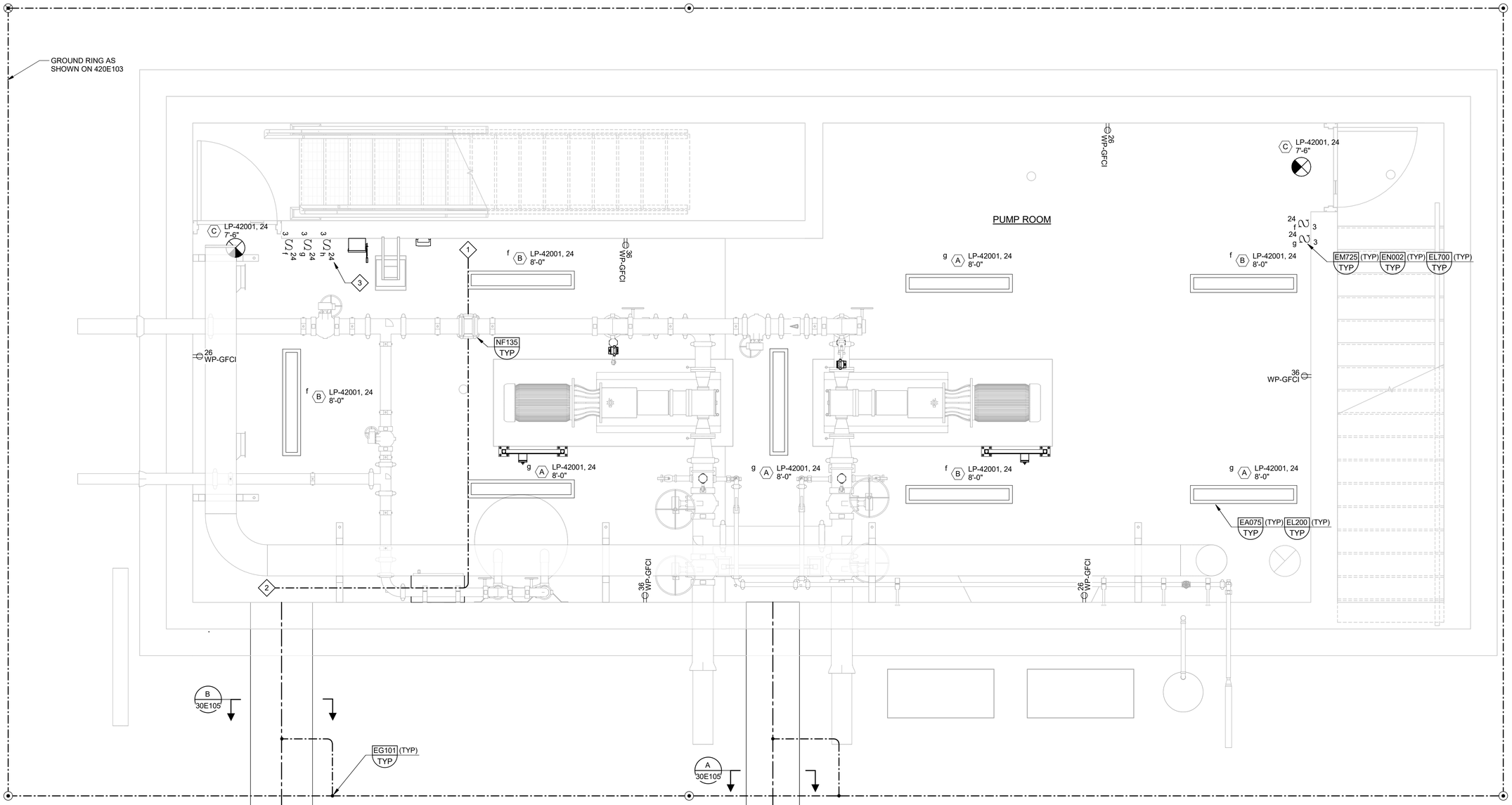

E PLAN
420E101
SCALE: 1/2" = 1'-0"

VERIFY SCALES

BAR IS ONE INCH ON ORIGINAL DRAWING

0 1"

IF NOT ONE INCH ON THIS SHEET, ADJUST SCALES ACCORDINGLY

TYLER DOUGLAS TROJA
STATE OF WASHINGTON
24031376
REGISTERED
PROFESSIONAL ENGINEER

carollo®

PLOT DATE: 6/25/2026 2:15:06 PM

Date	No	Revision	By

PROJECT ENGINEER
DESIGNED/DRAWN TDT/BLS
INSPECTOR

DIRECTOR PUBLIC WORKS MAO
CITY ENGINEER MLW
ASSISTANT DIRECTOR MAO

CITY OF BELLINGHAM, WASHINGTON
PUBLIC WORKS DEPARTMENT
ENGINEERING DIVISION

SCALE
Horiz. AS SHOWN
Vert. AS SHOWN

DATUM
H: NAD 83/98
V: NAVD 88

Job. No. EU194
Date JAN 2026
Field Bk.

POST POINT RESOURCE RECOVERY PLANT
ELECTRICAL
SLUDGE STORAGE BUILDING LOWER LEVEL LIGHTING AND GROUNDING PLAN

DRAWING NO. 420E105
SHEET NO. 114 OF 198

CONTACT PERSON: STEPHEN DAY, PE SE , PROJECT ENGINEER AT 360-778-7944 FILE NAME: Autodesk Docs://Bellingham 202021-100000 Primary Sludge Tank Replacement/202021420E9801.rvt

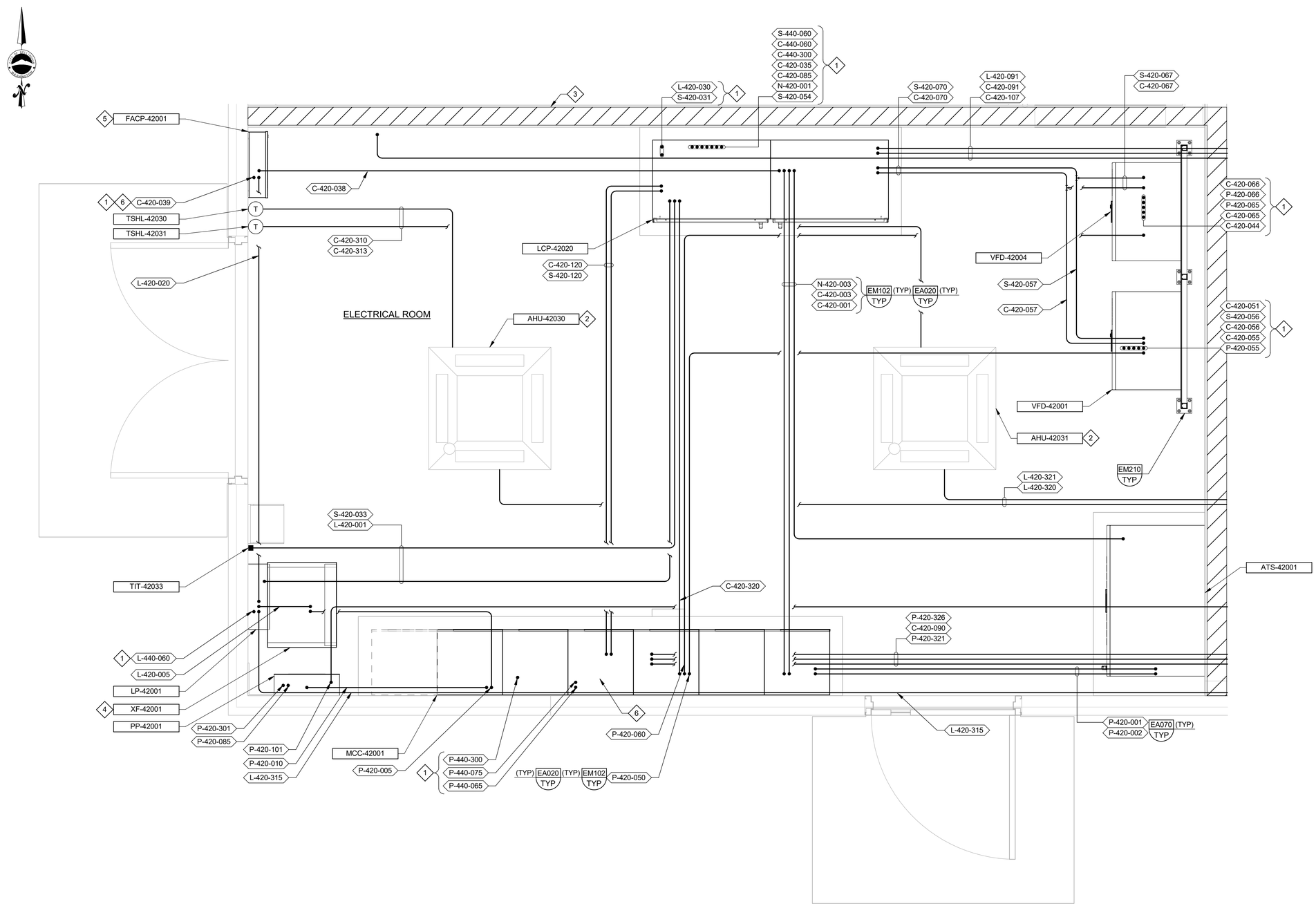

KEY NOTES:

1. CONDUITS TRANSITION TO LOWER LEVEL PLAN.
2. INDOOR AIR HANDLING UNIT IS POWERED FROM OUTDOOR UNIT. PROVIDE CONDUIT AND UTILIZE MANUFACTURER PROVIDED CABLING FOR POWER INTERCONNECTION BETWEEN INDOOR AND OUTDOOR UNITS.
3. DO NOT MOUNT CONDUITS, EQUIPMENT, OR DEVICES FROM EXISTING WOOD FRAME WALL OR NEW METAL STUD WALL WITHOUT WRITTEN APPROVAL FROM ENGINEER. UTILIZE STEEL JOISTS, CONCRETE WALLS, AND FLOOR SUPPORTS FOR NEW CONDUIT, EQUIPMENT, AND DEVICES.
4. WALL MOUNT TRANSFORMER ABOVE LIGHTING PANEL MINIMUM 8 FEET ABOVE FINISHED FLOOR TO BOTTOM OF TRANSFORMER SUPPORTS. REFER TO SECTION 26_05_29 FOR ADDITIONAL SUBMITTAL REQUIREMENTS RELATED TO TRANSFORMER ENGINEERED STRUCTURAL CALCULATIONS FOR SUPPORTS.
5. PROVIDE FIRE DETECTION AND ALARMING SYSTEM AS SPECIFIED IN SECTION 28_46_13. INTERFACE RETROFITTED BUILDING 420 FIRE ALARM SYSTEM WITH PLANT'S EXISTING MASTER FIRE ALARM CONTROL PANEL LOCATED IN BUILDING 710 AND AS INDICATED ON THE DRAWINGS.
6. EXISTING LOCATION OF FATC-42000 IS WHERE NEW MCC-42001 IS TO BE LOCATED. FIELD VERIFY LOCATION OF EXISTING CONDUIT WHICH CONTINUES FROM BUILDING 420 EXISTING FATC-42000 TO BUILDING 710, PROTECT IN PLACE IN PUMP ROOM/BASEMENT LEVEL BELOW, AND INTERCEPT TO REUSE RACEWAY PATH FROM EXISTING 420 BUILDING TO EXISTING 710 BUILDING MASTER FIRE ALARM CONTROL PANEL.

B 420E102 **PLAN**
SCALE: 3/4" = 1'-0"

VERIFY SCALES
BAR IS ONE INCH ON ORIGINAL DRAWING
0 1"
IF NOT ONE INCH ON THIS SHEET, ADJUST SCALES ACCORDINGLY

TYLER DOUGLAS TROUP
STATE OF WASHINGTON
24031376
REGISTERED PROFESSIONAL ENGINEER

carollo

PLOT DATE: 6/25/2026 2:15:39 PM

Date	No	Revision	By

PROJECT ENGINEER
DESIGNED/DRAWN TDT/BLS
INSPECTOR

DIRECTOR PUBLIC WORKS MAO
CITY ENGINEER MLW
ASSISTANT DIRECTOR MAO

CITY OF BELLINGHAM, WASHINGTON
PUBLIC WORKS DEPARTMENT
ENGINEERING DIVISION

SCALE
Horiz. AS SHOWN
Vert. AS SHOWN

DATUM
H: NAD 83/98
V: NAVD 88

Job. No. EU194
Date JAN 2026
Field Bk.

POST POINT RESOURCE RECOVERY PLANT
ELECTRICAL
SLUDGE STORAGE BUILDING ELECTRICAL ROOM POWER AND CONTROL PLAN

DRAWING NO. 420E106
SHEET NO. 115 OF 198

CONTACT PERSON: STEPHEN DAY, PE SE , PROJECT ENGINEER AT 360-778-7944 FILE NAME: Autodesk Docs://Bellingham 202021-100000 Primary Sludge Tank Replacement/202021420E9801.rvt

GENERAL NOTES:

1. SEE DRAWING 30E102 FOR LOCATION OF FACILITY ON SITE PLAN.

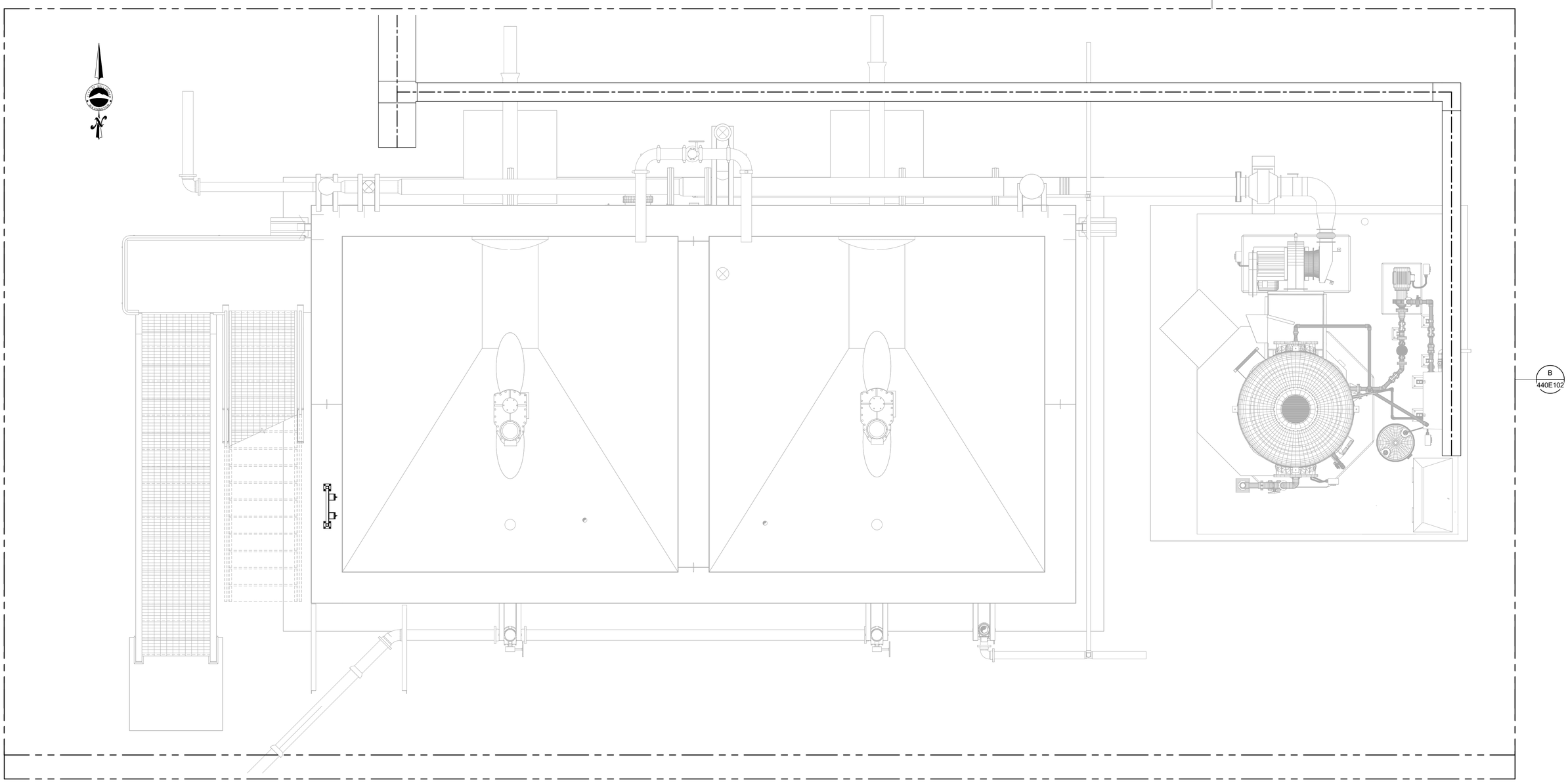

A PLAN
SCALE: 3/8" = 1'-0"

VERIFY SCALES

BAR IS ONE INCH ON ORIGINAL DRAWING

0 1"

IF NOT ONE INCH ON THIS SHEET, ADJUST SCALES ACCORDINGLY

TYLER DOUGLAS TROUT
STATE OF WASHINGTON
24031376
REGISTERED
PROFESSIONAL ENGINEER

carollo

PLOT DATE: 6/25/2026 2:18:25 PM

Date	No	Revision	By

PROJECT ENGINEER
DESIGNED/DRAWN TDT/BLS
INSPECTOR

DIRECTOR PUBLIC WORKS MAO
CITY ENGINEER MLW
ASSISTANT DIRECTOR MAO

CITY OF BELLINGHAM, WASHINGTON
PUBLIC WORKS DEPARTMENT
ENGINEERING DIVISION

SCALE
Horiz. AS SHOWN
Vert. AS SHOWN

DATUM
H: NAD 83/98
V: NAVD 88

Job. No. EU194
Date JAN 2026
Field Bk.

POST POINT RESOURCE RECOVERY PLANT
ELECTRICAL
SLUDGE STORAGE TANKS OVERALL PLAN

DRAWING NO. 440E101
SHEET NO. 116 OF 198

CONTACT PERSON: STEPHEN DAY, PE SE , PROJECT ENGINEER AT 360-778-7944 FILE NAME: Autodesk Docs://Bellingham 202021-100000 Primary Sludge Tank Replacement/202021440E0801.rvt

GENERAL NOTES:

1. SLUDGE TANK ODOR CONTROL SYSTEM HAZARDOUS AREA CLASSIFICATION: AREAS WITHIN 3 FT OF VESSELS AND DUCTING: CLASS I, DIVISION 2, GROUP D PER NFPA 820-2020, TABLE 4.2.2, ROW 18(d). AREAS OUTSIDE OF 3 FT OF VESSELS AND DUCTING: UNCLASSIFIED PER NFPA 820-2020, TABLE 4.2.2, ROW 18(e). PROVIDE HAZARDOUS AREA CONSTRUCTION AS DEFINED IN SECTION 26_05_02 AND IN ACCORDANCE WITH THE NEC.
2. SLUDGE STORAGE TANKS HAZARDOUS AREA CLASSIFICATION: INTERIOR OF TANK IS CLASS I, DIVISION 1, GROUP D PER NFPA 820-2020, TABLE 6.2.2(a) ROW 11(a). AREA WITHIN 10 FT OF WALLS HORIZONTALLY AND 18 INCHES ABOVE WATER SURFACE IS CLASS I, DIVISION 2, GROUP D PER NFPA 820-2020, TABLE 6.2.2(a) ROW 11(c). PROVIDE HAZARDOUS AREA CONSTRUCTION AS DEFINED IN SECTION 26_05_02 AND IN ACCORDANCE WITH THE NEC.
3. PROVIDE ALL CONDUIT, CABLE/WIRE, AND CONDUIT SUPPORTS FOR EQUIPMENT, INSTRUMENTS AND DEVICES ASSOCIATED WITH ODOR CONTROL SYSTEM AND LOCATED ON EQUIPMENT SKID/PAD BUT NOT SHOWN ON THIS DRAWING. REFER TO DRAWINGS 440M105, 440M106, AND SECTION 46_78_83 FOR ADDITIONAL DETAILS AND REQUIREMENTS FOR ODOR CONTROL SYSTEM.

KEY NOTES:

1. ODOR CONTROL PIPING AT UPPER LEVEL SLUDGE STORAGE TANK HIDDEN TO CLEARLY SHOW ELECTRICAL WORK AT GRADE.
2. PROVIDE NEW JUNCTION BOXES IN LIEU OF LB FITTINGS AS SHOWN IN EM219/TYP. LOCATE NEW JUNCTION BOXES APPROXIMATELY 4 FEET ABOVE FINISHED GRADE TO FACILITATE ROUTING NEW EXPOSED CONDUIT TO EQUIPMENT AND INSTRUMENTS LOCATED ON TANK DECK.
3. PROVIDE JUNCTION BOX OR CONDUIT TEE TO FACILITATE ROUTING TO ALL SLUDGE TANK LIGHTING AND RECEPTACLES. REFER TO DRAWING 440E103 FOR DEVICE LOCATIONS.
4. WALL MOUNT HEAT TRACE CONTROLLER 5 FEET ABOVE FINISHED GRADE. NEW EXPOSED CONDUIT ASSOCIATED WITH HEAT TRACE CONTROLLER SHALL BE ROUTED AT SIMILAR ELEVATION FROM SLUDGE TANK JUNCTION BOXES TO HEAT TRACE CONTROLLER. REFER TO MECHANICAL DRAWINGS AND SECTION 40_41_00 FOR ADDITIONAL REQUIREMENTS RELATED TO PROCESS PIPING EQUIPMENT HEAT TRACING INSTALLATION.
5. ROUTE CONDUIT ALONG INTERIOR TANK WALL AND CEILING AS INDICATED.
6. PENETRATE PARAPET WALL.
7. PENETRATE TANK WALL.
8. PROVIDE CONDUIT INSTALLATION DRAWING FOR REVIEW AND APPROVAL WHICH REFLECTS FINAL INSTALLATION DETAILS FOR APPROVED ODOR CONTROL SYSTEM PACKAGE PER SECTION 46_ 78 _83.
9. PROVIDE PVC COATED ALUMINUM CONDUIT (PCA) FOR SLUDGE STORAGE TANK INTERIOR EXPOSED CONDUIT. REFER TO SECTION 26_05_33 FOR ADDITIONAL PCA CONDUIT REQUIREMENTS.

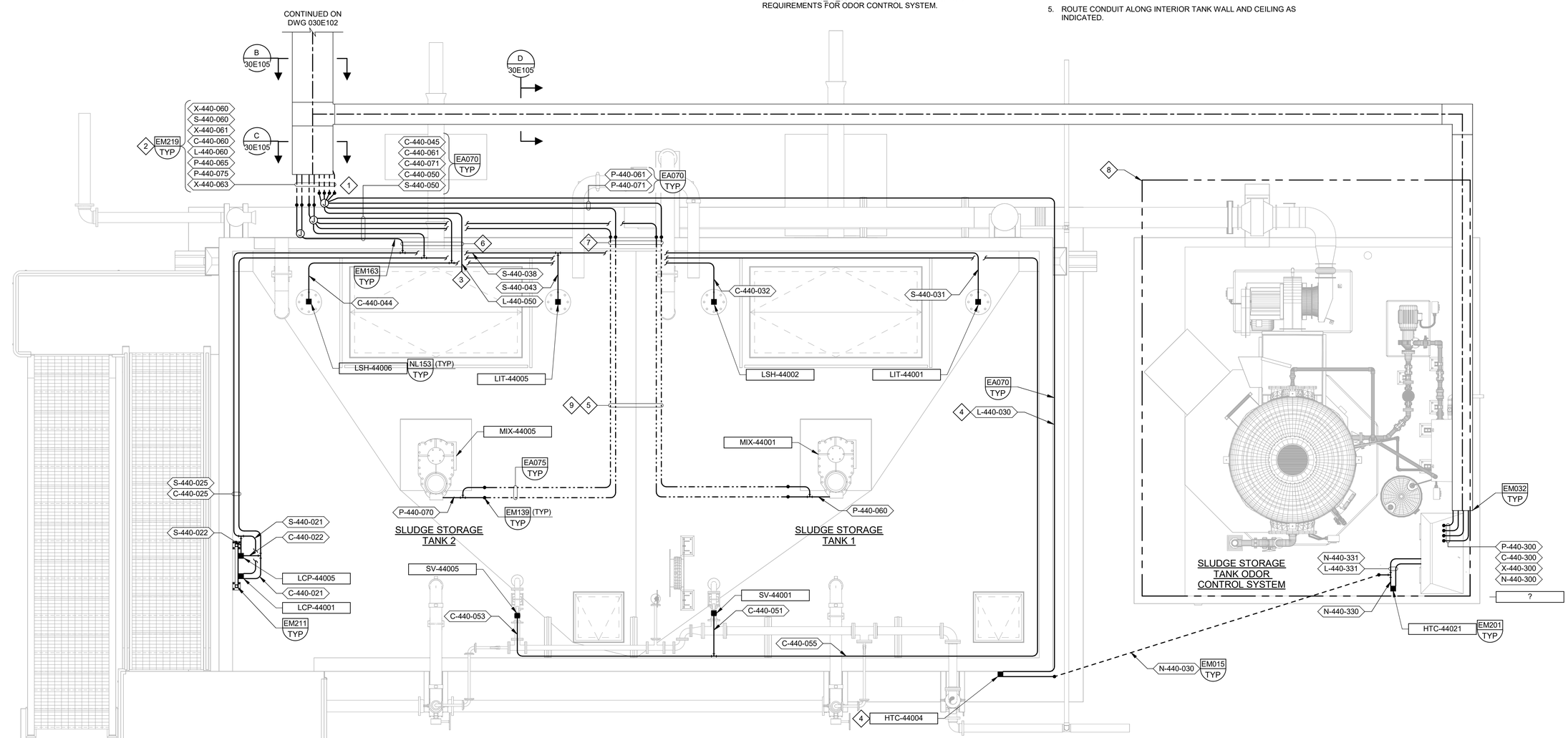

B PLAN (440E101)
SCALE: 3/8" = 1'-0"

VERIFY SCALES
BAR IS ONE INCH ON ORIGINAL DRAWING
0 1"
IF NOT ONE INCH ON THIS SHEET, ADJUST SCALES ACCORDINGLY

carollo®

PLOT DATE: 6/25/2026 2:19:20 PM

Date	No	Revision	By

PROJECT ENGINEER
DESIGNED/DRAWN TDT/BLS
INSPECTOR

DIRECTOR PUBLIC WORKS MAO
CITY ENGINEER MLW
ASSISTANT DIRECTOR MAO

CITY OF BELLINGHAM, WASHINGTON
PUBLIC WORKS DEPARTMENT
ENGINEERING DIVISION

SCALE: Horiz. AS SHOWN; Vert. AS SHOWN

DATUM: H: NAD 83/98; V: NAVD 88

Job. No. EU194
Date JAN 2026
Field Bk.

POST POINT RESOURCE RECOVERY PLANT
ELECTRICAL
SLUDGE STORAGE TANKS UPPER LEVEL POWER AND CONTROL PLAN

DRAWING NO. 440E102
SHEET NO. 117 OF 198

CONTACT PERSON: STEPHEN DAY, PE SE , PROJECT ENGINEER AT 360-778-7944 FILE NAME: Autodesk Docs://Bellingham 202021-100000 Primary Sludge Tank Replacement/202021440E0801.rvt

GENERAL NOTES:

1. SLUDGE TANK ODOR CONTROL SYSTEM HAZARDOUS AREA CLASSIFICATION: AREAS WITHIN 3 FT OF VESSELS AND DUCTING: CLASS I, DIVISION 2, GROUP D PER NFPA 820-2020, TABLE 4.2.2, ROW 18(d). AREAS OUTSIDE OF 3 FT OF VESSELS AND DUCTING:UNCLASSIFIED PER NFPA 820-2020, TABLE 4.2.2, ROW 18(e). PROVIDE HAZARDOUS AREA CONSTRUCTION AS DEFINED IN SECTION 26_05_02 AND IN ACCORDANCE WITH THE NEC.
2. SLUDGE STORAGE TANKS HAZARDOUS AREA CLASSIFICATION: INTERIOR OF TANK IS CLASS I, DIVISION 1, GROUP D PER NFPA 820-2020, TABLE 6.2.2(a) ROW 11(a). AREA WITHIN 10FT OF WALLS HORIZONTALLY AND 18 INCHES ABOVE WATER SURFACE IS CLASS I, DIVISION 2, GROUP D PER NFPA 820-2020, TABLE 6.2.2(a) ROW 11(c). PROVIDE HAZARDOUS AREA CONSTRUCTION AS DEFINED IN SECTION 26_05_02 AND IN ACCORDANCE WITH THE NEC.
3. REFER TO DRAWING 440E102 FOR 120VAC POWER CONDUIT LOCATION AND INSTALLATION FROM 420 BUILDING.

KEY NOTES:

1. LOCATE FIXTURE ADJACENT TO BOTTOM STAIR LANDING BELOW STAIRWELL INTERMEDIATE PLATFORM ON TANK AT ELEVATION INDICATED.

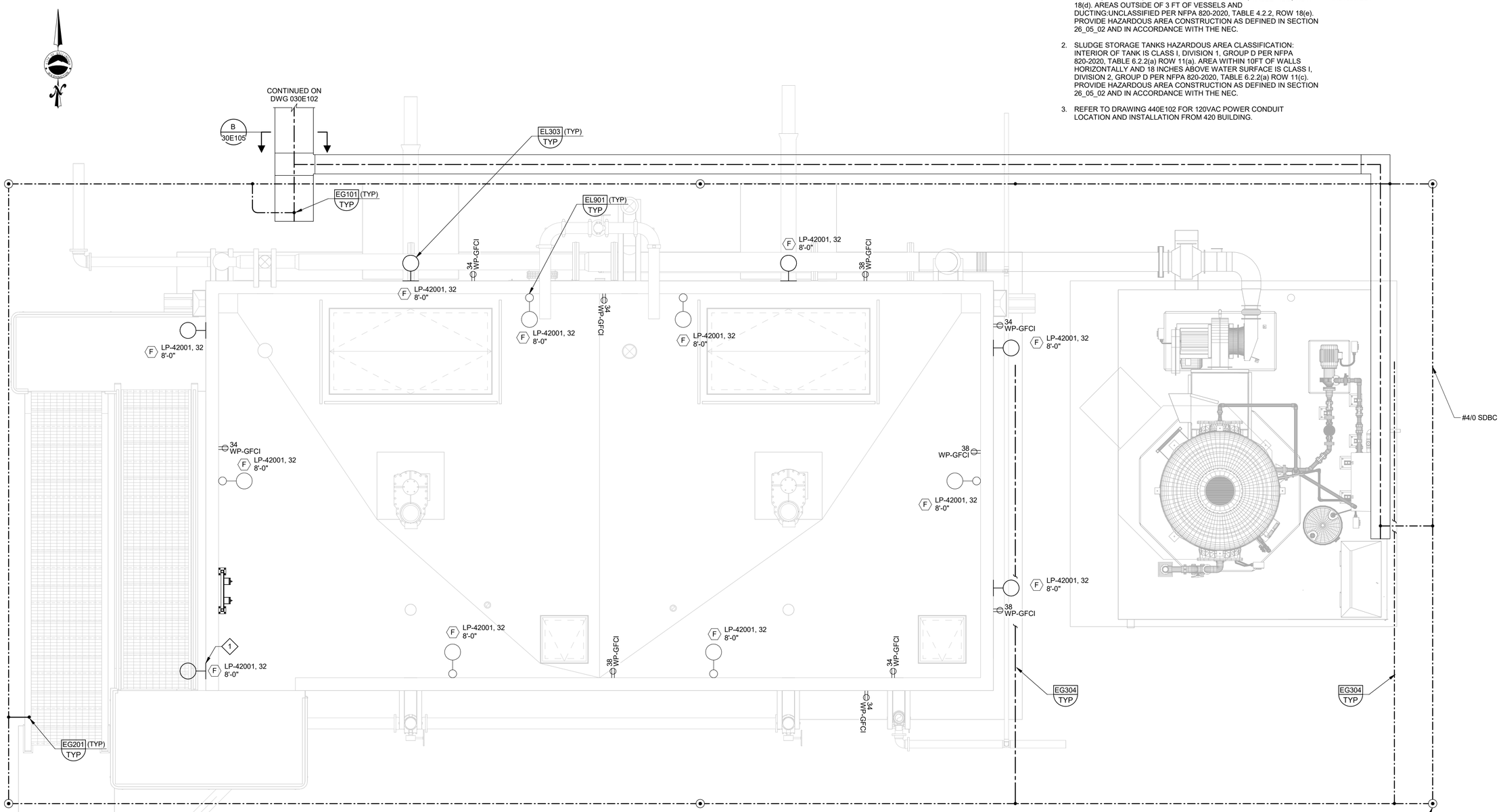

C PLAN
440E101
SCALE: 3/8" = 1'-0"

VERIFY SCALES

BAR IS ONE INCH ON ORIGINAL DRAWING

0 1"

IF NOT ONE INCH ON THIS SHEET, ADJUST SCALES ACCORDINGLY

TYLER DOUGLAS TROYER STATE OF WASHINGTON 24031376 REGISTERED PROFESSIONAL ENGINEER

carollo

PLOT DATE: 6/25/2026 2:20:01 PM

Date	No	Revision	By

PROJECT ENGINEER
DESIGNED/DRAWN TDT/BLS
INSPECTOR

DIRECTOR PUBLIC WORKS MAO
CITY ENGINEER MLW
ASSISTANT DIRECTOR MAO

CITY OF BELLINGHAM, WASHINGTON
PUBLIC WORKS DEPARTMENT
ENGINEERING DIVISION

SCALE
Horiz. AS SHOWN
Vert. AS SHOWN

DATUM
H: NAD 83/98
V: NAVD 88

Job. No. EU194
Date JAN 2026
Field Bk.

POST POINT RESOURCE RECOVERY PLANT
ELECTRICAL
SLUDGE STORAGE TANKS UPPER LEVEL LIGHTING AND GROUNDING PLAN

DRAWING NO. 440E103
SHEET NO. 118 OF 198

CONTACT PERSON: STEPHEN DAY, PE SE , PROJECT ENGINEER AT 360-778-7944 FILE NAME: Autodesk Docs://Bellingham 202021-100000 Primary Sludge Tank Replacement/202021440E0801.rvt

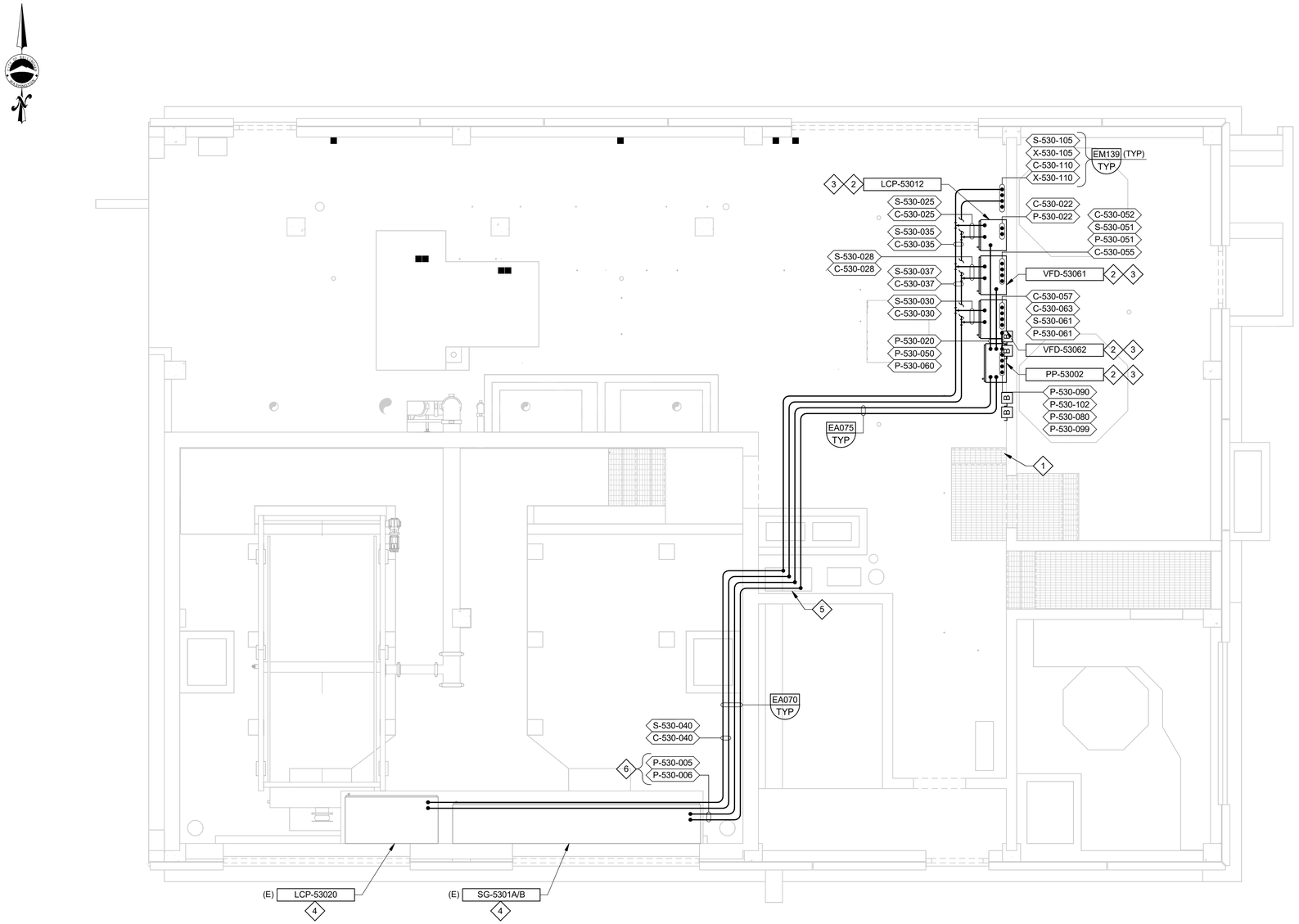

A PLAN

SCALE: 1/4" = 1'-0"

GENERAL NOTES:

1. CONTRACTOR SHALL FIELD VERIFY EXISTING CONDITIONS PRIOR TO ROUTING NEW CONDUIT.
2. CORE DRILL EXISTING CONCRETE WALLS IN ACCORDANCE WITH EM163/TYP.

KEY NOTES:

1. NEW ELECTRICAL PANELS SHALL NOT BE LOCATED UNDER EXISTING WATER PIPE NEAR EXISTING HOSE BIB.
2. WALL MOUNT NEW ELECTRICAL PANELS ADJACENT TO EXISTING FIRE EXTINGUISHER ON EXISTING CONCRETE WALL. RELOCATE EXISTING HOOKS AND CLEANING SUPPLIES/HOSE STORAGE. COORDINATE WITH CITY PLANT STAFF TO DETERMINE NEW DESIRED LOCATION.
3. RELOCATE EXISTING FIRE ALARM HORN/STROBE AS-NEEDED TO ACCOMMODATE NEW ELECTRICAL SHOWN.
4. EXISTING EQUIPMENT LOCATED ON UPPER LEVEL ABOVE IN APPROXIMATE LOCATIONS SHOWN.
5. UTILIZE EXISTING ELECTRICAL CHASE FOR ROUTING NEW RACEWAY FROM GROUND LEVEL TO UPPER LEVEL.
6. ROUTE NEW CONDUITS TO SG-5301A GROUP MOUNTED FEEDER SECTION FROM ABOVE.

VERIFY SCALES

BAR IS ONE INCH ON ORIGINAL DRAWING

0 1"

IF NOT ONE INCH ON THIS SHEET, ADJUST SCALES ACCORDINGLY

TYLER DOUGLAS TROUT
STATE OF WASHINGTON
24031376
REGISTERED PROFESSIONAL ENGINEER

carollo®

PLOT DATE: 6/29/2026 10:56:23 AM

Date	No	Revision	By

PROJECT ENGINEER
DESIGNED/DRAWN TDT/ASH
INSPECTOR

DIRECTOR PUBLIC WORKS MAO
CITY ENGINEER MLW
ASSISTANT DIRECTOR MAO

CITY OF BELLINGHAM, WASHINGTON
PUBLIC WORKS DEPARTMENT
ENGINEERING DIVISION

SCALE
Horiz. AS SHOWN
Vert. AS SHOWN

DATUM
H: NAD 83/98
V: NAVD 88

Job. No. EU194
Date JAN 2026
Field Bk.

POST POINT RESOURCE RECOVERY PLANT
ELECTRICAL
SOLIDS HANDLING BUILDING EAST GROUND LEVEL POWER AND CONTROL PLAN

DRAWING NO. 530E101
SHEET NO. 121 OF 198

CONTACT PERSON: STEPHEN DAY, PE SE , PROJECT ENGINEER AT 360-778-7944 FILE NAME: Autodesk Docs://Bellingham 202021-100000 Primary Sludge Tank Replacement/202021530E9801.rvt

GENERAL NOTES:

1. SWITCHBOARD SG-5301 IS EXISTING:
   - MANUFACTURER: GENERAL ELECTRIC
   - MODEL: AV-LINE
   - PRODUCT TYPE: AV2
   - JOB NUMBER: 59744
   - VOLTAGE: 480V
   - PHASE: 3
   - WIRE: 3
   - FREQUENCY: 60HZ
2. SPARE BREAKERS NOT SHOWN. SPARE BREAKERS INCLUDE ONE 50AT AND THREE 100AT THERMAL MAGNETIC BREAKERS.

KEY NOTES:

1. PROVIDE NEW NAMEPLATE.

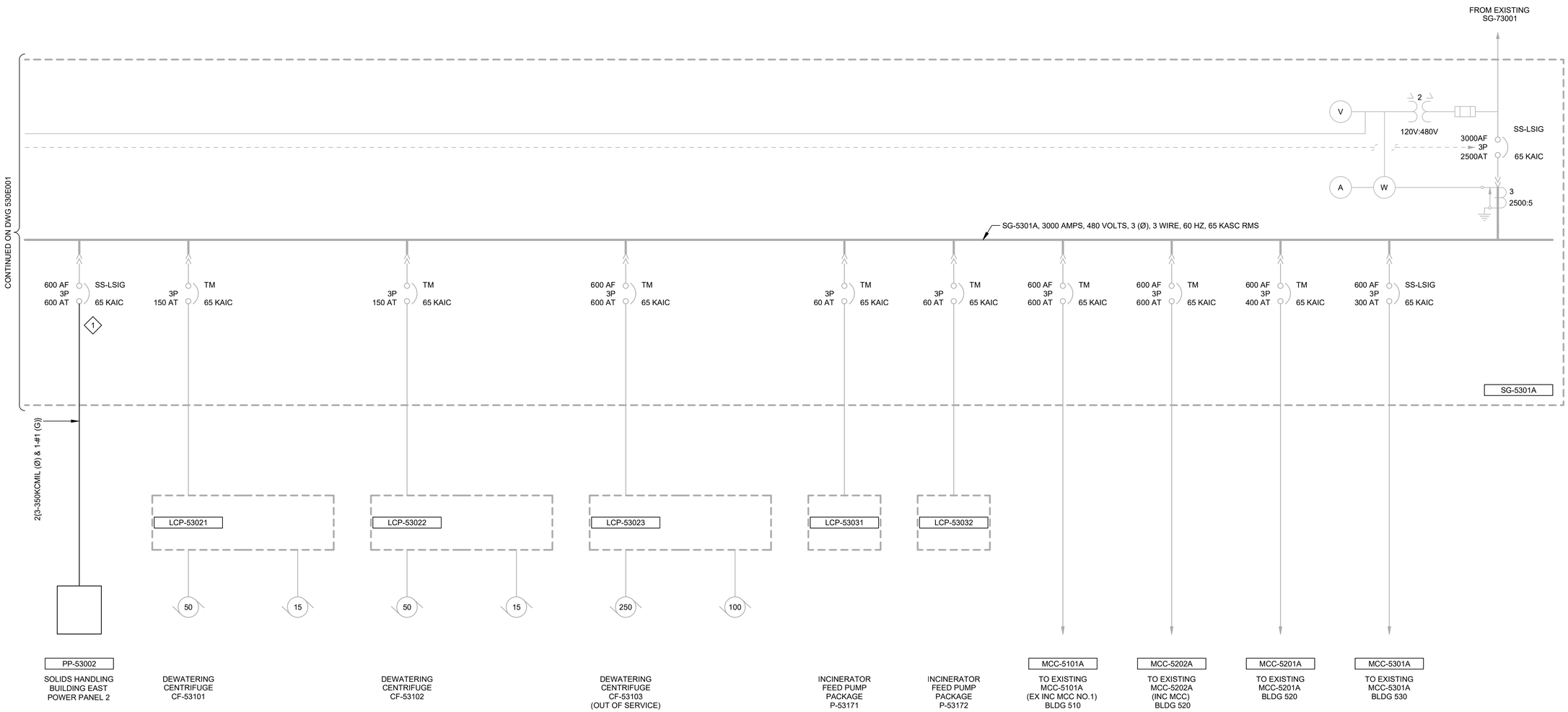

carollo®

Date	No	Revision	By
	4		
	3		
	2		
	1		

PROJECT ENGINEER MSS
DESIGNED/DRAWN TDT/ASH
INSPECTOR CH

DIRECTOR PUBLIC WORKS
CITY ENGINEER
ASSISTANT DIRECTOR

CITY OF BELLINGHAM, WASHINGTON
PUBLIC WORKS DEPARTMENT
ENGINEERING DIVISION

SCALE
Horiz. AS SHOWN
Vert. AS SHOWN

DATUM
H: NAD 83/98
V: NAVD 88

Job. No. EU194
Date JAN 2026
Field Bk.

POST POINT RESOURCE RECOVERY PLANT
ELECTRICAL
SG-5301A/B MODIFIED ONE-LINE DIAGRAM 2

DRAWING NO. 530E002
SHEET NO. 120 OF 198

LAST SAVED BY: lveloz

CONTACT PERSON: STEPHEN DAY, PE SE , PROJECT ENGINEER AT 360-778-7944

PROJECT NO. 202021-100000 FILE NAME: 202021530E002.dwg

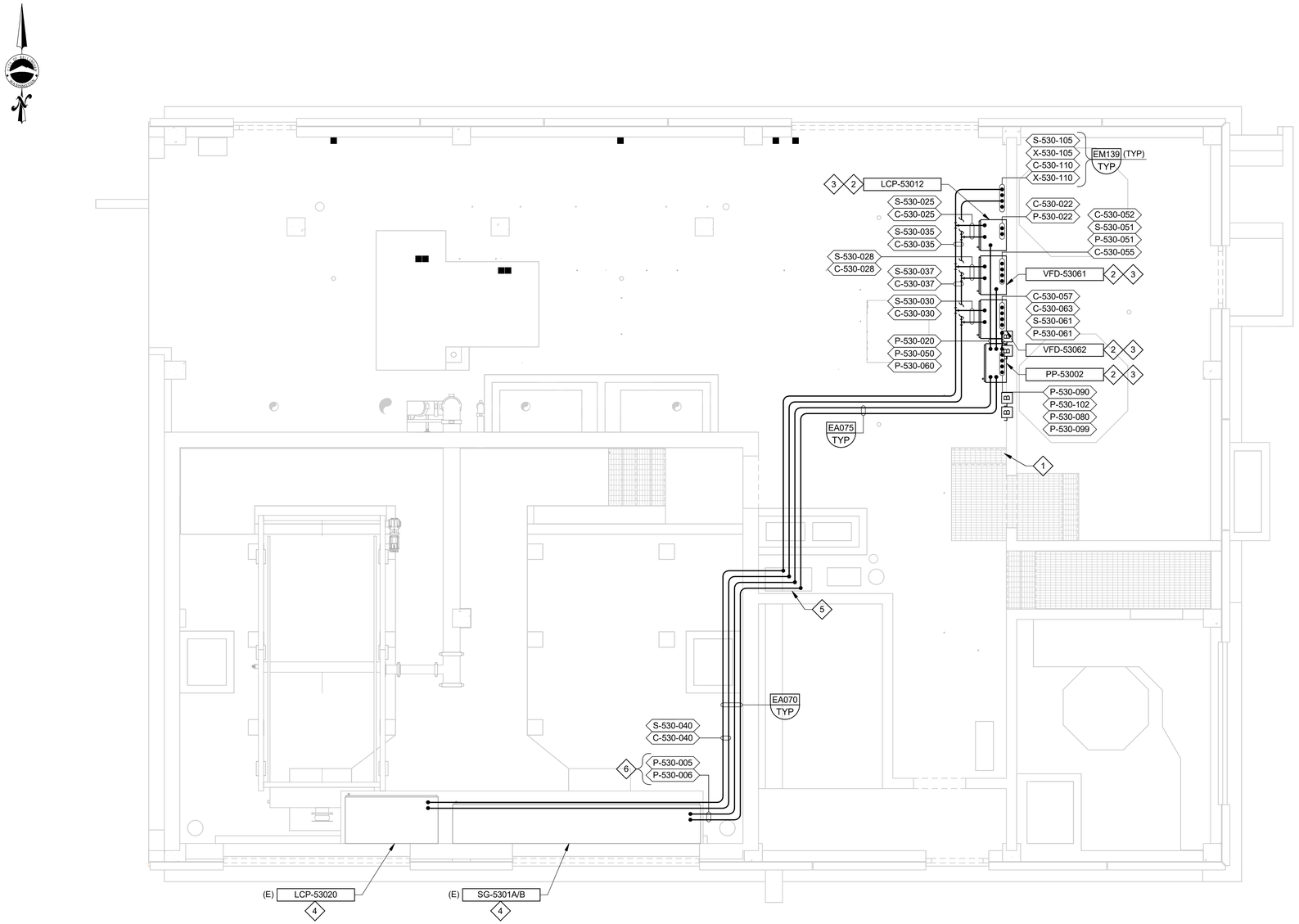

A PLAN

SCALE: 1/4" = 1'-0"

GENERAL NOTES:

1. CONTRACTOR SHALL FIELD VERIFY EXISTING CONDITIONS PRIOR TO ROUTING NEW CONDUIT.
2. CORE DRILL EXISTING CONCRETE WALLS IN ACCORDANCE WITH EM163/TYP.

KEY NOTES:

1. NEW ELECTRICAL PANELS SHALL NOT BE LOCATED UNDER EXISTING WATER PIPE NEAR EXISTING HOSE BIB.
2. WALL MOUNT NEW ELECTRICAL PANELS ADJACENT TO EXISTING FIRE EXTINGUISHER ON EXISTING CONCRETE WALL. RELOCATE EXISTING HOOKS AND CLEANING SUPPLIES/HOSE STORAGE. COORDINATE WITH CITY PLANT STAFF TO DETERMINE NEW DESIRED LOCATION.
3. RELOCATE EXISTING FIRE ALARM HORN/STROBE AS-NEEDED TO ACCOMMODATE NEW ELECTRICAL SHOWN.
4. EXISTING EQUIPMENT LOCATED ON UPPER LEVEL ABOVE IN APPROXIMATE LOCATIONS SHOWN.
5. UTILIZE EXISTING ELECTRICAL CHASE FOR ROUTING NEW RACEWAY FROM GROUND LEVEL TO UPPER LEVEL.
6. ROUTE NEW CONDUITS TO SG-5301A GROUP MOUNTED FEEDER SECTION FROM ABOVE.

VERIFY SCALES

BAR IS ONE INCH ON ORIGINAL DRAWING

0 1"

IF NOT ONE INCH ON THIS SHEET, ADJUST SCALES ACCORDINGLY

Digitally signed by Tyler Douglas Troud
Contact info: tyler.troud@carollo.com
Date: 2026.01.26 11:38:09 -08'00'

TYLER DOUGLAS TROUD
STATE OF WASHINGTON
24031376
REGISTERED PROFESSIONAL ENGINEER

PLOT DATE: 1/26/2026 11:38:09 AM

carollo®

Date	No	Revision	By
		PERMIT SUBMITTAL	

PROJECT ENGINEER
DESIGNED/DRAWN TDT/ASH
INSPECTOR

DIRECTOR PUBLIC WORKS MAO
CITY ENGINEER MLW
ASSISTANT DIRECTOR MAO

CITY OF BELLINGHAM, WASHINGTON
PUBLIC WORKS DEPARTMENT
ENGINEERING DIVISION

SCALE
Horiz. AS SHOWN
Vert. AS SHOWN

DATUM
H: NAD 83/98
V: NAVD 88

Job. No. EU194
Date JAN 2026
Field Bk.

POST POINT RESOURCE RECOVERY PLANT
ELECTRICAL
SOLIDS HANDLING BUILDING EAST GROUND LEVEL POWER AND CONTROL PLAN

DRAWING NO. 530E101
SHEET NO. 121 OF 198

CONTACT PERSON: STEPHEN DAY, PE SE , PROJECT ENGINEER AT 360-778-7944 FILE NAME: Autodesk Docs://Bellingham 202021-100000 Primary Sludge Tank Replacement/202021530E9801.rvt

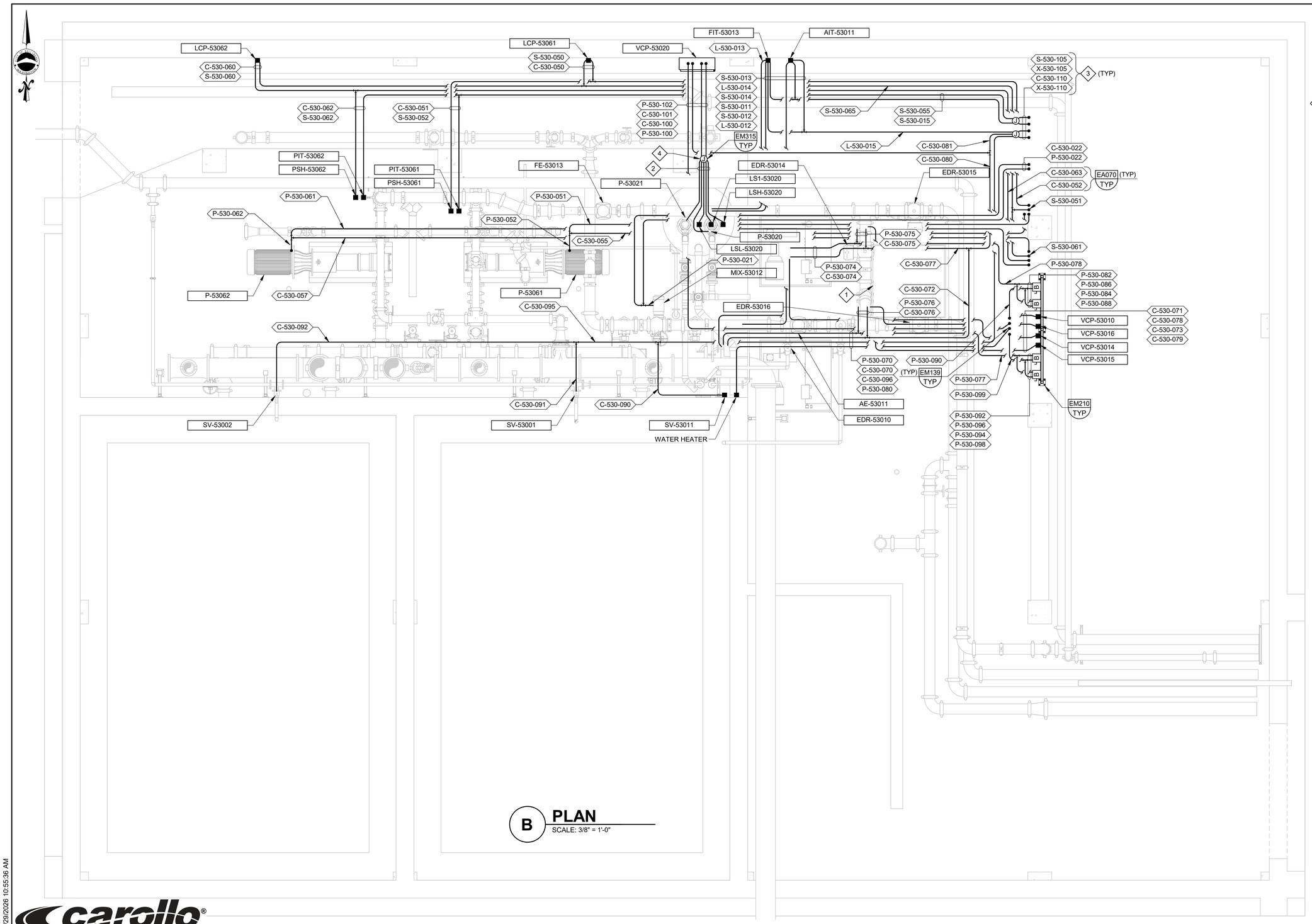

B **PLAN**
SCALE: 3/8" = 1'-0"

GENERAL NOTES:

1. CONTRACTOR SHALL VERIFY ALL EXISTING CONDITIONS PRIOR TO LOCATING NEW CONDUIT AND EQUIPMENT.
2. PROVIDE CONDUIT TRAPEZE SUPPORT PER EM102/TYP AS-NEEDED TO AVOID CONFLICTS WITH EXISTING.

KEY NOTES:

1. EXISTING FLOOR HATCH LOCATED ON BASEMENT LEVEL CEILING. DO NOT OBSTRUCT WITH NEW CONDUIT.
2. ROUTE SUBMERSIBLE EQUIPMENT CABLE TO SUMP PUMP TERMINATION BOX.
3. PROVIDE HOUSEKEEPING CURB FOR CONDUITS AT GROUND LEVEL PER EM107/TYP. CORE DRILL GROUND FLOOR SLAB PER EM139/TYP AND CAP EXPOSED SPARE CONDUITS PER EM105/TYP.
4. MOUNT SUMP PUMP TERMINATION BOX ON NEARBY STRUCTURAL COLUMN.

VERIFY SCALES
BAR IS ONE INCH ON ORIGINAL DRAWING
0 1"
IF NOT ONE INCH ON THIS SHEET, ADJUST SCALES ACCORDINGLY

PLOT DATE: 6/29/2026 10:55:36 AM

carollo®

Date	No	Revision	By

PROJECT ENGINEER
DESIGNED/DRAWN TDT/ASH
INSPECTOR

DIRECTOR PUBLIC WORKS MAO
CITY ENGINEER MLW
ASSISTANT DIRECTOR MAO

CITY OF BELLINGHAM, WASHINGTON
PUBLIC WORKS DEPARTMENT
ENGINEERING DIVISION

SCALE
Horiz. AS SHOWN
Vert. AS SHOWN

DATUM
H: NAD 83/98
V: NAVD 88

Job. No. EU194
Date JAN 2026
Field Bk.

POST POINT RESOURCE RECOVERY PLANT
ELECTRICAL
SOLIDS HANDLING BUILDING EAST BASEMENT LEVEL
POWER AND CONTROL PLAN

DRAWING NO. 530E102
SHEET NO. 122 OF 198

CONTACT PERSON: STEPHEN DAY, PE SE , PROJECT ENGINEER AT 360-778-7944 FILE NAME: Autodesk Docs://Bellingham 202021-100000 Primary Sludge Tank Replacement/202021530E9801.rvt

SYMBOL	DRAWING VISIBLE FIELDS	FIELD - 1	FIELD - 2	FIELD - 3	FIELD - 4	FIELD - 5	FIELD - 6	FIELD - 7	FIELD - 8
HMI/SCADA SYSTEM OPERATOR INTERFACE TERMINAL	1 - TAG111 2 - LOOP NUMBER 3 - FUNCTION 4 - DESCRIPTION 5 - DESCRIPTION 6 - EXISTING/FUTURE	REFER 1 2	REFER 3	ACTION ALARM SP - NUMERIC STATUS - SET POINT TREND	DESCRIPTION 2 5	DESCRIPTION	E - EXISTING F - FUTURE		
HARDWIRED I/O POINT	1 - TAG 2 - LOOP NUMBER 3 - FUNCTION 4 - DESCRIPTION 5 - LOCATION 6 - EXISTING/FUTURE 7 - IO TABLE	REFER 1 2 4	REFER 3	AI - ANALOG INPUT AO - ANALOG OUTPUT DI - DISCRETE INPUT DO - DISCRETE OUTPUT RTD - RTD INPUT	DESCRIPTION	PAC - PROGRAMMABLE AUTOMATION CONTROLLER NO. PLC - PROGRAMMABLE LOGIC CONTROLLER NO. RIO - REMOTE I/O VCP - VENDOR CONTROL PANEL NO.	E - EXISTING F - FUTURE		
NETWORK / SOFT I/O	1 - TAG 2 - LOOP NUMBER 3 - PROTOCOL 4 - PANEL 5 - PLC 6 - EXISTING/FUTURE 7 - IO TABLE 8 - SWITCH/SEGMENT	REFER 1 2	REFER 3	COMMUNICATION PROTOCOL CNET - CONTROLNET DNET - DEVICENET EIP - ETHERNET/IP FF - FOUNDATION FIELDBUS HART-IP - HART OVER ETHERNET MANF - MFR. PROPRIETARY MBRTU - MODBUS RTU MB+ - MODBUS PLUS MBTCP - MODBUS TCP DP - PROFIBUS DP PA - PROFIBUS PA PNET - PROFINET SNMP - SNMPv3 HTTP - WEB SERVER (TCP/IP)	DESCRIPTION	PAC - PROGRAMMABLE AUTOMATION CONTROLLER NO. PLC - PROGRAMMABLE LOGIC CONTROLLER NO. RIO - REMOTE I/O VCP - VENDOR CONTROL PANEL NO.	E - EXISTING F - FUTURE		
LOCAL OPERATOR INTERFACE	1 - TAG 2 - LOOP NUMBER 3 - FUNCTION 4 - DESCRIPTION 5 - LOCATION 6 - EXISTING/FUTURE	REFER 1 2	REFER 3	ACTION ALARM SP - NUMERIC STATUS - SET POINT TREND	DESCRIPTION	LOI - LOCAL OPERATOR INTERFACE NO. LCP - LOCAL CONTROL PANEL NO. PCM - PROCESS CONTROL MODULE NO. VCP - VENDOR CONTROL PANEL NO.	E - EXISTING F - FUTURE		
PILOT DEVICE OPERATOR INTERFACE	1 - TAG 2 - LOOP NUMBER 3 - FUNCTION 4 - DESCRIPTION 5 - LOCATION 6 - EXISTING/FUTURE	REFER 1 2	REFER 3	AM - AUTO/MANUAL BYPASS - BY PASS ESD - EQUIPMENT SHUTDOWN HOA - HAND/OFF/AUTO LOR - LOCAL/OFF/REMOTE LOS - LOCK OUT STOP LS - LEAD/STANDBY LSR - LOCAL/STOP/REMOTE OC - OPEN/CLOSE OO - OFF/ON OSC - OPEN/STOP/CLOSE RST - RESET SEL - SELECT SPD - SPEED SS - START/STOP ST - STOP	DESCRIPTION 2 5	LCP - LOCAL CONTROL PANEL NO. MCC - MOTOR CONTROL CENTER NO. PCM - PROCESS CONTROL MODULE NO. RVSS - REDUCED VOLTAGE SOLID STARTER NO. VCP - VENDOR CONTROL PANEL NO. VFD - VARIABLE FREQUENCY DRIVE NO.	E - EXISTING F - FUTURE		
POWER DEVICE PRIMARY FUNCTION OPERATOR ACCESSIBLE	1 - TAG 2 - LOOP NUMBER 3 - FUNCTION 4 - VOLTAGE-POLE 5 - LOCATION 6 - EXISTING/FUTURE	CB - CIRCUIT BREAKER DISC - DISCONNECT FU - FUSE	REFER 3	TM - THERMAL MAGNETIC CIRCUIT BREAKER	24VDC - 1P 24VDC - 2P 24VAC - 1P 48VDC - 2P 120VAC - 1P 208VAC - 2P 208VAC - 3P 240VAC - 2P 240VAC - 3P 480VAC - 3P 2400VAC - 3P 4160VAC - 3P	DP - DISTRIBUTION PANEL NO. LCP - LOCAL CONTROL PANEL NO. LP - LIGHTING PANEL NO. MCC - MOTOR CONTROL CENTER NO. PCM - PROCESS CONTROL MODULE NO. PP - POWER PANEL NO. VCP - VENDOR CONTROL PANEL NO.	E - EXISTING F - FUTURE		
POWER DEVICE AUXILIARY FUNCTION OPERATOR ACCESSIBLE	1 - TAG 2 - LOOP NUMBER 3 - DESCRIPTION 4 - DESCRIPTION 5 - DESCRIPTION 6 - EXISTING/FUTURE	DISC - DISCONNECT	REFER 3	DESCRIPTION	DESCRIPTION	DESCRIPTION	E - EXISTING F - FUTURE		
POWER DEVICE PRIMARY FUNCTION OPERATOR INACCESSIBLE	1 - TAG 2 - LOOP NUMBER 3 - FUNCTION 4 - VOLTAGE-POLE 5 - LOCATION 6 - EXISTING/FUTURE	CB - CIRCUIT BREAKER FU - FUSE	REFER 3	MCP - MOTOR CIRCUIT PROTECTOR SS - SOLID STATE CIRCUIT BREAKER TM - THERMAL MAGNETIC CIRCUIT BREAKER	24VDC - 1P 24VDC - 2P 24VAC - 1P 48VDC - 2P 120VAC - 1P 208VAC - 2P 208VAC - 3P 240VAC - 2P 240VAC - 3P 480VAC - 3P 2400VAC - 3P 4160VAC - 3P	DP - DISTRIBUTION PANEL NO. LCP - LOCAL CONTROL PANEL NO. LP - LIGHTING PANEL NO. MCC - MOTOR CONTROL CENTER NO. PCM - PROCESS CONTROL MODULE NO. PP - POWER PANEL NO. VCP - VENDOR CONTROL PANEL NO.	E - EXISTING F - FUTURE		
FIELD EQUIPMENT STARTER / DRIVE CUBICLE / CABINET	1 - TAG 2 - LOOP NUMBER 3 - TYPE 4 - VOLTAGE-POLE 5 - POWER SOURCE 6 - EXISTING/FUTURE	MS - MOTOR STARTER RVAT - REDUCED VOLTAGE AUTO TRANSFORMER STARTER RVSS - REDUCED VOLTAGE SOLID STATE STARTER VFD - VARIABLE FREQUENCY DRIVE	REFER 3	FVNR - FULL VOLTAGE NON-REVERSING STARTER FVR - FULL VOLTAGE REVERSING STARTER PWS - PART-WINDING STARTER RVAT - REDUCED VOLTAGE AUTO RVSS - REDUCED VOLTAGE SOLID STATE STARTER TS1W - TWO SPEED SINGLE WINDING TS2W - TWO SPEED TWO WINDINGS VFD - VARIABLE FREQUENCY DRIVE	120VAC - 1P 208VAC - 2P 208VAC - 3P 240VAC - 2P 240VAC - 3P 480VAC - 3P 2400VAC - 3P 4160VAC - 3P	LCP - LOCAL CONTROL PANEL NO. MCC - MOTOR CONTROL CENTER NO. PCM - PROCESS CONTROL MODULE NO. VCP - VENDOR CONTROL PANEL NO.	E - EXISTING F - FUTURE		

SYMBOL	DRAWING VISIBLE FIELDS	FIELD - 1	FIELD - 2	FIELD - 3	FIELD - 4	FIELD - 5	FIELD - 6	FIELD - 7	FIELD - 8
INSTRUMENT PRIMARY ELEMENT	1 - TAG 2 - LOOP NUMBER 3 - FUNCTION 4 - FURNISHED BY 5 - LOCATION 6 - EXISTING/FUTURE	REFER 1	REFER 3	DESCRIPTION 5	DESCRIPTION 6 7	AREA NO. BUILDING NO. ROOM NO.	E - EXISTING F - FUTURE		
INSTRUMENT/ CONTROL ELEMENT PRIMARY FUNCTION OPERATOR ACCESSIBLE	1 - TAG 2 - LOOP NUMBER 3 - FUNCTION 4 - FURNISHED BY 5 - DESCRIPTION 6 - EXISTING/FUTURE	REFER 1	REFER 3	DESCRIPTION 5	DESCRIPTION 6 7	DESCRIPTION INT - INTEGRAL REM - REMOTE	E - EXISTING F - FUTURE		OUT - OUTDOOR
INSTRUMENT/ CONTROL ELEMENT AUXILIARY FUNCTION OPERATOR ACCESSIBLE	1 - TAG 2 - LOOP NUMBER 3 - FUNCTION 4 - FURNISHED BY 5 - LOCATION 6 - EXISTING/FUTURE	REFER 1	REFER 3	DESCRIPTION	DESCRIPTION 6 7	DESCRIPTION	E - EXISTING F - FUTURE		
INSTRUMENT/ CONTROL ELEMENT PRIMARY FUNCTION OPERATOR INACCESSIBLE	1 - TAG 2 - LOOP NUMBER 3 - FUNCTION 4 - FURNISHED BY 5 - LOCATION 6 - EXISTING/FUTURE	REFER 1 3 XR - PROTECTION RELAY CR - CONTROL RELAY XR - INTERPOSING RELAY	REFER 3	DESCRIPTION	DESCRIPTION 6 7	DESCRIPTION	E - EXISTING F - FUTURE		
INSTRUMENT/ CONTROL ELEMENT AUXILIARY FUNCTION OPERATOR INACCESSIBLE	1 - TAG 2 - LOOP NUMBER 3 - FUNCTION 4 - FURNISHED BY 5 - LOCATION 6 - EXISTING/FUTURE	REFER 1 3 XR - PROTECTION RELAY CR - CONTROL RELAY XR - INTERPOSING RELAY	REFER 3	DESCRIPTION	DESCRIPTION 6 7	DESCRIPTION	E - EXISTING F - FUTURE		
FIELD EQUIPMENT NON-POWERED	1 - TAG 2 - LOOP NUMBER 3 - FUNCTION/SIZE 4 - FURNISHED BY 5 - LOCATION 6 - EXISTING/FUTURE	REFER 1	REFER 3	DESCRIPTION	DESCRIPTION 6 7	AREA NO. BUILDING NO. ROOM NO.	E - EXISTING F - FUTURE		
FIELD EQUIPMENT PRIMARY FUNCTION POWERED	1 - TAG 2 - LOOP NUMBER 3 - FUNCTION 4 - FURNISHED BY 5 - LOCATION 6 - EXISTING/FUTURE	REFER 1	REFER 3	DESCRIPTION	DESCRIPTION 6 7	AREA NO. BUILDING NO. ROOM NO.	E - EXISTING F - FUTURE		
FIELD EQUIPMENT AUXILIARY FUNCTION POWERED	1 - TAG 2 - LOOP NUMBER 3 - FUNCTION 4 - FURNISHED BY 5 - LOCATION 6 - EXISTING/FUTURE	MWH - MOTOR WINDING HEATER TSH - TEMPERATURE SWITCH XSH - TORQUE SWITCH	REFER 3	DESCRIPTION	DESCRIPTION 6 7	DESCRIPTION	E - EXISTING F - FUTURE		

INSTRUMENT BUBBLE LOCATIONS

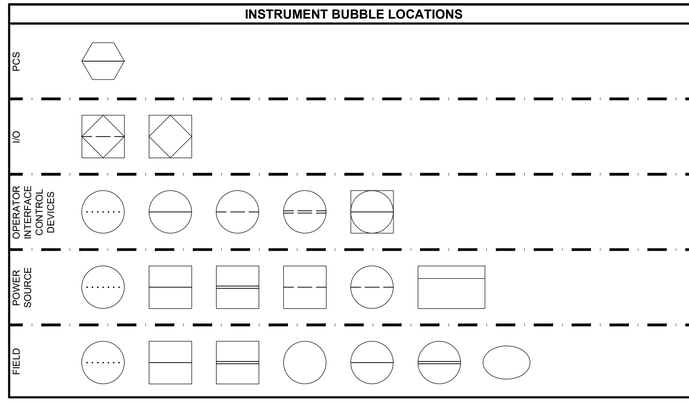

NOTES

1. INSTRUMENT TAG IDENTIFICATION LETTERS TABLE
2. OPERATOR PILOT DEVICE LEGEND
3. EQUIPMENT TAGGING TABLE
4. I/O TYPE DESIGNATIONS
5. INSTRUMENT TYPE DESIGNATIONS TABLE
6. FURNISHED BY:
   - FBO FURNISHED BY OWNER
   - FBV FURNISHED BY VENDOR
7. PROVIDED BY:
   - PBO PROVIDED BY OWNER
   - PBV PROVIDED BY VENDOR

carollo®

Date	No	Revision	By
	4		
	3		
	2		
	1		

PROJECT ENGINEER MSS
DESIGNED/DRAWN CE
INSPECTOR RG

DIRECTOR PUBLIC WORKS
CITY ENGINEER
ASSISTANT DIRECTOR

CITY OF BELLINGHAM, WASHINGTON
PUBLIC WORKS DEPARTMENT
ENGINEERING DIVISION

SCALE
Horiz. AS SHOWN
Vert. AS SHOWN

DATUM
H: NAD 83/98
V: NAVD 88

Job. No. EU194
Date JAN 2026
Field Bk.

POST POINT RESOURCE RECOVERY PLANT
INSTRUMENTATION
SYMBOLS AND ABBREVIATIONS 1

DRAWING NO. 010N101
SHEET NO. 123 OF 198

CONTACT PERSON: STEPHEN DAY, PE SE , PROJECT ENGINEER AT 360-778-7944

PROJECT NO. 202021-100000 FILE NAME: 202021010N101.dwg

1/21/2026 10:38:11 AM

LAST SAVED BY: CRollins

1/21/2026 8:22:48 AM

INSTRUMENT TAG IDENTIFICATION LETTERS

MEASURED VARIABLE \ INSTRUMENTATION FUNCTION		ELEMENT	TRANSMITTER	INDICATING TRANSMITTER	CONVERTER TRANSDUCER, RELAY SPECIAL DEVICES	INDICATOR	RECORDER	CONTROL/COMMAND	INDICATING CONTROLLER	RECORDING CONTROLLER	SWITCH	SWITCH LOW LOW	SWITCH LOW	SWITCH HIGH	SWITCH HIGH HIGH	SWITCH COMBINATION HIGH LOW	ACTION	ALARM LOW LOW	ALARM LOW	ALARM HIGH	ALARM HIGH HIGH	TOTALIZE INDICATOR TRANSMITTER	VALVE	GAUGE	LIGHT	SPEED SETTING
A	ANALYSIS	AE	AT	AIT	AY	AI	AR	AC	AIC	ARC	AS	ASLL	ASL	ASH	ASHH	ASHL		AALL	AAL	AAH	AAHH				AL	
C	CONDUCTIVITY	CE	CT	CIT	CY	CI	CR	CC	CIC	CRC	CS	CSLL	CSL	CSH	CSHH	CSHL		CALL	CAL	CAH	CAHH				CL	
D	DENSITY	DE	DT	DIT	DY	DI	DR	DC	DIC	DRC	DS	DSLL	DSL	DSH	DSHH	DSHL		DALL	DAL	DAH	DAHH				DL	
E	VOLTAGE												ESL													
F	FLOW	FE	FT	FIT	FY	FI	FR	FC	FIC	FRC	FS	FSLL	FSL	FSH	FSHH	FSHL		FALL	FAL	FAH	FAHH	FQI	FCV	FG	FL	
H	HAND (MANUAL)*							HC			HS*						HA*						HV		HL	HSS
I	CURRENT		IT	IIT	IY	II	IR	IC	IIC	IRC	IS	ISLL	ISL	ISH	ISHH			IALL	IAL	IAH	IAHH				IL	
J	POWER					JS																				
K	TIME				KY	KI	KR	KC	KIC	KRC	KS	KSLL	KSL	KSH	KSHH			KALL	KAL	KAH	KAHH		KV		KL	
L	LEVEL	LE	LT	LIT	LY	LI	LR	LC	LIC	LRC	LS	LSLL	LSL	LSH	LSHH	LSHL		LALL	LAL	LAH	LAHH		LCV	LG	LL	
M	MOISTURE OR HUMIDITY	ME	MT	MIT	MY	MI	MR	MC	MIC	MRC	MS	MSLL	MSL	MSH	MSHH			MALL	MAL	MAH	MAHH				ML	
N	USER'S CHOICE																									
P	PRESSURE OR VACUUM	PE	PT	PIT	PY	PI	PR	PC	PIC	PRC	PS	PSLL	PSL	PSH	PSHH	PSHL		PALL	PAL	PAH	PAHH		PCV		PL	
PD	DIFFERENTIAL PRESSURE		PDT	PDIT	PDY	PDI	PDR	PDC	PDIC	PDRC	PDS	PDSLL	PDSL	PDSH	PDSHH			PDALL	PDAL	PDAH	PDAHH		PDCV		PDL	
Q	QUANTITY	QE	QT	QIT	QY	QI	QR				QS	QSLL	QSL	QSH	QSHH			QALL	QAL	QAH	QAHH					
R	RADIATION																									
S	SPEED	SE	ST	SIT	SY	SI	SR	SC	SIC	SRC	SS	SSLL	SSL	SSH	SSHH			SALL	SAL	SAH	SAHH					
T	TEMPERATURE	TE	TT	TIT	TY	TI	TR	TC	TIC	TRC	TS	TSLL	TSL	TSH	TSHH	TSHL		TALL	TAL	TAH	TAHH		TCV		TL	
TD	DIFFERENTIAL TEMPERATURE		TDT	TDIT	TDY	TDI	TDR	TDC	TDIC	TDRC	TDS	TDSLL	TDSL	TDSH	TDSHH			TDALL	TDAL	TDAH	TDAHH		TDCV		TDL	
U	MULTIVARIABLE					UI	UR	UC	UIC	URC	US														UL	
V	VISCOSITY	VE	VT	VIT	VY	VI	VR	VC	VIC	VRC	VS	VSLL	VSL	VSH	VSHH			VALL	VAL	VAH	VAHH				VL	
W	WEIGHT	WE	WT	WIT	WY	WI	WR				WS	WSLL	WSL	WSH	WSHH			WALL	WAL	WAH	WAHH					
X	UNCLASSIFIED	XE	XT	XIT	XY	XI	XR	XC	XIC	XRC	XS	XSLL	XSL	XSH	XSHH			XALL	XAL	XAH	XAHH		XCV	XG	XL	
XV	VIBRATION	XVE	XVT		XVY	XVI	XVR				XVS			XVSH	XVSHH					XVAH	XVAHH				XVL	
Y	STATUS					YI																			YL	
Z	POSITION	ZE	ZT	ZIT	ZY	ZI		ZC**			ZS**												ZV		ZL**	

OPERATOR PILOT DEVICE LEGEND

DEVICE TYPE \ PILOT DEVICE FUNCTION	LOCAL-OFF-REMOTE (LOR) OR LOCAL-STOP-REMOTE (LSR)	STOP(SP)	START (ST)	HAND-OFF-AUTO (HOA) HAND-OFF-REMOTE (HOR)	OFF-ON (OO)	SELECT (SEL)	OPEN-STOP-CLOSE (OSC)	JOG OPEN-HOLD-CLOSE (JOHC)	SEMI/AUTO-AUTO-MANUAL (SAAM)	LEAD-LAG-STANDBY (LLGS)	AUTO-MANUAL (AM)	OPEN-CLOSE (OC)	LOW-HIGH (LH)	RESET (RST)	SPEED (SPD)	START-STOP (STSP)	EQUIPMENT SHUTDOWN (ESD)	BYPASS (BYP)			SILENCE	POSITION (POS)
PILOT DEVICE TAG (HAND SWITCHES)	HSA	HSB	HSC	HSD	HSE	HSF	HSG	HSH	HIS	HSJ	HSM	HSO	HSQ	HSR	HSS	HST	HSU	HSV	HSW	HSX	HSY	HSZ

I/O TYPE DESIGNATIONS

RNG	RUNNING	SPDC	SPEED COMMAND
FAIL	FAILED/FAULT	SPDF	SPEED FEEDBACK
FWD	RUNNING FORWARD	REM	LOR IN REMOTE
FAST	RUNNING HIGH	LOC	LOR IN LOCAL
SLOW	RUNNING LOW	AUTO	HOA IN AUTO
REV	RUNNING REVERSE	HAND	HOA IN HAND
SVC	SOLENOID VALVE CLOSE	RST	RESET
SVO	SOLENOID VALVE OPEN		
RUN	RUN		
SLWC	MOTOR START LOW		
REVC	MOTOR START REVERSE		

INSTRUMENT TYPE DESIGNATIONS

CGD	COMBUSTIBLE GAS DETECTOR	PTOF	PULSE TIME OF FLIGHT
COND	CONDUCTIVITY	RTD	RESISTANCE TEMP DETECTOR
DO	DISSOLVED OXYGEN	SB	SLUDGE BLANKET
FMCW	FREQ. MODULATED CONT. WAVE	SC	STREAMING CURRENT
ISB	INTRINSIC SAFETY BARRIER	SD	SLUDGE DEPTH
LEL	LOWER EXPLOSIVE LIMIT	TDR	TIME DOMAIN REFLECTOMETRY
MLSS	MIXED LIQUOR SUSPENDED SOLIDS	TOC	TOTAL ORGANIC CARBON
ORG	UV 504	TSS	TOTAL SUSPENDED SOLIDS
ORP	OXIDATION REDUCTION POTENTIAL	TURB	TURBIDITY
PSUB	PRESSURE SUBMERSIBLE	UVI	UV INTENSITY
PC	PARTICLE COUNTER	UVT	UV TRANSMITTANCE

SPECIFIC ABBREVIATIONS

HTR	HEATER
HTU	HEAT TRACE UNIT
MWH	MOTOR WINDING HEATER
SV	SOLENOID VALVE
SPD	SURGE PROTECTIVE DEVICE
UPS	UNINTERRUPTIBLE POWER SUPPLY
YLA	STATUS AUTO PILOT LIGHT
YLR	STATUS REMOTE PILOT LIGHT
YL1	STATUS RUNNING PILOT LIGHT
YL2	ALARM FAILED/FAULT PILOT LIGHT

P&ID LINE SYMBOLS

INSTRUMENT OR CONNECTION TO PROCESS

PNEUMATIC SIGNAL

ELECTRIC SIGNAL

HYDRAULIC SIGNAL

CAPILLARY TUBE

INTERNAL SYSTEM LINK (SOFTWARE OR DATA LINK)

PROCESS LINE SYMBOLS

PRIMARY PROCESS FLOW IN PIPE

SECONDARY PROCESS FLOW IN PIPE

PRIMARY PROCESS FLOW IN CHANNEL

SECONDARY PROCESS FLOW IN CHANNEL

HEAT TRACE

DESIGNATIONS

EQUIPMENT ENCLOSURE

EXISTING

FUTURE

FUTURE

MISCELLANEOUS P&ID SYMBOLS

PROCESS CONTINUATION

DESC2_
DESC1_
| DWG NO.
UNIQUE IDENTIFIER
CONTINUATION SHEET

SIGNAL CONTINUATION

DESC2_
DESC1_
| DWG NO.
UNIQUE IDENTIFIER
CONTINUATION SHEET

PIPE CALLOUT

PIPE SIZE

SCHEMATIC DETAIL

?
-

TYPICAL DETAIL

* TYP
TYPNUM
TYPNUM2
TYPNUM3
TYPNUM4
TYPNUM5
TYPNUM6

Digitally Signed by Douglas Tadip Date: 2026.01.21 08:22:48 -08'00'
DOUGLAS TADIP
STATE OF WASHINGTON
24031376
REGISTERED
PROFESSIONAL ENGINEER

carollo®

Date	No	Revision	By
	4		
	3		
	2		
	1		

PROJECT ENGINEER MSS
DESIGNED/DRAWN CE
INSPECTOR RG

DIRECTOR PUBLIC WORKS
CITY ENGINEER
ASSISTANT DIRECTOR

CITY OF BELLINGHAM, WASHINGTON
PUBLIC WORKS DEPARTMENT
ENGINEERING DIVISION

SCALE
Horiz. AS SHOWN
Vert. AS SHOWN

DATUM
H: NAD 83/98
V: NAVD 88

Job. No. EU194
Date JAN 2026
Field Bk.

POST POINT RESOURCE RECOVERY PLANT
INSTRUMENTATION
SYMBOLS AND ABBREVIATIONS 2

DRAWING NO. 010N102
SHEET NO. 124 OF 198

LAST SAVED BY: CRollins

CONTACT PERSON: STEPHEN DAY, PE SE , PROJECT ENGINEER AT 360-778-7944

PROJECT NO. 202021-100000 FILE NAME: 202021010N102.dwg

1/21/2026 8:22:52 AM

ACTUATORS

- DIAPHRAGM
- ELECTRIC HYDRAULIC
- ELECTRIC
- HAND
- HYDRAULIC
- MOTOR
- PNEUMATIC
- SOLENOID

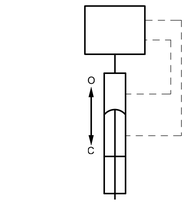

HYDRAULIC MODULATING

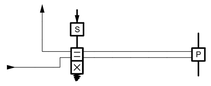

PNEUMATIC SINGLE SOLENOID OPEN/CLOSE

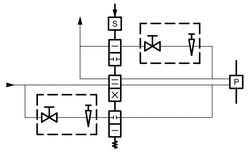

PNEUMATIC SINGLE SOLENOID w/ SPEED CONTROL

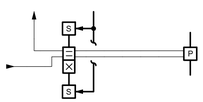

PNEUMATIC DUAL SOLENOID OPEN/CLOSE

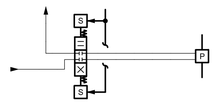

PNEUMATIC DUAL SOLENOID OPEN/HOLD/CLOSE

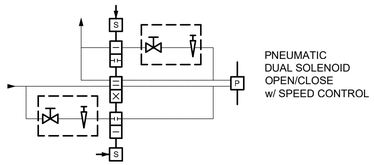

PNEUMATIC DUAL SOLENOID OPEN/CLOSE w/ SPEED CONTROL

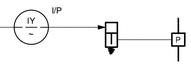

PNEUMATIC MODULATING

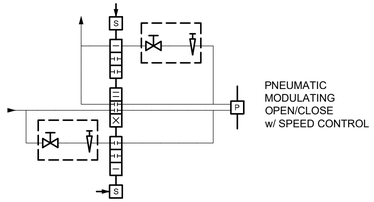

PNEUMATIC MODULATING OPEN/CLOSE w/ SPEED CONTROL

PIPING

- AIR GAP
- BLIND FLANGE
- CAPPED OR PLUGGED
- CONCENTRIC INCREASER
- CONCENTRIC REDUCER
- DRAIN
- ECCENTRIC INCREASER
- FLANGED CONNECTION
- TEE
- UNION
- ECCENTRIC REDUCER
- EXPANSION COUPLING
- EXPANSION JOINT VIBRATION CENTER
- FLEXIBLE CONNECTION
- QUICK DISCONNECT

PUMPS

- AIR DRIVEN
- CENTRIFUGAL
- CHEMICAL FEED DIAPHRAGM
- DIAPHRAGM
- GEAR
- LOBE
- PERISTALTIC OR HOSE
- PISTON
- PROGRESSIVE CAVITY
- OR SUBMERSIBLE
- VERTICAL TURBINE
- VERTICAL CHOPPER
- WATER CHAMP

BLOWERS/ COMPRESSORS/FANS

- CENTRIFUGAL SINGLE STAGE BLOWER/FAN
- CENTRIFUGAL MULTI STAGE BLOWER
- RECIPROCATING COMPRESSOR
- SCREW COMPRESSOR
- FAN
- LIQUID RING COMPRESSOR
- ROTARY LOBE BLOWER

CHECK VALVES

- BACK FLOW PREVENTER
- BALL
- DIAPHRAGM CHECK
- DOUBLE FLAP
- FLAPPER
- SLANTING CHECK VALVE
- SPRING LOADED GENERAL
- SPRING LOADED SWING
- SWING

PRESSURE VALVES

- BACKPRESSURE REGULATING SELF CONTAINED
- BACKPRESSURE REGULATING EXTERNAL TAP
- PRESSURE REDUCING SELF CONTAINED
- PRESSURE REDUCING EXTERNAL PRESSURE TAP
- REGULATING
- PRESSURE RELIEF
- VACUUM RELIEF

VALVES

- 3-WAY
- 3-WAY PLUG
- 4-WAY
- AIR-RELIEF
- ANGLE
- BALL
- BALL V-NOTCH
- BUTTERFLY
- BUTTERFLY-BURIED VALVE BOX
- CONE
- DIAPHRAGM
- FLOAT
- GATE
- GATE-BURIED VALVE BOX
- GLOBE
- HOSE
- MISCELLANEOUS
- MUD
- NEEDLE
- PINCH
- PLUG ECCENTRIC
- PLUG ECCENTRIC w-VALVE BOX
- PLUG ECCENTRIC LUBRICATED
- PLUG ECCENTRIC LUBRICATED BURIED VALVE BOX
- PLUG CONCENTRIC
- PLUG CONCENTRIC -BURIED VALVE BOX
- PLUG CONCENTRIC LUBRICATED
- PLUG CONCENTRIC LUBRICATED BURIED VALVE BOX
- PUMP DISCHARGE
- TELESCOPING

VALVE DESIGNATIONS	
NO	NORMALLY OPEN
NC	NORMALLY CLOSED
FO	FAIL OPEN
FC	FAIL CLOSE
FLP	FAIL LAST POSITION

MISC

- AIR / CHEMICAL DIFFUSER
- BASKET STRAINER
- BLOW-OFF SILENCER
- CALIBRATION COLUMN
- COALESCER
- DESICCANT DRYER
- EDUCTOR/EJECTOR
- EQUIPMENT/ INSTRUMENT LOCATOR
- EYEWASH
- FILTER
- FILTER SEPARATOR
- FINE FILTER
- FIRE ALARM/SENSOR
- FLAME ARRESTER
- FLAME ARRESTER w/THERMALLY OPERATED VALVE
- FLOW CONDITIONER
- GAS CANNON
- GRINDER
- HEAT EXCHANGER
- HOIST
- HORIZONTAL MIXER
- HOSE CONNECTION
- INLET STRAINER
- INLINE STATIC MIXER
- INLINE DUCT BALANCING DAMPER
- LOUVER OR BACKDRAFT DAMPER
- MATERIAL CHANGE
- MIXER
- NOZZLE
- ORIFICE RESTRICTION
- PERISTALTIC COMPOSITE SAMPLER
- OR PULSATION DAMPENER
- REFRIGERATED DRYER
- RUPTURE DISK
- SAMPLE PORT
- SIGHT TUBE
- SMOKE DETECTOR
- STRAINER - MECHANICALLY CLEANED
- STRAINER WITH BLOW OFF
- STRAINER WYE TYPE
- VAPOR HEATER
- VAPORIZER
- VENT
- VENT TO ATMOSPHERE

carollo®

Date	No	Revision	By
	4		
	3		
	2		
	1		

PROJECT ENGINEER MSS
DESIGNED/DRAWN CE
INSPECTOR RG

DIRECTOR PUBLIC WORKS
CITY ENGINEER
ASSISTANT DIRECTOR

CITY OF BELLINGHAM, WASHINGTON
PUBLIC WORKS DEPARTMENT
ENGINEERING DIVISION

SCALE
Horiz. AS SHOWN
Vert. AS SHOWN

DATUM
H: NAD 83/98
V: NAVD 88

Job. No. EU194
Date JAN 2026
Field Bk.

POST POINT RESOURCE RECOVERY PLANT
INSTRUMENTATION
SYMBOLS AND ABBREVIATIONS 3

DRAWING NO. 010N103
SHEET NO. 125 OF 198

CONTACT PERSON: STEPHEN DAY, PE SE , PROJECT ENGINEER AT 360-778-7944

PROJECT NO. 202021-100000 FILE NAME: 202021010N103.dwg

LAST SAVED BY: CRollins

1/21/2026 8:22:25 AM

FLOW

- CORIOLIS
- MAGNETIC
- ORIFICE
- PADDLE WHEEL
- PISTON
- ANNUBAR
- PITOT TUBE
- POSITIVE-DISPLACEMENT
- PROPELLER-TURBINE
- SLUDGE DENSITY ANALYZER
- ROTAMETER
- SHUTTLE
- THERMAL
- ULTRASONIC
- ULTRASONIC BIOGAS
- V-CONE
- VENTURI TUBE OR FLOW NOZZLE
- VORTEX

FLUMES

- LEOPOLD-LAGCO
- PALMER-BOWLUS
- PARSHALL
- REGULAR CUTTHROAT
- TRAPEZOIDAL

GATES

SIDE VIEW	PLAN VIEW
SLIDE	FLAP
SLUICE	KNIFE
STOP	SLIDE
	SLUICE
	STOP
	WEIR
	BUTTERFLY

LEVELS

- BUBBLER
- CAPACITANCE
- TANK — DIFFERENTIAL PRESSURE
- DISPLACEMENT
- ELECTRODE
- BALL FLOAT
- INVERTED COLUMN
- PROBE
- RADAR PTOF
- RADAR (FREQUENCY MODULATED CONTINUOUS WAVE)
- RADAR TDR
- SUSPENDED/ SUBMERSIBLE
- TUNING FORK
- ULTRASONIC

NETWORKS

CABLE CALLOUTS AND ABBREVIATIONS

- 24/FO-SM — FIBER LINE REPRESENTS ONE 24-STRAND FIBER OPTIC CABLE
- (2) 24/FO-SM — FIBER LINE REPRESENTS TWO 24-STRAND FIBER OPTIC CABLES
- (1) 24/FO-SM EA. — EACH FIBER LINE REPRESENTS ONE 24-STRAND FIBER OPTIC CABLE
- (4) — COPPER LINE REPRESENTS FOUR COPPER ETHERNET CABLES
- (2) EA. — EACH COPPER LINE REPRESENTS TWO COPPER ETHERNET CABLES

FIBER ABBREVIATIONS

##/FO-XX
- ## = STRAND COUNT
- FO = FIBER OPTIC

XX = MODE
- SM = SINGLE MODE
- MM = MULTIMODE

NETWORK ABBREVIATIONS

BMS	= BUILDING MANAGEMENT SYSTEM
BSN	= BUSINESS NETWORK
FCN	= FIELD CONTROL NETWORK
MIN	= MAINTENANCE INFORMATION NETWORK
PCN	= PROCESS CONTROL NETWORK
PLCN	= PLC NETWORK
SCN	= SECURITY CONTROL NETWORK
PCN-W	= WIRELESS PROCESS CONTROL NETWORK
NR	= NETWORK RACK
NP	= NETWORK PANEL
ES	= ETHERNET SWITCH
FPP	= FIBER PATCH PANEL

VLAN SYMBOLS

- = BUSINESS NETWORK
- = SECURITY CONTROL NETWORK
- = BUILDING MANAGEMENT SYSTEM
- = PROCESS CONTROL NETWORK
- = WIRELESS PROCESS CONTROL NETWORK
- = MAINTENANCE INFORMATION NETWORK
- = PLC NETWORK
- = FIELD CONTROL NETWORK

PRESSURE/VACUUM

PRESSURE	DIFFERENTIAL PRESSURE	PRESSURE SEALS
PI — GAUGE	PDI — GAUGE DIFFERENTIAL INDICATOR	SEAL ANNULAR
PSH / PE — PRESSURE SWITCH	PDSL / PDE — DIFFERENTIAL PRESSURE SWITCH	SEAL DIAPHRAGM
PIT / PE — PRESSURE TRANSMITTER	PDIT / PDE — DIFFERENTIAL PRESSURE TRANSMITTER	SEAL SANITARY
MANOMETER		

EXAMPLE

PSH / PE — PRESSURE SWITCH

TEMPERATURE

- TEMPERATURE w/THERMOWELL
- TEMPERATURE GAUGE
- T — THERMOMETER

WEIGHT

- PLATFORM SCALE

WEIRS

SIDE VIEW	PLAN VIEW
RECTANGULAR w/o END CONTRACTIONS	RECTANGULAR w/o END CONTRACTIONS
RECTANGULAR w/ END CONTRACTIONS	RECTANGULAR w/ END CONTRACTIONS
V-NOTCH (TRIANGULAR)	V-NOTCH (TRIANGULAR)
TRAPEZOIDAL (CIPOLLETTI)	TRAPEZOIDAL (CIPOLLETTI)

NETWORK LINE SYMBOLS

- COPPER ETHERNET — C
- DUPLEX FIBER PATCH — FP
- FIBER OPTIC ETHERNET — F
- WIRELESS
- PROFIBUS DP
- PROFIBUS PA
- SERIAL DATA

MISCELLANEOUS NETWORK SYMBOLS

NETWORK CABLE CONTINUATIONS

TOP OF PAGE STYLE CONTINUATION

DESC 3
DESC 2
DESC 1 — CONTINUATION SHEET
DWG NO. — UNIQUE IDENTIFIER
#

BOTTOM/LEFT OF PAGE STYLE CONTINUATION

UNIQUE IDENTIFIER — #
CONTINUATION SHEET — DWG NO.
DESC 1
DESC 2
DESC 3

FIELD NETWORK DEVICE

PLC TAG — PROTOCOL
PANEL TAG — SEGMENT #
DEVICE SPECIFIC SYMBOL
TAG
DESC 1
DESC 2
DESC 3
P&ID DRAWING REFERENCE

NETWORK EQUIPMENT CALLOUT

TAG
DESC 1

carollo®

Date	No	Revision	By
	4		
	3		
	2		
	1		

PROJECT ENGINEER MSS
DESIGNED/DRAWN CE
INSPECTOR RG

DIRECTOR PUBLIC WORKS
CITY ENGINEER
ASSISTANT DIRECTOR

CITY OF BELLINGHAM, WASHINGTON
PUBLIC WORKS DEPARTMENT
ENGINEERING DIVISION

SCALE
Horiz. AS SHOWN
Vert. AS SHOWN

DATUM
H: NAD 83/98
V: NAVD 88

Job. No. EU194
Date JAN 2026
Field Bk.

POST POINT RESOURCE RECOVERY PLANT
INSTRUMENTATION
SYMBOLS AND ABBREVIATIONS 4

DRAWING NO. 010N104
SHEET NO. 126 OF 198

CONTACT PERSON: STEPHEN DAY, PE SE , PROJECT ENGINEER AT 360-778-7944

PROJECT NO. 202021-100000 FILE NAME: 202021010N104.dwg

LAST SAVED BY: CRollins

PROCESS SWITCHES

TAGGING IDENTIFICATION
1 = FUNCTION
2 = DESCRIPTION
3 = LOCATION

LEVEL SWITCH
CLOSE ON RISING LEVEL

LEVEL SWITCH
OPEN ON RISING LEVEL

PRESSURE SWITCH
CLOSE ON RISING PRESSURE

PRESSURE SWITCH
OPEN ON RISING PRESSURE

TEMPERATURE SWITCH
CLOSE ON RISING TEMPERATURE

TEMPERATURE SWITCH
OPEN ON RISING TEMPERATURE

FLOW SWITCH
CLOSE ON INCREASE IN FLOW

FLOW SWITCH
OPEN ON INCREASE IN FLOW

VIBRATION SWITCH
OPEN ON RISING VIBRATION

VIBRATION SWITCH
CLOSE ON RISING VIBRATION

TORQUE SWITCH
OPEN ON HIGH TORQUE

TORQUE SWITCH
CLOSE ON HIGH TORQUE

NORMALLY CLOSED
LIMIT SWITCH

NORMALLY CLOSED
HELD OPEN LIMIT SWITCH

NORMALLY OPEN
LIMIT SWITCH

NORMALLY OPEN
HELD CLOSED LIMIT SWITCH

HAND SWITCHES

TAGGING IDENTIFICATION
1 = FUNCTION
2 = DESCRIPTION
3 = LOCATION
a/b/c = POSITION
x = DENOTES POSITION CONTACTS CLOSED IN

NORMALLY OPEN
MOMENTARY PUSHBUTTON

NORMALLY CLOSED
MOMENTARY PUSHBUTTON

MUSHROOM HEAD PUSHBUTTON
NORMALLY OPEN

MUSHROOM HEAD PUSHBUTTON
NORMALLY CLOSED

PUSH-PULL PUSHBUTTON
MAINTAINED CONTACT

PUSH-PULL PUSHBUTTON
NORMALLY CLOSED

PADLOCK SWITCH

PULL CORD SWITCH

STOP-LOCKOUT PUSHBUTTON

THREE POSITION SELECTOR SWITCH

TWO POSITION SELECTOR SWITCH
NORMALLY OPEN

TWO POSITION SELECTOR SWITCH
NORMALLY CLOSED

SPRING-RETURN

RELAYS

TAGGING IDENTIFICATION
1 = FUNCTION
2 = DESCRIPTION
3 = LOCATION
a = TYPE
CR- CONTROL RELAY
TD- TIME DELAY RELAY
M - MOTOR STARTER COIL
L - MOTOR STARTER COIL - LOW SPEED
H - MOTOR STARTER COIL - HIGH SPEED
F - MOTOR STARTER COIL - FORWARD
R - MOTOR STARTER COIL - REVERSE

b = TIME DELAY STATE
TDON - TIME DELAY ON ENERGIZATION
TDOFF - TIME DELAY ON DEENERGIZATION

c = TIMING RANGE/SETTING

RELAY COIL

NORMALLY OPEN
CONTROL CONTACT

NORMALLY CLOSED
CONTROL CONTACT

TIME DELAY CONTACT
NORMALLY OPEN
TIMED CLOSING

TIME DELAY CONTACT
NORMALLY CLOSED
TIMED OPENING

TIME DELAY CONTACT
NORMALLY OPEN
TIMED OPENING

TIME DELAY CONTACT
NORMALLY CLOSED
TIMED CLOSING

I/O

TAGGING IDENTIFICATION
1 = FUNCTION
2 = DESCRIPTION
3 = LOCATION
a = INPUT/OUTPUT
b = I/O VOLTAGE

PLC DISCRETE

PLC ANALOG

DIGITAL BUS

MISC

TAGGING IDENTIFICATION
1 = FUNCTION
2 = DESCRIPTION
3 = LOCATION

SOLENOID

CIRCUIT BREAKER

DISCONNECT

FUSE

TRANSIENT SURGE PROTECTION

MOTOR WINDING HEATER

MOTORS

TAGGING IDENTIFICATION
1 = FUNCTION
2 = DESCRIPTION
3 = LOCATION
a = HORSEPOWER

MOTOR - 1 PHASE

MOTOR - 3 PHASE

INDICATORS

TAGGING IDENTIFICATION
1 = FUNCTION
2 = DESCRIPTION
3 = LOCATION
a = LENS COLOR
R - RED
G - GREEN
W - WHITE
A - AMBER
B - BLUE
Y - YELLOW
C - CLEAR

PILOT LIGHT

PUSH-TO-TEST LIGHT

BEACON

HORN

VARISTOR

CAPACITOR

RESISTOR

BATTERY

DIODE

MOTOR OVERLOAD HEATERS

OVERLOAD CONTACT

DRAWOUT CONNECTION

GROUND

LIGHTNING ARRESTOR

CONTROL POWER TRANSFORMER

ELAPSED TIME METER

RTD

MISC PORT

ETHERNET PORT

SURGE PROTECTION DEVICE

TRANSFORMER LINE/LOAD REACTOR

SPEED SWITCH

SPEED POTENTIOMETER

SHIELDED WIRE

LOOP

MOTORS

SCHEMATIC NUMBER — SCHEMATIC DESCRIPTION

DESCRIPTION

CONTROL SCHEMATIC

TAG → LOOP
* = XXX → XXX-
TAG NUMBER — PRIMARY EQUIPMENT LOOP

REFERENCE DWG.
DWG1 — P&ID REFERENCE
DWG2 — ADDITIONAL REFERENCES

LOCATION LEGEND
XXX — ABBREVIATION
IN/AT XXX — LOCATION DESCRIPTION

carollo®

Date	No	Revision	By
	4		
	3		
	2		
	1		

PROJECT ENGINEER MSS
DESIGNED/DRAWN CE
INSPECTOR RG

DIRECTOR PUBLIC WORKS
CITY ENGINEER
ASSISTANT DIRECTOR

CITY OF BELLINGHAM, WASHINGTON
PUBLIC WORKS DEPARTMENT
ENGINEERING DIVISION

SCALE
Horiz. AS SHOWN
Vert. AS SHOWN

DATUM
H: NAD 83/98
V: NAVD 88

Job. No. EU194
Date JAN 2026
Field Bk.

POST POINT RESOURCE RECOVERY PLANT
INSTRUMENTATION
SCHEMATIC SYMBOLS

DRAWING NO. 010N105
SHEET NO. 127 OF 198

CONTACT PERSON: STEPHEN DAY, PE SE , PROJECT ENGINEER AT 360-778-7944

PROJECT NO. 202021-100000 FILE NAME: 202021010N105.dwg

LAST SAVED BY: CRollins

1/21/2026 8:22:29 AM

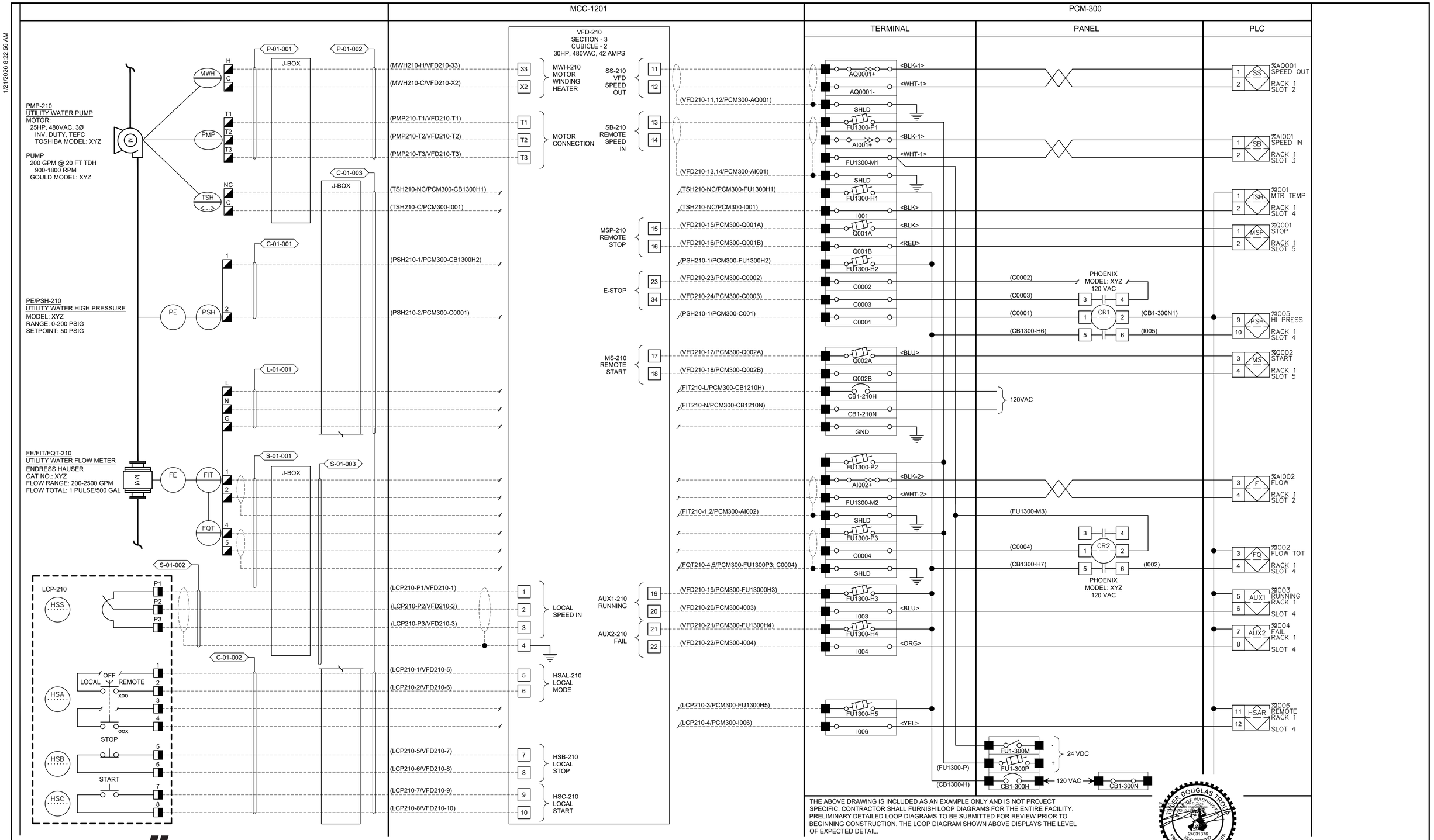

carollo®

Date	No	Revision	By
	4		
	3		
	2		
	1		

PROJECT ENGINEER MSS
DESIGNED/DRAWN CE
INSPECTOR RG

DIRECTOR PUBLIC WORKS
CITY ENGINEER
ASSISTANT DIRECTOR

CITY OF BELLINGHAM, WASHINGTON
PUBLIC WORKS DEPARTMENT
ENGINEERING DIVISION

SCALE
Horiz. AS SHOWN
Vert. AS SHOWN

DATUM
H: NAD 83/98
V: NAVD 88

Job. No. EU194
Date JAN 2026
Field Bk.

POST POINT RESOURCE RECOVERY PLANT
INSTRUMENTATION
SAMPLE LOOP DRAWING

DRAWING NO. 010N106
SHEET NO. 128 OF 198

CONTACT PERSON: STEPHEN DAY, PE SE , PROJECT ENGINEER AT 360-778-7944

PROJECT NO. 202021-100000 FILE NAME: 202021010N106.dwg

1/21/2026 8:22:56 AM

LAST SAVED BY: CRollins

EQUIPMENT TAGGING SYSTEM

XXX-#####

EQUIPMENT TAG DESCRIPTOR

ABBREV.	DESCRIPTION
AB	AFTERBURNER
ASU	AIR SUPPLY UNIT
AVR	AIR AND/OR VACUUM RELEASE VALVE
BS	BARSCREEN
BT	BELT THICKENER
BTF	BIOTRICKLING FILTER
B	BLOWER
BOI	BOILER
BP	BUBBLER PANEL
CF	CENTRIFUGE
CH	CHILLER
C	CHLORINATOR
CL	CLASSIFIER
CR	CONCENTRATOR
CN	CONVEYOR
CC	COOLING COILS
CS	CYCLONE SEPARATOR
DH	DUCT HEATER
DHU	DEHUMIDIFIER
DX	DIRECT EXPANSION COIL
E	EJECTOR
EAM	ELECTRIC ANALOG MODULATING ACTUATOR
EDM	ELECTRIC DISCRETE MODULATING ACTUATOR
EDR	ELECTRIC DISCRETE RUN OPEN/CLOSE ACTUATOR
EF	EXHAUST FAN
ENG	ENGINE GENERATOR
ET	EXPANSION TANK
F	FAN
FD	FEEDER
G	GATE
GB	GEAR BOX
GT	SECURITY GATE
GR	GRINDER
HC	HEATING COILS
HT	HEATER
HX	HEAT EXCHANGER
IN	INCINERATOR
M	CLARIFIER MECHANISM
MD	MOTORIZED DAMPER
ME	MISCELLANEOUS EQUIPMENT
MX	MIXER
NDR	PNEUMATIC DISCRETE RUN OPEN/CLOSE ACTUATOR
P	PUMP
PFS	POLYMER FEED SYSTEM
PV	PRESSURE VESSEL
PRV	PRESSURE RELIEF VALVE
RU	ROLL UP DOOR
S	SCRUBBER
SA	SAMPLER
SF	SUPPLY FAN
SL	SILENCER
ST	STRAINER
SV	SOLENOID VALVE
T	TANK OR HOPPER
UH	UNIT HEATER
V	VALVE
VP	VAPORIZER
VR	VACUUM REGULATOR

FACILITY INDEX

DESIGNATION	PROCESS AREA NAME
010	GENERAL
020	SITE GRADING
030	SITE PIPING
050	GALLERY
110	SCREENINGS BUILDING
120	HEADWORKS BUILDING
130	PRELIMINARY TREATMENT ODOR CONTROL
140	CHEMICALLY ENHANCED PRIMARY TREATMENT BUILDING
210	PRIMARY CLARIFIER
220	PRIMARY EFFLUENT PUMP STATION
230	PRIMARY SLUDGE PUMP STATION
305	SELECTOR/ACTIVATED SLUDGE BASIN NO. 1
306	SELECTOR/ACTIVATED SLUDGE BASIN NO. 1 ODOR CONTROL
310	ACTIVATED SLUDGE BASINS NO. 2 & 3
311	ACTIVATED SLUDGE BASIN NO. 4
312	ACTIVATED SLUDGE BASINS NO. 2-4 ODOR CONTROL
320	HYPOCHLORITE GENERATION BUILDING
325	BLOWER BUILDING
330	SECONDARY CLARIFIER
340	SECONDARY SLUDGE PUMP STATION
410	CHLORINE CONTACT BASIN
420	SLUDGE STORAGE BUILDING
430	SODIUM BISULFITE BUILDING
440	SLUDGE STORAGE TANKS
510	SOLIDS HANDLING BUILDING
520	SOLIDS HANDLING BUILDING - WEST
530	SOLIDS HANDLING BUILDING - EAST
710	ADMINISTRATION/LABORATORY BUILDING
720	SHOP BUILDING
730	STORAGE BUILDING
740	EMERGENCY GENERATOR BUILDING

EQUIPMENT NUMBER

EXAMPLES

CAUSTIC SODA PUMP NO. 2	P-14020
SELECTOR BASIN MIXER NO. 1	MX-30510
AERATION BLOWER NO. 3	B-32530

carollo®

Date	No	Revision	By
	4		
	3		
	2		
	1		

PROJECT ENGINEER MSS
DESIGNED/DRAWN CE
INSPECTOR RG

DIRECTOR PUBLIC WORKS
CITY ENGINEER
ASSISTANT DIRECTOR

CITY OF BELLINGHAM, WASHINGTON
PUBLIC WORKS DEPARTMENT
ENGINEERING DIVISION

SCALE
Horiz. AS SHOWN
Vert. AS SHOWN

DATUM
H: NAD 83/98
V: NAVD 88

Job. No. EU194
Date JAN 2026
Field Bk.

POST POINT RESOURCE RECOVERY PLANT
INSTRUMENTATION
EQUIPMENT TAGGING SYSTEM

DRAWING NO. 010N107
SHEET NO. 129 OF 198

CONTACT PERSON: STEPHEN DAY, PE SE , PROJECT ENGINEER AT 360-778-7944

PROJECT NO. 202021-100000 FILE NAME: 202021010N107.dwg

1/21/2026 8:22:32 AM

LAST SAVED BY: CRollins

1/29/2026 10:07:28 AM

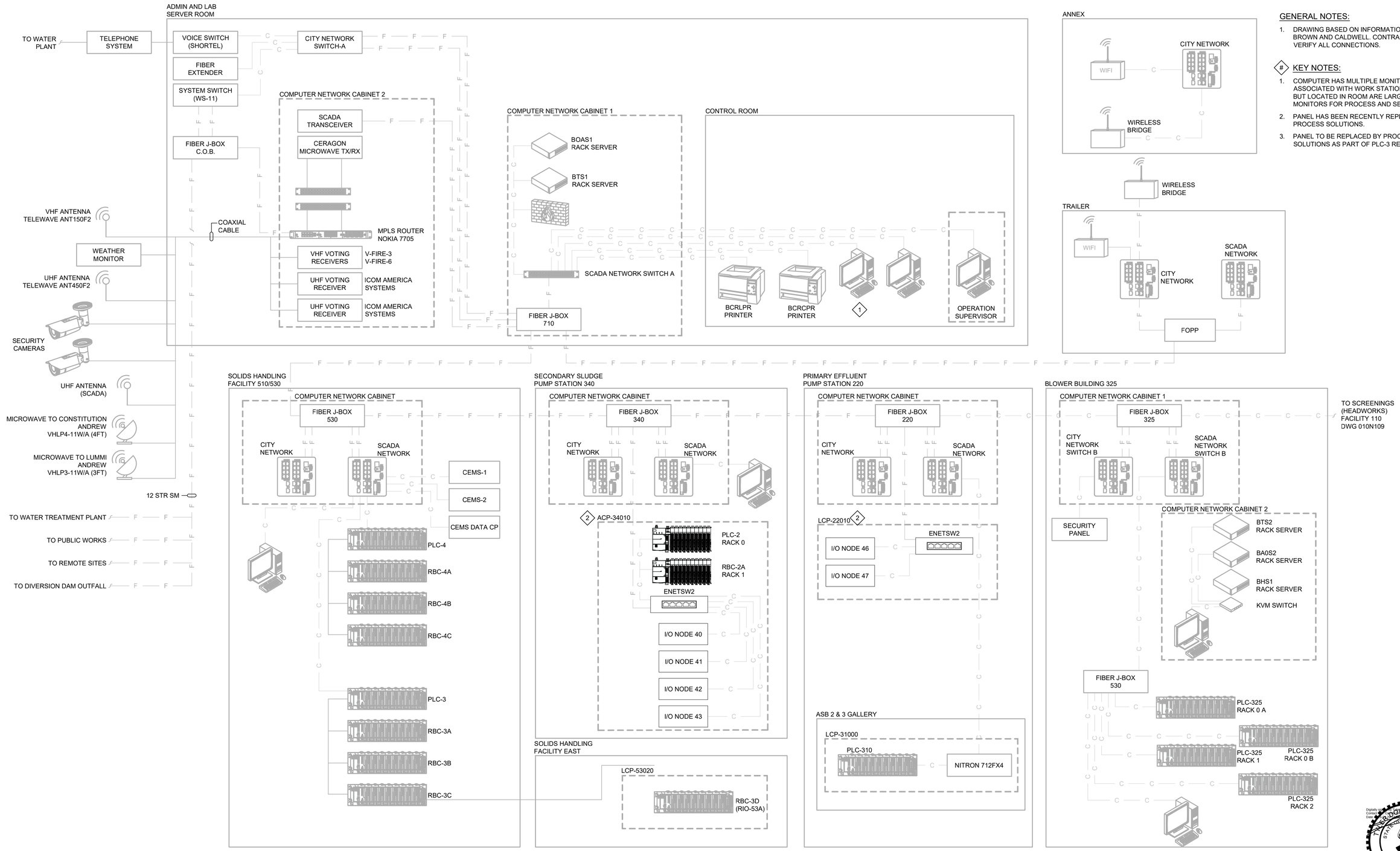

GENERAL NOTES:

1. DRAWING BASED ON INFORMATION PROVIDED BY BROWN AND CALDWELL. CONTRACTOR TO FIELD VERIFY ALL CONNECTIONS.

KEY NOTES:

1. COMPUTER HAS MULTIPLE MONITORS ASSOCIATED WITH WORK STATIONS. NOT SHOWN BUT LOCATED IN ROOM ARE LARGE WALL MONITORS FOR PROCESS AND SECURITY.
2. PANEL HAS BEEN RECENTLY REPLACED BY PROCESS SOLUTIONS.
3. PANEL TO BE REPLACED BY PROCESS SOLUTIONS AS PART OF PLC-3 REPLACEMENT.

carollo®

Date	No	Revision	By
	4		
	3		
	2		
	1		

PROJECT ENGINEER MSS
DESIGNED/DRAWN JMR/LMB
INSPECTOR RG

DIRECTOR PUBLIC WORKS
CITY ENGINEER
ASSISTANT DIRECTOR

CITY OF BELLINGHAM, WASHINGTON
PUBLIC WORKS DEPARTMENT
ENGINEERING DIVISION

SCALE
Horiz. AS SHOWN
Vert. AS SHOWN

DATUM
H: NAD 83/98
V: NAVD 88

Job. No. EU194
Date JAN 2026
Field Bk.

POST POINT RESOURCE RECOVERY PLANT
INSTRUMENTATION
NETWORK BLOCK DIAGRAM 1

DRAWING NO. 010N108
SHEET NO. 130 OF 198

CONTACT PERSON: STEPHEN DAY, PE SE , PROJECT ENGINEER AT 360-778-7944

PROJECT NO. 202021-100000 FILE NAME: 202021010N108.dwg

LAST SAVED BY: CRollins

1/21/2026 8:22:59 AM

GENERAL NOTES:

1. DRAWING BASED ON INFORMATION PROVIDED BY BROWN AND CALDWELL. CONTRACTOR TO FIELD VERIFY ALL CONNECTIONS.

KEY NOTES:

1. FIBER CABLE TO BE PROVIDED AND INSTALLED BY CITY.

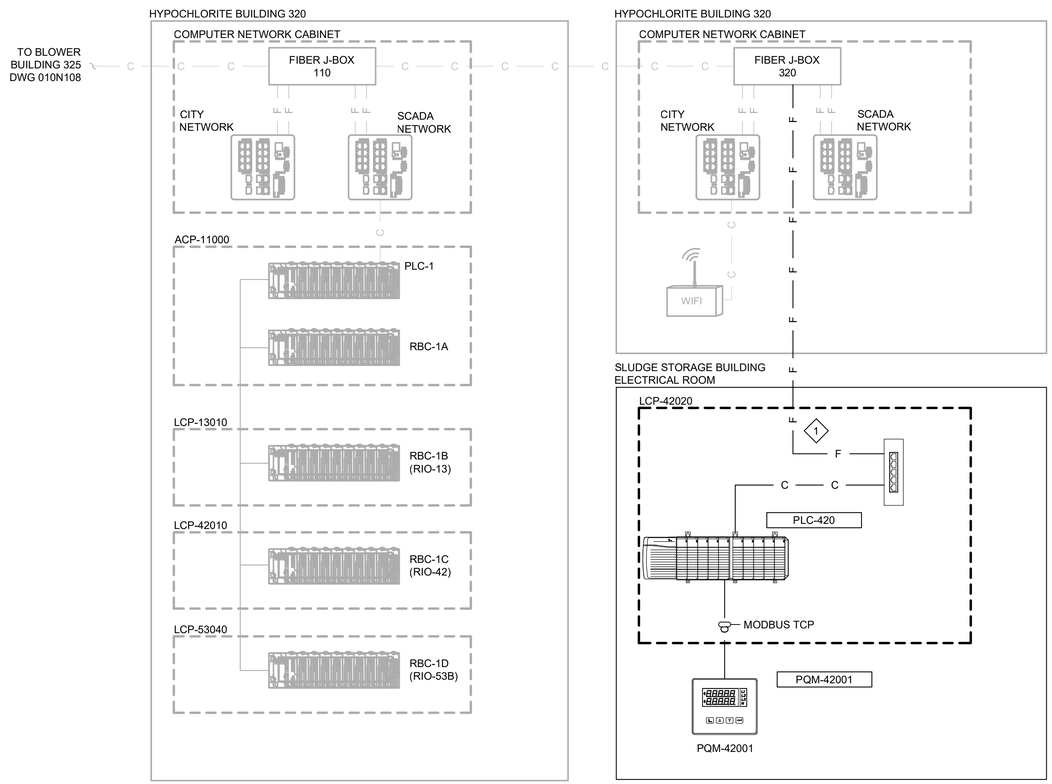

carollo

Date	No	Revision	By
	4		
	3		
	2		
	1		

PROJECT ENGINEER MSS
DESIGNED/DRAWN JMR/LMB
INSPECTOR RG

DIRECTOR PUBLIC WORKS
CITY ENGINEER
ASSISTANT DIRECTOR

CITY OF BELLINGHAM, WASHINGTON
PUBLIC WORKS DEPARTMENT
ENGINEERING DIVISION

SCALE
Horiz. AS SHOWN
Vert. AS SHOWN

DATUM
H: NAD 83/98
V: NAVD 88

Job. No. EU194
Date JAN 2026
Field Bk.

POST POINT RESOURCE RECOVERY PLANT
INSTRUMENTATION
NETWORK BLOCK DIAGRAM 2

DRAWING NO. 010N109
SHEET NO. 131 OF 198

CONTACT PERSON: STEPHEN DAY, PE SE , PROJECT ENGINEER AT 360-778-7944

LAST SAVED BY: CRollins

PROJECT NO. 202021-100000 FILE NAME: 202021010N109.dwg

1/21/2026 8:23:03 AM

GENERAL NOTES:

1. PROVIDE LABEL INDICATING INTEGRATOR'S LOGO WITH COMPANY NAME AND ADDRESS MOUNTED ON THE FRONT OF THE ENCLOSURE.
2. FOLLOW ALL UL 508 AND 508A SUPPLEMENT SB REQUIREMENTS TO DETERMINE SHORT CIRCUIT RATINGS.
3. REFER TO ELECTRICAL PLANS FOR LOCATION OF ALL ENCLOSURES.
4. SECURE ENCLOSURE TO FLOOR FOLLOWING MANUFACTURER'S RECOMMENDATIONS. ADHERE TO ALL SEISMIC INSTALLATION REQUIREMENTS FOR THE APPROPRIATE LOCATIONS.
5. ALL ENCLOSURES SHALL BE MOUNTED ON A HOUSEKEEPING PAD.

KEY NOTES:

1. INSTALL SWITCH ON OUTERMOST DOOR OF OVERLAPPING DOORS. PROVIDE ADDITIONAL SWITCHES, WIRED IN SERIES, FOR NON-OVERLAPPING DOORS.

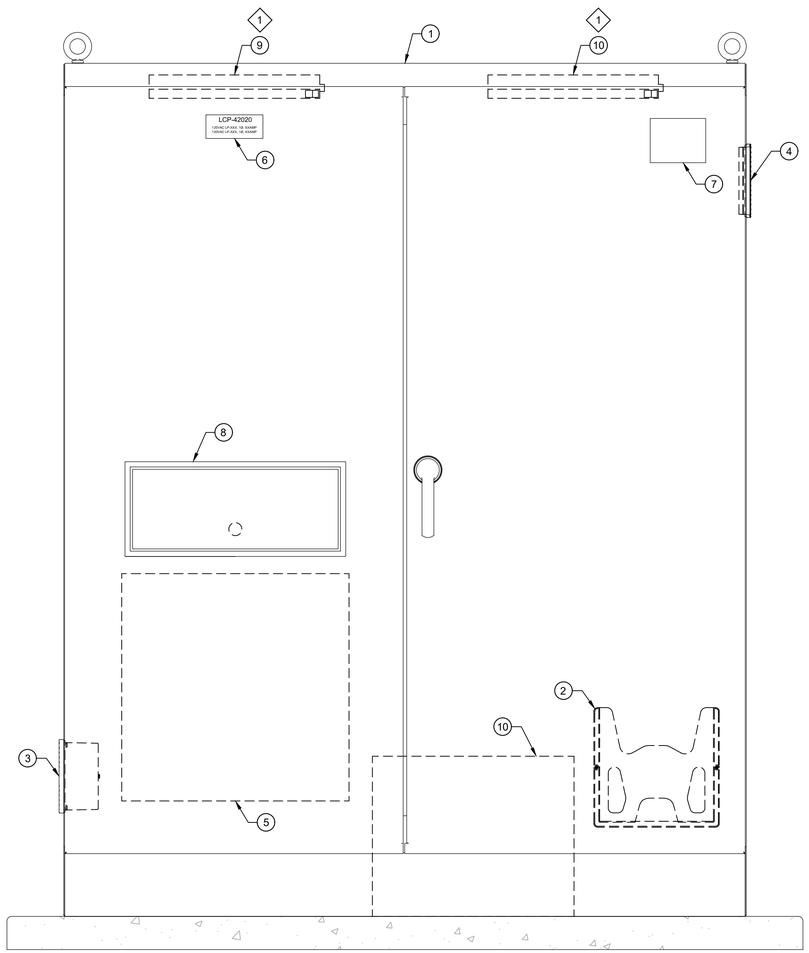

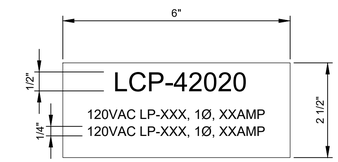

NAMEPLATE SCHEDULE
LCP-42020

MAJOR EQUIPMENT SCHEDULE	
ITEM	DESCRIPTION
1	ENCLOSURE, NEMA 12, FREE STANDING
2	DATA POCKET
3	COOLING FAN
4	EXHAUST GRILLE
5	FOLDING SHELF
6	NAMEPLATE
7	MANUFACTURER'S LABEL
8	KEYBOARD BOX
9	LIGHT W/ INTRUSION SWITCH
10	UNINTERRUPTIBLE POWER SUPPLY

carollo®

Date	No	Revision	By
	4		
	3		
	2		
	1		

PROJECT ENGINEER MSS
DESIGNED/DRAWN JMR/CEY
INSPECTOR RG

DIRECTOR PUBLIC WORKS
CITY ENGINEER
ASSISTANT DIRECTOR

CITY OF BELLINGHAM, WASHINGTON
PUBLIC WORKS DEPARTMENT
ENGINEERING DIVISION

SCALE
Horiz. AS SHOWN
Vert. AS SHOWN

DATUM
H: NAD 83/98
V: NAVD 88

Job. No. EU194
Date JAN 2026
Field Bk.

POST POINT RESOURCE RECOVERY PLANT
INSTRUMENTATION
LCP-42020
EXTERNAL ELEVATION

DRAWING NO. 010N201
SHEET NO. 132 OF 198

LAST SAVED BY: CRollins

CONTACT PERSON: STEPHEN DAY, PE SE , PROJECT ENGINEER AT 360-778-7944

PROJECT NO. 202021-100000 FILE NAME: 202021010N201.dwg

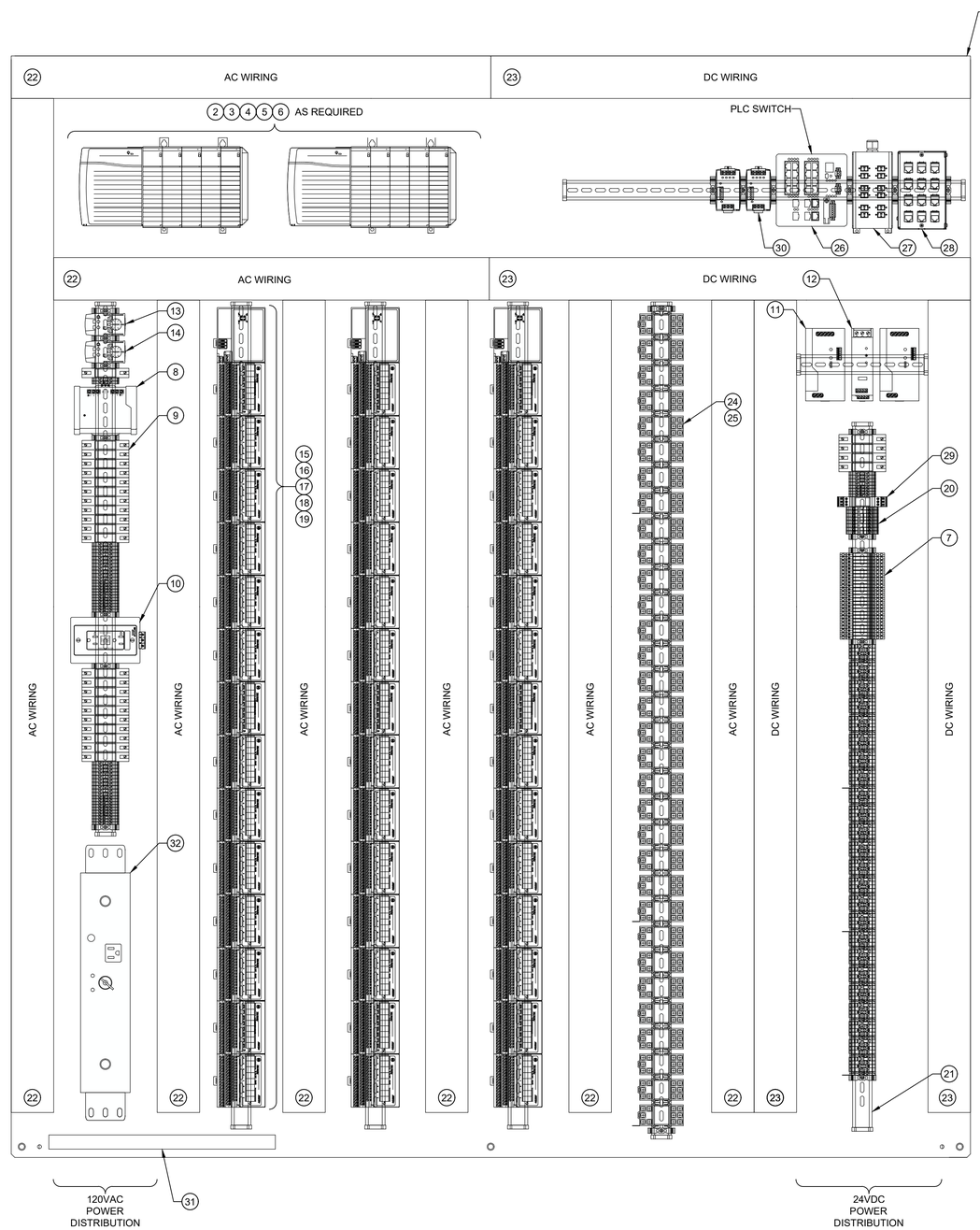

GENERAL NOTES:

1. ENCLOSURE DRAWING REPRESENTS DESIGN INTENT. CONTRACTOR TO SUPPLY AS-BUILT DRAWINGS SHOWING FINAL ENCLOSURE LAYOUT WITH ALL EQUIPMENT, MANUFACTURERS, AND PART NUMBERS.
2. REFER TO ELECTRICAL PLANS FOR LOCATION OF ALL ENCLOSURES. CONSTRUCT PANEL TO MEET THE FULL INTENT OF ARTICLE 409 OF THE NATIONAL ELECTRIC CODE.
3. FOLLOW ALL UL 508 AND 508A SUPPLEMENT SB REQUIREMENTS TO DETERMINE SHORT CIRCUIT RATINGS.
4. CIRCUIT BREAKERS SHALL BE COORDINATED TO TRIP BRANCH CIRCUIT BREAKER PRIOR TO THE MAIN PANEL CIRCUIT BREAKER.
5. ALL TIE WRAPS SHALL BE LOCATED OUTSIDE OF THE WIRE DUCTS. INSTALLATION OF ALL NYLON TIE WRAPS SHALL BE TENSIONED AND TRIMMED FLUSH.
6. ELEVATE ALL TERMINAL BLOCK DIN RAIL A MINIMUM OF 2 INCHES OFF OF BACK PANEL.
7. NO 480VAC CIRCUITS SHALL TERMINATE IN OR PASS THROUGH CONTROL CABINETS.
8. NO CAMERA OR TELEPHONE CABLES SHALL TERMINATE IN OR PASS THROUGH CONTROL CABINETS.
9. ALL CONDUIT PENETRATIONS SHALL BE LOCATED AT THE TOP OR BOTTOM OF THE ENCLOSURE. NO SIDE, FRONT, OR REAR PENETRATIONS ALLOWED.
10. QUANTITY OF COMPONENTS VARY AS REQUIRED FOR EACH CABINET.
11. REFER TO INSTRUMENTATION TYPICAL DETAILS FOR PANEL CONSTRUCTION AND WIRING REQUIREMENTS.
12. PROVIDE PANEL SURGE PROTECTION FOR ALL INSTRUMENT SIGNAL LINES LOCATED OUTDOORS OR OTHERWISE INDICATED IN THE DRAWING OR SPECIFICATIONS.
13. REFER TO DETAILS NE101/TYP, NE102/TYP, NE104/TYP, NE105/TYP, NE304/TYP, NE305/TYP, NE306/TYP, NE307/TYP, NE310/TYP, NE311/TYP, NE350/TYP, NE351/TYP, NE352/TYP, NE353/TYP, NE354/TYP.

MAJOR EQUIPMENT SCHEDULE

ITEM	DESCRIPTION
1	BACK PANEL
2	PLC BACKPLANE
3	PLC PROCESSOR
4	PLC POWER SUPPLY
5	PLC ETHERNET COMMUNICATION MODULES
6	PLC REDUNDANCY MODULES
7	SIGNAL CONDITIONERS
8	120VAC PANEL SURGE PROTECTOR
9	CIRCUIT BREAKERS
10	RECEPTACLE, 5A
11	24VDC POWER SUPPLY
12	REDUNDANCY MODULE
13	HVAC CONTROL
14	ENCLOSURE TEMPERATURE SWITCH
15	FLEX I/O ETHERNET/IP ADAPTER
16	FLEX I/O ISOLATED DI MODULE
17	FLEX I/O ISOLATED DO MODULE
18	FLEX I/O ISOLATED AI MODULE
19	FLEX I/O ISOLATED AO MODULE
20	24VDC FUSED TERMINAL BLOCKS
21	DIN RAIL
22	GRAY WIRE DUCT
23	WHITE WIRE DUCT
24	TIMER/CONTROL RELAYS
25	INTERPOSING RELAYS
26	ETHERNET SWITCH
27	FIBER PATCH PANEL
28	COPPER PATCH PANEL
29	24VDC PANEL SURGE PROTECTOR
30	ELECTRONIC CIRCUIT PROTECTOR
31	GROUND BAR
32	UPS MAINTENANCE BYPASS SWITCH

carollo®

Date	No	Revision	By
	4		
	3		
	2		
	1		

PROJECT ENGINEER MSS
DESIGNED/DRAWN JMR/CEY
INSPECTOR RG

DIRECTOR PUBLIC WORKS
CITY ENGINEER
ASSISTANT DIRECTOR

CITY OF BELLINGHAM, WASHINGTON
PUBLIC WORKS DEPARTMENT
ENGINEERING DIVISION

SCALE
Horiz. AS SHOWN
Vert. AS SHOWN

DATUM
H: NAD 83/98
V: NAVD 88

Job. No. EU194
Date JAN 2026
Field Bk.

POST POINT RESOURCE RECOVERY PLANT
INSTRUMENTATION
LCP-42020
INTERNAL ELEVATION

DRAWING NO. 010N202
SHEET NO. 133 OF 198

CONTACT PERSON: STEPHEN DAY, PE SE , PROJECT ENGINEER AT 360-778-7944

PROJECT NO. 202021-100000 FILE NAME: 202021010N202.dwg

LAST SAVED BY: CRollins

1/21/2026 8:22:41 AM

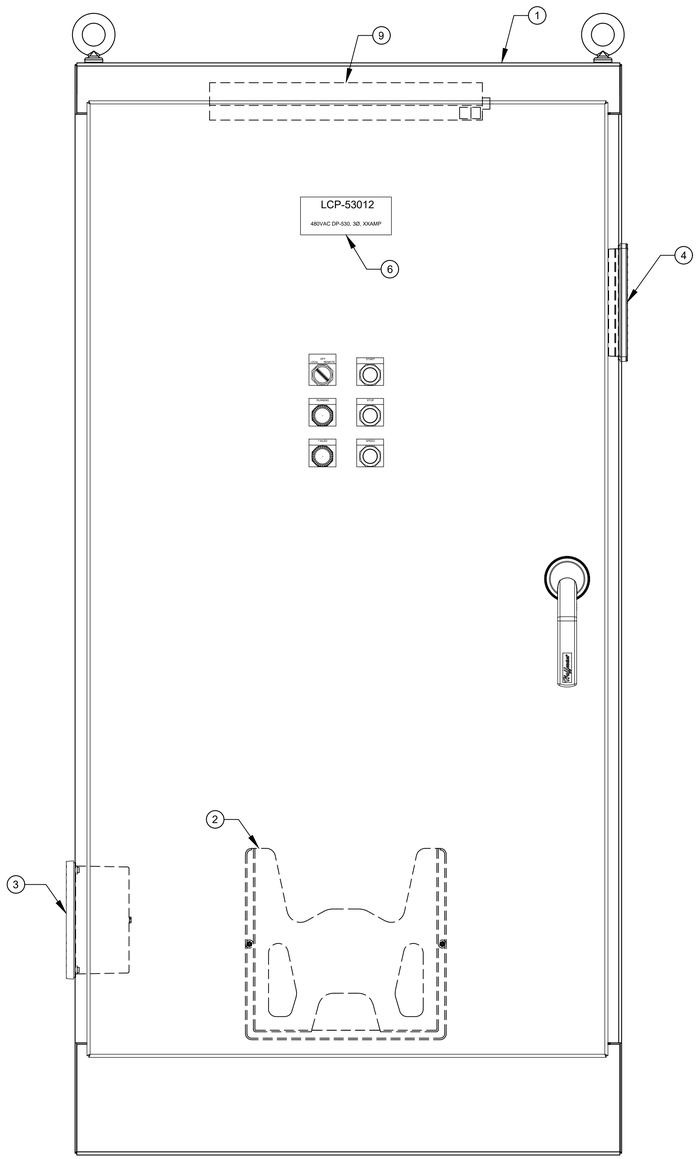

EXTERNAL ELEVATION

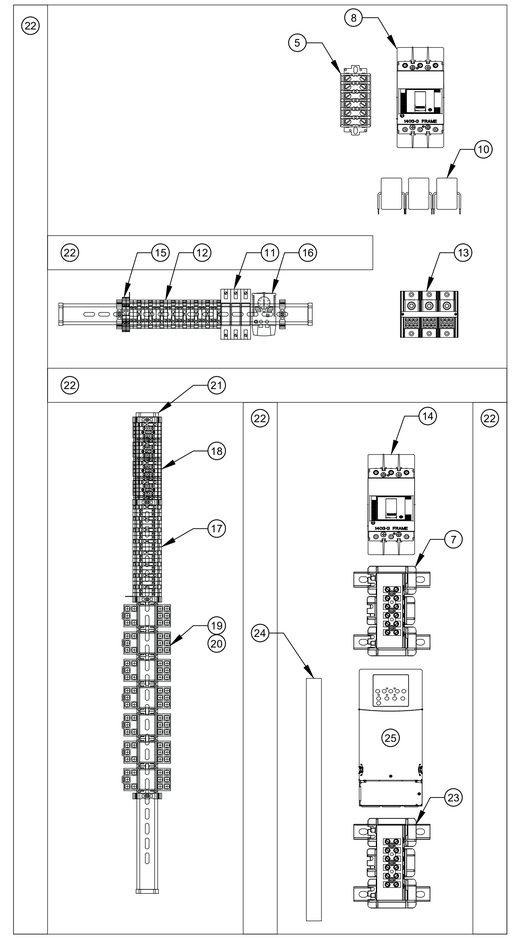

INTERNAL ELEVATION

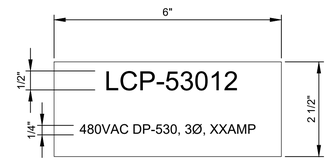

NAMEPLATE SCHEDULE

LCP-53012

GENERAL NOTES:

1. ENCLOSURE DRAWING REPRESENTS DESIGN INTENT. CONTRACTOR TO SUPPLY AS-BUILT DRAWINGS SHOWING FINAL ENCLOSURE LAYOUT WITH ALL EQUIPMENT, MANUFACTURERS, AND PART NUMBERS.
2. REFER TO ELECTRICAL PLANS FOR LOCATION OF ALL ENCLOSURES. CONSTRUCT PANEL TO MEET THE FULL INTENT OF ARTICLE 409 OF THE NATIONAL ELECTRIC CODE.
3. FOLLOW ALL UL 508 AND 508A SUPPLEMENT SB REQUIREMENTS TO DETERMINE SHORT CIRCUIT RATINGS.
4. CIRCUIT BREAKERS SHALL BE COORDINATED TO TRIP BRANCH CIRCUIT BREAKER PRIOR TO THE MAIN PANEL CIRCUIT BREAKER.
5. ALL TIE WRAPS SHALL BE LOCATED OUTSIDE OF THE WIRE DUCTS. INSTALLATION OF ALL NYLON TIE WRAPS SHALL BE TENSIONED AND TRIMMED FLUSH.
6. ELEVATE ALL TERMINAL BLOCK DIN RAIL A MINIMUM OF 2 INCHES OFF OF BACK PANEL.
7. NO 480VAC CIRCUITS SHALL TERMINATE IN OR PASS THROUGH CONTROL CABINETS.
8. NO CAMERA OR TELEPHONE CABLES SHALL TERMINATE IN OR PASS THROUGH CONTROL CABINETS.
9. ALL CONDUIT PENETRATIONS SHALL BE LOCATED AT THE TOP OR BOTTOM OF THE ENCLOSURE. NO SIDE, FRONT, OR REAR PENETRATIONS ALLOWED.
10. QUANTITY OF COMPONENTS VARY AS REQUIRED FOR EACH CABINET.
11. REFER TO INSTRUMENTATION TYPICAL DETAILS FOR PANEL CONSTRUCTION AND WIRING REQUIREMENTS.
12. PROVIDE PANEL SURGE PROTECTION FOR ALL INSTRUMENT SIGNAL LINES LOCATED OUTDOORS OR OTHERWISE INDICATED IN THE DRAWING OR SPECIFICATIONS.

MAJOR EQUIPMENT SCHEDULE

ITEM	DESCRIPTION
1	ENCLOSURE, NEMA 4X, FREE STANDING
2	DATA POCKET
3	COOLING FAN
4	EXHAUST GRILLE
5	TERMINAL SHORTING BLOCK
6	NAMEPLATE
7	DV/DT FILTER
8	MAIN CIRCUIT BREAKER
9	LIGHT W/ INTRUSION SWITCH
10	CURRENT TRANSFORMERS
11	CIRCUIT BREAKERS
12	120VAC TERMINAL BLOCKS
13	POWER DISTRIBUTION BLOCK
14	VFD CIRCUIT BREAKER
15	FUSED TERMINAL BLOCKS
16	ENCLOSURE TEMPERATURE SWITCH
17	DISCRETE TERMINAL BLOCKS
18	ANALOG TERMINAL BLOCKS
19	TIMER/CONTROL RELAYS
20	INTERPOSING RELAYS
21	DIN RAIL
22	WIRE DUCT
23	LINE REACTOR
24	GROUND BAR
25	VARIABLE FREQUENCY DRIVE

carollo®

Date	No	Revision	By
	4		
	3		
	2		
	1		

PROJECT ENGINEER MSS
DESIGNED/DRAWN JMR/LMB
INSPECTOR RG

DIRECTOR PUBLIC WORKS
CITY ENGINEER
ASSISTANT DIRECTOR

CITY OF BELLINGHAM, WASHINGTON
PUBLIC WORKS DEPARTMENT
ENGINEERING DIVISION

SCALE
Horiz. AS SHOWN
Vert. AS SHOWN

DATUM
H: NAD 83/98
V: NAVD 88

Job. No. EU194
Date JAN 2026
Field Bk.

POST POINT RESOURCE RECOVERY PLANT
INSTRUMENTATION
LCP-53012
ELEVATIONS

DRAWING NO. 010N203
SHEET NO. 134 OF 198

CONTACT PERSON: STEPHEN DAY, PE SE , PROJECT ENGINEER AT 360-778-7944

LAST SAVED BY: CRollins

PROJECT NO. 202021-100000 FILE NAME: 202021010N203.dwg

1/21/2026 8:24:10 AM

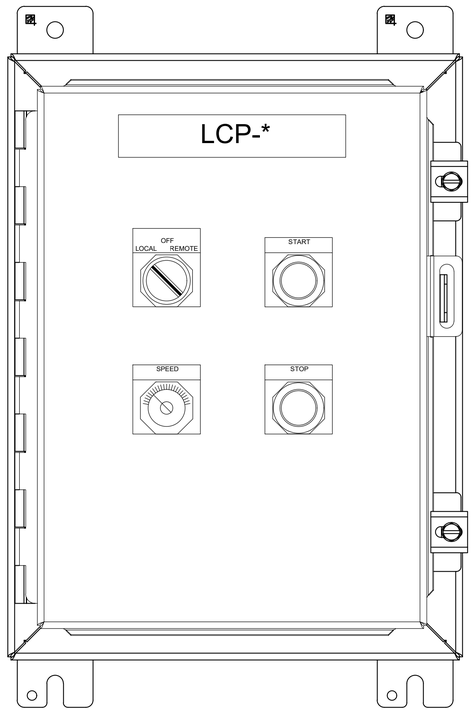

TYPE 1 - LCP WITH SPEED CONTROL

NAMEPLATE SCHEDULE
LCP-34033
LCP-34034
LCP-42001
LCP-42004
LCP-44001
LCP-44005
LCP-53061
LCP-53062

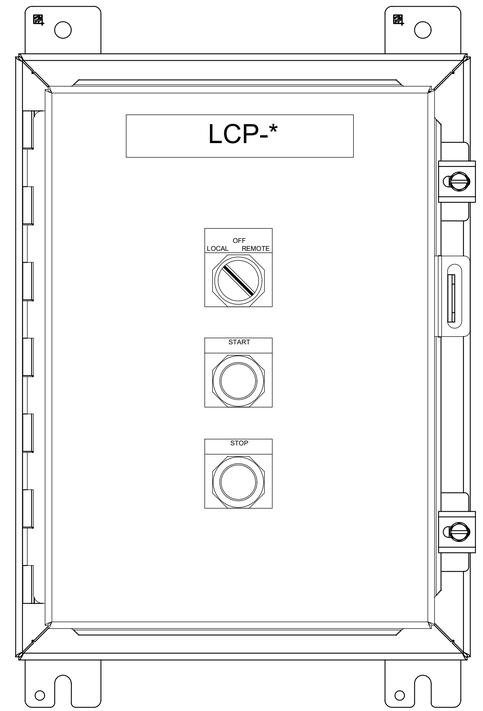

TYPE 2 - LCP WITH START/STOP CONTROL

NAMEPLATE SCHEDULE
LCP-33088

GENERAL NOTES:

1. ENCLOSURE DRAWING REPRESENTS DESIGN INTENT. CONTRACTOR TO SUPPLY AS-BUILT DRAWINGS SHOWING FINAL ENCLOSURE LAYOUT WITH ALL EQUIPMENT, MANUFACTURERS, AND PART NUMBERS.
2. REFER TO ELECTRICAL PLANS FOR LOCATION OF ALL ENCLOSURES. CONSTRUCT PANEL TO MEET THE FULL INTENT OF ARTICLE 409 OF THE NATIONAL ELECTRIC CODE.
3. FOLLOW ALL UL 508 AND 508A SUPPLEMENT SB REQUIREMENTS TO DETERMINE SHORT CIRCUIT RATINGS.
4. CIRCUIT BREAKERS SHALL BE COORDINATED TO TRIP BRANCH CIRCUIT BREAKER PRIOR TO THE MAIN PANEL CIRCUIT BREAKER.
5. ALL TIE WRAPS SHALL BE LOCATED OUTSIDE OF THE WIRE DUCTS. INSTALLATION OF ALL NYLON TIE WRAPS SHALL BE TENSIONED AND TRIMMED FLUSH.
6. ELEVATE ALL TERMINAL BLOCK DIN RAIL A MINIMUM OF 2 INCHES OFF OF BACK PANEL.
7. NO 480VAC CIRCUITS SHALL TERMINATE IN OR PASS THROUGH CONTROL CABINETS.
8. NO CAMERA OR TELEPHONE CABLES SHALL TERMINATE IN OR PASS THROUGH CONTROL CABINETS.
9. ALL CONDUIT PENETRATIONS SHALL BE LOCATED AT THE TOP OR BOTTOM OF THE ENCLOSURE. NO SIDE, FRONT, OR REAR PENETRATIONS ALLOWED.
10. QUANTITY OF COMPONENTS VARY AS REQUIRED FOR EACH CABINET.
11. REFER TO INSTRUMENTATION TYPICAL DETAILS FOR PANEL CONSTRUCTION AND WIRING REQUIREMENTS.
12. PROVIDE PANEL SURGE PROTECTION FOR ALL INSTRUMENT SIGNAL LINES LOCATED OUTDOORS OR OTHERWISE INDICATED IN THE DRAWING OR SPECIFICATIONS.

carollo®

Date	No	Revision	By
	4		
	3		
	2		
	1		

PROJECT ENGINEER MSS
DESIGNED/DRAWN JMR/LMB
INSPECTOR RG

DIRECTOR PUBLIC WORKS
CITY ENGINEER
ASSISTANT DIRECTOR

CITY OF BELLINGHAM, WASHINGTON
PUBLIC WORKS DEPARTMENT
ENGINEERING DIVISION

SCALE
Horiz. AS SHOWN
Vert. AS SHOWN

DATUM
H: NAD 83/98
V: NAVD 88

Job. No. EU194
Date JAN 2026
Field Bk.

POST POINT RESOURCE RECOVERY PLANT
INSTRUMENTATION
TYPICAL LCP ELEVATIONS

DRAWING NO. 010N204
SHEET NO. 135 OF 198

LAST SAVED BY: CRollins

CONTACT PERSON: STEPHEN DAY, PE SE , PROJECT ENGINEER AT 360-778-7944

PROJECT NO. 202021-100000 FILE NAME: 202021010N204.dwg

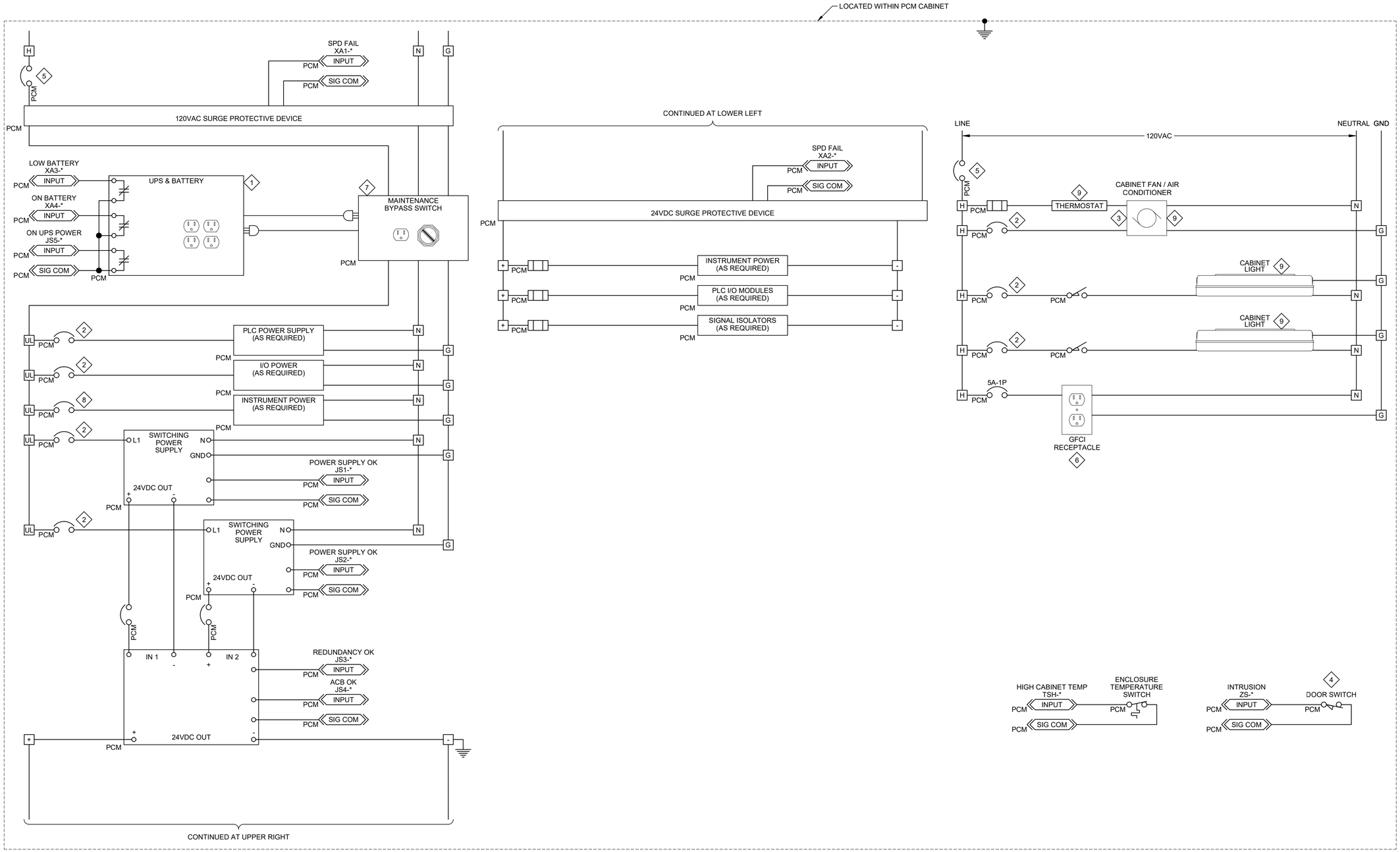

GENERAL NOTES:

1. SCHEMATIC ILLUSTRATES DESIGN INTENT ONLY. PROVIDE ALL NECESSARY COMPONENTS TO MEET PROJECT REQUIREMENTS.

KEY NOTES:

1. SIZE UPS AND BATTERY BASED ON UPS SPECIFICATION REQUIREMENTS.
2. SIZE BASED ON PROTECTION NEEDS.
3. VERIFY LOADS BASED ON TEMPERATURE CALCULATIONS. PROVIDE ADDITIONAL CIRCUIT IF REQUIRED.
4. INSTALL SWITCH ON OUTERMOST DOOR OF OVERLAPPING DOORS. PROVIDE ADDITIONAL SWITCHES, WIRED IN SERIES, FOR NON-OVERLAPPING DOORS.
5. SIZE BASED ON LOAD REQUIREMENT.
6. PROVIDE QUANTITY REQUIRED PER SPECIFICATIONS. SIZE RECEPTACLE FOR LAPTOP.
7. PROVIDE HARDWIRED CONNECTIONS OR RECEPTACLE/PLUG AS REQUIRED BY MAINTENANCE BYPASS SWITCH.
8. SIZE BASED ON PROTECTION NEEDS. PROVIDE SEPARATE CIRCUIT BREAKERS FOR EACH INSTRUMENT POWERED FROM THE PCM CABINET.
9. PROVIDE QUANTITY REQUIRED PER DRAWINGS AND SPECIFICATIONS.

TERMINAL BLOCK LEGEND

H	120VAC
N	NEUTRAL
G	GROUND
UL	UPS 120VAC
+	24VDC (+)
-	24VDC (-)

TAG ⟷ LOOP
* = 42020 ⟷ LCP-42020

REFERENCE DWG.
420N902

LOCATION LEGEND

PCM	PCM
MCC	MOTOR CONTROL CENTER
FLD	FIELD DEVICE
LCP	LOCAL CONTROL PANEL
STR	FREE-STANDING STARTER
VFD	FREE-STANDING VFD

LCP-42020 PLC AND INSTRUMENT POWER

1 CONTROL SCHEMATIC

carollo®

Date	No	Revision	By
	4		
	3		
	2		
	1		

PROJECT ENGINEER MSS
DESIGNED/DRAWN JMR/LMB
INSPECTOR RG

DIRECTOR PUBLIC WORKS
CITY ENGINEER
ASSISTANT DIRECTOR

CITY OF BELLINGHAM, WASHINGTON
PUBLIC WORKS DEPARTMENT
ENGINEERING DIVISION

SCALE
Horiz. AS SHOWN
Vert. AS SHOWN

DATUM
H: NAD 83/98
V: NAVD 88

Job. No. EU194
Date JAN 2026
Field Bk.

POST POINT RESOURCE RECOVERY PLANT
INSTRUMENTATION
LCP-42020 WIRING DIAGRAM

DRAWING NO. 010N301
SHEET NO. 136 OF 198

CONTACT PERSON: STEPHEN DAY, PE SE , PROJECT ENGINEER AT 360-778-7944

PROJECT NO. 202021-100000 FILE NAME: 202021010N301.dwg

1/21/2026 8:24:14 AM

LAST SAVED BY: CRollins

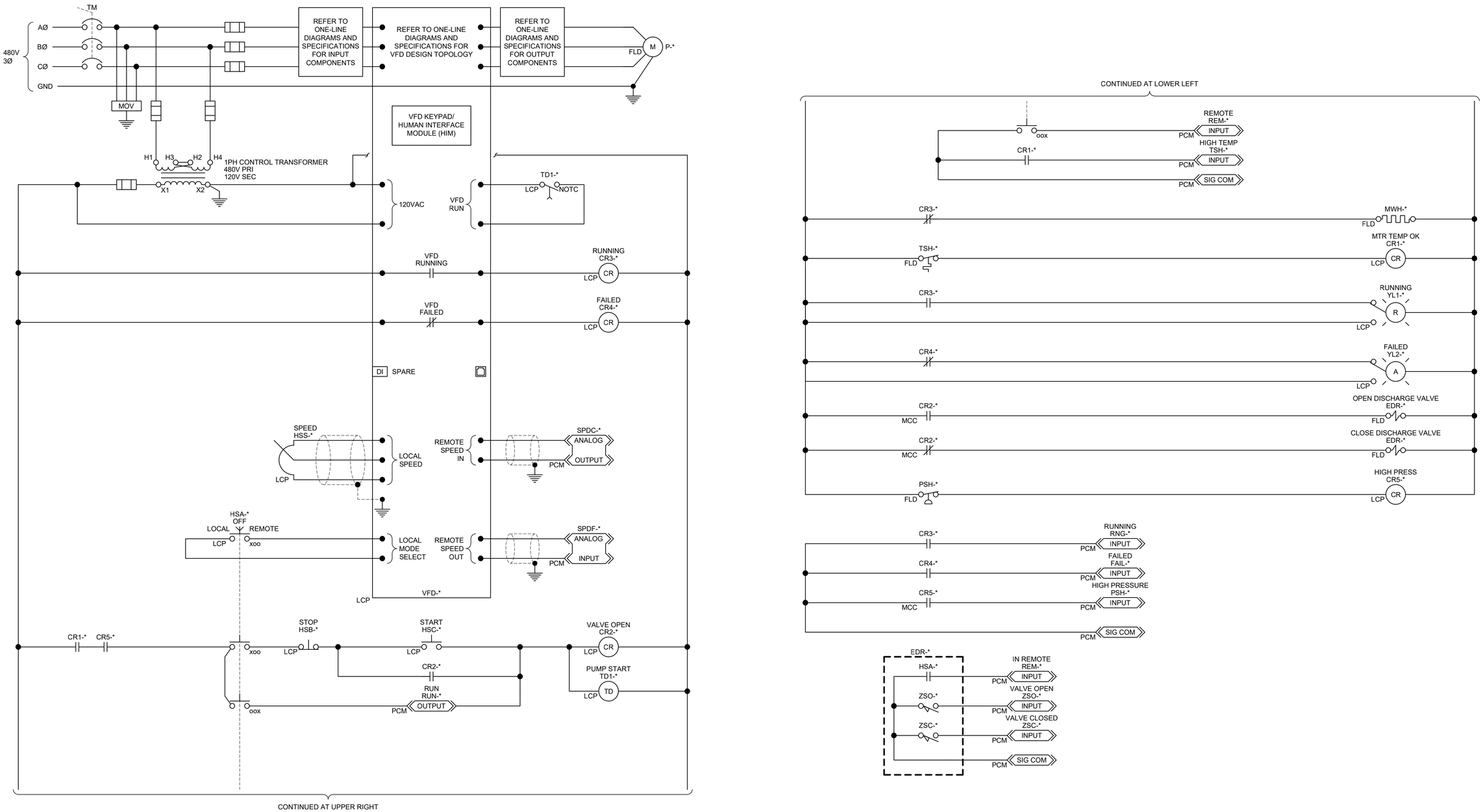

TAG	LOOP	REFERENCE DWG.
* = 34033	P-34033	050N102
* = 34034	P-34034	050N102

LOCATION LEGEND

PCM	PCM
MCC	MOTOR CONTROL CENTER
FLD	FIELD DEVICE
LCP	LOCAL CONTROL PANEL
STR	FREE-STANDING STARTER
VFD	FREE-STANDING VFD

LCP-53012 WAS PUMPS POWER

2 CONTROL SCHEMATIC

carollo®

Date	No	Revision	By
	4		
	3		
	2		
	1		

PROJECT ENGINEER MSS
DESIGNED/DRAWN JMR/KIK
INSPECTOR RG

DIRECTOR PUBLIC WORKS
CITY ENGINEER
ASSISTANT DIRECTOR

CITY OF BELLINGHAM, WASHINGTON
PUBLIC WORKS DEPARTMENT
ENGINEERING DIVISION

SCALE
Horiz. AS SHOWN
Vert. AS SHOWN

DATUM
H: NAD 83/98
V: NAVD 88

Job. No. EU194
Date JAN 2026
Field Bk.

POST POINT RESOURCE RECOVERY PLANT
INSTRUMENTATION
WAS PUMP WIRING DIAGRAM

DRAWING NO. 010N302
SHEET NO. 137 OF 198

CONTACT PERSON: STEPHEN DAY, PE SE , PROJECT ENGINEER AT 360-778-7944

PROJECT NO. 202021-100000 FILE NAME: 202021010N302.dwg

1/21/2026 10:21:11 AM

LAST SAVED BY: CRollins

1/21/2026 9:07:11 AM

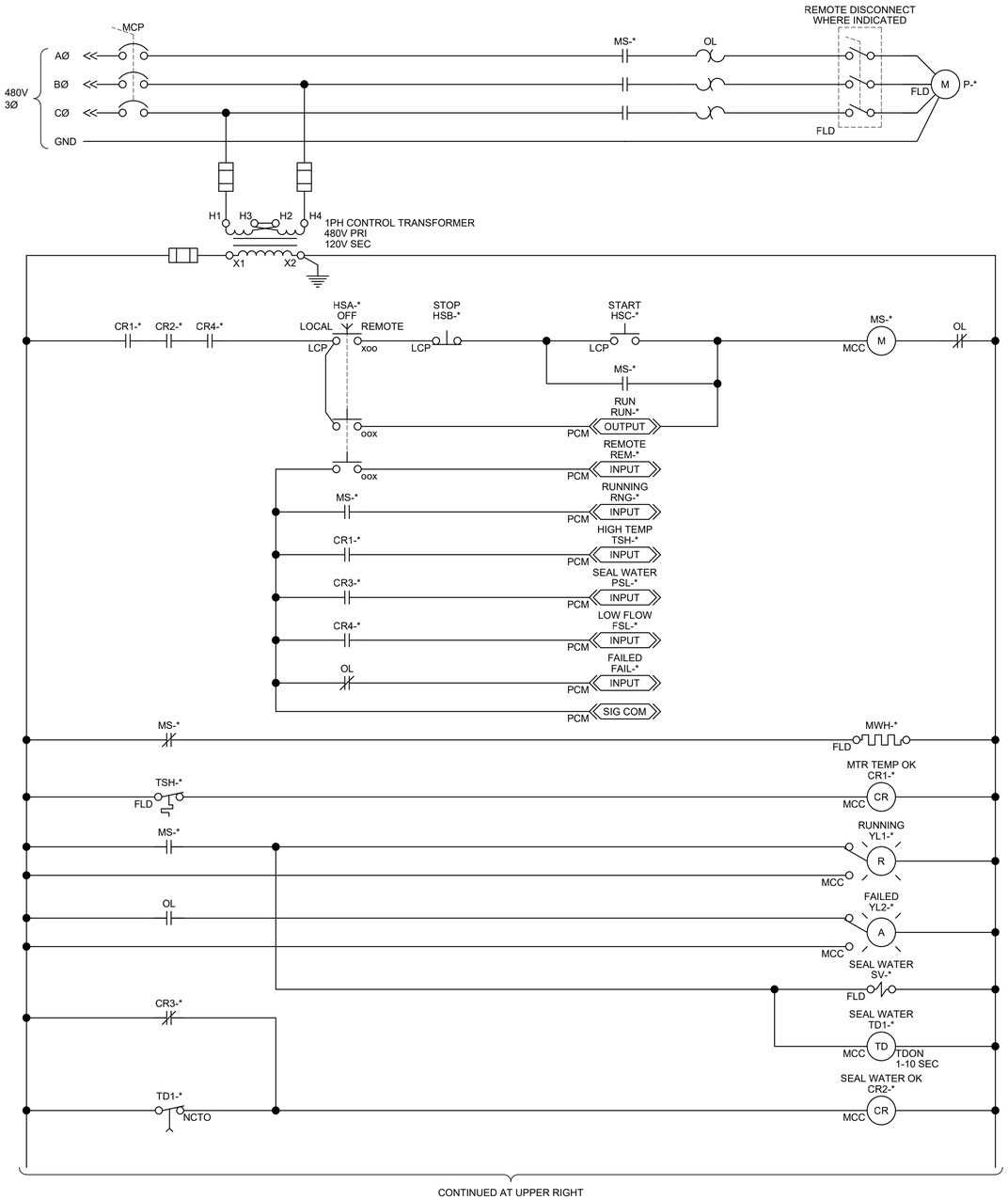

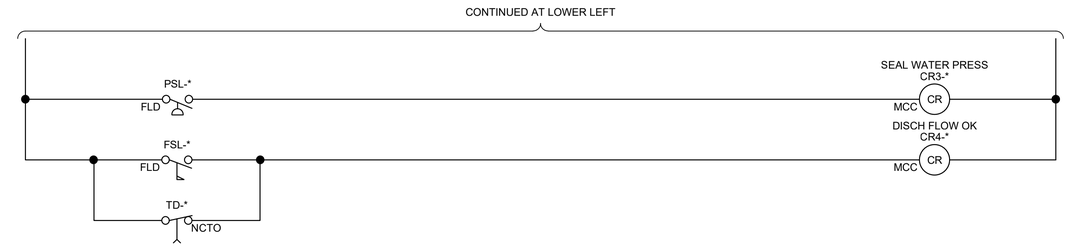

TAG ◄——► LOOP
* = 33088 ◄——► P-33088

REFERENCE DWG.
340N101

LOCATION LEGEND

PCM	PCM
MCC	MOTOR CONTROL CENTER
FLD	FIELD DEVICE
LCP	LOCAL CONTROL PANEL
STR	FREE-STANDING STARTER
VFD	FREE-STANDING VFD

DEWATERING PUMP

3 CONTROL SCHEMATIC

carollo®

Date	No	Revision	By
	4		
	3		
	2		
	1		

PROJECT ENGINEER MSS
DESIGNED/DRAWN JMR/KIK
INSPECTOR RG

DIRECTOR PUBLIC WORKS
CITY ENGINEER
ASSISTANT DIRECTOR

CITY OF BELLINGHAM, WASHINGTON
PUBLIC WORKS DEPARTMENT
ENGINEERING DIVISION

SCALE
Horiz. AS SHOWN
Vert. AS SHOWN

DATUM
H: NAD 83/98
V: NAVD 88

Job. No. EU194
Date JAN 2026
Field Bk.

POST POINT RESOURCE RECOVERY PLANT
INSTRUMENTATION
DEWATERING PUMP WIRING DIAGRAM

DRAWING NO. 010N303
SHEET NO. 138 OF 198

LAST SAVED BY: CRollins

CONTACT PERSON: STEPHEN DAY, PE SE , PROJECT ENGINEER AT 360-778-7944

PROJECT NO. 202021-100000 FILE NAME: 202021010N303.dwg

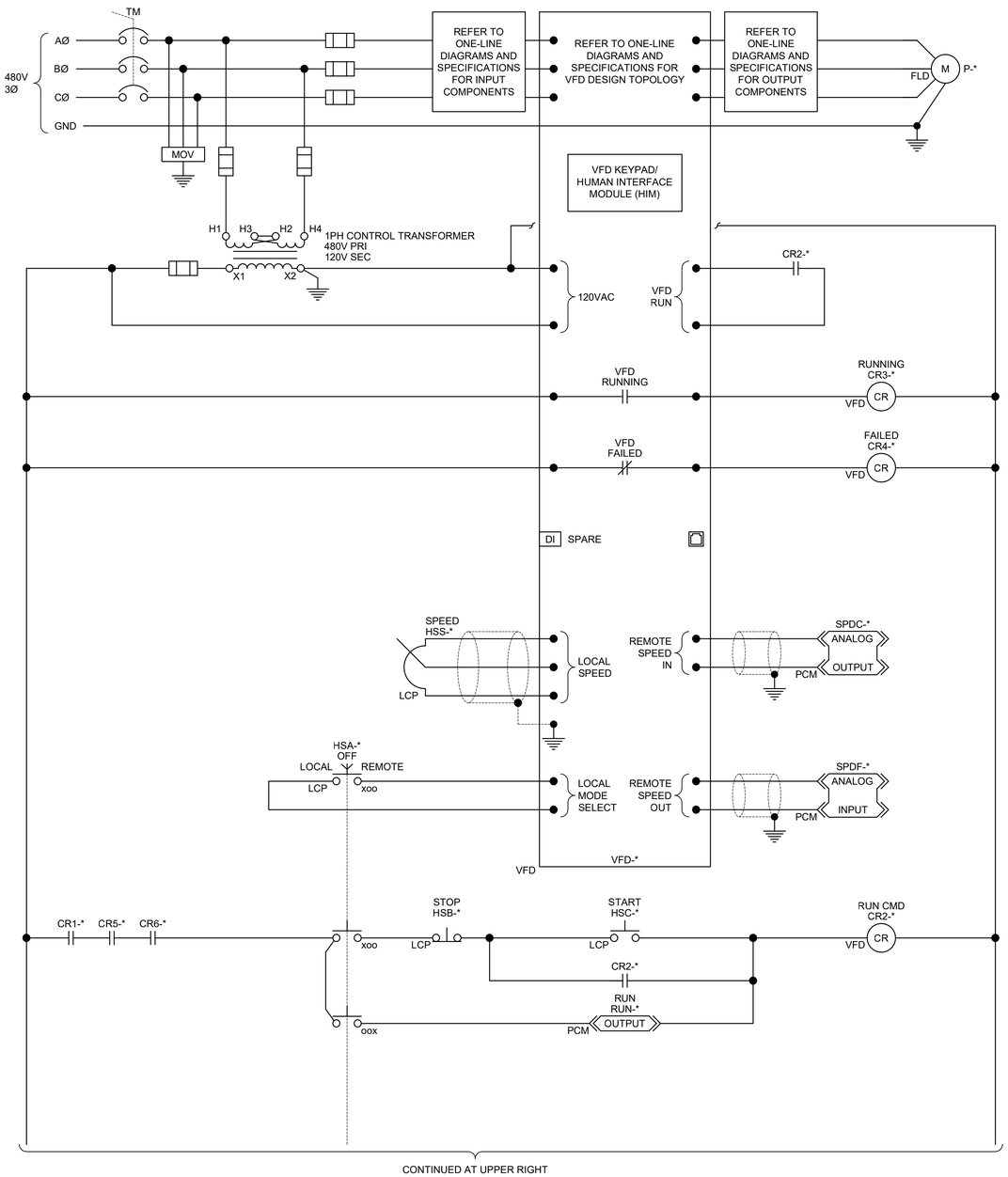

CONTINUED AT UPPER RIGHT

CONTINUED AT LOWER LEFT

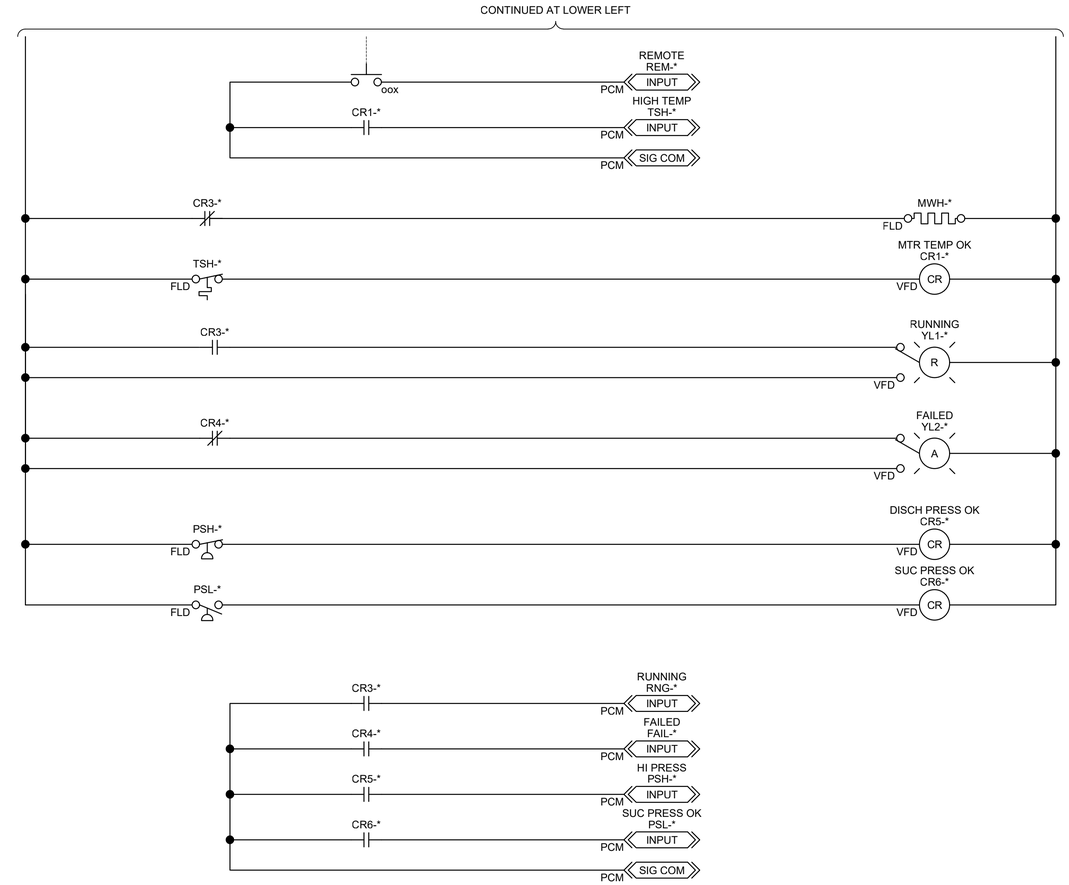

SLUDGE STORAGE PUMP

4 CONTROL SCHEMATIC

TAG		LOOP	REFERENCE DWG.
* = 42001	⟷	P-42001	420N101
* = 42004	⟷	P-42004	420N102

LOCATION LEGEND

PCM	PCM
MCC	MOTOR CONTROL CENTER
FLD	FIELD DEVICE
LCP	LOCAL CONTROL PANEL
STR	FREE-STANDING STARTER
VFD	FREE-STANDING VFD

carollo®

Date	No	Revision	By
	4		
	3		
	2		
	1		

PROJECT ENGINEER MSS
DESIGNED/DRAWN JMR/KIK
INSPECTOR RG

DIRECTOR PUBLIC WORKS
CITY ENGINEER
ASSISTANT DIRECTOR

CITY OF BELLINGHAM, WASHINGTON
PUBLIC WORKS DEPARTMENT
ENGINEERING DIVISION

SCALE
Horiz. AS SHOWN
Vert. AS SHOWN

DATUM
H: NAD 83/98
V: NAVD 88

Job. No. EU194
Date JAN 2026
Field Bk.

POST POINT RESOURCE RECOVERY PLANT
INSTRUMENTATION
SLUDGE STORAGE PUMP WIRING DIAGRAM

DRAWING NO. 010N304
SHEET NO. 139 OF 198

CONTACT PERSON: STEPHEN DAY, PE SE , PROJECT ENGINEER AT 360-778-7944

PROJECT NO. 202021-100000 FILE NAME: 202021010N304.dwg

LAST SAVED BY: CRollins

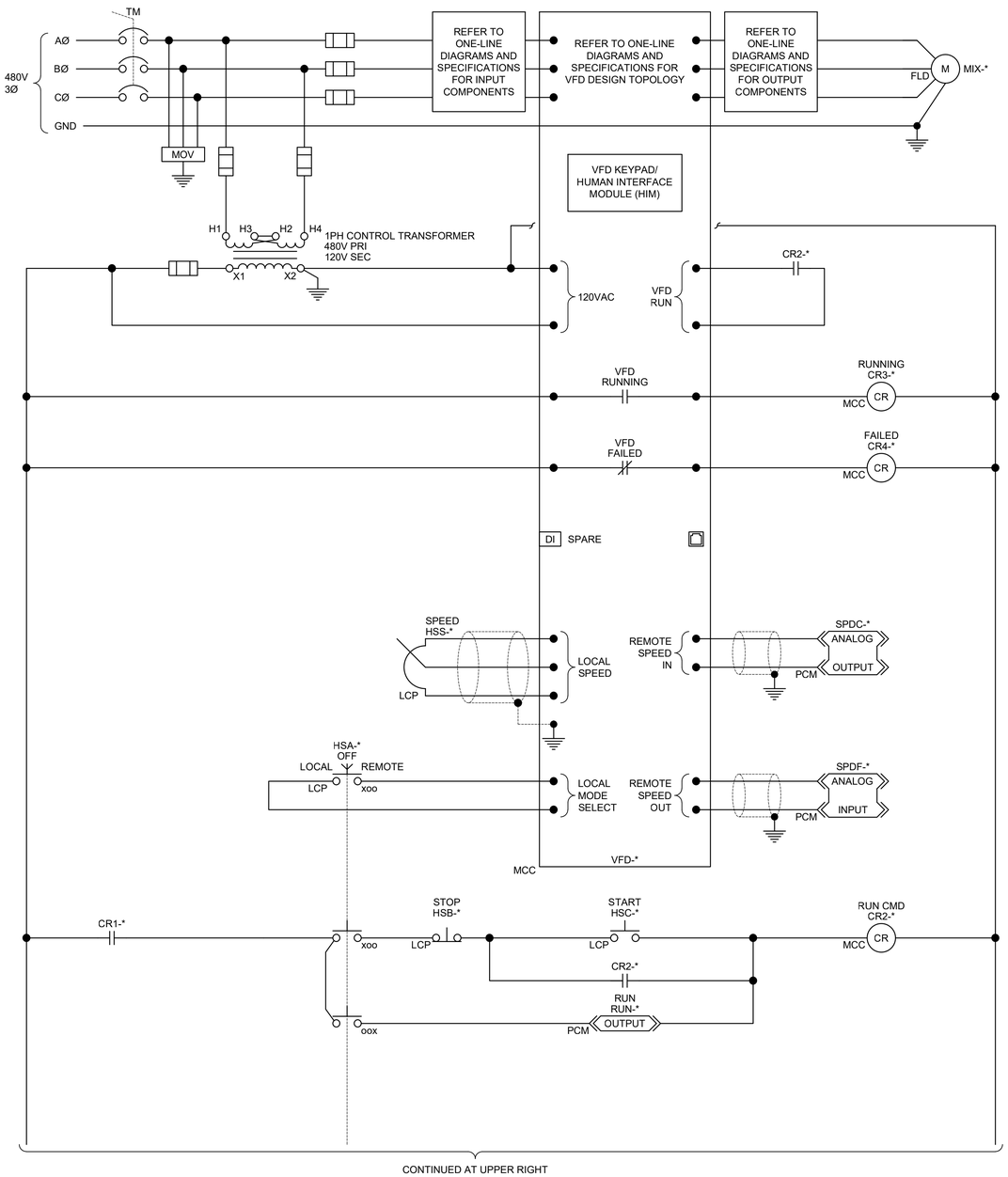

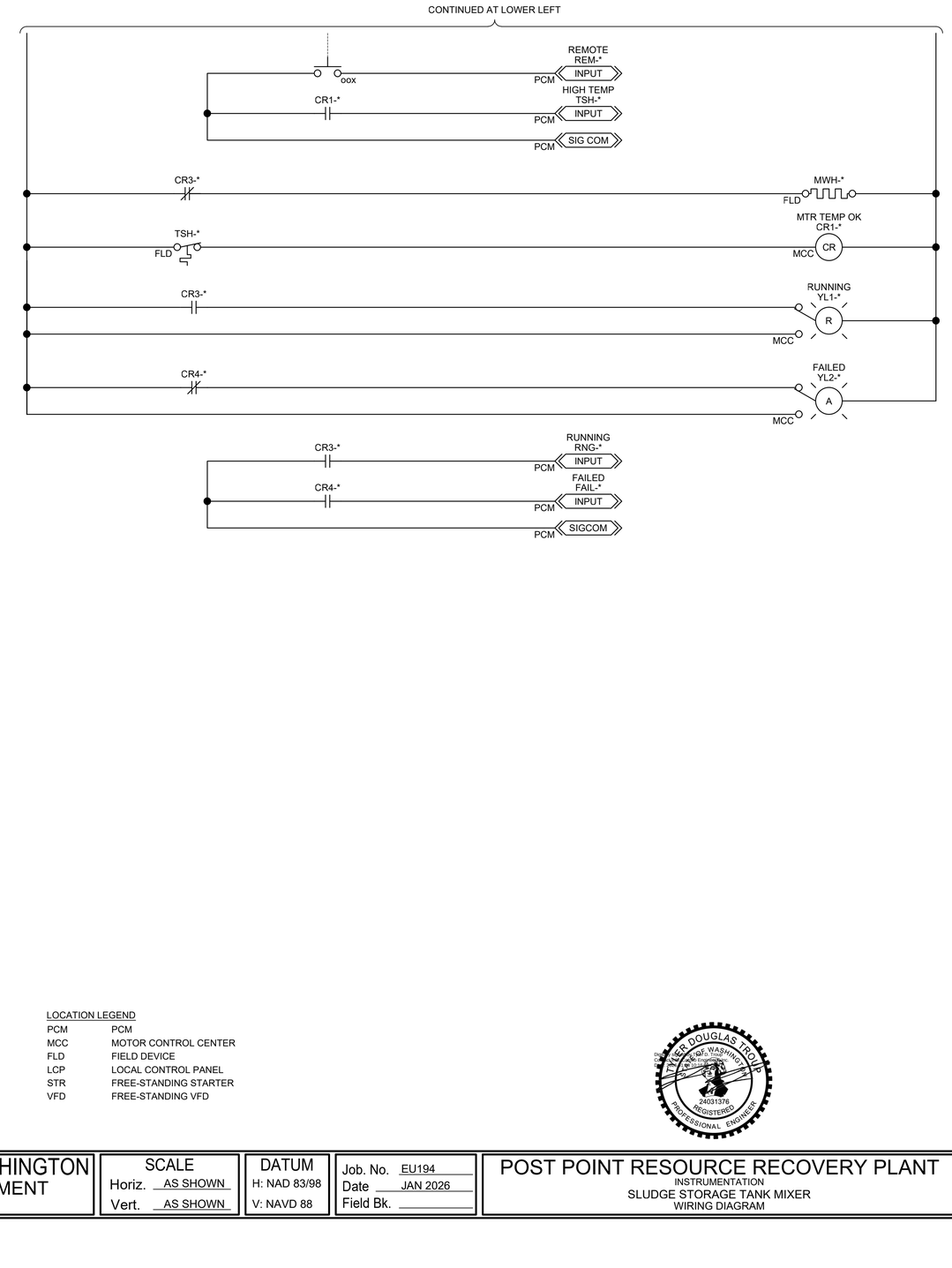

TAG		LOOP	REFERENCE DWG.
* = 44001	⟷	MIX-44001	440N101
* = 44005	⟷	MIX-44005	440N102

LOCATION LEGEND

PCM	PCM
MCC	MOTOR CONTROL CENTER
FLD	FIELD DEVICE
LCP	LOCAL CONTROL PANEL
STR	FREE-STANDING STARTER
VFD	FREE-STANDING VFD

SLUDGE TANK MIXER

5 CONTROL SCHEMATIC

carollo®

Date	No	Revision	By
	4		
	3		
	2		
	1		

PROJECT ENGINEER MSS
DESIGNED/DRAWN JMR/KIK
INSPECTOR RG

DIRECTOR PUBLIC WORKS
CITY ENGINEER
ASSISTANT DIRECTOR

CITY OF BELLINGHAM, WASHINGTON
PUBLIC WORKS DEPARTMENT
ENGINEERING DIVISION

SCALE
Horiz. AS SHOWN
Vert. AS SHOWN

DATUM
H: NAD 83/98
V: NAVD 88

Job. No. EU194
Date JAN 2026
Field Bk.

POST POINT RESOURCE RECOVERY PLANT
INSTRUMENTATION
SLUDGE STORAGE TANK MIXER
WIRING DIAGRAM

DRAWING NO. 010N305
SHEET NO. 140 OF 198

CONTACT PERSON: STEPHEN DAY, PE SE , PROJECT ENGINEER AT 360-778-7944

PROJECT NO. 202021-100000 FILE NAME: 202021010N305.dwg

LAST SAVED BY: CRollins

1/21/2026 10:07:10 AM

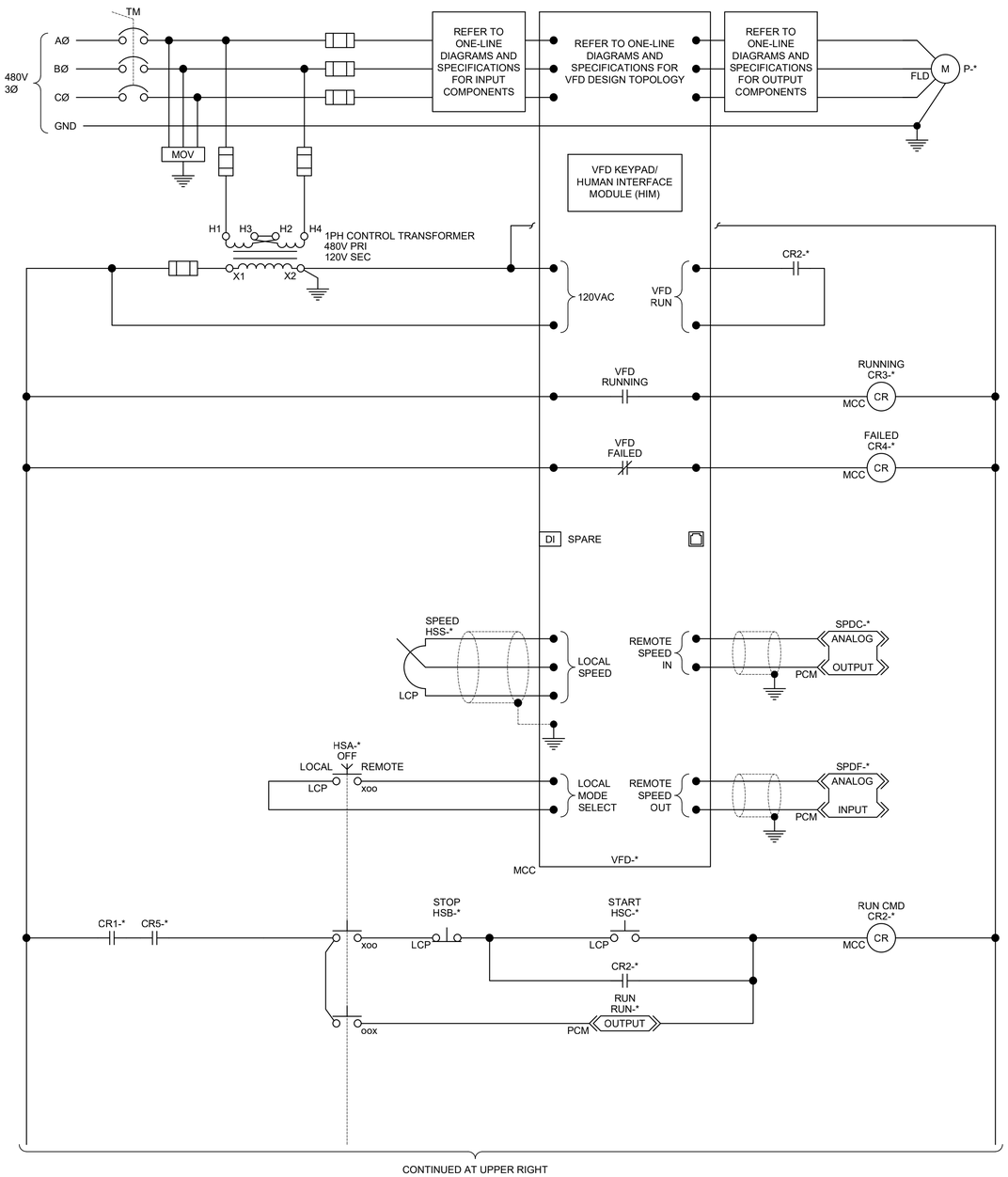

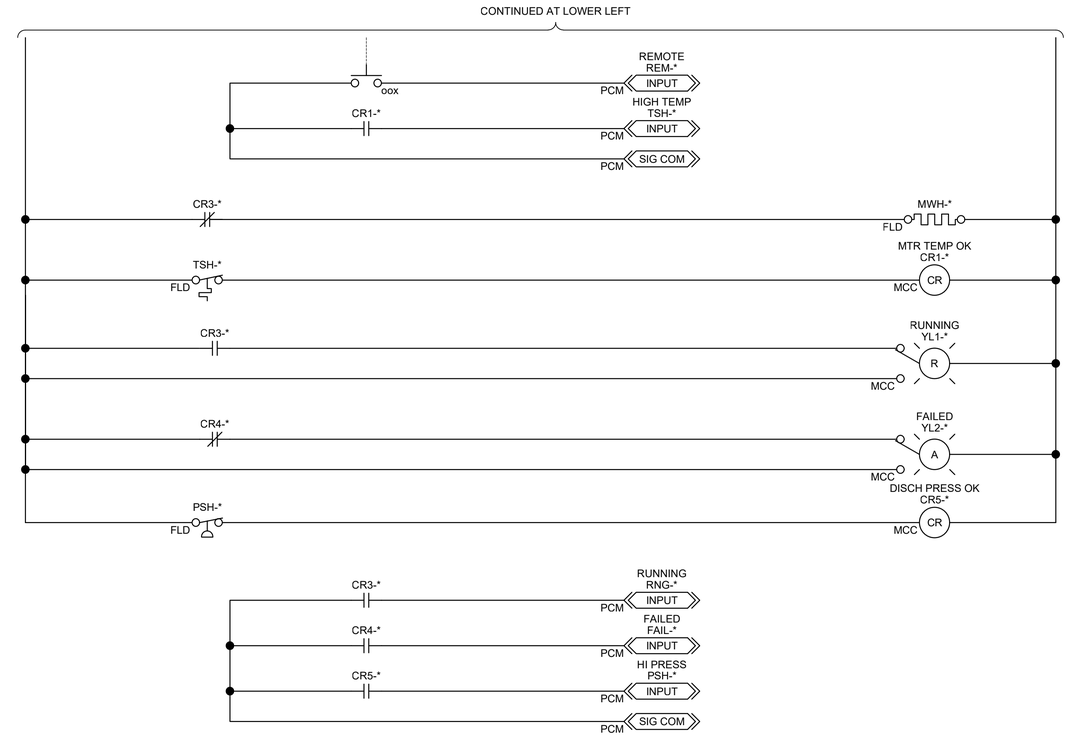

CONTINUED AT UPPER RIGHT

THICKENED SLUDGE PUMP

6 CONTROL SCHEMATIC

TAG		LOOP	REFERENCE DWG.
* = 53061	⟷	P-53061	530N102
* = 53062	⟷	P-53062	530N103

LOCATION LEGEND

PCM	PCM
MCC	MOTOR CONTROL CENTER
FLD	FIELD DEVICE
LCP	LOCAL CONTROL PANEL
STR	FREE-STANDING STARTER
VFD	FREE-STANDING VFD

carollo®

Date	No	Revision	By
	4		
	3		
	2		
	1		

PROJECT ENGINEER MSS
DESIGNED/DRAWN JMR/KIK
INSPECTOR RG

DIRECTOR PUBLIC WORKS
CITY ENGINEER
ASSISTANT DIRECTOR

CITY OF BELLINGHAM, WASHINGTON
PUBLIC WORKS DEPARTMENT
ENGINEERING DIVISION

SCALE
Horiz. AS SHOWN
Vert. AS SHOWN

DATUM
H: NAD 83/98
V: NAVD 88

Job. No. EU194
Date JAN 2026
Field Bk.

POST POINT RESOURCE RECOVERY PLANT
INSTRUMENTATION
THICKENED SLUDGE PUMP WIRING DIAGRAM

DRAWING NO. 010N306
SHEET NO. 141 OF 198

CONTACT PERSON: STEPHEN DAY, PE SE , PROJECT ENGINEER AT 360-778-7944

PROJECT NO. 202021-100000 FILE NAME: 202021010N306.dwg

LAST SAVED BY: CRollins

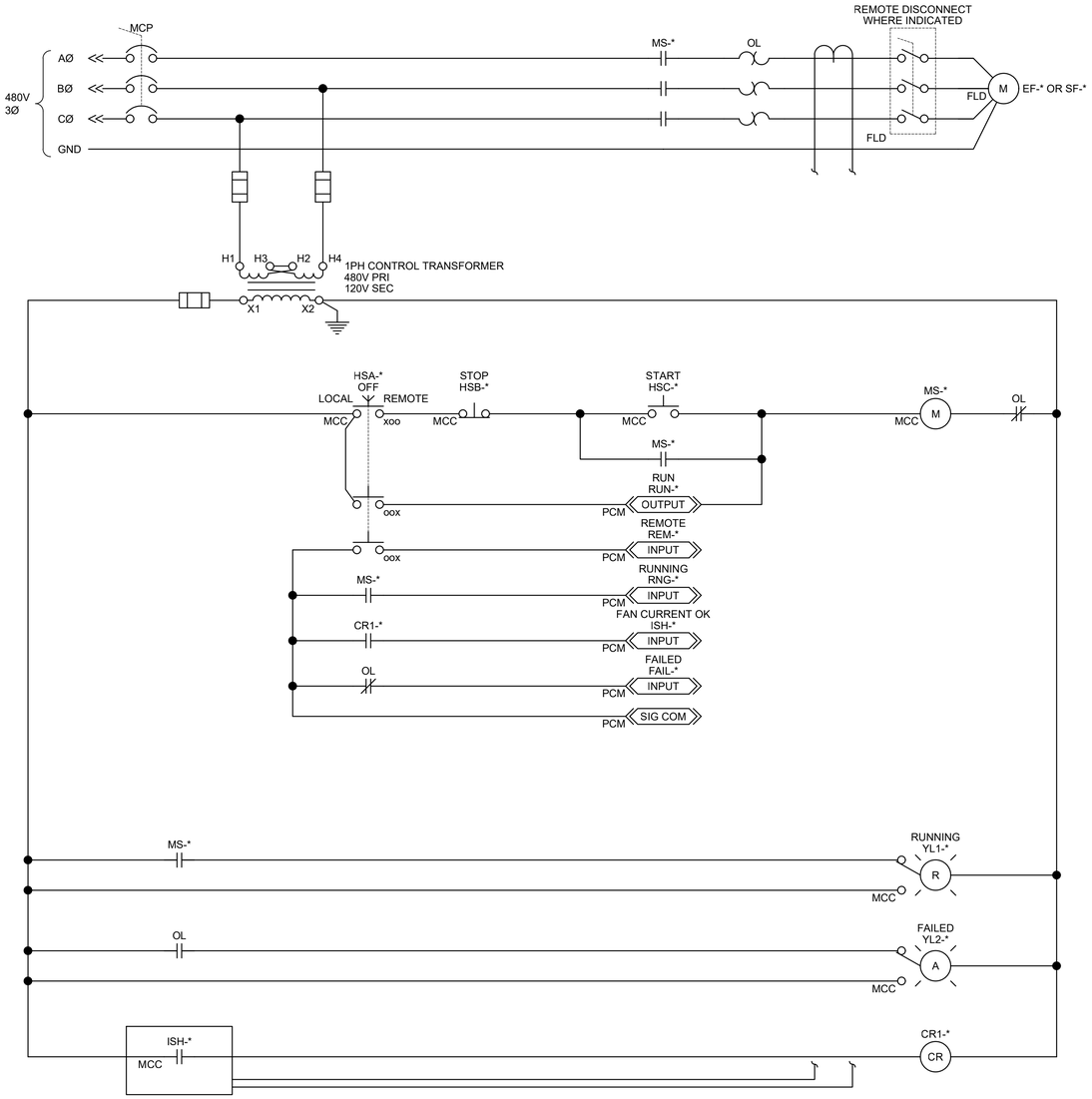

TAG		LOOP	REFERENCE DWG.
* = 42032	⟵⟶	EF-42032	420N802
* = 42033	⟵⟶	SF-42033	420N802

LOCATION LEGEND

PCM	PCM
MCC	MOTOR CONTROL CENTER
FLD	FIELD DEVICE
LCP	LOCAL CONTROL PANEL
STR	FREE-STANDING STARTER
VFD	FREE-STANDING VFD

FAN SCHEMATIC

7 CONTROL SCHEMATIC

carollo®

Date	No	Revision	By
	4		
	3		
	2		
	1		

PROJECT ENGINEER MSS
DESIGNED/DRAWN JMR/KIK
INSPECTOR RG

DIRECTOR PUBLIC WORKS
CITY ENGINEER
ASSISTANT DIRECTOR

CITY OF BELLINGHAM, WASHINGTON
PUBLIC WORKS DEPARTMENT
ENGINEERING DIVISION

SCALE
Horiz. AS SHOWN
Vert. AS SHOWN

DATUM
H: NAD 83/98
V: NAVD 88

Job. No. EU194
Date JAN 2026
Field Bk.

POST POINT RESOURCE RECOVERY PLANT
INSTRUMENTATION
FAN WIRING DIAGRAM

DRAWING NO. 010N307
SHEET NO. 142 OF 198

CONTACT PERSON: STEPHEN DAY, PE SE , PROJECT ENGINEER AT 360-778-7944

PROJECT NO. 202021-100000 FILE NAME: 202021010N307.dwg

1/21/2026 8:24:20 AM

LAST SAVED BY: CRollins

1/21/2026 8:23:56 AM

KEY NOTES:

1. HORN/STROBE COMBINATION UNIT.

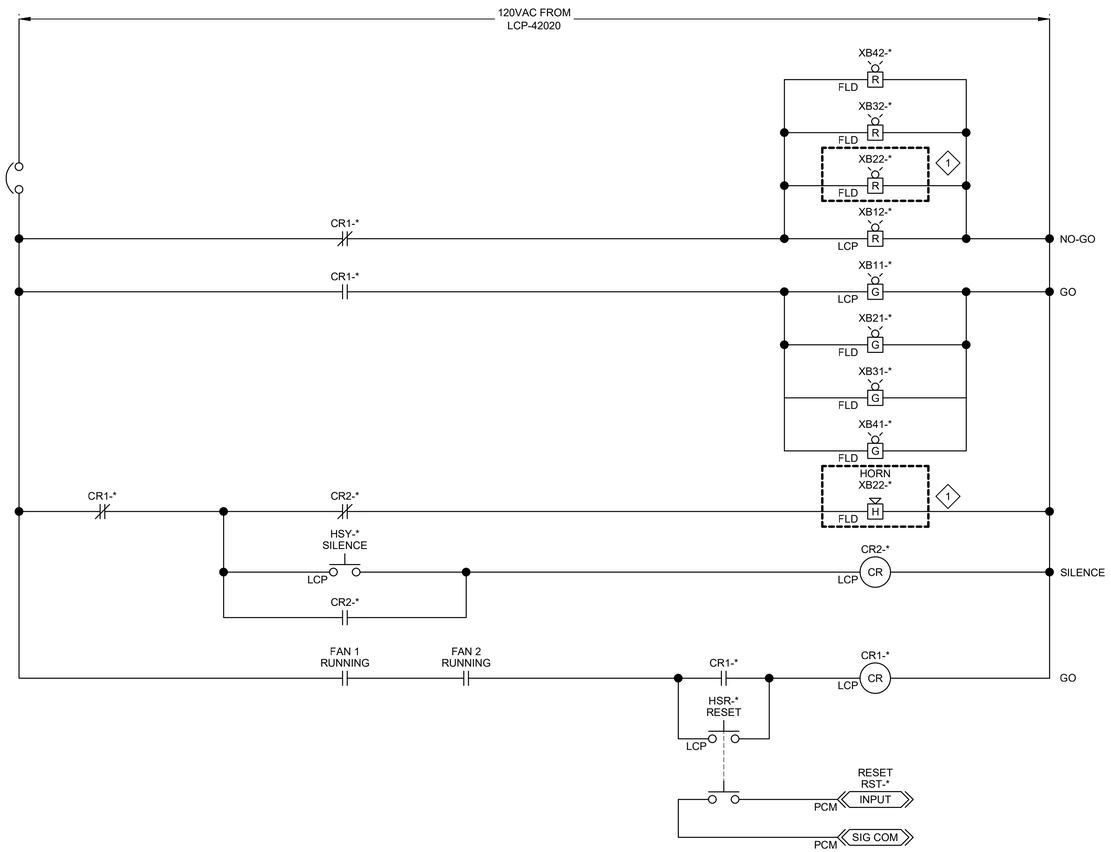

TAG ⟷ LOOP
* = 42021 ⟷ LCP-42021

REFERENCE DWG.
420N804

LOCATION LEGEND

PCM	PCM
MCC	MOTOR CONTROL CENTER
FLD	FIELD DEVICE
LCP	LOCAL CONTROL PANEL
STR	FREE-STANDING STARTER
VFD	FREE-STANDING VFD

GO/NO-GO SYSTEM

8 CONTROL SCHEMATIC

carollo®

TYLER DOUGLAS TROUT
STATE OF WASHINGTON
24031376
REGISTERED
PROFESSIONAL ENGINEER

Date	No	Revision	By
	4		
	3		
	2		
	1		

PROJECT ENGINEER MSS
DESIGNED/DRAWN JMR/KIK
INSPECTOR RG

DIRECTOR PUBLIC WORKS
CITY ENGINEER
ASSISTANT DIRECTOR

CITY OF BELLINGHAM, WASHINGTON
PUBLIC WORKS DEPARTMENT
ENGINEERING DIVISION

SCALE
Horiz. AS SHOWN
Vert. AS SHOWN

DATUM
H: NAD 83/98
V: NAVD 88

Job. No. EU194
Date JAN 2026
Field Bk.

POST POINT RESOURCE RECOVERY PLANT
INSTRUMENTATION
GO/NO-GO SYSTEM WIRING DIAGRAM

DRAWING NO. 010N308
SHEET NO. 143 OF 198

LAST SAVED BY: CRollins

CONTACT PERSON: STEPHEN DAY, PE SE , PROJECT ENGINEER AT 360-778-7944

PROJECT NO. 202021-100000 FILE NAME: 202021010N308.dwg

1/21/2026 8:22:45 AM

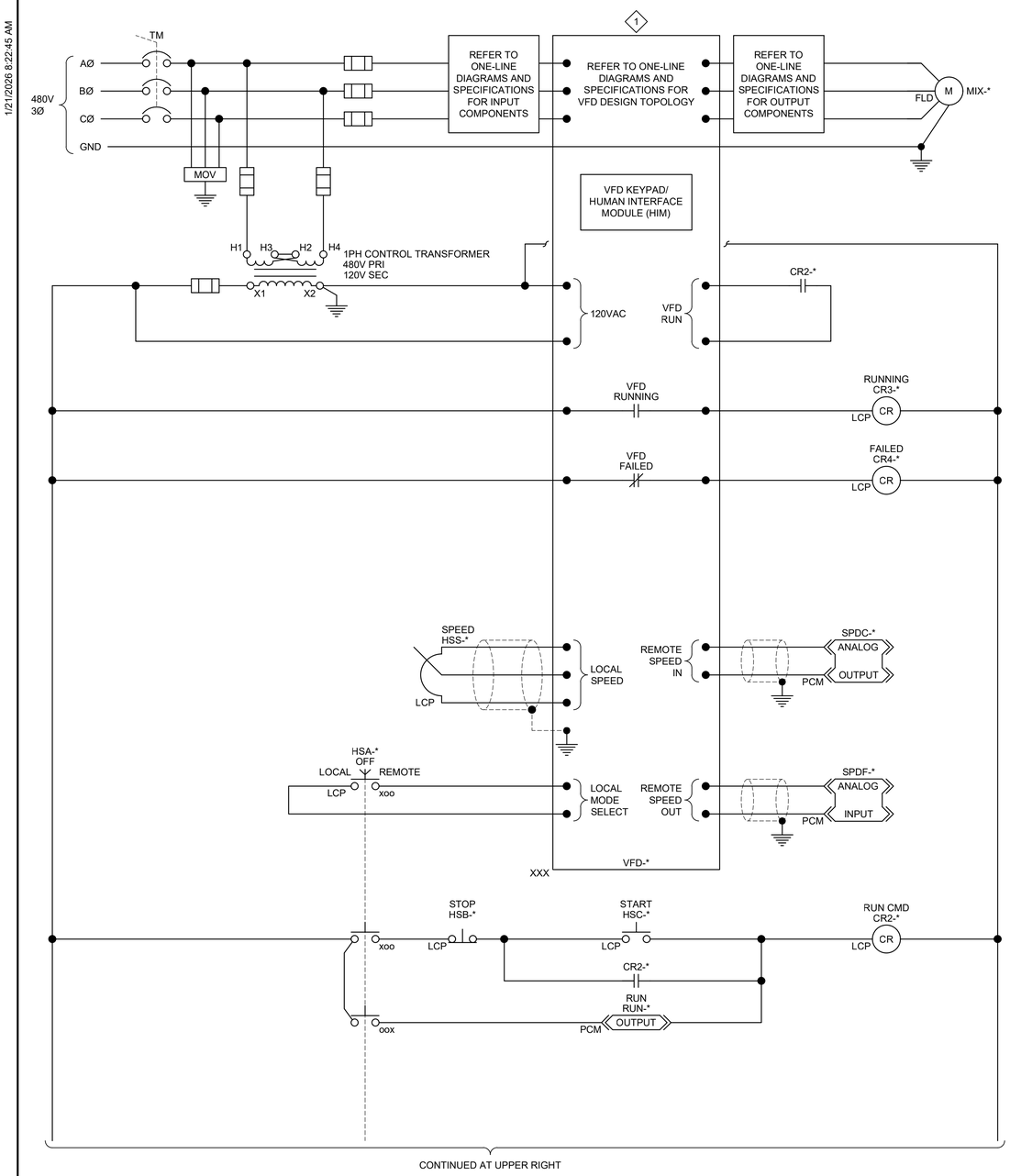

CONTINUED AT UPPER RIGHT

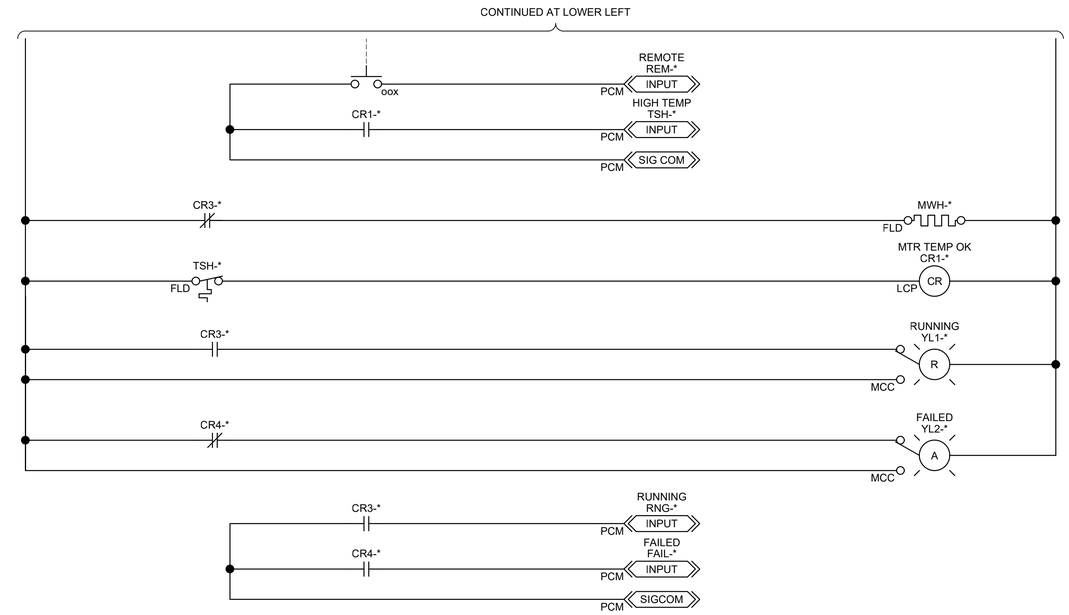

KEY NOTES:

1. VFD IS PROVIDED BY MIXER SUPPLIER. COORDINATE INSTALLATION VENDOR PROVIDED VFD IN THE LCP.

TAG ⟷ LOOP
* = 53012 ⟷ MIX-53012

REFERENCE DWG.
530N104

LOCATION LEGEND

PCM	PCM OR DCS
MCC	MOTOR CONTROL CENTER
FLD	FIELD DEVICE
LCP	LOCAL CONTROL PANEL
STR	FREE-STANDING STARTER
VFD	FREE-STANDING VFD

LCP-53012

9 CONTROL SCHEMATIC

carollo®

Date	No	Revision	By
	4		
	3		
	2		
	1		

PROJECT ENGINEER MSS
DESIGNED/DRAWN JMR/LMB
INSPECTOR RG

DIRECTOR PUBLIC WORKS
CITY ENGINEER
ASSISTANT DIRECTOR

CITY OF BELLINGHAM, WASHINGTON
PUBLIC WORKS DEPARTMENT
ENGINEERING DIVISION

SCALE
Horiz. AS SHOWN
Vert. AS SHOWN

DATUM
H: NAD 83/98
V: NAVD 88

Job. No. EU194
Date JAN 2026
Field Bk.

POST POINT RESOURCE RECOVERY PLANT
INSTRUMENTATION
LCP-53012 WIRING DIAGRAM

DRAWING NO. 010N309
SHEET NO. 144 OF 198

CONTACT PERSON: STEPHEN DAY, PE SE , PROJECT ENGINEER AT 360-778-7944

PROJECT NO. 202021-100000 FILE NAME: 202021010N309.dwg

LAST SAVED BY: CRollins

1/21/2026 8:24:23 AM

I/O

POWER SOURCE

FIELD

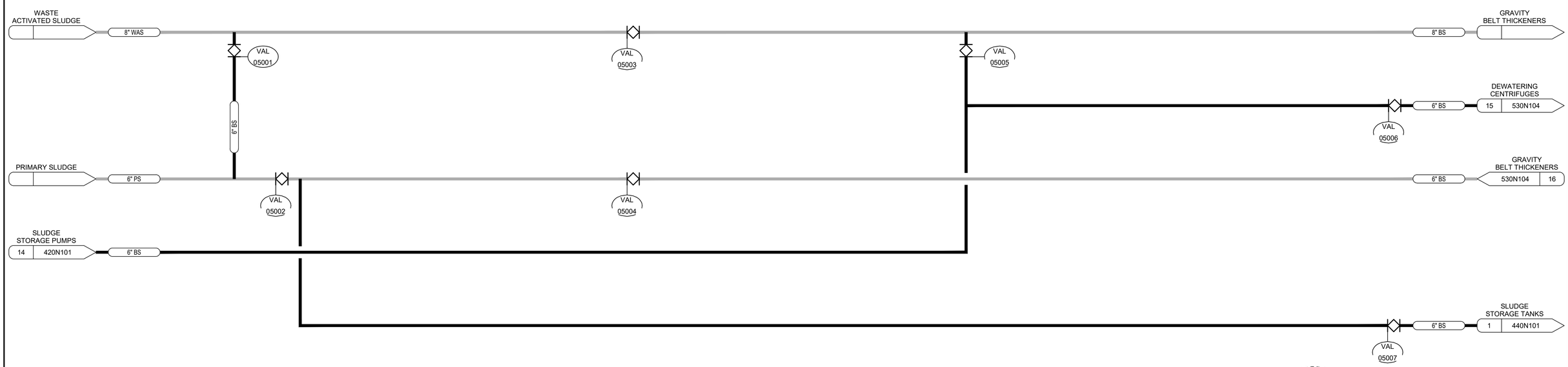

carollo®

Date	No	Revision	By
	4		
	3		
	2		
	1		

PROJECT ENGINEER MSS
DESIGNED/DRAWN CY/CGR
INSPECTOR RG

DIRECTOR PUBLIC WORKS
CITY ENGINEER
ASSISTANT DIRECTOR

CITY OF BELLINGHAM, WASHINGTON
PUBLIC WORKS DEPARTMENT
ENGINEERING DIVISION

SCALE
Horiz. AS SHOWN
Vert. AS SHOWN

DATUM
H: NAD 83/98
V: NAVD 88

Job. No. EU194
Date JAN 2026
Field Bk.

POST POINT RESOURCE RECOVERY PLANT
INSTRUMENTATION
GALLERY PIPING P&ID

DRAWING NO. 050N101
SHEET NO. 145 OF 198

LAST SAVED BY: CRollins

CONTACT PERSON: STEPHEN DAY, PE SE , PROJECT ENGINEER AT 360-778-7944

PROJECT NO. 202021-100000 FILE NAME: 202021050N101.dwg

1/29/2026 10:07:17 AM

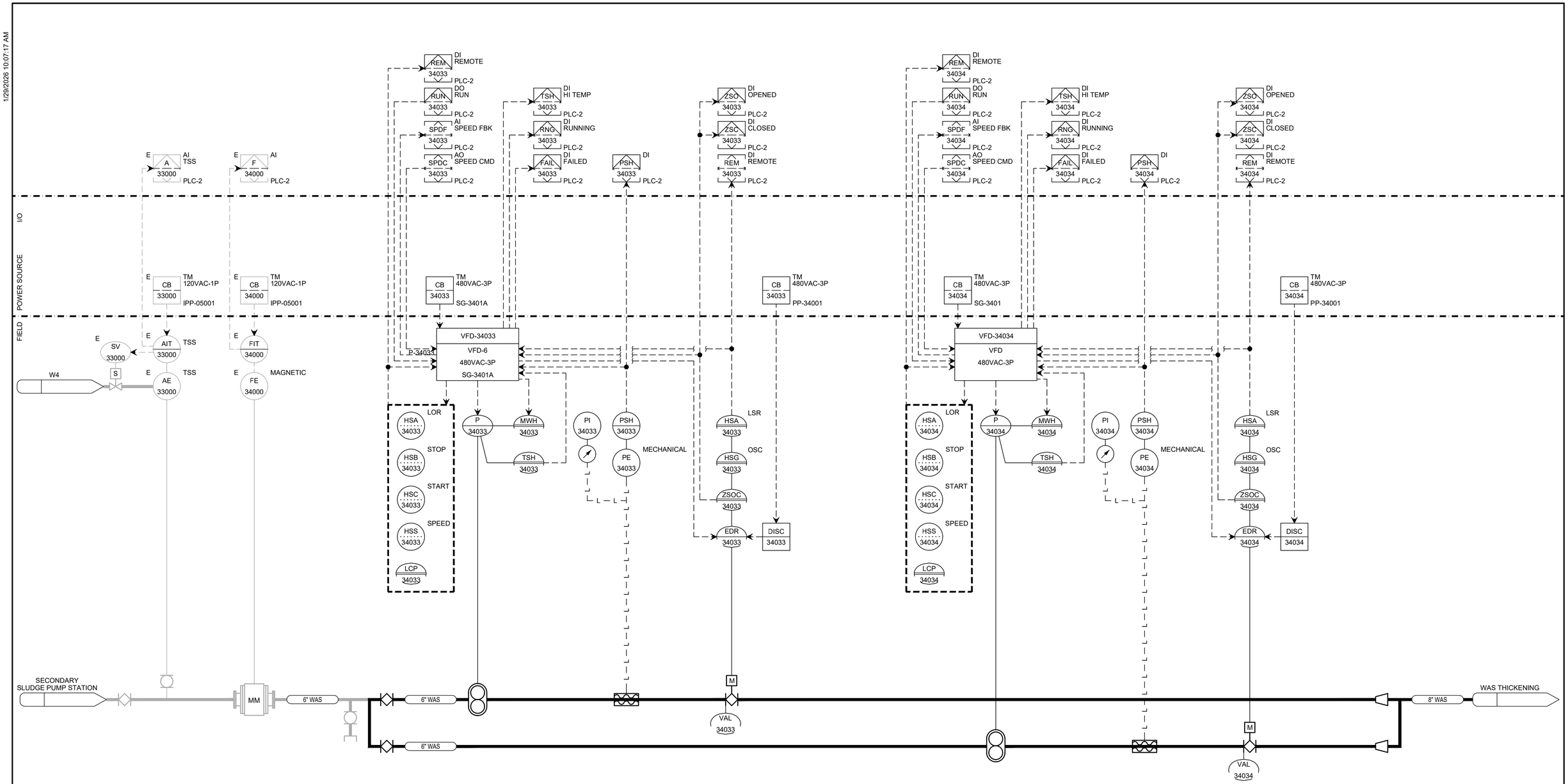

AE-33000
TOTAL SUSPENDED SOLIDS

FE-34000
MAGNETIC FLOW METER

P-34033
WAS PUMP
20HP 480VAC 3PH
2 010N302

PI-34033
PRESSURE INDICATOR
0-160 PSI

PE-34033
PRESSURE SWITCH HIGH
20 PSIG OPEN
* TYP NP501

EDR-34033
ELECTRIC DISCRETE VALVE OPEN/CLOSE

P-34034
WAS PUMP 2
2 010N302

PI-34034
PRESSURE INDICATOR
0-160 PSI

PE-34034
PRESSURE SWITCH HIGH
20 PSIG OPEN
* TYP NP501

EDR-34034
ELECTRIC DISCRETE VALVE OPEN/CLOSE

carollo®

Date	No	Revision	By
	4		
	3		
	2		
	1		

PROJECT ENGINEER MSS
DESIGNED/DRAWN JMR/CGR
INSPECTOR RG

DIRECTOR PUBLIC WORKS
CITY ENGINEER
ASSISTANT DIRECTOR

CITY OF BELLINGHAM, WASHINGTON
PUBLIC WORKS DEPARTMENT
ENGINEERING DIVISION

SCALE
Horiz. AS SHOWN
Vert. AS SHOWN

DATUM
H: NAD 83/98
V: NAVD 88

Job. No. EU194
Date JAN 2026
Field Bk.

POST POINT RESOURCE RECOVERY PLANT
INSTRUMENTATION
WAS PUMPS P&ID

DRAWING NO. 050N102
SHEET NO. 146 OF 198

LAST SAVED BY: CRollins

CONTACT PERSON: STEPHEN DAY, PE SE , PROJECT ENGINEER AT 360-778-7944

PROJECT NO. 202021-100000 FILE NAME: 202021050N102.dwg

1/21/2026 8:24:26 AM

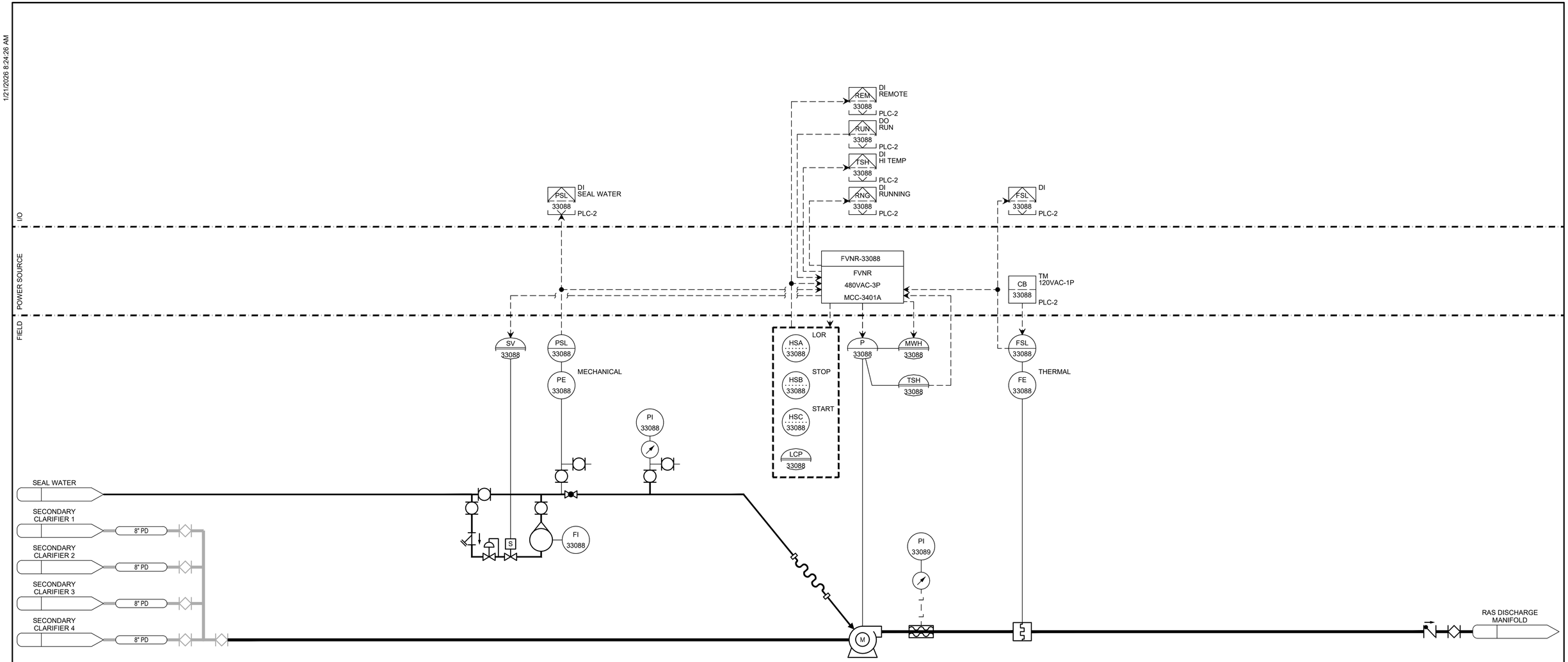

PE-33088
PRESSURE SWITCH LOW
50 PSIG OPEN
* TYP NP501

FI-33088
ROTAMETER
0-2 GPM

PI-33088
PRESSURE INDICATOR
0-100 PSI, 0-230 FT H20
* TYP NP501

PI-33089
PRESSURE INDICATOR
0-60 PSI

P-33088
SECONDARY CLARIFIER DEWATERING PUMP
3 010N303

FE-33088
THERMAL FLOW SWITCH
300 GPM
* TYP NF111

carollo®

Date	No	Revision	By
	4		
	3		
	2		
	1		

PROJECT ENGINEER MSS
DESIGNED/DRAWN CY/CGR
INSPECTOR RG

DIRECTOR PUBLIC WORKS
CITY ENGINEER
ASSISTANT DIRECTOR

CITY OF BELLINGHAM, WASHINGTON
PUBLIC WORKS DEPARTMENT
ENGINEERING DIVISION

SCALE
Horiz. AS SHOWN
Vert. AS SHOWN

DATUM
H: NAD 83/98
V: NAVD 88

Job. No. EU194
Date JAN 2026
Field Bk.

POST POINT RESOURCE RECOVERY PLANT
INSTRUMENTATION
SECONDARY CLARIFIER
DEWATERING PUMP P&ID

DRAWING NO. 340N101
SHEET NO. 147 OF 198

LAST SAVED BY: CRollins

CONTACT PERSON: STEPHEN DAY, PE SE , PROJECT ENGINEER AT 360-778-7944

PROJECT NO. 202021-100000 FILE NAME: 202021340N101.dwg

1/21/2026 8:23:21 AM

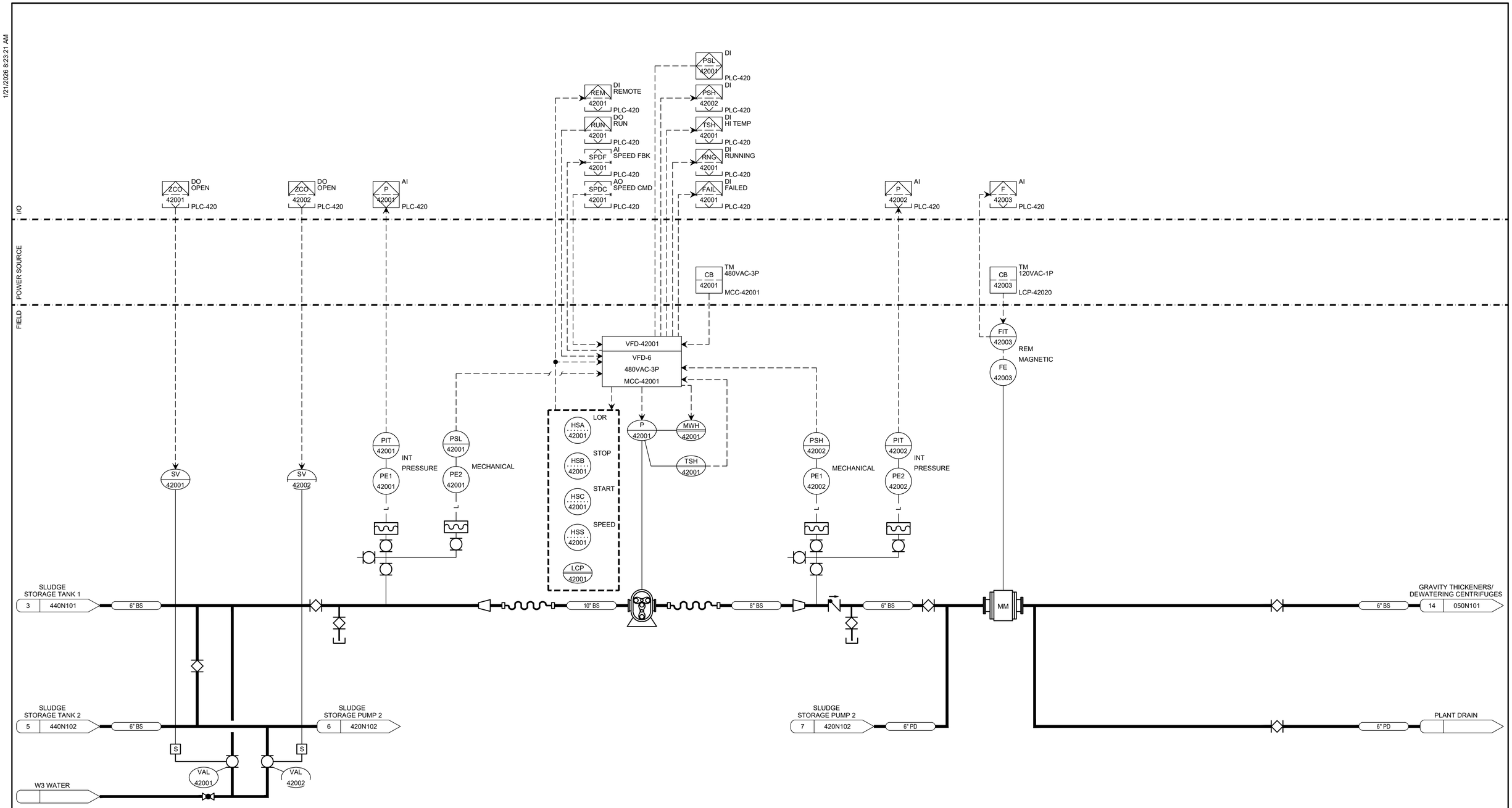

carollo®

Date	No	Revision	By
	4		
	3		
	2		
	1		

PROJECT ENGINEER MSS
DESIGNED/DRAWN CY/CGR
INSPECTOR RG

DIRECTOR PUBLIC WORKS
CITY ENGINEER
ASSISTANT DIRECTOR

CITY OF BELLINGHAM, WASHINGTON
PUBLIC WORKS DEPARTMENT
ENGINEERING DIVISION

SCALE
Horiz. AS SHOWN
Vert. AS SHOWN

DATUM
H: NAD 83/98
V: NAVD 88

Job. No. EU194
Date JAN 2026
Field Bk.

POST POINT RESOURCE RECOVERY PLANT
INSTRUMENTATION
SLUDGE STORAGE PUMP 1 P&ID

DRAWING NO. 420N101
SHEET NO. 148 OF 198

LAST SAVED BY: CRollins

CONTACT PERSON: STEPHEN DAY, PE SE , PROJECT ENGINEER AT 360-778-7944

PROJECT NO. 202021-100000 FILE NAME: 202021420N101.dwg

1/21/2026 8:23:24 AM

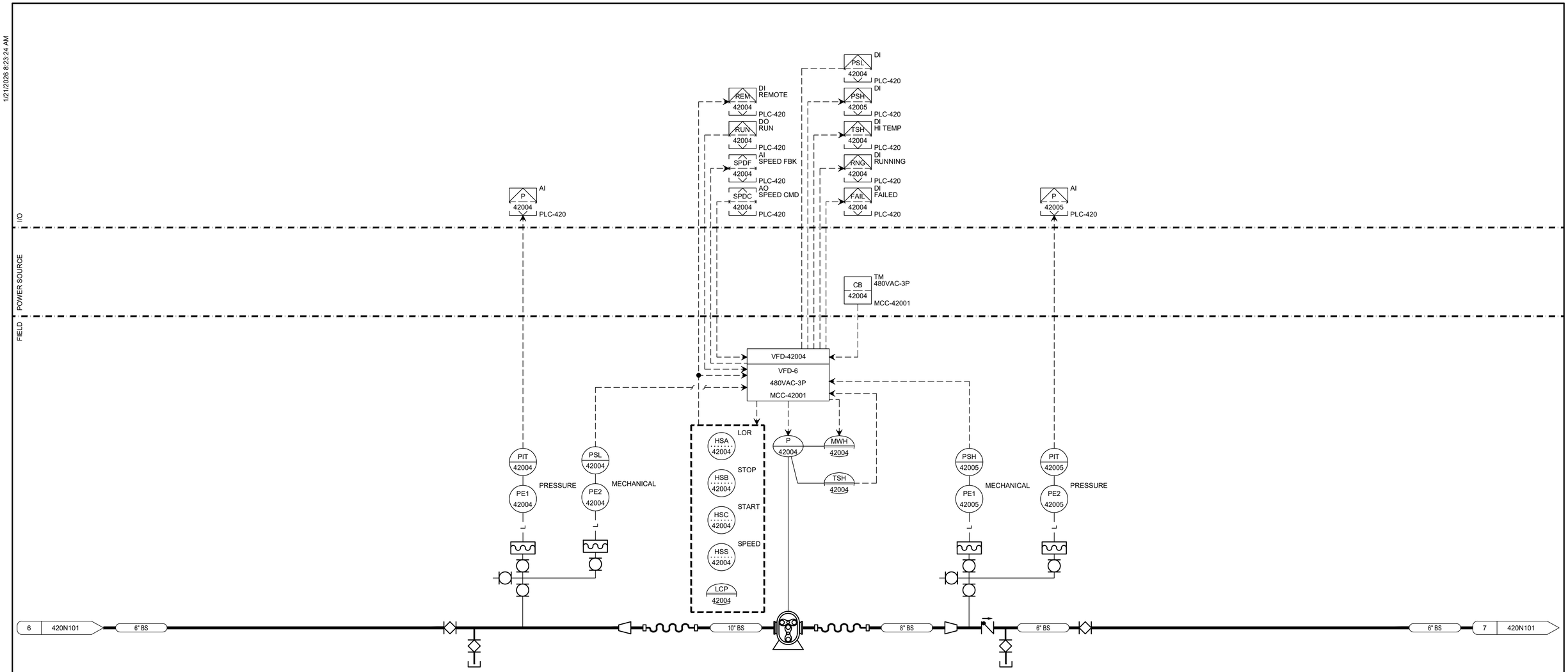

PE2-42004
PRESSURE SWITCH LOW
-5 PSIG OPEN
NP503 TYP

PE1-42004
PRESSURE TRANSMITTER
0-200 PSIG
NP503 TYP

P-42004
SLUDGE STORAGE PUMP 2
30HP 480VAC 3PH
4 010N304

PE1-42005
PRESSURE SWITCH HIGH
150 PSIG OPEN
NP503 TYP

PE2-42005
PRESSURE TRANSMITTER
0-200 PSIG
NP503 TYP

carollo®

Date	No	Revision	By
	4		
	3		
	2		
	1		

PROJECT ENGINEER MSS
DESIGNED/DRAWN CY/KIK
INSPECTOR RG

DIRECTOR PUBLIC WORKS
CITY ENGINEER
ASSISTANT DIRECTOR

CITY OF BELLINGHAM, WASHINGTON
PUBLIC WORKS DEPARTMENT
ENGINEERING DIVISION

SCALE
Horiz. AS SHOWN
Vert. AS SHOWN

DATUM
H: NAD 83/98
V: NAVD 88

Job. No. EU194
Date JAN 2026
Field Bk.

POST POINT RESOURCE RECOVERY PLANT
INSTRUMENTATION
SLUDGE STORAGE PUMP 2 P&ID

DRAWING NO. 420N102
SHEET NO. 149 OF 198

LAST SAVED BY: CRollins

CONTACT PERSON: STEPHEN DAY, PE SE , PROJECT ENGINEER AT 360-778-7944

PROJECT NO. 202021-100000 FILE NAME: 202021420N102.dwg

1/21/2026 8:24:30 AM

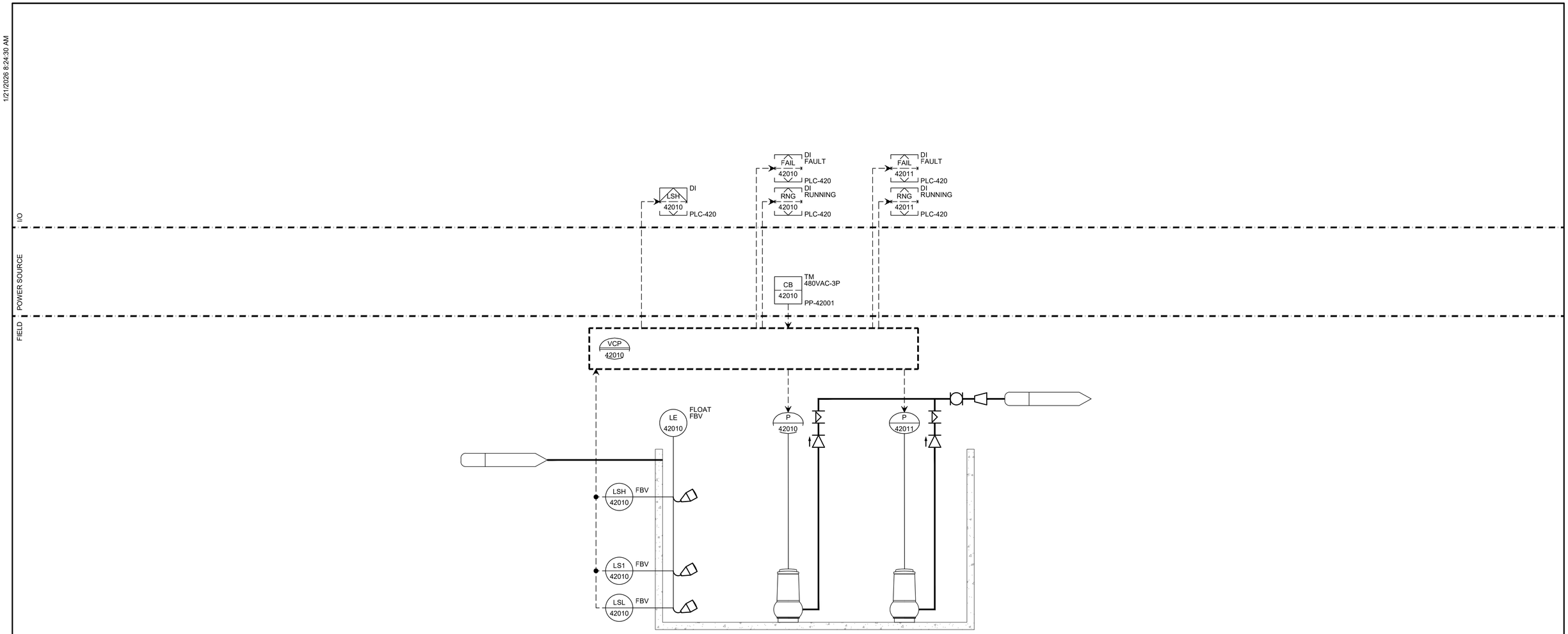

LSH-42010 SUMP LEVEL — NL101 TYP

P-42011
SLUDGE STORAGE BUILDING SUMP PUMP 2
7.5HP 480VAC 3PH

P-42010
SLUDGE STORAGE BUILDING SUMP PUMP 1
7.5HP 480VAC 3PH

carollo®

Date	No	Revision	By
	4		
	3		
	2		
	1		

PROJECT ENGINEER MSS
DESIGNED/DRAWN JMR/KIK
INSPECTOR RG

DIRECTOR PUBLIC WORKS
CITY ENGINEER
ASSISTANT DIRECTOR

CITY OF BELLINGHAM, WASHINGTON
PUBLIC WORKS DEPARTMENT
ENGINEERING DIVISION

SCALE
Horiz. AS SHOWN
Vert. AS SHOWN

DATUM
H: NAD 83/98
V: NAVD 88

Job. No. EU194
Date JAN 2026
Field Bk.

POST POINT RESOURCE RECOVERY PLANT
INSTRUMENTATION
SUMP PUMPS

DRAWING NO. 420N801
SHEET NO. 150 OF 198

LAST SAVED BY: CRollins

CONTACT PERSON: STEPHEN DAY, PE SE , PROJECT ENGINEER AT 360-778-7944

PROJECT NO. 202021-100000 FILE NAME: 202021420N801.dwg

1/21/2026 8:24:00 AM

I/O

POWER SOURCE

FIELD

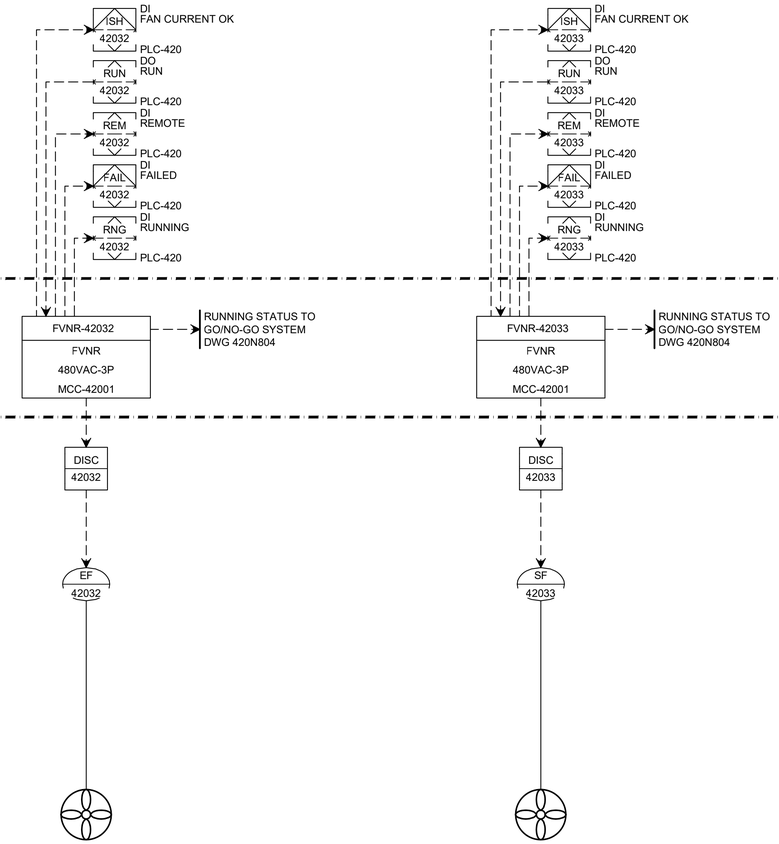

EF-42032
SLUDGE STORAGE BUILDING EXHAUST FAN
0.25HP 480VAC 3PH
7
010N307

SF-42033
SLUDGE STORAGE BUILDING SUPPLY FAN
0.5HP 480VAC 3PH
7
010N307

carollo®

Date	No	Revision	By
	4		
	3		
	2		
	1		

PROJECT ENGINEER MSS
DESIGNED/DRAWN JMR/KIK
INSPECTOR RG

DIRECTOR PUBLIC WORKS
CITY ENGINEER
ASSISTANT DIRECTOR

CITY OF BELLINGHAM, WASHINGTON
PUBLIC WORKS DEPARTMENT
ENGINEERING DIVISION

SCALE
Horiz. AS SHOWN
Vert. AS SHOWN

DATUM
H: NAD 83/98
V: NAVD 88

Job. No. EU194
Date JAN 2026
Field Bk.

POST POINT RESOURCE RECOVERY PLANT
INSTRUMENTATION
HVAC P&ID 1

DRAWING NO. 420N802
SHEET NO. 151 OF 198

LAST SAVED BY: CRollins

CONTACT PERSON: STEPHEN DAY, PE SE , PROJECT ENGINEER AT 360-778-7944

PROJECT NO. 202021-100000 FILE NAME: 202021420N802.dwg

1/29/2026 10:07:23 AM

I/O

POWER SOURCE

FIELD

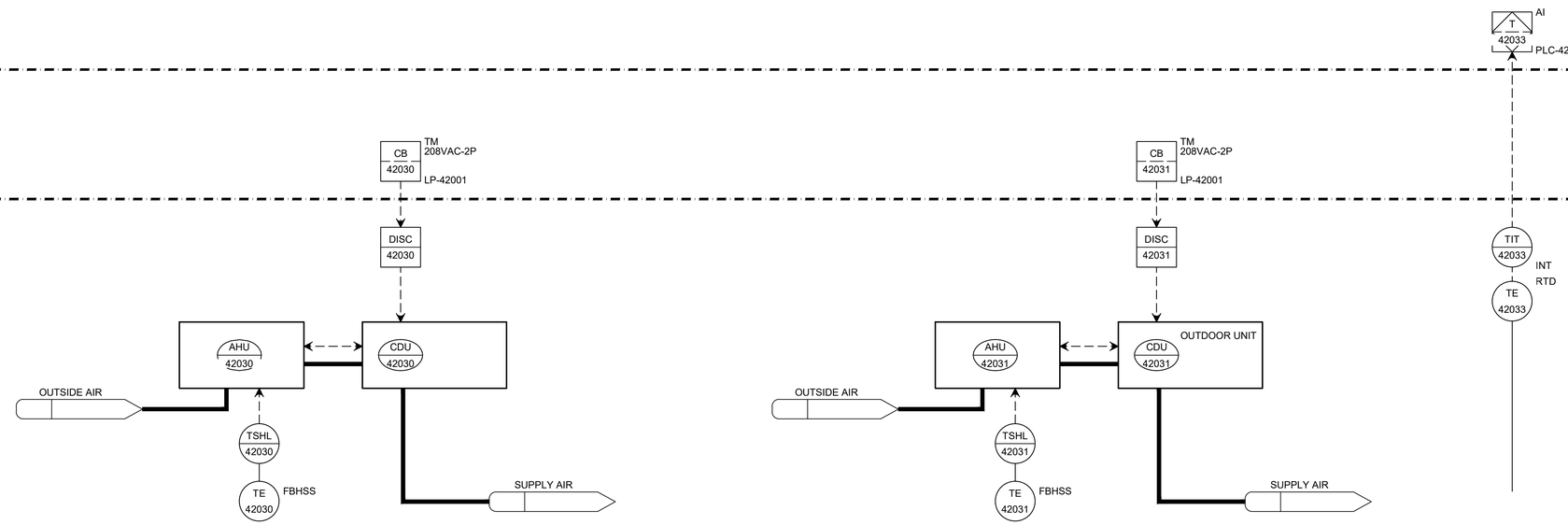

AHU-42030
ELECTRICAL ROOM AIR HANDLING UNIT 1
1AMP 208VAC 1PH

CDU-42030
ELECTRICAL ROOM CONDENSING UNIT 1
25AMP 208VAC 1PH

TE-42030
THERMOSTAT

AHU-42031
ELECTRICAL ROOM AIR HANDLING UNIT 2
1AMP 208VAC 1PH

CDU-42031
ELECTRICAL ROOM CONDENSING UNIT 2
25AMP 208VAC 1PH

TE-42031
THERMOSTAT

TE-42033
TEMPERATURE TRANSMITTER
40-120

carollo®

Date	No	Revision	By
	4		
	3		
	2		
	1		

PROJECT ENGINEER MSS
DESIGNED/DRAWN JMR/KIK
INSPECTOR RG

DIRECTOR PUBLIC WORKS
CITY ENGINEER
ASSISTANT DIRECTOR

CITY OF BELLINGHAM, WASHINGTON
PUBLIC WORKS DEPARTMENT
ENGINEERING DIVISION

SCALE
Horiz. AS SHOWN
Vert. AS SHOWN

DATUM
H: NAD 83/98
V: NAVD 88

Job. No. EU194
Date JAN 2026
Field Bk.

POST POINT RESOURCE RECOVERY PLANT
INSTRUMENTATION
HVAC P&ID 2

DRAWING NO. 420N803
SHEET NO. 152 OF 198

CONTACT PERSON: STEPHEN DAY, PE SE , PROJECT ENGINEER AT 360-778-7944

PROJECT NO. 202021-100000 FILE NAME: 202021420N803.dwg

LAST SAVED BY: CRollins

1/21/2026 8:22:12 AM

I/O

POWER SOURCE

FIELD

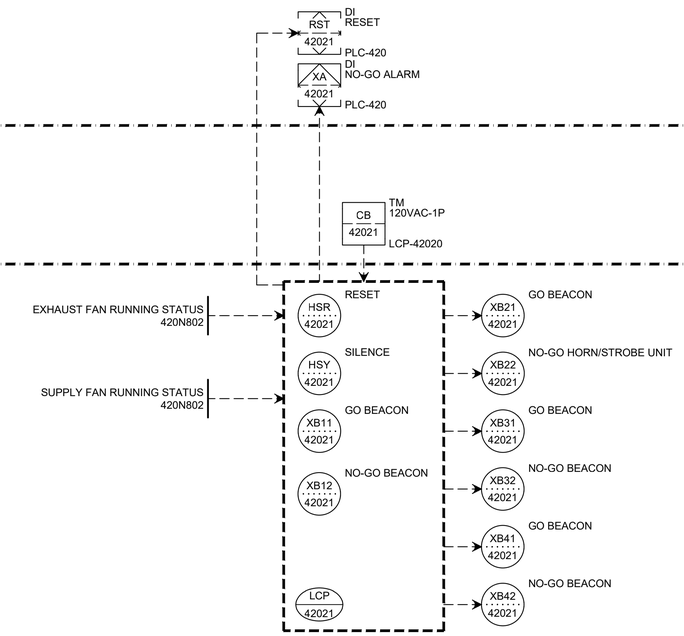

LCP-42021
GO/NO-GO PANEL
8
010N308

carollo®

Date	No	Revision	By
	4		
	3		
	2		
	1		

PROJECT ENGINEER MSS
DESIGNED/DRAWN JMR/KIK
INSPECTOR RG

DIRECTOR PUBLIC WORKS
CITY ENGINEER
ASSISTANT DIRECTOR

CITY OF BELLINGHAM, WASHINGTON
PUBLIC WORKS DEPARTMENT
ENGINEERING DIVISION

SCALE
Horiz. AS SHOWN
Vert. AS SHOWN

DATUM
H: NAD 83/98
V: NAVD 88

Job. No. EU194
Date JAN 2026
Field Bk.

POST POINT RESOURCE RECOVERY PLANT
INSTRUMENTATION
GO/NO-GO SYSTEM P&ID

DRAWING NO. 420N804
SHEET NO. 153 OF 198

LAST SAVED BY: CRollins

CONTACT PERSON: STEPHEN DAY, PE SE , PROJECT ENGINEER AT 360-778-7944

PROJECT NO. 202021-100000 FILE NAME: 202021420N804.dwg

1/21/2026 8:23:32 AM

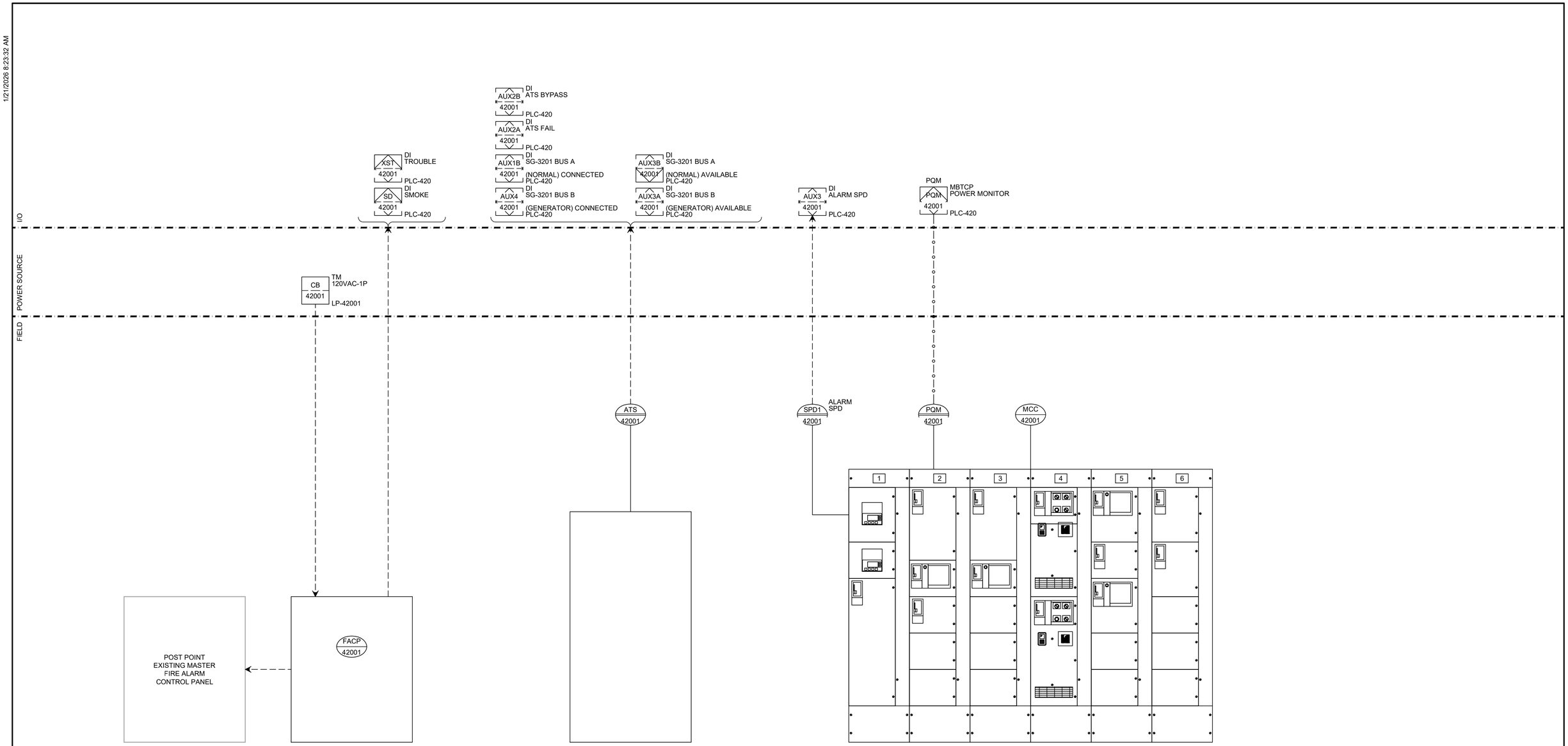

FACP-42001
FIRE ALARM CONTROL PANEL

ATS-42001
AUTOMATIC TRANSFER SWITCH

MCC-42001
MOTOR CONTROL CENTER

carollo®

Date	No	Revision	By
	4		
	3		
	2		
	1		

PROJECT ENGINEER MSS
DESIGNED/DRAWN JMR/KIK
INSPECTOR RG

DIRECTOR PUBLIC WORKS
CITY ENGINEER
ASSISTANT DIRECTOR

CITY OF BELLINGHAM, WASHINGTON
PUBLIC WORKS DEPARTMENT
ENGINEERING DIVISION

SCALE
Horiz. AS SHOWN
Vert. AS SHOWN

DATUM
H: NAD 83/98
V: NAVD 88

Job. No. EU194
Date JAN 2026
Field Bk.

POST POINT RESOURCE RECOVERY PLANT
INSTRUMENTATION
ELECTRICAL EQUIPMENT

DRAWING NO. 420N901
SHEET NO. 154 OF 198

LAST SAVED BY: CRollins

CONTACT PERSON: STEPHEN DAY, PE SE , PROJECT ENGINEER AT 360-778-7944

PROJECT NO. 202021-100000 FILE NAME: 202021420N901.dwg

1/21/2026 8:23:35 AM

I/O

POWER SOURCE

FIELD

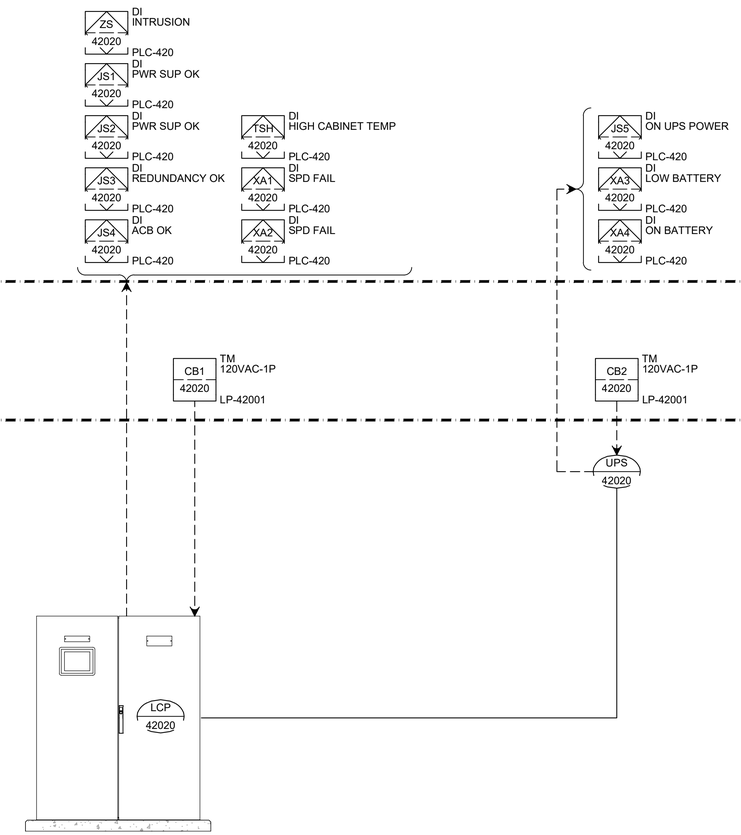

LCP-42020
PCM CABINET
1
010N301

UPS-42020
UPS POWER STATUS

carollo®

Date	No	Revision	By
	4		
	3		
	2		
	1		

PROJECT ENGINEER MSS
DESIGNED/DRAWN JMR/CWG
INSPECTOR RG

DIRECTOR PUBLIC WORKS
CITY ENGINEER
ASSISTANT DIRECTOR

CITY OF BELLINGHAM, WASHINGTON
PUBLIC WORKS DEPARTMENT
ENGINEERING DIVISION

SCALE
Horiz. AS SHOWN
Vert. AS SHOWN

DATUM
H: NAD 83/98
V: NAVD 88

Job. No. EU194
Date JAN 2026
Field Bk.

POST POINT RESOURCE RECOVERY PLANT
INSTRUMENTATION
LCP-42020 MONITORING P&ID

DRAWING NO. 420N902
SHEET NO. 155 OF 198

LAST SAVED BY: CRollins

CONTACT PERSON: STEPHEN DAY, PE SE , PROJECT ENGINEER AT 360-778-7944

PROJECT NO. 202021-100000 FILE NAME: 202021420N902.dwg

1/21/2026 8:22:15 AM

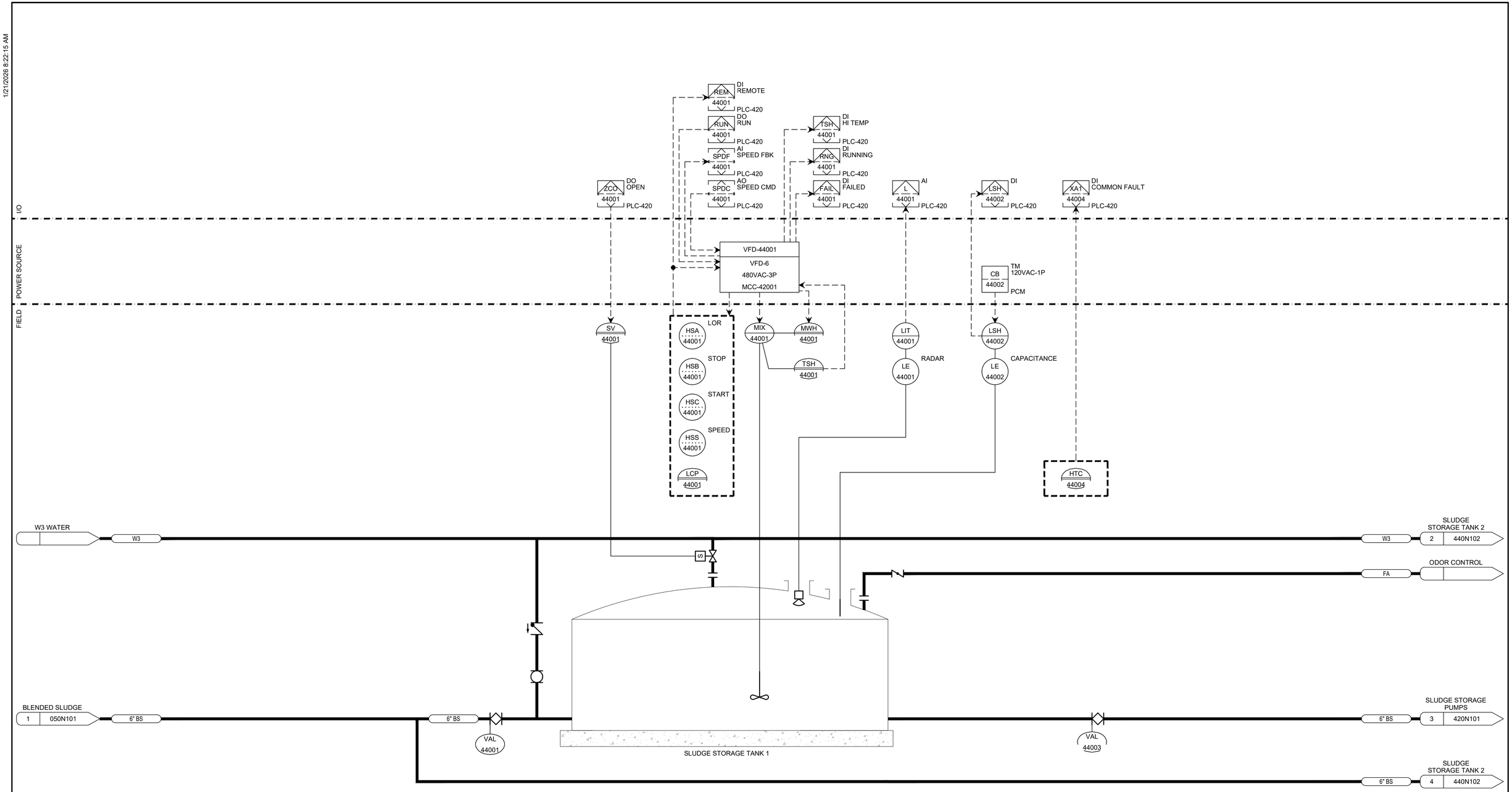

MIX-44001
SLUDGE STORAGE TANK 1 MIXER
10HP 480VAC 3PH
5 / 010N305

LE-44002
CAPACITANCE
27 FT
* / TYP — NL117

LE-44001
RADAR
0-28 FT
* / TYP — NL153

HTC-44004
HEAT TRACE CONTROLLER
24AMP 208VAC 3PH

carollo®

Date	No	Revision	By
	4		
	3		
	2		
	1		

PROJECT ENGINEER MSS
DESIGNED/DRAWN CY/CGR
INSPECTOR RG

DIRECTOR PUBLIC WORKS
CITY ENGINEER
ASSISTANT DIRECTOR

CITY OF BELLINGHAM, WASHINGTON
PUBLIC WORKS DEPARTMENT
ENGINEERING DIVISION

SCALE
Horiz. AS SHOWN
Vert. AS SHOWN

DATUM
H: NAD 83/98
V: NAVD 88

Job. No. EU194
Date JAN 2026
Field Bk.

POST POINT RESOURCE RECOVERY PLANT
INSTRUMENTATION
SLUDGE STORAGE TANK 1 P&ID

DRAWING NO. 440N101
SHEET NO. 156 OF 198

LAST SAVED BY: CRollins

CONTACT PERSON: STEPHEN DAY, PE SE , PROJECT ENGINEER AT 360-778-7944

PROJECT NO. 202021-100000 FILE NAME: 202021440N101.dwg

1/21/2026 8:24:33 AM

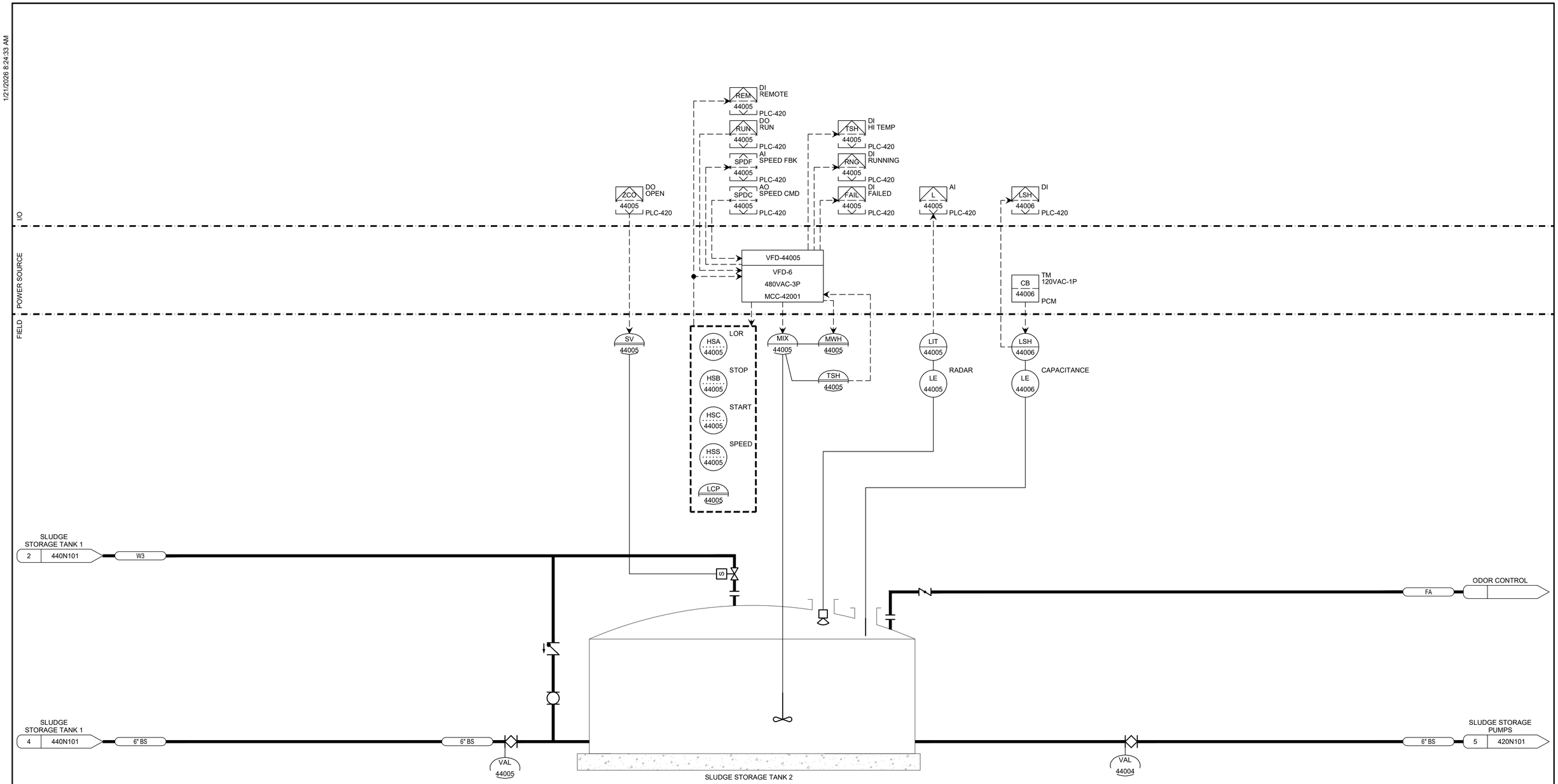

MIX-44005
SLUDGE STORAGE TANK 2 MIXER
10HP 480VAC 3PH
5 / 010N305

LE-44006
CAPACITANCE
27 FT
* / TYP NL117

LE-44005
RADAR
0-28 FT
* / TYP NL153

carollo®

Date	No	Revision	By
	4		
	3		
	2		
	1		

PROJECT ENGINEER MSS
DESIGNED/DRAWN CY/CGR
INSPECTOR RG

DIRECTOR PUBLIC WORKS
CITY ENGINEER
ASSISTANT DIRECTOR

CITY OF BELLINGHAM, WASHINGTON
PUBLIC WORKS DEPARTMENT
ENGINEERING DIVISION

SCALE
Horiz. AS SHOWN
Vert. AS SHOWN

DATUM
H: NAD 83/98
V: NAVD 88

Job. No. EU194
Date JAN 2026
Field Bk.

POST POINT RESOURCE RECOVERY PLANT
INSTRUMENTATION
SLUDGE STORAGE TANK 2 P&ID

DRAWING NO. 440N102
SHEET NO. 157 OF 198

LAST SAVED BY: CRollins

CONTACT PERSON: STEPHEN DAY, PE SE , PROJECT ENGINEER AT 360-778-7944

PROJECT NO. 202021-100000 FILE NAME: 202021440N102.dwg

1/21/2026 8:23:38 AM

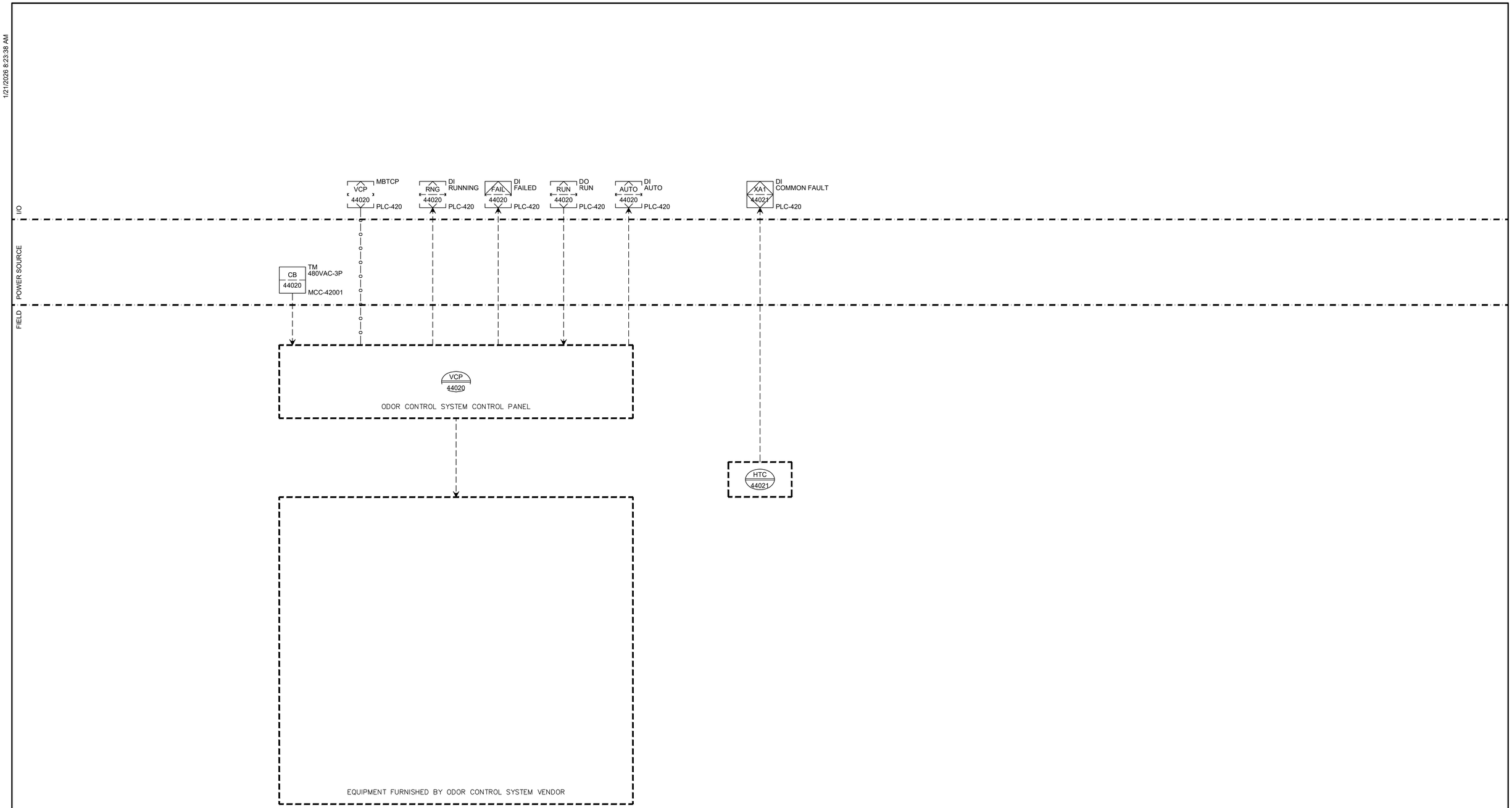

HTC-44021
HEAT TRACE CONTROLLER
24AMP 208VAC 3PH

carollo®

Date	No	Revision	By
	4		
	3		
	2		
	1		

PROJECT ENGINEER MSS
DESIGNED/DRAWN JMR/KIK
INSPECTOR RG

DIRECTOR PUBLIC WORKS
CITY ENGINEER
ASSISTANT DIRECTOR

CITY OF BELLINGHAM, WASHINGTON
PUBLIC WORKS DEPARTMENT
ENGINEERING DIVISION

SCALE
Horiz. AS SHOWN
Vert. AS SHOWN

DATUM
H: NAD 83/98
V: NAVD 88

Job. No. EU194
Date JAN 2026
Field Bk.

POST POINT RESOURCE RECOVERY PLANT
INSTRUMENTATION
ODOR CONTROL SYSTEM P&ID

DRAWING NO. 440N801
SHEET NO. 158 OF 198

CONTACT PERSON: STEPHEN DAY, PE SE , PROJECT ENGINEER AT 360-778-7944

PROJECT NO. 202021-100000 FILE NAME: 202021440N801.dwg

LAST SAVED BY: CRollins

1/21/2026 8:24:03 AM

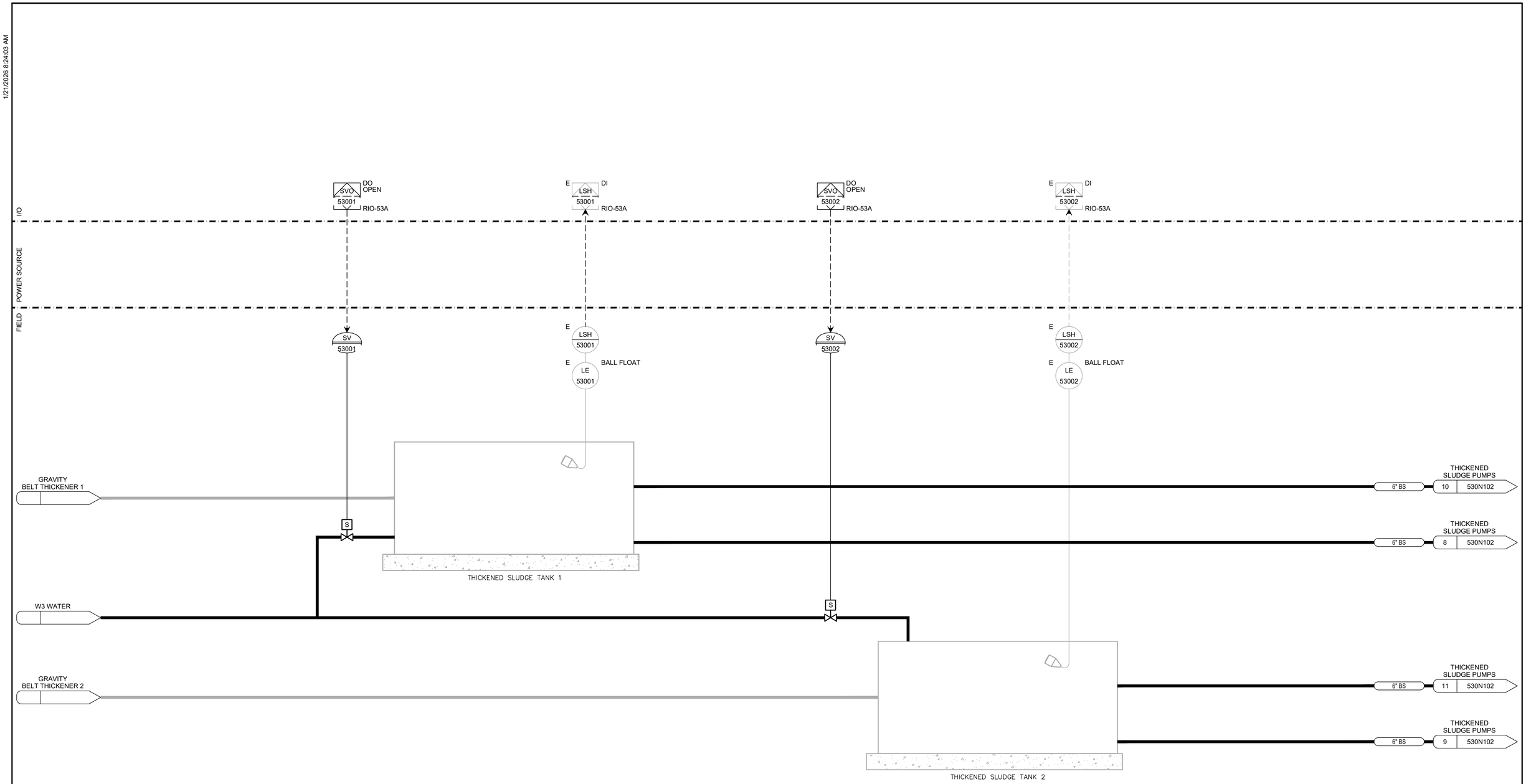

carollo®

Date	No	Revision	By
	4		
	3		
	2		
	1		

PROJECT ENGINEER MSS
DESIGNED/DRAWN JMR/CGR
INSPECTOR RG

DIRECTOR PUBLIC WORKS
CITY ENGINEER
ASSISTANT DIRECTOR

CITY OF BELLINGHAM, WASHINGTON
PUBLIC WORKS DEPARTMENT
ENGINEERING DIVISION

SCALE
Horiz. AS SHOWN
Vert. AS SHOWN

DATUM
H: NAD 83/98
V: NAVD 88

Job. No. EU194
Date JAN 2026
Field Bk.

POST POINT RESOURCE RECOVERY PLANT
INSTRUMENTATION
THICKENED SLUDGE TANKS P&ID

DRAWING NO. 530N101
SHEET NO. 159 OF 198

CONTACT PERSON: STEPHEN DAY, PE SE , PROJECT ENGINEER AT 360-778-7944

PROJECT NO. 202021-100000 FILE NAME: 202021530N101.dwg

LAST SAVED BY: CRollins

1/21/2026 8:23:42 AM

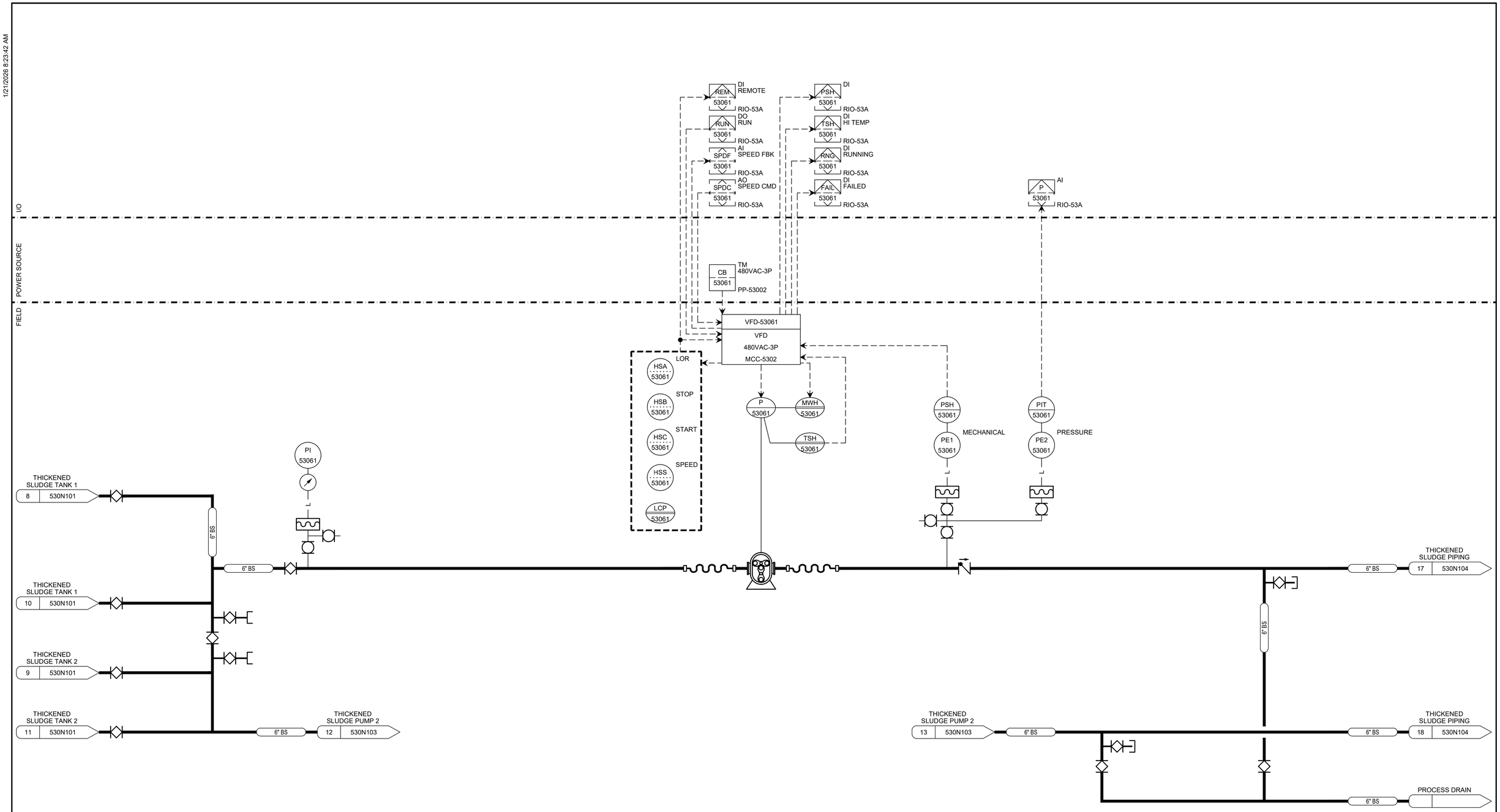

carollo®

Date	No	Revision	By
	4		
	3		
	2		
	1		

PROJECT ENGINEER MSS
DESIGNED/DRAWN CY/CGR
INSPECTOR RG

DIRECTOR PUBLIC WORKS
CITY ENGINEER
ASSISTANT DIRECTOR

CITY OF BELLINGHAM, WASHINGTON
PUBLIC WORKS DEPARTMENT
ENGINEERING DIVISION

SCALE
Horiz. AS SHOWN
Vert. AS SHOWN

DATUM
H: NAD 83/98
V: NAVD 88

Job. No. EU194
Date JAN 2026
Field Bk.

POST POINT RESOURCE RECOVERY PLANT
INSTRUMENTATION
THICKENED SLUDGE PUMP 1 P&ID

DRAWING NO. 530N102
SHEET NO. 160 OF 198

LAST SAVED BY: CRollins

CONTACT PERSON: STEPHEN DAY, PE SE , PROJECT ENGINEER AT 360-778-7944

PROJECT NO. 202021-100000 FILE NAME: 202021530N102.dwg

1/21/2026 8:22:19 AM

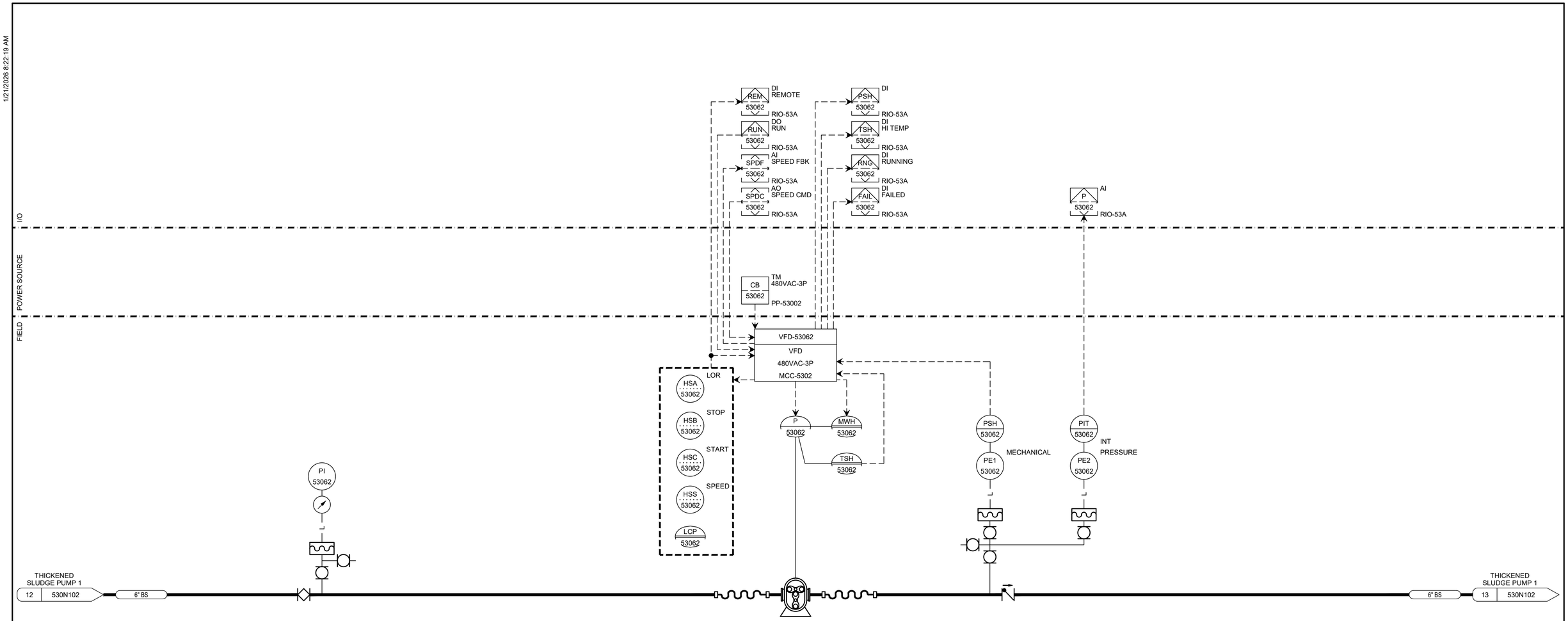

PI-53062
PRESSURE INDICATOR
30" HG/15 PSI
NP503 TYP

P-53062
THICKENED SLUDGE PUMP 2
30HP 480VAC 3PH
6
010N306

PE1-53062
PRESSURE SWITCH HIGH
100 PSIG OPEN
NP503 TYP

PE2-53062
PRESSURE TRANSMITTER
0-150 PSIG

carollo®

Date	No	Revision	By
	4		
	3		
	2		
	1		

PROJECT ENGINEER MSS
DESIGNED/DRAWN CY/CGR
INSPECTOR RG

DIRECTOR PUBLIC WORKS
CITY ENGINEER
ASSISTANT DIRECTOR

CITY OF BELLINGHAM, WASHINGTON
PUBLIC WORKS DEPARTMENT
ENGINEERING DIVISION

SCALE
Horiz. AS SHOWN
Vert. AS SHOWN

DATUM
H: NAD 83/98
V: NAVD 88

Job. No. EU194
Date JAN 2026
Field Bk.

POST POINT RESOURCE RECOVERY PLANT
INSTRUMENTATION
THICKENED SLUDGE PUMP 2 P&ID

DRAWING NO. 530N103
SHEET NO. 161 OF 198

LAST SAVED BY: CRollins

CONTACT PERSON: STEPHEN DAY, PE SE , PROJECT ENGINEER AT 360-778-7944

PROJECT NO. 202021-100000 FILE NAME: 202021530N103.dwg

1/29/2026 10:07:20 AM

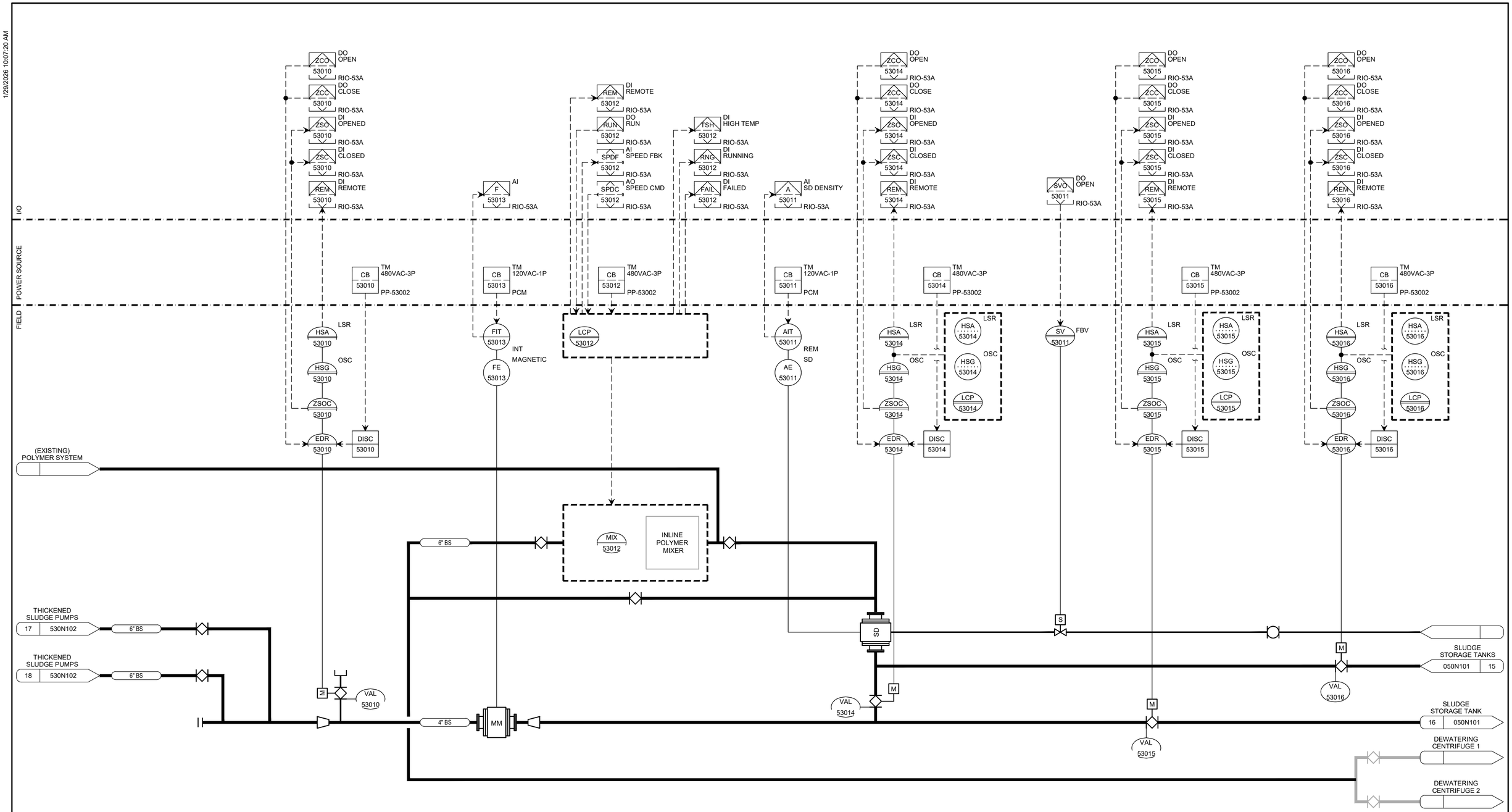

EDR-53010
TSL SAMPLE VALVE
1.1AMP 480VAC 3PH

FE-53013 * TYP NF130 NF136
MAGNETIC FLOW METER
0-500 GPM
4"

MIX-53012 2 010N302
INLINE POLYMER MIXER
3HP 480VAC 3PH

AE-53011 * TYP NA901
SLUDGE DENSITY METER
0-10%
4"

EDR-53014
SST BYPASS VALVE
1.1AMP 480VAC 3PH

EDR-53015
SST FEED VALVE
1.1AMP 480VAC 3PH

EDR-53016
SST RETURN VALVE
1.1AMP 480VAC 3PH

carollo®

Date	No	Revision	By
	4		
	3		
	2		
	1		

PROJECT ENGINEER MSS
DESIGNED/DRAWN CY/CGR
INSPECTOR RG

DIRECTOR PUBLIC WORKS
CITY ENGINEER
ASSISTANT DIRECTOR

CITY OF BELLINGHAM, WASHINGTON
PUBLIC WORKS DEPARTMENT
ENGINEERING DIVISION

SCALE
Horiz. AS SHOWN
Vert. AS SHOWN

DATUM
H: NAD 83/98
V: NAVD 88

Job. No. EU194
Date JAN 2026
Field Bk.

POST POINT RESOURCE RECOVERY PLANT
INSTRUMENTATION
THICKENED SLUDGE PIPING P&ID

DRAWING NO. 530N104
SHEET NO. 162 OF 198

LAST SAVED BY: CRollins

CONTACT PERSON: STEPHEN DAY, PE SE , PROJECT ENGINEER AT 360-778-7944

PROJECT NO. 202021-100000 FILE NAME: 202021530N104.dwg

1/21/2026 8:24:07 AM

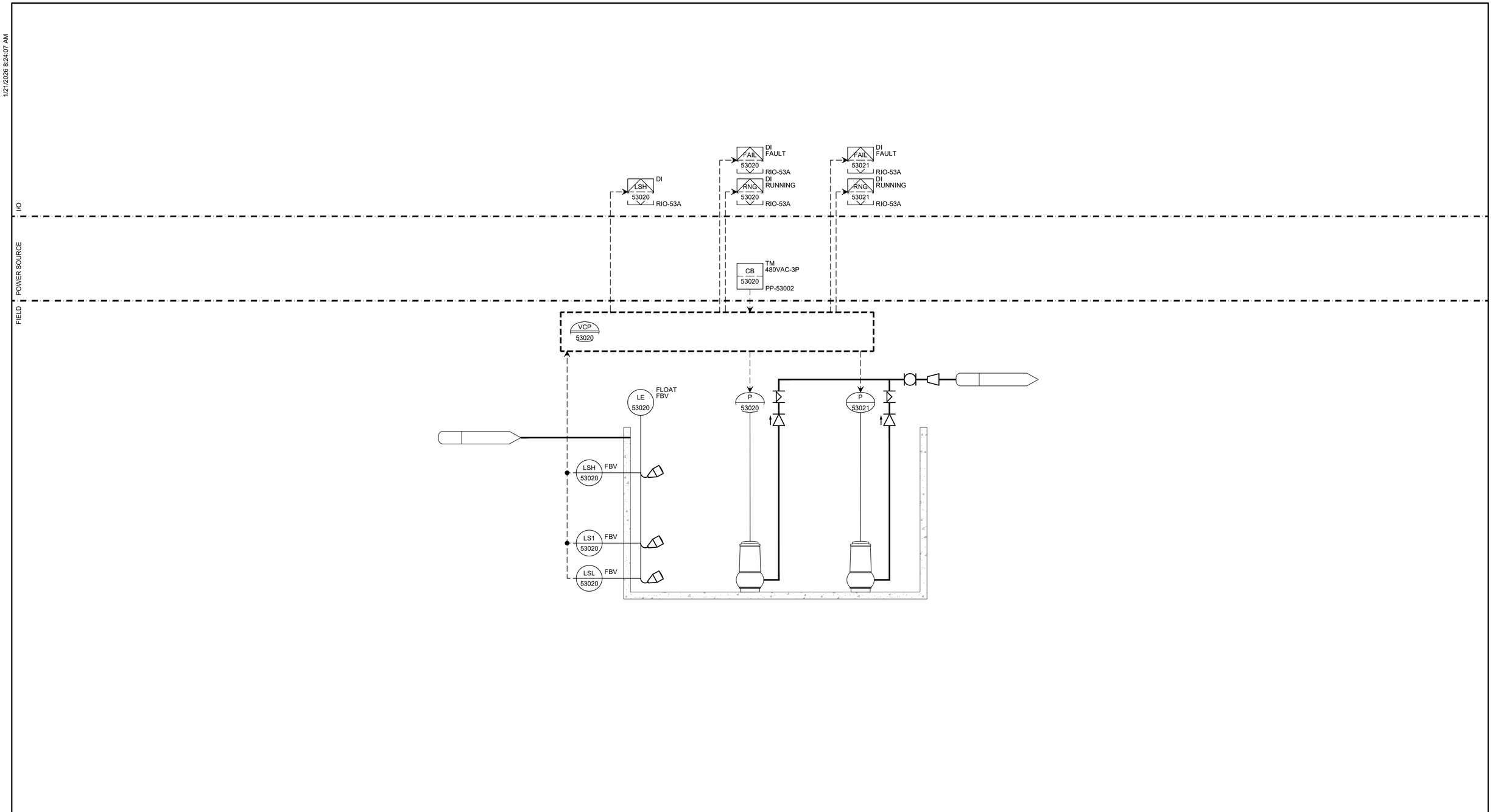

LSH-53020
SUMP LEVEL

P-53020
SUMP PUMP 1
7.5HP 480VAC 3PH

P-53021
SUMP PUMP 2
7.5HP 480VAC 3PH

carollo®

Date	No	Revision	By
	4		
	3		
	2		
	1		

PROJECT ENGINEER MSS
DESIGNED/DRAWN JMR/WC
INSPECTOR RG

DIRECTOR PUBLIC WORKS
CITY ENGINEER
ASSISTANT DIRECTOR

CITY OF BELLINGHAM, WASHINGTON
PUBLIC WORKS DEPARTMENT
ENGINEERING DIVISION

SCALE
Horiz. AS SHOWN
Vert. AS SHOWN

DATUM
H: NAD 83/98
V: NAVD 88

Job. No. EU194
Date JAN 2026
Field Bk.

POST POINT RESOURCE RECOVERY PLANT
INSTRUMENTATION
SUMP PUMPS

DRAWING NO. 530N801
SHEET NO. 163 OF 198

LAST SAVED BY: CRollins

CONTACT PERSON: STEPHEN DAY, PE SE , PROJECT ENGINEER AT 360-778-7944

PROJECT NO. 202021-100000 FILE NAME: 202021530N801.dwg

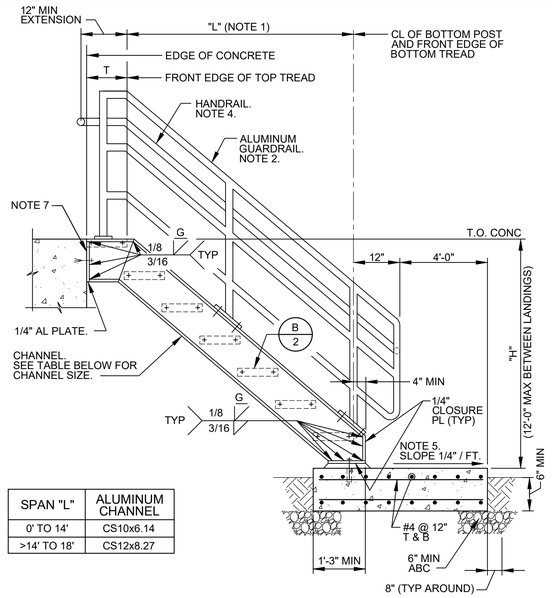

SPAN "L"	ALUMINUM CHANNEL
0' TO 14'	CS10x6.14
>14' TO 18'	CS12x8.27

A - ELEVATION - STAIRS

AC101 TYP — STAIRS - ALUMINUM - FLUSH TOP - THREE RAIL

NS — SHEET 1 OF 3 — 06/10/22

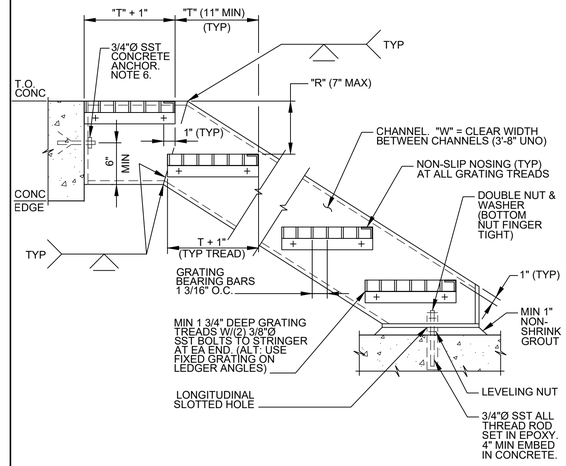

B 1 SECTION - STAIR TREADS

AC101 TYP — STAIRS - ALUMINUM - FLUSH TOP - THREE RAIL

NS — SHEET 2 OF 3 — 06/10/22

NOTES:

1. SEE DRAWINGS FOR DIMENSIONS "H", "L", "R", "T" AND "W".
2. SEE DETAIL AC500/TYP FOR ALUMINUM GUARDRAIL NOTES AND DETAIL AC504/TYP FOR ALUMINUM GUARDRAIL DETAILS.
3. COAT ALUMINUM SURFACES IN CONTACT WITH CONCRETE, AND INSTALL ISOLATION SLEEVES AND WASHERS BETWEEN DISSIMILAR METALS AS SPECIFIED.
4. PROVIDE HANDRAIL EXTENSIONS AS SHOWN AT BOTH SIDES OF STAIR, UNLESS HANDRAIL IS CONTINUOUS (AS AT SWITCHBACK STAIR).
5. AT EXTERIOR STAIRS, PROVIDE CONCRETE SLAB ON GRADE UNLESS OTHERWISE INDICATED ON THE DRAWINGS. MINIMUM CONCRETE SLAB WIDTH = STAIR CLEAR WIDTH ("W") PLUS 2'-0" (12" EACH SIDE). EDGE TOP CORNERS OF SLAB TO 1/4" RADIUS.
6. INSTALL CONCRETE ANCHORS MIN 6" FROM BOTTOM AND 6" FROM SIDES/EDGES OF CONCRETE.
7. CONNECTION TO CONCRETE SHOWN. SEE DETAIL AC120/TYP FOR CONNECTION AT METAL FRAMING.

AC101 TYP — STAIRS - ALUMINUM - FLUSH TOP - THREE RAIL

NS — SHEET 3 OF 3 — 06/10/22

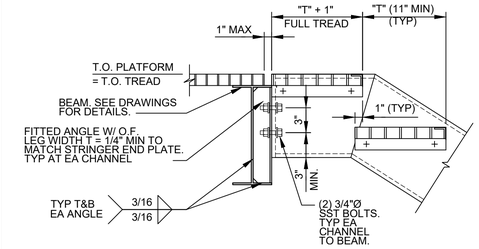

A - CONNECTION TO BEAM

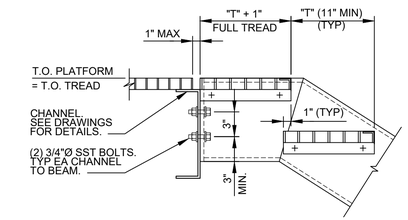

B - CONNECTION TO ALUMINUM CHANNEL

NOTES:

1. INSTALL ISOLATION SLEEVES AND DIELECTRIC BREAKS BETWEEN DISSIMILAR METALS. SEE SPECIFICATIONS.

AC120 TYP — STAIRS - ALUMINUM - FLUSH TOP

NS — 10/10/22

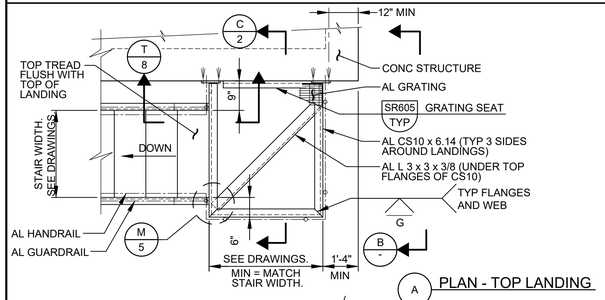

A PLAN - TOP LANDING

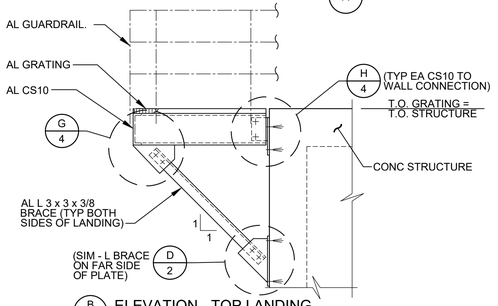

B - ELEVATION - TOP LANDING

AC130 TYP — STAIRS - ALUMINUM - LANDINGS

NS — SHEET 1 OF 8 — 03/05/24

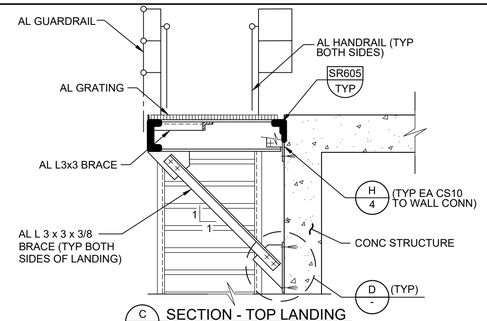

C 1 SECTION - TOP LANDING

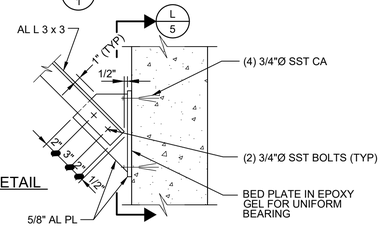

D 1 DETAIL

NOTES:

1. BEFORE DRILLING CONCRETE FOR ANCHORS, LAY OUT ALL ANCHOR PLATES AND HOLES. FIELD LOCATE REINFORCEMENT WITHIN 6" OF EACH HOLE. ADJUST PLATE LOCATIONS HORIZONTALLY TO AVOID MAXIMUM NUMBER OF BARS.
2. COAT ALUMINUM SURFACES IN CONTACT WITH CONCRETE, AND INSTALL ISOLATION SLEEVES AND WASHERS AT DISSIMILAR METALS, AS SPECIFIED.

AC130 TYP — STAIRS - ALUMINUM - LANDINGS

NS — SHEET 2 OF 8 — 03/05/24

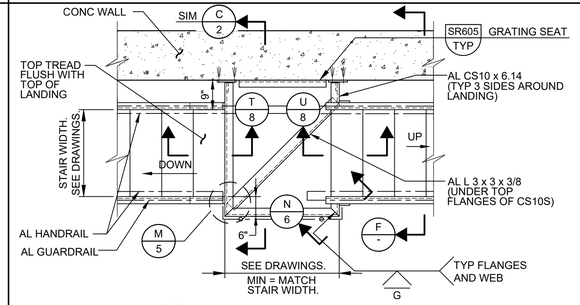

E PLAN - INTERMEDIATE LANDING

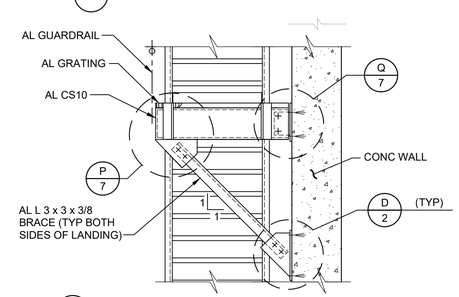

F - SECTION - INTERMEDIATE LANDING

AC130 TYP — STAIRS - ALUMINUM - LANDINGS

NS — SHEET 3 OF 8 — 03/05/24

carollo®

Date	No	Revision	By
	4		
	3		
	2		
	1		

PROJECT ENGINEER HCC
DESIGNED/DRAWN DE
INSPECTOR JAD / KA

DIRECTOR PUBLIC WORKS
CITY ENGINEER
ASSISTANT DIRECTOR

CITY OF BELLINGHAM, WASHINGTON
PUBLIC WORKS DEPARTMENT
ENGINEERING DIVISION

SCALE — Horiz. AS SHOWN — Vert. AS SHOWN
DATUM — H: NAD 83/98 — V: NAVD 88
Job. No. EU194 — Date JAN 2026 — Field Bk.

POST POINT RESOURCE RECOVERY PLANT
TYPICAL DETAILS
ARCHITECTURAL TYPICAL DETAILS 1

DRAWING NO. 800TA001
SHEET NO. 164 OF 198

CONTACT PERSON: STEPHEN DAY, PE SE , PROJECT ENGINEER AT 360-778-7944

PROJECT NO. 202021-100000 FILE NAME: 202021800TA001.dwg

LAST SAVED BY: lveloz

1/26/2026 2:04:23 PM

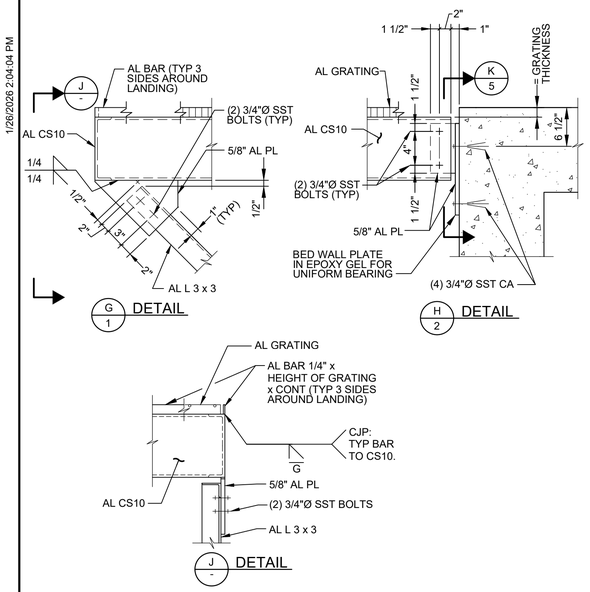

AC130 TYP STAIRS - ALUMINUM - LANDINGS

NS SHEET 4 OF 8 03/05/24

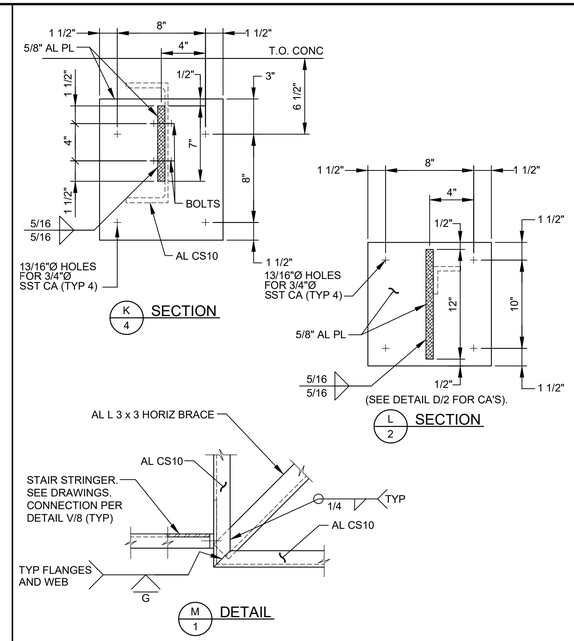

AC130 TYP STAIRS - ALUMINUM - LANDINGS

NS SHEET 5 OF 8 03/05/24

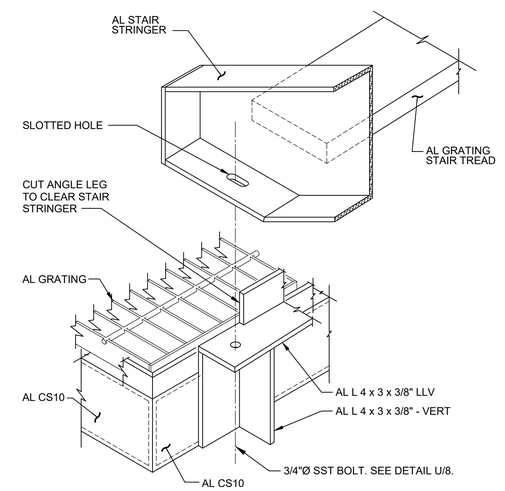

AC130 TYP STAIRS - ALUMINUM - LANDINGS

NS SHEET 6 OF 8 03/05/24

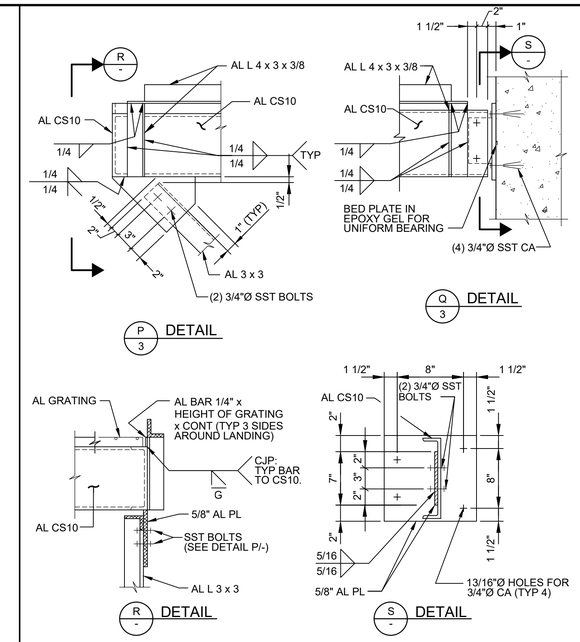

AC130 TYP STAIRS - ALUMINUM - LANDINGS

NS SHEET 7 OF 8 03/05/24

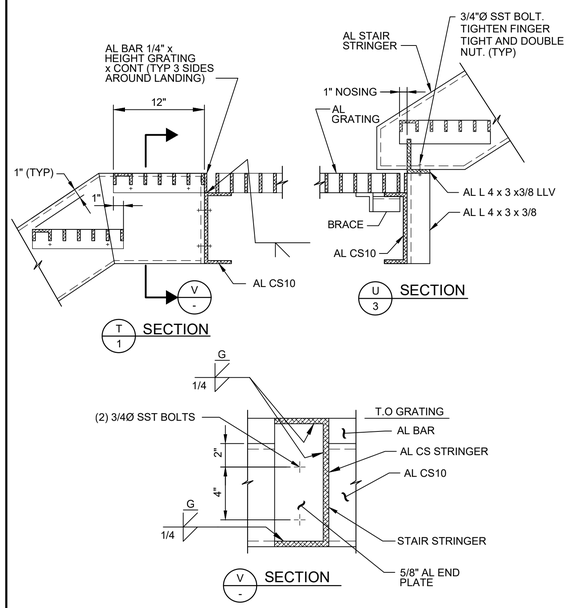

AC130 TYP STAIRS - ALUMINUM - LANDINGS

NS SHEET 8 OF 8 03/05/24

NOTES:

1. PROVIDE GUARDRAILS AT STAIRS AND AT OPEN SIDED WALKING SURFACES THAT ARE ELEVATED MORE THAN 30" ABOVE GRADE OR ADJACENT CONSTRUCTION.
2. WHERE EQUIPMENT IS LOCATED LESS THAN 10' FROM EDGE OF ROOF AND ELEVATED MORE THAN 30" ABOVE GRADE OR ADJACENT CONSTRUCTION, PROVIDE 42" HIGH GUARDRAIL FORMING A PROTECTIVE BARRIER. PARAPET WALL 42" OR MORE IN HEIGHT MAY BE THE GUARDRAIL AT ROOF LOCATIONS.
3. SEE DRAWINGS AND SPECIFICATIONS FOR GUARDRAIL MATERIAL TYPE(S).
4. PROVIDE HANDRAIL AT BOTH SIDES OF EVERY STAIR HAVING 2 OR MORE RISERS.
5. PROVIDE CONTINUOUS HANDRAIL GRIPPING SURFACES FOR THE FULL LENGTH OF THE STAIR.
6. PROVIDE HANDRAIL EXTENSIONS AT BOTH SIDES OF STAIRS AT TOP AND BOTTOM. HANDRAIL EXTENSION ON STAIR MOUNTED GUARDRAIL MAY BE OMITTED WHERE IT IS PERPENDICULAR TO AND IMPEDES EXIT FLOW.
7. MAKE INSIDE HANDRAIL ON SWITCHBACK STAIRS CONTINUOUS.
8. FOR WALL MOUNTED HANDRAILS, PROVIDE SINGLE RAIL WITH TOP OF RAIL AT 2'-10" HEIGHT ABOVE LANDINGS OR TREAD NOSINGS. PROVIDE MATCHING HANDRAIL ON OPPOSITE SIDE.
9. GUARDRAIL SHALL BE FIXED UNLESS OTHERWISE INDICATED ON THE DRAWINGS.
10. PLACE CENTER OF EMBEDDED POSTS 6" FROM EDGE OF CONCRETE AND 6" FROM FRONT EDGE OF CONCRETE STAIR NOSINGS UNLESS OTHERWISE INDICATED ON THE DRAWINGS.
11. PLACE GUARDRAIL POSTS OPPOSITE EACH OTHER WHERE RAILINGS ARE PARALLEL.
12. FOR GUARDRAIL POSTS MOUNTED TO BEAM OR STAIR CHANNEL, PROVIDE MANUFACTURERS REINFORCED CONNECTION FROM POST TO PLATE. PLATE AND REINFORCED INSERTS SHALL BE ALUMINUM OR STAINLESS STEEL.
13. PROVIDE SLIDING JOINTS AT 24' MAX SPACING FOR EXPANSION OF RAIL AND KICKPLATE. LOCATE SLIDING JOINTS NEAR FACE OF POST. GAP AT TIME OF INSTALLATION SHALL BE BASED ON TEMPERATURE OF GUARDRAIL. PROVIDE 1/4" GAP AT 100°F AND 5/8" GAP AT 0°F. INTERPOLATE GAP FOR OTHER INSTALLATION TEMPERATURES. AT CONCRETE EXPANSION JOINTS, PROVIDE MINIMUM 1" GAP IN SLIDING JOINTS BUT NOT LESS THAN WIDTH OF CONCRETE EXPANSION JOINT. MAKE INSERT SLEEVES IN RAILS LONG ENOUGH TO ALLOW FOR THE FULL RANGE OF MOVEMENT.
14. MATERIAL FOR KICKPLATE CHANNEL SLIDING JOINT PLATES, SHALL BE OF THE SAME MATERIAL AS THE GUARDRAIL.
15. JOINTS FOR STAINLESS STEEL GUARDRAIL AND HANDRAIL SHALL BE COPED, WELDED, AND GROUND SMOOTH.
16. PROVIDE KICKPLATE AT ALL LOCATIONS EXCEPT AT SLOPING GUARDRAIL ON STAIRS AND WHERE GUARDRAIL IS MOUNTED ON A 4" MIN CURB. KICKPLATE MAY BE EXTRUDED OR BENT PLATE AND SHALL BE ATTACHED WITH SST BOLTS IN 5/16" x 3/4" SLOTTED HOLES. BOLT KICKPLATE TO POST WITH BOTTOM 1/4" CLEAR ABOVE FLOOR. FOR SIDE MOUNTED GUARDRAIL, PROVIDE STANDARD SPACER BLOCK BETWEEN POST AND KICKPLATE TO MAINTAIN 1/4" MAX CLEAR SPACING. HAND TIGHTEN AND CENTER PUNCH BOLT THREADS TO LOCK.
17. COAT SURFACES OF ALUMINUM IN CONTACT WITH CONCRETE AS SPECIFIED. PROVIDE NEOPRENE GASKET BETWEEN ALUMINUM AND STEEL.

AC500 TYP GUARDRAIL - HANDRAIL - NOTES

NS 06/21/19

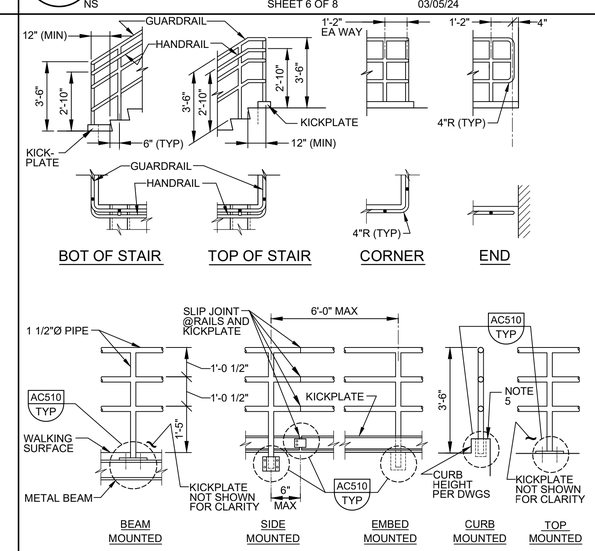

AC504 TYP GUARDRAIL - THREE RAIL

NS SHEET 1 OF 3 03/05/24

carollo

LAST SAVED BY: dlee

Date	No	Revision	By
	4		
	3		
	2		
	1		

PROJECT ENGINEER HCC
DESIGNED/DRAWN DE
INSPECTOR JAD / KA

DIRECTOR PUBLIC WORKS
CITY ENGINEER
ASSISTANT DIRECTOR

CITY OF BELLINGHAM, WASHINGTON
PUBLIC WORKS DEPARTMENT
ENGINEERING DIVISION

SCALE
Horiz. AS SHOWN
Vert. AS SHOWN

DATUM
H: NAD 83/98
V: NAVD 88

Job. No. EU194
Date JAN 2026
Field Bk.

POST POINT RESOURCE RECOVERY PLANT
TYPICAL DETAILS
ARCHITECTURAL TYPICAL DETAILS 2

DRAWING NO. 800TA002
SHEET NO. 165 OF 198

CONTACT PERSON: STEPHEN DAY, PE SE , PROJECT ENGINEER AT 360-778-7944

PROJECT NO. 202021-100000 FILE NAME: 202021800TA002.dwg

1/26/2026 2:03:45 PM

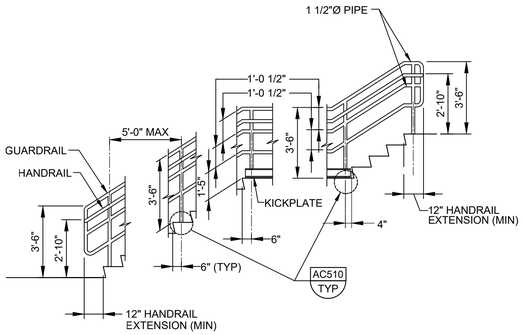

STAIR GUARDRAIL/HANDRAIL ELEVATION

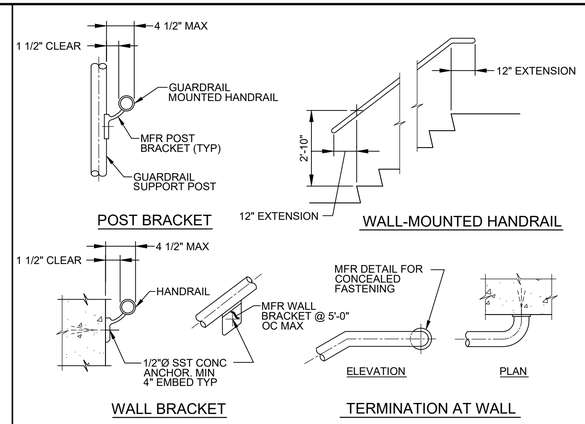

HANDRAIL DETAILS

NOTES:

1. THIS DETAIL IS APPLICABLE AT PRIVATE STAIRS IN F, H, AND S OCCUPANCIES WHERE OPERATOR ONLY ACCESS IS REQUIRED. DETAILS AND INSTALLATION SHALL COMPLY WITH THE BUILDING CODE.
2. SEE SPECIFICATIONS AND DETAIL AC500/TYP FOR ADDITIONAL REQUIREMENTS.
3. VARIOUS POST MOUNTING DETAILS ARE ILLUSTRATED. SEE DRAWINGS AND DETAIL AC510/TYP FOR SPECIFIC MOUNTING REQUIREMENTS.
4. HANDRAIL EXTENSIONS ARE REQUIRED ON BOTH SIDES OF STAIR, EXCEPT WHERE INSIDE HANDRAIL IS CONTINUOUS AT SWITCHBACK STAIR.
5. AT CURB, USE EMBEDDED OR TOP MOUNTED POST AS INDICATED ON THE DRAWINGS.

AC504 TYP — GUARDRAIL - THREE RAIL

NS — SHEET 2 OF 3 — 03/05/24

AC504 TYP — GUARDRAIL - THREE RAIL

NS — SHEET 3 OF 3 — 03/05/24

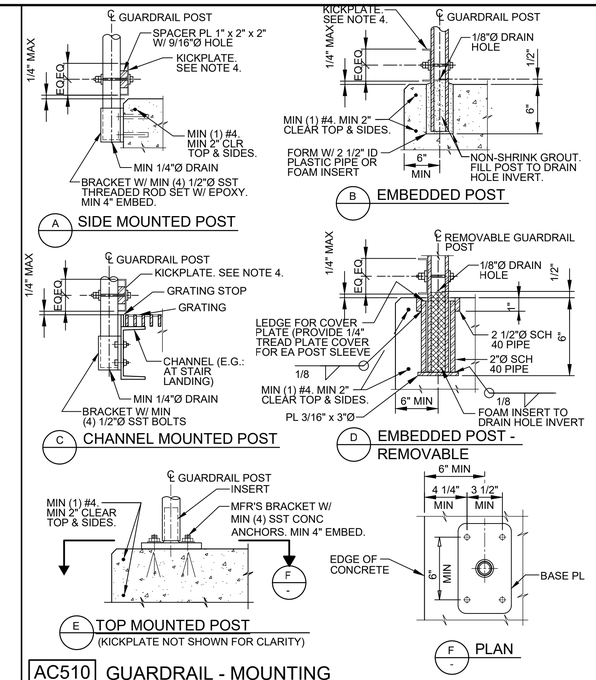

AC510 TYP — GUARDRAIL - MOUNTING

NS — SHEET 1 OF 2 — 06/21/19

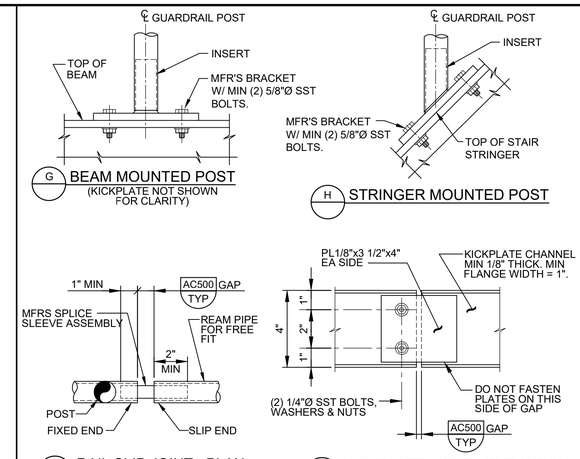

NOTES:

1. FOR ADDITIONAL REQUIREMENTS, SEE DETAIL AC500/TYP.
2. SEE DRAWINGS FOR MATERIAL TYPES.
3. COAT ALUMINUM SURFACES IN CONTACT WITH CONCRETE OR DISSIMILAR METALS AS SPECIFIED.
4. KICKPLATE CONNECTION AT POST: MIN 3/4" HORIZONTAL SLOTTED HOLE IN CHANNEL W/ MIN 1/4"Ø BOLT. PROVIDE WASHER AND DOUBLE NUTS. INSIDE NUT FINGER-TIGHT TO PERMIT EXPANSION AND CONTRACTION.

AC510 TYP — GUARDRAIL - MOUNTING

NS — SHEET 2 OF 2 — 06/21/19

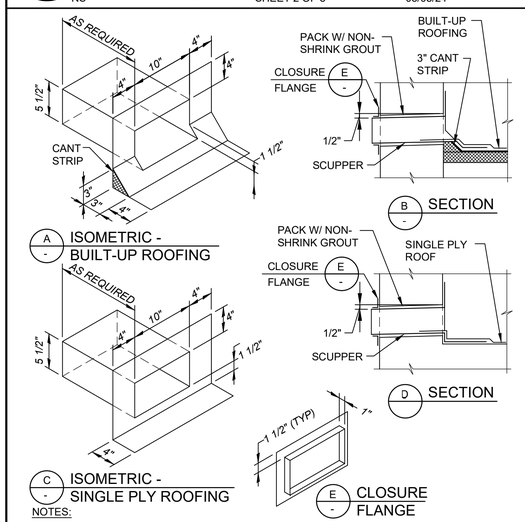

NOTES:

1. PROVIDE SCUPPER AS DETAILED AND ADHERE TO SURROUNDING STRUCTURE UNLESS OTHERWISE RECOMMENDED BY ROOFING MANUFACTURER.
2. FABRICATE SCUPPER AND FLANGE FROM MIN 0.032" THICK PRE-FINISHED AL. FINISH SHALL BE KYNAR. COLOR SHALL BE ENGINEER SELECTED FROM STANDARD COLOR OFFERINGS. COAT AL IN CONTACT WITH CONC AND CMU AS SPECIFIED.
3. LOCATE INVERT OF SCUPPER 2" ABOVE ADJACENT ROOF DRAIN INLET.
3. PROVIDE CLOSURE FLANGE AT EXTERIOR WALL. SET FLANGE IN SEALANT.

AG222 TYP — SCUPPER - SECONDARY BUILT-UP AND SINGLE-PLY SYSTEMS

06/21/19

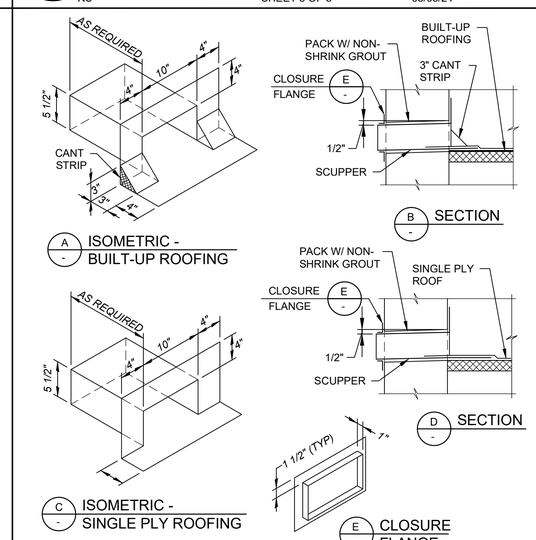

NOTES:

1. PROVIDE SCUPPER AS DETAILED AND ADHERE TO SURROUNDING STRUCTURE UNLESS OTHERWISE RECOMMENDED BY ROOFING MANUFACTURER.
2. FABRICATE SCUPPER AND FLANGE FROM MIN 0.032" THICK PRE-FINISHED AL. FINISH SHALL BE KYNAR. COLOR SHALL BE ENGINEER SELECTED FROM STANDARD COLOR OFFERINGS. COAT AL IN CONTACT WITH CONC AND CMU AS SPECIFIED.
3. PROVIDE CLOSURE FLANGE AT EXTERIOR WALL. SET FLANGE IN SEALANT.

AG223 TYP — SCUPPER - PRIMARY BUILT-UP AND SINGLE-PLY SYSTEMS

06/21/19

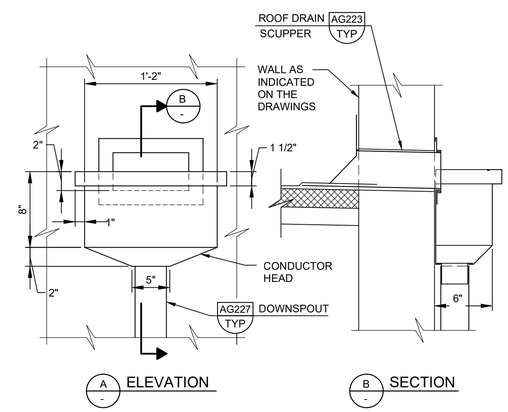

NOTES:

1. PROVIDE CONDUCTOR HEAD AS DETAILED UNLESS OTHERWISE RECOMMENDED BY ROOFING MANUFACTURER.
2. FABRICATE CONDUCTOR HEAD FROM MIN 0.032" THICK PRE-FINISHED AL. FINISH SHALL BE KYNAR. COLOR SHALL BE ENGINEER SELECTED FROM STANDARD COLOR OFFERINGS. COAT AL IN CONTACT WITH CONC OR CMU AS SPECIFIED. SEAL ALL JOINTS.
3. SEE SPEC FOR SPECIFIC ROOFING AND INSULATION MATERIAL. SCUPPER SHAPE WILL VARY WITH ROOFING TYPE.

AG225 TYP — CONDUCTOR HEAD - ALUMINUM

06/21/19

Digitally signed by: Andrew C. Dee
Contact: adee@carollo.com
Date: 2026.01.26 14:12:42 -08'00'

ANDREW C. DEE — STATE OF WASHINGTON — 21258 — REGISTERED PROFESSIONAL ENGINEER

carollo®

LAST SAVED BY: dee

Date	No	Revision	By
	4		
	3		
	2		
	1		

PROJECT ENGINEER HCC
DESIGNED/DRAWN DE
INSPECTOR JAD / KA

DIRECTOR PUBLIC WORKS
CITY ENGINEER
ASSISTANT DIRECTOR

CITY OF BELLINGHAM, WASHINGTON
PUBLIC WORKS DEPARTMENT
ENGINEERING DIVISION

SCALE — Horiz. AS SHOWN — Vert. AS SHOWN
DATUM — H: NAD 83/98 — V: NAVD 88
Job. No. EU194
Date JAN 2026
Field Bk.

POST POINT RESOURCE RECOVERY PLANT
TYPICAL DETAILS
ARCHITECTURAL TYPICAL DETAILS 3

DRAWING NO. 800TA003
SHEET NO. 166 OF 198

CONTACT PERSON: STEPHEN DAY, PE SE , PROJECT ENGINEER AT 360-778-7944

PROJECT NO. 202021-100000 FILE NAME: 202021800TA003.dwg

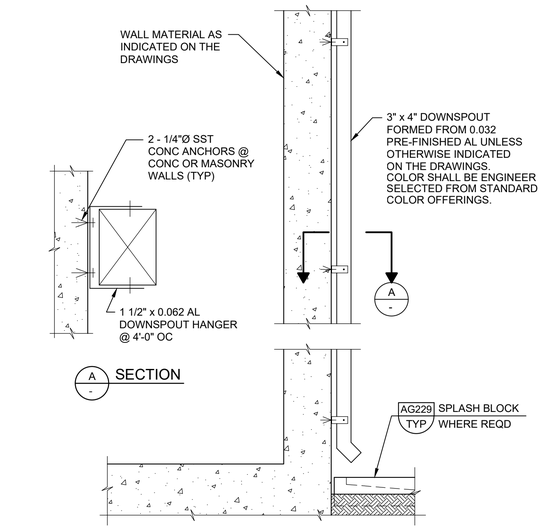

NOTE:

1. PROVIDE SPLASH BLOCK AS SHOWN EXCEPT AT PAVING AND SIDEWALKS.
2. ALTERNATE SIZE DOWNSPOUTS WILL BE REQUIRED, IF SO INDICATED ON THE DRAWINGS.
3. COAT AL IN CONTACT WITH CONC AND CMU AS SPECIFIED.

AG227 TYP DOWN SPOUT - ALUMINUM

06/21/19

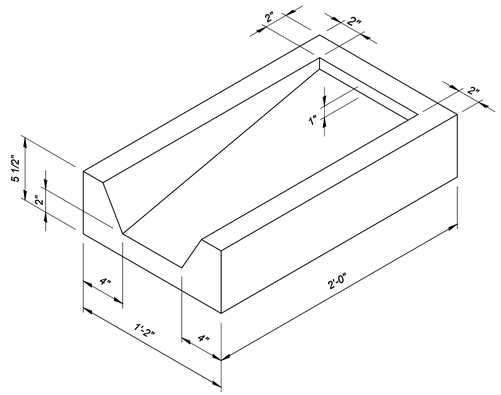

AG229 TYP SPLASH BLOCK - CONCRETE - SURFACE MOUNTED

06/21/19

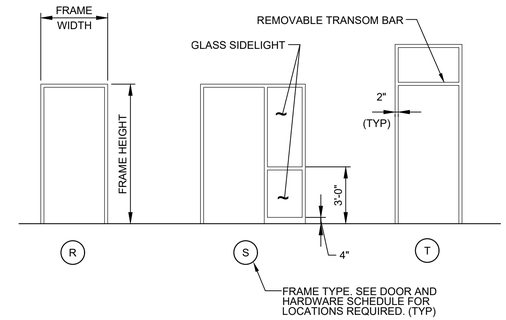

NOTES:

1. SEE DOOR AND HARDWARE SCHEDULE FOR FRAME SIZE, MATERIAL, AND DETAILS.
2. SIDELIGHT MAY BE ON EITHER SIDE OF DOOR. SEE DRAWINGS FOR REQUIRED SIDELIGHT LOCATION.
3. GLASS AT SIDELIGHTS SHALL BE TEMPERED.
4. GLASS AT INTERIOR SIDELIGHTS SHALL BE CLEAR. GLASS AT EXTERIOR SIDELIGHTS SHALL BE TINTED INSULATING GLASS.

AJ100 TYP DOOR - FRAME - STICK

06/21/19

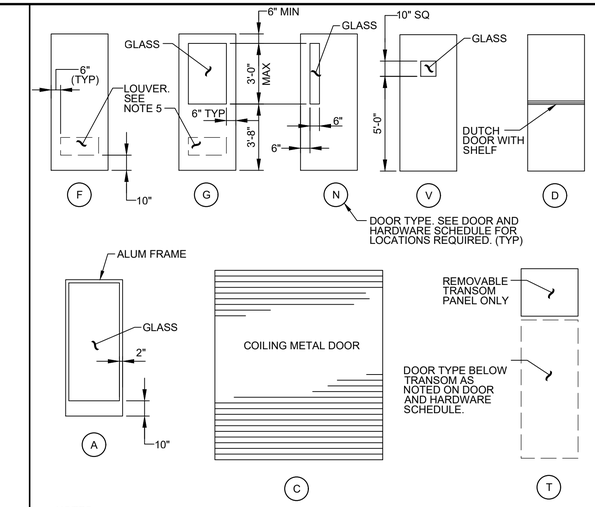

NOTES:

1. DOOR SIZE AND TYPE SHALL BE IN ACCORDANCE WITH DOOR AND HARDWARE SCHEDULE.
2. GLASS AT DOORS SHALL BE TEMPERED UNLESS OTHERWISE INDICATED ON THE DRAWINGS.
3. GLASS AT INTERIOR DOORS SHALL BE CLEAR. GLASS AT EXTERIOR DOORS SHALL BE TINTED.
4. PROVIDE WIRE GLASS AT LABELED DOORS.
5. LOUVER MAY BE REQD AT ANY DOOR TYPE. IF A LOUVER IS REQUIRED, SIZES AND LOCATIONS WILL BE NOTED ON DOOR AND HARDWARE SCHEDULE.
6. PROVIDE LABELED DOORS IN ACCORDANCE WITH DOOR AND HARDWARE SCHEDULE.

AJ103 TYP DOOR - ELEVATIONS - TYPES

06/21/19

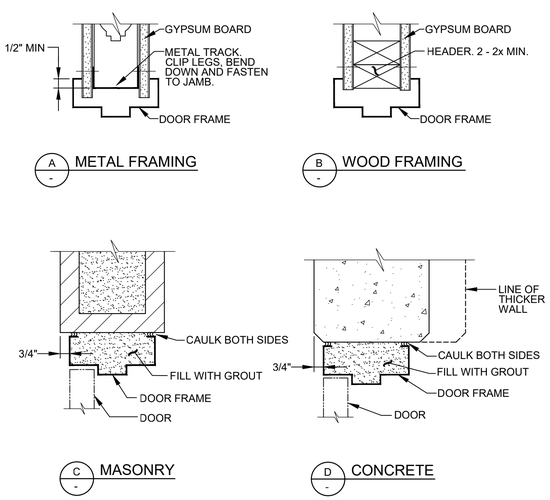

AJ105 TYP DOOR - HEAD - DETAILS

SHEET 1 OF 2 06/21/19

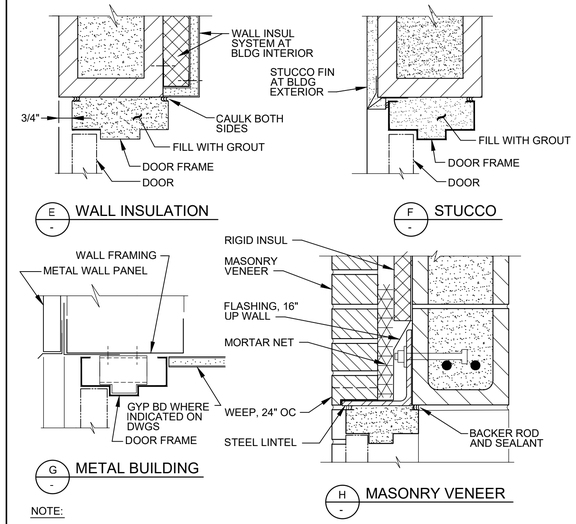

NOTE:

1. DOOR AND FRAME SIZE AND MATERIAL SHALL BE IN ACCORDANCE WITH DOOR AND HARDWARE SCHEDULE.
2. FRAME DIMENSIONS SHALL MATCH THOSE OF JAMB DETAILS ON AJ107/TYP.
3. SEE SPEC FOR WALL INSULATION SYSTEM DETAILS.
4. SEE STRUCT DRAWINGS FOR LINTEL DETAILS.

AJ105 TYP DOOR - HEAD - DETAILS

SHEET 2 OF2 06/21/19

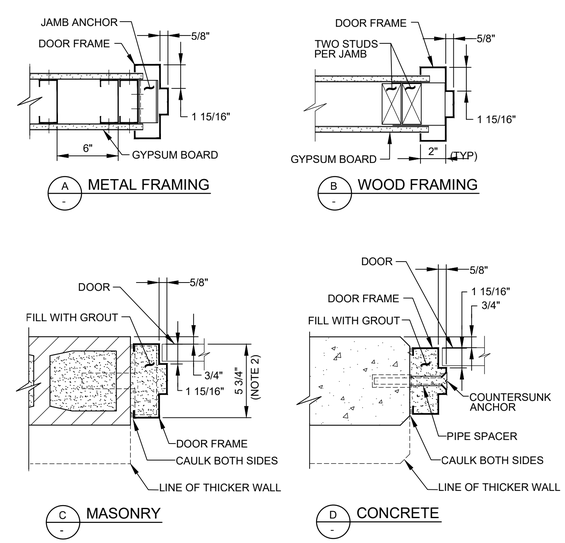

AJ107 TYP DOOR - JAMB - DETAILS

SHEET 1 OF 2 09/20/23

carollo®

Date	No	Revision	By
	4		
	3		
	2		
	1		

LAST SAVED BY: dlee

PROJECT ENGINEER HCC
DESIGNED/DRAWN DE
INSPECTOR JAD / KA

DIRECTOR PUBLIC WORKS
CITY ENGINEER
ASSISTANT DIRECTOR

CITY OF BELLINGHAM, WASHINGTON
PUBLIC WORKS DEPARTMENT
ENGINEERING DIVISION

SCALE
Horiz. AS SHOWN
Vert. AS SHOWN

DATUM
H: NAD 83/98
V: NAVD 88

Job. No. EU194
Date JAN 2026
Field Bk.

POST POINT RESOURCE RECOVERY PLANT
TYPICAL DETAILS
ARCHITECTURAL TYPICAL DETAILS 4

DRAWING NO. 800TA004
SHEET NO. 167 OF 198

CONTACT PERSON: STEPHEN DAY, PE SE , PROJECT ENGINEER AT 360-778-7944

PROJECT NO. 202021-100000 FILE NAME: 202021800TA004.dwg

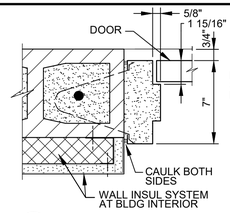

E - FURRED MASONRY

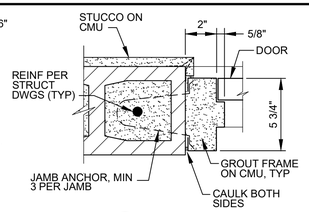

F - STUCCO

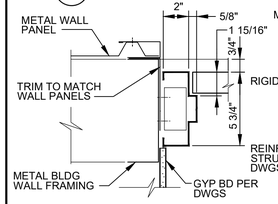

G - METAL BUILDING

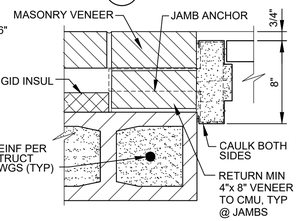

H - MASONRY VENEER

NOTES:

1. DOOR AND FRAME SIZE AND MATERIAL SHALL BE IN ACCORDANCE WITH DOOR AND HARDWARE SCHEDULE.
2. PROVIDE 2" FRAME WIDTH, FRAME DEPTH AS INDICATED AND 1/2" BACKBEND TYPICAL UNLESS OTHERWISE SCHEDULED.
3. PROVIDE MINIMUM 3 ANCHORS PER JAMB AT MASONRY AND 4 ANCHORS PER JAMB AT STUD OR CONCRETE CONSTRUCTION. FILL FRAMES IN MASONRY WITH GROUT.
4. 4"x2 1/4"x8" VENEER SHOWN, SIZE VARIES WITH PROJECT, SEE SPEC FOR REQUIRED SIZE.

AJ107 TYP — DOOR - JAMB - DETAILS

SHEET 2 OF 2 09/20/23

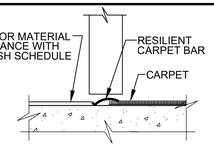

A -

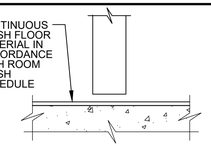

B -

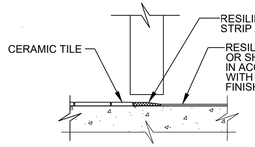

C -

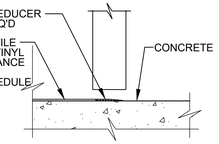

D -

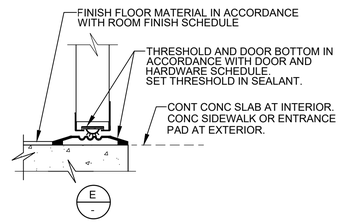

E -

NOTE:

1. DOOR CLEARANCE AT BOTTOM OF DOOR SHALL BE 1/4" MIN AND 3/8" MAX.

AJ109 TYP — DOOR - SILL - DETAILS

06/21/19

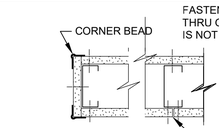

A - END AND BUTT JOINT

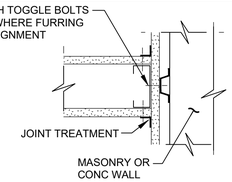

B - INTERSECTION

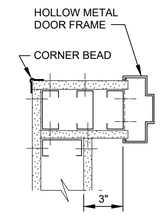

C - DOOR AT CORNER

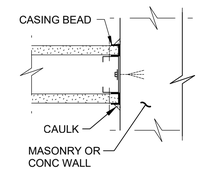

D - INTERSECTION

NOTES:

1. ALL METAL STUDS SHALL BE 3 5/8" UNLESS INDICATED OTHERWISE ON DRAWINGS.
2. ALL GYPSUM WALL BOARD SHALL BE 5/8" THICK UNLESS INDICATED OTHERWISE ON DWGS.

AL500 TYP — WALL FRAMING - METAL NON-LOAD BEARING - INTERNAL

SHEET 1 OF 3 06/21/19

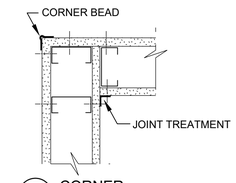

E - CORNER

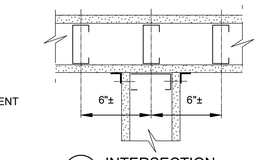

F - INTERSECTION

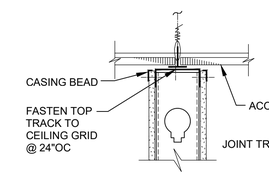

G - TO CEILING

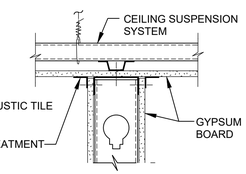

H - TO CEILING

AL500 TYP — WALL FRAMING - METAL NON-LOAD BEARING - INTERNAL

SHEET 2 OF 3 06/21/19

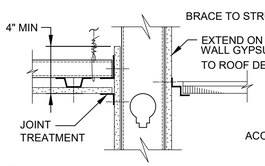

J - THRU SUSPENDED CEILING

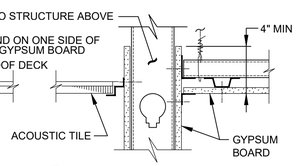

K - THRU SUSPENDED CEILING

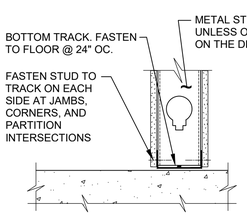

L - FLOOR

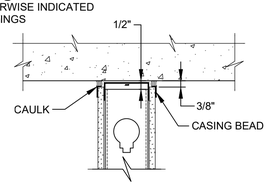

M - ROOF DECK

AL500 TYP — WALL FRAMING - METAL NON-LOAD BEARING - INTERNAL

SHEET 3 OF 3 06/21/19

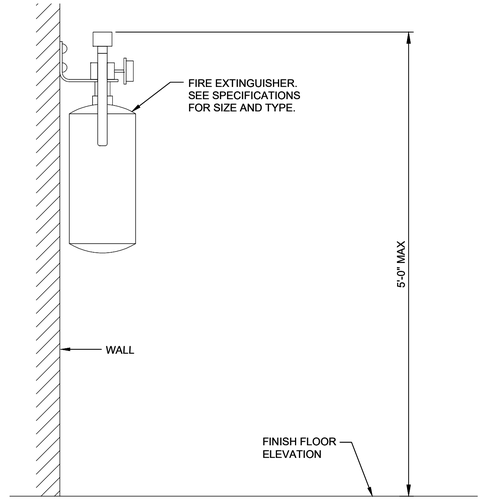

NOTES:

1. MOUNT TO WALL WITH NUMBER AND SIZE OF ANCHORS TO MATCH BRACKET. USE CONCRETE ANCHORS FOR MASONRY OR CONCRETE WALLS. AT MASONRY INSTALL AT GROUTED CELL. MOUNT TO STUD WITH LAG BOLTS, OR WOOD SCREWS FOR WOOD PARTITION WALL.
2. SEE SPECIFICATIONS FOR SIGNAGE REQUIREMENTS ABOVE FIRE EXTINGUISHERS.

AN400 TYP — FIRE EXTINGUISHER WALL-MOUNTED

06/21/19

carollo®

Date	No	Revision	By
	4		
	3		
	2		
	1		

PROJECT ENGINEER HCC
DESIGNED/DRAWN DE
INSPECTOR JAD / KA

DIRECTOR PUBLIC WORKS
CITY ENGINEER
ASSISTANT DIRECTOR

CITY OF BELLINGHAM, WASHINGTON
PUBLIC WORKS DEPARTMENT
ENGINEERING DIVISION

SCALE: Horiz. AS SHOWN; Vert. AS SHOWN
DATUM: H: NAD 83/98; V: NAVD 88
Job. No. EU194; Date JAN 2026; Field Bk.

POST POINT RESOURCE RECOVERY PLANT
TYPICAL DETAILS
ARCHITECTURAL TYPICAL DETAILS 5

DRAWING NO. 800TA005
SHEET NO. 168 OF 198

CONTACT PERSON: STEPHEN DAY, PE SE , PROJECT ENGINEER AT 360-778-7944

PROJECT NO. 202021-100000 FILE NAME: 202021800TA005.dwg

LAST SAVED BY: dlee

10/9/2024 1:26:41 PM

2/24/2025 10:30:47 AM

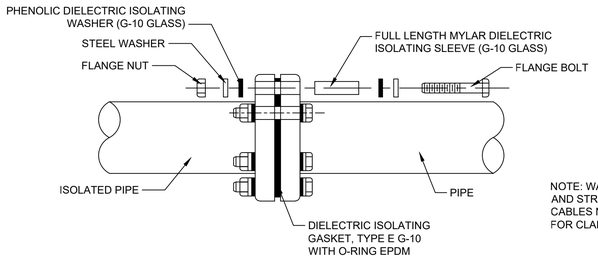

TOP VIEW ISOLATION JOINT FLANGE KIT

NOTE: WAX TAPE WRAP AND STRUCTURE CABLES NOT SHOWN FOR CLARITY.

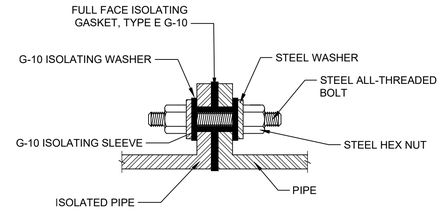

SIDE VIEW ISOLATION JOINT FLANGE KIT

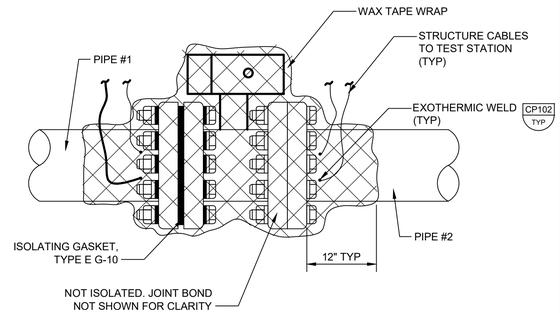

WAX TAPE WRAP EXAMPLE

NOTES:

1. TYPICAL FOR NON-WELDED PIPING OR WELDED PIPING WITH MECHANICAL COUPLINGS.
2. FULL LENGTH ISOLATING SLEEVES REQUIRED FOR ALL THRU-FLANGE BOLTS OR STUDS.
3. ISOLATION IS TO BE TESTED PRIOR TO BURIAL AND TESTED AFTER BURIAL TO INSURE ISOLATION.
4. BURIED ISOLATION FLANGES ARE TO BE WRAPPED WITH WAX TAPE. DAMAGE COATINGS REPAIRED PER SPECIFICATION.
5. ALL ISOLATION FLANGES REQUIRE AN IJFK TEST STATION PER SPECIFICATION.
6. FOR NOMINAL PIPE DIAMETERS UP TO 36", PROVIDE ONE ISOLATING AND ONE STEEL WASHER ON EITHER SIDE OF FLANGE BOLT. FOR PIPE DIAMETERS GREATER THAN 36", ISOLATING WASHERS SHALL BE INSTALLED SANDWICHED BETWEEN A PAIR OF MATCHING STEEL WASHERS AT BOTH SIDES OF FLANGE BOLT.

CP175 TYP S — ISOLATION JOINT FLANGE KIT DETAILS

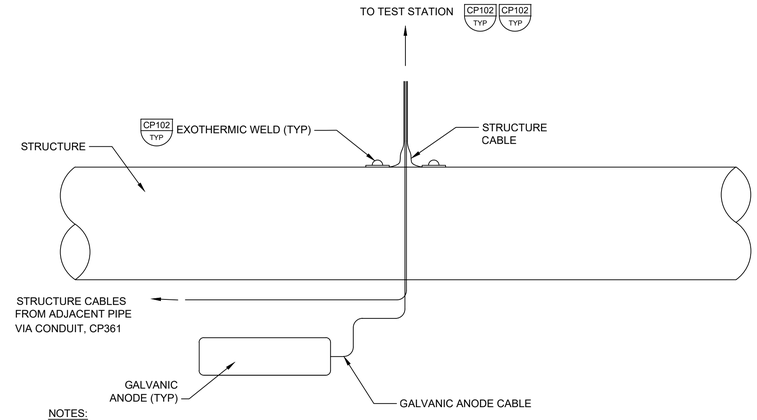

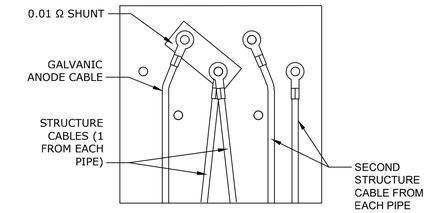

CATHODIC PROTECTION TEST STATION TERMINAL BOARD LAYOUT

NOTES:

1. PROVIDE 18" SLACK IN CABLES TO ALLOW FOR STRUCTURE SETTLEMENT AND MOVEMENT.
2. ROUTE ALL WIRES THROUGH RIGID PVC UNDERGROUND AND GRP ABOVE GROUND TO TEST STATION. REFER TO CP361.
3. ANODE ALIGNMENT TO PIPE PER CP363 AND CP371.
4. REFER TO THE SPECIFICATIONS FOR CABLE SIZES AND COLOR. REFER TO CP100 FOR CABLE LABEL INSTRUCTIONS.
5. FOR TEST STATIONS RECEIVING STRUCTURE CABLES FROM MULTIPLE PIPES, ROUTE 2 STRUCTURE CONTINUITY CABLES VIA CONDUIT, CP361.
6. TERMINAL BOARD LAYOUT SHOWS AN EXAMPLE FOR STRUCTURE CABLES COMING FROM TWO PIPES INTO THE TEST STATION. TWO TOTAL STRUCTURE CABLES PER PIPE. CAN ALSO BE CALLED CONTINUITY CABLE.

CP311 TYP S — CATHODIC PROTECTION TEST STATION

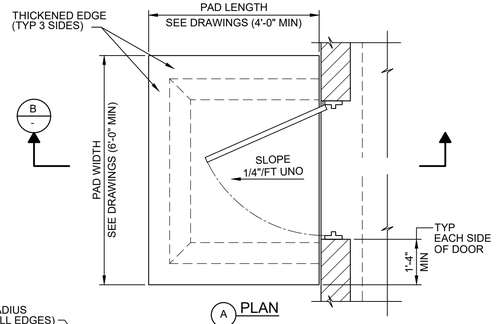

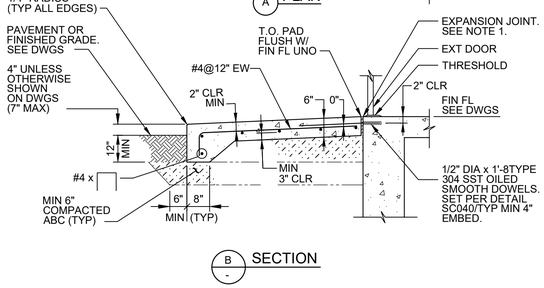

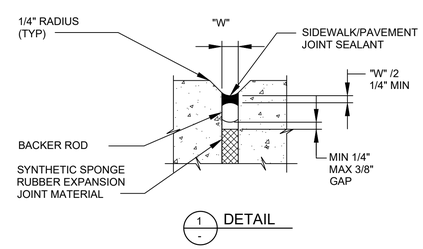

NOTES:

1. EXPANSION JOINT AT FACE OF STRUCTURE: 3/8" WIDE AND AS INDICATED IN DETAIL 1.

CR314 TYP — SIDEWALK - ENTRANCE PAD

12/18/2023

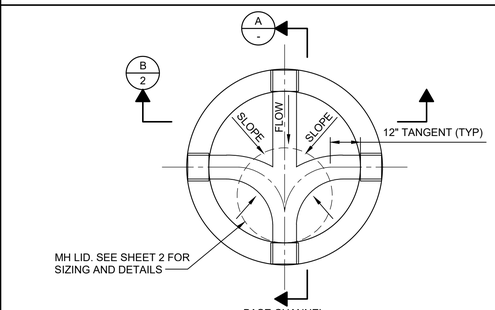

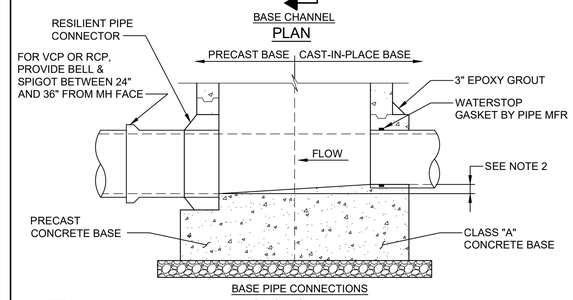

NOTES:

1. BASES SHALL BE PRECAST UNO ON THE DRAWINGS.
2. DROP ACROSS MANHOLE SHALL BE 0.1' MINIMUM. WHERE PIPE SIZES ARE DIFFERENT, MATCH CROWNS.

CS110 TYP N — MANHOLE

SHEET 1 OF 2 04/09/24

Digitally signed by MATTHEW SCOTT SPRICK
Contact: matthew.sprick@carollo.com
Date: 2026.02.04 14:08:08 -08'00'
MATTHEW SCOTT SPRICK — STATE OF WASHINGTON — 29659 — REGISTERED PROFESSIONAL ENGINEER

carollo®

LAST SAVED BY: dlee

Date	No	Revision	By
	4		
	3		
	2		
	1		

PROJECT ENGINEER MSS
DESIGNED/DRAWN HC
INSPECTOR JAD

DIRECTOR PUBLIC WORKS
CITY ENGINEER
ASSISTANT DIRECTOR

CITY OF BELLINGHAM, WASHINGTON
PUBLIC WORKS DEPARTMENT
ENGINEERING DIVISION

SCALE — Horiz. AS SHOWN — Vert. AS SHOWN
DATUM — H: NAD 83/98 — V: NAVD 88
Job. No. EU194
Date JAN 2026
Field Bk.

POST POINT RESOURCE RECOVERY PLANT
TYPICAL DETAILS
CIVIL TYPICAL DETAILS 1

DRAWING NO. 800TC001
SHEET NO. 169 OF 198

CONTACT PERSON: STEPHEN DAY, PE SE , PROJECT ENGINEER AT 360-778-7944

PROJECT NO. 202021-100000 FILE NAME: 202021800TC001.dwg

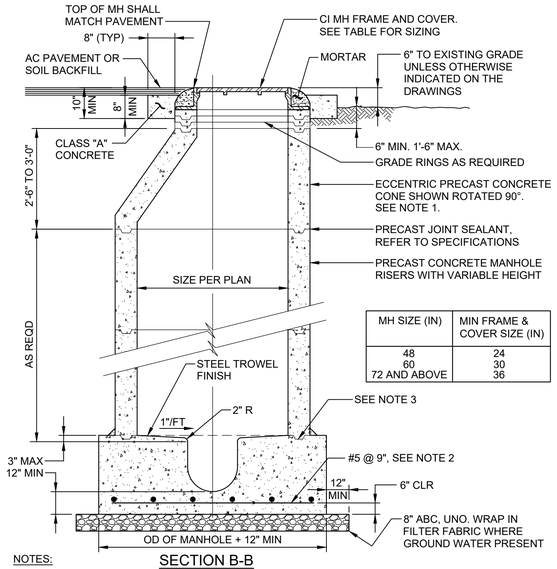

MH SIZE (IN)	MIN FRAME & COVER SIZE (IN)
48	24
60	30
72 AND ABOVE	36

SECTION B-B

NOTES:

1. LOCATE MANHOLE COVER ON DOWNSTREAM SIDE OF MANHOLE. WHERE INDICATED ON THE PLANS, INSTALL A REINFORCED CONCRETE FLAT TOP IN LIEU OF A CONE.
2. FOR PRECAST BASES, REINFORCEMENT DESIGN SHALL BE DETERMINED BY THE MANUFACTURER AND CERTIFIED BY A PROFESSIONAL ENGINEER.
3. FOR CAST-IN-PLACE MANHOLES FORM GROOVE IN MANHOLE BASE WITH STEEL OR ALUMINUM BASE RING PER MANUFACTURER'S DETAIL.

CS110 MANHOLE

TYP N

SHEET 2 OF 2 04/09/24

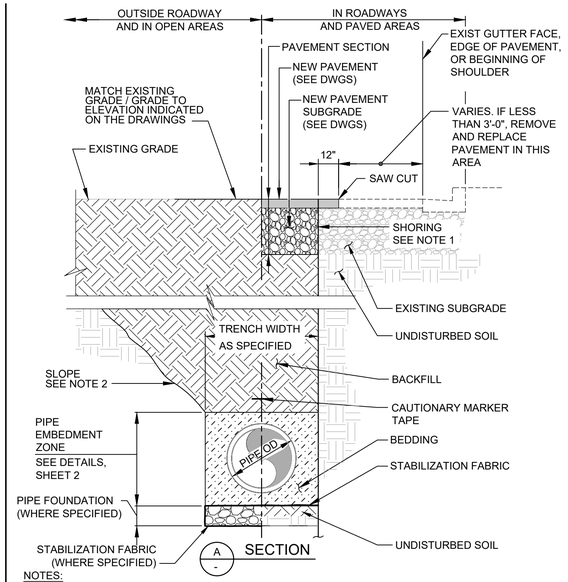

NOTES:

1. SEE SPECIFICATIONS FOR SHORING REQUIREMENTS.
2. SEE SPECIFICATIONS FOR SLOPE REQUIREMENTS.
3. SEE SPECIFICATIONS FOR TRENCH DEPTH AND WIDTH REQUIREMENTS.

CY111 PIPE TRENCH

TYP N

SHEET 1 OF 2 9/12/2024

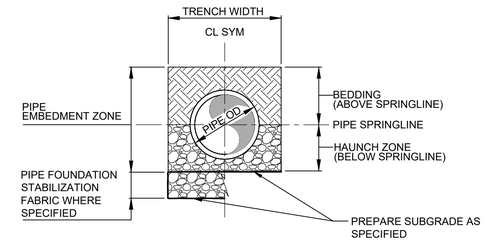

A
-
PIPE ZONE EMBEDMENT - RIGID PIPE

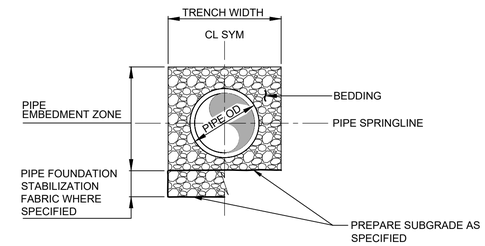

B
-
PIPE ZONE EMBEDMENT - FLEXIBLE PIPE

CY111 PIPE TRENCH

TYP N

SHEET 2 OF 2 9/12/2024

carollo®

Date	No	Revision	By
	4		
	3		
	2		
	1		

PROJECT ENGINEER MSS
DESIGNED/DRAWN HC
INSPECTOR JAD

DIRECTOR PUBLIC WORKS
CITY ENGINEER
ASSISTANT DIRECTOR

CITY OF BELLINGHAM, WASHINGTON
PUBLIC WORKS DEPARTMENT
ENGINEERING DIVISION

SCALE
Horiz. AS SHOWN
Vert. AS SHOWN

DATUM
H: NAD 83/98
V: NAVD 88

Job. No. EU194
Date JAN 2026
Field Bk.

POST POINT RESOURCE RECOVERY PLANT
TYPICAL DETAILS
CIVIL TYPICAL DETAILS 2

DRAWING NO. 800TC002
SHEET NO. 170 OF 198

CONTACT PERSON: STEPHEN DAY, PE SE , PROJECT ENGINEER AT 360-778-7944

PROJECT NO. 202021-100000 FILE NAME: 202021800TC002.dwg

2/24/2025 10:30:47 AM

LAST SAVED BY: ivelcz

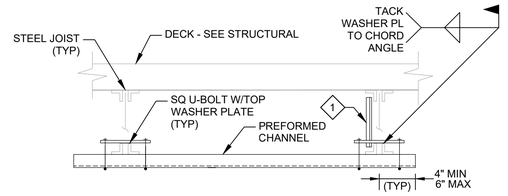

ACROSS

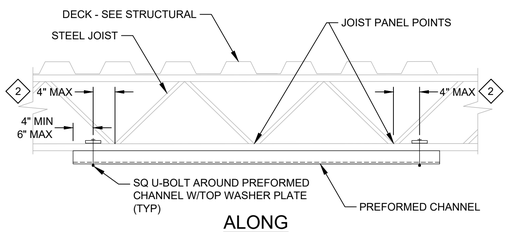

ALONG

KEY NOTES:

1. WHERE CHANNEL IS OFFSET FROM JOIST PANEL POINT BY MORE THAN 4" ADD LOAD POINT BRACE PER SM802 (TYP).
2. LOCATE U-BOLTS MAX 4" PAST JOIST PANEL POINTS NEAREST EACH END OF LUMINAIRE AND MAX 48" ALONG PREFORMED CHANNEL.

EA020 TYP S ATTACHMENT TO STEEL JOISTS

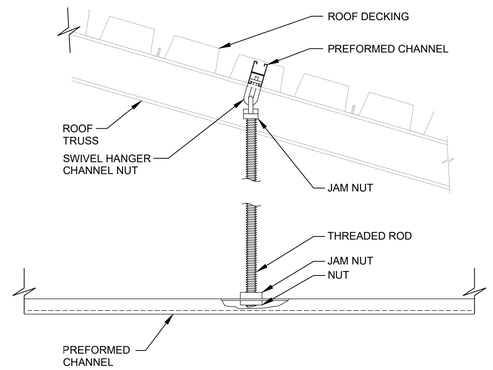

EA050 TYP S ATTACHMENT BETWEEN ROOF JOISTS

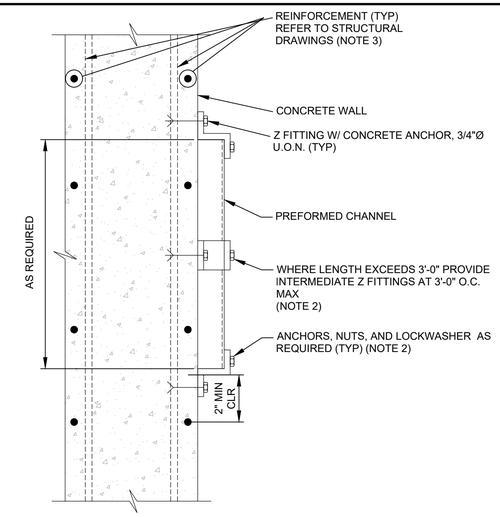

GENERAL NOTES:

1. THIS DETAIL TYPICAL FOR BOTH VERTICAL AND HORIZONTAL MOUNTING.
2. SUPPORTS TO BE SPACED IN ACCORDANCE WITH NEC REQUIREMENTS. CONCRETE ANCHORS SHALL BE PER THE SPECIFICATIONS.
3. REFER TO STRUCTURAL DRAWINGS FOR ORIENTATION OF REINFORCEMENT AND BARS.

EA070 TYP S PREFORMED CHANNEL ATTACHMENT TO CONCRETE WALL

9/9/22

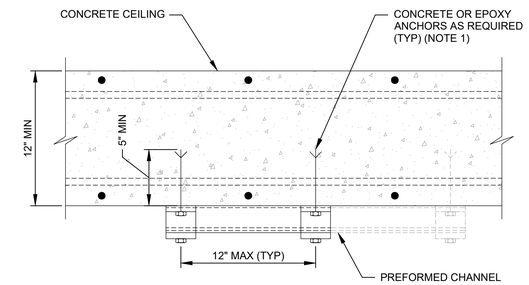

GENERAL NOTES:

1. A FOOT UNISTRUT SUPPORT WITH TWO CONCRETE OR EPOXY ANCHORS 12" APART IS RATED FOR 500 LBS.
2. EACH EXTENSION WITH ADDITIONAL ANCHORS AT 12" INCREMENTS INCREASES THE LOADING CAPACITY BY 500 LBS.
3. SUBMIT ANCHORAGE CALCULATIONS WHEN LOAD EXCEEDS 500 LBS. REFER TO THE SPECIFICATIONS.

EA075 TYP S PREFORMED CHANNEL ATTACHMENT TO CONCRETE CEILING

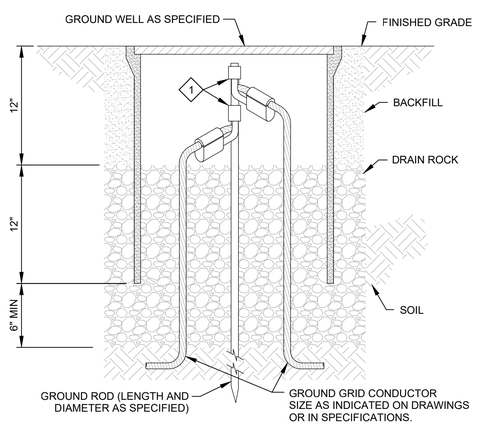

KEY NOTES:

1. GROUND ROD TO GROUND GRID CROSS CONNECTOR. SIZE FOR ROD AND CABLE PER CONNECTOR MANUFACTURERS GUIDELINES.

EG001 TYP GROUND ROD AND GROUNDWELL COMPRESSION CONNECTION

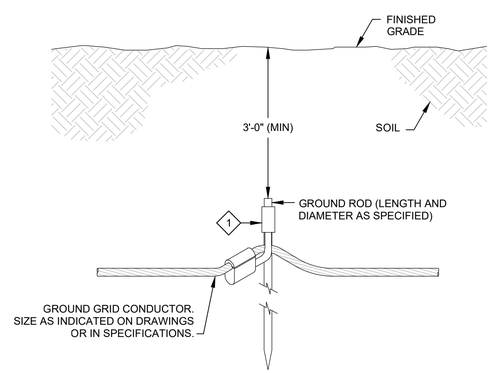

KEY NOTES:

1. GROUND ROD TO GROUND GRID CROSS CONNECTOR. SIZE FOR ROD AND CABLE PER CONNECTOR MANUFACTURERS GUIDELINES.

EG002 TYP S GROUND ROD COMPRESSION CONNECTION

carollo®

Date	No	Revision	By
	4		
	3		
	2		
	1		

PROJECT ENGINEER CE
DESIGNED/DRAWN CE
INSPECTOR

DIRECTOR PUBLIC WORKS
CITY ENGINEER
ASSISTANT DIRECTOR

CITY OF BELLINGHAM, WASHINGTON
PUBLIC WORKS DEPARTMENT
ENGINEERING DIVISION

SCALE
Horiz. AS SHOWN
Vert. AS SHOWN

DATUM
H: NAD 83/98
V: NAVD 88

Job. No. EU194
Date JAN 2026
Field Bk.

POST POINT RESOURCE RECOVERY PLANT
TYPICAL DETAILS
ELECTRICAL TYPICAL DETAILS 1

DRAWING NO. 800TE001
SHEET NO. 171 OF 198

CONTACT PERSON: STEPHEN DAY, PE SE , PROJECT ENGINEER AT 360-778-7944

PROJECT NO. 202021-100000 FILE NAME: 202021800TE001.dwg

10/9/2024 1:33:31 PM

LAST SAVED BY: lveloz

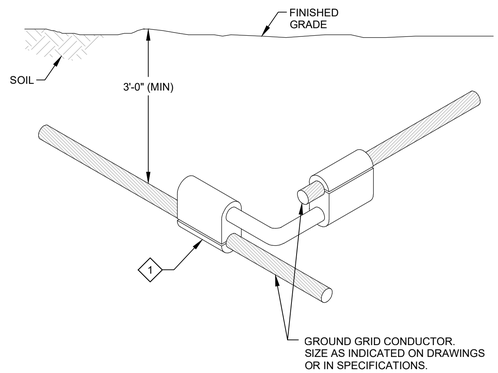

KEY NOTES:

1. GROUND GRID CROSS CONNECTOR. SIZE FOR CABLE PER CONNECTOR MANUFACTURERS GUIDELINES.

EG101 TYP S — COPPER GROUNDING CABLE CONNECTION COMPRESSION CONNECTION

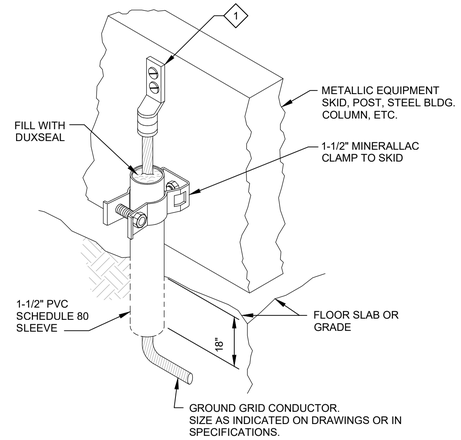

GENERAL NOTES:

1. CLEAN ALL PAINTED SURFACES TO BARE METAL BEFORE BOLTING ON THE GROUND LUG.
2. NOTE: BOLT GROUND LUG ONLY TO EQUIPMENT SKIDS OR STRUCTURE, NOT TO EQUIPMENT OR TANK SHELLS.

KEY NOTES:

1. HEAVY DUTY COMPRESSION TERMINAL.

EG201 TYP S — EQUIPMENT SKID GROUNDING COMPRESSION CONNECTION

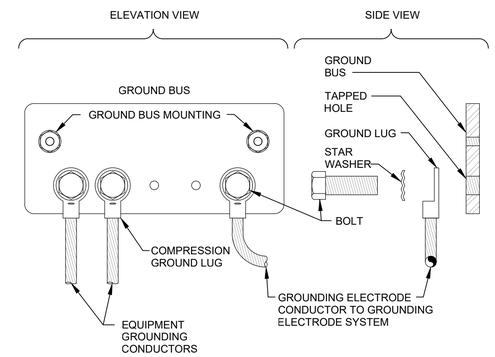

EG204 TYP S — GROUND BUS CONNECTIONS

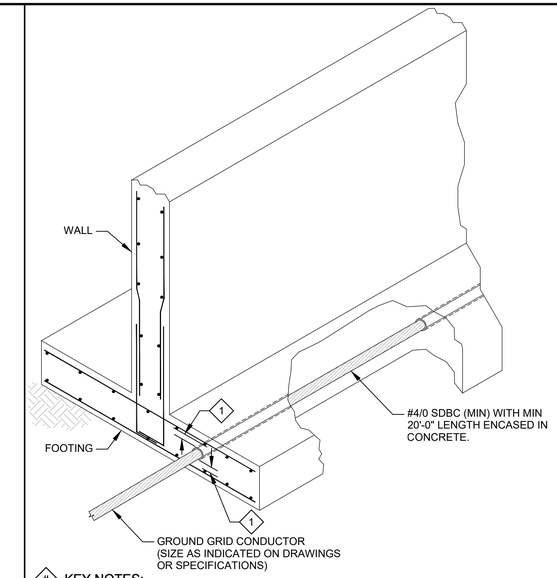

KEY NOTES:

1. GROUND GRID CONDUCTOR TO BE FULLY ENCASED IN CONCRETE. PROVIDE MIN 1 1/2" CLEAR BETWEEN CONDUCTOR & REINFORCING BARS, OR BETWEEN CONDUCTOR AND FACE OF CONCRETE.

EG304 TYP S — GROUNDING CONNECTION TO FOOTING (UFER)

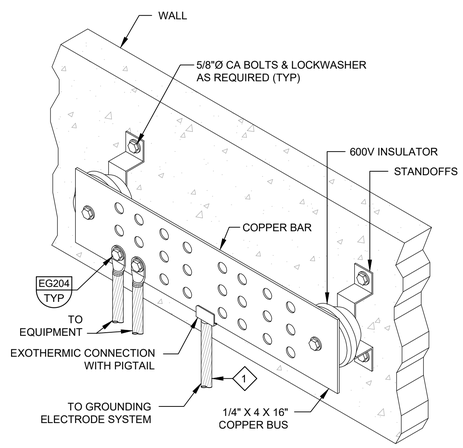

KEY NOTES:

1. #2/O S.D.B.C. UNLESS OTHERWISE INDICATED ON THE DRAWINGS.

EG400 TYP — STRUCTURE GROUND BUS ASSEMBLY

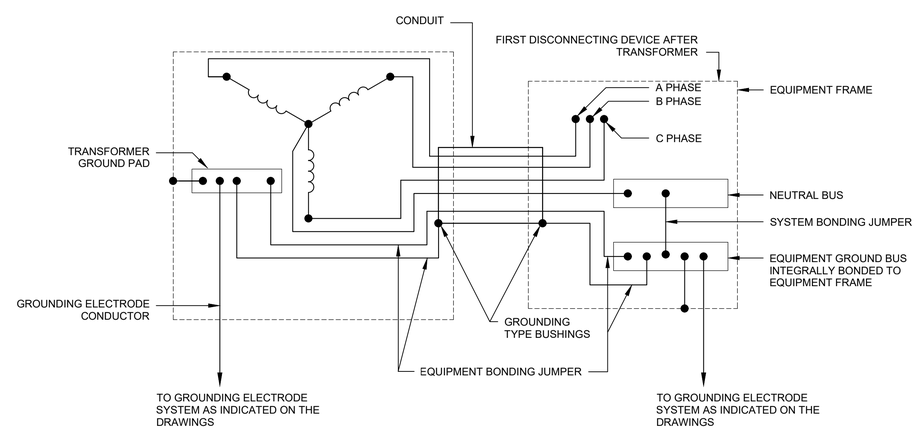

EG511 TYP S — TRANSFORMER (NON-UTILITY) 3-PHASE, 4-WIRE SECONDARY POWER GROUNDING DETAIL

carollo®

Date	No	Revision	By
	4		
	3		
	2		
	1		

PROJECT ENGINEER MSS
DESIGNED/DRAWN CE
INSPECTOR CH

DIRECTOR PUBLIC WORKS
CITY ENGINEER
ASSISTANT DIRECTOR

CITY OF BELLINGHAM, WASHINGTON
PUBLIC WORKS DEPARTMENT
ENGINEERING DIVISION

SCALE
Horiz. AS SHOWN
Vert. AS SHOWN

DATUM
H: NAD 83/98
V: NAVD 88

Job. No. EU194
Date JAN 2026
Field Bk.

POST POINT RESOURCE RECOVERY PLANT
TYPICAL DETAILS
ELECTRICAL TYPICAL DETAILS 2

DRAWING NO. 800TE002
SHEET NO. 172 OF 198

CONTACT PERSON: STEPHEN DAY, PE SE , PROJECT ENGINEER AT 360-778-7944

PROJECT NO. 202021-100000 FILE NAME: 202021800TE002.dwg

LAST SAVED BY: lveloz

10/9/2024 1:37:05 PM

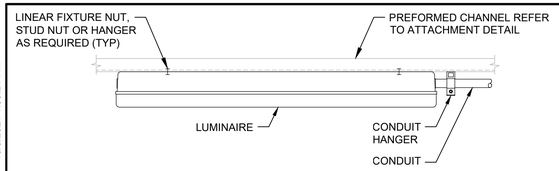

FLUSH MOUNTED

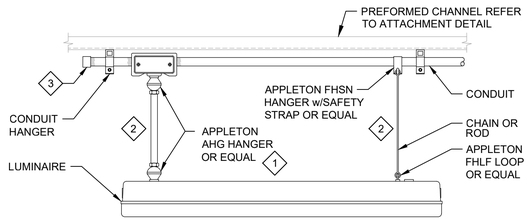

SUSPENDED

KEY NOTES:

1. USE MEYERS HUB IN WET AND/OR CORROSIVE AREAS.
2. LENGTH AS REQUIRED FOR INDICATED MOUNTING HEIGHT.
3. CAP END CONDUIT AS REQUIRED.

EL200 TYP S LINEAR LUMINAIRE MOUNTING

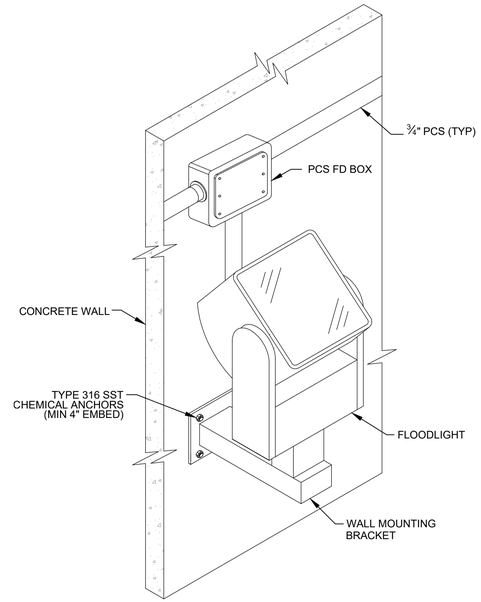

EL303 TYP S FLOODLIGHT LUMINAIRE MOUNTING TO CONCRETE WALL

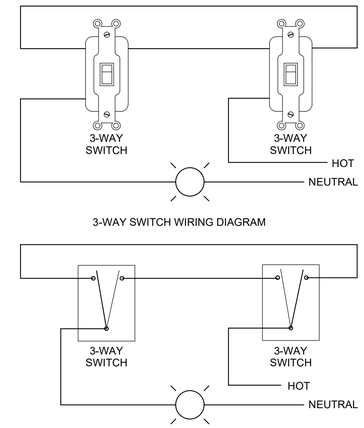

EL700 TYP S 3-WAY SWITCH ONE-LINE DIAGRAM

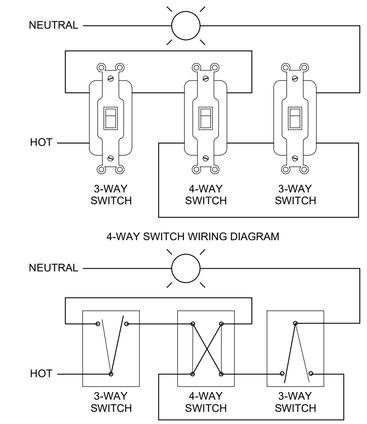

EL701 TYP S 4-WAY SWITCH ONE-LINE DIAGRAM

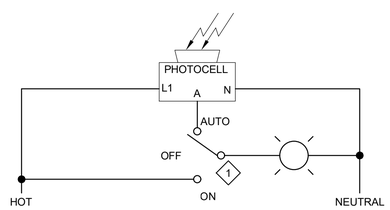

KEY NOTES:

1. REFER TO THE SPECIFICATIONS FOR SWITCH REQUIREMENTS.

EL703 TYP PHOTO-ELECTRIC EYE CONTROL

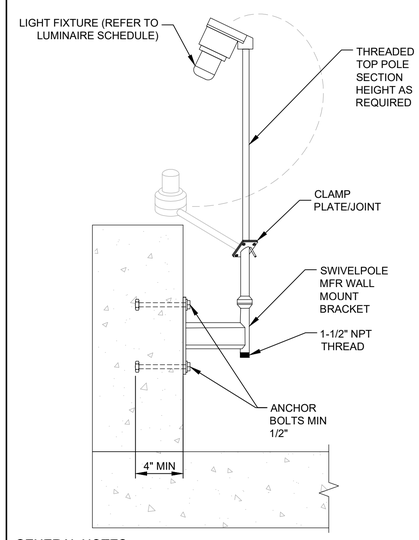

GENERAL NOTES:

1. SWIVELPOLE C1 MAXIS M1 COLUMN/WALL MOUNT OR EQUAL. HOT DIPPED GALVANIZED STEEL. REFER TO SPECIFICATIONS.
2. ROUTE CABLE THROUGH WALL BRACKET OR UP FROM BASE. REFER TO PLAN DRAWINGS FOR CONDUIT ROUTING REQUIREMENTS.
3. REFER TO SPECIFICATIONS FOR MOUNTING HARDWARE MATERIAL REQUIREMENTS.

EL901 TYP J SWIVEL JOINT STANCHION ON CONCRETE WALL

carollo®

10/9/2024 1:39:24 PM

LAST SAVED BY: lveloz

Date	No	Revision	By
	4		
	3		
	2		
	1		

PROJECT ENGINEER MSS
DESIGNED/DRAWN CE
INSPECTOR CH

DIRECTOR PUBLIC WORKS
CITY ENGINEER
ASSISTANT DIRECTOR

CITY OF BELLINGHAM, WASHINGTON
PUBLIC WORKS DEPARTMENT
ENGINEERING DIVISION

SCALE
Horiz. AS SHOWN
Vert. AS SHOWN

DATUM
H: NAD 83/98
V: NAVD 88

Job. No. EU194
Date JAN 2026
Field Bk.

POST POINT RESOURCE RECOVERY PLANT
TYPICAL DETAILS
ELECTRICAL TYPICAL DETAILS 3

DRAWING NO. 800TE003
SHEET NO. 173 OF 198

CONTACT PERSON: STEPHEN DAY, PE SE , PROJECT ENGINEER AT 360-778-7944

PROJECT NO. 202021-100000 FILE NAME: 202021800TE003.dwg

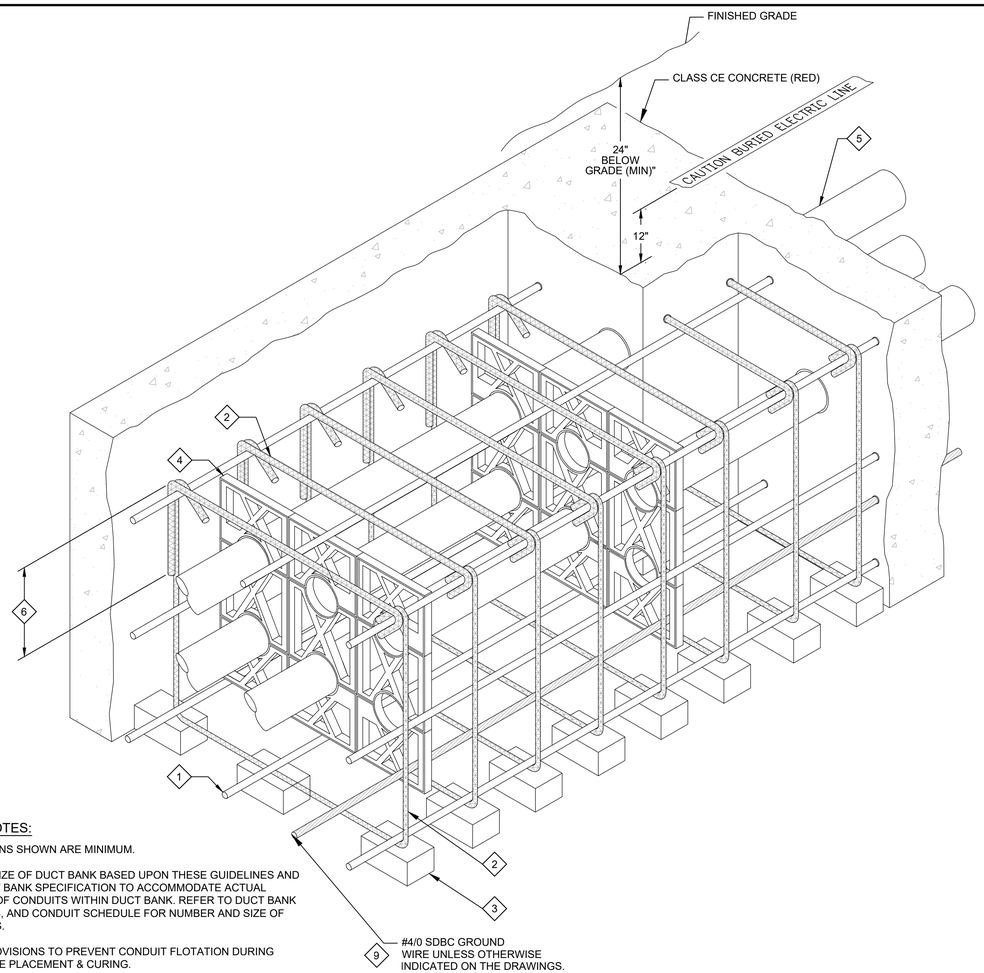

GENERAL NOTES:

1. DIMENSIONS SHOWN ARE MINIMUM.
2. ADJUST SIZE OF DUCT BANK BASED UPON THESE GUIDELINES AND THE DUCT BANK SPECIFICATION TO ACCOMMODATE ACTUAL NUMBER OF CONDUITS WITHIN DUCT BANK. REFER TO DUCT BANK SECTIONS, AND CONDUIT SCHEDULE FOR NUMBER AND SIZE OF CONDUITS.
3. MAKE PROVISIONS TO PREVENT CONDUIT FLOTATION DURING CONCRETE PLACEMENT & CURING.

KEY NOTES:

1. #4 REINFORCING STEEL 12" MAXIMUM ON CENTER AROUND ENTIRE PERIMETER OF DUCT BANK.
2. #4 REINFORCING STEEL TIES MAXIMUM 24" ON CENTER ALONG LENGTH OF DUCT BANK.
3. MINIMUM OF TWO PRECAST CONCRETE BAR SUPPORTS PLACED UNDER A TIE AT EACH PVC CONDUIT SPACER ALONG LENGTH OF DUCT BANK. PROVIDE PRECAST BAR SUPPORTS AT INTERVALS OF 24" TO REDUCE DEFLECTION.
4. PVC CONDUIT SPACERS ON 8'-0" CENTERS (MAXIMUM). LOCATE 12" FROM TIES.
5. REFER TO DUCT BANK SECTIONS AND SPECIFICATIONS FOR CONDUIT REQUIREMENTS.
6. 1'-4" OR 135 DEGREE HOOK FOR SHALLOW DUCT BANKS SHALLOWER THAN 21"
7. CONTRACTOR'S OPTION TO PROVIDE 1'-4" LAP LENGTH EACH SIDE OF HORIZONTAL TIE.
8. LOWER PORTION OF TIES COULD BE U-BARS IF UPPER PORTIONS PROVIDES 1'-4" VERTICAL LEGS EACH SIDE.
9. BOND THE DUCT BANK GROUND WIRE TO THE GROUNDING SYSTEM AT BOTH ENDS OF THE DUCT BANK.

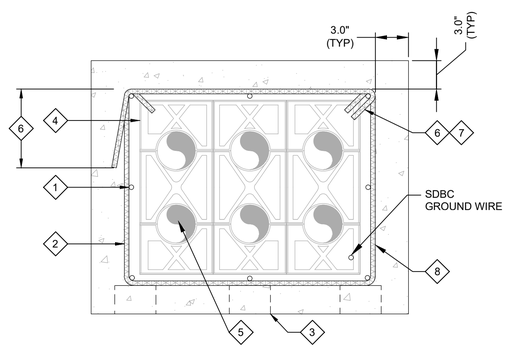

EM001 TYP — REINFORCED CONCRETE DUCT BANK

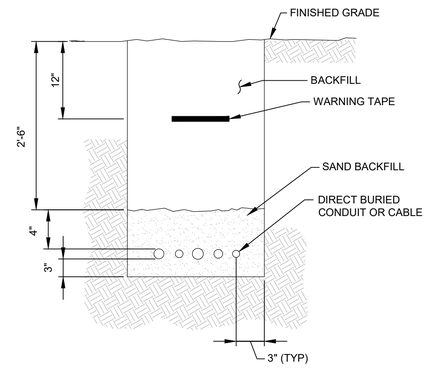

GENERAL NOTES:

1. ALL DIMENSIONS ARE MINIMUM UNLESS OTHERWISE INDICATED ON THE DRAWINGS.
2. REFER TO THE SPECIFICATIONS FOR TRENCH BACKFILL REQUIREMENTS.

EM015 TYP S — DIRECT BURIED CONDUIT OR CABLE

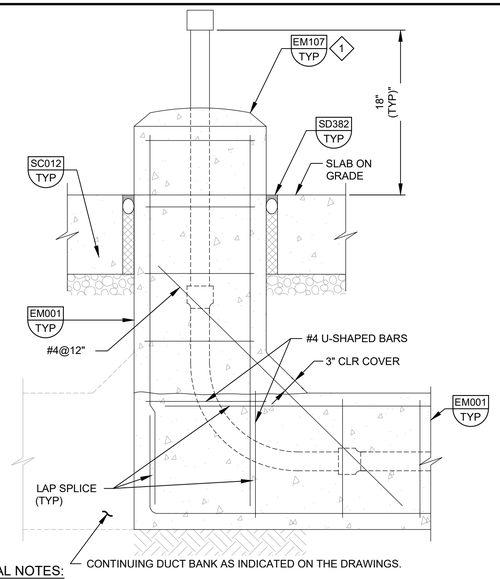

GENERAL NOTES:

1. REFER TO THE SPECIFICATIONS FOR MATERIAL REQUIREMENTS.

KEY NOTES:

1. PROVIDE CONDUIT HOUSE KEEPING CURB AT ALL LOCATIONS WHERE THE CONDUIT IS NOT PROTECTED BY AN EQUIPMENT PAD.

EM032 TYP S — DUCT BANK RISER THROUGH SLAB ON GRADE

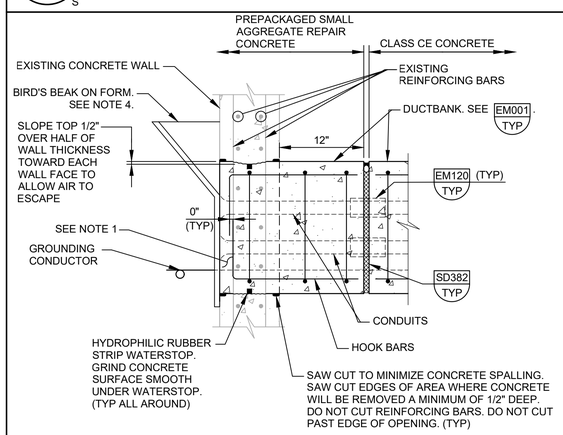

GENERAL NOTES:

1. USE NON-DESTRUCTIVE REINFORCE BAR LOCATOR TO LOCATE EXISTING REINFORCING BARS IN WALL. ADJUST LOCATION OF CONDUITS IN DUCTBANK TO MISS EXISTING REINFORCING BARS IN WALL.
2. REMOVE CONCRETE AS SHOWN FOR NEW DUCTBANK PENETRATION THROUGH WALL. DO NOT CUT EXISTING REINFORCING BARS.
3. ROUGHEN CONCRETE TO 1/4" AMPLITUDE AND COAT WITH EPOXY RESIN/PORTLAND CEMENT BONDING AGENT.
4. USE FORM WITH "BIRD'S BEAK" FOR ACCESS FOR VIBRATOR AND TO ALLOW CONCRETE TO BE PLACED UNDER SLIGHT PRESSURE. AFTER FORMS ARE REMOVED, REMOVE PROJECTING CONCRETE AND FINISH TO MATCH FINISH OF EXISTING CONCRETE.

EM039 TYP S — DUCT BANK CONNECTION TO EXISTING WALL

08/13/13

carollo®

Date	No	Revision	By
	4		
	3		
	2		
	1		

PROJECT ENGINEER MSS
DESIGNED/DRAWN CE
INSPECTOR CH

DIRECTOR PUBLIC WORKS
CITY ENGINEER
ASSISTANT DIRECTOR

CITY OF BELLINGHAM, WASHINGTON
PUBLIC WORKS DEPARTMENT
ENGINEERING DIVISION

SCALE
Horiz. AS SHOWN
Vert. AS SHOWN

DATUM
H: NAD 83/98
V: NAVD 88

Job. No. EU194
Date JAN 2026
Field Bk.

POST POINT RESOURCE RECOVERY PLANT
TYPICAL DETAILS
ELECTRICAL TYPICAL DETAILS 4

DRAWING NO. 800TE004
SHEET NO. 174 OF 198

LAST SAVED BY: ivelozz

CONTACT PERSON: STEPHEN DAY, PE SE , PROJECT ENGINEER AT 360-778-7944

PROJECT NO. 202021-100000 FILE NAME: 202021800TE004.dwg

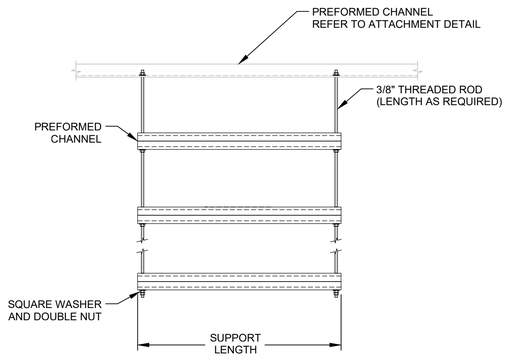

GENERAL NOTES:

1. PROVIDE NUMBER AND LENGTH OF PREFORMED CHANNEL SUPPORTS AS REQUIRED BY EQUIPMENT AND MATERIALS TO BE INSTALLED.
2. PROVIDE SEISMIC BRACING PER THE SPECIFICATIONS.
3. REFER TO SPECIFICATIONS FOR MATERIAL REQUIREMENTS.

EM102 TRAPEZE SUPPORT
TYP S

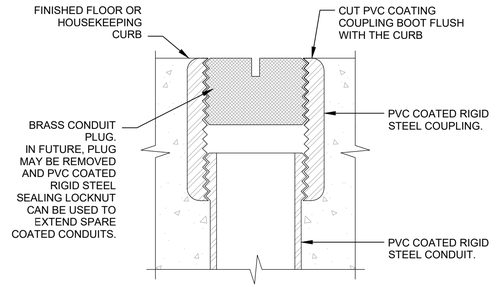

ENCASED CONDUITS

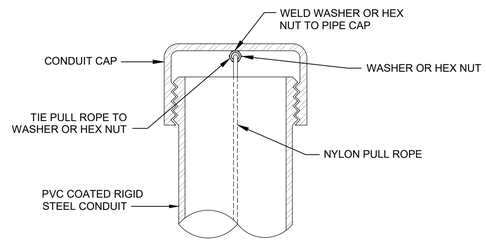

EXPOSED CONDUITS

GENERAL NOTES:

1. PROVIDE 2" MIN CLEAR BETWEEN ADJACENT CONDUITS

EM105 SPARE CONDUIT DETAIL
TYP S

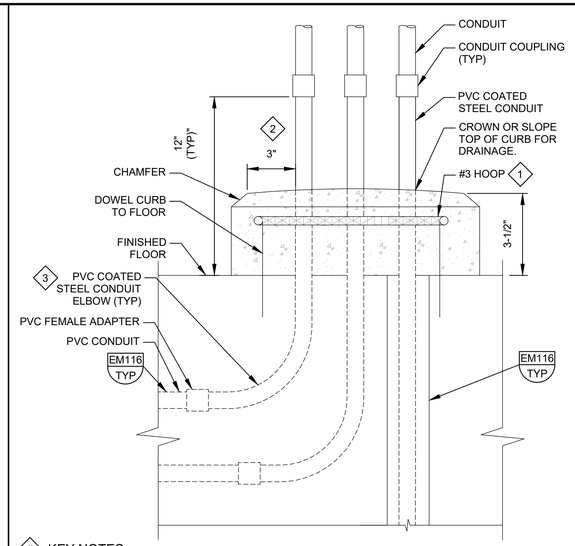

KEY NOTES:

1. TYPICAL BOTH SIDES, FRONT AND REAR.
2. COORDINATE REINFORCING STEEL REQUIREMENTS WITH THE CONTRACTOR.
3. FIELD BEND 1" CONDUITS. PROVIDE MANUFACTURED PCS ELBOWS FOR CONDUITS 1.25" AND LARGER.

EM107 CONDUIT HOUSEKEEPING CURB
TYP S

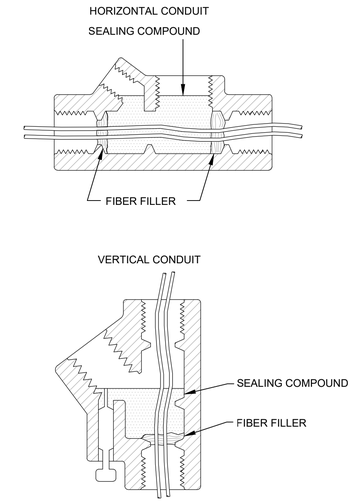

EM108 CONDUIT SEAL DAMMING AND POURING DETAIL
TYP S

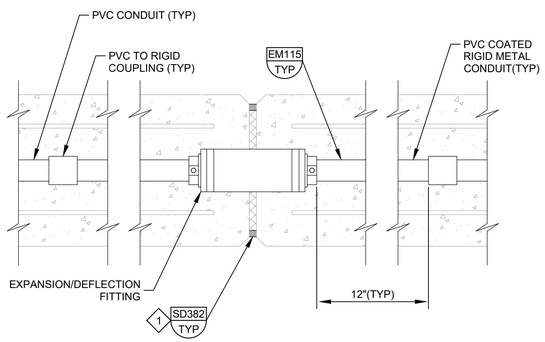

GENERAL NOTES:

1. INSTALLATION IS NOT SUITABLE FOR WATER BEARING WALLS OR SLABS.
2. SPREAD CONDUITS AT EXPANSION JOINT TO MAINTAIN A MINIMUM OF 2" BETWEEN THE EXPANSION/DEFLECTION FITTINGS.

KEY NOTES:

1. WIDTH OF THE JOINT INDICATED ON THE STRUCTURAL DRAWINGS MUST BE EQUAL TO OR GREATER THAN THE FITTING MANUFACTURER'S REQUIREMENTS.

EM120 EMBEDDED CONDUIT EXPANSION/DEFLECTION FITTING
TYP

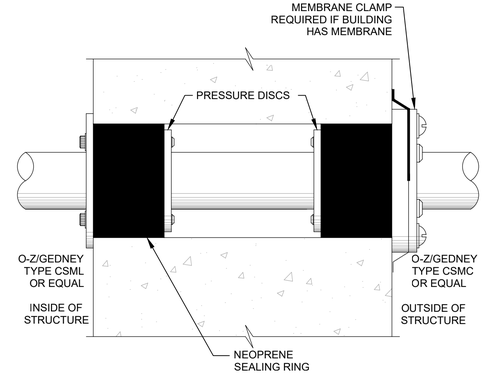

GENERAL NOTES:

1. REFER TO SPECIFICATIONS FOR CORE-DRILLING REQUIREMENTS.

EM133 CONDUIT WALL PENETRATION BELOW GRADE
TYP S

carollo®

Date	No	Revision	By
	4		
	3		
	2		
	1		

PROJECT ENGINEER MSS
DESIGNED/DRAWN TDT
INSPECTOR CH

DIRECTOR PUBLIC WORKS
CITY ENGINEER
ASSISTANT DIRECTOR

CITY OF BELLINGHAM, WASHINGTON
PUBLIC WORKS DEPARTMENT
ENGINEERING DIVISION

SCALE
Horiz. AS SHOWN
Vert. AS SHOWN

DATUM
H: NAD 83/98
V: NAVD 88

Job. No. EU194
Date JAN 2026
Field Bk.

POST POINT RESOURCE RECOVERY PLANT
TYPICAL DETAILS
ELECTRICAL TYPICAL DETAILS 5

DRAWING NO. 800TE005
SHEET NO. 175 OF 198

LAST SAVED BY: lveloz

CONTACT PERSON: STEPHEN DAY, PE SE , PROJECT ENGINEER AT 360-778-7944

PROJECT NO. 202021-100000 FILE NAME: 202021800TE005.dwg

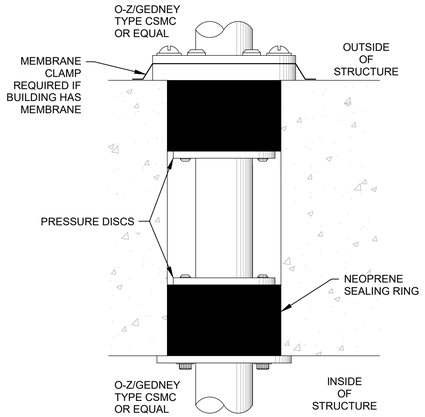

EM136 TYP S — CORE HOLE CONDUIT FLOOR PENETRATION

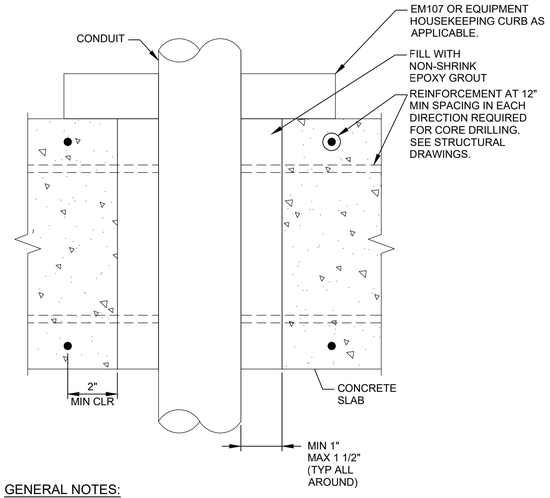

GENERAL NOTES:

1. PROVIDE NON-DESTRUCTIVE TESTING TO DETERMINE LOCATIONS OF REINFORCEMENT. MAINTAIN MIN 2" CLEAR BETWEEN CORE DRILLED OPENING AND REINFORCEMENT.
2. APPLY EPOXY CEMENT BONDING AGENT PRIOR TO GROUTING.

EM139 TYP S — CORE DRILLED PENETRATION CONCRETE SLAB

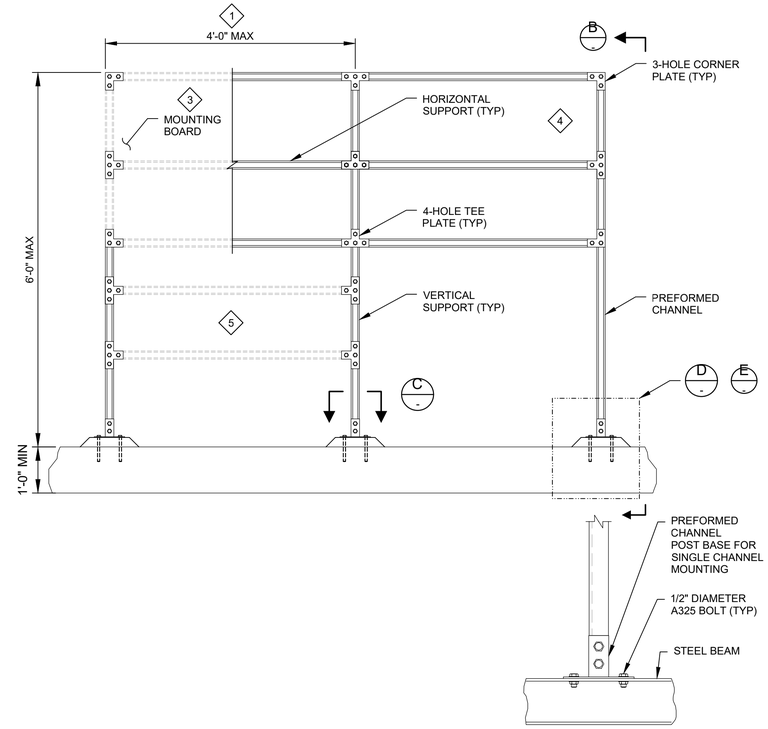

D POST MOUNTED ON STEEL BEAM

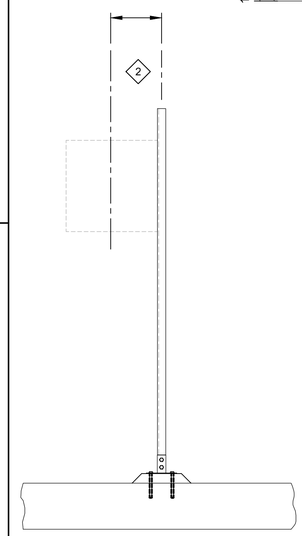

B SECTION

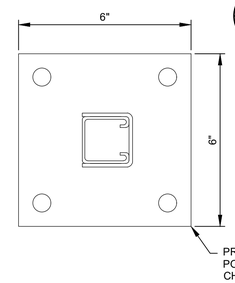

C POST BASE

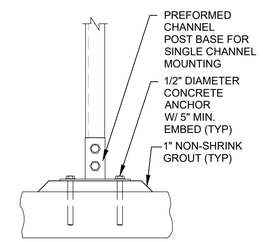

E POST MOUNTED ON CONCRETE

SCALE:
FILE:

GENERAL NOTES:

1. AS SHOWN, THE MOUNTING STAND IS SUITABLE FOR THE FOLLOWING DESIGN CRITERIA.
   - STAINLESS STEEL OR HOT-DIPPED GALVANIZED PREFORMED CHANNEL
   - SEISMIC DESIGN CATEGORY: A THROUGH D
   - RISK CATEGORY: III AND IV
   - MAXIMUM EQUIPMENT LOAD OF 100 LBS PER VERTICAL SUPPORT

   SUBMIT DESIGN CALCULATIONS FOR EACH INSTALLATION THAT EXCEEDS THE SPECIFIED DESIGN CRITERIA OR DIMENSIONAL LIMITATIONS IN THIS DETAIL. REFER TO THE SPECIFICATIONS FOR DESIGN CALCULATION SUBMITTAL REQUIREMENTS
2. REFER TO THE SPECIFICATIONS FOR MATERIAL REQUIREMENTS.
3. WHERE CONCRETE ANCHORS COME IN CONTACT WITH DISSIMILAR METALS, ISOLATE DISSIMILAR METALS AS SPECIFIED IN THE SPECIFICATIONS.
4. HORIZONTAL AND VERTICAL SUPPORTS SHALL CONSIST OF PREFORMED SINGLE CHANNELS.

KEY NOTES:

1. FOR MOUNTING STANDS WIDER THAN 4 FEET PROVIDE EQUALLY SPACED VERTICAL SUPPORTS AT 4 FOOT MAXIMUM SPACING.
2. MAXIMUM OFFSET TO THE CENTERLINE OF EQUIPMENT OR ENCLOSURES IS 1'-6".
3. PROVIDE A MOUNTING BOARD FOR INSTRUMENTS AND DEVICES WEIGHING LESS THAN 20 POUNDS THAT CANNOT BE MOUNTED DIRECTLY TO PREFORMED CHANNEL. EQUIPMENT ANCHORAGE TO THE MOUNTING BOARD SHALL BE DESIGNED BY THE CONTRACTOR.
4. PROVIDE ADDITIONAL PREFORMED CHANNEL SUPPORTS FOR ENCLOSURES THAT CAN BE MOUNTED DIRECTLY TO THE PREFORMED CHANNEL.
5. OPTIONAL HORIZONTAL SUPPORTS AND AVAILABLE SPACE FOR JUNCTION BOXES.

EM210 TYP S — INDOOR EQUIPMENT MOUNTING STAND

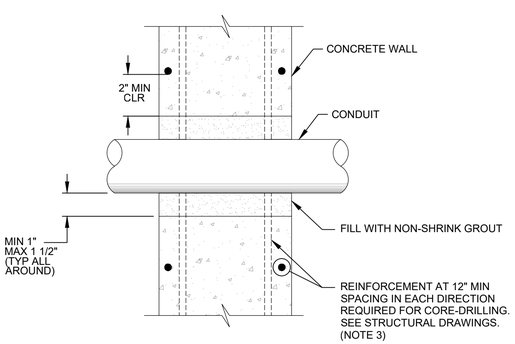

GENERAL NOTES:

1. PROVIDE NON-DESTRUCTIVE TESTING TO DETERMINE LOCATIONS OF REINFORCEMENT. MAINTAIN MIN 2" CLEAR BETWEEN CORE DRILLED OPENING AND REINFORCEMENT.
2. APPLY EPOXY CEMENT BONDING AGENT OR ROUGHEN CONCRETE SURFACE PRIOR TO GROUTING.
3. PROVIDE CAST-IN SLEEVE FOR PENETRATIONS IN WALLS WITH REINFORCEMENT SPACING LESS THAN 2" IN EACH DIRECTION. REFER TO STRUCTURAL DRAWINGS.

EM163 TYP — CORE DRILLED PENETRATION CONCRETE WALL

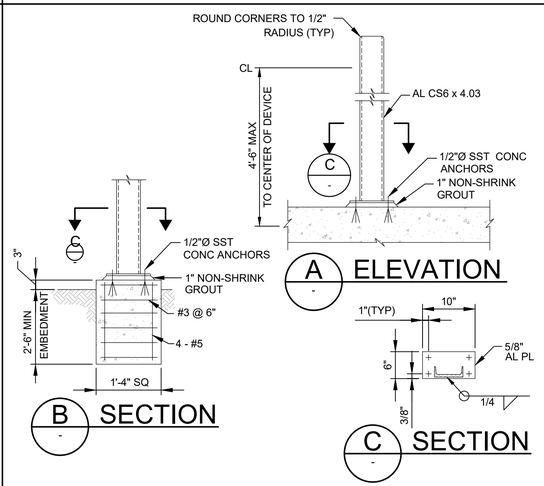

A ELEVATION

B SECTION

C SECTION

GENERAL NOTES:

1. WHERE SEPARATE FOUNDATION IS REQUIRED, SEE SECTION B.
2. COAT ALUMINUM SURFACES IN CONTACT WITH CONCRETE PER SPECIFICATIONS.
3. USE STAINLESS STEEL FASTENERS FOR MOUNTING DEVICES.
4. WEIGHT OF DEVICE(S) SHALL NOT EXCEED 100 POUNDS.

EM201 TYP S — DEVICE SUPPORT AND MOUNTING

carollo®

Digitally signed by Tyler D. Troup
Contact Info: tyler@carollo.com
Date: 2026.01.09

TYLER DOUGLAS TROUP
STATE OF WASHINGTON
24031376
REGISTERED
PROFESSIONAL ENGINEER

Date	No	Revision	By
	4		
	3		
	2		
	1		

PROJECT ENGINEER MSS
DESIGNED/DRAWN CE
INSPECTOR CH

DIRECTOR PUBLIC WORKS
CITY ENGINEER
ASSISTANT DIRECTOR

CITY OF BELLINGHAM, WASHINGTON
PUBLIC WORKS DEPARTMENT
ENGINEERING DIVISION

SCALE
Horiz. AS SHOWN
Vert. AS SHOWN

DATUM
H: NAD 83/98
V: NAVD 88

Job. No. EU194
Date JAN 2026
Field Bk.

POST POINT RESOURCE RECOVERY PLANT
TYPICAL DETAILS
ELECTRICAL TYPICAL DETAILS 6

DRAWING NO. 800TE006
SHEET NO. 176 OF 198

LAST SAVED BY: lveloz

CONTACT PERSON: STEPHEN DAY, PE SE , PROJECT ENGINEER AT 360-778-7944

PROJECT NO. 202021-100000 FILE NAME: 202021800TE006.dwg

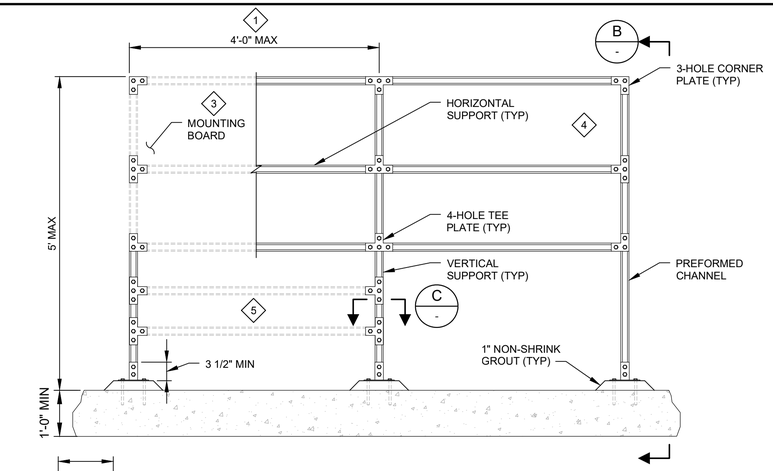

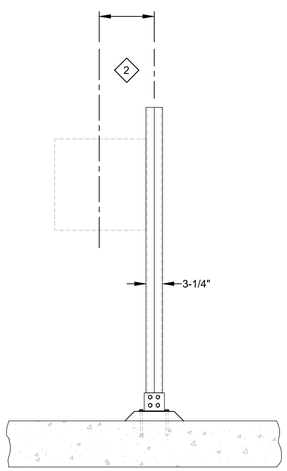

B SECTION

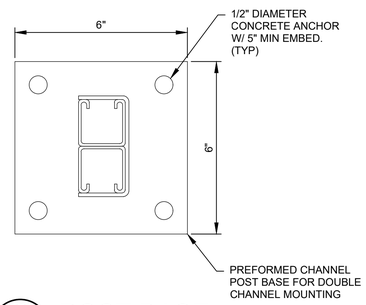

C POST BASE
SCALE:
FILE:

GENERAL NOTES:

1. AS SHOWN, THE MOUNTING STAND IS SUITABLE FOR THE FOLLOWING DESIGN CRITERIA.
   - STAINLESS STEEL OR HOT-DIPPED GALVANIZED PREFORMED CHANNEL
   - BASIC WIND SPEED (3 SECOND GUST. 33 FEET ABOVE GROUND) : 120 MPH
   - WIND EXPOSURE CATEGORY: C
   - NON -SPECIAL WIND REGIONS
   - SEISMIC DESIGN CATEGORY: A THROUGH D
   - RISK CATEGORY: III AND IV
   - MAXIMUM EQUIPMENT LOAD OF 100 LBS PER VERTICAL SUPPORT

   SUBMIT DESIGN CALCULATIONS FOR EACH INSTALLATION THAT EXCEEDS THE SPECIFIED DESIGN CRITERIA OR DIMENSIONAL LIMITATIONS IN THIS DETAIL. REFER TO THE SPECIFICATIONS FOR DESIGN CALCULATION SUBMITTAL REQUIREMENTS.
2. THE TOTAL SURFACE AREA OF ALL EQUIPMENT AND MOUNTING BOARDS SHALL NOT EXCEED 12 SQUARE FEET PER VERTICAL SUPPORT.
3. REFER TO THE SPECIFICATIONS FOR MATERIAL REQUIREMENTS.
4. WHERE CONCRETE ANCHORS COME IN CONTACT WITH DISSIMILAR METALS, ISOLATE DISSIMILAR METALS AS SPECIFIED IN THE SPECIFICATIONS.
5. VERTICAL SUPPORTS SHALL CONSIST OF PREFORMED DOUBLE CHANNELS. HORIZONTAL SUPPORTS SHALL CONSIST OF PREFORMED SINGLE CHANNELS.

KEY NOTES:

1. FOR MOUNTING STANDS WIDER THAN 4 FEET PROVIDE EQUALLY SPACED VERTICAL SUPPORTS AT 4 FOOT MAXIMUM SPACING.
2. MAXIMUM OFFSET TO THE CENTERLINE OF EQUIPMENT OR ENCLOSURES IS 1'-6".
3. PROVIDE A MOUNTING BOARD FOR INSTRUMENTS AND DEVICES WEIGHING LESS THAN 20 POUNDS THAT CANNOT BE MOUNTED DIRECTLY TO PREFORMED CHANNEL. EQUIPMENT ANCHORAGE TO THE MOUNTING BOARD SHALL BE DESIGNED BY THE CONTRACTOR.
4. PROVIDE ADDITIONAL PREFORMED CHANNEL SUPPORTS FOR ENCLOSURES THAT CAN BE MOUNTED DIRECTLY TO THE PREFORMED CHANNEL.
5. OPTIONAL HORIZONTAL SUPPORTS AND AVAILABLE SPACE FOR JUNCTION BOXES.

EM211 TYP OUTDOOR EQUIPMENT MOUNTING STAND

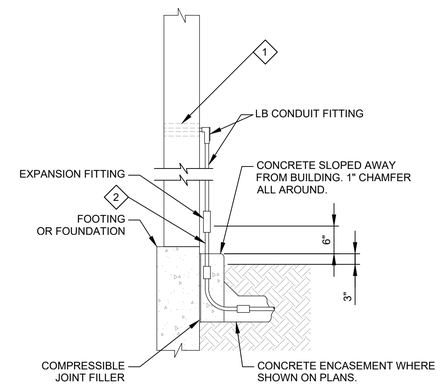

GENERAL NOTES:

1. REFER TO THE SPECIFICATIONS FOR MATERIAL REQUIREMENTS.

KEY NOTES:

1. USE THE WALL PENETRATION DETAIL SUITABLE FOR THE WALL CONSTRUCTION.
2. DO NOT ATTACH THE CONDUIT TO THE BUILDING BEFORE THE EXPANSION FITTING.

EM219 TYP S DUCT BANK RISER ADJACENT TO BUILDING
10/15/22

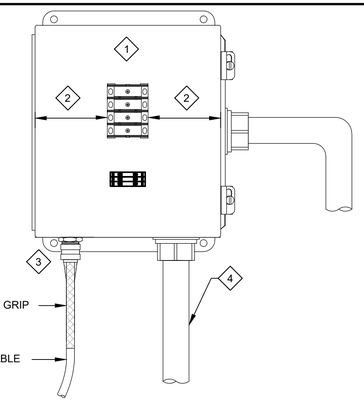

GENERAL NOTES:

1. REFER TO THE SPECIFICATIONS FOR ENCLOSURE AND MATERIAL REQUIREMENTS.
2. PROVIDE A BACK PANEL AND DIN RAIL FOR MOUNTING THE POWER AND CONTROL BLOCKS.
3. DO NOT MAKE CONDUIT CONNECTIONS TO THE TOP OF NEMA 4X ENCLOSURES.

KEY NOTES:

1. LISTED POWER TERMINAL BLOCKS WITH SAFETY COVER.
2. PROVIDE CLEARANCE IN ACCORDANCE WITH THE NEC.
3. THE EQUIPMENT CABLE MAY BE ROUTED IN CONDUIT FROM THE WET WELL. REFER TO THE DRAWINGS.
4. PROVIDE CONDUIT SEALS ON THE BUILDING WIRE SIDE OF THE JUNCTION BOX AS REQUIRED.

EM315 TYP S SUBMERSIBLE EQUIPMENT CABLE CONNECTION DETAIL

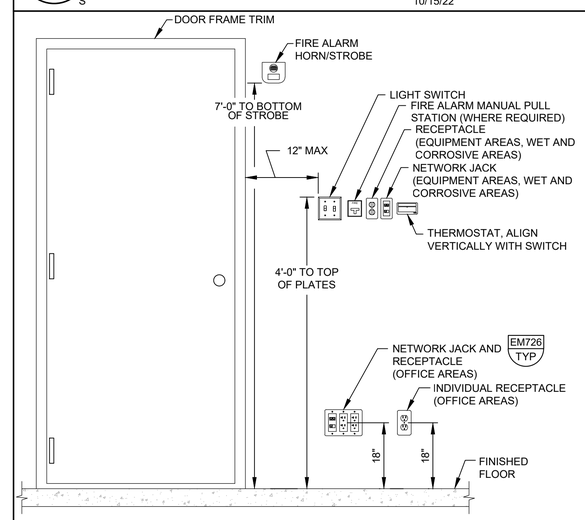

GENERAL NOTES:

1. ALL SWITCHES AND RECEPTACLES SHALL BE EMBEDDED IN THE WALL UNLESS OTHERWISE INDICATED ON THE DRAWINGS.

EM725 TYP S OUTLET BOX MOUNTING

carollo®

Date	No	Revision	By
	4		
	3		
	2		
	1		

PROJECT ENGINEER MSS
DESIGNED/DRAWN TDT
INSPECTOR CH

DIRECTOR PUBLIC WORKS
CITY ENGINEER
ASSISTANT DIRECTOR

CITY OF BELLINGHAM, WASHINGTON
PUBLIC WORKS DEPARTMENT
ENGINEERING DIVISION

SCALE
Horiz. AS SHOWN
Vert. AS SHOWN

DATUM
H: NAD 83/98
V: NAVD 88

Job. No. EU194
Date JAN 2026
Field Bk.

POST POINT RESOURCE RECOVERY PLANT
TYPICAL DETAILS
ELECTRICAL TYPICAL DETAILS 7

DRAWING NO. 800TE007
SHEET NO. 177 OF 198

CONTACT PERSON: STEPHEN DAY, PE SE , PROJECT ENGINEER AT 360-778-7944

PROJECT NO. 202021-100000 FILE NAME: 202021800TE007.dwg

10/9/2024 1:44:55 PM

LAST SAVED BY: lveloz

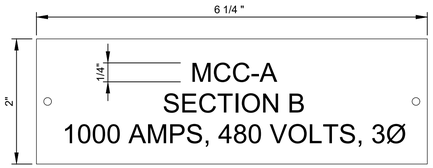

OVERALL ELECTRICAL EQUIPMENT

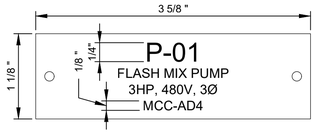

STARTER OR CIRCUIT BREAKER COMPARTMENT

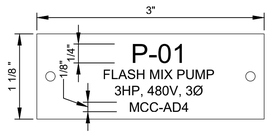

DISCONNECT, LOCAL CONTROL PANEL

GENERAL NOTES:

1. REFER TO THE SPECIFICATIONS FOR MATERIALS AND COLOR SCHEMES.
2. NAMEPLATE DIMENSIONS ARE APPROXIMATE.

EN001 TYPICAL ELECTRICAL EQUIPMENT NAMEPLATES

TYP S

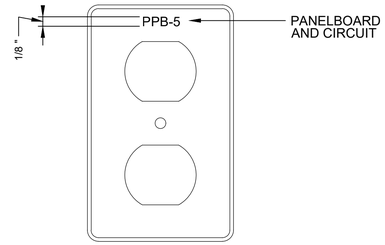

RECEPTACLE

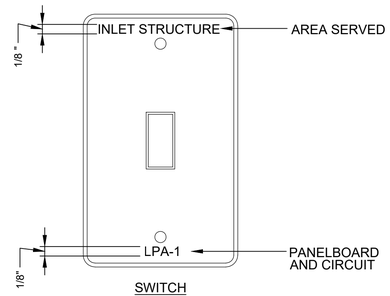

SWITCH

GENERAL NOTES:

1. ENGRAVE CIRCUIT DESIGNATION DIRECTLY ONTO DEVICE COVER PLATE. FILL LETTERING WITH BLACK ENAMEL.

EN002 TYPICAL PLATE IDENTIFICATION

TYP S

carollo®

LAST SAVED BY: lveloz

Date	No	Revision	By
	4		
	3		
	2		
	1		

PROJECT ENGINEER MSS
DESIGNED/DRAWN TDT
INSPECTOR CH

DIRECTOR PUBLIC WORKS
CITY ENGINEER
ASSISTANT DIRECTOR

CITY OF BELLINGHAM, WASHINGTON
PUBLIC WORKS DEPARTMENT
ENGINEERING DIVISION

SCALE
Horiz. AS SHOWN
Vert. AS SHOWN

DATUM
H: NAD 83/98
V: NAVD 88

Job. No. EU194
Date JAN 2026
Field Bk.

POST POINT RESOURCE RECOVERY PLANT
TYPICAL DETAILS
ELECTRICAL TYPICAL DETAILS 8

DRAWING NO. 800TE008
SHEET NO. 178 OF 198

CONTACT PERSON: STEPHEN DAY, PE SE , PROJECT ENGINEER AT 360-778-7944

PROJECT NO. 202021-100000 FILE NAME: 202021800TE008.dwg

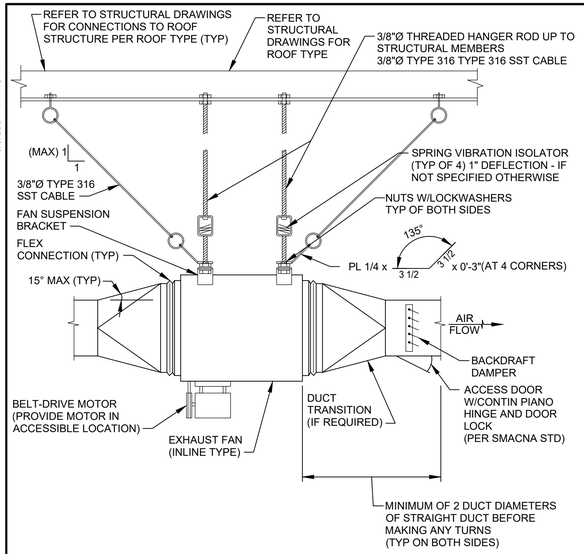

NOTES:

1. PROVIDE ACCESS PANEL IN HARD CEILING LOCATIONS FOR FAN, MOTOR AND BACKDRAFT DAMPER ACCESS. PROVIDE ADEQUATE SERVICE SPACE AROUND FAN FOR FAN REMOVAL MOTOR, BELT & DRIVE ACCESS.

HE140 TYP S — FAN - CEILING INLINE SUPPLY/EXHAUST

8/25/22

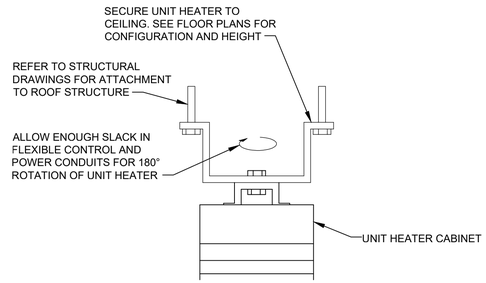

HE310 TYP S — UNIT HEATER - CEILING MOUNT - ELECTRIC

5/23/18

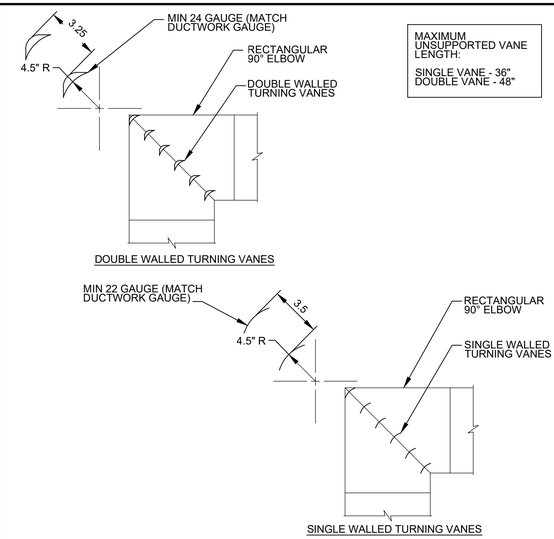

NOTES:

1. INSTALL VANES IN SECTIONS OR USE TIE RODS TO LIMIT THE UNBRACED VANE LENGTH.
2. VANES SHALL BE SECURELY FASTENED TO RUNNERS.
3. ALL VANES SHALL BE SECURE AND STABLE IN INSTALLED OPERATING POSITION. IF NECESSARY, AT CERTAIN VELOCITIES OR PRESSURES WELD VANES TO RUNNERS ON APPROPRIATE INTERVALS ALONG RUNNERS.
4. OTHER VANE SIZES, SPACINGS OR CONFIGURATIONS CAN BE REVIEWED BY ENGINEER OF RECORD FOR APPROVAL.

HA320 TYP S — TURNING VANES FOR METAL DUCT

SHEET 1 OF 2 5/17/18

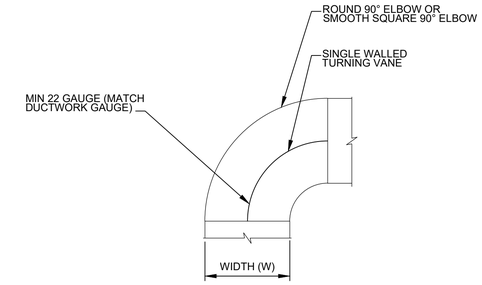

CENTERLINE R = 3W/2 UNLESS OTHERWISE SPECIFIED - IS NOT RESTRICTED TO 90° SQUARE THROAT OR SMOOTH RADIUS ELBOW.

NOTES:

1. INSTALL VANES IN SECTIONS OR USE TIE RODS TO LIMIT THE UNBRACED VANE LENGTH.
2. VANES SHALL BE SECURELY FASTENED TO RUNNERS.
3. ALL VANES SHALL BE SECURE AND STABLE IN INSTALLED OPERATING POSITION. IF NECESSARY, AT CERTAIN VELOCITIES OR PRESSURES WELD VANES TO RUNNERS ON APPROPRIATE INTERVALS ALONG RUNNERS.
4. OTHER VANE SIZES, SPACINGS OR CONFIGURATIONS CAN BE REVIEWED BY ENGINEER OF RECORD FOR APPROVAL.

HA320 TYP S — TURNING VANES FOR METAL DUCT

SHEET 2 OF 2 5/17/18

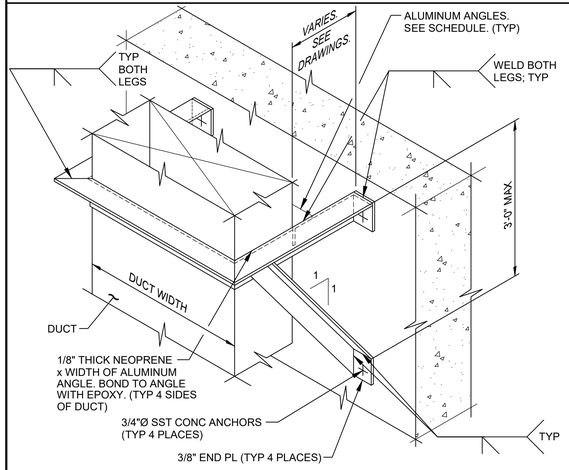

AIR DUCT HANGER AND SUPPORT SCHEDULE		
DUCT WIDTH	ANGLE SIZE	SPACING WHEN NOT INDICATED ON THE DRAWINGS
LESS THAN 18"	L 2 x 2 x 0.250	8'-0" OC MAX
18" THRU 40"	L 2 1/2 x 2 1/2 x 0.375	8'-0" OC MAX
GREATER THAN 40"	L 3 x 3 x 0.375	4'-0" OC MAX

NOTE:

1. DUCT WIDTH SHALL BE THE LONG DIMENSION OF RECTANGULAR DUCT OR THE OUTSIDE DIAMETER OF ROUND DUCT.

LIGHT DUTY DUCTWORK

HS350 TYP — DUCT SUPPORT FOR VERTICAL RECTANGULAR DUCT - WALL BRACKET OUTSIDE

2 9/14/18

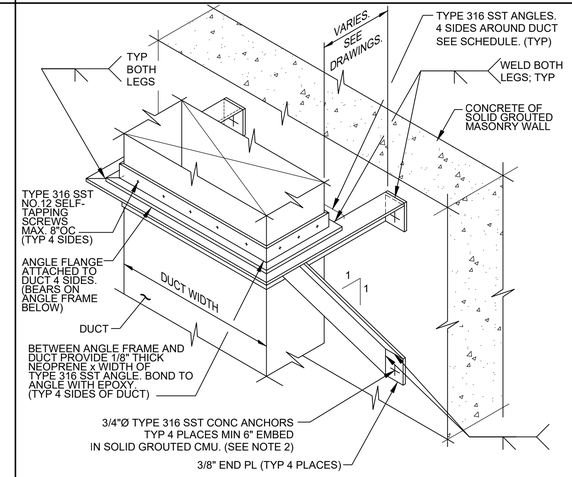

AIR DUCT HANGER AND SUPPORT SCHEDULE		
DUCT WIDTH	ANGLE SIZE	SPACING WHEN NOT INDICATED ON THE DRAWINGS
LESS THAN 18"	L 2 x 2 x 0.250	8'-0" OC MAX
18" THRU 40"	L 2 1/2 x 2 1/2 x 0.375	8'-0" OC MAX
GREATER THAN 40"	L 3 x 3 x 0.375	4'-0" OC MAX

NOTE:

1. DUCT WIDTH SHALL BE THE LONG DIMENSION OF RECTANGULAR DUCT OR THE OUTSIDE DIAMETER OF ROUND DUCT.
2. SOLID GROUTED CMU TO EXTEND MIN. 12" ALL AROUND PAST CENTERLINE OF ANCHOR.

HS350 TYP S — DUCT SUPPORT FOR VERTICAL RECTANGULAR DUCT - WALL BRACKET OUTSIDE

SHEET 2 OF 2 9/14/18

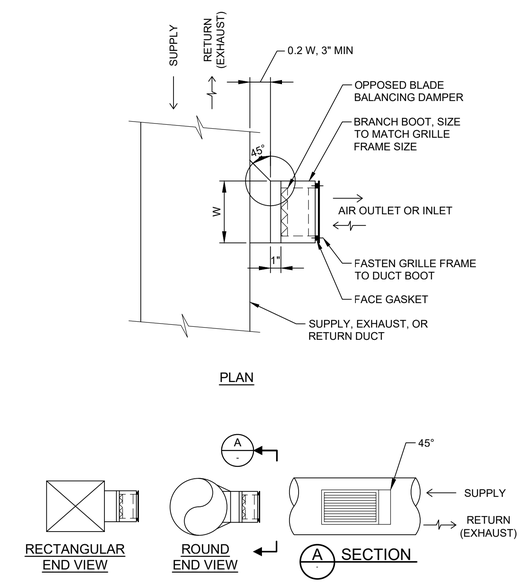

HA520 TYP S — GRILLE - SUPPLY/RETURN/EXHAUST - METAL

11/13/18

carollo®

Date	No	Revision	By
	4		
	3		
	2		
	1		

PROJECT ENGINEER CE
DESIGNED/DRAWN CE
INSPECTOR

DIRECTOR PUBLIC WORKS
CITY ENGINEER
ASSISTANT DIRECTOR

CITY OF BELLINGHAM, WASHINGTON
PUBLIC WORKS DEPARTMENT
ENGINEERING DIVISION

SCALE: Horiz. AS SHOWN; Vert. AS SHOWN
DATUM: H: NAD 83/98; V: NAVD 88
Job. No. EU194
Date JAN 2026
Field Bk.

POST POINT RESOURCE RECOVERY PLANT
TYPICAL DETAILS
HVAC TYPICAL DETAILS 1

DRAWING NO. 800TH001
SHEET NO. 179 OF 198

CONTACT PERSON: STEPHEN DAY, PE SE , PROJECT ENGINEER AT 360-778-7944

PROJECT NO. 202021-100000 FILE NAME: 202021800TH001.dwg

LAST SAVED BY: dlee

10/9/2024 1:47:45 PM

10/9/2024 2:04:01 PM

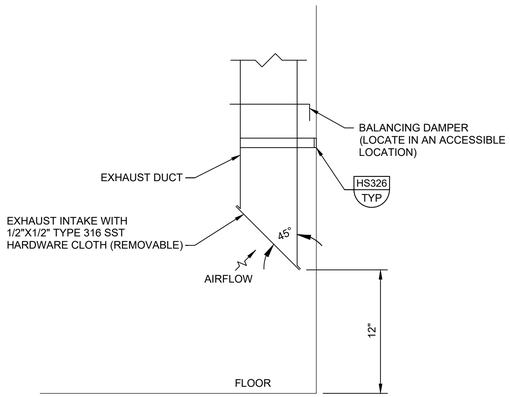

HD540 TYP S — TERMATION - EXHAUST DUCT DROP

5/17/18

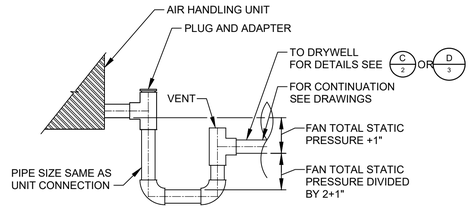

A DRAW THRU UNIT

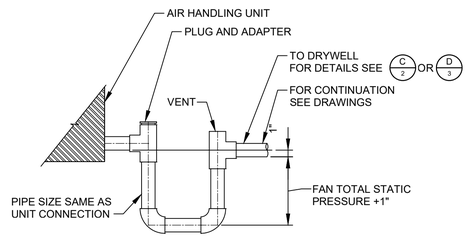

B BLOW THRU UNIT

HE620 TYP S — PIPE CONNECTION - AC CONDENSATE

SHEET 1 OF 3 12/18/2023

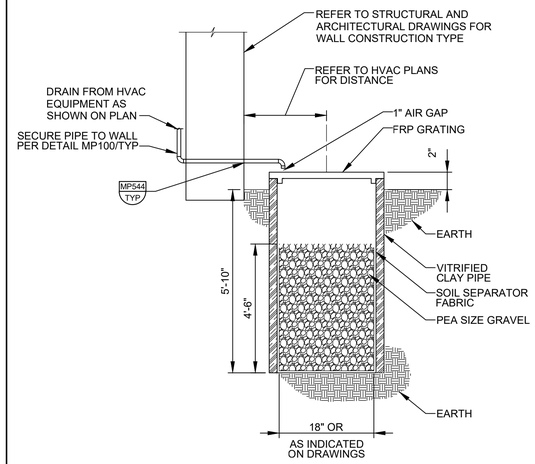

C DRYWELL - ABOVE GROUND PIPING

HE620 TYP S — PIPE CONNECTION - AC CONDENSATE

SHEET 2 OF 3 12/18/2023

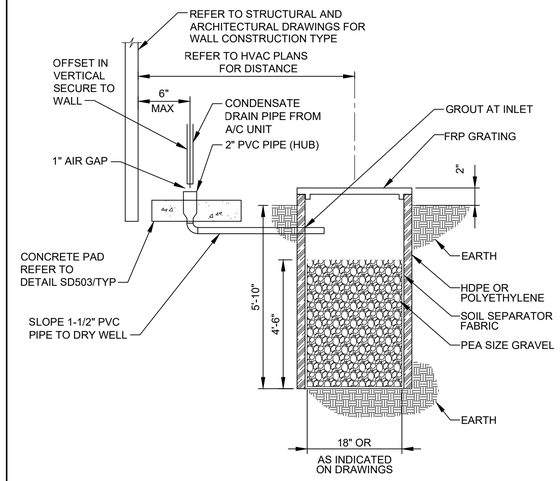

D DRYWELL - BELOW GROUND PIPING

HE620 TYP S — PIPE CONNECTION - AC CONDENSATE

SHEET 3 OF 3 12/18/2023

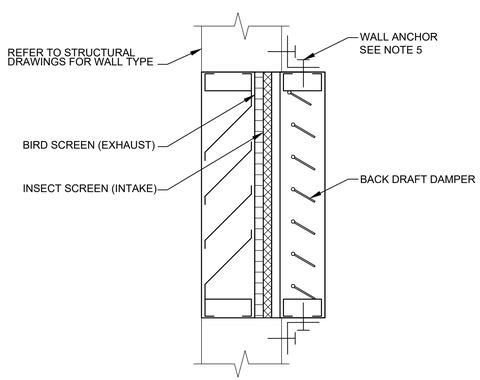

NOTES:

1. ALL FASTENERS SHALL BE STAINLESS STEEL.
2. REFER TO MANUFACTURE RECOMMENDATIONS FOR INSTALLATION.
3. COORDINATE THE SEQUENCE OF INSTALLATION OF DAMPERS AND LOUVERS WITH ANY STRUCTURAL BRACING TO THE WALL.
4. REFER TO ARCHITECTURAL AND STRUCTURAL DRAWINGS FOR DETAILS OF WALL OPENINGS AND FLASHING DETAILS.
5. CONTRACTOR IS RESPONSIBLE FOR ATTACHMENT TO WALL. COORDINATE WITH LOUVER MFR. SEE PROJECT SPECIFICATIONS FOR ANCHOR REQUIREMENTS.

HE520 TYP — LOUVER - STATIONARY - INTAKE/EXHAUST

2 2/23/23

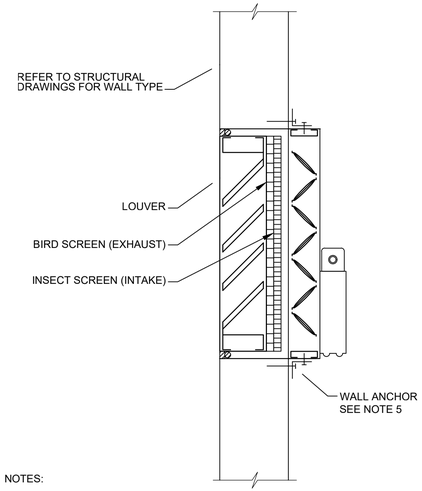

NOTES:

1. ALL FASTENERS SHALL BE STAINLESS STEEL.
2. REFER TO MANUFACTURE RECOMMENDATIONS FOR INSTALLATION.
3. COORDINATE THE SEQUENCE OF INSTALLATION OF DAMPERS AND LOUVERS WITH ANY STRUCTURAL BRACING TO THE WALL.
4. REFER TO ARCHITECTURAL AND STRUCTURAL DRAWINGS FOR DETAILS OF WALL OPENINGS AND FLASHING DETAILS
5. CONTRACTOR IS RESPONSIBLE FOR ATTACHMENT TO WALL. COORDINATE WITH LOUVER MFR. SEE PROJECT SPECIFICATIONS FOR ANCHOR REQUIREMENTS.

HE520 TYP S — LOUVER - STATIONARY - INTAKE/EXHAUST WITH MOTORIZED DAMPER MOUNTING

SHEET 2 OF 2 2/23/23

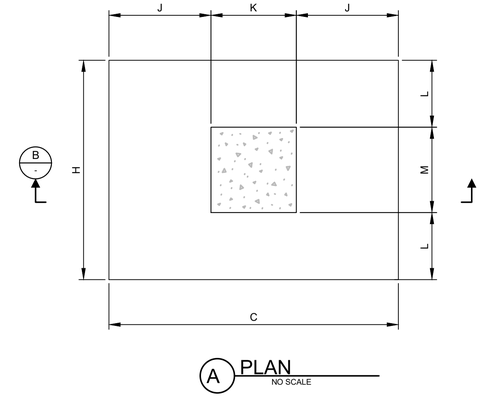

A PLAN
NO SCALE

NOTES:

1. ALL STEEL MEMBERS, BOLTS, AND STEEL PLATES SHALL BE GALVANIZED.
2. CENTER PIPE ON CONCRETE FOUNDATION.
3. a) PROOF-ROLL THE EXPOSED EXCAVATED AREA UNTIL FIRM STABLE SOIL. REMOVE ANY SOFT OR PUMPING AREAS. GEOTECHNICAL ENGINEER OR HIS REPRESENTATIVE SHOULD OBSERVE THIS. TEST THE SUBGRADE FOR COMPACTION AND MOISTURE CONTENT.
   b) GEOTECHNICAL ENGINEER SHALL OBSERVE PRIOR TO CONCRETE PAVEMENT. COMPACT A MINIMUM OF 98% OF THE STANDARD PROCTOR, ASTM D698, TO A MOISTURE CONTENT RANGING FROM ONE PERCENTAGE POINT BELOW OPTIMUM MOISTURE TO THREE PERCENTAGE POINTS ABOVE OPTIMUM MOISTURE (-1 TO +3).

HO110 TYP S — SUPPORT FOR ROUND FRP DUCT ADJUSTABLE YARD

SHEET 1 OF 4 08/16/18

Digitally signed by Chad Green
Contact: chad@carollo.com
Date: 2026.01.14 11:41:42 -08'00'
STATE OF WASHINGTON
CHAD GREEN
53605
REGISTERED
PROFESSIONAL ENGINEER

carollo®

LAST SAVED BY: dlee

Date	No	Revision	By
	4		
	3		
	2		
	1		

PROJECT ENGINEER CE
DESIGNED/DRAWN CE
INSPECTOR

DIRECTOR PUBLIC WORKS
CITY ENGINEER
ASSISTANT DIRECTOR

CITY OF BELLINGHAM, WASHINGTON
PUBLIC WORKS DEPARTMENT
ENGINEERING DIVISION

SCALE
Horiz. AS SHOWN
Vert. AS SHOWN

DATUM
H: NAD 83/98
V: NAVD 88

Job. No. EU194
Date JAN 2026
Field Bk.

POST POINT RESOURCE RECOVERY PLANT
TYPICAL DETAILS
HVAC TYPICAL DETAILS 2

DRAWING NO. 800TH002
SHEET NO. 180 OF 198

CONTACT PERSON: STEPHEN DAY, PE SE , PROJECT ENGINEER AT 360-778-7944

PROJECT NO. 202021-100000 FILE NAME: 202021800TH002.dwg

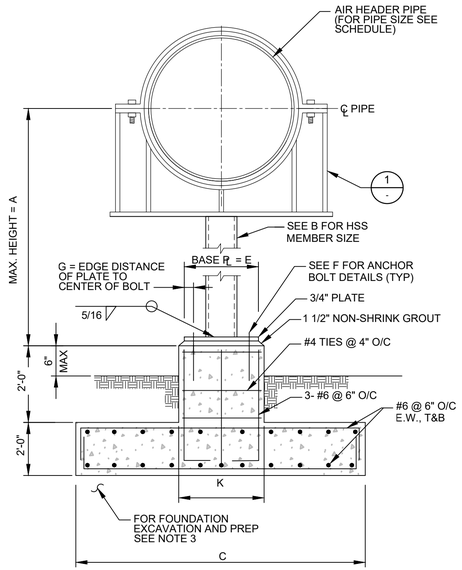

B SECTION
SCALE: NO SCALE

HO110 TYP S — SUPPORT FOR ROUND FRP DUCT ADJUSTABLE YARD

SHEET 2 OF 4 08/16/18

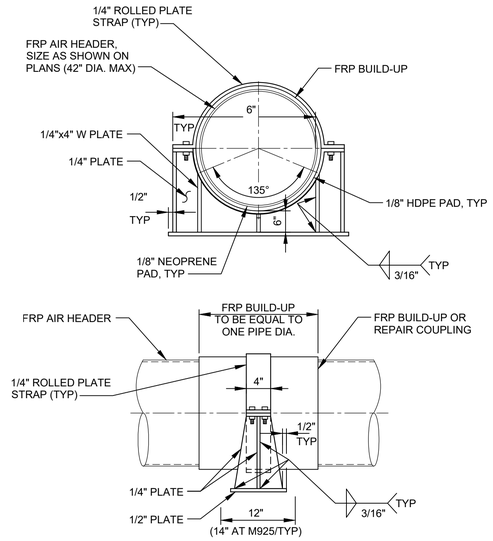

1 DETAIL
SCALE: NO SCALE

NOTES:

1. ALL STEEL MEMBERS, BOLTS, AND STEEL PLATES SHALL BE GALVANIZED.

HO110 TYP S — SUPPORT FOR ROUND FRP DUCT ADJUSTABLE YARD

SHEET 3 OF 4 08/16/18

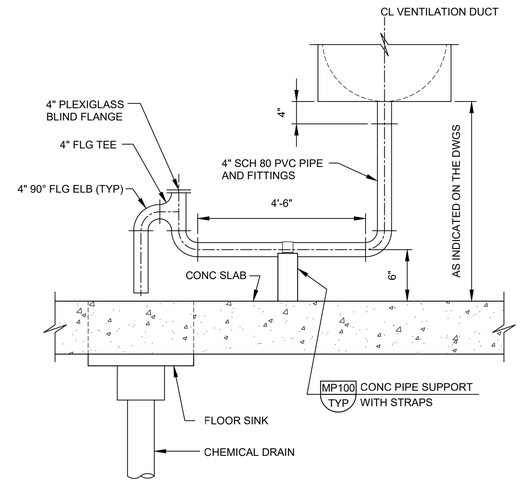

HO720 TYP — CONDENSATE DRAIN FOR FRP DUCT - 4" DIAMETER

12/18/2023

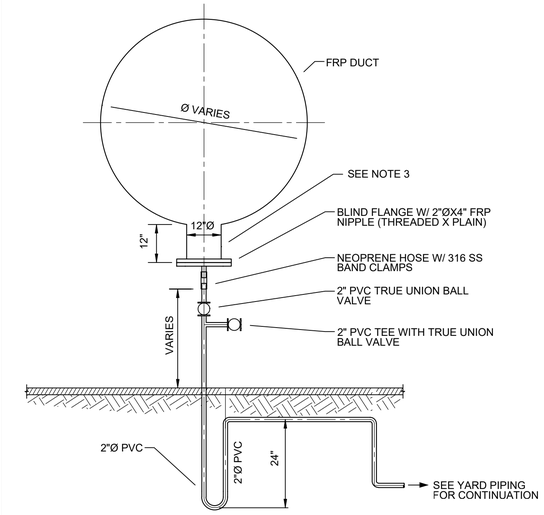

NOTES:

1. INSTALL WHERE SHOWN ON PLANS AND AT ALL LOW POINTS IN DUCT.
2. 2"Ø FRP NIPPLE TO BE THREADED INTO BLIND FLANGE.
3. INSTALL 12" STUBOUT ON DUCTS 12"Ø AND LARGER INSTALL A 6" STUBOUT ON DUCTS 6"-12"Ø. INTERIOR OF DUCT AT STUBOUT SHALL BE SMOOTH AND WITHOUT PROTRUSION ABOVE FLOWLINE OF DUCT.

HO730 TYP S — CONDENSATE DRAIN FOR FRP DUCT - 2" DIAMETER BELOW GRADE

9/09/22

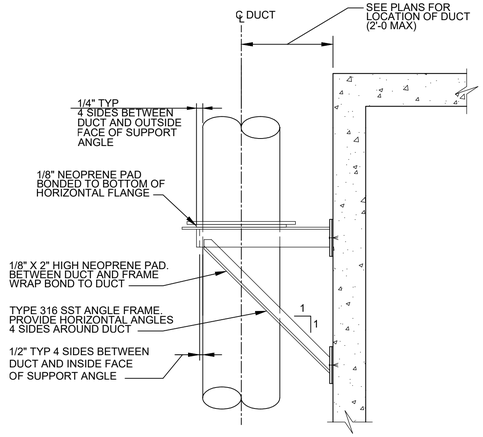

AIR DUCT HANGER AND SUPPORT SCHEDULE		
DUCT DIA	ANGLE SIZE	SPACING WHEN NOT INDICATED ON THE DRAWINGS
LESS THAN 18"	L2 x 2 x 0.250	8'-0" OC MAX
18" THRU 40"	L2 1/2" x 2 1/2" x 0.375	8'-0" OC MAX
GREATER THAN 40"	L3 x 3 x 0.375	4'-0" OC MAX

HS326 TYP — DUCT SUPPORT FOR VERTICAL ROUND DUCT - WALL LATERAL BRACE

9/14/18

carollo®

Digitally signed by CHAD GREEN
Contact: chad.green@carollo.com
Date: 2026.01.14 15:08:08 -08'00'

CHAD GREEN — STATE OF WASHINGTON — 53635 — REGISTERED PROFESSIONAL ENGINEER

LAST SAVED BY: dlee

Date	No	Revision	By
	4		
	3		
	2		
	1		

PROJECT ENGINEER CE
DESIGNED/DRAWN CE
INSPECTOR

DIRECTOR PUBLIC WORKS
CITY ENGINEER
ASSISTANT DIRECTOR

CITY OF BELLINGHAM, WASHINGTON
PUBLIC WORKS DEPARTMENT
ENGINEERING DIVISION

SCALE
Horiz. AS SHOWN
Vert. AS SHOWN

DATUM
H: NAD 83/98
V: NAVD 88

Job. No. EU194
Date JAN 2026
Field Bk.

POST POINT RESOURCE RECOVERY PLANT
TYPICAL DETAILS
HVAC TYPICAL DETAILS 3

DRAWING NO. 800TH003
SHEET NO. 181 OF 198

CONTACT PERSON: STEPHEN DAY, PE SE , PROJECT ENGINEER AT 360-778-7944

PROJECT NO. 202021-100000 FILE NAME: 202021800TH003.dwg

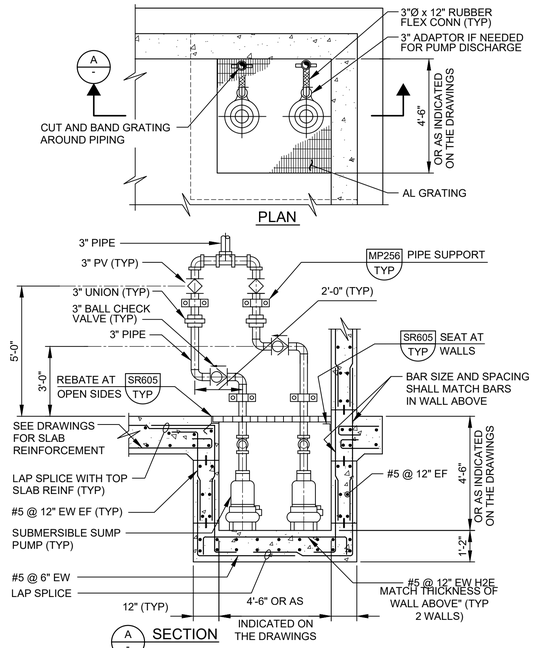

MA111 TYP DUPLEX SUMP PUMP

07/20/23

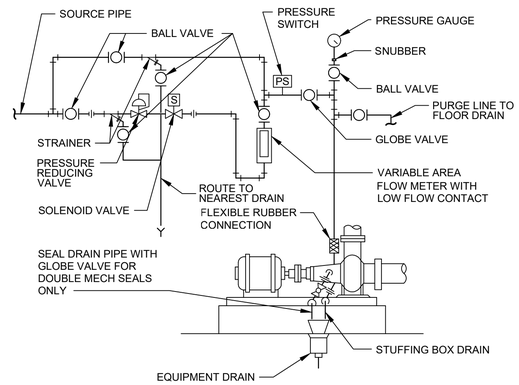

NOTES:

1. UNLESS SPECIFIED OTHERWISE, ALL PIPING VALVES, AND FITTINGS SHALL BE 1/2" 304 STAINLESS STEEL.
2. WHERE A DRIP PAN IS PROVIDED ON THE PUMP BASE, A SEPARATE DRAIN LINE TO THE EQUIPMENT DRAIN SHALL BE PROVIDED.
3. SEE P&ID AND CONTROL DESCRIPTION FOR SOLENOID VALVE OPERATION (POWER-OPEN/ POWER-CLOSE) TYPE.

MA301 TYP SEAL WATER - PIPING SCHEMATIC

S 06/26/23

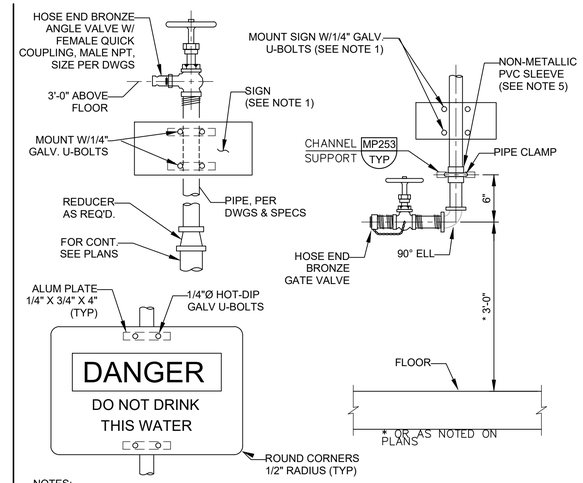

NOTES:

1. SIGN SHALL BE 3/8" THICK LAMINATED PLASTIC. PLASTIC SHALL BE TREATED TO RESIST SUNLIGHT (ULTRAVIOLET) DETERIORATION. MOUNTING: FOUR GROMMETED HOLES FOR 1/4" GALV U-BOLTS.
2. SIGN SHALL BE 7" x 10" & SHALL CONFORM TO THE SPECIFICATIONS.
3. SIGN AS SHOWN IS ROTATED 90° OFF TRUE POSITION. SIGN SHALL BE MOUNTED TO PERMIT EASY READING.
4. INSTALL HOSE RACK, MA417/TYP AT EACH HOSE VALVE.
5. SLEEVE REQUIRED FOR DISSIMILAR METALS.

MA415 TYP WASHDOWN - HOSE BIBB WITH NPW SIGN

N, S 05/03/23

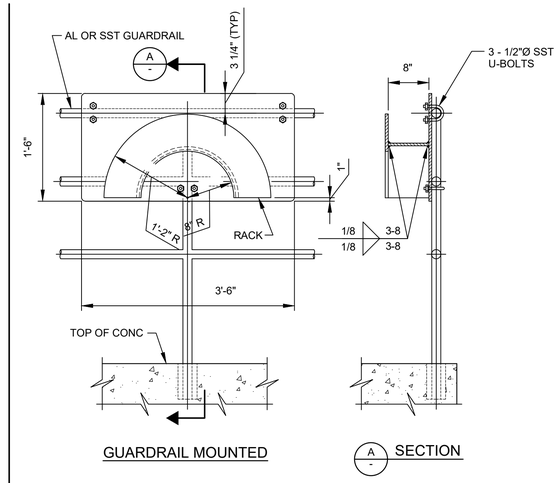

NOTES:

1. HOSE RACK SHALL BE FABRICATED FROM 3/16" ALUMINUM PLATE. ROUND ALL EDGES SMOOTH.
2. HOSE RACKS INSTALLED IN YARD LOCATIONS SHALL BE FREESTANDING. ANCHOR TO A 4'-6" LONG x 2'-0" WIDE x 12" DEEP CONCRETE PAD WITH #5@12" EW, T&B.
3. WALL MOUNTED HOSE RACKS ON MASONRY WALL SHALL BE FASTEN TO GROUTED CELLS.

MA417 TYP WASHDOWN - HOSE RACK

S SHEET 1 OF 2 12/01/22

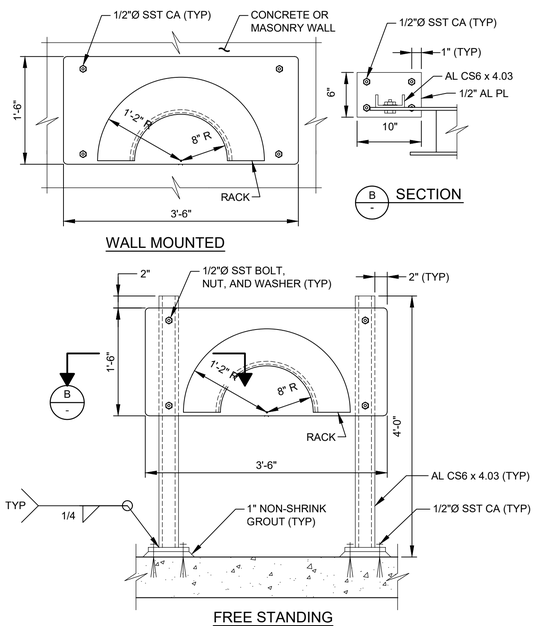

MA417 TYP WASHDOWN - HOSE RACK

F 2 12/01/22

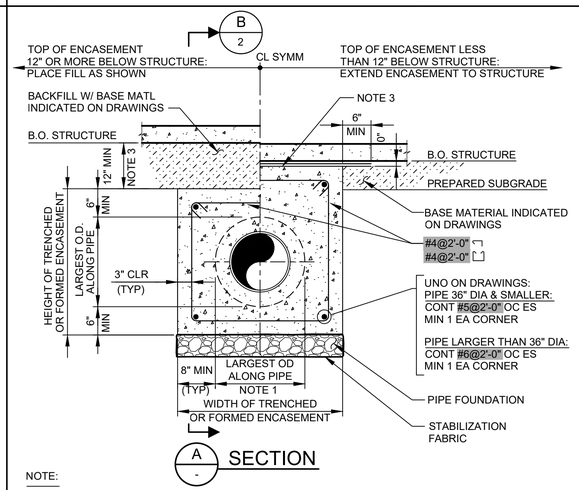

NOTE:

1. PIPE MATERIAL AND PIPE JOINTS / COUPLERS AS INDICATED ON THE DRAWINGS.
2. TERMINATE CONCRETE ENCASEMENT AT A PIPE JOINT OUTSIDE OF THE STRUCTURE.
3. WHERE DISTANCE BETWEEN BOTTOM OF STRUCTURE AND TOP OF TYPICAL ENCASEMENT SECTION IS LESS THAN 12", EXTEND ENCASEMENT UPWARD TO UNDERSIDE OF SLAB. STEEL TROWEL TOP SURFACE AND SEPARATE ENCASEMENT FROM STRUCTURE WITH 2 LAYERS 6 MIL POLYETHYLENE SHEETING.
4. ENCASEMENT CONCRETE: CLASS A-NA.
5. SPLICE PERIMETER REINFORCEMENT OUTSIDE INTERSECTION OF ENCASEMENT WHERE POSSIBLE.

MP003 TYP PIPE ENCASEMENT - BELOW STRUCTURE

S SHEET 1 OF 2 06/03/24

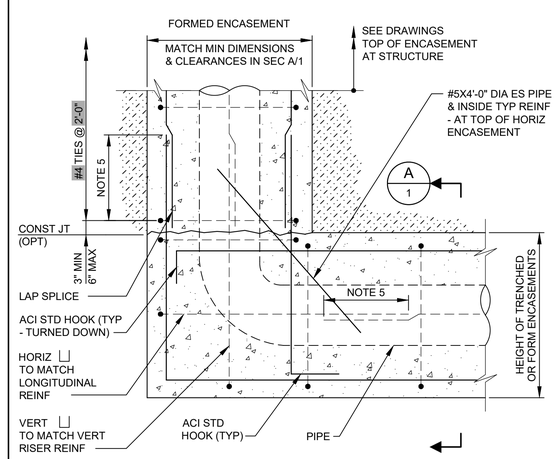

MP003 TYP PIPE ENCASEMENT - BELOW STRUCTURE

S SHEET 2 OF 2 06/03/24

carollo®

Date	No	Revision	By
	4		
	3		
	2		
	1		

LAST SAVED BY: dlee

PROJECT ENGINEER MSS
DESIGNED/DRAWN MSS
INSPECTOR CC

DIRECTOR PUBLIC WORKS
CITY ENGINEER
ASSISTANT DIRECTOR

CITY OF BELLINGHAM, WASHINGTON
PUBLIC WORKS DEPARTMENT
ENGINEERING DIVISION

SCALE Horiz. AS SHOWN Vert. AS SHOWN
DATUM H: NAD 83/98 V: NAVD 88
Job. No. EU194 Date JAN 2026 Field Bk.

POST POINT RESOURCE RECOVERY PLANT
TYPICAL DETAILS
MECHANICAL DETAILS 1

DRAWING NO. 800TM001
SHEET NO. 182 OF 198

CONTACT PERSON: STEPHEN DAY, PE SE , PROJECT ENGINEER AT 360-778-7944

PROJECT NO. 202021-100000 FILE NAME: 202021800TM001.dwg

10/3/2024 2:54:02 PM

10/3/2024 2:54:14 PM

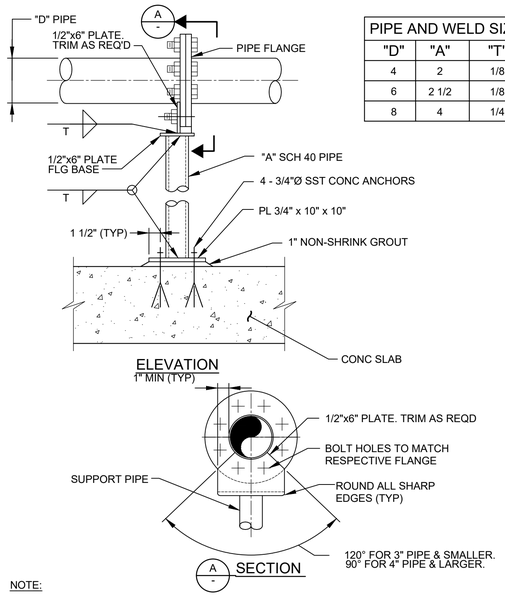

PIPE AND WELD SIZE		
"D"	"A"	"T"
4	2	1/8
6	2 1/2	1/8
8	4	1/4

NOTE:

1. IF SUPPORT IS SUBMERGED OR LOCATED BELOW THE TOP OF WALL IN WATER BEARING STRUCTURE, ALL MATERIAL FOR SUPPORT SHALL BE STAINLESS STEEL. IN ALL OTHER AREAS, ALL MATERIAL FOR SUPPORT SHALL BE HOT-DIP GALVANIZED STEEL UNLESS OTHERWISE INDICATED ON DRAWINGS. HOT-DIP GALVANIZE AFTER FABRICATION.

MP032 TYP — PIPE SUPPORT - POST ON CONCRETE: FIXED HEIGHT STEEL W/ TOP CONNECTION TO PIPE FLANGE

NS 05/31/23

ADJUSTABLE PIPE SADDLE SUPPORT SCHEDULE (INCHES)					
SIZE OF SUPPORTED PIPE **	PIPE SIZE "A"	PIPE SIZE "B"	"C"	"D"	
				MINIMUM	MAXIMUM
2 1/2 *	2 1/2	1 1/2	12	8	13
3	2 1/2	1 1/2	12	8 1/2	13 1/2
3 1/2	2 1/2	1 1/2	12	8 1/2	13 1/2
4	3	2 1/2	12	9 1/2	14
6	3	2 1/2	12	10 1/2	15 1/2
8	3	2 1/2	12	11 1/2	16 1/2
10	3	2 1/2	12	13 1/2	18 1/2
12	3	2 1/2	12	15	19 1/2
14	4	3	12	16 1/2	20 1/2
16	4	3	12	17 1/2	22 1/2
18	6	3 1/2	14	19 1/2	24
20	6	3 1/2	14	21	25 1/2
24	6	4	14	23 1/2	28 1/2
30	6	4	14	27	31 1/2
32	6	4	14	28 1/2	32 1/2
36	6	4	14	30 1/2	34 1/2

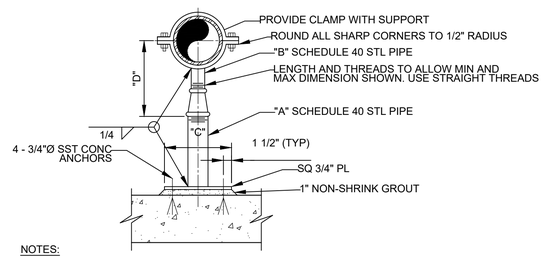

NOTES:

1. REFER TO THE SPECIFICATIONS FOR MATERIAL REQUIREMENTS.
2. * = USE 2 1/2" SUPPORTS FOR PIPES LESS THEN 2 1/2"Ø.
3. ** = NOMINAL PIPE SIZE.

MP034 TYP — PIPE SUPPORT - POST ON CONCRETE: ADJUSTABLE HEIGHT STEEL W/ TOP SADDLE

NS 10/12/23

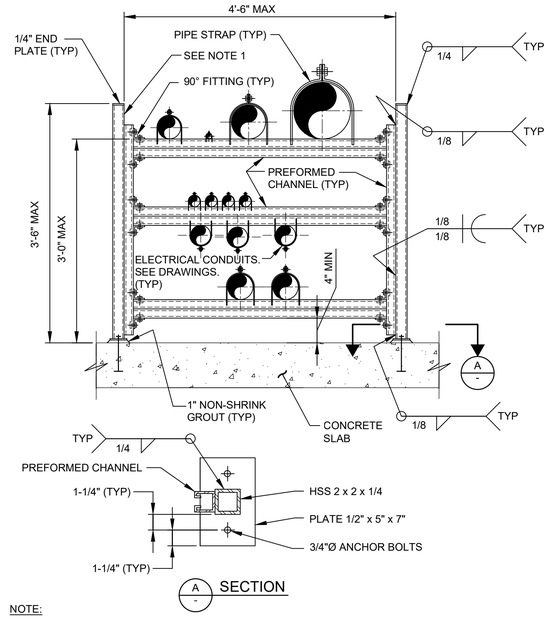

NOTE:

1. REFER TO THE SPECIFICATIONS FOR MATERIAL REQUIREMENTS.

MP073 TYP — PIPE SUPPORT - FLOOR RACK: STEEL W/ PREFORMED CHANNELS

N 09/18/23

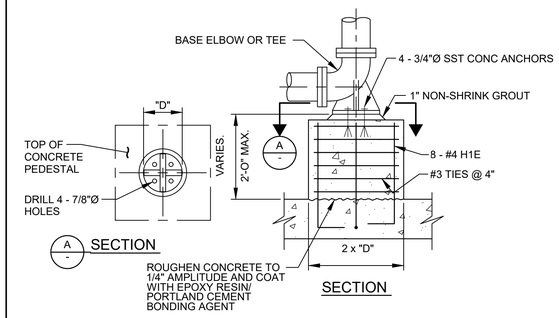

MP080 TYP — PIPE SUPPORT - BASE ELBOW OR TEE - DUCTILE IRON PIPE ON CONCRETE PEDESTAL

NS 09/05/23

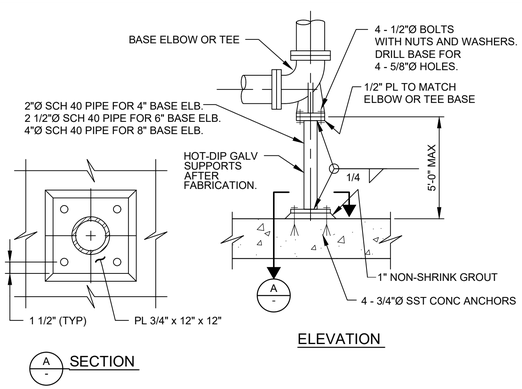

MP081 TYP — PIPE SUPPORT - BASE ELBOW OR TEE - DUCTILE IRON PIPE ON STEEL PIPE

09/05/23

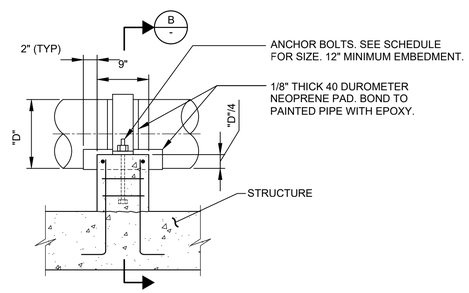

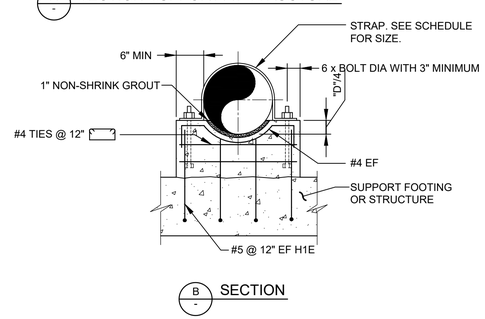

MP100 TYP — CONCRETE PIPE SUPPORT

N SHEET 1 OF 2 10/12/23

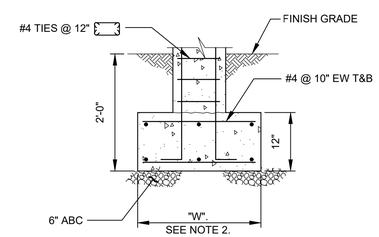

SCHEDULE		
PIPE SIZE	STRAP SIZE	ANCHOR BOLT DIA
8" - 12"	FB 1/4" x 4"	1/2"
14" - 24"	FB 5/16" x 4"	5/8"
26" - 36"	FB 3/8" x 4"	3/4"

NOTES:

1. REFER TO THE SPECIFICATIONS FOR MATERIAL REQUIREMENTS.
2. THE WIDTH OF THE FOOTING "W" = 2'-6". THE LENGTH OF THE FOOTING = "D" + 2'-0".
3. FOR INSTALLATION ON AN EXISTING CONCRETE FLOOR, VERTICAL #5 BARS SHALL BE EPOXY BONDED WITH MINIMUM EMBED DEPTH OF 6". ROUGHEN EXISTING CONCRETE AND COAT WITH BONDING AGENT AT INTERFACE WITH NEW CONCRETE.

MP100 TYP — CONCRETE PIPE SUPPORT

N SHEET 2 OF 2 10/12/23

carollo®

LAST SAVED BY: lveloz

Date	No	Revision	By
	4		
	3		
	2		
	1		

PROJECT ENGINEER MSS
DESIGNED/DRAWN MSS
INSPECTOR CC

DIRECTOR PUBLIC WORKS
CITY ENGINEER
ASSISTANT DIRECTOR

CITY OF BELLINGHAM, WASHINGTON
PUBLIC WORKS DEPARTMENT
ENGINEERING DIVISION

SCALE: Horiz. AS SHOWN; Vert. AS SHOWN
DATUM: H: NAD 83/98; V: NAVD 88
Job. No. EU194
Date JAN 2026
Field Bk.

POST POINT RESOURCE RECOVERY PLANT
TYPICAL DETAILS
MECHANICAL TYPICAL DETAILS 2

DRAWING NO. 800TM002
SHEET NO. 183 OF 198

CONTACT PERSON: STEPHEN DAY, PE SE , PROJECT ENGINEER AT 360-778-7944

PROJECT NO. 202021-100000 FILE NAME: 202021800TM002.dwg

MECHCANICAL TYPICAL DETAILS 3

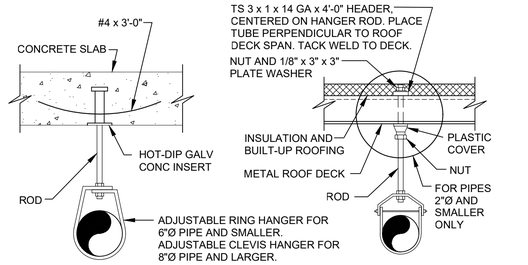

AT CONC SLAB

AT METAL DECK

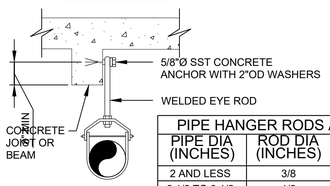

AT CONC JOIST OR BEAM

PIPE HANGER RODS AND SUPPORT SPACING		
PIPE DIA (INCHES)	ROD DIA (INCHES)	MAX SUPPORT SPACING
2 AND LESS	3/8	5 FEET
2 1/2 TO 3 1/2	1/2	10 FEET
4 TO 5	5/8	10 FEET
6	3/4	10 FEET
8	7/8	10 FEET
10	7/8	10 FEET
12	7/8	10 FEET

NOTES:

1. ISOLATE ALL COPPER PIPE FROM SUPPORT WITH PVC TAPE.
2. REFER TO THE SPECIFICATIONS FOR MATERIAL REQUIREMENTS.
3. PROVIDE ADDITIONAL HANGER AT EACH SIDE OF ALL VALVES 4 INCHES AND LARGER.

MP132 TYP — PIPE SUPPORT - OVERHEAD ROD W/ ADJUSTABLE RING OR CLEVIS

N — SHEET 1 OF 2 — 09/18/23

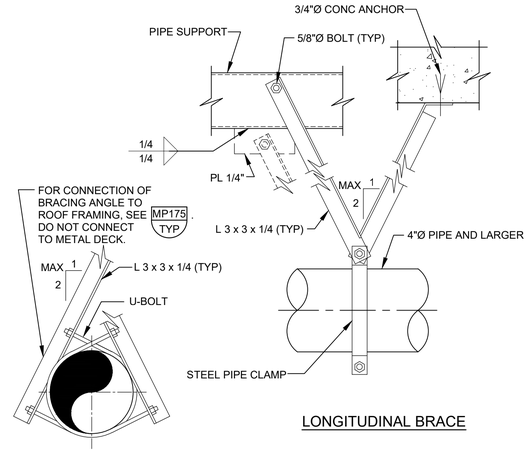

LONGITUDINAL BRACE

TRANSVERSE BRACE

NOTES:

1. MAXIMUM LONGITUDINAL BRACE SPACING = 20'-0".
2. MAXIMUM TRANSVERSE BRACE SPACING = 20'-0".
3. DO NOT CONNECT BRACE TO BOTTOM OF ROOF BEAM OR C8 PIPE SUPPORT, EXCEPT AS SHOWN IN MP175 TYP.
4. USE LONGITUDINAL AND TRANSVERSE BRACES FOR PIPES 4" AND LARGER.

MP132 TYP — PIPE SUPPORT - OVERHEAD ROD W/ ADJUSTABLE RING OR CLEVIS

N — SHEET 2 OF 2 — 09/18/23

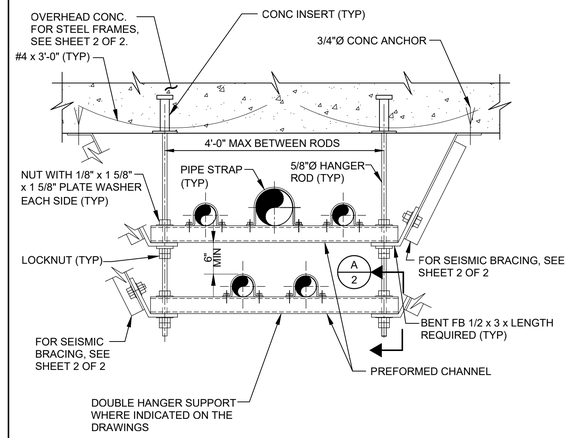

NOTES:

1. HANGER SPACING SHALL BE BASED ON MAXIMUM SPAN ALLOWABLE FOR ANY INDIVIDUAL PIPE.
2. ALL-THREAD ROD SHALL BE USED ONLY FOR DOUBLE SUPPORTS.
3. REFER TO THE SPECIFICATIONS FOR MATERIAL REQUIREMENTS.

MP175 TYP — PIPE SUPPORT - OVERHEAD TRAPEZE - DOUBLE BEAM

N — SHEET 1 OF 2 — 10/05/23

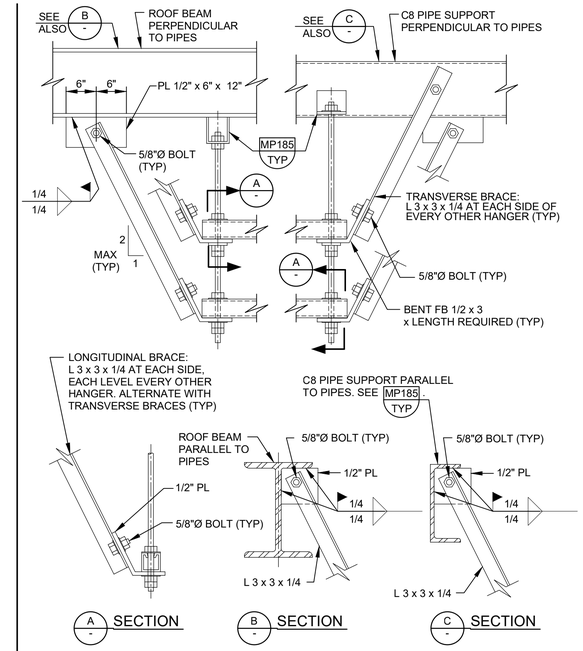

MP175 TYP — PIPE SUPPORT - OVERHEAD TRAPEZE - DOUBLE BEAM

N — SHEET 2 OF 2 — 10/05/23

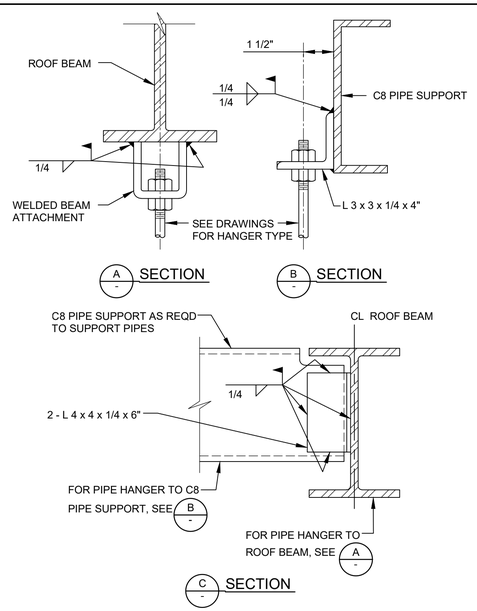

NOTES:

1. REFER TO THE SPECIFICATIONS FOR MATERIAL REQUIREMENTS.

MP185 TYP — PIPE SUPPORT - OVERHEAD CONNECTIONS TO STEEL FRAMING

10/05/23

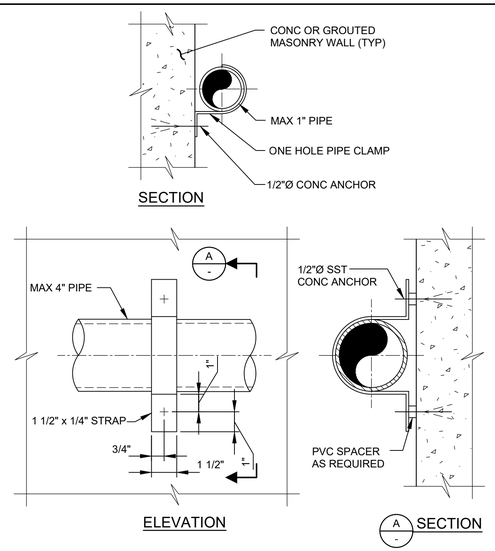

NOTE:

1. REFER TO THE SPECIFICATIONS FOR MATERIAL REQUIREMENTS.

MP215 TYP — PIPE SUPPORT - WALL - PIPE CLIP

10/12/23

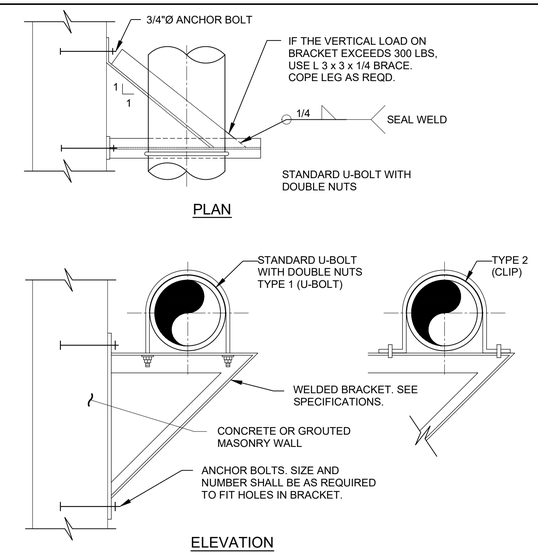

NOTES:

1. MAXIMUM ALLOWABLE VERTICAL LOAD IS THE SMALLER OF 1500 POUNDS AND THE MANUFACTURERS MAXIMUM ALLOWABLE BRACKET LOAD.
2. REFER TO THE SPECIFICATIONS FOR MATERIAL REQUIREMENTS.
3. ISOLATE ALL COPPER PIPE WITH PVC TAPE.

MP220 TYP — PIPE SUPPORT - WALL - PREFORMED BRACKET W/ PIPE U-BOLT OR CLIP ABOVE

N — 10/12/23

carollo®

LAST SAVED BY: dlee

Date	No	Revision	By
	4		
	3		
	2		
	1		

PROJECT ENGINEER MSS
DESIGNED/DRAWN MSS
INSPECTOR CC

DIRECTOR PUBLIC WORKS
CITY ENGINEER
ASSISTANT DIRECTOR

CITY OF BELLINGHAM, WASHINGTON
PUBLIC WORKS DEPARTMENT
ENGINEERING DIVISION

SCALE: Horiz. AS SHOWN; Vert. AS SHOWN
DATUM: H: NAD 83/98; V: NAVD 88
Job. No. EU194; Date JAN 2026; Field Bk.

POST POINT RESOURCE RECOVERY PLANT
TYPICAL DETAILS
MECHANICAL TYPICAL DETAILS 3

DRAWING NO. 800TM003
SHEET NO. 184 OF 198

CONTACT PERSON: STEPHEN DAY, PE SE , PROJECT ENGINEER AT 360-778-7944

PROJECT NO. 202021-100000 FILE NAME: 202021800TM003.dwg

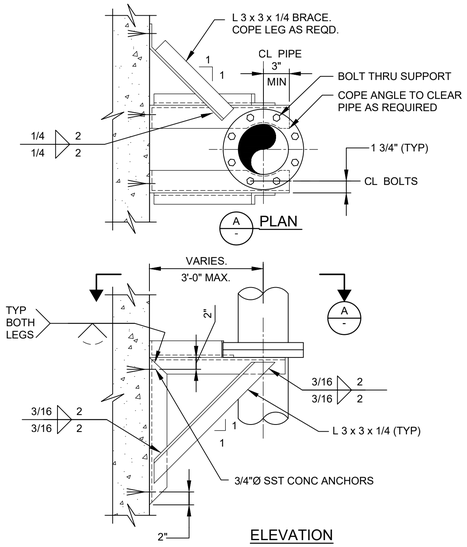

NOTE:

1. IF THE SUPPORT IS SUBMERGED OR BELOW THE TOP OF THE WALL IN A WATER BEARING STRUCTURE, ALL MATERIALS SHALL BE ASTM A240 TYPE 316L STAINLESS STEEL. OTHERWISE, MATERIALS SHALL BE HOT DIP GALVANIZED STEEL, HOT DIP GALVANIZE AFTER FABRICATION.

MP250 TYP — PIPE SUPPORT - WALL - VERTICAL PIPE ON FABRICATED SUPPORT AT FLANGES

N 06/26/23

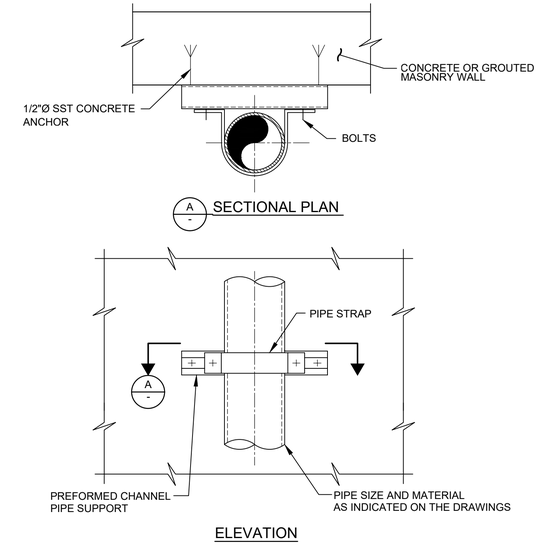

NOTE:

1. IF SUPPORT IS SUBMERGED OR LOCATED BELOW THE TOP OF WALL IN WATER BEARING STRUCTURE, ALL MATERIAL SHALL BE STAINLESS STEEL. IN ALL OTHER AREAS, THE MATERIALS SHALL BE HOT-DIP GALVANIZED STEEL UNLESS OTHERWISE INDICATED ON THE DRAWINGS. HOT-DIP GALVANIZE AFTER FABRICATION.

MP253 TYP — PIPE SUPPORT - PREFORMED CHANNEL: SURFACE MOUNTED

08/08/23

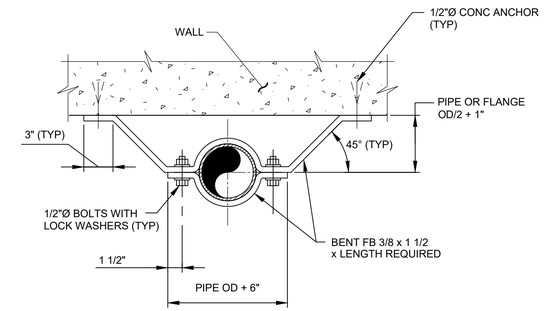

NOTE:

1. IF SUPPORT IS SUBMERGED OR LOCATED BELOW THE TOP OF WALL IN WATER BEARING STRUCTURE, ALL MATERIAL SHALL BE STAINLESS STEEL. IN ALL OTHER AREAS, ALL MATERIAL SHALL BE HOT-DIP GALVANIZED STEEL UNLESS OTHERWISE INDICATED ON THE DRAWINGS.

MP256 TYP — PIPE SUPPORT - WALL - VERTICAL PIPE ON CLAMP SWAY BRACE

N 12/01/22

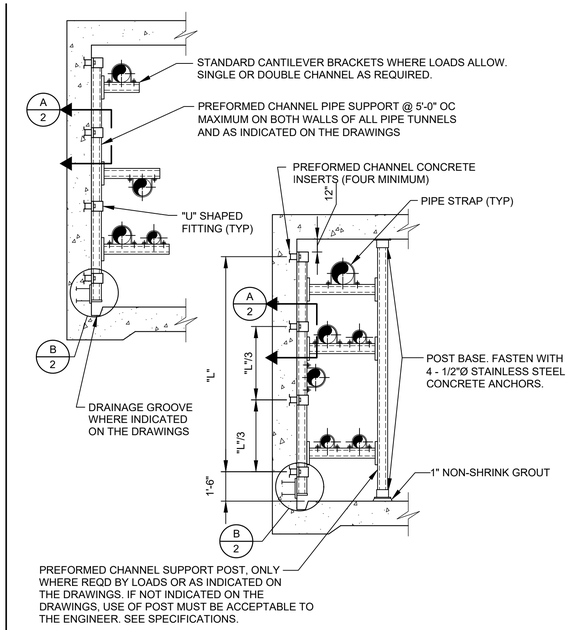

MP272 TYP — PIPE RACK -"F" TYPE - PREFORMED CHANNELS

N SHEET 1 OF 2 12/01/22

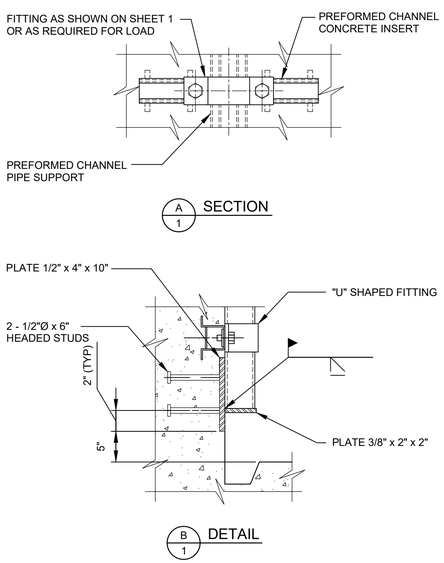

MP272 TYP — PIPE RACK -"F" TYPE - PREFORMED CHANNELS

F 2 12/01/22

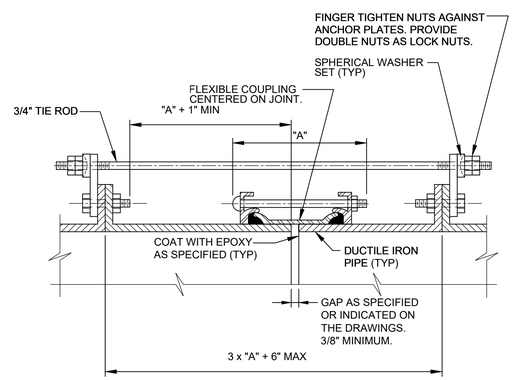

ROD SCHEDULE		
PIPE THRUST. SEE NOTE 2.	TYPE OF CONNECTION	NO. OF RODS
0-6,000#	I	2
6,001 - 12,000#	II	2
12,001 - 18,000#	II	3
18,001 - 24,000#	II	4
24,001 - 30,000#	II	5

MP310 TYP — PIPE JOINT - DIP - FLEXIBLE COUPLING - RESTRAINED

SHEET 1 OF 2

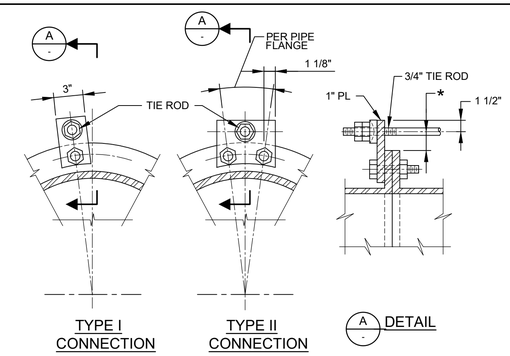

NOTES:

1. ALL EXPOSED FLEXIBLE COUPLINGS SHALL HAVE TIE RODS UNLESS SPECIFICALLY INDICATED OTHERWISE ON THE DRAWINGS.
2. PIPE THRUST SHALL BE BASED ON TEST PRESSURE.
3. PIPE THRUST = 0.7854 x D^2 x TEST PRESSURE, WHERE "D" IS PIPE OD.
4. MINIMUM TIE ROD YIELD = 48,000 PSI.
5. FOR THRUSTS GREATER THAN 30,000 POUNDS, ADD ONE 3/4 INCH DIAMETER TIE ROD FOR EVERY 6,000 POUNDS INCREASE IN THRUST.
6. ALL ROD CONNECTIONS SHALL BE TYPE II FOR THRUSTS GREATER THAN 30,000 POUNDS.
7. GRIND ALL CORNERS SMOOTH.
8. * = AS REQUIRED TO CLEAR FLEXIBLE COUPLING. 3/4" MINIMUM AND 1 1/2" MAXIMUM.

MP310 TYP — PIPE JOINT - DIP - FLEXIBLE COUPLING - RESTRAINED

N SHEET 2 OF 2 09/05/23

carollo®

LAST SAVED BY: lveloz

Date	No	Revision	By
	4		
	3		
	2		
	1		

PROJECT ENGINEER MSS
DESIGNED/DRAWN MSS
INSPECTOR CC

DIRECTOR PUBLIC WORKS
CITY ENGINEER
ASSISTANT DIRECTOR

CITY OF BELLINGHAM, WASHINGTON
PUBLIC WORKS DEPARTMENT
ENGINEERING DIVISION

SCALE: Horiz. AS SHOWN; Vert. AS SHOWN
DATUM: H: NAD 83/98; V: NAVD 88
Job. No. EU194
Date JAN 2026
Field Bk.

POST POINT RESOURCE RECOVERY PLANT
TYPICAL DETAILS
MECHANICAL TYPICAL DETAILS 4

DRAWING NO. 800TM004
SHEET NO. 185 OF 198

CONTACT PERSON: STEPHEN DAY, PE SE , PROJECT ENGINEER AT 360-778-7944

PROJECT NO. 202021-100000 FILE NAME: 202021800TM004.dwg

10/3/2024 2:54:33 PM

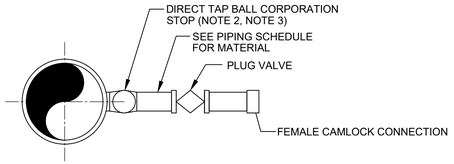

DIP NOMINAL DIAMETER	FLUSHING CONNECTION DIAMETER
4"	3/4"
6" - 14"	1"
16"	1 1/2"
18" AND ABOVE	2"

DETAIL A - DUCTILE IRON PIPE FLUSHING CONNECTION

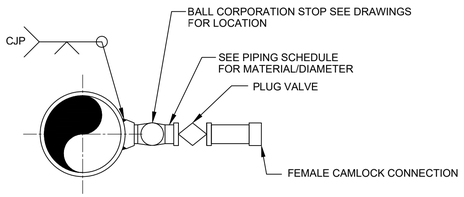

DETAIL B - STEEL PIPE FLUSHING CONNECTION

NOTE:

1. CJP = COMPLETE JOINT PENETRATION.
2. CORPORATION STOP SHALL BE FURNISHED WITH AWWA TAPER THREADS PER AWWA C800. PIPE SHALL BE TAPPED ACCORDINGLY.
3. CONNECTIONS GREATER THAN 2" SHALL REQUIRE A TAPPING SADDLE.

MP405 TYP — PIPE CONNECTION - FLUSHING

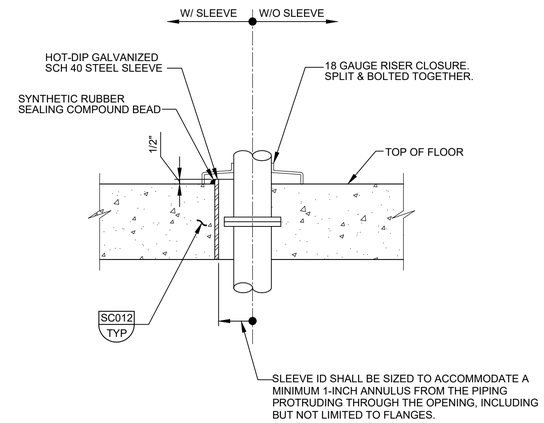

MP514 TYP — FLOOR PENETRATION - CORED OR CAST-IN OPENING W/ CLOSURE

08/14/24

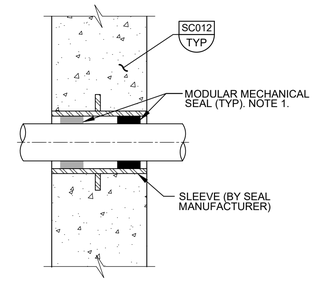

NEW

A - WALL PENETRATION

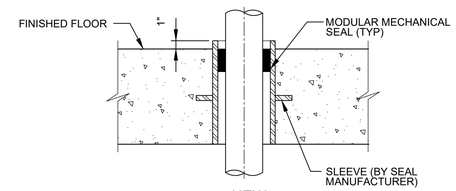

NEW

B - SLAB PENETRATION

NOTES:

1. WALLS THICKER THAN 12" INSTALL MODULAR MECHANICAL SEAL AT BOTH ENDS OF WALL SLEEVE.

MP544 TYP — WALL PENETRATION - CAST-IN SLEEVE W/ BARRIER SEALS

SHEET 1 OF 2 02/13/24

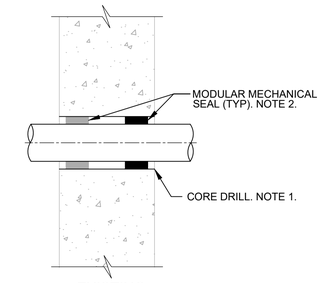

EXISTING

A - WALL PENETRATION

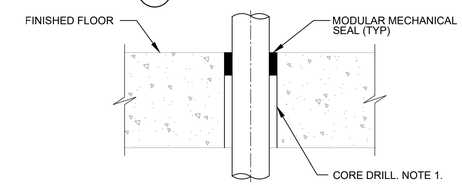

EXISTING

B - SLAB PENETRATION

NOTES:

1. CORE DRILL DIAMETER. PROCEDURES, AND POST -DRILLING SURFACE PREPARATION PER MODULAR MECHANICAL SEAL MANUFACTURER'S RECOMMENDATIONS FOR SPECIFIC PIPE OD.
2. WALLS 12" OR THICKER INSTALL MODULAR MECHANICAL SEAL AT BOTH ENDS OF PENETRATION.

MP544 TYP — WALL PENETRATION - CAST-IN SLEEVE W/ BARRIER SEALS

SHEET 2 OF 2 02/13/24

Digitally signed by Matthew Scott Sprick
Comcast
Date: 2024.10.04 09:34:52 -07'00'

MATTHEW SCOTT SPRICK — STATE OF WASHINGTON — 29659 — REGISTERED PROFESSIONAL ENGINEER

carollo®

Date	No	Revision	By
	4		
	3		
	2		
	1		

PROJECT ENGINEER MSS
DESIGNED/DRAWN MSS
INSPECTOR CE

DIRECTOR PUBLIC WORKS
CITY ENGINEER
ASSISTANT DIRECTOR

CITY OF BELLINGHAM, WASHINGTON
PUBLIC WORKS DEPARTMENT
ENGINEERING DIVISION

SCALE
Horiz. AS SHOWN
Vert. AS SHOWN

DATUM
H: NAD 83/98
V: NAVD 88

Job. No. EU194
Date JAN 2026
Field Bk.

POST POINT RESOURCE RECOVERY PLANT
TYPICAL DETAILS
MECHANICAL TYPICAL DETAILS 5

DRAWING NO. 800TM005
SHEET NO. 186 OF 198

CONTACT PERSON: STEPHEN DAY, PE SE , PROJECT ENGINEER AT 360-778-7944

PROJECT NO. 202021-100000 FILE NAME: 202021800TM005.dwg

LAST SAVED BY: dlee

10/4/2024 9:34:52 AM

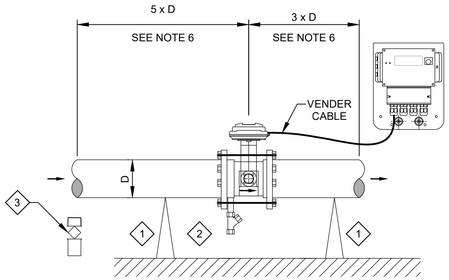

NOTES:

1. FOLLOW MANUFACTURER'S RECOMMENDED MAXIMUM TORQUE SETTINGS. DO NOT OVER-TORQUE FLANGE BOLTS. OVERTIGHTENING THE FASTENERS WILL DEFORM SEALING FACES OR DAMAGE THE LINE.
2. ALWAYS TIGHTEN FLANGE BOLTS UNIFORMLY AND IN DIAGONALLY OPPOSITE SEQUENCE.
3. MOUNT METER SO THAT IT REMAINS FULLY FLOODED.
4. INSTALL METER SUCH THAT THERE ARE NO PIPE BENDS 5 PIPE DIAMETERS UPSTREAM AND 3 PIPE DIAMETERS DOWNSTREAM OF THE METER.
5. MOUNT REMOTE TRANSMITTER WITHIN 30 FEET OF SENSOR.
6. INSTALL THE DENSITY METER SENSOR A MINIMUM OF FOUR FEET AWAY OR GREATER FROM ANY UPSTREAM OR DOWNSTREAM MAGNETIC FLOW METER.
7. INSTALL THE DENSITY METER SENSOR'S GROUND WIRE FIRMLY BOLTED AND GROUNDED TO THE PIPING SYSTEM OR EARTH GROUND IN ACCORDANCE WITH MANUFACTURER'S INSTALLATION REQUIREMENTS.

KEY NOTES:

1. PIPE SUPPORTS BY MECHANICAL CONTRACTOR. NO SUPPORTS SHALL BE INSTALLED AT THE METER HOUSING.
2. PROVIDE MANUFACTURER'S FLUSHING ASSEMBLY. MOUNT IN ACCORDANCE WITH MANUFACTURER'S INSTALLATION REQUIREMENTS.
3. INSTALL SAMPLE TAP UPSTREAM OR DOWNSTREAM OF METER WITHIN 1-2 PIPE DIAMETERS AS INDICATED ON THE DRAWINGS.

NA901 TOTAL SOLIDS DENSITY METER MOUNTING DETAIL
TYP J

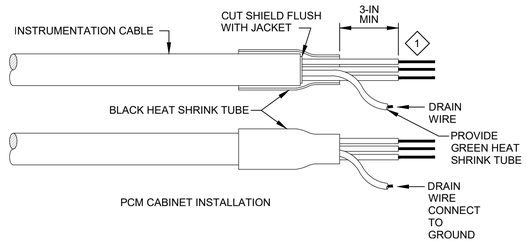

PCM CABINET INSTALLATION

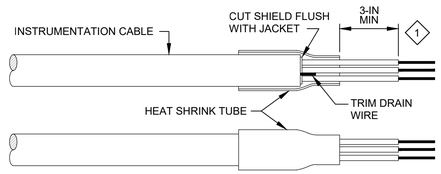

FIELD INSTALLATION

KEY NOTES:

1. SIMILAR FOR 2-CONDUCTOR SHIELDED CABLE.

NE101 TERMINATION DETAILS INSTRUMENTATION SHIELDED CABLE
TYP S

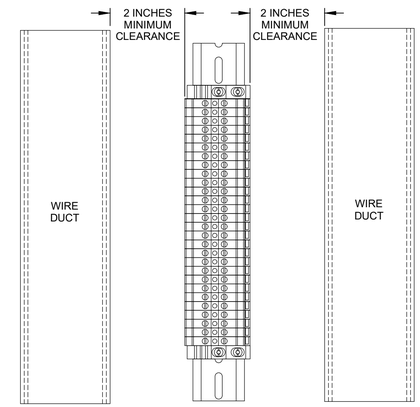

NE102 TERMINAL BLOCK CLEARANCE
TYP S

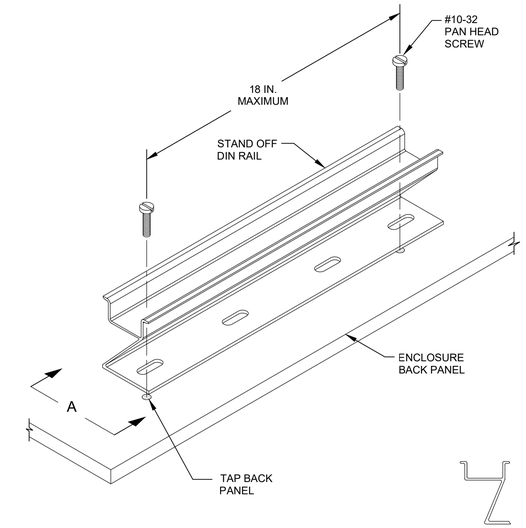

A - VIEW

NE104 RAISED DIN RAIL MOUNTING
TYP S

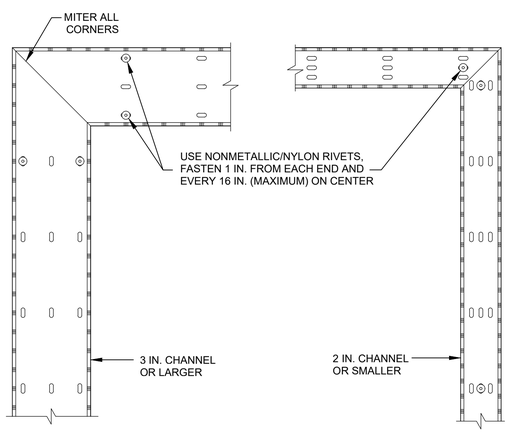

NE105 PANEL WIRING DUCT MOUNTING
TYP

carollo®

Date	No	Revision	By
	4		
	3		
	2		
	1		

PROJECT ENGINEER MSS
DESIGNED/DRAWN JR/SNH
INSPECTOR RG

DIRECTOR PUBLIC WORKS
CITY ENGINEER
ASSISTANT DIRECTOR

CITY OF BELLINGHAM, WASHINGTON
PUBLIC WORKS DEPARTMENT
ENGINEERING DIVISION

SCALE
Horiz. AS SHOWN
Vert. AS SHOWN

DATUM
H: NAD 83/98
V: NAVD 88

Job. No. EU194
Date JAN 2026
Field Bk.

POST POINT RESOURCE RECOVERY PLANT
TYPICAL DETAILS
INSTRUMENTATION TYPICAL DETAILS 1

DRAWING NO. 800TN001
SHEET NO. 187 OF 198

LAST SAVED BY: CRollins

CONTACT PERSON: STEPHEN DAY, PE SE , PROJECT ENGINEER AT 360-778-7944

PROJECT NO. 202021-100000 FILE NAME: 202021800TN001.dwg

1/27/2026 3:00:17 PM

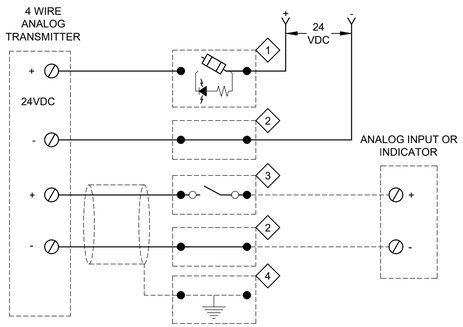

KEY NOTES:

1. FUSED TERMINAL/DISCONNECT BLOCK.
2. FEED THROUGH TERMINAL BLOCK.
3. TEST BLOCK WITH KNIFE DISCONNECT SWITCH.
4. GROUNDING TERMINAL BLOCK.

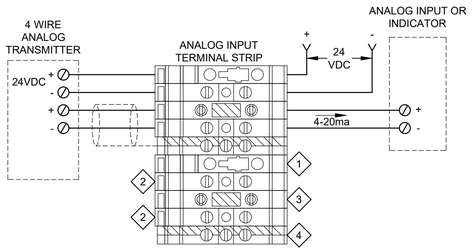

GENERAL NOTES:

1. GROUND SHIELD AT ANALOG TERMINAL STRIP INSIDE PCM PANEL.
2. (-)24VDC RETURNS OR COMMONS CAN'T BE PROTECTED OR HAVE A DISCONNECTING MEANS ON SYSTEMS WITH GROUNDED 24VDC POWER SUPPLIES.

FOUR WIRE TRANSMITTER WITH (GROUNDED) 24VDC POWER SUPPLY SCHEMATIC

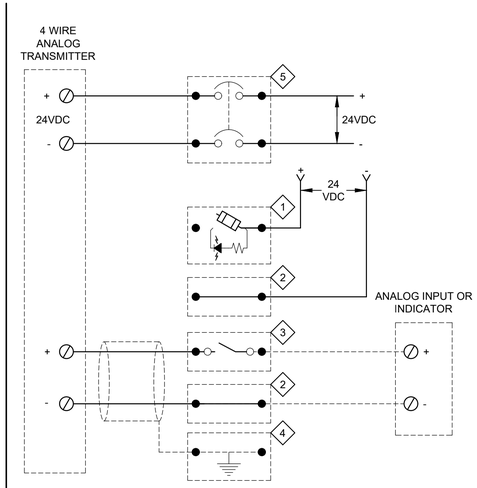

KEY NOTES:

1. FUSED TERMINAL/DISCONNECT BLOCK.
2. FEED THROUGH TERMINAL BLOCK.
3. TEST BLOCK WITH KNIFE DISCONNECT SWITCH.
4. GROUNDING TERMINAL BLOCK.
5. 2-POLE 24VDC CIRCUIT BREAKER.

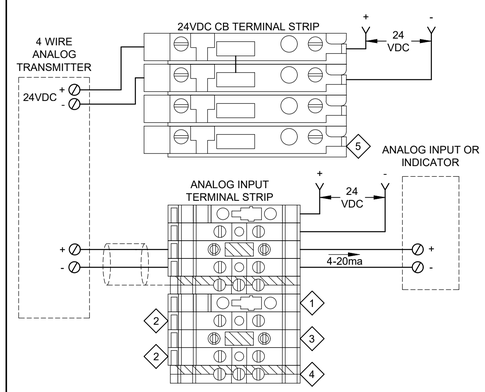

GENERAL NOTES:

1. GROUND SHIELD AT ANALOG TERMINAL STRIP INSIDE PCM PANEL.
2. PROVIDE (-)24VDC RETURNS WITH PROTECTION ON ALL UN-GROUNDED 24VDC POWER SUPPLIES.

FOUR WIRE TRANSMITTER WITH (UN-GROUNDED) 24VDC POWER SUPPLY SCHEMATIC

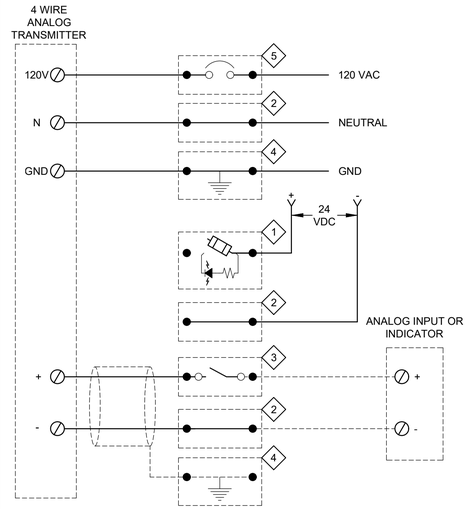

KEY NOTES:

1. FUSED TERMINAL/DISCONNECT BLOCK.
2. FEED THROUGH TERMINAL BLOCK.
3. TEST BLOCK WITH KNIFE DISCONNECT SWITCH.
4. GROUNDING TERMINAL BLOCK.
5. 120VAC CIRCUIT BREAKER.

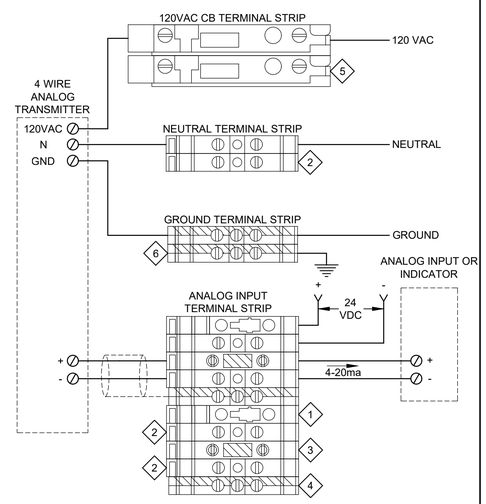

GENERAL NOTES:

1. GROUND SHIELD AT ANALOG TERMINAL STRIP INSIDE PCM PANEL.
2. PROVIDE 120VAC CIRCUIT BREAKER FOR EACH INSTRUMENT.

FOUR WIRE (120VAC) TRANSMITTER SCHEMATIC

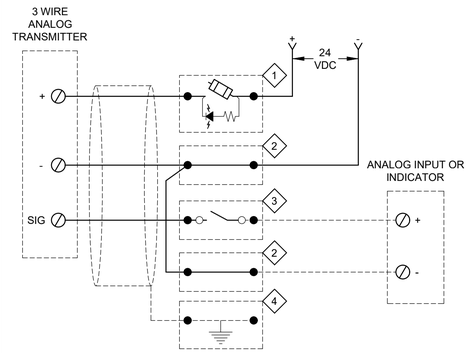

KEY NOTES:

1. FUSED TERMINAL/DISCONNECT BLOCK.
2. FEED THROUGH TERMINAL BLOCK.
3. TEST BLOCK WITH KNIFE DISCONNECT SWITCH.
4. GROUNDING TERMINAL BLOCK.

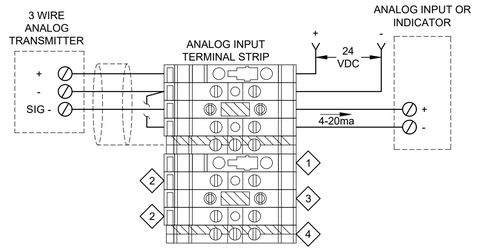

GENERAL NOTES:

1. GROUND SHIELD AT ANALOG TERMINAL STRIP INSIDE PCM PANEL.

24VDC THREE WIRE ANALOG TRANSMITTER SCHEMATIC

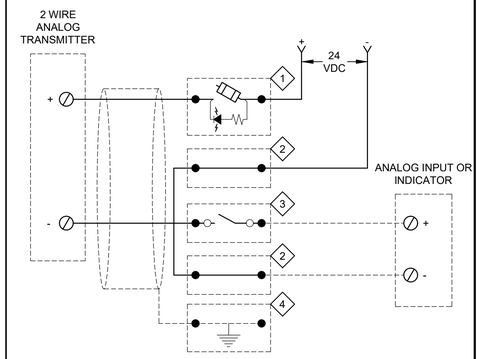

KEY NOTES:

1. FUSED TERMINAL/DISCONNECT BLOCK.
2. FEED THROUGH TERMINAL BLOCK.
3. TEST BLOCK WITH KNIFE DISCONNECT SWITCH.
4. GROUNDING TERMINAL BLOCK.

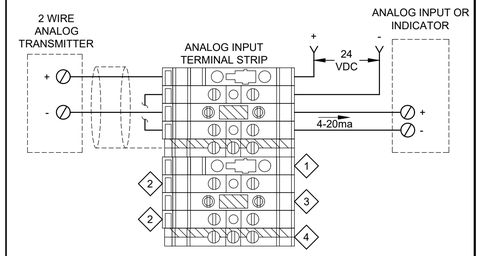

GENERAL NOTES:

1. GROUND SHIELD AT ANALOG TERMINAL STRIP INSIDE PCM PANEL.

24VDC TWO WIRE TRANSMITTER SCHEMATIC

NE304 TYP ANALOG INPUT TERMINAL DETAILS

carollo®

Date	No	Revision	By
	4		
	3		
	2		
	1		

PROJECT ENGINEER MSS
DESIGNED/DRAWN JMR
INSPECTOR RG

DIRECTOR PUBLIC WORKS
CITY ENGINEER
ASSISTANT DIRECTOR

CITY OF BELLINGHAM, WASHINGTON
PUBLIC WORKS DEPARTMENT
ENGINEERING DIVISION

SCALE
Horiz. AS SHOWN
Vert. AS SHOWN

DATUM
H: NAD 83/98
V: NAVD 88

Job. No. EU194
Date JAN 2026
Field Bk.

POST POINT RESOURCE RECOVERY PLANT
TYPICAL DETAILS
INSTRUMENTATION TYPICAL DETAILS 2

DRAWING NO. 800TN002
SHEET NO. 188 OF 198

LAST SAVED BY: CRollins

CONTACT PERSON: STEPHEN DAY, PE SE , PROJECT ENGINEER AT 360-778-7944

PROJECT NO. 202021-100000 FILE NAME: 202021800TN002.dwg

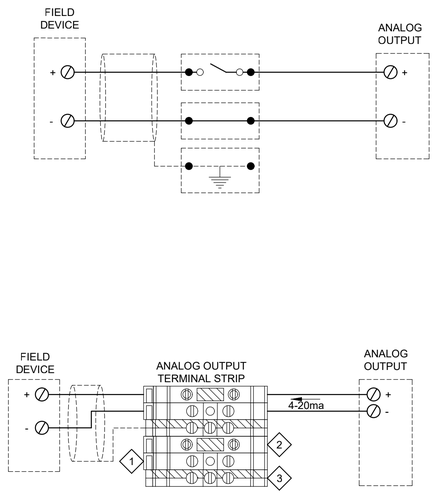

GENERAL NOTES:

1. GROUND SHIELD AT ANALOG TERMINAL STRIP INSIDE PCM PANEL.

KEY NOTES:

1. FEED THROUGH TERMINAL BLOCK.
2. TEST BLOCK WITH KNIFE DISCONNECT SWITCH.
3. GROUNDING TERMINAL BLOCK.

NE305 TYP S — ANALOG OUTPUT TERMINAL DETAILS 24VDC ANALOG OUTPUT SCHEMATIC

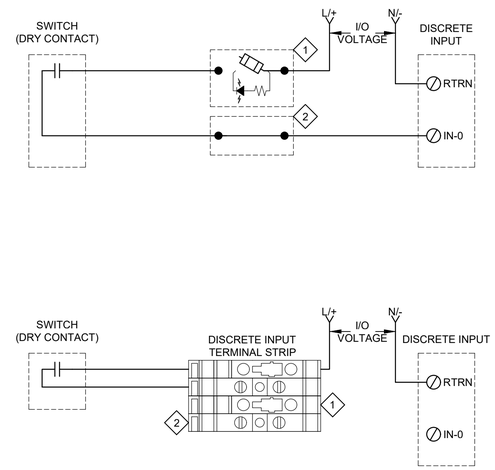

GENERAL NOTES:

1. REFER TO SPECIFICATIONS FOR PLC DISCRETE I/O VOLTAGE.

KEY NOTES:

1. FUSED TERMINAL/DISCONNECT BLOCK.
2. FEED THROUGH TERMINAL BLOCK.

NE306 TYP S — DISCRETE INPUT TERMINAL DETAILS (DRY CONTACT) SCHEMATIC

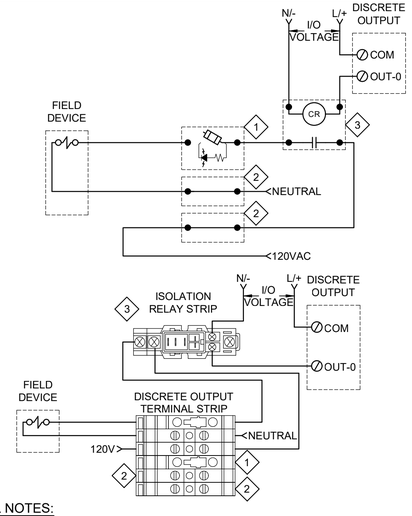

GENERAL NOTES:

1. REFER TO SPECIFICATIONS FOR PLC DISCRETE I/O VOLTAGE.

KEY NOTES:

1. FUSED TERMINAL/DISCONNECT BLOCK.
2. FEED THROUGH TERMINAL BLOCK.
3. ISOLATION RELAY.

NE307 TYP S — DISCRETE OUTPUT TERMINAL DETAILS (PANEL SOURCED) SCHEMATIC

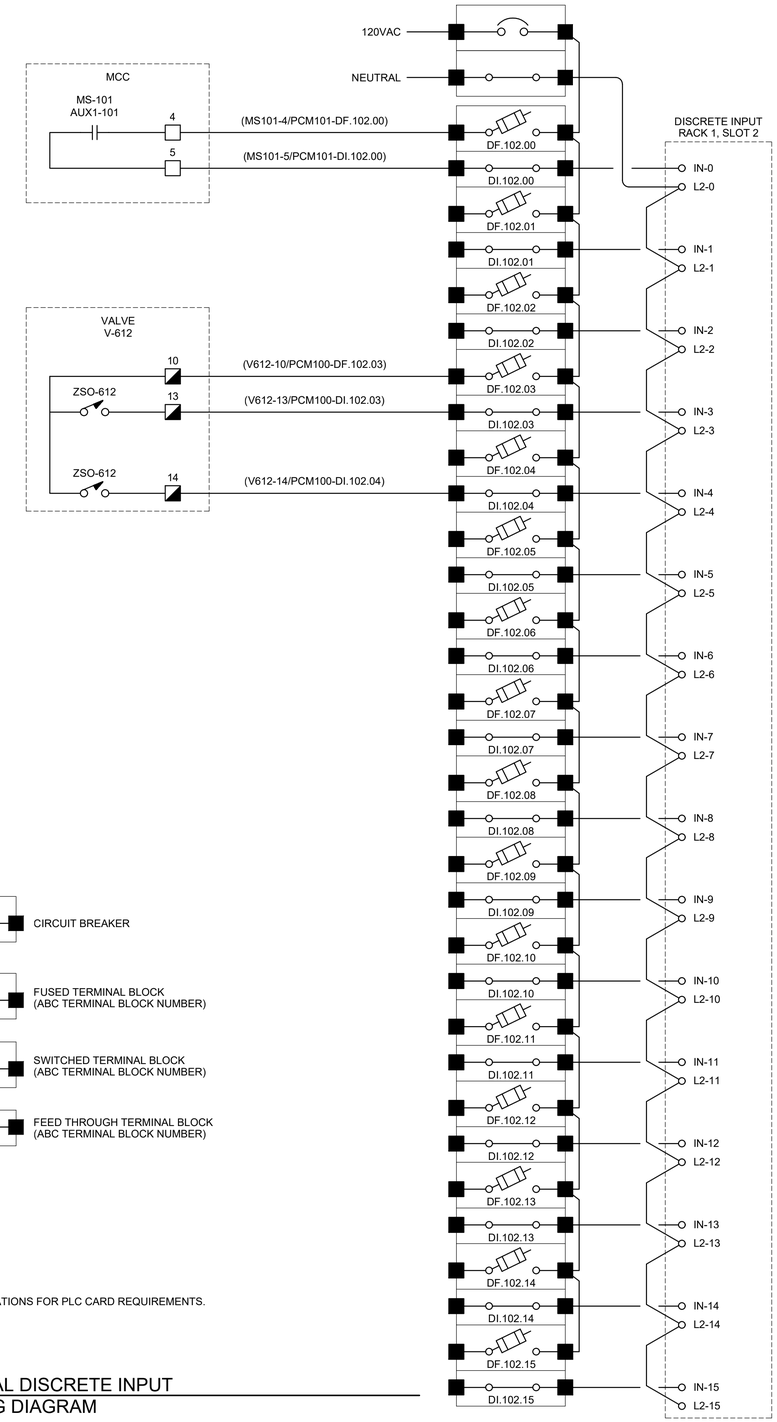

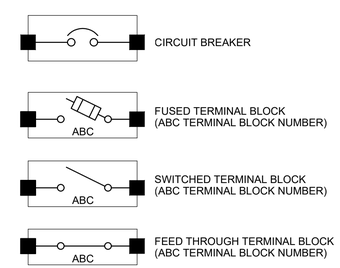

GENERAL NOTES:

1. REFER TO SPECIFICATIONS FOR PLC CARD REQUIREMENTS.

NE310 TYP S — TYPICAL DISCRETE INPUT WIRING DIAGRAM

carollo®

Date	No	Revision	By
	4		
	3		
	2		
	1		

PROJECT ENGINEER MSS
DESIGNED/DRAWN JMR
INSPECTOR RG

DIRECTOR PUBLIC WORKS
CITY ENGINEER
ASSISTANT DIRECTOR

CITY OF BELLINGHAM, WASHINGTON
PUBLIC WORKS DEPARTMENT
ENGINEERING DIVISION

SCALE
Horiz. AS SHOWN
Vert. AS SHOWN

DATUM
H: NAD 83/98
V: NAVD 88

Job. No. EU194
Date JAN 2026
Field Bk.

POST POINT RESOURCE RECOVERY PLANT
TYPICAL DETAILS
INSTRUMENTATION TYPICAL DETAILS 3

DRAWING NO. 800TN003
SHEET NO. 189 OF 198

LAST SAVED BY: CRollins

CONTACT PERSON: STEPHEN DAY, PE SE , PROJECT ENGINEER AT 360-778-7944

PROJECT NO. 202021-100000 FILE NAME: 202021800TN003.dwg

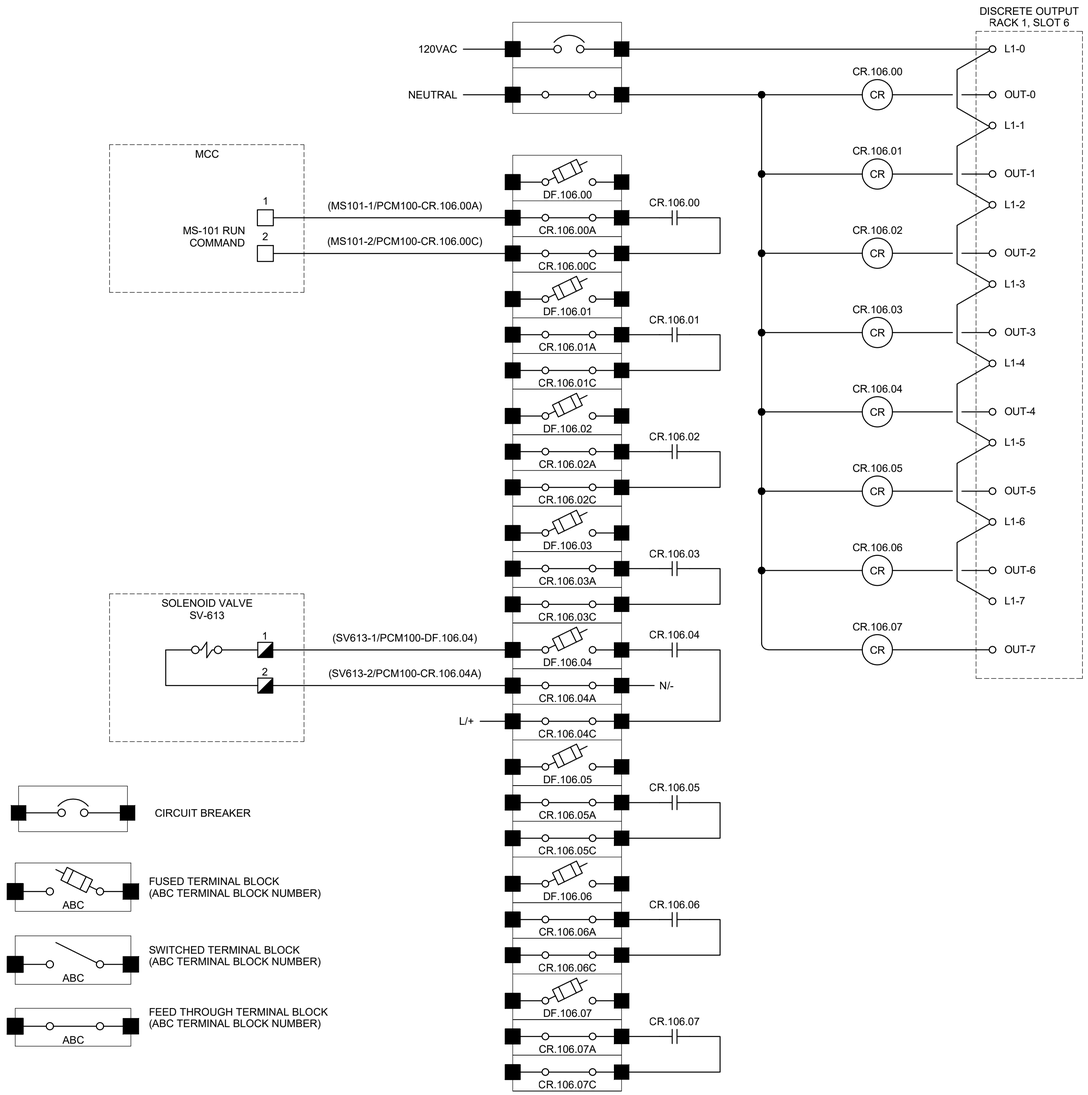

GENERAL NOTES:

1. REFER TO SPECIFICATIONS FOR PLC CARD REQUIREMENTS.

NE311 TYP — TYPICAL DISCRETE OUTPUT WIRING DIAGRAM

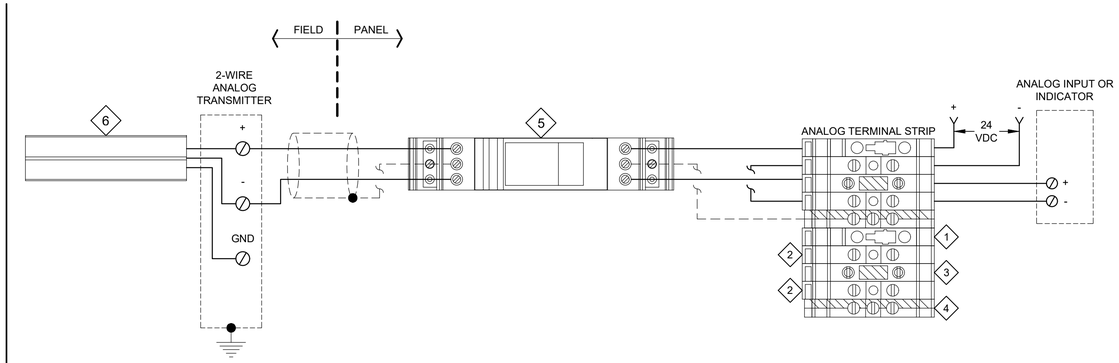

KEY NOTES:

1. FUSED TERMINAL/DISCONNECT BLOCK.
2. FEED THROUGH TERMINAL BLOCK.
3. TEST BLOCK WITH KNIFE DISCONNECT SWITCH.
4. GROUNDING TERMINAL BLOCK. BONDED TO EQUIPMENT GROUND VIA DIN RAIL MOUNTING FOOT.
5. PANEL MOUNTED SURGE PROTECTIVE DEVICE. BONDED TO EQUIPMENT GROUND VIA DIN RAIL MOUNTING FOOT.
6. FIELD DEVICE MOUNTED SURGE PROTECTIVE DEVICE. BONDED TO EQUIPMENT GROUND VIA FIELD DEVICE GROUND TERMINAL.

NE350 TYP — TYPICAL SURGE PROTECTION WIRING 2-WIRE ANALOG TRANSMITTER

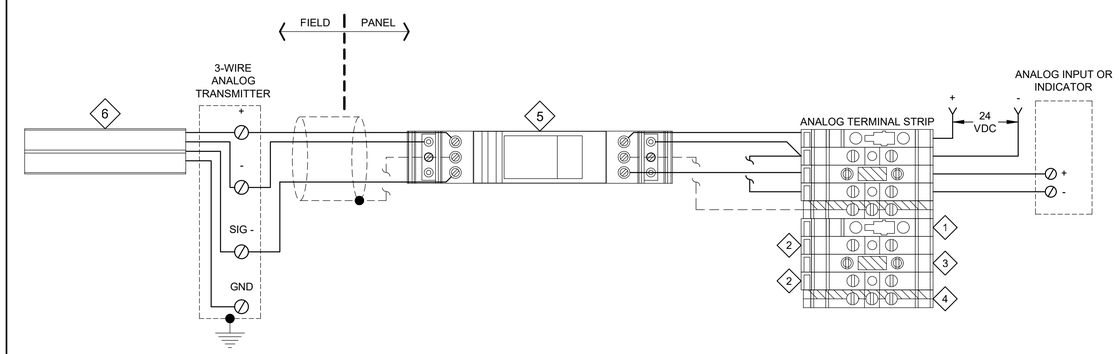

KEY NOTES:

1. FUSED TERMINAL/DISCONNECT BLOCK.
2. FEED THROUGH TERMINAL BLOCK.
3. TEST BLOCK WITH KNIFE DISCONNECT SWITCH.
4. GROUNDING TERMINAL BLOCK. BONDED TO EQUIPMENT GROUND VIA DIN RAIL MOUNTING FOOT.
5. PANEL MOUNTED SURGE PROTECTIVE DEVICE. BONDED TO EQUIPMENT GROUND VIA DIN RAIL MOUNTING FOOT.
6. FIELD DEVICE MOUNTED SURGE PROTECTIVE DEVICE. BONDED TO EQUIPMENT GROUND VIA FIELD DEVICE GROUND TERMINAL.

NE351 TYP — TYPICAL SURGE PROTECTION WIRING 3-WIRE ANALOG TRANSMITTER

carollo

Date	No	Revision	By
	4		
	3		
	2		
	1		

PROJECT ENGINEER MSS
DESIGNED/DRAWN JMR
INSPECTOR RG

DIRECTOR PUBLIC WORKS
CITY ENGINEER
ASSISTANT DIRECTOR

CITY OF BELLINGHAM, WASHINGTON
PUBLIC WORKS DEPARTMENT
ENGINEERING DIVISION

SCALE
Horiz. AS SHOWN
Vert. AS SHOWN

DATUM
H: NAD 83/98
V: NAVD 88

Job. No. EU194
Date JAN 2026
Field Bk.

POST POINT RESOURCE RECOVERY PLANT
TYPICAL DETAILS
INSTRUMENTATION TYPICAL DETAILS 4

DRAWING NO. 800TN004
SHEET NO. 190 OF 198

CONTACT PERSON: STEPHEN DAY, PE SE , PROJECT ENGINEER AT 360-778-7944

PROJECT NO. 202021-100000 FILE NAME: 202021800TN004.dwg

LAST SAVED BY: CRollins

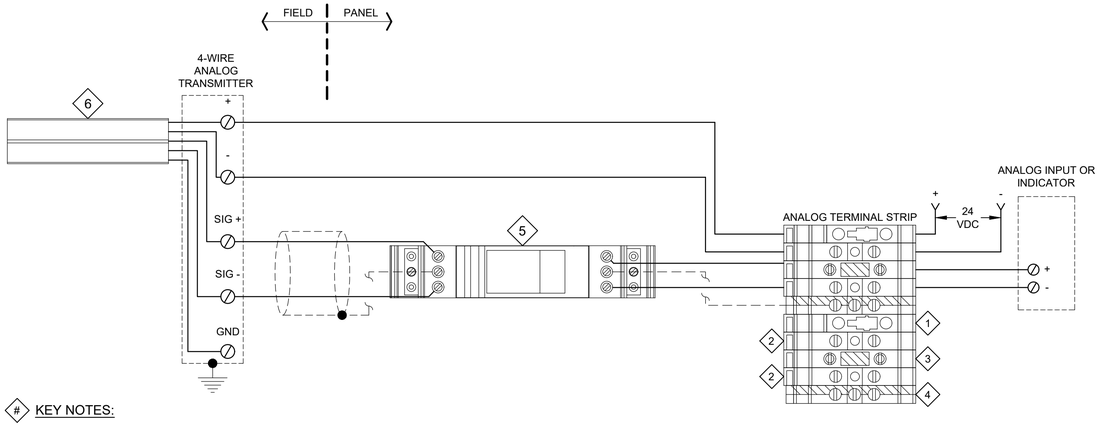

KEY NOTES:

1. FUSED TERMINAL/DISCONNECT BLOCK.
2. FEED THROUGH TERMINAL BLOCK.
3. TEST BLOCK WITH KNIFE DISCONNECT SWITCH.
4. GROUNDING TERMINAL BLOCK. BONDED TO EQUIPMENT GROUND VIA DIN RAIL MOUNTING FOOT.
5. PANEL MOUNTED SURGE PROTECTIVE DEVICE. BONDED TO EQUIPMENT GROUND VIA DIN RAIL MOUNTING FOOT.
6. FIELD DEVICE MOUNTED SURGE PROTECTIVE DEVICE. BONDED TO EQUIPMENT GROUND VIA FIELD DEVICE GROUND TERMINAL.

NE352 TYP — TYPICAL SURGE PROTECTION WIRING
4-WIRE ANALOG TRANSMITTER
WITH GROUNDED 24VDC POWER SUPPLY

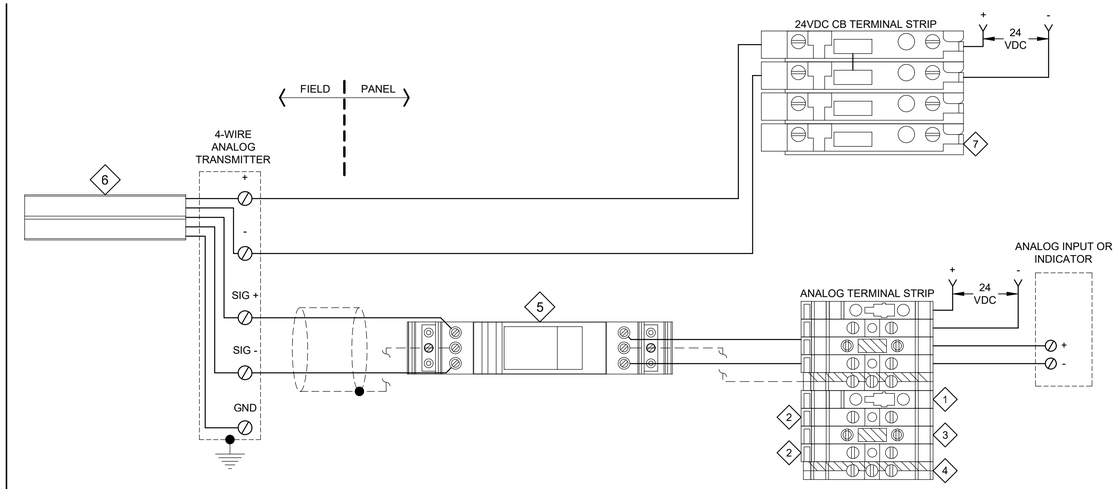

KEY NOTES:

1. FUSED TERMINAL/DISCONNECT BLOCK.
2. FEED THROUGH TERMINAL BLOCK.
3. TEST BLOCK WITH KNIFE DISCONNECT SWITCH.
4. GROUNDING TERMINAL BLOCK. BONDED TO EQUIPMENT GROUND VIA DIN RAIL MOUNTING FOOT.
5. PANEL MOUNTED SURGE PROTECTIVE DEVICE. BONDED TO EQUIPMENT GROUND VIA DIN RAIL MOUNTING FOOT.
6. FIELD DEVICE MOUNTED SURGE PROTECTIVE DEVICE. BONDED TO EQUIPMENT GROUND VIA FIELD DEVICE GROUND TERMINAL.
7. 2-POLE 24VDC CIRCUIT BREAKER.

NE353 TYP — TYPICAL SURGE PROTECTION WIRING
4-WIRE ANALOG TRANSMITTER
WITH UN-GROUNDED 24VDC POWER SUPPLY

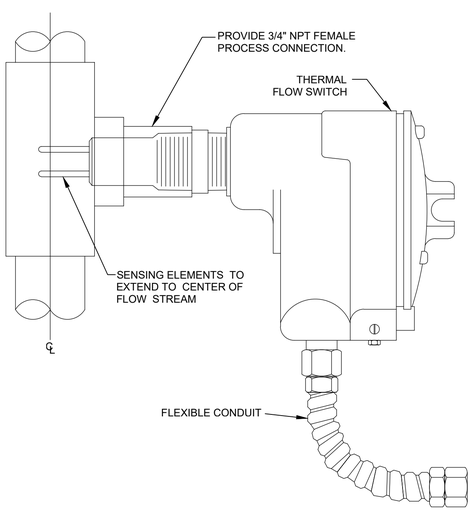

NF111 TYP — THERMAL FLOW SWITCH MOUNTING DETAIL

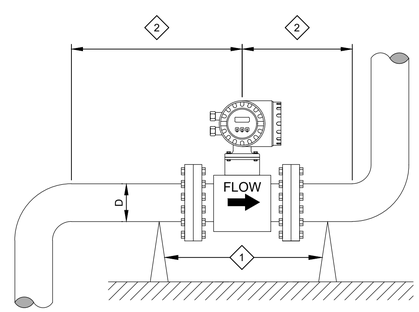

GENERAL NOTES:

1. FOLLOW MANUFACTURER'S RECOMMENDED MAXIMUM TORQUE SETTINGS. DO NOT OVER-TORQUE FLANGE BOLTS. OVERTIGHTENING THE FASTENERS WILL DEFORM SEALING FACES OR DAMAGE THE LINE.
2. ALWAYS TIGHTEN FLANGE BOLTS UNIFORMLY AND IN DIAGONALLY OPPOSITE SEQUENCE.
3. MOUNT METER SO THAT IT REMAINS FULLY FLOODED.
4. FOR METERS SPECIFIED WITH ZERO DIAMETER FEATURE, REFER TO THE MECHANICAL DRAWINGS FOR INSTALLATION.

KEY NOTES:

1. PIPE SUPPORTS BY MECHANICAL CONTRACTOR. NO SUPPORTS SHALL BE INSTALLED AT THE METER HOUSING.
2. INSTALL METER SUCH THAT THERE ARE NO PIPE BENDS FOR 5 PIPE DIAMETERS UPSTREAM AND 3 PIPE DIAMETERS DOWNSTREAM OF THE METER.

NF130 TYP — MAGNETIC FLOWMETER MOUNTING DETAIL

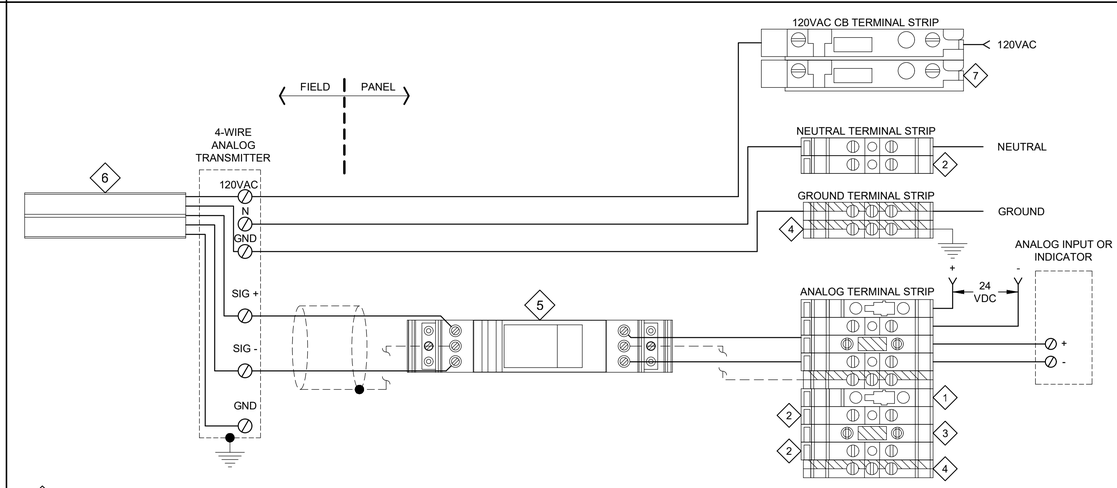

KEY NOTES:

1. FUSED TERMINAL/DISCONNECT BLOCK.
2. FEED THROUGH TERMINAL BLOCK.
3. TEST BLOCK WITH KNIFE DISCONNECT SWITCH.
4. GROUNDING TERMINAL BLOCK. BONDED TO EQUIPMENT GROUND VIA DIN RAIL MOUNTING FOOT.
5. PANEL MOUNTED SURGE PROTECTIVE DEVICE. BONDED TO EQUIPMENT GROUND VIA DIN RAIL MOUNTING FOOT.
6. FIELD DEVICE MOUNTED SURGE PROTECTIVE DEVICE. BONDED TO EQUIPMENT GROUND VIA FIELD DEVICE GROUND TERMINAL.
7. 120VAC CIRCUIT BREAKER.

NE354 TYP — TYPICAL SURGE PROTECTION WIRING
4-WIRE ANALOG TRANSMITTER
120VAC POWER SUPPLY

carollo®

Date	No	Revision	By
	4		
	3		
	2		
	1		

PROJECT ENGINEER MSS
DESIGNED/DRAWN JMR
INSPECTOR RG

DIRECTOR PUBLIC WORKS
CITY ENGINEER
ASSISTANT DIRECTOR

CITY OF BELLINGHAM, WASHINGTON
PUBLIC WORKS DEPARTMENT
ENGINEERING DIVISION

SCALE
Horiz. AS SHOWN
Vert. AS SHOWN

DATUM
H: NAD 83/98
V: NAVD 88

Job. No. EU194
Date JAN 2026
Field Bk.

POST POINT RESOURCE RECOVERY PLANT
TYPICAL DETAILS
INSTRUMENTATION TYPICAL DETAILS 5

DRAWING NO. 800TN005
SHEET NO. 191 OF 198

CONTACT PERSON: STEPHEN DAY, PE SE , PROJECT ENGINEER AT 360-778-7944

PROJECT NO. 202021-100000 FILE NAME: 202021800TN005.dwg

LAST SAVED BY: CRollins

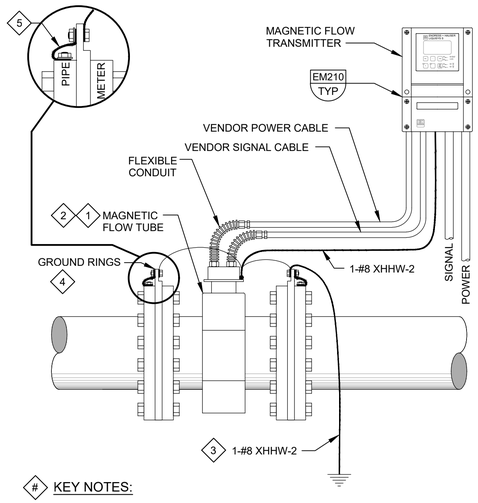

KEY NOTES:

1. CONTRACTOR SHALL VERIFY ZERO POTENTIAL BETWEEN FLOW TUBE, EARTH GROUND AND TRANSMITTER GROUND TERMINAL.
2. CONNECT TRANSMITTER GROUND TERMINAL TO GROUND RINGS.
3. CONNECT METER BODY TO EARTH GROUND POTENTIAL.
4. EQUALIZE POTENTIAL VIA GROUND RINGS BETWEEN FLUID AND MAGMETER.
5. PROVIDE BONDING JUMPER ON CONDUCTIVE PIPES.

NF135 TYP S REMOTE TRANSMITTER MAGNETIC FLOWMETER GROUNDING DETAIL

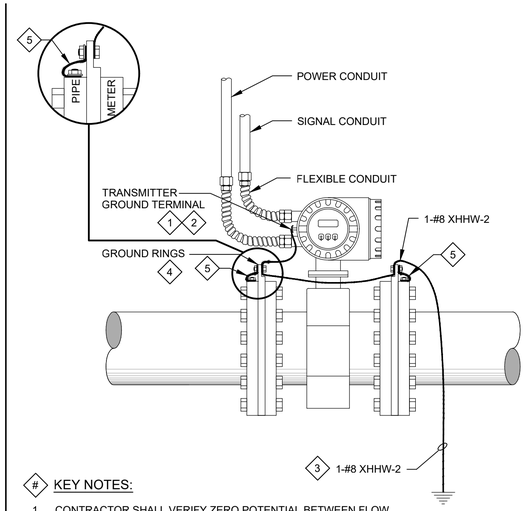

KEY NOTES:

1. CONTRACTOR SHALL VERIFY ZERO POTENTIAL BETWEEN FLOW TUBE, EARTH GROUND AND TRANSMITTER GROUND TERMINAL.
2. CONNECT TRANSMITTER GROUND TERMINAL TO GROUND RINGS.
3. CONNECT METER BODY TO EARTH GROUND POTENTIAL.
4. EQUALIZE POTENTIAL VIA GROUND RINGS BETWEEN FLUID AND MAGMETER.
5. PROVIDE BONDING JUMPER ON CONDUCTIVE PIPES.

NF136 TYP S INTEGRAL MAGNETIC FLOWMETER GROUNDING DETAIL

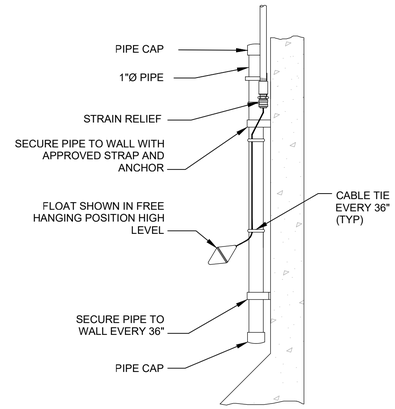

NL101 TYP S FLOAT SWITCH INSTALLATION

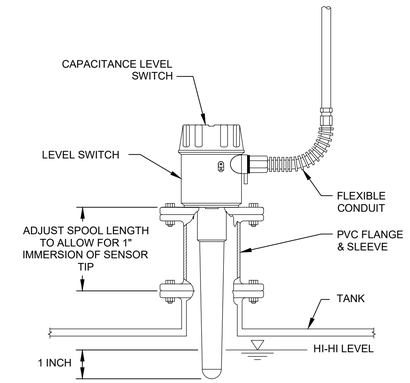

NL117 TYP S CAPACITANCE LEVEL SENSOR MOUNTING DETAIL

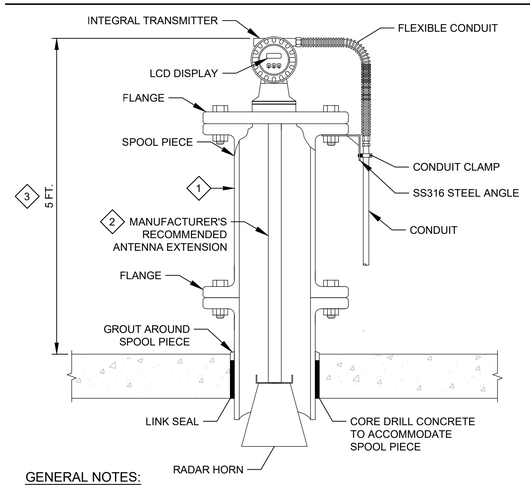

GENERAL NOTES:

1. LENGTH OF ANTENNA EXTENSION AND SPOOL PIECE SHALL BE AS REQUIRED TO INSTALL LCD DISPLAY.

KEY NOTES:

1. 1 INCH LARGER THAN DIAMETER OF RADAR HORN.
2. PROVIDE ANTENNA EXTENSION SUCH THAT THE RADAR HORN EXTENDS INTO THE STRUCTURE, PER MANUFACTURER'S RECOMMENDATION.
3. VERIFY SUITABLE ANTENNA EXTENSION IS AVAILABLE.

NL153 TYP MOUNTING DETAIL RADAR INSTRUMENT

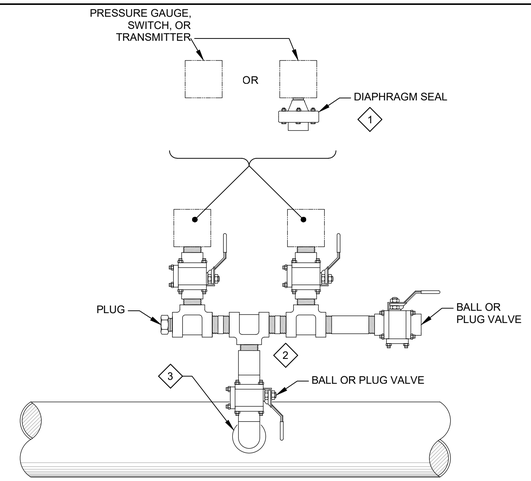

KEY NOTES:

1. USE THE INSTRUMENT DATA SHEETS IN DIVISION 17 OR DIVISIONS 40 SPECS TO IDENTIFY INDIVIDUAL REQUIREMENTS FOR DIAPHRAGM SEALS.
2. ALL VALVE AND PIPE MATERIAL SHALL BE COMPATIBLE WITH PROCESS FLUID.
3. THREADED TAP OR SADDLE CONNECTION FOR DUCTILE IRON PIPE. WELD-O-LET OR THREAD-O-LET FOR WELDED PIPE. TEE OR REDUCING TEE FOR NON-METALLIC PIPE.

NP501 TYP S MULTIPLE PRESSURE INSTRUMENTS MOUNTING DETAIL

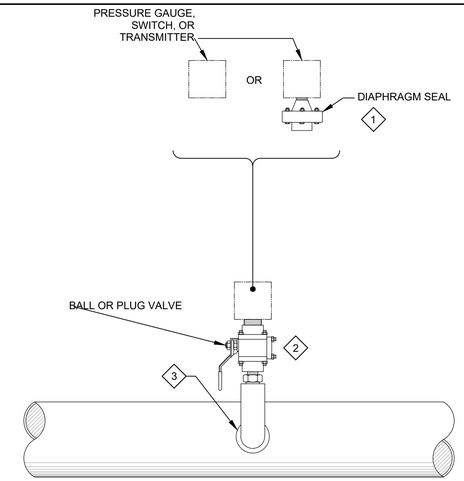

KEY NOTES:

1. USE THE INSTRUMENT DATA SHEETS IN DIVISION 17 OR DIVISIONS 40 SPECS TO IDENTIFY INDIVIDUAL REQUIREMENTS FOR DIAPHRAGM SEALS.
2. ALL VALVE AND PIPE MATERIAL SHALL BE COMPATIBLE WITH PROCESS FLUID.
3. THREADED TAP OR SADDLE CONNECTION FOR DUCTILE IRON PIPE. WELD-O-LET OR THREAD-O-LET FOR WELDED PIPE. TEE OR REDUCING TEE FOR NON-METALLIC PIPE.

NP503 TYP S ISOLATING PRESSURE INSTRUMENT MOUNTING DETAIL

carollo®

Date	No	Revision	By
	4		
	3		
	2		
	1		

PROJECT ENGINEER MSS
DESIGNED/DRAWN JMR
INSPECTOR RG

DIRECTOR PUBLIC WORKS
CITY ENGINEER
ASSISTANT DIRECTOR

CITY OF BELLINGHAM, WASHINGTON
PUBLIC WORKS DEPARTMENT
ENGINEERING DIVISION

SCALE
Horiz. AS SHOWN
Vert. AS SHOWN

DATUM
H: NAD 83/98
V: NAVD 88

Job. No. EU194
Date JAN 2026
Field Bk.

POST POINT RESOURCE RECOVERY PLANT
TYPICAL DETAILS
INSTRUMENTATION TYPICAL DETAILS 6

DRAWING NO. 800TN006
SHEET NO. 192 OF 198

CONTACT PERSON: STEPHEN DAY, PE SE , PROJECT ENGINEER AT 360-778-7944

LAST SAVED BY: CRollins

PROJECT NO. 202021-100000 FILE NAME: 202021800TN006.dwg

10/9/2024 2:18:55 PM

1. SEE DIVISION 03 SPECIFICATION FOR REQUIREMENTS FOR CONCRETE CONSTRUCTION.
2. UNLESS OTHERWISE INDICATED ON THE DRAWINGS, MINIMUM REINFORCEMENT OF CONCRETE WALLS OR SLABS SHALL BE AS FOLLOWS. CONTACT ENGINEER FOR LOCATIONS INSIDE CONCRETE.
   10" THICK OR LESS: .....#5 @ 12" EACH WAY.
   MORE THAN 10" THICK: .....#5 @ 12" EACH WAY, EACH FACE.
3. WALL REINFORCEMENT AT CORNERS OR JUNCTIONS OF WALLS SHALL BE CONTINUOUS, LAP SPLICED, OR TERMINATED IN AN ACI STANDARD 90 DEGREE HOOK. SEE DETAIL SC310/TYP.
4. UNLESS OTHERWISE INDICATED ON THE DRAWINGS, DOWELS BETWEEN ADJACENT CONCRETE PLACEMENTS SHALL BE THE SAME SIZE AND SPACING AS THE REINFORCEMENT WHICH IS SPLICED TO THE DOWELS.
5. SLAB, BEAM AND COLUMN REINFORCING BARS SHALL HAVE A MINIMUM EXTENSION OR ANCHORAGE INTO SUPPORTS IN ACCORDANCE WITH ACI 318 AND ACI 350.
6. PROVIDE STIRRUP SUPPORT BARS SHALL BE TO SECURE TOP BARS AGAINST DISPLACEMENT AS REQUIRED.
7. UNLESS OTHERWISE INDICATED ON THE DRAWINGS, CONCRETE COVER OVER #11 AND SMALLER REINFORCING BARS SHALL BE AS FOLLOWS:
   A. SLABS AND JOISTS:
      FORMED CONCRETE SURFACES AND UNFORMED TOP SURFACES FOR DRY CONDITIONS
      #7 BARS AND SMALLER.....1"
      #8 BARS AND LARGER.....1 1/2"
      FORMED CONCRETE SURFACES AND UNFORMED TOP SURFACES EXPOSED TO WEATHER, IN CONTACT WITH SOIL OR FLUIDS, OR LOCATED OVER FLUIDS.....2"
   B. BEAMS AND COLUMNS:
      FORMED CONCRETE SURFACES FOR DRY CONDITIONS:
      STIRRUPS, SPIRALS, AND TIES.....1 1/2"
      PRINCIPAL REINFORCEMENT.....2"
      FORMED CONCRETE SURFACES EXPOSED TO WEATHER, IN CONTACT WITH SOIL OR FLUIDS, OR IN BEAMS LOCATED OVER FLUIDS:
      STIRRUPS AND TIES.....2"
      PRINCIPAL REINFORCEMENT.....2 1/2"
   C. WALLS:
      FORMED CONCRETE SURFACES FOR DRY CONDITIONS:
      #7 BARS AND SMALLER.....1"
      #8 BARS AND LARGER.....1 1/2"
      FORMED CONCRETE SURFACES EXPOSED TO WEATHER, OR IN CONTACT WITH SOIL OR FLUIDS.....2"

SC001 TYP S — REINFORCED CONCRETE - NOTES

SHEET 1 OF 3 12/18/2023

   D. FOOTINGS AND SLABS ON GRADE:
      FORMED VERTICAL CONCRETE SURFACES.....2"
      AT UNFORMED CONCRETE SURFACES CAST AGAINST SOIL, ROCK, OR CONCRETE WORK MATS.....3"
      TOP SURFACE OF FOOTINGS AND SLABS.....SAME AS SLABS
8. WATERSTOPS:
   A. PROVIDE WATERSTOPS AT JOINTS IN SLABS AND WALLS OF LIQUID-CONTAINING STRUCTURES, AND PORTIONS OF STRUCTURES BELOW THE DESIGN GROUNDWATER LEVEL. MAKE WATERSTOPS CONTINUOUS THROUGH STRUCTURE, SPLICING WATERSTOPS IN SLABS WITH WATERSTOPS IN WALLS.
   B. END WATERSTOPS 3" BELOW TOP OF WALLS. WHERE TOP OF WALL IS COVERED BY A SLAB WITHOUT WATERSTOPS, CONTINUE WATERSTOP TO WALL/SLAB JOINT. WHERE TOP OF WALL IS COVERED BY A SLAB WITH WATERSTOPS, MAKE WATERSTOPS CONTINUOUS, SPLICING WATERSTOPS IN WALLS WITH WATERSTOPS IN SLAB.
9. CURE CONCRETE IN ACCORDANCE WITH THE CONTRACT DOCUMENTS. WHERE WATER CURING IS SPECIFIED, MEMBRANE CURING IS NOT ALLOWED.
   A. THE CONTRACTOR IS WARNED THAT WATER CURING IS DIFFICULT AT TIMES DUE TO WIND AND DRY CONDITIONS. STUDY SPECIFICATION REQUIREMENTS AND FURNISH ADEQUATE SYSTEMS TO PROVIDE WATER CURING WHERE REQUIRED.
   B. KEEP WATER CURED SURFACES VISIBLY MOIST AT ALL TIMES. FLOOD TOPS OF WALLS NOT LESS THEN 3 TIMES DAILY.
10. DO NOT PLACE BACKFILL AGAINST WALLS UNTIL:
   A. WALLS HAVE BEEN CAST TO FULL HEIGHT OF STRUCTURE AND CONCRETE HAS REACHED THE MINIMUM SPECIFIED COMPRESSIVE STRENGTH (f'c).
   B. CONNECTING SLABS AND BEAMS HAVE BEEN CAST AND CONCRETE IN THOSE ELEMENTS HAS REACHED THE MINIMUM SPECIFIED COMPRESSIVE STRENGTH (f'c).
11. LAP SPLICES:
   A. SEE TABLE 1 OF THIS DETAIL FOR LAP SPLICE LENGTHS.
   B. WHEN MULTIPLE BARS ARE SPLICED AT THE SAME SECTION, THE "CLEAR BAR SPACING" IS DEFINED AS THE MINIMUM CLEAR DISTANCE BETWEEN THE BARS OUTSIDE THE SPLICE LENGTH MINUS ONE BAR DIAMETER.
   C. UNLESS OTHERWISE INDICATED ON THE DRAWINGS, BARS AT A LAP SPLICE SHALL BE IN CONTACT WITH EACH OTHER.
   D. "TOP BARS" ARE HORIZONTAL REINFORCEMENT AT LOCATIONS WHERE MORE THAN 12 INCHES OF FRESH CONCRETE IS CAST IN THE MEMBER BELOW THE BAR.
12. FORM EXPOSED CONCRETE CORNERS AND EDGES WITH 3/4" CHAMFER UNLESS OTHERWISE INDICATED ON THE DRAWINGS.

SC001 TYP S — REINFORCED CONCRETE - NOTES

SHEET 2 OF 3 12/18/2023

TABLE 1: REINFORCING BAR LAP SPLICES: f'c = 4000 PSI, Fy = 60,000 PSI

BAR SIZE	MINIMUM COVER (BAR DIA)	MINIMUM CLEAR BAR SPACING (BAR DIA)	LAP SPLICE LENGTH (INCHES)	
			TOP BARS	OTHER BARS
#4	MORE THAN 1	MORE THAN 2	32 *	25 *
	MORE THAN 2	MORE THAN 4	20	16
#5	MORE THAN 1	MORE THAN 2	40 *	31 *
	MORE THAN 2	MORE THAN 4	26	20
#6	MORE THAN 1	MORE THAN 2	48 *	37 *
	MORE THAN 2	MORE THAN 4	30	24
#7	MORE THAN 1	MORE THAN 2	70 *	54 *
	MORE THAN 2	MORE THAN 4	43	33
#8	MORE THAN 1	MORE THAN 2	81 *	62 *
	MORE THAN 2	MORE THAN 4	50	38
#9	MORE THAN 1	MORE THAN 2	90 *	70 *
	MORE THAN 2	MORE THAN 4	56	42
#10	MORE THAN 1	MORE THAN 2	104 *	81 *
	MORE THAN 2	MORE THAN 4	62	48
#11	MORE THAN 1	MORE THAN 2	114 *	88 *
	MORE THAN 2	MORE THAN 4	69	54

REINFORCING BAR LAP SPLICE TABLE NOTES:

1. TABULATED SPLICE LENGTHS ARE APPLICABLE ONLY WHEN BOTH REQUIREMENTS FOR MINIMUM COVER AND FOR MINIMUM CLEAR BAR SPACING ARE SATISFIED.
2. * = IF THE CLEAR BAR SPACING IS LESS THAN OR EQUAL TO TWO BAR DIAMETERS, OR THE COVER IS LESS THAN OR EQUAL TO ONE BAR DIAMETER, THE LAP SPLICE LENGTH SHALL BE INCREASED BY 50 PERCENT.

SC001 TYP S — REINFORCED CONCRETE - NOTES

SHEET 3 OF 3 12/18/2023

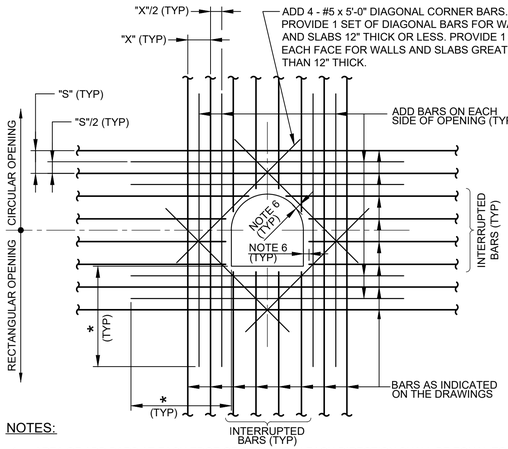

NOTES:

1. AREA OF ADD BARS AT EACH EDGE OF OPENING IN EACH DIRECTION SHALL BE EQUAL TO OR GREATER THAN 1/2 THE CROSS SECTIONAL AREA OF THE INTERRUPTED BARS.
2. PROVIDE STANDARD ACI HOOKS ON BARS IF STRAIGHT EXTENSION PAST THE OPENING, CANNOT BE ACHIEVED.
3. PLACE ADD BARS IN SAME PLANES AS INTERRUPTED REINFORCING.
4. PLACE #5 DIAGONAL BARS ON INSIDE OF INTERRUPTED REINFORCING.
5. * DIMENSION EQUALS OPENING DIMENSION MEASURED PERPENDICULAR TO ADD BARS PLUS LAP SPLICE LENGTH. HOOK BARS WHERE INTERRUPTED.
6. 2" CLEAR TO CONCRETE OPENINGS OR OUTSIDE FACE OF PIPES AND PIPE SLEEVES. DO NOT OVERCUT REINFORCEMENT FOR EASIER PLACEMENT OF WEEP RINGS AND FLANGES.
7. ADD BARS ARE NOT REQUIRED AT SIDES OF OPENINGS PARALLEL TO AND WITHIN 6" OF A WALL OR BEAM.

SC012 TYP N — CONCRETE - REINFORCEMENT - ADDITIONAL REINF AT OPENINGS - SLABS AND WALLS

04/23/2024

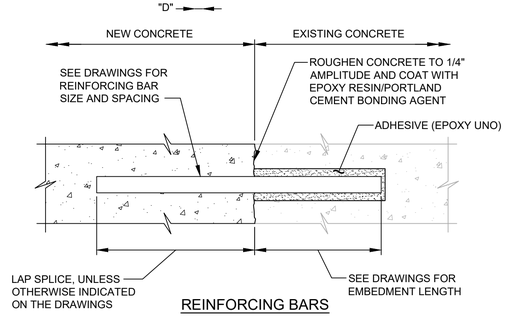

REINFORCING BARS

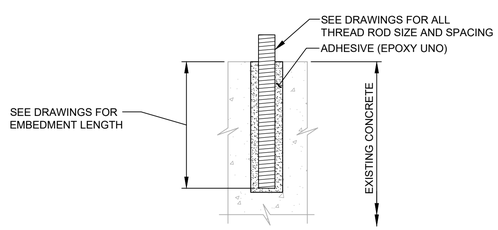

ALL-THREAD RODS

NOTE:

1. INSTALLATION OF REINFORCING BARS AND ALL THREAD RODS AS INDICATED IN THE SPECIFICATIONS.

SC040 TYP S — CONCRETE REINFORCEMENT - ADHESIVE-BONDED BARS AND ALL-THREAD RODS

03/28/2024

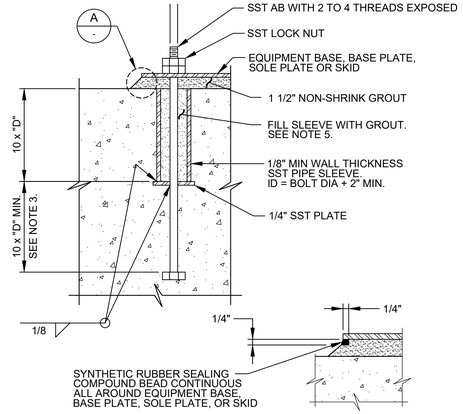

A DETAIL

NOTES:

1. "D" = DIAMETER OF ANCHOR BOLT.
2. ANCHOR BOLT DIAMETER AS INDICATED ON THE DRAWINGS. IF NOT INDICATED ON THE DRAWINGS, THE ANCHOR BOLT SIZE SHALL BE AS RECOMMENDED BY THE EQUIPMENT MANUFACTURER.
3. WHERE CONCRETE SLAB OR BEAM THICKNESS WILL NOT ACCOMMODATE THE ANCHOR BOLT, PROVIDE EXTRA THICKNESS OF SLAB OR BEAM.
4. DO NOT USE ALL THREAD RODS AS A SUBSTITUTE FOR BOLTS WITH A BOLT HEAD. SMOOTH RODS THREADED AT THE ENDS MAY BE USED IF ACCEPTABLE TO THE ENGINEER. DO NOT WELD NUTS TO THE THREADED RODS.
5. PROVIDE CAST-IN-PLACE ANCHOR BOLTS DIRECTLY INTO CONCRETE AS AN ALTERNATIVE.
6. DO NOT USE LEVELING NUTS TO SUPPORT AND LEVEL EQUIPMENT BASE, BASE PLATE, SOLE PLATE, OR SKID.

SC064 TYP N — ANCHOR BOLT - SLEEVE PLUS EMBED

03/27/2024

Digitally signed by HUIDONG CHEN
Contact info: chenh@carollo.com
Date: 2024.10.09 14:18:42 -07'00'
STATE OF WASHINGTON 21258 REGISTERED PROFESSIONAL ENGINEER

carollo®

LAST SAVED BY: dlee

Date	No	Revision	By
	4		
	3		
	2		
	1		

PROJECT ENGINEER HCC
DESIGNED/DRAWN DE
INSPECTOR JAD / KA

DIRECTOR PUBLIC WORKS
CITY ENGINEER
ASSISTANT DIRECTOR

CITY OF BELLINGHAM, WASHINGTON
PUBLIC WORKS DEPARTMENT
ENGINEERING DIVISION

SCALE
Horiz. AS SHOWN
Vert. AS SHOWN

DATUM
H: NAD 83/98
V: NAVD 88

Job. No. EU194
Date JAN 2026
Field Bk.

POST POINT RESOURCE RECOVERY PLANT
TYPICAL DETAILS
STRUCTURAL TYPICAL DETAILS 1

DRAWING NO. 800TS001
SHEET NO. 193 OF 198

CONTACT PERSON: STEPHEN DAY, PE SE , PROJECT ENGINEER AT 360-778-7944

PROJECT NO. 202021-100000 FILE NAME: 202021800TS001.dwg

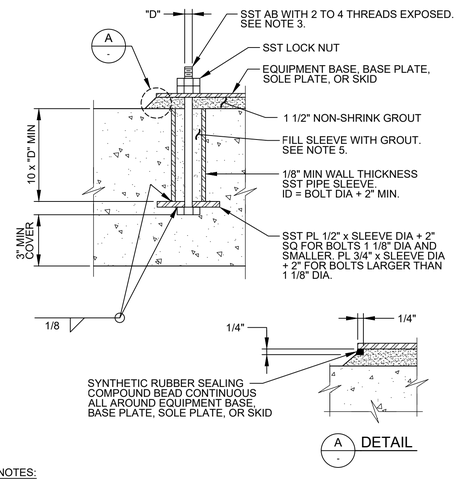

A DETAIL

NOTES:

1. "D" = DIAMETER OF ANCHOR BOLT.
2. ANCHOR BOLT DIAMETER AS INDICATED ON THE DRAWINGS. IF NOT INDICATED ON THE DRAWINGS, THE ANCHOR BOLT SIZE SHALL BE AS RECOMMENDED BY THE EQUIPMENT MANUFACTURER.
3. DO NOT USE ALL THREAD RODS AS A SUBSTITUTE FOR BOLTS WITH A BOLT HEAD.
4. PROVIDE CAST-IN-PLACE ANCHOR BOLTS DIRECTLY INTO CONCRETE AS AN ALTERNATIVE.
5. DO NOT USE LEVELING NUTS TO SUPPORT AND LEVEL EQUIPMENT BASE, BASE PLATE, SOLE PLATE, OR SKID.

SC066 TYP — ANCHOR BOLT - SLEEVE FULL HEIGHT

N 04/23/2024

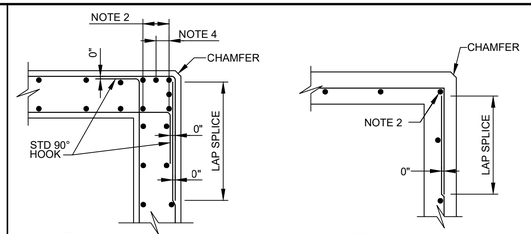

A DETAIL - CORNER: DOUBLE MAT

B DETAIL - CORNER: SINGLE MAT

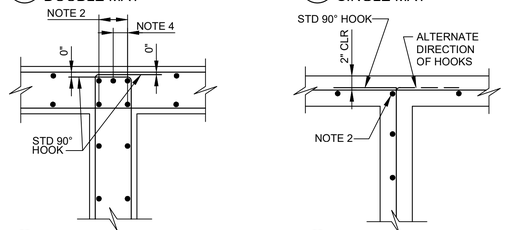

C DETAIL - INTERSECTION: DOUBLE MAT

D DETAIL - INTERSECTION: SINGLE MAT

NOTES:

1. BAR SIZE, SPACING, AND ORIENTATION OF BAR LAYERS SHALL BE AS INDICATED ON THE DRAWINGS.
2. AT INTERSECTION, MAKE BAR SIZE THE LARGER OF BAR SIZES IN CONNECTING WALLS. PLACE BARS IN SAME LAYERS AS AT CONNECTING WALLS (TYP).
3. BAR TAILS: 12 BAR DIAMETERS PLUS 12".
4. EXTERIOR VERTICAL BARS SHALL BE PROVIDED AT A SPACING THAT DOES NOT EXCEED THE SPACING SPECIFIED ON THE DRAWINGS REGARDLESS OF THE WALL THICKNESS.

SC310 TYP — CONCRETE - REINFORCEMENT - WALL CORNERS AND INTERSECTIONS

S SHEET 1 OF 2 12/18/2023

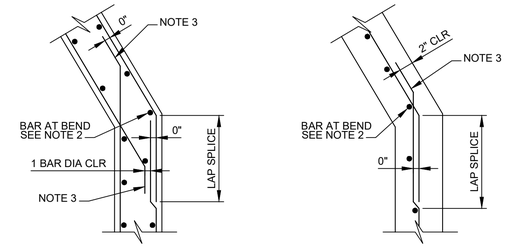

E DETAIL - INTERSECTION: DOUBLE MAT

F DETAIL - INTERSECTION: SINGLE MAT

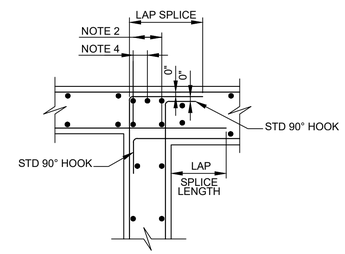

G DETAIL - INTERSECTION: CHANGE IN WALL THICKNESS

SC310 TYP — CONCRETE - REINFORCEMENT - WALL CORNERS AND INTERSECTIONS

S SHEET 2 OF 2 12/18/2023

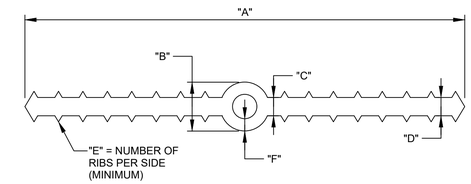

TYPE	"A"	"B"	"C"	"D"	"E"	"F"	APPLICATION
W/O CENTER BULB	6"	-	3/8"	3/8"	7	-	CONSTRUCTION AND CONTROL JOINTS
CENTER BULB	6"	7/8"	3/8"	3/8"	7	9/32"	FOR USE WITH DETAIL EM071/TYP ONLY
CENTER BULB	9"	1"	3/8"	3/8"	7	1/4"	EXPANSION JOINTS 1" AND NARROWER
CENTER BULB	9"	2"	3/8"	3/8"	7	1/4"	EXPANSION JOINTS WIDER THAN 1" AND TENSION/COMPRESSION RING BEAM AT DIGESTERS

NOTES:

1. SEE SPECIFICATIONS FOR MATERIAL REQUIREMENTS.
2. DIMENSIONS ARE MINIMUM, UNLESS OTHERWISE NOTED.

SD004 TYP — CONCRETE JOINTS - PVC WATERSTOPS - SCHEDULE

12/18/2023

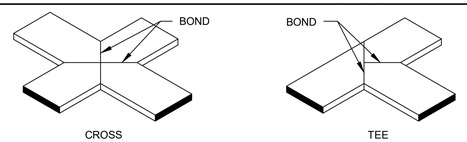

IN-PLANE JOINTS

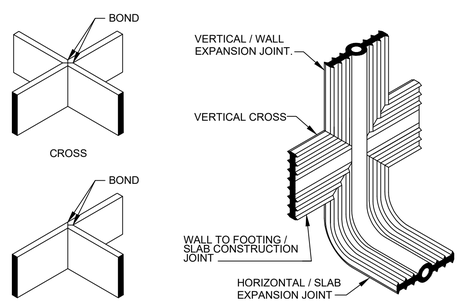

OUT-OF-PLANE JOINTS

NOTES:

1. MAKE WELDS AS SPECIFIED AND IN ACCORDANCE WITH THE MANUFACTURER'S RECOMMENDATIONS.
2. CROSSES AND TEES SHALL BE FACTORY PREFABRICATED BY THE MANUFACTURER. FIELD WELDS SHALL BE BUTT WELDS ONLY.

SD008 TYP — CONCRETE JOINTS - PVC WATERSTOPS - PREFABRICATED JOINTS

12/18/2023

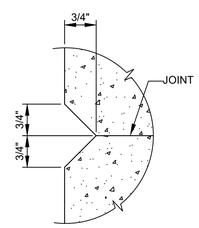

SD050 TYP — CONCRETE JOINTS - V-GROOVE

N 12/18/2023

carollo®

LAST SAVED BY: lveloz

Date	No	Revision	By
	4		
	3		
	2		
	1		

PROJECT ENGINEER HCC
DESIGNED/DRAWN DE
INSPECTOR JAD / KA

DIRECTOR PUBLIC WORKS
CITY ENGINEER
ASSISTANT DIRECTOR

CITY OF BELLINGHAM, WASHINGTON
PUBLIC WORKS DEPARTMENT
ENGINEERING DIVISION

SCALE
Horiz. AS SHOWN
Vert. AS SHOWN

DATUM
H: NAD 83/98
V: NAVD 88

Job. No. EU194
Date JAN 2026
Field Bk.

POST POINT RESOURCE RECOVERY PLANT
TYPICAL DETAILS
STRUCTURAL TYPICAL DETAILS 2

DRAWING NO. 800TS002
SHEET NO. 194 OF 198

CONTACT PERSON: STEPHEN DAY, PE SE , PROJECT ENGINEER AT 360-778-7944

PROJECT NO. 202021-100000 FILE NAME: 202021800TS002.dwg

10/9/2024 2:22:59 PM

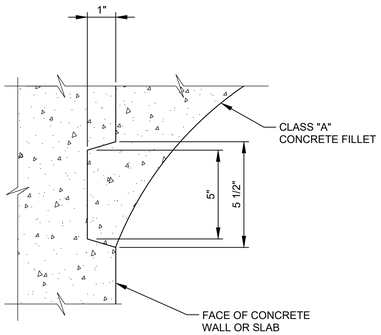

SD066 TYP — CONCRETE JOINTS - KEY AT CONCRETE FILL

12/18/2023

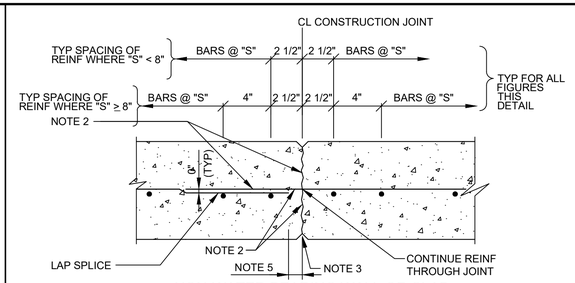

NON-WATER BEARING WALL OR SLAB
SINGLE LAYER REINFORCEMENT

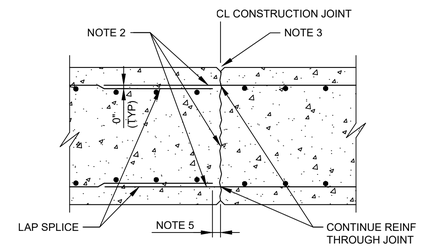

NON-WATER BEARING WALL OR SLAB
DOUBLE LAYER REINFORCEMENT

SD102 TYP S — CONCRETE JOINTS - CONSTRUCTION JOINT - WALL OR SLAB

SHEET 1 OF 2 12/18/2023

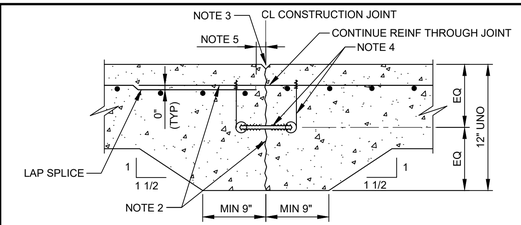

WATER BEARING SLAB LESS THAN 12" THICK

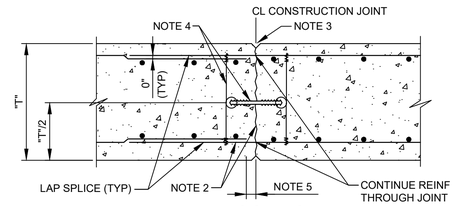

WATER BEARING SLAB OR WALL

NOTES:

1. "S" EQUALS TYPICAL BAR SPACING INDICATED ON THE DRAWINGS.
   "T" EQUALS SLAB OR WALL THICKNESS.
2. WATER-BLAST EXPOSED JOINT FACE AND PROJECTING REINFORCEMENT BEFORE PLACING CONCRETE.
3. JOINT EDGES:
   A. FOR WALLS AND BOTTOM OF EXPOSED SLABS: FORM EDGES WITH 1/2" CHAMFER.
   B. FOR SLABS: EDGE TOP AND ENDS WITH 1/4" RADIUS.
4. 6" WATERSTOP CENTERED ON JOINT - SEE DETAIL SD004/TYP. PROVIDE WIRE TIES MAX 2'-0" OC. HOG RINGS MAY BE USED IN LIEU OF WIRE LOOPS. THOROUGHLY CLEAN WATERSTOP BEFORE PLACING CONCRETE IN SECOND POUR.
5. STOP REINFORCING 2" CLEAR OF JOINT.

SD102 TYP S — CONCRETE JOINTS - CONSTRUCTION JOINT - WALL OR SLAB

SHEET 2 OF 2 12/18/2023

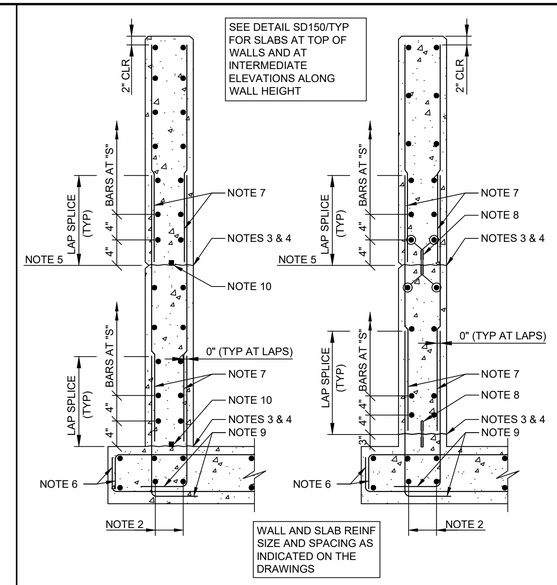

A SECTION

B SECTION - "W/ WSTP"

SD130 TYP S, N — CONCRETE JOINTS - CONSTRUCTION JOINT - WALLS - STARTER WALL AT PVC WATERSTOP

SHEET 1 OF 2 12/18/2023

NOTES:

1. "S" EQUALS TYPICAL BAR SPACING INDICATED ON THE DRAWINGS.
2. PLACE AND ALIGN BARS BEFORE PLACING DOWELS. BAR SIZE TO MATCH SLAB BARS.
3. WATER-BLAST JOINT FACE AND PROJECTING REINFORCEMENT BEFORE PLACING CONCRETE.
4. PLACE CEMENT GROUT OVER JOINT FACE IMMEDIATELY BEFORE PLACING CONCRETE. (SEE SPECIFICATIONS.)
5. CONSTRUCTION JOINT WHERE INDICATED ON THE DRAWINGS. WHERE WALL SURFACE IS EXPOSED TO VIEW IN THE FINISHED WORK, PROVIDE V-GROOVE PER DETAIL SD050/TYP.
6. STANDARD 90° HOOK WHERE INDICATED ON THE DRAWINGS. (ALTERNATE: PROVIDE 180° HOOK WHERE REQUIRED BY SLAB THICKNESS.)
7. DOWELS: SAME SIZE AND SPACING AS VERTICAL WALL BARS, UNLESS OTHERWISE NOTED.
8. 6" PVC WATERSTOP CENTERED VERTICALLY ON JOINT. PROVIDE WIRE TIES MAX 2'-0" OC. HOG RINGS MAY BE USED IN LIEU OF WIRE LOOPS. THOROUGHLY CLEAN WATERSTOP BEFORE PLACING CONCRETE.
9. STANDARD 90° HOOK UNLESS OTHERWISE INDICATED ON THE DRAWINGS.
10. WHERE DRAWINGS INDICATE "W/ STRIP WSTP" PROVIDE LOW EXPANSION HYDROPHILIC WATERSTOP AT TOP SURFACE OF JOINT AND CENTERED BETWEEN VERTICAL BARS.

SD130 TYP S, N — CONCRETE JOINTS - CONSTRUCTION JOINT - WALLS - STARTER WALL AT PVC WATERSTOP

SHEET 2 OF 2 12/18/2023

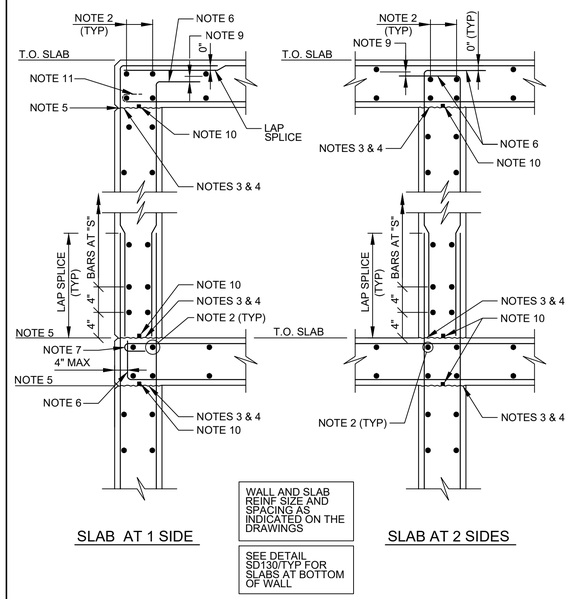

SLAB AT 1 SIDE

SLAB AT 2 SIDES

A SECTION

SD150 TYP S, N — CONCRETE JOINTS - CONSTRUCTION JOINT - WALLS AT ELEVATED SLABS

SHEET 1 OF 3 12/18/2023

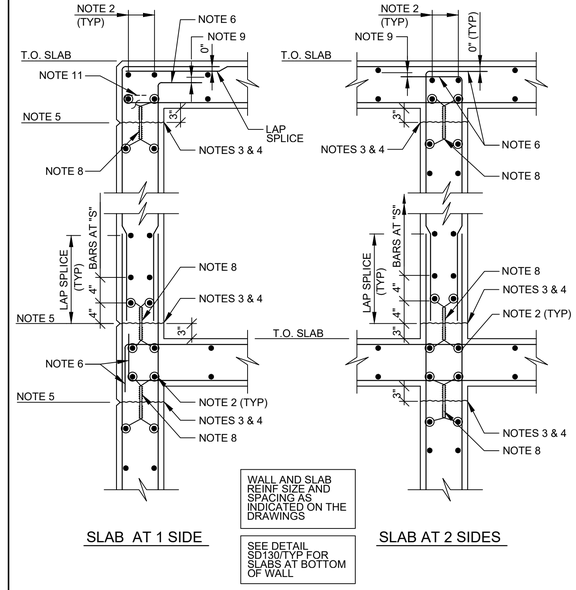

SLAB AT 1 SIDE

SLAB AT 2 SIDES

B SECTION - "W/ WSTP"

SD150 TYP S, N — CONCRETE JOINTS - CONSTRUCTION JOINT - WALLS AT ELEVATED SLABS

SHEET 2 OF 3 12/18/2023

carollo®

LAST SAVED BY: dlee

Date	No	Revision	By
	4		
	3		
	2		
	1		

PROJECT ENGINEER HCC
DESIGNED/DRAWN DE
INSPECTOR JAD / KA

DIRECTOR PUBLIC WORKS
CITY ENGINEER
ASSISTANT DIRECTOR

CITY OF BELLINGHAM, WASHINGTON
PUBLIC WORKS DEPARTMENT
ENGINEERING DIVISION

SCALE
Horiz. AS SHOWN
Vert. AS SHOWN

DATUM
H: NAD 83/98
V: NAVD 88

Job. No. EU194
Date JAN 2026
Field Bk.

POST POINT RESOURCE RECOVERY PLANT
TYPICAL DETAILS
STRUCTURAL TYPICAL DETAILS 3

DRAWING NO. 800TS003
SHEET NO. 195 OF 198

CONTACT PERSON: STEPHEN DAY, PE SE , PROJECT ENGINEER AT 360-778-7944

PROJECT NO. 202021-100000 FILE NAME: 202021800TS003.dwg

10/9/2024 2:23:54 PM

NOTES:

1. "S" EQUALS TYPICAL BAR SPACING INDICATED ON THE DRAWINGS.
2. AT INTERSECTION, MAKE BAR SIZE THE LARGER OF BAR SIZES IN ADJACENT SLAB OR WALL. PLACE BARS AT SAME LAYERS AS IN ADJACENT SLAB OR WALL.
3. WATER-BLAST JOINT FACE AND PROJECTING REINFORCEMENT BEFORE PLACING CONCRETE.
4. PLACE CEMENT GROUT OVER JOINT FACE IMMEDIATELY BEFORE PLACING CONCRETE. (SEE SPECIFICATIONS)
5. CONSTRUCTION JOINT WHERE INDICATED ON THE DRAWINGS. WHERE WALL SURFACE IS EXPOSED TO VIEW IN THE FINISHED WORK, PROVIDE V-GROOVE PER DETAIL SD050/TYP.
6. STANDARD 90° HOOK UNLESS OTHERWISE INDICATED ON THE DRAWINGS.
7. STANDARD 180° HOOK (ALTERNATE: 90° HOOK ROTATED OUT OF VERTICAL PLANE IF APPROVED BY ENGINEER.)
8. 6" PVC WATERSTOP CENTERED VERTICALLY ON JOINT. PROVIDE WIRE TIES MAX 2'-0" OC. HOG RINGS MAY BE USED IN LIEU OF WIRE LOOPS. THOROUGHLY CLEAN WATERSTOP BEFORE PLACING CONCRETE.
9. 1 BAR DIAMETER CLEAR.
10. WHERE DRAWINGS INDICATE "W/ STRIP WSTP" PROVIDE LOW EXPANSION HYDROPHILIC WATERSTOP AT TOP SURFACE OF JOINT AND CENTERED BETWEEN VERTICAL BARS.
11. STANDARD 180° HOOK WHERE INDICATED ON THE DRAWINGS.

SD150 TYP — CONCRETE JOINTS - CONSTRUCTION JOINT - WALLS AT ELEVATED SLABS

S, N — SHEET 3 OF 3 — 12/18/2023

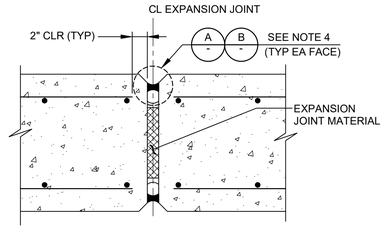

NON-WATER BEARING SLAB OR WALL

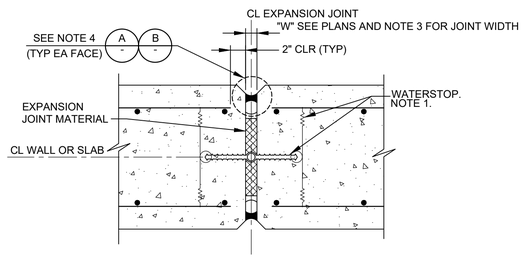

WATER BEARING SLAB OR WALL

SD382 TYP — CONCRETE JOINTS - ISOLATION JOINT - WALL OR SLAB

S — SHEET 1 OF 2 — 12/18/2023

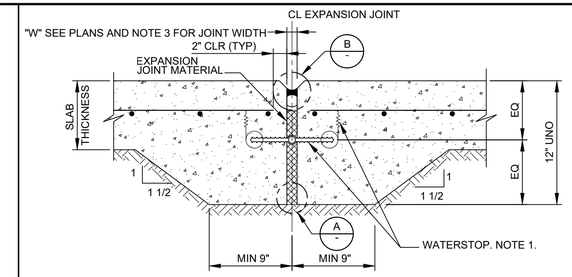

WATER BEARING SLAB LESS THAN 12" THICK

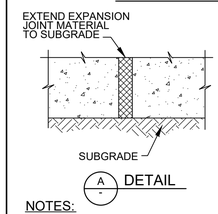

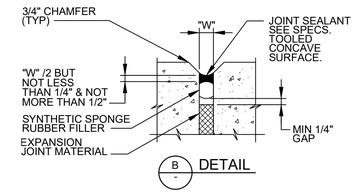

NOTES:

1. 9" WATERSTOP WITH CENTER BULB CENTERED ON JOINT - SEE DETAIL SD004/TYP. PROVIDE WIRE TIES MAX 2'-0" OC. HOG RINGS MAY BE USED IN LIEU OF WIRE LOOPS. THOROUGHLY CLEAN WATERSTOP BEFORE PLACING CONCRETE IN SECOND POUR.
2. JOINT EDGES:
   A. FOR WALLS AND BOTTOM OF EXPOSED SLABS: FORM EDGES WITH 3/4" CHAMFER.
   B. FOR SLABS: EDGE TOP AND ENDS WITH 1/4" RADIUS.
3. "W"=1" UNLESS OTHERWISE INDICATED ON PLANS. (MIN JOINT WIDTH = 3/8", MAX JOINT WIDTH = 2")
4. USE DETAIL A ONLY AT SOIL SIDE OF SLABS ON GRADE. USE DETAIL B AT ALL OTHER LOCATIONS.

SD382 TYP — CONCRETE JOINTS - ISOLATION JOINT - WALL OR SLAB

S — SHEET 2 OF 2 — 12/18/2023

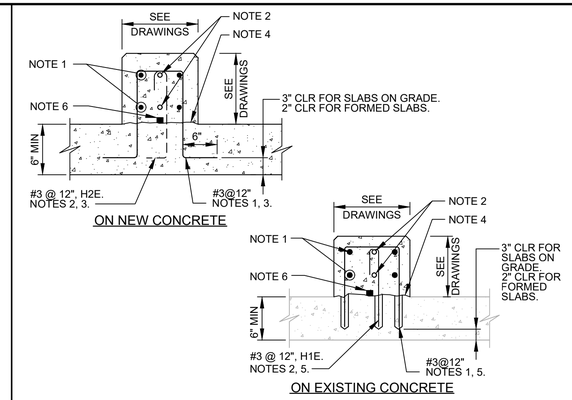

NOTES:

1. FOR CURB WIDTH > 10": HORIZ REINF: 1 - #4 EACH FACE FOR EACH 12" HEIGHT.
2. FOR CURB WIDTH ≤ 10". HORIZ REINF: 1 - #4 INSIDE 180° HOOK.
   ADD 1 - #4 HORIZ FOR EACH 12" HEIGHT.
3. HOOK PARALLEL TO CURB WHERE REQD.
4. REMOVE EXISTING COATINGS. ROUGHEN CONCRETE TO 1/4" AMPLITUDE. CLEAN AND APPLY EPOXY RESIN/PORTLAND CEMENT BONDING AGENT BEFORE PLACING CURB.
5. SET NEW REINF IN EXISTING CONCRETE USING DETAIL SC040/TYP.
6. FOR CURB 10" & WIDER: WHERE DRAWINGS INDICATE "W/STRIP WSTP," PROVIDE LOW EXPANSION HYDROPHILIC WATERSTOP AT TOP SURFACE OF JOINT AND CENTERED BETWEEN VERTICAL #3'S. WRAP STRIP WATERSTOP UP VERTICAL END WHERE CURB ABUTS WALL OR COLUMN. STOP STRIP MIN 4" BELOW TOP OF CURB.

SD470 TYP — CONCRETE - CURB

S — 12/18/2023

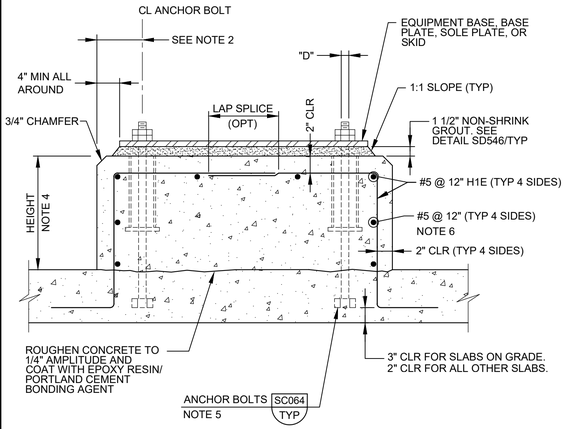

NOTES:

1. "D" = DIAMETER OF ANCHOR BOLT.
2. THE EDGE DISTANCE ON THE ANCHOR BOLTS SHALL NOT BE LESS THAN 6" OR 8 x "D".
3. PAD DIMENSIONS AND ANCHOR BOLT SIZE SHALL CONFORM TO EQUIPMENT MANUFACTURER'S REQUIREMENTS.
4. HEIGHT TO SUIT EQUIPMENT FURNISHED OR AS INDICATED ON THE DRAWINGS.
5. WHERE CONCRETE SLAB OR BEAM THICKNESS WILL NOT ACCOMMODATE THE ANCHOR BOLT, PROVIDE EXTRA THICKNESS FOR SLAB OR BEAM.
6. PROVIDE HOOPS OR CORNERS PER DETAIL SC310/TYP.

SD512 TYP — CONCRETE - EQUIPMENT BASE - DEEP ANCHORS

N — 12/18/2023

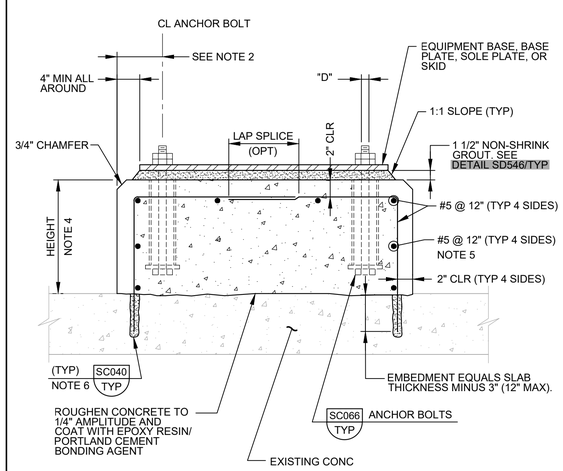

NOTES:

1. "D" = DIAMETER OF ANCHOR BOLT.
2. THE EDGE DISTANCE ON THE ANCHOR BOLTS SHALL NOT BE LESS THAN 6" OR 8 x "D".
3. PAD DIMENSIONS AND ANCHOR BOLT SIZE SHALL CONFORM TO EQUIPMENT MANUFACTURER'S REQUIREMENTS.
4. HEIGHT TO SUIT EQUIPMENT FURNISHED OR AS INDICATED ON THE DRAWINGS.
5. PROVIDE HOOPS OR CORNERS PER DETAIL SC310/TYP.
6. FIELD LOCATE EXISTING REINFORCEMENT IN SLAB BEFORE DRILLING. ADJUST DOWEL LOCATIONS TO AVOID REINFORCEMENT.

SD530 TYP — CONCRETE - EQUIPMENT BASE ON EXISTING CONCRETE

N — 12/18/2023

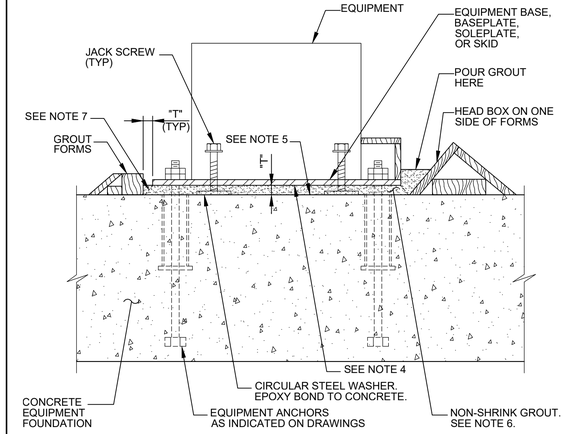

NOTES:

1. "T" = EQUALS GROUT THICKNESS INDICATED ON THE DRAWING. 1" MINIMUM GROUT THICKNESS.
2. FILL ANCHOR SLEEVES WITH GROUT.
3. DO NOT USE LEVELING NUTS ON EQUIPMENT ANCHORS.
4. PREPARE SURFACE OF EQUIPMENT BASES, BASE PLATES, SOLE PLATES, AND SKIDS IN CONTACT WITH GROUT AS SPECIFIED IN SECTION 46_05_10.
5. PREPARE SURFACES OF CONCRETE FOUNDATION IN CONTACT WITH GROUT AS SPECIFIED IN SECTION 46_05_10.
6. PLACE NON-SHRINK GROUT AS SPECIFIED IN SECTION 46_05_10.
7. AFTER GROUT SETS, TRIM GROUT TO 45 DEGREE CHAMFER.

SD546 TYP — CONCRETE - EQUIPMENT GROUTING

N — 12/18/2023

carollo®

LAST SAVED BY: dlee

Date	No	Revision	By
	4		
	3		
	2		
	1		

PROJECT ENGINEER HCC
DESIGNED/DRAWN DE
INSPECTOR JAD / KA

DIRECTOR PUBLIC WORKS
CITY ENGINEER
ASSISTANT DIRECTOR

CITY OF BELLINGHAM, WASHINGTON
PUBLIC WORKS DEPARTMENT
ENGINEERING DIVISION

SCALE: Horiz. AS SHOWN; Vert. AS SHOWN
DATUM: H: NAD 83/98; V: NAVD 88
Job. No. EU194
Date JAN 2026
Field Bk.

POST POINT RESOURCE RECOVERY PLANT
TYPICAL DETAILS
STRUCTURAL TYPICAL DETAILS 4

DRAWING NO. 800TS004
SHEET NO. 196 OF 198

CONTACT PERSON: STEPHEN DAY, PE SE , PROJECT ENGINEER AT 360-778-7944

PROJECT NO. 202021-100000 FILE NAME: 202021800TS004.dwg

10/9/2024 2:25:05 PM

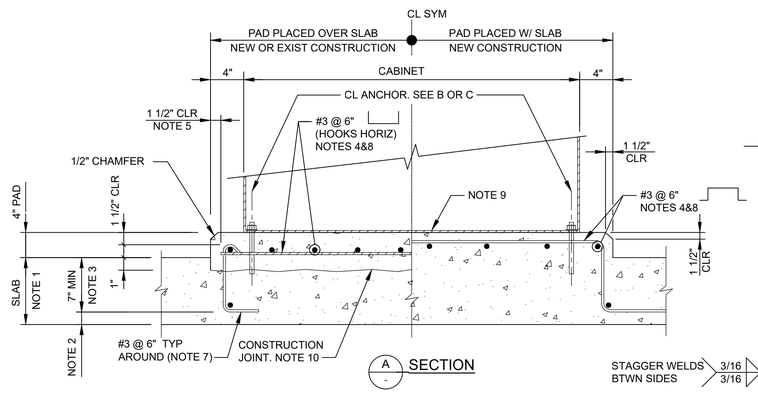

A - SECTION

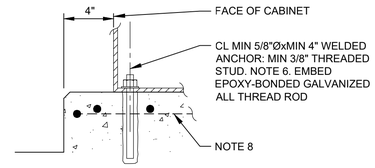

B - POST-INSTALLED ANCHOR

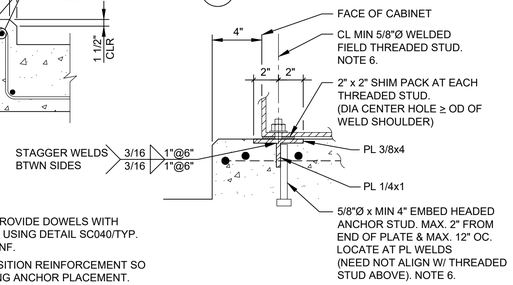

C - CAST-IN-ANCHOR

NOTES:

1. SEE STRUCTURAL DRAWINGS FOR THICKNESS OF SLAB BELOW PAD. SLAB REINFORCEMENT NOT SHOWN.
2. SEE SC001/ TYP FOR MIN CONCRETE COVER REQUIREMENTS.
3. CONTACT ENGINEER FOR INSTRUCTIONS WHERE EMBEDMENT IS LESS THAN DIMENSION SHOWN.
4. FOR EQUIPMENT WITH CONDUIT WINDOWS BELOW, ADJUST BAR LOCATIONS TO FIT BETWEEN WINDOWS.
5. LOCATE VERTICAL EDGE OF PAD AND VERTICAL FACE OF PERIMETER HOOK BARS USING VERTICAL 2x FORM DURING SLAB PLACEMENT.
6. HOT DIP GALVANIZE PLATE AND HEADED ANCHOR STUD ASSEMBLY. TOUCH UP GALVANIZING AFTER FIELD WELDING THREADED STUDS.
7. FOR NEW PAD ON EXIST SLAB, PROVIDE DOWELS WITH VERTICAL LEG SET IN ADHESIVE USING DETAIL SC040/TYP. DO NOT CUT EXISTING SLAB REINF.
8. POST-INSTALLED ANCHORS: POSITION REINFORCEMENT SO THAT IT WILL NOT BE CUT DURING ANCHOR PLACEMENT.
9. SEE DRAWINGS FOR REQUIRED PENETRATION DETAILS.
10. ROUGHEN CONCRETE TO ICRI CSP-7. SATURATE BONDING SURFACES AND CONCRETE 12" BEYOND FOR MINIMUM 24 HOURS. REMOVE WATER AND PREPARE CONCRETE TO "SATURATED SURFACE DRY" (SSD) CONDITION. PLACE PAD AND WATER CURE MINIMUM 7 DAYS.

SD702 TYP — CONCRETE - EQUIPMENT - ELECTRICAL - HOUSEKEEPING PAD AT ELECTRICAL CABINETS

12/18/2023

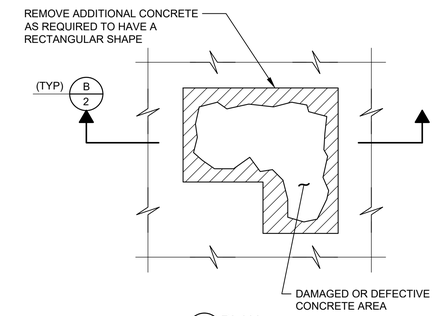

A - PLAN

NOTES:

1. SAW CUT EDGES OF AREA WHERE CONCRETE WILL BE REMOVED A MINIMUM OF 1/2" DEEP. DO NOT CUT REINFORCING BARS. DO NOT SAW CUT PAST OUTSIDE CORNERS.
2. CHIP OUT DAMAGED OR DEFECTIVE CONCRETE WITH HAND HELD PNEUMATIC CHIPPING GUN. DO NOT CUT OR DAMAGE REINFORCING BARS.
3. IF MORE THAN 1/3 OF BAR DIAMETER IS EXPOSED DURING REMOVAL OF DAMAGED OR DEFECTIVE CONCRETE, REMOVE ADDITIONAL CONCRETE TO A MINIMUM 1" BEHIND/AROUND THE EXPOSED BARS.
4. CONCRETE SURFACES TO BE REPAIRED SHALL BE CLEANED AND ROUGHENED TO ICRI SURFACE PROFILE CSP 7 (±1/8") UNLESS OTHERWISE RECOMMENDED BY REPAIR CONCRETE MANUFACTURER.
5. SOAK CONCRETE IN REPAIR AREA AND MIN 2" BEYOND WITH WATER FOR MIN 24 HOURS JUST BEFORE PLACING REPAIR CONCRETE. CONCRETE IN REPAIR AREA TO BE REPAIRED SHALL BE "SATURATED SURFACE DRY" (SSD) WHEN REPAIR CONCRETE IS PLACED.
6. WATER CURE REPAIR FOR MINIMUM OF 7 DAYS AFTER PLACEMENT. KEEP REPAIRED AREA CONTINUOUSLY MOIST.
7. SEE DRAWINGS FOR ESTIMATED REPAIR DEPTH. REQUIRED REPAIR DEPTH MAY BE ADJUSTED FOR FIELD CONDITIONS. PROVIDE REPAIR DEPTH WITHIN REPAIR CONCRETE MANUFACTURER'S RECOMMENDED LIMITS FOR MAX/MIN THICKNESS.

SD810 TYP — CONCRETE REPAIR - SURFACE

N — SHEET 1 OF 2 — 12/18/2023

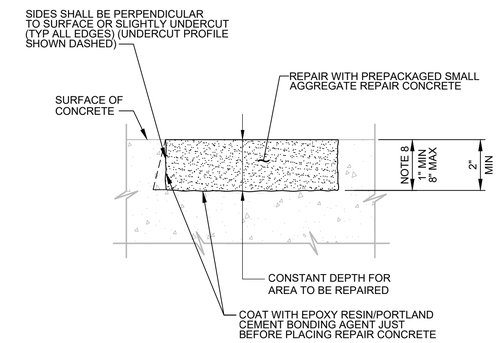

B 1 - SECTION

SD810 TYP — CONCRETE REPAIR - SURFACE

N — SHEET 2 OF 2 — 12/18/2023

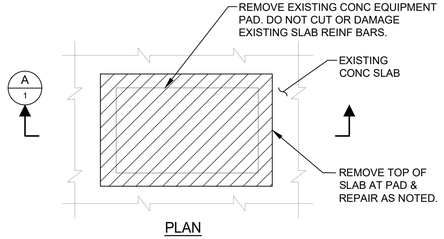

PLAN

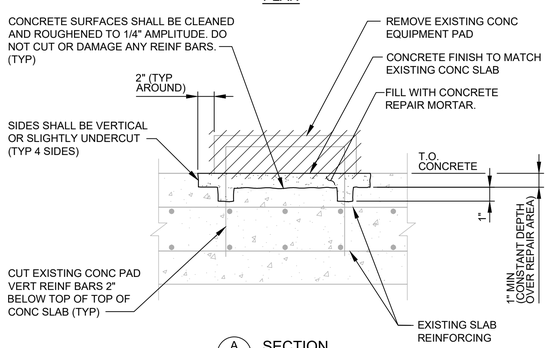

A 1 - SECTION

SD820 TYP — CONCRETE REPAIR - SLAB AT REMOVED EQUIPMENT PAD

N — SHEET 1 OF 2 — 12/18/2023

NOTES:

1. SAW CUT EDGES OF AREA WHERE CONCRETE WILL BE REMOVED A MINIMUM OF 1/2" DEEP. DO NOT CUT REINFORCING BARS. DO NOT CUT PAST OUTSIDE CORNERS.
2. CHIP OUT CONCRETE WITH A HAND HELD PNEUMATIC CHIPPING DEVICE. DO NOT CUT OR DAMAGE REINFORCING BARS.
3. ROUGHEN BONDING SURFACES TO 1/4" AMPLITUDE. CLEAN PREPARED SURFACES.
4. SOAK CONCRETE SURFACES IN AND 12" BEYOND REPAIR AREA WITH WATER FOR MINIMUM 24 HOURS JUST BEFORE PLACING CONCRETE REPAIR MORTAR. AREA TO BE REPAIRED SHALL BE SATURATED AND SURFACE DRY WHEN BONDING AGENT AND REPAIR MORTAR IS PLACED.
5. COAT CONCRETE SURFACES RECEIVING REPAIR WITH EPOXY RESIN/PORTLAND CEMENT BONDING AGENT JUST BEFORE PLACING REPAIR MORTAR.
6. WATER CURE REPAIR FOR MINIMUM OF 7 DAYS. KEEP REPAIR AREA AND SURFACES 12" BEYOND PERIMETER CONTINUOUSLY WET.

SD820 TYP — CONCRETE REPAIR - SLAB AT REMOVED EQUIPMENT PAD

N — SHEET 2 OF 2 — 12/18/2023

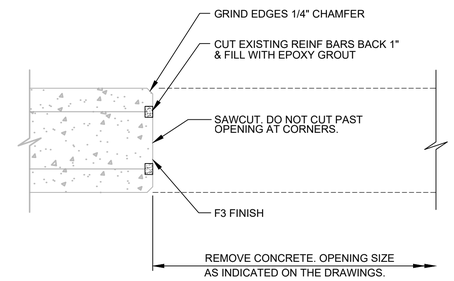

A - HEAD OR JAMB DETAIL

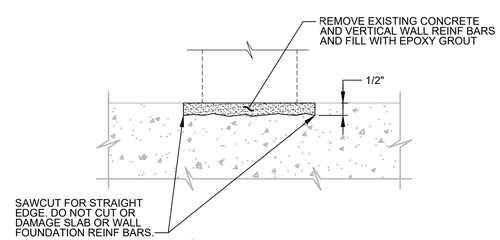

B - SILL DETAIL

SD850 TYP — CONCRETE REPAIR - WALL - NEW OPENING IN EXISTING CONCRETE WALL

N — 04/23/2024

carollo®

LAST SAVED BY: dlee

Date	No	Revision	By
	4		
	3		
	2		
	1		

PROJECT ENGINEER HCC
DESIGNED/DRAWN DE
INSPECTOR JAD / KA

DIRECTOR PUBLIC WORKS
CITY ENGINEER
ASSISTANT DIRECTOR

CITY OF BELLINGHAM, WASHINGTON
PUBLIC WORKS DEPARTMENT
ENGINEERING DIVISION

SCALE — Horiz. AS SHOWN — Vert. AS SHOWN
DATUM — H: NAD 83/98 — V: NAVD 88
Job. No. EU194
Date JAN 2026
Field Bk.

POST POINT RESOURCE RECOVERY PLANT
TYPICAL DETAILS
STRUCTURAL TYPICAL DETAILS 5

DRAWING NO. 800TS005
SHEET NO. 197 OF 198

CONTACT PERSON: STEPHEN DAY, PE SE , PROJECT ENGINEER AT 360-778-7944

PROJECT NO. 202021-100000 FILE NAME: 202021800TS005.dwg

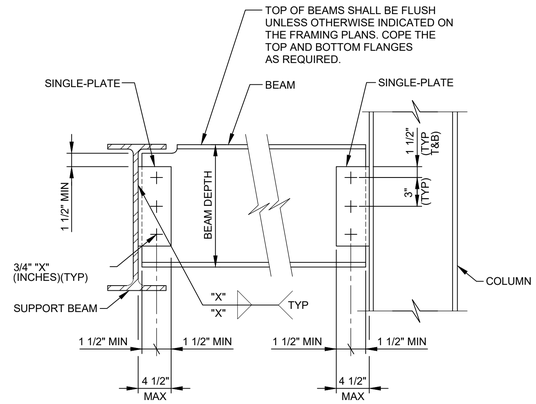

BEAM DEPTH (INCHES)	NUMBER OF BOLTS PER PLATE	PLATE THICKNESS (INCHES)	FILLET WELD SIZE "X" (INCHES)
8-10	2	1/4	3/16
12-16	3	1/4	3/16
18-21	5	3/8	5/16
24-30	7	3/8	5/16

NOTE:

1. SCHEDULE APPLIES TO ALL BEAMS UNLESS NUMBER OF BOLTS PER LEG IS OTHERWISE INDICATED ON THE FRAMING PLAN BY (#) WHERE NUMBER INSIDE SYMBOL = NUMBER OF BOLTS.

SH601 TYP — STEEL – CONNECTION – W BEAM TO W BEAM / COL SHEAR TAB - BEAM BOLTED / SUPPORT WELDED

N 12/18/2023

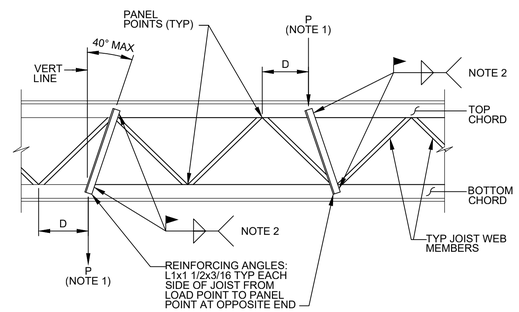

NOTES:

1. "P" REPRESENTS CONCENTRATED LOAD FROM EQUIPMENT OR FIXTURES. WHERE P IS 50 POUNDS OR MORE AND WHERE THE DISTANCE FROM LOAD POINT TO PANEL POINT (D) EXCEEDS 4". INSTALL REINFORCING ANGLE FROM LOAD POINT TO PANEL POINT ON OPPOSITE CHORD OF JOIST.
2. WELD: EFFECTIVE THROAT: THICKNESS OF THINNER STEEL MEMBER MINUS 1/16". LENGTH: MINIMUM 3/4" EACH SIDE.

SM802 TYP — STEEL JOISTS - REINFORCEMENT - ADDED WEBS AT VERT LOADS TO CHORD

S 12/18/2023

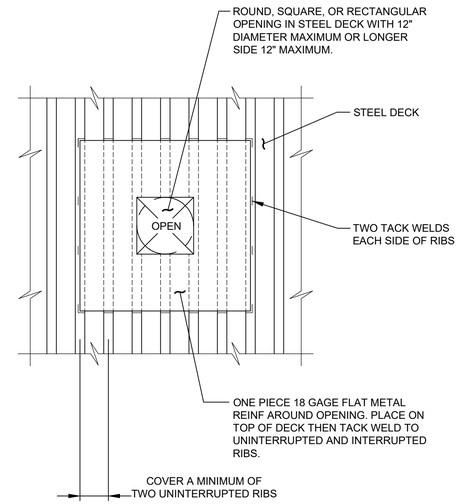

SN638 TYP — STEEL DECK - OPENINGS TO 12" - REINFORCING PLATE AT TOP

12/18/2023

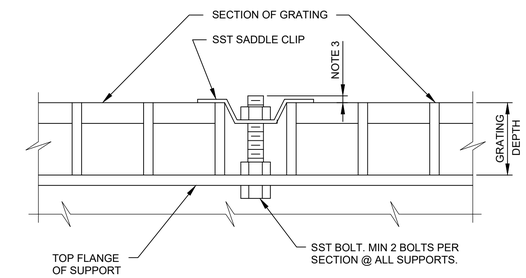

NOTES:

1. GRATING FASTENERS SHALL BE INSTALLED WHERE INDICATED ON THE DRAWINGS.
2. GRATING FASTENERS SHALL BE INSTALLED AT EACH CORNER OF EACH PANEL AND AT SPACING NOT TO EXCEED 8'-0".
3. RECESS THE GRATING CLIP WITHIN THE DEPTH OF THE GRATING TO AVOID A TRIPPING HAZARD.

SR601 TYP — GRATING - FASTENERS

12/18/2023

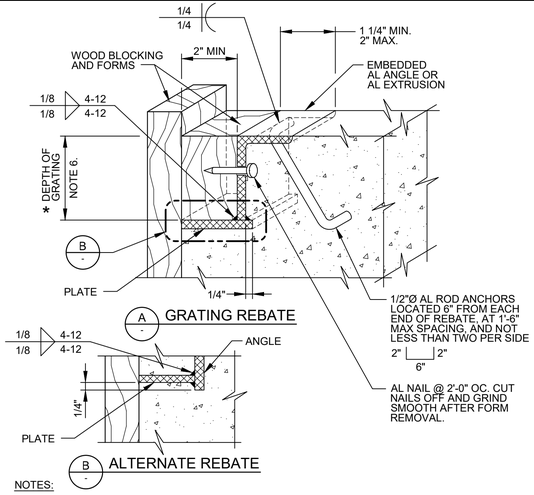

NOTES:

1. SEE SPECIFICATIONS FOR ALUMINUM GRATING.
2. MAKE REBATE AND/OR SEAT CONTINUOUS AROUND OPENING.
3. EMBEDDED REBATE ANGLE AND PLATE SHALL BE 1/4" MINIMUM THICKNESS.
4. REBATE MAY BE EXTRUDED, SUBJECT TO ENGINEER'S ACCEPTANCE.
5. COAT ALUMINUM SURFACES IN CONTACT WITH CONCRETE AS SPECIFIED.
6. * = DIMENSION AS REQUIRED BY GRATING MANUFACTURER. SEE SPECIFICATIONS.

SR605 TYP — GRATING - ALUMINUM - REBATE

NS SHEET 1 OF 2 12/18/2023

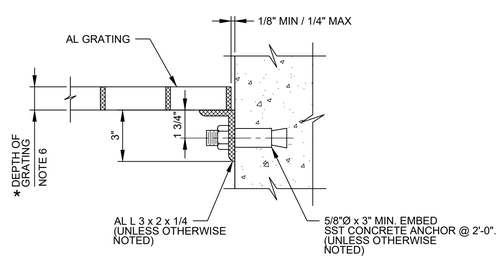

SR605 TYP — GRATING - ALUMINUM - REBATE

NS SHEET 2 OF 2 12/18/2023

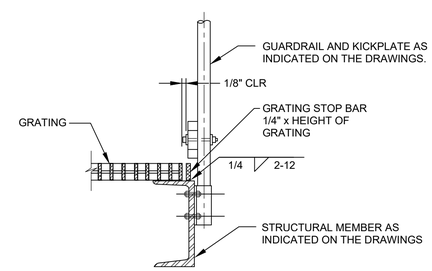

NOTES:

1. GRATING STOP SHALL BE INSTALLED ON ALL GRATING PLATFORMS AND LANDINGS SHALL BE CONTINUOUS ON ALL SIDES OF PLATFORMS NOT OTHERWISE COVERED BY A REBATE, SEAT, OR OTHER SIMILAR DETAIL. GRATING STOPS SHALL BE DISCONTINUOUS AT STAIRS BUT SHALL SERVE TO HOLD LANDING PANEL AT STAIRWAYS IN PLACE.
2. GRATING STOP SHALL BE OF THE SAME MATERIAL AS THE STRUCTURAL MEMBER.

SR615 TYP — GRATING - SUPPORT - CHANNEL AT CONC WALL

12/18/2023

Digitally signed by: CHIPOM CHEN
Contact: chipom@carollo.com
Date: 2024.10.09 14:28:03 -07'00'
STATE OF WASHINGTON 21258 REGISTERED PROFESSIONAL ENGINEER

carollo®

LAST SAVED BY: dlee

Date	No	Revision	By
	4		
	3		
	2		
	1		

PROJECT ENGINEER HCC
DESIGNED/DRAWN DE
INSPECTOR JAD / KA

DIRECTOR PUBLIC WORKS
CITY ENGINEER
ASSISTANT DIRECTOR

CITY OF BELLINGHAM, WASHINGTON
PUBLIC WORKS DEPARTMENT
ENGINEERING DIVISION

SCALE: Horiz. AS SHOWN; Vert. AS SHOWN
DATUM: H: NAD 83/98; V: NAVD 88
Job. No. EU194
Date JAN 2026
Field Bk.

POST POINT RESOURCE RECOVERY PLANT
TYPICAL DETAILS
STRUCTURAL TYPICAL DETAILS 6

DRAWING NO. 800TS006
SHEET NO. 198 OF 198

CONTACT PERSON: STEPHEN DAY, PE SE , PROJECT ENGINEER AT 360-778-7944

PROJECT NO. 202021-100000 FILE NAME: 202021800TS006.dwg