59V-007

INDEX OF SHEETS	
SHEET NO.	DESCRIPTION
A01	Title Sheet
A02	Index Of Sheets Cont.
A03	Std. Dwg. Nos.
AD01, AD02	Survey Control Data

STATE OF OREGON
DEPARTMENT OF TRANSPORTATION
PLANS FOR PROPOSED PROJECT

STRUCTURE & PAVING

OR99: ROGUE RIVER BRIDGE, GOLD HILL SPUR PROJECT

GOLD HILL SPUR HIGHWAY

JACKSON COUNTY
SEPTEMBER 2026

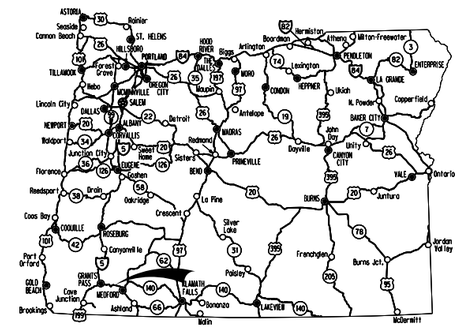

ATTENTION:
Oregon Law Requires You To Follow Rules Adopted By The Oregon Utility Notification Center. Those Rules Are Set Forth In OAR 952-001-0001 Through OAR 952-001-0100. You May Obtain Copies Of The Rules By Calling The Center (Note: The Telephone Number For The Oregon Utility Notification Center Is (503) 232-1987).

SAFETY FIRST
LET'S ALL WORK TOGETHER TO MAKE THIS JOB SAFE

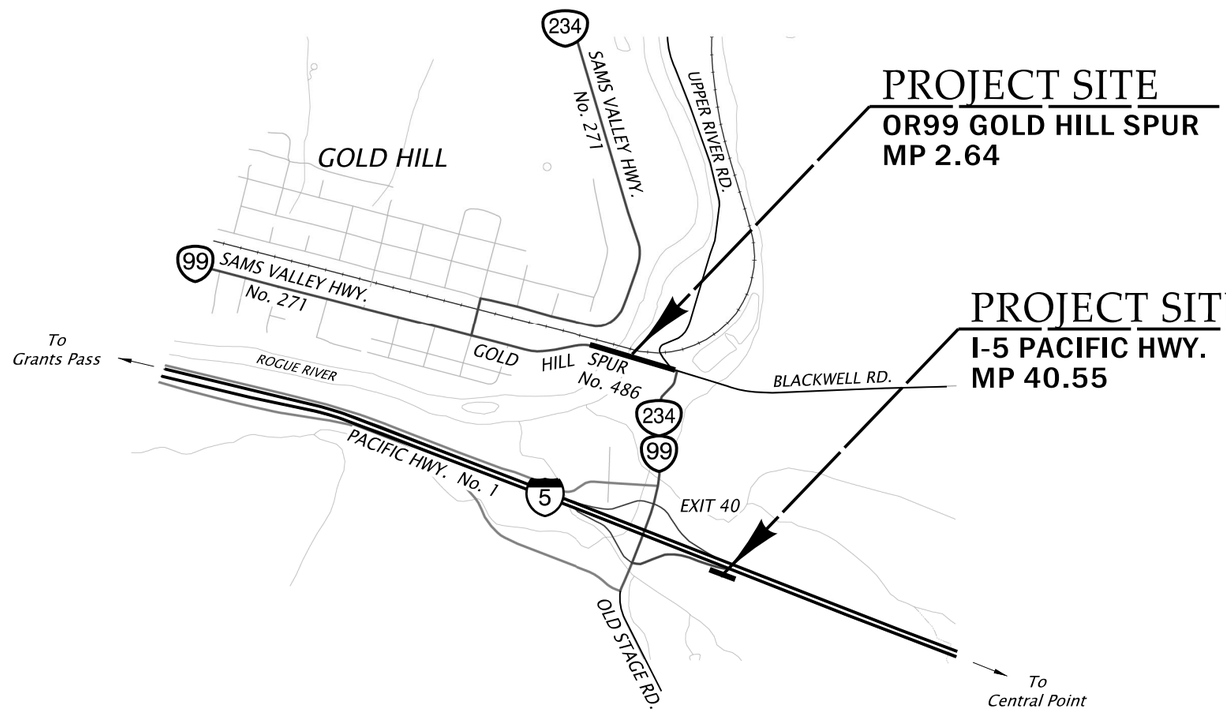

N

T. 36S., R. 3W., W.M.

OREGON TRANSPORTATION COMMISSION

Julie Brown	CHAIR
Lee Beyer	VICE CHAIR
Jeff Baker	COMMISSIONER
Phil Chang	COMMISSIONER
Vacant	COMMISSIONER
Chris Warner	INTERIM DIRECTOR OF TRANSPORTATION

These plans were developed using ODOT design standards. Exceptions to these standards, if any, have been submitted and approved by the ODOT Chief Engineer or their delegated authority.

Approving Authority: THOMPSON Mark — Digitally signed by THOMPSON Mark Date: 2026.07.16 13:08:04 -07'00'
Signature & date

Mark Thompson, Reg. 3 Tech. Ctr. Manager
Print name and title

PELTZ Tova R — Digitally signed by PELTZ Tova R Date: 2026.08.07 09:53:00 -07'00'
Concurrence by ODOT Chief Engineer

OR99: ROGUE RIVER BRIDGE, GOLD HILL SPUR PROJECT
GOLD HILL SPUR HIGHWAY
JACKSON COUNTY

FEDERAL HIGHWAY ADMINISTRATION	PROJECT NUMBER	SHEET NO.
OREGON DIVISION	S486(000)	A01

PE003454 000

FINAL ELECTRONIC DOCUMENT AVAILABLE UPON REQUEST

INDEX OF SHEETS, CONT.

ROADWAY DETAILS

SHEET NO.	DESCRIPTION
BA01 – BA05	Typical Sections
BB01 – BB03	Details

ROADWAY CONSTRUCTION

SHEET NO.	DESCRIPTION
C01	General Construction
C01A	General Construction Notes
C02	General Construction
C02A	General Construction Notes

TRAFFIC CONTROL

SHEET NO.	DESCRIPTION
EA01, EA02	Traffic Control Plan
EB01, EB02	Traffic Control Plan

EROSION CONTROL

SHEET NO.	DESCRIPTION
FB01, FB02	Erosion and Sediment Control Plan

GEOTECHNICAL

SHEET NO.	DESCRIPTION
GA01 – GA04	Geotechnical Data

HYDRAULIC

SHEET NO.	DESCRIPTION
HA01	Stormwater Plan
HA02	Details

BRIDGE

SHEET NO.	BDS DRAWING NO.	DESCRIPTION
STRUCTURE NO. 00576		
J01	114161	Plan and Elevation
J02	114162	General Notes
J03	114163	Structure Staging
J04	114164	Construction Sequence
J05	114165	Deck Plan – Spans 1–3
J06	114166	Deck Plan – Span 4
J07	114167	Deck Plan – Spans 5–7
J08	114168	Deck Elevation Table
J09	114169	Typical Deck Sections
J10	114170	Utility Access Details
J11	114171	Utility Access Details – Bent 1 and Bent 8
J12	114172	Bent 2 Details (Bent 7 Similar)
J13	114173	Bent 4 Removal Limits (Bent 5 Similar)
J14	114174	Bent 4 Details (Bent 5 Similar)
J15	114175	Strengthening – Beam 'A'
J16	114176	Strengthening – Beam 'G'
J17	114177	Strengthening – Beam 'K' and Beam 'L'
J18	114178	Wingwall Plan
J19	114179	Wingwalls A and B
J20	114180	Miscellaneous Wingwall Details
J21	114181	Ground Anchorage
J22	114182	Wingwall C
J23	114183	Wingwall D
J24	114184	Wingwall Excavation and Backfill Limits
J25	114185	Vertical Concrete Parapet, 42-inch with Moment Slab
J26	114186	Rail to Curb Transition

INDEX OF SHEETS, CONT.

BRIDGE

SHEET NO.	BDS DRAWING NO.	DESCRIPTION
STRUCTURE NO. 00576		
J27	114187	Walkway Scupper and Dentil Details
J28	114188	Rail Elevation 1
J29	114189	Rail Elevation 2
J30	114190	Historic Look Bridge Rail End Block and Transition Post
J31	114191	Rail Post Details – Bents 2 and 7
J32	114192	Rail Post Details – Bents 3 and 6
J33	114193	Rail Post Details – Bents 4 and 5
J34	114194	Intermediate Rail Post
J35	114195	Intermediate Rail Post with Joint
J36	114196	Typical Rail Sections and Baluster Reinforcement
J37	114197	Pedestrian Rail 1
J38	114198	Pedestrian Rail 2
J39	114199	Concrete Surface Finishes
JA01	114200	Materials and Notes (Avista)
JA02	114201	Bridge Plan and Elevation
JA03	114202	Abutments and Elevation Spans 1 and 7
JA04	114203	Elevation – Spans 2, 3, 5, and 6
JA05	114204	Elevation – Span 4 and Deck Sections
JA06	114205	Deck Sections and Pipe Hangers
JA07	114206	Miscellaneous Pipe Hanger Details
JA08	114207	Horizontal Support and Vent Details
JB01	114208	Plan and Elevation – Sewer
JB02	114209	General Notes – Sewer
JB03	114210	Details – 1
JB04	114211	Details – 2
JB05	114212	Details – 3
JC01	114213	Legend and Notes
JC02	114214	Plan and Elevation – Water
JC03	114215	Civil Details 1
JC04	114216	Civil Details 2
JC05	114217	Civil Details 3
JC06	114218	Structural Details

SIGNS

SHEET NO.	DESCRIPTION
LA01	Signing Plan
LB01	Signing Details
LC01	Sign & Post Data Table

PERMENANT PAVEMENT MARKINGS

SHEET NO.	DESCRIPTION
QA01	Pavement Markings Details
QB01	Pavement Markings Plan

RVSS

SHEET NO.	DESCRIPTION
R01, R02	RVSS Facilities (Sewer)

CITY OF GOLD HILL

SHEET NO.	DESCRIPTION
S01, S02	City of Gold Hill Facilities (Water line)

OREGON DEPARTMENT OF TRANSPORTATION

OR99: ROGUE RIVER BRIDGE, GOLD HILL SPUR PROJECT
GOLD HILL SPUR HIGHWAY
JACKSON COUNTY

FEDERAL HIGHWAY ADMINISTRATION	PROJECT NUMBER	SHEET NO.
OREGON DIVISION	SEE SHEET A01	A02

Standard Drawings located on the web at:
http://www.oregon.gov/ODOT/Engineering/Pages/Standards.aspx

FINAL ELECTRONIC DOCUMENT AVAILABLE UPON REQUEST

Standard Dwgs.

RD140 - Roadway Cross Slopes Superelevated Sections

RD300 - Trench Backfill, Bedding, Pipe Zone And Multiple Installations
RD302 - Street Cut
RD317 - Culvert Embankment Protection and Riprap Pads
RD339 - Pipe To Structure Connections
RD365 - Frames & Grates For Concrete Inlets
RD370 - Ditch Inlet Type D
RD376 - Miscellaneous Drainage Structures Siphon Box, Inlet Cap & Inlet Adjustment
RD386 - Fill Height Tables For Circular Concrete Pipe
RD399 - Stormwater Treatment And Storage Facility Field Markers

RD402 - Midwest Guardrail System Types
RD403 - Midwest Guardrail System Wood Post And Block
RD404 - Midwest Guardrail System Steel Post And Block
RD407 - Midwest Guardrail System (W-Beam)
RD409 - Thrie Beam Guardrail
RD410 - Thrie Beam Guardrail Transition
RD416 - Midwest Guardrail System Standard Hardware (Nuts, Bolts, Washers And Misc.)
RD417 - Midwest Guardrail System End Sections
RD419 - Midwest Guardrail System Grading For Terminals
RD442A - Midwest Guardrail System Placement At Bridge Ends (Sheet 1 of 2)
RD442B - Midwest Guardrail System Placement At Bridge Ends (Sheet 2 of 2)
RD451 - Wood Breakaway Posts
RD482 - Midwest Guardrail System Type 3 (Nested W-Beam)

RD610 - Asphalt Concrete Pavement (ACP) Details
RD615 - Surface Edge Details

RD701 - Drainage Curbs
RD720 - Curb Line Sidewalks
RD722 - Sidewalk Joints And Transition Panels

RD1000 - Construction Entrances
RD1006 - Check Dams Type 2 and 6
RD1010 - Inlet Protection Type 2, 3, 6, 7, 10 and 11
RD1032 - Sediment Barrier Type 8
RD1040 - Sediment Fence
RD1050 - Temporary Scour Basin/Energy Dissipator
RD1055 - Slope and Channel Matting

BR140 - Poured Joint Seal
BR195 - Bridge ID Marker

BR200 - Type "F" Concrete Rail
BR203 - Transition Type "F" Concrete Rail to Guardrail
BR206 - 2-Tube Curb Mount Rail
BR207 - 2-Tube Curb Mount Rail Transition
BR222 - Vertical Concrete Parapet, 42 Inch
BR226 - 2-Tube Side Mount Rail

BR500 - Concrete Repair
BR505 - Reinforcing Bar Repair
BR520 - General Cathodic Protection Details
BR525 - Reinforcement Continuity Detail

TM200 - Sign Installation Details
TM201 - Miscellaneous Sign Placement Details
TM223 - Conventional Roads Directional Sign Layout Street Name Signs
TM230 - Mounting Details For Removable Legend 4" Through 8" Letters & Numbers

TM500 - Pavement Marking Standard Detail Blocks
TM515 - Pavement Markers
TM521 - Durable & High Performance Pavement Markings Surface & Groove Installed Non-Profiled
TM560 - Alignment Layout: General
TM561 - Alignment Layout: Left Turn Lane, Centerline & Medians
TM570 - Traffic Delineators
TM571 - Traffic Delineators Steel Post Details
TM576 - Traffic Delineator Installation for Non-Freeways

TM635 - Breakaway Sign & Luminaire Supports - Support Location Guidelines
TM670 - Wood Post Sign Supports
TM671 - 3 Second Gust Wind Speed Map
TM676 - Sign Attachments
TM681 - Perforated Steel Square Tube (PSST) Sign Support Installation
TM687 - Perforated Steel Square Tube (PSST) Anchor Foundation

TM700 - General Conduit Trenching
TM701 - General Conduit And Wire/Cable Installation

TM800 - Tables, Abrupt Edge and PCMS Details
TM820 - Temporary Barricades
TM821 - Temporary Sign Supports
TM822 - Temporary Sign Supports
TM840 - Closure Details
TM844 - Temporary Pedestrian Accessible Routes
TM845 - Temporary Sidewalk Ramps

R/W Map: RW9942M

Standard Drawings located on the web at:
http://www.oregon.gov/ODOT/Engineering/Pages/Standards.aspx

OREGON DEPARTMENT OF TRANSPORTATION

OR99: ROGUE RIVER BRIDGE, GOLD HILL SPUR PROJECT
GOLD HILL SPUR HIGHWAY
JACKSON COUNTY

FEDERAL HIGHWAY ADMINISTRATION	PROJECT NUMBER	SHEET NO.
OREGON DIVISION	SEE SHEET A01	A03

FINAL ELECTRONIC DOCUMENT AVAILABLE UPON REQUEST

59V-007

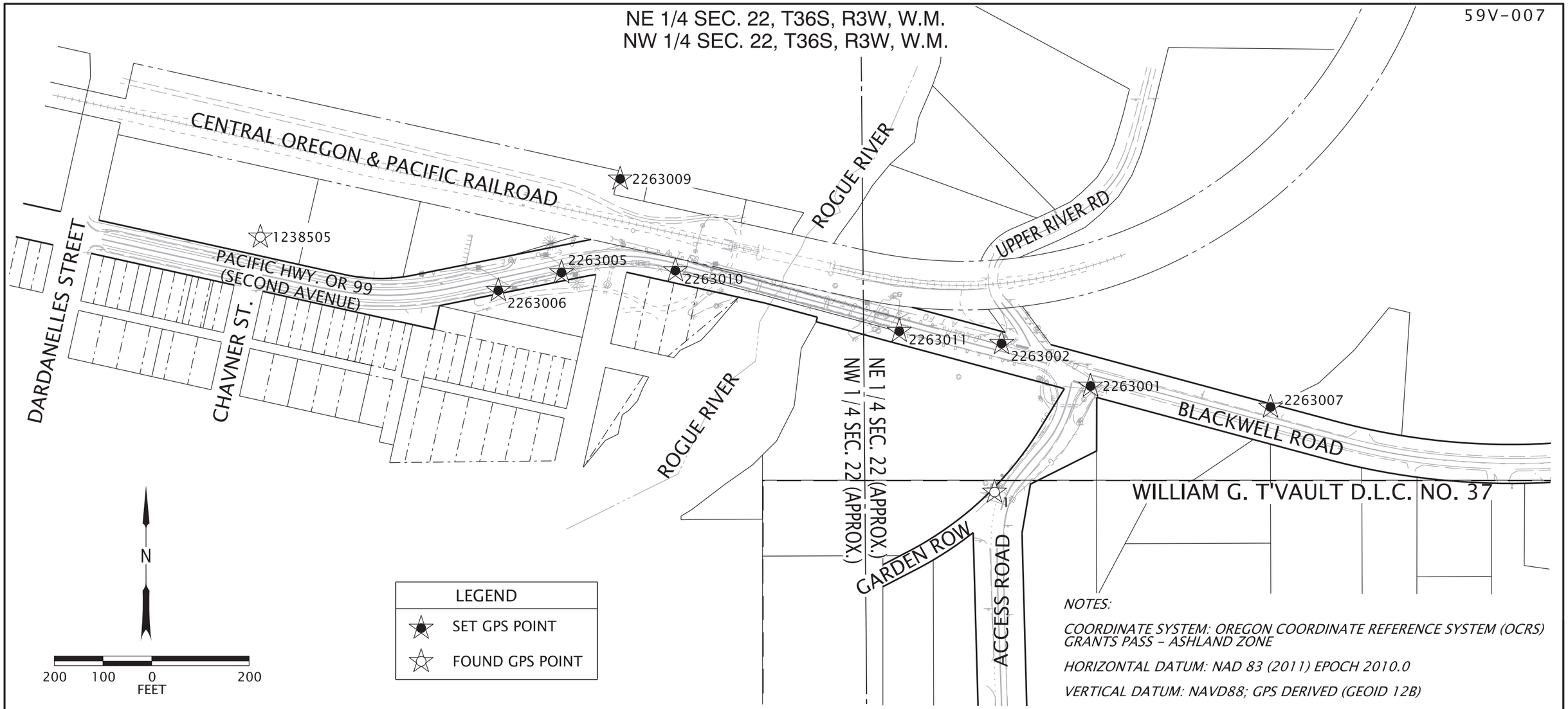

NOTES:

COORDINATE SYSTEM: OREGON COORDINATE REFERENCE SYSTEM (OCRS) GRANTS PASS - ASHLAND ZONE

HORIZONTAL DATUM: NAD 83 (2011) EPOCH 2010.0

VERTICAL DATUM: NAVD88; GPS DERIVED (GEOID 12B)

SURVEY OF RECORD: SN 23977 -JACKSON COUNTY, OR. FILED SEPTEMBER 5, 2023

FIELD VERIFY ALL CONTROL BEFORE USE!

NETWORK CONTROL TABLE

IR = IRON ROD ALUM=ALUMINUM

PT. NO.	OCRS NORTHING	OCRS EASTING	ELEV.	DATE	DESCRIPTION
1	247843.66	242728.83	1073.96	3/16/2023	FOUND 2" ALUM CAP "ODOT CONTROL POINT 1"
1238505	248367.59	241221.62	1089.34	3/16/2023	FOUND 2" ALUM CAP "OREGON STATE HIGHWAY DIV. 1238505"
2263001	248061.32	242925.81	1081.70	3/16/2023	SET 5/8" X 30" REBAR w/ALUMINUM CAP "ODOT CONTROL POINT 2263001"
2263002	248148.72	242743.14	1082.85	3/16/2023	SET 5/8" X 30" REBAR w/ALUMINUM CAP "ODOT CONTROL POINT 2263002"
2263005	248294.47	241839.89	1090.64	3/16/2023	SET 1" COPPER PLUG "ODOT 2263005"
2263006	248257.67	241710.08	1091.54	3/16/2023	SET 1" COPPER PLUG "ODOT 2263006"
2263007	248018.24	243295.20	1091.22	3/16/2023	SET 1" COPPER PLUG "ODOT 2263007"
2263009	248486.66	241960.29	1102.91	3/16/2023	FOUND 5/8" IR
2263010	248298.38	242073.51	1088.10	3/16/2023	SET 1" COPPER PLUG "ODOT 2263010"
2263011	248173.98	242533.17	1086.09	3/16/2023	SET 1" COPPER PLUG "ODOT 2263011"

REGISTERED PROFESSIONAL LAND SURVEYOR

Digitally Signed 2026.06.11 11:14:00 -07'00'

OREGON
MARCH 14, 2017
ZACHARY PATRICK EARLE
91474

RENEWS: 12-31-2027

OREGON DEPARTMENT OF TRANSPORTATION

OR99: ROGUE RIVER BRIDGE, GOLD HILL SPUR PROJECT
GOLD HILL SPUR HIGHWAY
JACKSON COUNTY

Designer: ZACK EARLE Reviewer: LOGAN MILES
Drafter: ZACK EARLE Checker: NA

SURVEY CONTROL DATA

SHEET NO. AD01

59V-007

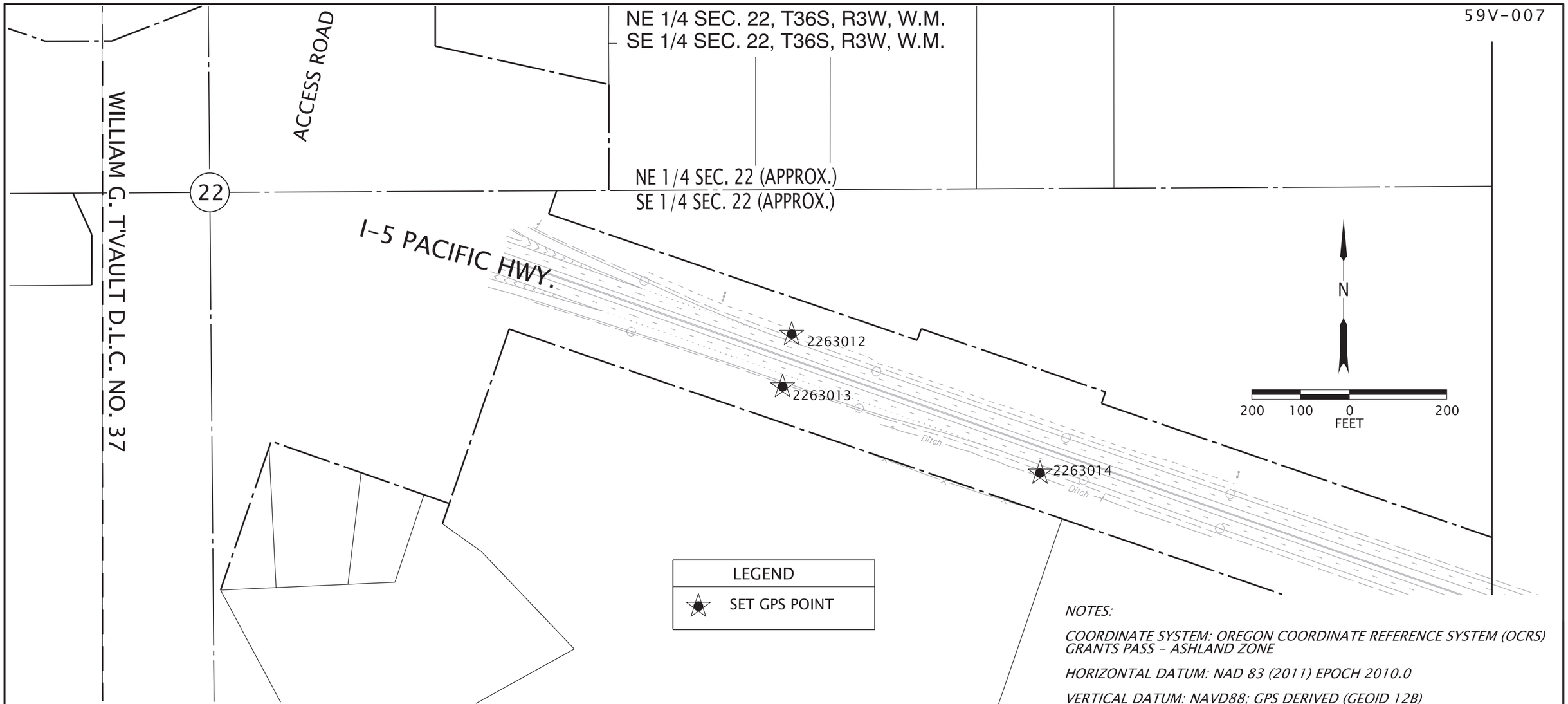

LEGEND
★ SET GPS POINT

NOTES:

COORDINATE SYSTEM: OREGON COORDINATE REFERENCE SYSTEM (OCRS) GRANTS PASS - ASHLAND ZONE

HORIZONTAL DATUM: NAD 83 (2011) EPOCH 2010.0

VERTICAL DATUM: NAVD88; GPS DERIVED (GEOID 12B)

SURVEY OF RECORD: SN 23977 -JACKSON COUNTY, OR. FILED SEPTEMBER 5, 2023

FIELD VERIFY ALL CONTROL BEFORE USE!

NETWORK CONTROL TABLE

IR = IRON ROD ALUM=ALUMINUM

PT. NO.	OCRS NORTHING	OCRS EASTING	ELEV.	DATE	DESCRIPTION
2263012	246170.00	243668.73	1117.81	7/20/2023	SET 5/8" X 30" REBAR w/ALUMINUM CAP "ODOT CONTROL POINT 2263012"
2263013	246062.52	243650.13	1117.79	7/20/2023	SET 5/8" X 30" REBAR w/ALUMINUM CAP "ODOT CONTROL POINT 2263013"
2263014	245885.32	244178.56	1128.47	7/20/2023	SET 5/8" X 30" REBAR w/ALUMINUM CAP "ODOT CONTROL POINT 2263014"

REGISTERED PROFESSIONAL LAND SURVEYOR

Digitally Signed 2026.06.11 11:16:22 -07'00'

OREGON
MARCH 14, 2017
ZACHARY PATRICK EARLE
91474

RENEWS: 12-31-2027

OREGON DEPARTMENT OF TRANSPORTATION

OR99: ROGUE RIVER BRIDGE, GOLD HILL SPUR PROJECT
GOLD HILL SPUR HIGHWAY
JACKSON COUNTY

Designer: ZACK EARLE Reviewer: LOGAN MILES
Drafter: ZACK EARLE Checker: NA

SURVEY CONTROL DATA

SHEET NO. AD02

Notes:
1. Side-slopes are shown as vert. to horiz.
2. For standard superelevation, see dwg. RD140.
3. For embankment and sliver fill construction details see sht. BB01.

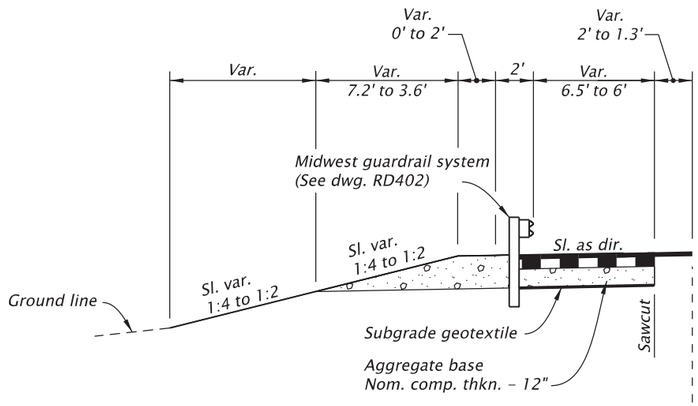

STA. "L" 5+78.5 To STA. "L" 6+15.0

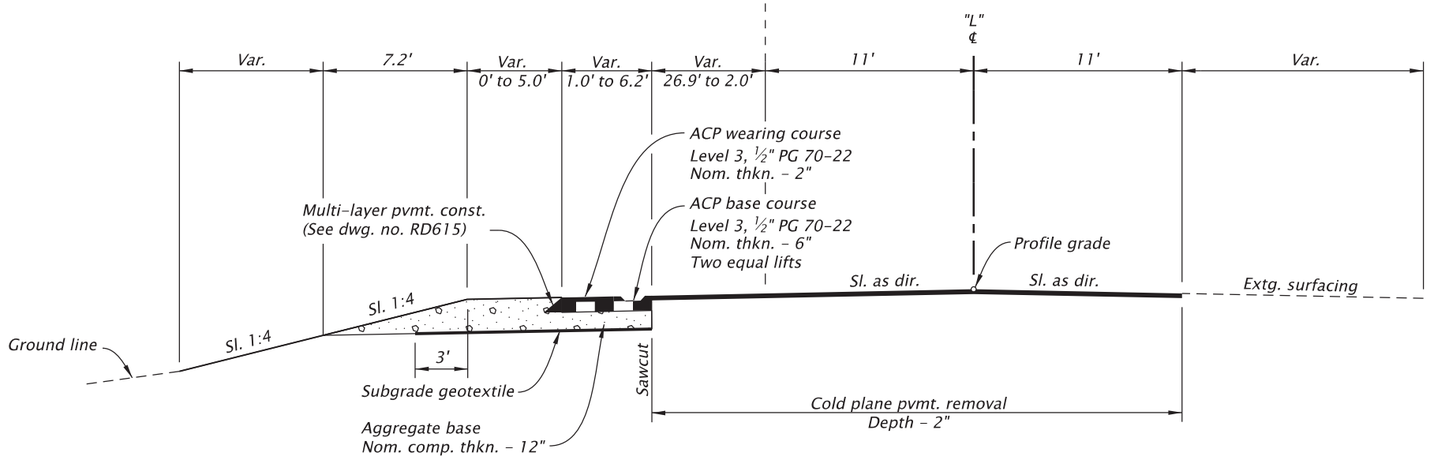

STA. "L" 4+95.0 To STA. "L" 6+15.0

REGISTERED PROFESSIONAL ENGINEER
63243PE
Digitally Signed Date: 2026.06.01 16:24:58 -07'00'
OREGON
JULY 9, 2001
CHRIS ROSS ZELMER
RENEWS: 06-30-2028

OREGON DEPARTMENT OF TRANSPORTATION

OR99: ROGUE RIVER BRIDGE, GOLD HILL SPUR PROJECT
GOLD HILL SPUR HIGHWAY
JACKSON COUNTY

Designer: Brian Sheadel | Reviewer: Chris Zelmer
Drafter: Judy Hardin | Checker: Kyle Parrish

TYPICAL SECTIONS

SHEET NO. BA01

FINAL ELECTRONIC DOCUMENT
AVAILABLE UPON REQUEST

Notes:
1. *Side-slopes are shown as vert. to horiz.*
2. *For standard superelevation, see dwg. RD140.*
3. *For embankment and sliver fill construction details see sht. BB01.*

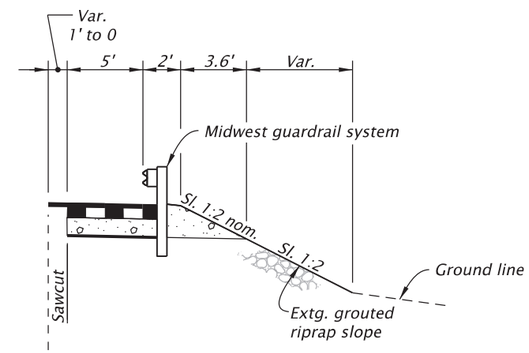

STA. "L" 6+51.5 TO STA. "L" 7+37.5

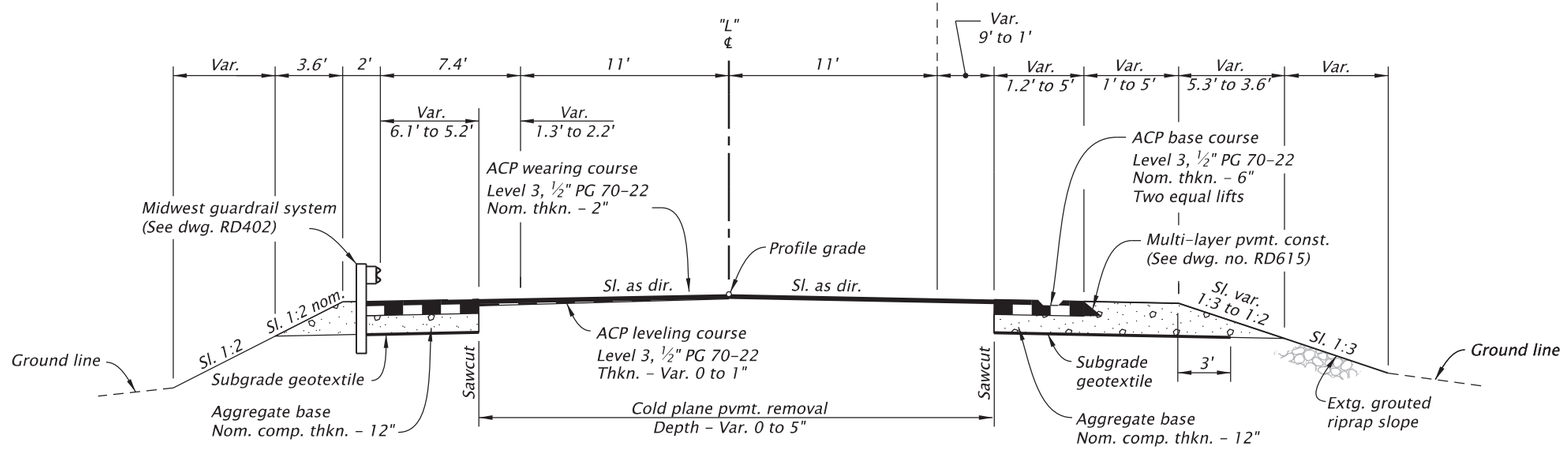

STA. "L" 6+15.0 TO STA. "L" 7+37.5

REGISTERED PROFESSIONAL ENGINEER
63243PE
Digitally Signed Date: 2026.06.01 16:27:25 -07'00'
OREGON
JULY 9, 2001
CHRIS ROSS ZELMER
RENEWS: 06-30-2028

OREGON DEPARTMENT OF TRANSPORTATION

OR99: ROGUE RIVER BRIDGE, GOLD HILL SPUR PROJECT
GOLD HILL SPUR HIGHWAY
JACKSON COUNTY

Designer: Brian Sheadel | Reviewer: Chris Zelmer
Drafter: Judy Hardin | Checker: Kyle Parrish

TYPICAL SECTIONS

SHEET NO. BA02

FINAL ELECTRONIC DOCUMENT
AVAILABLE UPON REQUEST

STRUCTURAL DETAILS CHECKED 2026.08.04 11:47:01-07'00'

Bidding Plans

59V-007

Notes:
1. Side-slopes are shown as vert. to horiz.
2. For standard superelevation, see dwg. RD140.
3. For embankment and sliver fill construction details see sht. BB01.

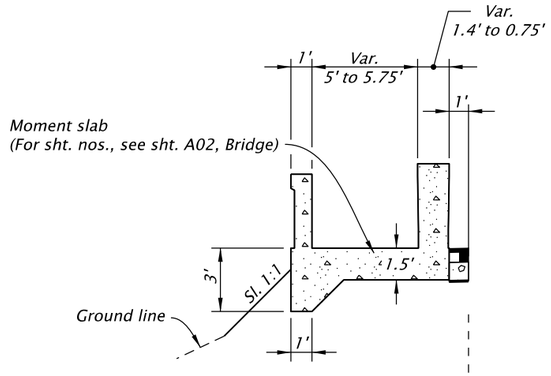

STA. "L" 7+92.5 TO STA. "L" 8+37.5

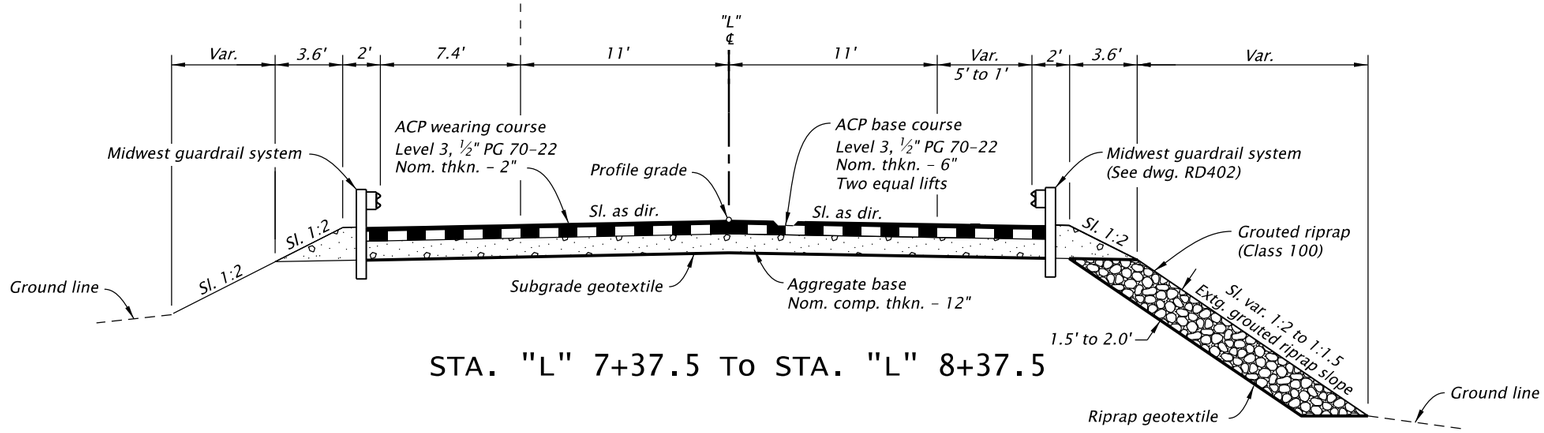

STA. "L" 7+37.5 TO STA. "L" 8+37.5

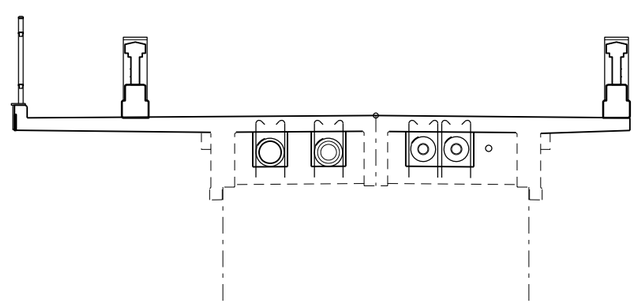

STA. "L" 8+37.5 TO STA. "L" 12+89.8 (Str. No. 00576)

(For sht. nos., see sht. A02, Bridge)

REGISTERED PROFESSIONAL ENGINEER
63243PE
Digitally Signed Date: 2026.06.01 16:28:45 -07'00'
OREGON
JULY 9, 2001
CHRIS ROSS ZELMER
RENEWS: 06-30-2028

OREGON DEPARTMENT OF TRANSPORTATION

OR99: ROGUE RIVER BRIDGE, GOLD HILL SPUR PROJECT
GOLD HILL SPUR HIGHWAY
JACKSON COUNTY

Designer: Brian Sheadel | Reviewer: Chris Zelmer
Drafter: Judy Hardin | Checker: Kyle Parrish

TYPICAL SECTIONS

SHEET NO. BA03

FINAL ELECTRONIC DOCUMENT AVAILABLE UPON REQUEST

STRUCTURAL DETAILS CHECKED 2026.08.04 11:47:55-07'00'

Notes:
1. Side-slopes are shown as vert. to horiz.
2. For standard superelevation, see dwg. RD140.
3. For embankment and sliver fill construction details see sht. BB01.

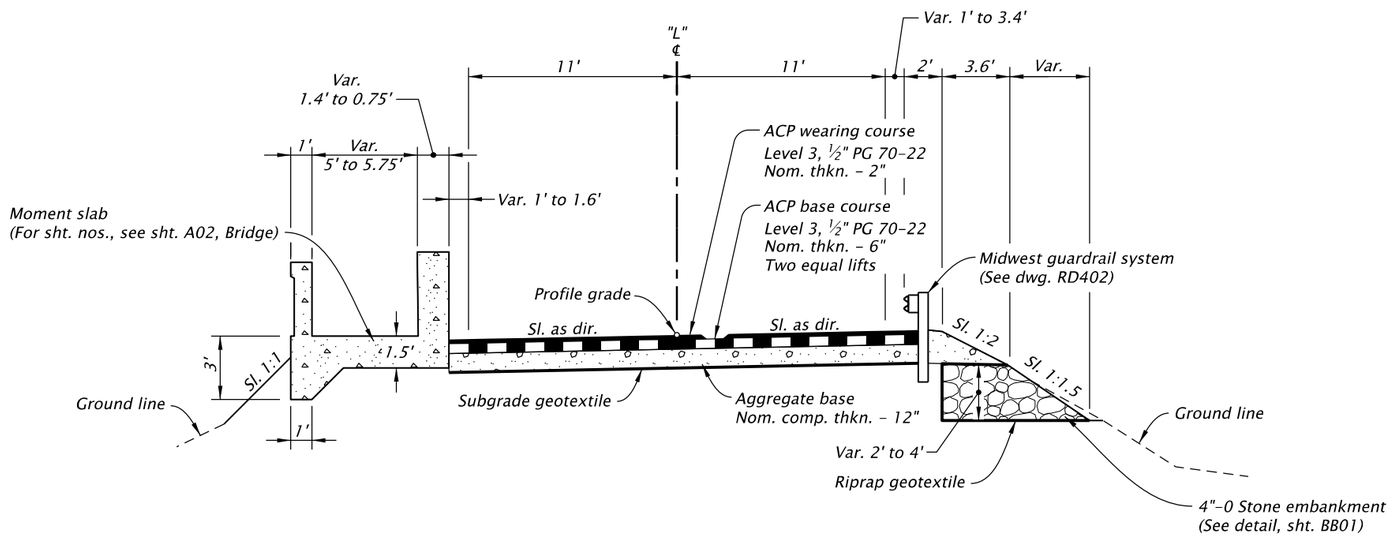

STA. "L" 12+89.8 TO STA. "L" 13+65.0

REGISTERED PROFESSIONAL ENGINEER
63243PE
Digitally Signed Date: 2026.06.08 09:07:36 -07'00'
OREGON
JULY 9, 2001
CHRIS ROSS ZELMER
RENEWS: 06-30-2028

OREGON DEPARTMENT OF TRANSPORTATION

OR99: ROGUE RIVER BRIDGE, GOLD HILL SPUR PROJECT
GOLD HILL SPUR HIGHWAY
JACKSON COUNTY

Designer: Brian Sheadel
Reviewer: Chris Zelmer
Drafter: Judy Hardin
Checker: Kyle Parrish

TYPICAL SECTIONS

SHEET NO.
BA04

FINAL ELECTRONIC DOCUMENT AVAILABLE UPON REQUEST

Notes:
1. Side-slopes are shown as vert. to horiz.
2. For standard superelevation, see dwg. RD140.
3. For embankment and sliver fill construction details see sht. BB01.

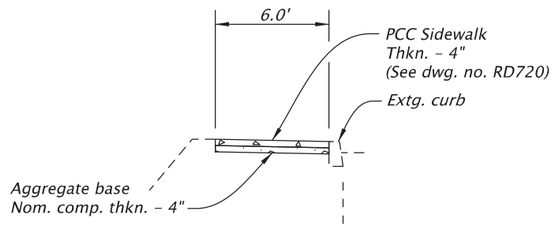

STA. "L" 13+65.0 To STA. "L" 13+75.0

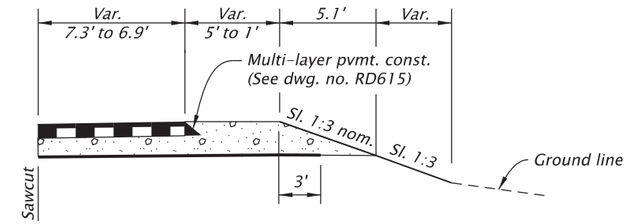

STA. "L" 14+57.6 To STA. "L" 15+15.0

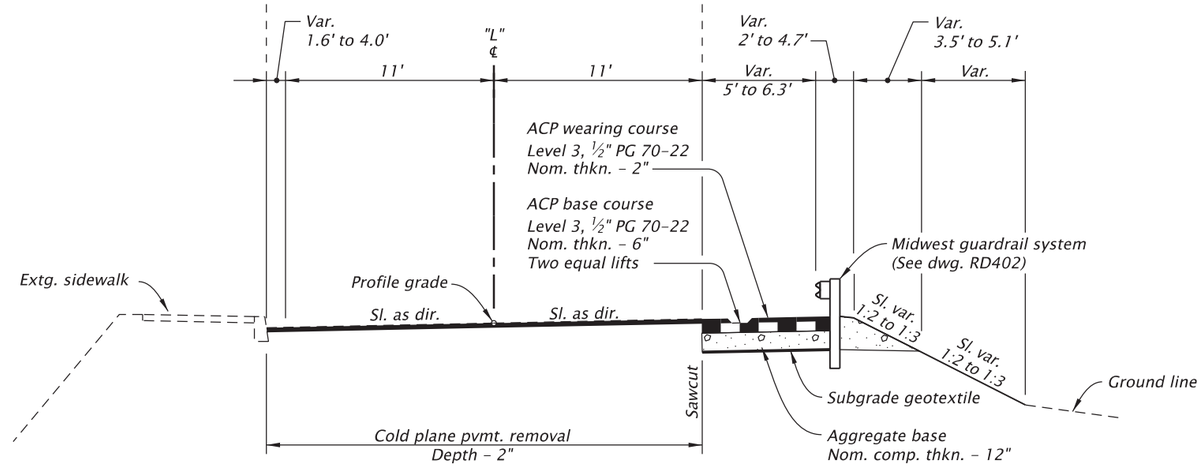

STA. "L" 13+65.0 To STA. "L" 15+15.0

REGISTERED PROFESSIONAL ENGINEER
63243PE
Digitally Signed Date: 2026.06.08 09:08:53 -07'00'
OREGON
JULY 9, 2001
CHRIS ROSS ZELMER
RENEWS: 06-30-2028

FINAL ELECTRONIC DOCUMENT
AVAILABLE UPON REQUEST

OREGON DEPARTMENT OF TRANSPORTATION

OR99: ROGUE RIVER BRIDGE, GOLD HILL SPUR PROJECT
GOLD HILL SPUR HIGHWAY
JACKSON COUNTY

Designer: Brian Sheadel
Reviewer: Chris Zelmer
Drafter: Judy Hardin
Checker: Kyle Parrish

TYPICAL SECTIONS

SHEET NO.
BA05

59V-007

STANDARD EMBANKMENT CONSTRUCTION

(Not to scale: Diagrammatic only)

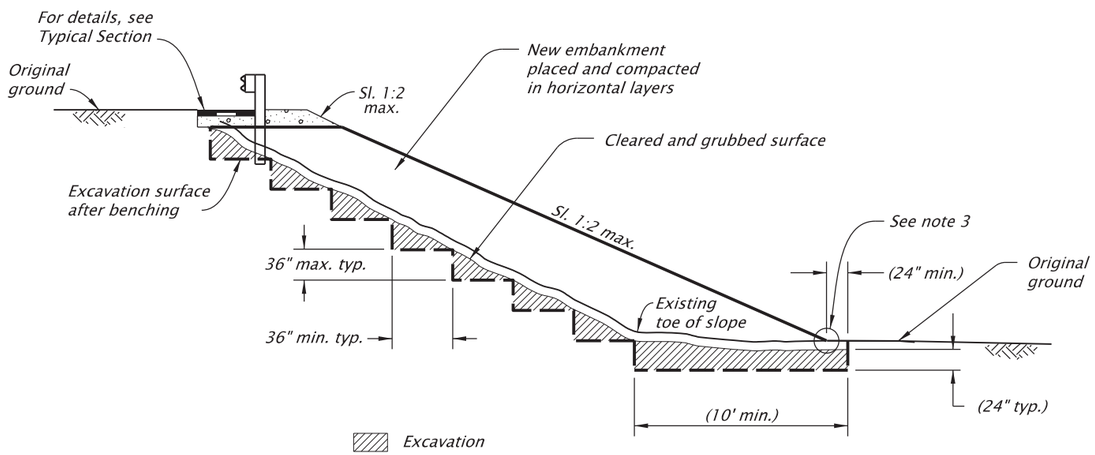

GENERAL NOTES:
1. Construct benches on slopes steeper than 1: 5 (v: h) to provide positive bond with existing ground.
2. Benching work is incidental to embankment construction.
3. This detail applies to embankments which toe out at a height of 5' or less above the existing toe of slope. Use Sliver Fill Benching detail for embankments which toe out greater than 5' above the existing toe of slope.

18" SUBGRADE STABILIZATION

(Not to scale: Diagrammatic only)

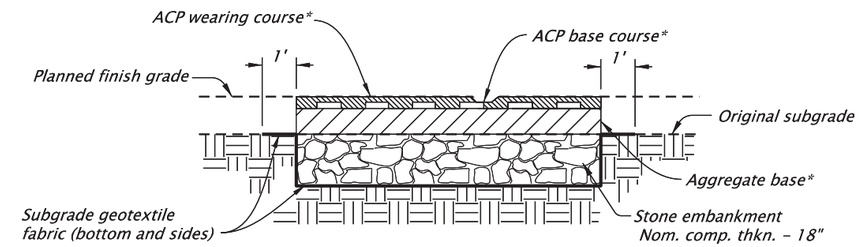

* For pavement details not specified, see Typical Sections.

GENERAL NOTES:
1. Locate as directed by the Engineer.
2. Excavate to a depth of 18" below subgrade.
3. Replace with 18" of stone embankment prior to placement of aggregate base.
4. Over excavation, if necessary, will be directed by the Engineer and measured for payment according to 00331.80.
5. Subgrade stablization to be used only in areas of excavation.

SLIVER FILL BENCHING DETAIL

(Not to scale: Diagrammatic only)

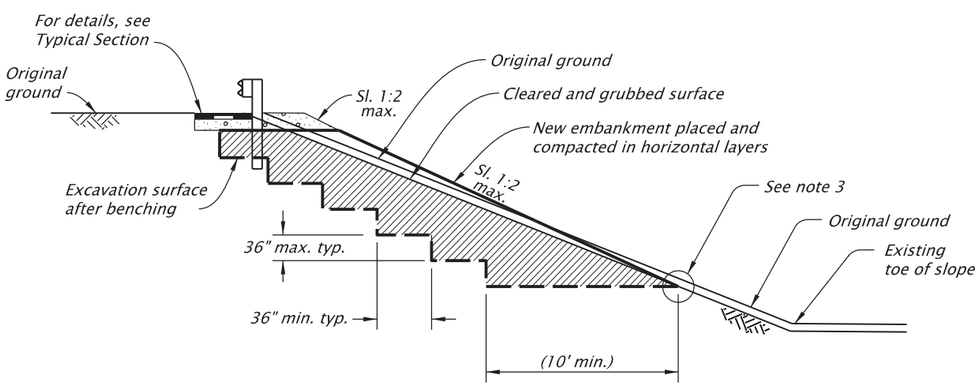

GENERAL NOTES:
1. Construct benches on slopes steeper than 1: 5 (v: h) to provide positive bond with existing ground.
2. Benching work is incidental to embankment construction.
3. The Sliver Fill Benching detail applies to embankments which toe out at a height greater than 5' above the existing toe of slope. Use Standard Embankment Construction detail for embankments which toe out 5' or less above the existing toe of slope.

STONE EMBANKMENT CONSTRUCTION

STA. "L" 12+89.8 To STA. "L" 13+65.0

(Not to scale: Diagrammatic only)

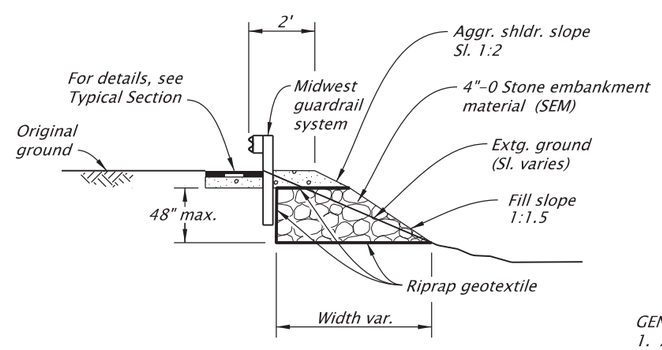

Stone embankment material (Material for benching is incidental)

GENERAL NOTE:
1. Additional sliver fill benching details on this sheet.

REGISTERED PROFESSIONAL ENGINEER
63243PE
Digitally Signed Date: 2026.06.08 09:11:23 -07'00'
OREGON
JULY 9, 2001
CHRIS ROSS ZELMER
RENEWS: 06-30-2028

OREGON DEPARTMENT OF TRANSPORTATION

OR99: ROGUE RIVER BRIDGE, GOLD HILL SPUR PROJECT
GOLD HILL SPUR HIGHWAY
JACKSON COUNTY

Designer: Brian Sheadel | Reviewer: Chris Zelmer
Drafter: Judy Hardin | Checker: Kyle Parrish

DETAILS

SHEET NO. BB01

FINAL ELECTRONIC DOCUMENT AVAILABLE UPON REQUEST

59V-007

RIPRAP BASIN

(See general const. sht. C01, note 11 for locations)

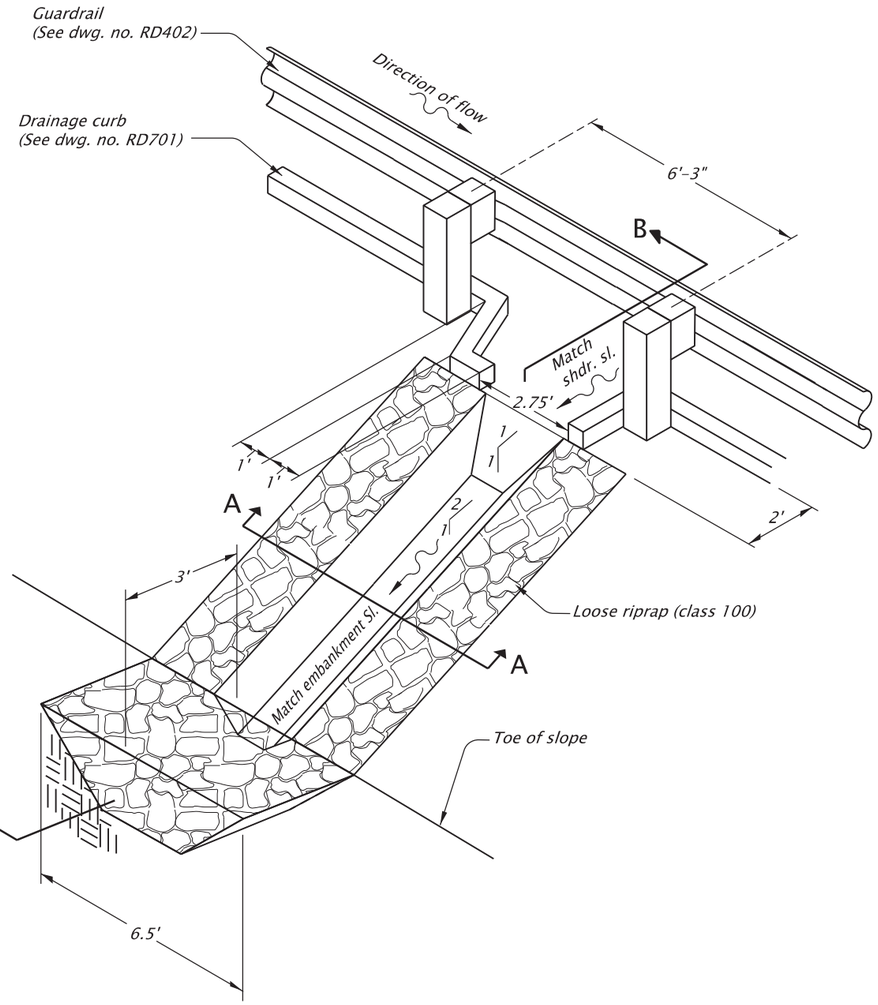

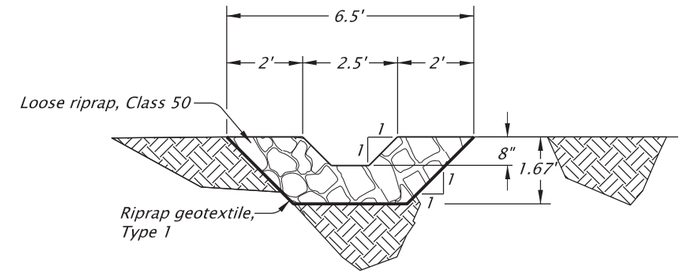

SECTION A-A

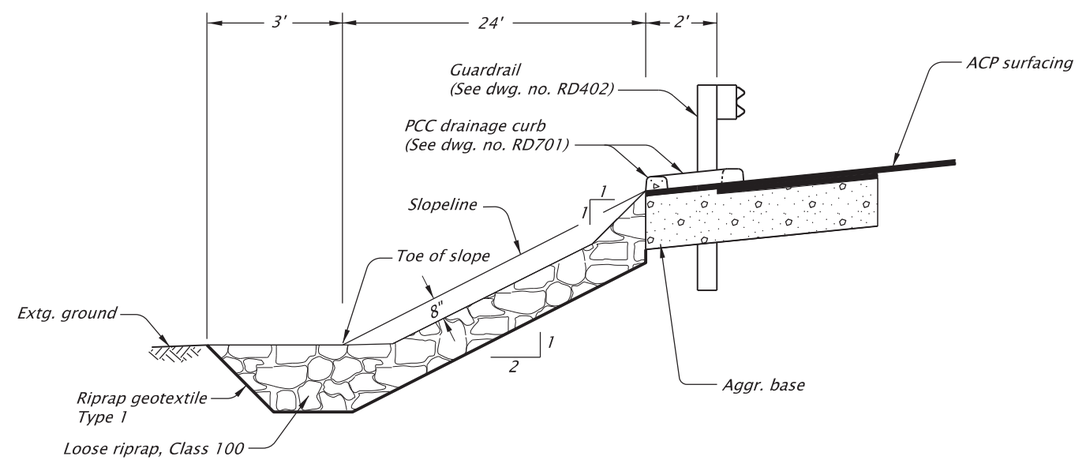

SECTION B-B

(See typical sections for surfacing details not shown)

REGISTERED PROFESSIONAL ENGINEER
63243PE
Digitally Signed Date: 2026.06.08 09:14:08 -07'00'
OREGON
JULY 9, 2001
CHRIS ROSS ZELMER
RENEWS: 06-30-2028

OREGON DEPARTMENT OF TRANSPORTATION

OR99: ROGUE RIVER BRIDGE, GOLD HILL SPUR PROJECT
GOLD HILL SPUR HIGHWAY
JACKSON COUNTY

Designer: Brian Sheadel | Reviewer: Chris Zelmer
Drafter: Judy Hardin | Checker: Kyle Parrish

DETAILS

SHEET NO. BB02

FINAL ELECTRONIC DOCUMENT
AVAILABLE UPON REQUEST

59V-007

"L" LINE
SUPERELEVATION DIAGRAM

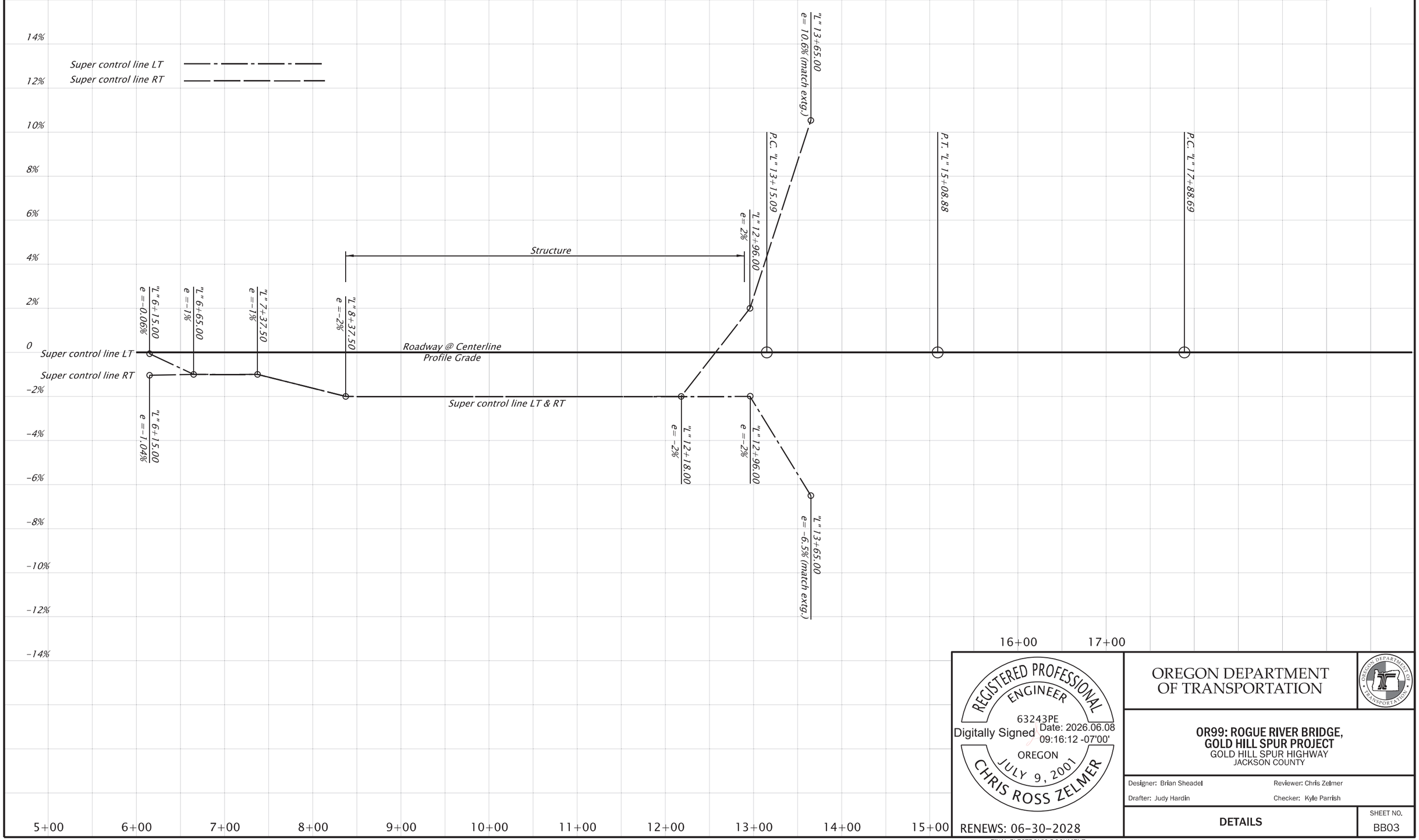

REGISTERED PROFESSIONAL ENGINEER
63243PE
Digitally Signed Date: 2026.06.08 09:16:12 -07'00'
OREGON
JULY 9, 2001
CHRIS ROSS ZELMER
RENEWS: 06-30-2028

OREGON DEPARTMENT OF TRANSPORTATION

OR99: ROGUE RIVER BRIDGE, GOLD HILL SPUR PROJECT
GOLD HILL SPUR HIGHWAY
JACKSON COUNTY

Designer: Brian Sheadel
Reviewer: Chris Zelmer
Drafter: Judy Hardin
Checker: Kyle Parrish

DETAILS

SHEET NO. BB03

FINAL ELECTRONIC DOCUMENT AVAILABLE UPON REQUEST

59V-007

Sec.22, T.36S, R.3W, W.M.

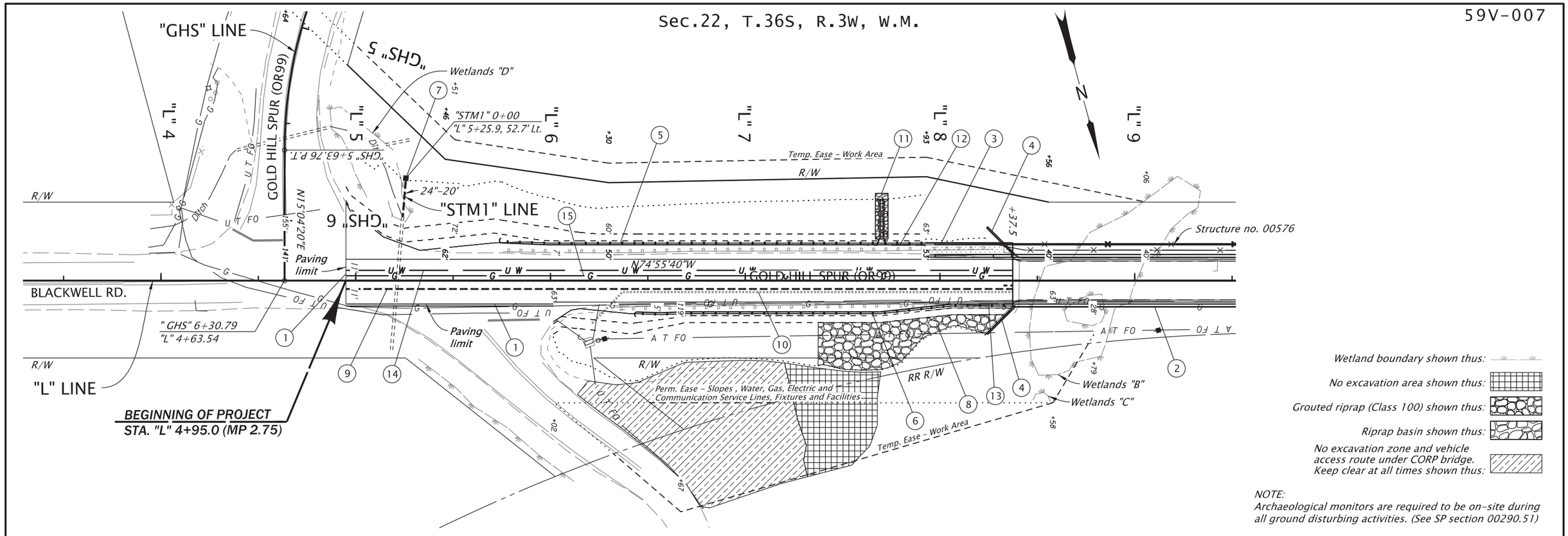

NOTE:
Archaeological monitors are required to be on-site during all ground disturbing activities. (See SP section 00290.51)

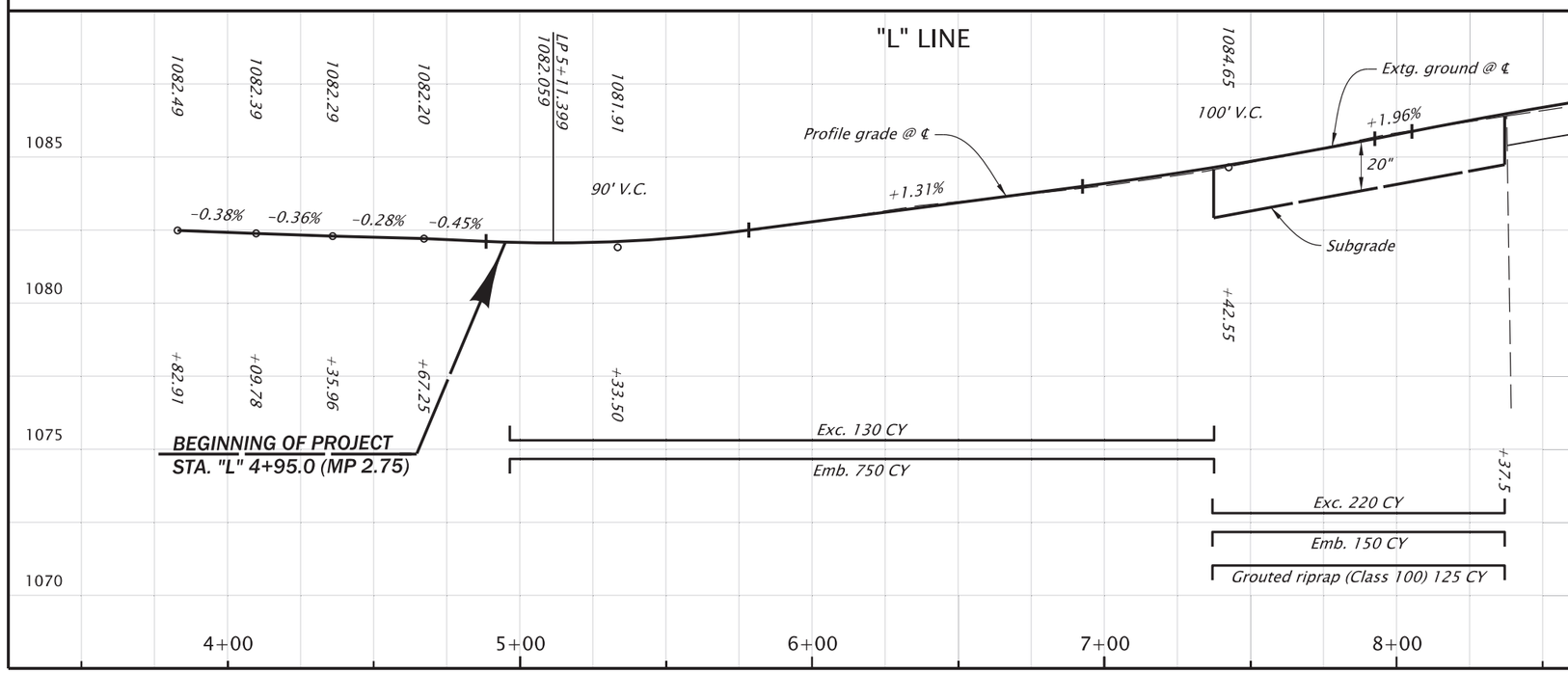

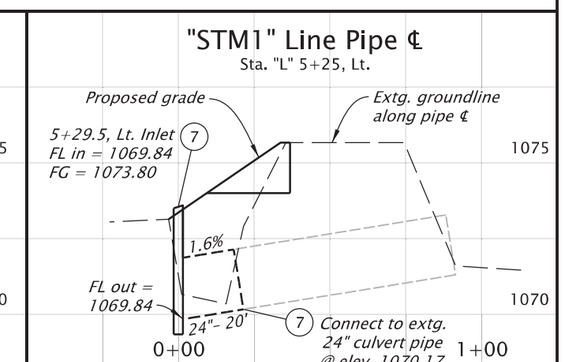

REGISTERED PROFESSIONAL ENGINEER
63243PE
Digitally Signed Date: 2026.06.15 10:28:19 -07'00'
OREGON
JULY 9, 2001
CHRIS ROSS ZELMER
RENEWS: 06-30-2028

FINAL ELECTRONIC DOCUMENT AVAILABLE UPON REQUEST

OREGON DEPARTMENT OF TRANSPORTATION

OR99: ROGUE RIVER BRIDGE, GOLD HILL SPUR PROJECT
GOLD HILL SPUR HIGHWAY
JACKSON COUNTY

Designer: Brian Sheadel
Reviewer: Chris Zelmer
Drafter: Judy Hardin
Checker: Kyle Parrish

GENERAL CONSTRUCTION

SHEET NO. C01

CONSTRUCTION NOTES

1. *Asphalt conc. pvmt. match*
   (See dwg. RD610)

2. *Structure no. 00576*
   (For sht. nos., see sht. A02, Bridge)

3. *Const. conc. moment slab with railing*
   (For sht. nos., see sht. A02, Bridge)

4. *Const. wingwall modifications*
   (For sht. nos., see sht. A02, Bridge)

5. *Sta. "L" 5+75 to Sta. "L" 7+92.5, Lt.*
   Remove extg. guardrail - 250'
   Const. Midwest Guardrail System - 150' (Type 2A)
   Const. Midwest Guardrail System - 12.5' (Type 3)
   W=1', E=0'
   Const. guardrail terminal, non-flared
   Test level 2
   Const. 31" guardrail to bridge transition
   Preferred grading plan
   (See dwgs. RD402, RD403, RD404, RD407, RD409, RD410, RD416, RD417, RD419, RD442A, RD442B, RD451, RD482, BR203 & BR222)

6. *Sta. "L" 6+44.5 to Sta. "L" 8+37.5, Rt.*
   Remove extg. guardrail - 205'
   Const. Midwest Guardrail System - 125.0' (Type 2A)
   Const. Midwest Guardrail System - 12.5' (Type 3)
   W=1', E=0'
   Const. guardrail terminal, non-flared
   Test level 2
   Const. 31" guardrail to bridge transition
   Preferred grading plan

7. *Sta "L" 5+25.9, 52.7' Lt.*
   Const. Type "D" inlet
   Extend 24" conc. culv. pipe - 20'
   Class III conc. pipe, watertight joints
   10' depth
   (See dwgs. RD300, RD339, RD365, RD370 & RD386)

8. *Inst. grouted riprap (Class 100)*
   (For locations, see sht. BA03)
   (For benching details, see sht. BB01)

9. *Install RVSS san. sew. pipe*
   (For sht. nos., see sht. A02, RVSS)

10. *Install 4" rigid metallic pipe - 225'*
    (For future use, place at a depth of approx. 36" & connect to new conduit on structure)
    Trench resurfacing - 25 SY
    (CLSM backfill)
    (See dwgs. RD300, RD302 , TM700 & TM701)

11. *Inst. rip rap basin*
    (For details, see sht. no. BB02)
    (See dwg. RD317)

12. *Sta. "L" 7+62.5 to "L" 7+92.5, Lt.*
    Inst. PCC drainage curb - 34'
    (For details, see sht. no. BB02
    (See dwg. RD701)

13. *Sta. "L" 8+17.5 to "L" 8+37.5, Lt.*
    Inst. PCC drainage curb - 20'

14. *Install City of Gold Hill water line*
    (For sht. nos., see sht. A02, City of Gold Hill)

15. *Proposed location of new gas line (by others)*

REGISTERED PROFESSIONAL ENGINEER
63243PE
Digitally Signed Date: 2026.07.16 13:31:33 -07'00'
OREGON
JULY 9, 2001
CHRIS ROSS ZELMER
RENEWS: 06-30-2028

OREGON DEPARTMENT OF TRANSPORTATION

OR99: ROGUE RIVER BRIDGE, GOLD HILL SPUR PROJECT
GOLD HILL SPUR HIGHWAY
JACKSON COUNTY

Designer: Brian Sheadel | Reviewer: Chris Zelmer
Drafter: Judy Hardin | Checker: Kyle Parrish

GENERAL CONSTRUCTION NOTES

SHEET NO. C01A

FINAL ELECTRONIC DOCUMENT
AVAILABLE UPON REQUEST

59V-007

Sec.22, T.36S, R.3W, W.M.

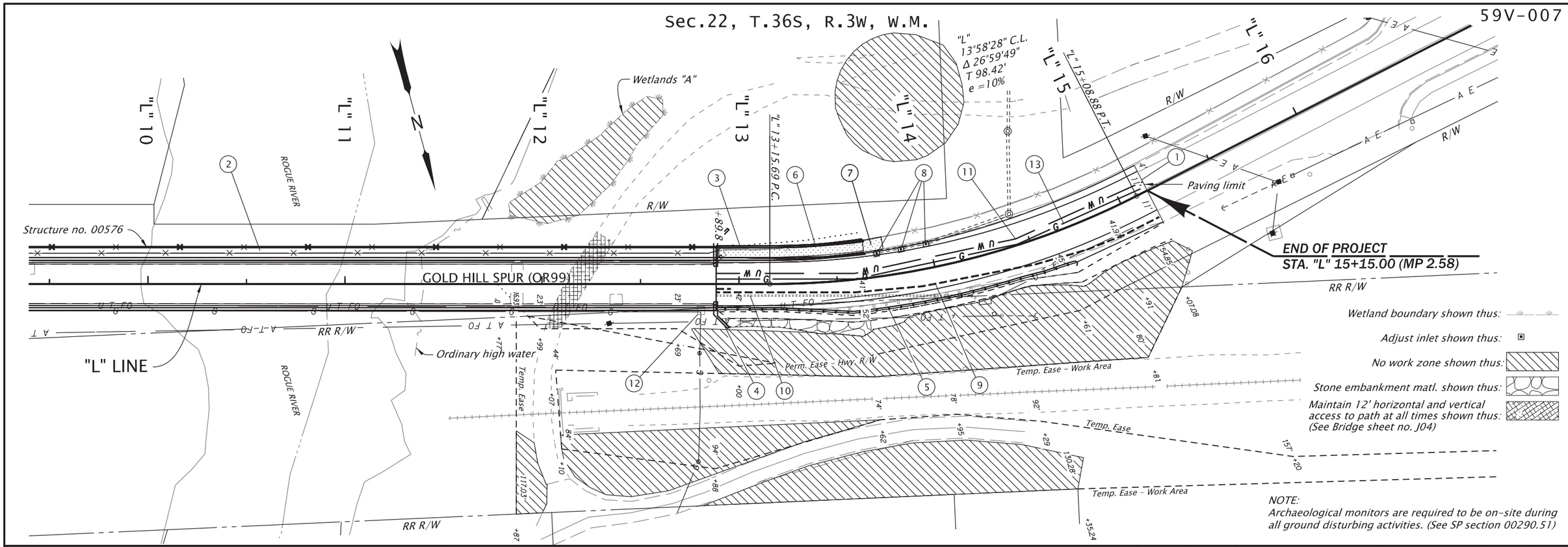

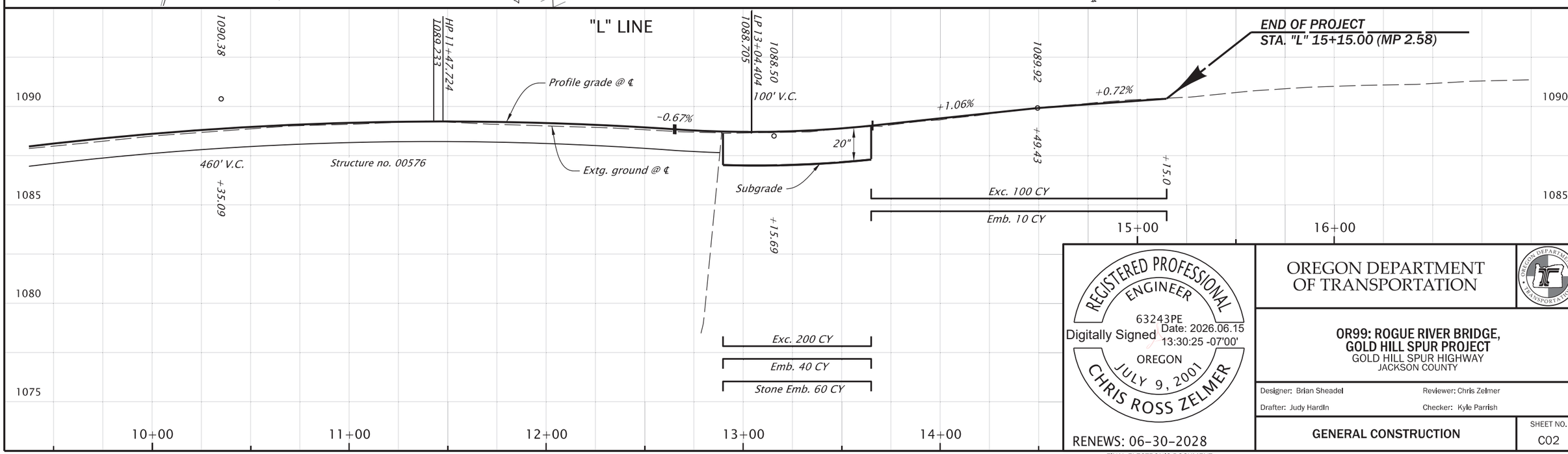

REGISTERED PROFESSIONAL ENGINEER
63243PE
Digitally Signed Date: 2026.06.15 13:30:25 -07'00'
OREGON
JULY 9, 2001
CHRIS ROSS ZELMER
RENEWS: 06-30-2028

FINAL ELECTRONIC DOCUMENT AVAILABLE UPON REQUEST

OREGON DEPARTMENT OF TRANSPORTATION

OR99: ROGUE RIVER BRIDGE, GOLD HILL SPUR PROJECT
GOLD HILL SPUR HIGHWAY
JACKSON COUNTY

Designer: Brian Sheadel
Reviewer: Chris Zelmer
Drafter: Judy Hardin
Checker: Kyle Parrish

GENERAL CONSTRUCTION

SHEET NO. C02

CONSTRUCTION NOTES

1. *Asphalt conc. pvmt. match*

2. *Structure no. 00576*
   (For sht. nos., see sht. A02, Bridge)

3. *Const. conc. moment slab with railing*
   (For sht. nos., see sht. A02, Bridge)

4. *Const. wingwall modifications*
   (For sht. nos., see sht. A02, Bridge)

5. *Sta. "L" 12+89.7 to Sta. "L" 14+67.0, Rt.*
   Remove extg. guardrail - 150'
   Const. Midwest Guardrail System - 125.0' (Type 2A)
   Const. Midwest Guardrail System - 12.5' (Type 3)
   W=1', E=0'
   (Steel guardrail posts)
   Const. guardrail terminal, non-flared
   Test level 2
   Const. 31" guardrail to bridge transition
   Preferred grading plan

6. *Sta. "L" 12+92.0 to Sta. "L" 13+65.0, Lt.*
   Remove extg. chain link fence - 60'

7. *Sta. "L" 13+65 to Sta. "L" 13+75, Lt.*
   Remove extg. PCC sidewalk
   Const. PCC sidewalk
   (See dwgs. RD720 & RD722)

8. *Adjust inlet - 3*
   (See dwg. RD376)

9. *Install RVSS san. sew. pipe*
   (For sht. nos., see sht. A02, RVSS)

10. *Install 4" rigid metallic pipe - 100'*
    (For future use, place at a depth of approx. 36"
    & connect to proposed conduit on structure)
    Trench resurfacing - 15 SY
    (CLSM backfill)

11. *Install City of Gold Hill water line*
    (For sht. nos., see sht. A02, City of Gold Hill)

12. *Remove extg. conc. vault*
    (For additional details, see sht. A02, Bridge)

13. *Proposed location of new gas line (by others)*

REGISTERED PROFESSIONAL ENGINEER
63243PE
Digitally Signed Date: 2026.07.16 13:32:34 -07'00'
OREGON
JULY 9, 2001
CHRIS ROSS ZELMER
RENEWS: 06-30-2028

FINAL ELECTRONIC DOCUMENT
AVAILABLE UPON REQUEST

OREGON DEPARTMENT OF TRANSPORTATION

OR99: ROGUE RIVER BRIDGE, GOLD HILL SPUR PROJECT
GOLD HILL SPUR HIGHWAY
JACKSON COUNTY

Designer: Brian Sheadel | Reviewer: Chris Zelmer
Drafter: Judy Hardin | Checker: Kyle Parrish

GENERAL CONSTRUCTION NOTES

SHEET NO. C02A

DETOUR PLAN

OR99: ROGUE RIVER BRIDGE CLOSURE

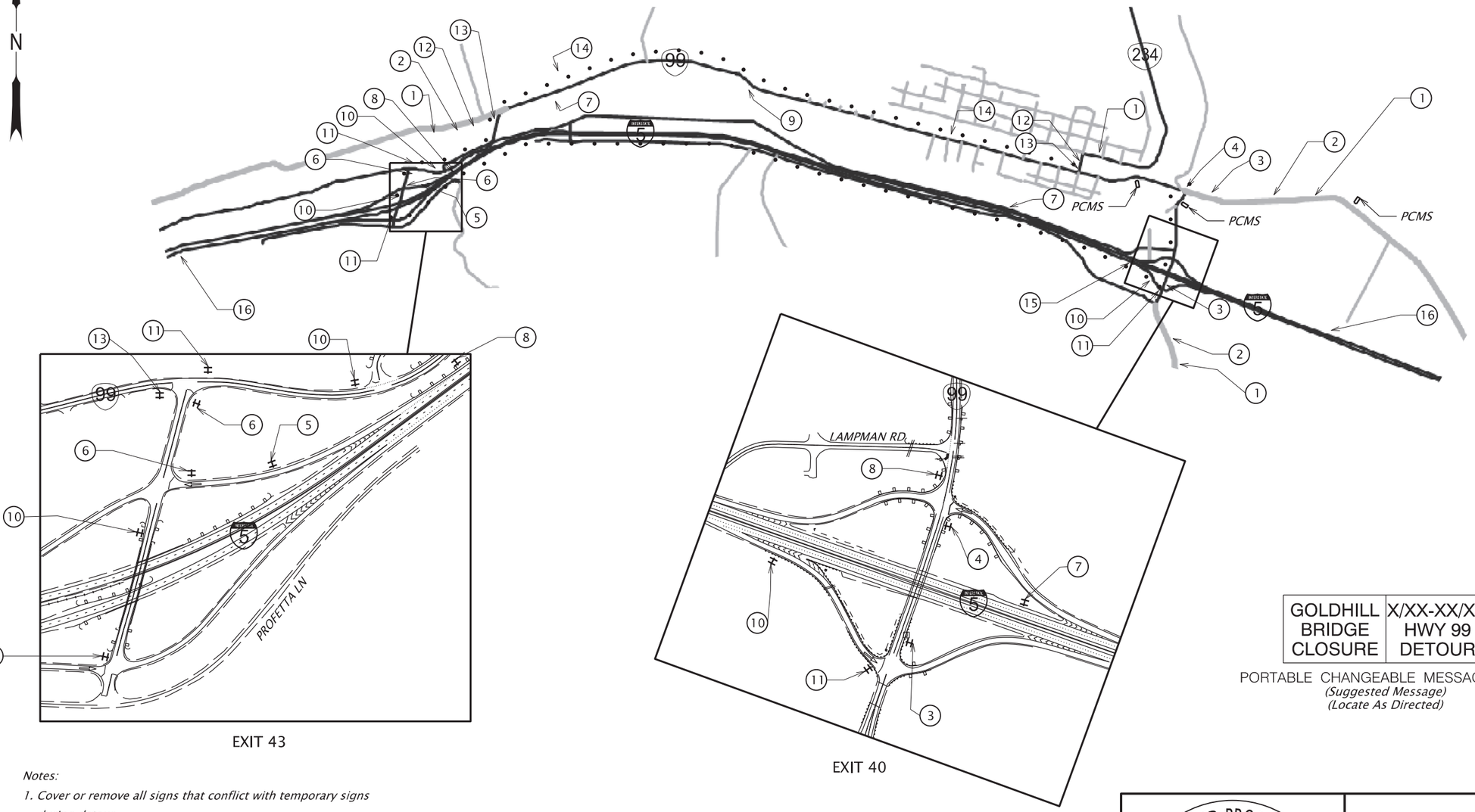

GOLDHILL BRIDGE CLOSURE	X/XX-XX/XX HWY 99 DETOUR

PORTABLE CHANGEABLE MESSAGE SIGN
(Suggested Message)
(Locate As Directed)

Notes:

1. *Cover or remove all signs that conflict with temporary signs during detour.*
2. *Adjustments to temporary traffic control devices may be required to accommodate existing field conditions.*
3. *Pre-construction portable changeable message signs to be displayed 30 days prior to construction.*

To Be Accompanied by Standard Dwg. Nos. TM670, TM671, TM800, TM820, TM821, TM822, TM840, TM844 AND TM845

REGISTERED PROFESSIONAL ENGINEER
91094PE
Digitally Signed 2026.06.17 09:23:40 -07'00'
OREGON
SEP. 10, 2019
JORGE GONZALEZ
RENEWS: 06-30-2027

FINAL ELECTRONIC DOCUMENT AVAILABLE UPON REQUEST

OREGON DEPARTMENT OF TRANSPORTATION

OR99: ROGUE RIVER BRIDGE, GOLD HILL SPUR PROJECT
GOLD HILL SPUR HIGHWAY
JACKSON COUNTY

Designer: Jacob Sarver
Reviewer: Jorge Gonzalez
Drafter: Jacob Sarver
Checker: William Fitzgerald

TRAFFIC CONTROL PLAN

SHEET NO. EA01

DETOUR PLAN

48x60

1

W20-2

2

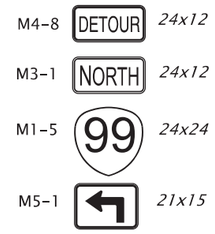

3

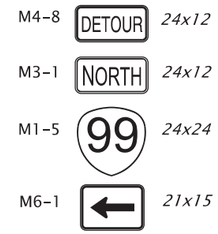

4

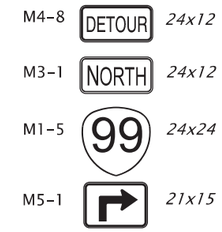

5

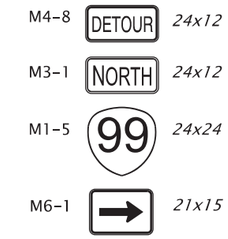

6

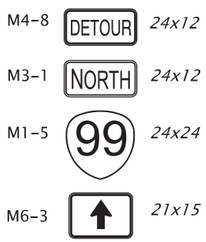

7

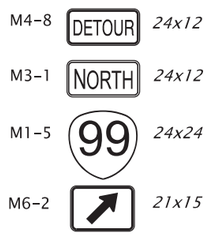

8

CG20-5
30x24

9

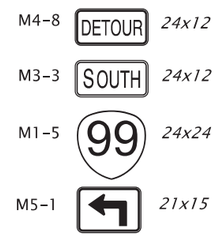

10

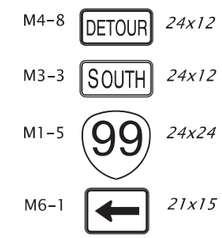

11

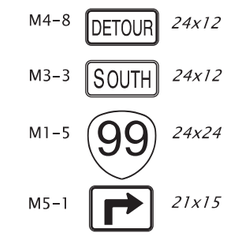

12

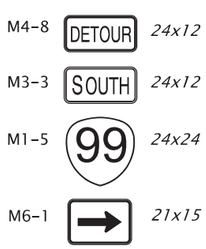

13

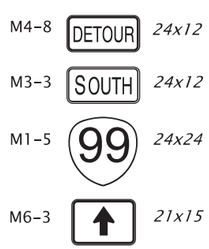

14

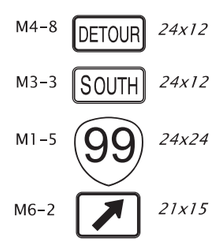

15

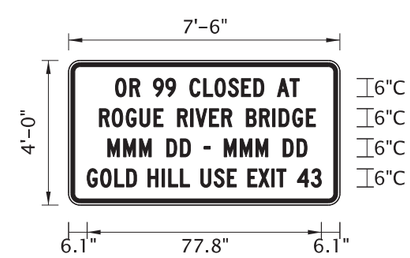

16

REGISTERED PROFESSIONAL ENGINEER
91094PE
Digitally Signed 2026.06.17 09:29:30 -07'00'
OREGON
SEP. 10, 2019
JORGE GONZALEZ
RENEWS: 06-30-2027

FINAL ELECTRONIC DOCUMENT
AVAILABLE UPON REQUEST

OREGON DEPARTMENT
OF TRANSPORTATION

OR99: ROGUE RIVER BRIDGE,
GOLD HILL SPUR PROJECT
GOLD HILL SPUR HIGHWAY
JACKSON COUNTY

Designer: Jacob Sarver
Reviewer: Jorge Gonzalez
Drafter: Jacob Sarver
Checker: William Fitzgerald

TRAFFIC CONTROL PLAN

SHEET NO.
EA02

59V-007

TEMPORARY PEDESTRIAN ACCESS ROUTE
(WEST SIDE)

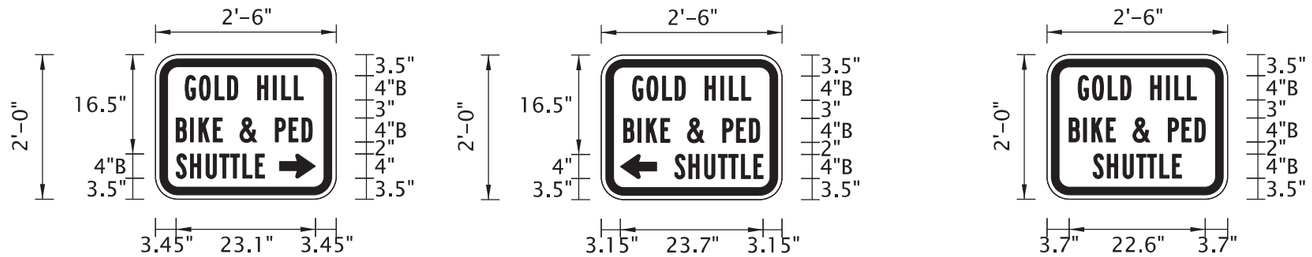

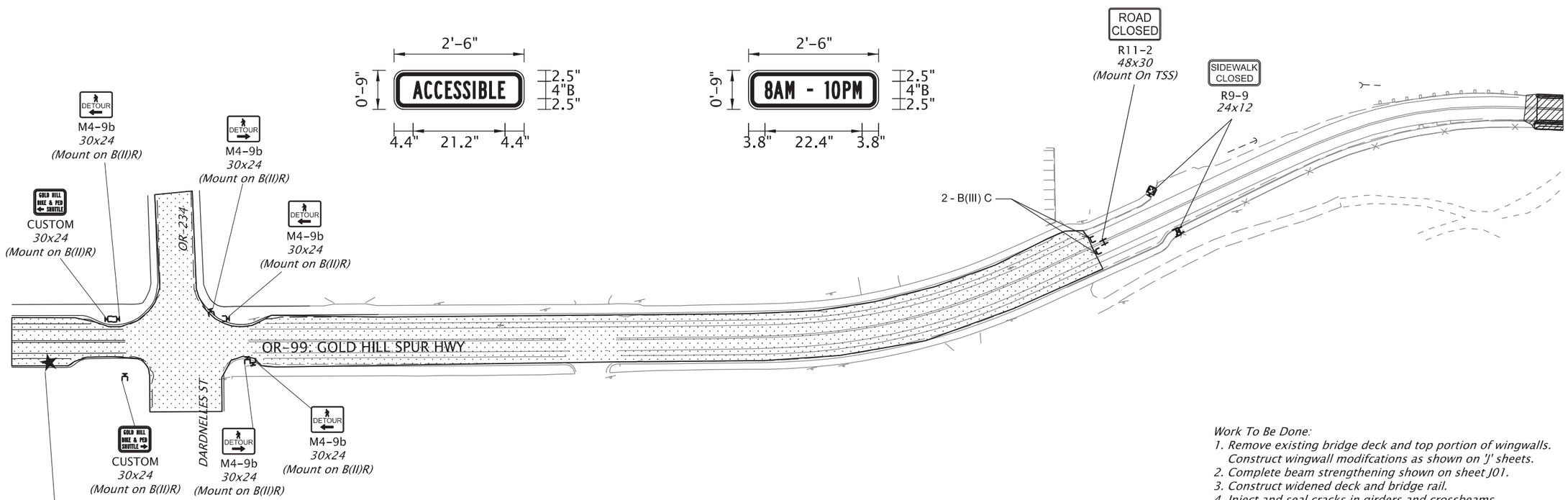

CUSTOM 30x24
CUSTOM ACCESSIBLE 30x9
CUSTOM 8AM - 10PM 30x9
(Mount on TSS)

Work To Be Done:
1. *Remove existing bridge deck and top portion of wingwalls. Construct wingwall modifcations as shown on 'J' sheets.*
2. *Complete beam strengthening shown on sheet J01.*
3. *Construct widened deck and bridge rail.*
4. *Inject and seal cracks in girders and crossbeams. Complete repairs to damages girders and crossbeams.*
5. *Apply architectural coating and construct joint seals. See sheet J01 for full list of bridge construction items.*

LEGEND

H	*Barricade & TSS*	★	*PTV Pickup/Dropoff Location*
H	*TSS*		*Pedestrian Barricade*
K	*Sign on barricade*		*Under construction*
I	*Sign on post*		*Under traffic*
C	*Barricade*		

Notes:
-Provide Pedestrian Transport Vehicle (PTV) service during bridge closure. Provide PTV service daily, at 20 minute intervals, between the hours of 8:00 AM to 10:00 PM.

REGISTERED PROFESSIONAL ENGINEER
91094PE
Digitally Signed 2026.07.14 11:39:27 -07'00'
OREGON
SEP. 10, 2019
JORGE GONZALEZ
RENEWS: 06-30-2027

FINAL ELECTRONIC DOCUMENT AVAILABLE UPON REQUEST

OREGON DEPARTMENT OF TRANSPORTATION

OR99: ROGUE RIVER BRIDGE, GOLD HILL SPUR PROJECT
GOLD HILL SPUR HIGHWAY
JACKSON COUNTY

Designer: Jacob Sarver
Reviewer: Jorge Gonzalez
Drafter: Jacob Sarver
Checker: William Fitzgerald

TRAFFIC CONTROL PLAN

SHEET NO. EB01

59V-007

TEMPORARY PEDESTRIAN ACCESS ROUTE
(EAST SIDE)

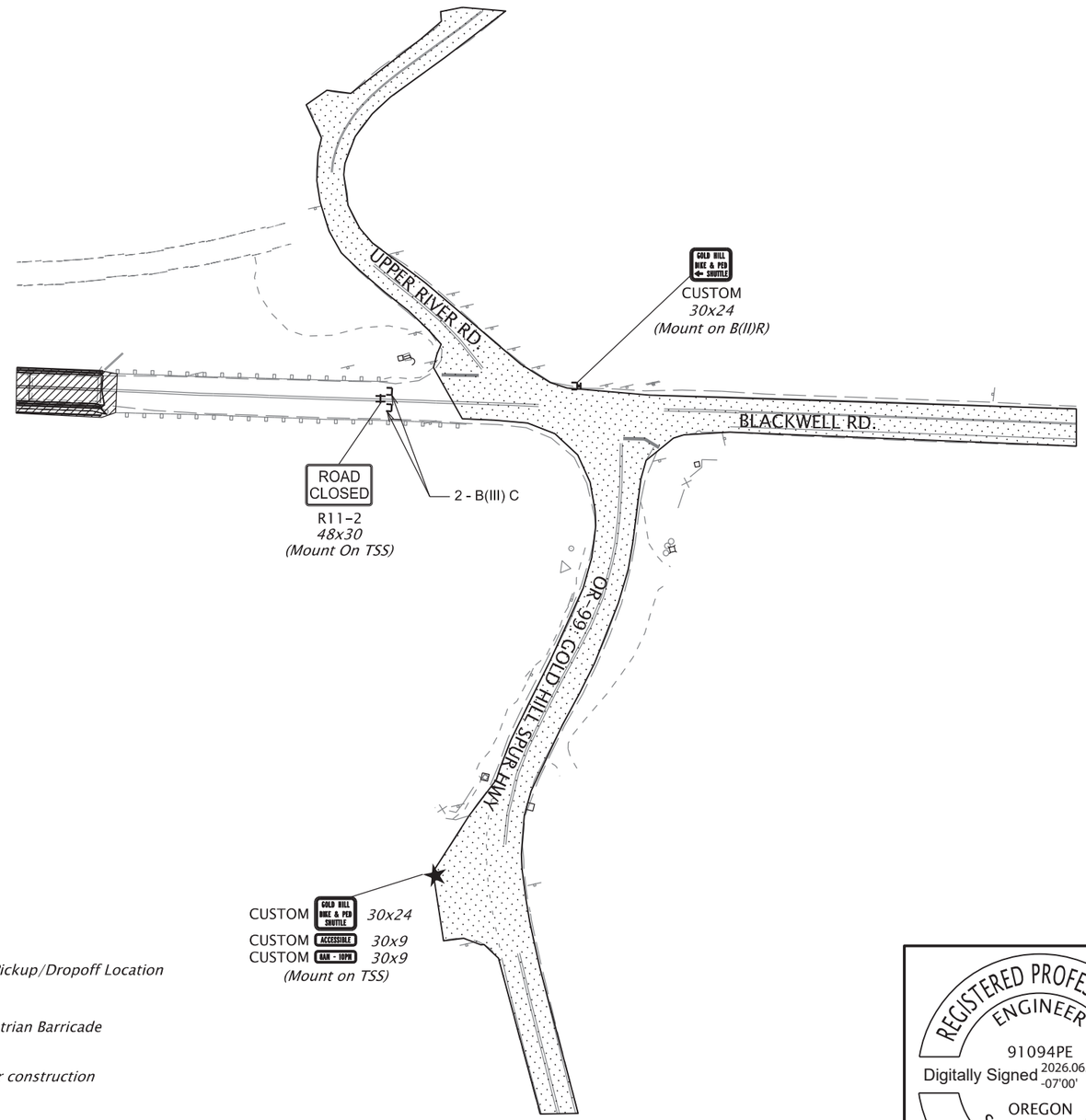

LEGEND

C H	*Barricade & TSS*	★	*PTV Pickup/Dropoff Location*
H	*TSS*		*Pedestrian Barricade*
K	*Sign on barricade*		*Under construction*
P	*Sign on post*		*Under traffic*
C	*Barricade*		

REGISTERED PROFESSIONAL ENGINEER
91094PE
Digitally Signed 2026.06.22 07:03:21 -07'00'
OREGON
SEP. 10, 2019
JORGE GONZALEZ
RENEWS: 06-30-2027

FINAL ELECTRONIC DOCUMENT AVAILABLE UPON REQUEST

OREGON DEPARTMENT OF TRANSPORTATION

OR99: ROGUE RIVER BRIDGE, GOLD HILL SPUR PROJECT
GOLD HILL SPUR HIGHWAY
JACKSON COUNTY

Designer: Jacob Sarver
Reviewer: Jorge Gonzalez
Drafter: Jacob Sarver
Checker: William Fitzgerald

TRAFFIC CONTROL PLAN

SHEET NO. EB02

59V-007

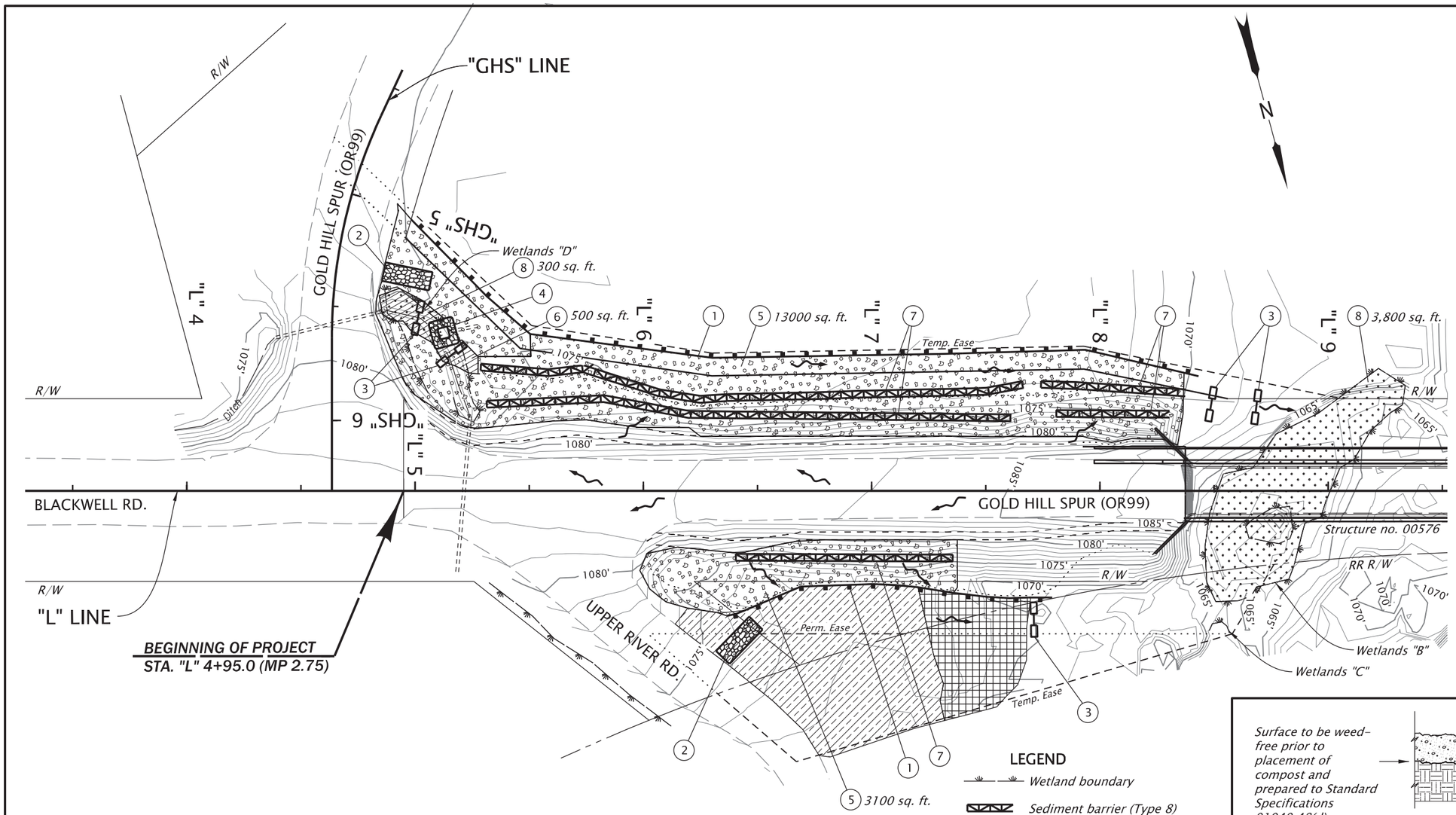

1. Const. sediment fence (Type 2) - 600' (See dwg. RD1040)
2. Const. aggregate construction entrance - 2 (See dwg. RD1000)
3. Const. check dam (Type 6) - 5 (See dwg. RD1006)
4. Const. energy dissipator (See dwg. RD1050)
5. Permanent seeding & mulching
6. Const. erosion control matting (Type B) (See dwg. RD1055)
7. Const. sediment barrier (Type 8) -700' (See dwg. RD1032)
8. Wetlands seeding & mulching

NOTE:
Archaeological monitors are required to be on-site during all ground disturbing activities. (See SP section 00290.51)

LEGEND

- Wetland boundary
- Sediment barrier (Type 8)
- Sediment fence
- Check dam in ditch section
- Energy dissipator
- Construction entrance
- Seeding and mulching
- Seeding and mulching (Wetlands seed mix)
- Erosion control matting
- No excavation area
- No excavation zone and vehicle access route under CORP bridge. Keep clear at all times.
- Flow direction

STANDARD DRAWINGS

■	RD1000	Construction Entrances
□	RD1005	Check Dams Type 1, 3 and 4
■	RD1006	Check Dams Type 2 and 6
■	RD1010	Inlet Protection Type 2, 3, 6, 7 10 and 11
□	RD1015	Inlet Protection Type 4
□	RD1030	Sediment Barrier Type 2, 3 and 4
□	RD1031	Sediment Barrier Type 5 and 6
■	RD1032	Sediment Barrier Type 8
□	RD1033	Sediment Barrier Type 9
■	RD1040	Sediment Fence
□	RD1045	Temporary Slope Drain With Energy Dissipator
■	RD1050	Temporary Scour Basin / Energy Dissipator
■	RD1055	Slope and Channel Matting
□	RD1060	Tire Wash Facility Type 1 and 2
□	RD1065	Sediment Trap
□	RD1070	Concrete Truck Wash Out

EROSION AND SEDIMENT CONTROL GENERAL NOTES

The construction, adjustment, maintenance, and upgrading of these Erosion and Sediment Control measures is the responsibility of the contractor for the duration of the project to comply with Section 00280 of the Oregon Standard Specifications for construction and the NPDES 1200-CA permit.

Erosion and Sediment Control measures shown on this plan are for anticipated site conditions. Adjust or upgrade these measures for unexpected storm events to ensure that sediment and sediment-laden water does not leave the site.

Develop a revised plan of the Erosion and Sediment Control measures shown as required by Section 00280, Oregon Standard Specifications for Construction. Implement this plan for all clearing and grading activities and in segments applicable to each staging phase. Construct in such a manner so as to ensure that sediment and sediment-ladenwater does not enter the roadway or drainage system, or violate applicable water standards.

Install measures within the right-of-way unless directed otherwise.

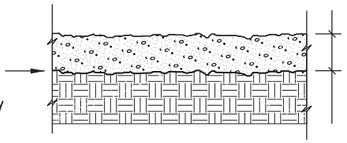

Note: See Standard Specifications 03020 for compost specifications.

APPLICATION - TEMPORARY/PERMANENT MULCHING
N.T.S.

REGISTERED PROFESSIONAL ENGINEER
63243PE
Digitally Signed Date: 2026.06.08 09:23:23 -07'00'
OREGON
JULY 9, 2001
CHRIS ROSS ZELMER
RENEWS: 06-30-2028

OREGON DEPARTMENT OF TRANSPORTATION

OR99: ROGUE RIVER BRIDGE, GOLD HILL SPUR PROJECT
GOLD HILL SPUR HIGHWAY
JACKSON COUNTY

Designer: Brian Sheadel | Reviewer: Chris Zelmer
Drafter: Judy Hardin | Checker: Kyle Parrish

EROSION AND SEDIMENT CONTROL PLAN

SHEET NO. FB01

FINAL ELECTRONIC DOCUMENT AVAILABLE UPON REQUEST

59V-007

1. Const. sediment fence (Type 2) - 350'
2. Const. check dam (Type 6)
3. Const. inlet protection (Type 3) - 3 (See dwg. RD1010)
4. Permanent seeding & mulching

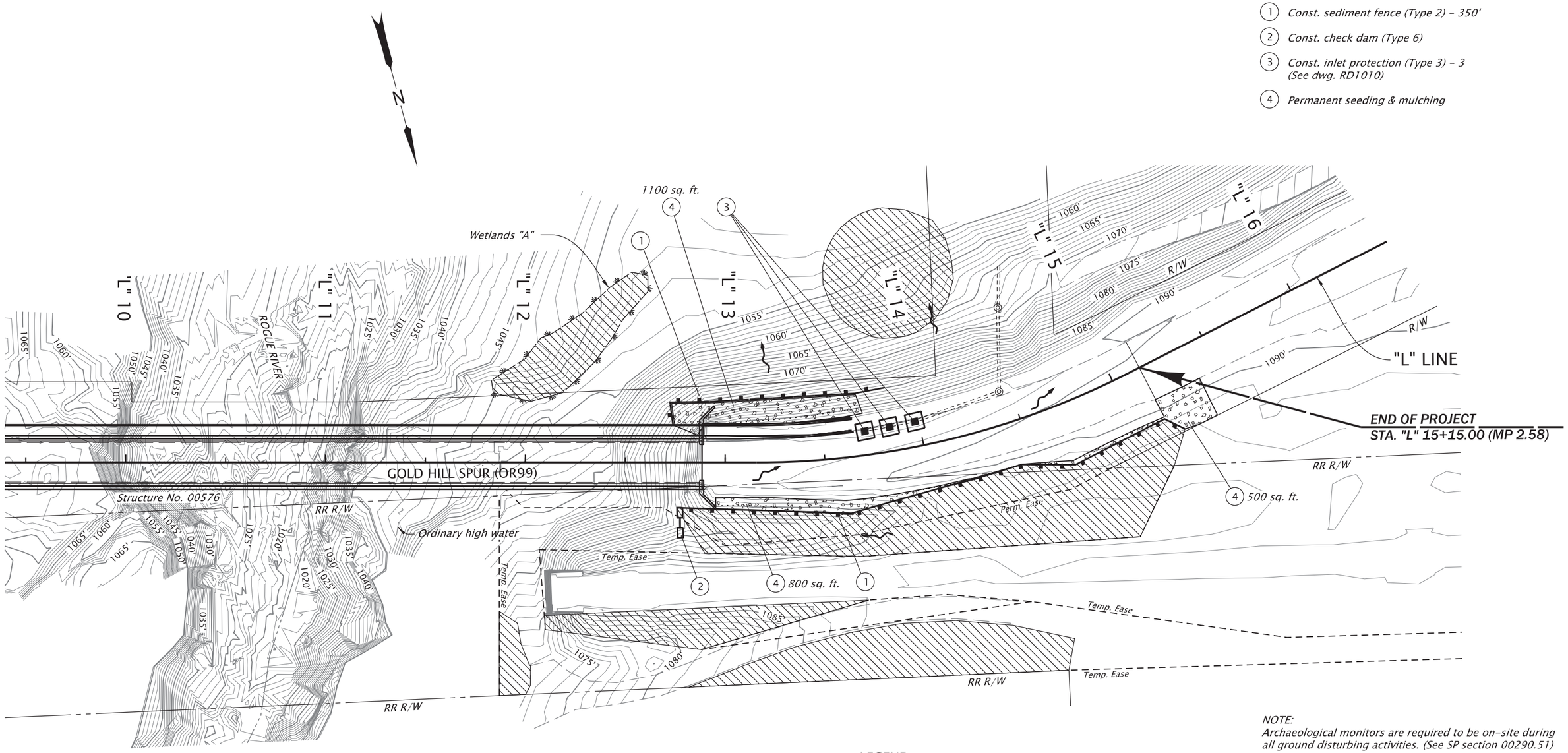

NOTE:
Archaeological monitors are required to be on-site during all ground disturbing activities. (See SP section 00290.51)

LEGEND

- Wetland boundary
- Sediment fence
- Check dam in ditch section
- Inlet protection
- Seeding and mulching
- No work area
- Flow direction

REGISTERED PROFESSIONAL ENGINEER
63243PE
Digitally Signed Date: 2026.06.08 09:24:31 -07'00'
OREGON
JULY 9, 2001
CHRIS ROSS ZELMER
RENEWS: 06-30-2028

FINAL ELECTRONIC DOCUMENT AVAILABLE UPON REQUEST

OREGON DEPARTMENT OF TRANSPORTATION

OR99: ROGUE RIVER BRIDGE, GOLD HILL SPUR PROJECT
GOLD HILL SPUR HIGHWAY
JACKSON COUNTY

Designer: Brian Sheadel | Reviewer: Chris Zelmer
Drafter: Judy Hardin | Checker: Kyle Parrish

EROSION AND SEDIMENT CONTROL PLAN

SHEET NO. FB02

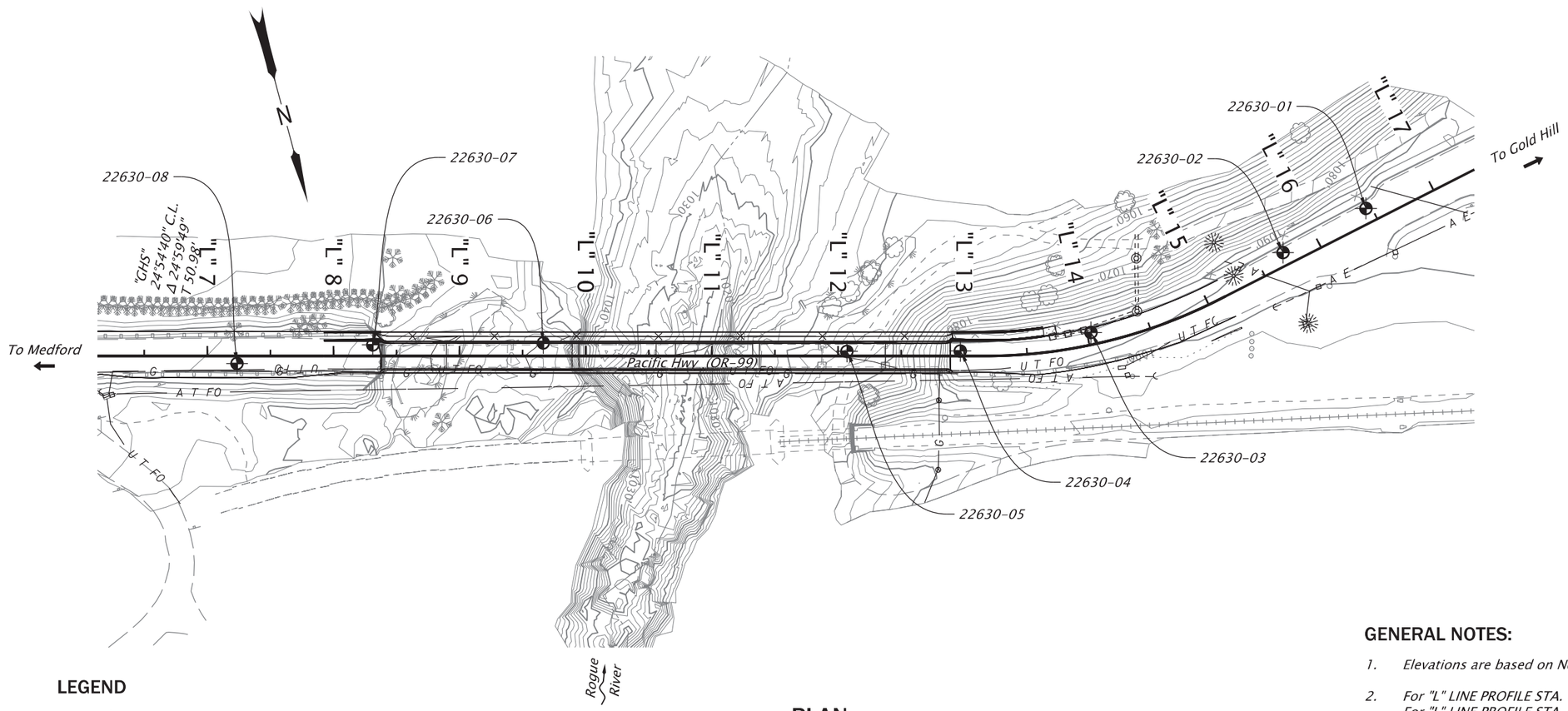

PLAN

Scale: 1"=100'
Major contour interval = 10'
Minior contour interval = 2'

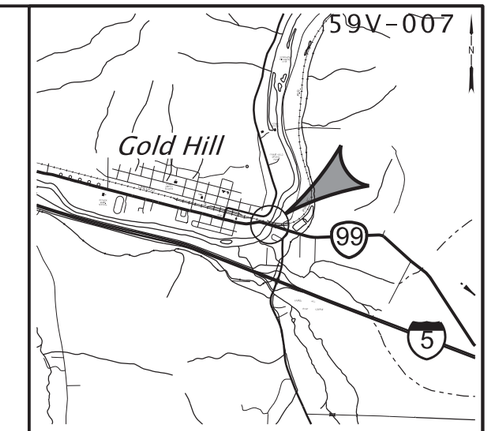

LOCATION MAP

Township 36 S, Range 03 W, Section 22, WM
Longitude 42.43083°N, Latitude 123.04344°W

LEGEND

- = *Drill hole*
- *Edge of asphalt*
- *Rail Road super structure*
- *Rail Road ballast*
- *Bridge Super*
- *Vegetation*
- *Tree*
- *Storm water man hole*
- *Edge of gravel*
- *Concrete*
- A E — *Aboveground electric*
- U T FO — *Underground fiber*
- A T FO — *Aboveground fiber*
- *Wetland*

GENERAL NOTES:

1. *Elevations are based on North American Vertical Datum (1988).*
2. *For "L" LINE PROFILE STA. 7+00-9+25 see GA02.*
   For "L" LINE PROFILE STA. 9+25-13+25 see GA03.
   For "L" LINE PROFILE STA. 13+25-17+00 see GA04.

CERTIFIED
OREGON
JILL E. DEKOEKKOEK
Digitally Signed 2026.06.17 14:38:42 -07'00'
E2555
ENGINEERING GEOLOGIST

EXPIRES: 05-01-2027

FINAL ELECTRONIC DOCUMENT
AVAILABLE UPON REQUEST

OREGON DEPARTMENT OF TRANSPORTATION

Rogue R_Hwy 486 (Gold Hill Spur)

OR99: ROGUE RIVER BRIDGE, GOLD HILL SPUR PROJECT
GOLD HILL SPUR HIGHWAY
JACKSON COUNTY

Designer: Jill DeKoekkoek
Reviewer: Colin Cunningham
Drafter: Dan Faas
Checker: N/A

GEOTECHNICAL DATA

SHEET NO. GA01

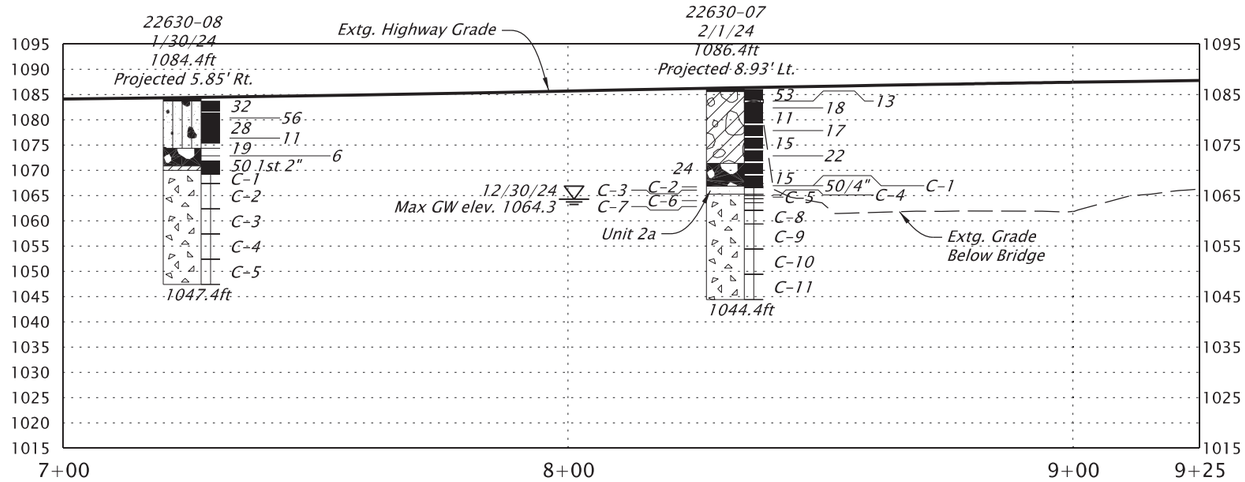

"L" LINE PROFILE STA.7+00-9+25

Horizontal Scale 1" = 30'
Vertical Scale 1"=30'

GENERAL NOTES:

1. *Geotechnical data shown on this drawing are a consolidation of information and/or revision in terminology from the drill logs. More detailed subsurface data is available on the drill logs in the Engineering Geology report.*
2. *In accordance with ASTM D1586, N values are reported for an interval of 1 ft. except as noted.*
3. *Gravels, cobbles, and boulders encountered or inferred from drilling action in 22630-07 and 22630-08, refer to drill logs in the Engineering Geology report in bid reference documents for more details.*

22630-07

Core	% Rec.	Hardness	R.Q.D.
C1	100	R4	0
C2	100	R4	0
C3	100	R4	0
C4	100	R4	0
C5	43	R5	0
C6	0	R4	0
C7	100	R4	36
C8	91	R4	66
C9	100	R4	75
C10	95	R4	58
C11	95	R4	52

22630-08

Core	% Rec.	Hardness	R.Q.D.
C1	92	R3	0
C2	97	R3	28
C3	100	R3-R4	41
C4	100	R4	94
C5	100	R4	60

UNIT DESCRIPTIONS

ASPHALTIC CONCRETE(Pavement Section - Unit 1)

Clayey gravelly SAND to Clayey SAND with gravel (SC), moist, loose to medium dense, fine to medium sand, rounded gravel(Fill - Unit 2a)

Clayey GRAVEL with sand (GC), moist to wet, medium dense, sub-rounded to sub-angular gravel, low to medium plasticity fines(Fill - Unit 2c)

Sandy CLAY (CL), low plasticity, damp, medium stiff to hard, some sub-angular to angular gravel(Fill - Unit 2d)

Boulders and cobbles with heterogeneous matrix of silty SAND to sandy CLAY and clayey GRAVEL with sand (SM, CL/SC, GC), cobbles and boulders inferred based on drilling response (fluid loss, bit chatter); cobble/boulder content not directly observed(Fill - Unit 2f)

METAVOLCANIC and METAVOLCANICLASTIC ANDESITE, slightly weathered to fresh, medium hard to hard, medium close to widely jointed and fractured with quartz, iron oxide, and manganese oxide mineralization, locally metavolcaniclastic with angular clasts of andesite in an aphanitic groundmass

LEGEND

▽	=	Groundwater level
00.00'	=	Elevation
MM/DD/YY	=	Date of measurement
C-1	=	Core sample
RQD	=	Rock Quality Designation
50/1st #"	=	Standard Penetration Test refusal length
■ 24	=	Standard Penetration Test - N value
⊠ 15	=	Oversized sampler - blowes per foot (modified California) - blow count

See sheet GA01 for Plan

CERTIFIED OREGON JILL E. DEKOEKKOEK Digitally Signed 2026.06.17 14:39:19 -07'00' E2555 ENGINEERING GEOLOGIST

EXPIRES: 05-01-2027

FINAL ELECTRONIC DOCUMENT AVAILABLE UPON REQUEST

OREGON DEPARTMENT OF TRANSPORTATION

OR99: ROGUE RIVER BRIDGE, GOLD HILL SPUR PROJECT
GOLD HILL SPUR HIGHWAY
JACKSON COUNTY

Designer: Jill DeKoekkoek | Reviewer: Colin Cunningham
Drafter: Dan Faas | Checker: N/A

GEOTECHNICAL DATA

SHEET NO. GA02

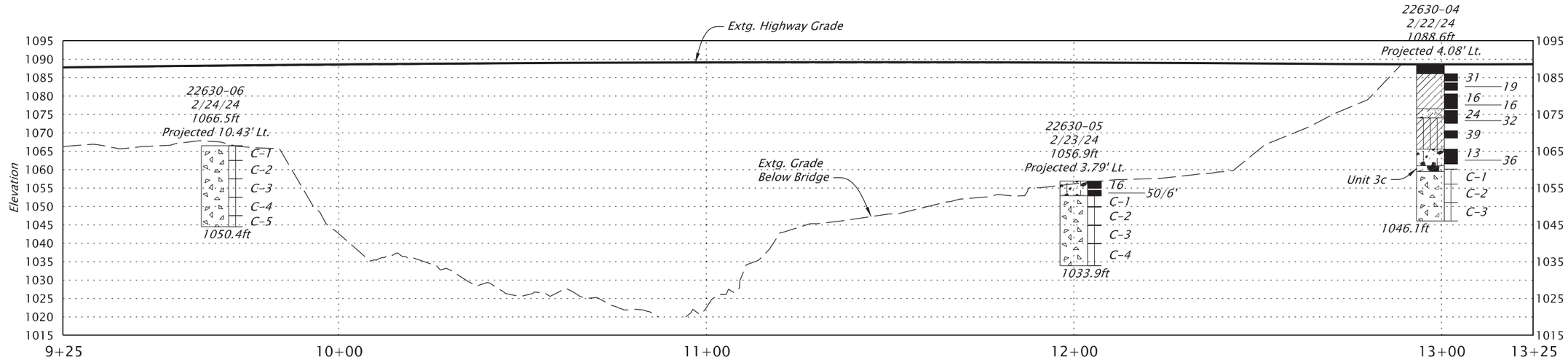

"L" LINE PROFILE STA.9+25-13+25

Horizontal Scale 1" =30'
Vertical Scale 1"=30'

UNIT DESCRIPTIONS

ASPHALTIC CONCRETE(Pavement Section - Unit 1)

Sandy CLAY (CL), low plasticity, damp, medium stiff to hard, some sub-angular to angular gravel(Fill - Unit 2d)

Well graded GRAVEL with clay (GW-GC), moist, very dense, poorly sorted, very fine to fine sand, low plasticity fines(Terrace Deposits - Unit 3c)

Sandy silty to silty sandy GRAVEL (GW-GM), dry to slightly moist, very dense, non plastic to low plasticity fines(Terrace Deposits - Unit 3d)

Clayey to clayey gravelly SAND (SC), damp to wet, dense to very dense, low plasticity fines, fine to coarse, subrounded to subangular gravel(Terrace Deposits - Unit 3e)

Sandy to sandy silty CLAY (ML-CL), medium plasticity, damp to moist, very stiff, some gravel(Terrace Deposits - Unit 3f)

METAVOLCANIC and METAVOLCANICLASTIC ANDESITE, slightly weathered to fresh, medium hard to hard, medium close to widely jointed and fractured with quartz, iron oxide, and manganese oxide mineralization, locally metavolcaniclastic with angular clasts of andesite in an aphanitic groundmass

22630-04

Core	% Rec.	Hardness	R.Q.D.
C1	88	R4	0
C2	100	R4	60
C3	100	R4	90

22630-05

Core	% Rec.	Hardness	R.Q.D.
C1	100	R4	17
C2	100	R4	60
C3	100	R4	70
C4	100	R4	100

22630-06

Core	% Rec.	Hardness	R.Q.D.
C1	100	R4	0
C2	90	R4	0
C3	100	R4	60
C4	100	R4	40
C5	100	R4	50

GENERAL NOTES:

1. *Geotechnical data shown on this drawing are a consolidation of information and/or revision in terminology from the drill logs. Estimated groundwater levels, if provided, are for reference only; the absence of a groundwater symbol may indicate that groundwater was not specifically measured. More detailed subsurface data is available on the drill logs in the geotechnical report, which is available from the Engineer.*
2. *In accordance with ASTM D1586, N values are reported for an interval of 1 ft. except as noted.*

LEGEND

▽	=	Groundwater level
00.00'	=	Elevation
MM/DD/YY	=	Date of measurement
C-1	=	Core sample
RQD	=	Rock Quality Designation
50/1st #"	=	Standard Penetration Test refusal length
■ 24	=	Standard Penetration Test - N value

See sheet GA01 for Plan

CERTIFIED OREGON JILL E. DEKOEKKOEK Digitally Signed 2026.06.17 14:39:59 -07'00' E2555 ENGINEERING GEOLOGIST

EXPIRES: 05-01-2027

FINAL ELECTRONIC DOCUMENT AVAILABLE UPON REQUEST

OREGON DEPARTMENT OF TRANSPORTATION

OR99: ROGUE RIVER BRIDGE, GOLD HILL SPUR PROJECT
GOLD HILL SPUR HIGHWAY
JACKSON COUNTY

Designer: Jill DeKoekkoek | Reviewer: Colin Cunningham
Drafter: Dan Faas | Checker: N/A

GEOTECHNICAL DATA

SHEET NO. GA03

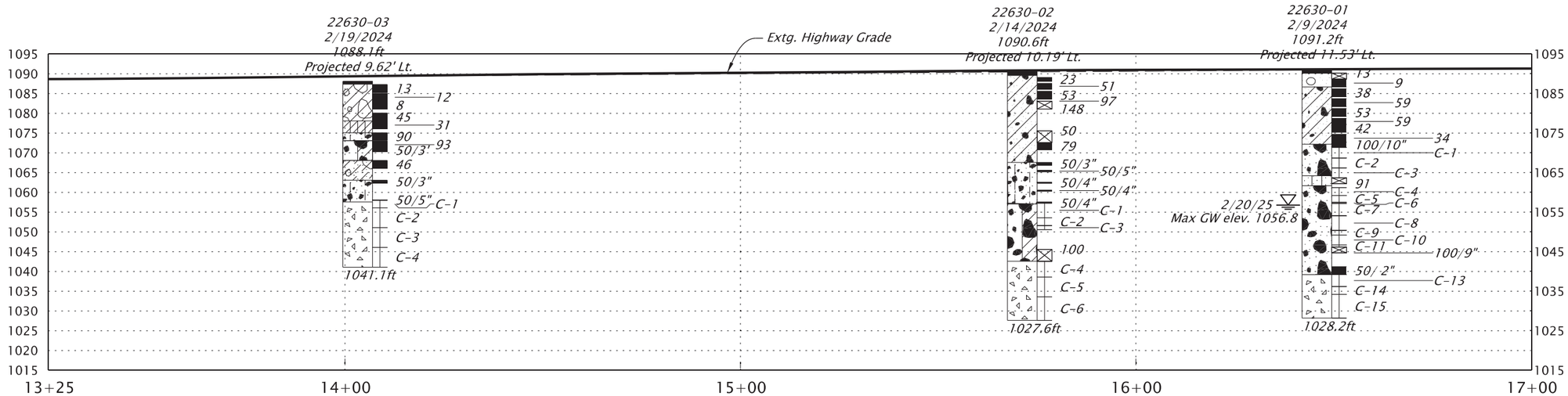

"L" LINE PROFILE STA.13+25-17+00

Horizontal Scale 1" = 30'
Vertical Scale 1"=30'

UNIT DESCRIPTIONS

ASPHALTIC CONCRETE(Pavement Section - Unit 1)

Clayey gravelly SAND to Clayey SAND with gravel (SC), moist, loose to medium dense, fine to medium sand, rounded gravel(Fill - Unit 2a)

Well graded GRAVEL with clay (GW-GC), dry to moist, loose to very dense, fine to coarse sub-angular to rounded gravel, low plasticity fines, some cobbles(Fill - Unit 2b)

Clayey GRAVEL with sand (GC), moist to wet, medium dense, sub-rounded to sub-angular gravel, low to medium plasticity fines(Fill - Unit 2c)

Well graded GRAVEL with cobbles (GW), rounded to subrounded(Terrace Deposits - Unit 3a)

Silty SAND (SM), moist, very dense, very fine to fine sand, low plasticity fines(Terrace Deposits - Unit 3b)

Well graded GRAVEL with clay (GW-GC), moist, very dense, poorly sorted, very fine to fine sand, low plasticity fines(Terrace Deposits - Unit 3c)

Sandy silty to silty sandy GRAVEL (GW-GM), dry to slightly moist, very dense, non plastic to low plasticity fines(Terrace Deposits - Unit 3d)

Clayey to clayey gravelly SAND (SC), damp to wet, dense to very dense, low plasticity fines, fine to coarse, subrounded to subangular gravel(Terrace Deposits - Unit 3e)

Sandy to sandy silty CLAY (ML-CL), medium plasticity, damp to moist, very stiff, some gravel(Terrace Deposits - Unit 3f)

METAVOLCANIC and METAVOLCANICLASTIC ANDESITE, slightly weathered to fresh, medium hard to hard, medium close to widely jointed and fractured with quartz, iron oxide, and manganese oxide mineralization, locally metavolcaniclastic with angular clasts of andesite in an aphanitic groundmass

GENERAL NOTES:

1. *Geotechnical data shown on this drawing are a consolidation of information and/or revision in terminology from the drill logs. Estimated groundwater levels, if provided, are for reference only; the absence of a groundwater symbol may indicate that groundwater was not specifically measured. More detailed subsurface data is available on the drill logs in the geotechnical report, which is available from the Engineer.*
2. *In accordance with ASTM D1586, N values are reported for an interval of 1 ft. except as noted.*

LEGEND

▽	=	Groundwater level
00.00'	=	Elevation
MM/DD/YY	=	Date of measurement
C-1	=	Core sample
RQD	=	Rock Quality Designation
50/1st #"	=	Standard Penetration Test refusal length
■ 24	=	Standard Penetration Test - N value
⊠ 15	=	Oversized sampler - blowes per foot (modified California) - blow count

22630-01

Core	% Rec.	Hardness	R.Q.D.
C1	0	R4	0
C2	0	R4	0
C3	0	R4	0
C4	0	R4	0
C5	0	R4	0
C6	0	R4	0
C7	0	R4	0
C8	0	R4	0
C9	0	R4	0
C10	0	R4	0
C11	0	R4	0
C13	100	R4	10
C14	100	R4	0
C15	100	R4	30

22630-02

Core	% Rec.	Hardness	R.Q.D.
C1	100	R4	0
C2	0	R4	0
C3	0	R4	0
C4	50	R4	0
C5	98	R4	71
C6	100	R4	100

22630-03

Core	% Rec.	Hardness	R.Q.D.
C1	100	R4	70
C2	90	R4	80
C3	100	R4	60
C4	100	R4	60

See sheet GA01 for Plan

CERTIFIED OREGON JILL E. DEKOEKKOEK Digitally Signed 2026.06.17 14:40:31 -07'00' E2555 ENGINEERING GEOLOGIST

EXPIRES: 05-01-2027

OREGON DEPARTMENT OF TRANSPORTATION

OR99: ROGUE RIVER BRIDGE, GOLD HILL SPUR PROJECT
GOLD HILL SPUR HIGHWAY
JACKSON COUNTY

Designer: Jill DeKoekkoek | Reviewer: Colin Cunningham
Drafter: Dan Faas | Checker: N/A

GEOTECHNICAL DATA

SHEET NO. GA04

FINAL ELECTRONIC DOCUMENT AVAILABLE UPON REQUEST

59V-007

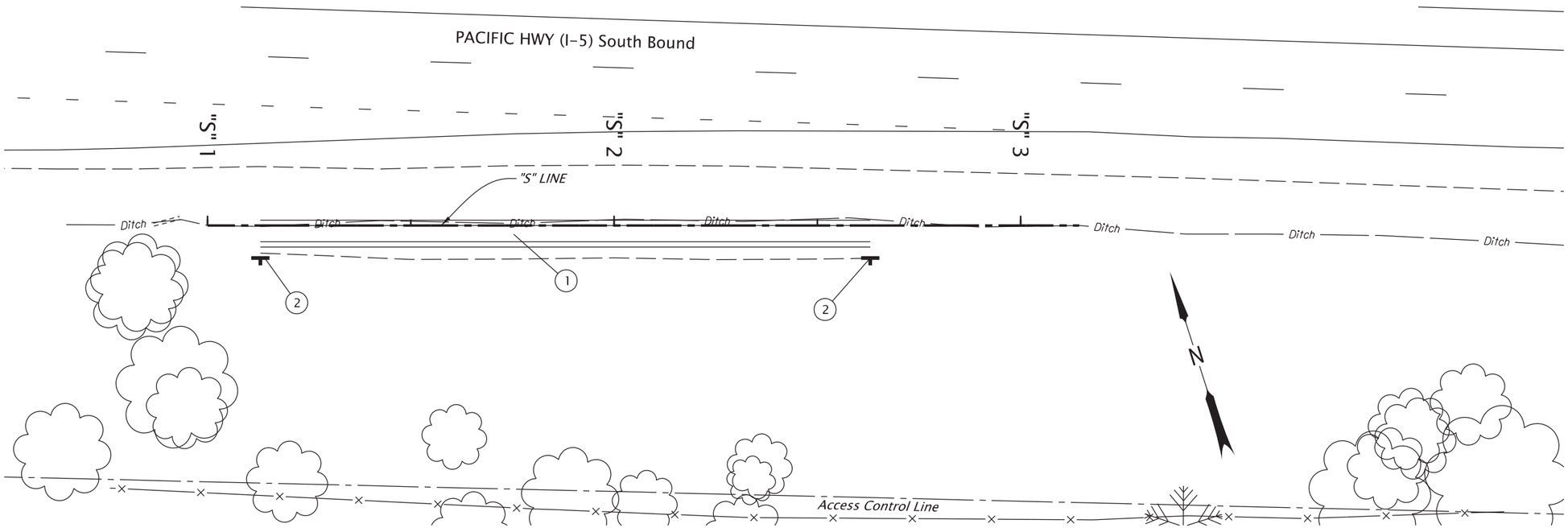

1. Sta. "S" 1+13.00 to Sta. 2+63.00, Rt. Const. water quality swale D00749 (For details, see sht. HA02)
2. Inst. I.D. marker (Type S2) - 2 (See std. dwg. No. RD399)

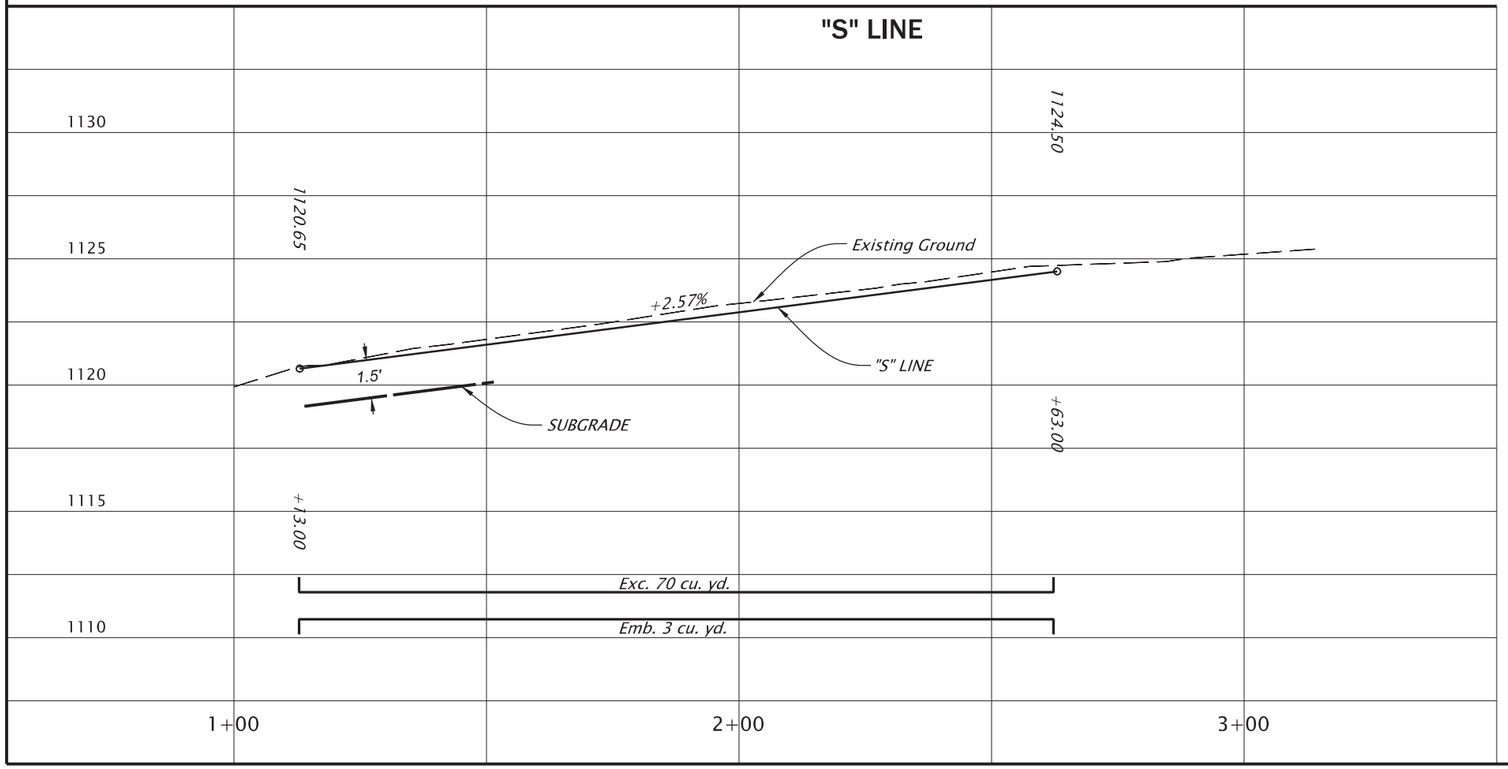

REGISTERED PROFESSIONAL ENGINEER
60211PE
Digitally Signed 2026.06.30 10:49:50 -07'00'
OREGON
JAN. 04, 2010
RICHARD C. CARSON
RENEWS: 12-31-2027

FINAL ELECTRONIC DOCUMENT AVAILABLE UPON REQUEST

OREGON DEPARTMENT OF TRANSPORTATION

OR99: ROGUE RIVER BRIDGE, GOLD HILL SPUR PROJECT
GOLD HILL SPUR HIGHWAY
JACKSON COUNTY

Designer: Richard Carson | Reviewer: Jered Carpenter
Drafter: David Knox | Checker: Chris Zelmer

STORMWATER PLAN

SHEET NO. HA01

WATER QUALITY SWALE DETAILS

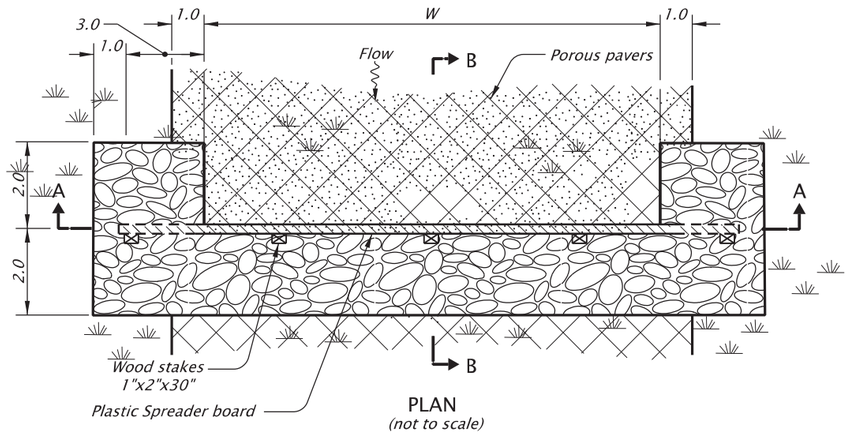

PLAN
(not to scale)

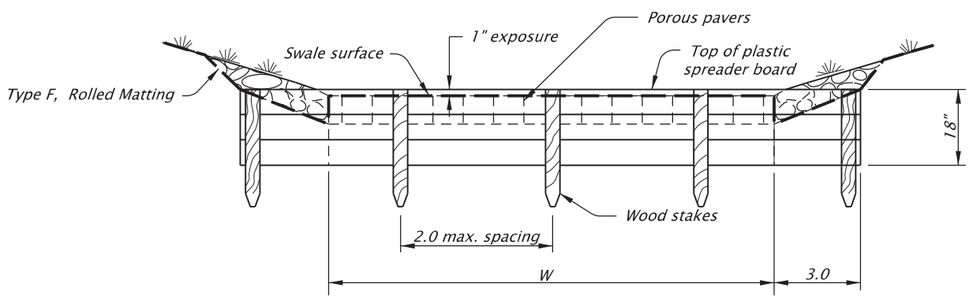

SECTION A-A
(not to scale)

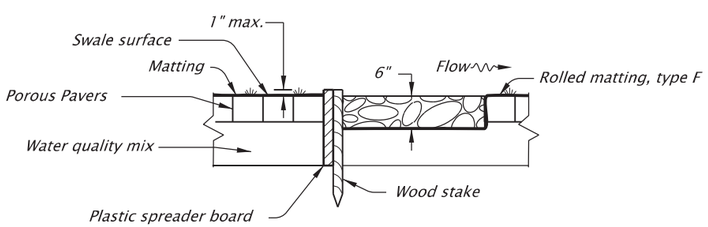

SECTION B-B
(not to scale)

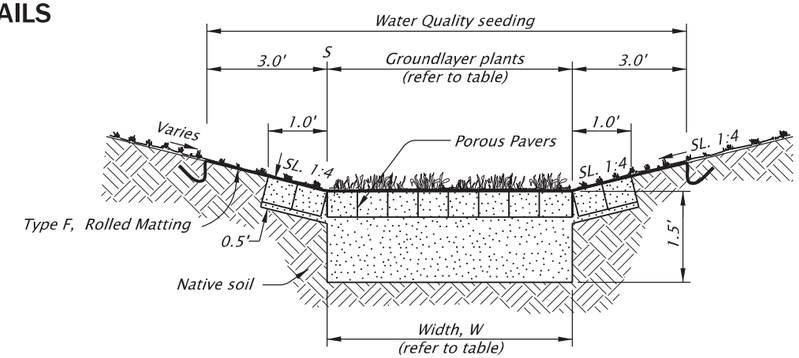

TYPICAL SECTION
(not to scale)

BIOFILTRATION SWALE DATA

Facility Name	Plan Sheet & Note #	STA. To STA.	W (ft.)	Longitudinal Slope (ft./ft.)	Side Slope Left (V:H)	Side Slope Right (V:H)	DFI
Water Quality Swale	HA01, note 1	STA 1+13.0 TO STA 2+63.0	4	0.026	1:4	1:4	D00749

GROUNDLAYER PLANT PLUGS

Scientific Name	Common Name	Type	Spacing	Swale Quantity D00749
Danathonia Californica	California Oatgrass	Plugs	1 per 2 sq. ft.	300
Bromus Sitchensis var. Sarinatus	California Brome	Plugs	1 per 2 sq. ft.	300
Ranunculus Occidentalis	Western Buttercup	Plugs	1 per 2 sq. ft.	300
Festuca Rubra	Red Fescue	Plugs	1 per 2 sq. ft.	300

NOTES:
1. Construct spreader boards level.
2. Extend spreader boards a minimum of 3 feet into side slopes.
3. Reinforce side slopes at flow spreader locally with 1½"-¾" granular drain backfill material. .
4. Fasten wood stakes to spreader boards with 2½" galvanized wood screws every 2" (minimum).
5. Place plastic board flow spreader at beginning and end of swale and every 50 feet throughout length of biofiltration swale.
6. Install matting according to RD1055 channel application. Omit check slots.
7. Install Type S2 markers at beginning and end of biofiltration swale.

1½"-¾" Granular Drain Backfill Material

Water quality mix (and swale excavation pay limit)

Note: All dimensions are in feet unless otherwise noted.

REGISTERED PROFESSIONAL ENGINEER
60211PE
Digitally Signed 2026.06.30 10:51:53 -07'00'
OREGON
JAN. 04, 2010
RICHARD C. CARSON
RENEWS: 12-31-2027
FINAL ELECTRONIC DOCUMENT AVAILABLE UPON REQUEST

OREGON DEPARTMENT OF TRANSPORTATION

OR99: ROGUE RIVER BRIDGE, GOLD HILL SPUR PROJECT
GOLD HILL SPUR HIGHWAY
JACKSON COUNTY

Designer: Richard Carson
Reviewer: Jered Carpenter
Drafter: David Knox
Checker: Chris Zelmer

DETAILS

SHEET NO. HA02

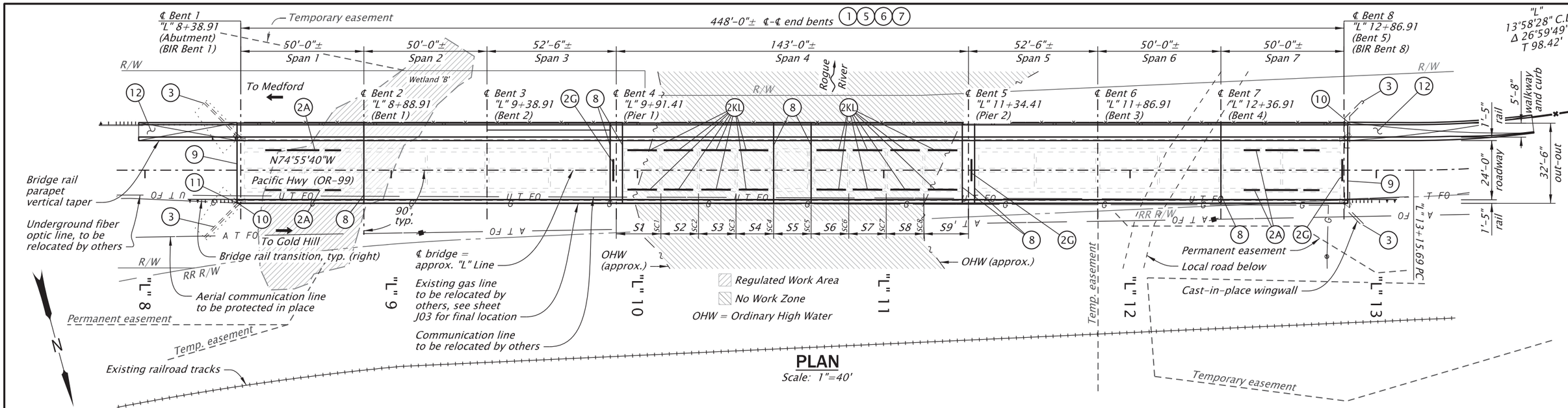

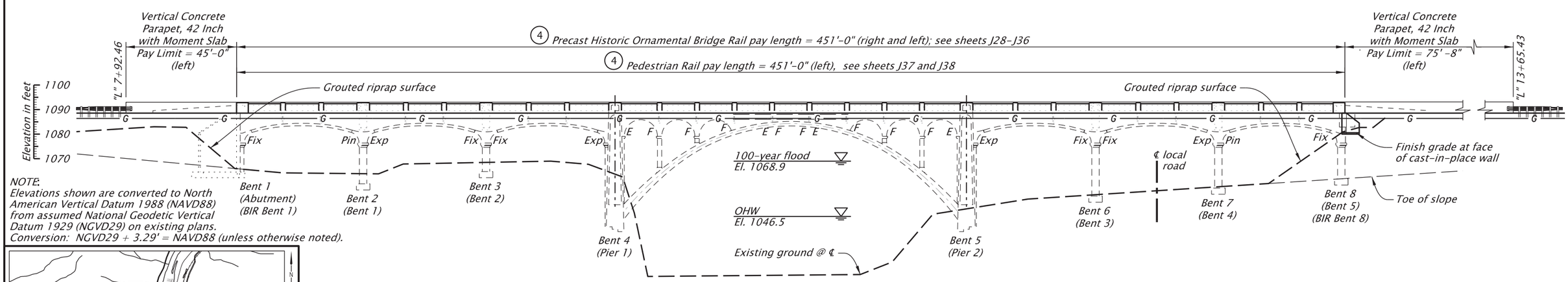

NOTE:
Elevations shown are converted to North American Vertical Datum 1988 (NAVD88) from assumed National Geodetic Vertical Datum 1929 (NGVD29) on existing plans.
Conversion: NGVD29 + 3.29' = NAVD88 (unless otherwise noted).

ELEVATION
Scale: 1"=40'

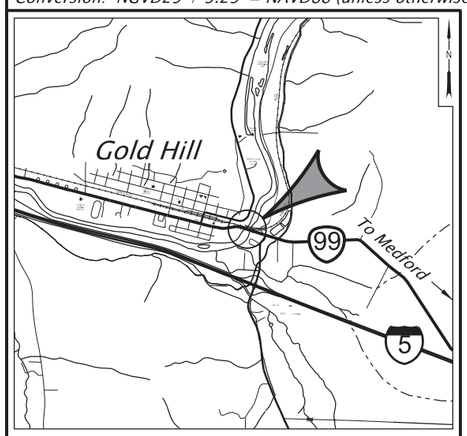

LOCATION MAP
Township 36 S, Range 03 W, Section 22, WM
Longitude 42.43083°N, Latitude 123.04344°W

WORK ITEMS

1. Remove existing bridge deck and top portion of wingwalls, as shown.
2A. Strengthen Beam "A" with Titanium System, 0.75" dia., see sheet J15 for details.
2G. Strengthen Beam "G" with Titanium System, 0.625" dia., see sheet J16 for details.
2KL. Strengthen Beams "K" and "L" with Titanium System, 0.625" dia., see sheet J17 for details.
3. Construct wingwall modifications, see sheets J18-J24 for details.
4. Provide Temporary Bridge Support Spans 2 to 6. Construct widened deck, Pedestrian Rail (see sheets J37-J38), and Precast Historic Ornamental Bridge Rail (see sheets J28-J36).
5. Inject and seal cracks in girders and crossbeams, see sheet J06.
6. Repair damaged concrete in girders and crossbeams. See drawings BR500 and BR505.
7. Apply architectural coating on wingwalls and exterior girder fascias, see sheet J39.
8. Install poured joint seal, see sheet J05 for details.
9. Construct control joint.
10. Install bridge ID markers, see sheet J02 and drawing BR195 for details.
11. Remove and protect bridge plaque. Reinstall on "Precast Historic Ornamental Bridge Rail", see sheet J30 for details.
12. Construct Vertical Concrete Parapet, 42" with moment slab, see sheets J25-J26 for details.

IF THIS MEASURES 1 INCH THEN DRAWING IS TO SCALE

ACCOMPANIED BY DRAWINGS:
J02-J39; JA01-JA08; JB01-JB05; JC01-JC06
BR140, BR195, BR200, BR203, BR222, BR500, BR505

NOT FOR CONSTRUCTION.
INFORMATIONAL DRAWINGS:
3192-3197, 3256

STRUCTURE NO.	00576
BDS DWG NO.	114161
CALC. BOOK	7777
HWY: 486	M.P.: 2.65
COUNTY	Jackson
DATE	JUNE 2026

REGISTERED PROFESSIONAL ENGINEER
56148PE
DIGITALLY SIGNED 2026.06.25 06:06:53-07'00'
OREGON
JAN. 15, 2002
ROBERT E. GRUBBS
RENEWS: 06-30-2027

OREGON DEPARTMENT OF TRANSPORTATION

Rogue R_Hwy 486 (Gold Hill Spur)

OR99: ROGUE RIVER BRIDGE, GOLD HILL SPUR PROJECT
GOLD HILL SPUR HIGHWAY
JACKSON COUNTY

Designer: Robert E. Grubbs, PE
Reviewer: Zachary T. Béget, PE
Drafter: J. Tillman
Checker: Luke W. Teubel, PE

PLAN and ELEVATION

SHEET NO. J01

FINAL ELECTRONIC DOCUMENT AVAILABLE UPON REQUEST

GENERAL NOTES

DESIGN NOTES

Bridge 00576 Modernization Design Category work consists of deck replacement and widening. Design is in accordance with the 2020, 9th edition of the "AASHTO LRFD Bridge Design Specifications" and October 2023 edition of the "Oregon Bridge Design Manual" as modified by the following: Design Exception 22630-02 for Non-Standard Bridge Rail.

Design of all new elements (including the reinforced concrete deck) includes an allowance of 25psf for future wearing surface, 370 lb/ft for combined utility loads and all the following Live Load:

Service and Strength I Limit States:
HL-93: Design truck (or trucks per LRFD 3.6.1.3) or the design tandems and the design lane load.

Strength II Limit State:
ODOT Type STP-5BW Permit truck
ODOT Type STP-4E Permit truck
EV3 truck

Design of strengthening includes 370 lb/ft for combined utility loads and all the following Live Loads:

Strength II Limit State:
ODOT Type OR-STP-4D Permit Truck
ODOT Type STP-5BW Permit truck
ODOT Type STP-4E Permit truck
EV3 truck

CONSTRUCTION NOTES

Provide all materials and perform all work according to the "Oregon Standard Specifications for Construction 2024."

Provide titanium alloy reinforcement with the mechanical properties shown in Section 00567.10.

Provide epoxy coated deck reinforcement according to ASTM Specification A706, or AASHTO Specification M31 (ASTM A615) Grade 80.

Provide all other reinforcing steel according to ASTM Specification A706, or AASHTO M31 (ASTM A615) Grade 60. Epoxy coat all reinforcing extending from deck into curbs and bridge rails. Use the following splice lengths:

Reinforcing Splice Lengths (Class B) Grade 60 f'c = 3.3 ksi, λ_{rc} = 0.4, 2in min. concrete clear cover										
Bar Size	#3	#4	#5	#6	#7	#8	#9	#10	#11	#14 and #18
Uncoated	1'-4"	1'-9"	2'-2"	2'-7"	3'-0"	3'-5"	3'-10"	4'-4"	4'-10"	Not permitted
Coated	2'-0"	2'-7"	3'-3"	3'-11"	4'-7"	5'-2"	5'-10"	6'-7"	7'-4"	Not permitted

Reinforcing Splice Lengths (Class B) Grade 60 f'c = 4.5 ksi, λ_{rc} = 0.4, 2in min. concrete clear cover										
Bar Size	#3	#4	#5	#6	#7	#8	#9	#10	#11	#14 and #18
Coated	1'-8"	2'-3"	2'-10"	3'-4"	3'-11"	4'-5"	5'-0"	5'-8"	6'-3"	Not permitted

Reinforcing Splice Lengths (Class B) Grade 80 f'c = 4.5 ksi, λ_{rc} = 0.4, 2in min. concrete clear cover										
Bar Size	#3	#4	#5	#6	#7	#8	#9	#10	#11	#14 and #18
Coated	2'-3"	3'-0"	3'-9"	4'-5"	5'-2"	5'-11"	6'-8"	7'-6"	8'-4"	Not permitted

Increase all splice lengths 30% for horizontal or nearly horizontal bars so placed that more than 1'-0" of fresh concrete is cast below the bar.

Splice reinforcing steel at alternate bars, staggered at least one splice length or as far as possible, unless shown otherwise.

Provide and install resin bonded anchors with epoxy resin from the QPL. The characteristic bond stress used in the design is 1200 psi. The minimum pullout strength and minimum embedment is as shown in Section 00535. Install anchors according to the manufacturer's recommendations.

Support the bottom mat reinforcing steel from the forms with precast mortar blocks at 2'-0" maximum each way. Support the top mat of reinforcing steel from the bottom mat of reinforcing steel with wire bar supports as shown in Chapter 3 of the "CRSI Manual of Standard Practice" (SBU, BBU, or CHCU). Place wire bar supports at 2'-0" maximum.

Place bars 2" clear of the nearest face of concrete, unless shown otherwise.

Provide Deck Concrete, Class HPC4500(IC) - 1½.

Provide General Structural Concrete, Class 3300 1 or ¾ for all other concrete.

Dimensions and geometry of existing features shown are based on a combination of Informational Drawings and project survey data and are considered approximate (±). Field verify critical dimensions prior to ordering or fabricating materials. Report material discrepancies to the Engineer and obtain approval for changes before proceeding.

Expect timber form work from original construction to be present in spandrel Spans S4, S5, and S6, and inside of Bents 4 and 5.

APPLICATION OF LIVE LOAD

STRENGTH LIMIT STATES

Strength I
AASHTO LRFD HL-93

Strength II
OR-STP-5BW
OR-STP-4E
EV-3

SERVICE LIMIT STATES

Service I
AASHTO LRFD HL-93

33% dynamic load allowance used for all live loads.

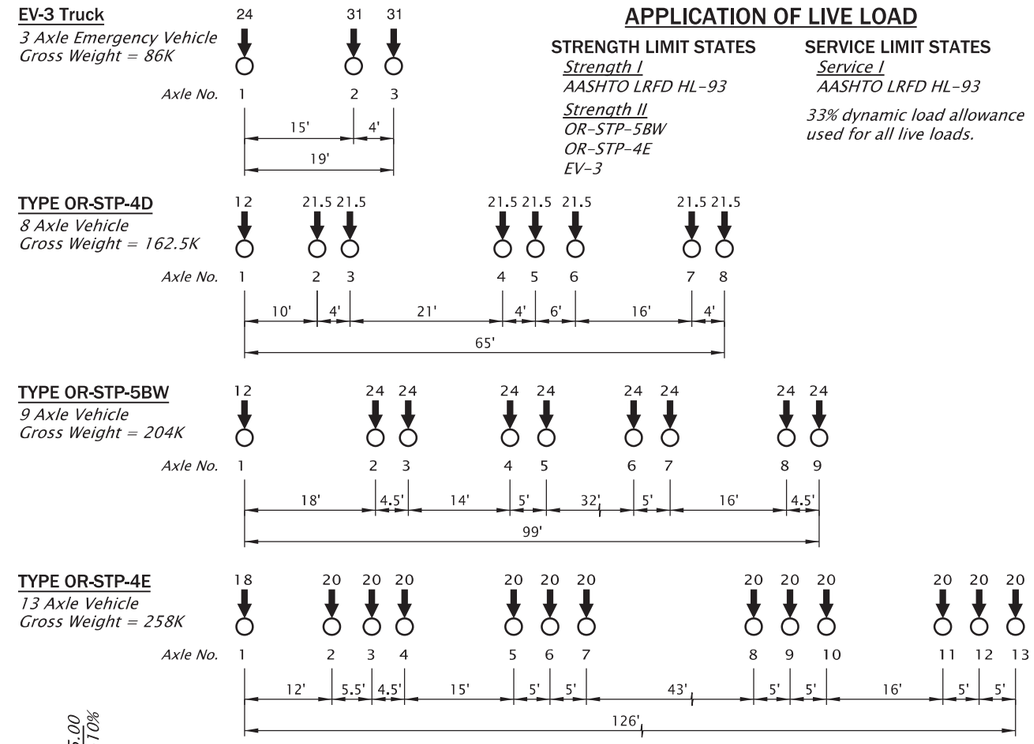

OREGON PERMIT LOADS FOR STATE OWNED BRIDGES

NOTE: units are kips and feet.

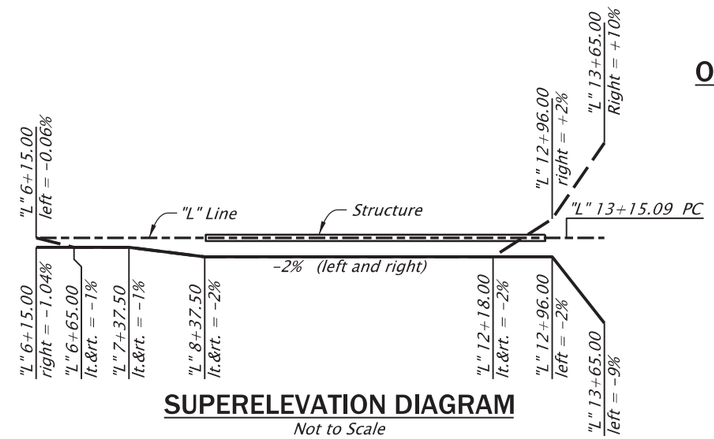

SUPERELEVATION DIAGRAM

Not to Scale

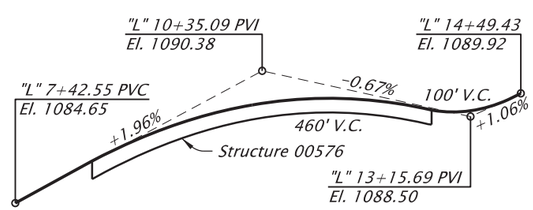

GRADELINE DIAGRAM

Not to Scale

BRIDGE IDENTIFICATION MARKER TABLE

Phone Number (Agency Dispatch Center)	(541) 858-3103
Route (RTE)	99
Highway No. (HWY)	486
Milepoint (MP)	2.65
Bridge No. (BR)	00576
Structure Name	Gold Hill Bridge over the Rogue River

See drawing BR195 for details.

See sheet J01 for Accompanied By Drawings and Informational Drawings.

IF THIS MEASURES 1 INCH THEN DRAWING IS TO SCALE

STRUCTURE NO. 00576
BDS DWG NO. 114162
CALC. BOOK 7777
HWY: 486
M.P.: 2.65
COUNTY Jackson
DATE JUNE 2026

REGISTERED PROFESSIONAL ENGINEER
56148PE
DIGITALLY SIGNED 2026.06.03 07:03:20-07'00'
OREGON
JAN. 15, 2002
ROBERT E. GRUBBS
RENEWS: 06-30-2027

FINAL ELECTRONIC DOCUMENT AVAILABLE UPON REQUEST

OREGON DEPARTMENT OF TRANSPORTATION

Rogue R_Hwy 486 (Gold Hill Spur)
OR99: ROGUE RIVER BRIDGE, GOLD HILL SPUR PROJECT
GOLD HILL SPUR HIGHWAY
JACKSON COUNTY

Designer: Robert E. Grubbs, PE
Reviewer: Zachary T. Béget, PE
Drafter: J. Tillman
Checker: Luke W. Teubel, PE

GENERAL NOTES
SHEET NO. J02

BRIDGE REMOVAL NOTES

1) Remove deck concrete between beams, bents, spandrel walls, and diaphragms in sections using full-depth saw cuts, as shown.

2) Remove concrete over beams, bents, spandrel walls, and diaphragms by saw cutting at the beam lines as shown. Complete removal using chipping hammers not exceeding a nominal 15-pound class.

3) Protect and preserve all existing reinforcing bars extending from existing structural elements into the existing deck.

4) Protect and preserve existing dentils and corbels.

5) Roughen all construction joints between existing and new concrete according to Section 00540.43(e).

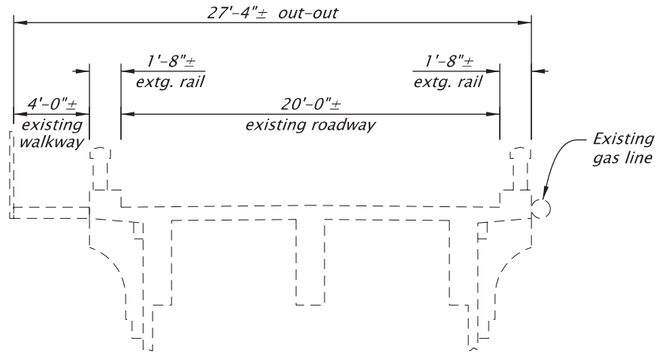

(typical approach span shown, arch span similar)

EXISTING

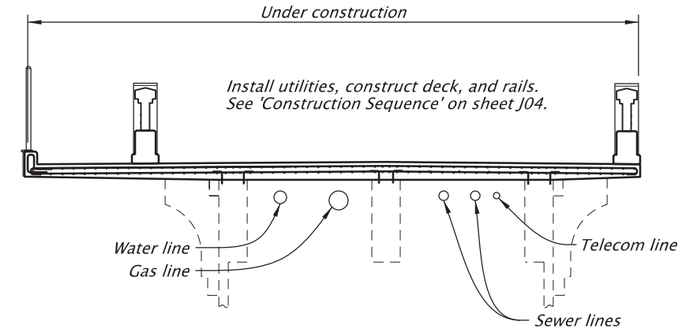

STAGE 2B

UTILITY INSTALLATION SEQUENCE

See sheets J09-J11 for details.

1. Remove portion of deck as shown in Stage 1.
2. Remove rectangular portions of diaphragms, crossbeams, and Bent 1 to facilitate gas line casing placement, as shown.
3. Install 14" outside diameter casing for 10" gas line installation in rectangular slots, supported on temporary shims.
4. Core 4" diameter hole in Bent 8 to facilitate gas line placement. See sheet J11 for details.
5. Allow shared access to job site for gas line contractor to install and charge 10" diameter gas line and retire existing gas line located on north side of structure (8 week estimated duration).
6. Remove deck and rectangular portions of diaphragms, crossbeams, and Bent 1 as shown to facilitate sewer lines and water line placement. See J04 for phased deck removal and replacement.
7. Core 5" diameter holes through diaphragms, crossbeams, and Bent 1 as shown to facilitate installation of telecom conduit.
8. Install two 12.75" outside diameter casings for sewer lines, 4" diameter casing for telecom line, and 14" outside diameter casing for water line in phases, as shown.
9. Install two 6" diameter sewer lines and 8" diameter water line.
10. Allow shared access to job site to Rogue Valley Sewer Service (RVSS) representatives for sewer line inspection.
11. Place reinforcement and form, and place concrete in diaphragms, crossbeams, and Bent 1 to develop access holes.
12. Patch 4" diameter hole in Bent 8 used for gas line placement, see sheet J11 for details.
13. Construct deck and concrete inserts for all utility lines. See sheets J11, JA-, JB-, and JC-series for details,
14. Install hangers for gas line, water line, telecom line, and sewer line, as shown. Remove shims from under gas line. See sheets J11, JA-, JB-, and JC-series for details,
15. Allow shared access to job site to gas line contractor for installation of pipe anchor support and expansion joint.

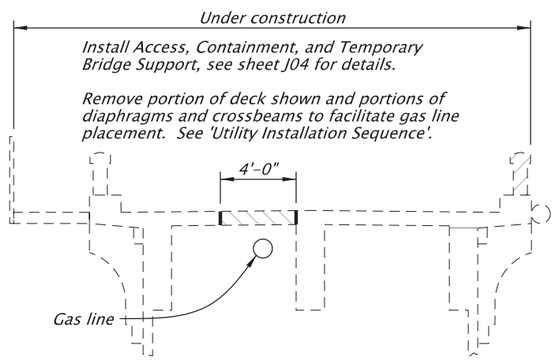

STAGE 1

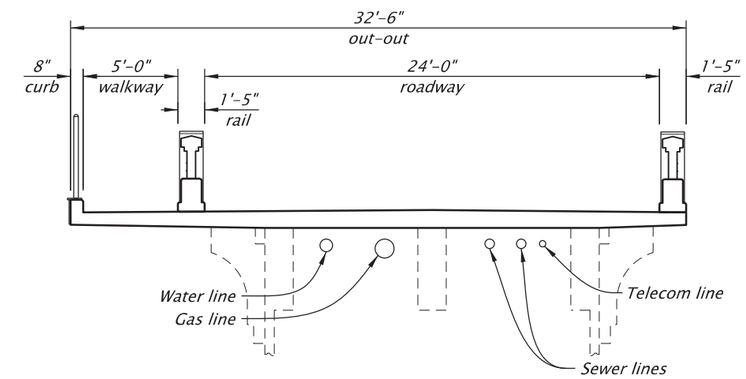

FINAL

STAGING SECTIONS

Scale: 1/8" = 1'-0"

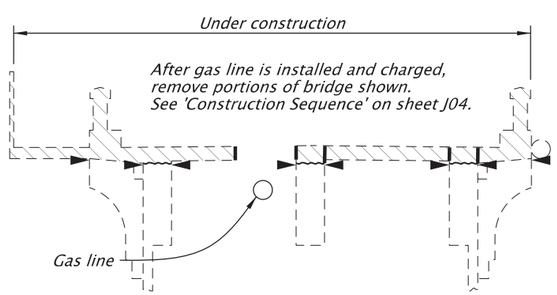

STAGE 2A

KEY

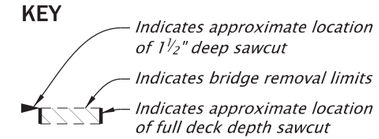

See sheet J01 for Accompanied By Drawings and Informational Drawings.

IF THIS MEASURES 1 INCH THEN DRAWING IS TO SCALE

STRUCTURE NO.	00576
BDS DWG NO.	114163
CALC. BOOK	7777
HWY: 486	M.P.: 2.65
COUNTY	Jackson
DATE	JUNE 2026

REGISTERED PROFESSIONAL ENGINEER
56148PE
DIGITALLY SIGNED 2026.06.03 07:04:05-07'00'
OREGON
JAN. 15, 2002
ROBERT E. GRUBBS
RENEWS: 06-30-2027

FINAL ELECTRONIC DOCUMENT AVAILABLE UPON REQUEST

OREGON DEPARTMENT OF TRANSPORTATION

Rogue R_Hwy 486 (Gold Hill Spur)

OR99: ROGUE RIVER BRIDGE, GOLD HILL SPUR PROJECT
GOLD HILL SPUR HIGHWAY
JACKSON COUNTY

Designer: Robert E. Grubbs, PE
Reviewer: Zachary T. Béget, PE
Drafter: J. Tillman
Checker: Luke W. Teubel, PE

STRUCTURE STAGING

SHEET NO. J03

NOTE:
Archaeological Monitoring required for all ground-disturbing activities related to Temporary Work Access, Containment, and Bridge Support installation and removal.

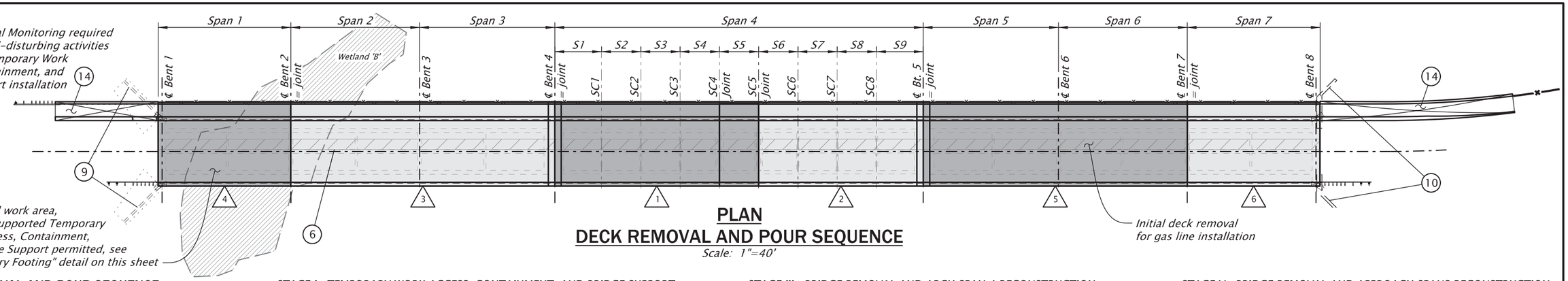

PLAN
DECK REMOVAL AND POUR SEQUENCE
Scale: 1"=40'

DECK REMOVAL AND POUR SEQUENCE

1. *Remove and replace deck in spandrel spans S1-S5.*
2. *Remove and replace deck in spandrel spans S6-S9.*
3. *Remove and replace deck in Spans 2-3.*
4. *Remove and replace deck in Span 1.*
5. *Remove and replace deck in Spans 5-6.*
6. *Remove and replace deck in Span 7.*

NOTE:
Deck removal and Pours 1 and 2 and pours 3, 4, 5, and 6, as shown, may be performed concurrently or sequentially, subject to Engineer's approval.

STAGE I: TEMPORARY WORK ACCESS, CONTAINMENT, AND BRIDGE SUPPORT

(1) *Install temporary work access, containment, and bridge support for all spans. (Do not take load from bridge until traffic is removed)*

(2) *Perform Beam 'A' Strengthening, see sheet J15.*

(3) *Perform Beam 'G' Strengthening, see sheet J16.*

STAGE II: GAS LINE INSTALLATION

(4) *Install Traffic Control Measures and close bridge to all traffic.*

(5) *Adjust bridge support to take load from bridge.*

(6) *Remove portions of deck, crossbeams and diaphragms, as shown on J03, J09, J10, and J11, and install 10" diameter gas line. See J03 for Bridge Removal Notes*

STAGE III: BRIDGE REMOVAL AND ARCH SPAN 4 RECONSTRUCTION

(7) *Remove the deck in spandrel spans S1 to S5. Perform Beam KLLK strengthening in Spans S1 to S4, see sheet J17. Construct Deck in spandrel spans S1 to S5 (Pour 1). Partial removal of span S6 expected for utility conduit placement. See J03 for Bridge Removal Notes*

(8) *Remove deck in spandrel spans S6 to S9. Perform Beam KLLK strengthening in Spans S6 to S9, see sheet J17. Construct deck in spandrel spans S6 to S9 (Pour 2). See J03 for Bridge Removal Notes*

STAGE IV: WINGWALL RECONSTRUCTION

(9) *Construct Wingwall A and B modifications.*

(10) *Remove and reconstruct Wingwall C and Wingwall D.*

STAGE V: BRIDGE REMOVAL AND APPROACH SPANS RECONSTRUCTION

(11) *Remove and replace the deck as shown, pours 3 through 6.*

STAGE VI: BRIDGE RAIL AND CLEANUP

(12) *Construct 'Precast Historic Ornamental Bridge Rail'.*

(13) *Install 'Pedestrian Rail'.*

(14) *Construct Vertical Concrete Parapet, 42 Inch with Moment Slab.*

(15) *Inject and Seal cracks in girders and crossbeams.*

(16) *Perform concrete repair.*

(17) *Apply architectural coating to wingwalls, bents, and exterior girder fascia, as shown. See sheet J39*

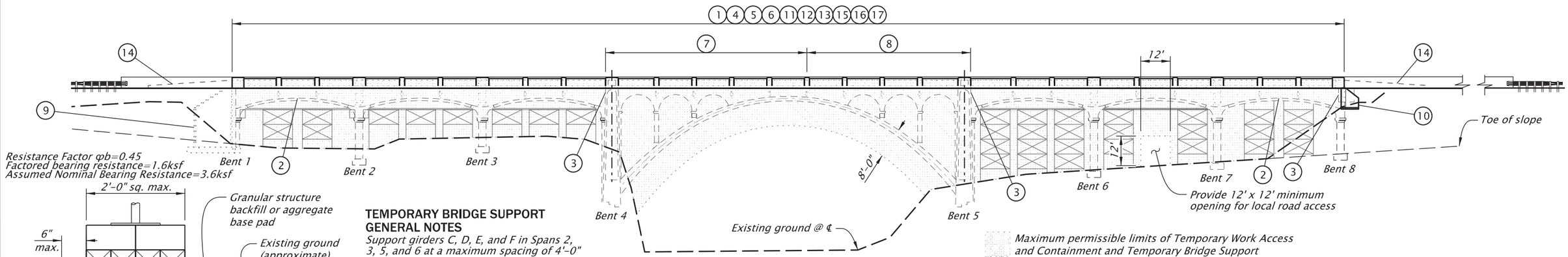

NOTES:
Placed in Regulated Work Area for Temporary Work Access, Containment, and Bridge Support.
Place geotextile on undistrurbed material.
Remove all materials after use.
No more than 12 temporary footings may be placed within regulated work area.
The shown Temporary Work Access, Containment, and Bridge Support Footings are conceptual and depict the maximum allowed.

TEMPORARY WORK ACCESS, CONTAINMENT, AND BRIDGE SUPPORT FOOTING
Scale: 1/2"=1'-0"

TEMPORARY BRIDGE SUPPORT GENERAL NOTES

Support girders C, D, E, and F in Spans 2, 3, 5, and 6 at a maximum spacing of 4'-0" for all Dead Loads and Construction Loads.

Maintain support until deck concrete falsework can be removed.

Support girders K and L in Span 4 at minimum of quarter points of spandrel spans for all Dead Loads and Construction Loads. Maintain support until deck concrete falsework can be removed.

Existing bridge girders, deck, or crossbeams cannot be used to support temporary or construction loads

After traffic removal and prior to deck removal, apply preload at girder support locations such that the total preload per span equals 10% of the girder weight, distributed among supports to transfer load to Temporary Bridge Support and minimize deflection

Continuously monitor vertical displacement of all temporary supports during construction. Provide temporary bridge support that allow for vertical adjustment and adjust as needed to maintain the existing profile.

Temporary structures shown are conceptual and schematic only.

ELEVATION
CONSTRUCTION SEQUENCE
Scale: 1"=40'

See sheet J01 for Accompanied By Drawings and Informational Drawings.

IF THIS MEASURES 1 INCH THEN DRAWING IS TO SCALE

STRUCTURE NO.	00576
BDS DWG NO.	114164
CALC. BOOK	7777
HWY: 486	M.P.: 2.65
COUNTY	Jackson
DATE	JUNE 2026

REGISTERED PROFESSIONAL ENGINEER
56148PE
DIGITALLY SIGNED 2026.06.25 06:06:30-07'00'
OREGON
JAN. 15, 2002
ROBERT E. GRUBBS
RENEWS: 06-30-2027

FINAL ELECTRONIC DOCUMENT AVAILABLE UPON REQUEST

OREGON DEPARTMENT OF TRANSPORTATION

Rogue R_Hwy 486 (Gold Hill Spur)

OR99: ROGUE RIVER BRIDGE, GOLD HILL SPUR PROJECT
GOLD HILL SPUR HIGHWAY
JACKSON COUNTY

Designer: Robert E. Grubbs, PE
Reviewer: Zachary T. Béget, PE
Drafter: J. Tillman
Checker: Luke W. Teubel, PE

CONSTRUCTION SEQUENCE

SHEET NO. J04

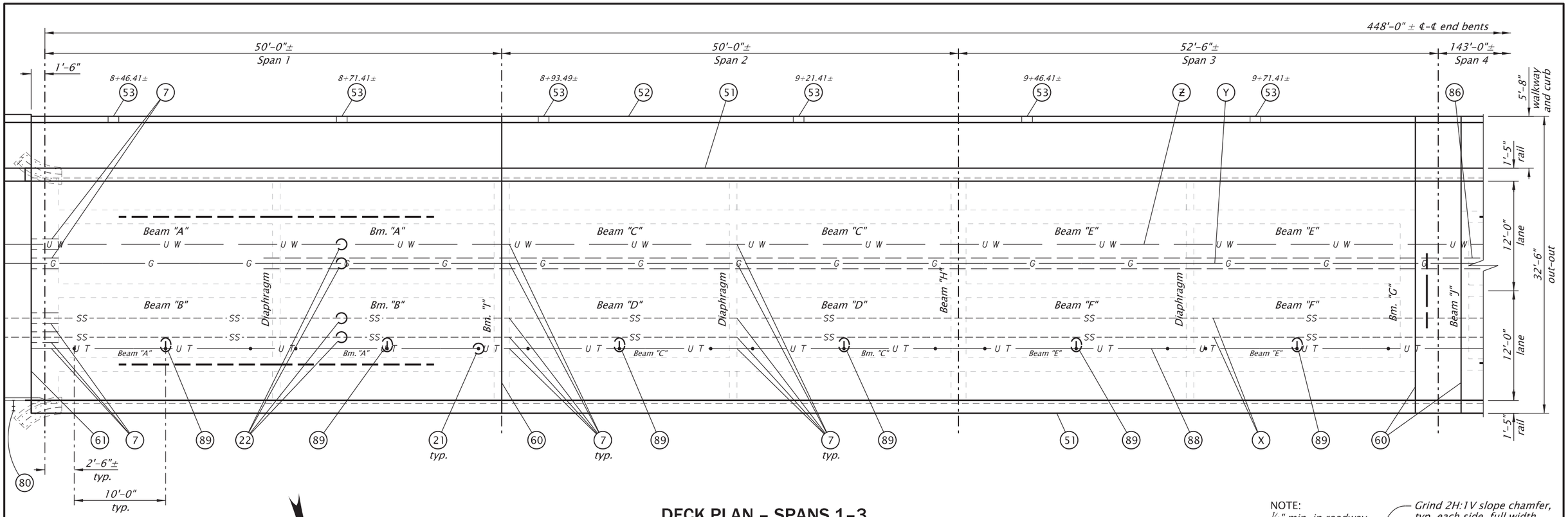

DECK PLAN – SPANS 1–3

Scale: 3/32" = 1'-0"

NOTE:
See sheet J08 for Deck Elevations.

DETAIL REFERENCE NUMBERS

(7) Utility hole through transverse beams, piers, wall, and diaphragms. See sheets J09–J11 for details.

(21) Provide hot-dip galvanized expanded coil concrete inserts with closed back ferrule, threaded for 3/4" dia. threaded rods installed in the deck at 10'-0" max., as shown in DECK PLAN.

(22) Provide hot-dipped galvanized expanded coil concrete inserts with closed back ferrule for sewer-line, gas line, and water line installations. See JA-, JB-, and JC-series for details.

(51) Precast Historic Ornamental Bridge Rail. See sheets J28 to J36 for details.

(52) Pedestrian Rail. See sheets J37–J38 for details.

(53) Install "Curb Scupper", see sheet J27 for details

(60) Install Poured Joint Seal, see details on this sheet and drawing BR140. Joint setting = 1 1/4" at 52°F. Decrease 0.10 for every 10°F above 52°F. Increase 0.10 for every 10°F below 52°F.

(61) Control Joint in ACP wearing surface at bridge ends. Sawcut 1 1/2" deep and fill with hot applied joint sealant.

(80) Bridge Identification Marker, see sheet J02 and drawing BR195 for details.

(85) Place a 12.75" O.D. casing (153'±) for 6" diameter sewer line. See sheets J09–J11 and JB-series sheets for details.

(86) Place a 14" O.D. casing (420'±) for 10" diameter gas line. See sheets J09–J11 and JA-series sheets for details.

(87) Place a 14" O.D. casing (150'±) for water line. See sheets J09–J11 and JC-series sheets for details.

(88) Place a 4" diameter rigid metallic casing with expansion fittings at all expansion joints (8 total) for telecom line. See sheets J09–J11 for details.

(89) Install lateral and longitudinal bracing for 4" diameter rigid metallic casing, see sheet J09 for details.

(X) Install 6" dia. sewer line. See JB-series and sheets J09–J11 for details.

(Y) 10" dia. gas line installed by others. See JA-series and sheets J09–J11 for details.

(Z) Install 8" dia. water line. See JC-series and sheets J09–J11 for details.

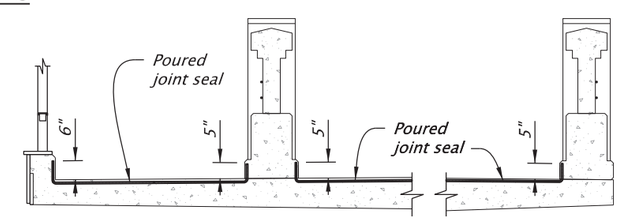

POURED JOINT SEAL PLACEMENT IN PRECAST HISTORIC ORNAMENTAL BRIDGE RAIL

Not To Scale

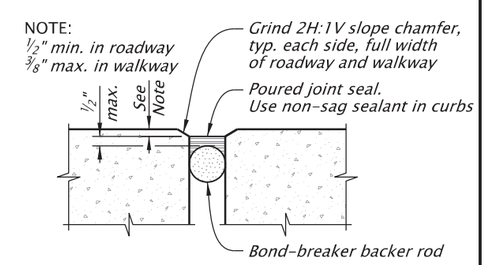

NOTE:
Provide joint seal having a firm, stable, and slip resistant top surface.

POURED JOINT SEAL

Scale: 1 1/2"=1'-0"

See sheet J01 for Accompanied By Drawings and Informational Drawings.

STRUCTURE NO.	00576
BDS DWG NO.	114165
CALC. BOOK	7777
HWY: 486	M.P.: 2.65
COUNTY	Jackson
DATE	JUNE 2026

IF THIS MEASURES 1 INCH THEN DRAWING IS TO SCALE

REGISTERED PROFESSIONAL ENGINEER
56148PE
DIGITALLY SIGNED 2026.06.25 06:07:04-07'00'
OREGON
JAN. 15, 2002
ROBERT E. GRUBBS
RENEWS: 06-30-2027

FINAL ELECTRONIC DOCUMENT AVAILABLE UPON REQUEST

OREGON DEPARTMENT OF TRANSPORTATION

Rogue R_Hwy 486 (Gold Hill Spur)

OR99: ROGUE RIVER BRIDGE, GOLD HILL SPUR PROJECT
GOLD HILL SPUR HIGHWAY
JACKSON COUNTY

Designer: Robert E. Grubbs, PE
Reviewer: Zachary T. Béget, PE
Drafter: J. Tilman
Checker: Luke W. Teubel, PE

DECK PLAN – SPANS 1 - 3

SHEET NO. J05

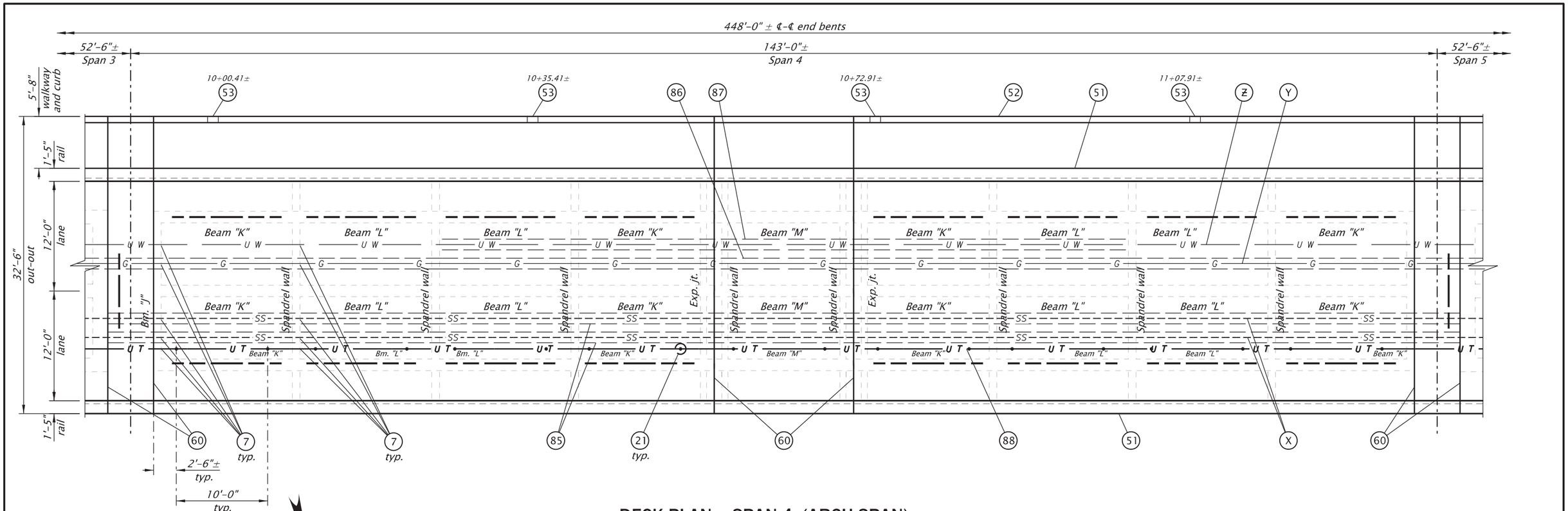

DECK PLAN – SPAN 4 (ARCH SPAN)

Scale: 3/32" = 1'-0"

NOTE:
See sheet J05 for Detail Reference Numbers.

See sheet J08 for Deck Elevations.

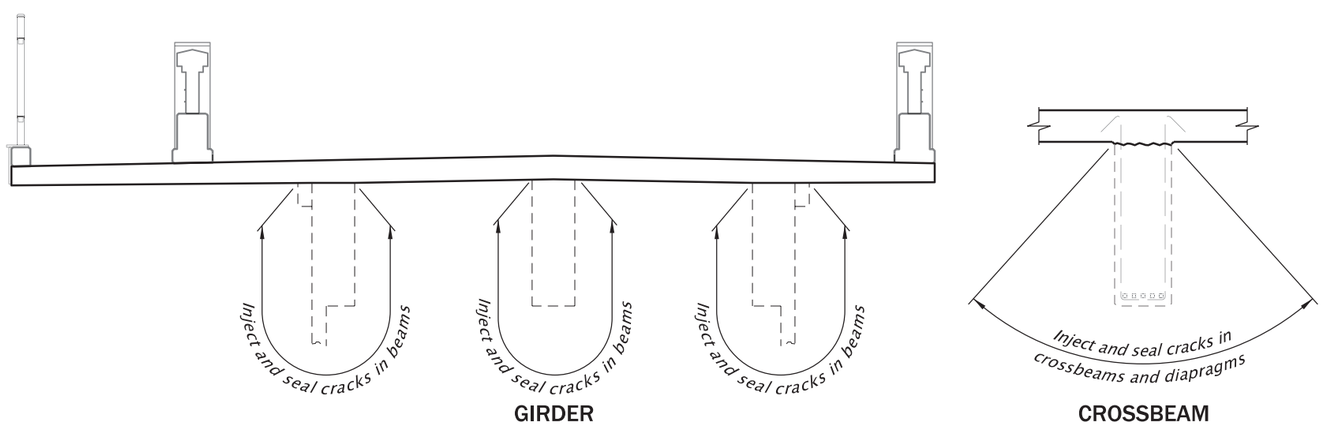

INJECT AND SEAL CRACKS PAY LIMITS

Not To Scale

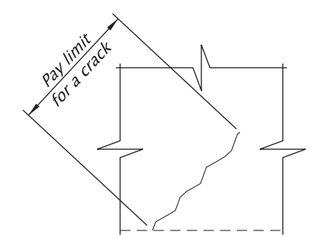

CRACK PAY LIMITS

Not To Scale

See sheet J01 for Accompanied By Drawings and Informational Drawings.

STRUCTURE NO.	00576
BDS DWG NO.	114166
CALC. BOOK	7777
HWY: 486	M.P.: 2.65
COUNTY	Jackson
DATE	JUNE 2026

IF THIS MEASURES 1 INCH THEN DRAWING IS TO SCALE

REGISTERED PROFESSIONAL ENGINEER
56148PE
DIGITALLY SIGNED 2026.06.03 07:06:39-07'00'
OREGON
JAN. 15, 2002
ROBERT E. GRUBBS
RENEWS: 06-30-2027

FINAL ELECTRONIC DOCUMENT AVAILABLE UPON REQUEST

OREGON DEPARTMENT OF TRANSPORTATION

Rogue R_Hwy 486 (Gold Hill Spur)

OR99: ROGUE RIVER BRIDGE, GOLD HILL SPUR PROJECT
GOLD HILL SPUR HIGHWAY
JACKSON COUNTY

Designer: Robert E. Grubbs, PE
Reviewer: Zachary T. Béget, PE
Drafter: J. Tillman
Checker: Luke W. Teubel, PE

DECK PLAN – SPAN 4

SHEET NO. J06

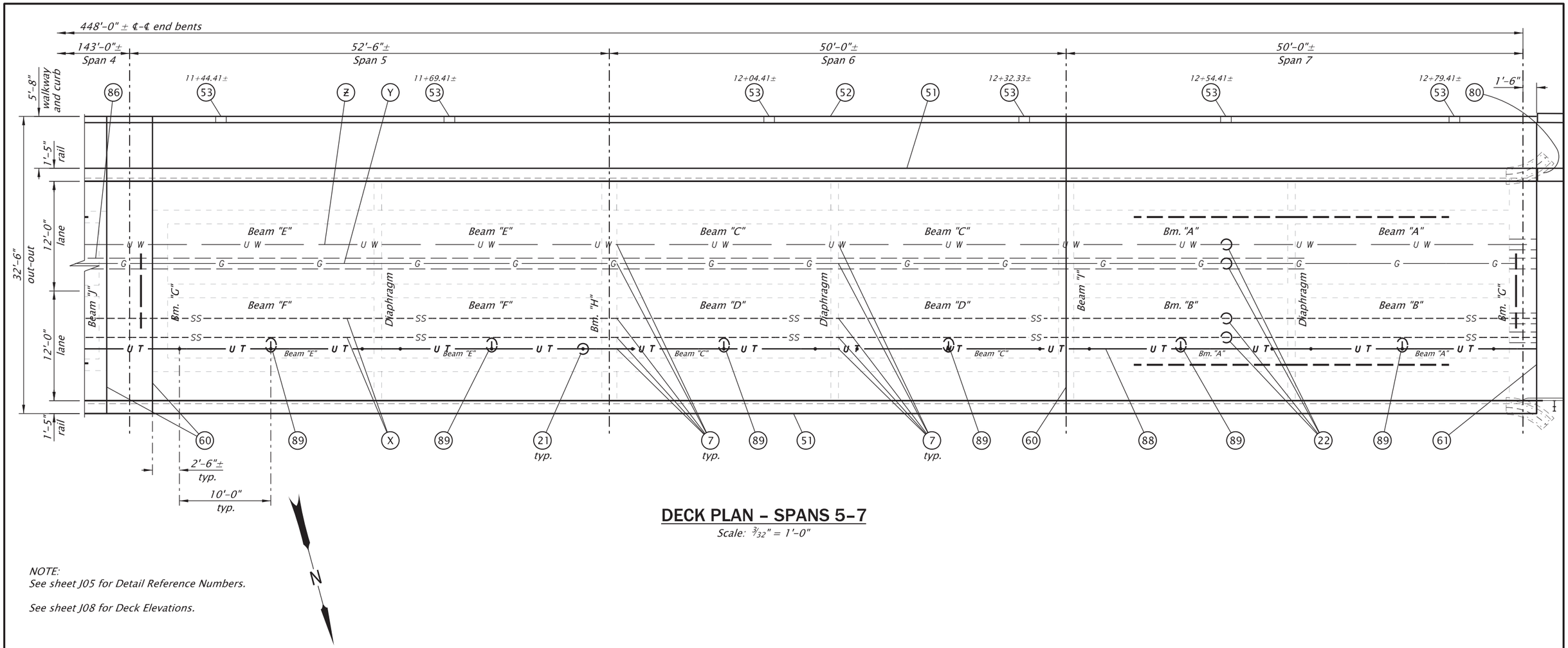

DECK PLAN – SPANS 5–7

Scale: 3/32" = 1'-0"

NOTE:
See sheet J05 for Detail Reference Numbers.

See sheet J08 for Deck Elevations.

See sheet J01 for Accompanied By Drawings and Informational Drawings.

STRUCTURE NO.	00576
BDS DWG NO.	114167
CALC. BOOK	7777
HWY: 486	M.P.: 2.65
COUNTY	Jackson
DATE	JUNE 2026

IF THIS MEASURES 1 INCH THEN DRAWING IS TO SCALE

REGISTERED PROFESSIONAL ENGINEER
56148PE
DIGITALLY SIGNED 2026.06.03 07:07:14-07'00'
OREGON
JAN. 15, 2002
ROBERT E. GRUBBS
RENEWS: 06-30-2027

FINAL ELECTRONIC DOCUMENT AVAILABLE UPON REQUEST

OREGON DEPARTMENT OF TRANSPORTATION

Rogue R_Hwy 486 (Gold Hill Spur)

OR99: ROGUE RIVER BRIDGE, GOLD HILL SPUR PROJECT
GOLD HILL SPUR HIGHWAY
JACKSON COUNTY

Designer: Robert E. Grubbs, PE
Reviewer: Zachary T. Béget, PE
Drafter: J. Tilman
Checker: Luke W. Teubel, PE

DECK PLAN – SPANS 5 - 7

SHEET NO. J07

FINISH GRADE DECK ELEVATION TABLE

		LEFT EDGE	LEFT BEAM A	BEAM B	RIGHT BEAM A	RIGHT EDGE
	STATION	ELEVATION	ELEVATION	ELEVATION	ELEVATION	ELEVATION
Bent 1	*8+38.91*	*1086.12*	*1086.34*	*1086.50*	*1086.34*	*1086.24*
0.25L	*8+51.41*	*1086.34*	*1086.56*	*1086.72*	*1086.56*	*1086.45*
0.5L	*8+63.91*	*1086.55*	*1086.77*	*1086.93*	*1086.77*	*1086.66*
0.75L	*8+76.41*	*1086.75*	*1086.96*	*1087.13*	*1086.96*	*1086.86*
Bent 2	*8+88.91*	*1086.93*	*1087.15*	*1087.32*	*1087.15*	*1087.05*
0.25L	*9+01.41*	*1087.11*	*1087.33*	*1087.50*	*1087.33*	*1087.23*
0.5L	*9+13.91*	*1087.29*	*1087.51*	*1087.67*	*1087.51*	*1087.40*
0.75L	*9+26.41*	*1087.45*	*1087.67*	*1087.83*	*1087.67*	*1087.56*
Bent 3	*9+38.91*	*1087.60*	*1087.82*	*1087.98*	*1087.82*	*1087.72*
0.25L	*9+52.04*	*1087.75*	*1087.97*	*1088.14*	*1087.97*	*1087.87*
0.5L	*9+65.16*	*1087.90*	*1088.12*	*1088.28*	*1088.12*	*1088.01*
0.75L	*9+78.29*	*1088.03*	*1088.25*	*1088.41*	*1088.25*	*1088.14*
Bent 4	*9+91.41*	*1088.15*	*1088.37*	*1088.53*	*1088.37*	*1088.26*
Col1	*10+09.54*	*1088.30*	*1088.52*	*1088.69*	*1088.52*	*1088.42*
Col2	*10+24.79*	*1088.42*	*1088.64*	*1088.80*	*1088.64*	*1088.53*
Col3	*10+40.04*	*1088.52*	*1088.74*	*1088.90*	*1088.74*	*1088.63*
Col4	*10+55.29*	*1088.61*	*1088.83*	*1088.99*	*1088.83*	*1088.72*
Col5	*10+70.54*	*1088.68*	*1088.90*	*1089.06*	*1088.90*	*1088.79*
Col6	*10+85.79*	*1088.74*	*1088.96*	*1089.12*	*1088.96*	*1088.85*
Col7	*11+01.04*	*1088.79*	*1089.01*	*1089.17*	*1089.01*	*1088.90*
Col8	*11+16.29*	*1088.82*	*1089.04*	*1089.20*	*1089.04*	*1088.93*
Bent 5	*11+34.41*	*1088.84*	*1089.06*	*1089.23*	*1089.06*	*1088.96*
0.25L	*11+47.54*	*1088.85*	*1089.07*	*1089.23*	*1089.07*	*1088.96*
0.5L	*11+60.66*	*1088.85*	*1089.07*	*1089.23*	*1089.07*	*1088.96*
0.75L	*11+73.79*	*1088.83*	*1089.05*	*1089.21*	*1089.05*	*1088.94*
Bent 6	*11+86.91*	*1088.81*	*1089.03*	*1089.19*	*1089.03*	*1088.92*
0.25L	*11+99.41*	*1088.77*	*1088.99*	*1089.16*	*1088.99*	*1088.89*
0.5L	*12+11.91*	*1088.73*	*1088.95*	*1089.11*	*1088.95*	*1088.85*
0.75L	*12+24.41*	*1088.68*	*1088.90*	*1089.06*	*1088.93*	*1088.84*
Bent 7	*12+36.91*	*1088.62*	*1088.84*	*1089.01*	*1088.92*	*1088.87*
0.25L	*12+49.41*	*1088.56*	*1088.78*	*1088.94*	*1088.91*	*1088.88*
0.5L	*12+61.91*	*1088.48*	*1088.70*	*1088.86*	*1088.88*	*1088.89*
0.75L	*12+74.41*	*1088.40*	*1088.62*	*1088.78*	*1088.86*	*1088.90*
Bent 8	*12+86.91*	*1088.35*	*1088.57*	*1088.73*	*1088.86*	*1088.94*

Finish grade elevations are in feet and based on North American Vertical Datum 1988 (NAVD88).

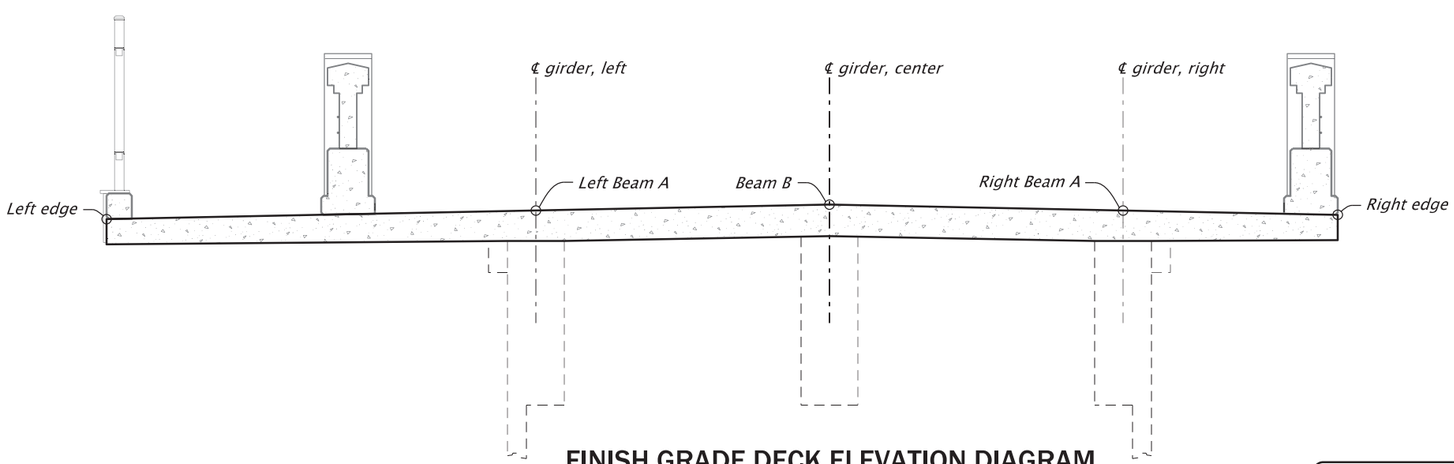

FINISH GRADE DECK ELEVATION DIAGRAM

Scale: 1/4"=1'-0"

IF THIS MEASURES 1 INCH THEN DRAWING IS TO SCALE

See sheet J01 for Accompanied By Drawings and Informational Drawings.

STRUCTURE NO. 00576
BDS DWG NO. 114168
CALC. BOOK 7777
HWY: 486
M.P.: 2.65
COUNTY Jackson
DATE JUNE 2026

REGISTERED PROFESSIONAL ENGINEER
56148PE
DIGITALLY SIGNED 2026.06.03 07:07:59-07'00'
OREGON
JAN. 15, 2002
ROBERT E. GRUBBS
RENEWS: 06-30-2027

FINAL ELECTRONIC DOCUMENT AVAILABLE UPON REQUEST

OREGON DEPARTMENT OF TRANSPORTATION

Rogue R_Hwy 486 (Gold Hill Spur)

OR99: ROGUE RIVER BRIDGE, GOLD HILL SPUR PROJECT
GOLD HILL SPUR HIGHWAY
JACKSON COUNTY

Designer: Robert E. Grubbs, PE
Reviewer: Zachary T. Béget, PE
Drafter: J. Tillman
Checker: Luke W. Teubel, PE

DECK ELEVATION TABLE

SHEET NO. J08

DECK REINFORCEMENT

#4 @ 8" (Grade 80-epoxy coated) longitudinal, top and bottom with standard 180° hook each end. Except at Bents 4 and 5.

See sheet J14 for longitudinal reinforcement at Bents 4 and 5.

#4 @ 5½" (Grade 80-epoxy coated) transverse, full width top and bottom, with standard 180° hooks each end of top mat. Except at Bents 4 and 5.

#4 @ 5½" (Grade 80-epoxy coated) transverse with standard 180° hooks each end, full width of roadway (between concrete bridge rails, as shown) in top mat, as shown. Except at Bents 4 and 5.

Bents 4 and 5 (between joints):

#6 @ 6½" (Grade 80-epoxy coated) transverse, full width top and bottom, with standard 180° hooks each end of top mat.

#6 @ 6½" (Grade 80-epoxy coated) transverse with standard 180° hooks each end, full width of roadway (between concrete bridge rails, as shown) in top mat, as shown.

Place hooked bars at angle as required to accommodate clear cover shown.

*** Gas line centered 1'-1" below bottom of deck in Spans 1-3, 5-6, and S1, S2, S3, S7, S8, and S9.*
Gas line centered 11" below bottom of deck in Spans S4, S5, and S6

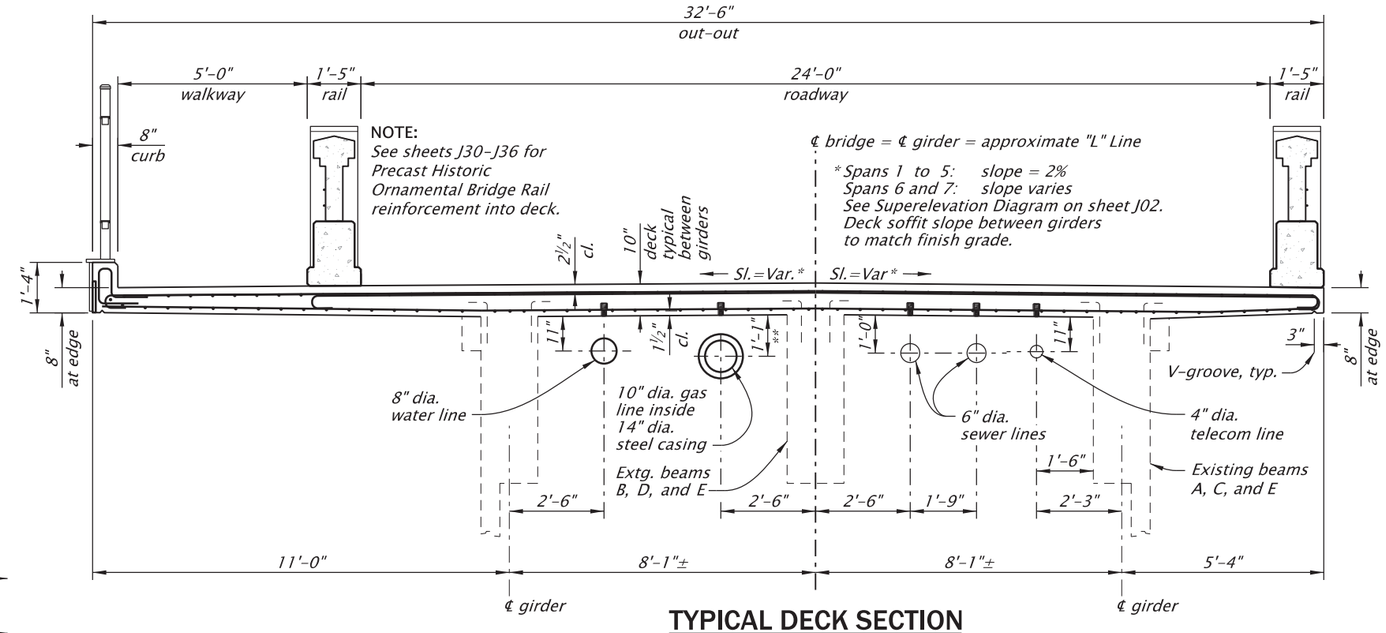

TYPICAL DECK SECTION

Scale: ¼" = 1'-0"

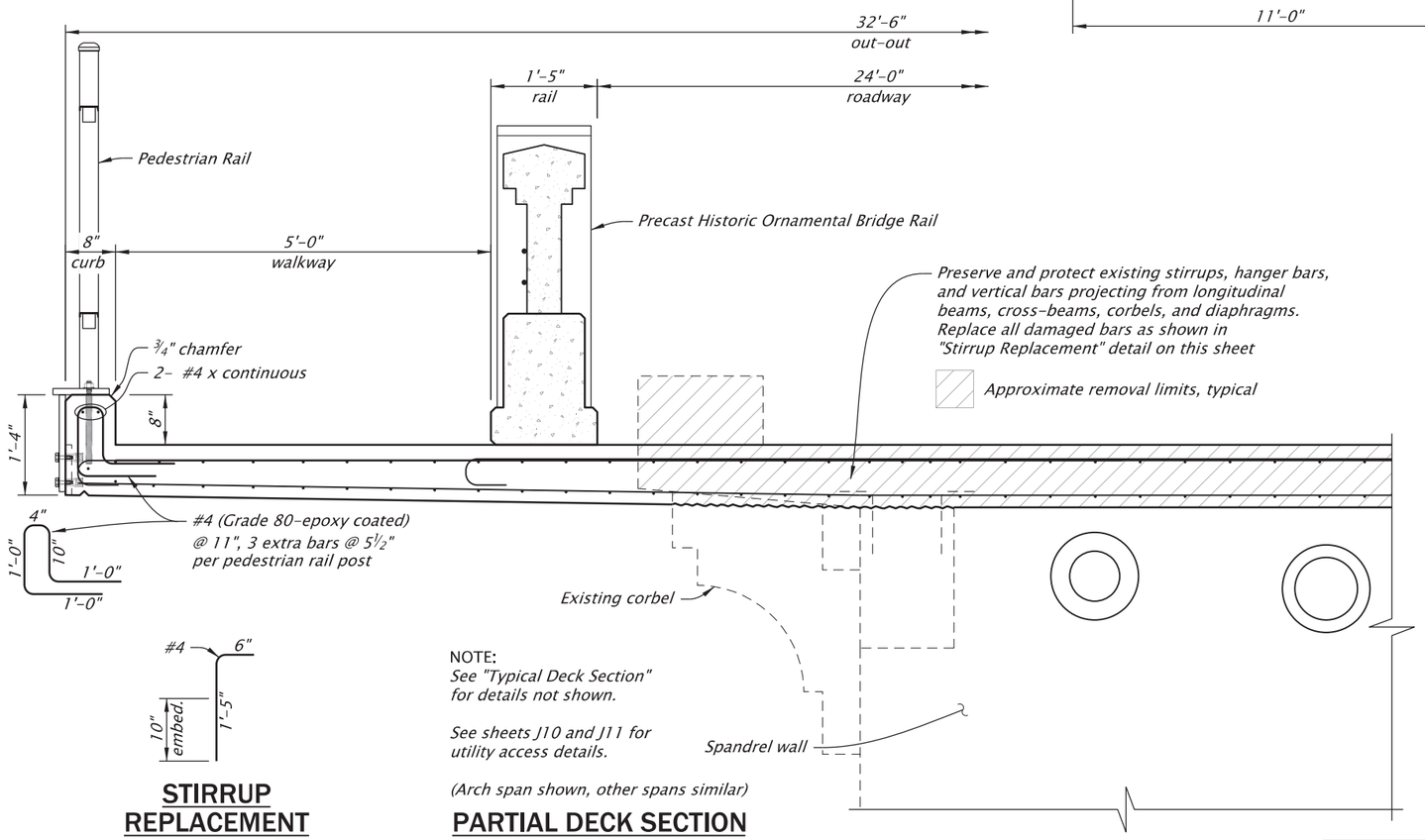

STIRRUP REPLACEMENT

Scale: ½" = 1'-0"

NOTE:
See "Typical Deck Section" for details not shown.

See sheets J10 and J11 for utility access details.

(Arch span shown, other spans similar)

PARTIAL DECK SECTION

Scale: ½" = 1'-0"

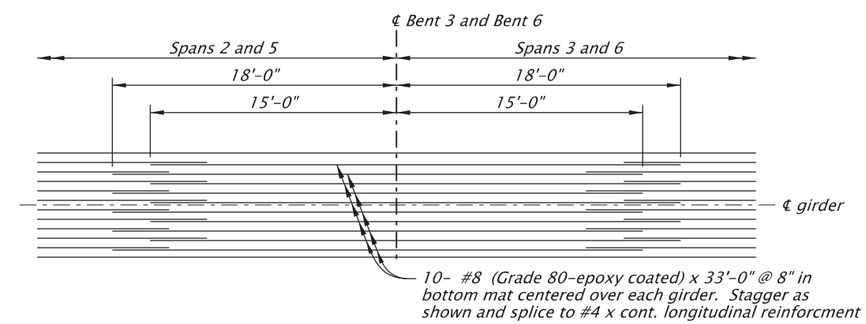

DECK REINFORCING AT BENTS 3 and 6

Not To Scale

See sheet J01 for Accompanied By Drawings and Informational Drawings.

IF THIS MEASURES 1 INCH THEN DRAWING IS TO SCALE

STRUCTURE NO.	00576
BDS DWG NO.	114169
CALC. BOOK	7777
HWY: 486 M.P.: 2.65	
COUNTY	Jackson
DATE	JUNE 2026

REGISTERED PROFESSIONAL ENGINEER
56148PE
DIGITALLY SIGNED 2026.06.25 06:07:16-07'00'
OREGON
JAN. 15, 2002
ROBERT E. GRUBBS
RENEWS: 06-30-2027

FINAL ELECTRONIC DOCUMENT AVAILABLE UPON REQUEST

OREGON DEPARTMENT OF TRANSPORTATION

Rogue R_Hwy 486 (Gold Hill Spur)

OR99: ROGUE RIVER BRIDGE, GOLD HILL SPUR PROJECT
GOLD HILL SPUR HIGHWAY
JACKSON COUNTY

Designer: Robert E. Grubbs, PE
Reviewer: Zachary T. Béget, PE
Drafter: J. Tillman
Checker: Luke W. Teubel, PE

TYPICAL DECK SECTIONS

SHEET NO. J09

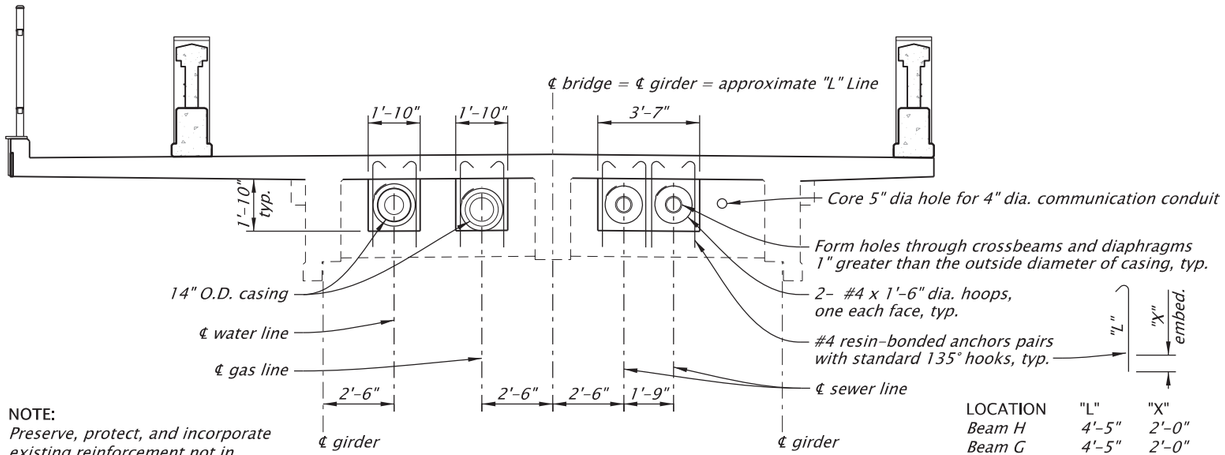

(Beam J shown - typical for Beams H, Beam G, and Diaphragms)

NOTE:
Preserve, protect, and incorporate existing reinforcement not in conflict with utility access holes.

LOCATION	"L"	"X"
Beam H	4'-5"	2'-0"
Beam G	4'-5"	2'-0"
Beam J	3'-0"	7"
Bents 4 & 5	4'-5"	2'-0"
Diaphragms	3'-5"	1'-0"

UTILITY ACCESS HOLES - CROSSBEAMS and DIAPHRAGMS

Scale: 3/16"=1'-0"

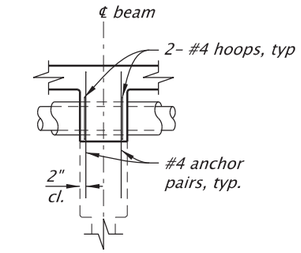

BEAM H (BENTS 3 and 6)

Scale: 3/16"=1'-0"

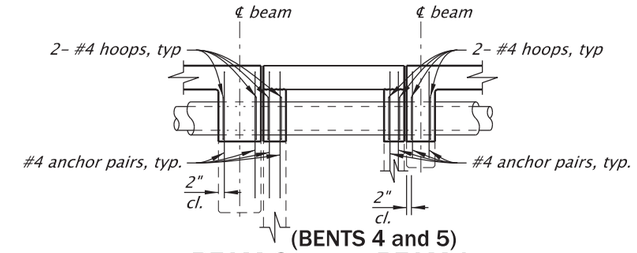

(BENTS 4 and 5)

BEAM G

Scale: 3/16"=1'-0"

BEAM J

Scale: 3/16"=1'-0"

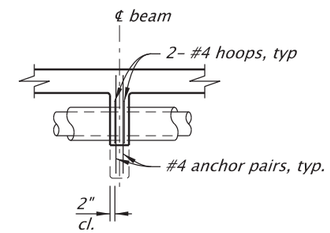

MIDSPAN DIAPHRAGM

Scale: 3/16"=1'-0"

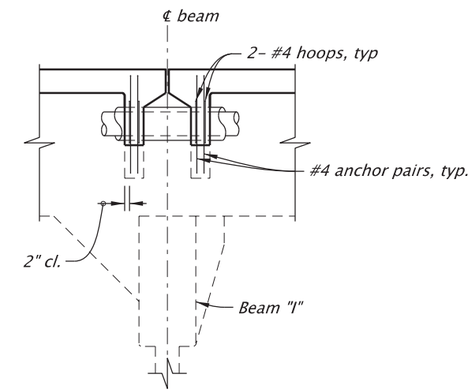

DIAPHRAGMS AT BENT 2 and BENT 7

Scale: 3/16"=1'-0"

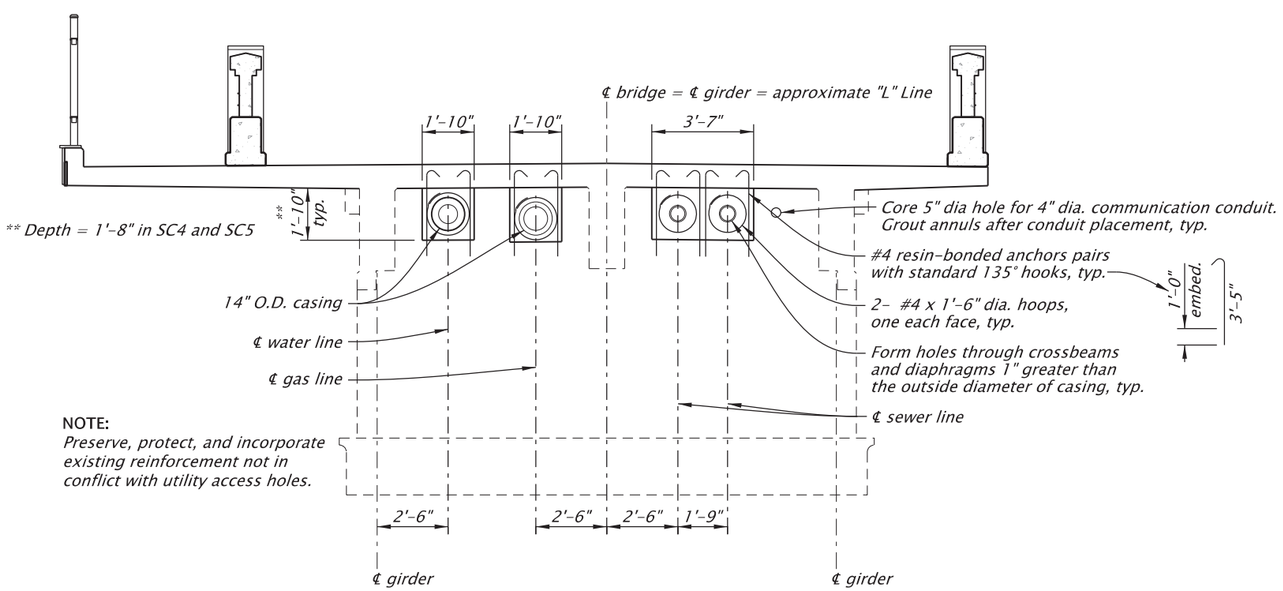

NOTE:
Preserve, protect, and incorporate existing reinforcement not in conflict with utility access holes.

UTILITY ACCESS HOLES - SPANDREL WALL

Scale: 3/16"=1'-0"

Bent 4 and Bent 5 similar

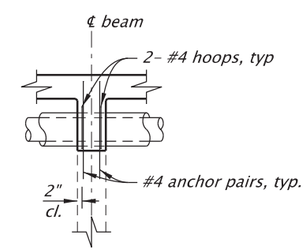

SPANDREL WALL

Scale: 3/16"=1'-0"

See sheet J01 for Accompanied By Drawings and Informational Drawings.

STRUCTURE NO.	00576
BDS DWG NO.	114170
CALC. BOOK	7777
HWY: 486	M.P.: 2.65
COUNTY	Jackson
DATE	JUNE 2026

IF THIS MEASURES 1 INCH THEN DRAWING IS TO SCALE

REGISTERED PROFESSIONAL ENGINEER
56148PE
DIGITALLY SIGNED 2026.06.03 07:09:20-07'00'
OREGON
JAN. 15, 2002
ROBERT E. GRUBBS
RENEWS: 06-30-2027

OREGON DEPARTMENT OF TRANSPORTATION

Rogue R_Hwy 486 (Gold Hill Spur)

OR99: ROGUE RIVER BRIDGE, GOLD HILL SPUR PROJECT
GOLD HILL SPUR HIGHWAY
JACKSON COUNTY

Designer: Robert E. Grubbs, PE
Reviewer: Zachary T. Béget, PE
Drafter: J. Tillman
Checker: Luke W. Teubel, PE

UTILITY ACCESS DETAILS

SHEET NO. J10

FINAL ELECTRONIC DOCUMENT AVAILABLE UPON REQUEST

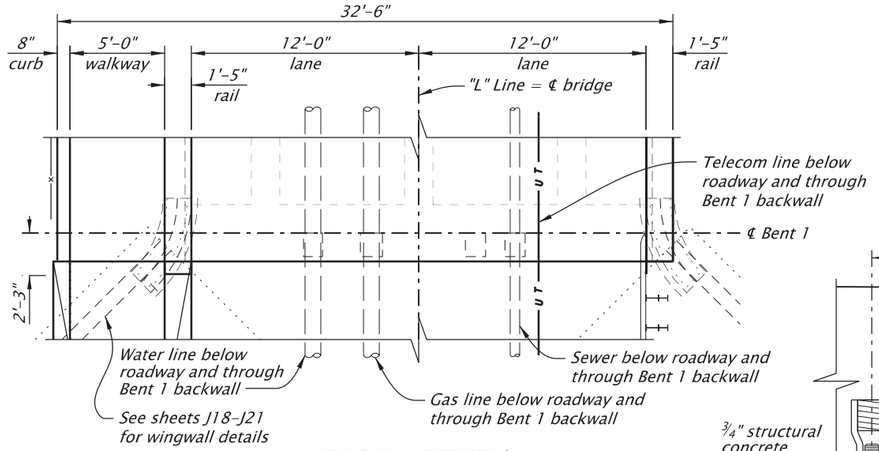

PLAN - BENT 1

Scale: 1/8" = 1'-0"

NOTE:
Transverse brace shown, longitudinal brace similiar.

Adjust transverse brace location as needed to avoid conflict with adjacent sewer line hangers and braces.

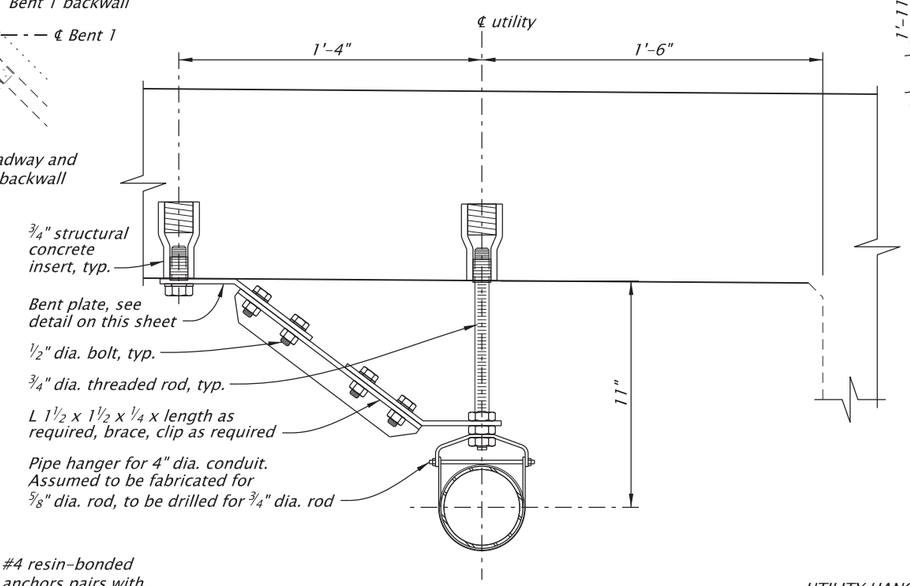

UTILITY HANGER FOR 4" DIA. TELECOM

Scale: 1 1/2"=1'-0"

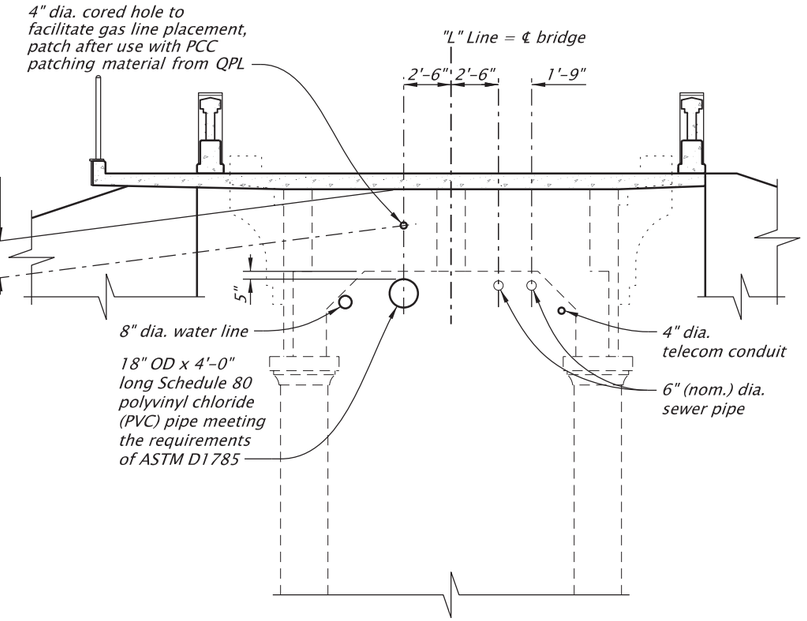

ELEVATION - BENT 8

Scale: 1/8" = 1'-0"

NOTE:
Preserve, protect, and incorporate existing reinforcement not in conflict with utility access holes.

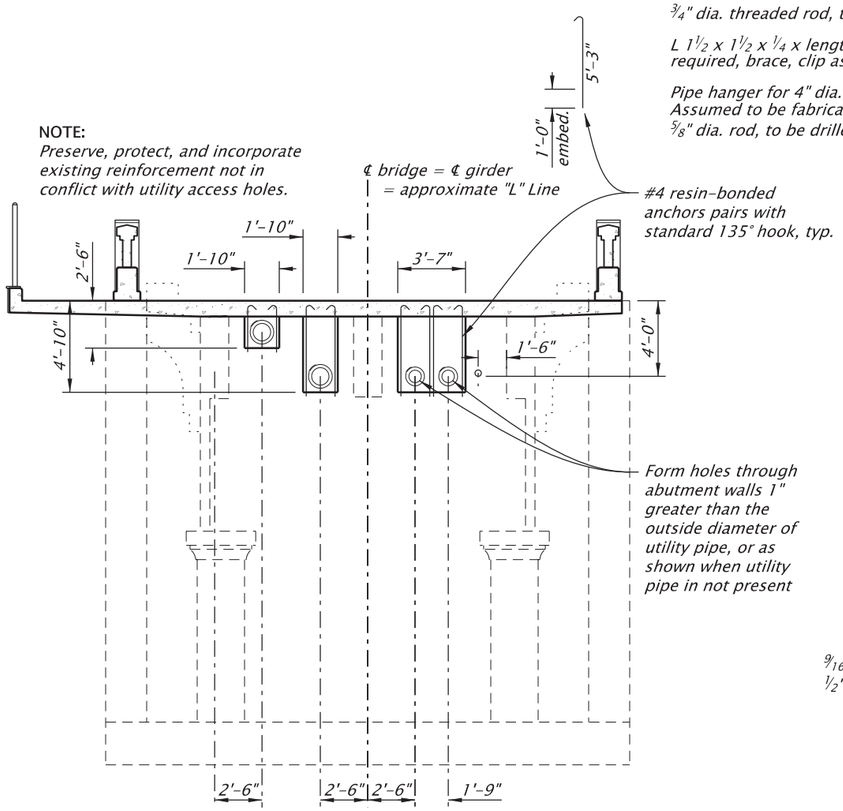

ELEVATION - BENT 1

Scale: 1/8" = 1'-0"

NOTE:
Looking ahead on station.

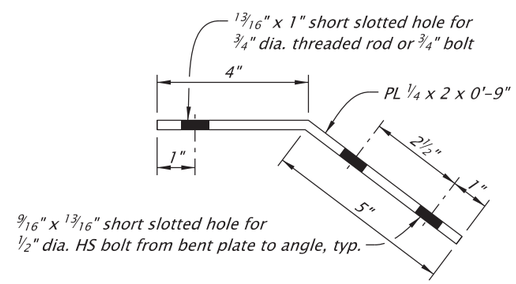

BENT PLATE

Scale: 3"=1'-0"

UTILITY HANGER NOTES:
Provide ASTM F1554 Grade 55 threaded rods.

Provide A307 bolts.

Provide ASTM A36 shapes and plates.

Furnish hot-dip galvanized cast-in coil inserts with a closed-back ferrule for a 3/4" diameter anchor bolt. The insert shall have a minimum safe working tension load of 5,890 pounds and a minimum length of 4 5/8".

Hot-dip galvanized after fabrication all hanger plates, hanger braces, bolts, nuts, threaded rods, structural steel inserts, and washers.

Provide full threaded-rod engagement into structural concrete insert.

Provide two longitudinal and two transverse braces in Spans 1, 2, 3, 5, 6, and 7, as shown on sheets J05 and J07.

See sheets J05-J07, JA-series, JB-series, and JC-series for structural concrete inserts and utility hanger locations.

Provide conduit expansion joints at Bent 1, 2, 4 (2), 5 (2), 7 and 8 per Specification 00583.

See sheet J01 for Accompanied By Drawings and Informational Drawings.

STRUCTURE NO.	00576
BDS DWG NO.	114171
CALC. BOOK	7777
HWY: 486	M.P.: 2.65
COUNTY	Jackson
DATE	JUNE 2026

REGISTERED PROFESSIONAL ENGINEER
56148PE
DIGITALLY SIGNED 2026.06.03 07:09:59-07'00'
OREGON
JAN. 15, 2002
ROBERT E. GRUBBS
RENEWS: 06-30-2027

OREGON DEPARTMENT OF TRANSPORTATION

Rogue R_Hwy 486 (Gold Hill Spur)

OR99: ROGUE RIVER BRIDGE, GOLD HILL SPUR PROJECT
GOLD HILL SPUR HIGHWAY
JACKSON COUNTY

Designer: Robert E. Grubbs, PE
Reviewer: Zachary T. Béget, PE
Drafter: J. Tillman
Checker: Luke W. Teubel, PE

UTILITY ACCESS DETAILS BENT 1 and BENT 8

SHEET NO. J11

IF THIS MEASURES 1 INCH THEN DRAWING IS TO SCALE

FINAL ELECTRONIC DOCUMENT AVAILABLE UPON REQUEST

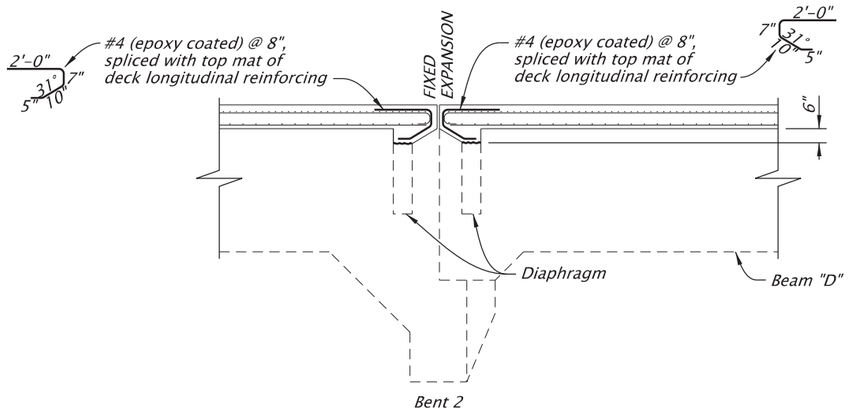

ELEVATION – BENT 2 (BENT 7 SIMILAR)

Scale: 3/16"=1'-0"

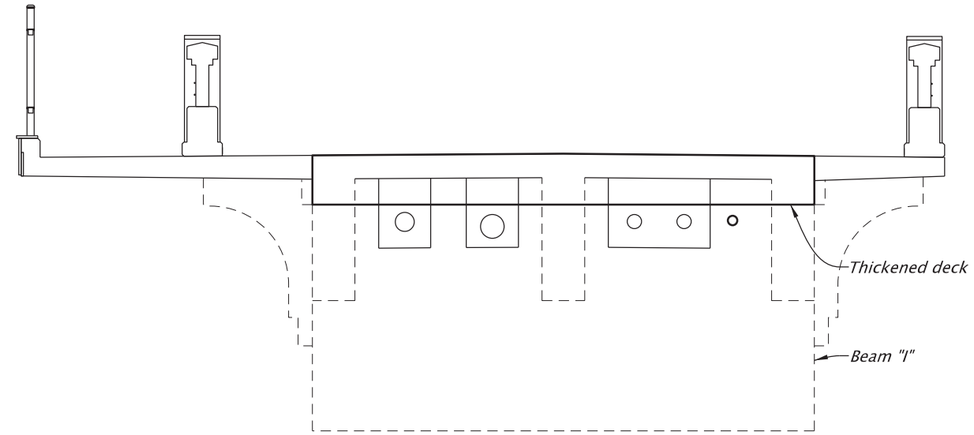

ELEVATION

Scale: 3/16"=1'-0"

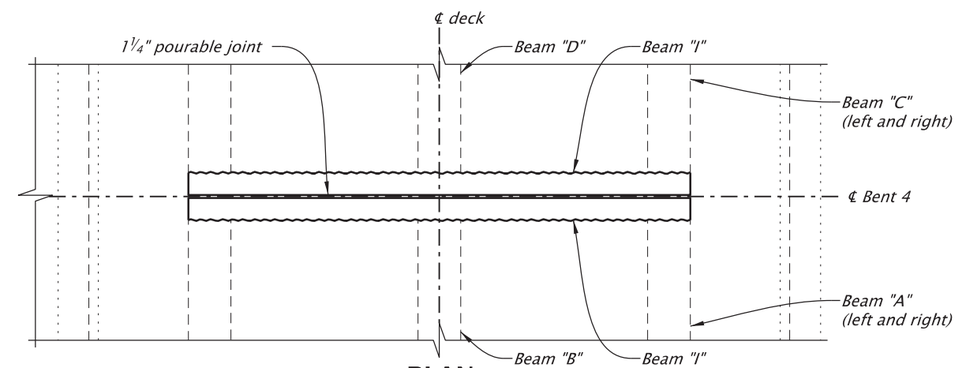

PLAN

Scale: 3/16"=1'-0"

See sheet J01 for Accompanied By Drawings and Informational Drawings.

STRUCTURE NO.	00576
BDS DWG NO.	114172
CALC. BOOK	7777
HWY: 486	M.P.: 2.65
COUNTY	Jackson
DATE	JUNE 2026

REGISTERED PROFESSIONAL ENGINEER
56148PE
DIGITALLY SIGNED 2026.06.03 07:10:38-07'00'
OREGON
JAN. 15, 2002
ROBERT E. GRUBBS
RENEWS: 06-30-2027

OREGON DEPARTMENT OF TRANSPORTATION

Rogue R_Hwy 486 (Gold Hill Spur)

OR99: ROGUE RIVER BRIDGE, GOLD HILL SPUR PROJECT
GOLD HILL SPUR HIGHWAY
JACKSON COUNTY

Designer: Stephen G. Chaffee, EIT
Reviewer: Zachary T. Béget, PE
Drafter: J. Tillman
Checker: Luke W. Teubel, PE

BENT 2 DETAILS (BENT 7 SIMILAR)

SHEET NO. J12

IF THIS MEASURES 1 INCH THEN DRAWING IS TO SCALE

FINAL ELECTRONIC DOCUMENT AVAILABLE UPON REQUEST

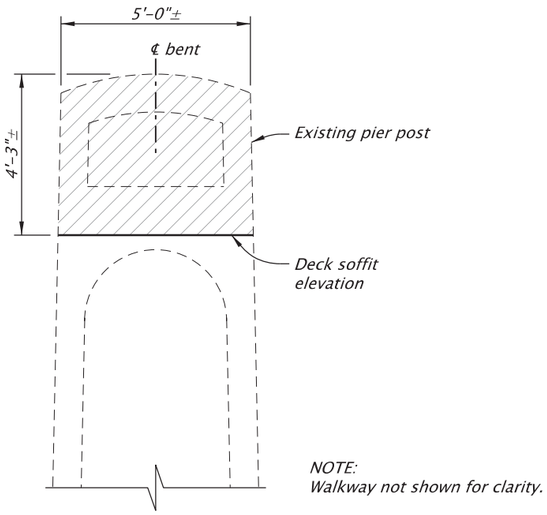

SECTION A–A

Scale: 1/4"=1'-0"

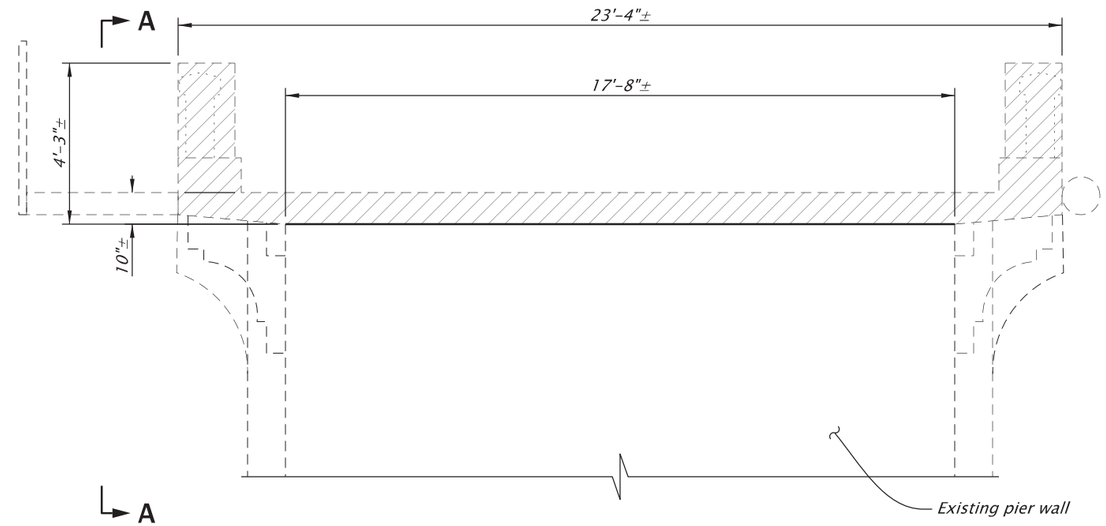

ELEVATION – TOP OF PIER

Scale: 1/4"=1'-0"

KEY

Bridge removal limits

See sheet J01 for Accompanied By Drawings and Informational Drawings.

STRUCTURE NO.	00576
BDS DWG NO.	114173
CALC. BOOK	7777
HWY: 486 M.P.: 2.65	
COUNTY	Jackson
DATE	JUNE 2026

REGISTERED PROFESSIONAL ENGINEER
56148PE
DIGITALLY SIGNED 2026.06.03 07:11:17-07'00'
OREGON
JAN. 15, 2002
ROBERT E. GRUBBS
RENEWS: 06–30–2027

FINAL ELECTRONIC DOCUMENT AVAILABLE UPON REQUEST

OREGON DEPARTMENT OF TRANSPORTATION

Rogue R_Hwy 486 (Gold Hill Spur)

OR99: ROGUE RIVER BRIDGE, GOLD HILL SPUR PROJECT
GOLD HILL SPUR HIGHWAY
JACKSON COUNTY

Designer: Stephen G. Chaffee, EIT
Reviewer: Zachary T. Béget, PE
Drafter: J. Tillman
Checker: Luke W. Teubel, PE

BENT 4 REMOVAL LIMITS (BENT 5 SIMILAR)

SHEET NO. J13

IF THIS MEASURES 1 INCH THEN DRAWING IS TO SCALE

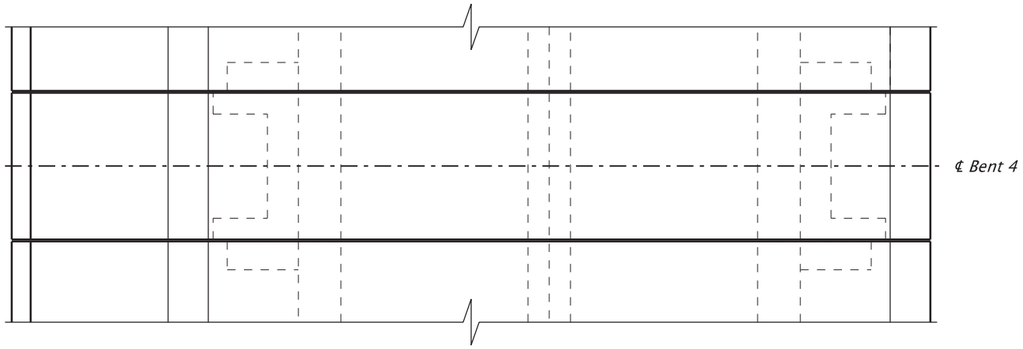

VIEW B-B

Scale: 3/16"=1'-0"

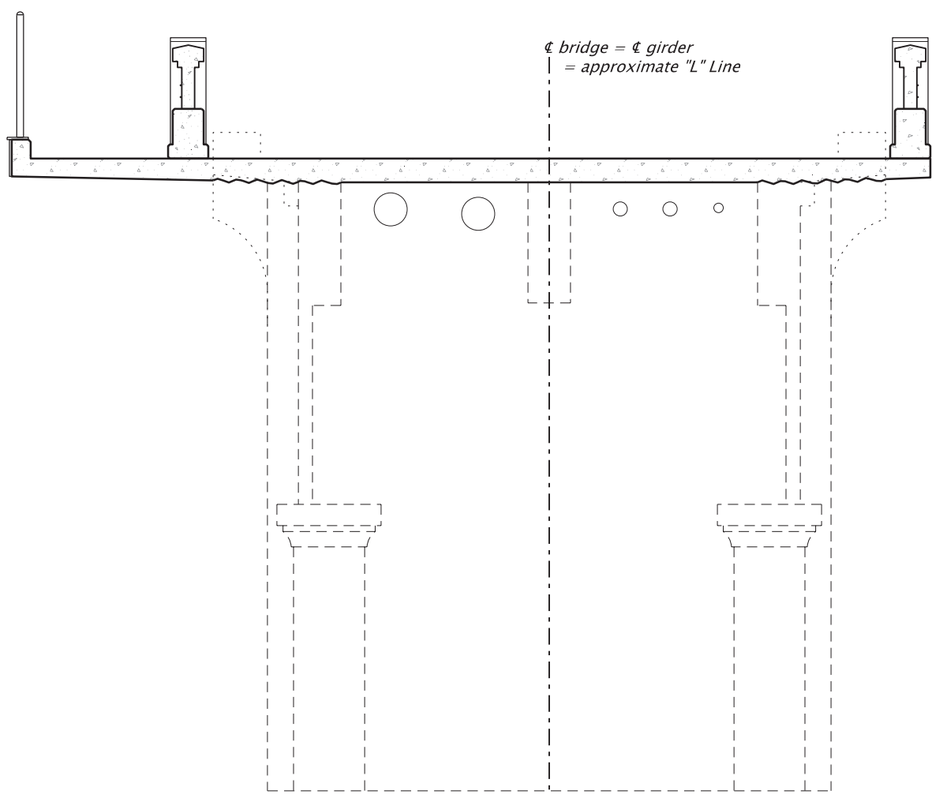

SECTION C-C

Scale: 3/16"=1'-0"

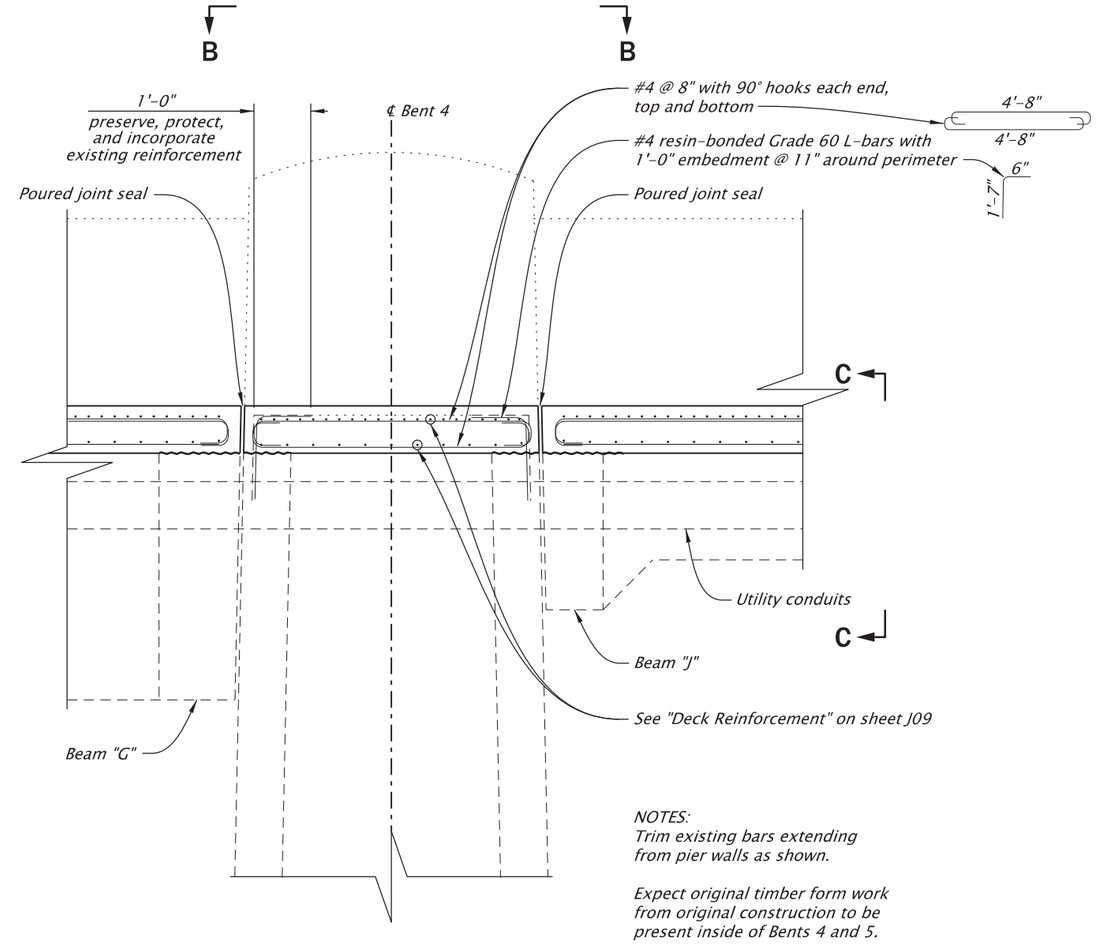

NOTES:
Trim existing bars extending from pier walls as shown.

Expect original timber form work from original construction to be present inside of Bents 4 and 5.

SECTION – BENT 4 (BENT 5 SIMILAR)

Scale: 3/8"=1'-0"

See sheet J01 for Accompanied By Drawings and Informational Drawings.

STRUCTURE NO.	00576
BDS DWG NO.	114174
CALC. BOOK	7777
HWY: 486 M.P.: 2.65	
COUNTY	Jackson
DATE	JUNE 2026

IF THIS MEASURES 1 INCH THEN DRAWING IS TO SCALE

REGISTERED PROFESSIONAL ENGINEER
56148PE
DIGITALLY SIGNED 2026.06.03 07:12:10-07'00'
OREGON
JAN. 15, 2002
ROBERT E. GRUBBS
RENEWS: 06-30-2027

FINAL ELECTRONIC DOCUMENT AVAILABLE UPON REQUEST

OREGON DEPARTMENT OF TRANSPORTATION

Rogue R_Hwy 486 (Gold Hill Spur)

OR99: ROGUE RIVER BRIDGE, GOLD HILL SPUR PROJECT
GOLD HILL SPUR HIGHWAY
JACKSON COUNTY

Designer: Stephen G. Chaffee, EIT
Reviewer: Zachary T. Béget, PE
Drafter: J. Tillman
Checker: Luke W. Teubel, PE

BENT 4 DETAILS (BENT 5 SIMILAR)

SHEET NO. J14

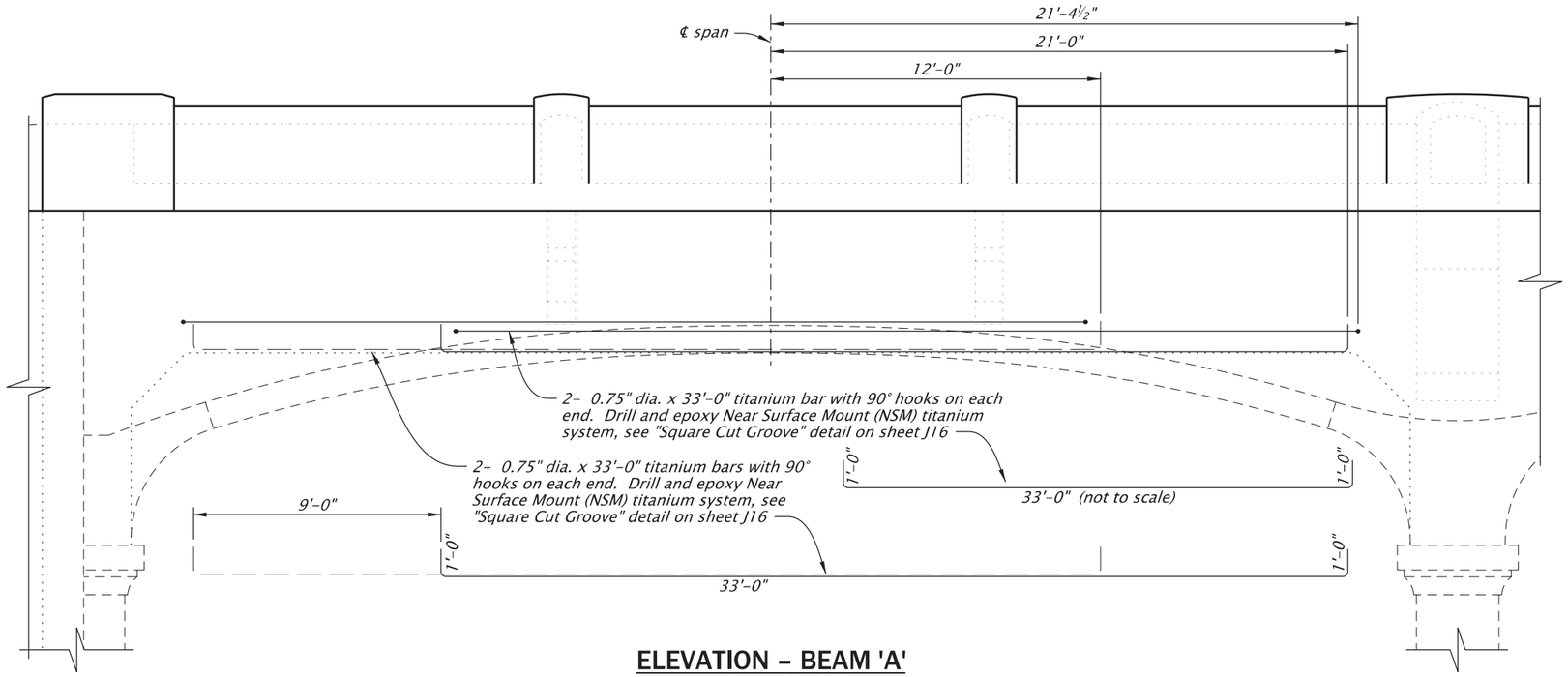

ELEVATION – BEAM 'A'

Scale: 3/16"=1'-0"

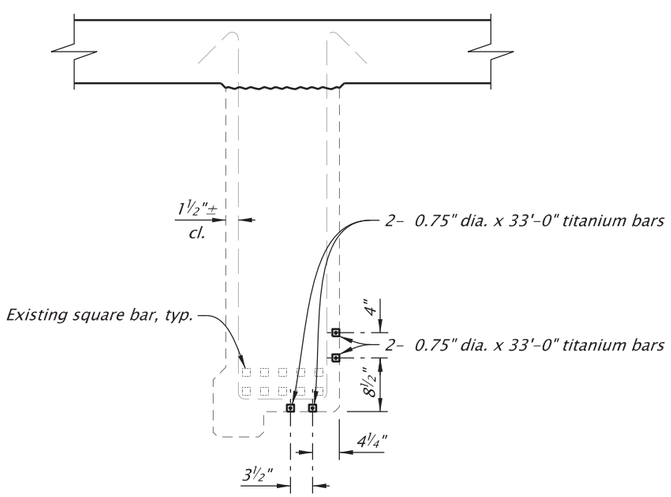

SECTION – BEAM 'A'

Scale: 1/2"=1'-0"

NOTE:
See sheet J16 for "NSM-Ti Flexural Strengthening Installation Notes" and details not shown.

See sheet J01 for Accompanied By Drawings and Informational Drawings.

STRUCTURE NO.	00576
BDS DWG NO.	114175
CALC. BOOK	7777
HWY: 486	M.P.: 2.65
COUNTY	Jackson
DATE	JUNE 2026

REGISTERED PROFESSIONAL ENGINEER
56148PE
DIGITALLY SIGNED 2026.06.25 06:07:27-07'00'
OREGON
JAN. 15, 2002
ROBERT E. GRUBBS
RENEWS: 06-30-2027

FINAL ELECTRONIC DOCUMENT AVAILABLE UPON REQUEST

OREGON DEPARTMENT OF TRANSPORTATION

Rogue R_Hwy 486 (Gold Hill Spur)

OR99: ROGUE RIVER BRIDGE, GOLD HILL SPUR PROJECT
GOLD HILL SPUR HIGHWAY
JACKSON COUNTY

Designer: Stephen G. Chaffee, EIT — Reviewer: Zachary T. Béget, PE
Drafter: J. Tillman — Checker: Luke W. Teubel, PE

STRENGTHENING - BEAM 'A'

SHEET NO. J15

IF THIS MEASURES 1 INCH THEN DRAWING IS TO SCALE

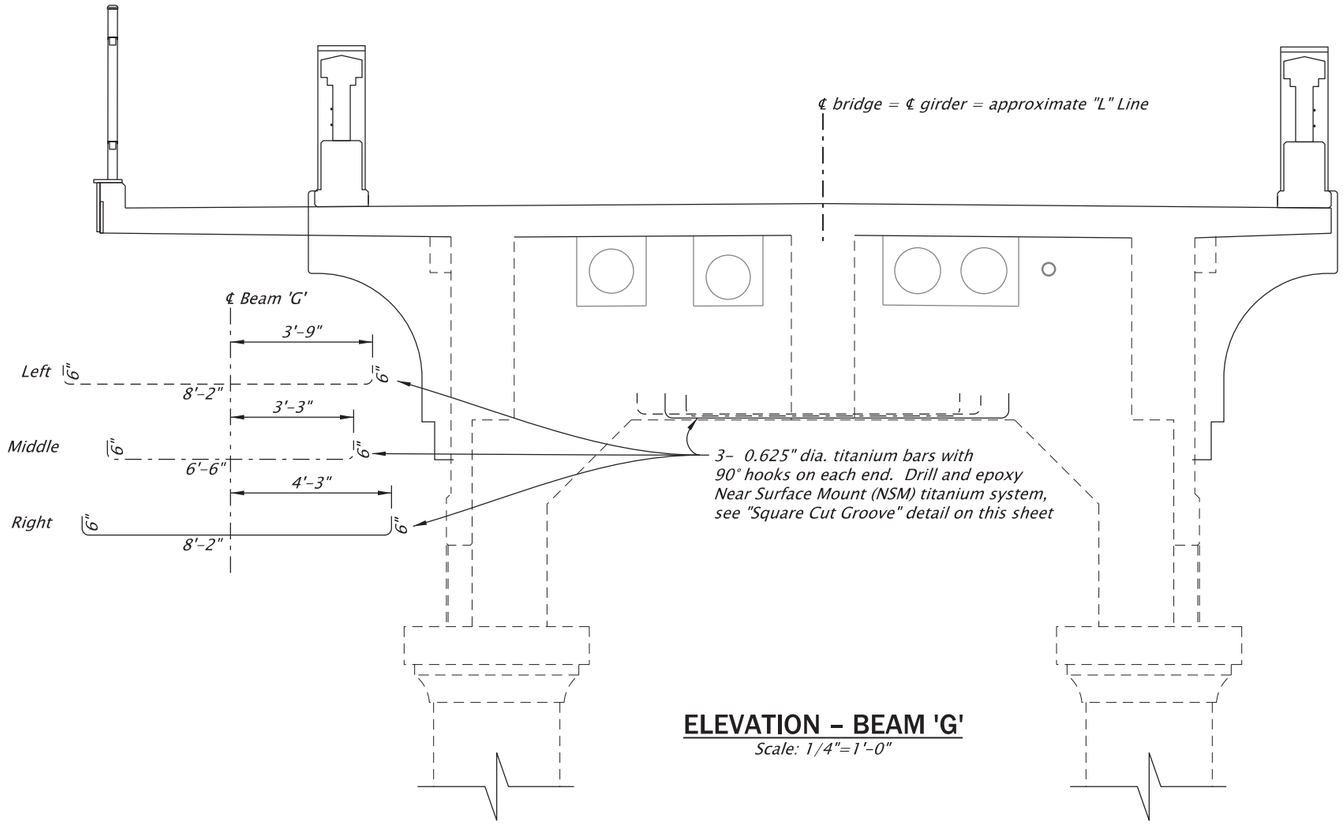

ELEVATION – BEAM 'G'

Scale: 1/4"=1'-0"

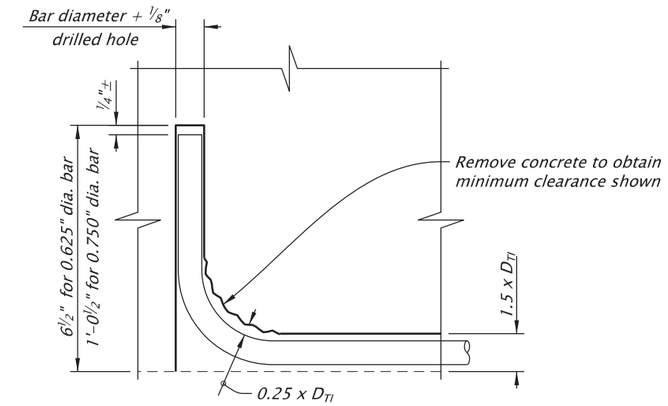

CHAMFER DETAIL

Scale: 3"=1'-0"

NSM-Ti FLEXURAL STRENGTHENING INSTALLATION NOTES:
Furnish all titanium bars with shop-bent hooks at one end only. Furnish all bars with the required in-place length plus 6 inches to account for potential conflicts.

Drill holes for hook placement to verify if any conflicts exist prior to cutting titanium bars and saw cutting grooves.

Cut titanium bars to field verified length. Heat titanium bars and field bend remaining hook to fit as specified, and grind inside bend to remove the deformations.

Bar lengths shown are hook to hook dimensions along girder.

D_{TI} = titanium bar diameter.

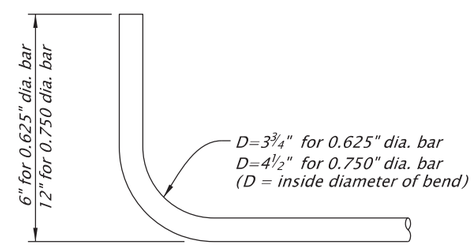

90° HOOK DETAIL

Scale: 3"=1'-0"

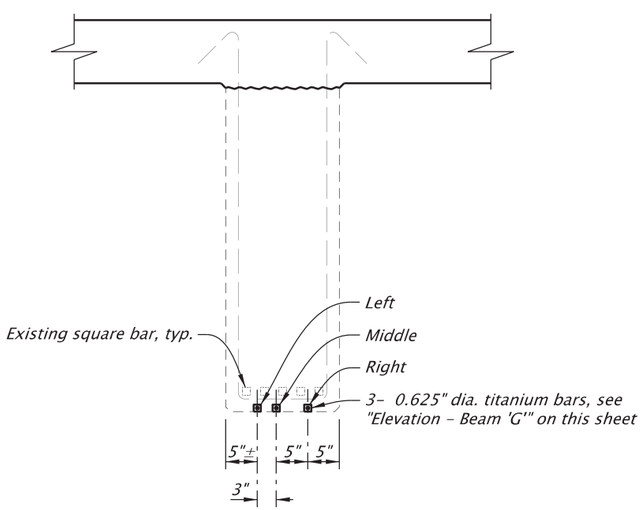

SECTION – BEAM 'G'

Scale: 1/2"=1'-0"

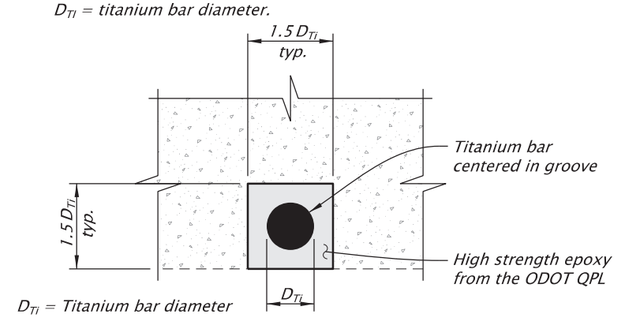

D_{TI} = Titanium bar diameter

SQUARE CUT GROOVE

Not To Scale

See sheet J01 for Accompanied By Drawings and Informational Drawings.

STRUCTURE NO.	00576
BDS DWG NO.	114176
CALC. BOOK	7777
HWY: 486	M.P.: 2.65
COUNTY	Jackson
DATE	JUNE 2026

IF THIS MEASURES 1 INCH THEN DRAWING IS TO SCALE

REGISTERED PROFESSIONAL ENGINEER
56148PE
DIGITALLY SIGNED 2026.06.03 07:14:29-07'00'
OREGON
JAN. 15, 2002
ROBERT E. GRUBBS
RENEWS: 06-30-2027

FINAL ELECTRONIC DOCUMENT AVAILABLE UPON REQUEST

OREGON DEPARTMENT OF TRANSPORTATION

Rogue R_Hwy 486 (Gold Hill Spur)

OR99: ROGUE RIVER BRIDGE, GOLD HILL SPUR PROJECT
GOLD HILL SPUR HIGHWAY
JACKSON COUNTY

Designer: Stephen G. Chaffee, EIT
Reviewer: Zachary T. Béget, PE
Drafter: J. Tillman
Checker: Luke W. Teubel, PE

STRENGTHENING - BEAM 'G'

SHEET NO. J16

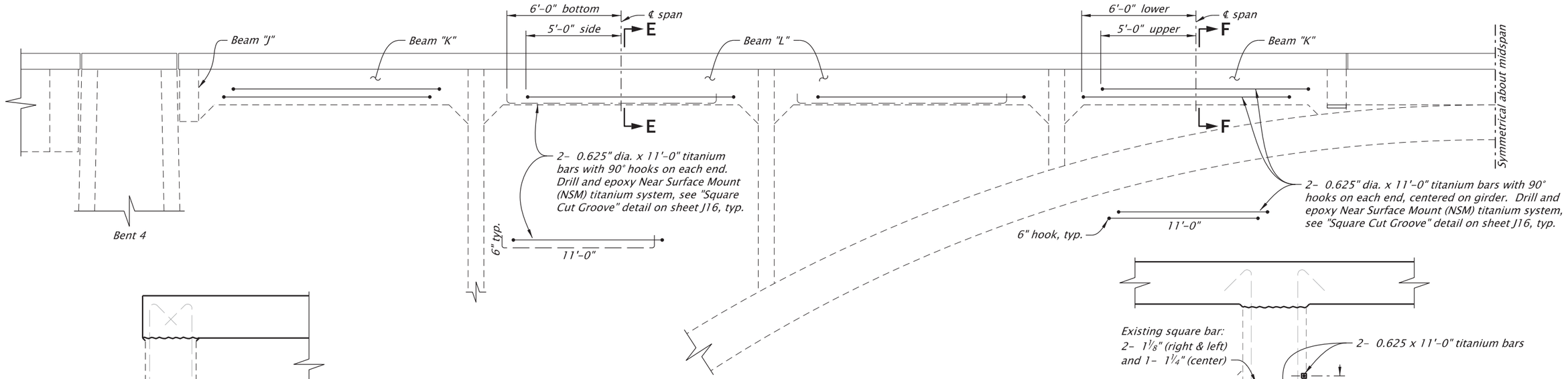

ELEVATION – EXTERIOR GIRDER
(HALF SPAN 4 SHOWN, SYMMETRICAL ABOUT MIDSPAN)
Scale: 3/16"=1'-0"

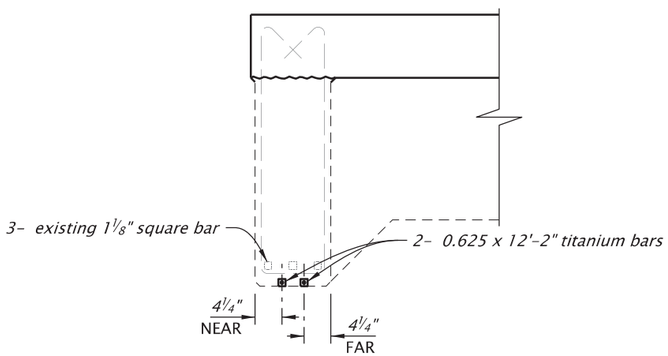

SECTION D-D (BEAM 'J')
Scale: 1/2"=1'-0"

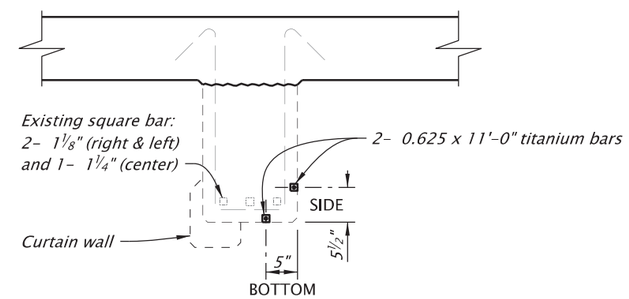

SECTION E-E (BEAM 'L')
Scale: 1/2"=1'-0"

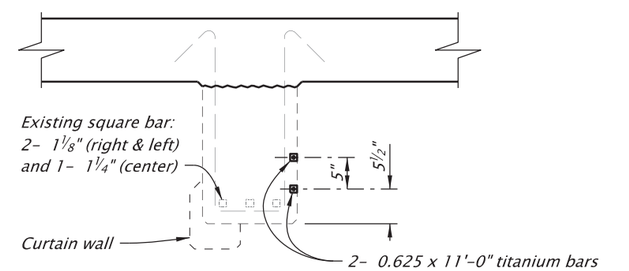

SECTION F-F (BEAM 'K')
Scale: 1/2"=1'-0"

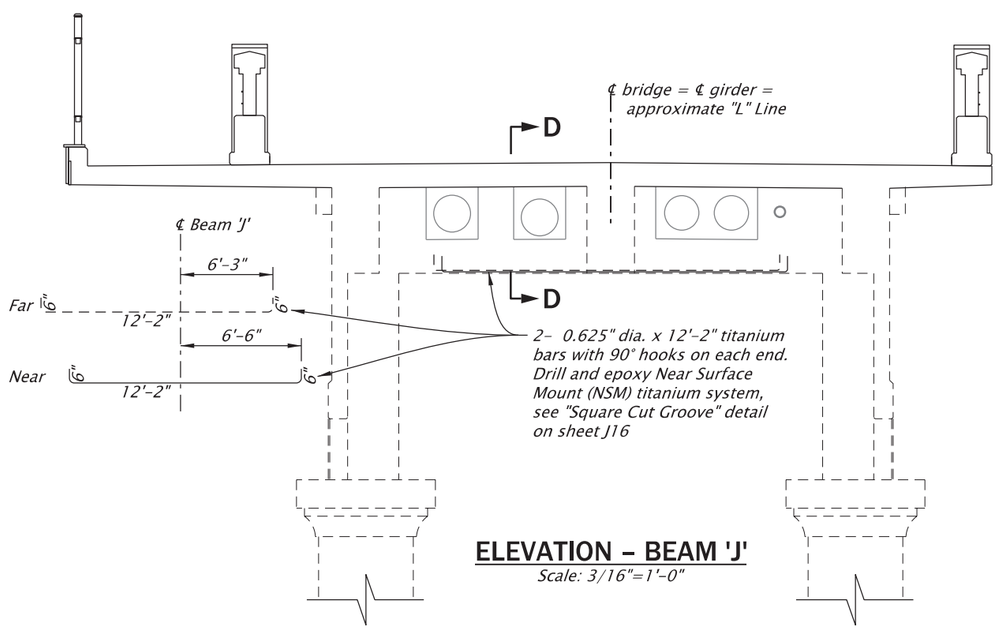

ELEVATION – BEAM 'J'
Scale: 3/16"=1'-0"

NOTE:
See sheet J16 for "NSM-Ti Flexural Strengthening Installation Notes" and details not shown.

See sheet J01 for Accompanied By Drawings and Informational Drawings.

STRUCTURE NO.	00576
BDS DWG NO.	114177
CALC. BOOK	7777
HWY: 486	M.P.: 2.65
COUNTY	Jackson
DATE	JUNE 2026

IF THIS MEASURES 1 INCH THEN DRAWING IS TO SCALE

REGISTERED PROFESSIONAL ENGINEER
56148PE
DIGITALLY SIGNED 2026.06.03 07:15:02-07'00'
OREGON
JAN. 15, 2002
ROBERT E. GRUBBS
RENEWS: 06-30-2027

FINAL ELECTRONIC DOCUMENT AVAILABLE UPON REQUEST

OREGON DEPARTMENT OF TRANSPORTATION

Rogue R_Hwy 486 (Gold Hill Spur)

OR99: ROGUE RIVER BRIDGE, GOLD HILL SPUR PROJECT
GOLD HILL SPUR HIGHWAY
JACKSON COUNTY

Designer: Stephen G. Chaffee, EIT
Reviewer: Zachary T. Béget, PE
Drafter: J. Tillman
Checker: Luke W. Teubel, PE

STRENGTHENING - BEAM 'K' and BEAM 'L'

SHEET NO. J17

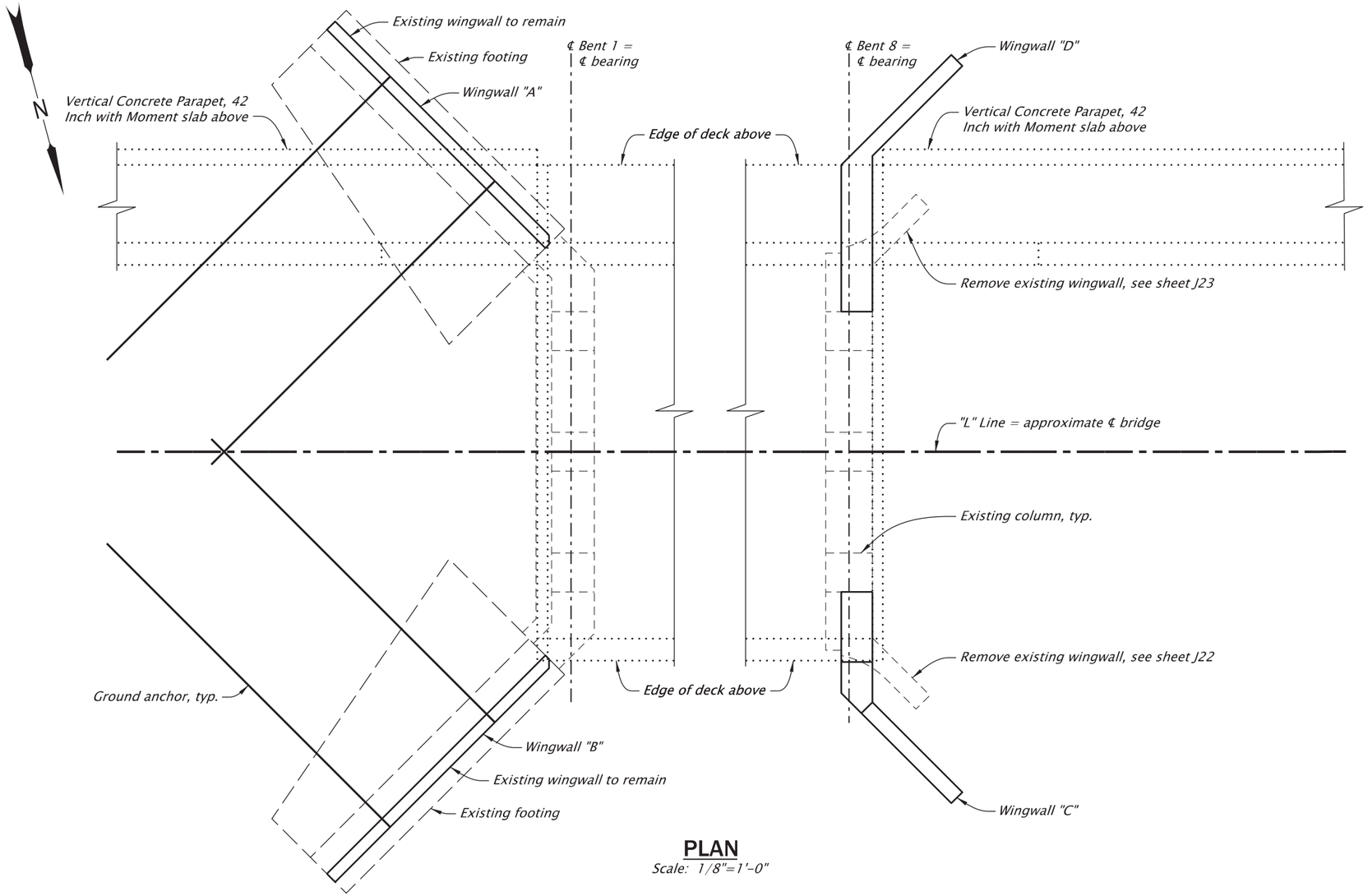

PLAN
Scale: 1/8"=1'-0"

BENT 1 WINGWALL MODIFICATION CONSTRUCTION SEQUENCE:

1) *Remove existing stone masonry slope paving and perform structural excavation to the limits shown on sheet J24.*
2) *Remove portions of wingwalls as shown on sheet J20.*
3) *Roughen existing concrete surfaces that will receive new concrete by chipping, shot blasting, or sandblasting to achieve a deviation from a plane surface of 1/4" and according to 00540.43(e).*
4) *Install resin bonded anchors and reinforcement.*
5) *Construct new wingwall exterior face.*
6) *Install and stress tie-back anchors.*
7) *Backfill wingwall with stone embankment as shown on sheet J24.*

ANCHOR NOTES

Provide ASTM A36 for structural steel plates.

Hot-dip galvanize all steel components.

NOTE:
Archaeological Monitoring required for all ground-disturbing activities related to wall construction.

See sheet J01 for Accompanied By Drawings and Informational Drawings.

IF THIS MEASURES 1 INCH THEN DRAWING IS TO SCALE

STRUCTURE NO.	00576
BDS DWG NO.	114178
CALC. BOOK	7777
HWY: 486 M.P.: 2.65	
COUNTY	Jackson
DATE	JUNE 2026

REGISTERED PROFESSIONAL ENGINEER
56148PE
DIGITALLY SIGNED 2026.06.03 07:15:43-07'00'
OREGON
JAN. 15, 2002
ROBERT E. GRUBBS
RENEWS: 06-30-2027

FINAL ELECTRONIC DOCUMENT AVAILABLE UPON REQUEST

OREGON DEPARTMENT OF TRANSPORTATION

Rogue R_Hwy 486 (Gold Hill Spur)

OR99: ROGUE RIVER BRIDGE, GOLD HILL SPUR PROJECT
GOLD HILL SPUR HIGHWAY
JACKSON COUNTY

Designer: Robert E. Grubbs, PE
Reviewer: Zachary T. Béget, PE
Drafter: J. Tillman
Checker: Luke W. Teubel, PE

WINGWALL PLAN

SHEET NO. J18

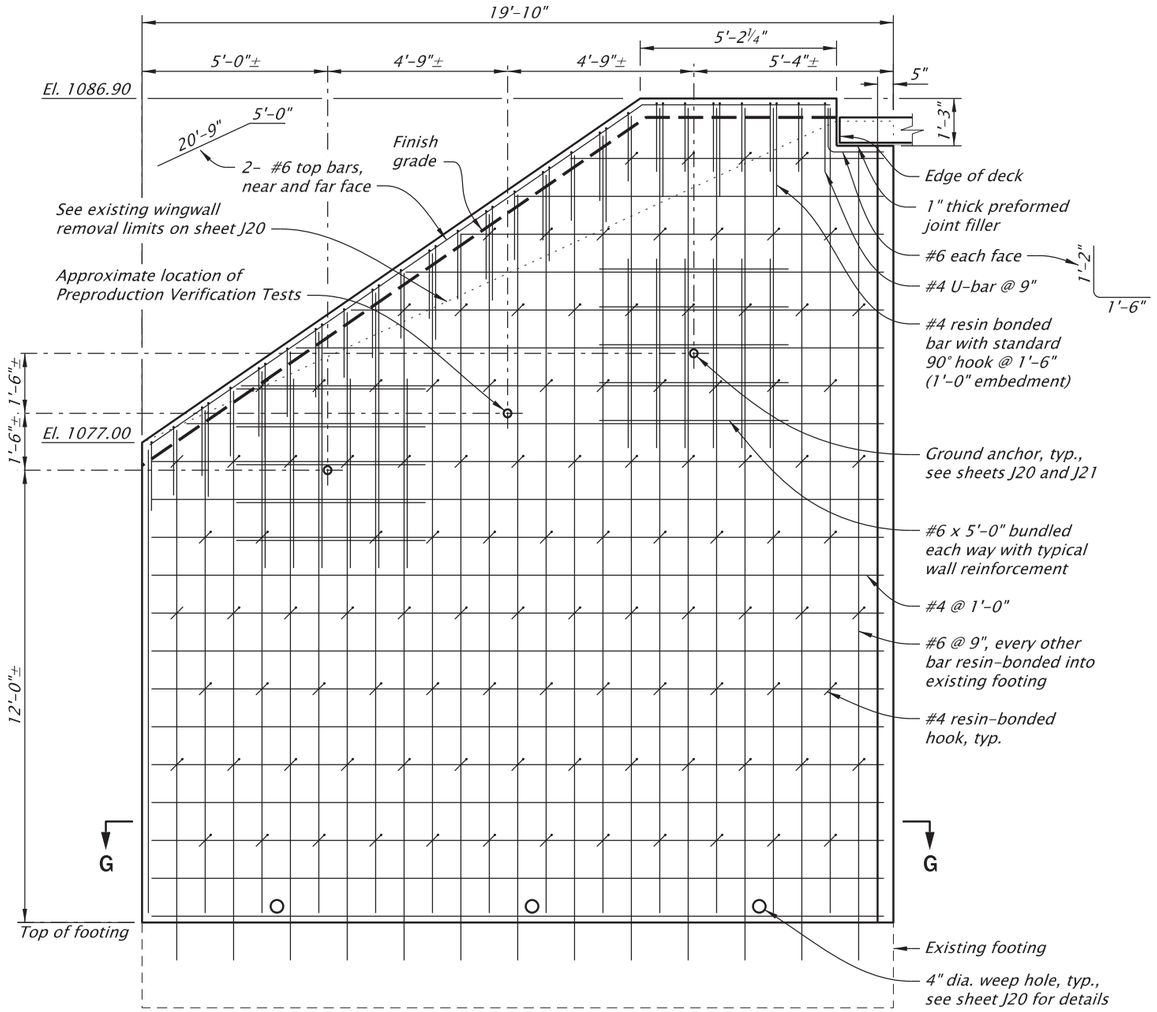

WINGWALL B
(LOOKING BACK ON STATION)

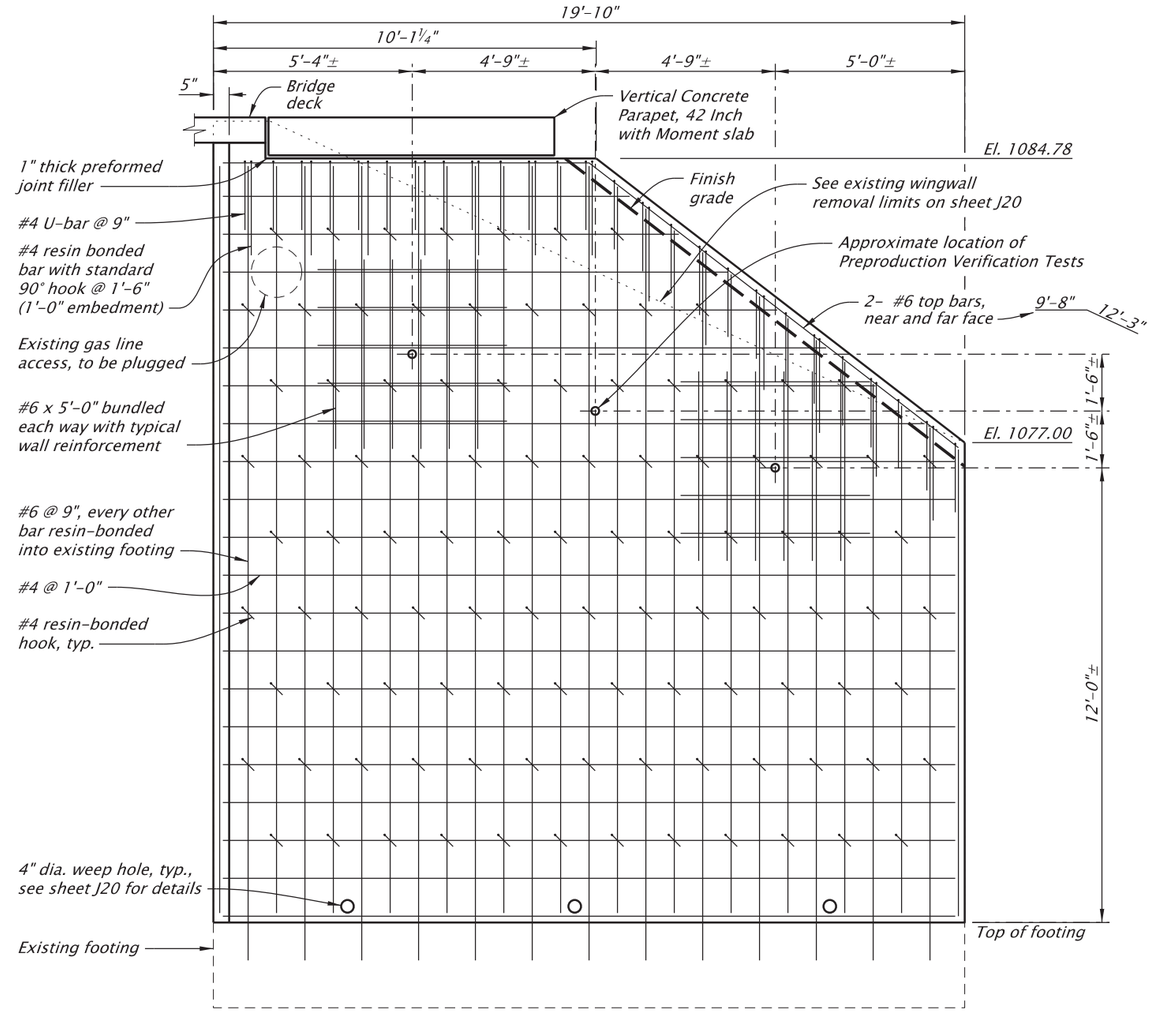

WINGWALL A
(LOOKING BACK ON STATION)

ELEVATION – WINGWALLS A and B

Scale: 1/4"=1'-0"

NOTE:
Prepare existing concrete to receive new concrete according to 00540.43(e).

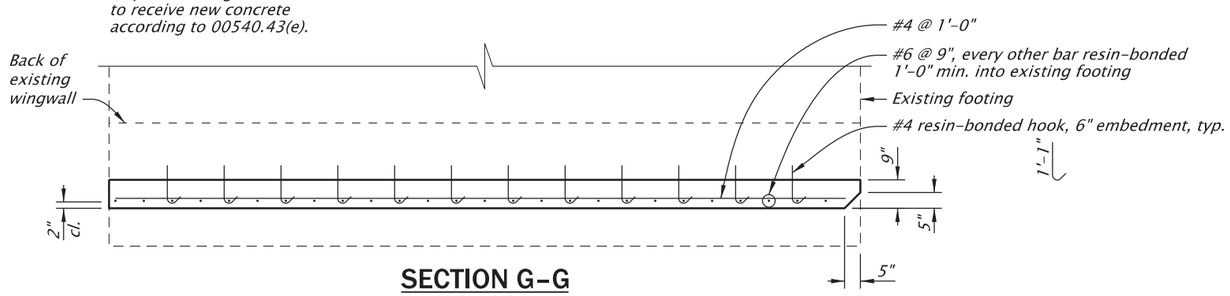

SECTION G–G
(WINGWALL A SIMILAR)

Scale: 1/4"=1'-0"

NOTE:
Archaeological Monitoring required for all ground-disturbing activities related to wall construction.

See sheet J01 for Accompanied By Drawings and Informational Drawings.

IF THIS MEASURES 1 INCH THEN DRAWING IS TO SCALE

STRUCTURE NO.	00576
BDS DWG NO.	114179
CALC. BOOK	7777
HWY: 486	M.P.: 2.65
COUNTY	Jackson
DATE	JUNE 2026

REGISTERED PROFESSIONAL ENGINEER
56148PE
DIGITALLY SIGNED 2026.06.03 07:16:25-07'00'
OREGON
JAN. 15, 2002
ROBERT E. GRUBBS
RENEWS: 06-30-2027

FINAL ELECTRONIC DOCUMENT AVAILABLE UPON REQUEST

OREGON DEPARTMENT OF TRANSPORTATION

Rogue R_Hwy 486 (Gold Hill Spur)

OR99: ROGUE RIVER BRIDGE, GOLD HILL SPUR PROJECT
GOLD HILL SPUR HIGHWAY
JACKSON COUNTY

Designer: Robert E. Grubbs, PE
Reviewer: Zachary T. Béget, PE
Drafter: J. Tillman
Checker: Luke W. Teubel, PE

WINGWALLS A and B

SHEET NO. J19

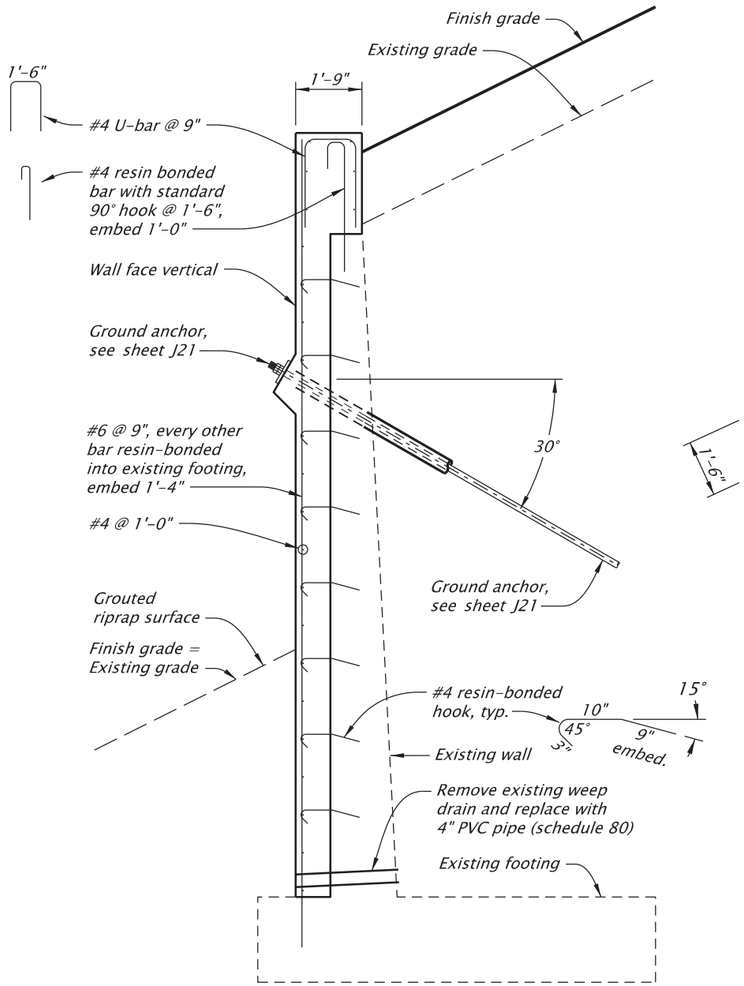

TYPICAL SECTION
WINGWALLS A and B
Scale: 1/4"=1'-0"

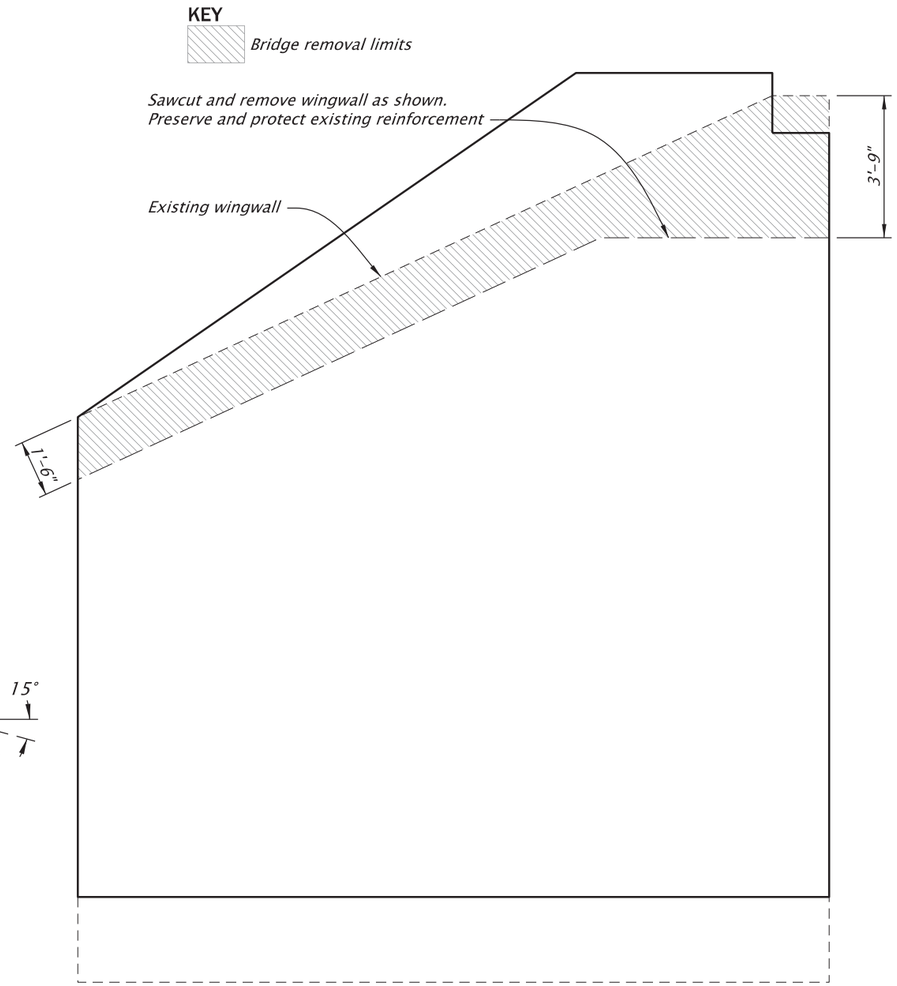

WINGWALL REMOVAL LIMITS
WINGWALLS A and B
Scale: 1/4"=1'-0"

NOTES:
See informational drawing 3194 for information not shown.

Field verify all dimensions before demolition.

See sheet J22 for Wingwall C and sheet J23 for Wingwall D.

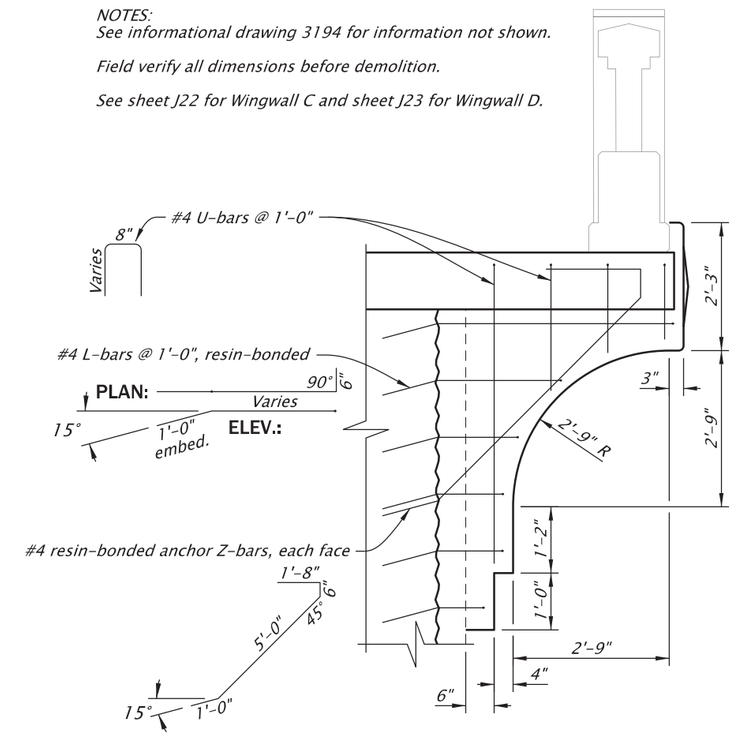

CORBEL DETAIL
WINGWALLS C and D
Scale: 3/8"=1'-0"

NOTE:
Archaeological Monitoring required for all ground-disturbing activities related to wall construction.

See sheet J01 for Accompanied By Drawings and Informational Drawings.

STRUCTURE NO.	00576
BDS DWG NO.	114180
CALC. BOOK	7777
HWY: 486	M.P.: 2.65
COUNTY	Jackson
DATE	JUNE 2026

REGISTERED PROFESSIONAL ENGINEER
56148PE
DIGITALLY SIGNED 2026.06.03 07:17:49-07'00'
OREGON
JAN. 15, 2002
ROBERT E. GRUBBS
RENEWS: 06-30-2027

FINAL ELECTRONIC DOCUMENT AVAILABLE UPON REQUEST

OREGON DEPARTMENT OF TRANSPORTATION

Rogue R_Hwy 486 (Gold Hill Spur)

OR99: ROGUE RIVER BRIDGE, GOLD HILL SPUR PROJECT
GOLD HILL SPUR HIGHWAY
JACKSON COUNTY

Designer: Robert E. Grubbs, PE — Reviewer: Zachary T. Béget, PE
Drafter: J. Tillman — Checker: Luke W. Teubel, PE

MISCELLANEOUS WINGWALL DETAILS

SHEET NO. J20

IF THIS MEASURES 1 INCH THEN DRAWING IS TO SCALE

WINGWALL AND GROUND ANCHOR CONSTRUCTION SEQUENCE:

1. *Excavate and remove portions of wingwall, as shown.*
2. *Core drill wingwall in preparation for ground anchor installation.*
3. *Install resin-bonded anchors, roughen surface, and cast concrete on face of existing wall (see sheet J20 for details). Do not backfill wingwall.*
4. *Conduct Preproduction Verification Test.*
5. *Drill and install permanent casing and ground anchors, perform grouting.*
6. *Install bearing plate and nut.*
7. *Proof test, stress, and lock off ground anchor.*
8. *Backfill wall.*

GROUND ANCHOR GENERAL NOTES:
Bar anchors may be spliced. Provide splices to resist 125% of the bar anchor yield strength.

Lock-off Load = 55 kip
Factored Design Load (FDL) = 55 kip

Conduct Preproduction Verification Test after wall concrete has cured for 7 counting days and has reached 100% of design strength.

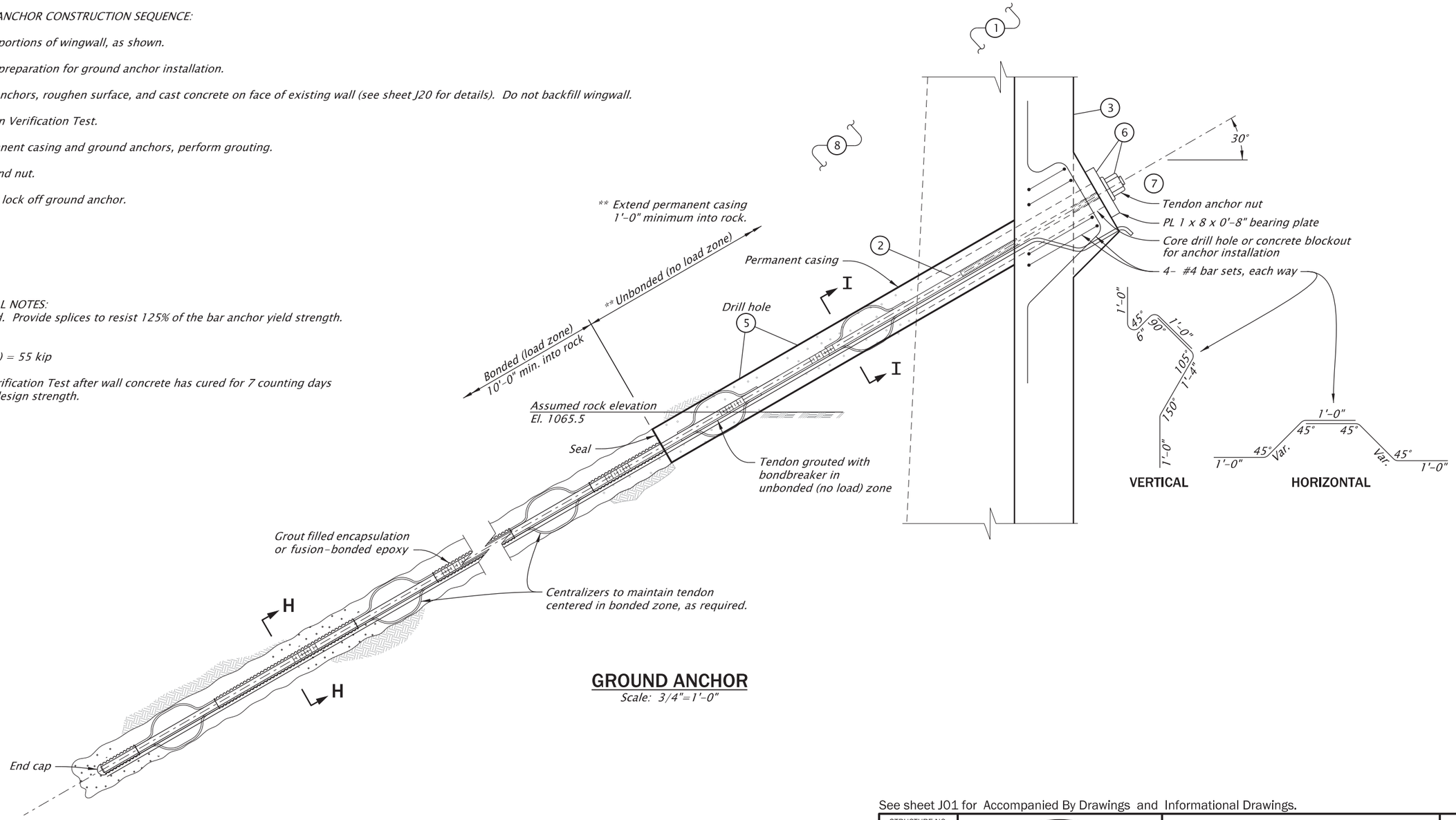

GROUND ANCHOR
Scale: 3/4"=1'-0"

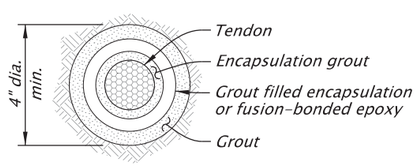

SECTION H-H
Not To Scale

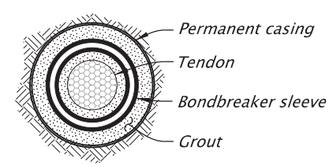

SECTION I-I
Not To Scale

See sheet J01 for Accompanied By Drawings and Informational Drawings.

STRUCTURE NO.	00576
BDS DWG NO.	114181
CALC. BOOK	7777
HWY: 486	M.P.: 2.65
COUNTY	Jackson
DATE	JUNE 2026

IF THIS MEASURES 1 INCH THEN DRAWING IS TO SCALE

REGISTERED PROFESSIONAL ENGINEER
56148PE
DIGITALLY SIGNED 2026.06.03 07:18:29-07'00'
OREGON
JAN. 15, 2002
ROBERT E. GRUBBS
RENEWS: 06-30-2027

FINAL ELECTRONIC DOCUMENT AVAILABLE UPON REQUEST

OREGON DEPARTMENT OF TRANSPORTATION

Rogue R_Hwy 486 (Gold Hill Spur)

OR99: ROGUE RIVER BRIDGE, GOLD HILL SPUR PROJECT
GOLD HILL SPUR HIGHWAY
JACKSON COUNTY

Designer: Robert E. Grubbs, PE
Reviewer: Zachary T. Béget, PE
Drafter: J. Tillman
Checker: Luke W. Teubel, PE

GROUND ANCHORAGE

SHEET NO. J21

NOTES:
Roughen existing concrete surfaces that will receive new concrete by chipping, shot blasting, or sandblasting to achieve a deviation from a plane surface of 1/4 inch and according to 00540.43(e).

Embed #4 resin-bonded bars 1'-0", typical.

Embed #6 resin-bonded bars 1'-10", typical.

KEY
Bridge removal limits, full height

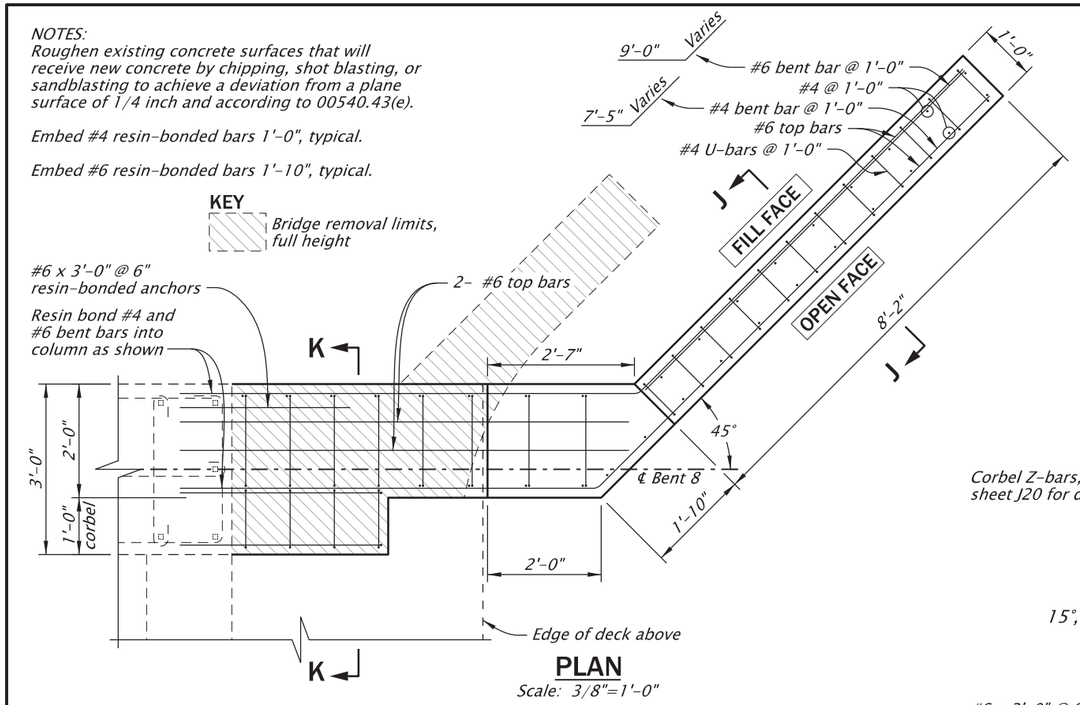

PLAN
Scale: 3/8"=1'-0"

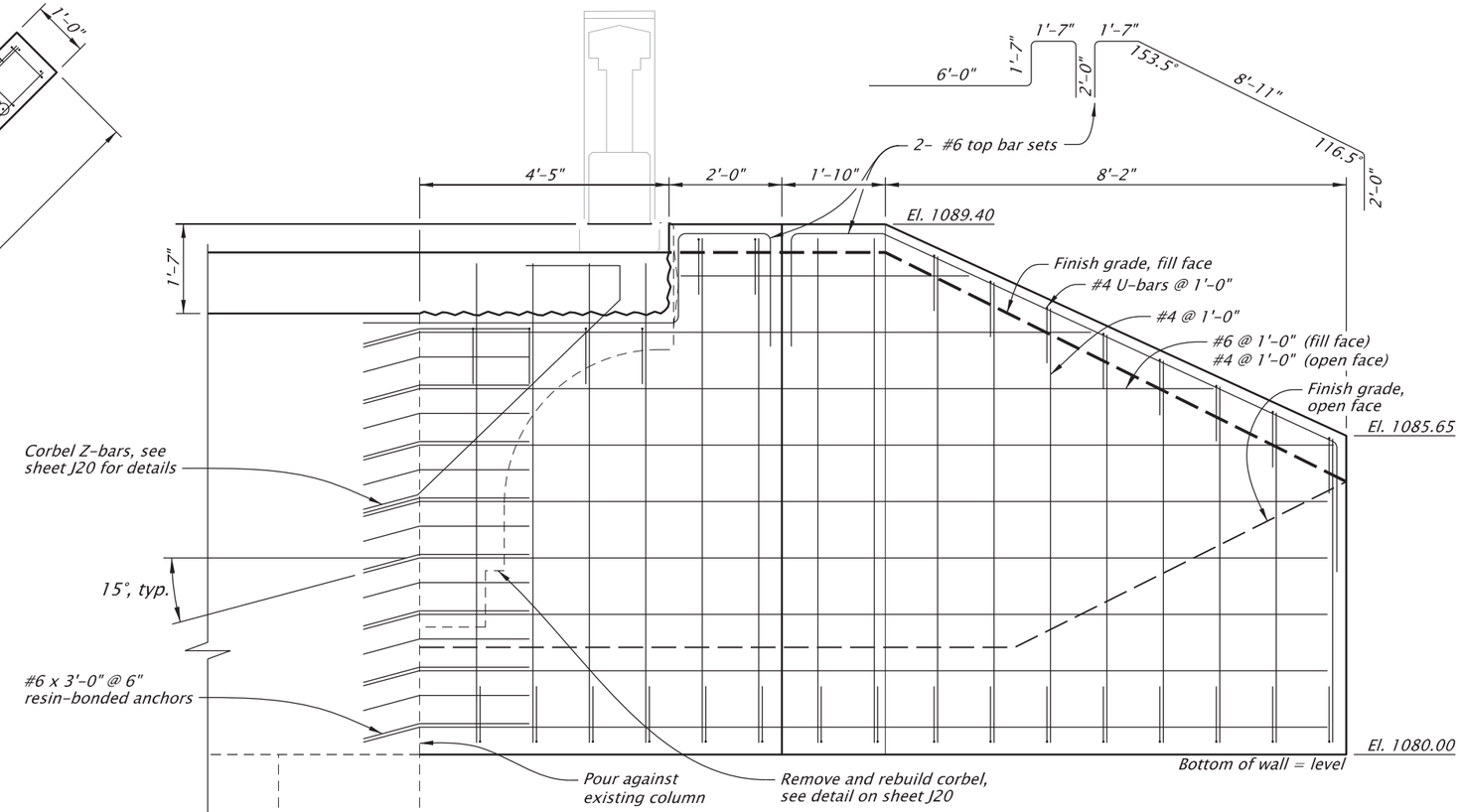

DEVELOPED ELEVATION
Scale: 3/8"=1'-0"

NOTE:
Deck reinforcing not shown for clarity.

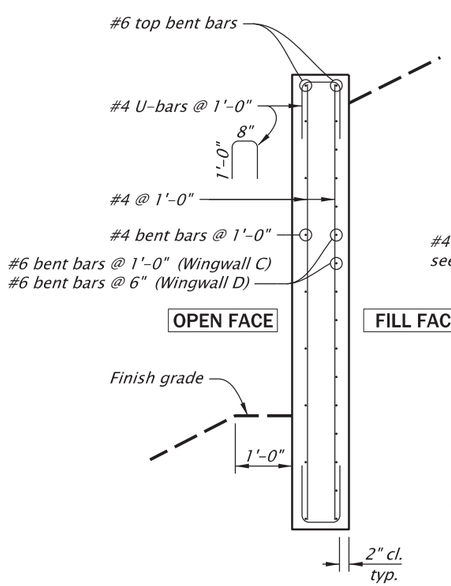

SECTION J-J
Scale: 3/8"=1'-0"

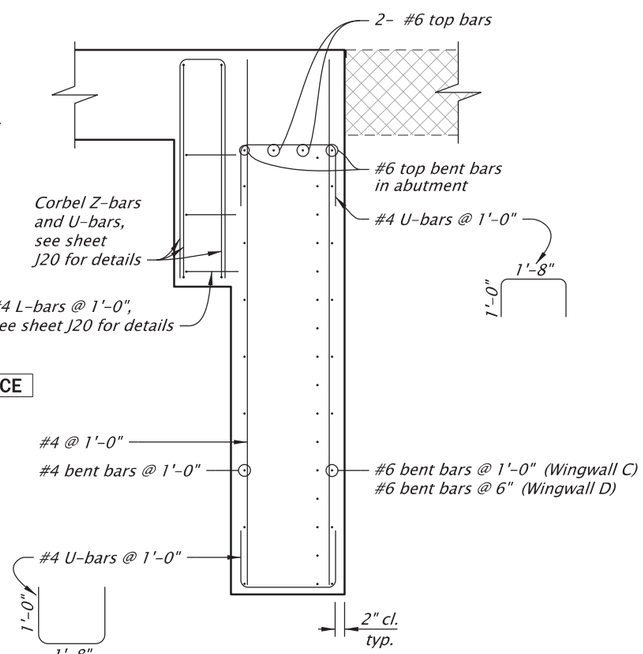

SECTION K-K
Scale: 3/8"=1'-0"

NOTE:
Archaeological Monitoring required for all ground-disturbing activities related to wall construction.

See sheet J01 for Accompanied By Drawings and Informational Drawings.

STRUCTURE NO.	00576
BDS DWG NO.	114182
CALC. BOOK	7777
HWY: 486	M.P.: 2.65
COUNTY	Jackson
DATE	JUNE 2026

IF THIS MEASURES 1 INCH THEN DRAWING IS TO SCALE

REGISTERED PROFESSIONAL ENGINEER
56148PE
DIGITALLY SIGNED 2026.06.03 07:19:02-07'00'
OREGON
JAN. 15, 2002
ROBERT E. GRUBBS
RENEWS: 06-30-2027

FINAL ELECTRONIC DOCUMENT AVAILABLE UPON REQUEST

OREGON DEPARTMENT OF TRANSPORTATION

Rogue R_Hwy 486 (Gold Hill Spur)

OR99: ROGUE RIVER BRIDGE, GOLD HILL SPUR PROJECT
GOLD HILL SPUR HIGHWAY
JACKSON COUNTY

Designer: Robert E. Grubbs, PE
Reviewer: Zachary T. Béget, PE
Drafter: J. Tillman
Checker: Luke W. Teubel, PE

WINGWALL C

SHEET NO. J22

KEY
Bridge removal limits, full height

NOTES:
Roughen existing concrete surfaces that will receive new concrete by chipping, shot blasting, or sandblasting to achieve a deviation from a plane surface of 1/4 inch and according to 00540.43(e).

Embed #4 resin-bonded bars 1'-0", typical.

Embed #6 resin-bonded bars 1'-10", typical.

See sheet J22 for Section J-J and Section K-K.

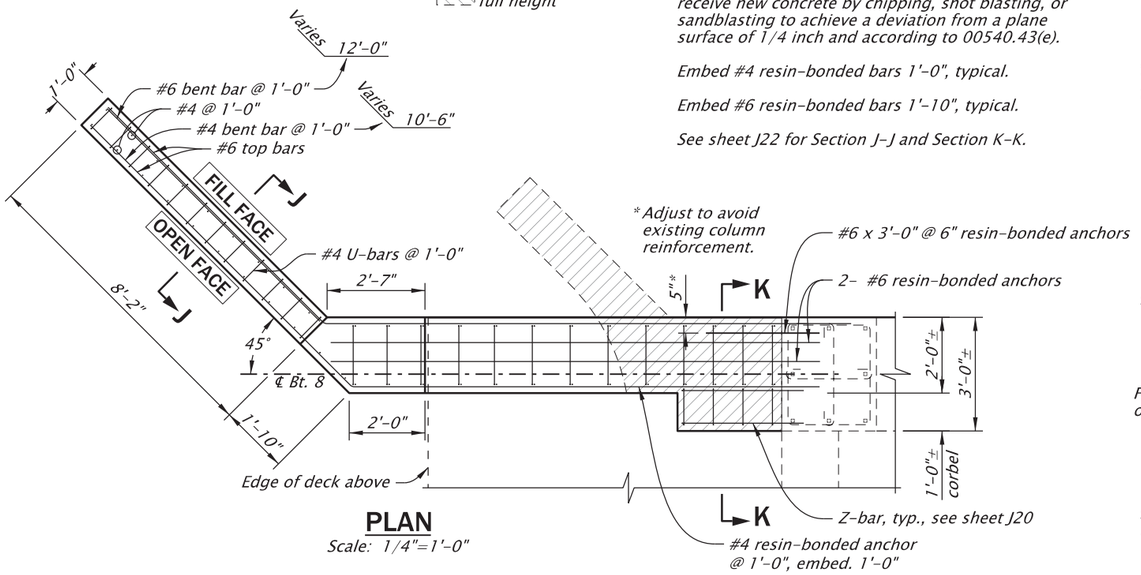

PLAN
Scale: 1/4"=1'-0"

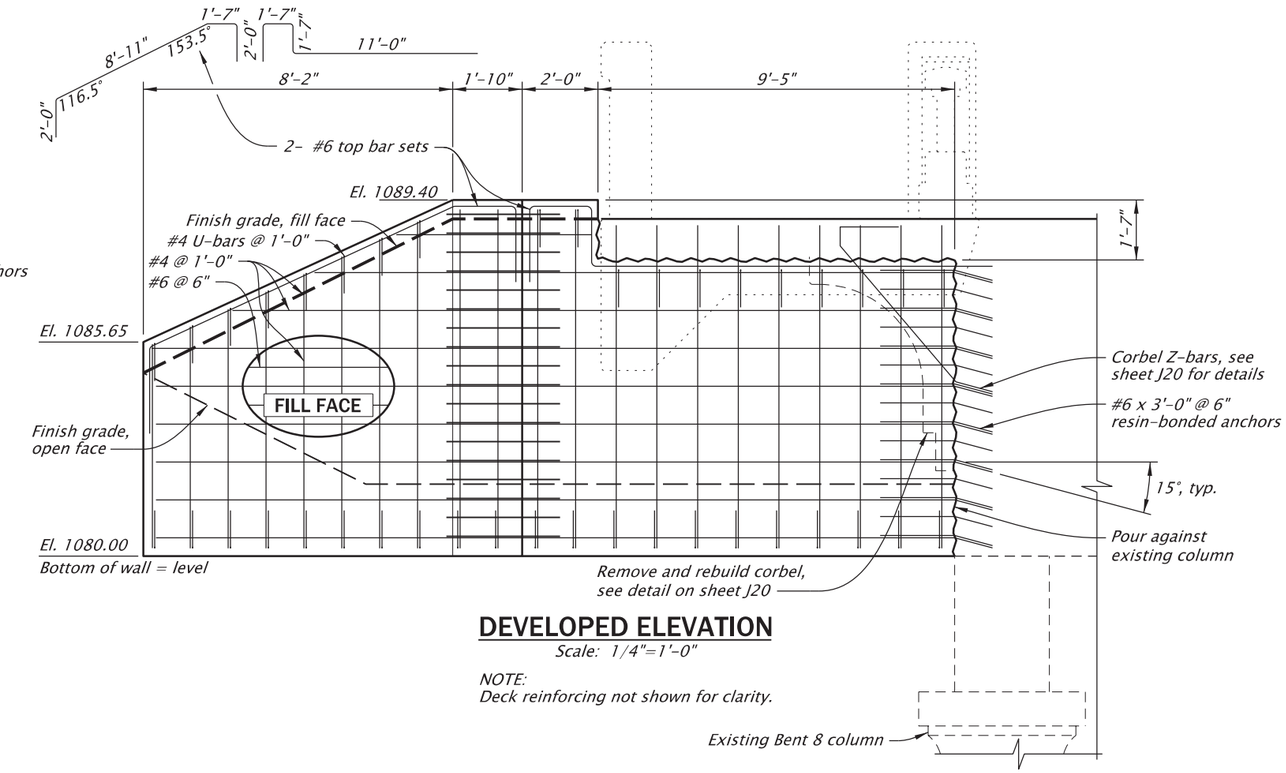

DEVELOPED ELEVATION
Scale: 1/4"=1'-0"

NOTE:
Deck reinforcing not shown for clarity.

NOTE:
Archaeological Monitoring required for all ground-disturbing activities related to wall construction.

See sheet J01 for Accompanied By Drawings and Informational Drawings.

IF THIS MEASURES 1 INCH THEN DRAWING IS TO SCALE

STRUCTURE NO.	00576
BDS DWG NO.	114183
CALC. BOOK	7777
HWY: 486 M.P.: 2.65	
COUNTY	Jackson
DATE	JUNE 2026

REGISTERED PROFESSIONAL ENGINEER
56148PE
DIGITALLY SIGNED 2026.06.03 07:19:33-07'00'
OREGON
JAN. 15, 2002
ROBERT E. GRUBBS
RENEWS: 06-30-2027

FINAL ELECTRONIC DOCUMENT AVAILABLE UPON REQUEST

OREGON DEPARTMENT OF TRANSPORTATION

Rogue R_Hwy 486 (Gold Hill Spur)

OR99: ROGUE RIVER BRIDGE, GOLD HILL SPUR PROJECT
GOLD HILL SPUR HIGHWAY
JACKSON COUNTY

Designer: Robert E. Grubbs, PE
Reviewer: Zachary T. Béget, PE
Drafter: J. Tillman
Checker: Luke W. Teubel, PE

WINGWALL D

SHEET NO. J23

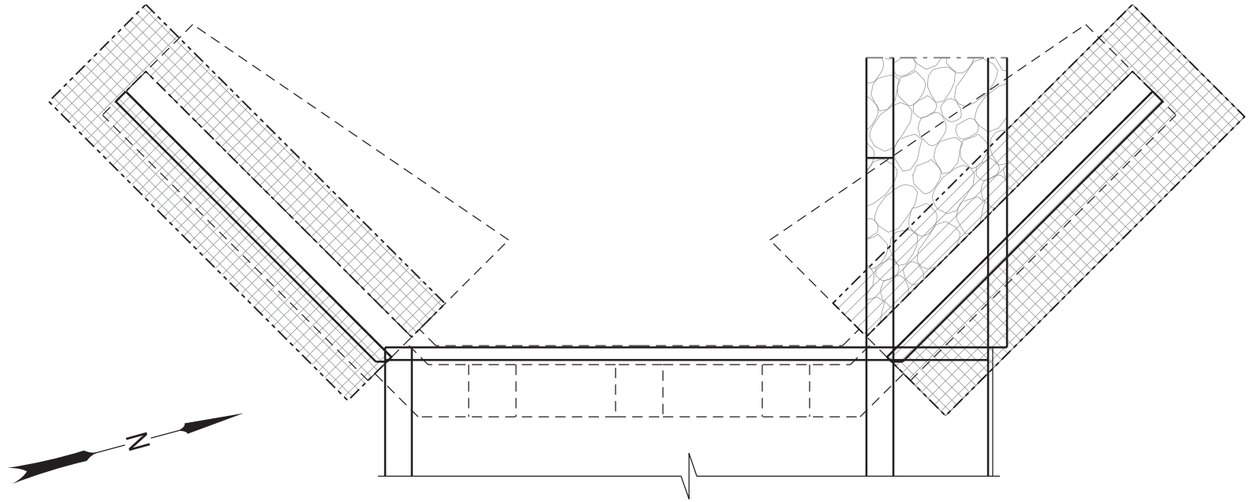

PLAN

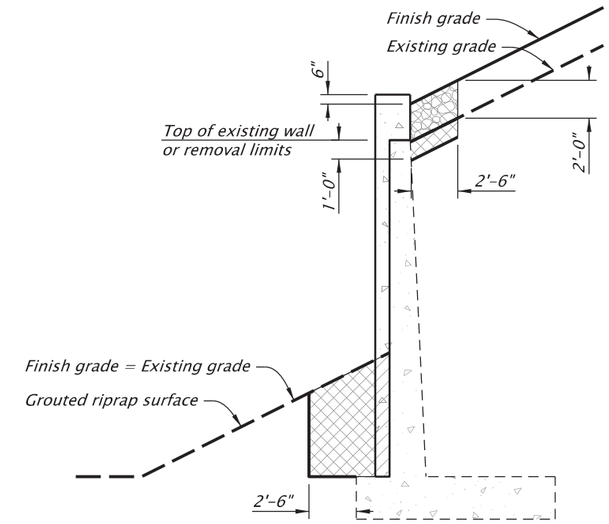

SECTION

BENT 1 EXCAVATION AND BACKFILL DETAILS

Scale: 1/8"=1'-0"

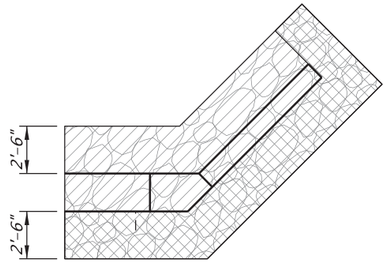

PLAN

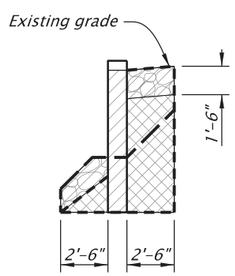

SECTION

BENT 8 EXCAVATION AND BACKFILL DETAILS

Scale: 1/8"=1'-0"

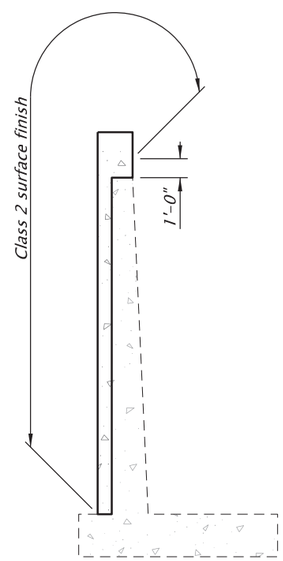

WINGWALLS A AND B

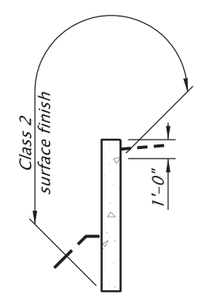

WINGWALLS C AND D

WALL SURFACE FINISH DIAGRAM

Scale: 1/8"=1'-0"

KEY

- *Structural excavation*
- *Stone embankment*
- *Granular wall backfill*

NOTE:
Archaeological Monitoring required for all ground-disturbing activities related to wall construction.

See sheet J01 for Accompanied By Drawings and Informational Drawings.

IF THIS MEASURES 1 INCH THEN DRAWING IS TO SCALE

STRUCTURE NO.	00576
BDS DWG NO.	114184
CALC. BOOK	7777
HWY: 486	M.P.: 2.65
COUNTY	Jackson
DATE	JUNE 2026

REGISTERED PROFESSIONAL ENGINEER
56148PE
DIGITALLY SIGNED 2026.06.03 07:20:10-07'00'
OREGON
JAN. 15, 2002
ROBERT E. GRUBBS
RENEWS: 06-30-2027

FINAL ELECTRONIC DOCUMENT AVAILABLE UPON REQUEST

OREGON DEPARTMENT OF TRANSPORTATION

Rogue R_Hwy 486 (Gold Hill Spur)

OR99: ROGUE RIVER BRIDGE, GOLD HILL SPUR PROJECT
GOLD HILL SPUR HIGHWAY
JACKSON COUNTY

Designer: Robert E. Grubbs, PE Reviewer: Zachary T. Béget, PE
Drafter: J. Tillman Checker: Luke W. Teubel, PE

WINGWALL EXCAVATION and BACKFILL LIMITS

SHEET NO. J24

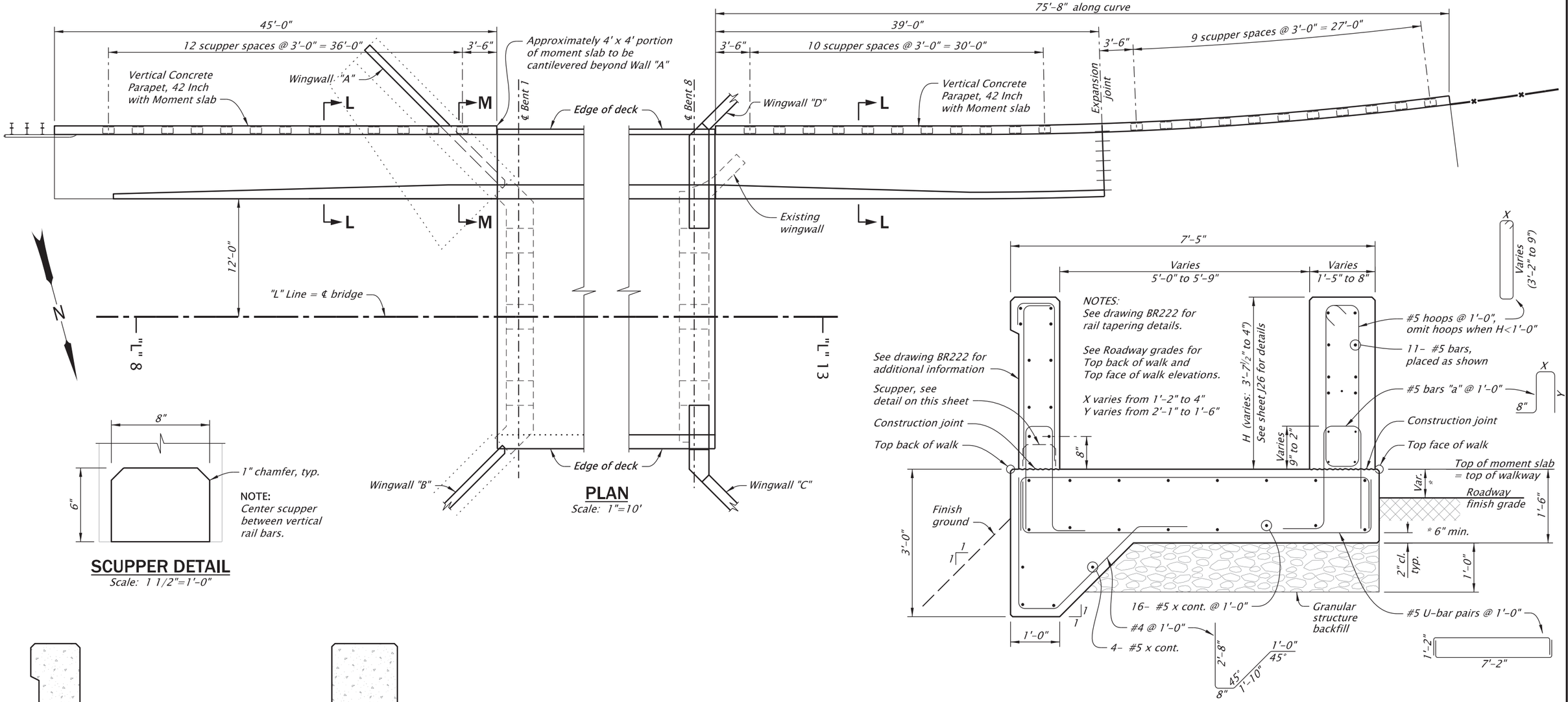

PLAN
Scale: 1"=10'

SECTION L-L
Scale: ½"=1'-0"

NOTE:
Center scupper between vertical rail bars.

SCUPPER DETAIL
Scale: 1 1/2"=1'-0"

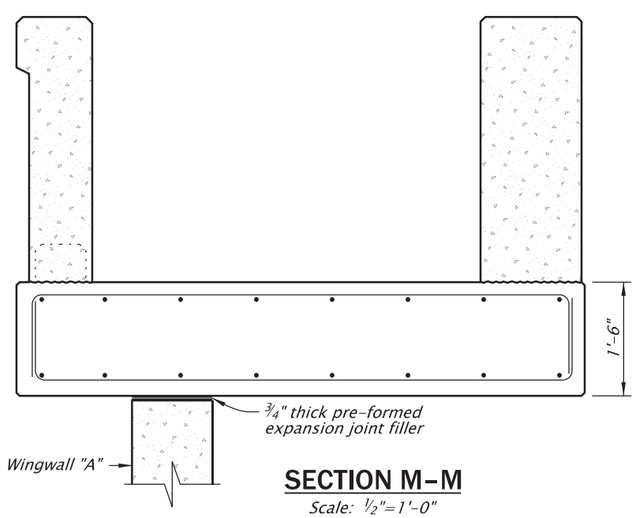

SECTION M-M
Scale: ½"=1'-0"

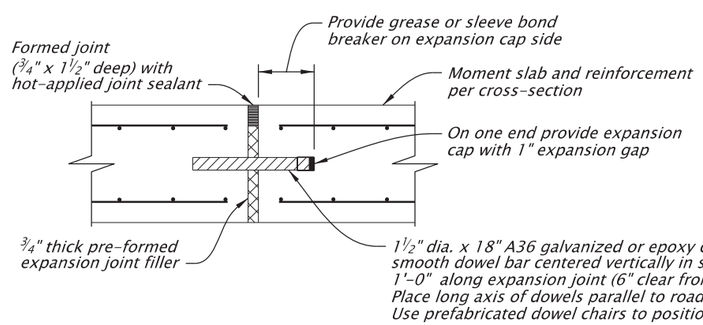

EXPANSION JOINT
Not To Scale

See sheet J01 for Accompanied By Drawings and Informational Drawings.

IF THIS MEASURES 1 INCH THEN DRAWING IS TO SCALE

STRUCTURE NO.	00576
BDS DWG NO.	114185
CALC. BOOK	7777
HWY: 486 M.P.: 2.65	
COUNTY	Jackson
DATE	JUNE 2026

REGISTERED PROFESSIONAL ENGINEER
56148PE
DIGITALLY SIGNED 2026.06.03 07:20:49-07'00'
OREGON
JAN. 15, 2002
ROBERT E. GRUBBS
RENEWS: 06-30-2027

FINAL ELECTRONIC DOCUMENT AVAILABLE UPON REQUEST

OREGON DEPARTMENT OF TRANSPORTATION

Rogue R_Hwy 486 (Gold Hill Spur)

OR99: ROGUE RIVER BRIDGE, GOLD HILL SPUR PROJECT
GOLD HILL SPUR HIGHWAY
JACKSON COUNTY

Designer: Robert E. Grubbs, PE
Reviewer: Zachary T. Béget, PE
Drafter: J. Tillman
Checker: Luke W. Teubel, PE

VERTICAL CONCRETE PARAPET, 42 INCH WITH MOMENT SLAB

SHEET NO. J25

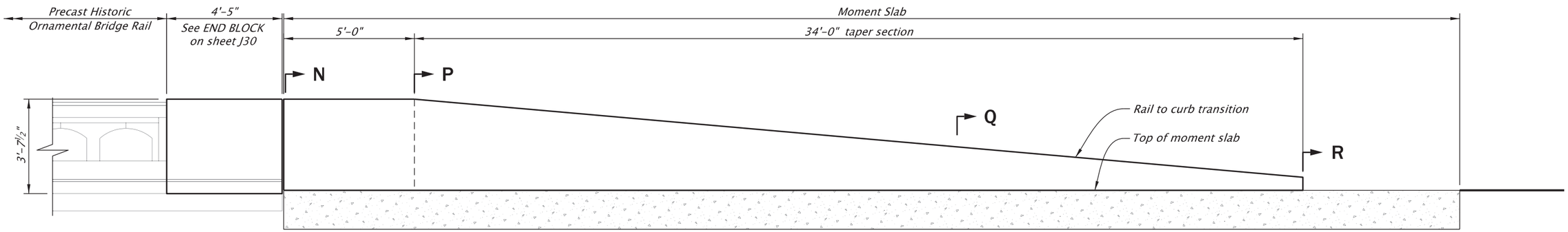

SECTION S-S

Scale: ¼" = 1'-0"

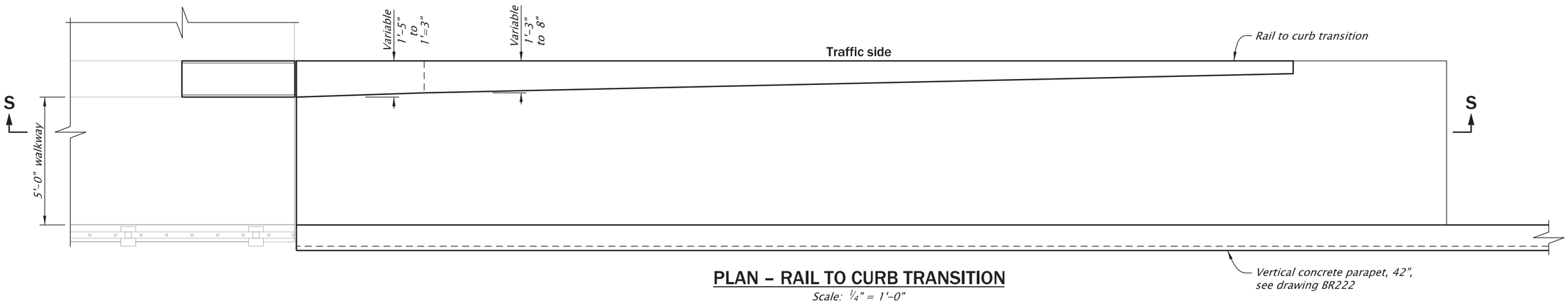

PLAN - RAIL TO CURB TRANSITION

Scale: ¼" = 1'-0"

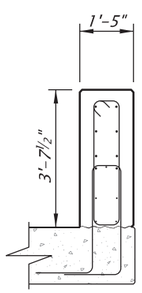

SECTION N-N

Scale: ¼" = 1'-0"

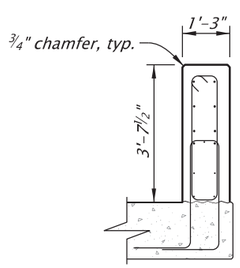

SECTION P-P

Scale: ¼" = 1'-0"

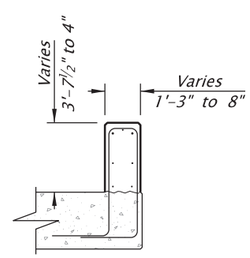

SECTION Q-Q

Scale: ¼" = 1'-0"

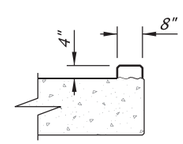

SECTION R-R

Scale: ¼" = 1'-0"

See sheet J01 for Accompanied By Drawings and Informational Drawings.

IF THIS MEASURES 1 INCH THEN DRAWING IS TO SCALE

STRUCTURE NO.	00576
BDS DWG NO.	114186
CALC. BOOK	7777
HWY: 486	M.P.: 2.65
COUNTY	Jackson
DATE	JUNE 2026

REGISTERED PROFESSIONAL ENGINEER
56148PE
DIGITALLY SIGNED 2026.06.25 06:07:43-07'00'
OREGON
JAN. 15, 2002
ROBERT E. GRUBBS
RENEWS: 06-30-2027

FINAL ELECTRONIC DOCUMENT AVAILABLE UPON REQUEST

OREGON DEPARTMENT OF TRANSPORTATION

Rogue R_Hwy 486 (Gold Hill Spur)

OR99: ROGUE RIVER BRIDGE, GOLD HILL SPUR PROJECT

GOLD HILL SPUR HIGHWAY
JACKSON COUNTY

Designer: Robert E. Grubbs, PE
Reviewer: Zachary T. Béget, PE
Drafter: J. Tillman
Checker: Luke W. Teubel, PE

RAIL TO CURB TRANSITION

SHEET NO. J26

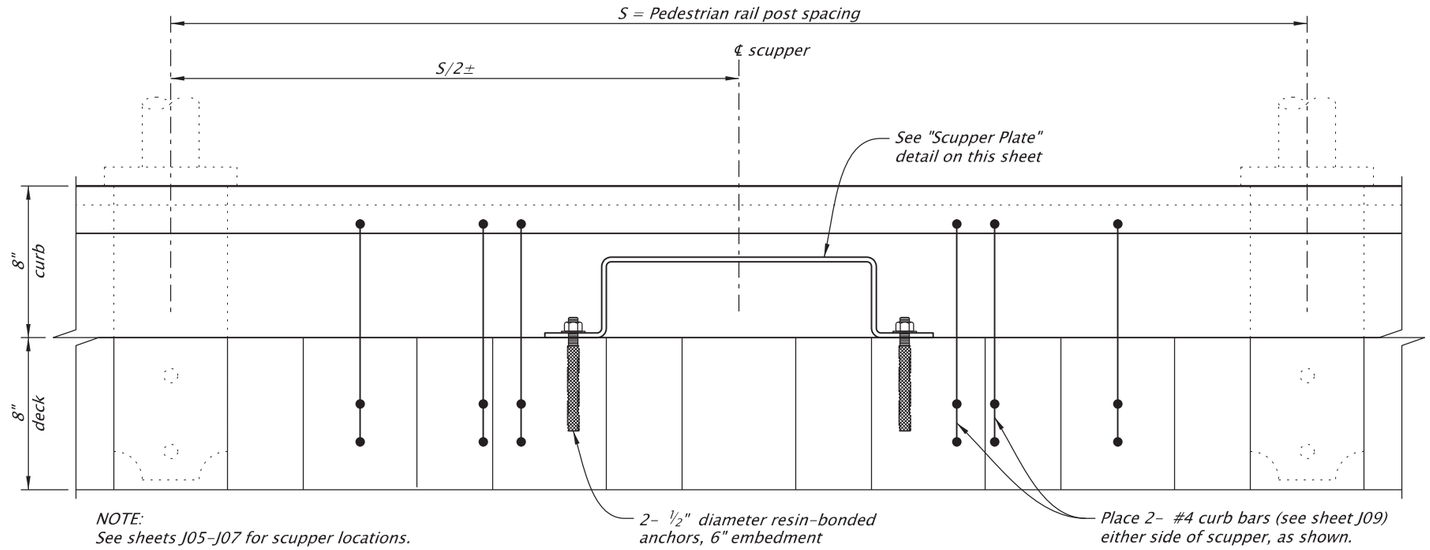

WALKWAY SCUPPER

Scale: 1 1/2"=1'-0"

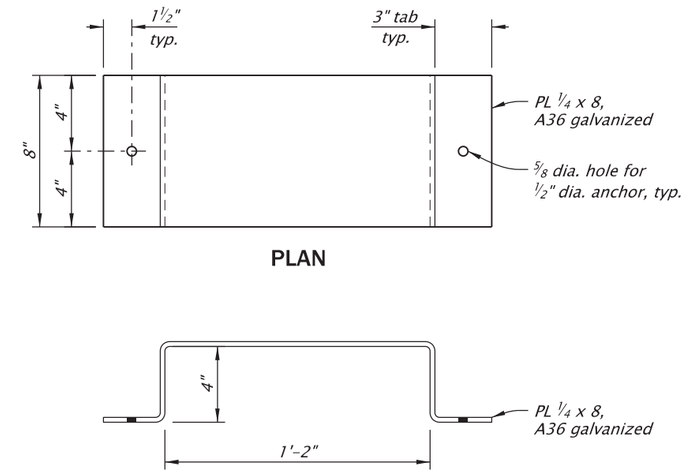

SCUPPER PLATE

Scale: 1 1/2"=1'-0"

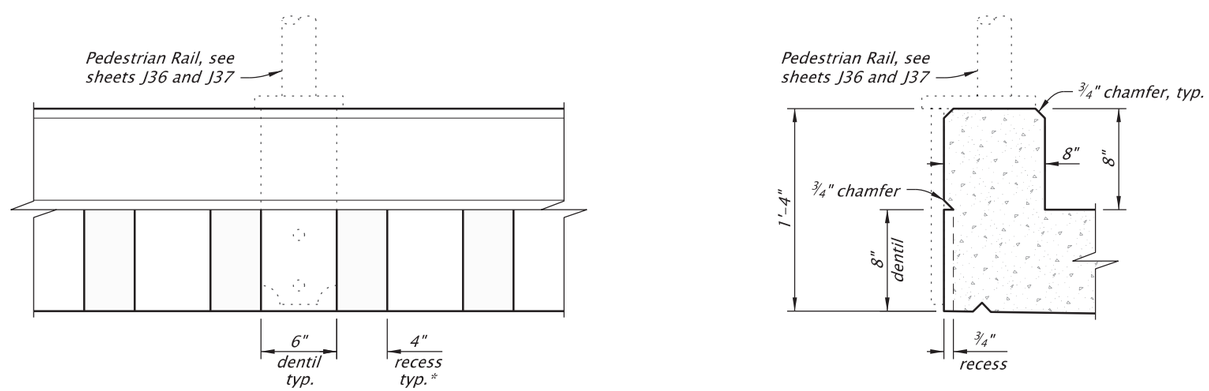

CURB AND DENTIL DETAILS

Scale: 1"=1'-0"

IF THIS MEASURES 1 INCH THEN DRAWING IS TO SCALE

See sheet J01 for Accompanied By Drawings and Informational Drawings.

STRUCTURE NO.	00576
BDS DWG NO.	114187
CALC. BOOK	7777
HWY: 486	M.P.: 2.65
COUNTY	Jackson
DATE	JUNE 2026

REGISTERED PROFESSIONAL ENGINEER
56148PE
DIGITALLY SIGNED 2026.06.03 07:21:56-07'00'
OREGON
JAN. 15, 2002
ROBERT E. GRUBBS
RENEWS: 06-30-2027

FINAL ELECTRONIC DOCUMENT AVAILABLE UPON REQUEST

OREGON DEPARTMENT OF TRANSPORTATION

Rogue R_Hwy 486 (Gold Hill Spur)

OR99: ROGUE RIVER BRIDGE, GOLD HILL SPUR PROJECT
GOLD HILL SPUR HIGHWAY
JACKSON COUNTY

Designer: Robert E. Grubbs, PE Reviewer: Zachary T. Béget, PE
Drafter: J. Tillman Checker: Luke W. Teubel, PE

WALKWAY SCUPPER and DENTIL DETAILS

SHEET NO. J27

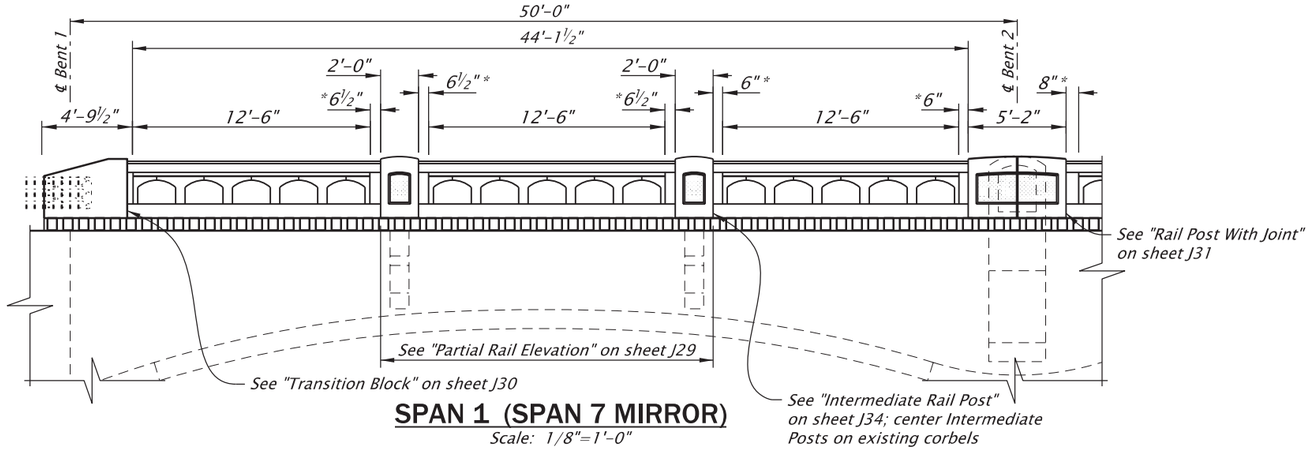

SPAN 1 (SPAN 7 MIRROR)

Scale: 1/8"=1'-0"

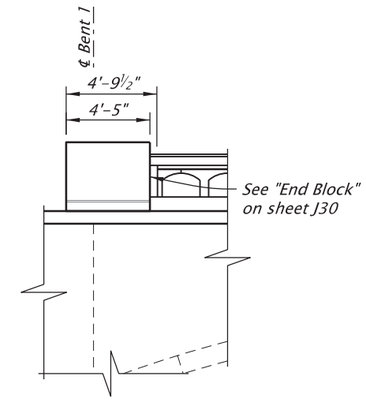

SPAN 1 END BLOCK AT MOMENT SLAB (SPAN 7 MIRROR)

Scale: 1/8"=1'-0"

PRECAST HISTORIC ORNAMENTAL BRIDGE RAIL LAYOUT

1) *Locate Intermediate Rail Posts centered at existing corbels, see sheet J34.*
2) *Locate Rail Post at Bents 2 and 7 centered on existing bent, located at deck joint, see sheet J31.*
3) *Locate Rail Post at Bents 3 and 6 centered on existing bent, see sheet J32.*
4) *Locate Rail Post at Bents 4 and 5 centered on existing bent and deck joints, see sheet J33.*
5) *Locate End Blocks and Transition Posts at bridge ends, see sheet J30.*
6) *Adjust dimensions between arch segments and posts, as shown, to result in five-arch segments centered between posts.*

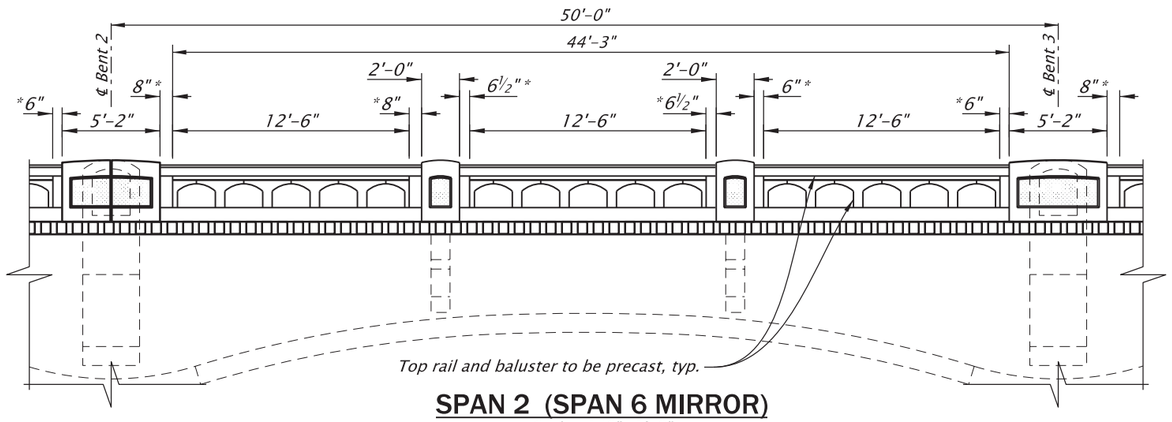

SPAN 2 (SPAN 6 MIRROR)

Scale: 1/8"=1'-0"

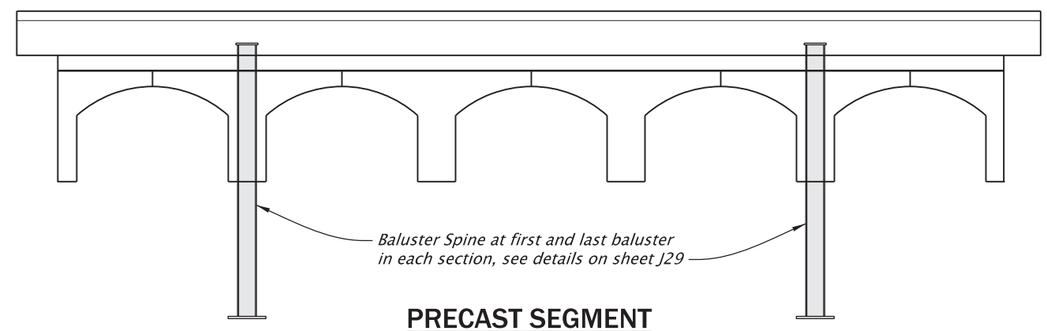

PRECAST SEGMENT

Scale: 1/2"=1'-0"

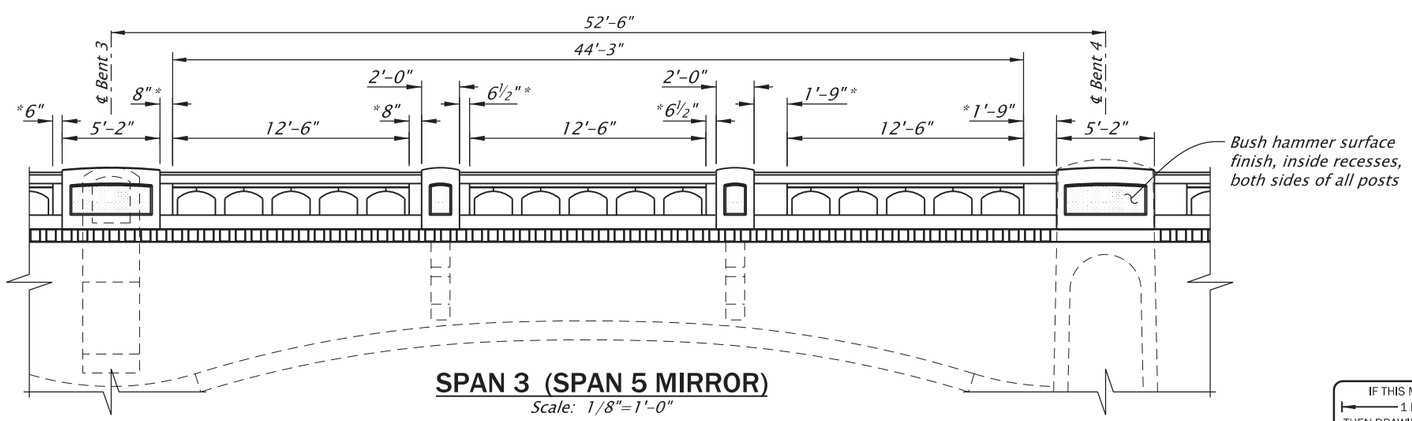

SPAN 3 (SPAN 5 MIRROR)

Scale: 1/8"=1'-0"

See sheet J01 for Accompanied By Drawings and Informational Drawings.

STRUCTURE NO.	00576
BDS DWG NO.	114188
CALC. BOOK	7777
HWY: 486	M.P.: 2.65
COUNTY	Jackson
DATE	JUNE 2026

IF THIS MEASURES 1 INCH THEN DRAWING IS TO SCALE

REGISTERED PROFESSIONAL ENGINEER
56148PE
DIGITALLY SIGNED 2026.06.25 06:07:54-07'00'
OREGON
JAN. 15, 2002
ROBERT E. GRUBBS
RENEWS: 06-30-2027

FINAL ELECTRONIC DOCUMENT AVAILABLE UPON REQUEST

OREGON DEPARTMENT OF TRANSPORTATION

Rogue R_Hwy 486 (Gold Hill Spur)

OR99: ROGUE RIVER BRIDGE, GOLD HILL SPUR PROJECT

GOLD HILL SPUR HIGHWAY
JACKSON COUNTY

Designer: Robert E. Grubbs, PE
Reviewer: Zachary T. Béget, PE
Drafter: J. Tillman
Checker: Luke W. Teubel, PE

RAIL ELEVATION 1

SHEET NO. J28

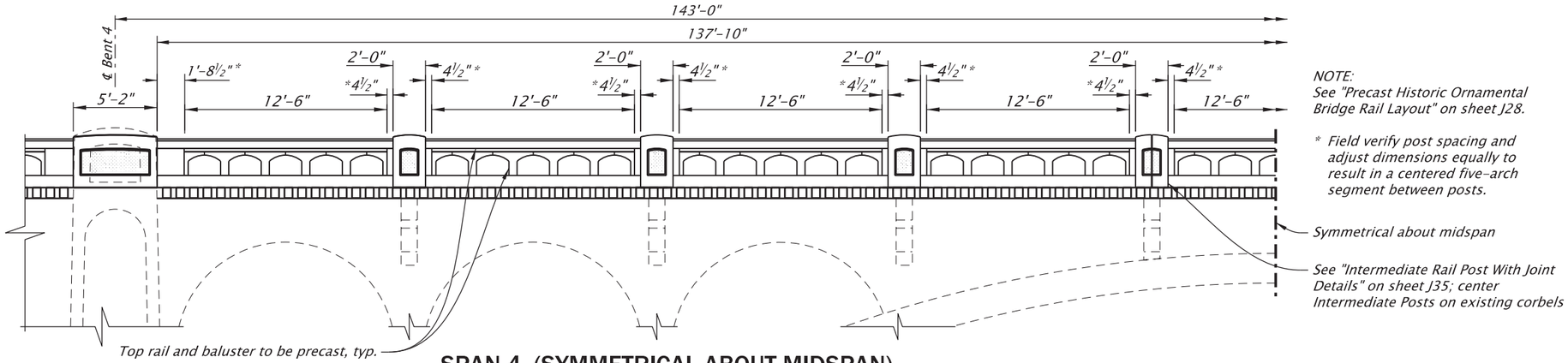

NOTE:
See "Precast Historic Ornamental Bridge Rail Layout" on sheet J28.

* Field verify post spacing and adjust dimensions equally to result in a centered five-arch segment between posts.

SPAN 4 (SYMMETRICAL ABOUT MIDSPAN)

Scale: 1/8"=1'-0"

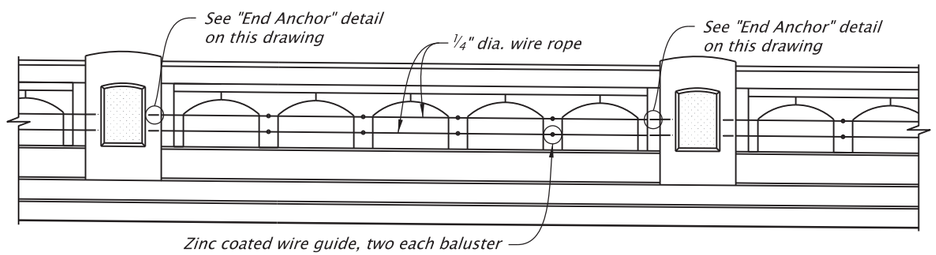

NOTE
Provide ANSI 316 stainless steel wire rope and hardware.

PARTIAL RAIL ELEVATION
RAIL WIRE ROPE ASSEMBLY

Scale: ¼"=1'-0"

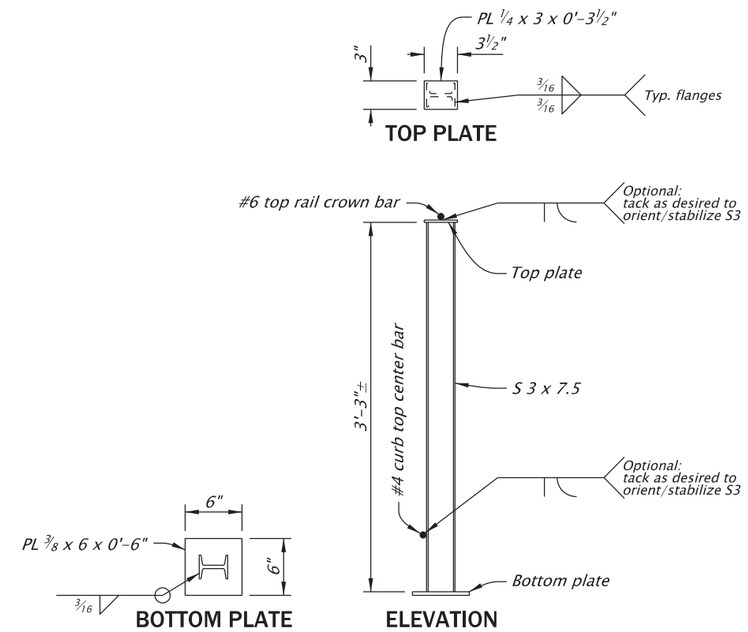

BALUSTER SPINE

Scale: ¾"=1'-0"

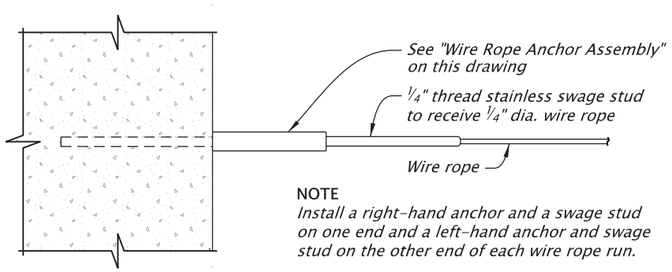

NOTE
Install a right-hand anchor and a swage stud on one end and a left-hand anchor and swage stud on the other end of each wire rope run.

END ANCHOR

Scale: 3"=1'-0"

* Type 316 stainless steel, ½" O.D. structural stainless pipe, interior tapped 2½" for ¼" dia. UNF, right and left handed

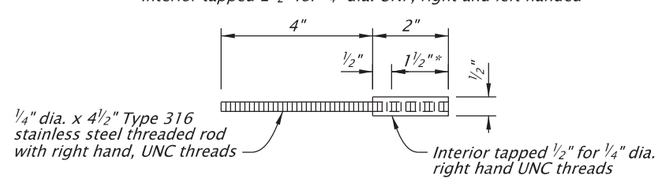

WIRE ROPE ANCHOR ASSEMBLY

Scale: 3"=1'-0"

See sheet J01 for Accompanied By Drawings and Informational Drawings.

STRUCTURE NO.	00576
BDS DWG NO.	114189
CALC. BOOK	7777
HWY: 486	M.P.: 2.65
COUNTY	Jackson
DATE	JUNE 2026

REGISTERED PROFESSIONAL ENGINEER
56148PE
DIGITALLY SIGNED 2026.06.25 06:08:06-07'00'
OREGON
JAN. 15, 2002
ROBERT E. GRUBBS
RENEWS: 06-30-2027

OREGON DEPARTMENT OF TRANSPORTATION

Rogue R_Hwy 486 (Gold Hill Spur)

OR99: ROGUE RIVER BRIDGE, GOLD HILL SPUR PROJECT
GOLD HILL SPUR HIGHWAY
JACKSON COUNTY

Designer: Robert E. Grubbs, PE
Reviewer: Zachary T. Béget, PE
Drafter: J. Tillman
Checker: Luke W. Teubel, PE

RAIL ELEVATION 2

SHEET NO. J29

IF THIS MEASURES 1 INCH THEN DRAWING IS TO SCALE

FINAL ELECTRONIC DOCUMENT AVAILABLE UPON REQUEST

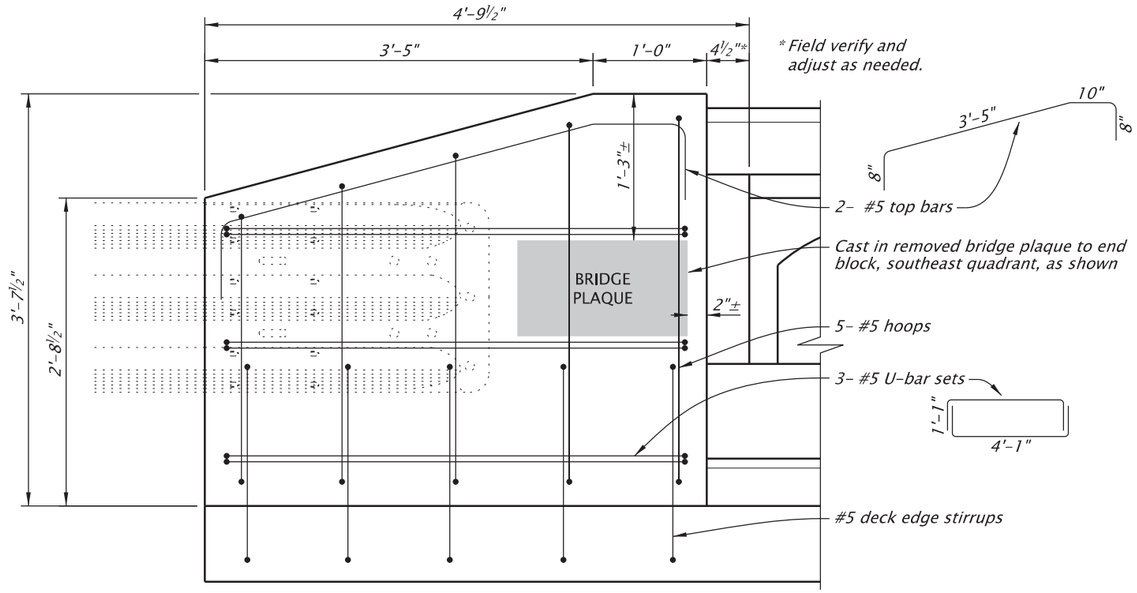

ELEVATION – TRANSITION BLOCK

Scale: 3/4"=1'-0"

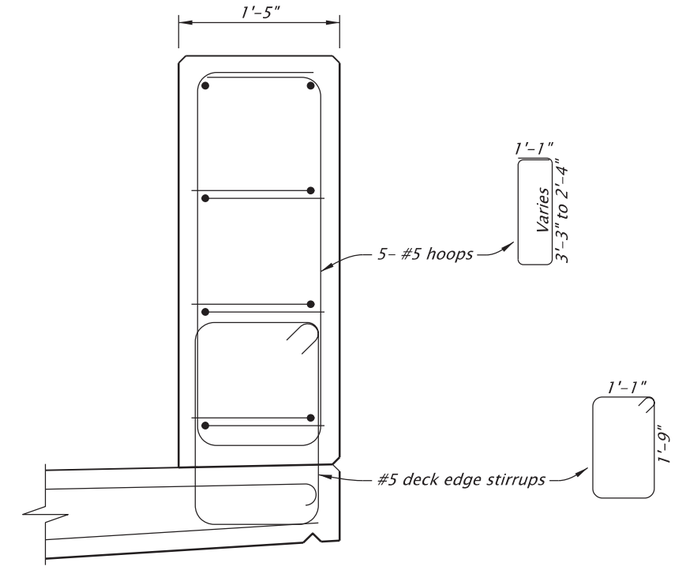

SECTION

Scale: 3/4"=1'-0"

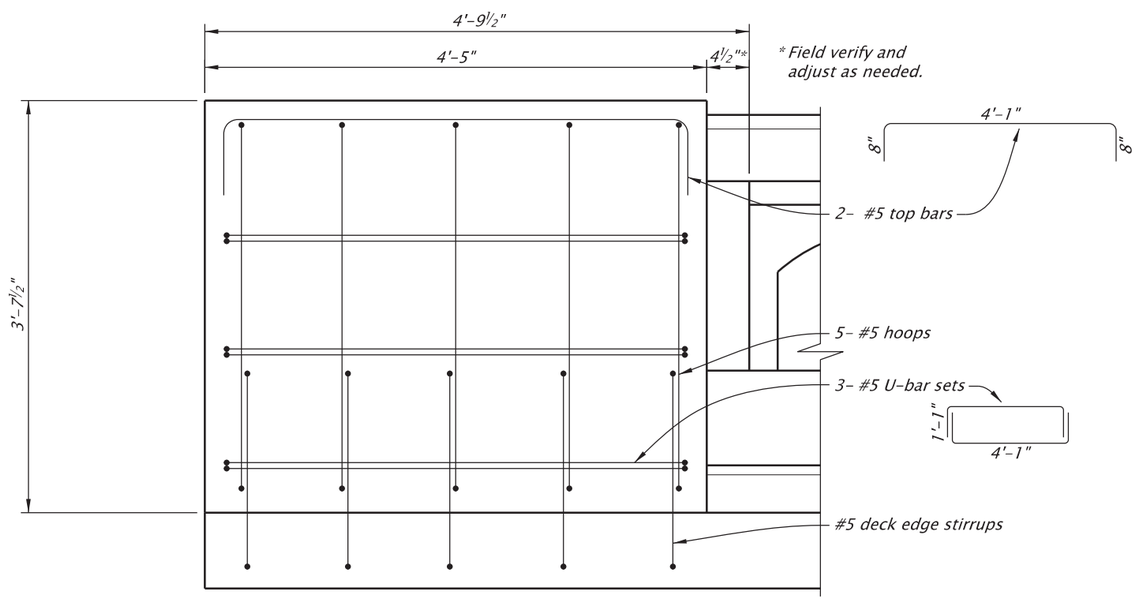

ELEVATION – END BLOCK

Scale: 3/4"=1'-0"

IF THIS MEASURES 1 INCH THEN DRAWING IS TO SCALE

See sheet J01 for Accompanied By Drawings and Informational Drawings.

STRUCTURE NO.	00576
BDS DWG NO.	114190
CALC. BOOK	7777
HWY: 486	M.P.: 2.65
COUNTY	Jackson
DATE	JUNE 2026

REGISTERED PROFESSIONAL ENGINEER
56148PE
DIGITALLY SIGNED 2026.06.25 06:08:20-07'00'
OREGON
JAN. 15, 2002
ROBERT E. GRUBBS
RENEWS: 06-30-2027

FINAL ELECTRONIC DOCUMENT AVAILABLE UPON REQUEST

OREGON DEPARTMENT OF TRANSPORTATION

Rogue R_Hwy 486 (Gold Hill Spur)

OR99: ROGUE RIVER BRIDGE, GOLD HILL SPUR PROJECT

GOLD HILL SPUR HIGHWAY
JACKSON COUNTY

Designer: Robert E. Grubbs, PE Reviewer: Zachary T. Béget, PE
Drafter: J. Tillman Checker: Luke W. Teubel, PE

PRECAST HISTORIC ORNAMENTAL BRIDGE RAIL END BLOCK and TRANSITION POST

SHEET NO. J30

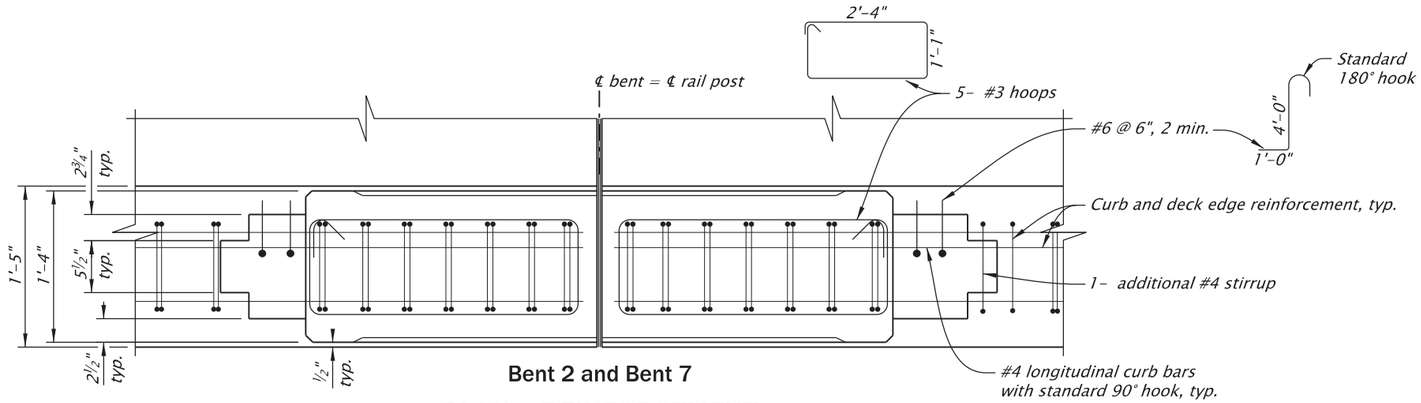

Bent 2 and Bent 7

PLAN – REINFORCEMENT

Scale: 3/4"=1'-0"

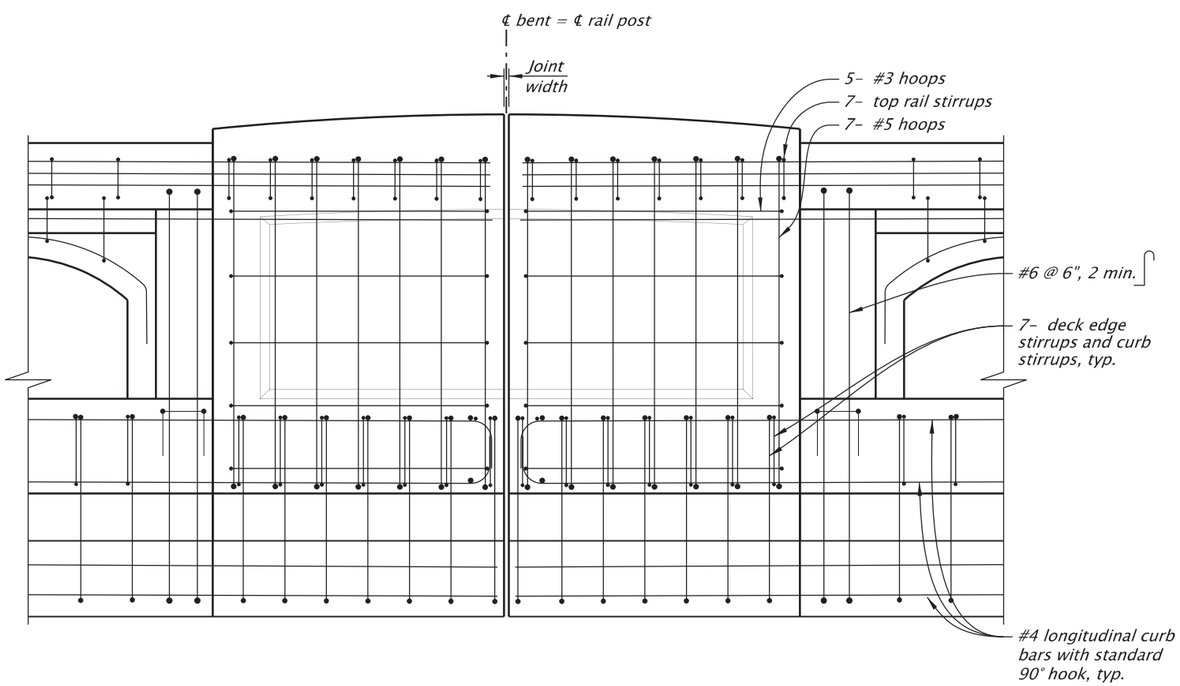

Bent 2 and Bent 7

ELEVATION – REINFORCEMENT

Scale: 3/4"=1'-0"

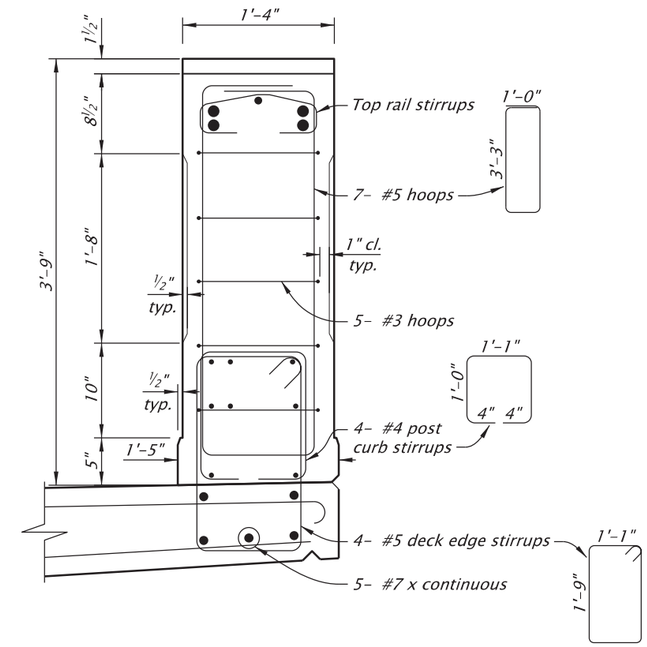

SECTION – RAIL POST

Scale: 3/4"=1'-0"

NOTE:
See sheet J32 for additional information.

See sheet J01 for Accompanied By Drawings and Informational Drawings.

STRUCTURE NO.	00576
BDS DWG NO.	114191
CALC. BOOK	7777
HWY: 486	M.P.: 2.65
COUNTY	Jackson
DATE	JUNE 2026

IF THIS MEASURES 1 INCH THEN DRAWING IS TO SCALE

REGISTERED PROFESSIONAL ENGINEER
56148PE
DIGITALLY SIGNED 2026.06.03 07:24:02-07'00'
OREGON
JAN. 15, 2002
ROBERT E. GRUBBS
RENEWS: 06-30-2027

FINAL ELECTRONIC DOCUMENT AVAILABLE UPON REQUEST

OREGON DEPARTMENT OF TRANSPORTATION

Rogue R_Hwy 486 (Gold Hill Spur)

OR99: ROGUE RIVER BRIDGE, GOLD HILL SPUR PROJECT
GOLD HILL SPUR HIGHWAY
JACKSON COUNTY

Designer: Robert E. Grubbs, PE
Reviewer: Zachary T. Béget, PE
Drafter: J. Tillman
Checker: Luke W. Teubel, PE

RAIL POST DETAILS - BENTS 2 and 7

SHEET NO. J31

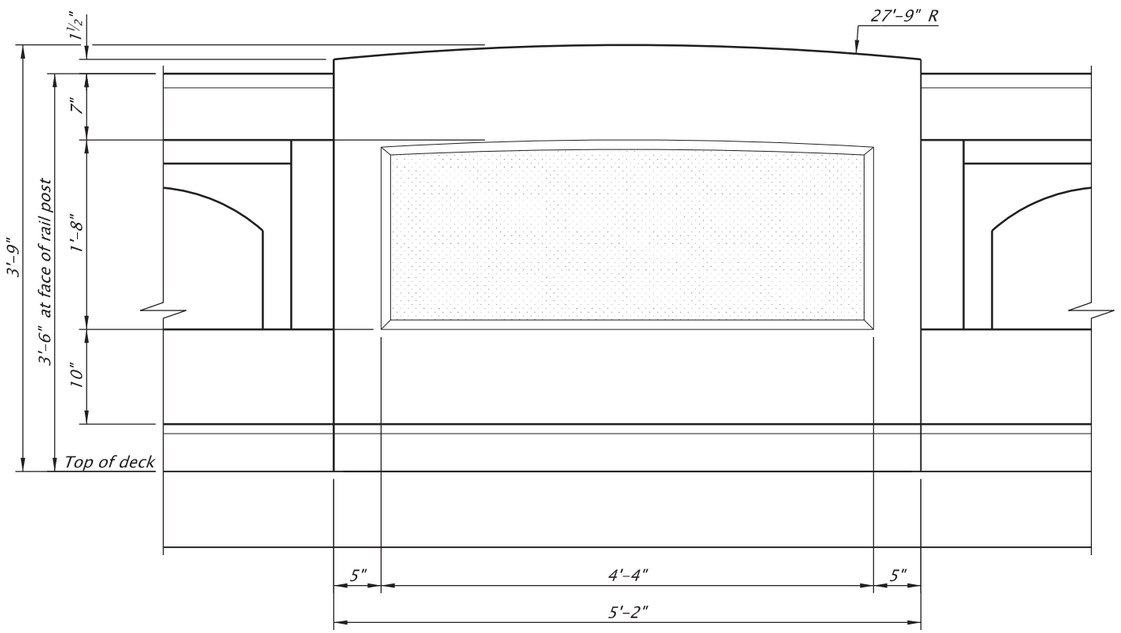

NOTE:
Similar for Bent 2, 4, 5, and 7.

ELEVATION – DIMENSIONS

Scale: 3/4"=1'-0"

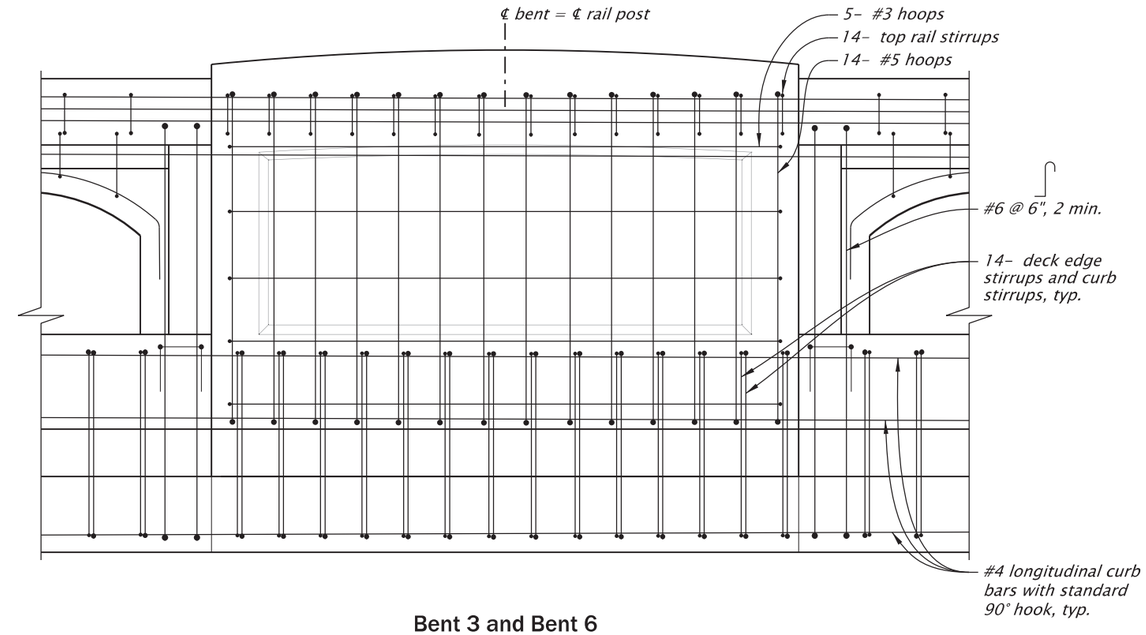

Bent 3 and Bent 6

ELEVATION – REINFORCEMENT

Scale: 3/4"=1'-0"

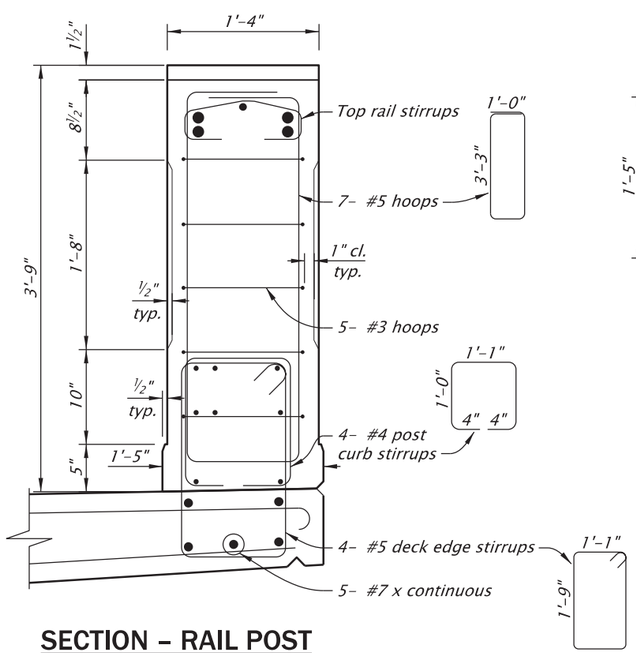

SECTION – RAIL POST

Scale: 3/4"=1'-0"

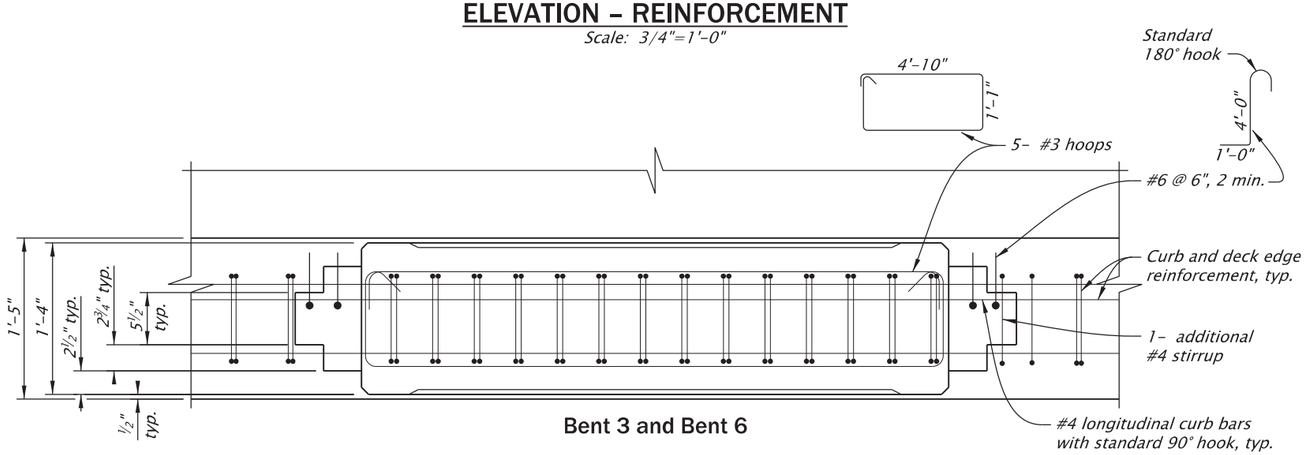

Bent 3 and Bent 6

PLAN – REINFORCEMENT

Scale: 3/4"=1'-0"

See sheet J01 for Accompanied By Drawings and Informational Drawings.

STRUCTURE NO.	00576
BDS DWG NO.	114192
CALC. BOOK	7777
HWY: 486 M.P.: 2.65	
COUNTY	Jackson
DATE	JUNE 2026

IF THIS MEASURES 1 INCH THEN DRAWING IS TO SCALE

REGISTERED PROFESSIONAL ENGINEER
56148PE
DIGITALLY SIGNED 2026.06.03 07:24:39-07'00'
OREGON
JAN. 15, 2002
ROBERT E. GRUBBS
RENEWS: 06-30-2027

FINAL ELECTRONIC DOCUMENT AVAILABLE UPON REQUEST

OREGON DEPARTMENT OF TRANSPORTATION

Rogue R_Hwy 486 (Gold Hill Spur)

OR99: ROGUE RIVER BRIDGE, GOLD HILL SPUR PROJECT
GOLD HILL SPUR HIGHWAY
JACKSON COUNTY

Designer: Robert E. Grubbs, PE
Reviewer: Zachary T. Béget, PE
Drafter: J. Tillman
Checker: Luke W. Teubel, PE

RAIL POST DETAILS - BENTS 3 and 6

SHEET NO. J32

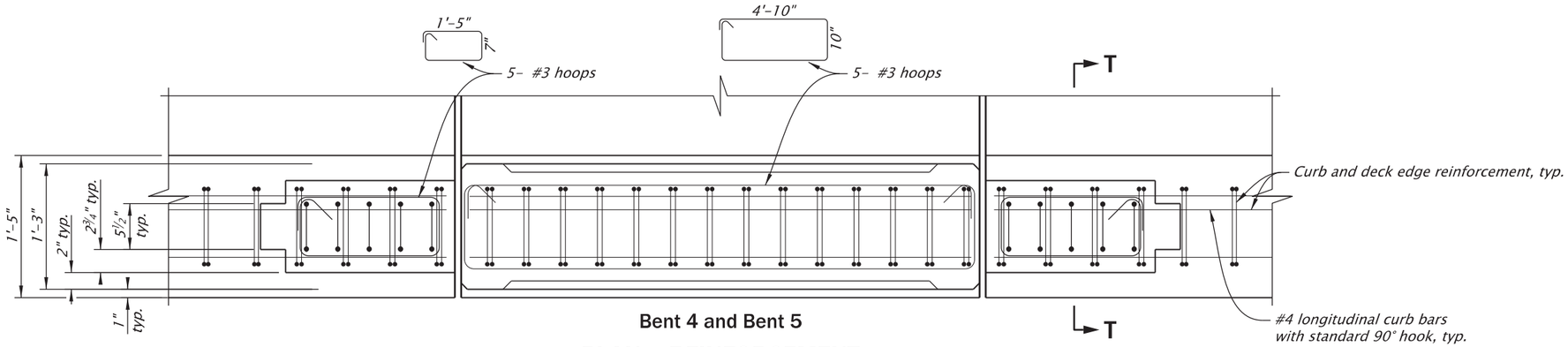

Bent 4 and Bent 5

PLAN – REINFORCEMENT

Scale: 3/4"=1'-0"

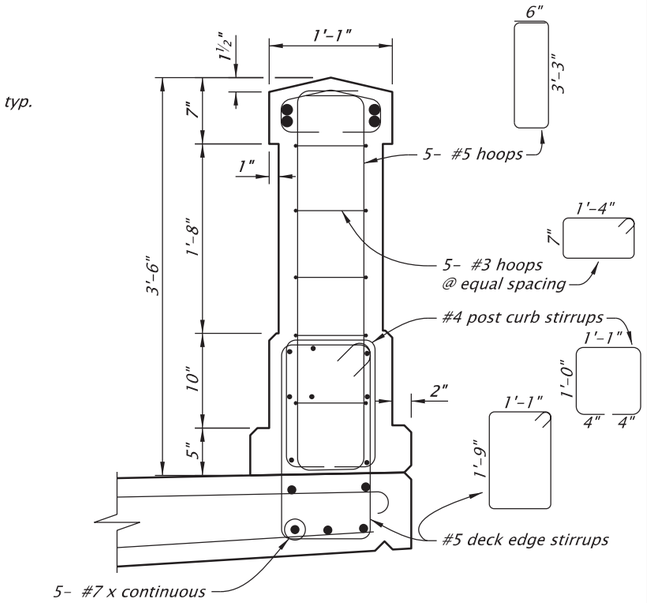

SECONDARY POST SECTION

SECTION T–T

Scale: 3/4"=1'-0"

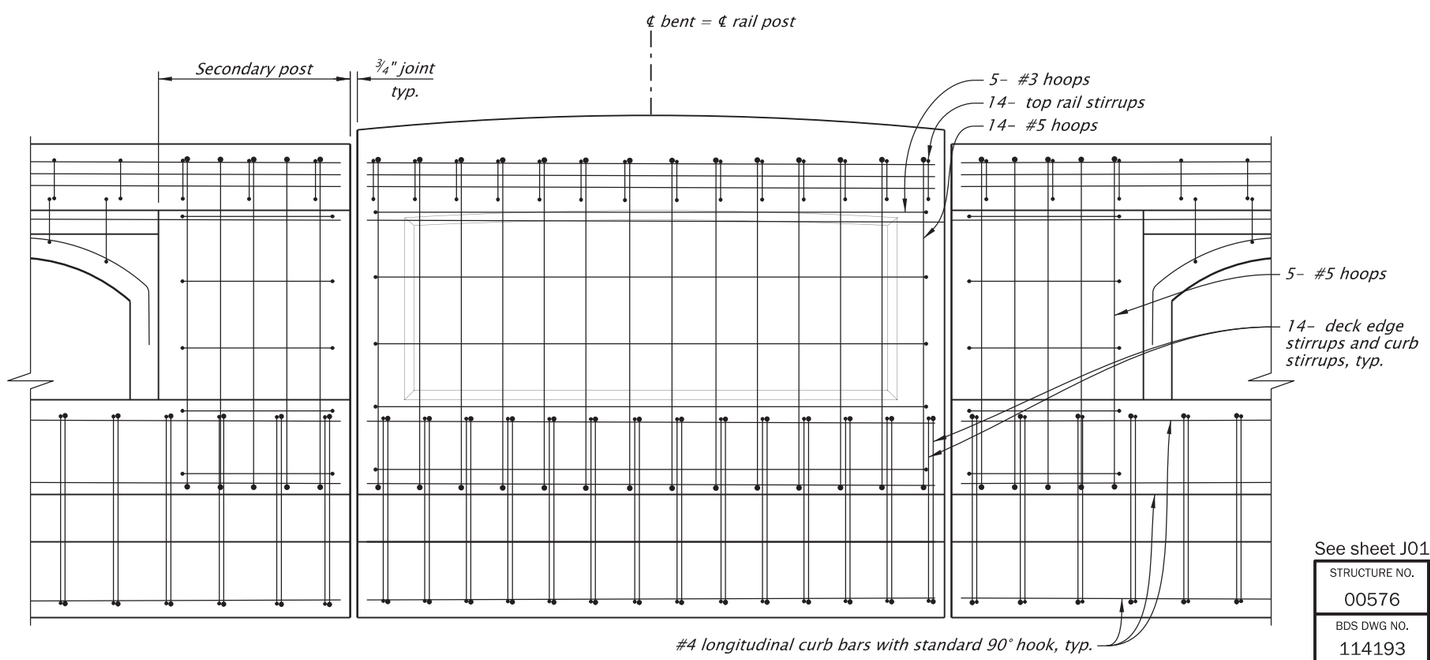

Bent 4 and Bent 5

ELEVATION – REINFORCEMENT

Scale: 3/4"=1'-0"

NOTE:
See "Section – Rail Post" on sheet J31.
See "Elevation – Dimensions" on sheet J32.

NOTE:
See sheet J32 for additional information.

See sheet J01 for Accompanied By Drawings and Informational Drawings.

IF THIS MEASURES 1 INCH THEN DRAWING IS TO SCALE

STRUCTURE NO.	00576
BDS DWG NO.	114193
CALC. BOOK	7777
HWY: 486	M.P.: 2.65
COUNTY	Jackson
DATE	JUNE 2026

REGISTERED PROFESSIONAL ENGINEER
56148PE
DIGITALLY SIGNED 2026.06.03 07:25:08-07'00'
OREGON
JAN. 15, 2002
ROBERT E. GRUBBS
RENEWS: 06–30–2027

FINAL ELECTRONIC DOCUMENT AVAILABLE UPON REQUEST

OREGON DEPARTMENT OF TRANSPORTATION

Rogue R_Hwy 486 (Gold Hill Spur)

OR99: ROGUE RIVER BRIDGE, GOLD HILL SPUR PROJECT
GOLD HILL SPUR HIGHWAY
JACKSON COUNTY

Designer: Robert E. Grubbs, PE
Reviewer: Zachary T. Béget, PE
Drafter: J. Tillman
Checker: Luke W. Teubel, PE

RAIL POST DETAILS - BENTS 4 and 5

SHEET NO. J33

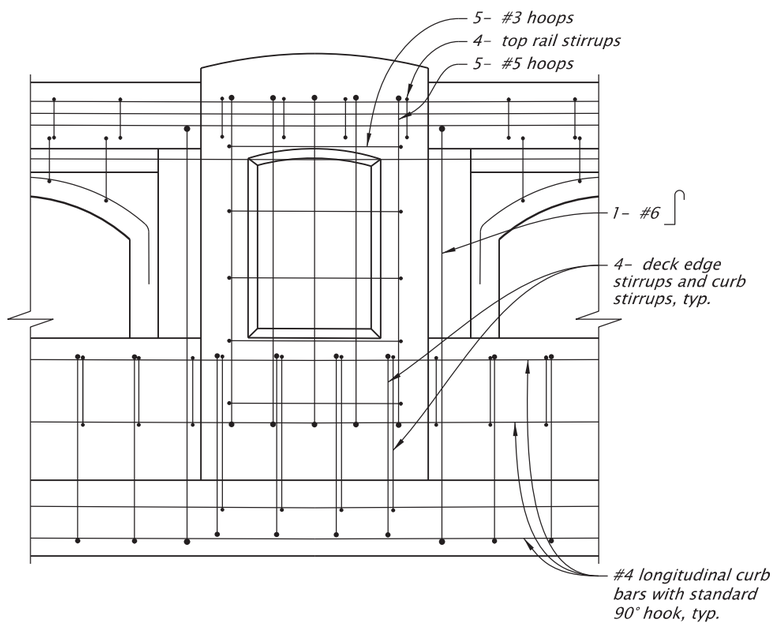

SC1, SC2, SC3, SC6, SC7, and SC8

ELEVATION – REINFORCEMENT

Scale: 3/4"=1'-0"

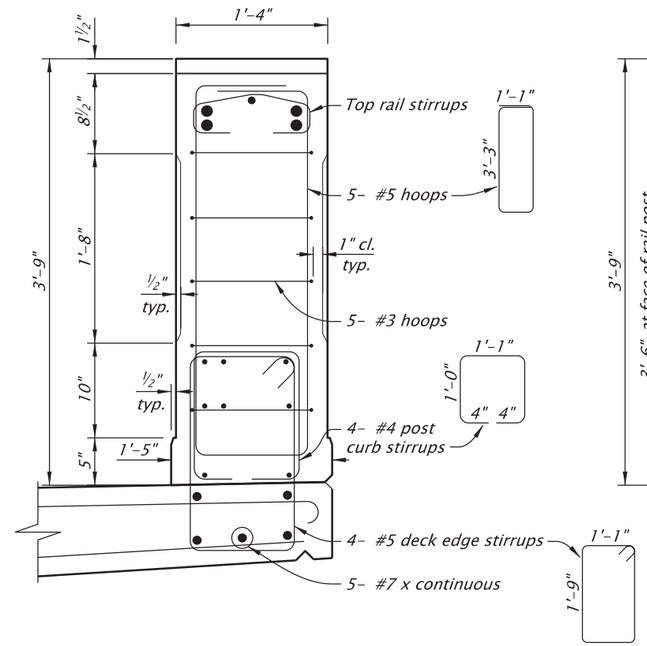

SECTION – RAIL POST

Scale: 3/4"=1'-0"

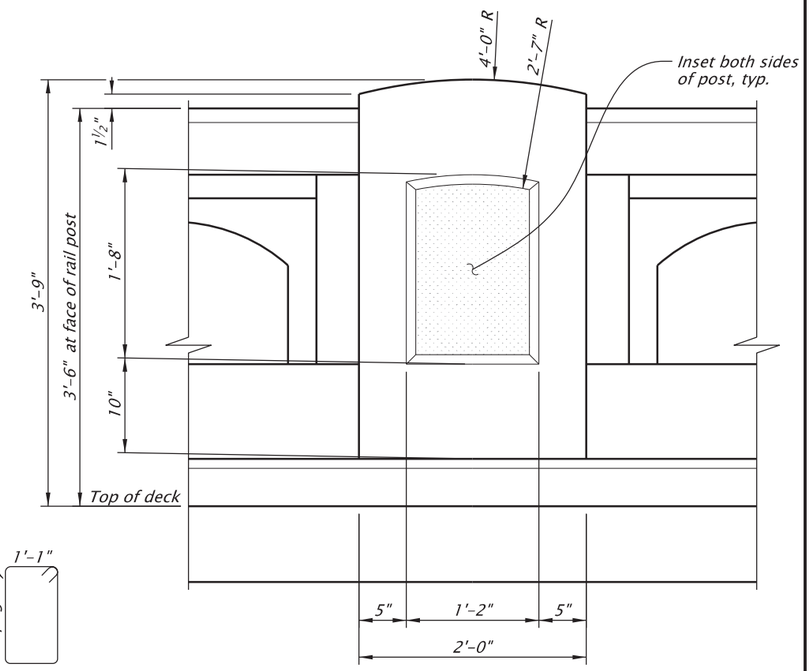

ELEVATION – DIMENSIONS

Scale: 3/4"=1'-0"

NOTE:
Center Intermediate Posts on existing corbels, as shown on sheets J28 and J29.

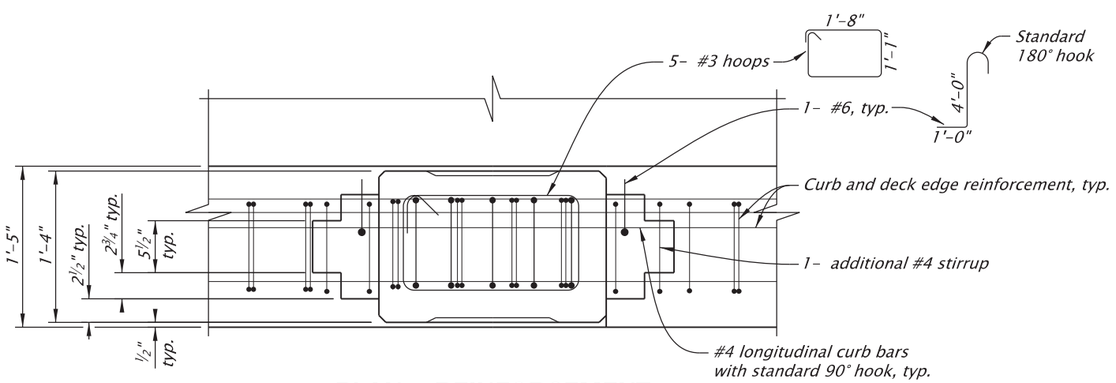

PLAN – REINFORCEMENT

Scale: 3/4"=1'-0"

See sheet J01 for Accompanied By Drawings and Informational Drawings.

STRUCTURE NO.	00576
BDS DWG NO.	114194
CALC. BOOK	7777
HWY: 486	M.P.: 2.65
COUNTY	Jackson
DATE	JUNE 2026

REGISTERED PROFESSIONAL ENGINEER
56148PE
DIGITALLY SIGNED 2026.06.03 07:26:26-07'00'
OREGON
JAN. 15, 2002
ROBERT E. GRUBBS
RENEWS: 06-30-2027

FINAL ELECTRONIC DOCUMENT AVAILABLE UPON REQUEST

OREGON DEPARTMENT OF TRANSPORTATION

Rogue R_Hwy 486 (Gold Hill Spur)

OR99: ROGUE RIVER BRIDGE, GOLD HILL SPUR PROJECT
GOLD HILL SPUR HIGHWAY
JACKSON COUNTY

Designer: Robert E. Grubbs, PE
Reviewer: Zachary T. Béget, PE
Drafter: J. Tillman
Checker: Luke W. Teubel, PE

INTERMEDIATE RAIL POST

SHEET NO. J34

IF THIS MEASURES 1 INCH THEN DRAWING IS TO SCALE

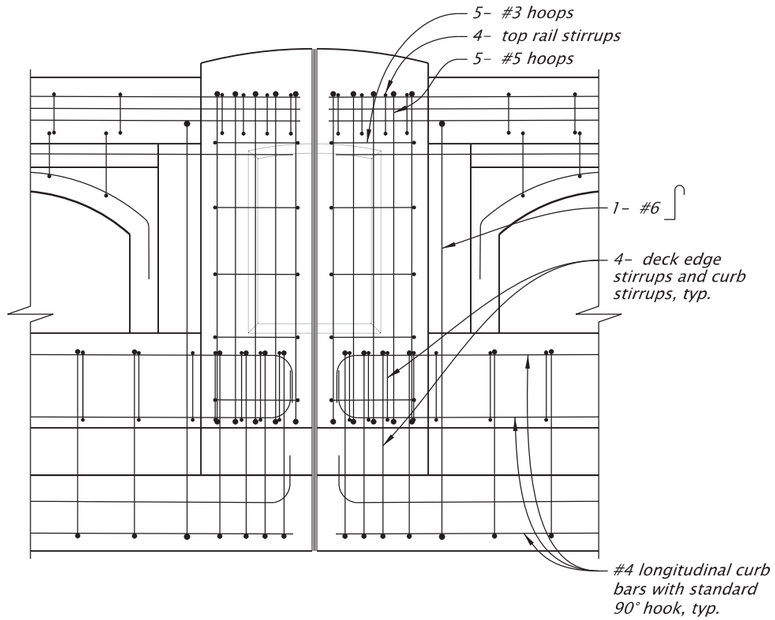

SC4 and SC5

ELEVATION – REINFORCEMENT

Scale: 3/4"=1'-0"

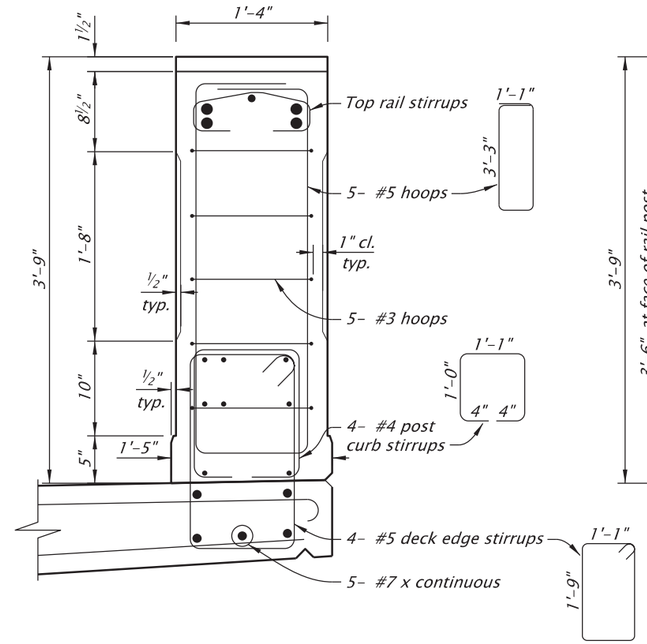

SECTION – RAIL POST

Scale: 3/4"=1'-0"

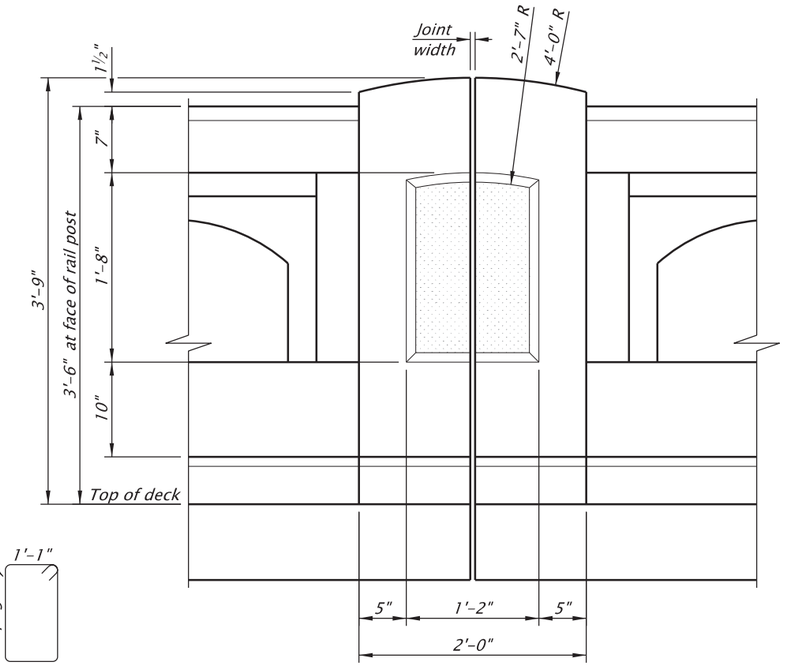

ELEVATION – DIMENSIONS

Scale: 3/4"=1'-0"

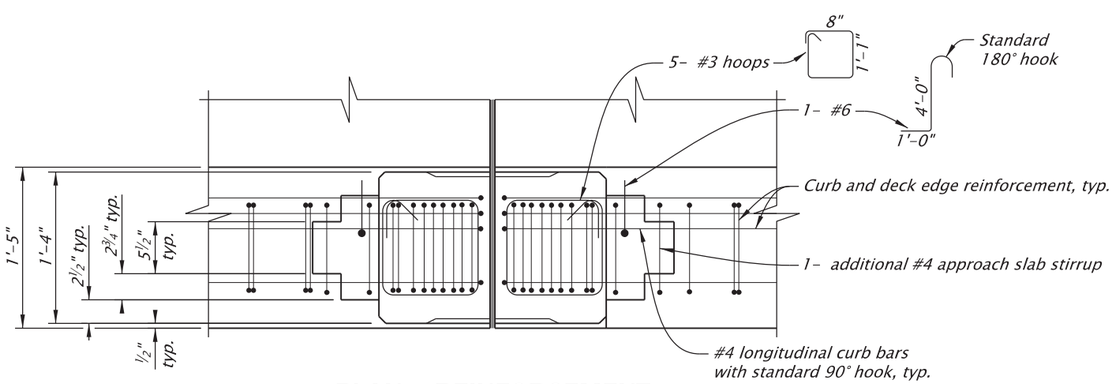

PLAN – REINFORCEMENT

Scale: 3/4"=1'-0"

See sheet J01 for Accompanied By Drawings and Informational Drawings.

STRUCTURE NO.	00576
BDS DWG NO.	114195
CALC. BOOK	7777
HWY: 486	M.P.: 2.65
COUNTY	Jackson
DATE	JUNE 2026

IF THIS MEASURES 1 INCH THEN DRAWING IS TO SCALE

REGISTERED PROFESSIONAL ENGINEER
56148PE
DIGITALLY SIGNED 2026.06.03 07:27:39-07'00'
OREGON
JAN. 15, 2002
ROBERT E. GRUBBS
RENEWS: 06-30-2027

FINAL ELECTRONIC DOCUMENT AVAILABLE UPON REQUEST

OREGON DEPARTMENT OF TRANSPORTATION

Rogue R_Hwy 486 (Gold Hill Spur)

OR99: ROGUE RIVER BRIDGE, GOLD HILL SPUR PROJECT

GOLD HILL SPUR HIGHWAY
JACKSON COUNTY

Designer: Robert E. Grubbs, PE
Reviewer: Zachary T. Béget, PE
Drafter: J. Tillman
Checker: Luke W. Teubel, PE

INTERMEDIATE RAIL POST WITH JOINT

SHEET NO. J35

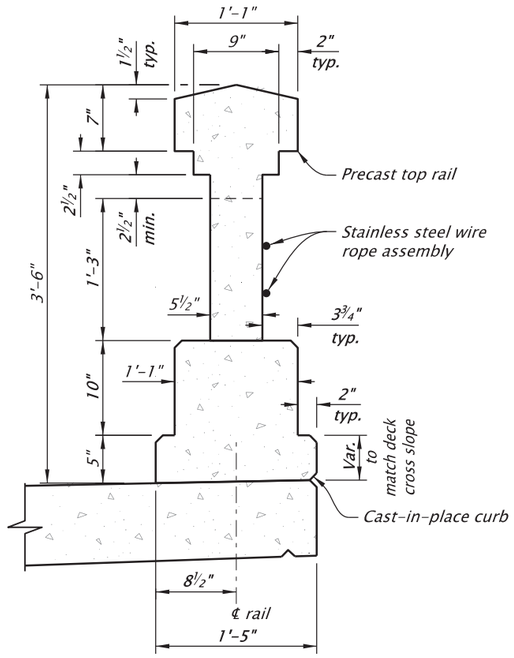

DIMENSIONS

GENERAL NOTES:
Rail designed and crash tested to meet MASH TL-4 requirements.

Provide all reinforcing steel conforming to ASTM A706 or AASHTO M31 (ASTM A615) Grade 60.

Place all bars 2" clear of the nearest face of concrete, unless shown otherwise.

Splice #4 bars 1'-4" minimum; splice #5 bars 1'-8" minimum.

Provide Class 3300 - 1½ or ¾ concrete.

Provide steel post and plates conforming to AASHTO M183 (ASTM A36).

At skewed bents up to 20°, make joints parallel to bent centerline. For skews greater than 20°, make joints normal to rail.

NOTES:
1. *Top rail and top of curb to be parallel to bridge deck finish grade profile.*
2. *Construct bridge rails vertically plumb (not normal to the deck).*
3. *For construction of reusable rail forms, the average grade of -0.90% may be used for determining baluster plumbness.*

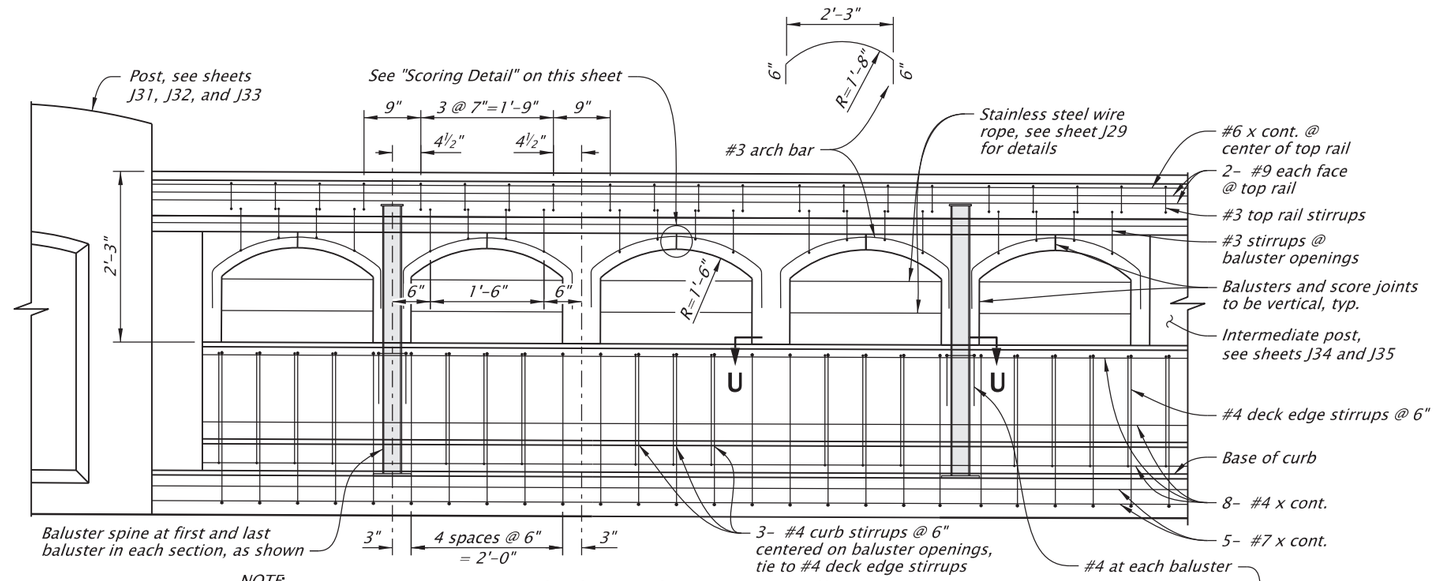

NOTE:
Deck rebar not shown for clarity.

PARTIAL RAIL ELEVATION
Scale: ½"=1'-0"

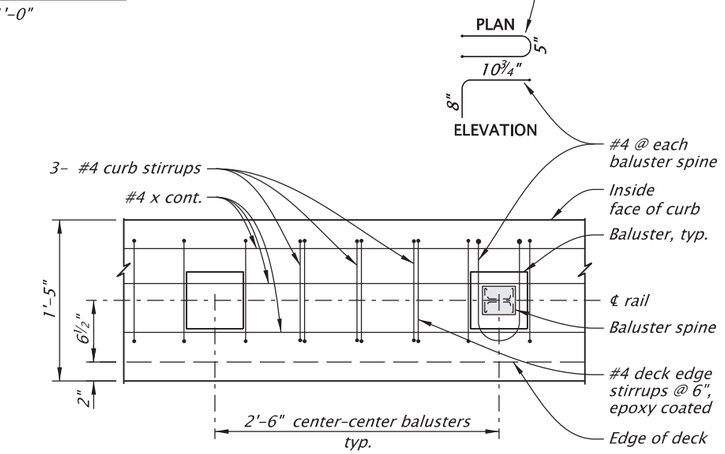

SECTION U-U
Scale: ¾"=1'-0"

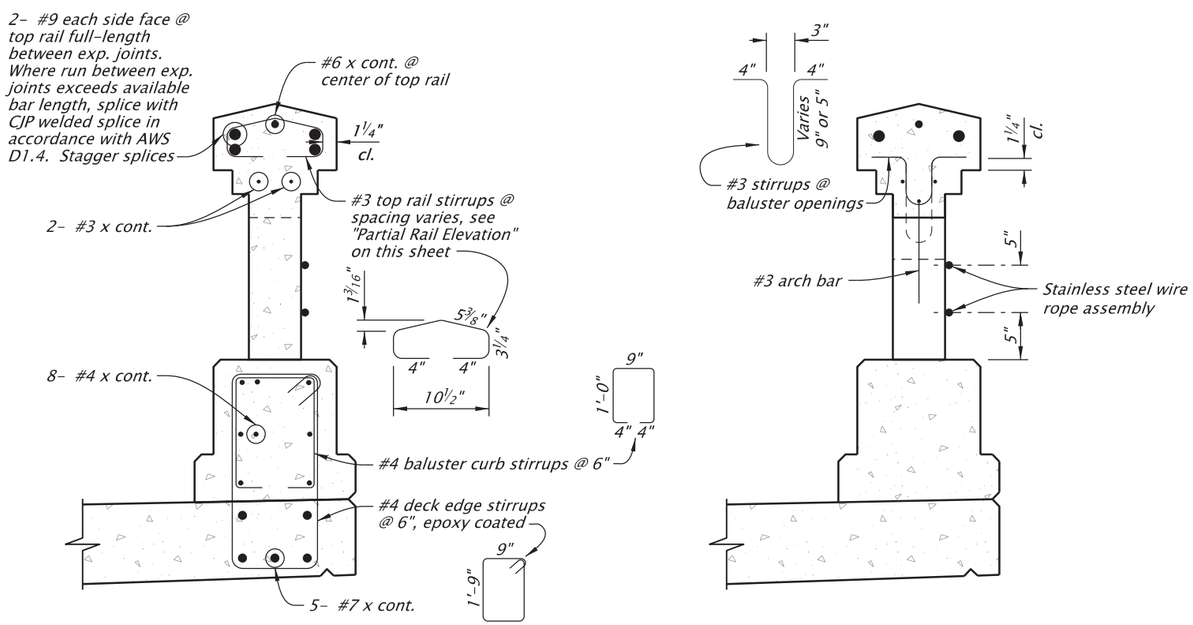

REINFORCEMENT AT BALUSTER

REINFORCEMENT AT BALUSTER OPENING

TYPICAL RAIL SECTION
Scale: ¾"=1'-0"

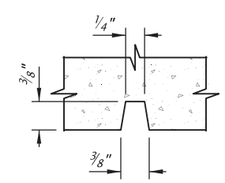

SCORING DETAIL
Scale: 6"=1'-0"

See sheet J01 for Accompanied By Drawings and Informational Drawings.

STRUCTURE NO.	00576
BDS DWG NO.	114196
CALC. BOOK	7777
HWY: 486 M.P.: 2.65	
COUNTY	Jackson
DATE	JUNE 2026

REGISTERED PROFESSIONAL ENGINEER
56148PE
DIGITALLY SIGNED 2026.06.03 07:28:52-07'00'
OREGON
JAN. 15, 2002
ROBERT E. GRUBBS
RENEWS: 06-30-2027

FINAL ELECTRONIC DOCUMENT AVAILABLE UPON REQUEST

OREGON DEPARTMENT OF TRANSPORTATION

Rogue R_Hwy 486 (Gold Hill Spur)

OR99: ROGUE RIVER BRIDGE, GOLD HILL SPUR PROJECT
GOLD HILL SPUR HIGHWAY
JACKSON COUNTY

Designer: Robert E. Grubbs, PE | Reviewer: Zachary T. Béget, PE
Drafter: J. Tillman | Checker: Luke W. Teubel, PE

TYPICAL RAIL SECTIONS and BALUSTER REINFORCEMENT

SHEET NO. J36

IF THIS MEASURES 1 INCH THEN DRAWING IS TO SCALE

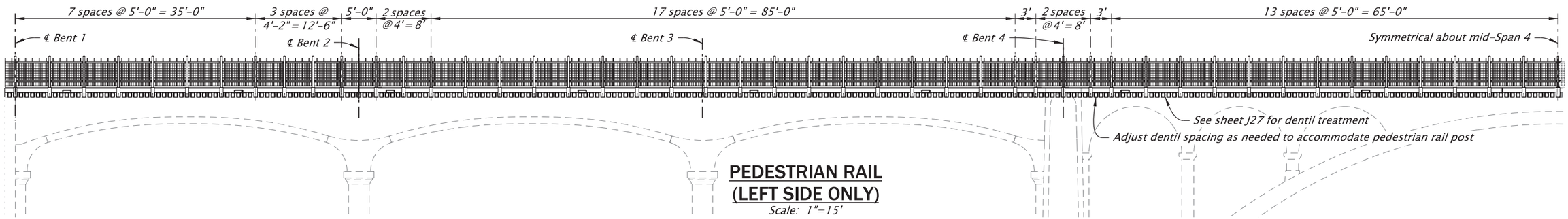

PEDESTRIAN RAIL (LEFT SIDE ONLY)

Scale: 1"=15'

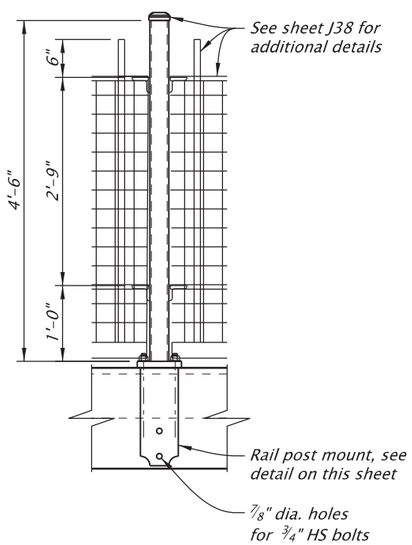

ELEVATION

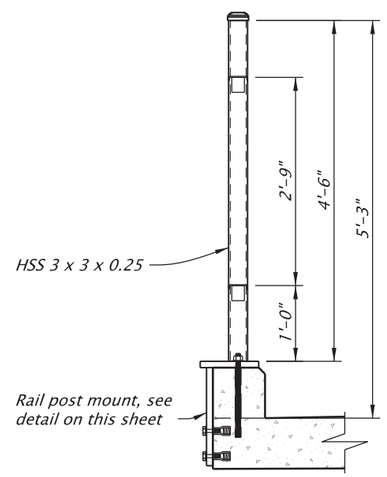

SECTION

PEDESTRIAN RAIL POST

Scale: 1/2"=1'-0"

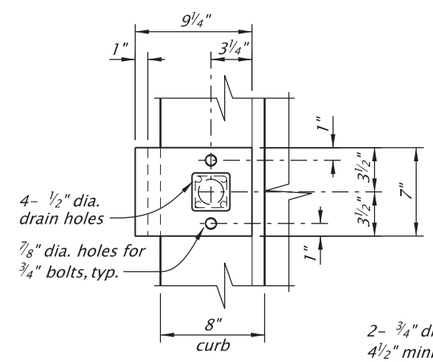

PLAN

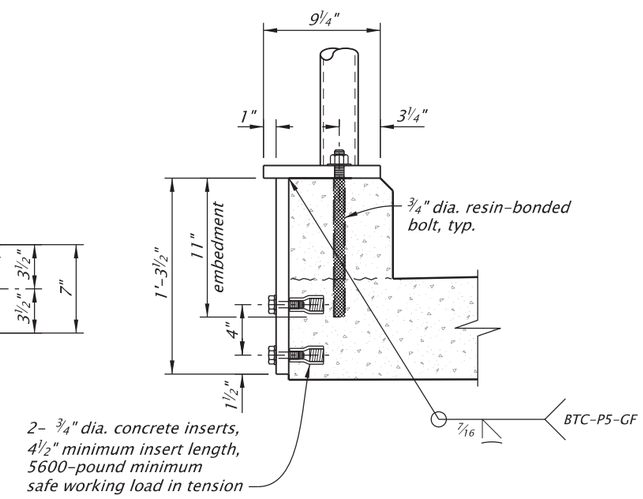

SECTION

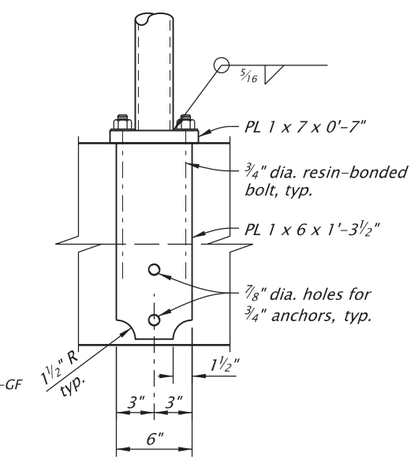

ELEVATION

RAIL POST MOUNT ASSEMBLY

Scale: 1"=1'-0"

NOTE:
See sheet J09 for curb details.

PEDESTRIAN RAIL GENERAL NOTES

Install pedestrian rail to the horizontal and vertical alignment of the structure. Install all posts and vertical members plumb in transverse and longitudinal directions. Install horizontal members parallel to bridge deck in the longitudinal direction of the pedestrian rail.

Provide HHS structural tubing conforming to ASTM A500, Grade A or B.

Provide all other steel shapes and plates conforming to AASHTO Specification M183 (ASTM Specification A36).

Provide welded wire mesh conforming to ASTM A185.

Provide bolts conforming to AASHTO Specification M164 (ASTM A325).

Provide resin-bonded anchors according to ASTM F1554, Grade 105.

Furnish and install 3/4" diameter F1554 grade 55 resin bonded anchors with epoxy resin from the QPL. The characteristic bond stress used in the design is 1200 psi. The minimum pull out strength is 5000 pounds with a minimum embedment (hef) of 11". Install anchors to the manufacturer's recommendations.

No horizontal or vertical splices are permitted within a panel.

Stamp all posts and panels for field identification.

Cover all slotted holes with powder coated flat washers.

All welding shall conform to AWS D 1.1 Structural Welding Code.

Powder coat all posts, welded wire mesh, channels, plates, caps, angles, connectors, and all other hardware SAE AMS-STD-595 color #27038 (black).

See sheet J01 for Accompanied By Drawings and Informational Drawings.

IF THIS MEASURES 1 INCH THEN DRAWING IS TO SCALE

STRUCTURE NO.	00576
BDS DWG NO.	114197
CALC. BOOK	7777
HWY: 486	M.P.: 2.65
COUNTY	Jackson
DATE	JUNE 2026

REGISTERED PROFESSIONAL ENGINEER
56148PE
DIGITALLY SIGNED 2026.06.03 07:28:42-07'00'
OREGON
JAN. 15, 2002
ROBERT E. GRUBBS
RENEWS: 06-30-2027

FINAL ELECTRONIC DOCUMENT AVAILABLE UPON REQUEST

OREGON DEPARTMENT OF TRANSPORTATION

Rogue R_Hwy 486 (Gold Hill Spur)

OR99: ROGUE RIVER BRIDGE, GOLD HILL SPUR PROJECT
GOLD HILL SPUR HIGHWAY
JACKSON COUNTY

Designer: Robert E. Grubbs, PE
Reviewer: Zachary T. Béget, PE
Drafter: J. Tillman
Checker: Luke W. Teubel, PE

PEDESTRIAN RAIL 1

SHEET NO. J37

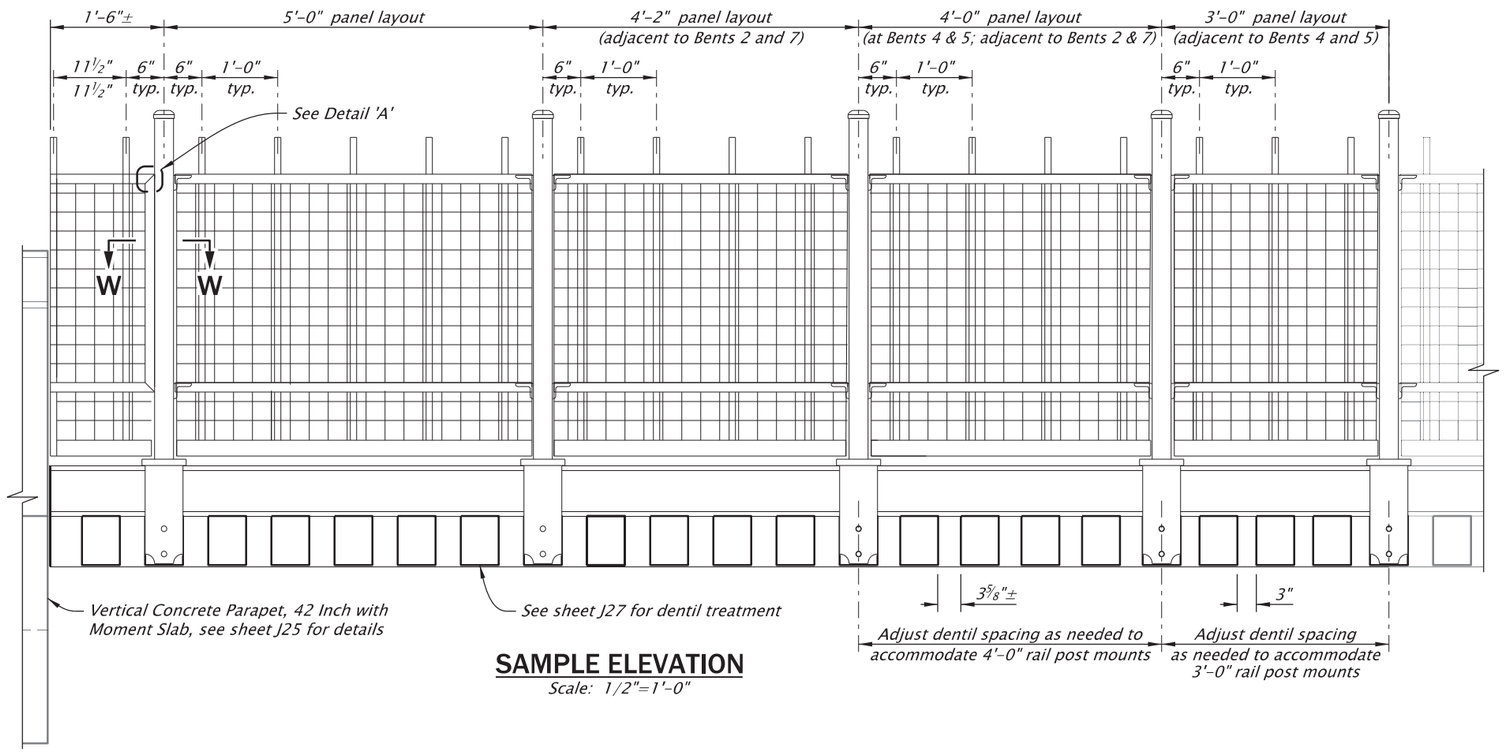

SAMPLE ELEVATION
Scale: 1/2"=1'-0"

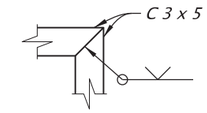

DETAIL 'A'
Scale: 1 1/2"=1'-0"

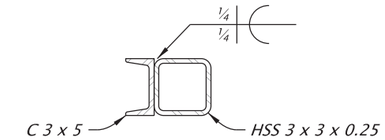

SECTION W-W
Scale: 1 1/2"=1'-0"

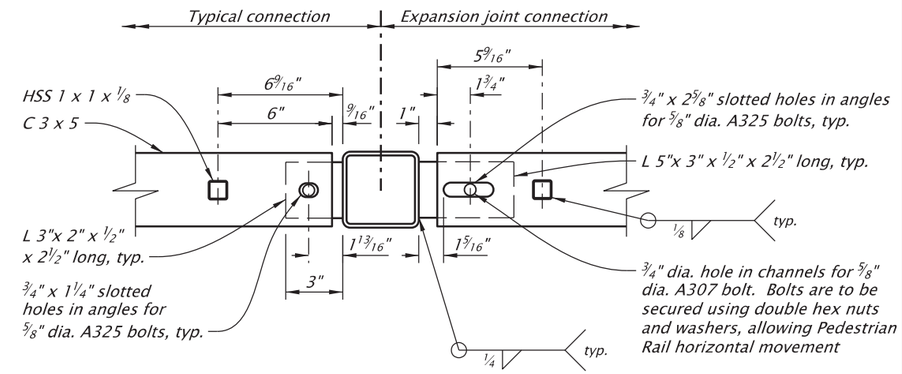

TYPICAL EXPANSION JOINT CONNECTION
Scale: 1 1/2"=1'-0"

WIRE MESH ATTACHMENT NOTES:

Provide ¾" long flare bevel groove welds at each fabric to square tube intersection.

Provide a minimum of 2 welds in mesh below bottom C 3 x 5.

Wire mesh to be parallel with vertical bars.

Place and weld wire mesh on the outside face of the Pedestrian Rail.

Maximum ¼" gap between wire mesh and edge members.

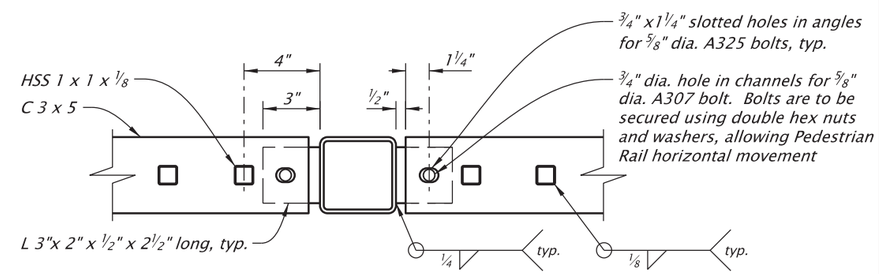

TYPICAL CONNECTION
Scale: 1 1/2"=1'-0"

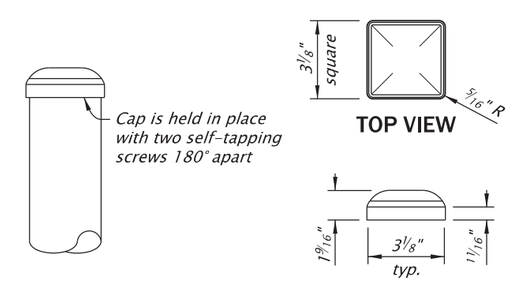

POST CAP
Scale: 1 1/2"=1'-0"

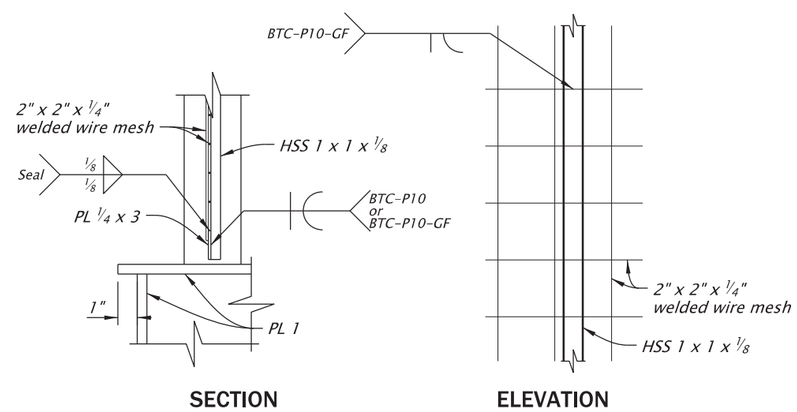

WIRE MESH ATTACHMENT
Not To Scale

See sheet J01 for Accompanied By Drawings and Informational Drawings.

STRUCTURE NO.	00576
BDS DWG NO.	114198
CALC. BOOK	7777
HWY: 486	M.P.: 2.65
COUNTY	Jackson
DATE	JUNE 2026

IF THIS MEASURES 1 INCH THEN DRAWING IS TO SCALE

REGISTERED PROFESSIONAL ENGINEER
56148PE
DIGITALLY SIGNED 2026.06.03 07:28:32-07'00'
OREGON
JAN. 15, 2002
ROBERT E. GRUBBS
RENEWS: 06-30-2027

FINAL ELECTRONIC DOCUMENT AVAILABLE UPON REQUEST

OREGON DEPARTMENT OF TRANSPORTATION

Rogue R_Hwy 486 (Gold Hill Spur)

OR99: ROGUE RIVER BRIDGE, GOLD HILL SPUR PROJECT
GOLD HILL SPUR HIGHWAY
JACKSON COUNTY

Designer: Robert E. Grubbs, PE
Reviewer: Zachary T. Béget, PE
Drafter: J. Tillman
Checker: Luke W. Teubel, PE

PEDESTRIAN RAIL 2

SHEET NO. J38

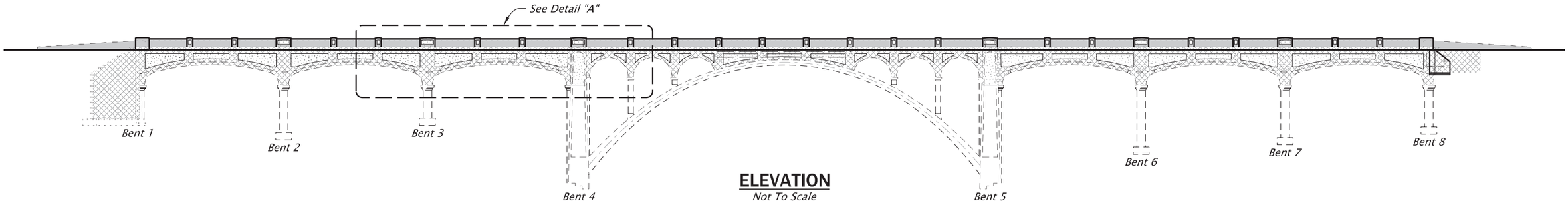

ELEVATION
Not To Scale

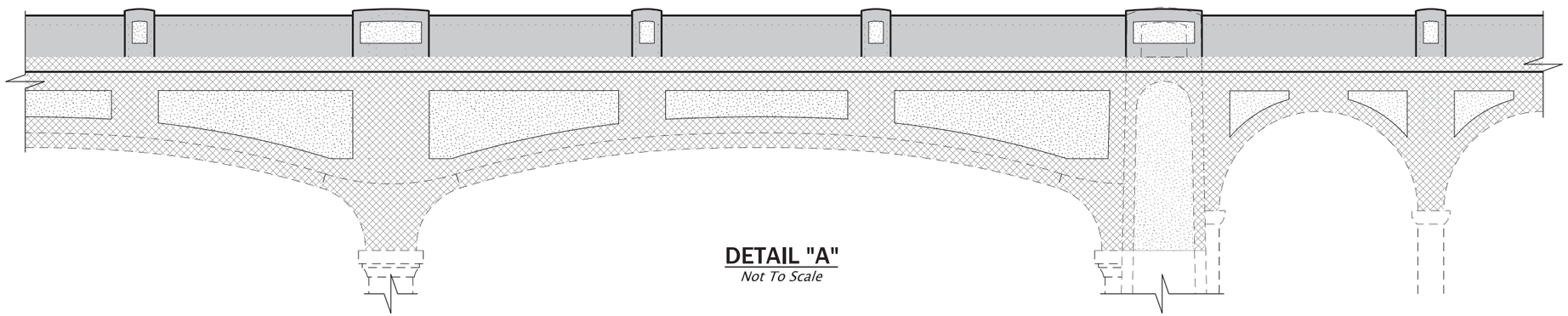

DETAIL "A"
Not To Scale

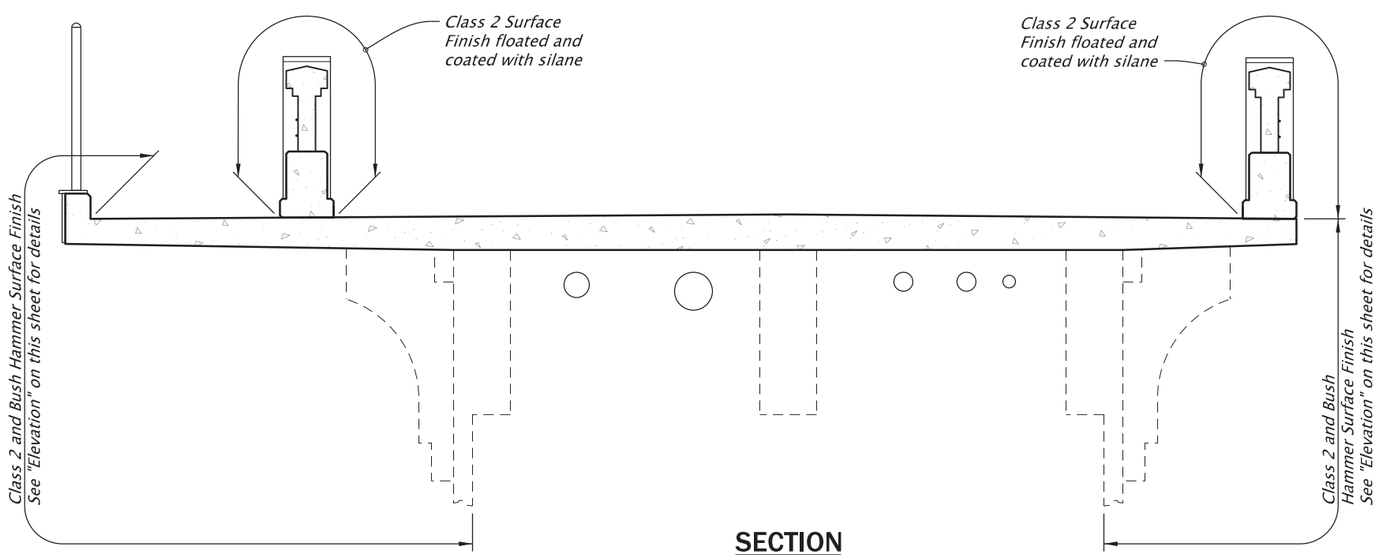

SECTION
Scale: ¼"=1'-0"

KEY

- *Class 2 Surface Finish – floated and coated with silane*
- *Bush Hammered Finish – Silpro California Stucco*
- *Class 2 Surface Finish – Silpro Skimwall*

See sheet J01 for Accompanied By Drawings and Informational Drawings.

IF THIS MEASURES 1 INCH THEN DRAWING IS TO SCALE

STRUCTURE NO.	00576
BDS DWG NO.	114199
CALC. BOOK	7777
HWY: 486	M.P.: 2.65
COUNTY	Jackson
DATE	JUNE 2026

REGISTERED PROFESSIONAL ENGINEER
56148PE
DIGITALLY SIGNED 2026.06.03 07:28:21-07'00'
OREGON
JAN. 15, 2002
ROBERT E. GRUBBS
RENEWS: 06-30-2027

FINAL ELECTRONIC DOCUMENT AVAILABLE UPON REQUEST

OREGON DEPARTMENT OF TRANSPORTATION

Rogue R_Hwy 486 (Gold Hill Spur)

OR99: ROGUE RIVER BRIDGE, GOLD HILL SPUR PROJECT
GOLD HILL SPUR HIGHWAY
JACKSON COUNTY

Designer: Stephen G. Chaffee, EIT
Reviewer: Zachary T. Béget, PE
Drafter: J. Tillman
Checker: Luke W. Teubel, PE

CONCRETE SURFACE FINISHES

SHEET NO. J39

BRIDGE CONTRACTOR CONSTRUCTION NOTES

1	INSTALL 14" GAS CASING AND CASING VENTS ONTO BRIDGE STRUCTURE IN ACCORDANCE WITH THE ODOT STAGING PLAN. CASING WILL BE PLACED ON DIAPHRAGM WALLS TEMPORARILY UNTIL PERMANENT PIPE HANGERS CAN BE INSTALLED. INSTALL TEMPORARY REMOVABLE SHIMS AT EACH SUPPORT WALL SO THE CASING CAN BE INSTALLED AT IT'S FINAL ELEVATION. REMOVE THE SHIMS AFTER THE PERMANENT PIPE HANGERS ARE IN PLACE.
2	PROVIDE A RECTANGULAR KNOCKOUT AT BENT 1, A PVC SLEEVE AT BENT 8, AND A CORE HOLE AT BENT 8 AS SHOWN ON SHEET JA03 TO ALLOW FOR AVISTA'S 10" STEEL GAS MAIN INSTALLATION.
3	FORM 14" CORE HOLE AROUND 10" STEEL GAS MAIN AT BENT 1 AFTER 10" GAS LINE IS INSTALLED BY AVISTA.
4	CUT AWAY AND REMOVE THE EXISTING 10" STEEL PIPING FROM THE NORTH SIDE OF THE BRIDGE ONLY AFTER PERMISSION IS PROVIDED BY AVISTA.
5	INSTALL ALL PIPE HANGERS, TRANSVERSE BRACES, LATERAL BRACES, AND HORIZONTAL SUPPORTS WITH OVERSIGHT FROM AN AVISTA REPRESENTATIVE. FINAL POSITIONING OF THE GAS CASING AND CARRIER SHALL FOLLOW THE DECK GRADE AS INDICATED IN THIS DRAWING, AND EACH ROLLER SUPPORT MUST BE IN CONTACT WITH THE PIPE.
6	INSTALL HORIZONTAL ADJUSTABLE SUPPORTS AT BENTS 1 AND 8 WHEN AMBIENT AIR TEMPERATURE IS BETWEEN 50°F AND 70°F (60°F PREFERRED).

MATERIAL LIST

ITEM	RESPONSIBILITY	QTY	DESCRIPTION
1	CONTRACTOR	420'	PIPE, STEEL, 14", 0.375" W.T., GRD B, BARE
2	CONTRACTOR	10'	PIPE, STEEL, 2", 0.154" W.T., GRD B, BARE
3	CONTRACTOR	4	ELBOW, 2", STEEL, BUTT WELD, STD WT, GRD B, SHORT RADIUS
4	CONTRACTOR	2	HEAVY SCREEN FOR VENT PIPE TERMINATIONS
5	CONTRACTOR	2	ADJUSTABLE PIPE SUPPORT, 10" PIPE, GALVANIZED, U BOLT, 120 DEG PIPE SADDLE INTERFACE, FRP LINER, 1,700 LB SUPPORT RATING (MIN)
6	CONTRACTOR	4	1/2" CONCRETE INSERT WITH A 2,800 LB TENSILE CAPACITY, GALVANIZED.
7	CONTRACTOR	5'	1/2" DIAMETER ALL-THREADED ROD (ATR), ASTM A36, Fy=36 KSI, GALVANIZED IN ACCORDANCE WITH AASHTO M 232, CUT TO LENGTH
8	CONTRACTOR	64	1/2" HEX NUT, AASHTO M 291, GRADE DH, GALVANIZED IN ACCORDANCE WITH AASHTO M 232
9	CONTRACTOR	8	1/2" WASHERS, AASHTO M 293, TYPE 1, GALVANIZED IN ACCORDANCE WITH AASHTO M 232
10	CONTRACTOR	4'	PIPE, PVC, 18", SCHEDULE 80
11	CONTRACTOR	14	5/8" CONCRETE INSERT WITH A 3,600 LB TENSILE CAPACITY,
12	CONTRACTOR	5	DOUBLE ROLLER PIPE HANGER, 10", NON-CONDUCTIVE ROLLERS, HOT DIPPED GALVANIZED
13	CONTRACTOR	10	7/8" CONCRETE INSERT WITH A 6,000 LB TENSILE CAPACITY, GALVANIZED
14	CONTRACTOR	216	7/8" HEX NUT, AASHTO M 291, GRADE DH, GALVANIZED IN ACCORDANCE WITH AASHTO M 232
15	CONTRACTOR	30'	7/8" DIAMETER ALL-THREADED ROD (ATR), ASTM A36, Fy=36 KSI, GALVANIZED IN ACCORDANCE WITH AASHTO M 232, CUT TO LENGTH
16	CONTRACTOR	48	DOUBLE ROLLER PIPE HANGER, 14", NON-CONDUCTIVE ROLLERS, HOT DIPPED GALVANIZED
17	CONTRACTOR	96	1" CONCRETE INSERT WITH A 8,000 LB TENSILE CAPACITY, GALVANIZED
18	CONTRACTOR	548	1" HEX NUT, AASHTO M 291, GRADE DH, GALVANIZED IN ACCORDANCE WITH AASHTO M 233
19	CONTRACTOR	290'	1" DIAMETER ALL-THREADED ROD (ATR), ASTM A36, Fy=36 KSI, GALVANIZED IN ACCORDANCE WITH AASHTO M 232, CUT TO LENGTH
20	CONTRACTOR	275'	STEEL ANGLE, ("L") 3 1/2" X 3 1/2" X 3/8" THICK, CUT TO LENGTH, ASTM A36, Fy=36 KSI, GALVANIZED IN ACCORDANCE WITH AASHTO M 111
21	CONTRACTOR	78	7/8" HEX BOLT, 4" LONG, ASTM A325N, GALVANIZED IN ACCORDANCE WITH AASHTO M 111
22	CONTRACTOR	156	STEEL BAR, 4" X 4" X 1/2" THICK, ASTM A36, Fy=36 KSI, GALVANIZED IN ACCORDANCE WITH AASHTO M 111
23	CONTRACTOR	78	#23 UNREINFORCED ELASTOMERIC BEARING PAD, 4" X 4" X 1/2"
24	CONTRACTOR	14	BENT CLIP, CUSTOM, 1/2" THICK X 2" WIDE, 116 DEG, 4-1/2" LEG WITH 3/4" X 2" SLOTTED HOLE, 5" LEG WITH TWO 9/16" HOLES, ASTM A36, Fy=36 KSI, GALVANIZED IN ACCORDANCE WITH AASHTO M111 (LB&A)
25	CONTRACTOR	14	BENT CLIP, CUSTOM, 1/2" THICK X 2" WIDE, 116 DEG, 4-1/2" LEG WITH 1-1/8" X 2" SLOTTED HOLE, 5" LEG WITH TWO 9/16" HOLES, ASTM A36, Fy=36 KSI, GALVANIZED IN ACCORDANCE WITH AASHTO M111 (LB&A)
26	CONTRACTOR	28'	STEEL ANGLE, ("L") 2 1/2" X 2 1/2" X 1/4" THICK, CUT TO LENGTH, ASTM A36, Fy=36 KSI, GALVANIZED IN ACCORDANCE WITH AASHTO M 111
27	CONTRACTOR	56	1/2" HEX BOLT, 2" LONG, ASTM A325N, GALVANIZED IN ACCORDANCE WITH AASHTO M 111
28	CONTRACTOR	6'	5/8" DIAMETER ALL-THREADED ROD (ATR), ASTM A36, Fy=36 KSI, GALVANIZED IN ACCORDANCE WITH AASHTO M 232, CUT TO LENGTH
29	CONTRACTOR	14	5/8" WASHERS, AASHTO M 293, TYPE 1, GALVANIZED IN ACCORDANCE WITH AASHTO M 232
30	CONTRACTOR	14	5/8" HEX NUT, AASHTO M 291, GRADE DH, GALVANIZED IN ACCORDANCE WITH AASHTO M 232

IF THIS MEASURES 1 INCH THEN DRAWING IS TO SCALE

STRUCTURE NO.	00576
BDS DWG NO.	114200
CALC. BOOK	7777
HWY: 486	M.P.: 2.65
COUNTY	Jackson
DATE	MAY 2026

REGISTERED PROFESSIONAL ENGINEER
106805PE
Digitally Signed 2026.06.19 06:46-07'00'
OREGON
JULY 08, 2025
MICHAEL D. YANG
EXPIRES: 06/30/28

AVISTA Corp.

Rogue R_Hwy 486 (Gold Hill Spur)

OR99: ROGUE RIVER BRIDGE, GOLD HILL SPUR PROJECT
GOLD HILL SPUR HIGHWAY
JACKSON COUNTY

Designer: Michael Yang
Reviewer:
Drafter: Michael Yang
Checker: Jeff Webb

MATERIALS & NOTES

SHEET NO. JA01

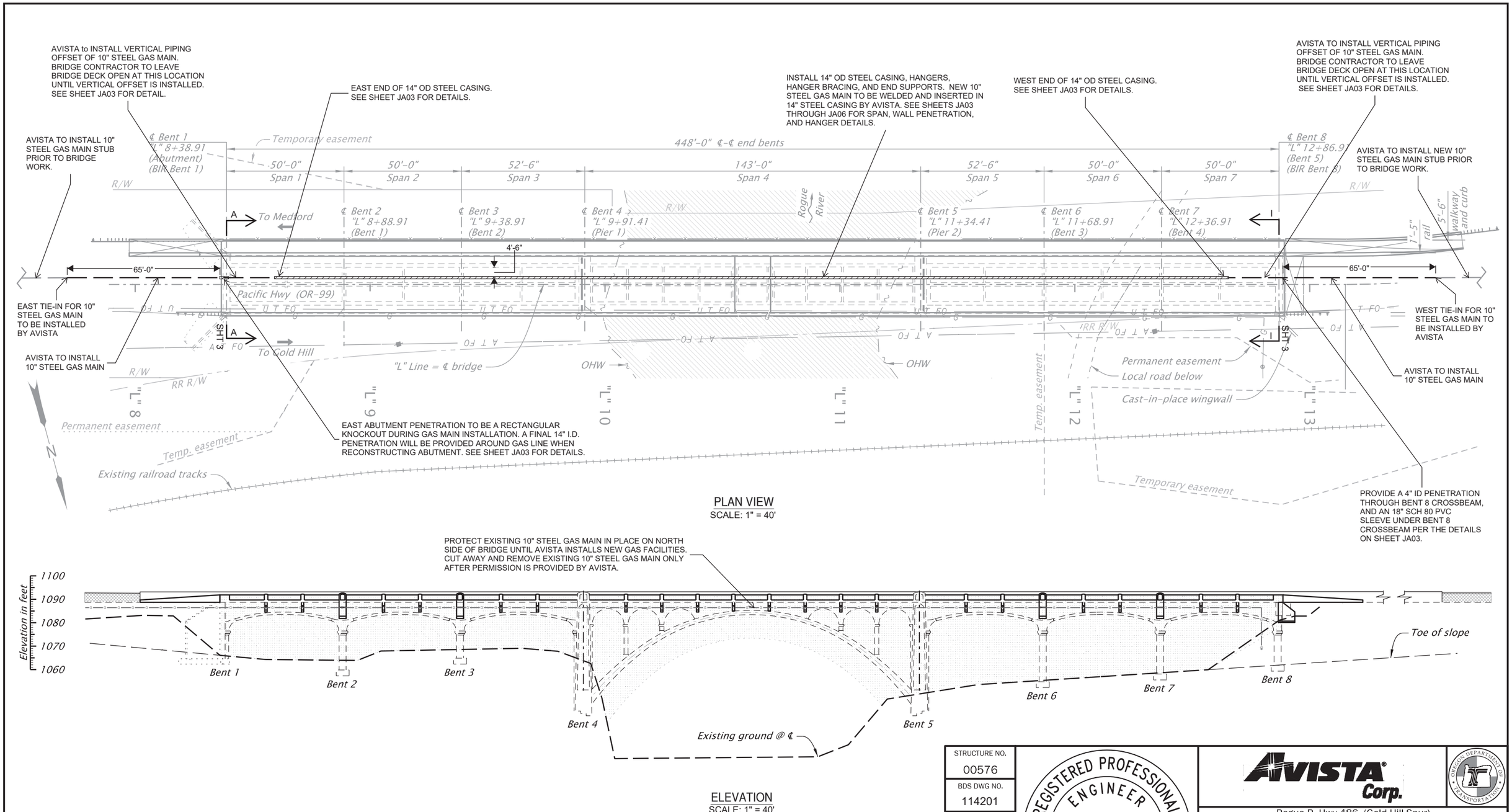

STRUCTURE NO.	00576
BDS DWG NO.	114201
CALC. BOOK	7777
HWY: 486	M.P.: 2.65
COUNTY	Jackson
DATE	MAY 2026

IF THIS MEASURES 1 INCH THEN DRAWING IS TO SCALE

REGISTERED PROFESSIONAL ENGINEER
106805PE
Digitally Signed 2026.06.19 06:47-07'00'
OREGON
JULY 08, 2025
MICHAEL D. YANG
EXPIRES: 06/30/28

AVISTA Corp.

Rogue R_Hwy 486 (Gold Hill Spur)

OR99: ROGUE RIVER BRIDGE, GOLD HILL SPUR PROJECT

GOLD HILL SPUR HIGHWAY
JACKSON COUNTY

Designer: Michael Yang
Reviewer:
Drafter: Michael Yang
Checker: Jeff Webb

BRIDGE PLAN & ELEVATION

SHEET NO. JA02

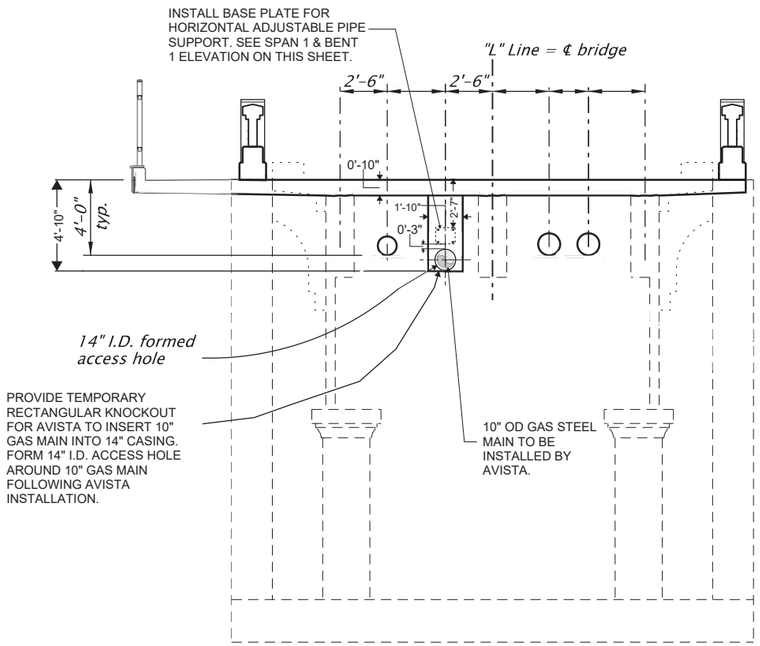

SECTION A-A: ABUTMENT PENETRATION AT BENT 1 - FACING WEST

SCALE: 1/8" = 1'

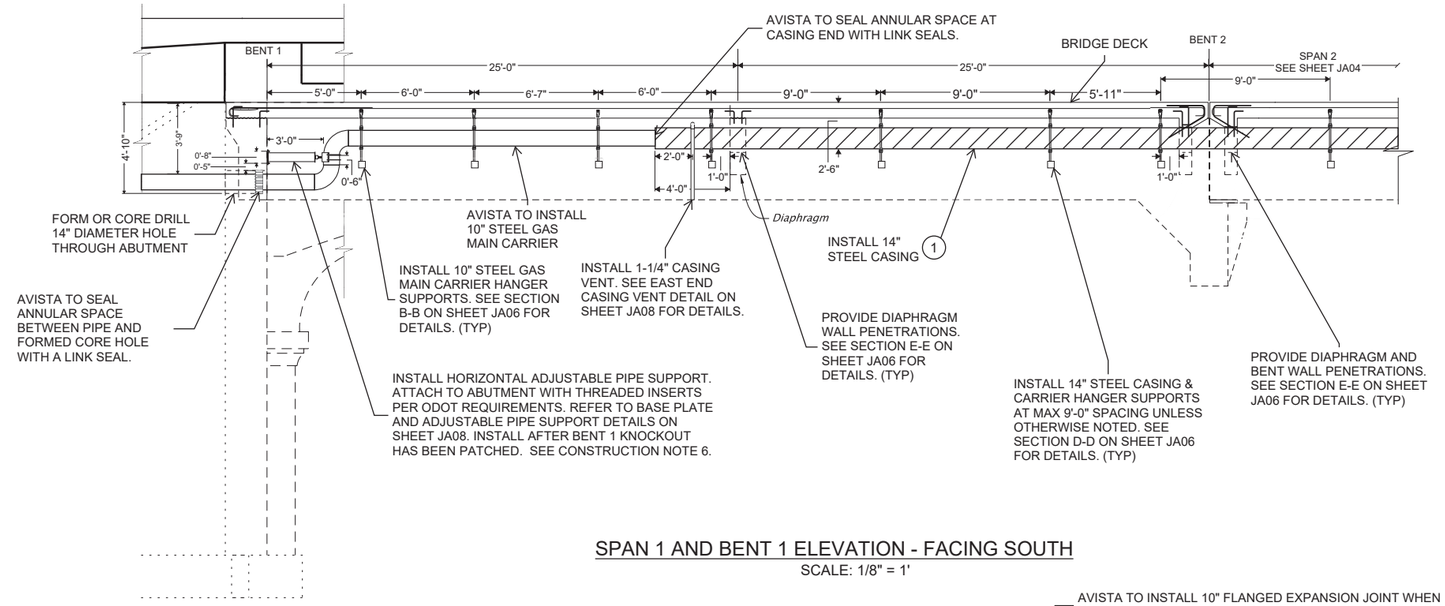

SPAN 1 AND BENT 1 ELEVATION - FACING SOUTH

SCALE: 1/8" = 1'

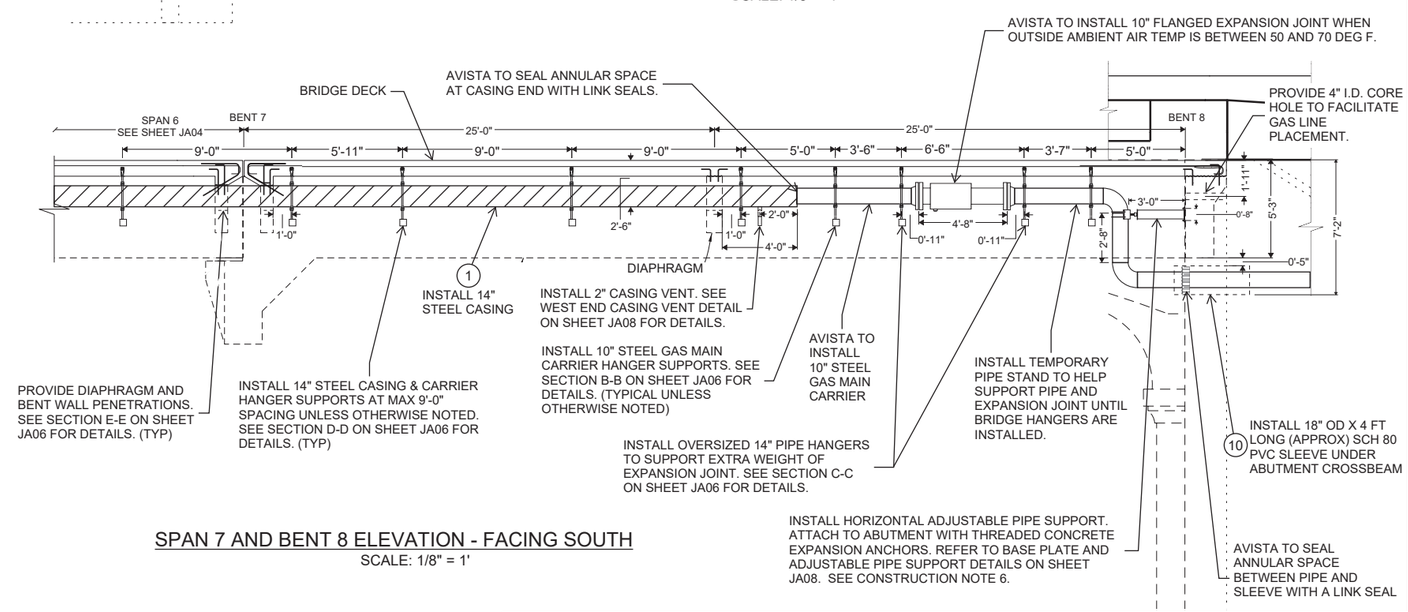

SPAN 7 AND BENT 8 ELEVATION - FACING SOUTH

SCALE: 1/8" = 1'

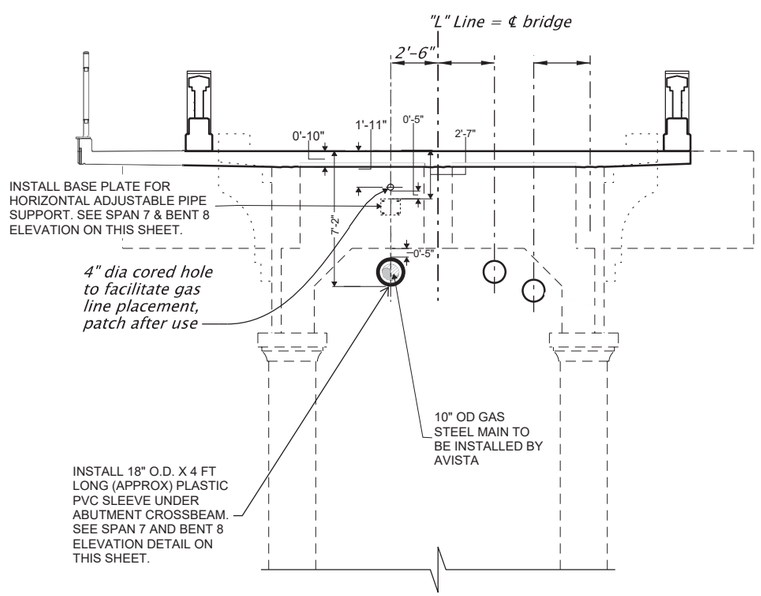

SECTION I-I: ABUTMENT PENETRATION AT BENT 8 - FACING WEST

SCALE: 1/8" = 1'

IF THIS MEASURES 1 INCH THEN DRAWING IS TO SCALE

STRUCTURE NO.	00576
BDS DWG NO.	114202
CALC. BOOK	7777
HWY: 486	M.P.: 2.65
COUNTY	Jackson
DATE	MAY 2026

REGISTERED PROFESSIONAL ENGINEER
106805PE
Digitally Signed 2026.06.19 06:48-07'00'
OREGON
JULY 08, 2025
MICHAEL D. YANG
EXPIRES: 06/30/28

AVISTA Corp.

OREGON DEPARTMENT OF TRANSPORTATION

Rogue R_Hwy 486 (Gold Hill Spur)

OR99: ROGUE RIVER BRIDGE, GOLD HILL SPUR PROJECT

GOLD HILL SPUR HIGHWAY

JACKSON COUNTY

Designer: Michael Yang Reviewer:

Drafter: Michael Yang Checker: Jeff Webb

ABUTMENTS & ELEVATION SPANS 1 & 7

SHEET NO. JA03

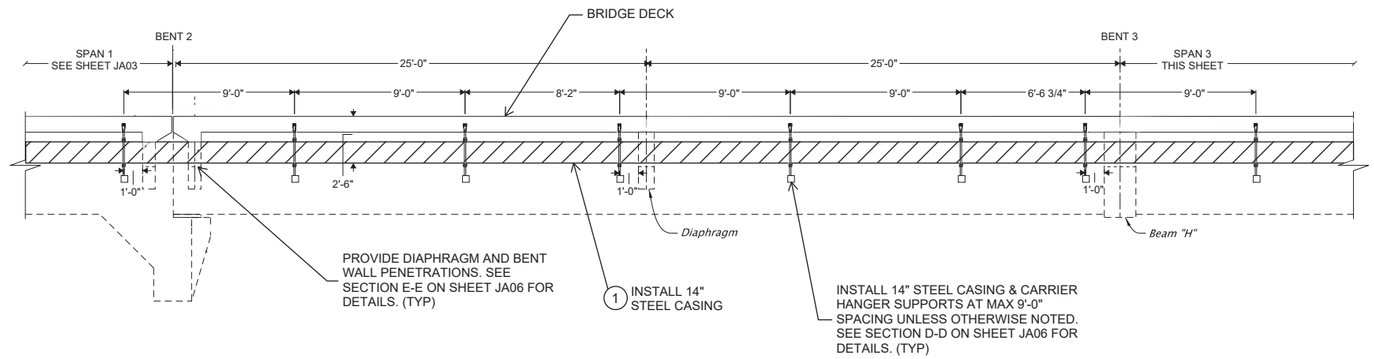

SPAN 2 ELEVATION - FACING SOUTH

SCALE: 1/8" = 1'

NOTE: SPAN 2 SHOWN, SPAN 6 SIMILAR

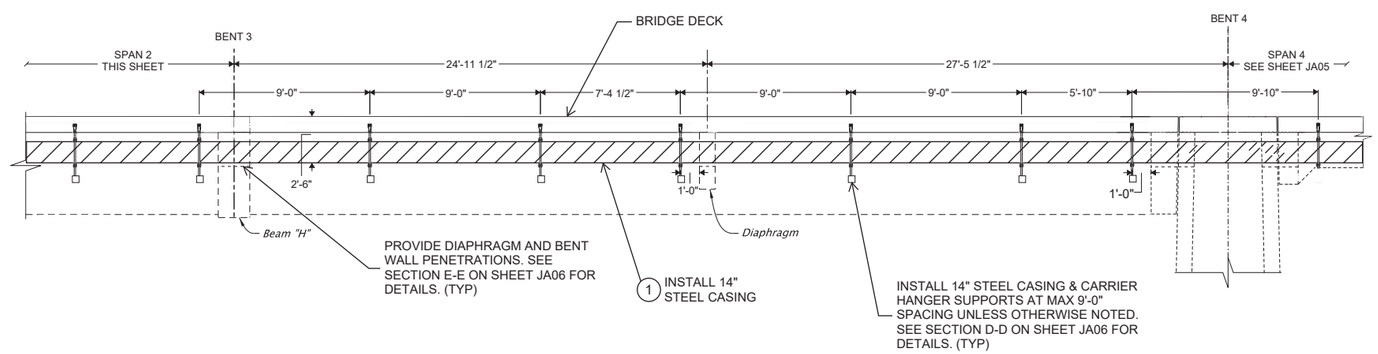

SPAN 3 ELEVATION - FACING SOUTH

SCALE: 1/8" = 1'

NOTE: SPAN 3 SHOWN, SPAN 5 SIMILAR

IF THIS MEASURES 1 INCH THEN DRAWING IS TO SCALE

STRUCTURE NO.	00576
BDS DWG NO.	114203
CALC. BOOK	7777
HWY: 486	M.P.: 2.65
COUNTY	Jackson
DATE	MAY 2026

REGISTERED PROFESSIONAL ENGINEER
106805PE
Digitally Signed 2026.06.19 06:49-07'00'
OREGON
JULY 08, 2025
MICHAEL D. YANG
EXPIRES: 06/30/28

AVISTA Corp.

OREGON DEPARTMENT OF TRANSPORTATION

Rogue R_Hwy 486 (Gold Hill Spur)

OR99: ROGUE RIVER BRIDGE, GOLD HILL SPUR PROJECT

GOLD HILL SPUR HIGHWAY

JACKSON COUNTY

Designer: Michael Yang Reviewer:

Drafter: Michael Yang Checker: Jeff Webb

ELEVATION SPANS 2, 3, 5, & 6

SHEET NO. JA04

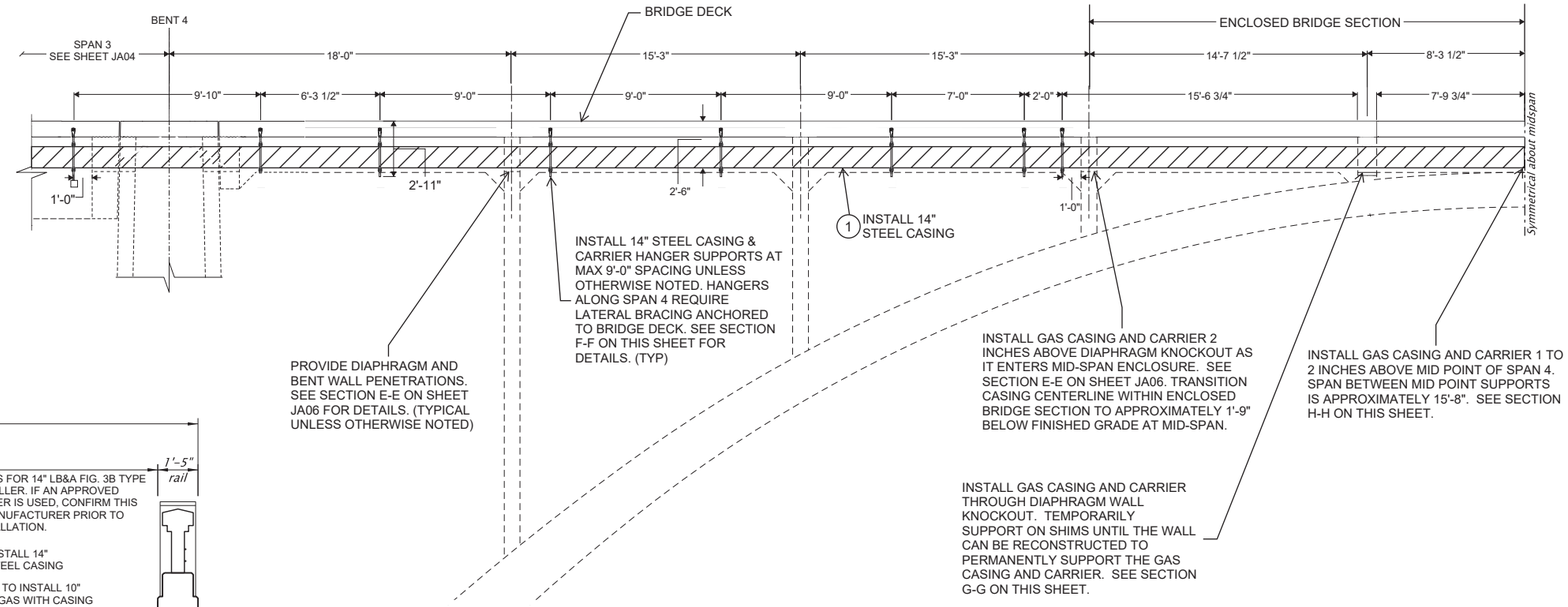

SPAN 4 EAST ELEVATION OF BRIDGE ARCH - FACING SOUTH

SCALE: 1/8" = 1'

NOTE: HALF ARCH SPAN 4 SHOWN, SYMMETRICAL ABOUT MIDSPAN

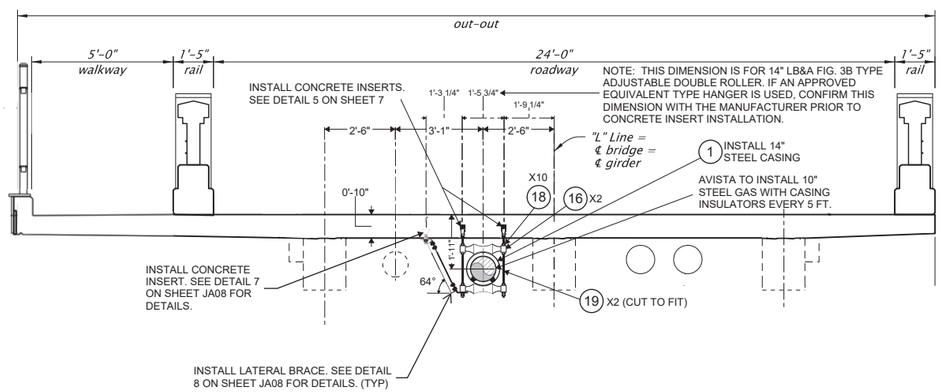

SECTION F-F: 14" GAS CASING & CARRIER HANGER DETAIL FOR SPAN 4

SCALE: 3/16" = 1'

(14) REQUIRED

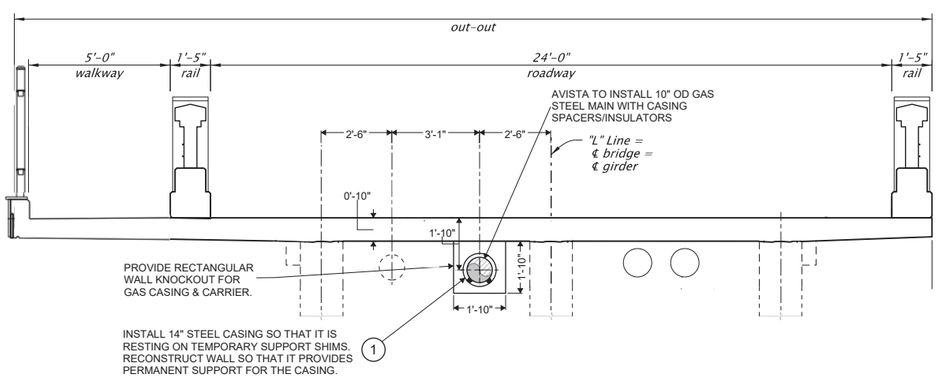

SECTION G-G: DIAPHRAGM WALL PENETRATION ON EACH SIDE OF MID-ARCH SPAN ENCLOSED SECTION

SCALE: 3/16" = 1'

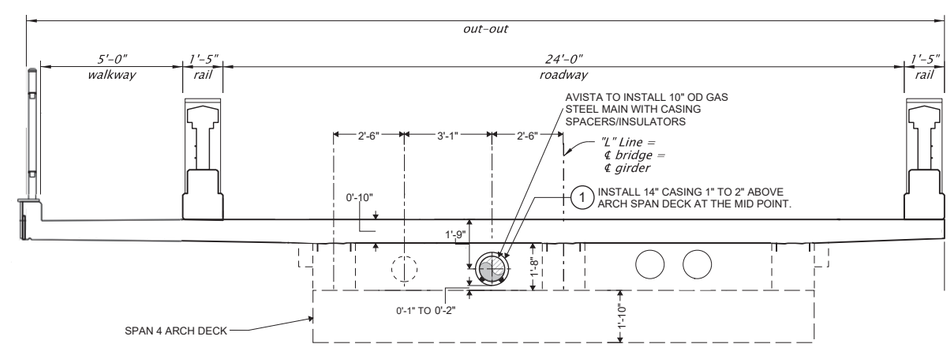

SECTION H-H: MID-ARCH SPAN ENCLOSED SECTION

SCALE: 3/16" = 1'

IF THIS MEASURES 1 INCH THEN DRAWING IS TO SCALE

STRUCTURE NO.	00576
BDS DWG NO.	114204
CALC. BOOK	7777
HWY: 486	
M.P.: 2.65	
COUNTY	Jackson
DATE	MAY 2026

REGISTERED PROFESSIONAL ENGINEER
106805PE
Digitally Signed 2026.06.19 06:50-07'00'
OREGON
JULY 08, 2025
MICHAEL D. YANG
EXPIRES: 06/30/28

AVISTA Corp.

OREGON DEPARTMENT OF TRANSPORTATION

Rogue R_Hwy 486 (Gold Hill Spur)

OR99: ROGUE RIVER BRIDGE, GOLD HILL SPUR PROJECT

GOLD HILL SPUR HIGHWAY

JACKSON COUNTY

Designer: Michael Yang Reviewer:

Drafter: Michael Yang Checker: Jeff Webb

ELEVATION SPAN 4 & DECK SECTIONS

SHEET NO. JA05

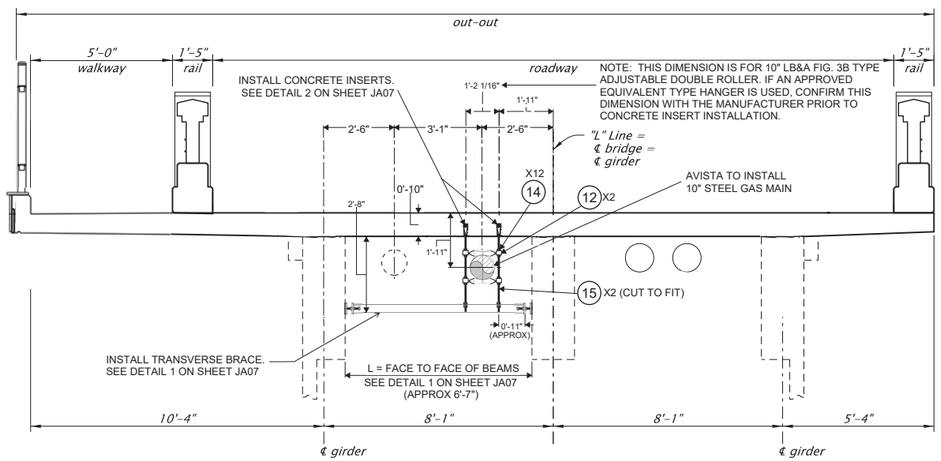

SECTION B-B: TYPICAL 10" GAS CARRIER HANGER DETAIL FOR SPANS 1 & 7

SCALE: 3/16" = 1'

(5) REQUIRED

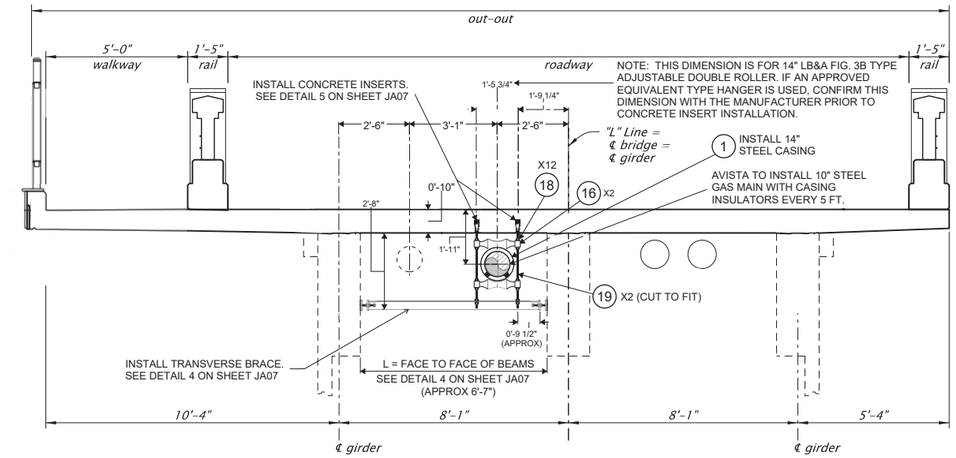

SECTION D-D: TYPICAL 14" GAS CASING & CARRIER HANGER DETAIL FOR SPANS 1, 2, 3, 5, 6, & 7

SCALE: 3/16" = 1'

(32) REQUIRED

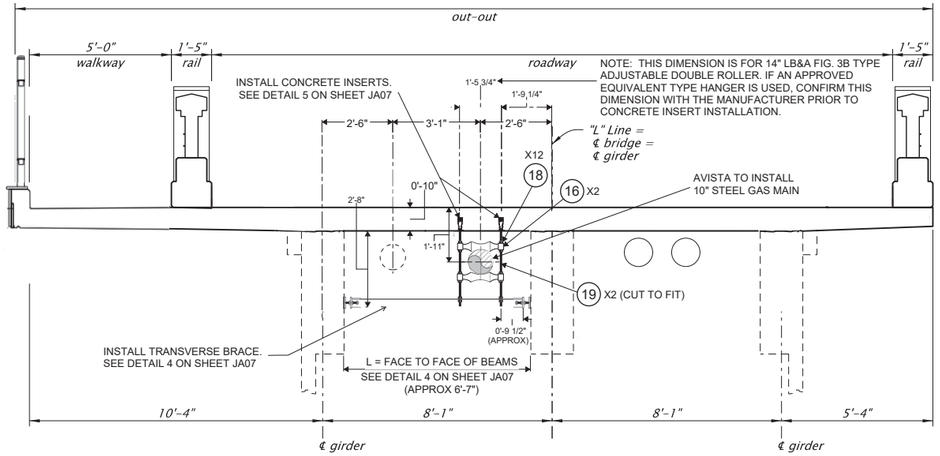

SECTION C-C: OVERSIZED 14" HANGER DETAIL FOR 10" GAS CARRIER AT EXPANSION JOINT

SCALE: 3/16" = 1'

(2) REQUIRED

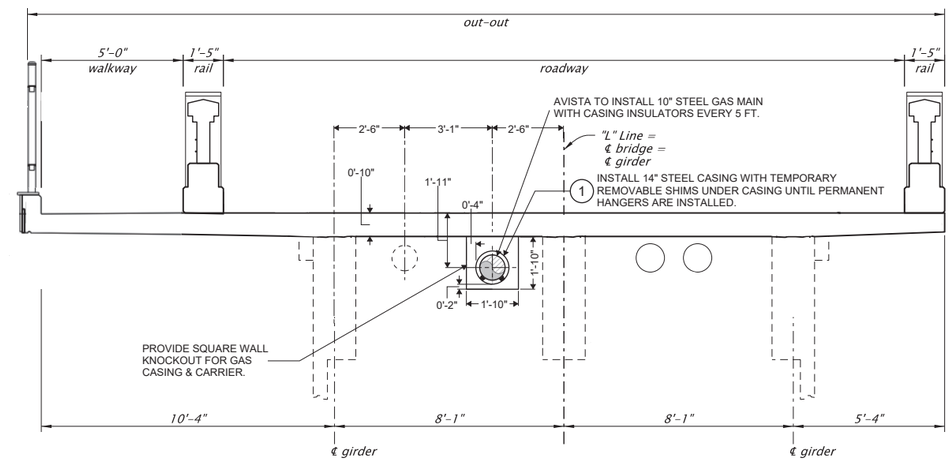

SECTION E-E: TYPICAL WALL PENETRATION FOR BENTS 2 THROUGH 7 AND DIAPHRAGM WALLS FOR SPANS 1 THROUGH 7

SCALE: 3/16" = 1'

IF THIS MEASURES 1 INCH THEN DRAWING IS TO SCALE

STRUCTURE NO.	00576
BDS DWG NO.	114205
CALC. BOOK	7777
HWY: 486	M.P.: 2.65
COUNTY	Jackson
DATE	MAY 2026

REGISTERED PROFESSIONAL ENGINEER
106805PE
Digitally Signed 2026.06.19 06:51-07'00'
OREGON
JULY 08, 2025
MICHAEL D. YANG
EXPIRES: 06/30/28

AVISTA Corp.

OREGON DEPARTMENT OF TRANSPORTATION

Rogue R_Hwy 486 (Gold Hill Spur)

OR99: ROGUE RIVER BRIDGE, GOLD HILL SPUR PROJECT

GOLD HILL SPUR HIGHWAY

JACKSON COUNTY

Designer: Michael Yang Reviewer:

Drafter: Michael Yang Checker: Jeff Webb

DECK SECTIONS & PIPE HANGERS

SHEET NO. JA06

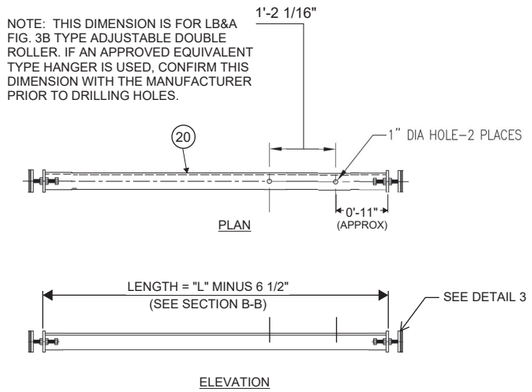

DETAIL 1

SCALE: 3/8" = 1'
TRANSVERSE BRACE DETAIL FOR 10" GAS
(5) REQUIRED

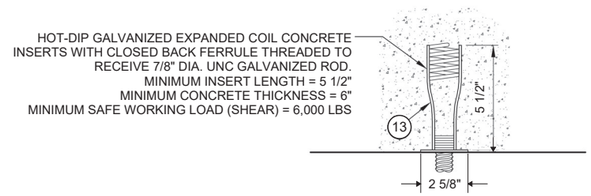

DETAIL 2

SCALE: NONE
CONCRETE INSERT FOR 7/8" HANGER RODS
(10) REQUIRED

NOTE: SAFE WORKING LOAD REFLECTS 3:1 SAFETY (ULTIMATE WORKING LOAD) FOR CONCRETE COMPRESSIVE STRENGTH OF 3,000 PSI.

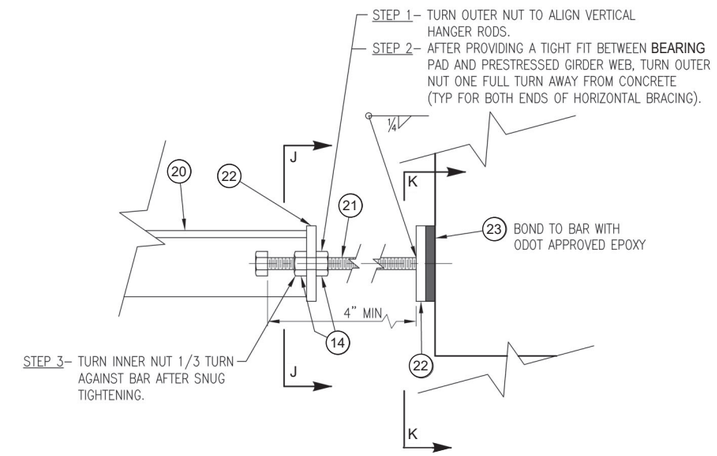

DETAIL 3

SCALE: NONE
(78) REQUIRED

10" HANGER DETAILS

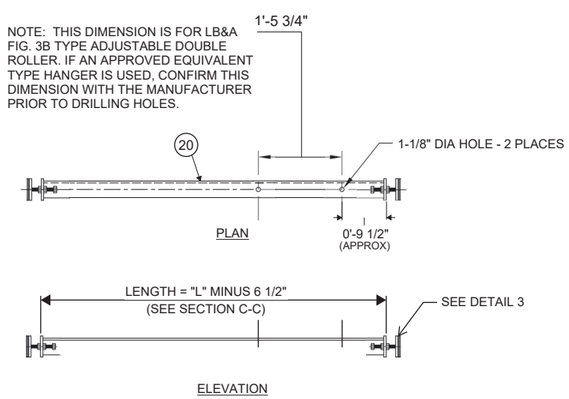

DETAIL 4

SCALE: 3/8" = 1'
TRANSVERSE BRACE DETAIL FOR 14" CASING
(34) REQUIRED

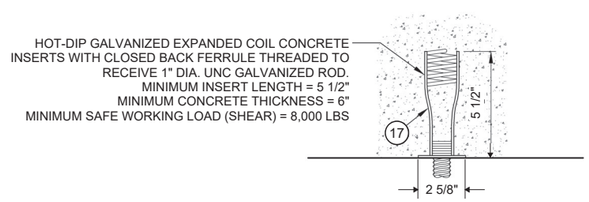

DETAIL 5

SCALE: NONE
CONCRETE INSERT FOR 1" HANGER RODS
(96) REQUIRED

NOTE: SAFE WORKING LOAD REFLECTS 3:1 SAFETY (ULTIMATE WORKING LOAD) FOR CONCRETE COMPRESSIVE STRENGTH OF 3,000 PSI.

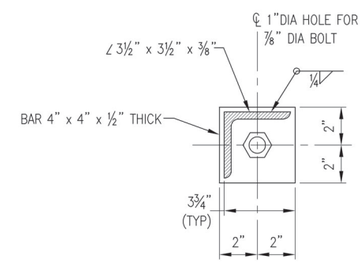

SECTION J-J

SCALE: NONE
(78) REQUIRED

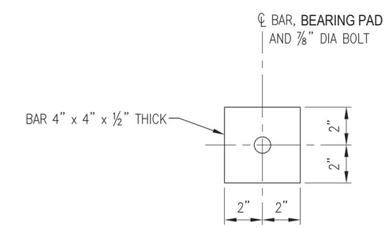

SECTION K-K

SCALE: NONE
(78) REQUIRED

14" HANGER DETAILS

IF THIS MEASURES 1 INCH THEN DRAWING IS TO SCALE

STRUCTURE NO.	00576
BDS DWG NO.	114206
CALC. BOOK	7777
HWY: 486	M.P.: 2.65
COUNTY	Jackson
DATE	MAY 2026

REGISTERED PROFESSIONAL ENGINEER
106805PE
Digitally Signed 2026.06.19 06:52-07'00'
OREGON
JULY 08, 2025
MICHAEL D. YANG
EXPIRES: 06/30/28

AVISTA Corp.

OREGON DEPARTMENT OF TRANSPORTATION

Rogue R_Hwy 486 (Gold Hill Spur)

OR99: ROGUE RIVER BRIDGE, GOLD HILL SPUR PROJECT
GOLD HILL SPUR HIGHWAY
JACKSON COUNTY

Designer: Michael Yang
Reviewer:
Drafter: Michael Yang
Checker: Jeff Webb

MISC PIPE HANGER DETAILS

SHEET NO. JA07

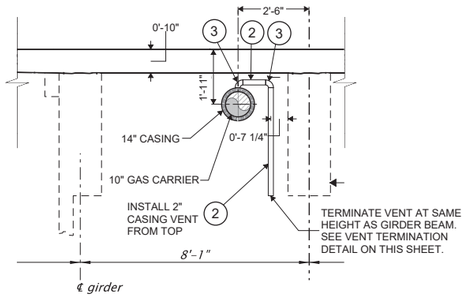

CASING VENT DETAIL AT EAST END - FACING WEST
SCALE: 3/16" = 1'

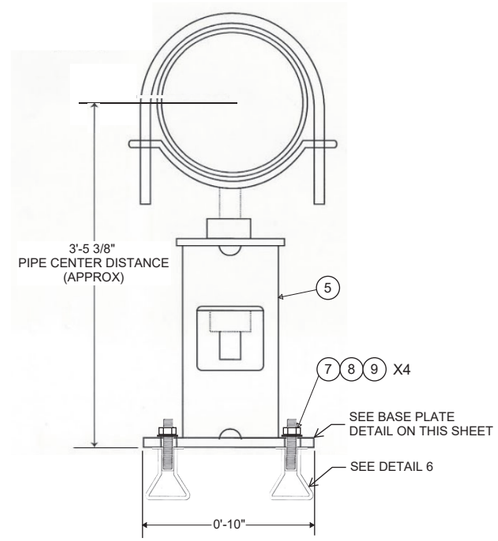

HORIZONTAL ADJUSTABLE PIPE SUPPORT DETAIL (BENT 1)
SCALE: NONE
(1) REQUIRED

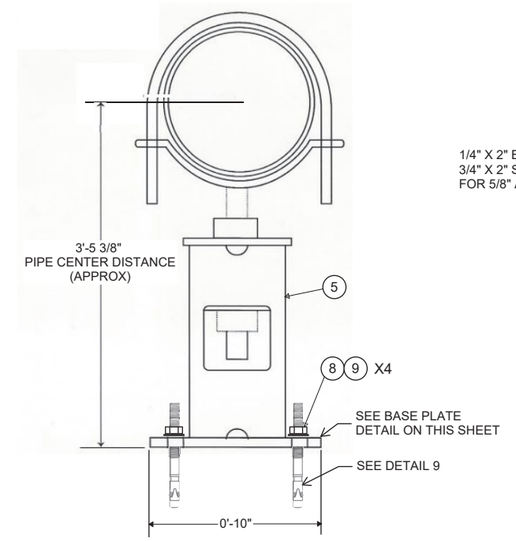

HORIZONTAL ADJUSTABLE PIPE SUPPORT DETAIL (BENT 8)
SCALE: NONE
(1) REQUIRED

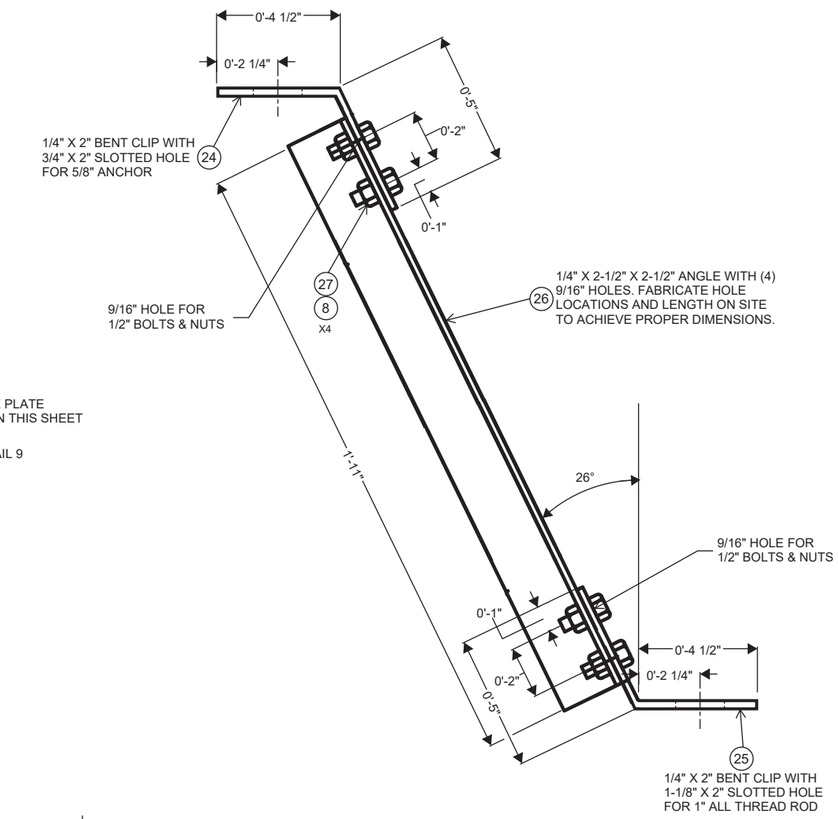

DETAIL 8
SCALE: NONE
(14 REQUIRED)

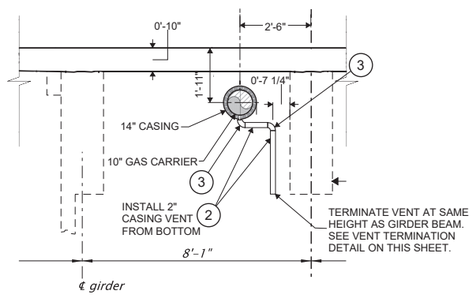

CASING VENT DETAIL AT WEST END - FACING WEST
SCALE: 3/16" = 1'

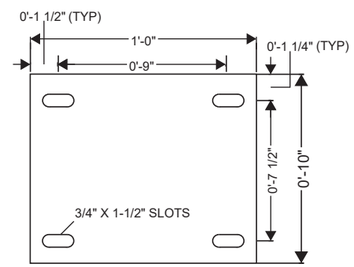

BASE PLATE FOR HORIZONTAL ADJUSTABLE PIPE SUPPORT
SCALE: 1.5" = 1'

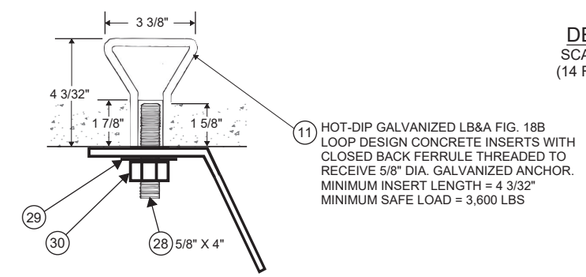

DETAIL 7
SCALE: NONE
(14 REQUIRED)

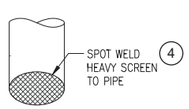

VENT TERMINATION DETAIL
SCALE: NONE

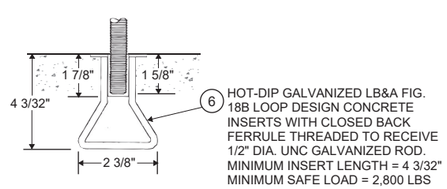

DETAIL 6
SCALE: NONE
(4 REQUIRED)

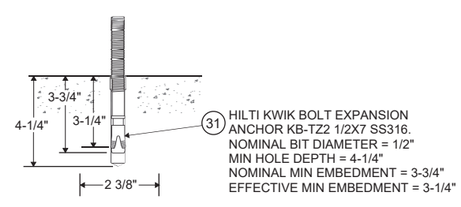

DETAIL 9
SCALE: NONE
(4 REQUIRED)

IF THIS MEASURES
1 INCH
THEN DRAWING IS TO SCALE

STRUCTURE NO.	00576
BDS DWG NO.	114207
CALC. BOOK	7777
HWY: 486	M.P.: 2.65
COUNTY	Jackson
DATE	MAY 2026

REGISTERED PROFESSIONAL ENGINEER
106805PE
Digitally Signed 2026.06.19 06:53-07'00'
OREGON
JULY 08, 2025
MICHAEL D. YANG
EXPIRES: 06/30/28

AVISTA Corp.

Rogue R_Hwy 486 (Gold Hill Spur)

OR99: ROGUE RIVER BRIDGE, GOLD HILL SPUR PROJECT
GOLD HILL SPUR HIGHWAY
JACKSON COUNTY

Designer: Michael Yang
Reviewer:
Drafter: Michael Yang
Checker: Jeff Webb

HORIZONTAL SUPPORT & VENT DETAILS

SHEET NO. JA08

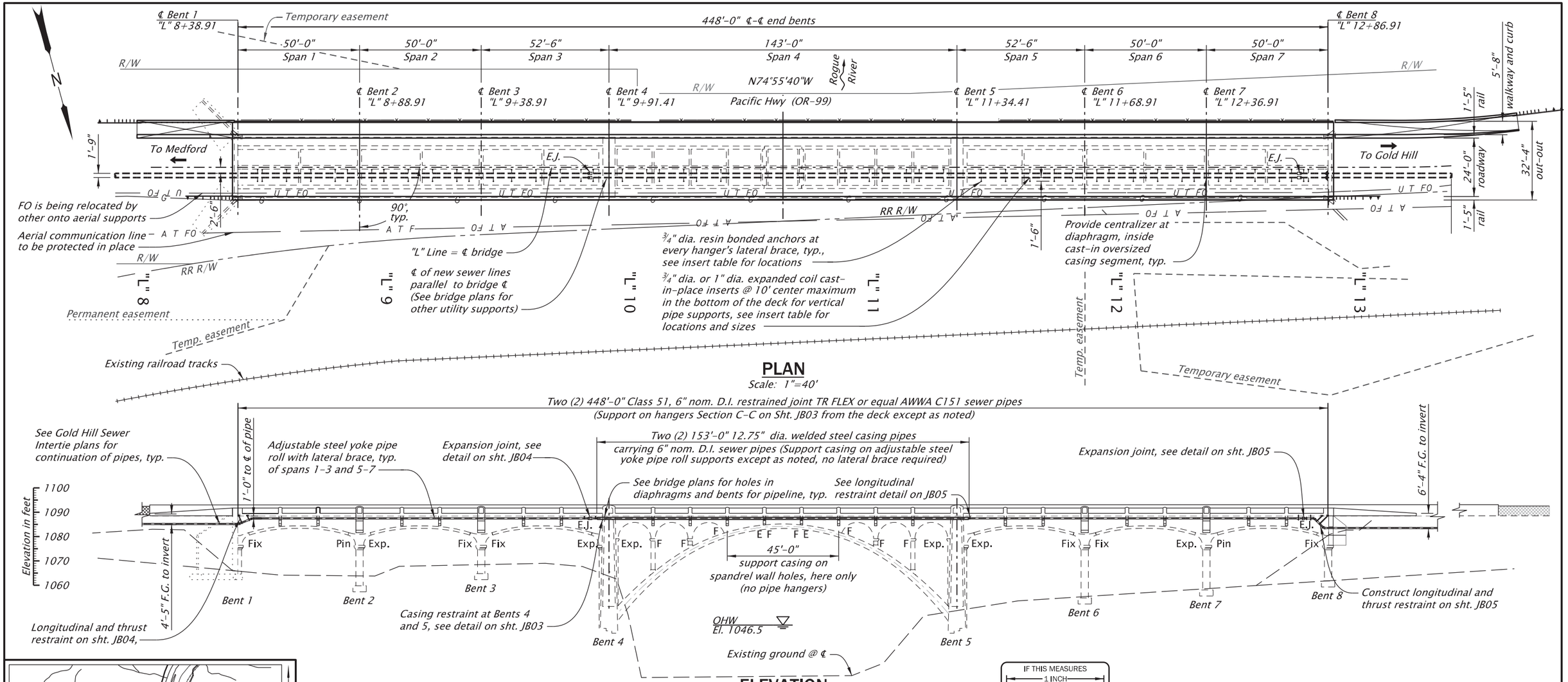

PLAN

Scale: 1"=40'

ELEVATION

Scale: 1"=40'

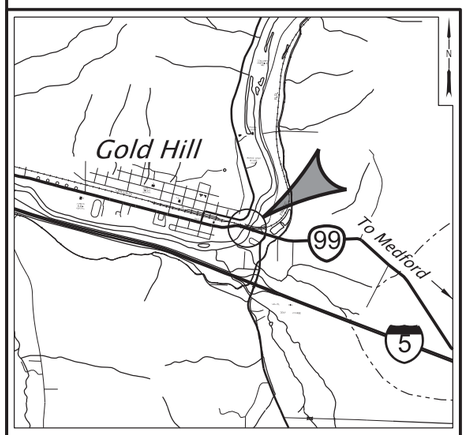

LOCATION MAP

Township 36 S, Range 03 W, Section 22, WM
Longitude 42.43083°N, Latitude 123.04344°W

IF THIS MEASURES 1 INCH THEN DRAWING IS TO SCALE

INSERT TABLE-LOCATIONS

* Not shown in plan view

Span 1		Span 2		Span 3		Span 4		Span 5		Span 6		Span 7	
Size	Location	Size	Location	Size	Location	Size	Location	Size	Location	Size	Location	Size	Location
¾"	10"*	¾"	5'-0"	¾"	5'-0"	1"	5'-6"	¾"	5'-0"*	Symmetric to Span 2		¾"	5'-0"
¾"	1'-6"*	¾"	10'-0"	¾"	12'-6"	1"	15'-6"	¾"	5'-8"*			¾"	10'-0"
¾"	4'-11"*	¾"	20'-0"	¾"	22'-6"	1"	20'-9"	¾"	10'-0"			¾"	20'-0"
¾"	5'-7"*	¾"	30'-0"	¾"	32'-6"	1"	30'-9"	¾"	20'-0"			¾"	30'-0"
¾"	8'-1"	¾"	40'-0"	¾"	41'-0"	1"	36'-0"	¾"	30'-0"			¾"	35'-0"
¾"	10'-0"	¾"	45'-0"	¾"	46-0"	1"	46'-0"	¾"	40'-0"			¾"	40'-0"
¾"	20'-0"					1"	97'-0"	¾"	47'-6"			¾"	41'-11"
¾"	30'-0"					1"	107'-0"					¾"	45'-6"*
¾"	40'-0"					1"	112'-3"					¾"	46'-2"*
¾"	45'-0"					1"	122'-3"					¾"	48'-6"*
						1"	127'-6"					¾"	49'-2"*
						1"	137'-6"						

Provide inserts in underside of deck plumb at every location. See anchor notes on shts. JB02-JB05. These are longitudinal location. Where shown in plan, provide additional inserts for lateral braces 1'-6" offset at the same longitudinal location

ACCOMPANIED BY DRAWINGS: JB02-JB05

NOT FOR CONSTRUCTION, INFORMATIONAL DRAWINGS: 3192-3197, 3256

NOTE:
Elevations shown are converted to North American Vertical Datum 1988 (NAVD88) from assumed National Geodectic Vertical Datum 1929 (NGVD29) on existing plans. Conversion: NGVD29 + 3.29' = NAVD88

STRUCTURE NO. 00576
BDS DWG NO. 114208
CALC. BOOK 7777
HWY: 486
M.P.: 2.65
COUNTY Jackson
DATE June 2026

STRUCTURAL REGISTERED PROFESSIONAL ENGINEER 58885 OREGON MAY 10, 2005 PETER GLEN SLOCUM
Digitally Signed 2026.07.01 10:15:54-07'00'
EXPIRES: 06/30/2028

DOWL
3502 Excel Dr., Ste. 105
Medford, Oregon 97504
541-683-6090
WWW.DOWL.COM

Rogue R_Hwy 486 (Gold Hill Spur)

OR99: ROGUE RIVER BRIDGE, GOLD HILL SPUR PROJECT
GOLD HILL SPUR HIGHWAY
JACKSON COUNTY

Designer: Pete Slocum, P.E., S.E. Reviewer: Ben Wardell, P.E.
Drafter: Ian Filson Checker: Nik Gordon, P.E.

PLAN AND ELEVATION - SEWER

SHEET NO. JB01

FINAL ELECTRONIC DOCUMENT AVAILABLE UPON REQUEST

SANITARY SEWER GENERAL NOTES (ON STRUCTURE):

CONSTRUCTION NOTES:

Provide all materials and perform all work according to the Plans, General Notes, "Oregon Standard Specifications for Construction 2024" .

Exposed sanitary sewer pipeline shall be ductile iron per section 00445 Special Provisions and special thickness Class 52 unless noted or shown otherwise. All pipe and standard fittings shall be restrained joint type.

Contractor shall provide a placement method, material list and a detailed pipeline layout shop drawing including fittings, spool sections, end treatments, and specialty items for review and approval by the Engineer. Unless otherwise noted or shown, bell ends or joints of pipe shall be located a minimum of 16 inches and a maximum of 39 inches away from pipe supports. Custom pipe spool lengths will be required to meet minimum distance to support requirements, and avoid conflicts between pipe supports, bells, fittings, expansion joints, restraints, diaphragms and bents/piers. Consider the sequence of construction coordinated with the bridge deck replacement and inaccessibility of some portions once the deck is placed.

Pipelines shall be tested by the contractor according to the Construction Staging this sheet.

Test Span 4 waterline in casing prior to connecting to and testing spans 1-3 and 5-7. Connect to the expansion joints only after testing and extending adjacent spans. After testing, all water shall be removed from the pipe line if not placed in service immediately.

Many aspects of this work are dependent upon the geometry of the existing structure. Dimensions and geometry of existing features shown in these plans are based upon information shown in the as-constructed drawings and shall be considered approximate. Field verify all dimensions and locations of existing reinforcing and prestressing steel prior to ordering or fabricating any materials.

Where steel casing is installed, place sewer line with poly centralizers, spaced at 5 foot intervals, inside by pulling not pushing.

Oregon law requires the rules adopted by the Oregon Utilities Notification Center be observed. These rules are set forth in OAR 952-001-0010 through OAR 952-001-0090. Copies of these rules may be obtained from the center or by calling 1-800-322-2344 or 811.

Provide ACME molded EPDM cone end seals or approved equal with stainless steel bands with worm gear tightening and install per manufacturer recommendations.

Provide non-shrink grout where shown.

See ODOT sheets for location of No Work Zone.

STRUCTURAL STEEL NOTES:

Provide all structural steel, including hot rolled shapes, stiffeners, and plates according to ASTM A572 Grade 50 unless noted otherwise.

Perform all structural steel welding in accordance with AWS D1.1 Structural welding - steel code - current edition.

Steel casing shall conform to A53 or A572. 12.75" outside diameter schedule 20 casing pipe. Joints shall be butt-welded and cut to accommodate bridge gradeline. Chase threads oversized as required to conform to external threaded galvanized parts.

Provide all bolts and nuts according to ASTM Specification F3125 Grade A325 unless noted otherwise. Provide all threaded rods according to ASTM F1554 Grade 55. Provide all DH nuts according to ASTM A563. Provide all washers according to ASTM Specification F436. Provide hot dip galvanization for all bolts, rods, nuts, structural steel, pipe supports, and miscellaneous attachments according to ASTM Specifications A123 and A153 as applicable. Place inserts such that the hanger rods are plumb without bending the hanger rods.

CONSTRUCTION STAGING:

Prior to connection of pipeline at bridge expansion joints, the following procedure shall be followed to extend the pipeline installation across the bridge. This procedure minimizes longitudinal distortion at the EX-TEND expansion joint caused by lengthening of the pipeline under pressure if not pre-extended:

(a) Manually extend each ductile iron joint during pipe installation to minimize pullout expansion following manufacturer's recommended procedures.
(b) Place a blind flange on the spool section between expansion joints or at the ends of the bridge prior to burial.
(c) Slowly pressurize the line to the testing pressure checking to make sure that as the line extends it slides longitudinal at the pipe supports so the supports are not restraining the longitudinal deflection, typical.
(d) Release pressure and remove blind flanges.
(e) Re-adjust yokes and rollers after pressurization.
(f) Connect the line to the expansion joints set at the mid-range of expansion/contraction length when the outside ambient air temp is between 50 and 70 degrees Fahrenheit.

See sheet JB01 for Accompanied By Drawings and Informational Drawings.

STRUCTURE NO.	00576
BDS DWG NO.	114209
CALC. BOOK	7777
HWY: 486 M.P.: 2.65	
COUNTY	Jackson
DATE	June 2026

IF THIS MEASURES 1 INCH THEN DRAWING IS TO SCALE

STRUCTURAL REGISTERED PROFESSIONAL ENGINEER 58885 OREGON MAY 10, 2005 PETER GLEN SLOCUM

Digitally Signed 2026.07.01 10:15:42-07'00'

EXPIRES: 06/30/2028

FINAL ELECTRONIC DOCUMENT AVAILABLE UPON REQUEST

3502 Excel Dr., Ste. 105
Medford, Oregon 97504
541-683-6090
DOWL
WWW.DOWL.COM

Rogue R_Hwy 486 (Gold Hill Spur)

OR99: ROGUE RIVER BRIDGE, GOLD HILL SPUR PROJECT
GOLD HILL SPUR HIGHWAY
JACKSON COUNTY

Designer: Pete Slocum, P.E., S.E. Reviewer: Ben Wardell, P.E.
Drafter: Ian Filson Checker: Nik Gordon, P.E.

GENERAL NOTES - SEWER

SHEET NO. JB02

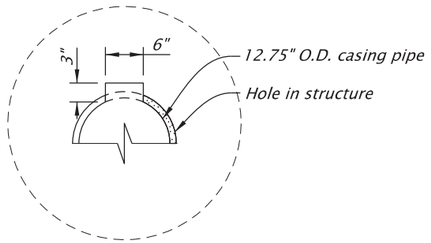

PLATE DETAIL
Scale: 1/2" = 1'-0"

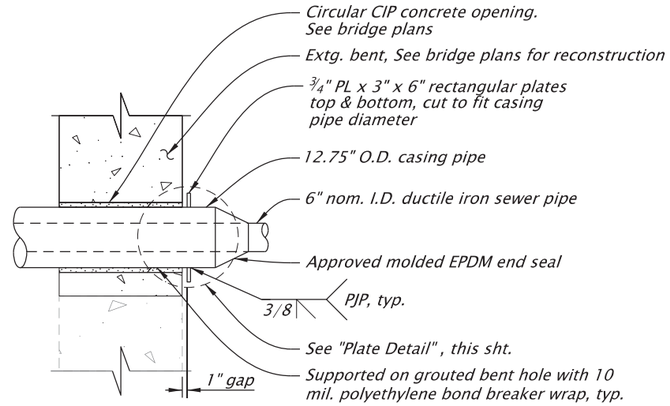

CASING RESTRAINT (BENT 5 SHOWN, BENT 4 SIMILAR)
Scale: No scale

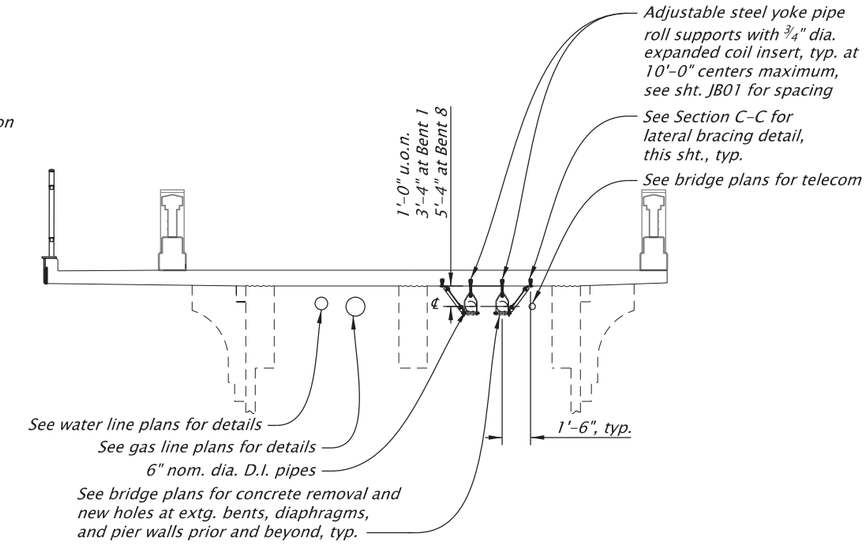

APPROACH SPANS
(Spans 1-3, 5-7)

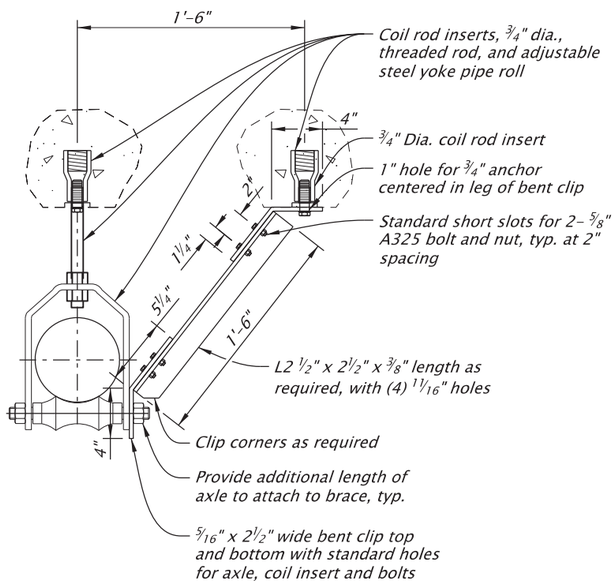

NOTE:
Section C-C applies to all spans except Span 4 that has no lateral braces and larger deck inserts

SECTION C-C
Scale: 1" = 1'-0"

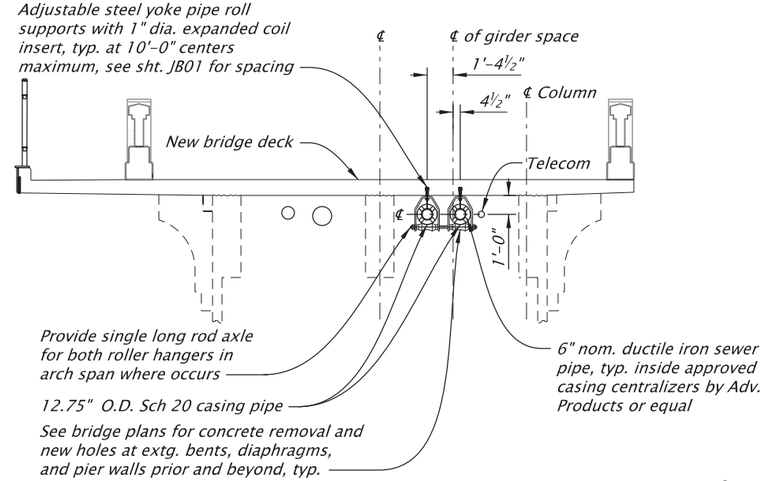

ARCH SPAN WITH HANGERS
(Span 4, not including barrel arch span)
Scale: 1/8" = 1'-0"

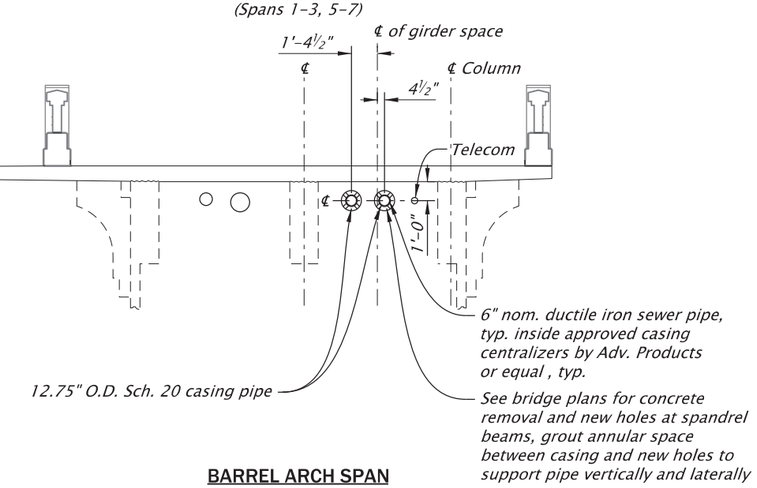

BARREL ARCH SPAN
(Center 45'-0" of Span 4)

DECK SECTIONS
Scale: 1/8" = 1'-0"

See sheet JB01 for Accompanied By Drawings and Informational Drawings.

IF THIS MEASURES 1 INCH THEN DRAWING IS TO SCALE

STRUCTURE NO.	00576
BDS DWG NO.	114210
CALC. BOOK	7777
HWY: 486	M.P.: 2.65
COUNTY	Jackson
DATE	June 2026

STRUCTURAL REGISTERED PROFESSIONAL ENGINEER 58885 OREGON MAY 10, 2005 PETER GLEN SLOCUM
Digitally Signed 2026.07.01 10:15:31-07'00'
EXPIRES: 06/30/2028

FINAL ELECTRONIC DOCUMENT AVAILABLE UPON REQUEST

DOWL
3502 Excel Dr., Ste. 105
Medford, Oregon 97504
541-683-6090
WWW.DOWL.COM

Rogue R_Hwy 486 (Gold Hill Spur)

OR99: ROGUE RIVER BRIDGE, GOLD HILL SPUR PROJECT
GOLD HILL SPUR HIGHWAY
JACKSON COUNTY

Designer: Pete Slocum, P.E., S.E. Reviewer: Ben Wardell, P.E.
Drafter: Ian Filson Checker: Nik Gordon, P.E.

DETAILS - 1

SHEET NO. JB03

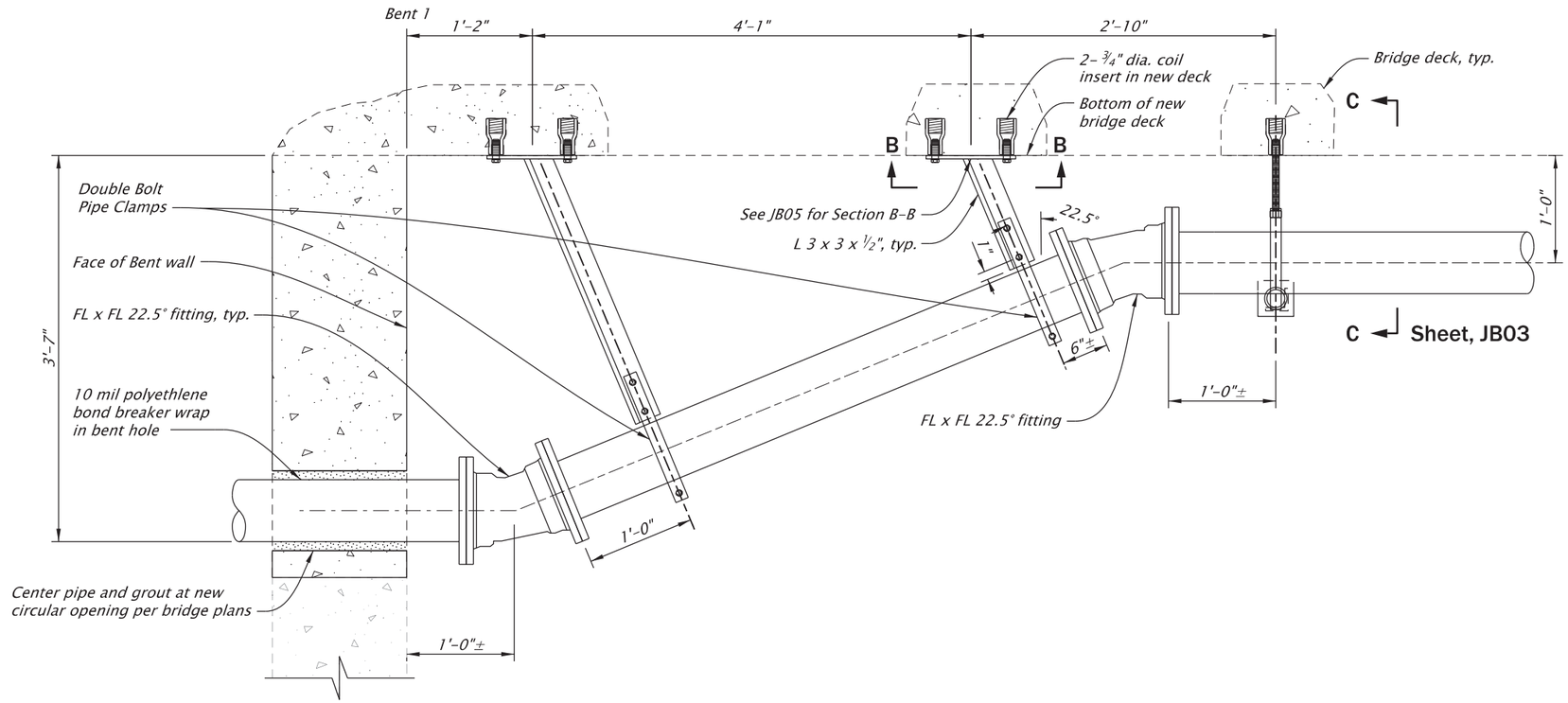

LONGITUDINAL AND THRUST RESTRAINT (BENT 1 SHOWN)

Scale: 3/4" = 1'-0"

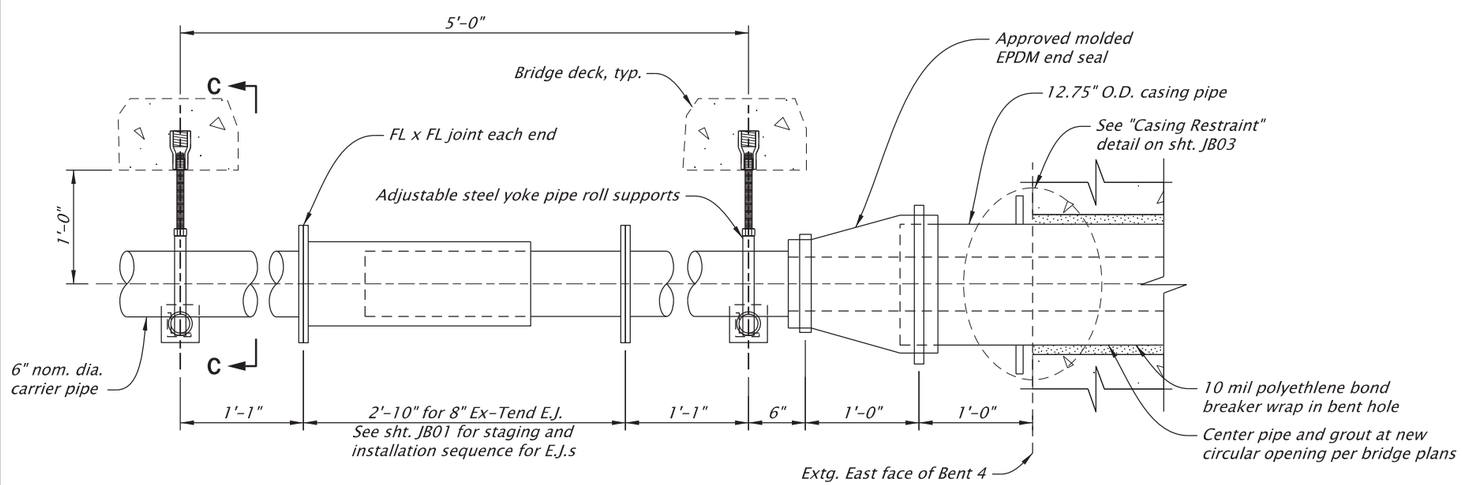

EXPANSION JOINT (AT BENT 4)

Scale: 3/4" = 1'-0"

See sheet JB01 for Accompanied By Drawings and Informational Drawings.

STRUCTURE NO.	00576
BDS DWG NO.	114211
CALC. BOOK	7777
HWY: 486	
M.P.: 2.65	
COUNTY	Jackson
DATE	June 2026

STRUCTURAL REGISTERED PROFESSIONAL ENGINEER 58885 OREGON MAY 10, 2005 PETER GLEN SLOCUM

Digitally Signed 2026.07.01 10:15:20-07'00'

EXPIRES: 06/30/2028

FINAL ELECTRONIC DOCUMENT AVAILABLE UPON REQUEST

IF THIS MEASURES 1 INCH THEN DRAWING IS TO SCALE

3502 Excel Dr., Ste. 105
Medford, Oregon 97504
541-683-6090
DOWL
WWW.DOWL.COM

Rogue R_Hwy 486 (Gold Hill Spur)

OR99: ROGUE RIVER BRIDGE, GOLD HILL SPUR PROJECT

GOLD HILL SPUR HIGHWAY
JACKSON COUNTY

Designer: Pete Slocum, P.E., S.E. Reviewer: Ben Wardell, P.E.
Drafter: Ian Filson Checker: Nik Gordon, P.E.

DETAILS - 2

SHEET NO. JB04

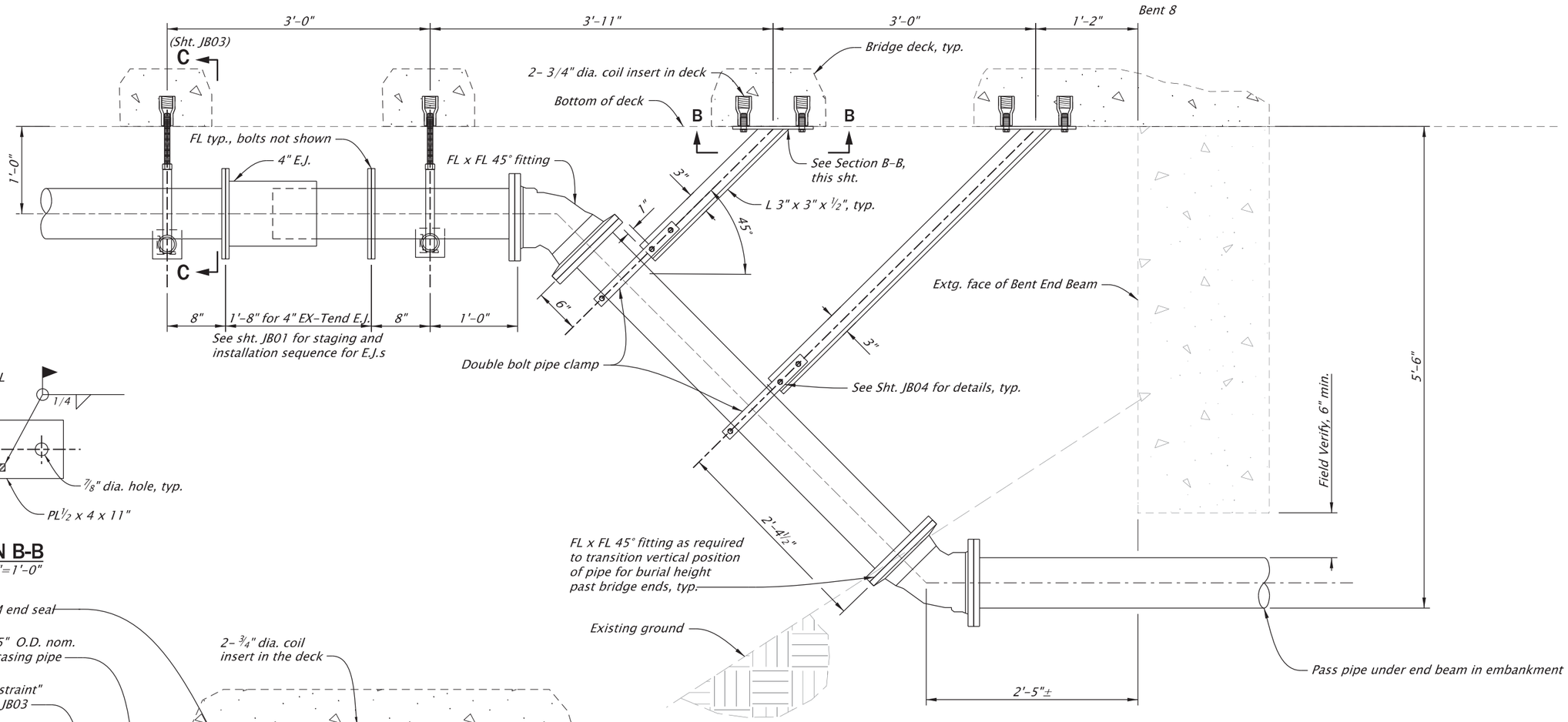

EXPANSION JOINT AND LONGITUDINAL AND THRUST RESTRAINT (BENT 8 SHOWN)

Scale: 3/4" = 1'-0"

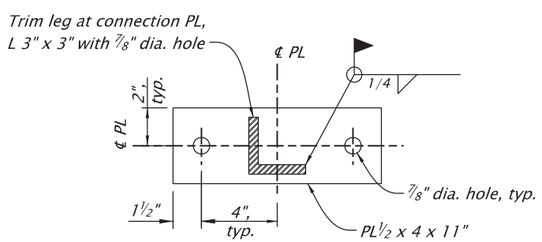

SECTION B-B

Scale: 1 1/2"=1'-0"

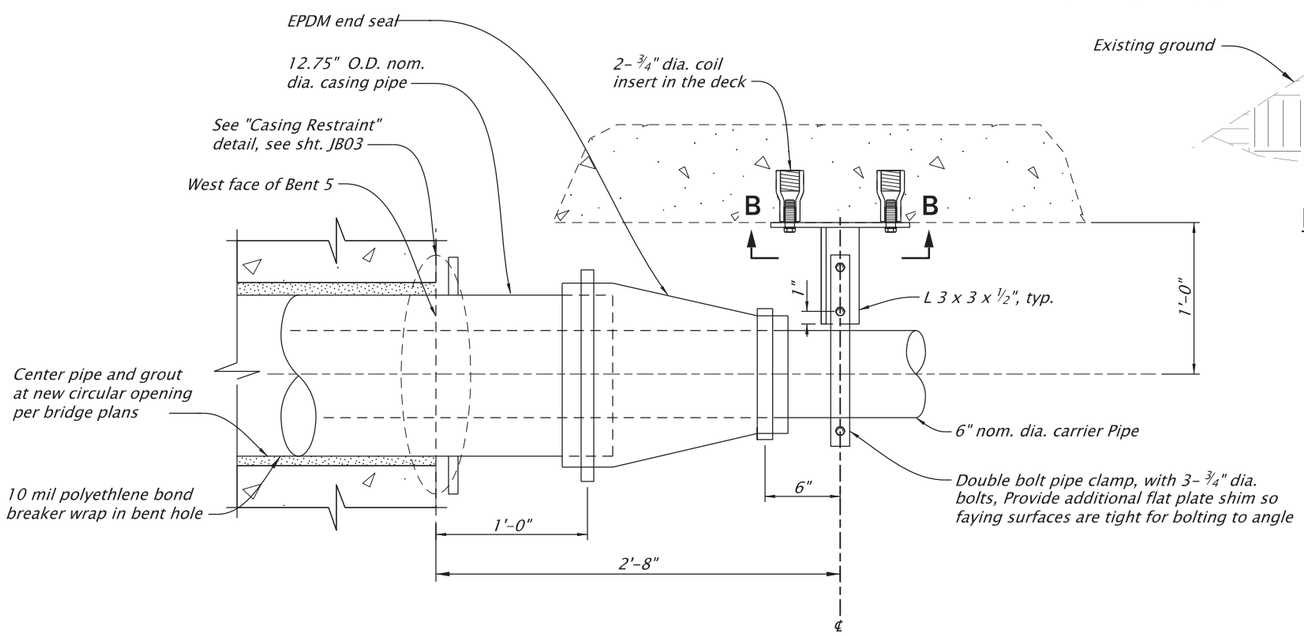

LONGITUDINAL RESTRAINT (AT BENT 5)

Scale: 1" = 1'-0"

See sheet JB01 for Accompanied By Drawings and Informational Drawings.

STRUCTURE NO.	00576
BDS DWG NO.	114212
CALC. BOOK	7777
HWY: 486	
M.P.: 2.65	
COUNTY	Jackson
DATE	June 2026

STRUCTURAL REGISTERED PROFESSIONAL ENGINEER 58885 OREGON MAY 10, 2005 PETER GLEN SLOCUM

Digitally Signed 2026.07.01 10:15:06-07'00'

EXPIRES: 06/30/2028

FINAL ELECTRONIC DOCUMENT AVAILABLE UPON REQUEST

IF THIS MEASURES 1 INCH THEN DRAWING IS TO SCALE

DOWL
3502 Excel Dr., Ste. 105
Medford, Oregon 97504
541-683-6090
WWW.DOWL.COM

OREGON DEPARTMENT OF TRANSPORTATION

Rogue R_Hwy 486 (Gold Hill Spur)

OR99: ROGUE RIVER BRIDGE, GOLD HILL SPUR PROJECT

GOLD HILL SPUR HIGHWAY
JACKSON COUNTY

Designer: Pete Slocum, P.E., S.E. Reviewer: Ben Wardell, P.E.
Drafter: Ian Filson Checker: Nik Gordon, P.E.

DETAILS - 3

SHEET NO. JB05

Provide all materials and perform all work according to the Plans, General Notes, "Oregon Standard Specifications for Construction 2024" with Special Provisions, and current American Water Works Association (AWWA) specifications as applicable.

All materials contacting water must meet requirements of NSF 61. All waterline work shall be constructed and disinfected per Oregon Administrative Rules (OAR) 333–061–0050 construction standards.

Exposed pipeline shall be ductile iron conforming to AWWA/ANSI C151 /A21, epoxy lined and coated special thickness Class 52 unless noted or shown otherwise. All pipe and standard fittings shall be restrained joint type, TR–Flex as manufactured by U.S. Pipe, or Flex–Ring as manufactured by American Ductile Iron Pipe Company or TR–Flex as manufactured by McWane Ductile or approved equal unless noted or shown otherwise. Pipe and fittings shall be supplied by the same manufacturer unless an approved equal is acceptable. All joints in pipes and fittings shall provide positive joint separation by means of interference fit weld beads, bolted flanges, or equal. Joints in pipe on the structure using external grippers such as MegaLug and internal grippers using gripper gaskets shall not be allowed.

Ductile iron water pipeline and fittings shall be ceramic epoxy lined, per Special Provisions, and meet all other requirements as the ductile iron pipeline.

Provide all bolts and nuts according to ASTM Specification F3125 Grade A325 unless noted otherwise. Provide all threaded rods according to ASTM F1554 Grade 55. Provide all DH nuts according to ASTM A563. Provide all structural steel in supports according to ASTM Specification A572 Grade 50 or A992 Grade 50. Provide all washers according to ASTM Specification F436. Provide hot dip galvanization for all bolts, rods, nuts, structural steel, pipe supports, and miscellaneous attachments according to ASTM Specifications A123 and A153 as applicable. Provide hot dip galvanized structural concrete inserts according to the requirements of specification 530.14. Place inserts such that the hanger rods are plumb without bending the hanger rods.

Contractor shall provide a material list and a detailed pipeline layout shop drawing including fittings, spool sections, end treatments, and specialty items for review and approval by the Engineer. Unless otherwise noted or shown, bell ends or joints of pipe shall be located a minimum of 16 inches and a maximum of 39 inches away from pipe supports. Custom pipe spool lengths will be required to meet minimum distance to support requirements, and avoid conflicts between pipe supports, bells, fittings, expansion joints, restraints, diaphragms and bents/piers.

Pipelines shall be hydrostatically tested by the contractor to a pressure in the Special Provision and in accordance with the AWWA C–600. Contractor shall be responsible for repairing all leaks to comply with pressure testing requirements. See Construction Staging this sheet.

The contractor shall be solely responsible for detailing, fabricating, installing, and testing the pipelines. Contractor shall submit pipeline placement method and layout shop drawings and details for review by the Engineer prior to construction.

Test span 4 waterline in casing prior to connecting to and testing spans 1–3 and 5–7. Connect to the expansion joints only after testing and extending adjacent spans. After testing, all water shall be removed from the pipeline if not placed in service immediately.

Provide utility conduit material and workmanship per section 00589 and 01140 of the ODOT/AWPA 2024 Standard Specifications for Construction and Special Provisions.

Provide and install resin bonded anchors as shown with high strength resin from the QPL. Install anchors according to the manufacturer's recommendations and the special provisions. Use an xray reinforcement locator and protect existing reinforcement prior to drilling anchors. Drill holes at approximately 10° downward angle.

Perform all structural steel welding in accordance with AWS D1.1 Structural welding – steel code – current edition.

Many aspects of this work are dependent upon the geometry of the existing structure. Dimensions and geometry of existing features shown in these plans are based upon information shown in the as–constructed drawings and shall be considered approximate. Field verify all dimensions and locations of existing reinforcing and prestressing steel prior to ordering or fabricating any materials.

Where steel casing is installed, place water line with poly centralizers, spaced at 5–foot intervals, inside by pulling not pushing.

Steel casing shall be hot–dipped galvanized interior and exterior and conforming to A53 or A572. 14" outside diameter schedule 20 casing pipe. Joints shall be butt–welded and cut to accommodate bridge gradeline. Chase threads oversized as required to conform to external threaded galvanized parts.

Consider the sequence of construction coordinated with the bridge deck replacement and inaccessibility of some portions once the deck is placed. Submit the placement method shop drawings and details for review and approval prior to construction.

Oregon law requires the rules adopted by the Oregon Utilities Notification Center be observed. These rules are set forth in OAR 952–001–0010 through OAR 952–001–0090. Copies of these rules may be obtained from the center or by calling 1–800–322–2344 or 811.

Provide ACME molded EPDM cone end seals or approved equal with stainless steel bands with worm gear tightening and install per manufacturer recommendations.

Prior to connection of pipeline at bridge expansion joints, the following procedure shall be followed to extend the pipeline installation across the bridge. This procedure minimizes longitudinal distortion at the EX–TEND expansion joint caused by lengthening of the pipeline under pressure if not pre–extended:

1. Manually extend each ductile iron joint during pipe installation to minimize pullout expansion following manufacturer's recommended practices.
2. Place a blind flange on the spool section between expansion joints or at the ends of the bridge prior to burial.
3. Slowly pressurize the line to the testing pressure checking to make sure that as the line extends it slides longitudinal at the pipe supports so the supports are not restraining the longitudinal deflection, typical.
4. Release pressure and remove blind flanges.
5. Re–adjust yokes and rollers after pressurization.
6. Connect the line to the expansion joints set at the mid–range of expansion/contraction length when the outside ambient air temp is between 50 and 70 degrees F.

LEGEND

EXISTING

- STORM DRAIN CATCH BASIN
- STORM MANHOLE
- POWER POLE
- GUY WIRE
- TREE
- CENTERLINE
- STORM DRAIN LINE
- COMMUNICATION LINE
- POWER (OVERHEAD)
- GAS LINE
- FENCE
- 4240.00 — CONTOUR WITH ELEVATION

PROPOSED

- AIR VALVE
- WATER VALVE
- WATER LINE
- SEWER FORCE MAIN LINE
- COMMUNICATION LINE
- GAS LINE

BY OTHERS, SHOWN FOR REFERENCE ONLY

See sheet JC01 for Accompanied By Drawings and Informational Drawings.

STRUCTURE NO.	00576
BDS DWG NO.	114217
CALC. BOOK	7777
HWY:	486
M.P.:	2.65
COUNTY	Jackson
DATE	JUN. 2026

IF THIS MEASURES 1 INCH THEN DRAWING IS TO SCALE

REGISTERED PROFESSIONAL ENGINEER 88332PE OREGON DECEMBER 9 2013 DANIEL B. SCALAS

Digitally Signed 2026.07.09 09:27:27-07'00'

EXPIRES 6/30/28

FINAL ELECTRONIC DOCUMENT AVAILABLE UPON REQUEST

ADKINS ENGINEERING & SURVEYING
o / 541.884.4666
w / AdkinsEngineering.com
1435 ESPLANADE AVENUE, KLAMATH FALLS, OR 97601

Rogue R_Hwy 486 (Gold Hill Spur)

OR99: ROGUE RIVER BRIDGE, GOLD HILL SPUR PROJECT

GOLD HILL SPUR HIGHWAY

JACKSON COUNTY

Designer:	ABRAHAM BARR	Reviewer:	DAN SCALAS, PE
Drafter:	ABRAHAM BARR	Checker:	DAN SCALAS, PE

LEGEND & NOTES

SHEET NO. JC01

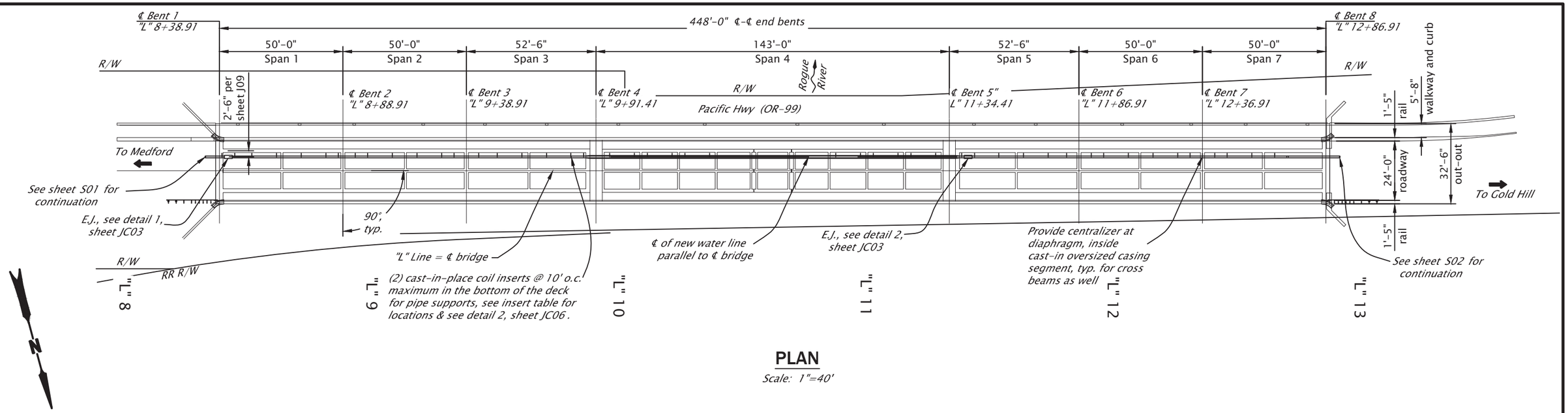

PLAN

Scale: 1"=40'

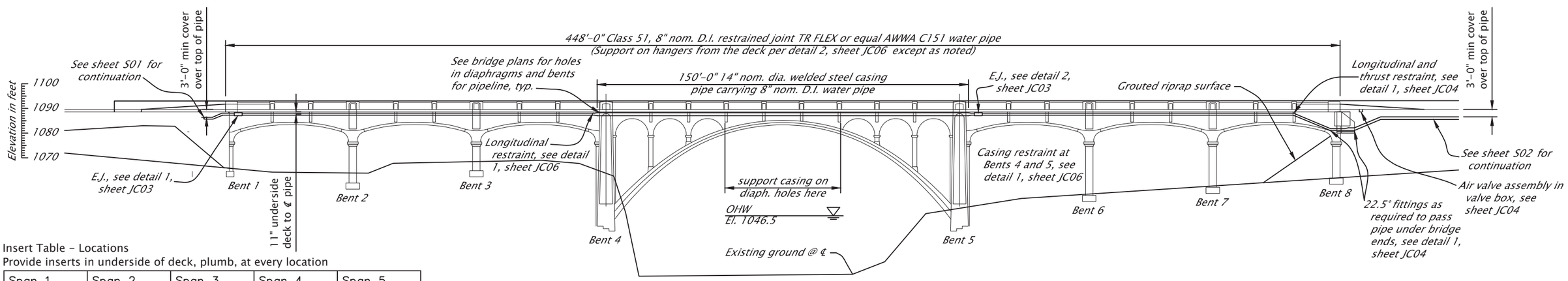

ELEVATION

Scale: 1"=40'

Insert Table - Locations
Provide inserts in underside of deck, plumb, at every location

Span 1	Span 2	Span 3	Span 4	Span 5
1'-0"	5'-0"	5'-0"	5'-6"	symmetric to Span 3
6'-3"	10'-0"	12'-6"	15'-6"	Span 6
13'-1.5"	20'-0"	22'-6"	20'-9"	symmetric to Span 2
23'-1.5"	30'-0"	32'-6"	30'-9"	Span 7
33'-1.5"	40'-0"	42'-3"	36'-0"	5'-0"
43'-1.5"	45'-0"	45'-8"	46'-0"	10'-0"
48'-1.5"		46'-2"	97'-0"	20'-0"
			107'-0"	29'-3.25"
			112'-3"	35'-11.75"
			122'-3"	36'-5.75"
			127'-6"	
			137'-6"	

See sheet JC01 for Accompanied By Drawings and Informational Drawings.

STRUCTURE NO.	00576
BDS DWG NO.	114217
CALC. BOOK	7777
HWY: 486	
M.P.: 2.65	
COUNTY	Jackson
DATE	JUN. 2026

IF THIS MEASURES 1 INCH THEN DRAWING IS TO SCALE

REGISTERED PROFESSIONAL ENGINEER 88332PE
Digitally Signed 2026.07.10 14:28:21-07'00'
OREGON DECEMBER 9, 2013 DANIEL B. SCALAS
EXPIRES 6/30/26

FINAL ELECTRONIC DOCUMENT AVAILABLE UPON REQUEST

ADKINS ENGINEERING & SURVEYING
o / 541.884.4666
w / AdkinsEngineering.com
1435 ESPLANADE AVENUE, KLAMATH FALLS, OR 97601

Rogue R_Hwy 486 (Gold Hill Spur)

OR99: ROGUE RIVER BRIDGE, GOLD HILL SPUR PROJECT

GOLD HILL SPUR HIGHWAY

JACKSON COUNTY

Designer:	ABRAHAM BARR	Reviewer:	DAN SCALAS, PE
Drafter:	ABRAHAM BARR	Checker:	DAN SCALAS, PE

PLAN & ELEVATION - WATER

SHEET NO. JC02

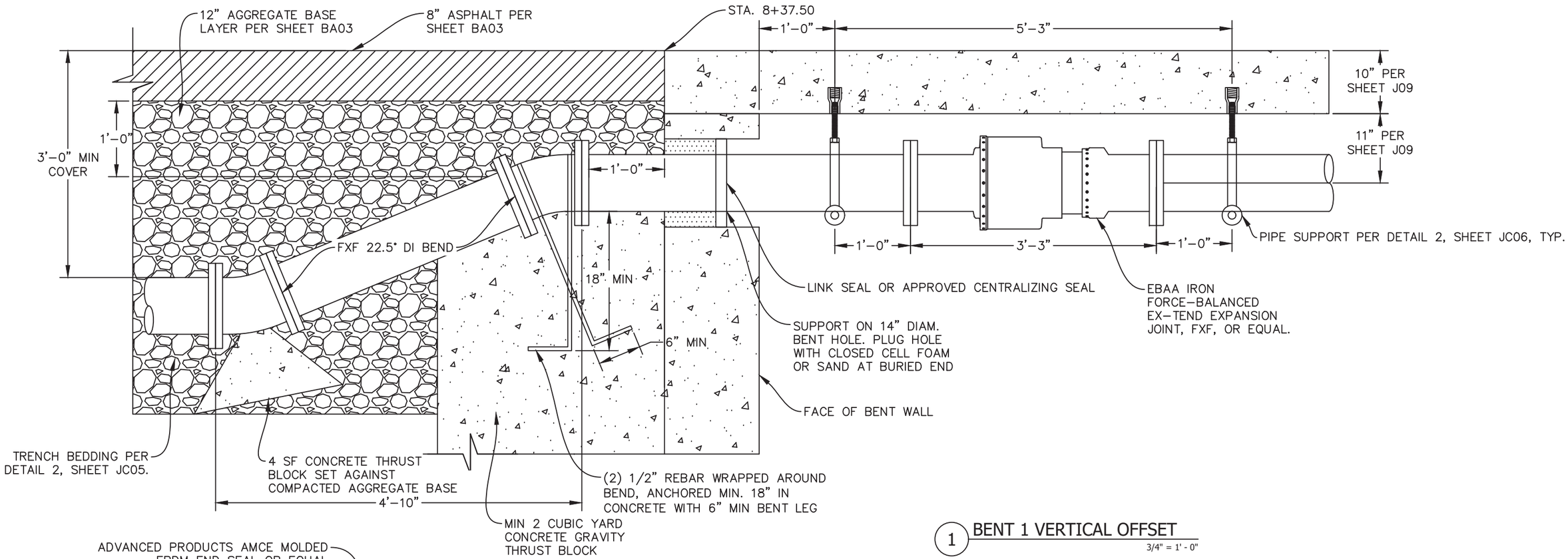

1 BENT 1 VERTICAL OFFSET

3/4" = 1' - 0"

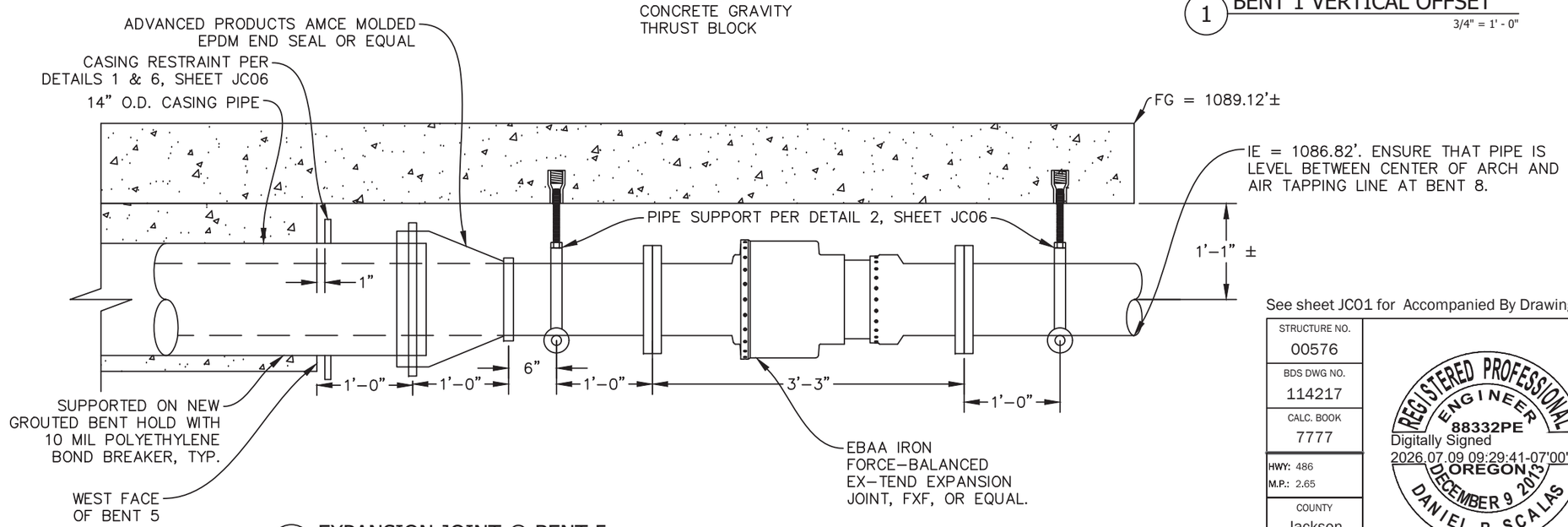

2 EXPANSION JOINT @ BENT 5

3/4" = 1' - 0"

See sheet JC01 for Accompanied By Drawings and Informational Drawings.

STRUCTURE NO.	00576
BDS DWG NO.	114217
CALC. BOOK	7777
HWY: 486	M.P.: 2.65
COUNTY	Jackson
DATE	FEB. 2026

IF THIS MEASURES 1 INCH THEN DRAWING IS TO SCALE

REGISTERED PROFESSIONAL ENGINEER 88332PE OREGON DECEMBER 9 2013 DANIEL B. SCALAS

Digitally Signed 2026.07.09 09:29:41-07'00'

EXPIRES 6/30/28

FINAL ELECTRONIC DOCUMENT AVAILABLE UPON REQUEST

ADKINS ENGINEERING & SURVEYING e / 541.884.4666 w / AdkinsEngineering.com

1435 ESPLANADE AVENUE, KLAMATH FALLS, OR 97601

Rogue R_Hwy 486 (Gold Hill Spur)

OR99: ROGUE RIVER BRIDGE, GOLD HILL SPUR PROJECT

GOLD HILL SPUR HIGHWAY

JACKSON COUNTY

Designer:	ABRAHAM BARR	Reviewer:	DAN SCALAS, PE
Drafter:	ABRAHAM BARR	Checker:	DAN SCALAS, PE

CIVIL DETAILS 1

SHEET NO. **JC03**

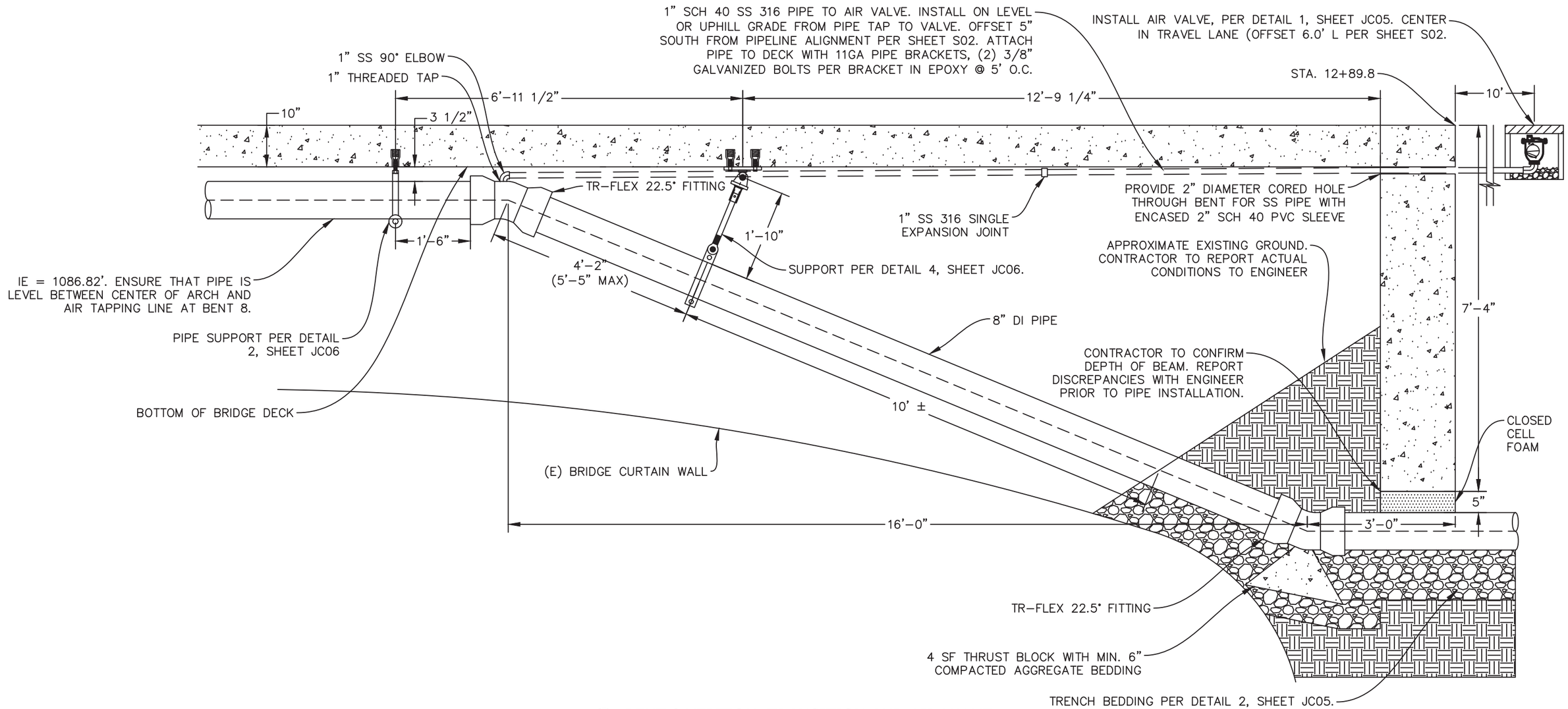

1 BENT 8 VERTICAL TRANSITION AND AIR VALVE

Scale: 1/2" = 1' - 0"

See sheet JC01 for Accompanied By Drawings and Informational Drawings.

STRUCTURE NO.	00576
BDS DWG NO.	114217
CALC. BOOK	7777
HWY: 486	M.P.: 2.65
COUNTY	Jackson
DATE	FEB. 2026

IF THIS MEASURES 1 INCH THEN DRAWING IS TO SCALE

REGISTERED PROFESSIONAL ENGINEER 88332PE OREGON DECEMBER 9 2013 DANIEL B. SCALAS

Digitally Signed 2026.07.09 09:30:03-07'00'

EXPIRES 6/30/28

FINAL ELECTRONIC DOCUMENT AVAILABLE UPON REQUEST

ADKINS ENGINEERING & SURVEYING
o / 541.884.4666
w / AdkinsEngineering.com
1435 ESPLANADE AVENUE, KLAMATH FALLS, OR 97601

Rogue R_Hwy 486 (Gold Hill Spur)

OR99: ROGUE RIVER BRIDGE, GOLD HILL SPUR PROJECT

GOLD HILL SPUR HIGHWAY

JACKSON COUNTY

Designer:	ABRAHAM BARR	Reviewer:	DAN SCALAS, PE
Drafter:	ABRAHAM BARR	Checker:	DAN SCALAS, PE

CIVIL DETAILS 2

SHEET NO. JC04

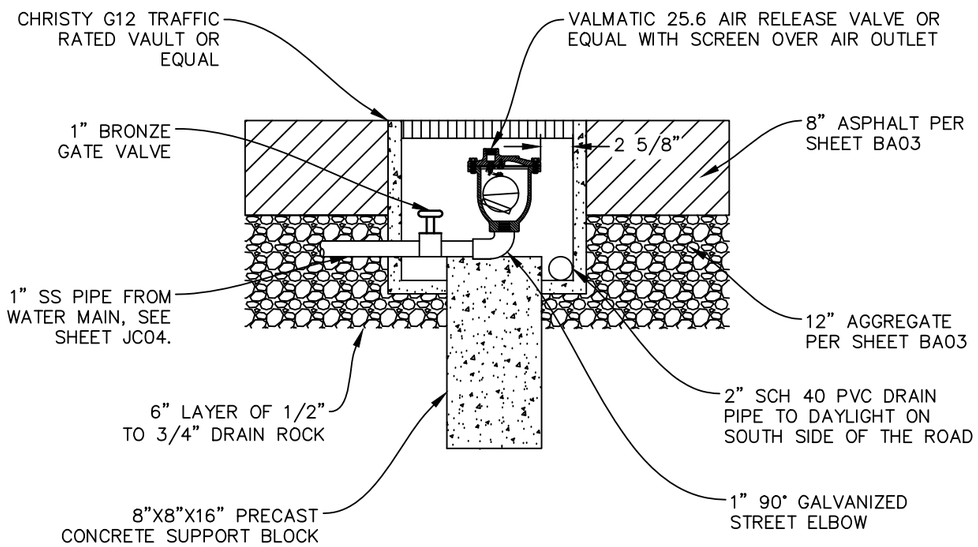

1 AIR VALVE ASSEMBLY
1" = 1'

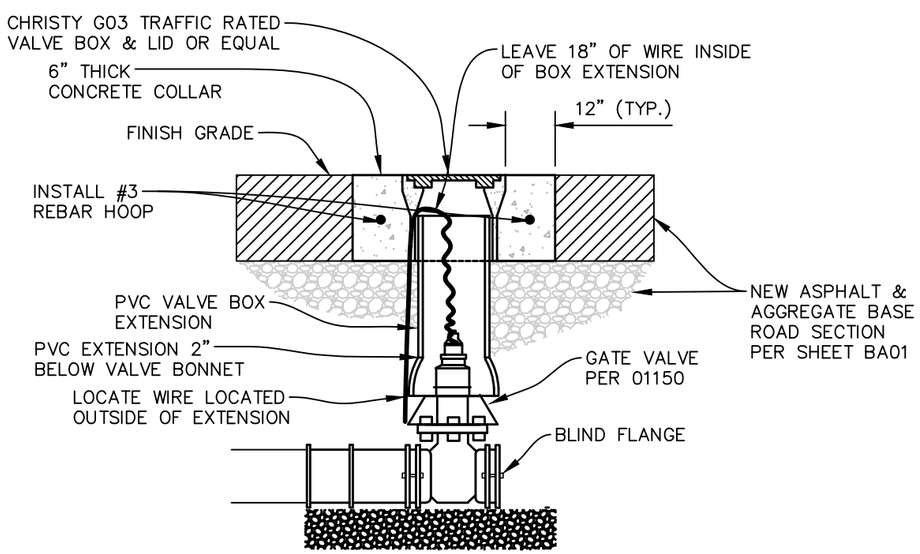

2 GATE VALVE ASSEMBLY
NTS

See sheet JC01 for Accompanied By Drawings and Informational Drawings.

STRUCTURE NO.	00576
BDS DWG NO.	114217
CALC. BOOK	7777
HWY: 486	
M.P.: 2.65	
COUNTY	Jackson
DATE	AUG. 2026

IF THIS MEASURES 1 INCH THEN DRAWING IS TO SCALE

REGISTERED PROFESSIONAL ENGINEER 88332PE OREGON DECEMBER 9 2013 DANIEL B. SCALAS

Digitally Signed 2026.08.17 13:04:03-07'00'

EXPIRES 6/30/28

FINAL ELECTRONIC DOCUMENT AVAILABLE UPON REQUEST

ADKINS ENGINEERING & SURVEYING
o / 541.884.4666
w / AdkinsEngineering.com
1435 ESPLANADE AVENUE, KLAMATH FALLS, OR 97601

Rogue R_Hwy 486 (Gold Hill Spur)

OR99: ROGUE RIVER BRIDGE, GOLD HILL SPUR PROJECT

GOLD HILL SPUR HIGHWAY

JACKSON COUNTY

Designer:	ABRAHAM BARR	Reviewer:	DAN SCALAS, PE
Drafter:	ABRAHAM BARR	Checker:	DAN SCALAS, PE

CIVIL DETAILS 3

SHEET NO. JC05

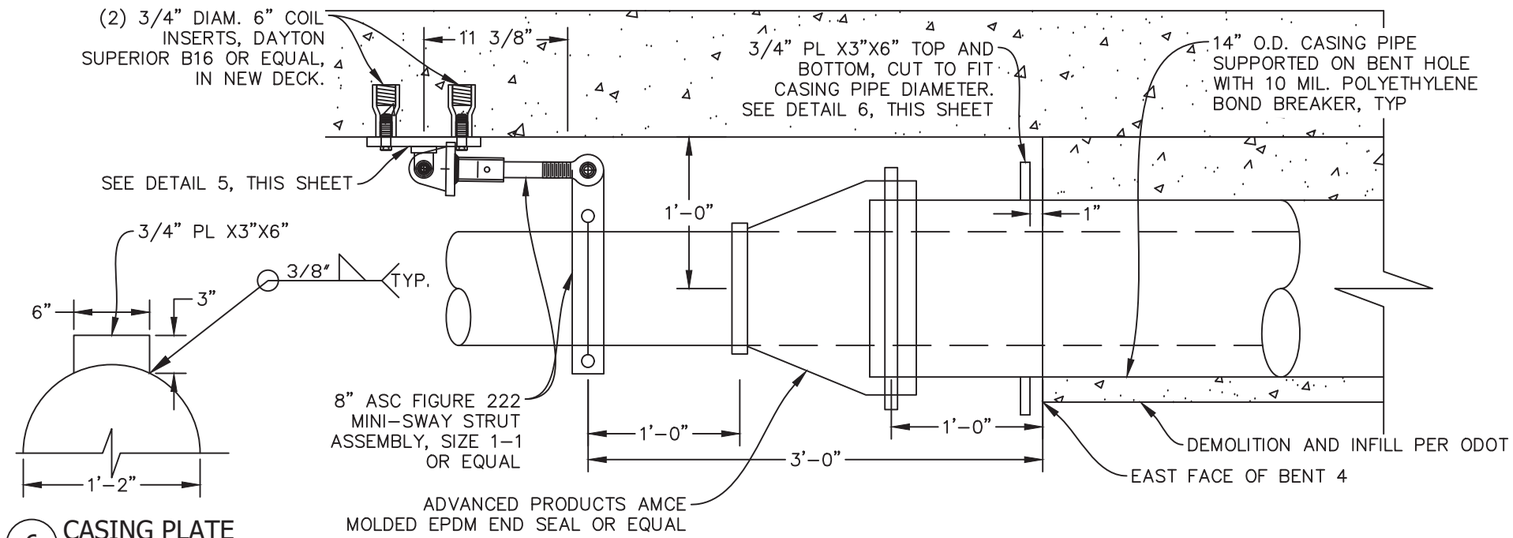

1 LONGITUDINAL RESTRAINT & CASING RESTRAINT @ BENT 4

1" = 1'

6 CASING PLATE

1" = 1'

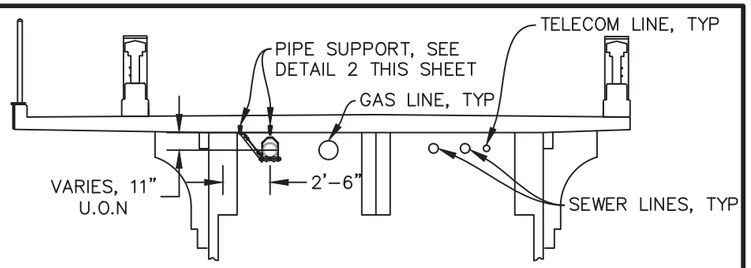

SPANS 1-3, 5-7

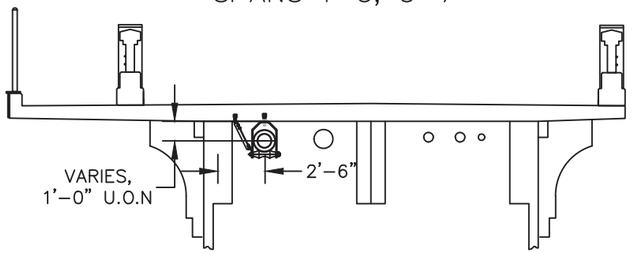

SPAN 4 - HANGERS

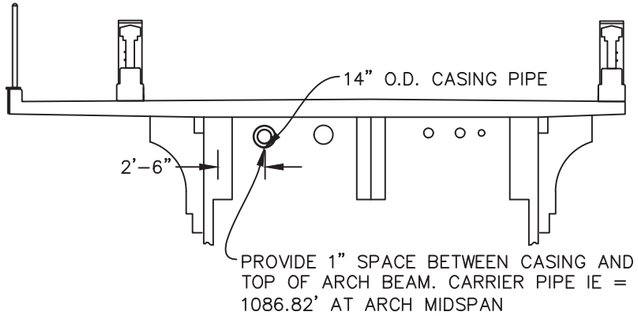

SPAN 4 - ON DIAPHRAGM HOLES

3 DECK SECTIONS

1/8" = 1' - 0"

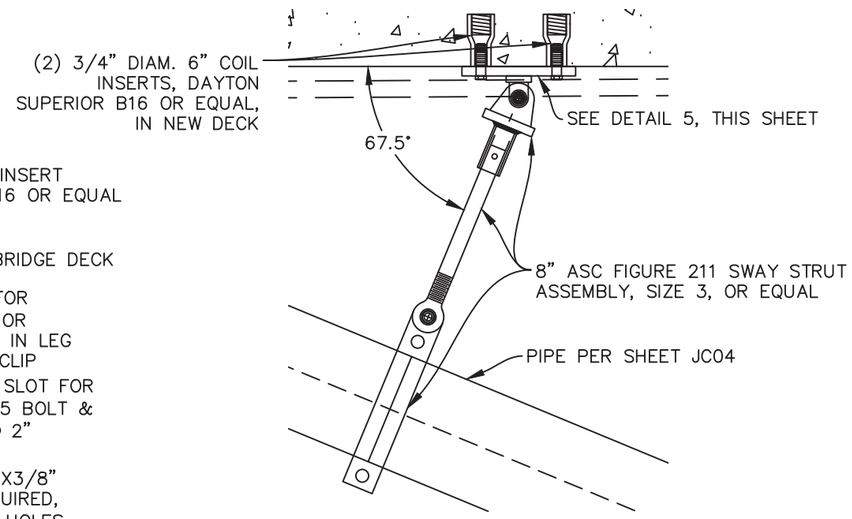

4 SWAY STRUT

Scale: 1" = 1' - 0"

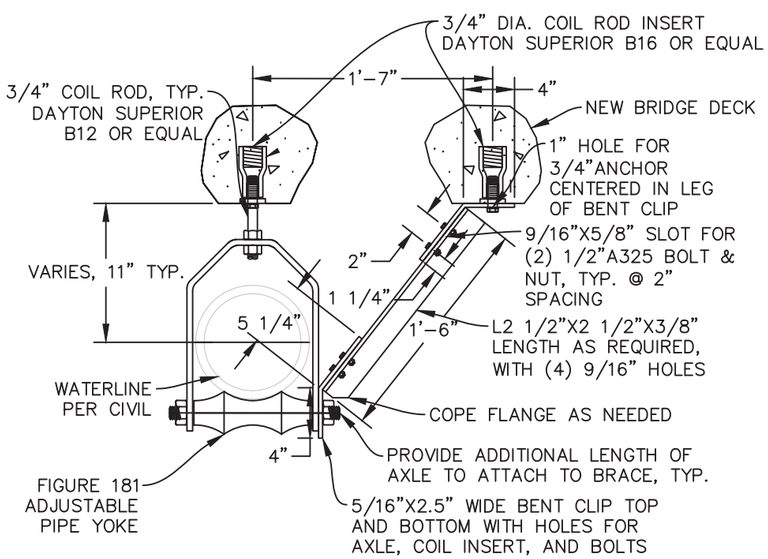

2 PIPE YOKE LATERAL BRACE

1" = 1'

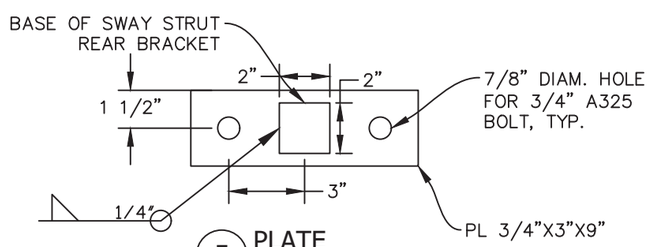

5 PLATE

Scale: 2" = 1' - 0"

See sheet JC01 for Accompanied By Drawings and Informational Drawings.

IF THIS MEASURES 1 INCH THEN DRAWING IS TO SCALE

STRUCTURE NO.	00576
BDS DWG NO.	114217
CALC. BOOK	7777
HWY: 486	
M.P.: 2.65	
COUNTY	Jackson
DATE	FEB. 2026

REGISTERED PROFESSIONAL ENGINEER 70805PE OREGON JAN. 9, 2007 MICHAEL D. MOSER

Digitally Signed 2026.07.09 14:52:05-07'00'

EXPIRES 12/31/26

ADKINS ENGINEERING & SURVEYING
1435 ESPLANADE AVENUE, KLAMATH FALLS, OR 97601
o / 541.884.4666
w / AdkinsEngineering.com

Rogue R_Hwy 486 (Gold Hill Spur)

OR99: ROGUE RIVER BRIDGE, GOLD HILL SPUR PROJECT

GOLD HILL SPUR HIGHWAY

JACKSON COUNTY

Designer: ABRAHAM BARR | Reviewer: MIKE MOSER, PE

Drafter: ABRAHAM BARR | Checker: MIKE MOSER, PE

STRUCTURAL DETAILS

SHEET NO. JC06

FINAL ELECTRONIC DOCUMENT AVAILABLE UPON REQUEST

SIGNING PLAN
OR99 M.P. 2.75 TO M.P. 2.54
STA. L 4+95 TO STA. L 16+50

SIGNING LEGEND

N	Install new sign (N)
N / M	Install new sign (N) on new (M) sign support
RXN / M	Remove existing sign (N) and (M) sign support
RXN	Remove existing sign (N)

N = Sign Number
M = Material
Material options:
W = Wood Post
ST = Perforated Steel Square Tube Sign Support

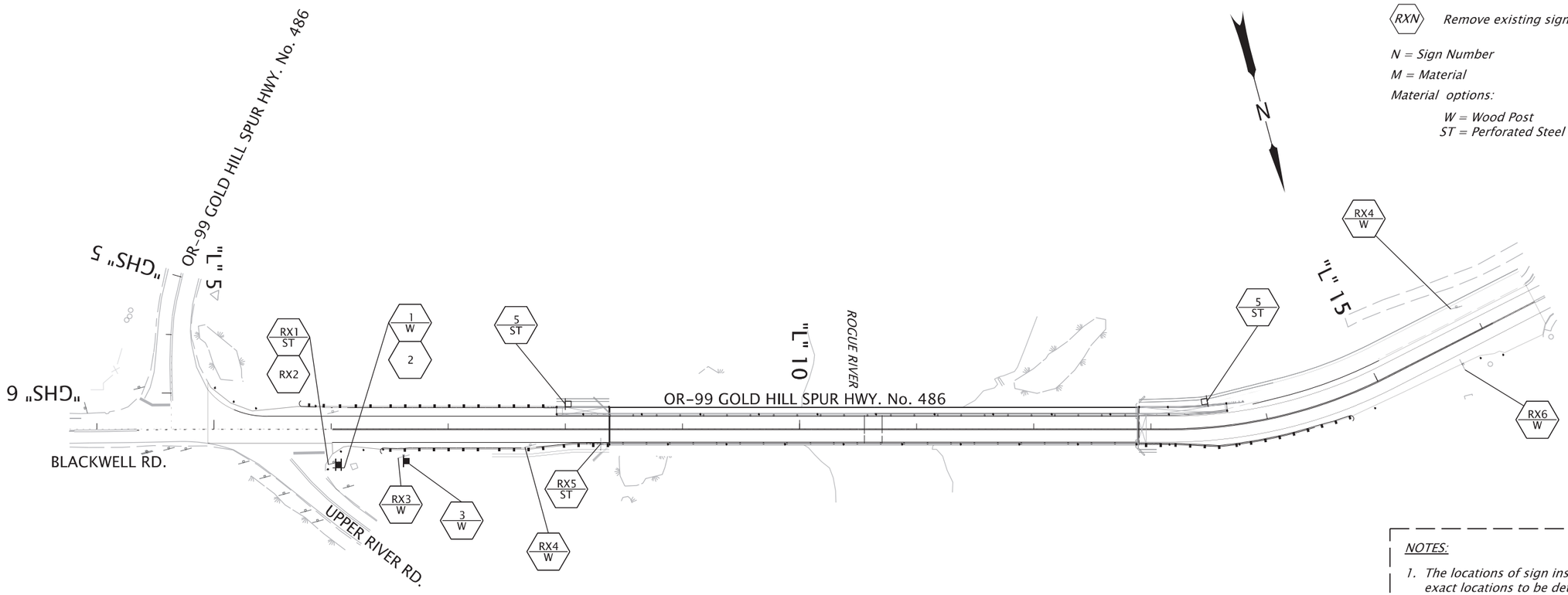

NOTES:

1. The locations of sign installations shown are approximate with exact locations to be determined in the field.
2. Existing signs not shown are to remain in place unless otherwise directed by the Engineer.

HWY: 486	
M.P.: 2.54-2.75	
TRS	S-23125
DFI/TSSU NO.	N/A

REGISTERED PROFESSIONAL ENGINEER
63353PE
Digitally Signed 2026.05.29 11:13:56 -07'00'
OREGON
JULY 12, 2005
SCOTT B. PARKER
RENEWS: 12-31-2026
FINAL ELECTRONIC DOCUMENT AVAILABLE UPON REQUEST

OREGON DEPARTMENT OF TRANSPORTATION

OR99: ROGUE RIVER BRIDGE, GOLD HILL SPUR PROJECT
GOLD HILL SPUR HIGHWAY
JACKSON COUNTY

Designer: Nelly Salazar Lázaro
Reviewer: William Fitzgerald
Drafter: Nelly Salazar Lázaro
Checker: Scott Parker

SIGNING PLAN
SHEET NO. LA01

SIGNING DETAILS

Sign No. 1

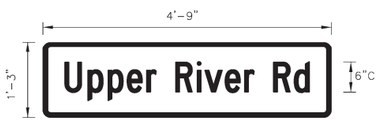

Sign No. 2

Sign No. 3

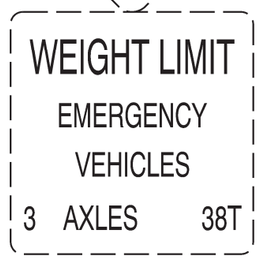

Sign No. 4

Sign No. 5

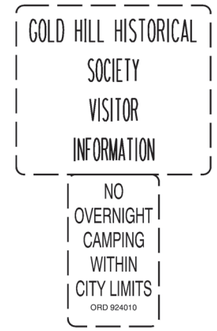

Sign No. 6

NOTE:
Signs shown with broken borders are existing signs.

HWY: 486	
M.P.: 2.54-2.75	
TRS	S-23126
DFI/TSSU NO.	N/A

REGISTERED PROFESSIONAL ENGINEER
63353PE
Digitally Signed 2026.05.29 11:21:44 -07'00'
OREGON
JULY 12, 2005
SCOTT B. PARKER
RENEWS: 12-31-2026

FINAL ELECTRONIC DOCUMENT
AVAILABLE UPON REQUEST

OREGON DEPARTMENT OF TRANSPORTATION

OR99: ROGUE RIVER BRIDGE, GOLD HILL SPUR PROJECT
GOLD HILL SPUR HIGHWAY
JACKSON COUNTY

Designer: Nelly Salazar Lázaro
Reviewer: Wiliam Fitzgerald
Drafter: Nelly Salazar Lázaro
Checker: Scott Parker

SIGNING DETAILS

SHEET NO. LB01

Bidding Plans

SIGN & POST DATA TABLE

SIGN NO.	SIGN LOCATION 4/ (TM200-TM201, TM635)	SIGN DIMENSIONS		SUB-STRATE			COLOR 1/					LEGEND		SIGN NO. 2/	TYPE OF SUPPORT																			POST		FOOTING		REMARKS
							BACKGROUND		LEGEND																					SECONDARY SIGN (TM676 & TM678)			SIZE	LENGTH	LOCATION 3/	MIN. DEPTH 5/	
		WIDTH	HEIGHT	PLYWOOD	SHEET ALUMINUM	EXTRUDED ALUM.	ASTM TYPE III or TYPE IV	ASTM TYPE IX OR TYPE XI	ASTM TYPE III or TYPE IV	ASTM TYPE IX OR TYPE XI	NON-REFLECTIVE	PERMANENT	DEMOUNTABLE (TM230-TM233)		WOOD POST (TM670-TM671,TM676)	SQ. TUBE SIGN SUPPORT (TM671, TM676, TM681, TM687-TM688)	TRIANGULAR BASE BREAKAWAY (TM602)	H - FRAME (TM602)	MULTI-POST BREAKAWAY (TM220, TM600-TM601)	STAINLESS STEEL CLAMP (SSC) (TM677)	SIGNAL POLE MOUNT (TM680)	MAST ARM SIGN MOUNT (TM679)	BRIDGE STRUCTURE MOUNT (Refer to Bridge Drawing)	CANTILEVER \ BUTTERFLY (Refer to Bridge Drawing)	SIGN BRIDGE (Refer to Bridge Drawing)	EXIT NUMBER SIGN SUPPORT (TM220, TM225)	ROUTE MARKER FRAME (TM678)	MILE POST MARKER POST (TM221-TM222)	CROSSWALK CLOSURE SUPPORT (TM240)	VERTICAL SIGN MOUNTS ON EXISTING STRUCTURES	CUSTOM VARIABLE SUPPORT	C 4X5.4	C 4X7.25	LENGTH	(BASED ON ESTIMATED LENGTH)	(MUST BE FIELD VERIFIED)			
1	"L" 6+03 Rt.	36"	36"		✓		R		W			✓		1	✓																			6"x6"	20'		5'	
	-																																					
2	"L" 6+03 Rt.	4'-9"	1'-3"	✓			G		W			✓		2																								Mount Above And Perpendicular To Sign #1 And Back To Back With Sign #2
2	"L" 6+03 Rt.	4'-9"	1'-3"	✓			G		W			✓		2																								Mount Above And Perpendicular To Sign #1 And Back To Back With Sign #2
	-																																					
3	"L" 6+62 Rt.	30"	36"		✓		W				BK	✓		3	✓																			4"x6"	18'		5'	
	-																																					
5	"L" 8+00 Lt.	18"	30"		✓		W				BK	✓		5		✓																		2" x 12GA	11'		3'-0"	Anchor: TS 2 1/2"x 2 1/2" (7GA) 3'
5	"L" 13+50 Lt.	18"	30"		✓		W				BK	✓		5		✓																		2" x 12GA	11'		3'-0"	Anchor: TS 2 1/2"x 2 1/2" (7GA) 3'

1/
BK=BLACK
BL=BLUE
BR=BROWN
FY=FLUORESCENT YELLOW
G=GREEN
O=ORANGE
P=PURPLE
R=RED
RB=RED-BLUE
W=WHITE
Y=YELLOW
YG=FLOURESCENT YELLOW-GREEN

2/
NOTE: L,C,R ARE LOCATIONS OF POSTS FACING THE SIGN.

L = LEFT POST
C = CENTER POST
R = RIGHT POST

3/
DISTANCE FROM EDGE OF TRAVEL LANE, FACE OF CURB, GUARDRAIL, OR BARRIER TO THE CENTERLINE OF FOOTING. FOR ADDITIONAL INFORMATION SEE STANDARD DRAWINGS TM600, TM602, AND TM635

4/
NOTE: THE LOCATIONS SHOWN ARE APPROXIMATE EXCEPT FOR SPEED ZONES, SCHOOL ZONES, OBJECT MARKERS AND MILEPOST MARKERS. EXACT LOCATIONS ARE TO BE DETERMINED BY THE ENGINEER

5/
MINIMUM DEPTH OF FOOTING FOR TRIANGULAR BASE BREAKAWAY AND MULTI-POST BREAKAWAY INSTALLATIONS IS FOR A 2' DIAMETER FOOTING. FOR ADDITIONAL INFORMATION SEE STANDARD DRAWINGS TM601 AND TM602.

HWY: 486
M.P.: 2.54-2.75

TRS
S-23127

DFI/TSSU NO.
N/A

REGISTERED PROFESSIONAL ENGINEER
63353PE
Digitally Signed 2026.05.29 11:24:55 -07'00'
OREGON
JULY 12, 2005
SCOTT B. PARKER
RENEWS: 12-31-2026

FINAL ELECTRONIC DOCUMENT AVAILABLE UPON REQUEST

OREGON DEPARTMENT OF TRANSPORTATION

OR99: ROGUE RIVER BRIDGE, GOLD HILL SPUR PROJECT
GOLD HILL SPUR HIGHWAY
JACKSON COUNTY

Designer: Nelly Salazar Lázaro
Drafter: Nelly Salazar Lázaro
Reviewer: Wiliam Fitzgerald
Checker: Scott Parker

SIGN & POST DATA TABLE

SHEET NO.
LC01

LEGEND

EX W	*Retain and protect extg. 4" white line*
EX D	*Retain and protect extg. double no-pass two 4" yellow lines*
EX ND	*Retain and protect extg. narrow double no-pass two 4" yellow lines*
EX S	*Retain and protect extg. stop bar 1' white bar*
W	*Inst. 4" white line*
W / R-20	*Inst. white line positioning guide reflectors with 4" white line*
YD	*Inst. 4" yellow dotted line*
ND	*Inst. narrow double no-pass two 4" yellow lines*

General Notes:

1. All longitudinal pavement markings shall be installed using Method "B(d)" (Thermoplastic, Sprayed, Surface, Non-Profiled). See Section 00865 in Special Provisions.
2. All mono-directional white pavement markers shall be installed using Material Type 1AR (Abrasive Resistant) and raised. See Section 00855 in Special Provisions.
3. All delineators shall be materials Type 2 and Type 5 as shown on plan sheet. See Section 00840 in Special Provisions.

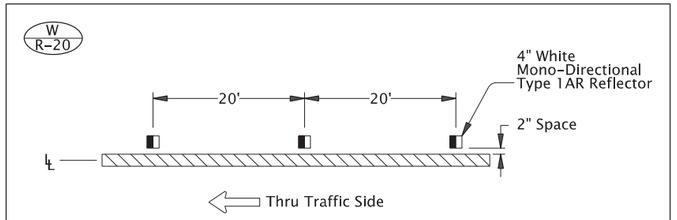

WHITE LINE POSITIONING GUIDE
REFLECTORS WITH 4" WHITE LINE

ACCOMPANIED BY DWGS.:
TM500, TM515, TM521, TM560, TM570, TM576.

REGISTERED PROFESSIONAL ENGINEER
63353PE
Digitally Signed 2026.05.29 11:26:02 -07'00'
OREGON
JULY 12, 2005
SCOTT B. PARKER
RENEWS: 12-31-2026

FINAL ELECTRONIC DOCUMENT
AVAILABLE UPON REQUEST

OREGON DEPARTMENT OF TRANSPORTATION

OR99: ROGUE RIVER BRIDGE, GOLD HILL SPUR PROJECT
GOLD HILL SPUR HIGHWAY
JACKSON COUNTY

Designer: Nelly Salazar Lázaro
Reviewer: William Fitzgerald
Drafter: Nelly Salazar Lázaro
Checker: Scott Parker

PAVEMENT MARKINGS DETAILS

SHEET NO.
QA01

59V-007

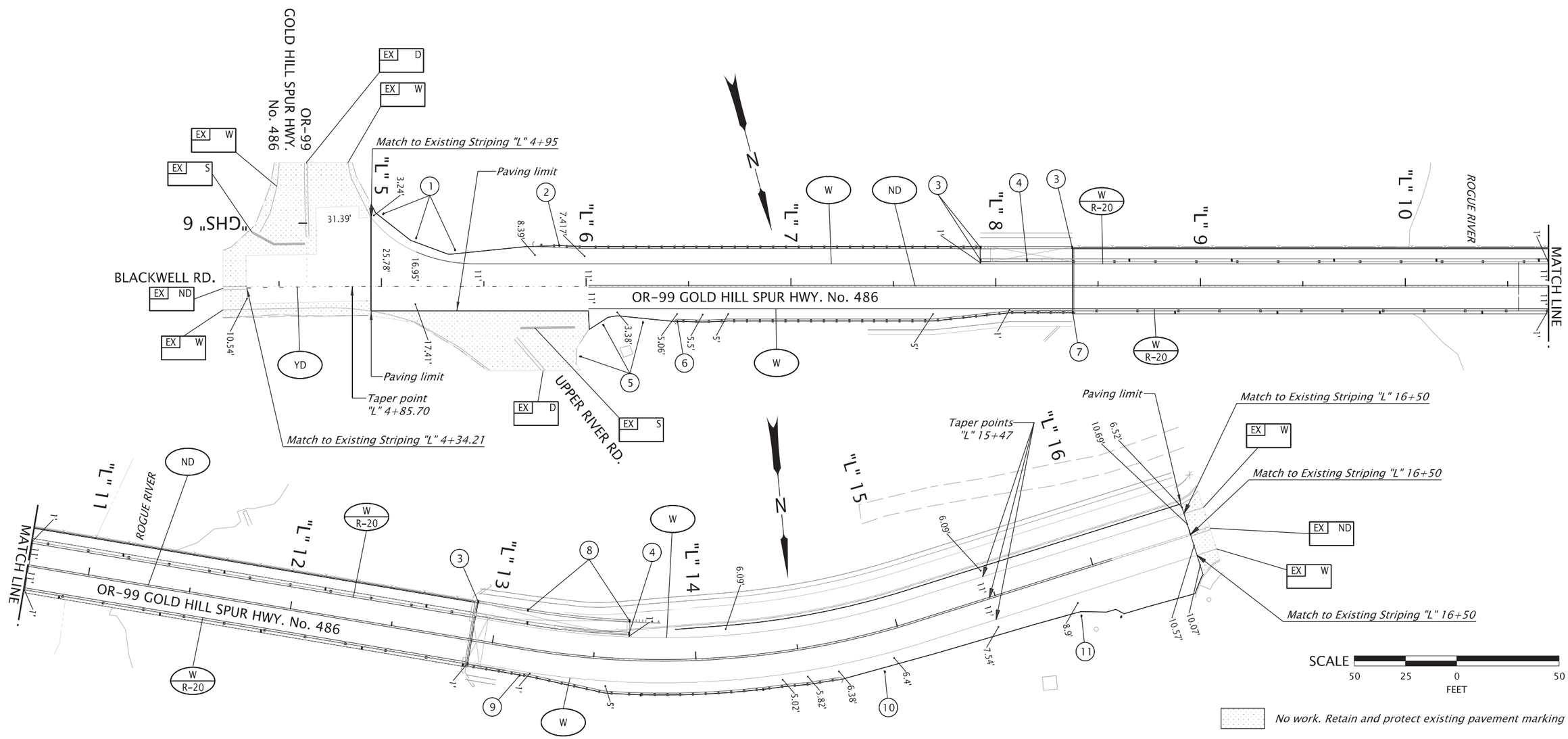

1. Inst. delineators type 2 with 2 white reflective sheetings and standard reflector pattern, color type "W-2" at 2' offset from edge of pavement and 20' spacing - 3 ea. See std. dwgs. TM570 & TM576
2. Inst. delineator type 2 with 2 white reflective sheetings and standard reflector pattern, color type "W-2" behind edge of pavement of guardrail- 1 ea. See std. dwg. TM570
3. Inst. delineators type 5 on top of bridge rail ends - 4 ea. See std. dwg. TM570
4. Sta. "L" 8+15.25, 12.71' Lt. to Sta. "L" 13+66.84, 12.71' Lt. Inst. delineators type 5 on top of bridge rail and 50' spacing - 12 ea.
5. Inst. delineators type 2 with 2 white reflective sheetings and standard reflector pattern, color type "W-2" at 2' offset from edge of pavement and 20' spacing - 3 ea.
6. Inst. delineator type 2 with 2 white reflective sheetings and standard reflector pattern, color type "W-2" behind edge of pavement of guardrail - 1 ea.
7. Sta. "L" 8+37.59, 12.71' Rt. to Sta. "L" 12+87.59, 12.71' Rt. Inst. delineators type 5 on top of bridge rail and 50' spacing - 10 ea.
8. Sta. "L" 13+14.46, 18.91' Lt. to Sta. "L" 13+66.82, 18.87' Lt. Inst. delineators type 5 on top of bridge rail and 50' spacing - 2 ea.
9. Sta. "L" 13+15.69, 13.06' Rt. to Sta. "L" 14+30.92, 17.06' Rt. Inst. delineators type 2 with 2 white reflective sheetings and standard reflector pattern, color type "W-2" behind edge of pavement of guardrail and 60' spacing - 3 ea.
10. Inst. delineator type 2 with 2 white reflective sheetings and standard reflector pattern, color type "W-2" at 2' offset from edge of pavement - 1 ea.
11. Inst. delineators type 2 with 2 white reflective sheetings and standard reflector pattern, color type "W-2" at 2' offset from edge of pavement and 20' spacing - 2 ea.

See sheet QA01 for Legend and General Notes

REGISTERED PROFESSIONAL ENGINEER
63353PE
Digitally Signed 2026.05.29 11:27:10 -07'00'
OREGON
JULY 12, 2005
SCOTT B. PARKER
RENEWS: 12-31-2026

FINAL ELECTRONIC DOCUMENT AVAILABLE UPON REQUEST

OREGON DEPARTMENT OF TRANSPORTATION

OR99: ROGUE RIVER BRIDGE, GOLD HILL SPUR PROJECT
GOLD HILL SPUR HIGHWAY
JACKSON COUNTY

Designer: Nelly Salazar Lázaro | Reviewer: William Fitzgerald
Drafter: Nelly Salazar Lázaro | Checker: Scott Parker

PAVEMENT MARKINGS PLAN

SHEET NO. QB01

59V-007

Sec.22, T.36S, R.3W, W.M.

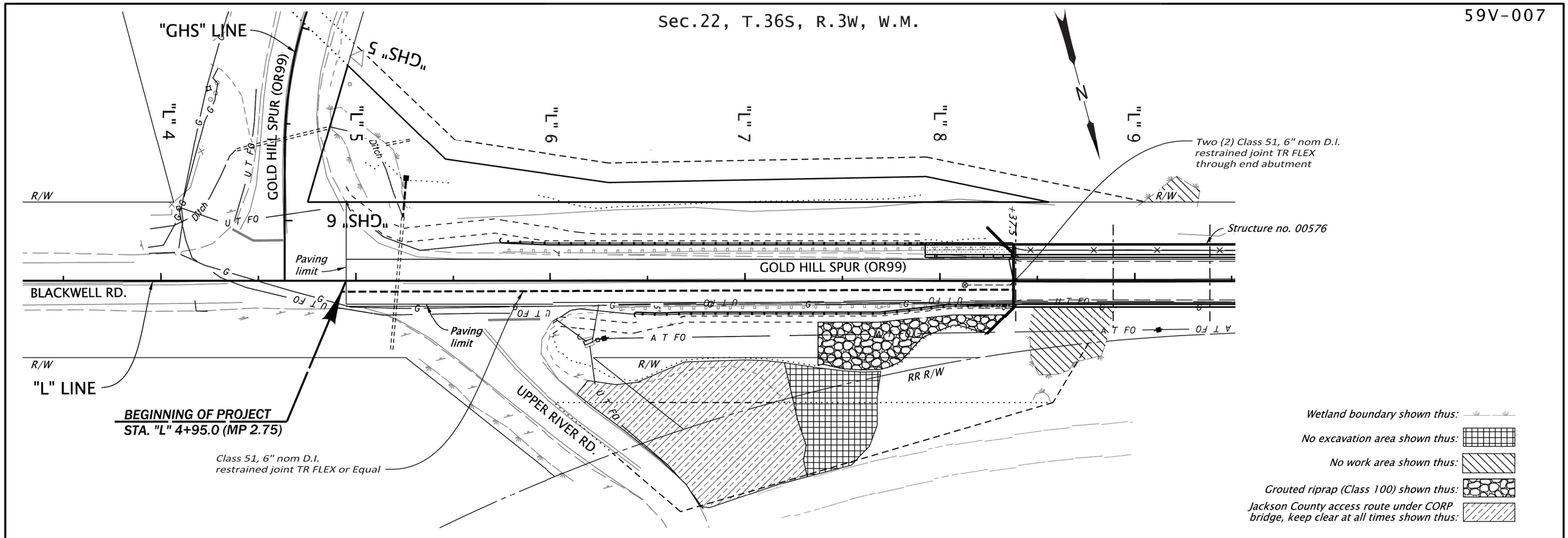

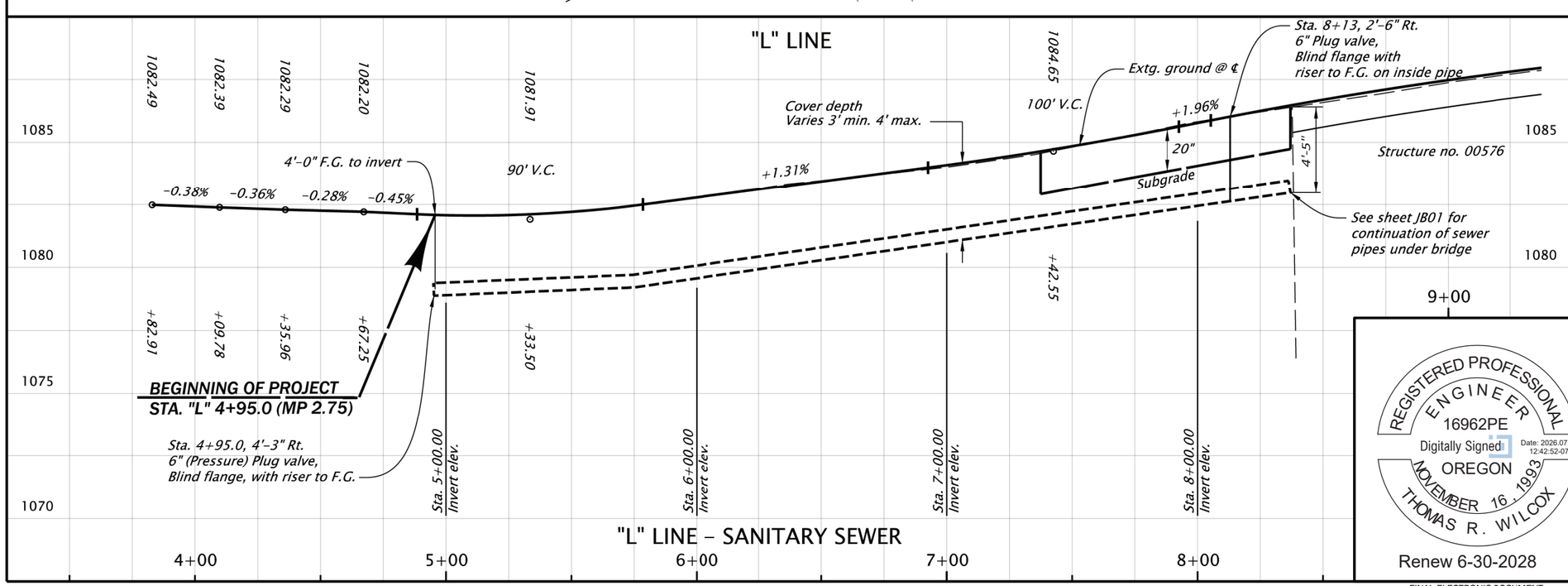

REGISTERED PROFESSIONAL ENGINEER
16962PE
Digitally Signed
Date: 2026.07.01 12:42:52-07'00'
OREGON
NOVEMBER 16, 1993
THOMAS R. WILCOX
Renew 6-30-2028

TETRA TECH
www.tetratech.com

OREGON DEPARTMENT OF TRANSPORTATION

OR99: ROGUE RIVER BRIDGE, GOLD HILL SPUR PROJECT
GOLD HILL SPUR HIGHWAY
JACKSON COUNTY

Designer: Tom Wilcox (Consultant) Reviewer:
Drafter: David Knox (ODOT) Checker:

RVSS FACILITIES

SHEET NO. R01

FINAL ELECTRONIC DOCUMENT AVAILABLE UPON REQUEST

59V-007

Sec.22, T.36S, R.3W, W.M.

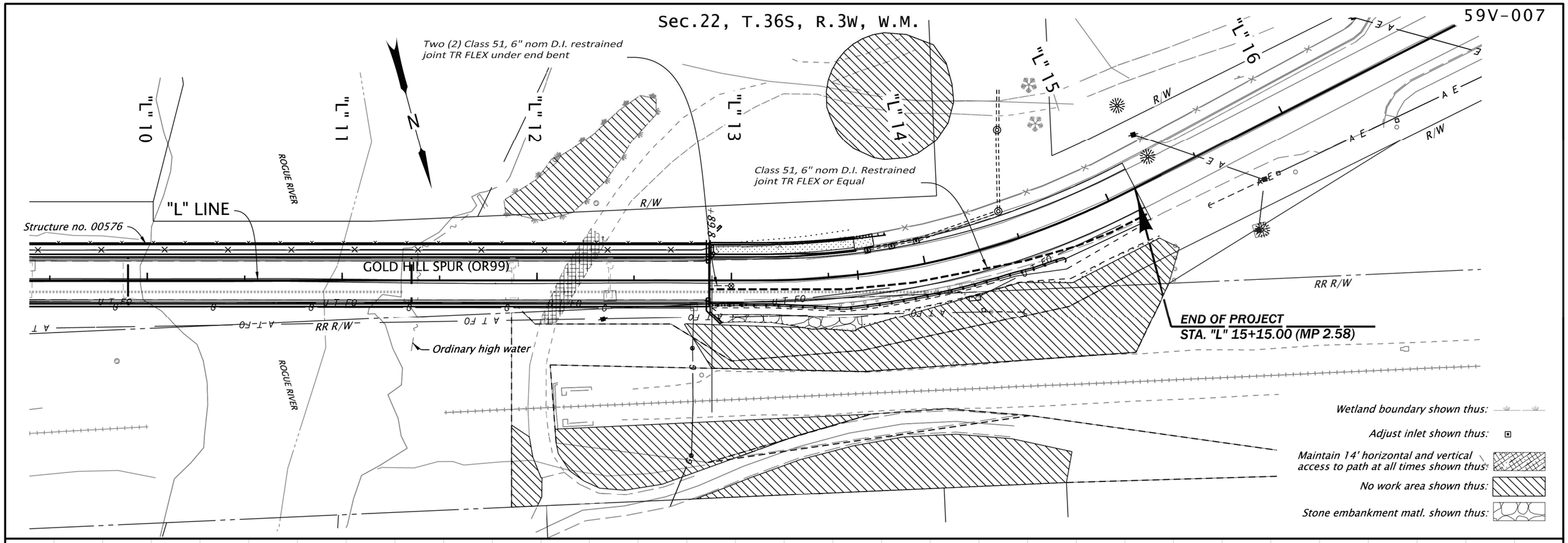

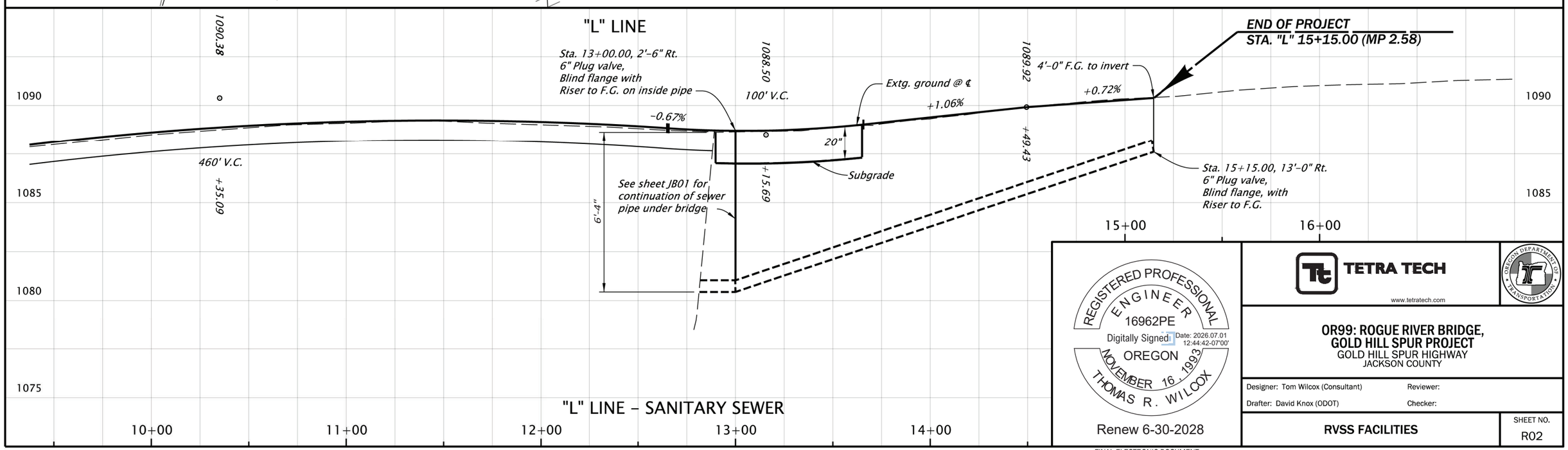

REGISTERED PROFESSIONAL ENGINEER
16962PE
Digitally Signed Date: 2026.07.01 12:44:42-07'00'
OREGON
NOVEMBER 16, 1993
THOMAS R. WILCOX
Renew 6-30-2028

TETRA TECH
www.tetratech.com

OREGON DEPARTMENT OF TRANSPORTATION

OR99: ROGUE RIVER BRIDGE, GOLD HILL SPUR PROJECT
GOLD HILL SPUR HIGHWAY
JACKSON COUNTY

Designer: Tom Wilcox (Consultant) Reviewer:
Drafter: David Knox (ODOT) Checker:

RVSS FACILITIES

SHEET NO. R02

FINAL ELECTRONIC DOCUMENT AVAILABLE UPON REQUEST

59V-007

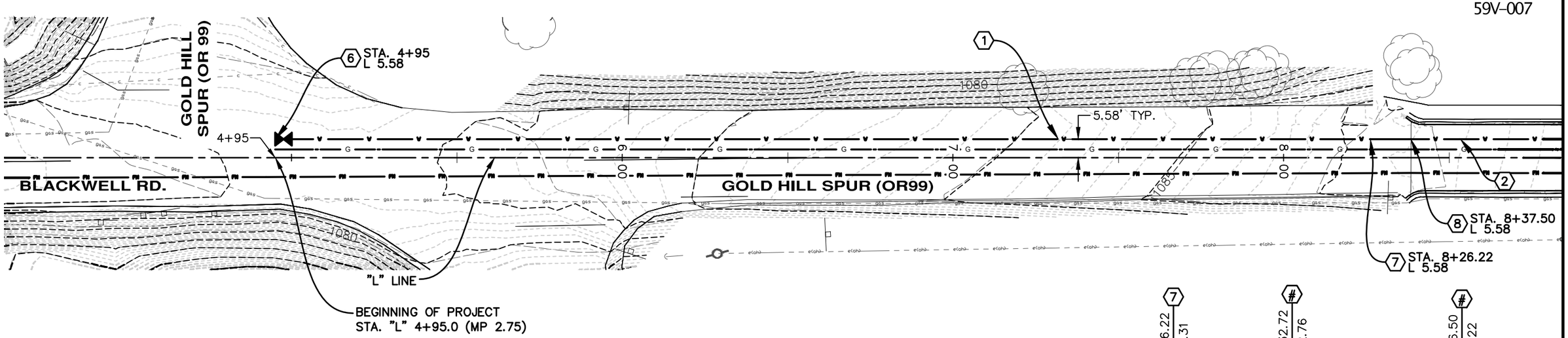

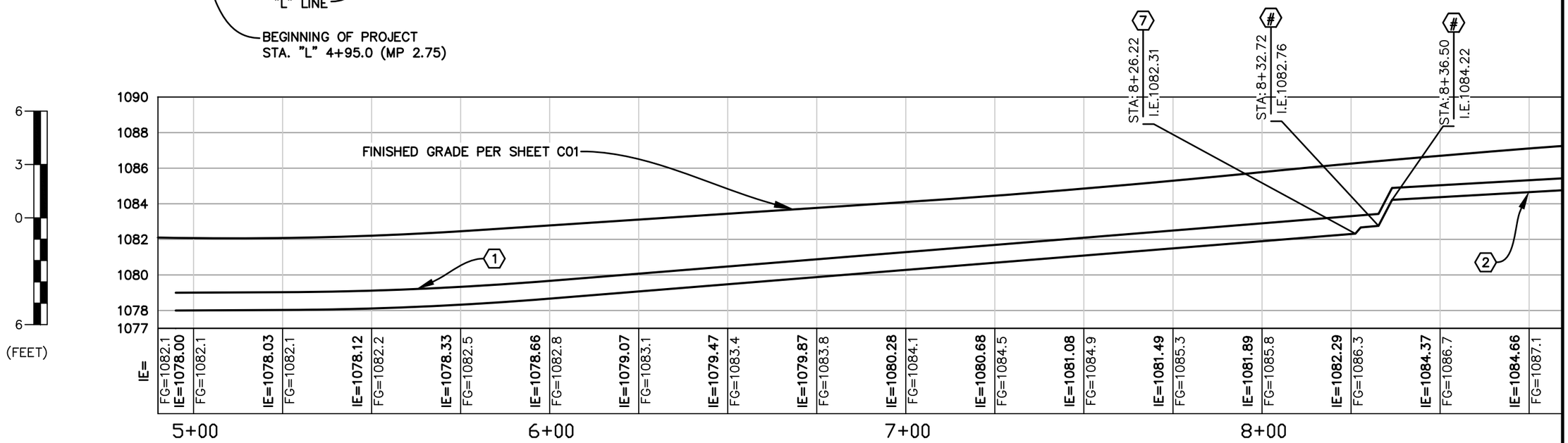

CONSTRUCTION NOTES

1. CONSTRUCT 12" C900 DR18 PVC PIPE WITH CLASS B BACKFILL PER RD300.
2. INSTALL 8" CLASS 350 DUCTILE IRON WATERLINE ATTACHED TO BRIDGE PER SHEETS JC02–JC06.
4. INSTALL 22.5° BEND.
6. INSTALL 12" GATE VALVE WITH BLIND FLANGE AT PROJECT EXTENTS PER DETAIL 2, SHEET JC05.
7. INSTALL 8"X12" RESTRAINED ECCENTRIC REDUCER. RESTRAIN A MINIMUM OF 60' OF THE 12" PVC PIPE.
8. TRANSITION TO BRIDGE HANGING SYSTEM. SEE DETAIL 1, SHEET JC03.

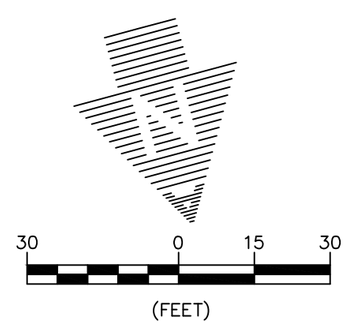

REGISTERED PROFESSIONAL ENGINEER
88332PE
Digitally Signed
2026.08.17 13:04:28-07'00'
OREGON
DECEMBER 9 2013
DANIEL B. SCALAS
EXPIRES 6/30/28

FINAL ELECTRONIC DOCUMENT
AVAILABLE UPON REQUEST

ADKINS ENGINEERING & SURVEYING
o / 541.884.4666
w / AdkinsEngineering.com
1435 ESPLANADE AVENUE, KLAMATH FALLS, OR 97601

OF99: ROGUE RIVER BRIDGE
GOLD HILL SPUR PROJECT
GOLD HILL SPUR HIGHWAY
JACKSON COUNTY

Designer:	ABRAHAM BARR	Reviewer:	DAN SCALAS, PE
Drafter:	ABRAHAM BARR	Checker:	DAN SCALAS, PE

WATER P&P STA. 4+95 - 9+00

SHEET NO. S01

59V-007

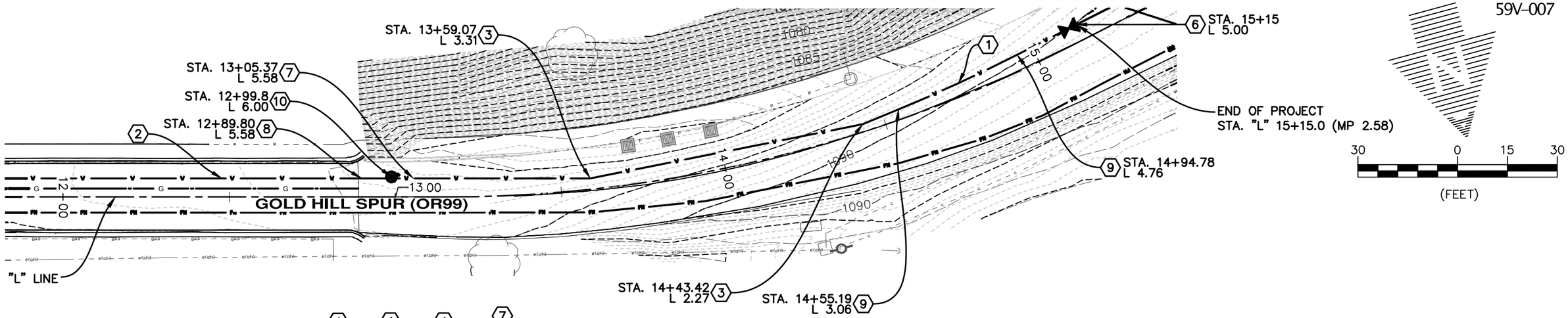
STA. 13+59.07
L 3.31
STA. 13+05.37
L 5.58
STA. 12+99.8
L 6.00
STA. 12+89.80
L 5.58
STA. 15+15
L 5.00
END OF PROJECT
STA. "L" 15+15.0 (MP 2.58)
STA. 14+94.78
L 4.76
STA. 14+43.42
L 2.27
STA. 14+55.19
L 3.06
GOLD HILL SPUR (OR99)
"L" LINE
1060
1065
1090
1095
1100
1105
1110
1115
1120
1125
1130
1135
1140
1145
1150
1155
1160
1165
1170
1175
1180
1185
1190
1195
1200
1205
1210
1215
1220
1225
1230
1235
1240
1245
1250
1255
1260
1265
1270
1275
1280
1285