Bidding Plans

59V-051

INDEX OF SHEETS	
SHEET NO.	DESCRIPTION
A01	Title Sheet
A02	Index Of Sheets Cont.

STATE OF OREGON

DEPARTMENT OF TRANSPORTATION

PLANS FOR PROPOSED PROJECT

GRADING, DRAINAGE, STRUCTURES, PAVING, SIGNING, ILLUMINATION, AND ROADSIDE DEVELOPMENT

OR22: CENTER ST BRIDGE (PHASE 1) PROJECT

WILLAMINA-SALEM HIGHWAY

MARION & POLK COUNTIES
SEPTEMBER 2026

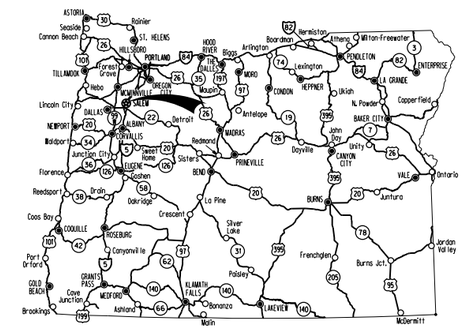

Overall Length Of Project - 0.53 Miles

SAFETY FIRST

LET'S ALL WORK TOGETHER TO MAKE THIS JOB SAFE

ATTENTION:
Oregon Law Requires You To Follow Rules Adopted By The Oregon Utility Notification Center. Those Rules Are Set Forth In OAR 952-001-0001 Through OAR 952-001-0100. You May Obtain Copies Of The Rules By Calling The Center (Note: The Telephone Number For The Oregon Utility Notification Center Is (503) 232-1987).

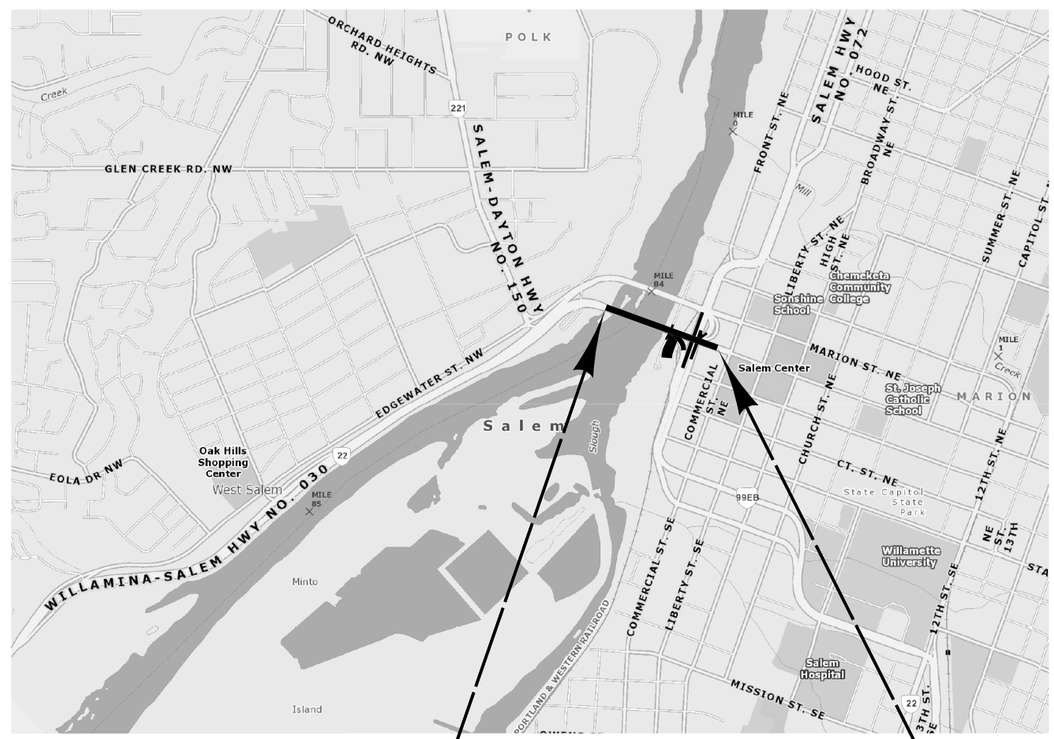

N

SEC. 22, T. 7 S., R. 3 W., W.M.

BEGINNING OF PROJECT

STA. "CE" 41+44.65
(M.P. 25.82)

END OF PROJECT

STA. "CE" 56+50.87
(M.P. 26.08)

PLANS PREPARED FOR
OREGON DEPARTMENT OF TRANSPORTATION

DOWL WWW.DOWL.COM

OREGON TRANSPORTATION COMMISSION

Julie Brown	CHAIR
Lee Beyer	VICE CHAIR
Jeff Baker	COMMISSIONER
Phil Chang	COMMISSIONER
Vacant	COMMISSIONER
Chris Warner	INTERIM DIRECTOR OF TRANSPORTATION

These plans were developed using AASHTO design standards. Exceptions to these standards, if any, have been submitted and approved by the ODOT Chief Engineer or their delegated authority.

Approving Authority: Robert Goodrich 2026.06.16 14:06:35-07'00'
Signature & date

Bob Goodrich P.E., Senior Project Manager
Print name and title

PELTZ Tova R Digitally signed by PELTZ Tova R Date: 2026.07.23 11:56:10 -07'00'
Concurrence by ODOT Chief Engineer

OR22: CENTER ST BRIDGE (PHASE 1) PROJECT
WILLAMINA-SALEM HIGHWAY
MARION & POLK COUNTIES

FEDERAL HIGHWAY ADMINISTRATION	PROJECT NUMBER	SHEET NO.
OREGON DIVISION	S030(031)	A01

FINAL ELECTRONIC DOCUMENT AVAILABLE UPON REQUEST

INDEX OF SHEETS, CONT.

SHEET NO.	DESCRIPTION
A03, A04	Index Of Sheets Cont.
A05	Std. Dwg. Nos.
A06	Plan Sheet Layout
A07	Survey Control Data

ROADWAY DETAILS

SHEET NO.	DESCRIPTION
BA01 Thru BA10 Incl.	Typical Sections
BB01 Thru BB19 Incl.	Details
BC01 Thru BC08 Incl.	Curb Ramp Details
BD01, BD02	Pipe Data

ROADWAY CONSTRUCTION

SHEET NO.	DESCRIPTION
C01	General Construction
C02	Alignment
C02A	General Construction
C02B	General Construction Notes
C02C	Drainage & Utilities
C02D	Drainage & Utilities Notes
C02E, C02F	Drainage Profile
D01	General Construction
D01A	General Construction Notes
D01B	Drainage & Utilities
D01C	Drainage & Utilities Notes
D01D, D01E	Drainage Profile
D02, D03	General Construction

TRAFFIC CONTROL

SHEET NO.	DESCRIPTION
EA01 Thru EA04 Incl.	Traffic Control Details
EB01 Thru EB06 Incl.	Traffic Control Plan
EB07	Traffic Control Detour Plan
EC01	Traffic Control Plan
EC02, EC03	Traffic Control Detour Plan
ED01	Traffic Control Detour Plan
ED02, ED03	Traffic Control Plan
ED04	Traffic Control Detour Plan
EE01	Traffic Control Plan
EF01 Thru EF08 Incl.	Traffic Control Plan
EG01 Thru EG07 Incl.	Traffic Control Plan
EG08	Traffic Control Detour Plan
EG09 Thru EG12 Incl.	Traffic Control Plan
EG13	Traffic Control Detour Plan
EG14, EG15	Traffic Control Plan
EG16, EG17	Traffic Control Details
EG18 Thru EG29 Incl.	Traffic Control Detour Plan
EG30 Thru EG32 Incl.	Traffic Control Plan

INDEX OF SHEETS, CONT.

SHEET NO.	DESCRIPTION
EG33	Traffic Control Detour Plan
EG34 Thru EG37 Incl.	Traffic Control Plan
EH01, EH02	Traffic Control Plan
EJ01 Thru EJ03 Incl.	Traffic Control Detour Plan
EJ04	Traffic Control Details

ROADSIDE DEVELOPMENT/EROSION CONTROL

SHEET NO.	DESCRIPTION
FA01	Planting Plan - Sheet Key
FA02	Planting Plan - Wallace Marine North
FA03	Planting Plan - Wallace Marine South
FA04	Planting Plan - Riverfront Park South
FA05	Planting Plan - Riverfront Park North
FA06	Planting Plan - Front Street North
FA07	Planting Plan - Front Street South
FA08	Planting Plan - Musgrave Avenue
FA09	Planting Schedules & Notes
FA10 Thru FA12 Incl.	Landscape Details & Notes
FA13	Irrigation Plan - Sheet Key
FA14	Irrigation Plan - Riverfront Park South
FA15	Irrigation Plan - Riverfront Park North
FA16	Irrigation Plan - Front Street North
FA17	Irrigation Plan - Front Street South
FA18	Irrigation Schedule & Notes
FA19	Irrigation Details & Notes
FB01 Thru FB11 Incl.	Erosion And Sediment Control Plan
FB101	Tree Plan - Sheet Key
FB102	Tree Plan - Wallace Marine Park
FB103	Tree Plan - Riverfront Park & Front Street South
FB104	Tree Plan - Riverfront Park & Front Street North
FB105	Tree Plan - Musgrave Avenue
FB106	Tree Protection & Removal Tables
FB107	Tree Plan Requirements & Protection

HYDRAULICS

SHEET NO.	DESCRIPTION
HA01	Stormwater Plan
HA02 Thru HA05 Incl.	Stormwater Details
HD01	Temporary Drainage Facilities Bent 15
HD02	Temporary Drainage Facilities Bents 20 & 21
HD03	Temporary Drainage Facilities Bents 24 & 25
HD04	Temporary Drainage Facilities Bent 26
HD05	Temporary Drainage Facilities Bents 27 & 28
HD06	Temporary Drainage Facilities Waterline
HD07	Temporary Water Management Facility At Station "CE" 41+80

INDEX OF SHEETS, CONT.

BRIDGE

SHEET NO.	BDS DRAWING NO.	DESCRIPTION
J01	113743	Key Plan
J02	113744	Common General Notes
STRUCTURE NO. 00123K		
JA01	113745	Plan And Elevation - 1
JA02	113746	Plan And Elevation - 2
JA03	113747	General Notes
JA04	113748	Construction Sequence - 1
JA05	113749	Construction Sequence - 2
JA06	113750	Construction Sequence - 3
JA07	113751	Construction Sequence - 4
JA08	113752	Construction Sequence - 5
JA09	113753	Subsurface Obstruction Plan
JA10	113754	Temporary Work Structure
JA11	113755	Construction Staging - 1
JA12	113756	Construction Staging - 2
JA13	113757	Geotechnical Data - 1
JA14	113758	Geotechnical Data - 2
JA15	113759	Geotechnical Data - 3
JA16	113760	Geotechnical Data - 4
JA17	113761	Geotechnical Data - 5
JA18	113762	Geotechnical Data - 6
JA19	113763	Geotechnical Data - 7
JA20	113764	Geotechnical Data - 8
JA21	113765	Geotechnical Data - 9
JA22	113766	Geotechnical Data - 10
JA23	113767	Foundation Plan - 1
JA24	113768	Foundation Plan - 2
JA25	113769	Foundation Plan - 3
JA26	113770	Foundation Plan - 4
JA27	113771	Foundation Plan - Pile Installation Concept Plan
JA28	113772	Deck Plan - 1
JA29	113773	Deck Plan - 2
JA30	113774	Deck Plan - 3
JA31	113775	Deck Plan - 4
JA32	113776	Span 14 Typical Section
JA33	113777	Span 14 Details - Girder Elevations
JA34	113778	Span 14 Details - Girder Reinforcement
JA35	113779	Span 14 Details - Bent 15 Deck Thickening
JA36	113780	Span 14 Details - Deck Thickening
JA37	113781	Span 14 Details - Near Surface Mounted Bars
JA38	113782	Span 15 Details - Bent 15 Deck Thickening
JA39	113783	Cross-Frame Details Bent 15 And 19
JA40	113784	Cross-Frame Details Bent 16-18
JA41	113785	Miscellaneous Steel Details
JA42	113786	Lateral Bracing Removal
JA43	113787	Temporary Cross-Frame Details
JA44	113788	Span 18 Details - Bent 19 Deck Thickening - 1
JA45	113789	Span 18 Details - Bent 19 Deck Thickening - 2

OREGON DEPARTMENT OF TRANSPORTATION

Standard Drawings located on the web at:
http://www.oregon.gov/ODOT/Engineering/Pages/Standards.aspx

OR22: CENTER ST BRIDGE (PHASE 1) PROJECT
WILLAMINA-SALEM HIGHWAY
MARION & POLK COUNTIES

FEDERAL HIGHWAY ADMINISTRATION	PROJECT NUMBER	SHEET NO.
OREGON DIVISION	SEE SHEET A01	A02

FINAL ELECTRONIC DOCUMENT
AVAILABLE UPON REQUEST

INDEX OF SHEETS, CONT.

BRIDGE

SHEET NO.	BDS DRAWING NO.	DESCRIPTION
		STRUCTURE NO. 00123K (Cont.)
JA46	113790	Span 19 Deck Details - Bent 19 Deck Thickening
JA47	113791	Span 19 Details - Waterline Opening Adjustments
JA48	113792	Span 19 Overlay
JA49	113793	Span 20 Thru 24 Girder Strengthening And Overlay
JA50	113794	Span 25 And 26 Girder Strengthening And Overlay
JA51	113795	Span 27 And 28 Girder Strengthening And Overlay
JA52	113796	Span 21 And 26 Gore Girder Soffit Strengthening
JA53	113797	Span 19 Thru 20 Gore Overlay Reinforcing
JA54	113798	Span 26 Gore Overlay Reinforcing
JA55	113799	Girder Strengthening Details
JA56	113800	Bent 15 Plan And Elevation
JA57	113801	Bent 15 Details
JA58	113802	Bent 15 Drilled Shafts Details
JA59	113803	Bent 15 Column Details - 1
JA60	113804	Bent 15 Column Details - 2
JA61	113805	Bent 15 Crossbeam Details - 1
JA62	113806	Bent 15 Crossbeam Details - 2
JA63	113807	Bent 15 Crossbeam Details - 3
JA64	113808	Bent 15 Crossbeam Details - 4
JA65	113809	Bent 15 Post-Tensioning Details - 1
JA66	113810	Bent 15 Post-Tensioning Details - 2
JA67	113811	Bent 15 Miscellaneous Details - 1
JA68	113812	Bent 15 Miscellaneous Details - 2
JA69	113813	Bent 16 Elevation (Bent 17 & 18 Similar)
JA70	113814	Bent 16 Footing Details - 1 (Bents 17 & 18 Similar)
JA71	113815	Bent 16 Footing Details - 2 (Bents 17 & 18 Similar)
JA72	113816	Bent 16 Footing Details - 3 (Bents 17 & 18 Similar)
JA73	113817	Bent 16 Footing Details - 4 (Bents 17 & 18 Similar)
JA74	113818	Bent 16 Footing Details - 5 (Bents 17 & 18 Similar)
JA75	113819	Bent 19 Plan And Elevation
JA76	113820	Bent 19 Footing Details
JA77	113821	Bent 19 Crossbeam Details - 1
JA78	113822	Bent 19 Crossbeam Details - 2
JA79	113823	Bent 19 Miscellaneous Details
JA80	113824	Bent 20 Plan And Elevation
JA81	113825	Bent 20 Footing Details
JA82	113826	Bent 20 Pier Wall Details
JA83	113827	Bent 20 Miscellaneous Details - 1
JA84	113828	Bent 20 Miscellaneous Details - 2
JA85	113829	Bent 21 Plan And Elevation
JA86	113830	Bent 21 Footing Details
JA87	113831	Bent 21 Pier Wall Details - 1
JA88	113832	Bent 21 Pier Wall Details - 2
JA89	113833	Bent 22 Plan And Elevation
JA90	113834	Bent 22 Pier Wall Details
JA91	113835	Bent 22 Bearing Seat Details
JA92	113836	Bent 22 Bearing Fire-Proof Cover Details
JA93	113837	Bent 23 Plan And Elevation
JA94	113838	Bent 24 Plan And Elevation
JA95	113839	Bent 24 Footing Details
JA96	113840	Bent 24 Pier Wall Details - 1
JA97	113841	Bent 24 Pier Wall Details - 2
JA98	113842	Bent 25 Plan And Elevation
JA99	113843	Bent 25 Footing Details
JA100	113844	Bent 25 Pier Wall Details
JA101	113845	Bent 25 Miscellaneous Details
JA102	113846	Bent 26 Plan And Elevation

INDEX OF SHEETS, CONT.

BRIDGE

SHEET NO.	BDS DRAWING NO.	DESCRIPTION
		STRUCTURE NO. 00123K (Cont.)
JA103	113847	Bent 26 Footing Details
JA104	113848	Bent 26 Pier Wall Details
JA105	113849	Bent 27 Plan And Elevation
JA106	113850	Bent 27 Footing Details
JA107	113851	Bent 27 Pier Wall Details
JA108	113852	Bent 27 Miscellaneous Details
JA109	113853	Bent 28 Plan And Elevation
JA110	113854	Bent 28 Footing Details
JA111	113855	Bent 28 Pier Wall Details - 1
JA112	113856	Bent 28 Pier Wall Details - 2
JA113	113857	Bent 29 Plan And Elevation
JA114	113858	Bent 29 Details
JA115	113859	Bearing Details - 1
JA116	113860	Bearing Details - 2
JA117	113861	Bearing Details - 3
JA118	113862	Bearing Details - 4
JA119	113863	Seismic Restrainer Details - 1
JA120	113864	Seismic Restrainer Details - 2
JA121	113865	Pedestrian Rail Details
JA122	113866	Pedestrian Rail On Parapet Details
JA123	113867	Bridge Rail Joint Details
JA124	113868	Expansion Joint Details - 1
JA125	113869	Expansion Joint Details - 2
JA126	113870	Expansion Joint Details - 3
JA127	113871	Drainage Plan And Elevation
JA128	113872	Drainage Details - 1
JA129	113873	Drainage Details - 2
JA130	113874	Drainage Details - 3
JA131	113875	Drainage Details - 4
JA132	113876	Miscellaneous Details - 1
JA133	113877	Miscellaneous Details - 2
JA134	113878	Impact Attenuator Installation Details - 1
JA135	113879	Impact Attenuator Installation Details - 2
		STRUCTURE NO. 22519
JB01	113894	Plan And Elevation
JB02	113895	Bent 3 Superstructure Dowels Details

INDEX OF SHEETS, CONT.

BRIDGE

SHEET NO.	BDS DRAWING NO.	DESCRIPTION
		STRUCTURE NO. 00123G
JC01	113897	Plan And Elevation
JC02	113898	General Notes
JC03	113899	Construction Sequence
JC04	113900	Geotechnical Data
JC05	113901	Foundation Plan
JC06	113902	Deck Plan
JC07	113903	Superstructure Strengthening Details - 1
JC08	113904	Superstructure Strengthening Details - 2
JC09	113905	Bent 3 Plan And Elevation
JC10	113906	Bent 3 Bearing Seat Details
JC11	113907	Bent 3 Temporary Shoring Details
JC12	113908	Bent 4 Plan And Elevation
JC13	113909	Bent 5 Plan And Elevation
JC14	113910	Bent 5 Footing Details
JC15	113911	Bent 5 Pier Wall Details
JC16	113912	Bent 5 Miscellaneous Details
JC17	113913	Bearing Details
JC18	113914	Bent 3 Pier Protection Wall Plan And Elevation
JC19	113915	Bent 4 Pier Protection Wall Plan And Elevation
JC20	113916	Bent 3 Pier Protection Walls Details
JC21	113917	Bent 4 Pier Protection Walls Details
		STRUCTURE NO. 22524
JD01	113918	Plan
JD02	113919	Bents 5 & 6 Construction Sequence
JD03	113920	Temporary Support Sequence
JD04	113921	Foundation Plan
JD05	113922	Bent 5 Elevation (Bent 6 Similar)
JD06	113923	Column And Footing Details
		STRUCTURE NO. 00123G
JZ01	113880	Railroad Data - 1
JZ02	113881	Railroad Data - 2
JZ03	113882	Railroad Data - 3
JZ04	113883	Railroad Data - 4
JZ05	113884	Railroad Data - 5
JZ06	113885	Railroad Data - 6
JZ07	113886	Railroad Data - 7
JZ08	113887	Railroad Data - 8
JZ09	113888	Vertical Ground Anchor Details
JZ10	113889	Protective Fence Details
JZ11	113890	Temporary Barrier Details - 1
JZ12	113891	Temporary Barrier Details - 2
JZ13	113892	Miscellaneous Details - 1
JZ14	113893	Miscellaneous Details - 2

OREGON DEPARTMENT OF TRANSPORTATION

Standard Drawings located on the web at:
http://www.oregon.gov/ODOT/Engineering/Pages/Standards.aspx

OR22: CENTER ST BRIDGE (PHASE 1) PROJECT
WILLAMINA-SALEM HIGHWAY
MARION & POLK COUNTIES

FEDERAL HIGHWAY ADMINISTRATION	PROJECT NUMBER	SHEET NO.
OREGON DIVISION	SEE SHEET A01	A03

FINAL ELECTRONIC DOCUMENT AVAILABLE UPON REQUEST

INDEX OF SHEETS, CONT.

SIGNALS

SHEET NO.	DESCRIPTION
MA01	Legend
MA02	Signal Plan
MA03	Existing Utilities
MA04	Details
MB01	Details
MB02	Interconnect Modification Plan
MB03	Details

ILLUMINATION

SHEET NO.	DESCRIPTION
PA01	Legend
PA02 Thru PA04 Incl.	Temporary Illumination Plan
PA05 Thru PA09 Incl.	Illumination Plan
PA10 Thru PA13 Incl.	Illumination Details
PA14 Thru PA17 Incl.	Heat Trace Details

PERMANENT PAVEMENT MARKINGS

SHEET NO.	DESCRIPTION
QA01 Thru QA03 Incl.	Signing & Striping Plan
QB01	Sign Details & Sign And Post Data Table
QB02	Sign Details

INDEX OF SHEETS, CONT.

WATERLINE

SHEET NO.	DESCRIPTION
RA01	Waterline Key Map
RA02	Construction Sequence
RA03	Work Sequence
RA04	General Notes
RB01	Bridge Waterline Layout - 1
RB02	Bridge Waterline Layout - 2
RB03	Bridge Waterline Layout - 3
RB04	Bridge Waterline Layout - 4
RB05	Bridge Waterline Layout - 5
RB06	Bent 15 Waterline Elevation
RB07	Bridge Waterline Construction Sequence
RB08	Waterline Details
RB09	Waterline Hanger Elevation
RB10	Waterline Hanger Details - 1
RB11	Waterline Hanger Details - 2
RB12	Waterline Hanger Details - 3
RB13	Waterline Hanger Details - 4
RB14	Waterline Walkway Details - 1
RB15	Waterline Walkway Details - 2
RB16	Bent Walkway Support Details
RB17	Crossbeam Pipe Support
RB18	Box Girder Pipe Support
RB19	Bent 20 Temporary Connection
RB20	Pipe Saddle "A"
RB21	Pipe Saddle "B"
RB22	Pipe Saddle "C"
RB23	Bent 20 Access Details - 1
RB24	Bent 20 Access Details - 2
RC01	Waterline - Plan & Profile "A" 10+00 To "A" 12+00 (Phases 3 & 4)
RC02	Waterline - Plan & Profile "A" 12+00 To "A" 14+50 (Phase 3)
RC03	Waterline - Plan & Profile "A" 14+50 To "A" 16+00 (Phases 1 East, 2, & 3)
RC04	Waterline - Plan & Profile "A" 16+00 To "A" 17+58 (Phase 1 East)
RC05	Waterline - Plan & Profile "B" 20+00 To "B" 21+64 (Phase 1 East)
RC06	Waterline - Plan & Profile "C" 30+00 To "C" 30+93 (Phase 3)
RC07	Waterline - Plan & Profile "D" 1+00 To "D" 2+50 (Phase 1 West)
RC08	Waterline - Plan & Profile "D" 2+50 To "D" 3+94 (Phases 1 West & 5)
RD01 Thru RD07 Incl.	Waterline Details

OREGON DEPARTMENT OF TRANSPORTATION

OR22: CENTER ST BRIDGE (PHASE 1) PROJECT
WILLAMINA-SALEM HIGHWAY
MARION & POLK COUNTIES

FEDERAL HIGHWAY ADMINISTRATION	PROJECT NUMBER	SHEET NO.
OREGON DIVISION	SEE SHEET A01	A04

Standard Drawings located on the web at:
http://www.oregon.gov/ODOT/Engineering/Pages/Standards.aspx

FINAL ELECTRONIC DOCUMENT AVAILABLE UPON REQUEST

Std. Dwg. Nos.

BR140 - Poured Joint Seal
BR157 - Asphaltic Plug Joint Seal

BR240 - Protective Fencing
BR241 - Protective Fencing Details-1
BR242 - Protective Fencing Details-2
BR246 - Pedestrian Rail
BR250 - Pedestrian Rail On Sidewalk Mounted Concrete Parapet
BR256 - Type "F" Concrete Rail With Pedestrian Rail
BR290 - Type "F" Concrete Rail, 42 Inch

BR500 - Concrete Repair

RD130 - Bollards

RD300 - Trench Backfill, Bedding, Pipe Zone And Multiple Installations
RD302 - Street Cut
RD306 - Concrete Encasement, Cradle, And Cap Details
RD335 - Standard Storm Sewer Manhole
RD336 - Standard Manhole Details
RD339 - Pipe To Structure Connections
RD340 - Storm Sewer Pollution Control Manhole
RD342 - Shallow Manholes
RD344 - Standard Manhole Base Section
RD345 - Pipe To Manhole Connections
RD346 - Large Precast Manhole
RD348 - Manhole With Inlet
RD356 - Manhole Covers And Frames
RD360 - Manhole Frame Adjustment
RD364 - Concrete Inlets Type G-1, G-2, G-2M & G-2MA
RD365 - Frames & Grates For Concrete Inlets
RD370 - Ditch Inlet Type D
RD371 - Concrete Inlet Base Type CG-3
RD372 - Concrete Inlet Top, Option 1, Type CG-3
RD376 - Miscellaneous Drainage Structures, Siphon Box, Inlet Cap & Inlet Adjustment
RD388 - Fill Height Tables For PVC Pipe
RD390 - Fill Height Table For Corrugated HDPE Pipe
RD393 - Fill Height Tables For Polypropylene Pipe

RD500 - 32" Concrete Barrier Type "F" Precast
RD501 - 32" Concrete Barrier Type "F" Precast Reinforcing
RD502 - Securing 32" Type "F" And Tall 42" Precast Concrete Barrier To The Roadway
RD503 - Precast Concrete Barrier Pin and Loop Assembly For Temporary Installation And Maintenance Purposes Only
RD505 - Concrete Barrier Cast-In-Place
RD510 - Concrete Barrier Terminal
RD515 - Median Barrier Anchoring Details For Temporary Installation And Maintenance Purposes Only
RD545 - Precast Tall (42") Concrete Barrier
RD546 - Precast Tall (42") Concrete Barrier
RD560 - Cast-In-Place Tall Concrete Barrier Transition To Standard Concrete Barrier

RD610 - Asphalt Concrete Pavement (ACP) Details

RD700 - Curbs
RD701 - Drainage Curbs
RD720 - Curb Line Sidewalks
RD721 - Separated Sidewalks
RD722 - Sidewalk Joints And Transition Panels
RD725 - Separated Sidewalk Driveways Or Alleys (Options A, B & C) ODOT Highways
RD740 - Separated Sidewalk Driveways Or Alleys (Options H, I & J) Local Jurisdictions

Std. Dwg. Nos.

RD815 - Chain Link Fence

RD909 - Detectable Guide Strip Placement At Bike Ramps

RD1000 - Construction Entrances
RD1010 - Inlet Protection Type 2, 3, 6, 7, 10 And 11
RD1015 - Inlet Protection Type 4
RD1032 - Sediment Barrier Type 8
RD1040 - Sediment Fence
RD1070 - Concrete Truck Wash Out

TM452 - Temporary Wood Strain Pole Details
TM453 - Temporary Pedestrian Wood Post, Guy Wire/Anchor & Luminaire Arm Details
TM454 - Temporary Controller Cabinet, Service Cabinet, Meter Base, & Terminal Cabinet
TM457 - Pedestal Foundation and Traffic Signal Assembly
TM460 - Vehicle Signal Details
TM462 - Vehicle Signal Bracket & Sign Bracket (Type B) Details
TM467 - Pedestrian Signal Mount And Pedestrian Pushbutton Details
TM470 - Wire & Cable Installation

TM500 - Pavement Marking Standard Detail Blocks
TM501 - Pavement Marking Standard Detail Blocks
TM503 - Pavement Marking Standard Detail Blocks
TM521 - Durable & High Performance Pavement Markings Surface & Groove Installed Non-Profiled

TM671 - 3 Second Gust Wind Speed Map
TM676 - Sign Attachments
TM677 - Sign Mounts
TM681 - Perforated Steel Square Tube (PSST) Sign Support Installation
TM687 - Perforated Steel Square Tube (PSST) Anchor Foundation
TM688 - Perforated Steel Square Tube (PSST) Slip Base Foundation
TM689 - Temporary PSST Vane Anchor Installation

TM700 - General Conduit Trenching
TM701 - General Conduit & Wire/Cable Installation
TM702 - General Junction Box/Hand Hole Installation

TM800 - Tables, Abrupt Edge And PCMS Details
TM810 - Temporary Pavement Markings
TM820 - Temporary Barricades
TM821 - Temporary Sign Supports
TM822 - Temporary Sign Supports
TM830 - Temporary Concrete Barrier And Rumble Strip Details
TM831 - Temporary Impact Attenuators
TM832 - Temporary Impact Attenuators
TM833 - Temporary Impact Attenuators
TM840 - Closure Details
TM841 - Intersection Work Zone Details
TM842 - Signalized Intersection Details
TM843 - Multi-Lane Signalized Intersection Details
TM844 - Temporary Pedestrian Accessible Routing
TM850 - 2-Lane, 2-Way Roadways
TM851 - Non-Freeway Multi-Lane Sections
TM852 - Non-Freeway Multi-Lane Sections
TM853 - Non-Freeway Multi-Lane Sections
TM854 - 2-Lane, 2-Way Roadway
TM855 - 2-Lane, 2-Way Roadway
TM860 - Freeway Sections-Ramps
TM861 - Freeway Sections
TM862 - Freeway Sections
TM870 - Bridge Construction

R/W Map No. RW9970M

Standard Drawings located on the web at:
http://www.oregon.gov/ODOT/Engineering/Pages/Standards.aspx

OREGON DEPARTMENT OF TRANSPORTATION

OR22: CENTER ST BRIDGE (PHASE 1) PROJECT
WILLAMINA-SALEM HIGHWAY
MARION & POLK COUNTIES

FEDERAL HIGHWAY ADMINISTRATION	PROJECT NUMBER	SHEET NO.
OREGON DIVISION	SEE SHEET A01	A05

FINAL ELECTRONIC DOCUMENT AVAILABLE UPON REQUEST

Sec. 22, T. 7 S., R. 3 W., W.M.

59V-051

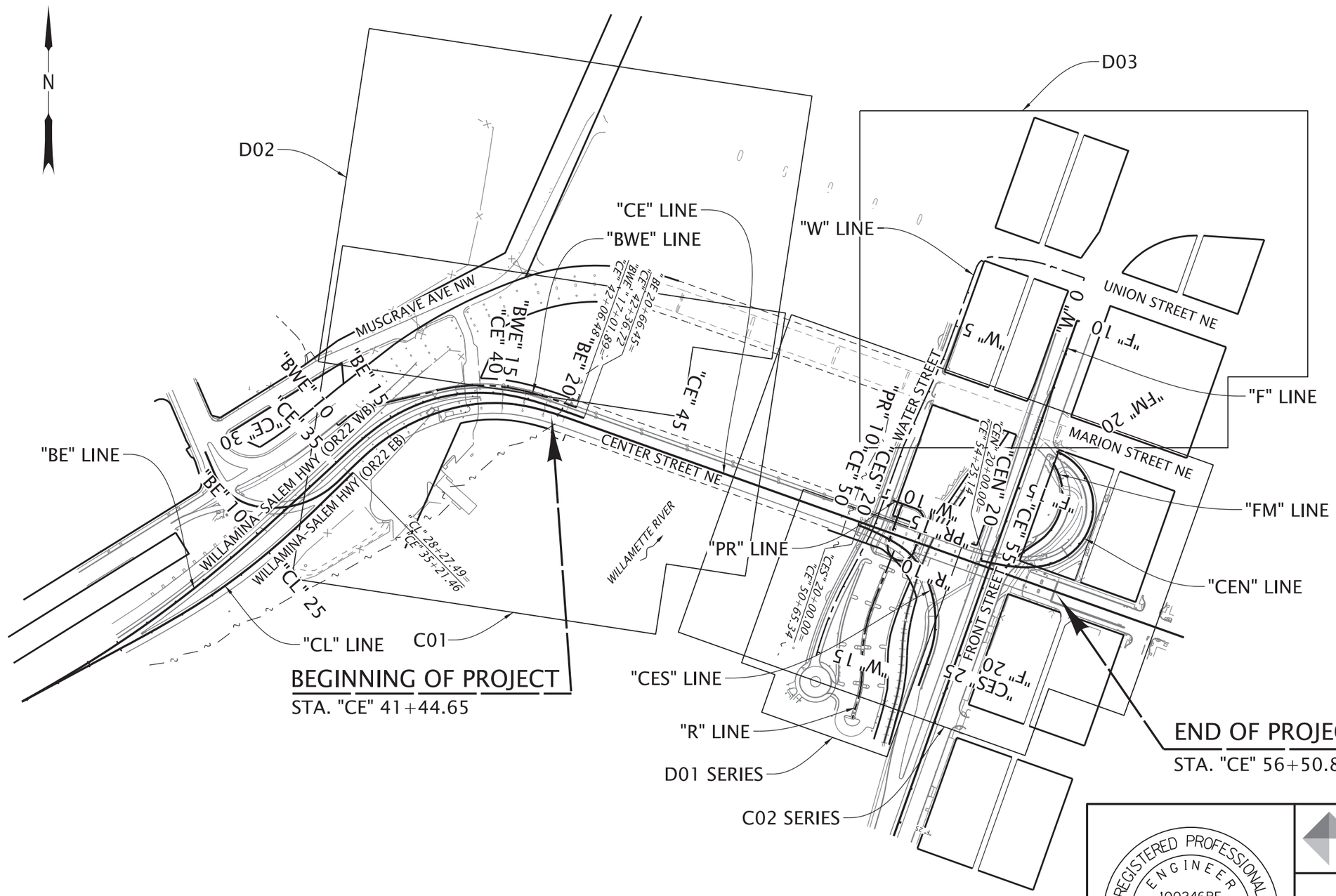

REGISTERED PROFESSIONAL ENGINEER
100246PE
Digitally Signed 2026.06.30 11:27:44-07'00'
OREGON
JULY 12, 2022
JASON BENJAMIN GALEAZZI

EXPIRES: 06/30/2027

FINAL ELECTRONIC DOCUMENT AVAILABLE UPON REQUEST

DOWL WWW.DOWL.COM

OREGON DEPARTMENT OF TRANSPORTATION

OR22: CENTER ST BRIDGE (PHASE 1) PROJECT
WILLAMINA-SALEM HIGHWAY
MARION & POLK COUNTIES

Designer: Jason Galeazzi
Reviewer: Bob Goodrich
Drafter: Steve Wolfer
Checker: Kyle Farnsworth

PLAN SHEET LAYOUT

SHEET NO. A06

59V-051

NOTES:

COORDINATE SYSTEM: OREGON COORDINATE REFERENCE SYSTEM (OCRS) SALEM ZONE

HORIZONTAL DATUM: NAD83 (2011) EPOCH 2010.00

VERTICAL DATUM: NAVD 88: GPS DERIVED

SURVEY OF RECORD:
MCSR 40057, MARION COUNTY, FILED JANUARY 03, 2025
CS 16822, POLK COUNTY, FILED SEPTEMBER 25, 2025

FIELD VERIFY ALL CONTROL BEFORE USE!

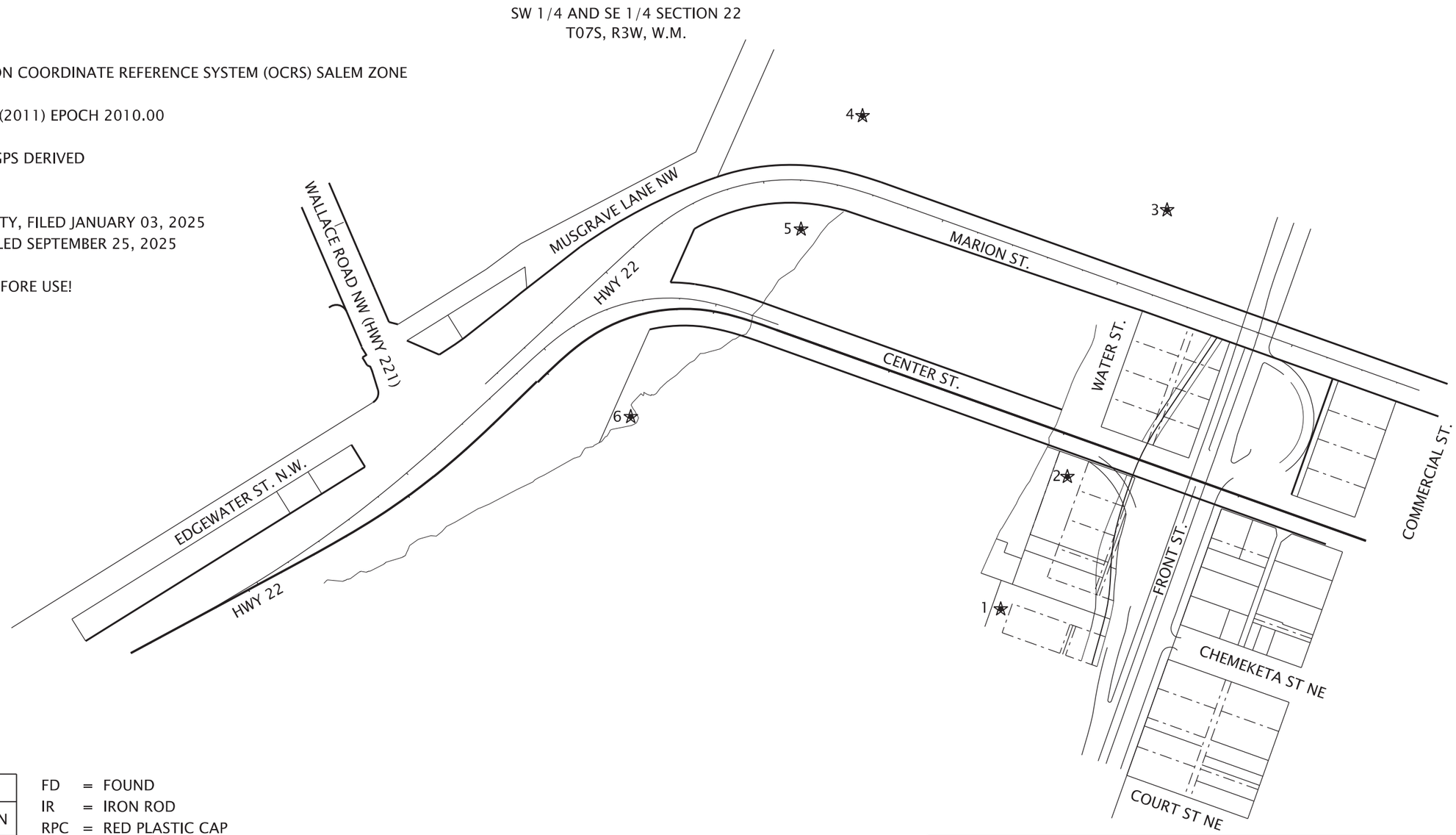

LEGEND	
★	FOUND NETWORK STATION

FD = FOUND
IR = IRON ROD
RPC = RED PLASTIC CAP

NETWORK POINT COORDINATE TABLE

PT. NO.	OCRS NORTHING	OCRS EASTING	ELEV.	DATE	DESCRIPTION
1	222360.62	174588.86	157.97'	2/2/2024	FD MAG NAIL WITH WASHER STAMPED "1 ALLIANCE GEOMATICS"
2	222717.27	174768.46	157.17'	2/2/2024	FD MAG NAIL WITH WASHER STAMPED "1 ALLIANCE GEOMATICS"
3	223435.65	175037.40	156.64'	2/2/2024	FD MAG NAIL WITH WASHER STAMPED "1 ALLIANCE GEOMATICS"
4	223689.35	174216.24	130.14'	2/2/2024	FD MAG NAIL WITH WASHER STAMPED "1 ALLIANCE GEOMATICS"
5	223383.84	174050.45	132.68'	2/2/2024	FD 5/8" IR WITH RPC STAMPED "1 ALLIANCE GEOMATICS CONTROL"
6	222878.67	173591.47	136.58'	2/2/2024	FD 5/8" IR WITH RPC STAMPED "1 ALLIANCE GEOMATICS CONTROL"

N

300 150 0 300
FEET

REGISTERED PROFESSIONAL LAND SURVEYOR
Digitally Signed 2026.06.18 14:45:07-07'00'
OREGON
MAY 12, 2011
ANDREW JOSEPH SILBERNAGEL
#79198
RENEWS: JUNE 30, 2028

DOWL WWW.DOWL.COM

OR22: CENTER ST BRIDGE (PHASE 1) PROJECT
WILLAMINA - SALEM HIGHWAY
MARION & POLK COUNTIES

Designer: J. SNOW
Reviewer: J. THORPE
Drafter: T. ALLEN
Checker: A. SILBERNAGEL

SURVEY CONTROL DATA

SHEET NO. A07

FINAL ELECTRONIC DOCUMENT AVAILABLE UPON REQUEST

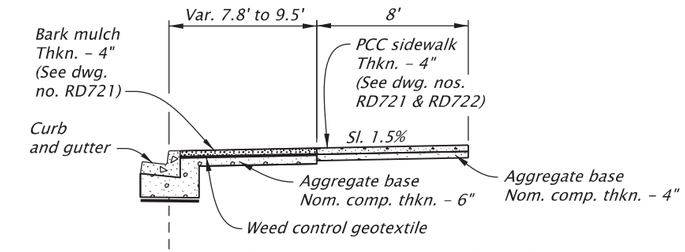

STA. "F" 14+57.1 To STA. "F" 16+11.0

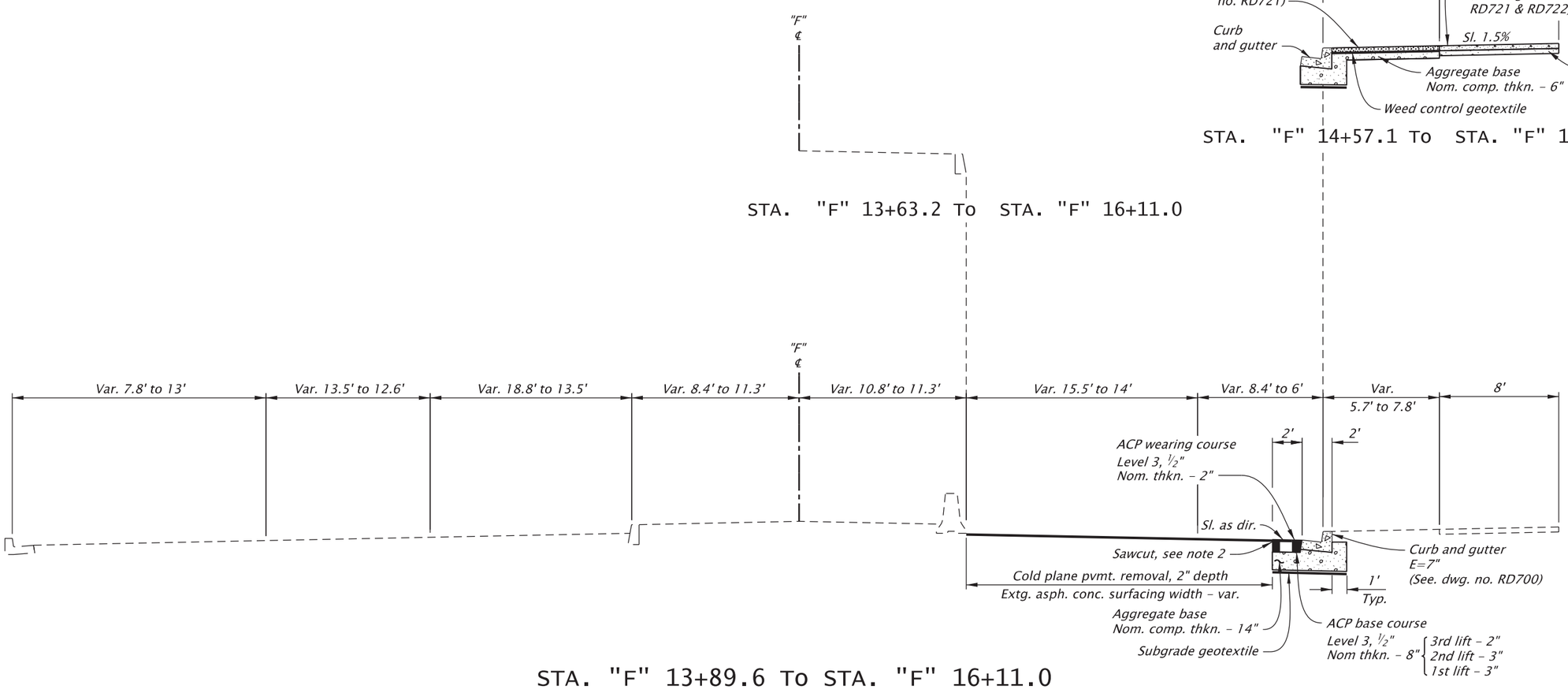

STA. "F" 13+63.2 To STA. "F" 16+11.0

STA. "F" 13+89.6 To STA. "F" 16+11.0

NOTES:

1. For all Level 3, 1/2" ACP, use PG 64-22 asphalt binder.
2. Per construction records, the existing pavement structure is estimated to be 6" ACP and 10" cement-treated base. Actual depths may vary.

REGISTERED PROFESSIONAL ENGINEER
100246PE
Digitally Signed 2026.01.27 16:22:05-08'00'
OREGON
JULY 12, 2022
JASON BENJAMIN GALEAZZI

EXPIRES: 06/30/2027

FINAL ELECTRONIC DOCUMENT AVAILABLE UPON REQUEST

DOWL WWW.DOWL.COM

OREGON DEPARTMENT OF TRANSPORTATION

OR22: CENTER ST BRIDGE (PHASE 1) PROJECT
WILLAMINA-SALEM HIGHWAY
MARION & POLK COUNTIES

Designer: Jason Galeazzi
Reviewer: Bob Goodrich
Drafter: Steve Wolfer
Checker: Kyle Farnsworth

TYPICAL SECTIONS

SHEET NO. BA01

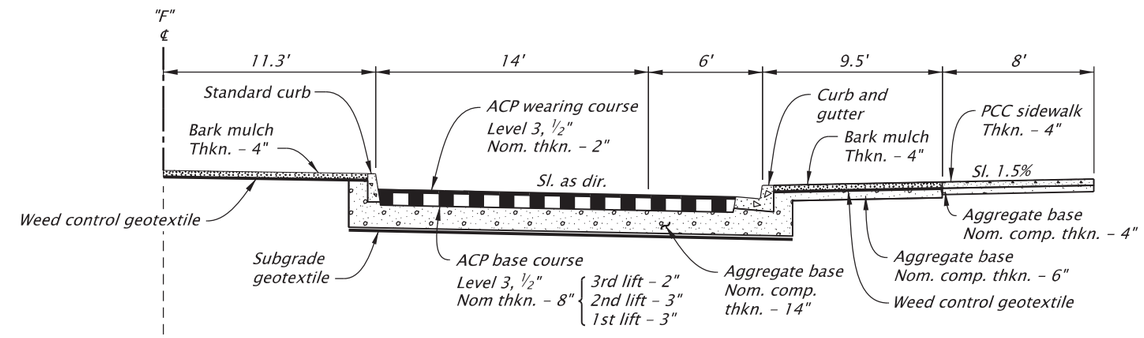

STA. "F" 16+42.0 To STA. "F" 16+64.0

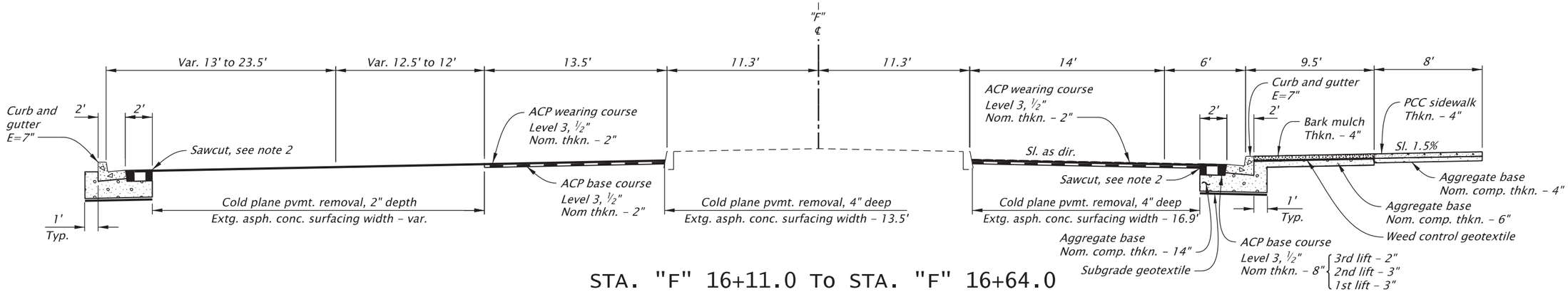

STA. "F" 16+11.0 To STA. "F" 16+64.0

NOTES:

1. For all Level 3, ½" ACP, use PG 64-22 asphalt binder.

2. Per construction records, the existing pavement structure is estimated to be 6" ACP and 10" cement-treated base. Actual depths may vary.

REGISTERED PROFESSIONAL ENGINEER
100246PE
Digitally Signed 2026.01.27 16:23:19-08'00'
OREGON
JULY 12, 2022
JASON BENJAMIN GALEAZZI
EXPIRES: 06/30/2027

FINAL ELECTRONIC DOCUMENT
AVAILABLE UPON REQUEST

DOWL WWW.DOWL.COM

OREGON DEPARTMENT OF TRANSPORTATION

OR22: CENTER ST BRIDGE (PHASE 1) PROJECT
WILLAMINA-SALEM HIGHWAY
MARION & POLK COUNTIES

Designer: Jason Galeazzi
Reviewer: Bob Goodrich
Drafter: Steve Wolfer
Checker: Kyle Farnsworth

TYPICAL SECTIONS

SHEET NO.
BA02

59V-051

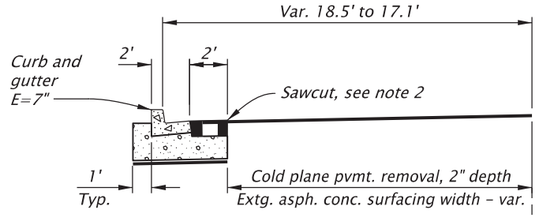

STA. "F" 17+57.3 To STA. "F" 18+05.0

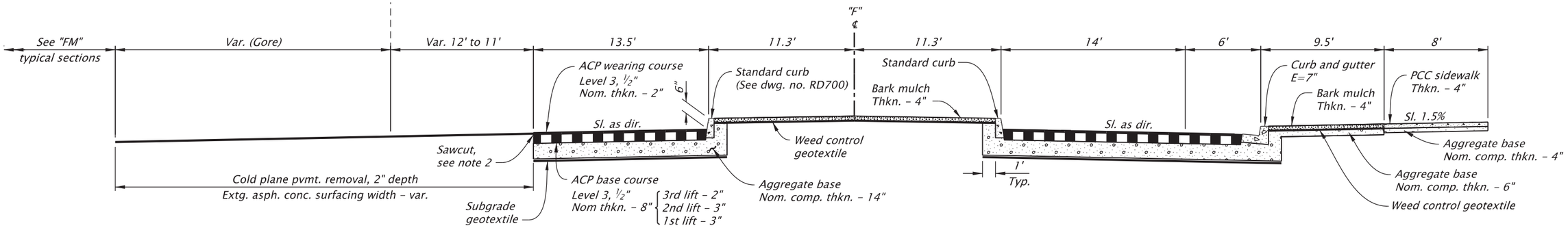

STA. "F" 16+64.0 To STA. "F" 18+05.0

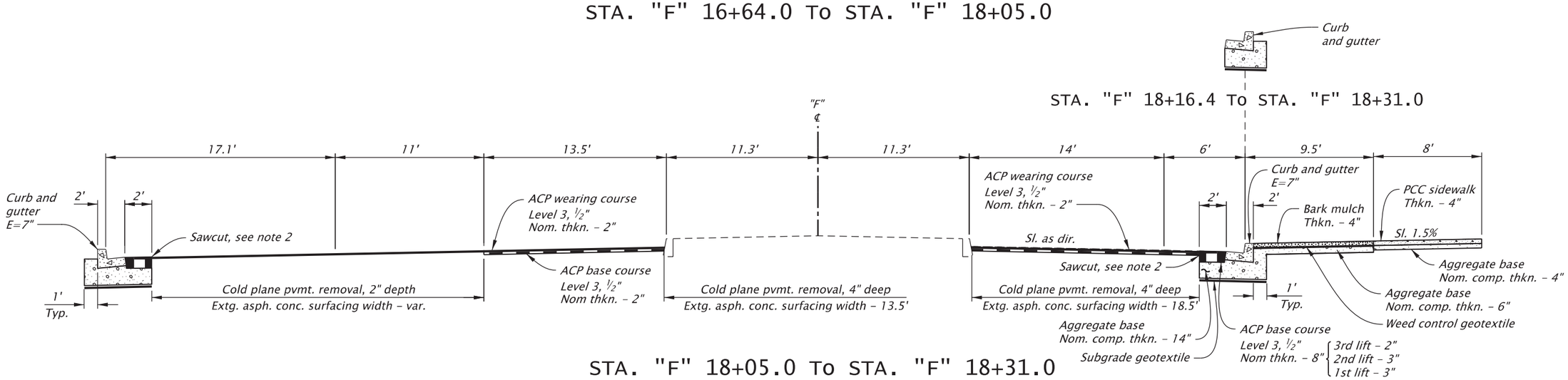

STA. "F" 18+05.0 To STA. "F" 18+31.0

NOTES:

1. For all Level 3, 1/2" ACP, use PG 64-22 asphalt binder.

2. Per construction records, the existing pavement structure is estimated to be 6" ACP and 10" cement-treated base. Actual depths may vary.

REGISTERED PROFESSIONAL ENGINEER
100246PE
Digitally Signed 2026.01.28 12:15:37-08'00'
OREGON
JULY 12, 2022
JASON BENJAMIN GALEAZZI
EXPIRES: 06/30/2027

FINAL ELECTRONIC DOCUMENT AVAILABLE UPON REQUEST

DOWL WWW.DOWL.COM

OREGON DEPARTMENT OF TRANSPORTATION

OR22: CENTER ST BRIDGE (PHASE 1) PROJECT
WILLAMINA-SALEM HIGHWAY
MARION & POLK COUNTIES

Designer: Jason Galeazzi
Reviewer: Bob Goodrich
Drafter: Steve Wolfer
Checker: Kyle Farnsworth

TYPICAL SECTIONS

SHEET NO. BA03

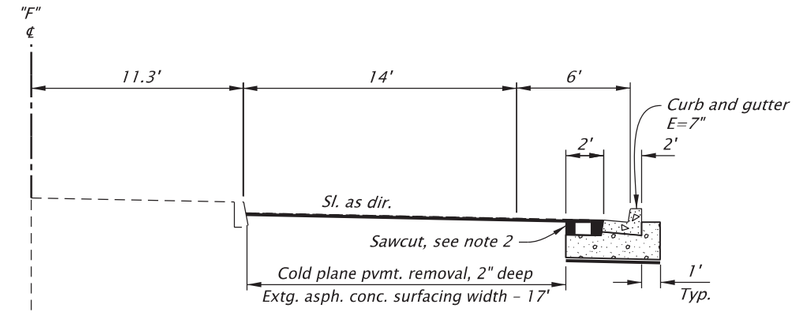

STA. "F" 19+96.0 To STA. "F" 21+31.0

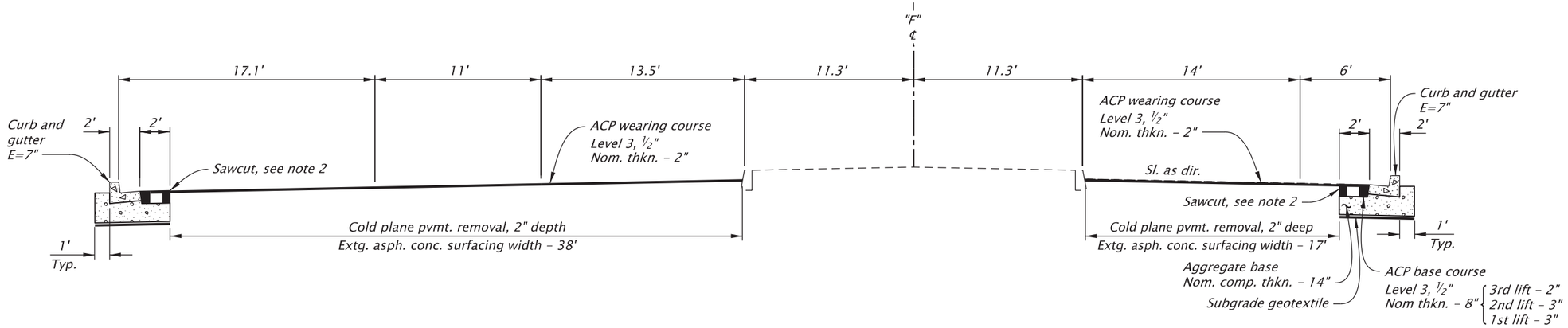

STA. "F" 18+31.0 To STA. "F" 21+31.0

NOTES:

1. For all Level 3, 1/2" ACP, use PG 64-22 asphalt binder.
2. Per construction records, the existing pavement structure is estimated to be 6" ACP and 10" cement-treated base. Actual depths may vary.

REGISTERED PROFESSIONAL ENGINEER
100246PE
Digitally Signed 2026.01.27 16:26:31-08'00'
OREGON
JULY 12, 2022
JASON BENJAMIN GALEAZZI

EXPIRES: 06/30/2027

FINAL ELECTRONIC DOCUMENT AVAILABLE UPON REQUEST

DOWL WWW.DOWL.COM

OREGON DEPARTMENT OF TRANSPORTATION

OR22: CENTER ST BRIDGE (PHASE 1) PROJECT
WILLAMINA-SALEM HIGHWAY
MARION & POLK COUNTIES

Designer: Jason Galeazzi
Reviewer: Bob Goodrich
Drafter: Steve Wolfer
Checker: Kyle Farnsworth

TYPICAL SECTIONS

SHEET NO.
BA04

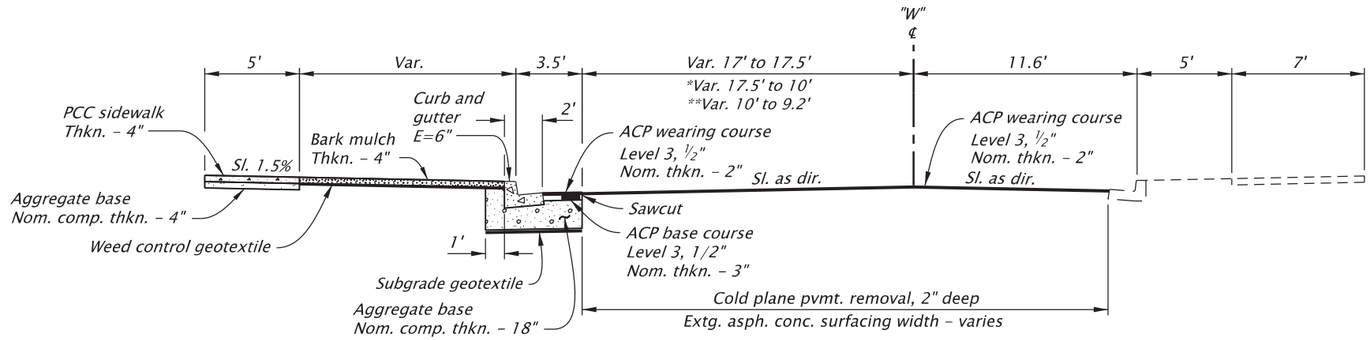

STA. "W" 10+30.5 To STA. "W" 11+05.1
*"W" 11+05.1 To "W" 11+24.2
**"W" 11+24.2 To "W" 11+61.0

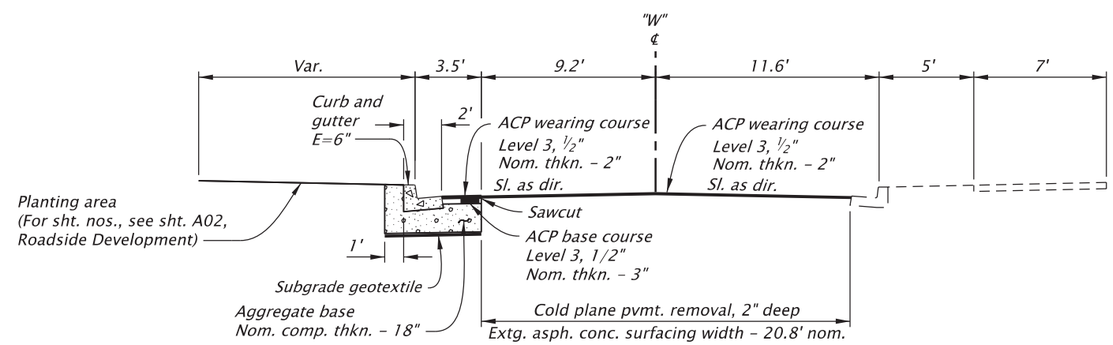

STA. "W" 11+61.0 To STA. "W" 12+37.2

NOTE:
1. For all Level 3, ½" ACP, use PG 64-22 asphalt binder.

REGISTERED PROFESSIONAL ENGINEER
100246PE
Digitally Signed 2026.01.27 16:27:30-08'00'
OREGON
JULY 12, 2022
JASON BENJAMIN GALEAZZI
EXPIRES: 06/30/2027

FINAL ELECTRONIC DOCUMENT
AVAILABLE UPON REQUEST

DOWL WWW.DOWL.COM

OREGON DEPARTMENT OF TRANSPORTATION

OR22: CENTER ST BRIDGE (PHASE 1) PROJECT
WILLAMINA-SALEM HIGHWAY
MARION & POLK COUNTIES

Designer: Jason Galeazzi
Reviewer: Bob Goodrich
Drafter: Steve Wolfer
Checker: Kyle Farnsworth

TYPICAL SECTIONS

SHEET NO.
BA05

59V-051

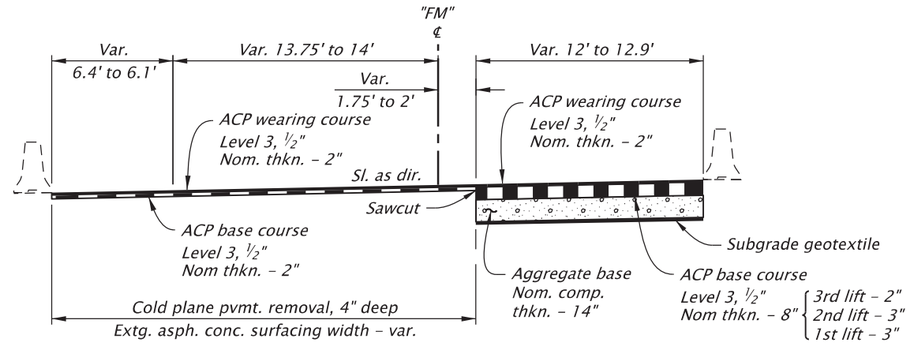

STA. "FM" 22+41.0 To STA. "FM" 22+45.7

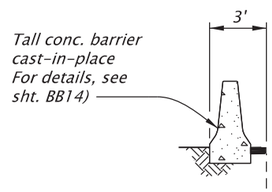

STA. "FM" 22+71.1 To STA. "FM" 22+83.6

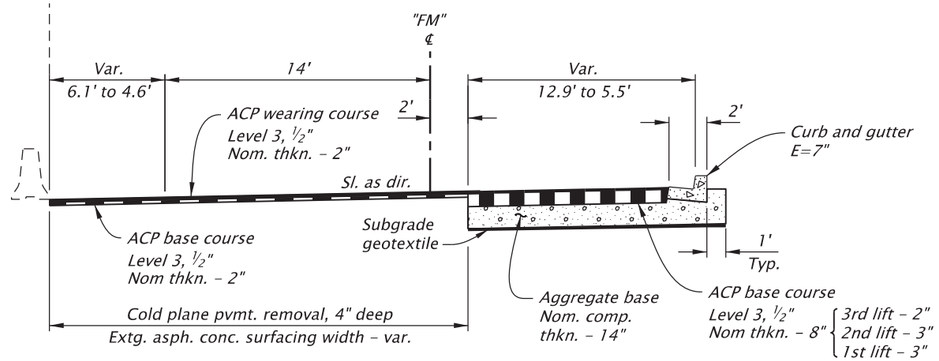

STA. "FM" 22+45.7 To STA. "FM" 22+83.6

NOTE:
1. For all Level 3, ½" ACP, use PG 64-22 asphalt binder.

REGISTERED PROFESSIONAL ENGINEER
100246PE
Digitally Signed 2026.01.27 16:28:13-08'00'
OREGON
JULY 12, 2022
JASON BENJAMIN GALEAZZI
EXPIRES: 06/30/2027

FINAL ELECTRONIC DOCUMENT
AVAILABLE UPON REQUEST

DOWL WWW.DOWL.COM

OREGON DEPARTMENT OF TRANSPORTATION

OR22: CENTER ST BRIDGE (PHASE 1) PROJECT
WILLAMINA-SALEM HIGHWAY
MARION & POLK COUNTIES

Designer: Jason Galeazzi
Reviewer: Bob Goodrich
Drafter: Steve Wolfer
Checker: Kyle Farnsworth

TYPICAL SECTIONS

SHEET NO.
BA06

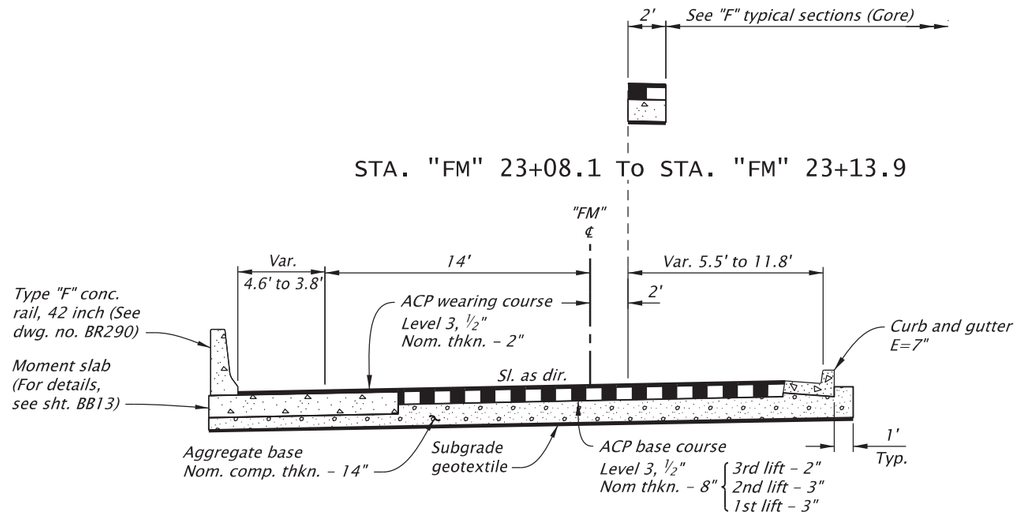

STA. "FM" 23+08.1 To STA. "FM" 23+13.9

STA. "FM" 22+83.6 To STA. "FM" 23+13.9

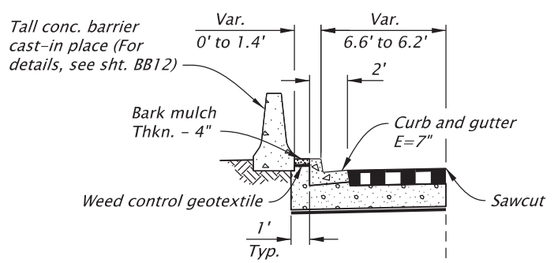

STA. "FM" 23+35.6 To STA. "FM" 23+40.0

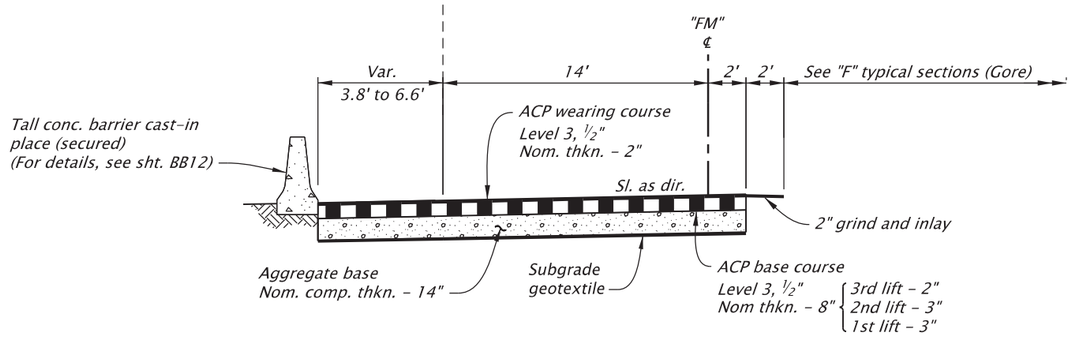

STA. "FM" 23+13.9 To STA. "FM" 23+40.0

NOTE:
1. For all Level 3, ½" ACP, use PG 64-22 asphalt binder.

REGISTERED PROFESSIONAL ENGINEER
100246PE
Digitally Signed 2026.01.27 16:30:09-08'00'
OREGON
JULY 12, 2022
JASON BENJAMIN GALEAZZI
EXPIRES: 06/30/2027

FINAL ELECTRONIC DOCUMENT AVAILABLE UPON REQUEST

DOWL WWW.DOWL.COM

OREGON DEPARTMENT OF TRANSPORTATION

OR22: CENTER ST BRIDGE (PHASE 1) PROJECT
WILLAMINA-SALEM HIGHWAY
MARION & POLK COUNTIES

Designer: Jason Galeazzi
Reviewer: Bob Goodrich
Drafter: Steve Wolfer
Checker: Kyle Farnsworth

TYPICAL SECTIONS

SHEET NO. BA07

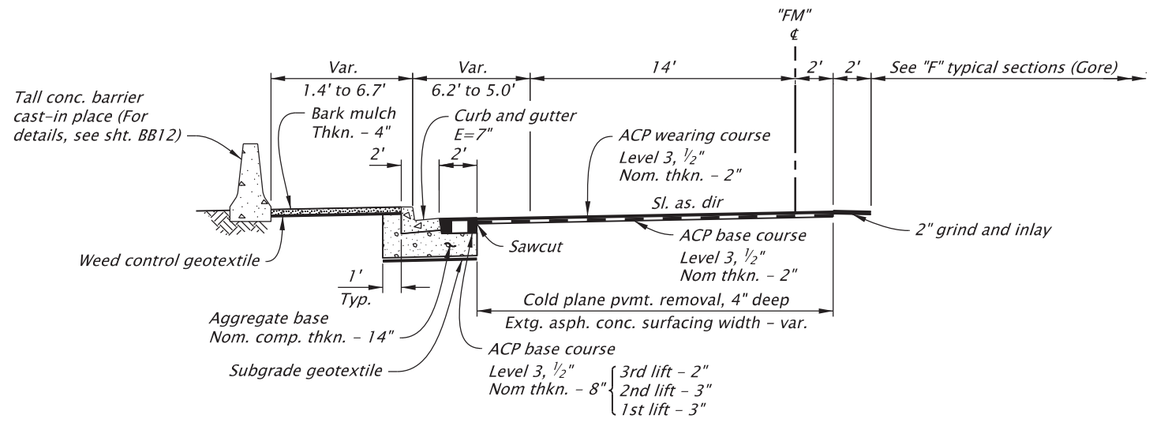

STA. "FM" 23+40.0 To STA. "FM" 23+55.0

STA. "FM" 23+91.2 To STA. "FM" 24+01.2

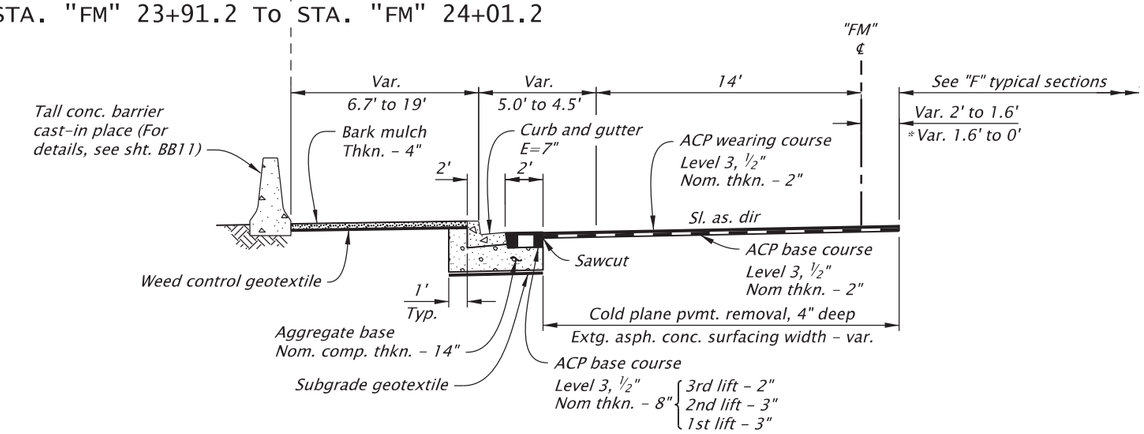

STA. "FM" 23+55.0 To STA. "FM" 23+91.2
*"FM" 23+91.2 To "FM" 24+01.2

NOTE:
1. For all Level 3, ½" ACP, use PG 64-22 asphalt binder.

REGISTERED PROFESSIONAL ENGINEER
100246PE
Digitally Signed 2026.01.27 16:31:07-08'00'
OREGON
JULY 12, 2022
JASON BENJAMIN GALEAZZI
EXPIRES: 06/30/2027
FINAL ELECTRONIC DOCUMENT AVAILABLE UPON REQUEST

DOWL WWW.DOWL.COM

OREGON DEPARTMENT OF TRANSPORTATION

OR22: CENTER ST BRIDGE (PHASE 1) PROJECT
WILLAMINA-SALEM HIGHWAY
MARION & POLK COUNTIES

Designer: Jason Galeazzi
Reviewer: Bob Goodrich
Drafter: Steve Wolfer
Checker: Kyle Farnsworth

TYPICAL SECTIONS

SHEET NO.
BA08

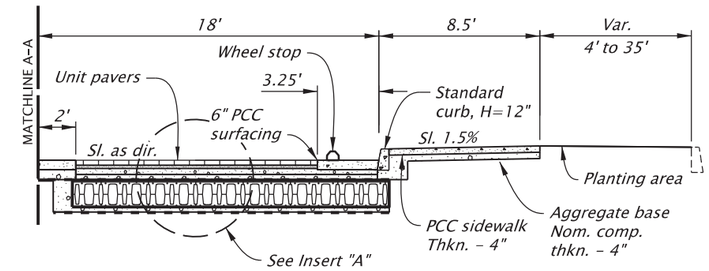

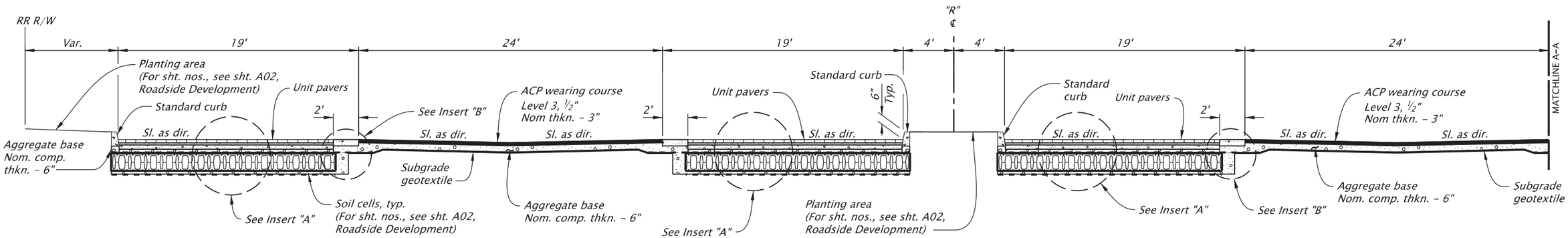

STA. "R" 8+03.2 To STA. "R" 10+69.7

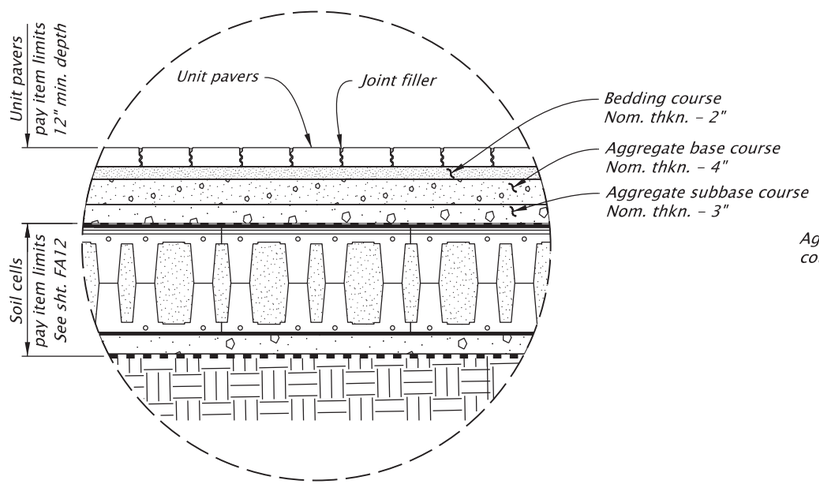

INSERT "A"

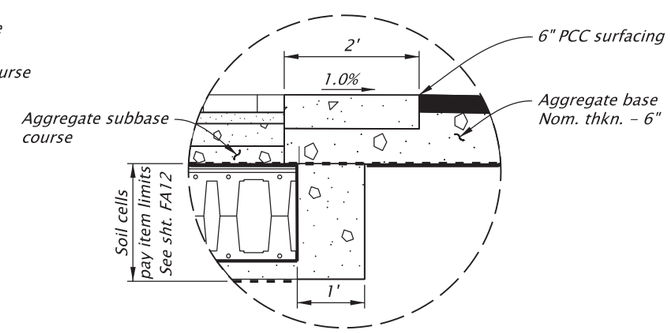

INSERT "B"

NOTES:

1. For all Level 3, 1/2" ACP, use PG 64-22 asphalt binder.
2. See sht. D01 for parking lot general construction plan.
3. See shts. BB06 & BB07 for parking lot grading details.
4. See sht. BB16 for conc. wheel stop detail.
5. See sht. D01 for location of PCC crosswalk and sht. BB16 for PCC surfacing detail.
6. See sht. A02, Roadside Development, for planting plan and soil cells details.
7. See sht. A02, Hydraulics, for stormwater plan and details.
8. Install standard aggregate base under curbs.

REGISTERED PROFESSIONAL ENGINEER
100246PE
Digitally Signed 2026.02.10 15:12:46-08'00'
OREGON
JULY 12, 2022
JASON BENJAMIN GALEAZZI
EXPIRES: 06/30/2027

FINAL ELECTRONIC DOCUMENT AVAILABLE UPON REQUEST

DOWL WWW.DOWL.COM

OREGON DEPARTMENT OF TRANSPORTATION

OR22: CENTER ST BRIDGE (PHASE 1) PROJECT
WILLAMINA-SALEM HIGHWAY
MARION & POLK COUNTIES

Designer: Jason Galeazzi
Reviewer: Bob Goodrich
Drafter: Steve Wolfer
Checker: Kyle Farnsworth

TYPICAL SECTIONS

SHEET NO. BA09

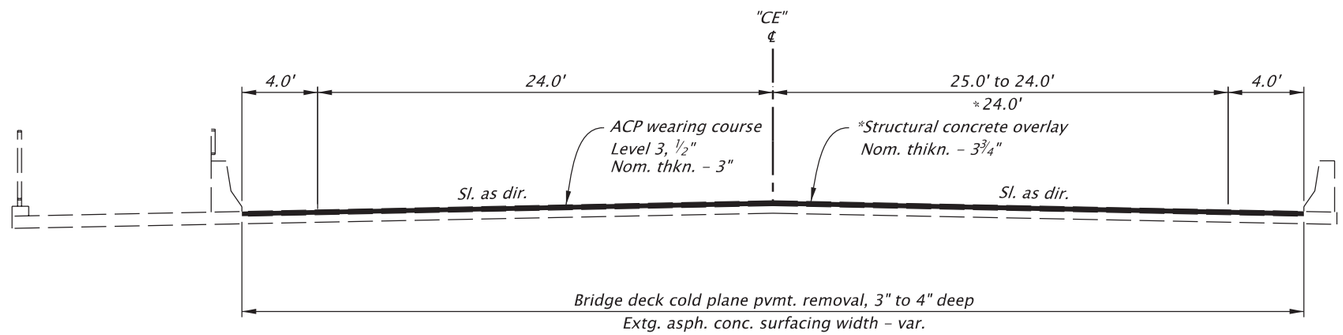

STA. "CE" 41+44.6 To STA. "CE" 41+76.0 (Bridge 00123K)
*"CE" 50+27.8 To "CE" 56+50.9 (Bridge 00123K)

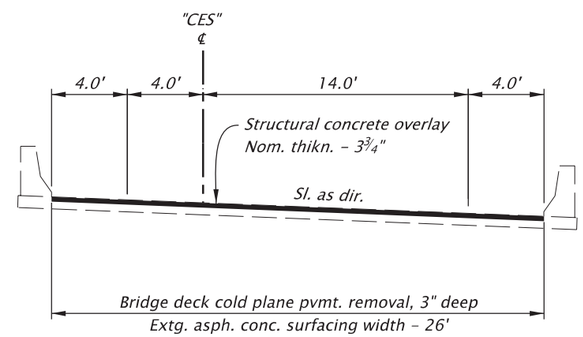

STA. "CES" 20+87.7 To STA. "CE" 23+63.4 (Bridge 00123G)

NOTES:
1. For all Level 3, 1/2" ACP, use PG 64-22 asphalt binder.

2. See sheet A02 and A03, Bridge, for construction plan and details.

REGISTERED PROFESSIONAL ENGINEER
100246PE
Digitally Signed 2026.06.05 16:11:37-07'00'
OREGON
JULY 12, 2022
JASON BENJAMIN GALEAZZI
EXPIRES: 06/30/2027
FINAL ELECTRONIC DOCUMENT AVAILABLE UPON REQUEST

DOWL WWW.DOWL.COM

OREGON DEPARTMENT OF TRANSPORTATION

OR22: CENTER ST BRIDGE (PHASE 1) PROJECT
WILLAMINA-SALEM HIGHWAY
MARION & POLK COUNTIES

Designer: Jason Galeazzi
Reviewer: Bob Goodrich
Drafter: Steve Wolfer
Checker: Kyle Farnsworth

TYPICAL SECTIONS

SHEET NO. BA10

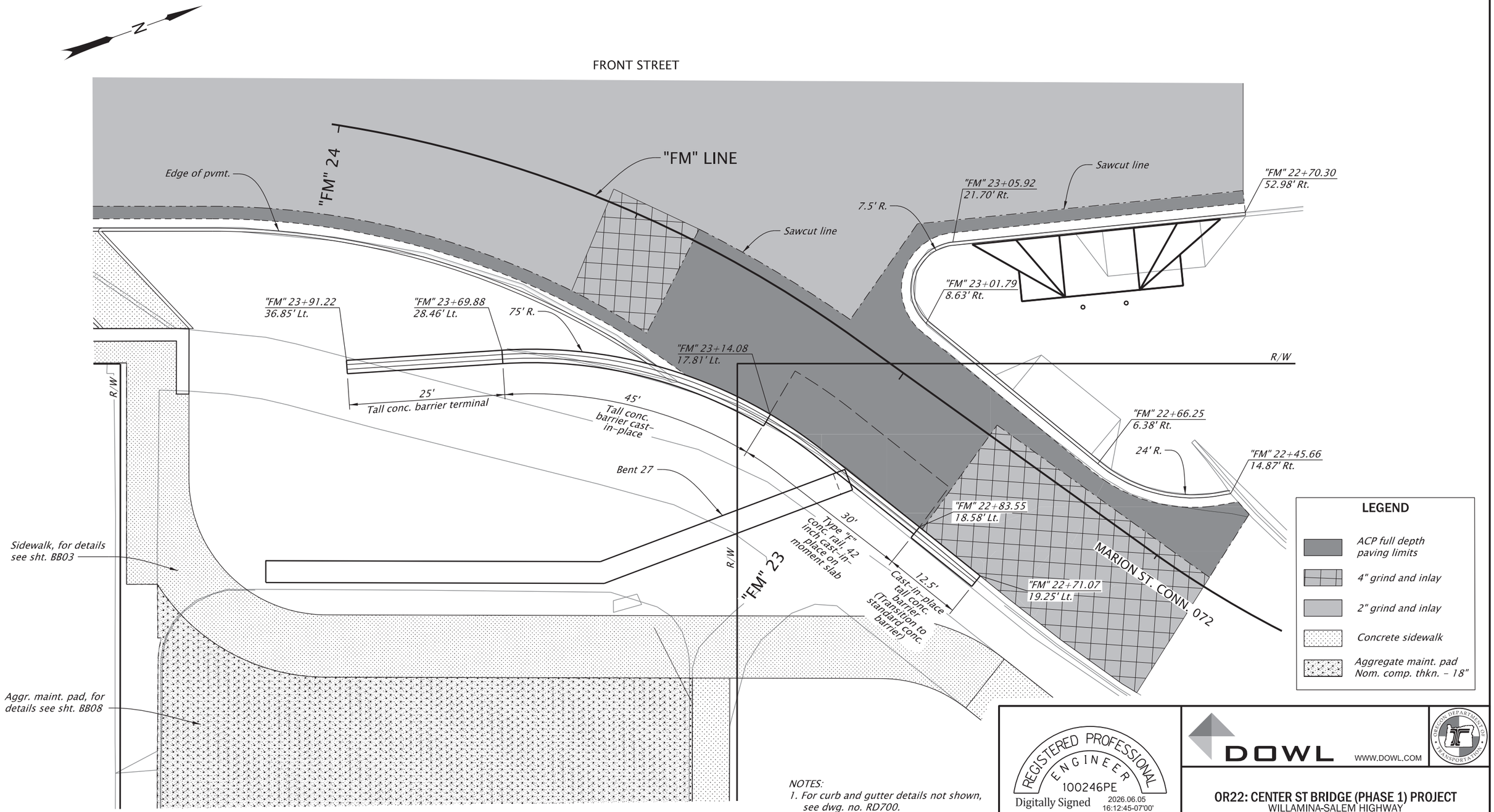

NOTES:

1. For curb and gutter details not shown, see dwg. no. RD700.
2. For conc. barrier and moment slab details, see shts. BB11 thru BB14.
3. See sht. JA105 for Bent 27 plan and elevation.

BARRIER & GORE DETAILS
MARION STREET CONNECTOR RAMP

REGISTERED PROFESSIONAL ENGINEER
100246PE
Digitally Signed 2026.06.05 16:12:45-07'00'
OREGON
JULY 12, 2022
JASON BENJAMIN GALEAZZI
EXPIRES: 06/30/2027

FINAL ELECTRONIC DOCUMENT AVAILABLE UPON REQUEST

DOWL WWW.DOWL.COM

OREGON DEPARTMENT OF TRANSPORTATION

OR22: CENTER ST BRIDGE (PHASE 1) PROJECT
WILLAMINA-SALEM HIGHWAY
MARION & POLK COUNTIES

Designer: Jason Galeazzi
Reviewer: Bob Goodrich
Drafter: Steve Wolfer
Checker: Kyle Farnsworth

DETAILS

SHEET NO. BB01

59V-051

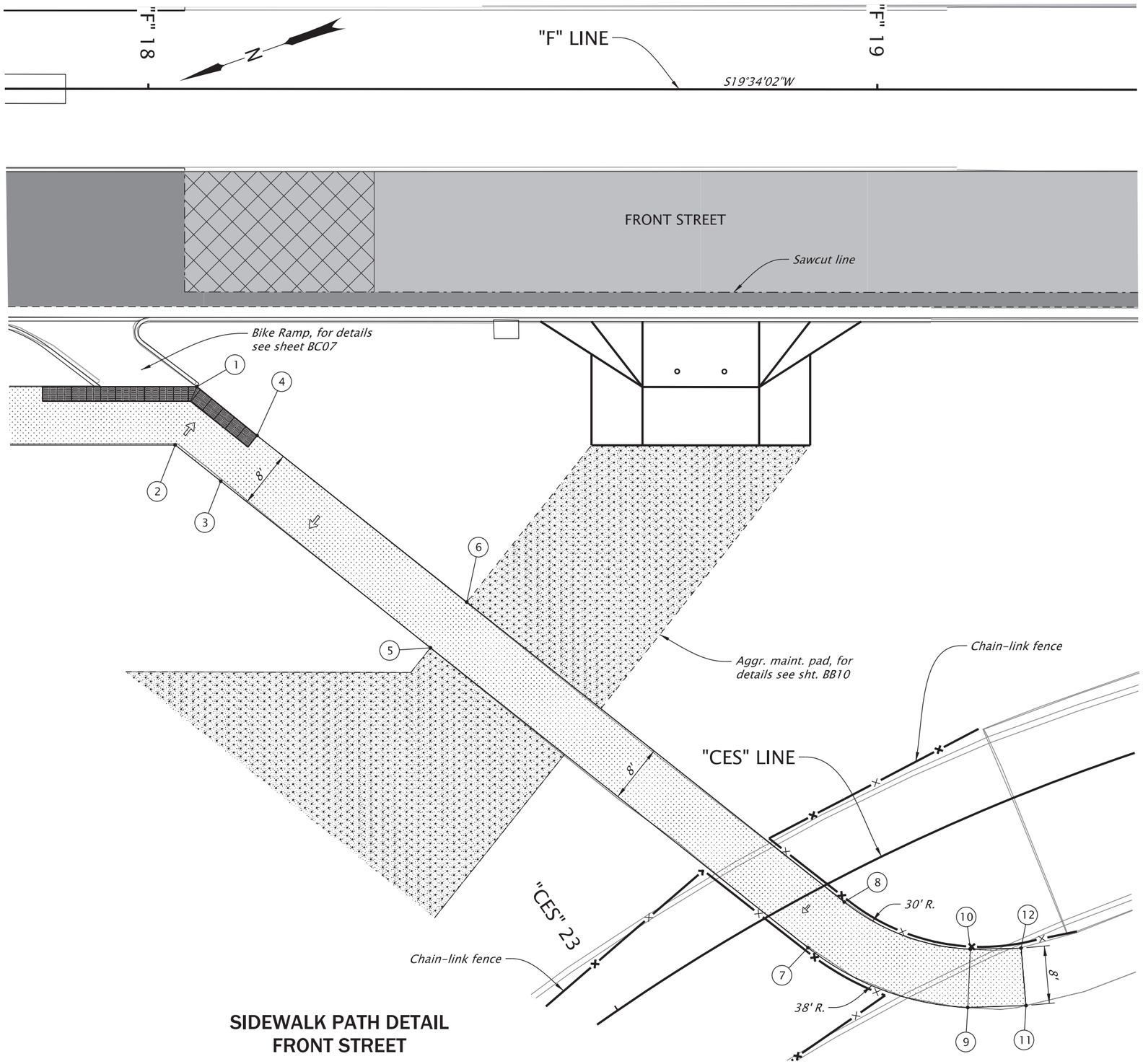

SIDEWALK PATH DETAIL
FRONT STREET

LOCATION	"F" LINE STATION	OFFSET	ELEVATION
1	18+06.71	40.86' Rt.	158.97
2	18+03.72	48.86' Rt.	159.10
3	18+09.99	53.83' Rt.	158.95
4	18+14.96	47.56' Rt.	159.07
5	18+38.77	76.66' Rt.	158.28
6	18+43.74	70.39' Rt.	158.40
7	18+90.58	117.77' Rt.	158.54
8	18+95.56	111.50' Rt.	158.66
9	19+12.51	125.96' Rt.	158.64
10	19+12.87	117.97' Rt.	158.76
11*	19+20.50	125.69' Rt.	158.67
12*	19+19.81	117.81' Rt.	158.82

*Match to exist. walk

LEGEND

- Max. 2.0% finished surface slope (Normal sidewalk cross slope)
- Station, offset, elevation point
- ACP full depth paving limits
- 4" grind and inlay
- 2" grind and inlay
- Concrete sidewalk
- Aggregate maint. pad Nom. comp. thkn. - 18"
- Detectable guide strip

NOTE:
1. For sidewalk details not shown, see dwg. nos. RD721 & RD722.

REGISTERED PROFESSIONAL ENGINEER
100246PE
Digitally Signed 2026.01.27 16:36:24-08'00'
OREGON
JULY 12, 2022
JASON BENJAMIN GALEAZZI

EXPIRES: 06/30/2027

FINAL ELECTRONIC DOCUMENT AVAILABLE UPON REQUEST

DOWL WWW.DOWL.COM

OR22: CENTER ST BRIDGE (PHASE 1) PROJECT
WILLAMINA-SALEM HIGHWAY
MARION & POLK COUNTIES

Designer: Jason Galeazzi
Reviewer: Bob Goodrich
Drafter: Steve Wolfer
Checker: Kyle Farnsworth

DETAILS

SHEET NO. BB02

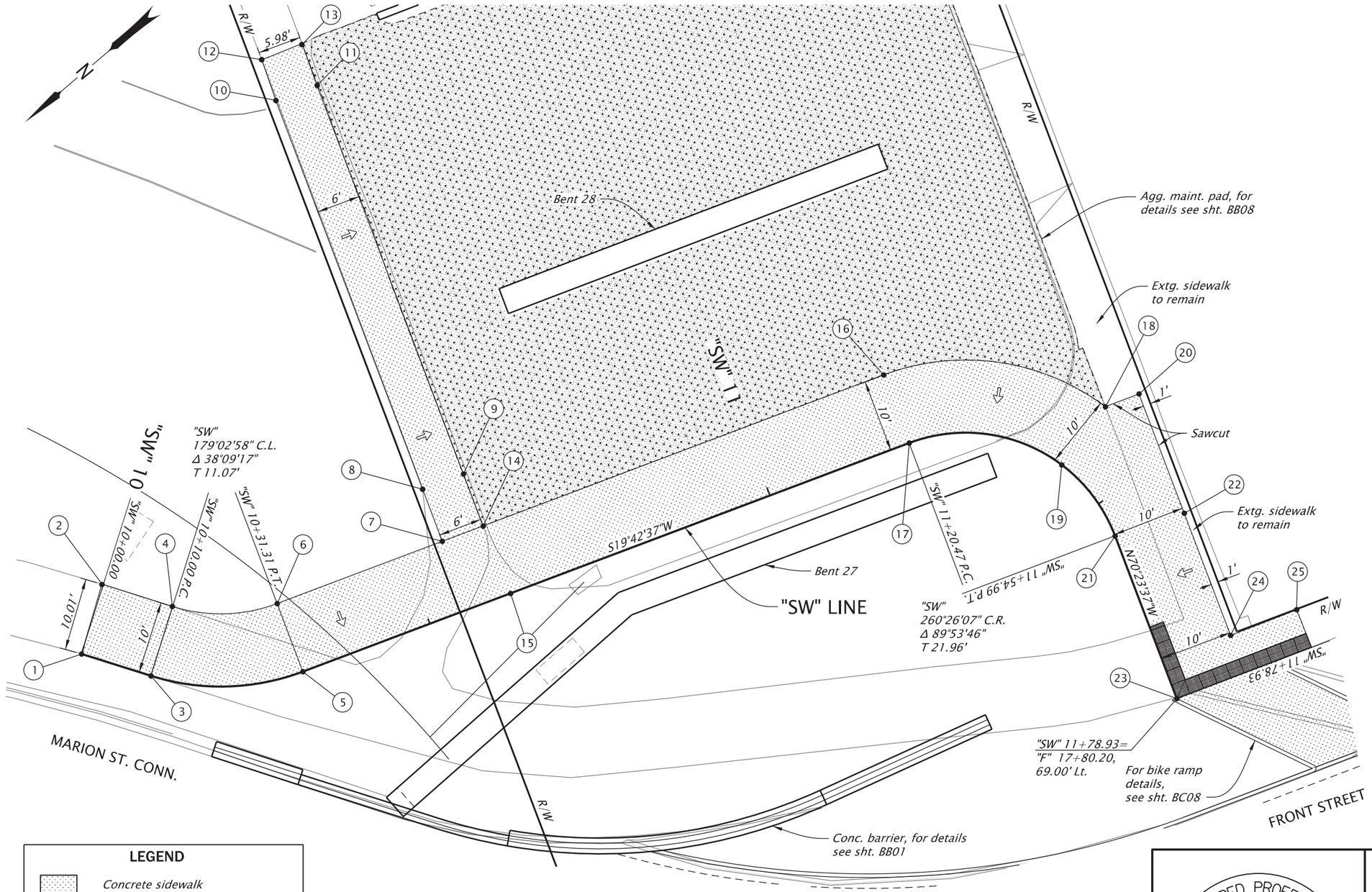

LOCATION	"SW" LINE STATION	OFFSET	ELEVATION
1*	10+00.00	0.00' Lt.	157.93
2*	10+00.00	10.01' Lt.	158.12
3	10+10.00	0.00' Lt.	157.81
4	10+10.00	10.00' Lt.	157.96
5	10+31.31	0.00 Lt.	157.72
6	10+31.31	10.00' Lt.	157.87
7	10+55.59	10.00' Lt	157.78
8	10+55.58	17.85' Lt.	157.97
9	10+61.58	17.85' Lt.	157.88
10	10+55.57	74.77' Lt.	157.69
11	10+61.57	74.44' Lt.	157.60
12*	10+55.73	80.77' Lt.	157.72
13*	10+61.70	80.88' Lt.	157.63
14	10+61.59	10.00' Lt.	157.75
15	10+61.59	0.00' Lt.	157.60
16	11+20.47	10.00' Lt.	157.87
17	11+20.47	0.00' Lt.	157.72
18*	11+42.59	10.00' Lt.	157.92
19	11+42.59	0.00' Lt.	157.77
20*	11+44.19	14.28' Lt.	158.01
21	11+54.99	0.00' Lt.	157.88
22*	11+54.99	10.00' Lt.	158.03
23	11+78.93	0.00' Lt.	158.05
24*	11+73.41	10.00' Lt.	158.12
25*	11+73.35	19.76' Lt.	158.15

*Match to exist. walk

LEGEND

- Concrete sidewalk
- Aggregate maint. pad Nom. comp. thkn. - 18"
- Max. 2.0% finished surface slope (Normal sidewalk cross slope)
- Station, offset, elevation point
- Detectable guide strip

SIDEWALK PATH DETAIL
FRONT STREET & MARION STREET CONNECTOR RAMP

NOTES:
1. For sidewalk details not shown, see dwg. nos. RD721 & RD722.
2. "SW" line is at face of walk.

REGISTERED PROFESSIONAL ENGINEER
100246PE
Digitally Signed 2026.01.28 10:15:11-08'00'
OREGON
JULY 12, 2022
JASON BENJAMIN GALEAZZI
EXPIRES: 06/30/2027

FINAL ELECTRONIC DOCUMENT AVAILABLE UPON REQUEST

DOWL WWW.DOWL.COM

OREGON DEPARTMENT OF TRANSPORTATION

OR22: CENTER ST BRIDGE (PHASE 1) PROJECT
WILLAMINA-SALEM HIGHWAY
MARION & POLK COUNTIES

Designer: Jason Galeazzi
Reviewer: Bob Goodrich
Drafter: Steve Wolfer
Checker: Kyle Farnsworth

DETAILS

SHEET NO. BB03

59V-051

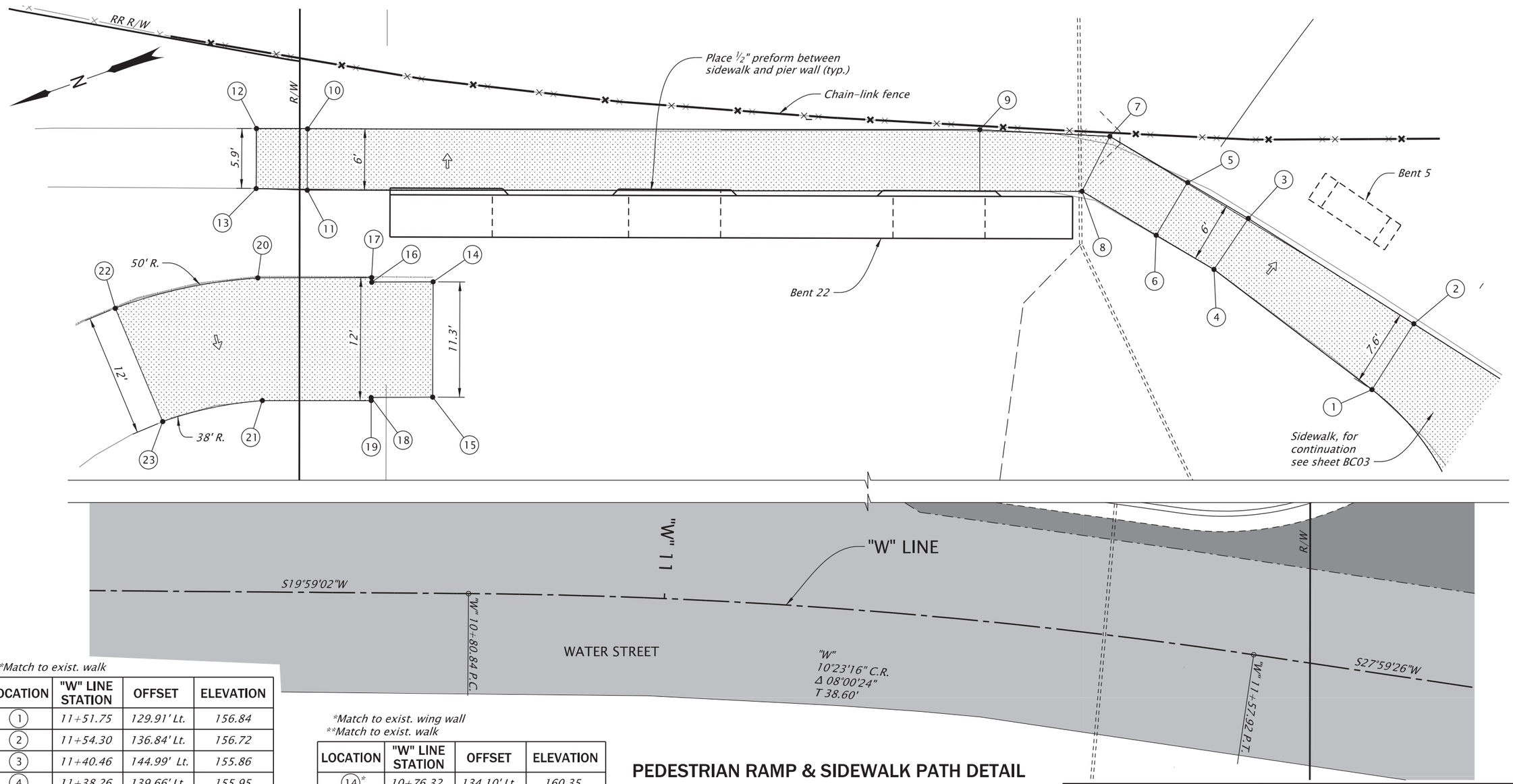

**Match to exist. walk

LOCATION	"W" LINE STATION	OFFSET	ELEVATION
1	11+51.75	129.91' Lt.	156.84
2	11+54.30	136.84' Lt.	156.72
3	11+40.46	144.99' Lt.	155.86
4	11+38.26	139.66' Lt.	155.95
5	11+35.48	147.83' Lt.	155.55
6	11+33.50	142.38' Lt.	155.64
7	11+29.18	151.54' Lt.	155.49
8	11+27.44	145.95' Lt.	155.58
9	11+19.20	151.09' Lt.	155.40
10	10+63.90	148.97' Lt.	155.94
11	10+63.94	142.97' Lt.	155.03
12**	10+58.91	148.95' Lt.	154.90
13**	10+58.94	143.09' Lt.	155.02

*Match to exist. wing wall
**Match to exist. walk

LOCATION	"W" LINE STATION	OFFSET	ELEVATION
14*	10+76.32	134.10' Lt.	160.35
15*	10+76.37	122.82' Lt.	160.07
16*	10+70.32	134.02' Lt.	160.08
17*	10+70.31	134.46' Lt.	160.07
18*	10+70.35	122.73' Lt.	159.78
19*	10+70.35	122.44' Lt.	159.77
20	10+59.18	134.35' Lt.	159.51
21	10+59.72	122.36' Lt.	159.25
22**	10+45.25	131.29' Lt.	158.98
23**	10+49.99	120.22' Lt.	158.75

PEDESTRIAN RAMP & SIDEWALK PATH DETAIL
WATER STREET

NOTE:
For sidewalk details not shown, see dwg. nos. RD721 & RD722.

LEGEND

- Max. 2.0% finished surface slope (Normal sidewalk cross slope)
- Station, offset, elevation point
- ACP full depth paving limits
- 2" grind and inlay
- Concrete sidewalk

REGISTERED PROFESSIONAL ENGINEER
100246PE
Digitally Signed 2026.01.27 16:39:05-08'00'
OREGON
JULY 12, 2022
JASON BENJAMIN GALEAZZI
EXPIRES: 06/30/2027

FINAL ELECTRONIC DOCUMENT AVAILABLE UPON REQUEST

DOWL WWW.DOWL.COM

OREGON DEPARTMENT OF TRANSPORTATION

OR22: CENTER ST BRIDGE (PHASE 1) PROJECT
WILLAMINA-SALEM HIGHWAY
MARION & POLK COUNTIES

Designer: Jason Galeazzi
Reviewer: Bob Goodrich
Drafter: Steve Wolfer
Checker: Kyle Farnsworth

DETAILS

SHEET NO. BB04

59V-051

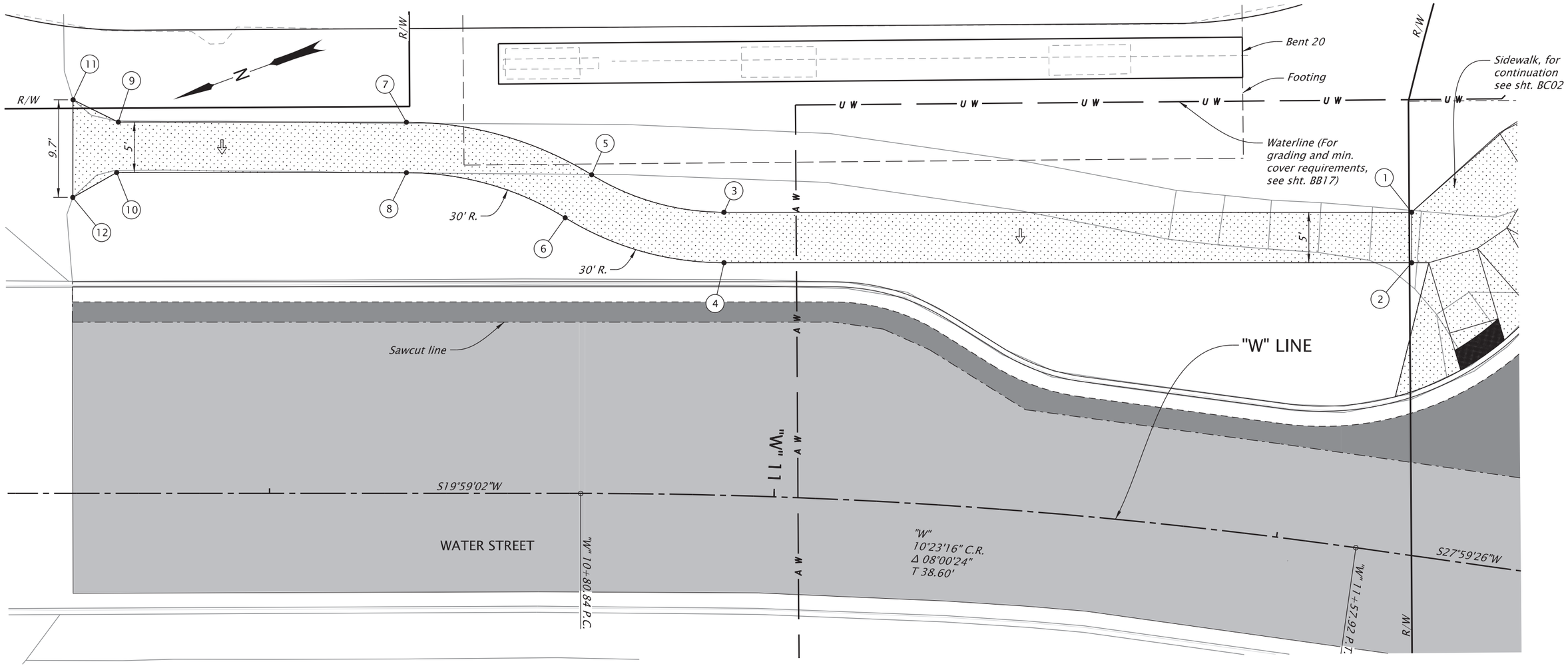

*Match to exist. walk

LOCATION	"W" LINE STATION	OFFSET	ELEVATION
1	11+58.77	33.68' Lt.	157.26
2	11+59.47	28.73' Lt.	157.19
3	10+94.36	28.03' Lt.	156.00
4	10+94.48	23.03' Lt.	155.92
5	10+81.87	31.58' Lt.	155.68
6	10+79.30	27.32' Lt.	155.60
7	10+63.57	36.78' Lt.	155.36
8	10+63.57	31.78' Lt.	155.28
9	10+35.02	36.79' Lt.	154.81
10	10+35.01	31.79' Lt.	154.73
11*	10+30.53	39.00' Lt.	154.81
12*	10+30.50	29.33' Lt.	154.63

LEGEND

- Max. 2.0% finished surface slope (Normal sidewalk cross slope)
- Station, offset, elevation point
- ACP full depth paving limits
- 2" grind and inlay
- Concrete sidewalk
- Truncated dome detectable warning surface

NOTES:
1. For waterline plans, see sht. A04, Waterline
2. For sidewalk details not shown, see dwg. nos. RD721 & RD722.

SIDEWALK PATH DETAIL
WATER STREET

REGISTERED PROFESSIONAL ENGINEER
100246PE
Digitally Signed 2026.06.30 11:30:54-07'00'
OREGON
JULY 12, 2022
JASON BENJAMIN GALEAZZI
EXPIRES: 06/30/2027

FINAL ELECTRONIC DOCUMENT AVAILABLE UPON REQUEST

DOWL WWW.DOWL.COM

OR22: CENTER ST BRIDGE (PHASE 1) PROJECT
WILLAMINA-SALEM HIGHWAY
MARION & POLK COUNTIES

Designer: Jason Galeazzi
Reviewer: Bob Goodrich
Drafter: Steve Wolfer
Checker: Kyle Farnsworth

DETAILS

SHEET NO. BB05

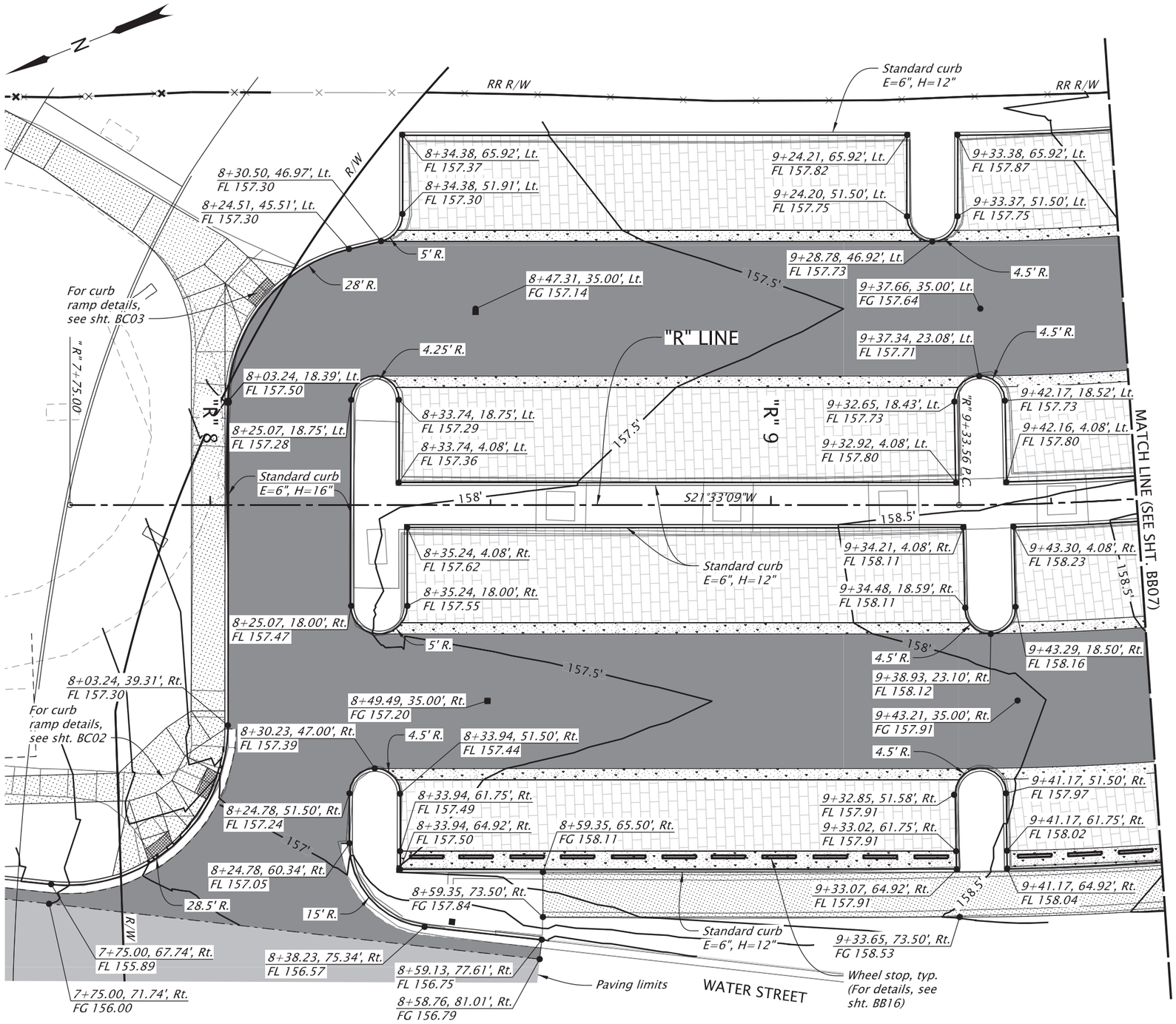

NOTES:

1. For parking lot planting plan, see sht. A02, Roadside Development.
2. For unit paver details, see typical sections and sht. A02, Roadside Development.
3. For drainage and utilities plan, see sht. A02, Roadway Construction and Hydraulics.
4. For waterline plan, see sht. A04, Waterline.
5. Unit pavers shown faded back for clarity.
6. Utilities not shown for clarity. Refer to plans as necessary.
7. Curb or curb and gutter exposure (E) equals 6" unless shown otherwise.
8. Curb height (H) equals 12" adjacent to unit pavers.
9. PCC surfacing at ends of parkings stalls slopes away from unit pavers at 1.0% as shown in typical sections.
10. Curb radii are measured at face of curb.

LEGEND

- ACP full depth paving limits
- 2" grind and inlay
- Unit pavers
- Concrete sidewalk
- PCC surfacing
- Truncated dome detectable warning surface

FG – Finish grade
FL – Flow line

PARKING LOT GRADING DETAILS
RIVERFRONT PARK

REGISTERED PROFESSIONAL ENGINEER
100246PE
Digitally Signed 2026.06.02 15:38:08-07'00'
OREGON
JULY 12, 2022
JASON BENJAMIN GALEAZZI
EXPIRES: 06/30/2027

FINAL ELECTRONIC DOCUMENT AVAILABLE UPON REQUEST

DOWL WWW.DOWL.COM

OREGON DEPARTMENT OF TRANSPORTATION

OR22: CENTER ST BRIDGE (PHASE 1) PROJECT
WILLAMINA-SALEM HIGHWAY
MARION & POLK COUNTIES

Designer: Jason Galeazzi
Reviewer: Bob Goodrich
Drafter: Steve Wolfer
Checker: Kyle Farnsworth

DETAILS

SHEET NO. BB06

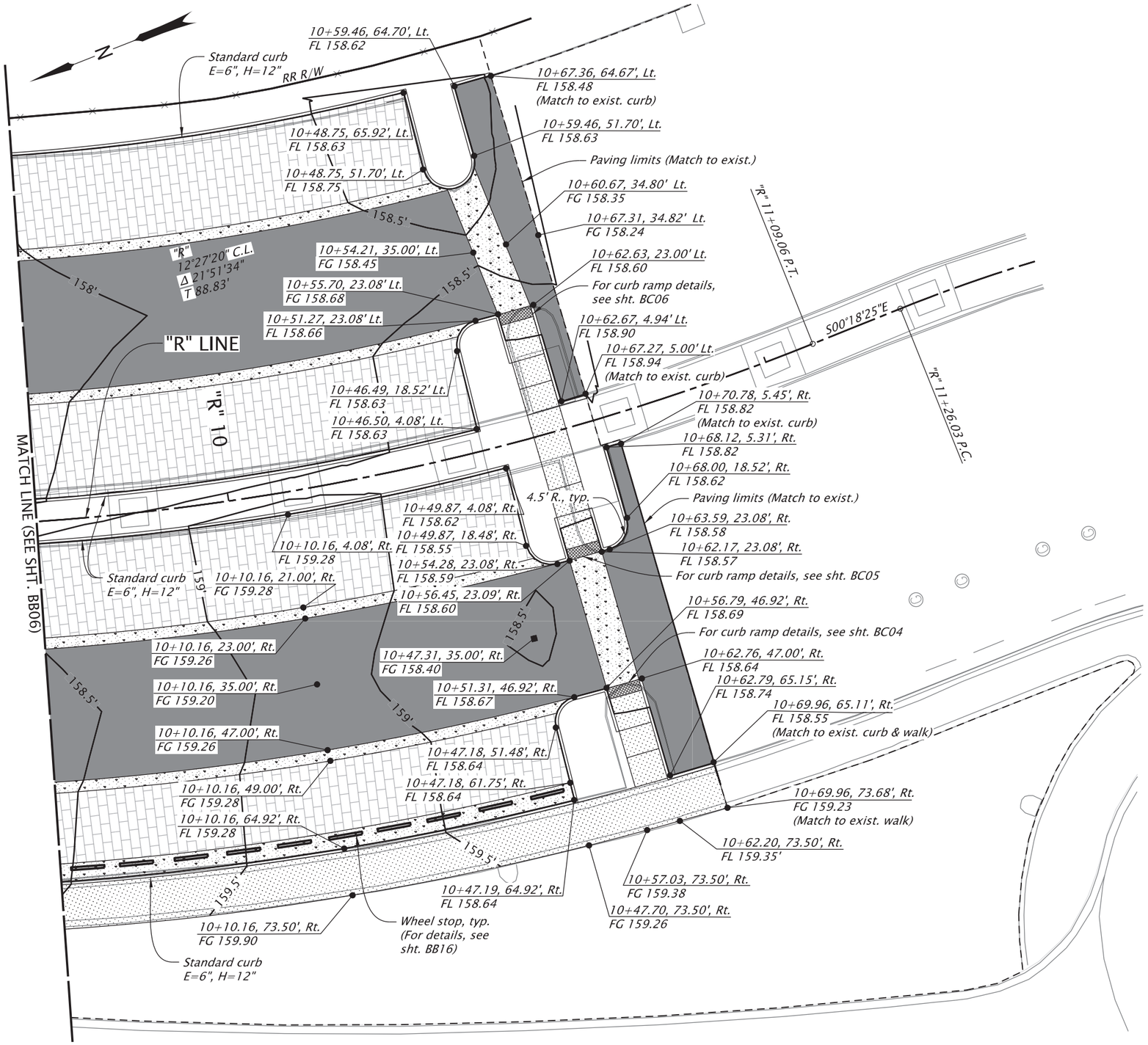

NOTES:

1. For parking lot planting plan, see sht. A02, Roadside Development.
2. For unit paver details, see typical sections and sht. A02, Roadside Development.
3. For drainage and utilities plan, see sht. A02, Roadway Construction and Hydraulics.
4. For waterline plan, see sht. A04, Waterline.
5. Unit pavers shown faded back for clarity.
6. Utilities not shown for clarity. Refer to plans as necessary.
7. Curb or curb and gutter exposure (E) equals 6" unless shown otherwise.
8. Curb height (H) equals 12" adjacent to unit pavers.
9. PCC surfacing at ends of parkings stalls slopes away from unit pavers at 1.0% as shown in typical sections.
10. Curb radii are measured at face of curb.

LEGEND

- ACP full depth paving limits
- Unit pavers
- Concrete sidewalk
- PCC surfacing
- Truncated dome detectable warning surface

FG – Finish grade
FL – Flow line

PARKING LOT GRADING DETAILS
RIVERFRONT PARK

REGISTERED PROFESSIONAL ENGINEER
100246PE
Digitally Signed 2026.02.10 15:18:26-08'00'
OREGON
JULY 12, 2022
JASON BENJAMIN GALEAZZI
EXPIRES: 06/30/2027

FINAL ELECTRONIC DOCUMENT AVAILABLE UPON REQUEST

DOWL WWW.DOWL.COM

OREGON DEPARTMENT OF TRANSPORTATION

OR22: CENTER ST BRIDGE (PHASE 1) PROJECT
WILLAMINA-SALEM HIGHWAY
MARION & POLK COUNTIES

Designer: Jason Galeazzi
Reviewer: Bob Goodrich
Drafter: Steve Wolfer
Checker: Kyle Farnsworth

DETAILS

SHEET NO. BB07

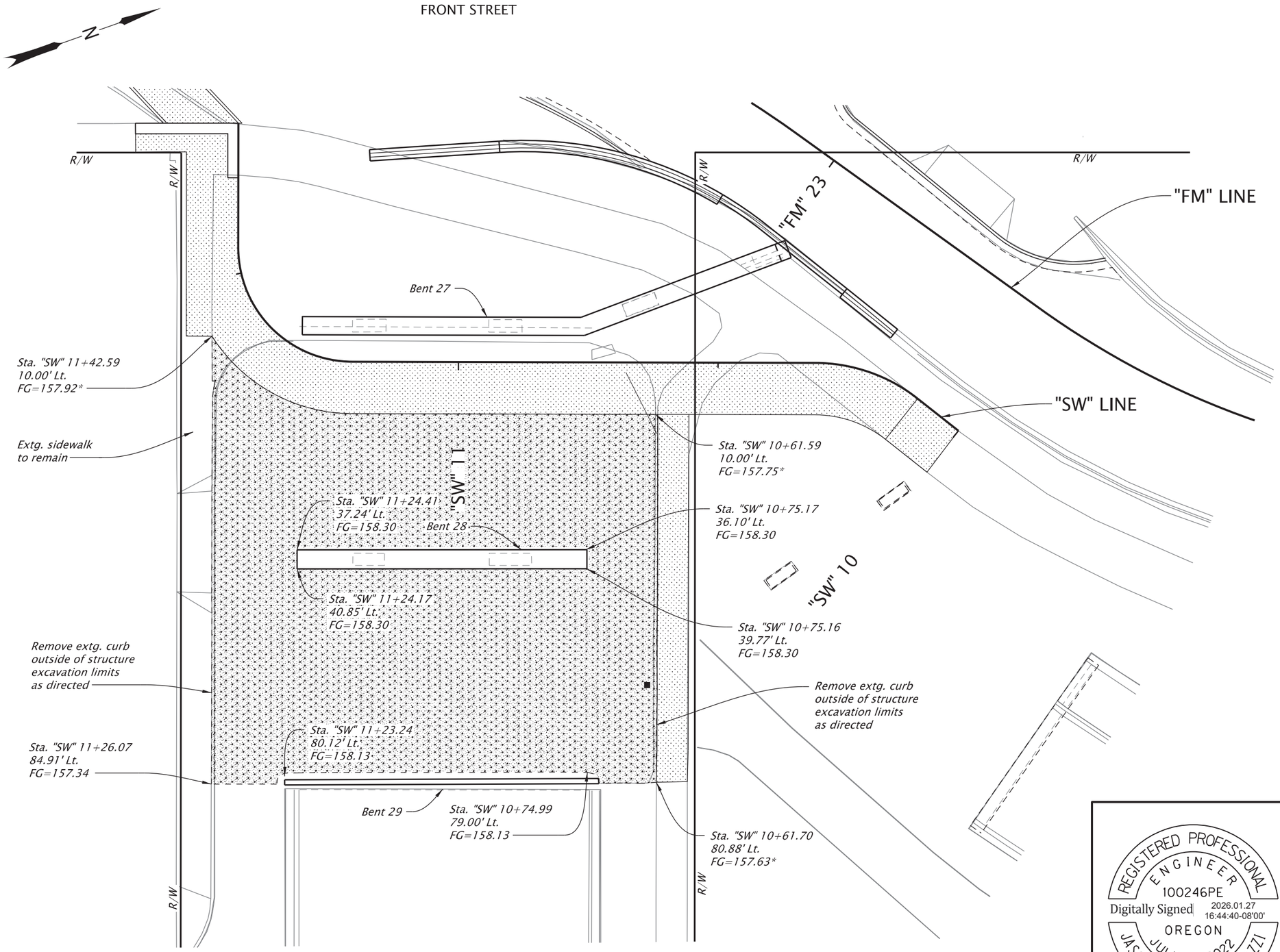

LEGEND

- Concrete sidewalk
- Aggregate maint. pad
  Nom. comp. thkn. - 18"
  (For details, see sht. BB16)

FG - Finish grade
* - Match to finish grade of sidewalk

AGGREGATE MAINTENANCE PAD DETAIL
FRONT STREET & MARION STREET
CONNECTOR RAMP

REGISTERED PROFESSIONAL ENGINEER
100246PE
Digitally Signed 2026.01.27 16:44:40-08'00'
OREGON
JULY 12, 2022
JASON BENJAMIN GALEAZZI
EXPIRES: 06/30/2027

FINAL ELECTRONIC DOCUMENT
AVAILABLE UPON REQUEST

DOWL WWW.DOWL.COM

OREGON DEPARTMENT OF TRANSPORTATION

OR22: CENTER ST BRIDGE (PHASE 1) PROJECT
WILLAMINA-SALEM HIGHWAY
MARION & POLK COUNTIES

Designer: Jason Galeazzi
Reviewer: Bob Goodrich
Drafter: Steve Wolfer
Checker: Kyle Farnsworth

DETAILS

SHEET NO.
BB08

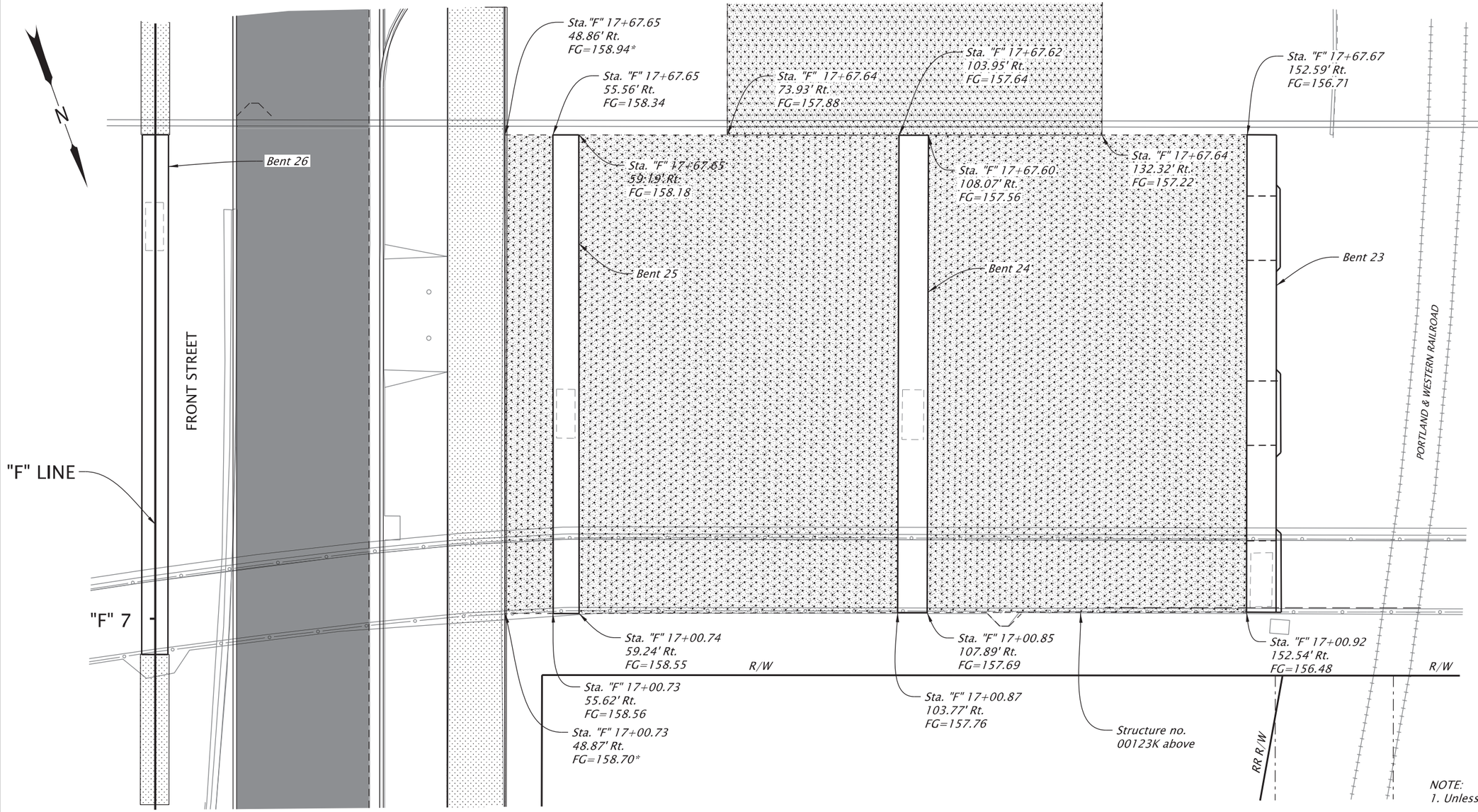

LEGEND

- ACP full depth paving limits
- Concrete sidewalk
- Aggregate maint. pad Nom. comp. thkn. - 18" (For details, see sht. BB16)

FG - Finish grade
* - Match to finish grade of sidewalk

NOTE:
1. Unless otherwise noted, match to exist. ground.

AGGREGATE MAINTENANCE PAD DETAIL
FRONT STREET

REGISTERED PROFESSIONAL ENGINEER
100246PE
Digitally Signed 2026.01.28 10:19:04-08'00'
OREGON
JULY 12, 2022
JASON BENJAMIN GALEAZZI
EXPIRES: 06/30/2027

FINAL ELECTRONIC DOCUMENT AVAILABLE UPON REQUEST

DOWL WWW.DOWL.COM

OREGON DEPARTMENT OF TRANSPORTATION

OR22: CENTER ST BRIDGE (PHASE 1) PROJECT
WILLAMINA-SALEM HIGHWAY
MARION & POLK COUNTIES

Designer: Jason Galeazzi
Reviewer: Bob Goodrich
Drafter: Steve Wolfer
Checker: Kyle Farnsworth

DETAILS

SHEET NO. BB09

59V-051

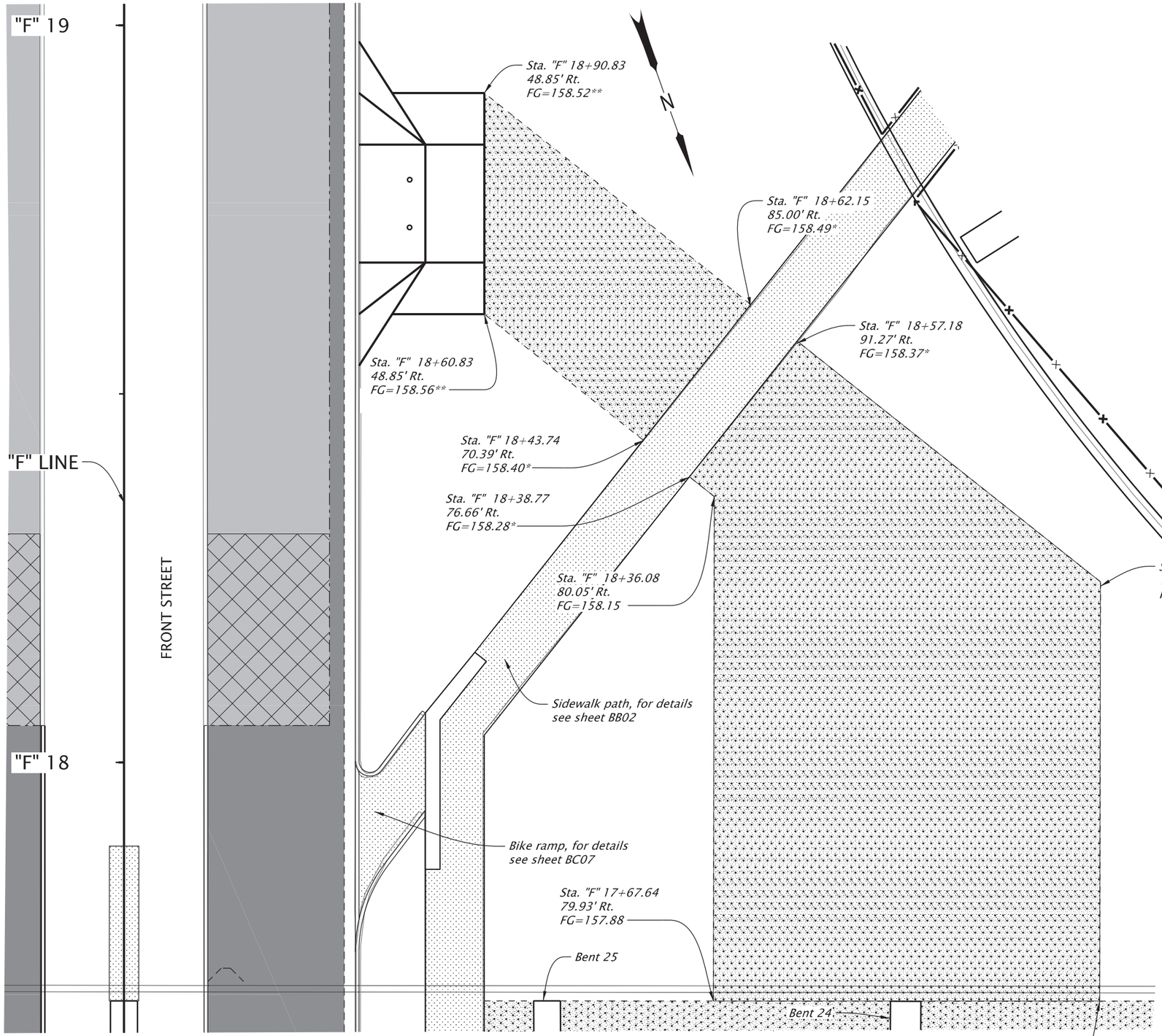

AGGREGATE MAINTENANCE PAD DETAIL
FRONT STREET

LEGEND

- ACP full depth paving limits
- 4" grind & inlay
- 2" grind & inlay
- Concrete sidewalk
- Aggregate maint. pad Nom. comp. thkn. - 18" (For details, see sht. BB16)

FG - Finish grade
* - Match to finish grade of sidewalk
** - Match to finish grade of approach

NOTE:
1. Unless otherwise noted, match to exist. ground.

REGISTERED PROFESSIONAL ENGINEER
100246PE
Digitally Signed 2026.01.27 16:47:04-08'00'
OREGON
JULY 12, 2022
JASON BENJAMIN GALEAZZI
EXPIRES: 06/30/2027

FINAL ELECTRONIC DOCUMENT AVAILABLE UPON REQUEST

DOWL WWW.DOWL.COM

OREGON DEPARTMENT OF TRANSPORTATION

OR22: CENTER ST BRIDGE (PHASE 1) PROJECT
WILLAMINA-SALEM HIGHWAY
MARION & POLK COUNTIES

Designer: Jason Galeazzi
Reviewer: Bob Goodrich
Drafter: Steve Wolfer
Checker: Kyle Farnsworth

DETAILS

SHEET NO. BB10

59V-051

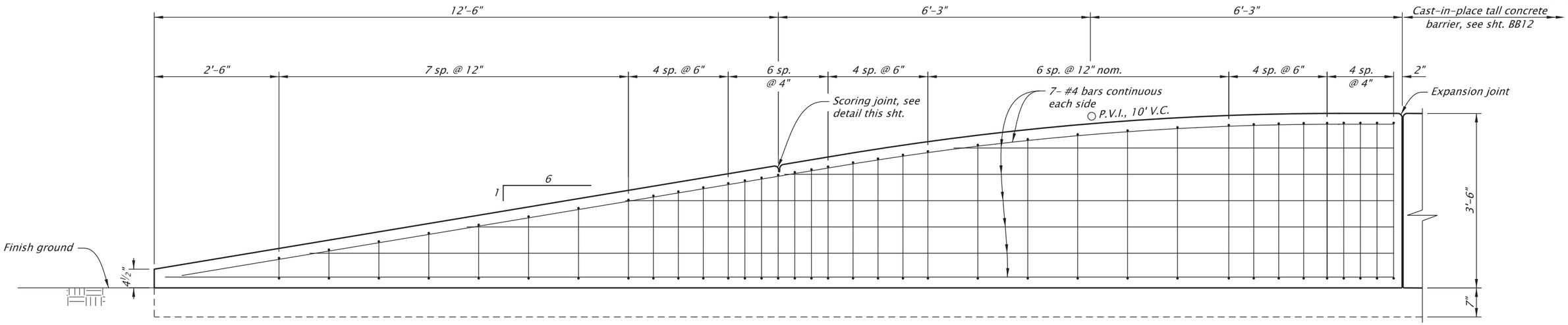

BARRIER TERMINAL DETAIL

(CAST-IN-PLACE)

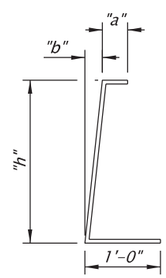

#4 STIRRUP DETAILS

Stirrup Number	Dim. "a"	Dim. "b"	Dim. "h"
1	1'-0"	½"	0'-5½"
2	11½"	¾"	0'-7½"
3	11¼"	1"	0'-9½"
4	10¾"	1¼"	0'11½"
5	10¼"	1¼"	1'-1½"
6	10"	1½"	1'-3½"
7	9½"	1¾"	1'-5½"
8	9¼"	2"	1'-7½"
9	9"	2"	1'-8½"
10	8¾"	2¼"	1'-9½"
11	8½"	2¼"	1'-10½"
12	8¼"	2½"	1'-11½"
13	8¼"	2½"	2'-0¼"
14	8"	2½"	2'-0¾"
15	8"	2½"	2'-1½"
16	7¾"	2¾"	2'-2¼"
17	7¾"	2¾"	2'-2¾"
18	7½"	2¾"	2'-3½"

Stirrup Number	Dim. "a"	Dim. "b"	Dim. "h"
19	7¼"	3"	2'-4½"
20	7"	3"	2'-5½"
21	7"	3"	2'-6¼"
22	6¾"	3¼"	2'-7¼"
23	6½"	3¼"	2'-8¾"
24	6¼"	3½"	2'-10"
25	6"	3½"	2'-11¼"
26	5¾"	3¾"	3'-0¼"
27	5½"	3¾"	3'-1"
28	5½"	3¾"	3'-1½"
29	5½"	3¾"	3'-1¾"
30	5½"	3¾"	3'-1¾"
31	5½"	3¾"	3'-2"
32	5½"	3¾"	3'-2"
33	5½"	3¾"	3'-2"
34	5½"	3¾"	3'-2"
35	5½"	3¾"	3'-2"
36	5½"	3¾"	3'-2"

TALL CONCRETE BARRIER TERMINAL

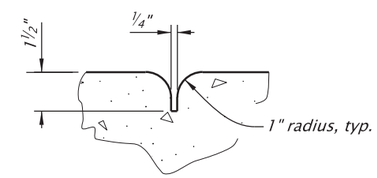

SCORING

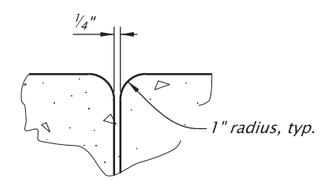

EXPANSION

JOINT DETAILS

NOTE:
See dwg. RD505 for details not shown.

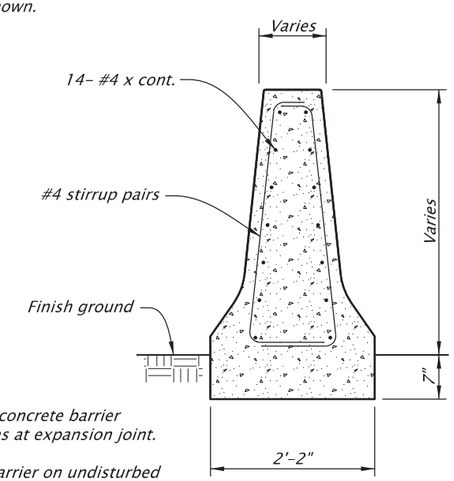

NOTES:
1. Match tall concrete barrier dimensions at expansion joint.
2. Cast the barrier on undisturbed or compacted material.

TYPICAL SECTION

REGISTERED PROFESSIONAL ENGINEER
16588
Digitally Signed 2026.01.27 13:32:18-08'00'
OREGON
JULY 20, 1993
ERIC EDWARD BONN
EXPIRES: 12/31/2027

FINAL ELECTRONIC DOCUMENT AVAILABLE UPON REQUEST

DOWL WWW.DOWL.COM

OREGON DEPARTMENT OF TRANSPORTATION

OR22: CENTER ST BRIDGE (PHASE 1) PROJECT
WILLAMINA-SALEM HIGHWAY
MARION & POLK COUNTIES

Designer: Eric Bonn, P.E. Reviewer: Bob Goodrich
Drafter: Brian Sevlts Checker: Mike McNulty, P.E.

DETAILS

SHEET NO. BB11

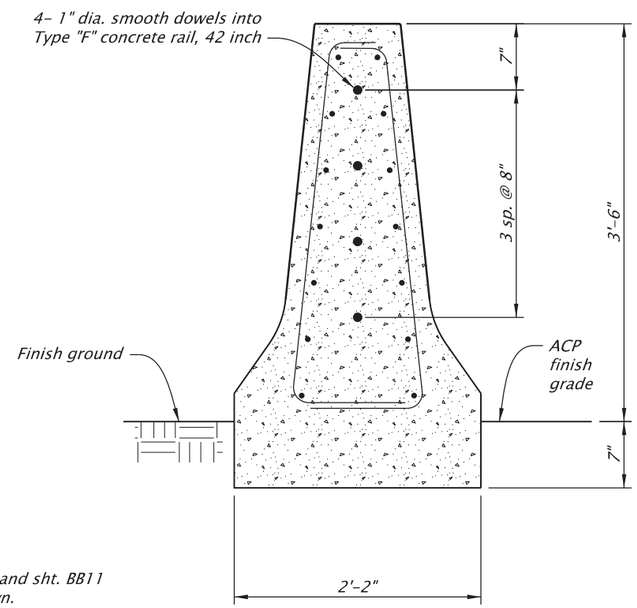

NOTES:
1. See typical sections and sht. BB11 for details not shown.

2. Cast the barrier on undisturbed or compacted material.

SECTION C-C

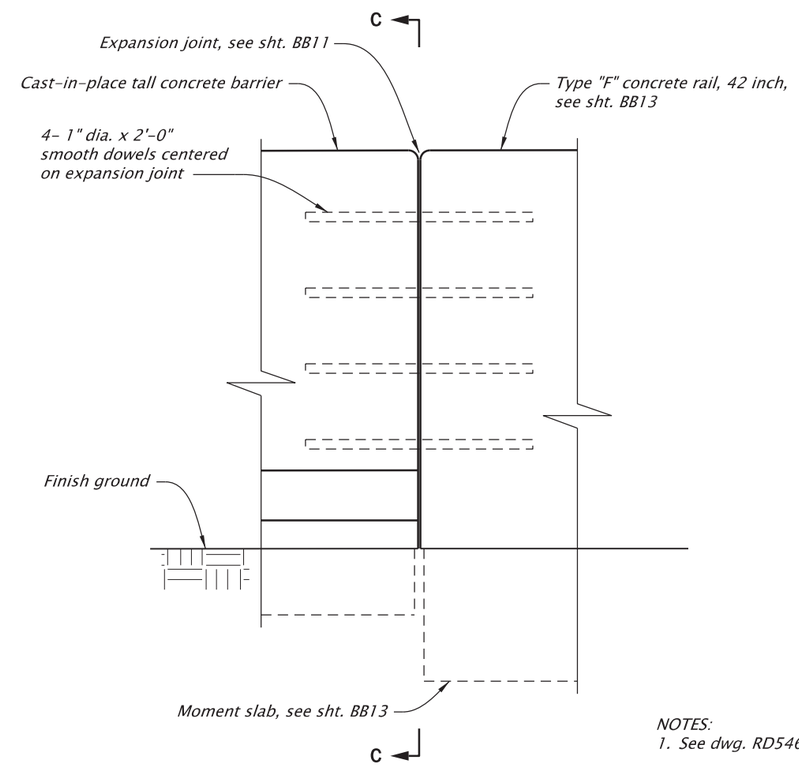

NOTES:
1. See dwg. RD546 for details not shown.

2. Typical reinforcement not shown for clarity.

ELEVATION AT END

TALL CONCRETE BARRIER

REGISTERED PROFESSIONAL ENGINEER
16588
Digitally Signed 2026.01.27 13:31:59-08'00'
OREGON
JULY 20, 1993
ERIC EDWARD BONN

EXPIRES: 12/31/2027

FINAL ELECTRONIC DOCUMENT
AVAILABLE UPON REQUEST

DOWL WWW.DOWL.COM

OREGON DEPARTMENT OF TRANSPORTATION

OR22: CENTER ST BRIDGE (PHASE 1) PROJECT
WILLAMINA-SALEM HIGHWAY
MARION & POLK COUNTIES

Designer: Eric Bonn, P.E. Reviewer: Bob Goodrich
Drafter: Brian Sevlts Checker: Mike McNulty, P.E.

DETAILS

SHEET NO. BB12

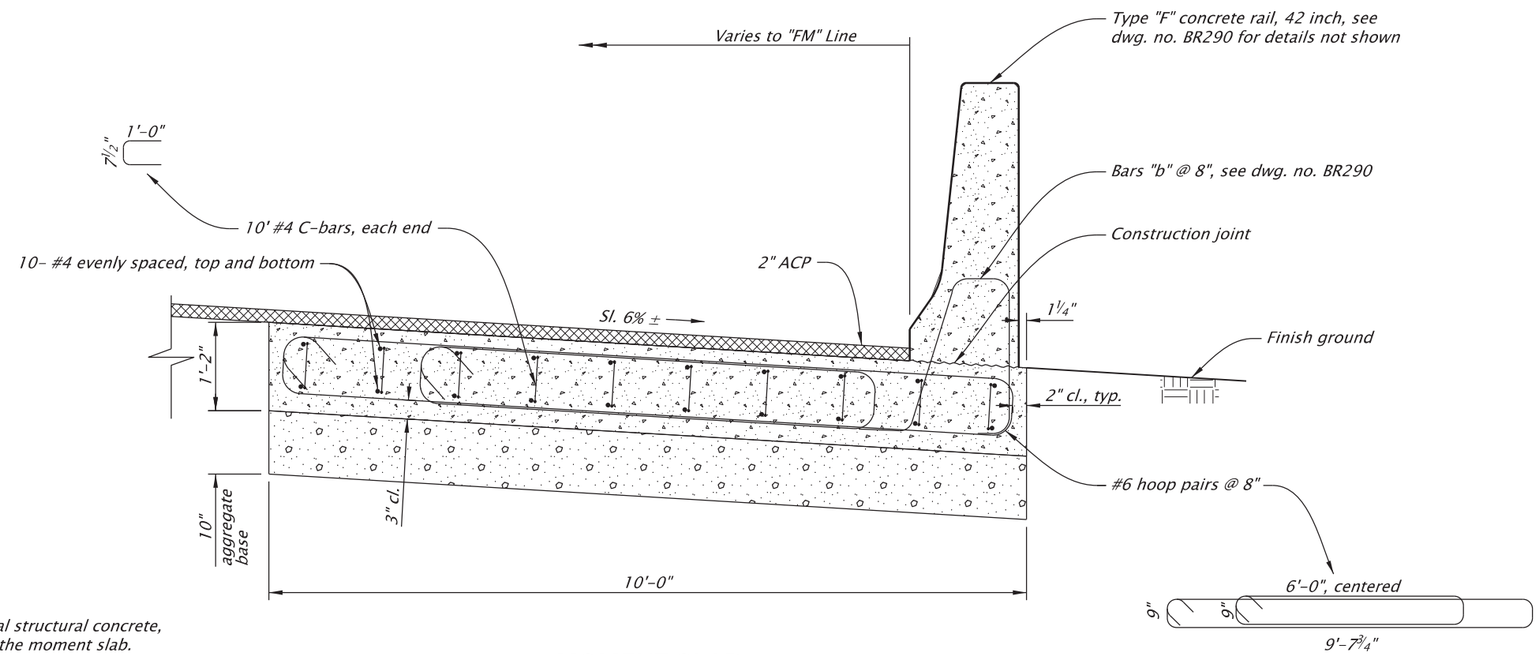

NOTE:
Provide General structural concrete, Class 4000 in the moment slab.

MOMENT SLAB

REGISTERED PROFESSIONAL ENGINEER
16588
Digitally Signed 2026.01.27 13:31:41-08'00'
OREGON
JULY 20, 1993
ERIC EDWARD BONN
EXPIRES: 12/31/2027

FINAL ELECTRONIC DOCUMENT AVAILABLE UPON REQUEST

DOWL WWW.DOWL.COM

OREGON DEPARTMENT OF TRANSPORTATION

OR22: CENTER ST BRIDGE (PHASE 1) PROJECT
WILLAMINA-SALEM HIGHWAY
MARION & POLK COUNTIES

Designer: Eric Bonn, P.E. Reviewer: Bob Goodrich
Drafter: Brian Sevlts Checker: Mike McNulty, P.E.

DETAILS

SHEET NO. BB13

59V-051

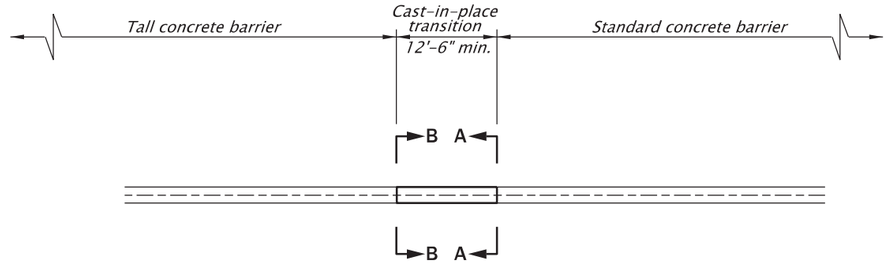

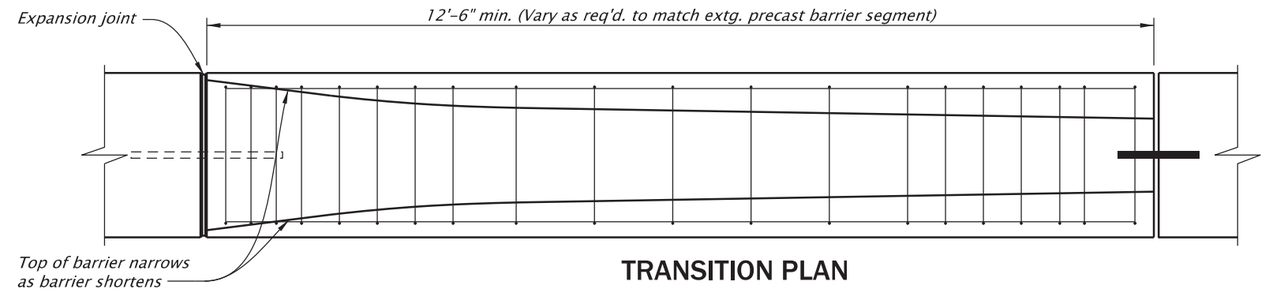

TRANSITION PLAN

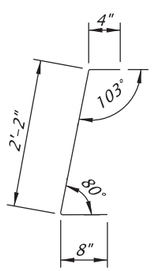

SECTION A-A

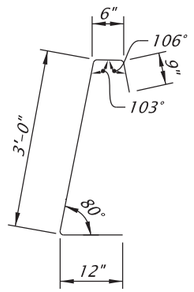

SECTION B-B

MODIFIED #4 STIRRUPS

(DIMENSIONS SHOWN WILL BE VARIABLE THROUGHOUT TRANSITION FROM A-A TO B-B)

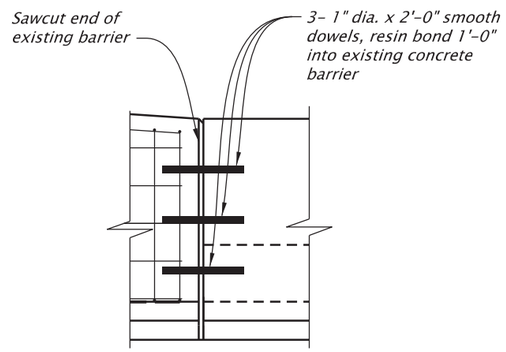

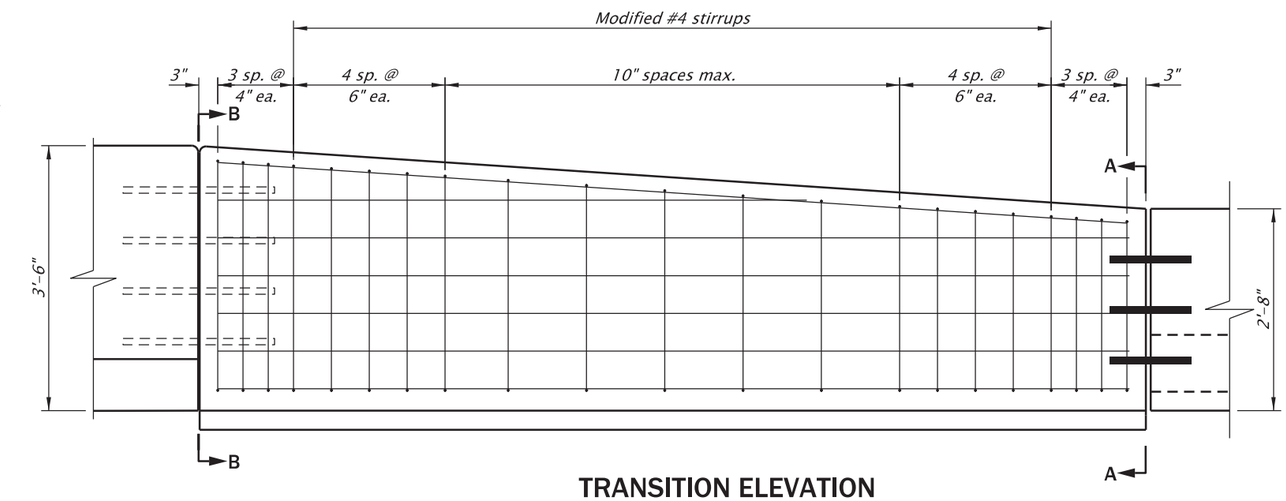

TRANSITION ELEVATION

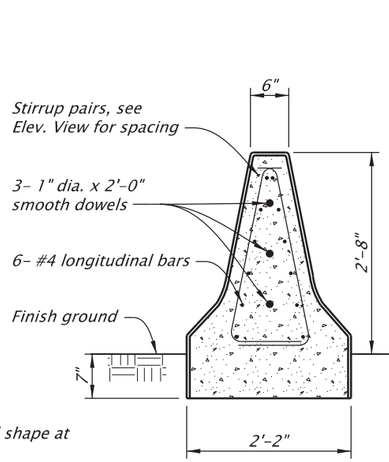

END VIEW A-A

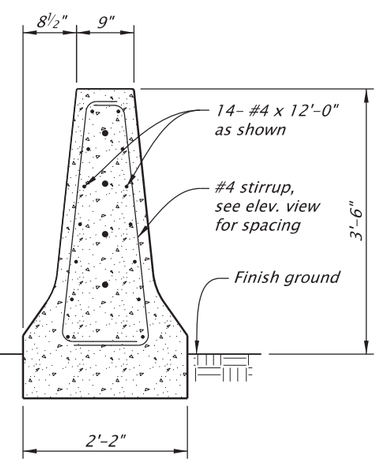

END VIEW B-B

NOTES:
1. Match the existing rail shape at the View A-A end.
2. Cast the barrier on undisturbed or compacted material.

TALL CONCRETE BARRIER TRANSITION

GENERAL NOTES FOR ALL DETAILS:

1. All reinforcing steel shall conform to ASTM A706 or AASHTO M31 (ASTM A615) Grade 60. All bars shall be full length as shown and shall be placed 1½" clear of the nearest face of concrete, unless shown otherwise.
2. Chamfer all edges ½".
3. Field verify end configurations of existing barrier prior to forming connections.
4. See dwg. nos. RD500 and RD545 for details not shown.

REGISTERED PROFESSIONAL ENGINEER
16588
Digitally Signed 2026.01.27 13:31:15-08'00'
OREGON
JULY 20, 1993
ERIC EDWARD BONN
EXPIRES: 12/31/2027

FINAL ELECTRONIC DOCUMENT AVAILABLE UPON REQUEST

DOWL WWW.DOWL.COM

OREGON DEPARTMENT OF TRANSPORTATION

OR22: CENTER ST BRIDGE (PHASE 1) PROJECT
WILLAMINA-SALEM HIGHWAY
MARION & POLK COUNTIES

Designer: Eric Bonn, P.E. Reviewer: Bob Goodrich
Drafter: Brian Sevits Checker: Mike McNulty, P.E.

DETAILS

SHEET NO. BB14

STATION	(1) GATING OR NON-GATING	(2) WIDTH OF OBSTACLE	(3) AVAILABLE LENGTH FOR ATTENUATOR	(4) ANGLE OF DIVERGENCE	(5) TEST LEVEL OR DESIGN SPEED	(6) ONE-SIDED HIT (SHLDR.)	(6) TWO-SIDED HIT SAME DIRECTION (GORE)	(6) TWO-SIDED HIT REVERSE DIRECTION (MEDIAN)	(7) REGULAR/LOW MAINTENANCE
"F" 16+94.99	*Non-gating*	*3'-8"*	*20'-8"*	*0°0'0"*	*Test level 3*			*X*	*Regular maintenance*
"F" 17+67.66	*Non-gating*	*3'-8"*	*20'-8"*	*0°0'0"*	*Test level 3*			*X*	*Regular maintenance*
**"CE" 52+44.21, Rt.*	*Non-gating*	*3.5'*	*11'-8"*	*31°45'32"*	*Test level 2*		*X*		*Regular maintenance*
**"CE" 55+67.60, Lt.*	*Non-gating*	*4.0'*	*11'-8"*	*22°58'50"*	*Test level 2*		*X*		*Regular maintenance*

**Quadguard II Wide*

IMPACT ATTENUATOR ATTRIBUTES

GENERAL NOTES:

1. *All materials and workmanship shall conform to the Oregon Standard Specifications for Construction 2024.*
2. *Details not shown shall be furnished by the manufacturer and approved by the Engineer.*
3. *Final alignment of impact attenuators shall be determined in the field by the Engineer.*

REGISTERED PROFESSIONAL ENGINEER
100246PE
Digitally Signed 2026.01.27 16:48:01-08'00'
OREGON
JULY 12, 2022
JASON BENJAMIN GALEAZZI
EXPIRES: 06/30/2027

FINAL ELECTRONIC DOCUMENT AVAILABLE UPON REQUEST

DOWL WWW.DOWL.COM

OREGON DEPARTMENT OF TRANSPORTATION

OR22: CENTER ST BRIDGE (PHASE 1) PROJECT
WILLAMINA-SALEM HIGHWAY
MARION & POLK COUNTIES

Designer: Jason Galeazzi
Reviewer: Bob Goodrich
Drafter: Steve Wolfer
Checker: Kyle Farnsworth

DETAILS

SHEET NO. BB15

59V-051

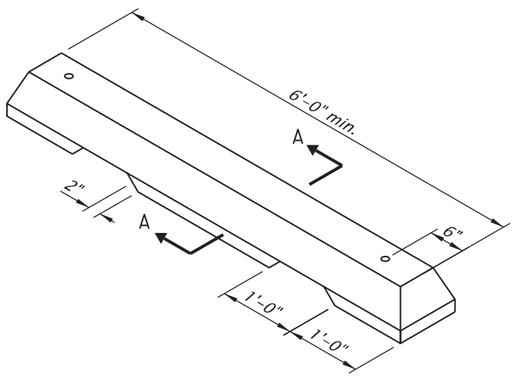

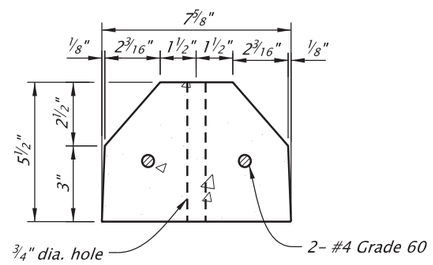

SECTION A-A

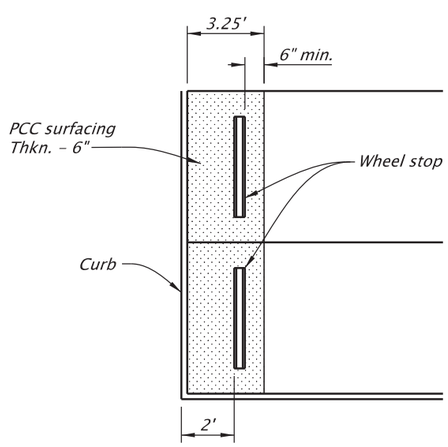

PLACEMENT

NOTES:
1. Anchor to PCC surfacing with #4 rebar. Resin bond rebar to PCC surfacing.

2. Center wheel stops between and perpendicular to stall lines.

PRECAST CONCRETE WHEEL STOP

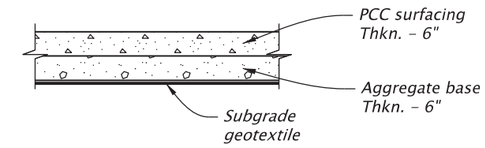

PCC SURFACING
PARKING LOT CROSSWALK

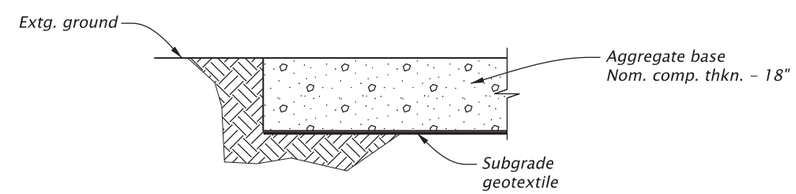

AGGREGATE MAINTENANCE PAD

REGISTERED PROFESSIONAL ENGINEER
100246PE
Digitally Signed 2026.01.27 16:49:03-08'00'
OREGON
JULY 12, 2022
JASON BENJAMIN GALEAZZI
EXPIRES: 06/30/2027

FINAL ELECTRONIC DOCUMENT
AVAILABLE UPON REQUEST

DOWL WWW.DOWL.COM

OREGON DEPARTMENT OF TRANSPORTATION

OR22: CENTER ST BRIDGE (PHASE 1) PROJECT
WILLAMINA-SALEM HIGHWAY
MARION & POLK COUNTIES

Designer: Jason Galeazzi
Reviewer: Bob Goodrich
Drafter: Steve Wolfer
Checker: Kyle Farnsworth

DETAILS

SHEET NO.
BB16

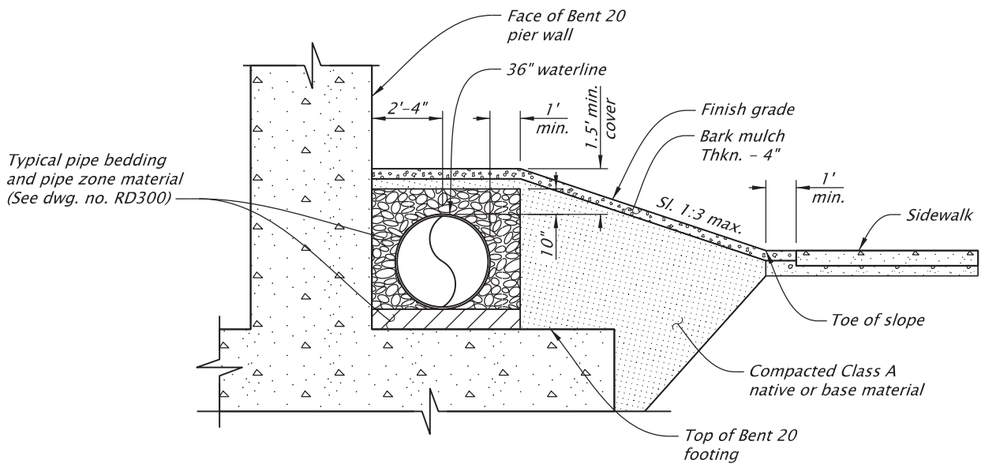

WATERLINE GRADING DETAIL
BENT 20 MINIMUM COVER

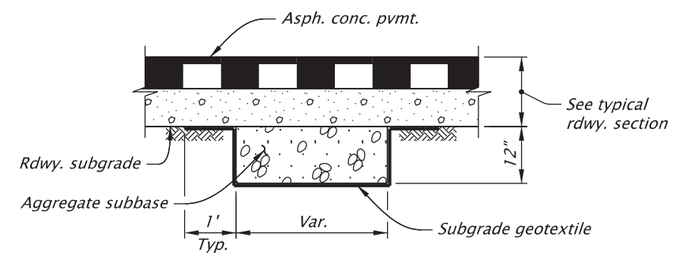

NOTES:
1. Locate subgrade stabilization as directed by Engineer.

2. Depth of subgrade stabilization to be determined per field conditions by Engineer.

SUBGRADE STABILIZATION

REGISTERED PROFESSIONAL ENGINEER
100246PE
Digitally Signed 2026.01.27 16:49:48-08'00'
OREGON
JULY 12, 2022
JASON BENJAMIN GALEAZZI
EXPIRES: 06/30/2027

FINAL ELECTRONIC DOCUMENT
AVAILABLE UPON REQUEST

DOWL WWW.DOWL.COM

OREGON DEPARTMENT OF TRANSPORTATION

OR22: CENTER ST BRIDGE (PHASE 1) PROJECT
WILLAMINA-SALEM HIGHWAY
MARION & POLK COUNTIES

Designer: Jason Galeazzi
Reviewer: Bob Goodrich
Drafter: Steve Wolfer
Checker: Kyle Farnsworth

DETAILS

SHEET NO.
BB17

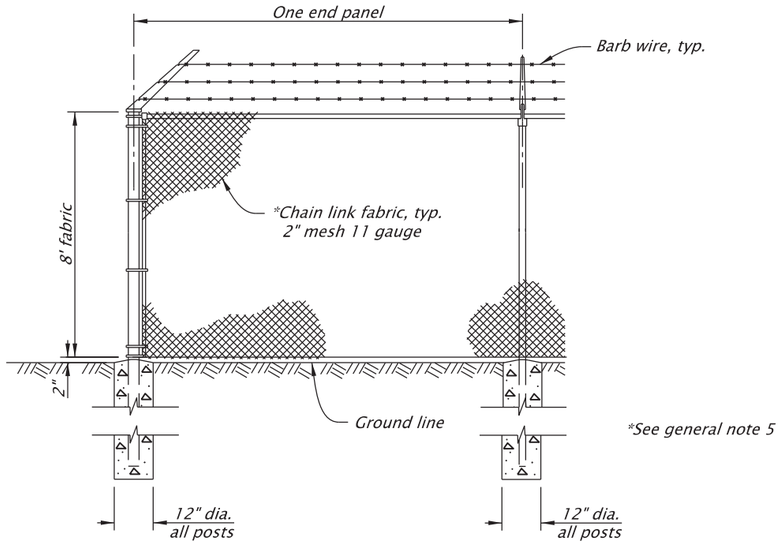

CORNER INSTALLATION

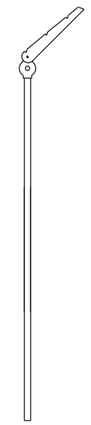

EXTENSION ARM

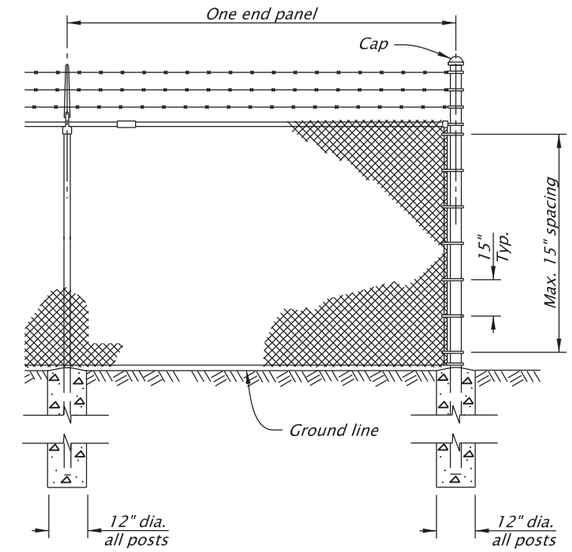

END INSTALLATION

TYPE CL-8R SECURITY (CHAIN LINK) FENCE

GENERAL NOTES FOR ALL DETAILS:

1. *Do not use top rail where fence can be struck by an errant vehicle.*
2. *For details not shown, see dwg. no. RD815.*
3. *BARBED WIRE TOP: Three strands of barbed wire shall run the entire length of fence above the fabric, with the top outside wire approximately 12" horizontally from the fence line and the other wires spaced uniformly. The wire shall be supported on the line post by means of heavy galvanized malleable iron caps with pressed steel extension arms at an angle of 45°. The extension arm shall project in the direction designated by the engineer.*
4. *All chain link fabric top and bottom selvage shall be knuckled finish.*
5. *Chain link fabric for the fence to be installed with pickets shall be 9 gauge wire woven in 3½" by 5½" diamond mesh.*

REGISTERED PROFESSIONAL ENGINEER
100246PE
Digitally Signed 2026.01.27 16:50:26-08'00'
OREGON
JULY 12, 2022
JASON BENJAMIN GALEAZZI

EXPIRES: 06/30/2027

FINAL ELECTRONIC DOCUMENT
AVAILABLE UPON REQUEST

DOWL WWW.DOWL.COM

OREGON DEPARTMENT OF TRANSPORTATION

OR22: CENTER ST BRIDGE (PHASE 1) PROJECT
WILLAMINA-SALEM HIGHWAY
MARION & POLK COUNTIES

Designer: Jason Galeazzi
Reviewer: Bob Goodrich
Drafter: Steve Wolfer
Checker: Kyle Farnsworth

DETAILS

SHEET NO.
BB18

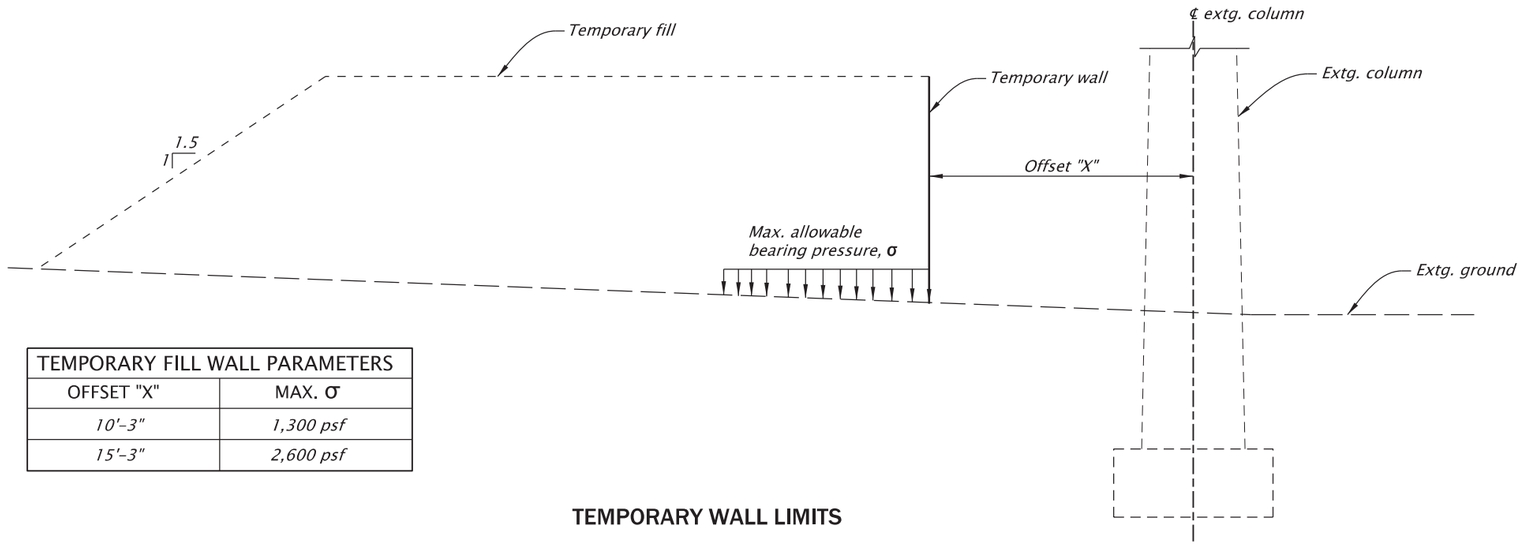

TEMPORARY FILL WALL PARAMETERS	
OFFSET "X"	MAX. σ
10'-3"	1,300 psf
15'-3"	2,600 psf

TEMPORARY WALL LIMITS

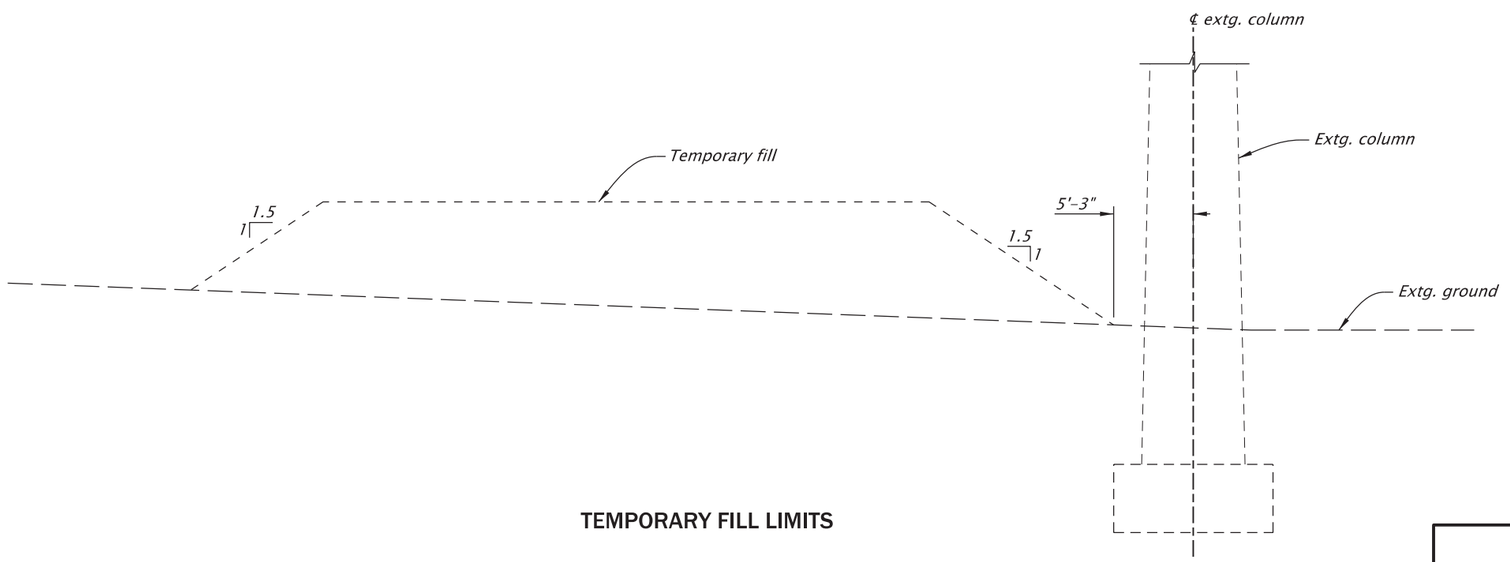

TEMPORARY FILL LIMITS

TEMPORARY ACCESS ROAD AT BENT 14 (BENTS 11-13 SIMILAR)

REGISTERED PROFESSIONAL ENGINEER
85555PE
Digitally Signed 2026.01.27 13:34:01-08'00'
OREGON
DEC. 21, 2011
MICHAEL G. McNULTY
EXPIRES: 12/31/2026

FINAL ELECTRONIC DOCUMENT
AVAILABLE UPON REQUEST

DOWL WWW.DOWL.COM

OREGON DEPARTMENT OF TRANSPORTATION

OR22: CENTER ST BRIDGE (PHASE 1) PROJECT
WILLAMINA-SALEM HIGHWAY
MARION & POLK COUNTIES

Designer: Michael McNulty
Reviewer: Bob Goodrich
Drafter: Steve Wolfer
Checker: Eric Bonn

DETAILS

SHEET NO.
BB19

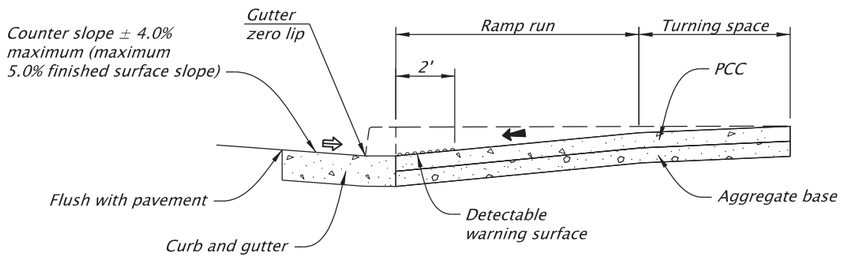

CURB RAMP CURB AND GUTTER DETAIL

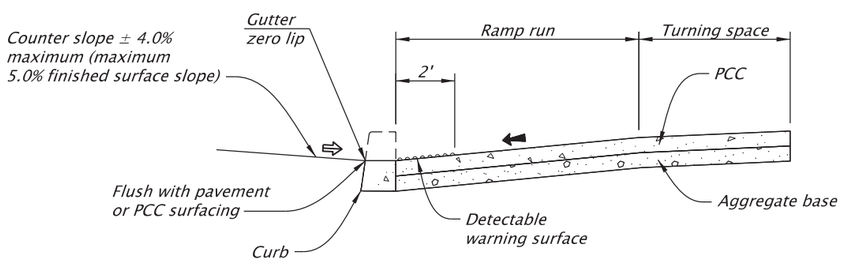

CURB RAMP STANDARD CURB DETAIL

LEGEND

#	*Point Identifier [Provide alpha or numeric value]*
X+XX.XX, XX.XX' / EL. XXX.XX' / E=X"	*Station, offset, elevation, curb exposure point (Leader Description Format)*
R#	*Ramp Number*

REGISTERED PROFESSIONAL ENGINEER
100246PE
Digitally Signed 2026.01.28 10:12:10-08'00'
OREGON
JULY 12, 2022
JASON BENJAMIN GALEAZZI
EXPIRES: 06/30/2027

FINAL ELECTRONIC DOCUMENT
AVAILABLE UPON REQUEST

DOWL WWW.DOWL.COM

OREGON DEPARTMENT OF TRANSPORTATION

OR22: CENTER ST BRIDGE (PHASE 1) PROJECT
WILLAMINA-SALEM HIGHWAY
MARION & POLK COUNTIES

Designer: Jason Galeazzi
Reviewer: Bob Goodrich
Drafter: Steve Wolfer
Checker: Kyle Farnsworth

CURB RAMP DETAILS

SHEET NO. BC01

59V-051

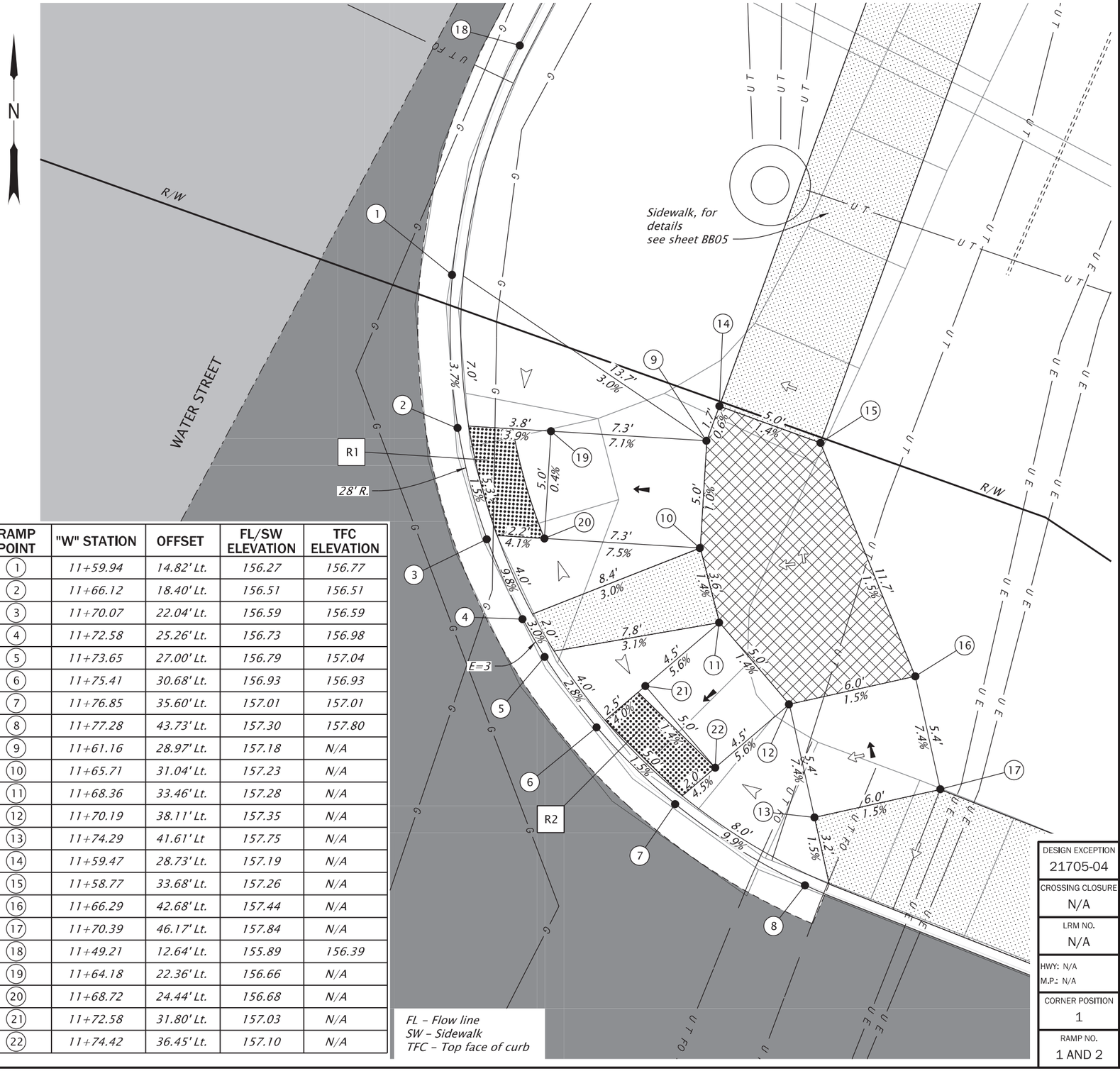

RAMP POINT	"W" STATION	OFFSET	FL/SW ELEVATION	TFC ELEVATION
1	11+59.94	14.82' Lt.	156.27	156.77
2	11+66.12	18.40' Lt.	156.51	156.51
3	11+70.07	22.04' Lt.	156.59	156.59
4	11+72.58	25.26' Lt.	156.73	156.98
5	11+73.65	27.00' Lt.	156.79	157.04
6	11+75.41	30.68' Lt.	156.93	156.93
7	11+76.85	35.60' Lt.	157.01	157.01
8	11+77.28	43.73' Lt.	157.30	157.80
9	11+61.16	28.97' Lt.	157.18	N/A
10	11+65.71	31.04' Lt.	157.23	N/A
11	11+68.36	33.46' Lt.	157.28	N/A
12	11+70.19	38.11' Lt.	157.35	N/A
13	11+74.29	41.61' Lt	157.75	N/A
14	11+59.47	28.73' Lt.	157.19	N/A
15	11+58.77	33.68' Lt.	157.26	N/A
16	11+66.29	42.68' Lt.	157.44	N/A
17	11+70.39	46.17' Lt.	157.84	N/A
18	11+49.21	12.64' Lt.	155.89	156.39
19	11+64.18	22.36' Lt.	156.66	N/A
20	11+68.72	24.44' Lt.	156.68	N/A
21	11+72.58	31.80' Lt.	157.03	N/A
22	11+74.42	36.45' Lt.	157.10	N/A

FL – Flow line
SW – Sidewalk
TFC – Top face of curb

- ACP full depth paving limits
- 2" grind and inlay
- Sidewalk
- Turning space
- Truncated dome detectable warning surface
- Cross slope 1.5% max. (Max. 2.0% finished surface slope)
- Running slope 7.5% max. (Max. 8.3% finished surface slope)
- Flare slope (Max. 10.0% finish surface slope)

CONSTRUCTION NOTES:

1. Slopes hold over elevations.
2. Max. cross slope change on ramp is 0.5% per foot.
3. See std. dwgs. for details not shown.
4. For sidewalk joint details, see Std. Dwg. RD722.
5. Curb height E=6" unless otherwise noted.
6. Plan view slopes along curb are at Top Back of Curb.

DESIGN EXCEPTION	21705-04
CROSSING CLOSURE	N/A
LRM NO.	N/A
HWY: N/A	
M.P.: N/A	
CORNER POSITION	1
RAMP NO.	1 AND 2

REGISTERED PROFESSIONAL ENGINEER
100246PE
Digitally Signed 2026.06.30 11:32:33-07'00'
OREGON
JULY 12, 2022
JASON BENJAMIN GALEAZZI
EXPIRES: 06/30/2027

FINAL ELECTRONIC DOCUMENT AVAILABLE UPON REQUEST

DOWL WWW.DOWL.COM

OREGON DEPARTMENT OF TRANSPORTATION

OR22: CENTER ST BRIDGE (PHASE 1) PROJECT
WILLAMINA-SALEM HIGHWAY
MARION & POLK COUNTIES

Designer: Jason Galeazzi
Reviewer: Bob Goodrich
Drafter: Steve Wolfer
Checker: Kyle Farnsworth

CURB RAMP DETAILS

SHEET NO. BC02

59V-051

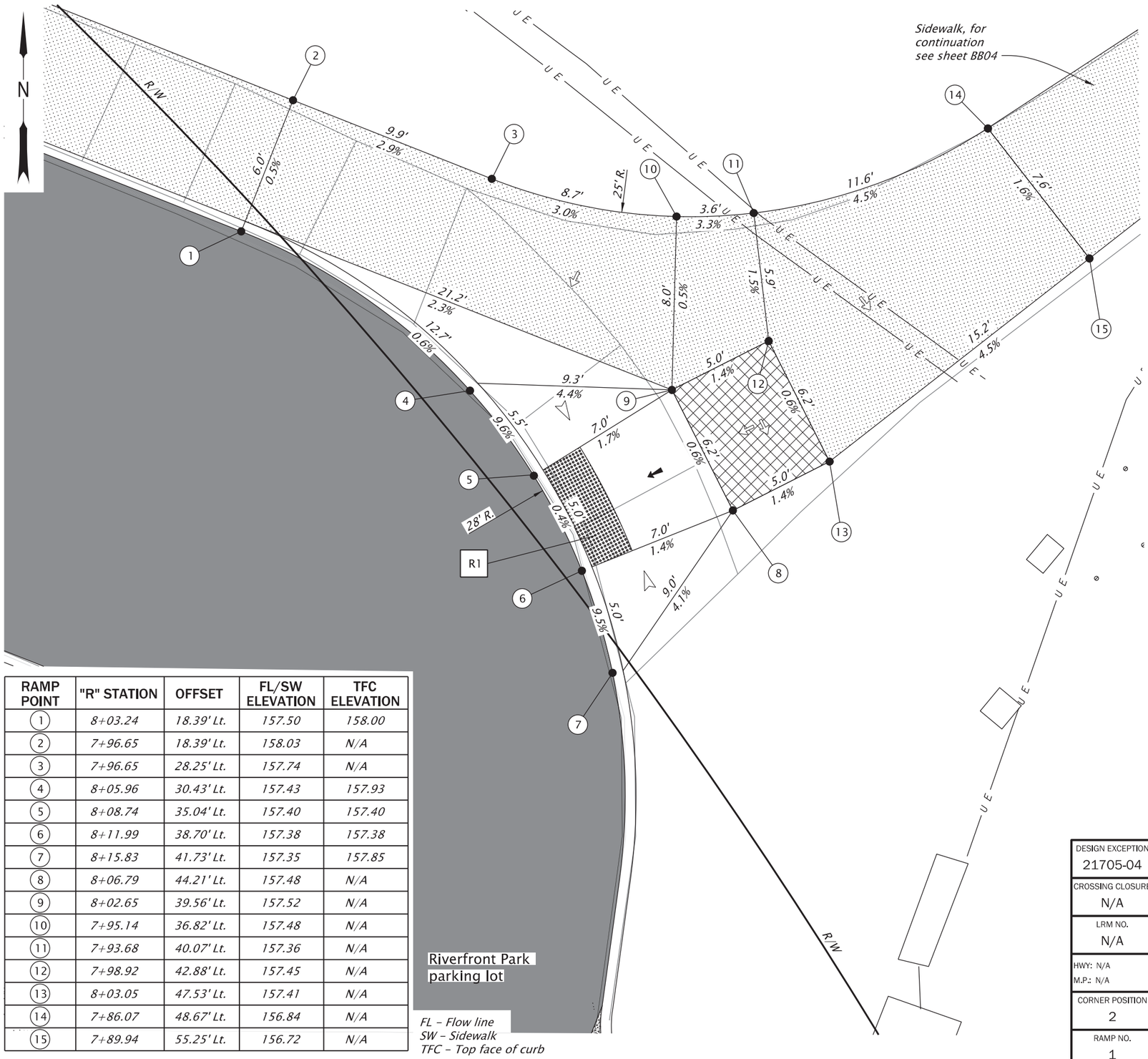

RAMP POINT	"R" STATION	OFFSET	FL/SW ELEVATION	TFC ELEVATION
1	8+03.24	18.39' Lt.	157.50	158.00
2	7+96.65	18.39' Lt.	158.03	N/A
3	7+96.65	28.25' Lt.	157.74	N/A
4	8+05.96	30.43' Lt.	157.43	157.93
5	8+08.74	35.04' Lt.	157.40	157.40
6	8+11.99	38.70' Lt.	157.38	157.38
7	8+15.83	41.73' Lt.	157.35	157.85
8	8+06.79	44.21' Lt.	157.48	N/A
9	8+02.65	39.56' Lt.	157.52	N/A
10	7+95.14	36.82' Lt.	157.48	N/A
11	7+93.68	40.07' Lt.	157.36	N/A
12	7+98.92	42.88' Lt.	157.45	N/A
13	8+03.05	47.53' Lt.	157.41	N/A
14	7+86.07	48.67' Lt.	156.84	N/A
15	7+89.94	55.25' Lt.	156.72	N/A

FL – Flow line
SW – Sidewalk
TFC – Top face of curb

ACP full depth paving limits

Sidewalk

Turning space

Truncated dome detectable warning surface

Cross slope 1.5% max.
(Max. 2.0% finished surface slope)

Running slope 7.5% max.
(Max. 8.3% finished surface slope)

Flare slope
(Max. 10.0% finish surface slope)

CONSTRUCTION NOTES:

1. *Slopes hold over elevations.*
2. *Max. cross slope change on ramp is 0.5% per foot.*
3. *See std. dwgs. for details not shown.*
4. *For sidewalk joint details, see Std. Dwg. RD722.*
5. *Curb height E=6" unless otherwise noted.*
6. *Plan view slopes along curb are at Top Back of Curb.*

DESIGN EXCEPTION	21705-04
CROSSING CLOSURE	N/A
LRM NO.	N/A
HWY: N/A	
M.P.: N/A	
CORNER POSITION	2
RAMP NO.	1

REGISTERED PROFESSIONAL ENGINEER
100246PE
Digitally Signed 2026.06.02 15:40:42-07'00'
OREGON
JULY 12, 2022
JASON BENJAMIN GALEAZZI
EXPIRES: 06/30/2027

FINAL ELECTRONIC DOCUMENT AVAILABLE UPON REQUEST

DOWL WWW.DOWL.COM

OREGON DEPARTMENT OF TRANSPORTATION

OR22: CENTER ST BRIDGE (PHASE 1) PROJECT
WILLAMINA-SALEM HIGHWAY
MARION & POLK COUNTIES

Designer: Jason Galeazzi
Reviewer: Bob Goodrich
Drafter: Steve Wolfer
Checker: Kyle Farnsworth

CURB RAMP DETAILS

SHEET NO. BC03

59V-051

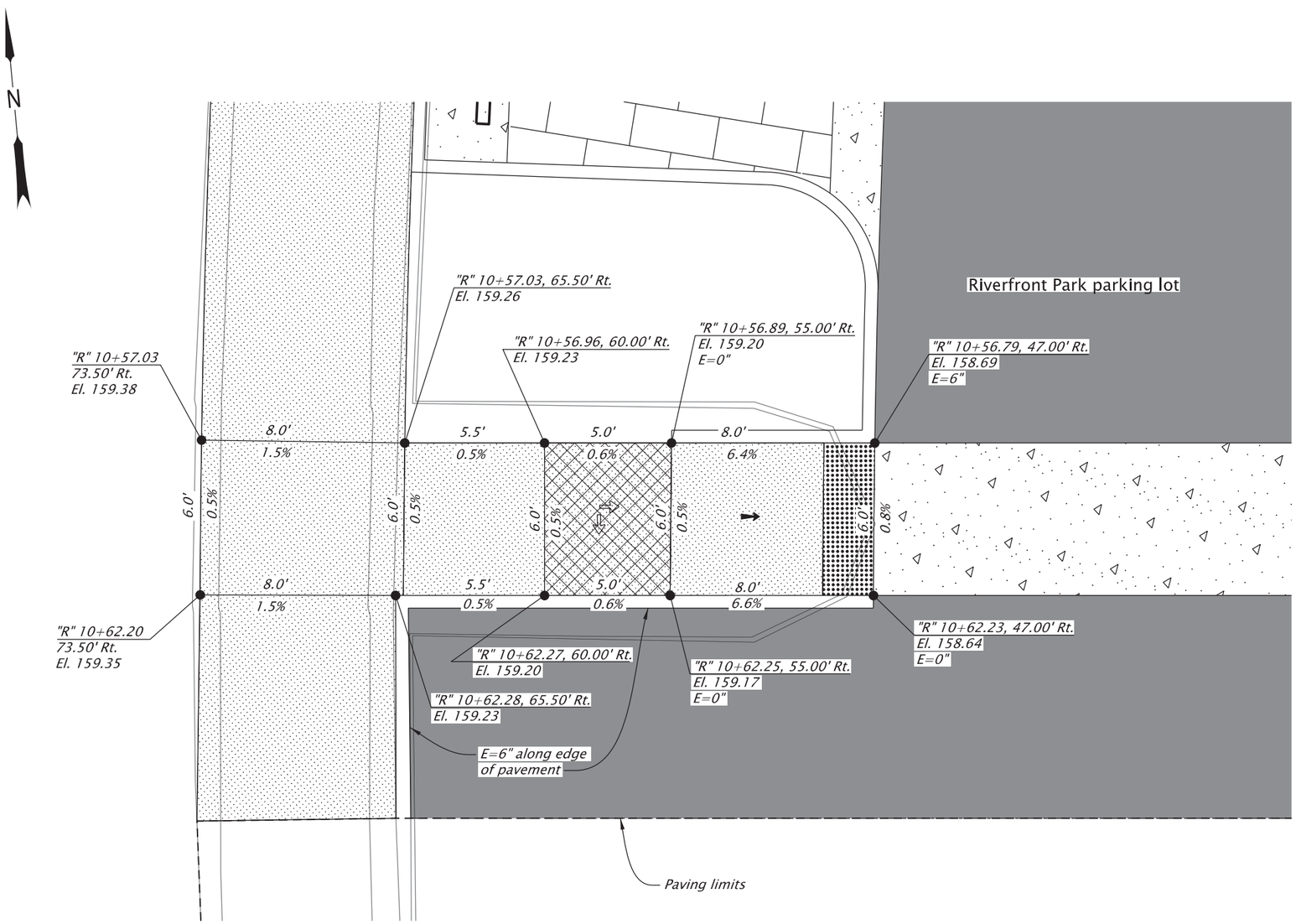

Turning space

Full depth pvmt.

Sidewalk

PCC surfacing

Truncated dome detectable warning surface

Cross slope 1.5% max.
(Max. 2.0% finished surface slope)

Running slope 7.5% max.
(Max. 8.3% finished surface slope)

E = Curb exposure

FG = Finish grade

CONSTRUCTION NOTES:

1. Slopes hold over elevations.
2. Max. cross slope change on ramp is 0.5% per foot.
3. See std. dwgs. for details not shown.
4. For sidewalk joint details, see Std. Dwg. RD722.
5. Curb height E=6" unless otherwise noted.
6. Plan view slopes along curb are at Top Back of Curb.

SCALE: 1"= 5'

5 2.5 0 5
FEET

DESIGN EXCEPTION	21705-04
CROSSING CLOSURE	N/A
LRM NO.	N/A
HWY: N/A	
M.P.: N/A	
CORNER POSITION	N/A
RAMP NO.	N/A

REGISTERED PROFESSIONAL ENGINEER
100246PE
Digitally Signed 2026.01.28 10:07:06-08'00'
OREGON
JULY 12, 2022
JASON BENJAMIN GALEAZZI

EXPIRES: 06/30/2027

FINAL ELECTRONIC DOCUMENT
AVAILABLE UPON REQUEST

DOWL WWW.DOWL.COM

OREGON DEPARTMENT OF TRANSPORTATION

OR22: CENTER ST BRIDGE (PHASE 1) PROJECT
WILLAMINA-SALEM HIGHWAY
MARION & POLK COUNTIES

Designer: Jason Galeazzi
Reviewer: Bob Goodrich
Drafter: Steve Wolfer
Checker: Kyle Farnsworth

CURB RAMP DETAILS

SHEET NO. BC04

59V-051

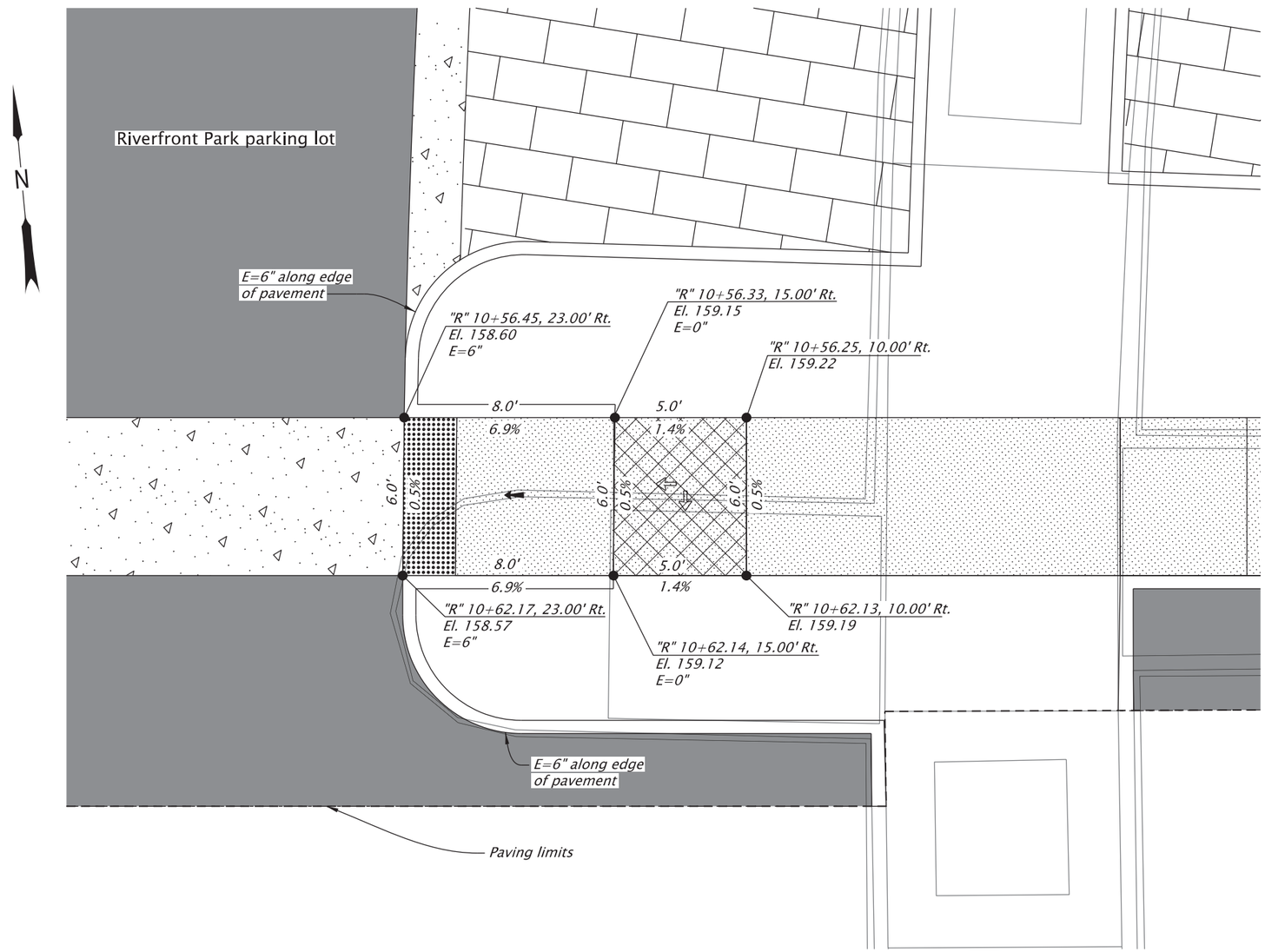

Turning space

Full depth pvmt.

Sidewalk

Truncated dome detectable warning surface

Cross slope 1.5% max.
(Max. 2.0% finished surface slope)

Running slope 7.5% max.
(Max. 8.3% finished surface slope)

E = Curb exposure

FG = Finish grade

CONSTRUCTION NOTES:

1. Slopes hold over elevations.
2. Max. cross slope change on ramp is 0.5% per foot.
3. See std. dwgs. for details not shown.
4. For sidewalk joint details, see Std. Dwg. RD722.
5. Curb height E=6" unless otherwise noted.
6. Plan view slopes along curb are at Top Back of Curb.

SCALE: 1"= 5'

5 2.5 0 5
FEET

DESIGN EXCEPTION	21705-04
CROSSING CLOSURE	N/A
LRM NO.	N/A
HWY: N/A	
M.P.: N/A	
CORNER POSITION	N/A
RAMP NO.	N/A

REGISTERED PROFESSIONAL ENGINEER
100246PE
Digitally Signed 2026.01.28 10:08:14-08'00'
OREGON
JULY 12, 2022
JASON BENJAMIN GALEAZZI

EXPIRES: 06/30/2027

FINAL ELECTRONIC DOCUMENT
AVAILABLE UPON REQUEST

DOWL WWW.DOWL.COM

OREGON DEPARTMENT OF TRANSPORTATION

OR22: CENTER ST BRIDGE (PHASE 1) PROJECT
WILLAMINA-SALEM HIGHWAY
MARION & POLK COUNTIES

Designer: Jason Galeazzi
Reviewer: Bob Goodrich
Drafter: Steve Wolfer
Checker: Kyle Farnsworth

CURB RAMP DETAILS

SHEET NO. BC05

59V-051

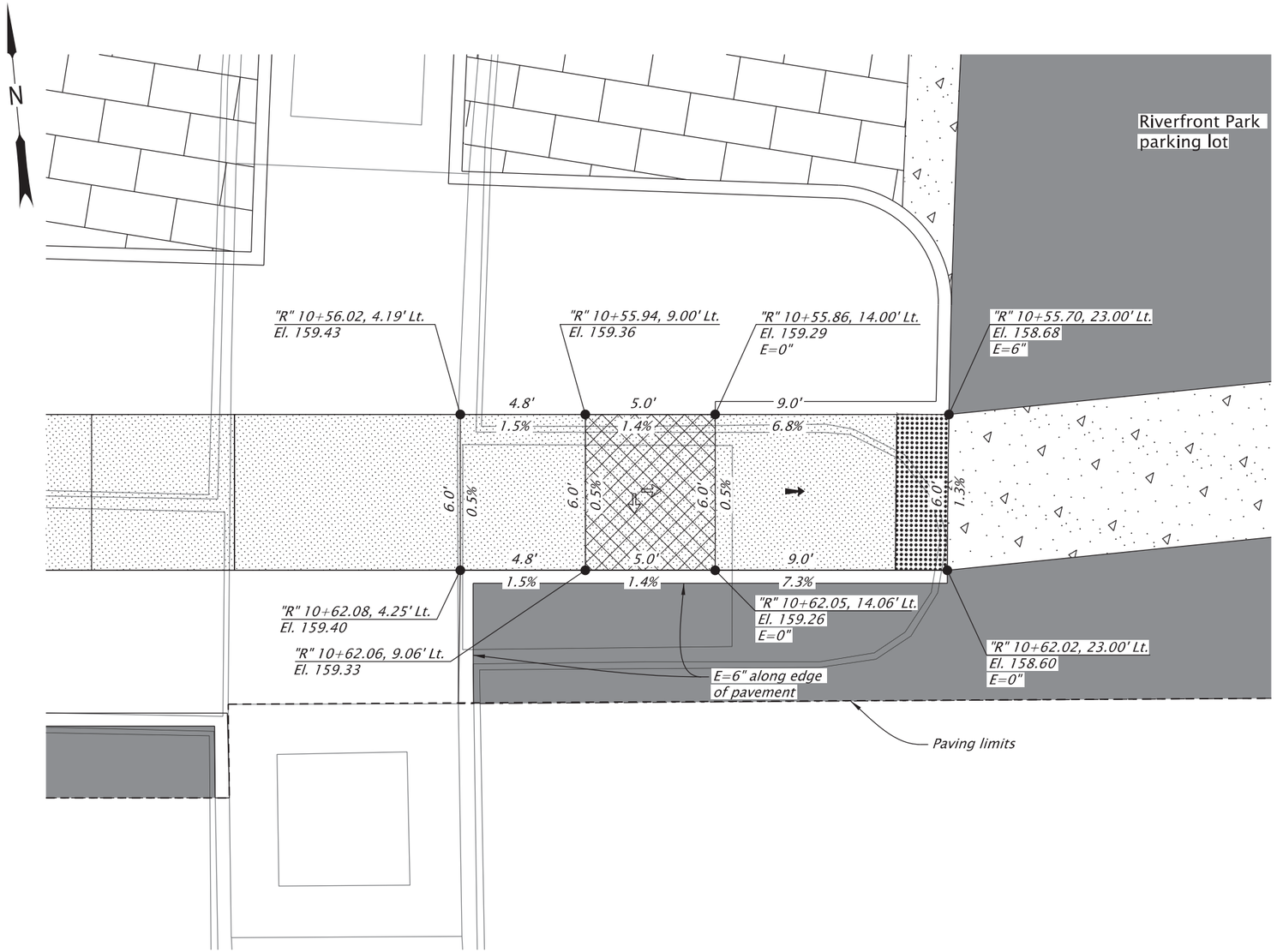

Turning space

Full depth pvmt.

Sidewalk

PCC surfacing

Truncated dome detectable warning surface

Cross slope 1.5% max.
(Max. 2.0% finished surface slope)

Running slope 7.5% max.
(Max. 8.3% finished surface slope)

E = Curb exposure

FG = Finish grade

CONSTRUCTION NOTES:

1. Slopes hold over elevations.
2. Max. cross slope change on ramp is 0.5% per foot.
3. See std. dwgs. for details not shown.
4. For sidewalk joint details, see Std. Dwg. RD722.
5. Curb height E=6" unless otherwise noted.
6. Plan view slopes along curb are at Top Back of Curb.

SCALE: 1"= 5'

5 2.5 0 5
FEET

DESIGN EXCEPTION	21705-04
CROSSING CLOSURE	N/A
LRM NO.	N/A
HWY: N/A M.P.: N/A	
CORNER POSITION	N/A
RAMP NO.	N/A

REGISTERED PROFESSIONAL ENGINEER
100246PE
Digitally Signed 2026.01.28 10:09:02-08'00'
OREGON
JULY 12, 2022
JASON BENJAMIN GALEAZZI

EXPIRES: 06/30/2027

FINAL ELECTRONIC DOCUMENT AVAILABLE UPON REQUEST

DOWL WWW.DOWL.COM

OREGON DEPARTMENT OF TRANSPORTATION

OR22: CENTER ST BRIDGE (PHASE 1) PROJECT
WILLAMINA-SALEM HIGHWAY
MARION & POLK COUNTIES

Designer: Jason Galeazzi
Reviewer: Bob Goodrich
Drafter: Steve Wolfer
Checker: Kyle Farnsworth

CURB RAMP DETAILS

SHEET NO. BC06

59V-051

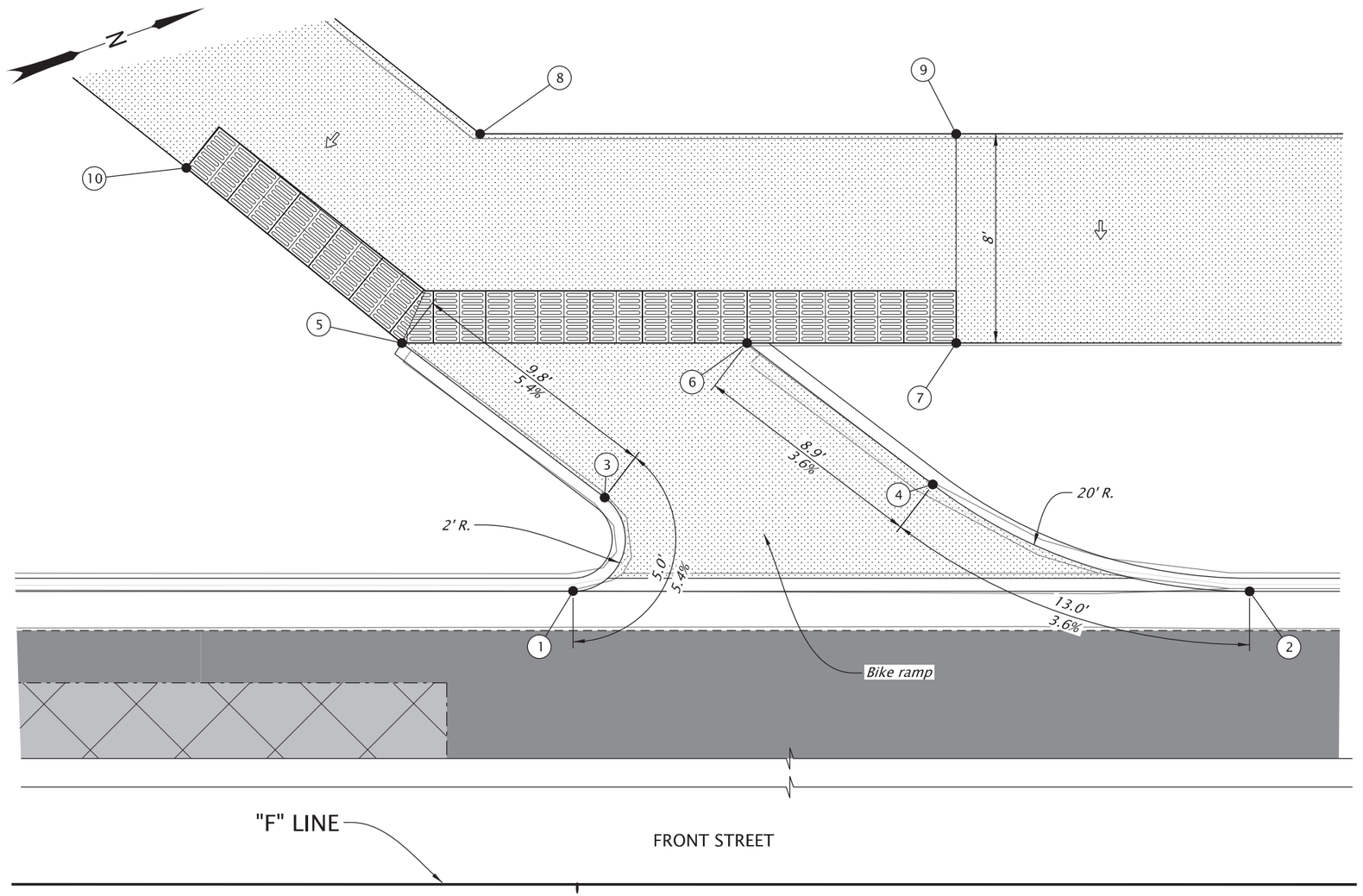

"F" 18

4" grind and inlay

ACP full depth paving limits

Sidewalk

Detectable guide strip

Cross slope 1.5% max.
(Max. 2.0% finished surface slope)

CONSTRUCTION NOTES:

1. Slopes hold over elevations.
2. Max. cross slope change on ramp is 0.5% per foot.
3. See std. dwgs. for details not shown.
4. For sidewalk joint details, see Std. Dwg. RD722.
5. Curb height E=7" unless otherwise noted.
6. Plan view slopes along curb are at flow line.
7. ADA inspection is not required for bike ramps.

RAMP POINT	"F" STATION	OFFSET	FL/SW ELEVATION	TFC ELEVATION
1	18+00.17	31.36' Rt.	158.17	158.75
2	17+74.29	31.36' Rt.	158.10	156.68
3	17+98.95	34.95' Rt.	158.44	158.64
4	17+86.40	35.45' Rt.	158.57	158.81
5	18+06.71	40.86' Rt.	158.97	158.97
6	17+93.51	40.86' Rt.	158.89	158.90
7	17+85.51	40.86' Rt.	158.88	N/A
8	18+03.72	48.86' Rt.	159.10	N/A
9	17+85.51	48.86' Rt.	159.00	N/A
10	18+14.96	47.56' Rt.	159.07	N/A

FL - Flow line
SW - Sidewalk
TFC - Top face of curb

SCALE: 1"= 5'

5 2.5 0 5
FEET

DESIGN EXCEPTION
N/A

CROSSING CLOSURE
N/A

LRM NO.
N/A

HWY: N/A
M.P.: N/A

CORNER POSITION
N/A

RAMP NO.
N/A

REGISTERED PROFESSIONAL ENGINEER
100246PE
Digitally Signed 2026.06.05 16:14:19-07'00'
OREGON
JULY 12, 2022
JASON BENJAMIN GALEAZZI

EXPIRES: 06/30/2027

FINAL ELECTRONIC DOCUMENT
AVAILABLE UPON REQUEST

DOWL WWW.DOWL.COM

OREGON DEPARTMENT OF TRANSPORTATION

OR22: CENTER ST BRIDGE (PHASE 1) PROJECT
WILLAMINA-SALEM HIGHWAY
MARION & POLK COUNTIES

Designer: Jason Galeazzi
Reviewer: Bob Goodrich
Drafter: Steve Wolfer
Checker: Kyle Farnsworth

CURB RAMP DETAILS

SHEET NO.
BC07

59V-051

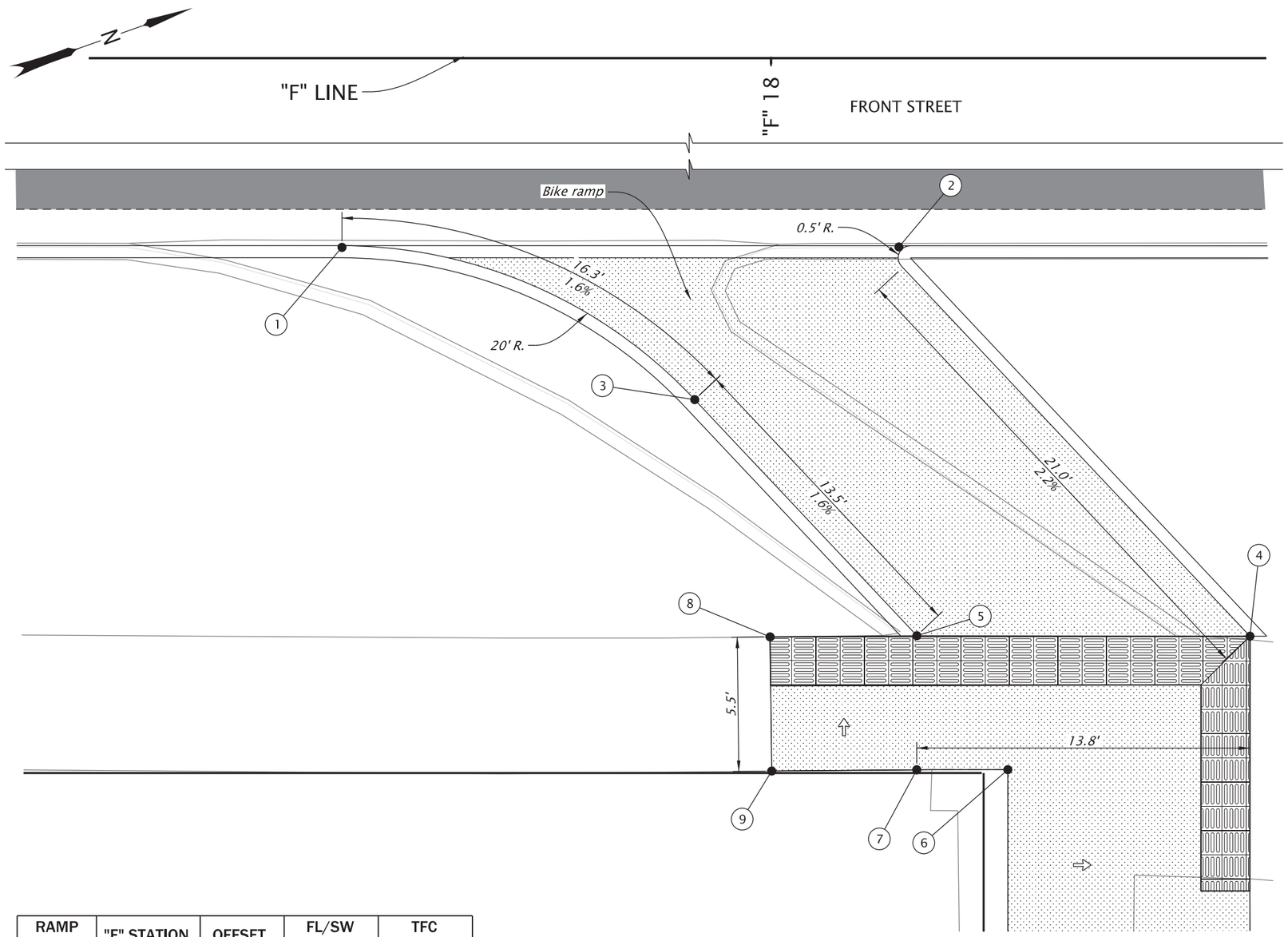

ACP full depth paving limits

Sidewalk

Detectable guide strip

Cross slope 1.5% max.
(Max. 2.0% finished surface slope)

CONSTRUCTION NOTES:

1. Slopes hold over elevations.
2. Max. cross slope change on ramp is 0.5% per foot.
3. See std. dwgs. for details not shown.
4. For sidewalk joint details, see Std. Dwg. RD722.
5. Curb height E=7" unless otherwise noted.
6. Plan view slopes along curb are at flow line.
7. ADA inspection is not required for bike ramps.

SCALE: 1"= 5'

5 2.5 0 5
FEET

RAMP POINT	"F" STATION	OFFSET	FL/SW ELEVATION	TFC ELEVATION
1	18+77.77	52.88' Lt.	157.60	158.18
2	17+94.74	52.88' Lt.	157.58	158.16
3	18+03.21	59.16' Lt.	157.86	158.12
4	17+80.20	69.00' Lt.	158.05	158.05
5	17+93.96	68.98' Lt.	158.08	158.08
6 *	17+90.20	74.52' Lt.	158.12	N/A
7 *	17+93.96	74.51' Lt.	158.16	N/A
8 *	18+00.00	69.03' Lt.	157.98	N/A
9 *	18+00.00	74.57' Lt.	158.15	N/A

* - Match to exist. walk
FL - Flow line
SW - Sidewalk
TFC - Top face of curb

DESIGN EXCEPTION
N/A

CROSSING CLOSURE
N/A

LRM NO.
N/A

HWY: N/A
M.P.: N/A

CORNER POSITION
N/A

RAMP NO.
N/A

REGISTERED PROFESSIONAL ENGINEER
100246PE
Digitally Signed 2026.06.05 16:15:32-07'00'
OREGON
JULY 12, 2022
JASON BENJAMIN GALEAZZI

EXPIRES: 06/30/2027

FINAL ELECTRONIC DOCUMENT
AVAILABLE UPON REQUEST

DOWL WWW.DOWL.COM

OREGON DEPARTMENT OF TRANSPORTATION

OR22: CENTER ST BRIDGE (PHASE 1) PROJECT
WILLAMINA-SALEM HIGHWAY
MARION & POLK COUNTIES

Designer: Jason Galeazzi
Reviewer: Bob Goodrich
Drafter: Steve Wolfer
Checker: Kyle Farnsworth

CURB RAMP DETAILS

SHEET NO.
BC08

59V-051

| SHEET NUMBER | NOTE No. ON PLANS | DESIGN HEIGHT OF COVER (FEET) (1) | PIPE: CIRCULAR OR ELLIPTICAL: SIZE IN (Inches) 10 | 12 | 18 | 24 | | | PIPE - ARCH: HELICAL: Riveted Welded or Lock Seam: EQUIV. RND SIZE (Inches) | LENGTH (FEET) | CROSS - SECTIONAL DIMENSIONS (2): SPAN (Feet-Inches) | RISE (Feet-Inches) | CORNER RADII (Inches) | DRAIN (PERFORATED) | CULVERT (ROAD APPROACH) | CULVERT (CONDUIT) | CULVERT | IRRIGATION | SIPHON | STORM SEWER | SANITARY SEWER | OTHERS (SEE REMARKS) | WATERTIGHT JOINTS | SLOPE ANCHORS | IMPERFECT TRENCH | pH | RESISTIVITY (HUNDREDS) | TERMINAL TREATMENT: LT. / RT. | SLOPED ENDS | SKEW NUMBER | PAVED END SLOPES | No. | ALTERNATE MATERIALS: HELICAL CORRUGATED METAL: ALUMINUM: SIZE OF CORRUGATIONS: 1 1/2" x 1/4" RIVETED, WELDED OR LOCK SEAM: PLATE THKN. (Inches) | CROSS SECTION (3) | 2 2/3" x 1/2" RIVETED, WELDED OR LOCK SEAM: PLATE THKN. (Inches) | CROSS SECTION (3) | 3" x 1" RIVETED, WELDED OR LOCK SEAM: PLATE THKN. (Inches) | CROSS SECTION (3) | COATING (4) | LOCK SEAM: SMOOTH WALL SPIRAL RIB ¾" x ¾" @ 7 ½" O.C. Or ¾" x 1" @ 11 ½" O.C.: PLATE THKN. (Inches) | CROSS SECTION (3) | COATING (4) | ALUMINIZED OR GALVANIZED IRON AND STEEL: SIZE OF CORRUGATIONS: 1 1/2" x 1/4" RIVETED, WELDED OR LOCK SEAM: PLATE THKN. (Inches) | CROSS SECTION (3) | 2 2/3" x 1/2" RIVETED, WELDED OR LOCK SEAM: PLATE THKN. (Inches) | CROSS SECTION (3) | 3" x 1" RIVETED, WELDED OR LOCK SEAM: PLATE THKN. (Inches) | CROSS SECTION (3) | COATING (4): GALVANIZED | COATING (4): ALUMINIZED | LOCK SEAM: SMOOTH WALL SPIRAL RIB ¾" x ¾" @ 7 ½" O.C. Or ¾" x 1" @ 11 ½" O.C.: PLATE THKN. (Inches) | CROSS SECTION (3) | COATING (4): GALVANIZED | COATING (4): ALUMINIZED | RIGID: PRE-CAST CONCRETE REINF.: III | IV | V | PLASTIC & IRON: CORRUGATED HDPE | SOLID WALL HDPE | REINFORCED HDPE | PVC - 46 PSI STIFFNESS | POLYPROPYLENE, DOUBLE WALL | POLYPROPYLENE, TRIPLE WALL | DUCTILE IRON - PIPE CLASS | APPURTENANCES: MANHOLES: DEPTH, TOP OF COVER TO INVERT (Feet) | DIAMETER OF LARGEST PIPE IN BASE (In.) | CONC.: PRECAST | CAST-IN-PLACE | DROP MANHOLE | SPECIAL | INLETS TYPE: G-2 | CG-3 | D Modified | G-2 Modified | EXTENSION: LEFT (Feet) | RIGHT (Feet) | EXTG. PIPE MATERIAL (5) | REMARKS |
|---|---|---

59V-051

| SHEET NUMBER | NOTE No. ON PLANS | DESIGN HEIGHT OF COVER (FEET) (1) | PIPE: CIRCULAR OR ELLIPTICAL, SIZE IN (Inches) 10 | 12 | 18 | 24 | | | PIPE - ARCH: HELICAL Riveted Welded or Lock Seam | EQUIV. RND SIZE (Inches) | LENGTH (FEET) | CROSS - SECTIONAL DIMENSIONS (2) SPAN (Feet-Inches) | RISE | CORNER RADII (Inches) | USE / INSTALLATION CRITERIA: DRAIN (PERFORATED) | CULVERT (ROAD APPROACH) | CULVERT (CONDUIT) | CULVERT | IRRIGATION | SIPHON | STORM SEWER | SANITARY SEWER | OTHERS (SEE REMARKS) | WATERTIGHT JOINTS | SLOPE ANCHORS | IMPERFECT TRENCH | pH | RESISTIVITY (HUNDREDS) | TERMINAL TREATMENT: LT. / RT. SLOPED ENDS | SKEW NUMBER | PAVED END SLOPES No. | ALTERNATE MATERIALS: HELICAL CORRUGATED METAL, ALUMINUM, SIZE OF CORRUGATIONS, RIVETED, WELDED OR LOCK SEAM: 1 1/2" x 1/4" PLATE THKN. (Inches) | CROSS SECTION (3) | 2 2/3" x 1/2" PLATE THKN. (Inches) | CROSS SECTION (3) | 3" x 1" PLATE THKN. (Inches) | CROSS SECTION (3) | COATING (4) | LOCK SEAM: SMOOTH WALL SPIRAL RIB 3/4" x 3/4" @ 7 1/2" O.C. Or 3/4" x 1" @ 11 1/2" O.C. PLATE THKN. (Inches) | CROSS SECTION (3) | COATING (4) | ALUMINIZED OR GALVANIZED IRON AND STEEL, SIZE OF CORRUGATIONS, RIVETED, WELDED OR LOCK SEAM: 1 1/2" x 1/4" PLATE THKN. (Inches) | CROSS SECTION (3) | 2 2/3" x 1/2" PLATE THKN. (Inches) | CROSS SECTION (3) | 3" x 1" PLATE THKN. (Inches) | CROSS SECTION (3) | COATING (4) | GALVANIZED | ALUMINIZED | LOCK SEAM: SMOOTH WALL SPIRAL RIB 3/4" x 3/4" @ 7 1/2" O.C. Or 3/4" x 1" @ 11 1/2" O.C. PLATE THKN. (Inches) | CROSS SECTION (3) | COATING (4) | GALVANIZED | ALUMINIZED | RIGID: PRE-CAST CONCRETE REINF. III | IV | V | PLASTIC & IRON: CORRUGATED HDPE | SOLID WALL HDPE | REINFORCED HDPE | PVC - 46 PSI STIFFNESS | POLYPROPYLENE, DOUBLE WALL | POLYPROPYLENE, TRIPLE WALL | DUCTILE IRON - PIPE CLASS | APPURTENANCES: MANHOLES: DEPTH, TOP OF COVER TO INVERT (Feet) | DIAMETER OF LARGEST PIPE IN BASE (In.) | CONC.: PRECAST | CAST-IN-PLACE | DROP MANHOLE | SPECIAL | INLETS TYPE: G-2 | CG-3 | D Modified | G-2 Modified (Number Required) | EXTENSION: LEFT (Feet) | RIGHT (Feet) | EXTG. PIPE MATERIAL (5) | REMARKS |
|---|---|---

Sec. 22, T. 7 S., R. 3 W., W.M.

59V-051

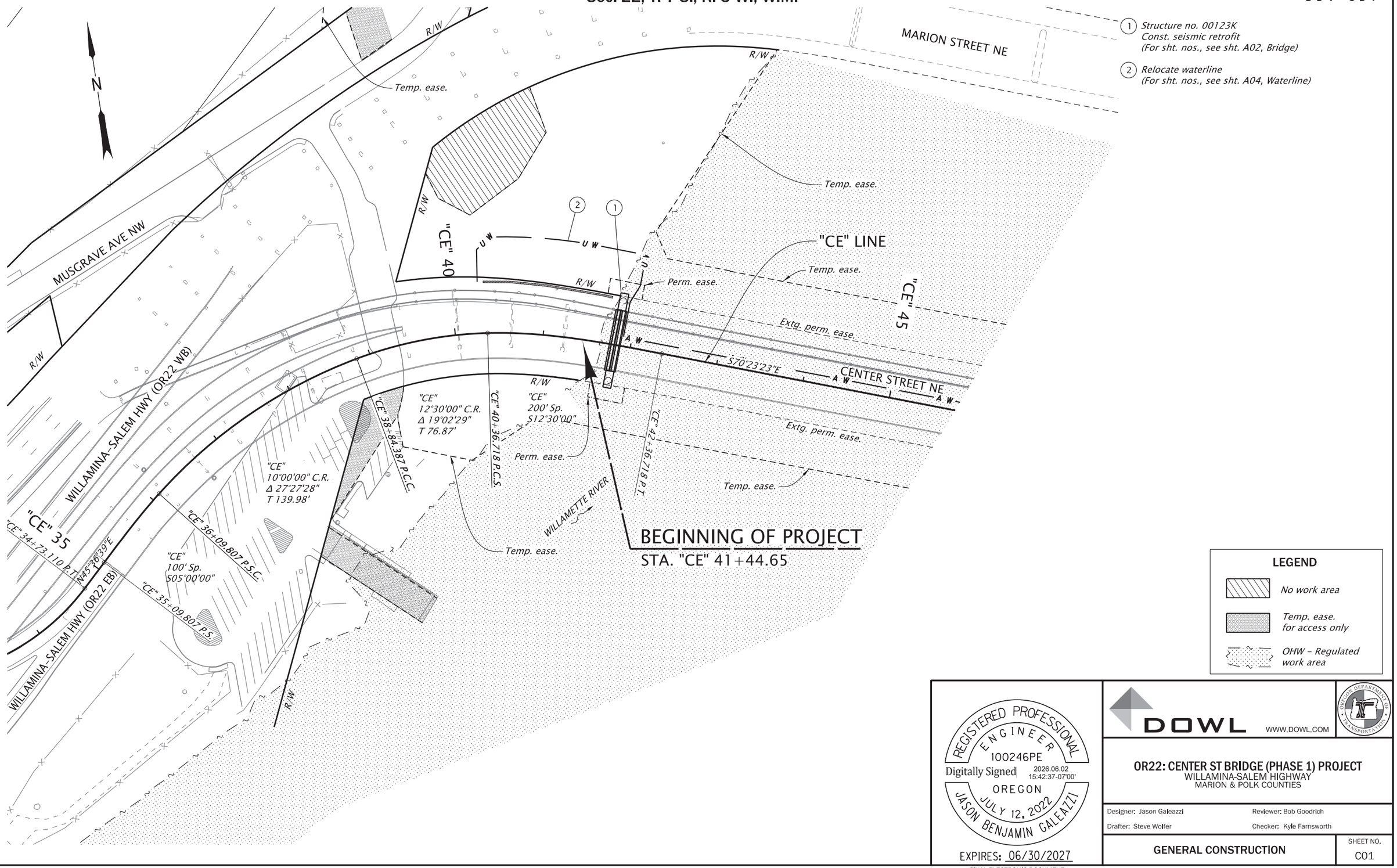

REGISTERED PROFESSIONAL ENGINEER
100246PE
Digitally Signed 2026.06.02 15:42:37-07'00'
OREGON
JULY 12, 2022
JASON BENJAMIN GALEAZZI

EXPIRES: 06/30/2027

FINAL ELECTRONIC DOCUMENT AVAILABLE UPON REQUEST

DOWL WWW.DOWL.COM

OREGON DEPARTMENT OF TRANSPORTATION

OR22: CENTER ST BRIDGE (PHASE 1) PROJECT
WILLAMINA-SALEM HIGHWAY
MARION & POLK COUNTIES

Designer: Jason Galeazzi
Reviewer: Bob Goodrich
Drafter: Steve Wolfer
Checker: Kyle Farnsworth

GENERAL CONSTRUCTION

SHEET NO. C01

59V-051

Sec. 22, T. 7 S., R. 3 W., W.M.

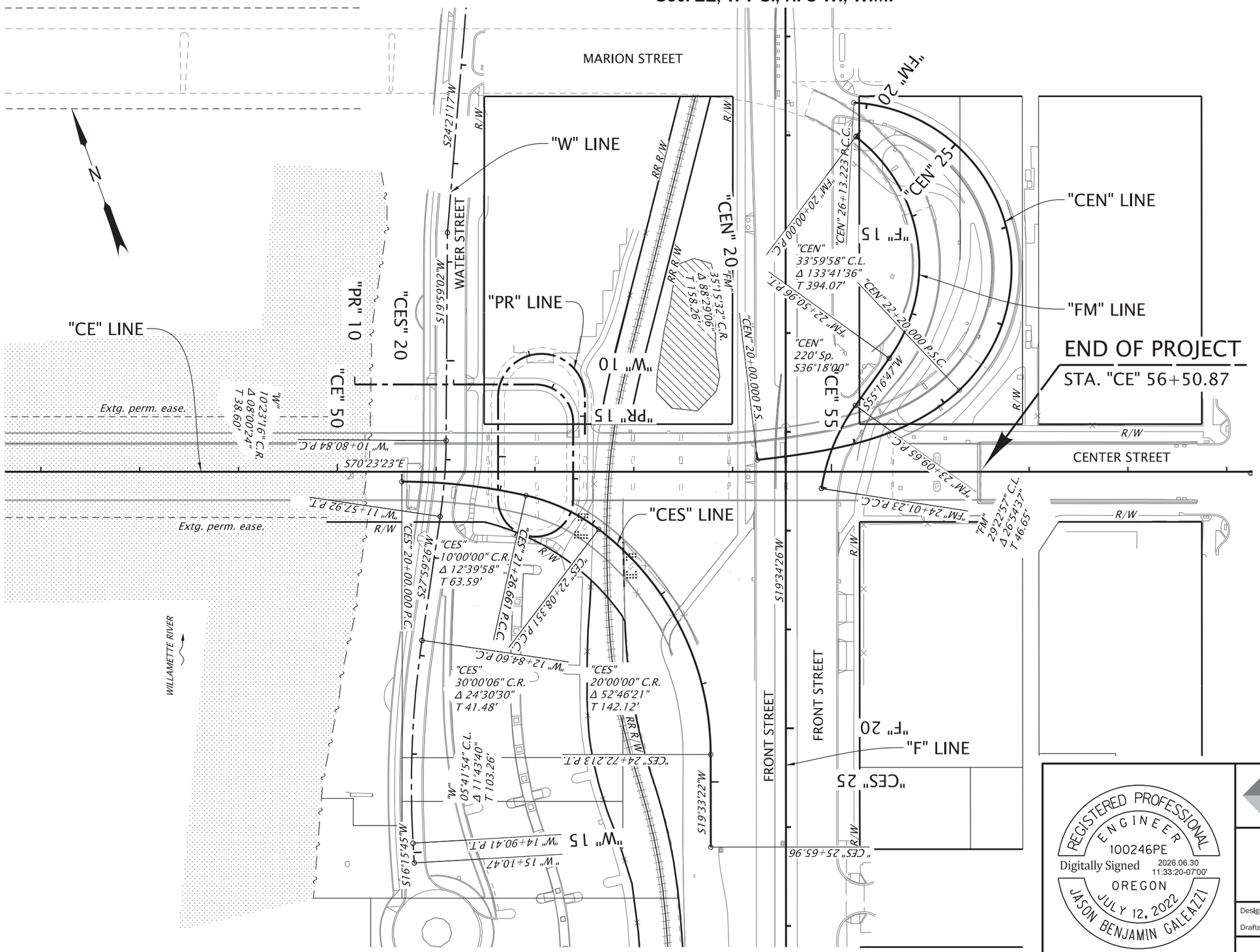

LEGEND

- OHW – Regulated work area
- No work area

REGISTERED PROFESSIONAL ENGINEER
100246PE
Digitally Signed 2026.06.30 11:33:20-07'00'
OREGON
JULY 12, 2022
JASON BENJAMIN GALEAZZI
EXPIRES: 06/30/2027

FINAL ELECTRONIC DOCUMENT AVAILABLE UPON REQUEST

DOWL WWW.DOWL.COM

OREGON DEPARTMENT OF TRANSPORTATION

OR22: CENTER ST BRIDGE (PHASE 1) PROJECT
WILLAMINA-SALEM HIGHWAY
MARION & POLK COUNTIES

Designer: Jason Galeazzi
Reviewer: Bob Goodrich
Drafter: Steve Wolfer
Checker: Kyle Farnsworth

ALIGNMENT

SHEET NO. C02

59V-051

Sec. 22, T. 7 S., R. 3 W., W.M.

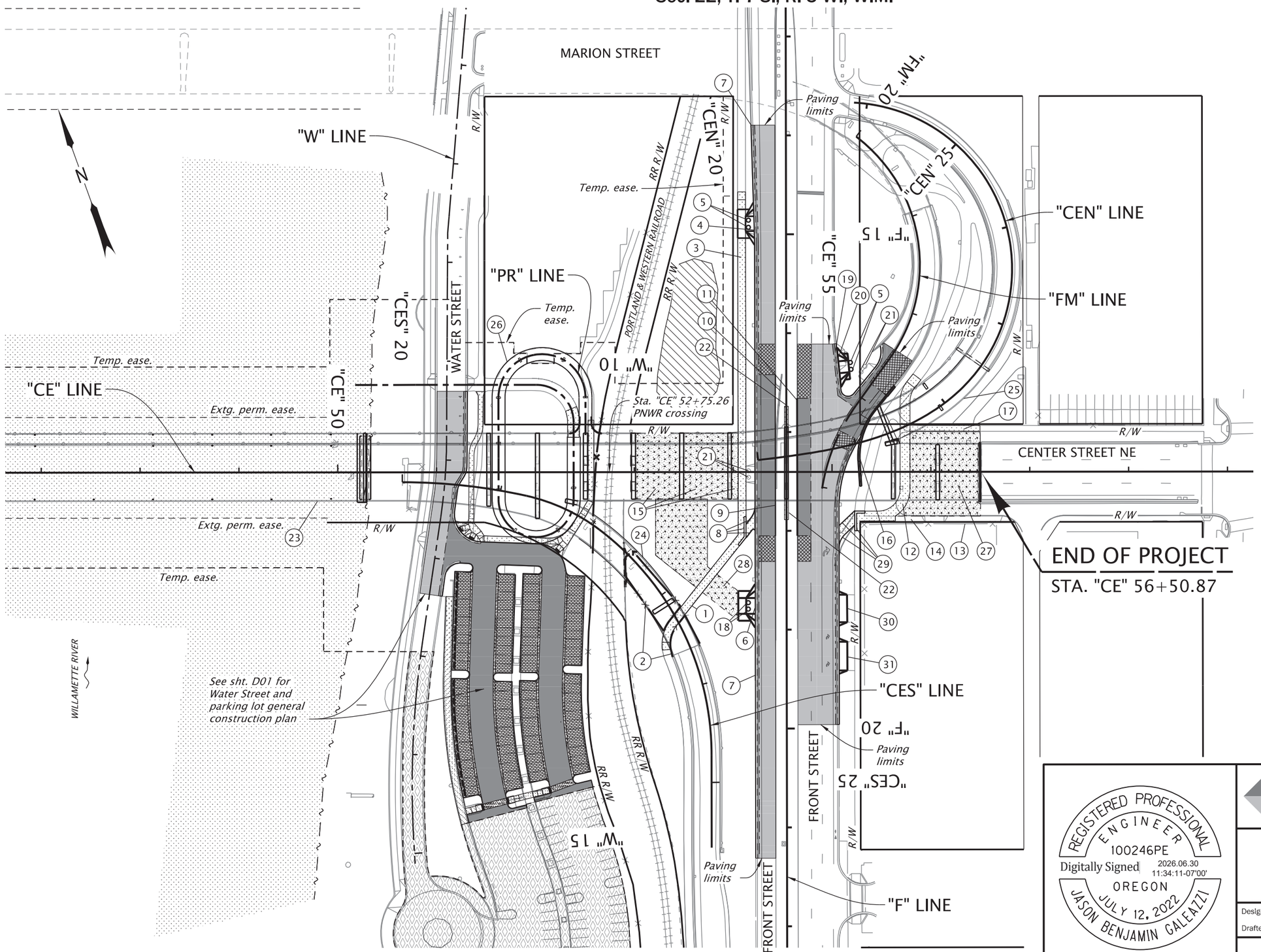

LEGEND

- No work area
- OHW – Regulated work area
- Temp. ease. for access only
- ACP full depth paving limits
- 2" grind and inlay
- 4" grind and inlay
- Concrete sidewalk
- Unit pavers
- Aggregate maint. pad Nom. comp. thkn. – 18"
- PCC surfacing

REGISTERED PROFESSIONAL ENGINEER
100246PE
Digitally Signed 2026.06.30 11:34:11-07'00'
OREGON
JULY 12, 2022
JASON BENJAMIN GALEAZZI

EXPIRES: 06/30/2027

FINAL ELECTRONIC DOCUMENT AVAILABLE UPON REQUEST

DOWL WWW.DOWL.COM

OREGON DEPARTMENT OF TRANSPORTATION

OR22: CENTER ST BRIDGE (PHASE 1) PROJECT
WILLAMINA-SALEM HIGHWAY
MARION & POLK COUNTIES

Designer: Jason Galeazzi
Reviewer: Bob Goodrich
Drafter: Steve Wolfer
Checker: Kyle Farnsworth

GENERAL CONSTRUCTION

SHEET NO. C02A

1. *Const. PCC sidewalk - 1,140 sq. ft.*
   (For details, see sht. BB02)

2. *Remove and rebuild extg. fence, type CL-4R - 280 ft.*
   (See dwg. no. RD815)
   (See sht. JC19 for posts embedded in pier protection wall footing)

3. *Const. PCC sidewalk - 3,604 sq. ft.*

4. *Sta. "F" 14+89.3, Rt.*
   Const. PCC dwy., option A, W=15 ft.
   (See dwg. no. RD725)

5. *Remove extg. bollard - 4 each*
   Inst. removable bollard - 4 each
   (See dwg. no. RD130)

6. *Sta. "F" 18+75.8, Rt.*
   Const. PCC dwy., option A, W=16 ft.

7. *Const. curb and gutter - 796 ft.*

8. *Sta. "F" 17+88.8, Rt.*
   Const. bicycle ramp
   Inst. detectable guide strips, blue - 63 sq. ft.
   Const. standard curb at sides of ramp - 31 ft.
   (See dwg. no. RD909)
   (For details, see sht. BC06)

9. *Const. standard curb - 163 ft.*

10. *Remove conc. barrier - 116 ft.*

11. *Const. standard curb - 139 ft.*

12. *Const. PCC Sidewalk - 1,917 sq. ft.*
    (For details, see sht. BB03)

13. *Extg. fence to remain*

14. *Extg. sidewalk to remain*

15. *Const. aggr. maint. pad - 6,409 sq. ft.*
    (For details, see sht. BB09)

16. *Remove conc. barrier - 86 ft.*
    Const. cast-in-place tall conc. barrier transition - 12.5 ft.
    Const. tall conc. barrier cast-in-place on moment slab - 30 ft.
    Const. tall conc. barrier cast-in-place - 45 ft.
    Const. conc. barrier terminal
    (For details, see shts. BB01, BB11, BB12, BB13, & BB14)

17. *Const. PCC sidewalk - 424 sq. ft.*
    (For details, see sht. BB03)

18. *Inst. removable bollard - 2 each*

19. *Const. curb and gutter - 123 ft.*
    (For details, see sht. BB01)

20. *Sta. "F" 16+34.6, Lt.*
    Const. PCC dwy., option A, W=12 ft.

21. *Remove extg. bollard - 4 each*

22. *Inst. impact attenuator, type f - 2 each*
    (For attenuator attributes, see sht. BB15)

23. *Structure no. 00123K*
    Const. seismic retrofit
    (For sht. nos., see sht. A02, Bridge)

24. *Structure no. 00123G*
    Const. seismic retrofit
    (For sht. nos., see sht. A03, Bridge)

25. *Structure no. 22519*
    Const. seismic retrofit
    (For sht. nos., see sht. A03, Bridge)

26. *Structure no. 22524*
    Const. modifications
    (For sht. nos., see sht. A03, Bridge)

27. *Const. aggr. maint. pad - 5,892 sq. ft.*
    (For details, see sht. BB08)

28. *Const. aggr. maint. pad - 4,817 sq. ft.*
    (For details, see sht. BB10)

29. *Sta. "F" 18+04.0, Lt.*
    Const. bicycle ramp
    Inst. detectable guide strips, blue - 57 sq. ft.
    Const. standard curb at sides of ramp - 47 ft.
    (For details, see sht. BC07)

30. *Sta. "F" 18+78.7, Lt.*
    Const. PCC dwy., option H, W=28 ft.
    (See dwg. no. RD740)

31. *Sta. "F" 19+26.8, Lt.*
    Const. PCC dwy., option H, W=29 ft.

REGISTERED PROFESSIONAL ENGINEER
100246PE
Digitally Signed 2026.01.28 10:23:16-08'00'
OREGON
JULY 12, 2022
JASON BENJAMIN GALEAZZI
EXPIRES: 06/30/2027

FINAL ELECTRONIC DOCUMENT AVAILABLE UPON REQUEST

DOWL WWW.DOWL.COM

OREGON DEPARTMENT OF TRANSPORTATION

OR22: CENTER ST BRIDGE (PHASE 1) PROJECT
WILLAMINA-SALEM HIGHWAY
MARION & POLK COUNTIES

Designer: Jason Galeazzi | Reviewer: Bob Goodrich
Drafter: Steve Wolfer | Checker: Kyle Farnsworth

GENERAL CONSTRUCTION NOTES

SHEET NO. C02B

59V-051

Sec. 22, T. 7 S., R. 3 W., W.M.

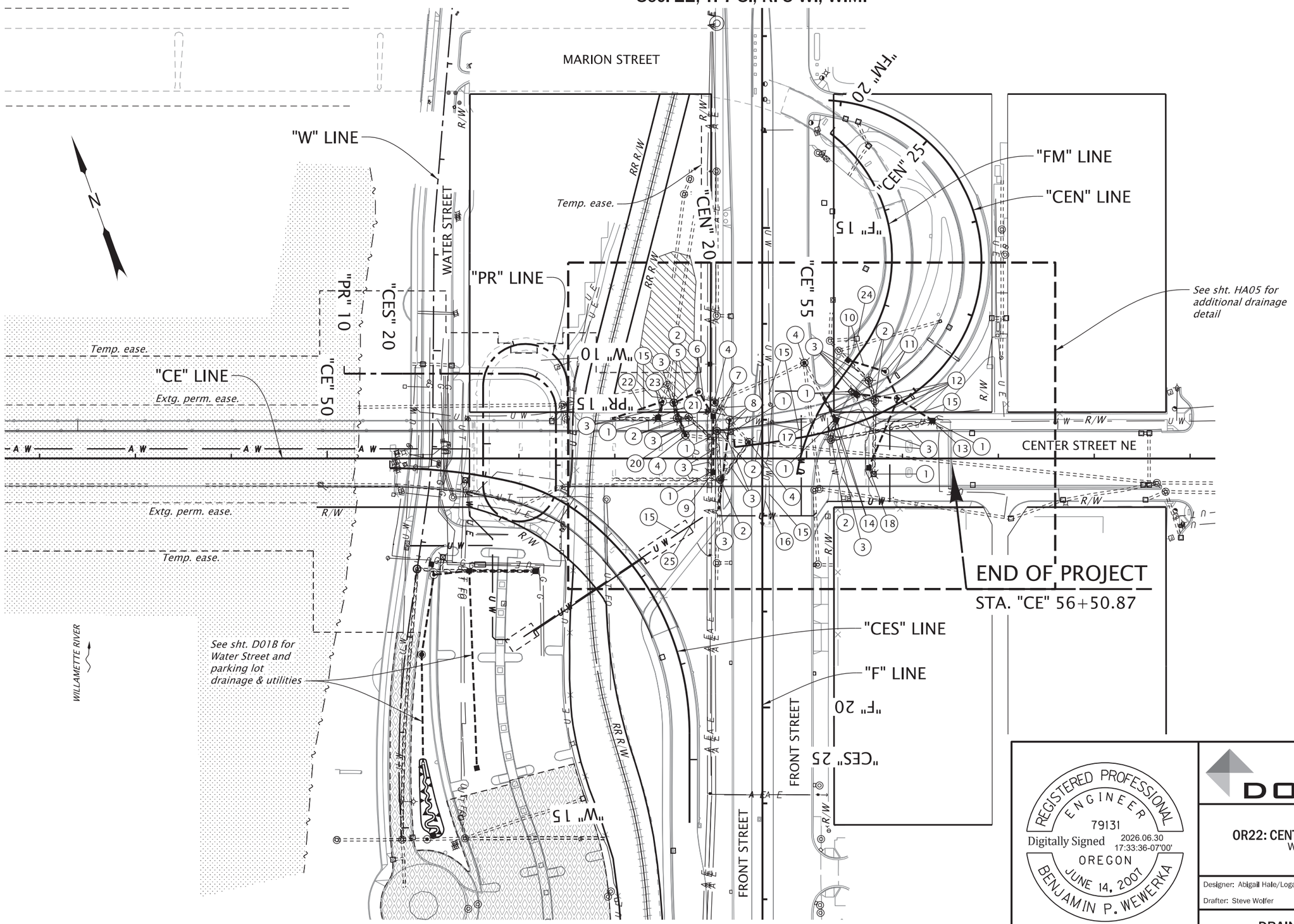

LEGEND

- *Remove/abandon pipe*
- *Storm pipe*
- *Temp. ease. for access only*
- *No work area*
- *OHW – Regulated work area*

REGISTERED PROFESSIONAL ENGINEER
79131
Digitally Signed 2026.06.30 17:33:36-07'00'
OREGON
JUNE 14, 2007
BENJAMIN P. WEWERKA
EXPIRES: 06/30/2028

FINAL ELECTRONIC DOCUMENT AVAILABLE UPON REQUEST

DOWL WWW.DOWL.COM

OREGON DEPARTMENT OF TRANSPORTATION

OR22: CENTER ST BRIDGE (PHASE 1) PROJECT
WILLAMINA-SALEM HIGHWAY
MARION & POLK COUNTIES

Designer: Abigail Hale/Logan Morrison
Reviewer: Bob Goodrich
Drafter: Steve Wolfer
Checker: Benjamin Wewerka

DRAINAGE & UTILITIES

SHEET NO. C02C

1. *Remove inlet - 9*
2. *Remove manhole - 8*
3. *Remove pipe - 748'*
4. *Minor adjust manhole - 4*
   (See dwg. no. RD360)
5. *Sta. "F" 16+82.36, 92.31' Rt.*
   Const. flow control manhole
   over extg. storm sew.
   Inst. 12" storm sew. pipe - 29'
   5' depth
   (See dwg. nos. RD300, RD336, RD345, RD346, RD356, RD388, RD390, & RD393)
   (For details, see sht. HA04)
6. *Sta. "F" 16+71.00, 65.92' Rt.*
   Const. pollution control manhole
   Inst. 12" storm sew. pipe - 30'
   5' depth
   (See dwg. no. RD340)
7. *Sta. "F" 16+96.36, 51.18' Rt.*
   Const. type "G-2" inlet, mod.
   w/ solid lid
   Inst. 12" storm sew. pipe - 59'
   5' depth
   (See dwg. nos. RD339, RD364 & RD365)
   (For details, see sht. HA04)
8. *Sta. "F" 17+00.61, 33.87' Rt.*
   Const. manhole with "CG-3" inlet
   over extg. storm sew.
   Inst. 12" storm sew. pipe - 94'
   5' depth
   Const. concrete closure collar
   Connect to extg. storm sew. pipe
   (See dwg. nos. RD306 & RD348)
   (For details, see sht. HA04)
9. *Sta. "F" 17+54.99, 51.10' Rt.*
   Const. type "G-2" inlet, mod.
   w/ solid lid
   (For details, see sht. HA04)
10. *Sta. "F" 16+37.80, 89.65' Lt.*
    Const. type "G-2" inlet
    over extg. storm sew.
    Inst. 12" storm sew. pipe - 40'
    5' depth
11. *Sta. "F" 16+49.79, 128.16' Lt.*
    Const. manhole
    Inst. 12" storm sew. pipe - 31'
    5' depth
    (See dwg. nos. RD335 & RD344)
12. *Sta. "F" 16+78.14, 141.68' Lt.*
    Const. manhole, shallow, 60" dia.
    Inst. 12" storm sew. pipe - 43'
    5' depth
    Inst. 12" storm sew. pipe - 79'
    5' depth
    Inst. 12" storm sew. pipe - 45'
    5' depth
    (See dwg. nos. RD342)
13. *Sta. "F" 17+01.61, 177.30' Lt.*
    Const. type "G-2" inlet
14. *Sta. "F" 16+98.53, 75.95' Lt.*
    Const. type "G-2" inlet
    Inst. 12" storm sew. pipe - 29'
    5' depth
    Const. concrete closure collar
    Connect to extg. storm sew. pipe
15. *Relocate waterline*
    (For sht. nos., see sht. A04, Waterline)
16. *Relocate traffic signal fiber utility*
    (For sht. nos., see sht. A04, Signals)
17. *Sta. "F" 16+74.84, 96.50' Lt.*
    Const. type "G-2" inlet, mod.
    w/ solid lid
    (For details, see sht. HA04)
18. *Sta. "F" 17+50.27, 111.02' Lt.*
    Const. type "G-2" inlet, mod.
    w/ solid lid
    (For details, see sht. HA04)
19. *Not used*
20. *Sta. "F" 16+82.36, 92.31' Rt.*
    Inst. 12" storm sew. pipe - 36'
    5' depth
    Connect to extg. storm manhole
21. *Sta. "F" 16+97.76, 108.41' Rt.*
    Const. type "G-2" inlet, mod.
    w/ solid lid
    (For details, see sht. HA04)
22. *Sta. "F" 16+98.70, 156.66' Rt.*
    Inst. 12" storm sew. pipe - 56'
    5' depth
    Connect to extg. inlet
23. *Sta. "F" 16+81.03, 103.77' Rt.*
    Const. manhole
    over extg. storm sew.
    Inst. 12" storm sew. pipe - 17'
    5' depth
24. *Adjust inlet*
25. *Relocate underground comm. line (By others)*

REGISTERED PROFESSIONAL ENGINEER
79131
Digitally Signed 2026.06.10 20:15:47-07'00'
OREGON
JUNE 14, 2007
BENJAMIN P. WEWERKA
EXPIRES: 06/30/2028

FINAL ELECTRONIC DOCUMENT
AVAILABLE UPON REQUEST

DOWL WWW.DOWL.COM

OREGON DEPARTMENT OF TRANSPORTATION

OR22: CENTER ST BRIDGE (PHASE 1) PROJECT
WILLAMINA-SALEM HIGHWAY
MARION & POLK COUNTIES

Designer: Abigail Hale/Logan Morrison
Reviewer: Bob Goodrich
Drafter: Steve Wolfer
Checker: Benjamin Wewerka

DRAINAGE & UTILITES NOTES

SHEET NO. C02D

59V-051

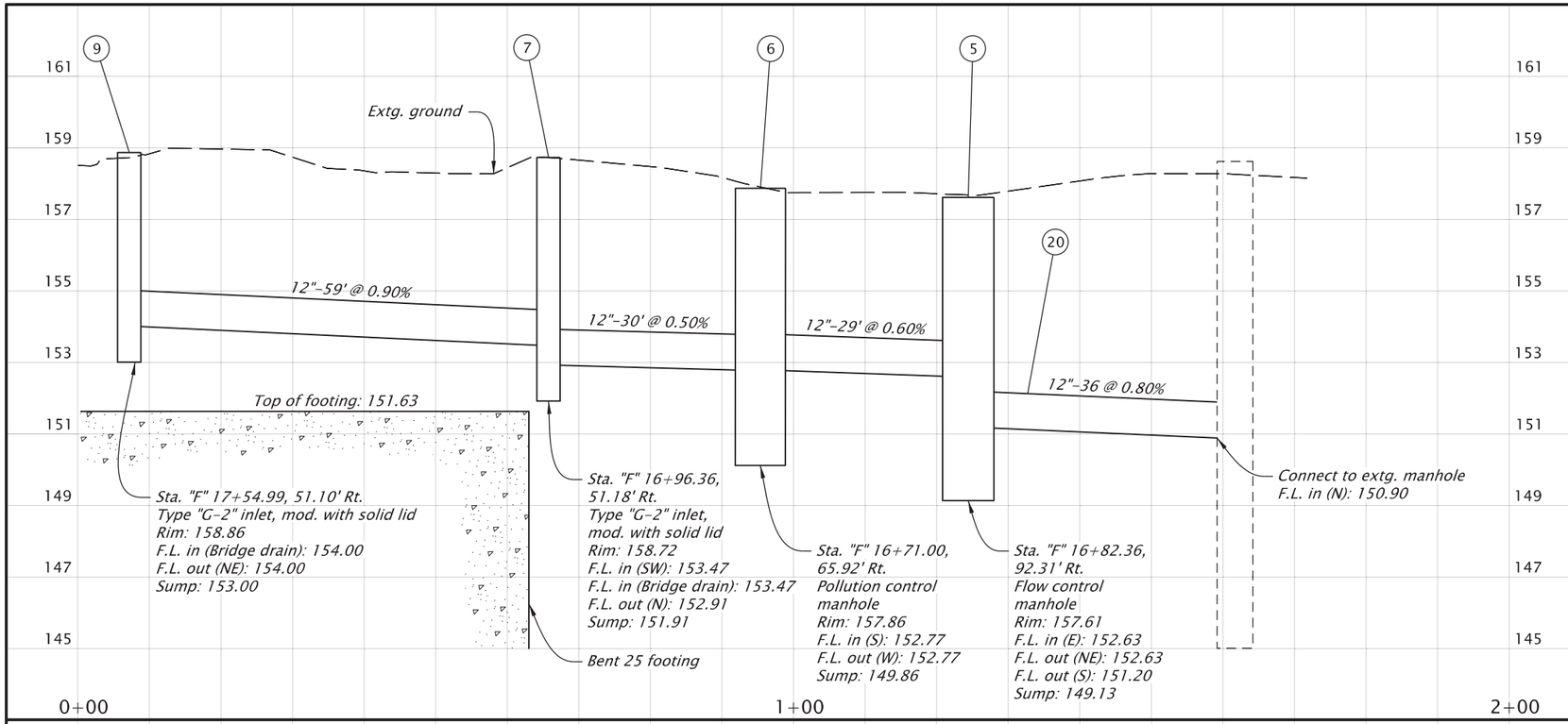

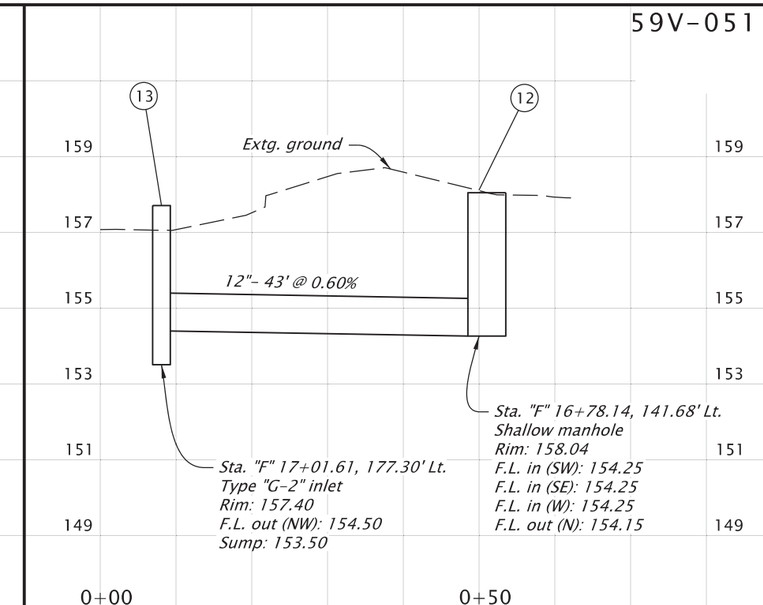

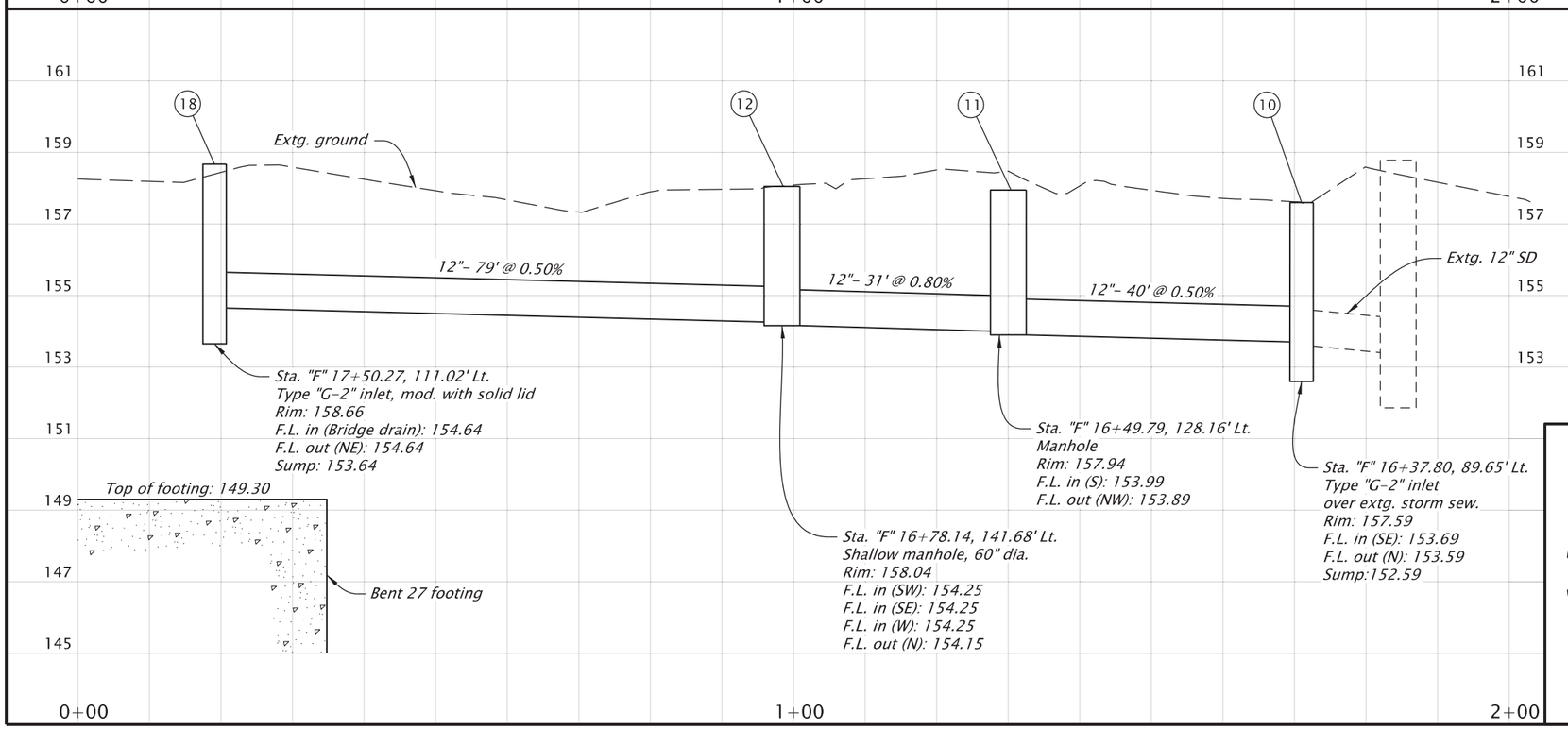

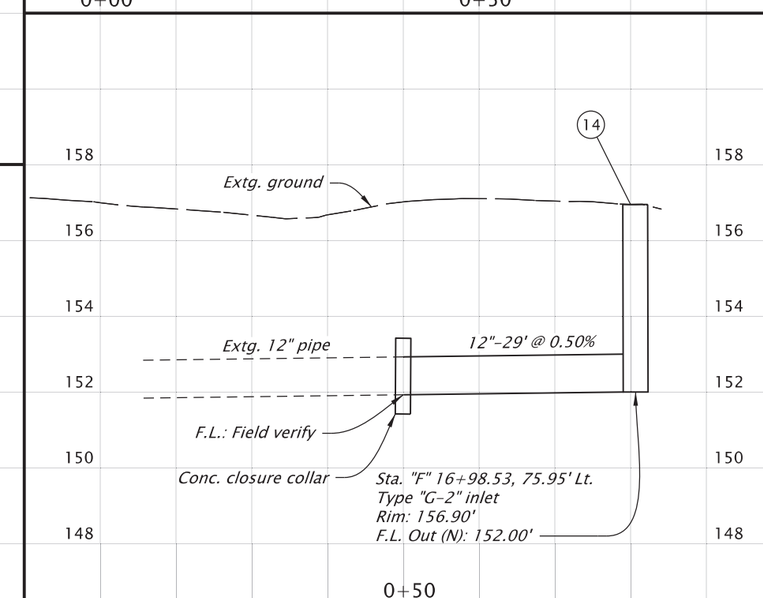

REGISTERED PROFESSIONAL ENGINEER
79131
Digitally Signed 2026.06.10 20:14:33-07'00'
OREGON
JUNE 14, 2007
BENJAMIN P. WEWERKA
EXPIRES: 06/30/2028

FINAL ELECTRONIC DOCUMENT AVAILABLE UPON REQUEST

DOWL WWW.DOWL.COM

OREGON DEPARTMENT OF TRANSPORTATION

OR22: CENTER ST BRIDGE (PHASE 1) PROJECT
WILLAMINA-SALEM HIGHWAY
MARION & POLK COUNTIES

Designer: Abigail Hale/Logan Morrison
Reviewer: Bob Goodrich
Drafter: Steve Wolfer
Checker: Benjamin Wewerka

DRAINAGE PROFILE

SHEET NO. C02E

59V-051

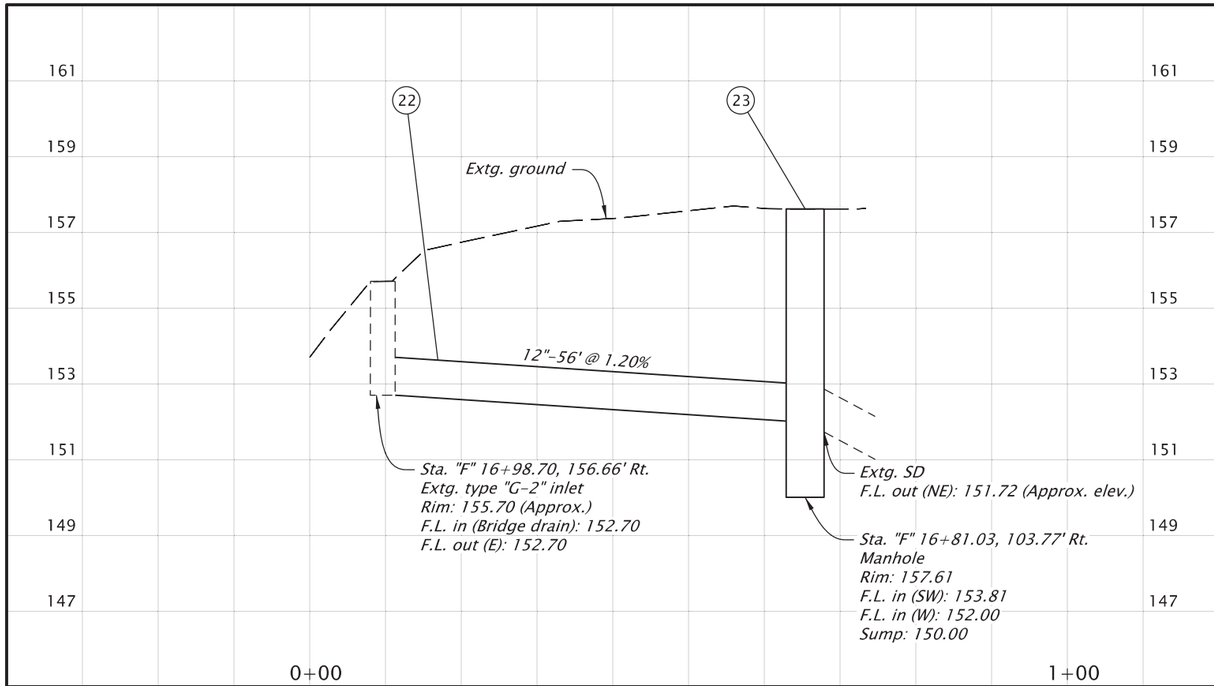

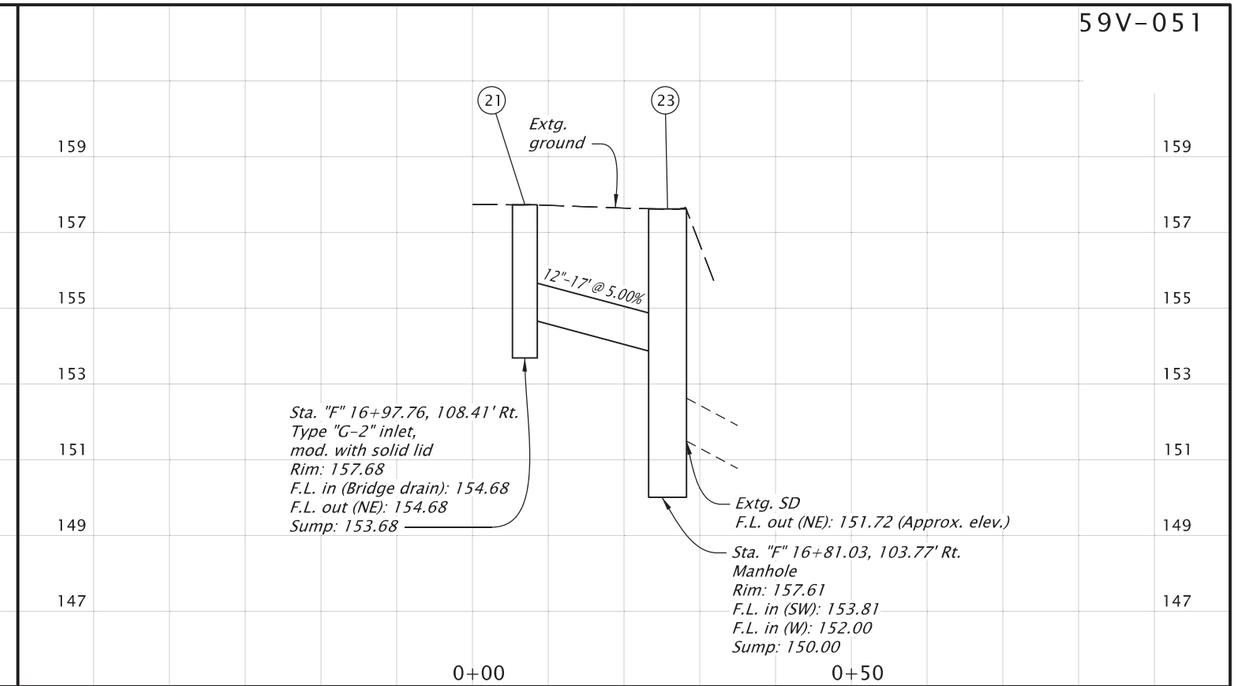

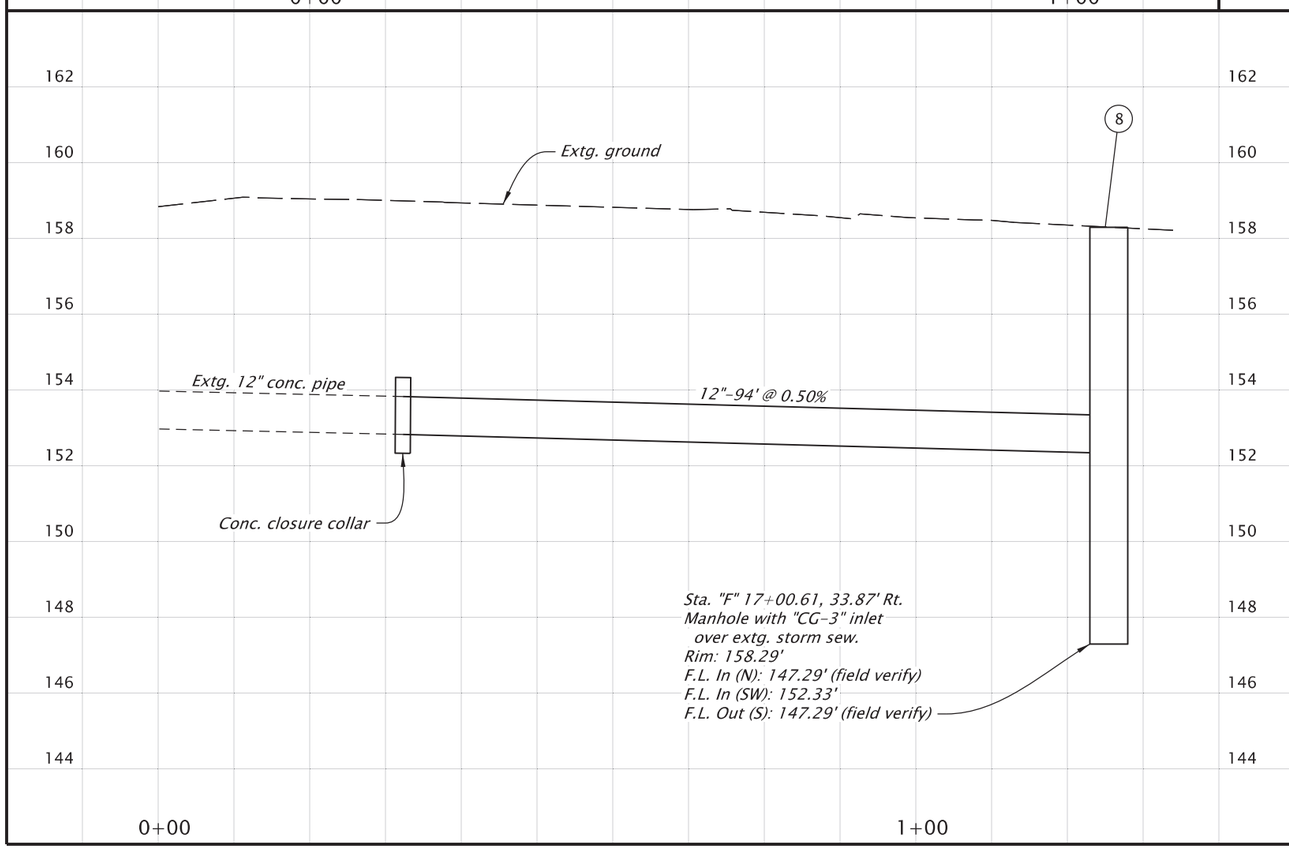

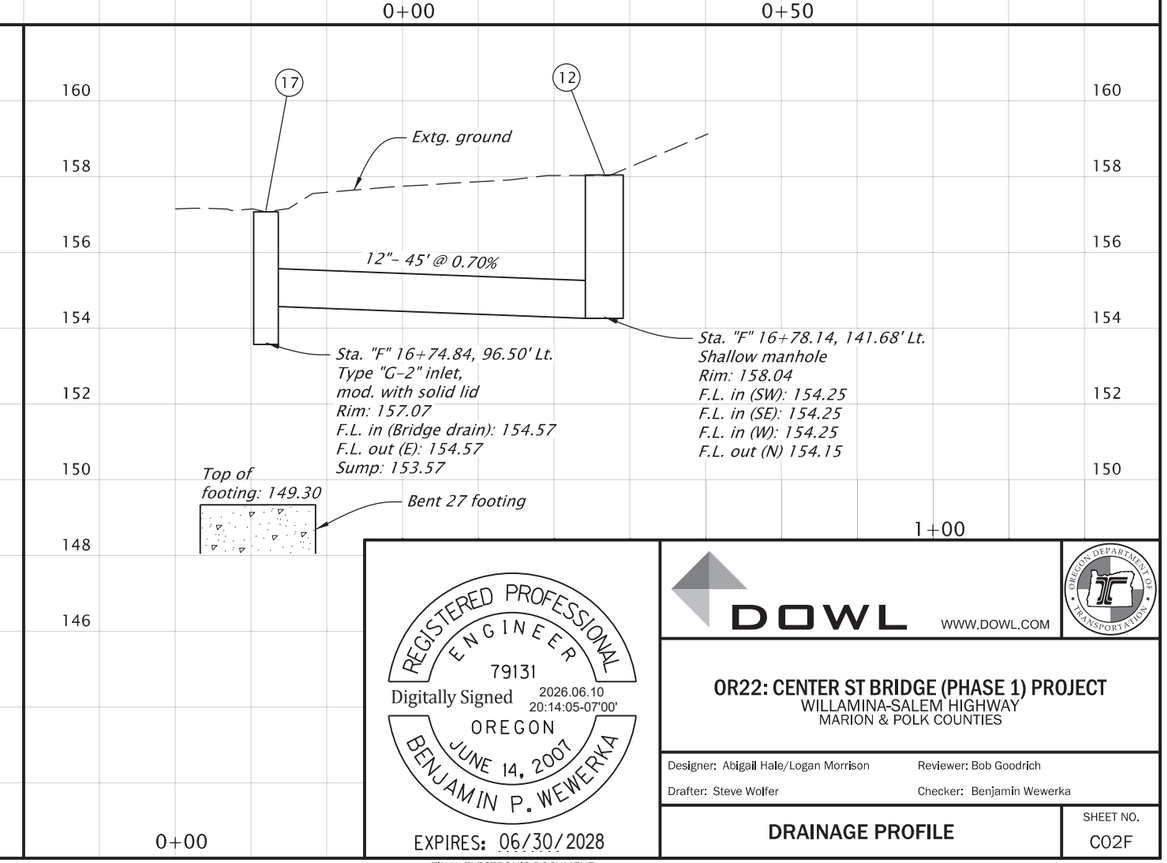

REGISTERED PROFESSIONAL ENGINEER
79131
Digitally Signed 2026.06.10 20:14:05-07'00'
OREGON
JUNE 14, 2007
BENJAMIN P. WEWERKA
EXPIRES: 06/30/2028

DOWL WWW.DOWL.COM

OREGON DEPARTMENT OF TRANSPORTATION

OR22: CENTER ST BRIDGE (PHASE 1) PROJECT
WILLAMINA-SALEM HIGHWAY
MARION & POLK COUNTIES

Designer: Abigail Hale/Logan Morrison
Reviewer: Bob Goodrich
Drafter: Steve Wolfer
Checker: Benjamin Wewerka

DRAINAGE PROFILE

SHEET NO. C02F

FINAL ELECTRONIC DOCUMENT
AVAILABLE UPON REQUEST

Sec. 22, T. 7 S., R. 3 W., W.M.

59V-051

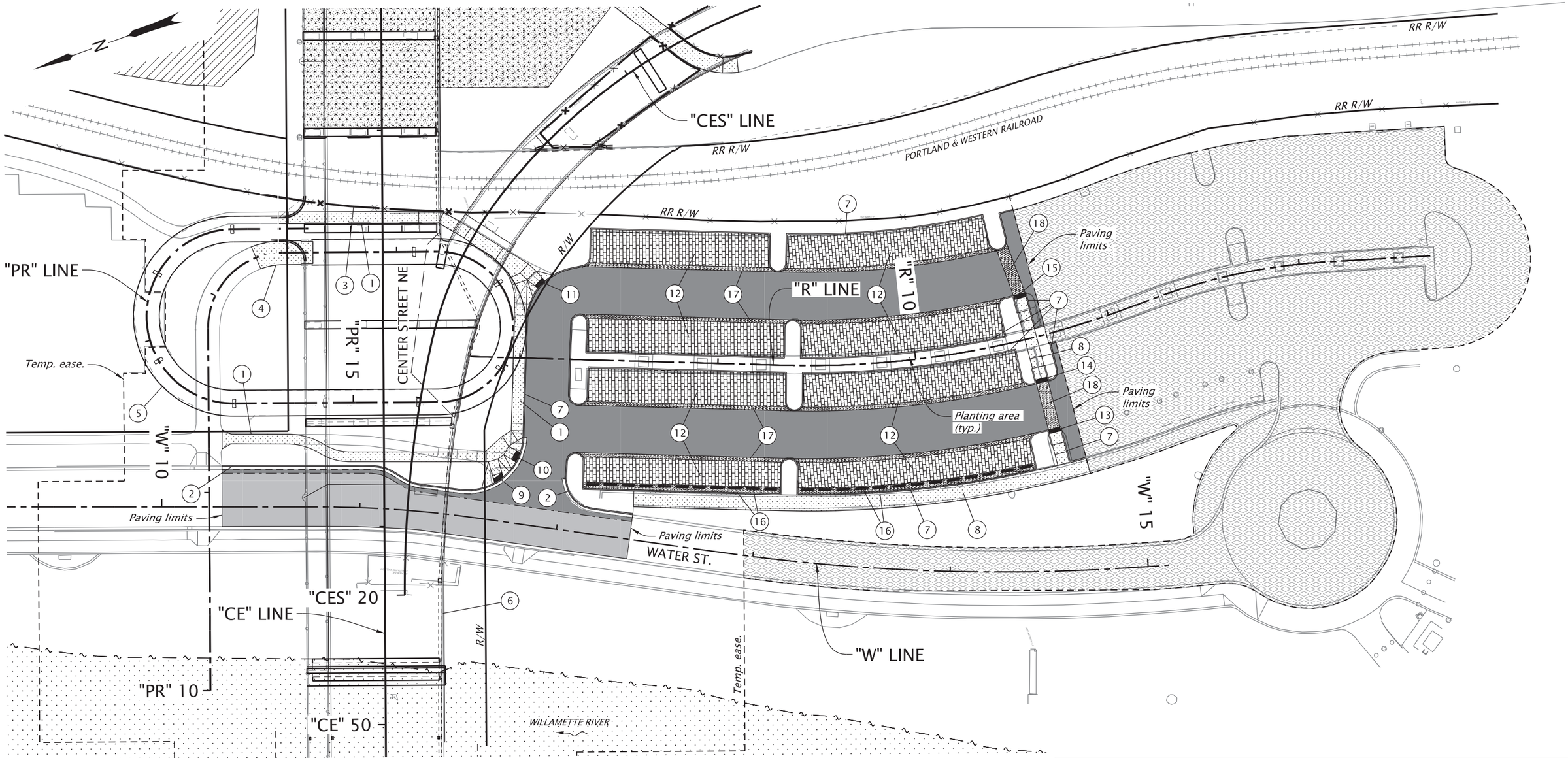

LEGEND

- No work area
- OHW – Regulated work area
- Temp. ease. for access only
- ACP full depth paving limits
- PCC surfacing
- Concrete sidewalk
- Unit pavers
- Aggregate maint. pad Nom. comp. thkn. – 18"
- 2" ACP inlay paving limits

NOTES:

1. For parking lot grading details, see shts. BB06 and BB07.
2. For parking lot planting plan, see sht. A02, Roadside Development.
3. For unit paver details, see typical sections and sht. A02, Roadside Development.

REGISTERED PROFESSIONAL ENGINEER
100246PE
Digitally Signed 2026.06.30 11:43:09-07'00'
OREGON
JULY 12, 2022
JASON BENJAMIN GALEAZZI

EXPIRES: 06/30/2027

FINAL ELECTRONIC DOCUMENT AVAILABLE UPON REQUEST

DOWL WWW.DOWL.COM

OREGON DEPARTMENT OF TRANSPORTATION

OR22: CENTER ST BRIDGE (PHASE 1) PROJECT
WILLAMINA-SALEM HIGHWAY
MARION & POLK COUNTIES

Designer: Jason Galeazzi
Reviewer: Bob Goodrich
Drafter: Steve Wolfer
Checker: Kyle Farnsworth

GENERAL CONSTRUCTION

SHEET NO. D01

1. *Const. PCC sidewalk - 2,479 sq. ft.*
2. *Const. curb and gutter - 212 ft.*
3. *Remove and rebuild extg. fence, type CL-4R - 144 ft.*
4. *Const. PCC sidewalk - 344 sq. ft.*
   (For details, see sht. BB04)
5. *Structure no. 22524*
   Const. modifications
   (For sht. nos., see sht. A03, Bridge)
6. *Structure no. 00123G*
   Const. seismic retrofit
   (For sht. nos., see sht. A03, Bridge)
7. *Const. standard curb - 1,474 ft.*
8. *Const. PCC sidewalk - 2,235 sq. ft.*
9. *Const. curb ramp, Perpendicular*
   Inst. colonial red truncated domes on new surface - 10.6 sq. ft.
   PCC surfacing
   (For details, see sht. BC02)
10. *Const. curb ramp, Perpendicular*
    Inst. colonial red truncated domes on new surface - 10 sq. ft.
    PCC surfacing
    (For details, see sht. BC02)
11. *Const. curb ramp, Perpendicular*
    Inst. colonial red truncated domes on new surface - 10.4 sq. ft.
    PCC surfacing
    (For details, see sht. BC03)
12. *Inst. unit pavers - 13,007 sq. ft.*
13. *Const. curb ramp, Perpendicular*
    Inst. colonial red truncated domes on new surface - 12.0 sq. ft.
    PCC surfacing
    (For details, see sht. BC04)
14. *Const. curb ramp, Perpendicular*
    Inst. colonial red truncated domes on new surface - 12.0 sq. ft.
    PCC surfacing
    (For details, see sht. BC05)
15. *Const. curb ramp, Perpendicular*
    Inst. colonial red truncated domes on new surface - 12.0 sq. ft.
    PCC surfacing
    (For details, see sht. BC06)
16. *Const. PCC surfacing - 716 sq. ft.*
    Inst. wheel stop - 24 each
    (For details, see sht. BB16)
17. *Const. PCC surfacing - 1,698 sq. ft.*
    (For details, see typical sections)
18. *Const. PCC surfacing - 292 sq. ft.*
    (For details, see sht. BB16)

REGISTERED PROFESSIONAL ENGINEER
100246PE
Digitally Signed 2026.06.05 16:19:02-07'00'
OREGON
JULY 12, 2022
JASON BENJAMIN GALEAZZI

EXPIRES: 06/30/2027

FINAL ELECTRONIC DOCUMENT AVAILABLE UPON REQUEST

DOWL WWW.DOWL.COM

OREGON DEPARTMENT OF TRANSPORTATION

OR22: CENTER ST BRIDGE (PHASE 1) PROJECT
WILLAMINA-SALEM HIGHWAY
MARION & POLK COUNTIES

Designer: Jason Galeazzi
Reviewer: Bob Goodrich
Drafter: Steve Wolfer
Checker: Kyle Farnsworth

GENERAL CONSTRUCTION NOTES

SHEET NO. D01A

Sec. 22, T. 7 S., R. 3 W., W.M.

59V-051

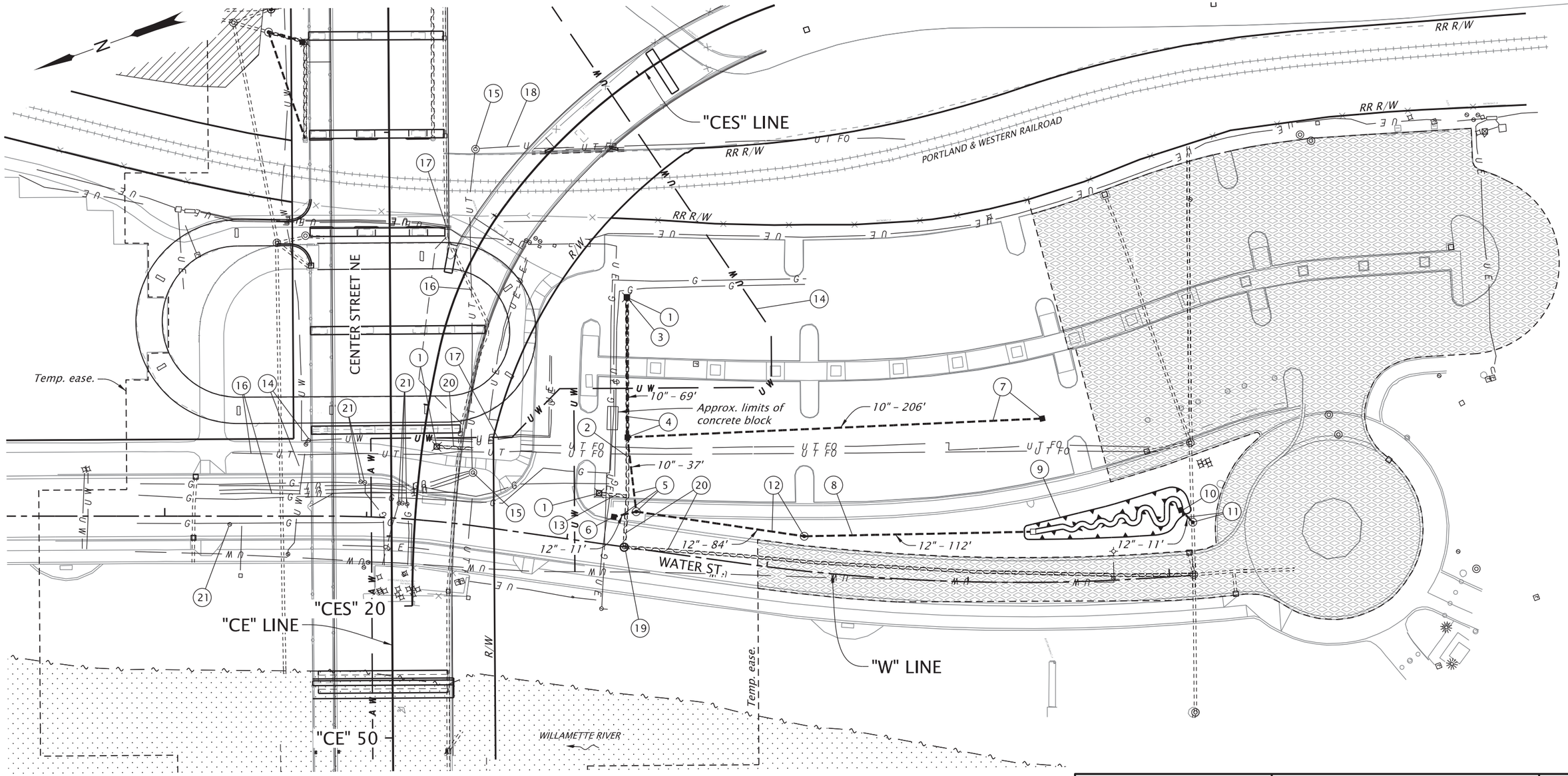

LEGEND

- *Remove/abandon pipe*
- *Storm pipe*
- *No work area*
- *OHW – Regulated work area*
- *Temp. ease. for access only*

REGISTERED PROFESSIONAL ENGINEER 79131 OREGON JUNE 14, 2007 BENJAMIN P. WEWERKA

Digitally Signed 2026.06.30 17:32:47-07'00'

EXPIRES: 06/30/2028

FINAL ELECTRONIC DOCUMENT AVAILABLE UPON REQUEST

DOWL WWW.DOWL.COM

OREGON DEPARTMENT OF TRANSPORTATION

OR22: CENTER ST BRIDGE (PHASE 1) PROJECT
WILLAMINA-SALEM HIGHWAY
MARION & POLK COUNTIES

Designer: Abigail Hale/Logan Morrison
Reviewer: Bob Goodrich
Drafter: Steve Wolfer
Checker: Benjamin Wewerka

DRAINAGE & UTILITIES

SHEET NO. D01B

1. *Remove inlet - 3*
2. *Remove pipe - 127'*
3. *Sta. "W" 12+12.75, 122.60' Lt.*
   Const. type "G-2" inlet
4. *Sta. "W" 12+22.60, 54.15' Lt.*
   Const. type "G-2" inlet
   Inst. 10" storm sew. pipe - 69'
   5' depth
5. *Sta. "W" 12+32.14, 18.11' Lt.*
   Const. manhole, shallow
   Inst. 10" storm sew. pipe - 37'
   5' depth
   Inst. 12" storm sew. pipe - 11'
   5' depth
6. *Sta. "W" 12+21.51, 14.01' Lt.*
   Const. type "CG-3" inlet
   (See dwg. nos. RD371 & RD372)
7. *Sta. "W" 14+37.80, 81.16 Lt.*
   Const. type "G-2" inlet
   Inst. 10" storm sew. pipe - 206'
   5' depth
8. *Sta. "W" 14+31.10, 25.06 Lt.*
   Inst. 12" storm sew. pipe - 112'
   5' depth
9. *Sta. "W" 14+45.53, 26.42' Lt.*
   Const. water quality swale, A
   (For details, see sht. HA01)
10. *Sta. "W" 15+02.75, 31.34' Lt.*
    Const. type "D" inlet, mod., z=3
    (See dwg. nos. RD370)
    (For details, see sht. HA03)
11. *Sta. "W" 15+10.46, 32.80' Lt.*
    Const. manhole
    over extg. storm sew.
    Inst. 12" storm sew. pipe - 11'
    10' depth
12. *Sta. "W" 13+16.98, 17.13' Lt.*
    Const. manhole, shallow
    Inst. 12" storm sew. pipe - 84'
    5' depth
13. *Remove 8" storm sew. - 13'*
14. *Relocate waterline*
    (For sht. nos., see sht. A04, Waterline)
15. *Relocate comm. manhole (By others)*
16. *Relocate underground comm. line (By others)*
17. *Relocate underground elec. line (By others)*
18. *Relocate underground comm. line (By others)*
19. *Abandon manhole*
20. *Abandon 12" storm sew. - 2*
21. *Adjust box - 6 each*

REGISTERED PROFESSIONAL ENGINEER
79131
Digitally Signed 2026.06.10 20:13:12-07'00'
OREGON
JUNE 14, 2007
BENJAMIN P. WEWERKA
EXPIRES: 06/30/2028

FINAL ELECTRONIC DOCUMENT
AVAILABLE UPON REQUEST

DOWL WWW.DOWL.COM

OREGON DEPARTMENT OF TRANSPORTATION

OR22: CENTER ST BRIDGE (PHASE 1) PROJECT
WILLAMINA-SALEM HIGHWAY
MARION & POLK COUNTIES

Designer: Abigail Hale/Logan Morrison
Reviewer: Bob Goodrich
Drafter: Steve Wolfer
Checker: Benjamin Wewerka

DRAINAGE & UTILITES NOTES

SHEET NO.
D01C

59V-051

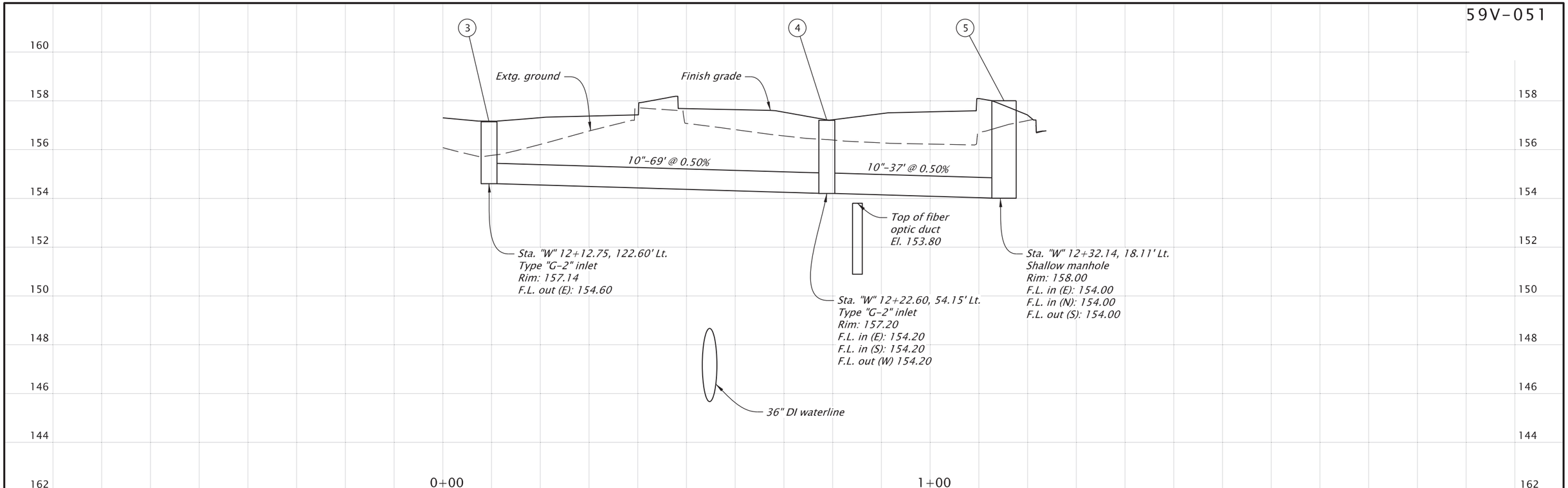

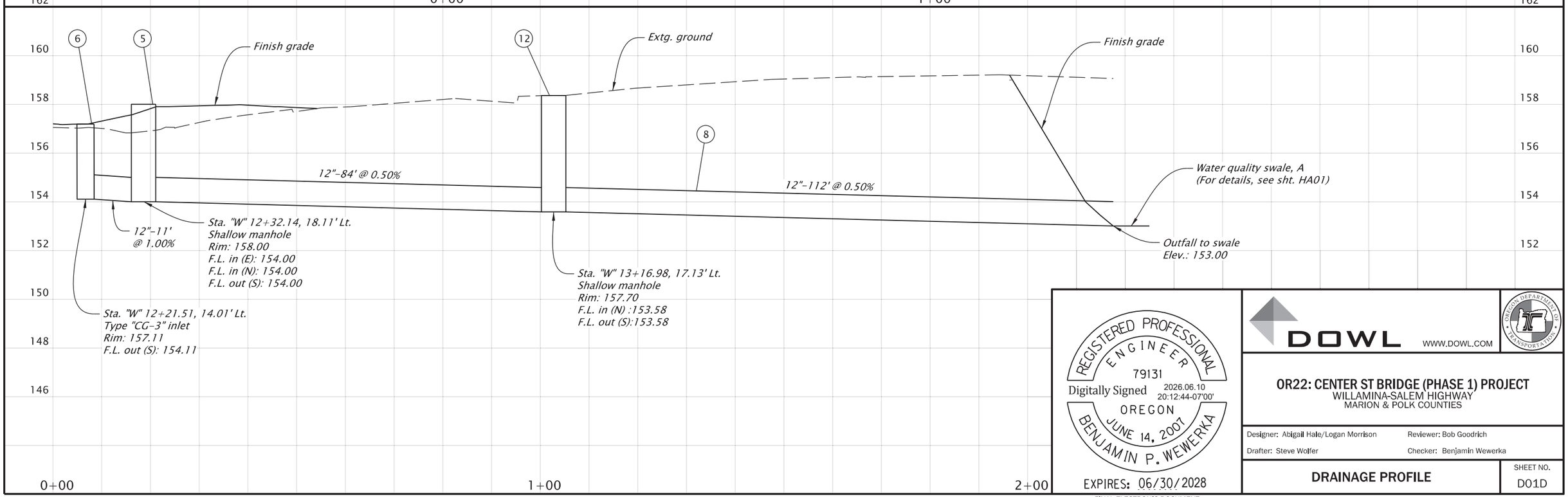

REGISTERED PROFESSIONAL ENGINEER
79131
Digitally Signed 2026.06.10 20:12:44-07'00'
OREGON
JUNE 14, 2007
BENJAMIN P. WEWERKA
EXPIRES: 06/30/2028

FINAL ELECTRONIC DOCUMENT AVAILABLE UPON REQUEST

DOWL WWW.DOWL.COM

OREGON DEPARTMENT OF TRANSPORTATION

OR22: CENTER ST BRIDGE (PHASE 1) PROJECT
WILLAMINA-SALEM HIGHWAY
MARION & POLK COUNTIES

Designer: Abigail Hale/Logan Morrison
Reviewer: Bob Goodrich
Drafter: Steve Wolfer
Checker: Benjamin Wewerka

DRAINAGE PROFILE

SHEET NO. D01D

59V-051

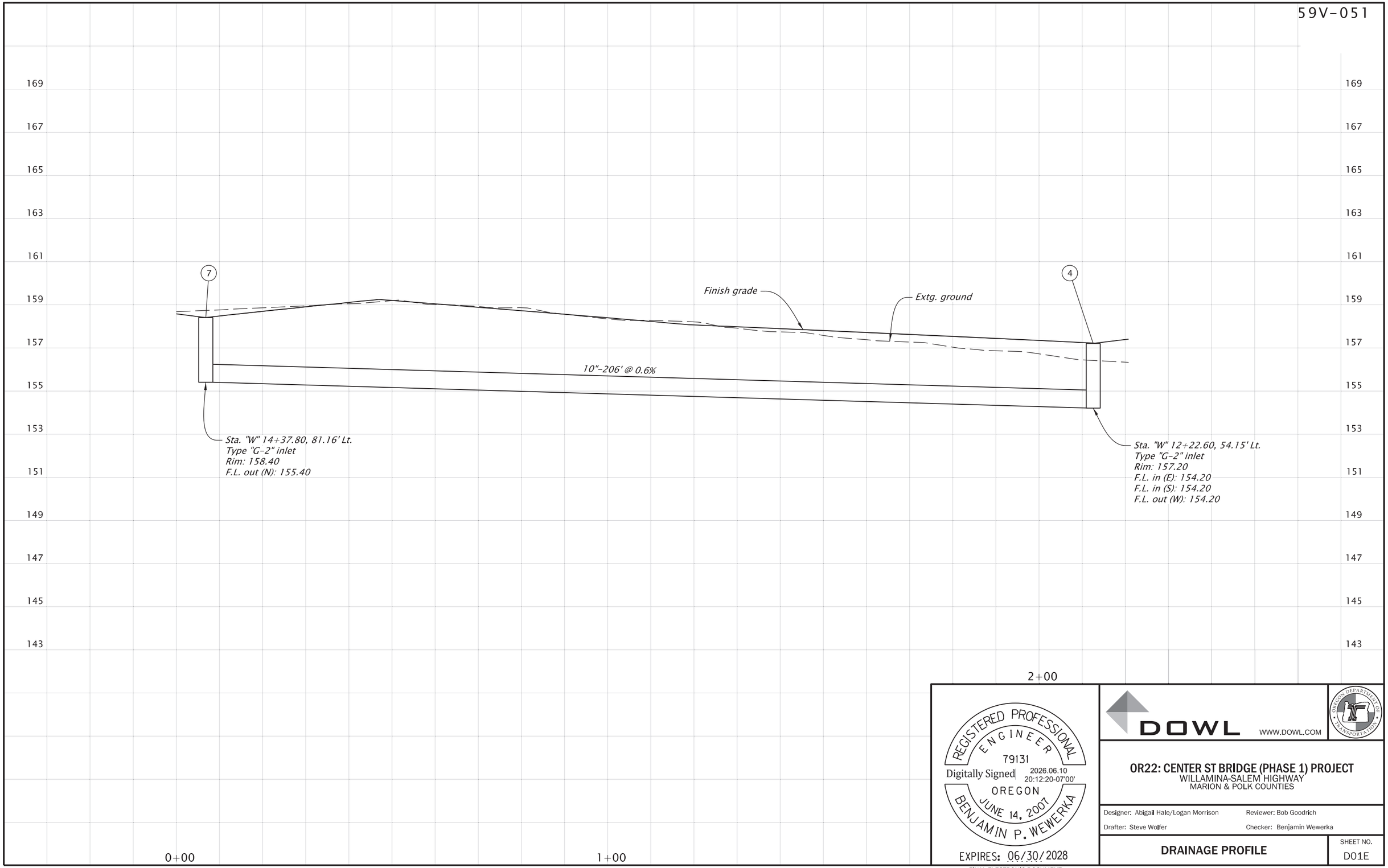

REGISTERED PROFESSIONAL ENGINEER
79131
Digitally Signed 2026.06.10 20:12:20-07'00'
OREGON
JUNE 14, 2007
BENJAMIN P. WEWERKA
EXPIRES: 06/30/2028

FINAL ELECTRONIC DOCUMENT AVAILABLE UPON REQUEST

DOWL WWW.DOWL.COM

OREGON DEPARTMENT OF TRANSPORTATION

OR22: CENTER ST BRIDGE (PHASE 1) PROJECT
WILLAMINA-SALEM HIGHWAY
MARION & POLK COUNTIES

Designer: Abigail Hale/Logan Morrison
Reviewer: Bob Goodrich
Drafter: Steve Wolfer
Checker: Benjamin Wewerka

DRAINAGE PROFILE

SHEET NO. D01E

Sec. 22, T. 7 S., R. 3 W., W.M.

59V-051

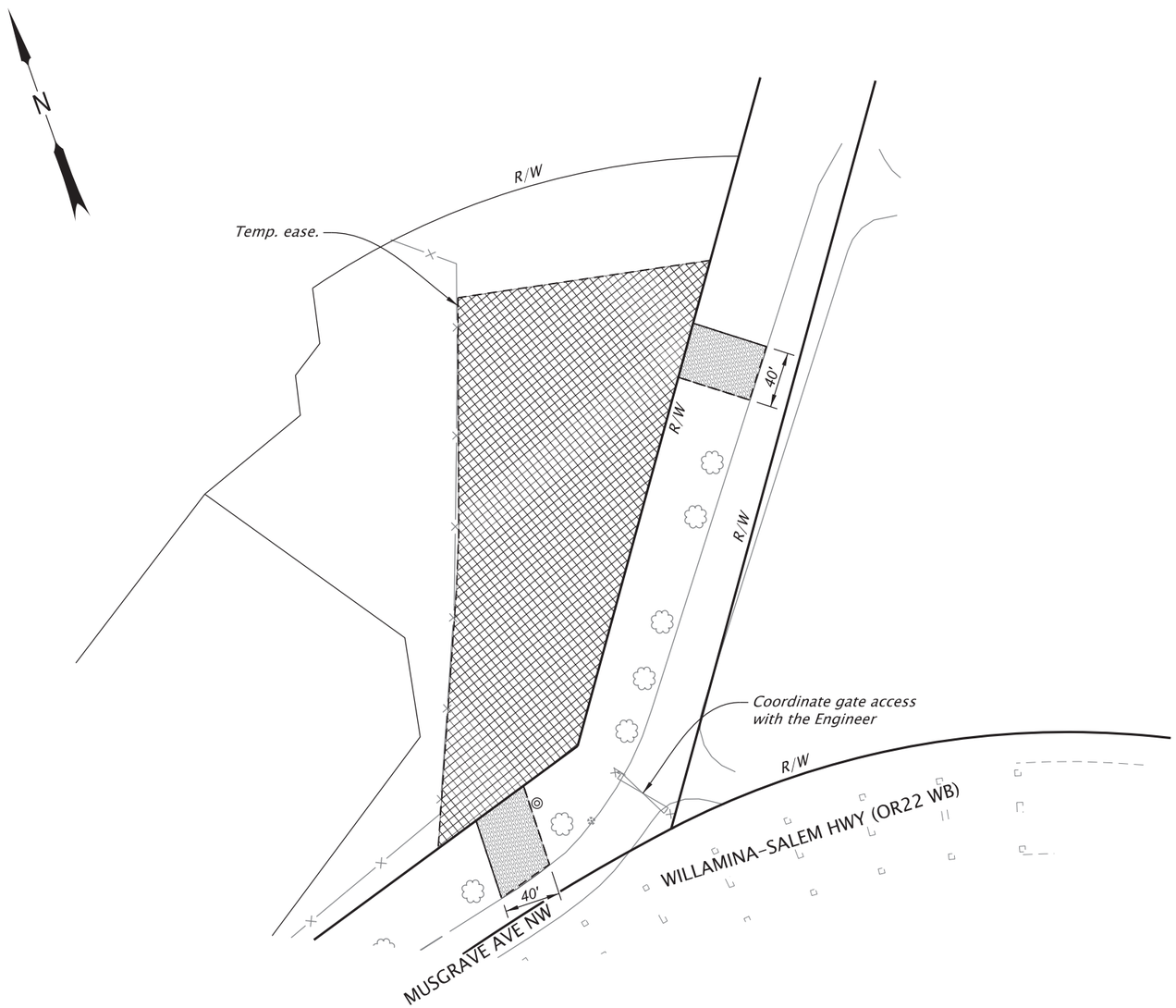

NOTE:
Provide traffic control at the Wallace / Musgrave intersection when using it for equipment and material transport. Traffic control subject to Engineer approval.

LEGEND

Temp. ease. for access only

Offsite construction area

REGISTERED PROFESSIONAL ENGINEER
100246PE
Digitally Signed 2026.06.02 15:57:00-07'00'
OREGON
JULY 12, 2022
JASON BENJAMIN GALEAZZI

EXPIRES: 06/30/2027

FINAL ELECTRONIC DOCUMENT AVAILABLE UPON REQUEST

DOWL WWW.DOWL.COM

OREGON DEPARTMENT OF TRANSPORTATION

OR22: CENTER ST BRIDGE (PHASE 1) PROJECT
WILLAMINA-SALEM HIGHWAY
MARION & POLK COUNTIES

Designer: Jason Galeazzi
Reviewer: Bob Goodrich
Drafter: Steve Wolfer
Checker: Kyle Farnsworth

GENERAL CONSTRUCTION

SHEET NO. D02

59V-051

Sec. 22, T. 7 S., R. 3 W., W.M.

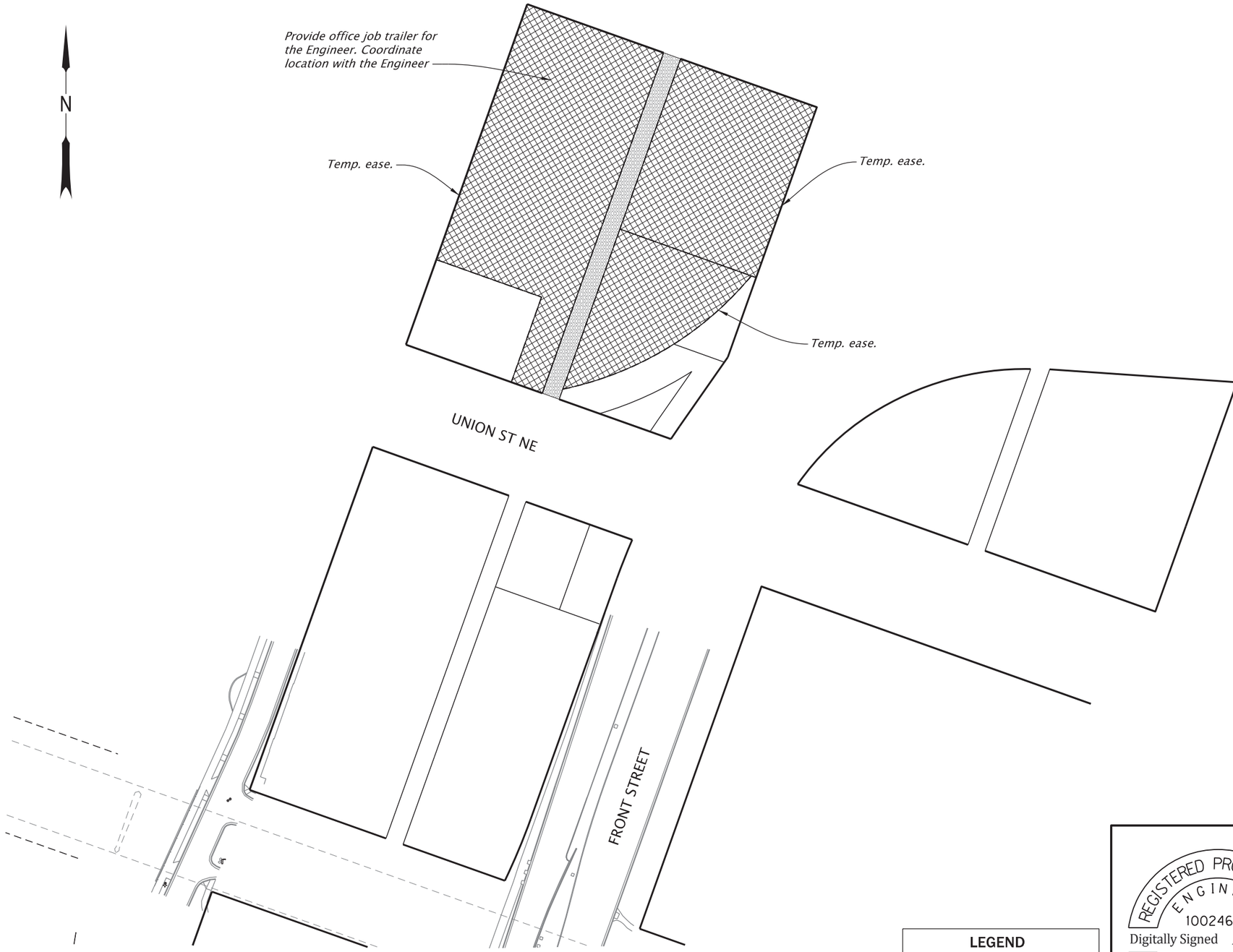

LEGEND

- *Offsite construction area*
- *Temp. ease. for access only*

REGISTERED PROFESSIONAL ENGINEER
100246PE
Digitally Signed 2026.06.02 15:58:22-07'00'
OREGON
JULY 12, 2022
JASON BENJAMIN GALEAZZI
EXPIRES: 06/30/2027

FINAL ELECTRONIC DOCUMENT AVAILABLE UPON REQUEST

DOWL WWW.DOWL.COM

OREGON DEPARTMENT OF TRANSPORTATION

OR22: CENTER ST BRIDGE (PHASE 1) PROJECT
WILLAMINA-SALEM HIGHWAY
MARION & POLK COUNTIES

Designer: Jason Galeazzi
Reviewer: Bob Goodrich
Drafter: Steve Wolfer
Checker: Kyle Farnsworth

GENERAL CONSTRUCTION

SHEET NO. D03

59V-051

T R A F F I C C O N T R O L S I G N D E T A I L S

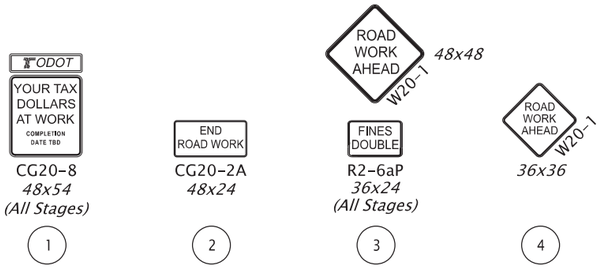

To Be Accompanied by Standard Dwg. Nos. RD500, RD501, RD502, RD503, TM500, TM800, TM810, TM820, TM821, TM822, TM830, TM840, TM841, TM842, TM843, TM844, TM850, TM851, TM852, TM853, TM855, TM860, TM861, & TM862.

Temporary Traffic Control Staging Summary			
Stage	*Phase*	*Sheet Numbers*	*Comments*
I	*1*	*EB01 EB02*	*Waterline Installation on Front Street (OR99E) Northbound West Side*
I	*2*	*EB03 - EB04*	*- Waterline Installation on Front Street (OR99E) Northbound - East Side*
I	*3*	*EB05*	*- Waterline Installation on Front Street (OR99E) Northbound* *- Closure on Front Street (OR99E) Marion Street bridge on-ramp*
I	*4*	*EB06 - EB07*	*- Waterline Intallation on Front Street (OR99E) Southbound*
II	*1*	*EC01 - EC03*	*- Bent 25 Construction adjacent to Front Street (OR99E) Southbound*
III	*1*	*ED01*	*- Barrier removal and temp shoring at Bent 27 adjacent to Front Street (OR99E) Northbound* *- Closure on Front Street (OR99E) Marion Street bridge on-ramp* *- Work Zone set up and temp paving* *- Use Stage III Phase 1 temporary traffic control plan to reconstruct impacted roadway from Stage III Phase 2 work.*
III	*2*	*ED02 - ED04*	*- Bent 27 Construction adjacent to Front Street (OR99E) Northbound*
IV	*1*	*EE01*	*- Bent 20 Construction adjacent to Water Street*
V	*1*	*EF01 - EF02*	*- Drilled Shaft work for Bent 15 that is visible above deck level* *- South lane of OR22 on the Center Street Bridge*
V	*2*	*EF03 - EF05*	*- Span 14 strenghtening on the OR22 Center Street Bridge in the northern two lanes.* *- Spans 20 - 28 strengthening on the OR22 Center Street Bridge in the northern two lanes.* *- Closures on the OR99E Front St northbound off-ramp and the OR22 Keizer/Portland on-ramp*
V	*3*	*EF06 - EF08*	*- Span 14 strenghtening on the OR22 Center Street Bridge in the southern two lanes.* *- Spans 20 - 28 strengthening on the OR22 Center Street Bridge in the southern two lanes.* *- Closures on the OR99E Front St Southbound off-ramp and the OR22 City Center/Albany on-ramp*
VI	*1*	*EG01 - EG02*	*- Bent 26 Construction in the Median of Front Street (OR99E) Both Directions* *- Span 25 and 26 strengthening in the median of Front Street (OR99E) Both Directions* *- Work Concurrent with Phases 2 & 3*
VI	*2*	*EG03 - EG09*	*- Bent 15 Construction on OR22 Center Street Bridge in the northern two lanes* *- Bent 19 Construction on OR22 Center Street Bridge in the northern two lanes* *- Spans 20 - 28 strengthening on the OR22 Center Street Bridge in the northern two lanes (continued)* *- Closures on the OR99E Front St northbound off-ramp and the OR22 Keizer/Portland on-ramp*
VI	*3*	*EG10 - EG15*	*- Bent 15 Construction on OR22 Center Street Bridge in the southern two lanes* *- Bent 19 Construction on OR22 Center Street Bridge in the southern two lanes* *- Spans 20 - 28 strengthening on the OR22 Center Street Bridge in the southern two lanes (continued)* *- Closures on the OR99E Front St Southbound off-ramp and the OR22 City Center/Albany on-ramp*
VI	*4*	*EG16 - EG37*	*- Full closure of the Center Street Bridge for Bent 15 & 19 modular joint installation.* *- Traffic detoured to 99W and to I-5 in Corvallis/Albany*
VII	*1*	*EH01 - EH02*	*- Short term (20 Minute Max) closures on OR22 Center Street Bridge* *- This traffic control stage may be used at any point during construction for short term work.* *- Closures on the OR22 City Center/Albany on-ramp*

Temporary Traffic Control General Notes*:

1. *Adjustments to temporary traffic control devices and signs may be required to accommodate existing field conditions. Location of all temporary traffic control devices, signs, and striping shall be all approved in the field by the Engineer.*

2. *Cover all conflicting existing permanent signing prior to beginning each traffic control stage.*

* *Temporary Traffic Control General Notes applicable to all traffic control and detour sheets.*

REGISTERED PROFESSIONAL ENGINEER 56,267 OREGON JULY 9, 2002 SCOTT M. MANSUR

Digitally Signed 2026.03.04 10:06:56-08'00'

EXPIRES: DEC. 31, 2026

FINAL ELECTRONIC DOCUMENT AVAILABLE UPON REQUEST

DKS
117 Commercial St. NE, Suite 310
Salem, Oregon 97301
(503) 391-8773
www.dksassociates.com

OREGON DEPARTMENT OF TRANSPORTATION

OR22: CENTER ST BRIDGE (PHASE 1) PROJECT
WILLAMINA-SALEM HIGHWAY
MARION & POLK COUNTIES

Designer: B. Lindell
Reviewer: B. Copeland
Drafter: C. Tower
Checker: S. Mansur

TRAFFIC CONTROL DETAILS

SHEET NO. EA01

59V-051

A D V A N C E S I G N I N G P L A N

CENTER ST BRDGE WORK	PREPARE TO MERGE <DATE> TO <DATE>

PCMS #1
(Suggested Message)
(Locate As Directed)

CENTER ST BRDGE WORK	FOLLOW SIGNS <DATE> TO <DATE>

PCMS #2
(Suggested Message)
(Locate As Directed)

FRONT ST WORK AHEAD	EXPECT DELAYS

PCMS #3
(Suggested Message)
(Locate As Directed)

FRONT ST WORK AHEAD	EXPECT DELAYS

PCMS #4
(Suggested Message)
(Locate As Directed)

CENTER ST BRDGE WORK	FOLLOW SIGNS <DATE> TO <DATE>

PCMS #5
(Suggested Message)
(Locate As Directed)

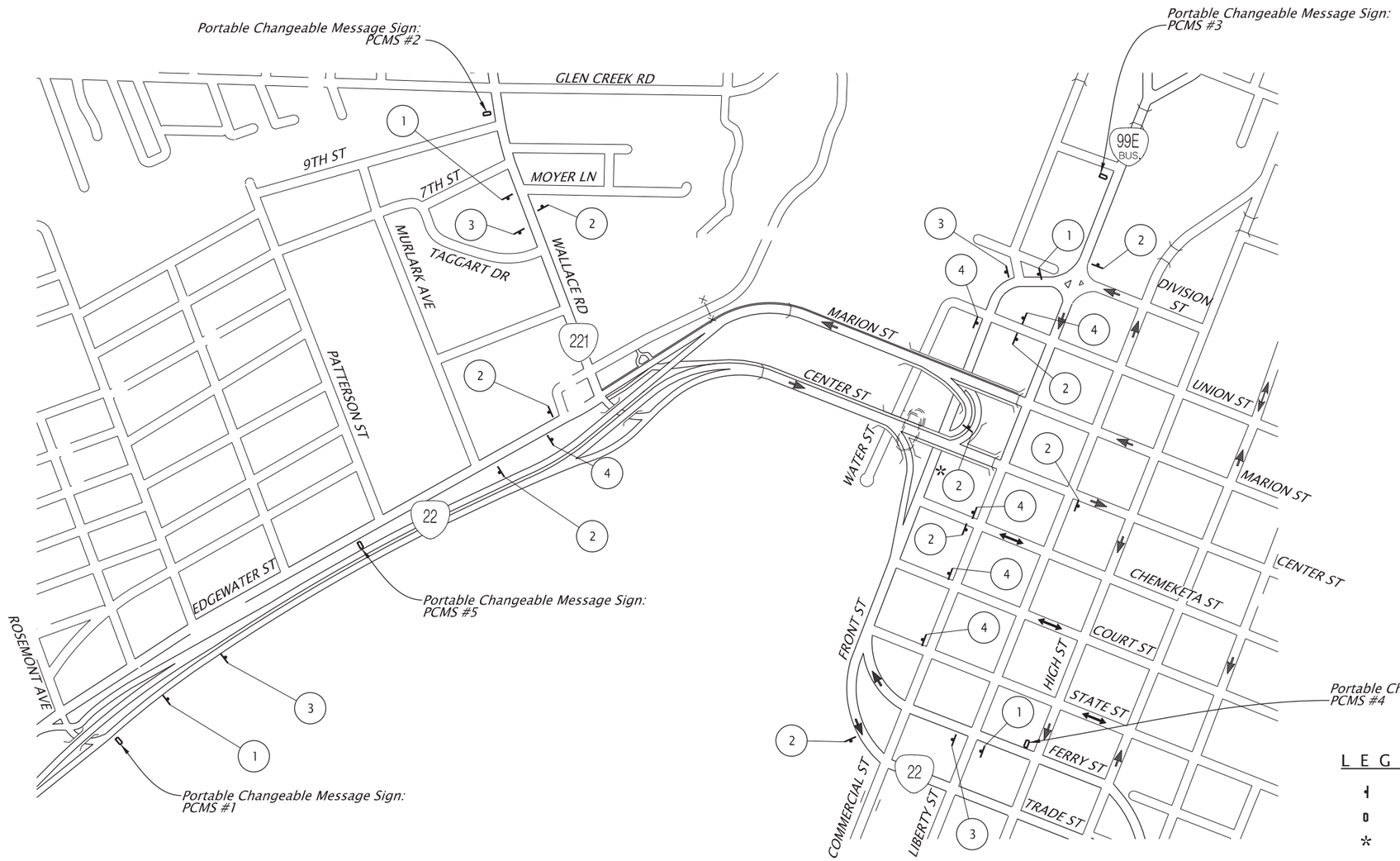

L E G E N D

- Sign on post
- Portable Changeable Message Sign (PCMS)
- Mount on barrier

N

800 400 0 800
FEET

Note:

1. See Sheet EA01 for Traffic Control Sign Details.

2. Advance signing and Portable Changable Message Signs (PCMS) to be installed and remain in place while existing roads are impacted by construction.

REGISTERED PROFESSIONAL ENGINEER 56,267
Digitally Signed 2026.01.27 16:07:36-08'00'
OREGON
JULY 9, 2002
SCOTT M. MANSUR
EXPIRES: DEC. 31, 2026

FINAL ELECTRONIC DOCUMENT AVAILABLE UPON REQUEST

DKS
117 Commercial St. NE, Suite 310
Salem, Oregon 97301
(503) 391-8773
www.dksassociates.com

OREGON DEPARTMENT OF TRANSPORTATION

OR22: CENTER ST BRIDGE (PHASE 1) PROJECT
WILLAMINA-SALEM HIGHWAY
MARION & POLK COUNTIES

Designer: B. Lindell
Reviewer: B. Copeland
Drafter: C. Tower
Checker: S. Mansur

TRAFFIC CONTROL DETAILS

SHEET NO. EA02

TEMPORARY PAVEMENT WIDENING
STAGES I & VI

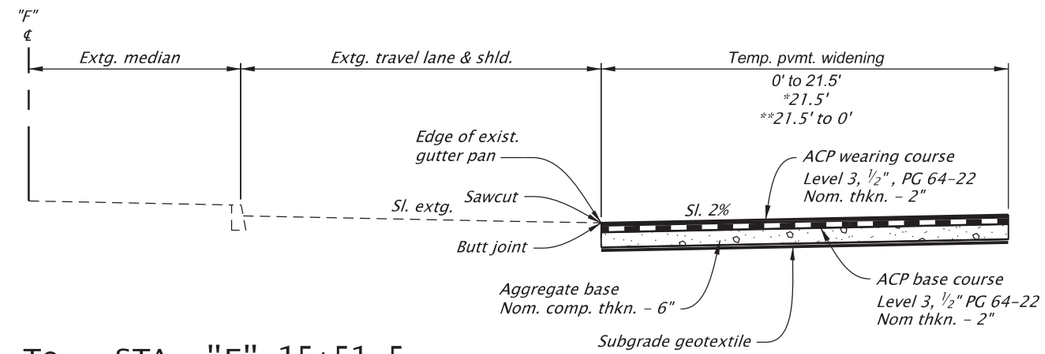

STA. "F" 13+36.5 To STA. "F" 15+51.5
*"F" 15+51.5 To "F" 19+16.5
**"F" 19+16.5 To "F" 21+31.5

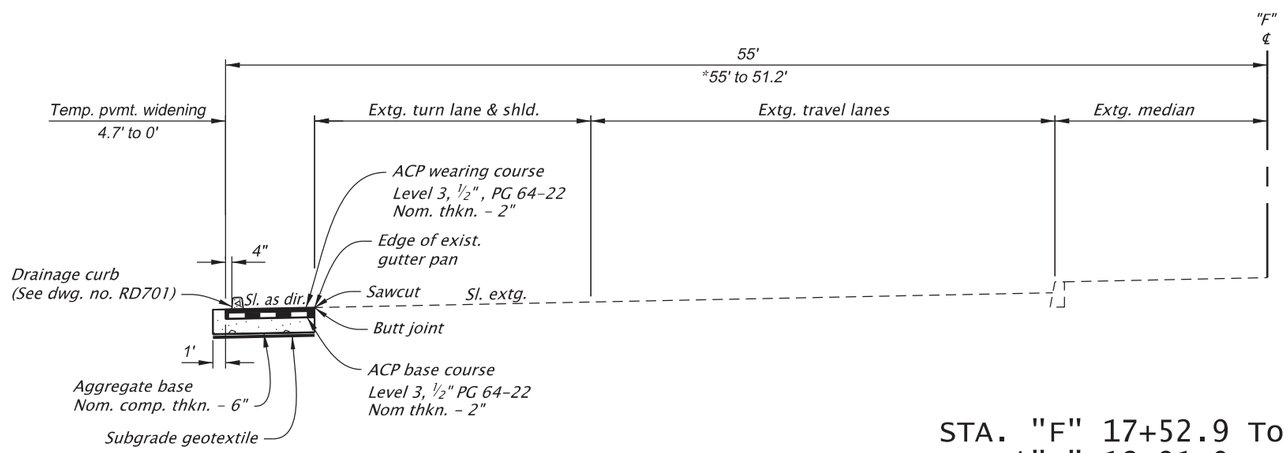

STA. "F" 17+52.9 To STA. "F" 18+91.0
*"F" 18+91.0 To "F" 19+96.0

NOTES:

1. *For traffic control plan and location of barrier and channelizing devices, see sht. nos., Sheet A02, Traffic Control.*
2. *For temporary drainage plan, see sht. nos., Sheet A02, Hydraulics.*

REGISTERED PROFESSIONAL ENGINEER
100246PE
Digitally Signed 2026.01.28 10:28:20-08'00'
OREGON
JULY 12, 2022
JASON BENJAMIN GALEAZZI
EXPIRES: 06/30/2027
FINAL ELECTRONIC DOCUMENT AVAILABLE UPON REQUEST

DOWL WWW.DOWL.COM

OREGON DEPARTMENT OF TRANSPORTATION

OR22: CENTER ST BRIDGE (PHASE 1) PROJECT
WILLAMINA-SALEM HIGHWAY
MARION & POLK COUNTIES

Designer: Jason Galeazzi
Reviewer: Bob Goodrich
Drafter: Steve Wolfer
Checker: Kyle Farnsworth

TRAFFIC CONTROL DETAILS

SHEET NO. EA03

59V-051

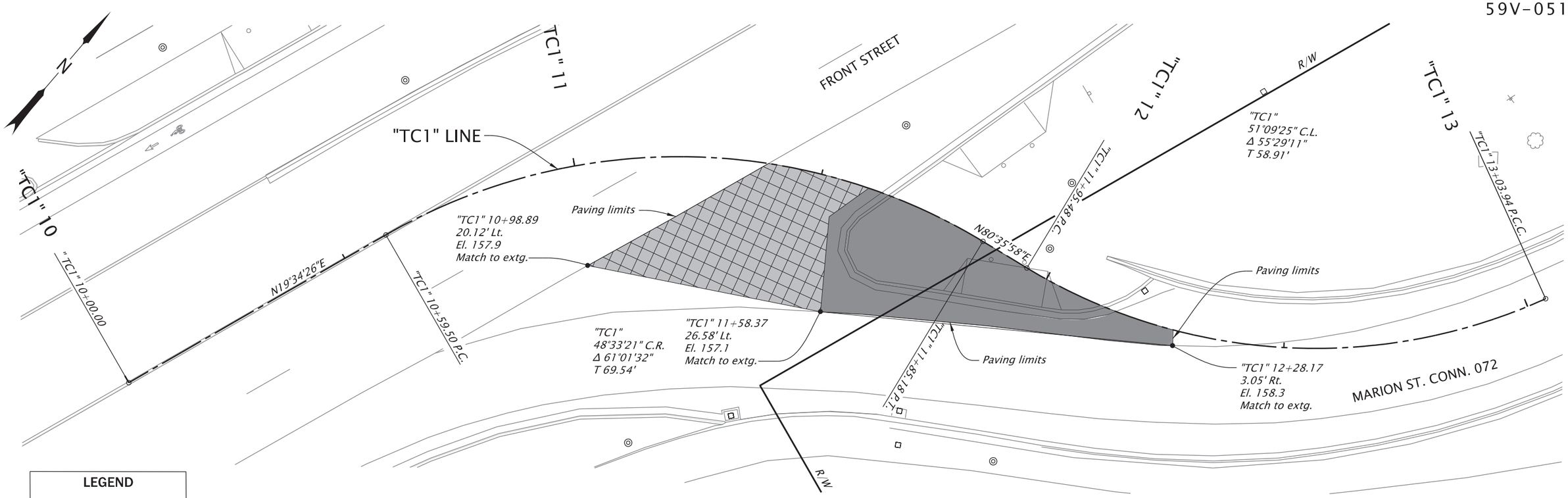

LEGEND

- ACP full depth paving limits
- ACP overlay, 0" to 4"

TEMPORARY PAVEMENT WIDENING
MARION STREET CONNECTOR RAMP
STAGE I

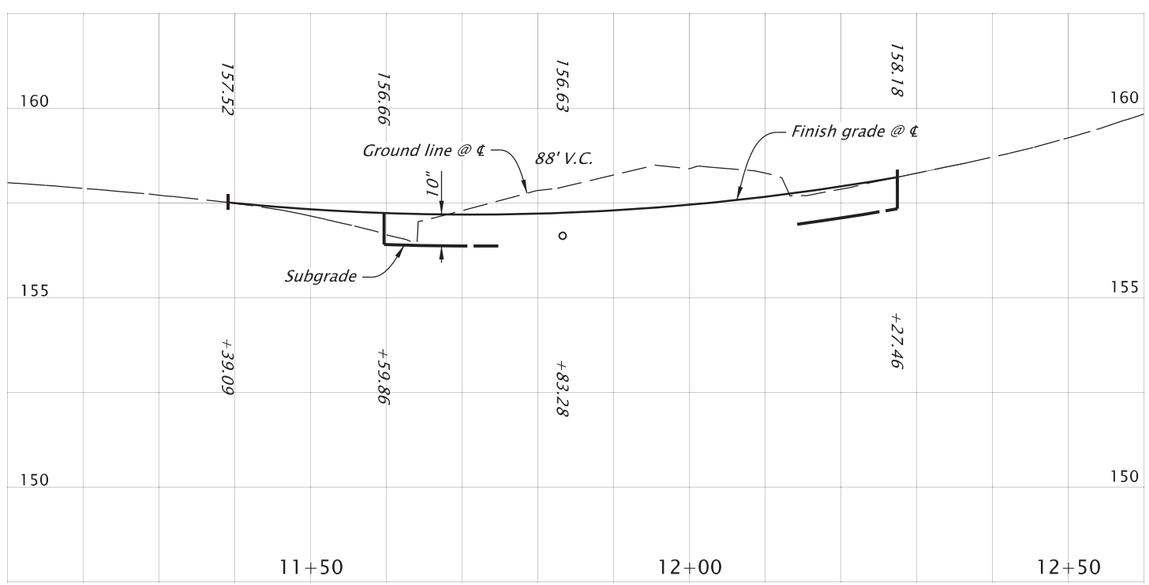

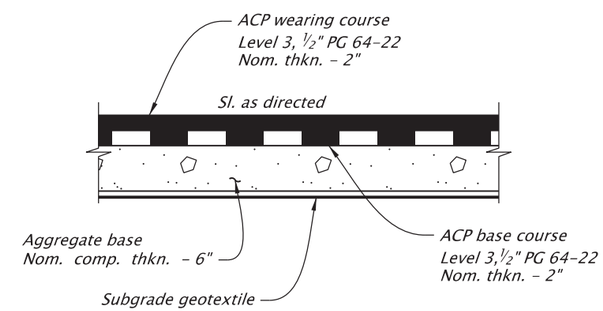

TEMPORARY SURFACING

REGISTERED PROFESSIONAL ENGINEER
100246PE
Digitally Signed 2026.01.28 10:29:04-08'00'
OREGON
JULY 12, 2022
JASON BENJAMIN GALEAZZI
EXPIRES: 06/30/2027

FINAL ELECTRONIC DOCUMENT AVAILABLE UPON REQUEST

DOWL WWW.DOWL.COM

OREGON DEPARTMENT OF TRANSPORTATION

OR22: CENTER ST BRIDGE (PHASE 1) PROJECT
WILLAMINA-SALEM HIGHWAY
MARION & POLK COUNTIES

Designer: Jason Galeazzi
Reviewer: Bob Goodrich
Drafter: Steve Wolfer
Checker: Kyle Farnsworth

TRAFFIC CONTROL DETAILS

SHEET NO. EA04

TRAFFIC CONTROL PLAN

STAGE I - PHASE 1

Front Street NB Water Line

48x48

1

48x48

2

48x48

3

R2-1

36x48

4

48x48

5

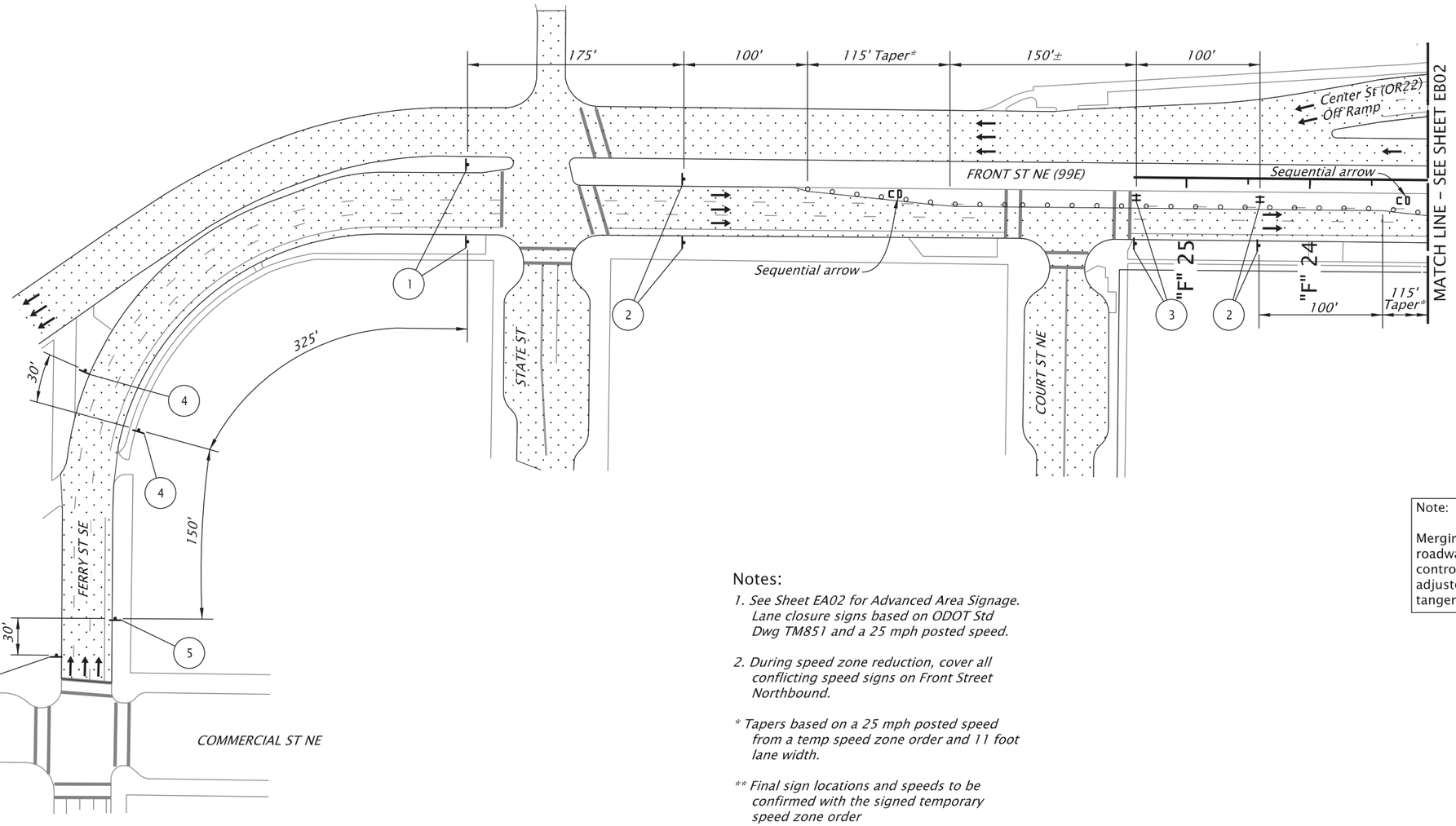

Note:

Merging taper should begin on roadway tangent. Recommended traffic control device spacing shown has been adjusted to accommodate tapers on tangent portions of roadway.

Notes:

1. *See Sheet EA02 for Advanced Area Signage. Lane closure signs based on ODOT Std Dwg TM851 and a 25 mph posted speed.*

2. *During speed zone reduction, cover all conflicting speed signs on Front Street Northbound.*

* *Tapers based on a 25 mph posted speed from a temp speed zone order and 11 foot lane width.*

** *Final sign locations and speeds to be confirmed with the signed temporary speed zone order*

LEGEND

- *Direction of traffic*
- *Under traffic*
- *Sign on post*
- *Temporary sign support (TSS)*
- *Temp. plastic drums on 20' max. spacing*
- *Signing detail, see this sheet*

N

100 50 0 100

FEET

REGISTERED PROFESSIONAL ENGINEER 56,267 OREGON JULY 9, 2002 SCOTT M. MANSUR

Digitally Signed 2026.01.27 16:07:43-08'00'

EXPIRES: DEC. 31, 2026

FINAL ELECTRONIC DOCUMENT AVAILABLE UPON REQUEST

DKS
117 Commercial St. NE, Suite 310
Salem, Oregon 97301
(503) 391-8773
www.dksassociates.com

OR22: CENTER ST BRIDGE (PHASE 1) PROJECT
WILLAMINA-SALEM HIGHWAY
MARION & POLK COUNTIES

Designer: B. Lindell
Reviewer: B. Copeland
Drafter: C. Tower
Checker: S. Mansur

TRAFFIC CONTROL PLAN

SHEET NO. EB01

T R A F F I C C O N T R O L P L A N

STAGE I - PHASE 1

Front Street NB Water Line

48x48

1

48x48

2

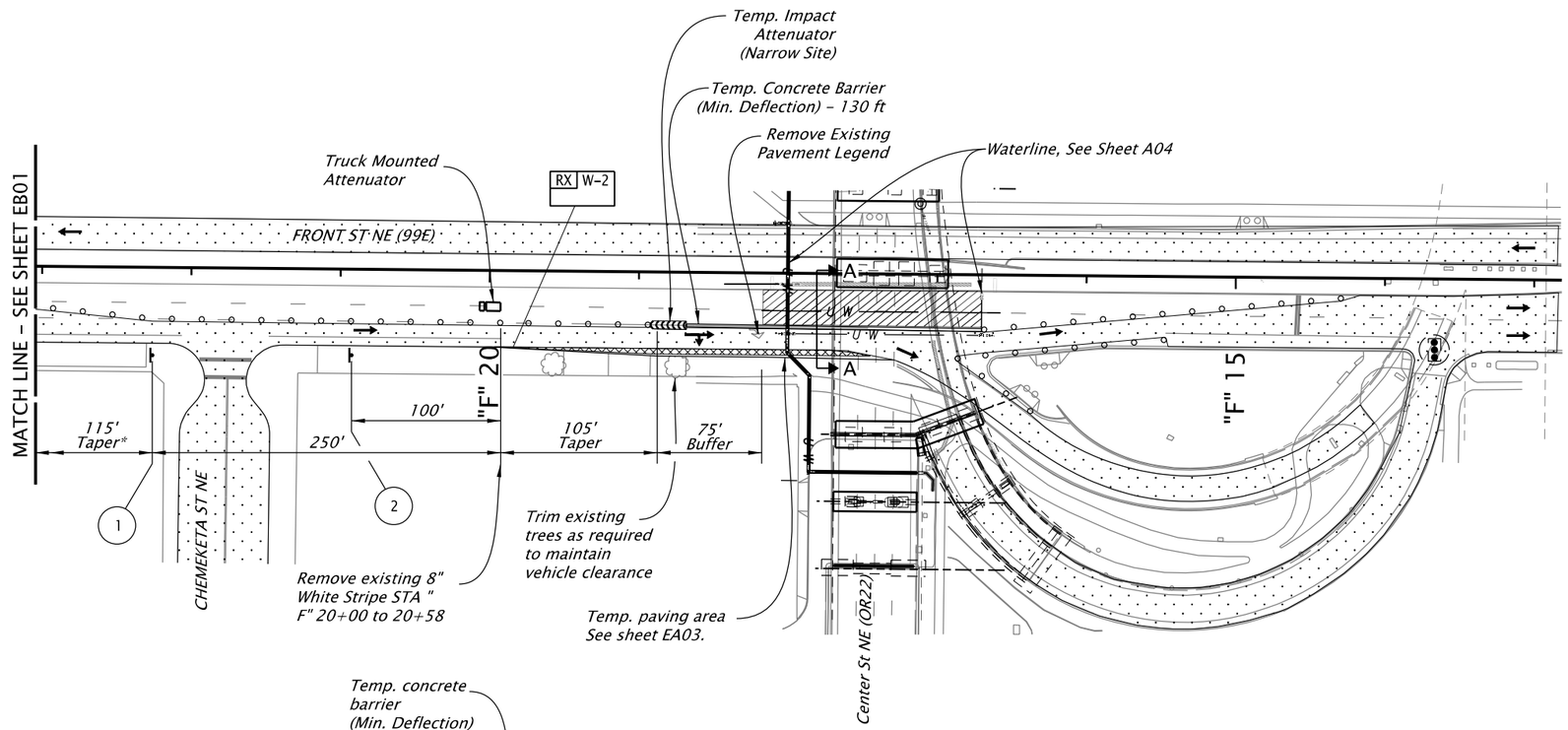

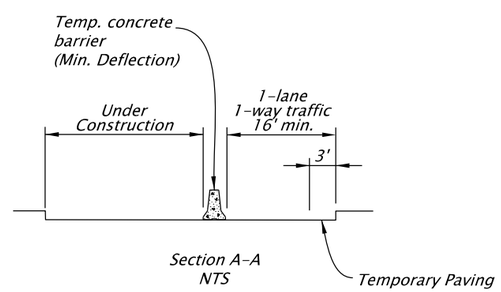

L E G E N D

- Direction of traffic
- Under traffic
- Under construction
- Temp. road widening
- Sign on post
- Temp. plastic drums on 20' max. spacing
- # Signing detail, see this sheet
- RX W-2 Remove extg. 8" white line

Notes:

1. See Sheet EA02 for Advanced Area Signage. Lane closure signs based on ODOT Std Dwg TM851 and a 25 mph posted speed.
2. Construct temporary paving under standard shoulder closures on TM861 prior to beginning Stage 1 Phase 1 work. Restore pavement to the original configuration before progressing work to the next phase. See sheet EA03 for pavement details.

* Tapers based on a 25 mph posted speed from a temp speed zone order and 11 foot lane width.

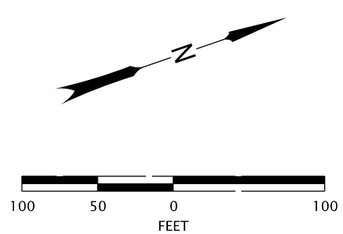

REGISTERED PROFESSIONAL ENGINEER 56,267 OREGON JULY 9, 2002 SCOTT M. MANSUR

Digitally Signed 2026.07.22 08:08:25-07'00'

EXPIRES: DEC. 31, 2026

FINAL ELECTRONIC DOCUMENT AVAILABLE UPON REQUEST

DKS
117 Commercial St. NE, Suite 310
Salem, Oregon 97301
(503) 391-8773
www.dksassociates.com

OR22: CENTER ST BRIDGE (PHASE 1) PROJECT
WILLAMINA-SALEM HIGHWAY
MARION & POLK COUNTIES

Designer: B. Lindell | Reviewer: B. Copeland
Drafter: C. Tower | Checker: S. Mansur

TRAFFIC CONTROL PLAN

SHEET NO. EB02

TRAFFIC CONTROL PLAN

STAGE I - PHASE 2

Front Street NB Water Line

48x48

1

48x48

2

48x48

3

R2-1

36x48

4

48x48

5

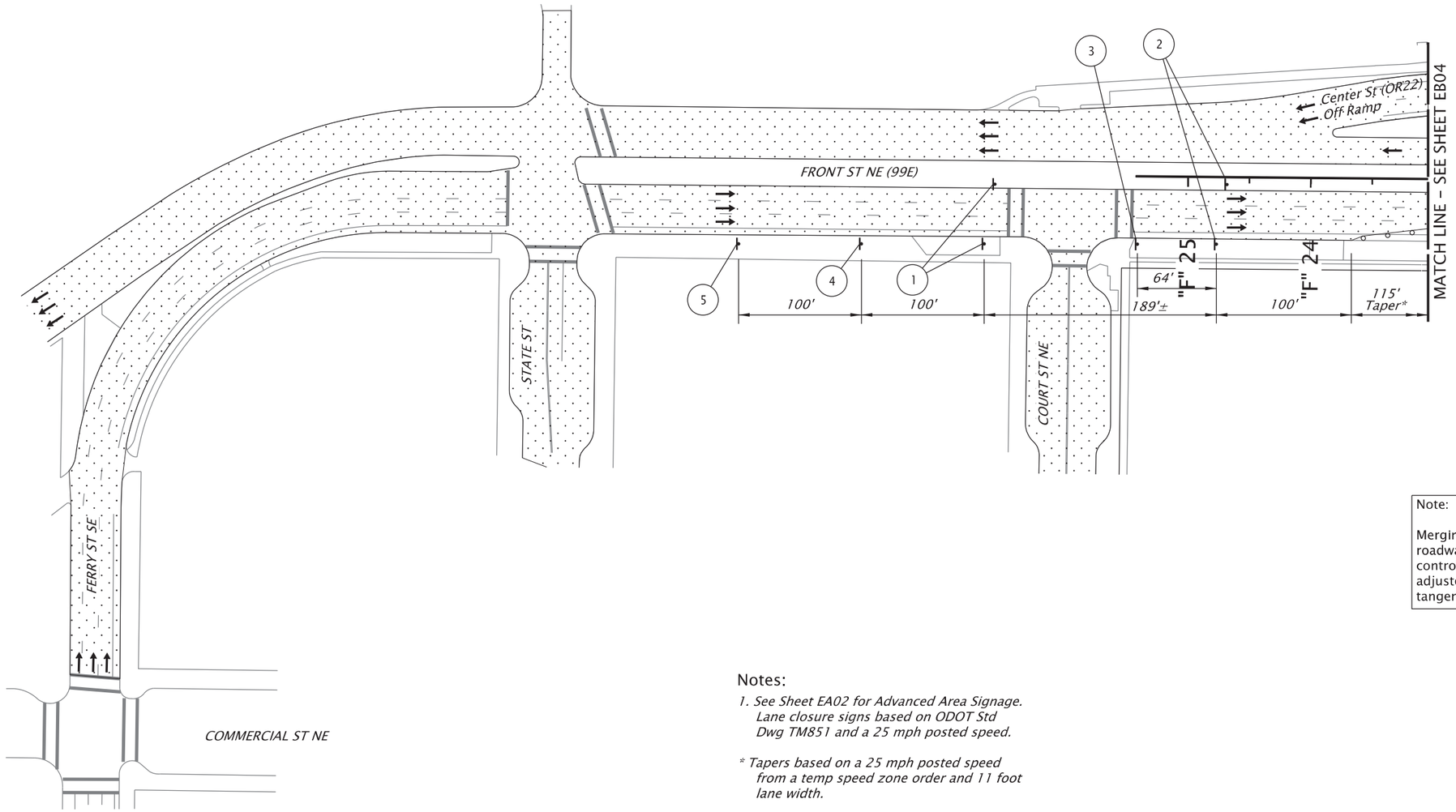

Note:

Merging taper should begin on roadway tangent. Recommended traffic control device spacing shown has been adjusted to accommodate tapers on tangent portions of roadway.

Notes:

1. *See Sheet EA02 for Advanced Area Signage. Lane closure signs based on ODOT Std Dwg TM851 and a 25 mph posted speed.*

** Tapers based on a 25 mph posted speed from a temp speed zone order and 11 foot lane width.*

*** Final sign locations and speeds to be confirmed with the signed temporary speed zone order*

LEGEND

- *Direction of traffic*
- *Under traffic*
- *Sign on post*
- *Temporary sign support (TSS)*
- *Temp. plastic drums on 20' max. spacing*
- *Signing detail, see this sheet*

N

100 50 0 100

FEET

REGISTERED PROFESSIONAL ENGINEER 56,267 OREGON JULY 9, 2002 SCOTT M. MANSUR

Digitally Signed: 2026.01.27 16:07:59-08'00'

EXPIRES: DEC. 31, 2026

FINAL ELECTRONIC DOCUMENT AVAILABLE UPON REQUEST

DKS
117 Commercial St. NE, Suite 310
Salem, Oregon 97301
(503) 391-8773
www.dksassociates.com

OR22: CENTER ST BRIDGE (PHASE 1) PROJECT
WILLAMINA-SALEM HIGHWAY
MARION & POLK COUNTIES

Designer: B. Lindell
Reviewer: B. Copeland
Drafter: C. Tower
Checker: S. Mansur

TRAFFIC CONTROL PLAN

SHEET NO. EB03

59V-051

T R A F F I C C O N T R O L P L A N

STAGE I - PHASE 2

Front Street NB Water Line

48x48

1

48x48

2

48x48

3

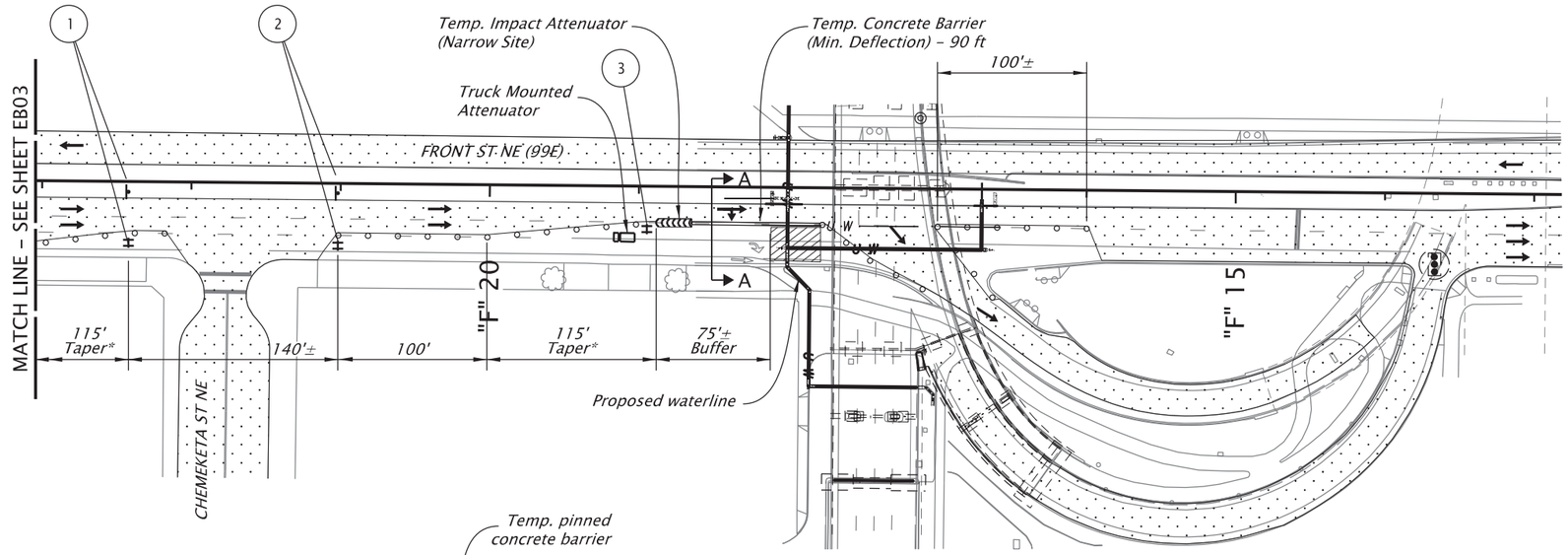

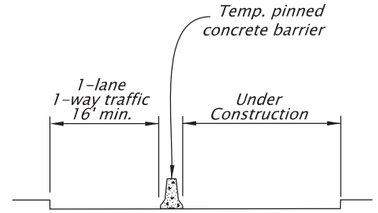

Section A-A
NTS

L E G E N D

- Direction of traffic
- Under traffic
- Under construction
- Sign on post
- Temporary sign support (TSS)
- Temp. plastic drums on 20' max. spacing
- # Signing detail, see this sheet

Notes:

1. See Sheet EA02 for Advanced Area Signage. Lane closure signs based on ODOT Std Dwg TM851 and a 25 mph posted speed.

2. Waterline valves, reducers and junctions to be installed during this phase. Ductile iron pipe running north-south under Front Street will be installed in Phase 3.

* Tapers based on a 25 mph posted speed from a temp speed zone order and 11 foot lane width.

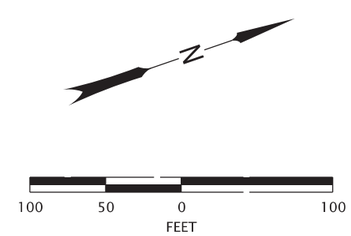

REGISTERED PROFESSIONAL ENGINEER 56,267
Digitally Signed 2026.01.27 16:08:05-08'00'
OREGON
JULY 9, 2002
SCOTT M. MANSUR
EXPIRES: DEC. 31, 2026

FINAL ELECTRONIC DOCUMENT
AVAILABLE UPON REQUEST

DKS
117 Commercial St. NE, Suite 310
Salem, Oregon 97301
(503) 391-8773
www.dksassociates.com

OR22: CENTER ST BRIDGE (PHASE 1) PROJECT
WILLAMINA-SALEM HIGHWAY
MARION & POLK COUNTIES

Designer: B. Lindell
Reviewer: B. Copeland
Drafter: C. Tower
Checker: S. Mansur

TRAFFIC CONTROL PLAN

SHEET NO.
EB04

59V-051

T R A F F I C C O N T R O L P L A N

STAGE I - PHASE 3

Front Street NB Water Line

48x48

1

48x48

2

RAMP CLOSED

OR22-18
48x30
(Mount On TSS)

3

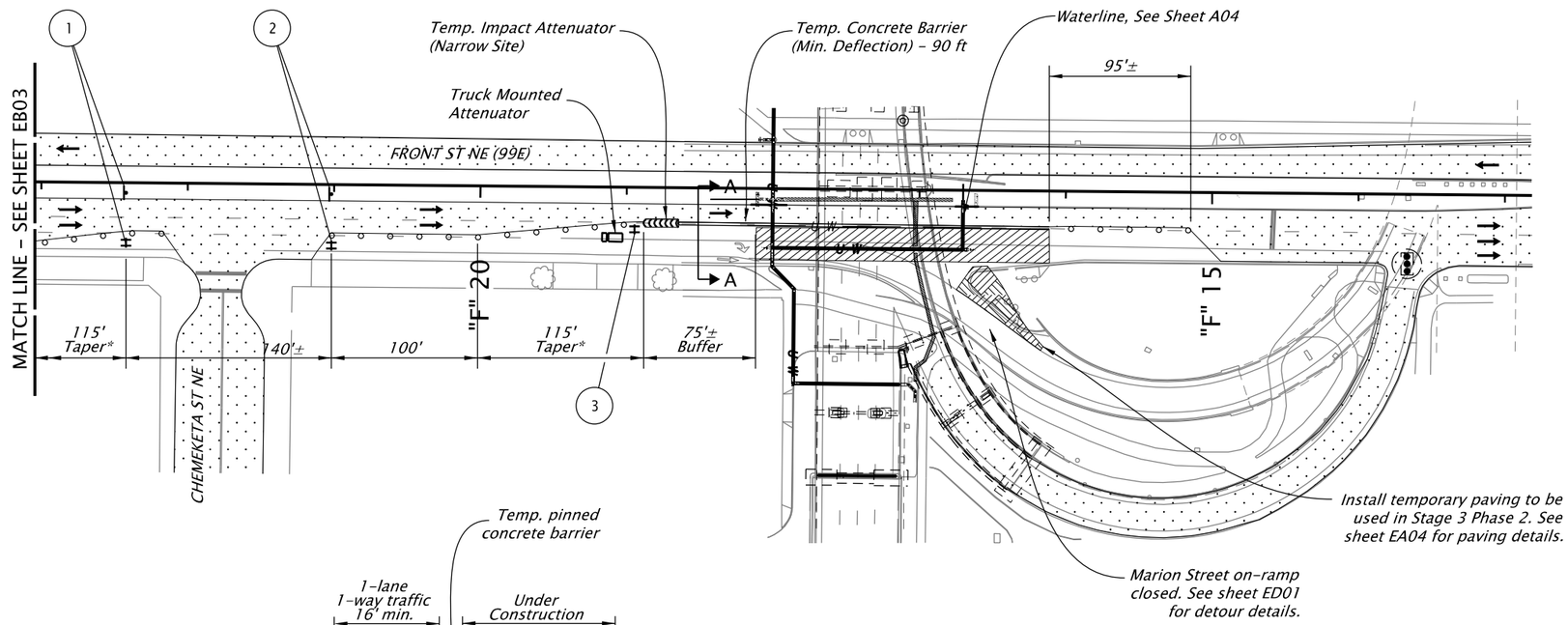

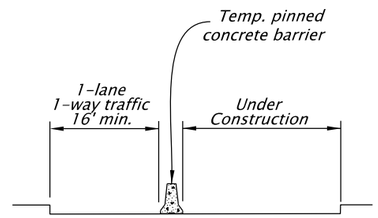

Section A-A
NTS

L E G E N D

- Direction of traffic
- Under traffic
- Under construction
- Temporary paving
- Sign on post
- Temporary sign support (TSS)
- Temp. plastic drums on 20' max. spacing
- # Signing detail, see this sheet

Notes:

1. See Sheet EA02 for Advanced Area Signage. Lane closure signs based on ODOT Std Dwg TM851 and a 25 mph posted speed.
2. See sheet EB03 for advanced lane closure signing.
3. Ductile iron pipe running north-south under Front Street will be installed during this phase.
4. See sheet ED01 for Marion Street On-Ramp detour details.

* Tapers based on a 25 mph posted speed from a temp speed zone order and 11 foot lane width.

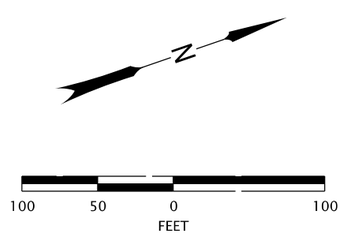

REGISTERED PROFESSIONAL ENGINEER 56,267
Digitally Signed: 2026.07.22 08:08:42-07'00'
OREGON
JULY 9, 2002
SCOTT M. MANSUR
EXPIRES: DEC. 31, 2026

FINAL ELECTRONIC DOCUMENT AVAILABLE UPON REQUEST

DKS
117 Commercial St. NE, Suite 310
Salem, Oregon 97301
(503) 391-8773
www.dksassociates.com

OR22: CENTER ST BRIDGE (PHASE 1) PROJECT
WILLAMINA-SALEM HIGHWAY
MARION & POLK COUNTIES

Designer: B. Lindell
Reviewer: B. Copeland
Drafter: C. Tower
Checker: S. Mansur

TRAFFIC CONTROL PLAN

SHEET NO. EB05

59V-051

TRAFFIC CONTROL PLAN

STAGE I - PHASE 4

Front Street SB Water Line

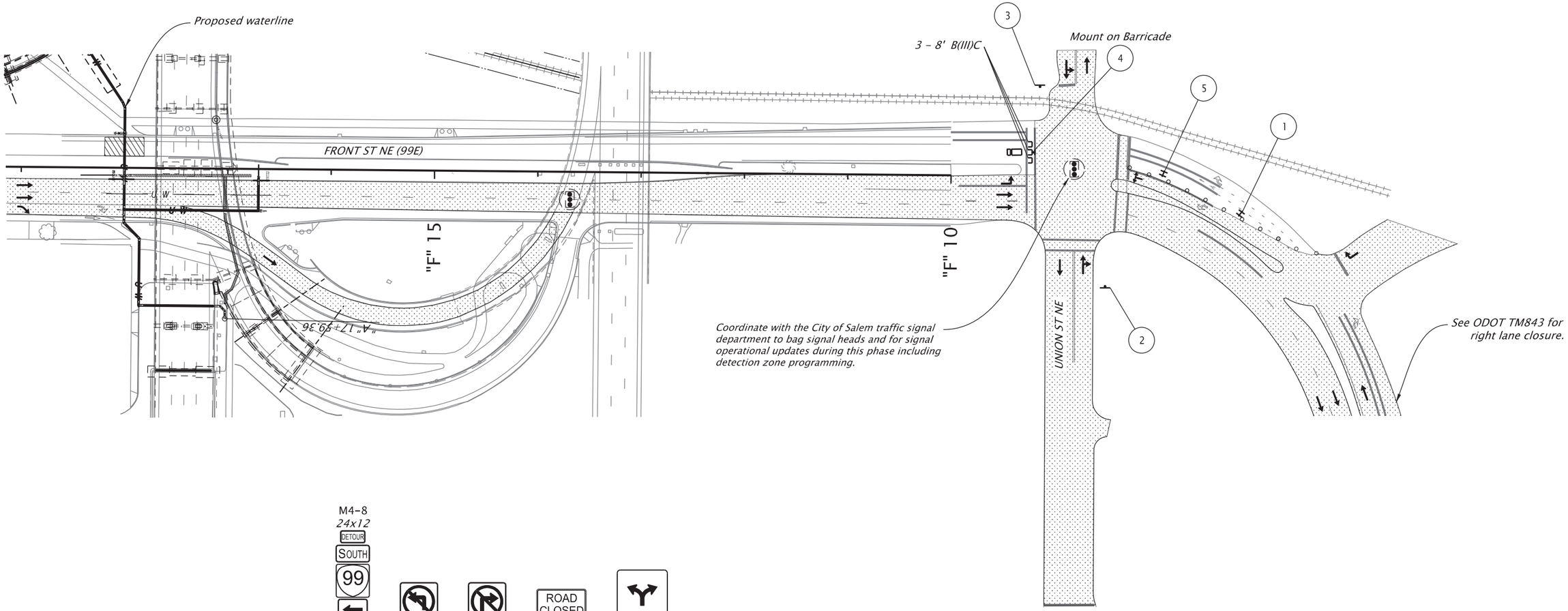

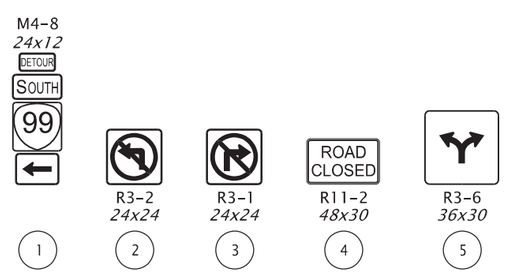

LEGEND

- Direction of traffic
- Under traffic
- Under construction
- Sign on post
- Barricade
- Sign on barricade
- Temp. plastic drums on 20' max. spacing
- (#) Signing detail, see this sheet

Notes:

1. See Sheet EA02 for Advanced Area Signage.
2. See Sheet EB07 for Front Street SB Detour.
3. Waterline work and closure of Front Street (99E) SB to occur from 10 PM - 5 AM. Protect the trench during daytime hours with a steel plate. See ODOT standard specification 00405.46(e) for temporary trench plating details.

N

100 50 0 100
FEET

REGISTERED PROFESSIONAL ENGINEER 56,267
Digitally Signed 2026.01.27 16:08:16-08'00'
OREGON
JULY 9, 2002
SCOTT M. MANSUR
EXPIRES: DEC. 31, 2026

FINAL ELECTRONIC DOCUMENT AVAILABLE UPON REQUEST

DKS
117 Commercial St. NE, Suite 310
Salem, Oregon 97301
(503) 391-8773
www.dksassociates.com

OREGON DEPARTMENT OF TRANSPORTATION

OR22: CENTER ST BRIDGE (PHASE 1) PROJECT
WILLAMINA-SALEM HIGHWAY
MARION & POLK COUNTIES

Designer: B. Lindell
Reviewer: B. Copeland
Drafter: C. Tower
Checker: S. Mansur

TRAFFIC CONTROL PLAN

SHEET NO. EB06

59V-051

D E T O U R P L A N

STAGE I - PHASE 4

Front Street SB Water Line

48x30

1

W20-3
48x48

2

W20-2D
48x48

3

CG20-5
30x24

4

M4-8P
M3-2P
M1-5
M6-3P

5

M4-8P
M3-2P
M1-5
M6-1PL

6

M4-8P
M3-2P
M1-5
M6-3PR

7

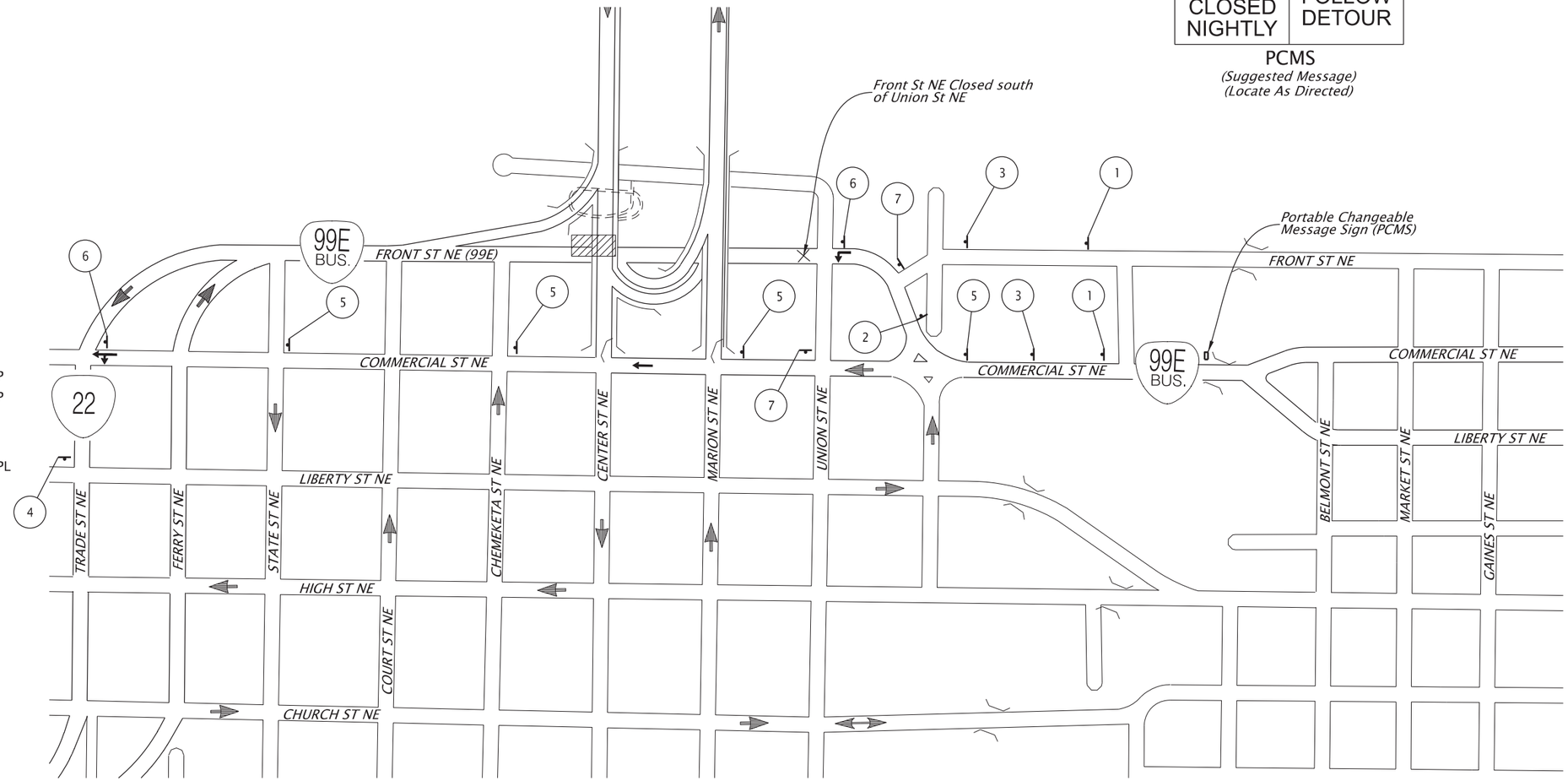

L E G E N D

- Direction of traffic
- Under construction
- Portable Changeable Message Sign (PCMS)
- Sign on post
- # Signing detail, see this sheet

Notes:

1. See Sheet EA02 for Advanced Area Signage.
2. Due to the short duration of the nightly detours, signs may be installed on temporary sign supports (TSS) or roll-up signs.

N

100 50 0 100
FEET

REGISTERED PROFESSIONAL ENGINEER 56,267 OREGON JULY 9, 2002 SCOTT M. MANSUR

Digitally Signed: 2026.01.27 16:08:22-08'00'

EXPIRES: DEC. 31, 2026

FINAL ELECTRONIC DOCUMENT AVAILABLE UPON REQUEST

DKS
117 Commercial St. NE, Suite 310
Salem, Oregon 97301
(503) 391-8773
www.dksassociates.com

OR22: CENTER ST BRIDGE (PHASE 1) PROJECT
WILLAMINA-SALEM HIGHWAY
MARION & POLK COUNTIES

Designer: B. Lindell
Reviewer: B. Copeland
Drafter: C. Tower
Checker: S. Mansur

TRAFFIC CONTROL DETOUR PLAN

SHEET NO. EB07

59V-051

TRAFFIC CONTROL PLAN
STAGE II
Bent 25 Construction

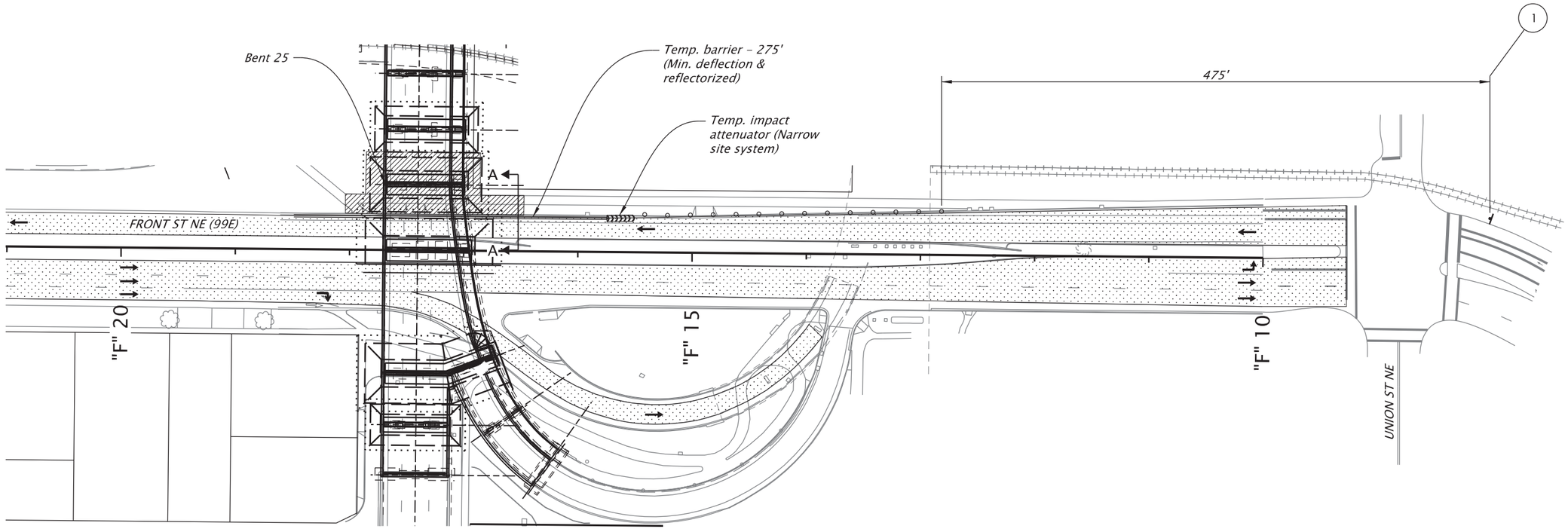

1

Notes:

1. See Sheet EA02 for Advanced Area Signage.
2. See EC03 for Temporary Pedestrian Detour Plan.

LEGEND

- Direction of traffic
- Under traffic
- Under construction
- Sign on post
- Temp. plastic drums on 20' max. spacing
- Tubular markers on 20' max. spacing
- # Signing detail, see this sheet

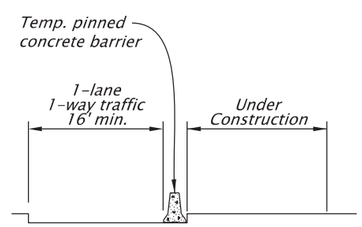

Section A-A
NTS

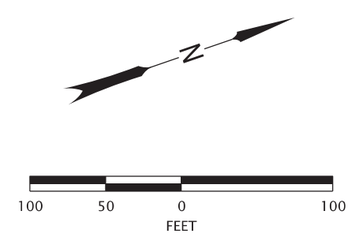

REGISTERED PROFESSIONAL ENGINEER 56,267 OREGON JULY 9, 2002 SCOTT M. MANSUR

Digitally Signed: 2026.01.27 16:21:41-08'00'

EXPIRES: DEC. 31, 2026

FINAL ELECTRONIC DOCUMENT AVAILABLE UPON REQUEST

DKS
117 Commercial St. NE, Suite 310
Salem, Oregon 97301
(503) 391-8773
www.dksassociates.com

OR22: CENTER ST BRIDGE (PHASE 1) PROJECT
WILLAMINA-SALEM HIGHWAY
MARION & POLK COUNTIES

Designer: B. Lindell | Reviewer: B. Copeland
Drafter: C. Tower | Checker: S. Mansur

TRAFFIC CONTROL PLAN

SHEET NO. EC01

TEMPORARY PEDESTRIAN DETOUR PLAN (TPAR)

59V-051

STAGE II

Center Street Bridge Closure

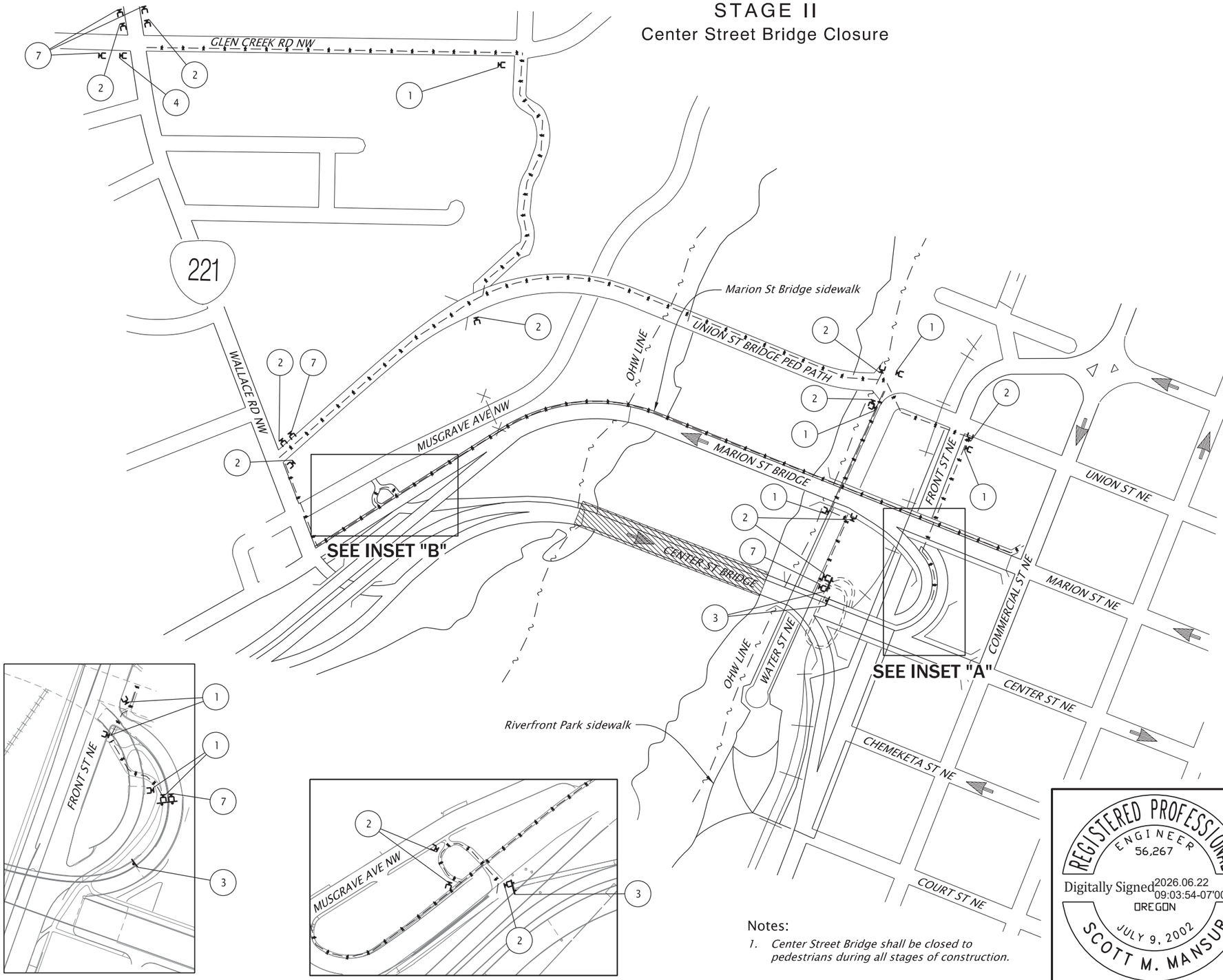

SIGN DETAILS

M4-9b(R)
30x24
(Mount on B(II)R)
1

M4-9b(L)
30x24
(Mount on B(II)L)
2

R9-9
24x12
(Mount on PCD)
3

M4-9b
30x24
(Mount on B(II)L)
4

Not Used
5

Not Used
6

CENTER STREET BRIDGE
CLOSED TO BIKES & PEDS
USE UNION STREET BRIDGE

18x36
7

N

LEGEND

- *Under construction (Sidewalk closed)*
- *Type II Barricade (L/R)*
- *Pedestrian Channeling Device (PCD) Secure PCD to pavement per direction from engineer.*
- *Temporary pedestrian access route*
- *Sign No. (See details on this sheet)*

Notes:

1. *Center Street Bridge shall be closed to pedestrians during all stages of construction.*

REGISTERED PROFESSIONAL ENGINEER
56,267
Digitally Signed 2026.06.22 09:03:54-07'00'
OREGON
JULY 9, 2002
SCOTT M. MANSUR
EXPIRES: DEC. 31, 2026

FINAL ELECTRONIC DOCUMENT AVAILABLE UPON REQUEST

DKS
117 Commercial St. NE, Suite 310
Salem, Oregon 97301
(503) 391-8773
www.dksassociates.com

OR22: CENTER ST BRIDGE (PHASE 1) PROJECT
WILLAMINA-SALEM HIGHWAY
MARION & POLK COUNTIES

Designer: B. Lindell
Reviewer: B. Copeland
Drafter: C. Tower
Checker: S. Mansur

TRAFFIC CONTROL DETOUR PLAN

SHEET NO.
EC02

TEMPORARY PEDESTRIAN DETOUR PLAN (TPAR)

59V-051

STAGE II

Bent 25 Construction

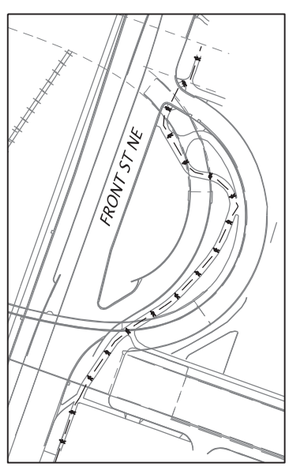

INSET "A"

SIGN DETAILS

M4-9b(R) 30x24 (Mount on B(II)R) (1)	M4-9b(L) 30x24 (Mount on B(II)L) (2)
R9-9 24x12 (Mount on PCD) (3)	Not Used (4)
R9-11 24x18 (Mount on B(II)L) (5)	R9-11 24x18 (Mount on B(II)R) (6)

LEGEND

- Closed to pedestrians
- Under construction
- Type II Barricade (L/R)
- Pedestrian Channeling Device (PCD)
- Temporary pedestrian access route
- (#) Sign No. (See details on this sheet)

N

Notes:

1. Center Street Bridge shall be closed to pedestrians during all stages of construction.
2. See sheet EC02 for Center Street Bridge pedestrian detour routes and details to be used in conjunction with this plan.

REGISTERED PROFESSIONAL ENGINEER 56,267 OREGON JULY 9, 2002 SCOTT M. MANSUR

Digitally Signed 2026.01.27 16:09:17-08'00'

EXPIRES: DEC. 31, 2026

FINAL ELECTRONIC DOCUMENT AVAILABLE UPON REQUEST

DKS
117 Commercial St. NE, Suite 310
Salem, Oregon 97301
(503) 391-8773
www.dksassociates.com

OR22: CENTER ST BRIDGE (PHASE 1) PROJECT
WILLAMINA-SALEM HIGHWAY
MARION & POLK COUNTIES

Designer: B. Lindell | Reviewer: B. Copeland
Drafter: C. Tower | Checker: S. Mansur

TRAFFIC CONTROL DETOUR PLAN

SHEET NO. EC03

59V-051

D E T O U R P L A N
STAGE III - PHASE 1
MARION STREET BRIDGE ON-RAMP CLOSURE

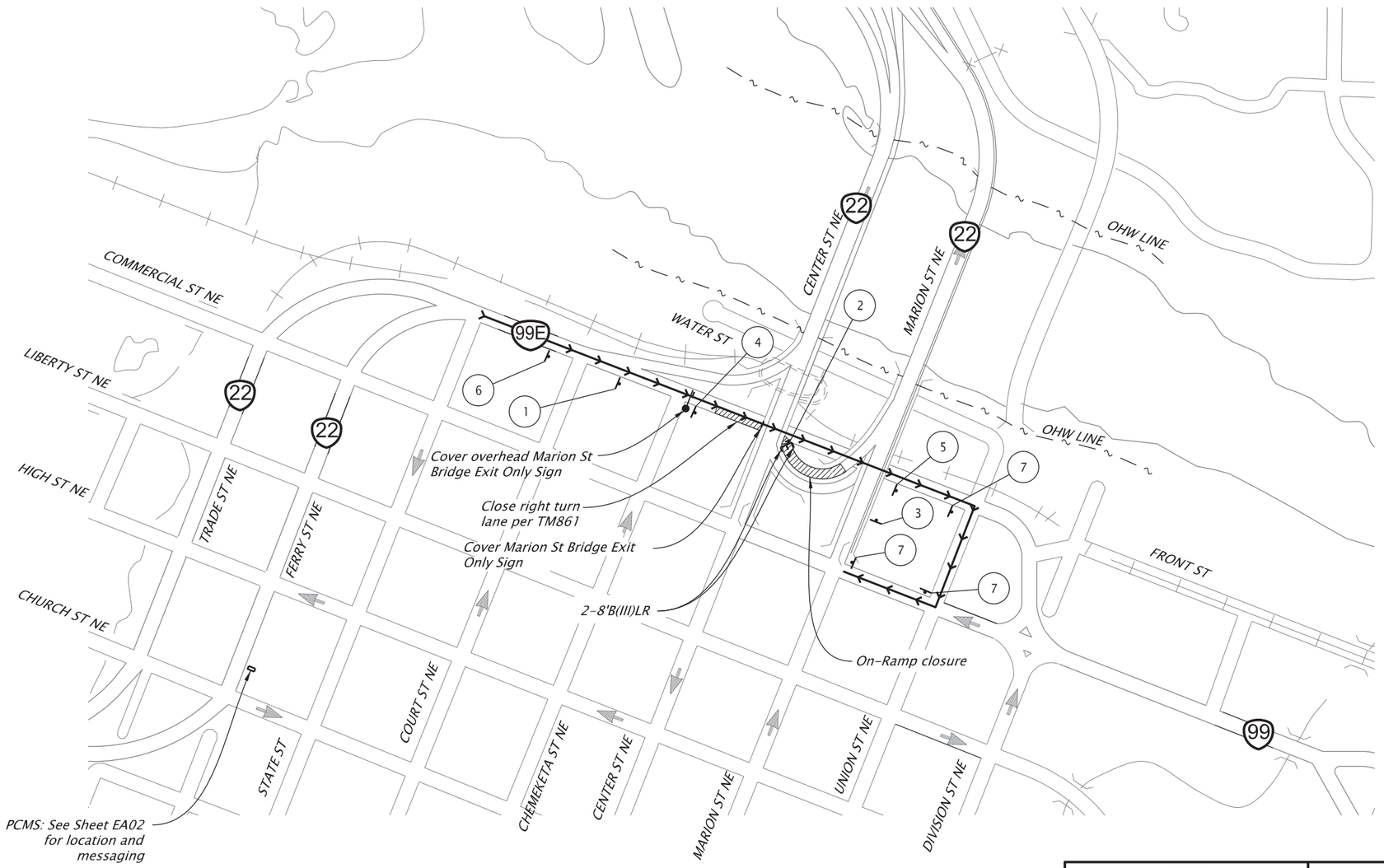

SIGN DETAILS

48"x48"

1

48"x36"
(Black on white)

2

CG20-5
24"X18"

3

M4-8
24"x12"

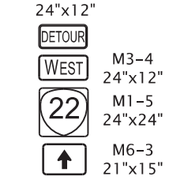

M3-4
24"x12"
M1-5
24"x24"
M6-3
21"x15"

4

M4-8
24"x12"

M3-4
24"x12"
M1-5
24"x24"
M5-1
21"x15"

5

36x36

6

M4-8
24"x12"

M3-4
24"x12"
M1-5
24"x24"
M5-1
21"x15"

7

L E G E N D

- *Vehicle detour route*
- *Under construction*
- *Temporary sign on temporary support*
- *Existing Cantilever Sign*
- *8' type III (L, R, or LR) barricade*
- *Portable Changeable Message Sign (PCMS)*
- (#) *Signing detail. See this sheet*

N

500 250 0 500
FEET

Notes:

1. See Sheet EA02 for Advanced Area Signage.
2. This detour plan also applies to Stage 1 Phase 3 work.

REGISTERED PROFESSIONAL ENGINEER 56,267
Digitally Signed: 2026.01.27 16:09:23-08'00'
OREGON
JULY 9, 2002
SCOTT M. MANSUR
EXPIRES: DEC. 31, 2026

FINAL ELECTRONIC DOCUMENT AVAILABLE UPON REQUEST

DKS
117 Commercial St. NE, Suite 310
Salem, Oregon 97301
(503) 391-8773
www.dksassociates.com

OR22: CENTER ST BRIDGE (PHASE 1) PROJECT
WILLAMINA-SALEM HIGHWAY
MARION & POLK COUNTIES

Designer: B. Lindell | Reviewer: Name
Drafter: C. Tower | Checker: Name

TRAFFIC CONTROL DETOUR PLAN

SHEET NO. ED01

TRAFFIC CONTROL PLAN

STAGE III - PHASE 2

Bent 27 Construction

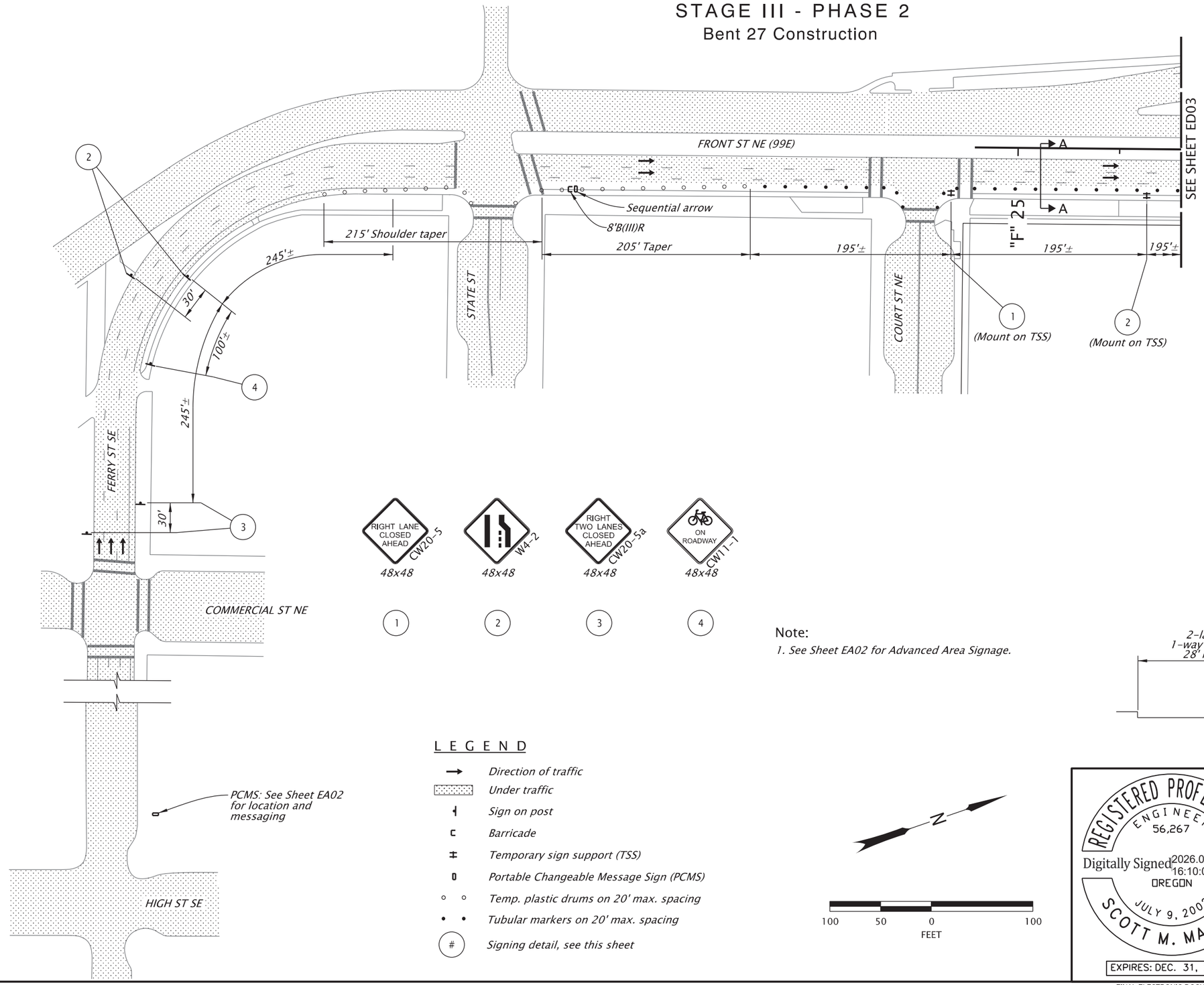

Note:

1. See Sheet EA02 for Advanced Area Signage.

Note:

Merging taper should begin on roadway tangent. Recommended traffic control device spacing reduced to accommodate tapers on tangent portions of roadway as shown.

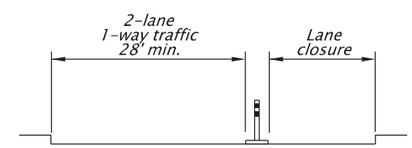

Section A-A
NTS

LEGEND

- Direction of traffic
- Under traffic
- Sign on post
- Barricade
- Temporary sign support (TSS)
- Portable Changeable Message Sign (PCMS)
- Temp. plastic drums on 20' max. spacing
- Tubular markers on 20' max. spacing
- # Signing detail, see this sheet

N

100 50 0 100
FEET

REGISTERED PROFESSIONAL ENGINEER 56,267 OREGON JULY 9, 2002 SCOTT M. MANSUR

Digitally Signed: 2026.01.27 16:10:01-08'00'

EXPIRES: DEC. 31, 2026

FINAL ELECTRONIC DOCUMENT AVAILABLE UPON REQUEST

DKS
117 Commercial St. NE, Suite 310
Salem, Oregon 97301
(503) 391-8773
www.dksassociates.com

OREGON DEPARTMENT OF TRANSPORTATION

OR22: CENTER ST BRIDGE (PHASE 1) PROJECT
WILLAMINA-SALEM HIGHWAY
MARION & POLK COUNTIES

Designer: B. Lindell
Reviewer: B. Copeland
Drafter: C. Tower
Checker: S. Mansur

TRAFFIC CONTROL PLAN

SHEET NO. ED02

T R A F F I C C O N T R O L P L A N

STAGE III - PHASE 2

Bent 27 Construction

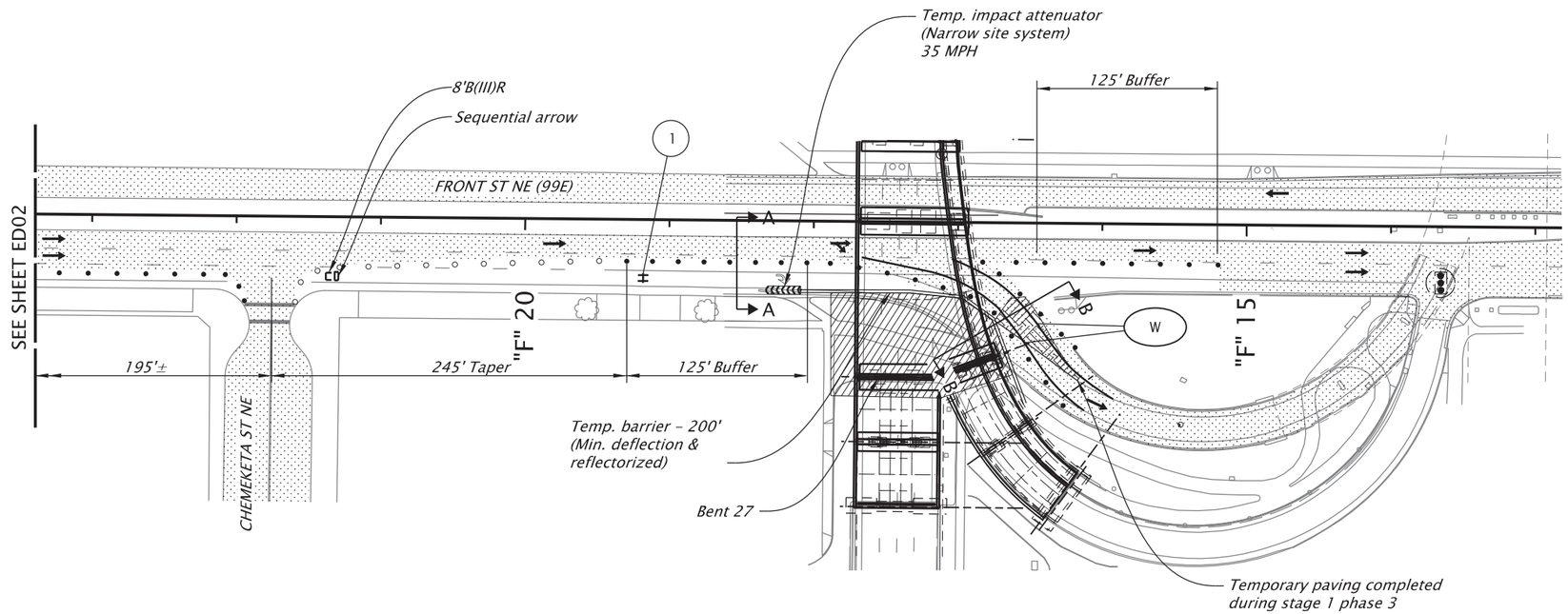

R3-6
30x30

1

Notes:

1. See Sheet EA02 for Advanced Area Signage.
2. Restore pavement markings to original configuration at the conclusion of Stage III.

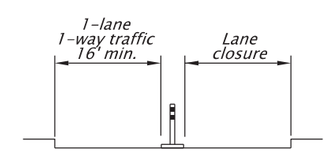

Section A-A
NTS

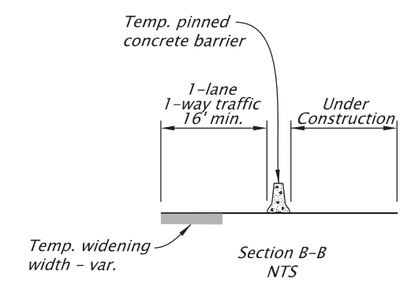

Section B-B
NTS

L E G E N D

- Direction of traffic
- Under traffic
- Under construction
- Temp. road widening
- Barricade
- Temporary sign support (TSS)
- Temp. plastic drums on 20' max. spacing
- Tubular markers on 20' max. spacing
- # Signing detail, see this sheet.
- W Inst. temporary 4" white line

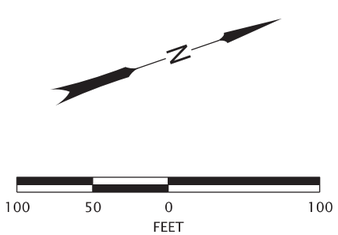

REGISTERED PROFESSIONAL ENGINEER 56,267
Digitally Signed 2026.06.22 09:02:44-07'00'
OREGON
JULY 9, 2002
SCOTT M. MANSUR
EXPIRES: DEC. 31, 2026

FINAL ELECTRONIC DOCUMENT
AVAILABLE UPON REQUEST

DKS
117 Commercial St. NE, Suite 310
Salem, Oregon 97301
(503) 391-8773
www.dksassociates.com

OREGON DEPARTMENT OF TRANSPORTATION

OR22: CENTER ST BRIDGE (PHASE 1) PROJECT
WILLAMINA-SALEM HIGHWAY
MARION & POLK COUNTIES

Designer: B. Lindell
Reviewer: B. Copeland
Drafter: C. Tower
Checker: S. Mansur

TRAFFIC CONTROL PLAN

SHEET NO. ED03

59V-051

TEMPORARY PEDESTRIAN DETOUR PLAN (TPAR)

STAGE III

Bent 27 Construction

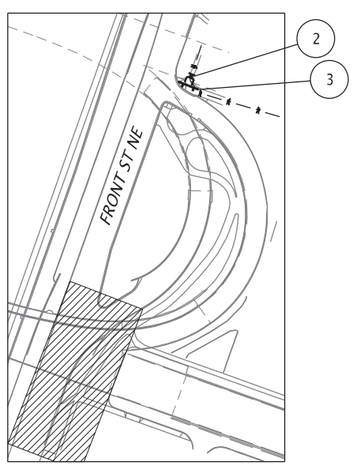

INSET "A"

SIGN DETAILS

DETOUR → M4-9b(R) 30x24 (Mount on B(II)R) (1)	DETOUR ← M4-9b(L) 30x24 (Mount on B(II)L) (2)
SIDEWALK CLOSED R9-9 24x12 (Mount on PCD) (3)	Not Used (4)
Not Used (5)	SIDEWALK CLOSED AHEAD CROSS HERE → R9-11 24x18 (Mount on B(II)R) (6)

LEGEND

- Closed to pedestrians
- Under construction
- Type II Barricade (L/R)
- Pedestrian Channeling Device (PCD)
- Temporary pedestrian access route
- # Sign No. (See details on this sheet)

Notes:

1. Center Street Bridge shall be closed to pedestrians during all stages of construction.
2. See sheet EC02 for Center Street Bridge pedestrian detour routes and details to be used in conjunction with this plan.

REGISTERED PROFESSIONAL ENGINEER 56,267 OREGON JULY 9, 2002 SCOTT M. MANSUR

Digitally Signed: 2026.01.27 16:09:02-08'00'

EXPIRES: DEC. 31, 2026

FINAL ELECTRONIC DOCUMENT AVAILABLE UPON REQUEST

DKS
117 Commercial St. NE, Suite 310
Salem, Oregon 97301
(503) 391-8773
www.dksassociates.com

OR22: CENTER ST BRIDGE (PHASE 1) PROJECT
WILLAMINA-SALEM HIGHWAY
MARION & POLK COUNTIES

Designer: B. Lindell | Reviewer: B. Copeland
Drafter: C. Tower | Checker: S. Mansur

TRAFFIC CONTROL DETOUR PLAN

SHEET NO. ED04

59V-051

TRAFFIC CONTROL PLAN

STAGE IV

Bent 20 Construction - Water Street

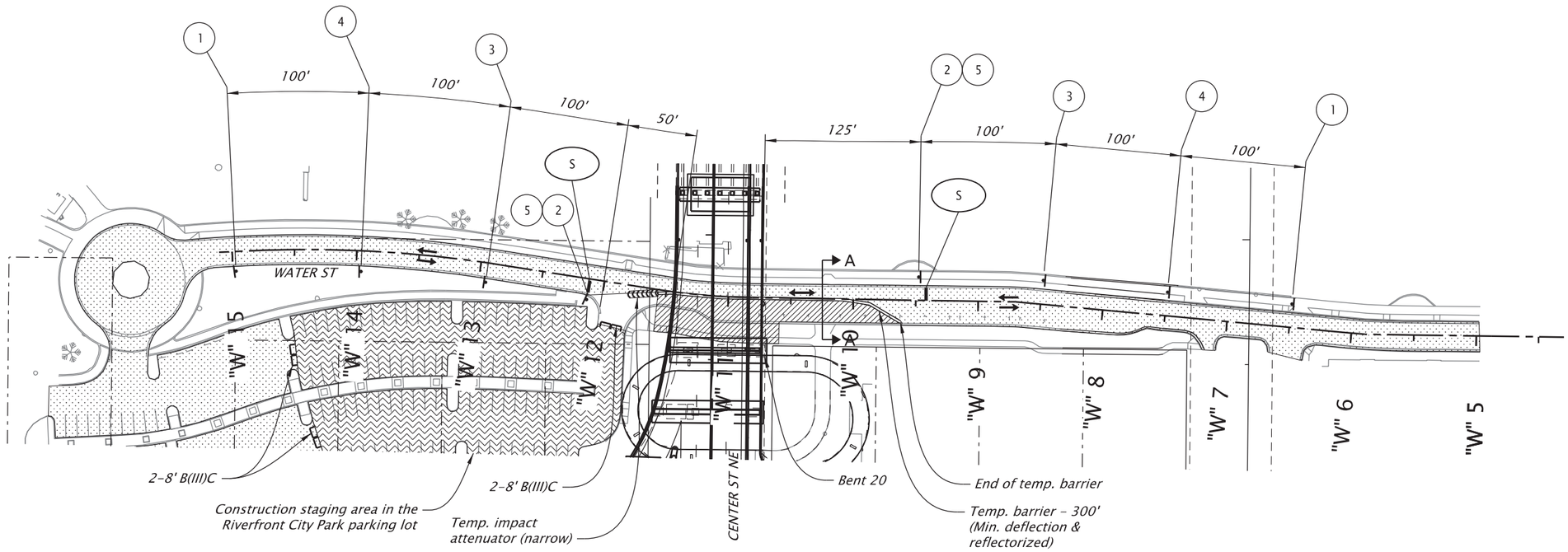

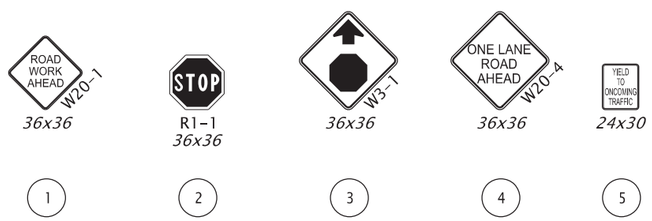

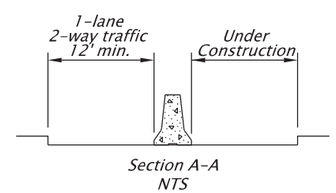

Note:

Self-regulating lane closure to be used during normal traffic periods. During special events or other heavy traffic periods, provide flagging to regulate two-way, one-lane traffic as directed. Confirm use of flaggers with the Engineer and City of Salem prior to beginning flagger operations.

LEGEND

- Direction of traffic
- Under traffic
- Under construction
- Staging area
- Sign on post
- Barricade
- Tubular markers on 20' max. spacing
- (#) Signing detail, see this sheet
- (S) Inst. Temp. 1' White Stop Bar

Notes:

1. See Sheet EA02 for Advanced Area Signage.

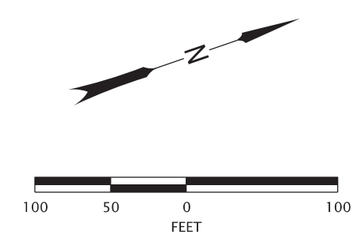

REGISTERED PROFESSIONAL ENGINEER 56,267 OREGON JULY 9, 2002 SCOTT M. MANSUR

Digitally Signed 2026.01.27 16:21:53-08'00'

EXPIRES: DEC. 31, 2026

FINAL ELECTRONIC DOCUMENT AVAILABLE UPON REQUEST

DKS
117 Commercial St. NE, Suite 310
Salem, Oregon 97301
(503) 391-8773
www.dksassociates.com

OREGON DEPARTMENT OF TRANSPORTATION

OR22: CENTER ST BRIDGE (PHASE 1) PROJECT
WILLAMINA-SALEM HIGHWAY
MARION & POLK COUNTIES

Designer: B. Lindell
Reviewer: B. Copeland
Drafter: C. Tower
Checker: S. Mansur

TRAFFIC CONTROL PLAN

SHEET NO. EE01

59V-051

T R A F F I C C O N T R O L P L A N

STAGE V - PHASE 1

Drilled Shaft Construction - South Lane

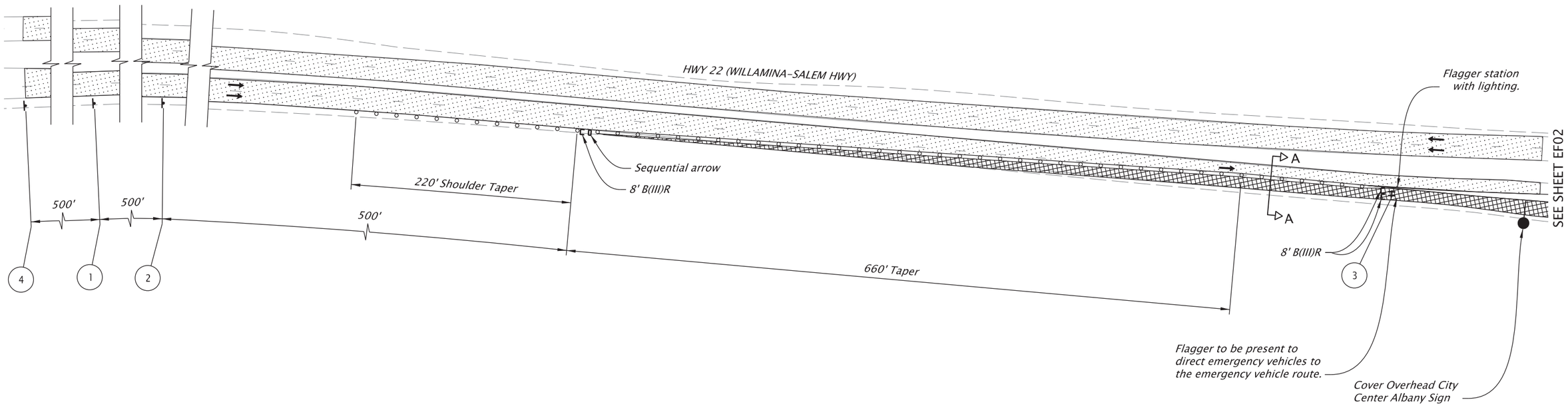

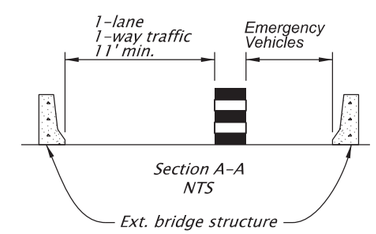

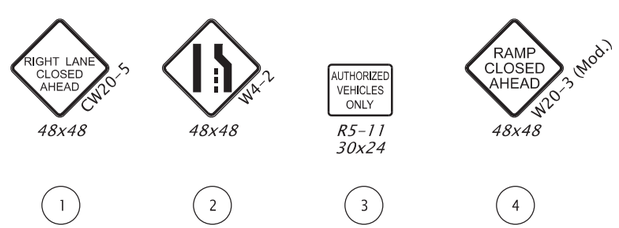

L E G E N D

- Direction of traffic
- Under traffic
- Open to Emergency Vehicles Only
- Sign on post
- Barricade
- Temporary sign support (TSS)
- Temp. plastic drums on 40' max. spacing
- (#) Signing detail, see this sheet.
- Cantilever sign support

Notes:

1. See Sheet EA02 for Advanced Area Signage.
2. Type 3 barricade to be removed by contractor in the presence of an emergency vehicle.
3. Lane closures in Stage V Phase 1 will be in place when drilled shaft operations result in equipment or materials adjacent to the travel lane at the bridge deck level.

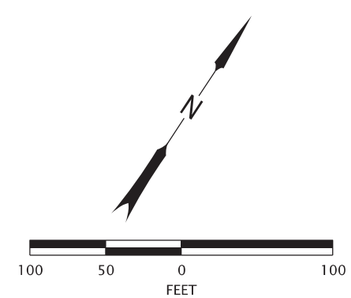

REGISTERED PROFESSIONAL ENGINEER 56,267 OREGON JULY 9, 2002 SCOTT M. MANSUR

Digitally Signed 2026.01.27 16:10:55-08'00'

EXPIRES: DEC. 31, 2026

FINAL ELECTRONIC DOCUMENT AVAILABLE UPON REQUEST

DKS
117 Commercial St. NE, Suite 310
Salem, Oregon 97301
(503) 391-8773
www.dksassociates.com

OREGON DEPARTMENT OF TRANSPORTATION

OR22: CENTER ST BRIDGE (PHASE 1) PROJECT
WILLAMINA-SALEM HIGHWAY
MARION & POLK COUNTIES

Designer: B. Lindell
Reviewer: B. Copeland
Drafter: C. Tower
Checker: S. Mansur

TRAFFIC CONTROL PLAN

SHEET NO. EF01

59V-051

T R A F F I C C O N T R O L P L A N

STAGE V - PHASE 1

Drilled Shaft Construction - South Lane

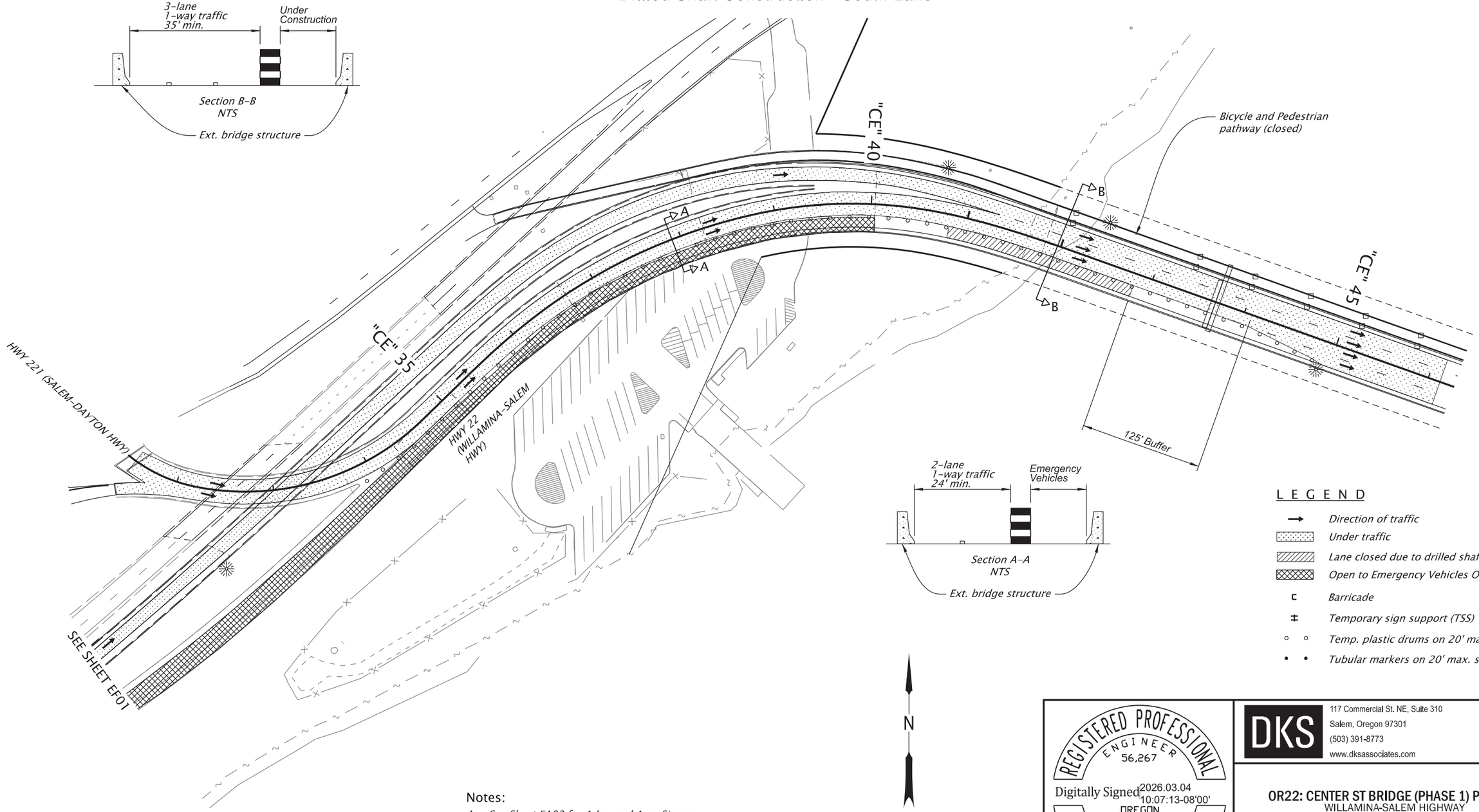

L E G E N D

- Direction of traffic
- Under traffic
- Lane closed due to drilled shaft operations
- Open to Emergency Vehicles Only
- Barricade
- Temporary sign support (TSS)
- Temp. plastic drums on 20' max. spacing
- Tubular markers on 20' max. spacing

Notes:

1. *See Sheet EA02 for Advanced Area Signage.*
2. *Lane closures in Stage V Phase 1 will be in place when drilled shaft operations result in equipment or materials adjacent to the travel lane at the bridge deck level.*

REGISTERED PROFESSIONAL ENGINEER
56,267
Digitally Signed 2026.03.04 10:07:13-08'00'
OREGON
JULY 9, 2002
SCOTT M. MANSUR
EXPIRES: DEC. 31, 2026

FINAL ELECTRONIC DOCUMENT
AVAILABLE UPON REQUEST

DKS
117 Commercial St. NE, Suite 310
Salem, Oregon 97301
(503) 391-8773
www.dksassociates.com

OREGON DEPARTMENT OF TRANSPORTATION

OR22: CENTER ST BRIDGE (PHASE 1) PROJECT
WILLAMINA-SALEM HIGHWAY
MARION & POLK COUNTIES

Designer: B. Lindell
Reviewer: B. Copeland
Drafter: C. Tower
Checker: S. Mansur

TRAFFIC CONTROL PLAN

SHEET NO.
EF02

T R A F F I C C O N T R O L P L A N

STAGE V - PHASE 2

Span 14 and Spans 20 to 28 Strengthening

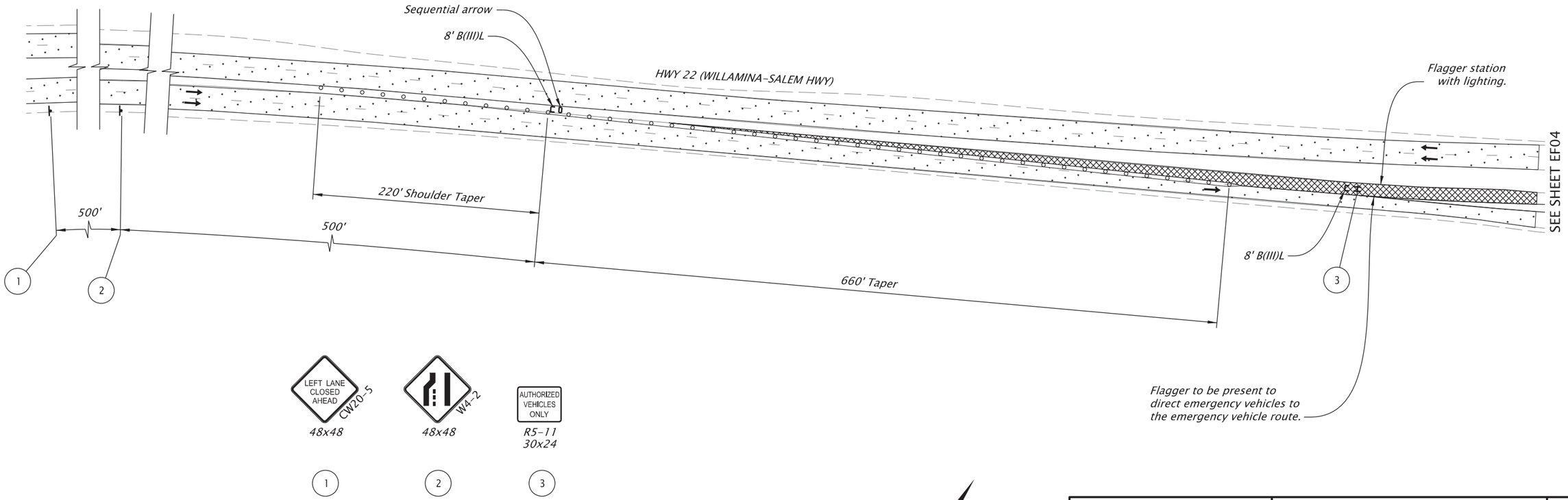

L E G E N D

- Direction of traffic
- Under traffic
- Open to Emergency Vehicles Only
- Sign on post
- Barricade
- Temporary sign support (TSS)
- Temp. plastic drums on 40' max. spacing
- (#) Signing detail, see this sheet

Notes:

1. See Sheet EA02 for Advanced Area Signage.
2. Type 3 barricade to be removed by contractor in the presence of an emergency vehicle.

N

100 50 0 100
FEET

REGISTERED PROFESSIONAL ENGINEER 56,267 OREGON JULY 9, 2002 SCOTT M. MANSUR

Digitally Signed: 2026.01.27 16:11:33-08'00'

EXPIRES: DEC. 31, 2026

FINAL ELECTRONIC DOCUMENT AVAILABLE UPON REQUEST

DKS
117 Commercial St. NE, Suite 310
Salem, Oregon 97301
(503) 391-8773
www.dksassociates.com

OR22: CENTER ST BRIDGE (PHASE 1) PROJECT
WILLAMINA-SALEM HIGHWAY
MARION & POLK COUNTIES

Designer: B. Lindell
Reviewer: B. Copeland
Drafter: C. Tower
Checker: S. Mansur

TRAFFIC CONTROL PLAN

SHEET NO. EF03

59V-051

T R A F F I C C O N T R O L P L A N

STAGE V - PHASE 2

Span 14 and Spans 20 to 28 Strengthening

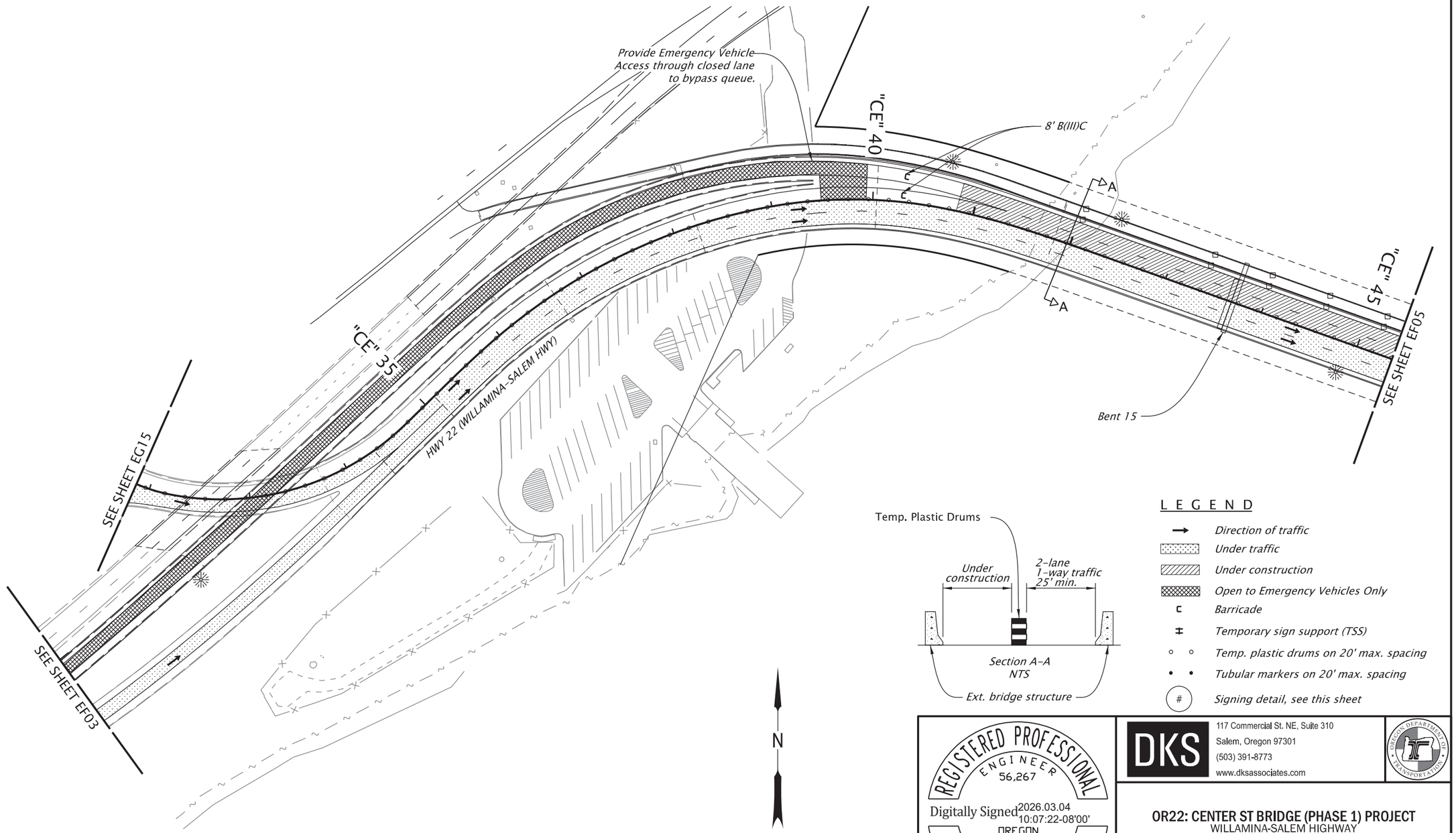

L E G E N D

- Direction of traffic
- Under traffic
- Under construction
- Open to Emergency Vehicles Only
- Barricade
- Temporary sign support (TSS)
- Temp. plastic drums on 20' max. spacing
- Tubular markers on 20' max. spacing
- # Signing detail, see this sheet

Notes:

1. *See Sheet EA02 for Advanced Area Signage.*

REGISTERED PROFESSIONAL ENGINEER 56,267 OREGON JULY 9, 2002 SCOTT M. MANSUR

Digitally Signed 2026.03.04 10:07:22-08'00'

EXPIRES: DEC. 31, 2026

FINAL ELECTRONIC DOCUMENT AVAILABLE UPON REQUEST

DKS
117 Commercial St. NE, Suite 310
Salem, Oregon 97301
(503) 391-8773
www.dksassociates.com

OR22: CENTER ST BRIDGE (PHASE 1) PROJECT
WILLAMINA-SALEM HIGHWAY
MARION & POLK COUNTIES

Designer: B. Lindell | Reviewer: B. Copeland
Drafter: C. Tower | Checker: S. Mansur

TRAFFIC CONTROL PLAN

SHEET NO. EF04

T R A F F I C C O N T R O L P L A N

STAGE V - PHASE 2

Span 14 and Spans 20 to 28 Strengthening

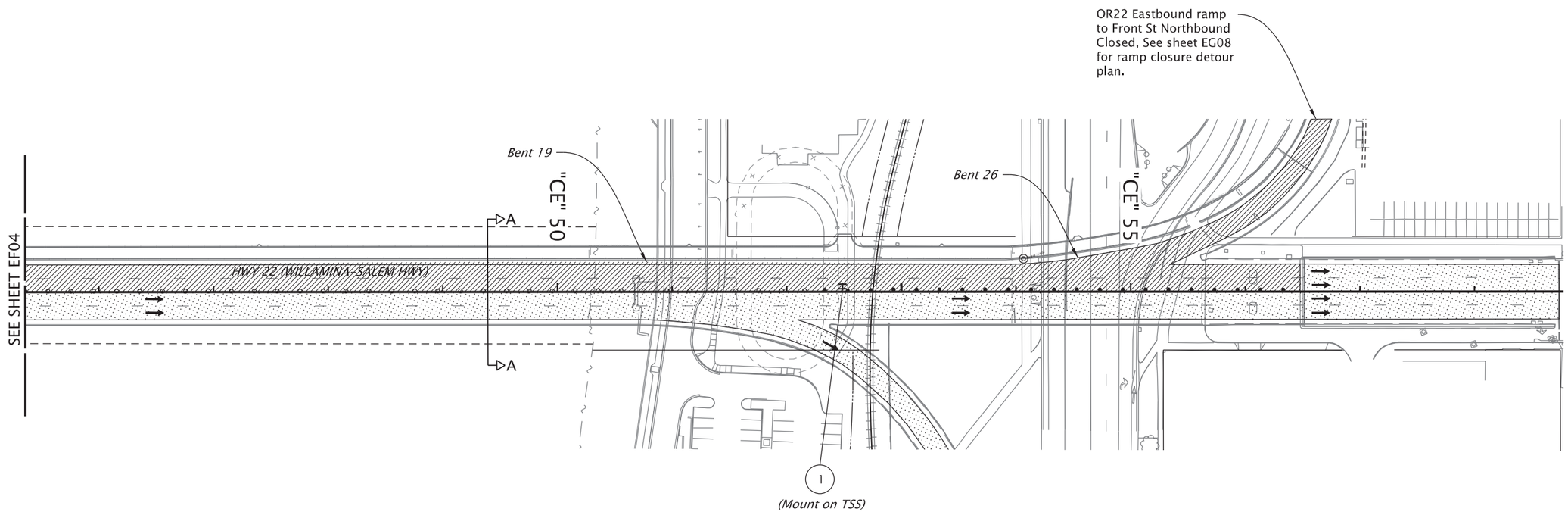

EXIT
CLOSED

black on orange
E5-2
48x36

1

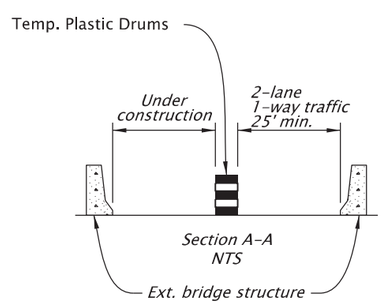

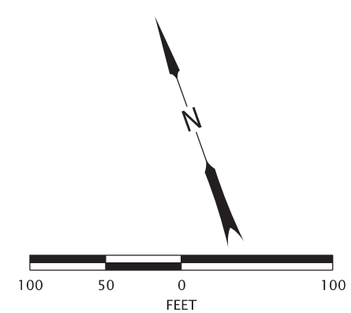

L E G E N D

- → *Direction of traffic*
- *Under traffic*
- *Under construction*
- *Temporary sign support (TSS)*
- *Temp. plastic drums on 20' max. spacing*
- *Tubular markers on 20' max. spacing*
- (#) *Signing detail, see this sheet*

Notes:

1. See Sheet EA02 for Advanced Area Signage.

REGISTERED PROFESSIONAL ENGINEER 56,267 OREGON JULY 9, 2002 SCOTT M. MANSUR

Digitally Signed 2026.02.12 14:38:15-08'00'

EXPIRES: DEC. 31, 2026

FINAL ELECTRONIC DOCUMENT AVAILABLE UPON REQUEST

DKS
117 Commercial St. NE, Suite 310
Salem, Oregon 97301
(503) 391-8773
www.dksassociates.com

OR22: CENTER ST BRIDGE (PHASE 1) PROJECT
WILLAMINA-SALEM HIGHWAY
MARION & POLK COUNTIES

Designer: B. Lindell
Reviewer: B. Copeland
Drafter: C. Tower
Checker: S. Mansur

TRAFFIC CONTROL PLAN

SHEET NO. EF05

TRAFFIC CONTROL PLAN

STAGE V - PHASE 3

Span 14 and Spans 20 to 28 Strengthening

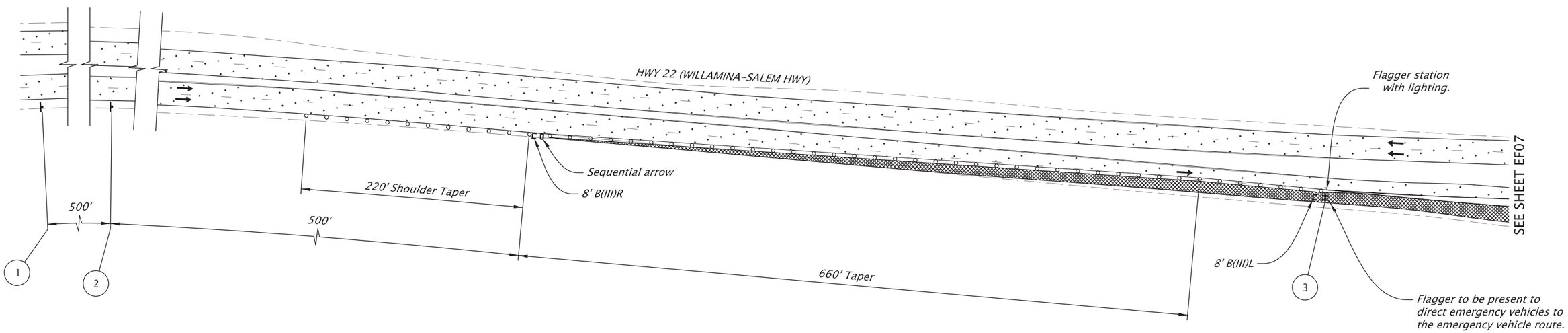

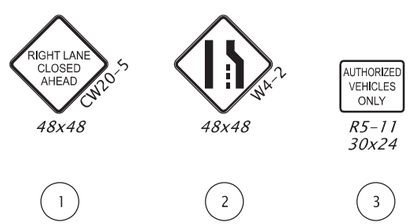

LEGEND

- Direction of traffic
- Under traffic
- Open to Emergency Vehicles Only
- Sign on post
- Barricade
- Temporary sign support (TSS)
- Temp. plastic drums on 40' max. spacing
- (#) Signing detail, see this sheet

Notes:

1. See Sheet EA02 for Advanced Area Signage.
2. Type 3 barricade to be removed by contractor in the presence of an emergency vehicle.

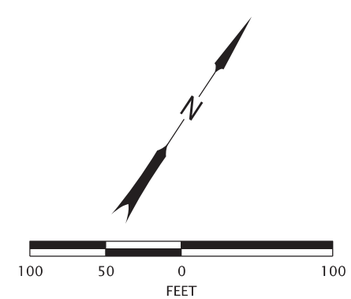

REGISTERED PROFESSIONAL ENGINEER 56,267 OREGON JULY 9, 2002 SCOTT M. MANSUR

Digitally Signed: 2026.01.27 16:11:56-08'00'

EXPIRES: DEC. 31, 2026

FINAL ELECTRONIC DOCUMENT AVAILABLE UPON REQUEST

DKS
117 Commercial St. NE, Suite 310
Salem, Oregon 97301
(503) 391-8773
www.dksassociates.com

OR22: CENTER ST BRIDGE (PHASE 1) PROJECT
WILLAMINA-SALEM HIGHWAY
MARION & POLK COUNTIES

Designer: B. Lindell
Reviewer: B. Copeland
Drafter: C. Tower
Checker: S. Mansur

TRAFFIC CONTROL PLAN

SHEET NO. EF06

59V-051

T R A F F I C C O N T R O L P L A N

STAGE V - PHASE 3

Span 14 and Spans 20 to 28 Strengthening

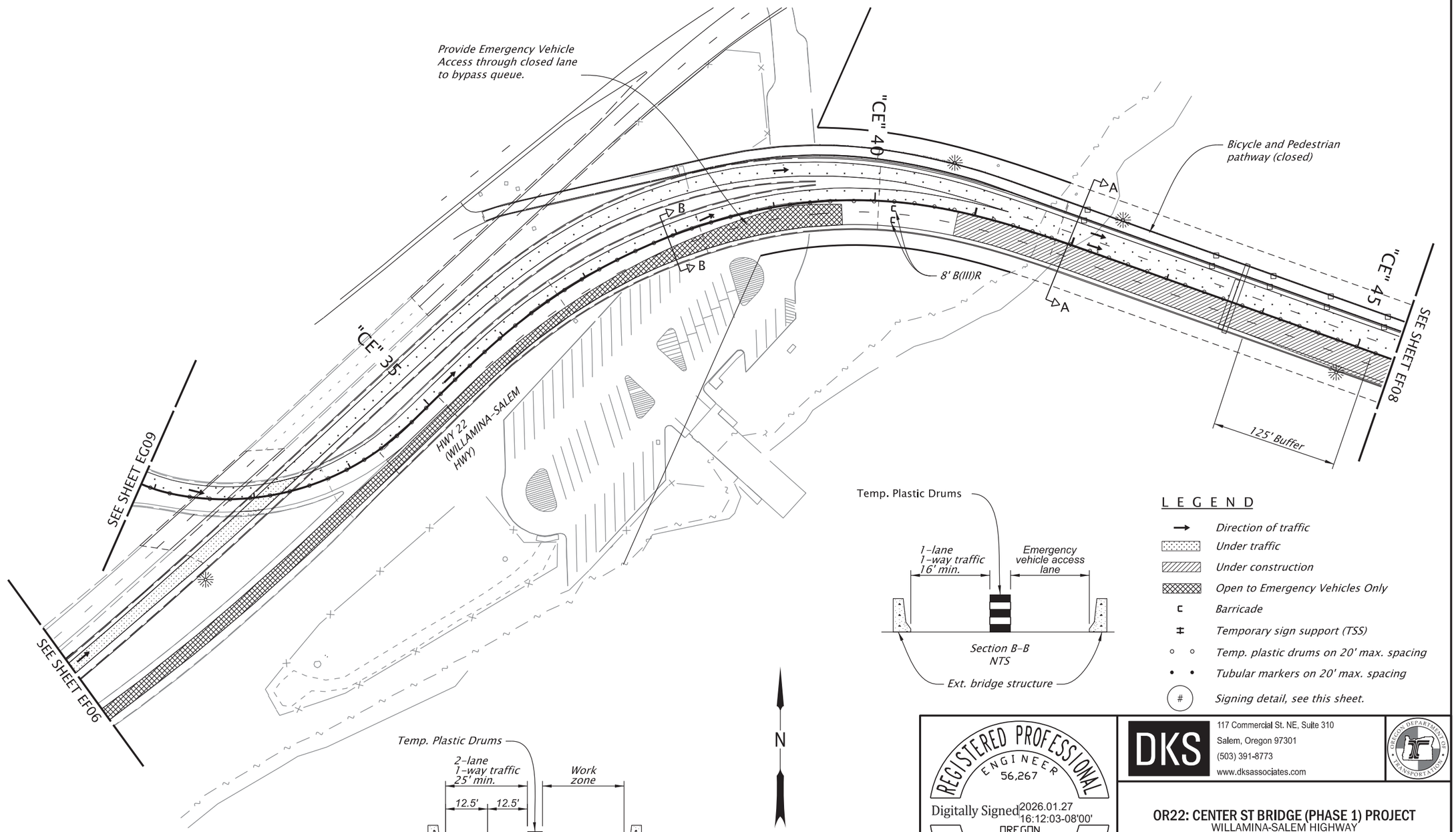

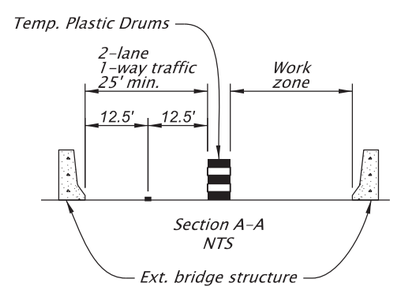

L E G E N D

- Direction of traffic
- Under traffic
- Under construction
- Open to Emergency Vehicles Only
- Barricade
- Temporary sign support (TSS)
- Temp. plastic drums on 20' max. spacing
- Tubular markers on 20' max. spacing
- # Signing detail, see this sheet.

Notes:

1. See Sheet EA02 for Advanced Area Signage.

REGISTERED PROFESSIONAL ENGINEER 56,267 OREGON JULY 9, 2002 SCOTT M. MANSUR

Digitally Signed 2026.01.27 16:12:03-08'00'

EXPIRES: DEC. 31, 2026

FINAL ELECTRONIC DOCUMENT AVAILABLE UPON REQUEST

DKS
117 Commercial St. NE, Suite 310
Salem, Oregon 97301
(503) 391-8773
www.dksassociates.com

OR22: CENTER ST BRIDGE (PHASE 1) PROJECT
WILLAMINA-SALEM HIGHWAY
MARION & POLK COUNTIES

Designer: B. Lindell | Reviewer: B. Copeland
Drafter: C. Tower | Checker: S. Mansur

TRAFFIC CONTROL PLAN

SHEET NO. EF07

TRAFFIC CONTROL PLAN

STAGE V - PHASE 3

Span 14 and Spans 20 to 28 Strengthening

EXIT CLOSED
black on orange
E5-2
48x36

1

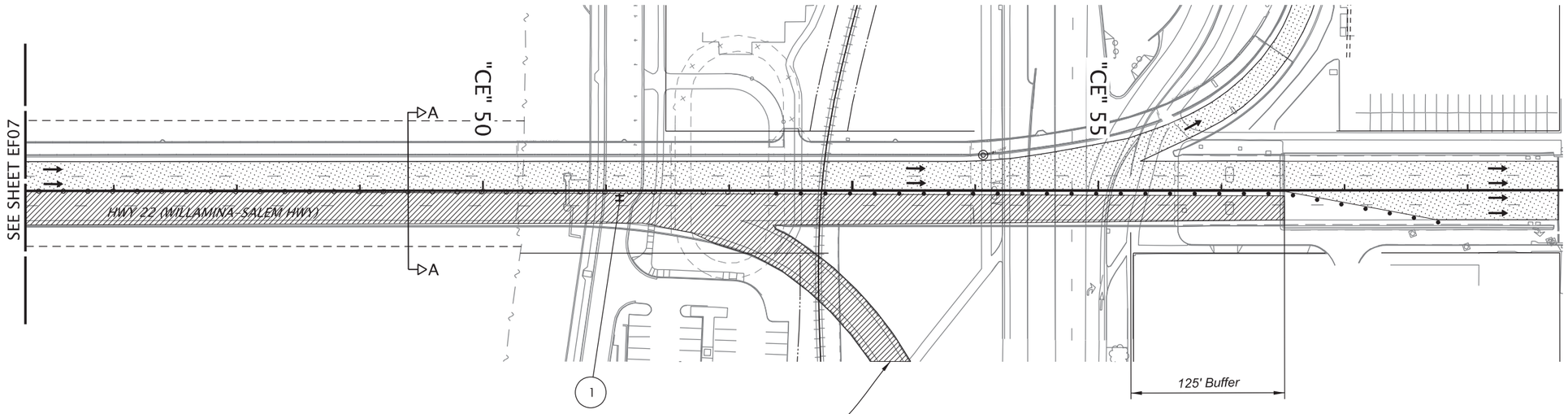

OR22 Eastbound ramp to Front Street Southbound Closed. See sheet EG13 for ramp detour plan.

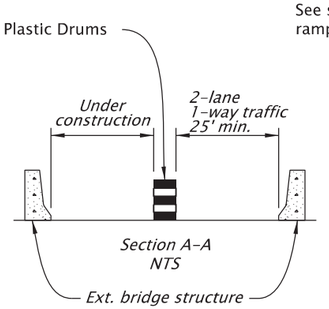

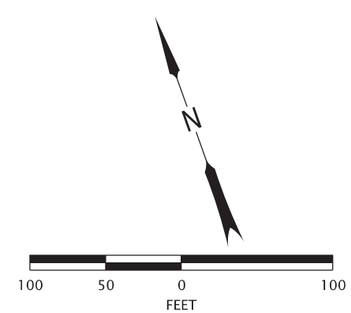

LEGEND

- *Direction of traffic*
- *Under traffic*
- *Under construction*
- *Temporary sign support (TSS)*
- *Temp. plastic drums on 20' max. spacing*
- *Tubular markers on 20' max. spacing*
- (#) *Signing detail, see this sheet*

Notes:

1. See Sheet EA02 for Advanced Area Signage.

REGISTERED PROFESSIONAL ENGINEER 56,267 OREGON JULY 9, 2002 SCOTT M. MANSUR

Digitally Signed 2026.02.12 14:30:59-08'00'

EXPIRES: DEC. 31, 2026

FINAL ELECTRONIC DOCUMENT AVAILABLE UPON REQUEST

DKS
117 Commercial St. NE, Suite 310
Salem, Oregon 97301
(503) 391-8773
www.dksassociates.com

OREGON DEPARTMENT OF TRANSPORTATION

OR22: CENTER ST BRIDGE (PHASE 1) PROJECT
WILLAMINA-SALEM HIGHWAY
MARION & POLK COUNTIES

Designer: B. Lindell
Reviewer: B. Copeland
Drafter: C. Tower
Checker: S. Mansur

TRAFFIC CONTROL PLAN

SHEET NO. EF08

59V-051

T R A F F I C C O N T R O L P L A N

STAGE VI - PHASE 1

Bent 26 Construction (Temporary Widening)

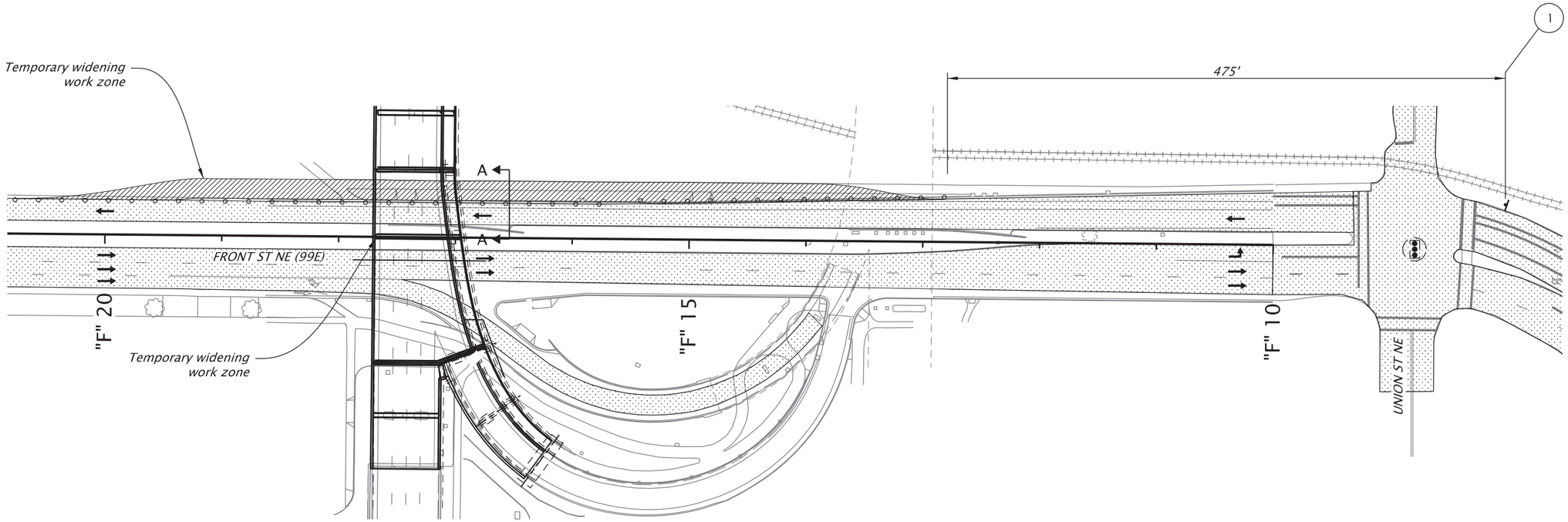

1

Notes:

1. See Sheet EA02 for Advanced Area Signage.
2. See Sheet EC02 for TPAR details for this stage.

L E G E N D

- Direction of traffic
- Under traffic
- Under construction
- Sign on post
- Temp. plastic drums on 20' max. spacing
- # Signing detail, see this sheet

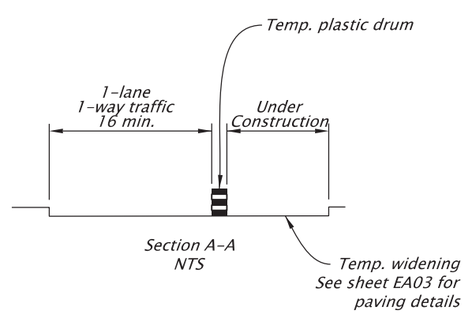

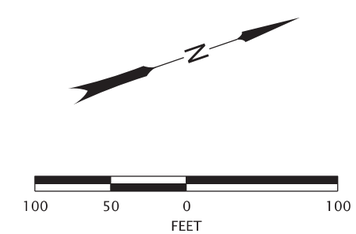

REGISTERED PROFESSIONAL ENGINEER 56,267 OREGON JULY 9, 2002 SCOTT M. MANSUR

Digitally Signed: 2026.01.27 16:22:07-08'00'

EXPIRES: DEC. 31, 2026

FINAL ELECTRONIC DOCUMENT AVAILABLE UPON REQUEST

DKS
117 Commercial St. NE, Suite 310
Salem, Oregon 97301
(503) 391-8773
www.dksassociates.com

OR22: CENTER ST BRIDGE (PHASE 1) PROJECT
WILLAMINA-SALEM HIGHWAY
MARION & POLK COUNTIES

Designer: B. Lindell | Reviewer: B. Copeland
Drafter: C. Tower | Checker: S. Mansur

TRAFFIC CONTROL PLAN

SHEET NO. EG01

59V-051

T R A F F I C C O N T R O L P L A N

STAGE VI - PHASE 1

Bent 26 Construction

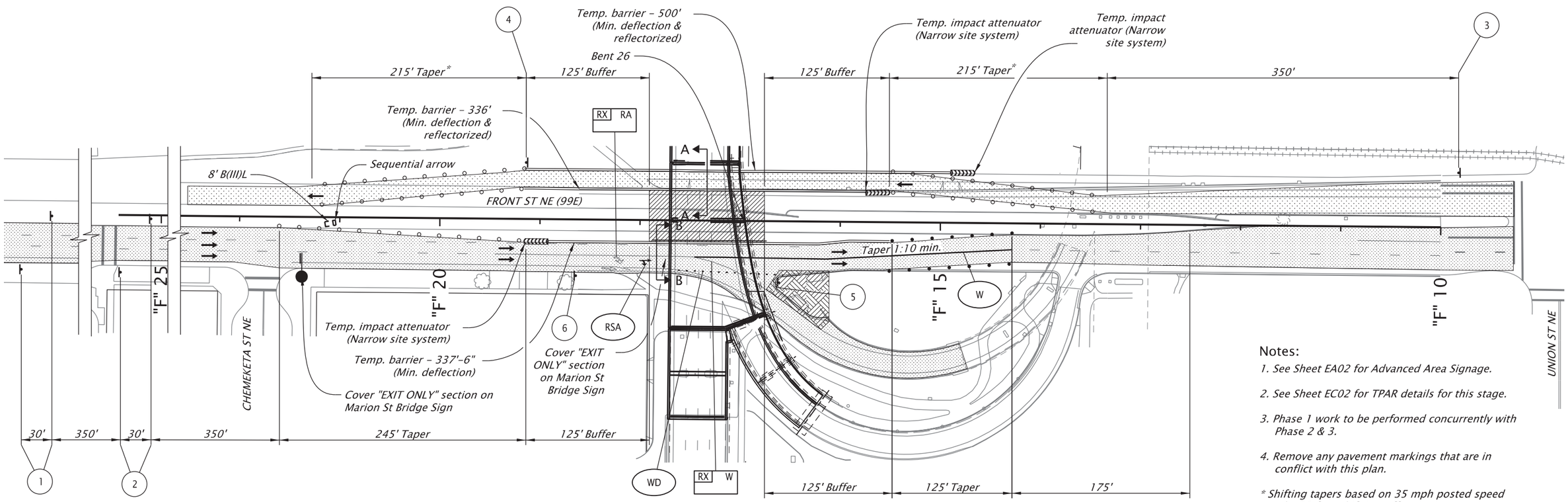

Notes:

1. See Sheet EA02 for Advanced Area Signage.
2. See Sheet EC02 for TPAR details for this stage.
3. Phase 1 work to be performed concurrently with Phase 2 & 3.
4. Remove any pavement markings that are in conflict with this plan.

* Shifting tapers based on 35 mph posted speed and a 20 foot shift in traffic.

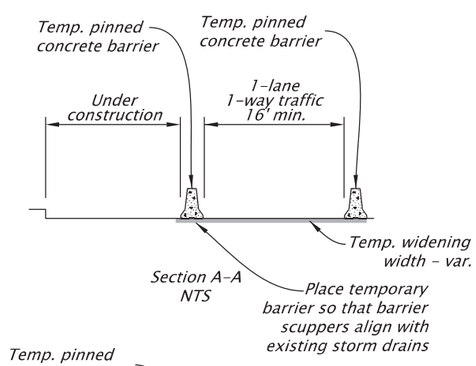

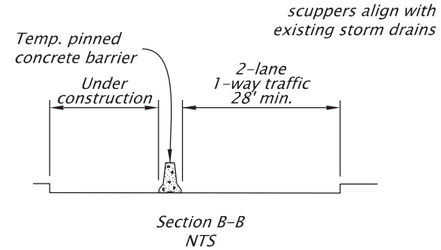

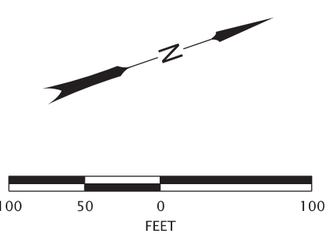

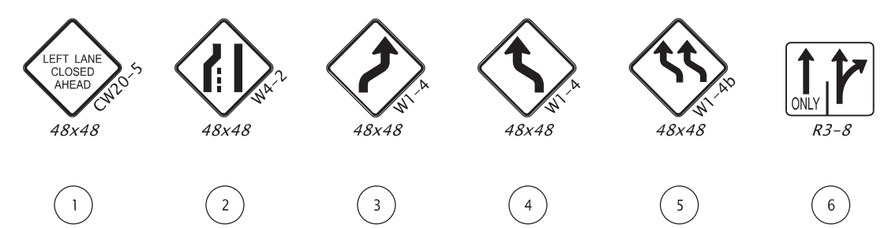

L E G E N D

- Direction of traffic
- Under traffic
- Under construction
- Temporary paving
- Sign on post
- Existing Cantilever Sign
- Barricade
- Temporary sign support (TSS)
- Temp. plastic drums on 20' max. spacing
- Tubular markers on 20' max. spacing
- # Signing detail, see this sheet
- RX W — Remove extg. 4" white line
- RX RA — Remove extg. right turn arrow (white)
- W — Inst. temp. 4" white line
- WD — Inst. temp 4" white dotted line
- RSA — Inst. temp. right turn straight arrow (white)

REGISTERED PROFESSIONAL ENGINEER 56,267 OREGON JULY 9, 2002 SCOTT M. MANSUR

Digitally Signed 2026.01.27 16:13:37-08'00'

EXPIRES: DEC. 31, 2026

FINAL ELECTRONIC DOCUMENT AVAILABLE UPON REQUEST

DKS
117 Commercial St. NE, Suite 310
Salem, Oregon 97301
(503) 391-8773
www.dksassociates.com

OREGON DEPARTMENT OF TRANSPORTATION

OR22: CENTER ST BRIDGE (PHASE 1) PROJECT
WILLAMINA-SALEM HIGHWAY
MARION & POLK COUNTIES

Designer: B. Lindell
Reviewer: B. Copeland
Drafter: C. Tower
Checker: S. Mansur

TRAFFIC CONTROL PLAN

SHEET NO. EG02

59V-051

TRAFFIC CONTROL PLAN

STAGE VI - PHASE 2

Bent 15 - North Half Construction

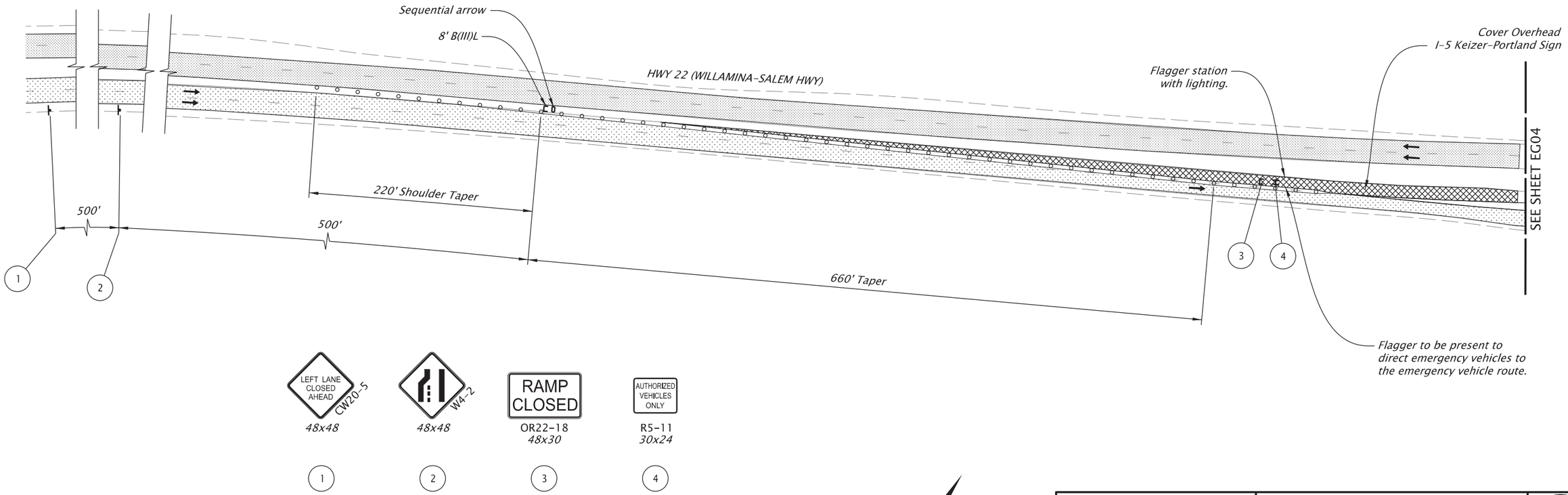

LEGEND

- Direction of traffic
- Under traffic
- Open to Emergency Vehicles Only
- Sign on post
- Barricade
- Temporary sign support (TSS)
- Temp. plastic drums on 40' max. spacing
- (#) Signing detail, see this sheet

Notes:

1. See Sheet EA02 for Advanced Area Signage.
2. Type 3 barricade to be removed by contractor in the presence of an emergency vehicle.

N

100 50 0 100
FEET

REGISTERED PROFESSIONAL ENGINEER 56,267 OREGON JULY 9, 2002 SCOTT M. MANSUR

Digitally Signed 2026.01.27 16:13:43-08'00'

EXPIRES: DEC. 31, 2026

FINAL ELECTRONIC DOCUMENT AVAILABLE UPON REQUEST

DKS
117 Commercial St. NE, Suite 310
Salem, Oregon 97301
(503) 391-8773
www.dksassociates.com

OR22: CENTER ST BRIDGE (PHASE 1) PROJECT
WILLAMINA-SALEM HIGHWAY
MARION & POLK COUNTIES

Designer: B. Lindell
Reviewer: B. Copeland
Drafter: C. Tower
Checker: S. Mansur

TRAFFIC CONTROL PLAN

SHEET NO. EG03

59V-051

T R A F F I C C O N T R O L P L A N

STAGE VI - PHASE 2

Bent 15 - North Half Construction

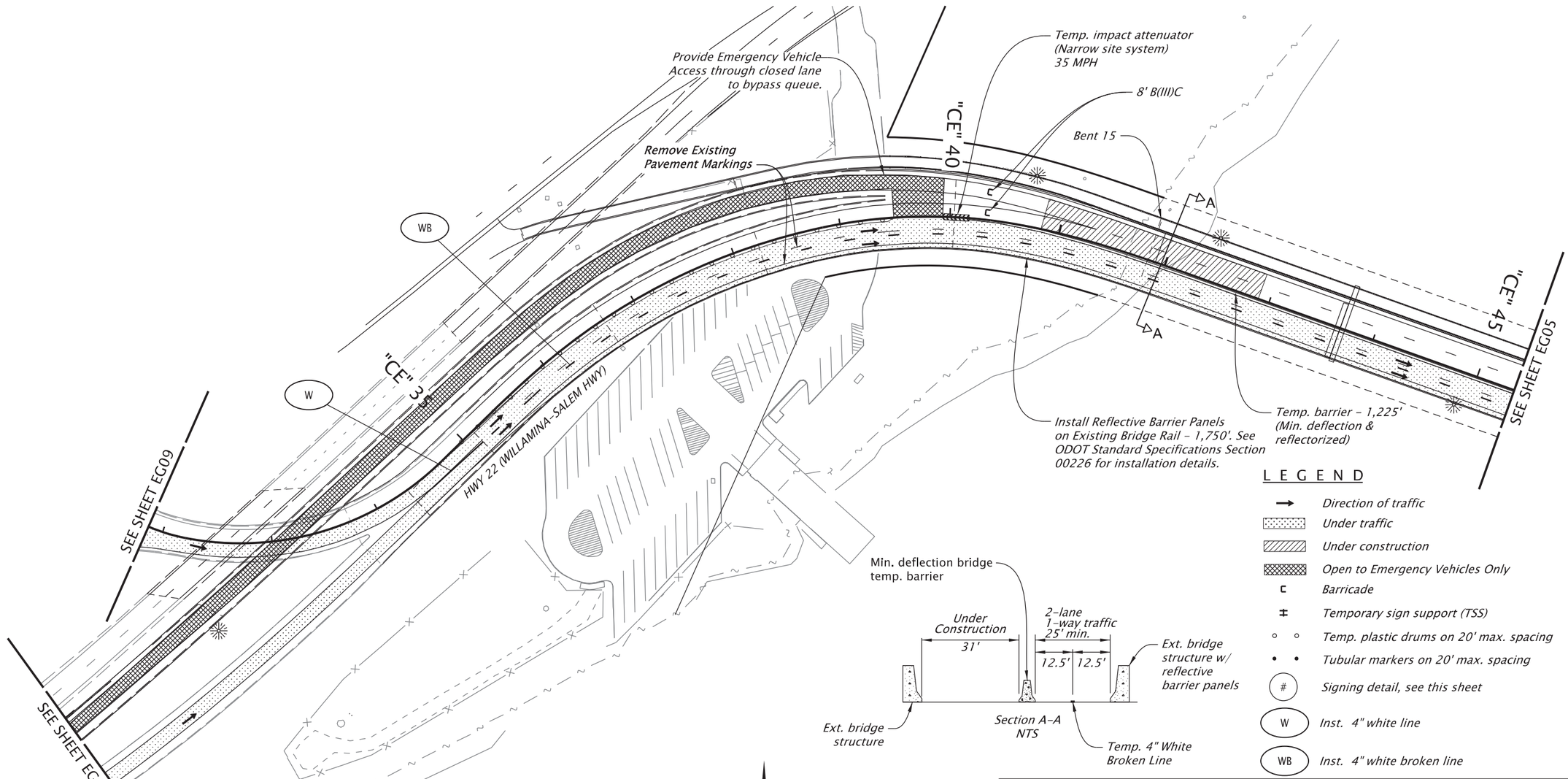

L E G E N D

- Direction of traffic
- Under traffic
- Under construction
- Open to Emergency Vehicles Only
- Barricade
- Temporary sign support (TSS)
- Temp. plastic drums on 20' max. spacing
- Tubular markers on 20' max. spacing
- (#) Signing detail, see this sheet
- (W) Inst. 4" white line
- (WB) Inst. 4" white broken line

Note:

Min. deflection bridge temp. barrier to be secured to bridge deck according to details shown on sheets JZ11 and JZ12.

Notes:

1. See Sheet EA02 for Advanced Area Signage.

N

100 50 0 100
FEET

REGISTERED PROFESSIONAL ENGINEER 56,267 OREGON JULY 9, 2002 SCOTT M. MANSUR

Digitally Signed: 2026.02.11 15:36:53-08'00'

EXPIRES: DEC. 31, 2026

FINAL ELECTRONIC DOCUMENT AVAILABLE UPON REQUEST

DKS
117 Commercial St. NE, Suite 310
Salem, Oregon 97301
(503) 391-8773
www.dksassociates.com

OR22: CENTER ST BRIDGE (PHASE 1) PROJECT
WILLAMINA-SALEM HIGHWAY
MARION & POLK COUNTIES

Designer: B. Lindell | Reviewer: B. Copeland
Drafter: C. Tower | Checker: S. Mansur

TRAFFIC CONTROL PLAN

SHEET NO. EG04

59V-051

T R A F F I C C O N T R O L P L A N

STAGE VI - PHASE 2

East Approach Spans - North Half Construction

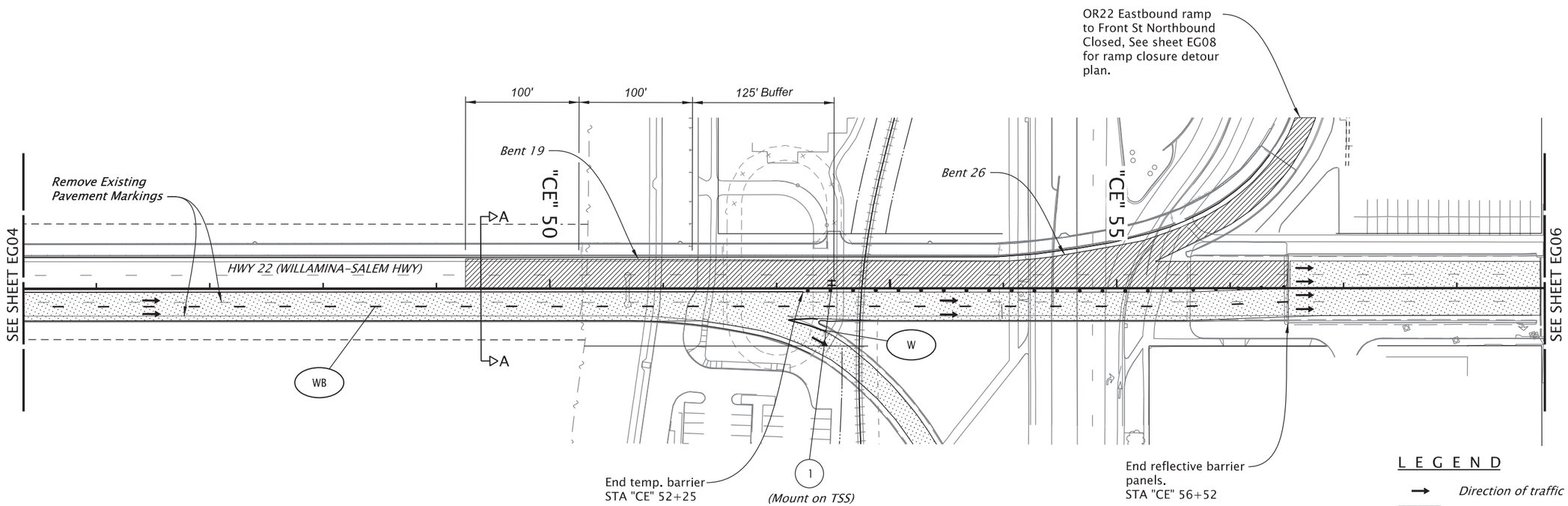

EXIT CLOSED

black on orange
E5-2
48x36

1

L E G E N D

- Direction of traffic
- Under traffic
- Under construction
- Temporary sign support (TSS)
- Tubular markers on 20' max. spacing
- # Signing detail, see this sheet
- W Inst. 4" white line
- WB Inst. 4" white broken line

Note:

Min. deflection bridge temp. barrier to be secured to bridge deck according to details shown on sheets JZ11 and JZ12.

Notes:

1. See Sheet EA02 for Advanced Area Signage.

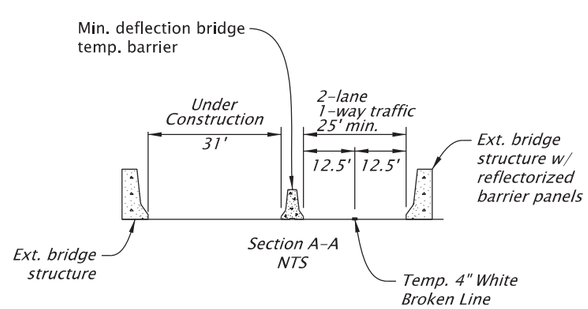

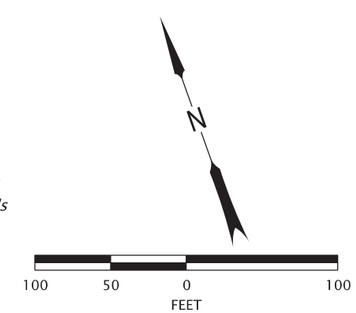

REGISTERED PROFESSIONAL ENGINEER 56,267 OREGON JULY 9, 2002 SCOTT M. MANSUR

Digitally Signed 2026.02.12 14:38:39-08'00'

EXPIRES: DEC. 31, 2026

FINAL ELECTRONIC DOCUMENT AVAILABLE UPON REQUEST

DKS
117 Commercial St. NE, Suite 310
Salem, Oregon 97301
(503) 391-8773
www.dksassociates.com

OR22: CENTER ST BRIDGE (PHASE 1) PROJECT
WILLAMINA-SALEM HIGHWAY
MARION & POLK COUNTIES

Designer: B. Lindell
Reviewer: B. Copeland
Drafter: C. Tower
Checker: S. Mansur

TRAFFIC CONTROL PLAN

SHEET NO. EG05

59V-051

TRAFFIC CONTROL PLAN
STAGE VI - PHASE 2
East Approach Spans - North Half Construction

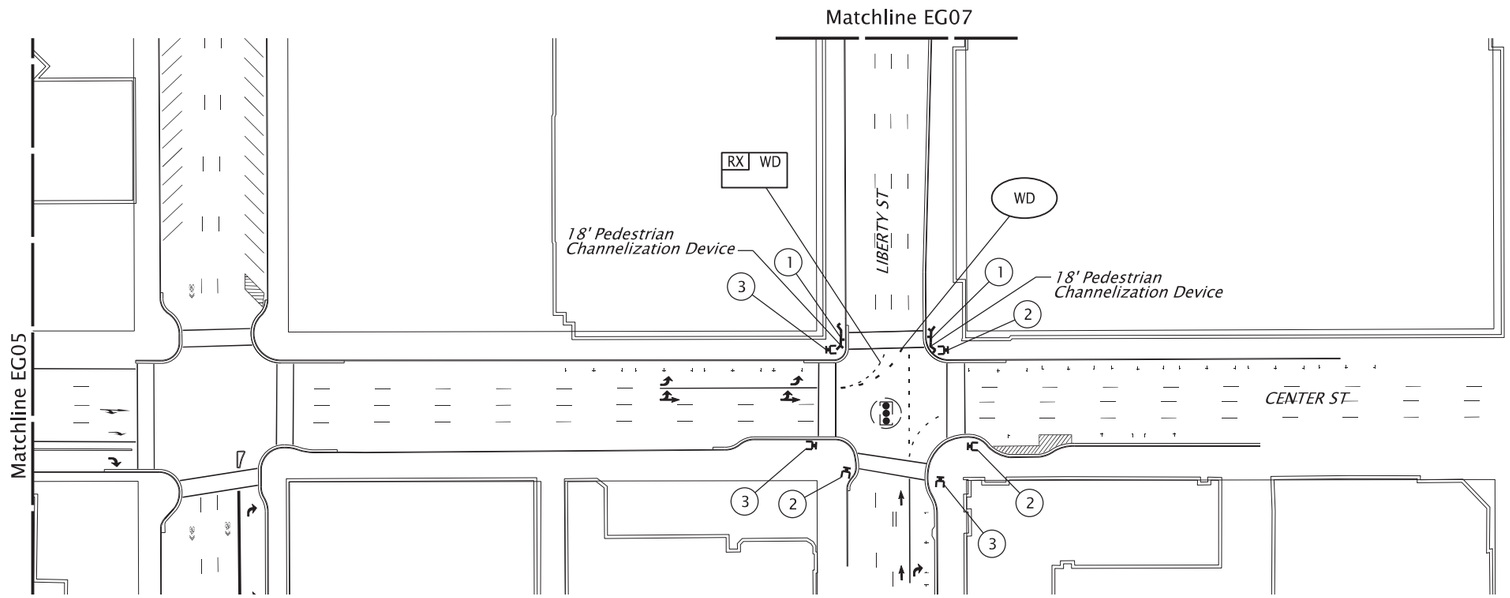

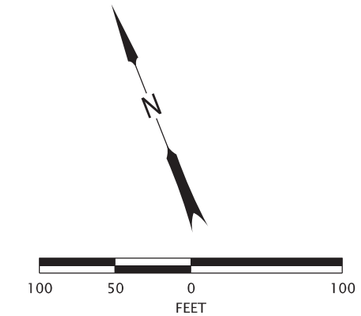

LEGEND

RX WD — *Remove extg. 4" white dotted line*

WD — *Inst. 4" white dotted line*

EXISTING SIGNAL

CROSSWALK CLOSED — OR22-7, *24x24*, *(Mount on PCD)* — 1

DETOUR — M4-9b, *30x24*, *(Mount on B(II)R)* — 2

DETOUR — M4-9b, *30x24*, *(Mount on B(II)R)* — 3

1. Cover existing pedestrian signals for the north leg crosswalk for duration of the temporary crosswalk closure.

2. Contact City of Salem Signal Operations Engineer at least two weeks prior to impacting the pedestrian crossing.

3. Temporary Pavement Markings may remain in place at the completion of Stage IV, Phase 2.

REGISTERED PROFESSIONAL ENGINEER
87,105
Digitally Signed Date: 2026.01.27 11:53:41-08'00'
OREGON
NOV. 13, 2012
CHRISTINA L. LAFLEUR
RENEWS: 12-31-2026

FINAL ELECTRONIC DOCUMENT AVAILABLE UPON REQUEST

OREGON DEPARTMENT OF TRANSPORTATION

OR22: CENTER ST BRIDGE (PHASE 1) PROJECT
WILLAMINA-SALEM HIGHWAY
MARION & POLK COUNTIES

Designer: C. LaFleur, PE | Reviewer: Andrew Wilkes, PE
Drafter: C. LaFleur, PE | Checker: N/A

TRAFFIC CONTROL PLAN

SHEET NO. EG06

59V-051

TRAFFIC CONTROL PLAN
STAGE VI - PHASE 2
East Approach Spans - North Half Construction

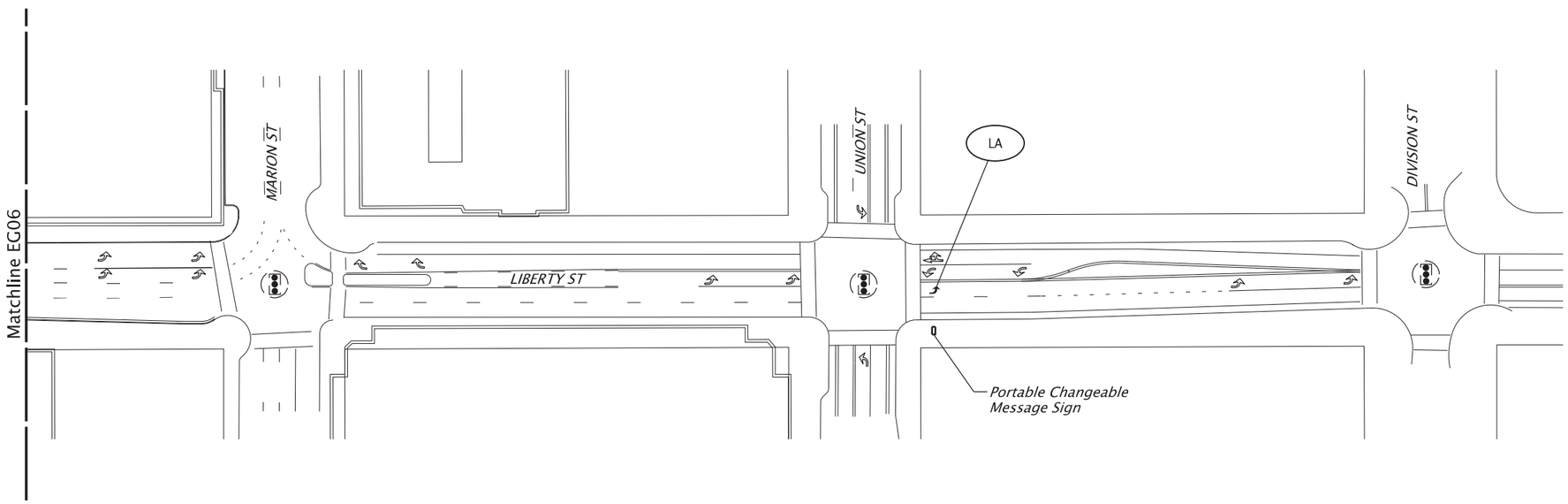

1. Temporary Pavement Markings may remain in place at the completion of Stage IV, Phase 2.

LEGEND

LA — *Inst. left turn arrow (white)*

EXISTING SIGNAL

LT LANE MUST TURN LT	THRU TRAFFIC RT LANE

PORTABLE CHANGEABLE MESSAGE SIGN
(Suggested Message)
(Locate As Directed)

REGISTERED PROFESSIONAL ENGINEER
87,105
Digitally Signed Date: 2026.01.27 11:54:56-08'00'
OREGON
NOV. 13, 2012
CHRISTINA L. LAFLEUR
RENEWS: 12-31-2026

FINAL ELECTRONIC DOCUMENT AVAILABLE UPON REQUEST

OREGON DEPARTMENT OF TRANSPORTATION

OR22: CENTER ST BRIDGE (PHASE 1) PROJECT
WILLAMINA-SALEM HIGHWAY
MARION & POLK COUNTIES

Designer: C. LaFleur, PE
Reviewer: Andrew Wilkes, PE
Drafter: C. LaFleur, PE
Checker: N/A

TRAFFIC CONTROL PLAN

SHEET NO. EG07

59V-051

DETOUR PLAN
STAGE VI - PHASE 2
Ramp Closure - Bent 19 North Half Construction

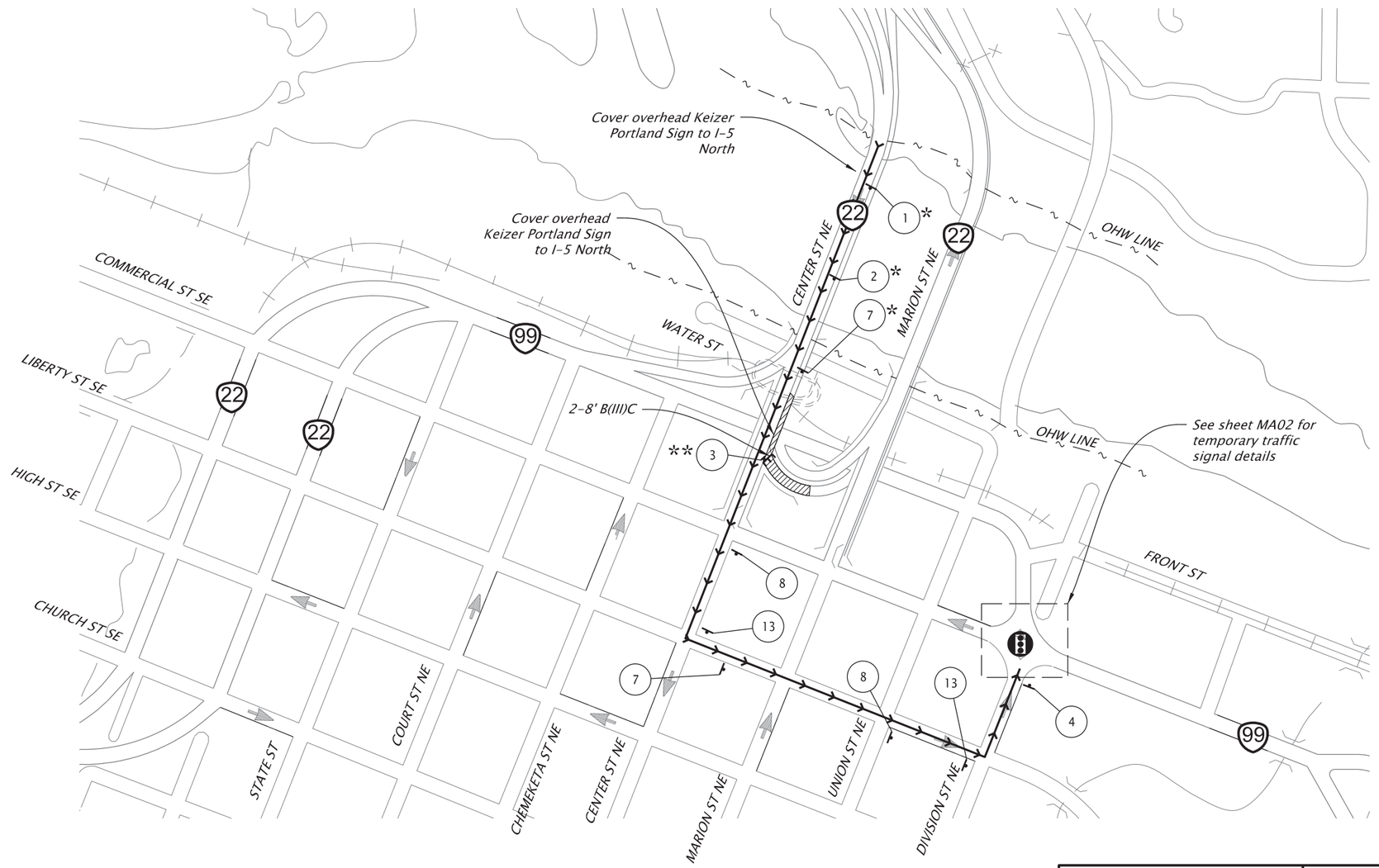

SIGN DETAILS

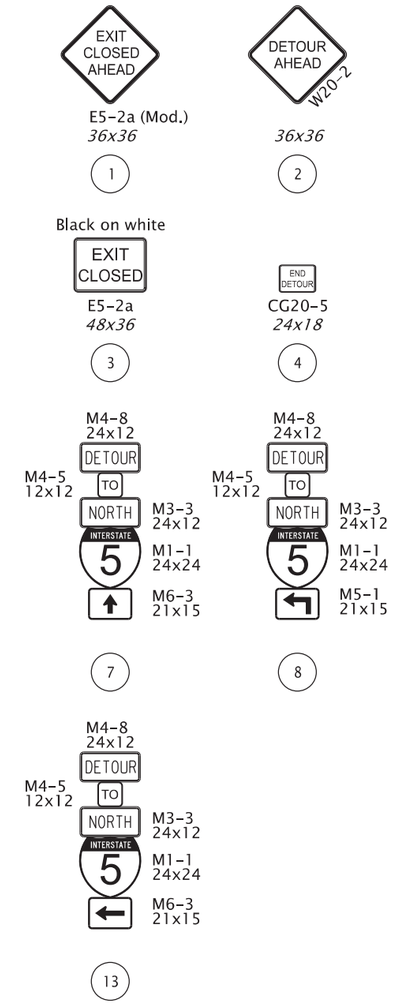

LEGEND

- Vehicle detour route
- Under construction
- Temporary sign on temporary support
- # Signing detail. See this sheet
- 8' type III (L, R, or LR) barricade
- * Mount on barrier. See ODOT Std Dwg TM822
- ** Mount on barricade. See ODOT Std Dwg TM822

N

500 250 0 500
FEET

Note:
1. See Sheet EA02 for Advanced Area Signage.
2. Update messages on PCMS #1 and #2 on EA02 to indicate ramp closure.

REGISTERED PROFESSIONAL ENGINEER 56,267
Digitally Signed 2026.02.10 15:23:54-08'00'
OREGON
JULY 9, 2002
SCOTT M. MANSUR
EXPIRES: DEC. 31, 2026

FINAL ELECTRONIC DOCUMENT AVAILABLE UPON REQUEST

DKS
117 Commercial St. NE, Suite 310
Salem, Oregon 97301
(503) 391-8773
www.dksassociates.com

OR22: CENTER ST BRIDGE (PHASE 1) PROJECT
WILLAMINA-SALEM HIGHWAY
MARION & POLK COUNTIES

Designer: B. Lindell
Reviewer: Name
Drafter: C. Tower
Checker: Name

TRAFFIC CONTROL DETOUR PLAN

SHEET NO. EG08

59V-051

T R A F F I C C O N T R O L P L A N

STAGE VI - PHASE 2

Bent 15 - North Half Construction

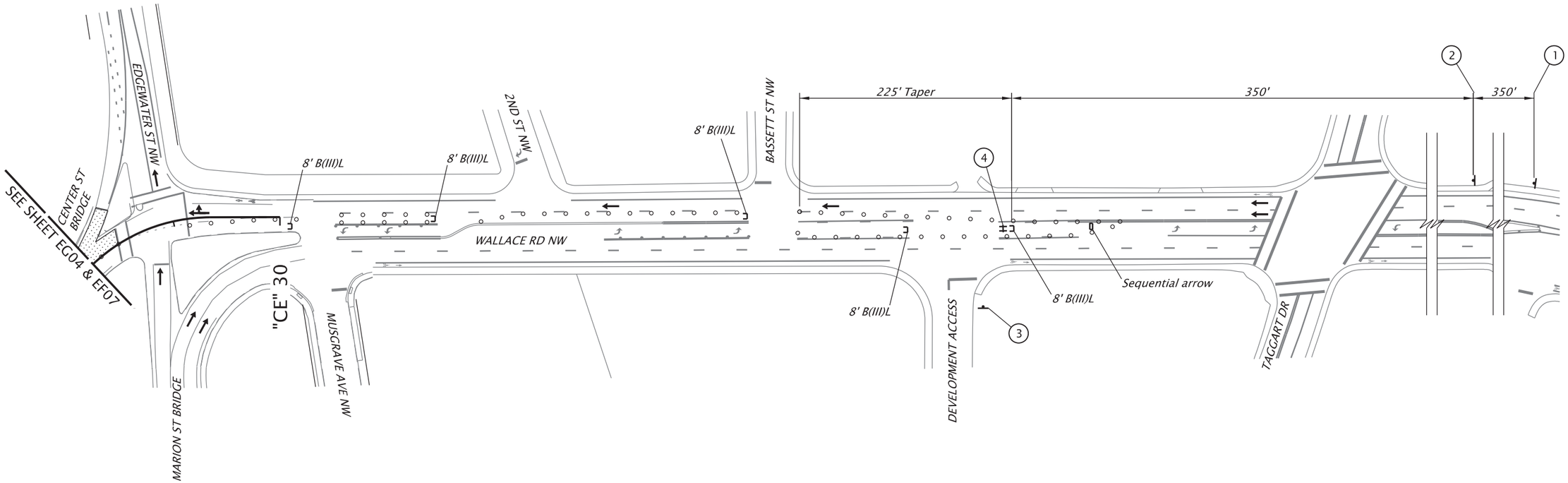

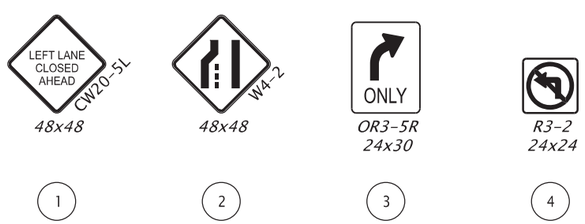

L E G E N D

- Direction of traffic
- Temporary sign on post
- 8 Ft Type III Barricade
- Temporary sign support (TSS)
- Temp. plastic drums on 20' max. spacing
- (#) Signing detail, see this sheet.

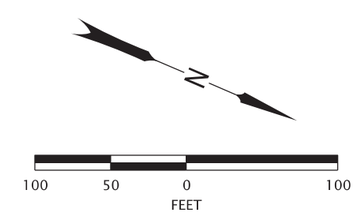

REGISTERED PROFESSIONAL ENGINEER 56,267 OREGON JULY 9, 2002 SCOTT M. MANSUR

Digitally Signed 2026.02.10 15:19:55-08'00'

EXPIRES: DEC. 31, 2026

FINAL ELECTRONIC DOCUMENT AVAILABLE UPON REQUEST

DKS
117 Commercial St. NE, Suite 310
Salem, Oregon 97301
(503) 391-8773
www.dksassociates.com

OR22: CENTER ST BRIDGE (PHASE 1) PROJECT
WILLAMINA-SALEM HIGHWAY
MARION & POLK COUNTIES

Designer: B. Lindell
Reviewer: B. Copeland
Drafter: C. Tower
Checker: S. Mansur

TRAFFIC CONTROL PLAN

SHEET NO. EG09

59V-051

T R A F F I C C O N T R O L P L A N

STAGE VI - PHASE 3

Bent 15 - South Half Construction

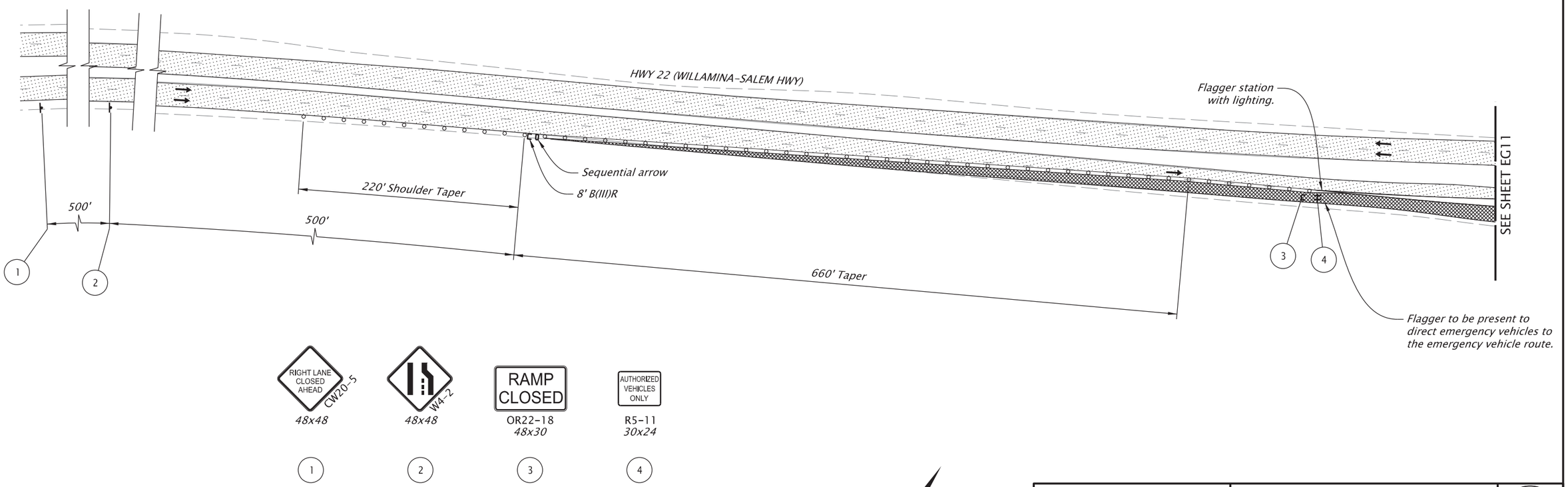

L E G E N D

- Direction of traffic
- Under traffic
- Open to Emergency Vehicles Only
- Sign on post
- Barricade
- Temporary sign support (TSS)
- Temp. plastic drums on 40' max. spacing
- (#) Signing detail, see this sheet

Notes:

1. See Sheet EA02 for Advanced Area Signage.
2. Type 3 barricade to be removed in the presence of an emergency vehicle.

N

100 50 0 100
FEET

REGISTERED PROFESSIONAL ENGINEER 56,267 OREGON JULY 9, 2002 SCOTT M. MANSUR

Digitally Signed: 2026.01.27 16:14:21-08'00'

EXPIRES: DEC. 31, 2026

FINAL ELECTRONIC DOCUMENT AVAILABLE UPON REQUEST

DKS
117 Commercial St. NE, Suite 310
Salem, Oregon 97301
(503) 391-8773
www.dksassociates.com

OREGON DEPARTMENT OF TRANSPORTATION

OR22: CENTER ST BRIDGE (PHASE 1) PROJECT
WILLAMINA-SALEM HIGHWAY
MARION & POLK COUNTIES

Designer: B. Lindell
Reviewer: B. Copeland
Drafter: C. Tower
Checker: S. Mansur

TRAFFIC CONTROL PLAN

SHEET NO. EG10

59V-051

T R A F F I C C O N T R O L P L A N

STAGE VI - PHASE 3

Bent 15 - South Half Construction

Note:

Min. deflection bridge temp. barrier to be secured to bridge deck according to details shown on sheets JZ11 and JZ12.

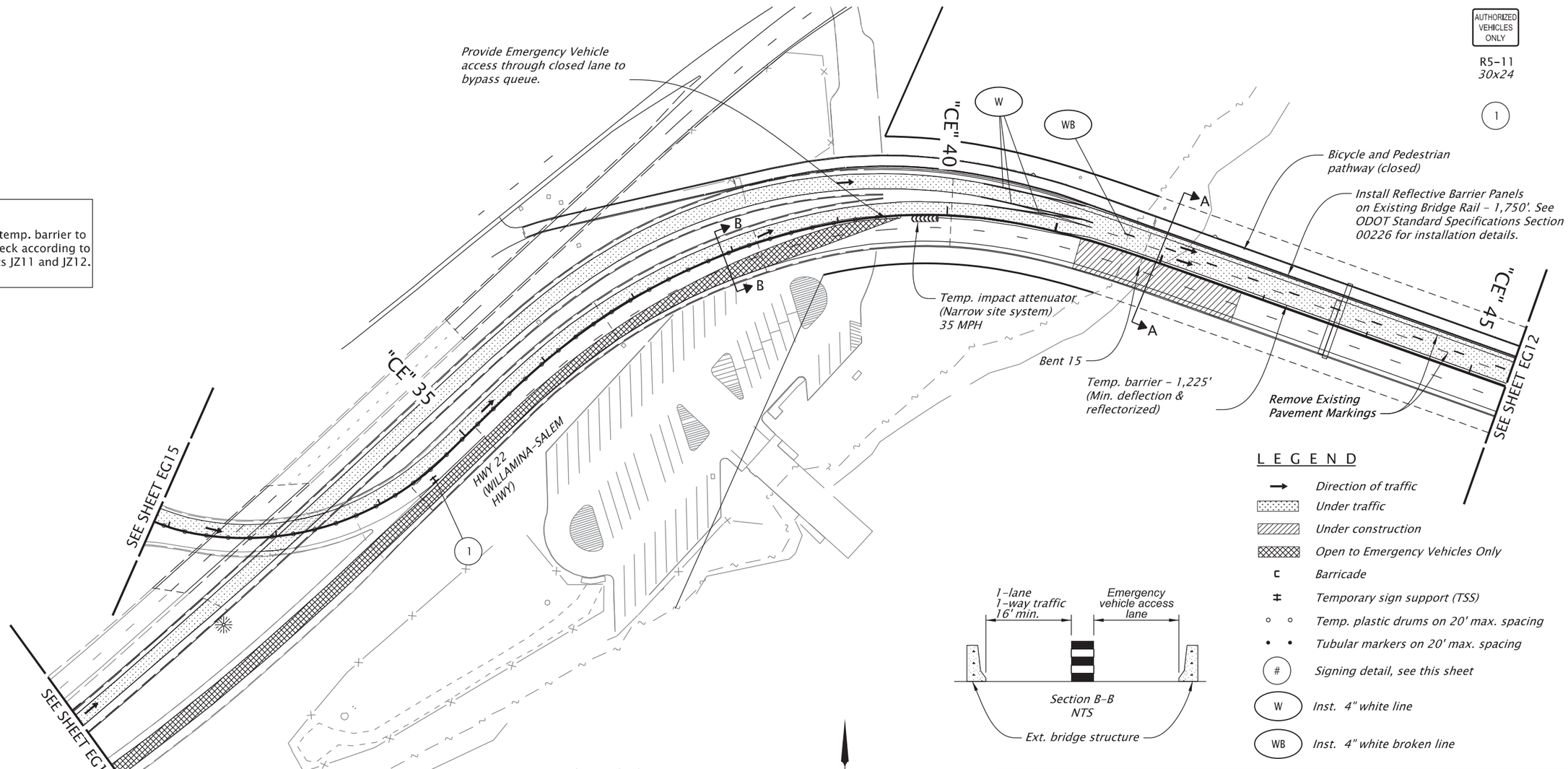

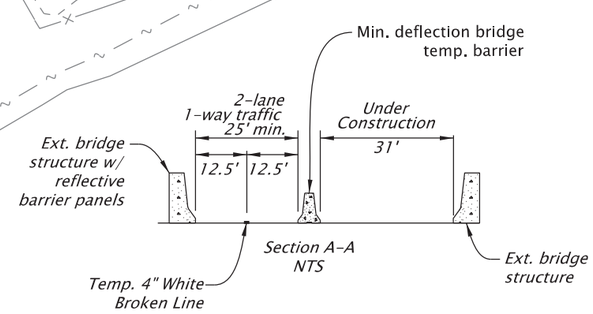

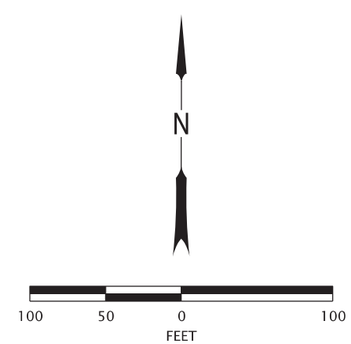

L E G E N D

- Direction of traffic
- Under traffic
- Under construction
- Open to Emergency Vehicles Only
- Barricade
- Temporary sign support (TSS)
- Temp. plastic drums on 20' max. spacing
- Tubular markers on 20' max. spacing
- # Signing detail, see this sheet
- W Inst. 4" white line
- WB Inst. 4" white broken line

Notes:

1. See Sheet EA02 for Advanced Area Signage.

REGISTERED PROFESSIONAL ENGINEER 56,267 OREGON JULY 9, 2002 SCOTT M. MANSUR

Digitally Signed 2026.02.11 15:37:09-08'00'

EXPIRES: DEC. 31, 2026

FINAL ELECTRONIC DOCUMENT AVAILABLE UPON REQUEST

DKS
117 Commercial St. NE, Suite 310
Salem, Oregon 97301
(503) 391-8773
www.dksassociates.com

OR22: CENTER ST BRIDGE (PHASE 1) PROJECT
WILLAMINA-SALEM HIGHWAY
MARION & POLK COUNTIES

Designer: B. Lindell | Reviewer: B. Copeland
Drafter: C. Tower | Checker: S. Mansur

TRAFFIC CONTROL PLAN

SHEET NO. EG11

TRAFFIC CONTROL PLAN

STAGE VI - PHASE 3

East Approach Spans - South Half Construction

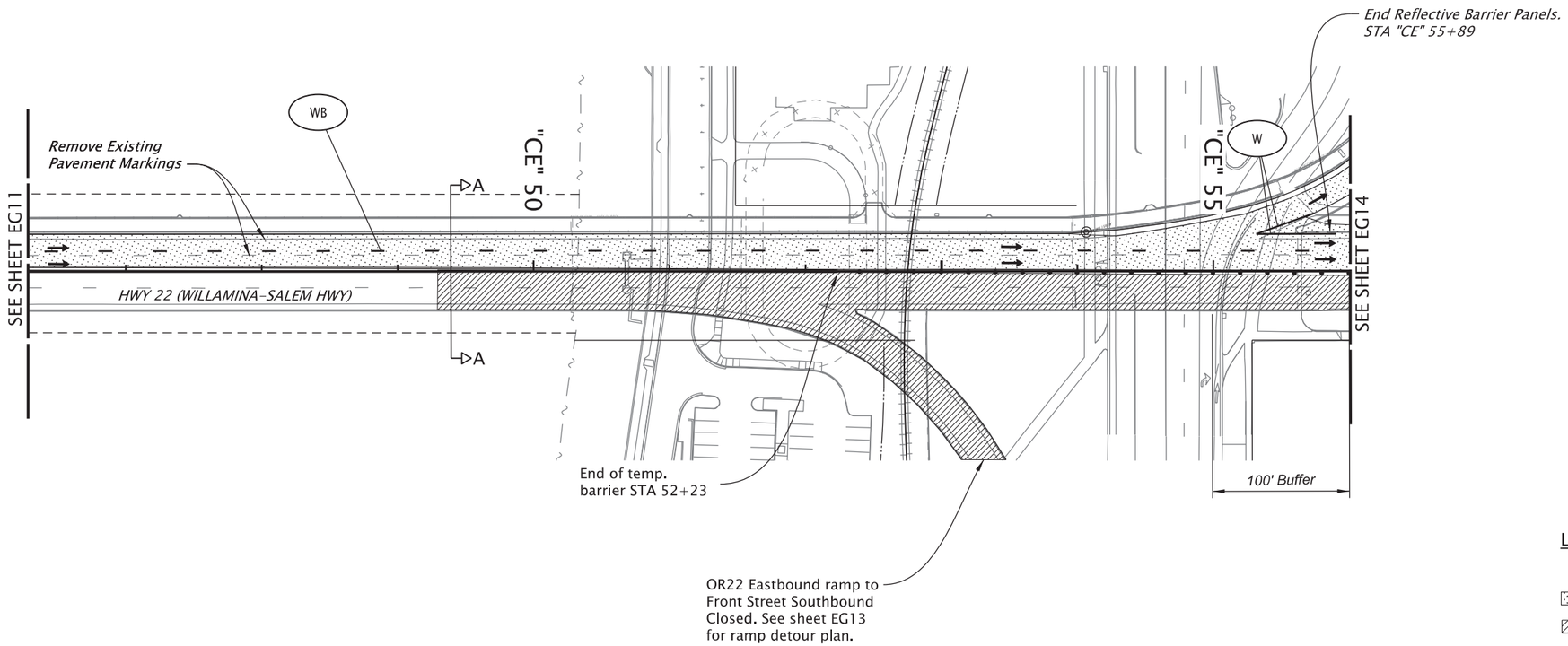

LEGEND

- Direction of traffic
- Under traffic
- Under construction
- Tubular markers on 20' max. spacing
- W — Inst. 4" white line
- WB — Inst. 4" white broken line

Note:

Min. deflection bridge temp. barrier to be secured to bridge deck according to details shown on sheets JZ11 and JZ12.

Notes:

1. See Sheet EA02 for Advanced Area Signage.

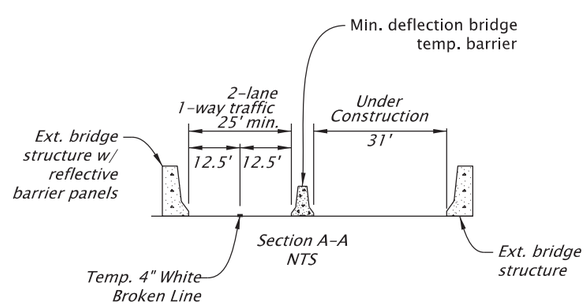

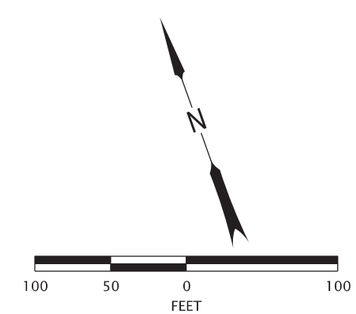

REGISTERED PROFESSIONAL ENGINEER 56,267 OREGON JULY 9, 2002 SCOTT M. MANSUR

Digitally Signed 2026.02.12 14:38:22-08'00'

EXPIRES: DEC. 31, 2026

FINAL ELECTRONIC DOCUMENT AVAILABLE UPON REQUEST

DKS
117 Commercial St. NE, Suite 310
Salem, Oregon 97301
(503) 391-8773
www.dksassociates.com

OREGON DEPARTMENT OF TRANSPORTATION

OR22: CENTER ST BRIDGE (PHASE 1) PROJECT
WILLAMINA-SALEM HIGHWAY
MARION & POLK COUNTIES

Designer: B. Lindell | Reviewer: B. Copeland
Drafter: C. Tower | Checker: S. Mansur

TRAFFIC CONTROL PLAN

SHEET NO. EG12

59V-051

D E T O U R P L A N

STAGE VI - PHASE 3

Ramp Closure - Bent 19 South Half Construction

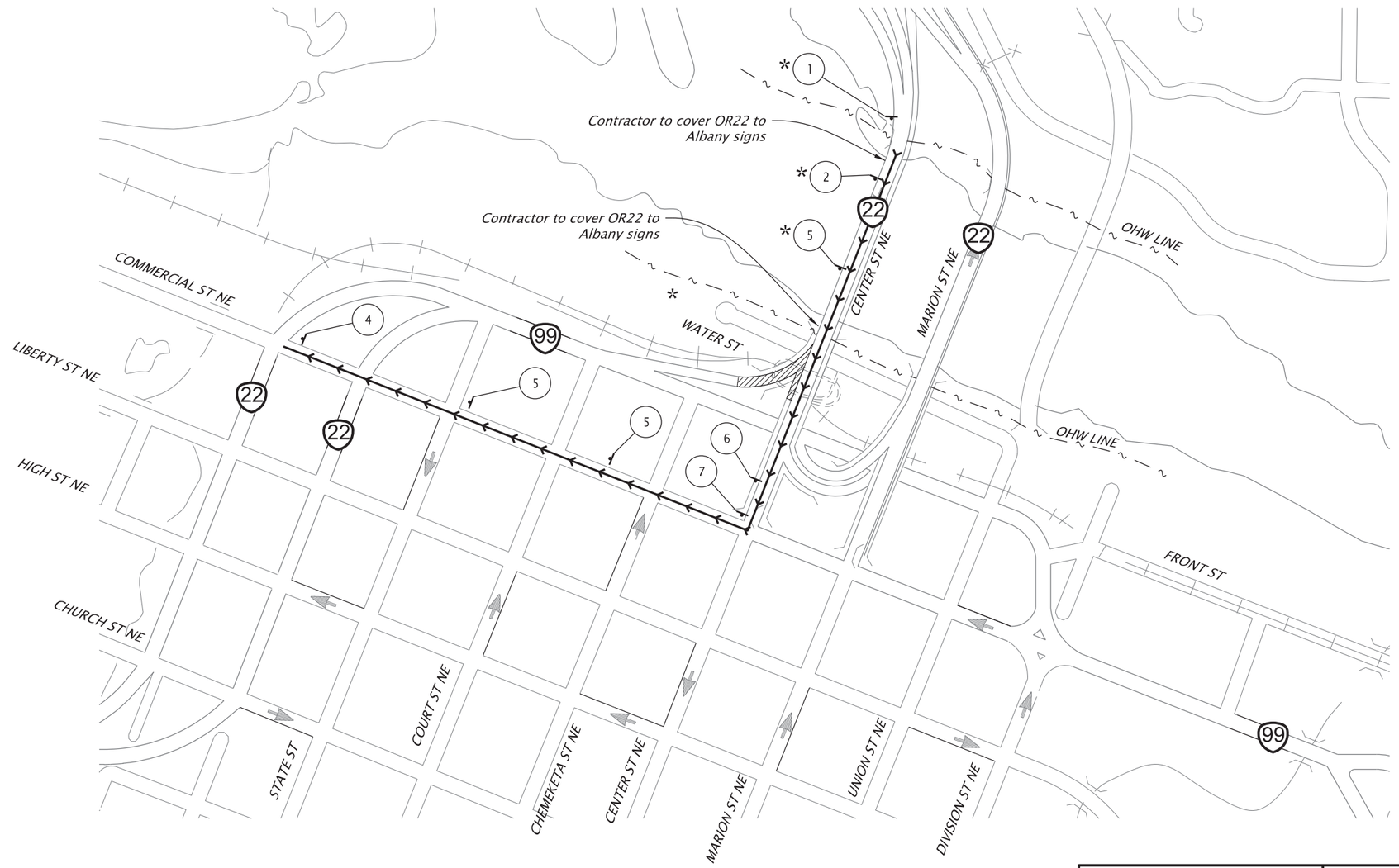

SIGN DETAILS

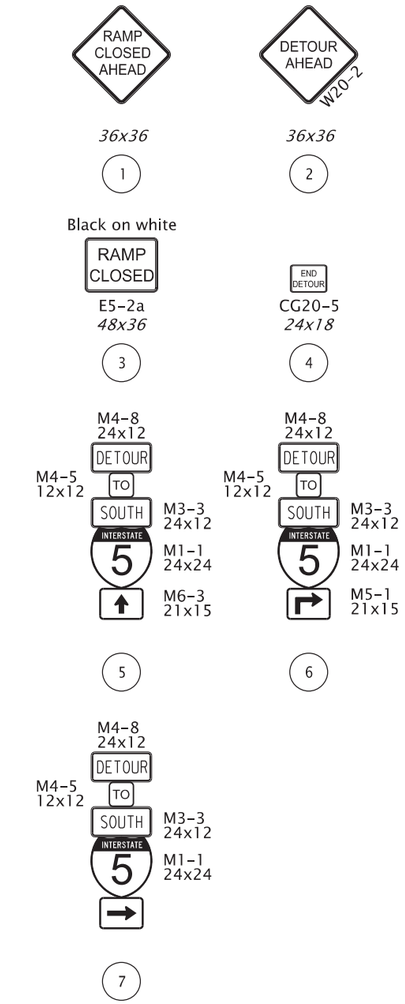

L E G E N D

- Vehicle detour route
- Under construction
- Temporary sign on temporary support
- # Signing detail. See this sheet
- 8' type III (L, R, or LR) barricade
- * Mount on barrier. See ODOT Std Dwg TM822
- ** Mount on barricade. See ODOT Std Dwg TM822

N

500 250 0 500
FEET

Note:
1. See Sheet EA02 for Advanced Area Signage.

Note:

Contractor to provide advanced PCMS specifying the ramp that is closed. See PCMS #1 on sheet EA02 for suggested location.

REGISTERED PROFESSIONAL ENGINEER 56,267
Digitally Signed 2026.01.27 16:14:40-08'00'
OREGON
JULY 9, 2002
SCOTT M. MANSUR
EXPIRES: DEC. 31, 2026

FINAL ELECTRONIC DOCUMENT AVAILABLE UPON REQUEST

DKS
117 Commercial St. NE, Suite 310
Salem, Oregon 97301
(503) 391-8773
www.dksassociates.com

OREGON DEPARTMENT OF TRANSPORTATION

OR22: CENTER ST BRIDGE (PHASE 1) PROJECT
WILLAMINA-SALEM HIGHWAY
MARION & POLK COUNTIES

Designer: B. Lindell
Reviewer: Name
Drafter: C. Tower
Checker: Name

TRAFFIC CONTROL DETOUR PLAN

SHEET NO. EG13

59V-051

T R A F F I C C O N T R O L P L A N

STAGE VI - PHASE 3

Bent 19 - South Half Construction

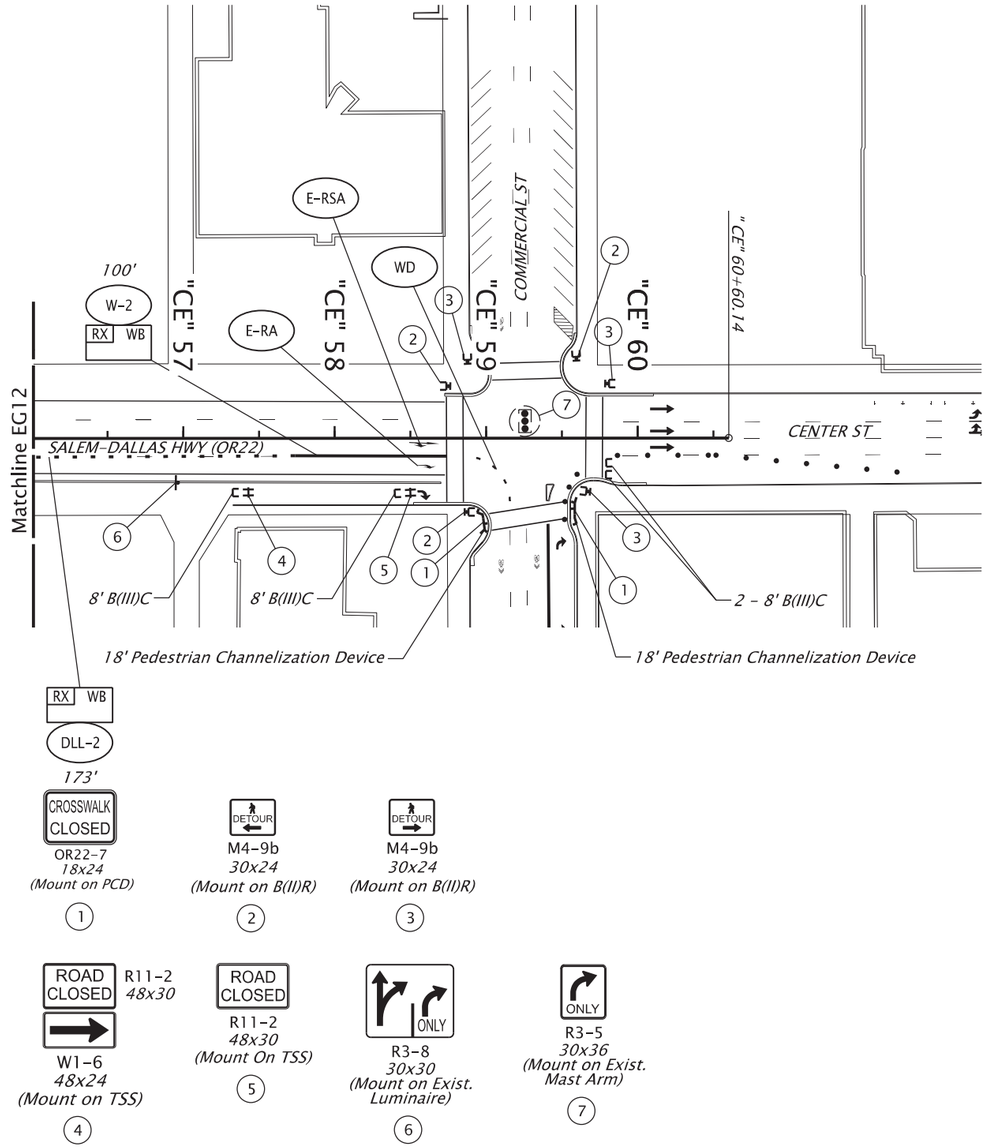

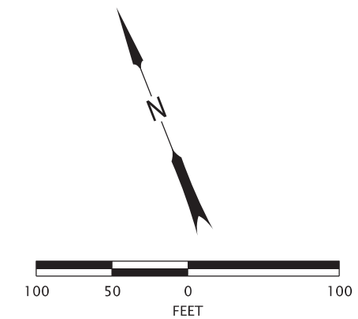

L E G E N D

- RX WD — *Remove extg. 4" white dotted line*
- RX WB — *Remove extg. 4" white broken line*
- WD — *Inst. 4" white dotted line*
- DLL-2 — *Inst. 8" white dotted lane line*
- W-2 — *Inst. 8" white line*
- E-RSA — *Inst. elongated right turn straight arrow (white)*
- E-RA — *Inst. elongated right turn arrow (white)*
- EXISTING SIGNAL
- • • • • • • • — *28" Tubular markers on 10' max. spacing*
- • • • • — *28" Tubular markers on 20' max. spacing*

1. Cover existing pedestrian signals for the south leg crosswalk for duration of the temporary crosswalk closure.

2. Cover flashing red signal and sign at Center St and Commercial intersection for duration of lane closure.

3. Contact City of Salem Signal Operations Engineer at least two weeks prior to impacting the pedestrian crossing.

4. Remove temporary pavement markings and reinstall permanent pavement markings to match the orginal lane configuration when Stage IV, Phase 3 is completed.

REGISTERED PROFESSIONAL ENGINEER
87,105
Digitally Signed Date: 2026.01.27 11:55:28-08'00'
OREGON
NOV. 13, 2012
CHRISTINA L. LAFLEUR
RENEWS: 12-31-2026

FINAL ELECTRONIC DOCUMENT AVAILABLE UPON REQUEST

OREGON DEPARTMENT OF TRANSPORTATION

OR22: CENTER ST BRIDGE (PHASE 1) PROJECT
WILLAMINA-SALEM HIGHWAY
MARION & POLK COUNTIES

Designer: C. LaFleur, PE | Reviewer: Andrew Wilkes, PE
Drafter: C. LaFleur, PE | Checker: N/A

TRAFFIC CONTROL PLAN

SHEET NO. EG14

59V-051

T R A F F I C C O N T R O L P L A N

STAGE VI - PHASE 3

Bent 15 - South Half Construction

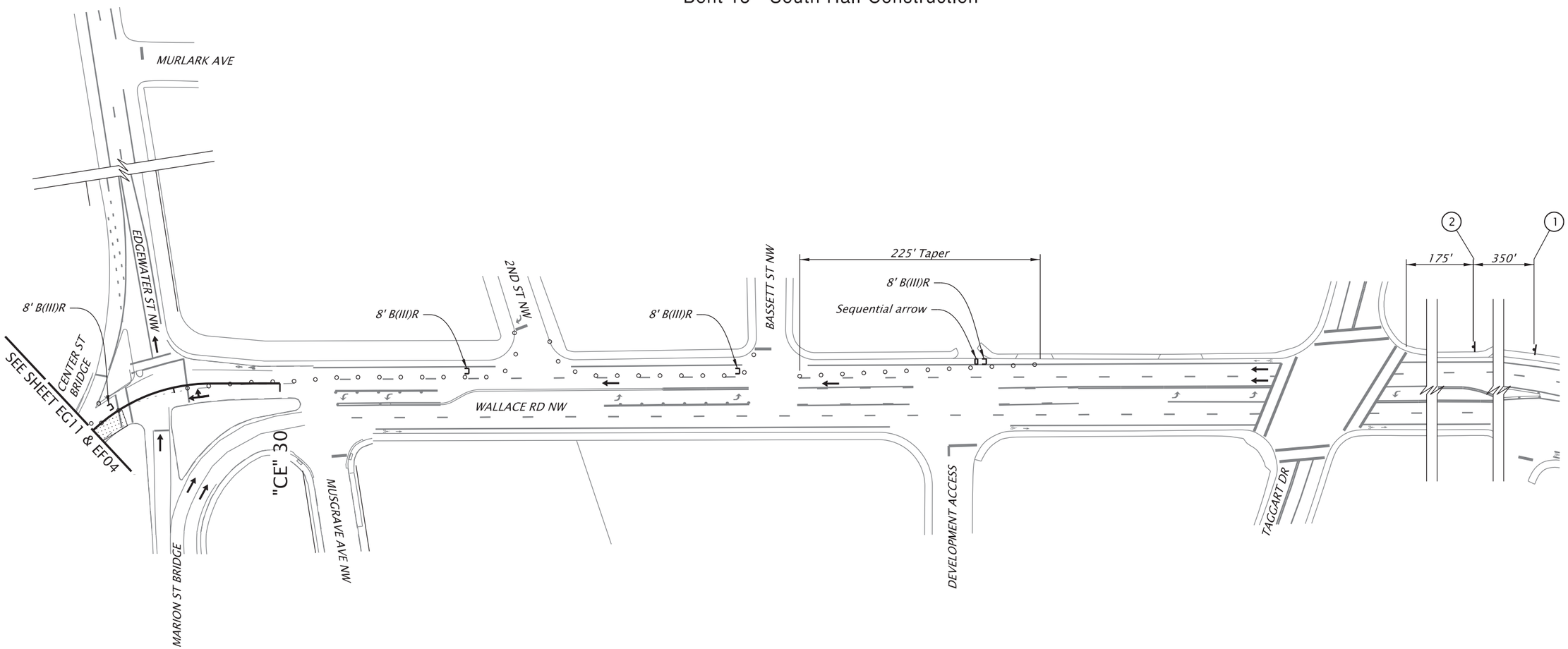

1 2

L E G E N D

- Direction of traffic
- Temporary sign on post
- 8 Ft Type III Barricade
- Temp. plastic drums on 20' max. spacing
- (#) Signing detail, see sht. EF16

N

100 50 0 100
FEET

REGISTERED PROFESSIONAL ENGINEER 56,267 OREGON JULY 9, 2002 SCOTT M. MANSUR

Digitally Signed 2026.01.27 16:14:46-08'00'

EXPIRES: DEC. 31, 2026

FINAL ELECTRONIC DOCUMENT AVAILABLE UPON REQUEST

DKS
117 Commercial St. NE, Suite 310
Salem, Oregon 97301
(503) 391-8773
www.dksassociates.com

OR22: CENTER ST BRIDGE (PHASE 1) PROJECT
WILLAMINA-SALEM HIGHWAY
MARION & POLK COUNTIES

Designer: B. Lindell
Reviewer: B. Copeland
Drafter: C. Tower
Checker: S. Mansur

TRAFFIC CONTROL PLAN

SHEET NO. EG15

59V-051

TRAFFIC CONTROL DETAILS

STAGE VI - PHASE 4

Full Bridge Closure

ADVANCED NOTIFICATION

OR22 TO SALEM CLOSURE	CLOSED MM/DD XPM-XAM

PCMS #1
(Suggested Message)
(Locate As Directed)

OR22 TO SALEM CLOSURE	CLOSED MM/DD XPM-XAM

PCMS #2
(Suggested Message)
(Locate As Directed)

CENTER ST BRDGE CLOSURE	CLOSED MM/DD XPM-XAM

PCMS #3
(Suggested Message)
(Locate As Directed)

OR22 TO SALEM CLOSURE	CLOSED MM/DD XPM-XAM

PCMS #4
(Suggested Message)
(Locate As Directed)

OR22 TO SALEM CLOSURE	CLOSED MM/DD XPM-XAM

PCMS #5
(Suggested Message)
(Locate As Directed)

DURING CLOSURE

OR22 TO SALEM CLOSURE	DETOUR USE OR18 EB

PCMS #1
(Suggested Message)
(Locate As Directed)

OR22 TO SALEM CLOSURE	DETOUR USE 99W TO OR217

PCMS #2
(Suggested Message)
(Locate As Directed)

CENTER ST BRDGE CLOSURE	DETOUR USE 99W SOUTH

PCMS #3
(Suggested Message)
(Locate As Directed)

OR22 TO SALEM CLOSURE	DETOUR USE OR34 EB

PCMS #4
(Suggested Message)
(Locate As Directed)

OR22 TO SALEM CLOSURE	DETOUR USE 99W NORTH

PCMS #5
(Suggested Message)
(Locate As Directed)

ADVANCED NOTIFICATION

OR22 CLOSURE AT CENTER ST BRIDGE XPM M/DD-XAM M/DD

VARIABLE MESSAGE SIGN "1"
(Suggested Message)
(Supplemental Signing Only)

OR22 CLOSURE AT CENTER ST BRIDGE XPM M/DD-XAM M/DD

VARIABLE MESSAGE SIGN "2"
(Suggested Message)
(Supplemental Signing Only)

OR22 BRIDGE CLSED NIGHTS M/DD-M/DD

VARIABLE MESSAGE SIGN "3"
(Suggested Message)
(Supplemental Signing Only)

DURING CLOSURE

CENTER ST BRIDGE CLOSED USE 99W TO 217 TO 1-5 SB

VARIABLE MESSAGE SIGN "1"
(Suggested Message)
(Supplemental Signing Only)

OR22 AT W SALEM CLOSED USED I-5 NB TO SALEM

VARIABLE MESSAGE SIGN "2"
(Suggested Message)
(Supplemental Signing Only)

CENTER ST BRDGE CLOSED USE 99W SB

VARIABLE MESSAGE SIGN "3"
(Suggested Message)
(Supplemental Signing Only)

General Note:

1. *Variable Message Sign messaging will need to be coordinated with ODOT.*

REGISTERED PROFESSIONAL ENGINEER 56,267 OREGON JULY 9, 2002 SCOTT M. MANSUR

Digitally Signed 2026.01.27 16:14:53-08'00'

EXPIRES: DEC. 31, 2026

FINAL ELECTRONIC DOCUMENT AVAILABLE UPON REQUEST

DKS
117 Commercial St. NE, Suite 310
Salem, Oregon 97301
(503) 391-8773
www.dksassociates.com

OREGON DEPARTMENT OF TRANSPORTATION

OR22: CENTER ST BRIDGE (PHASE 1) PROJECT
WILLAMINA-SALEM HIGHWAY
MARION & POLK COUNTIES

Designer: B. Lindell
Reviewer: B. Copeland
Drafter: C. Tower
Checker: S. Mansur

TRAFFIC CONTROL DETAILS

SHEET NO. EG16

59V-051

TRAFFIC CONTROL DETAILS

STAGE VI - PHASE 4

Full Bridge Closure

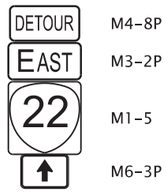

M4-8P
M3-2P
M1-5
M6-3P

1

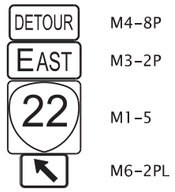

M4-8P
M3-2P
M1-5
M6-2PL

2

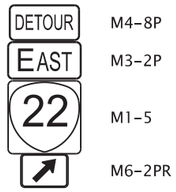

M4-8P
M3-2P
M1-5
M6-2PR

3

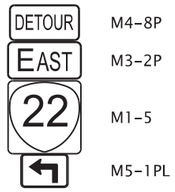

M4-8P
M3-2P
M1-5
M5-1PL

4

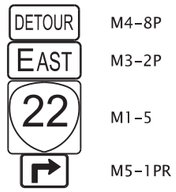

M4-8P
M3-2P
M1-5
M5-1PR

5

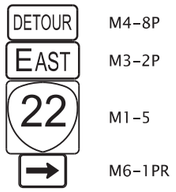

M4-8P
M3-2P
M1-5
M6-1PR

6

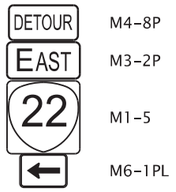

M4-8P
M3-2P
M1-5
M6-1PL

7

OR11-4a
60x30

8

CG20-5
30x24

9

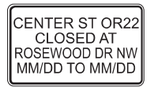

48x30

10

W20-1
48x48

11

CW20-5
48x48

12

W4-2L
48x48

13

48x30

14

CW20-5L
48x48

15

W4-2R
48x48

16

W20-3
48x48

17

W20-2D
48x48

18

R11-2
48x30

19

W12-1
48x48

20

R3-1
24x24

21

R3-2
24x24

22

CW23-12
48x48

23

48x30

24

M4-8P
M6-1PR

25

M4-8P
M6-1PL

26

48x30

27

OR22-18
48x30

28

M4-8P
M6-1P

29

R11-4
60x30
(Mount on TSS)

30

R3-5
36x30

31

W4-7
48x48

32

R3-7
30x30

33

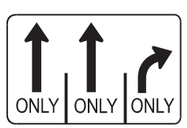

R3-8
48x30

34

30x24

35

M6-1PR

36

R3-8
48x30

37

REGISTERED PROFESSIONAL ENGINEER 56,267 OREGON JULY 9, 2002 SCOTT M. MANSUR

Digitally Signed: 2026.01.27 16:15:20-08'00'

EXPIRES: DEC. 31, 2026

FINAL ELECTRONIC DOCUMENT
AVAILABLE UPON REQUEST

DKS
117 Commercial St. NE, Suite 310
Salem, Oregon 97301
(503) 391-8773
www.dksassociates.com

OR22: CENTER ST BRIDGE (PHASE 1) PROJECT
WILLAMINA-SALEM HIGHWAY
MARION & POLK COUNTIES

Designer: B. Lindell
Reviewer: B. Copeland
Drafter: C. Tower
Checker: S. Mansur

TRAFFIC CONTROL DETAILS

SHEET NO.
EG17

59V-051

TRAFFIC CONTROL DETOUR PLAN

STAGE VI - PHASE 4

Full Bridge Closure

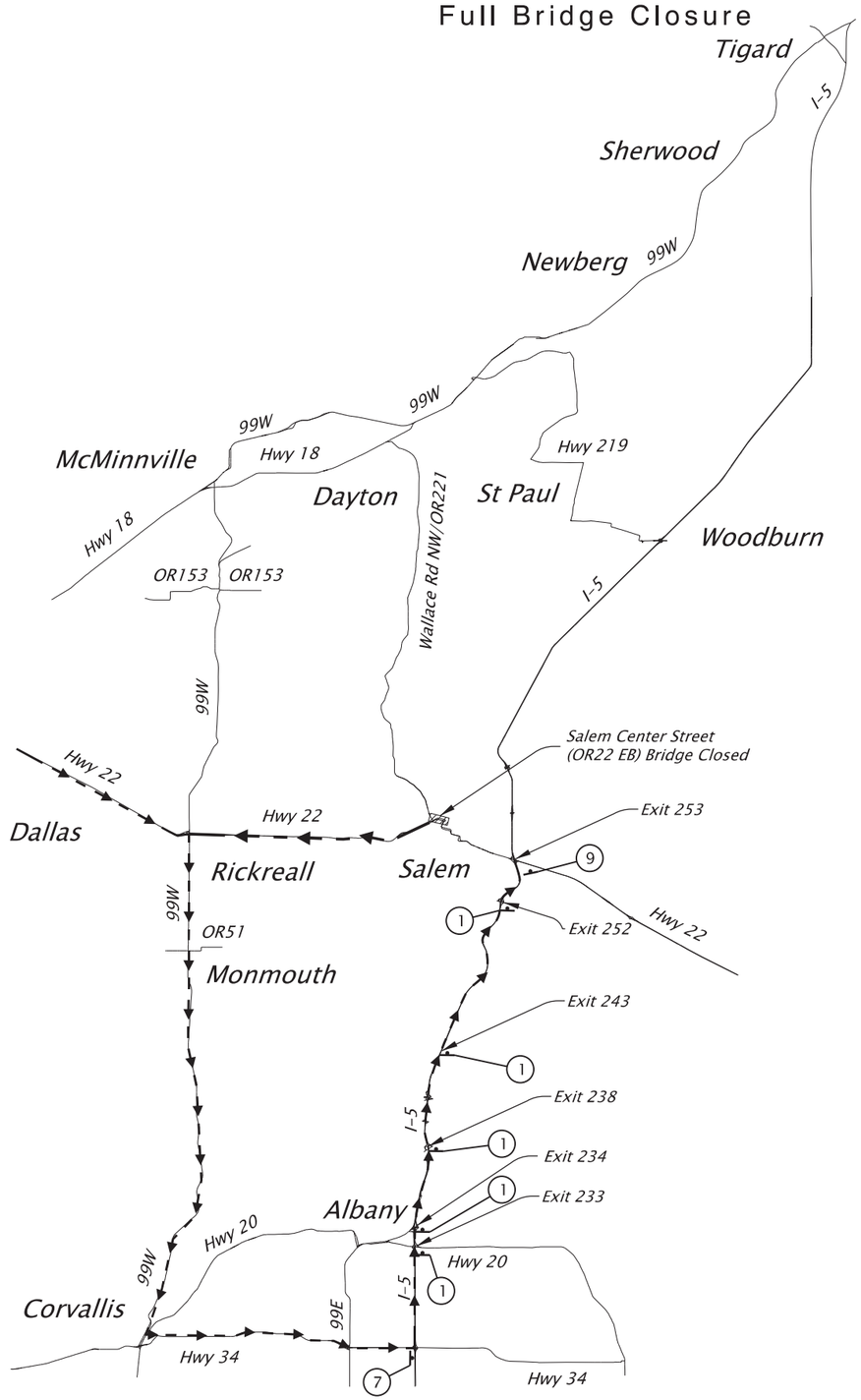

General Note:

1. *For Center Street Bridge closure details, reference special provision 00220.40(f) section 2.*

LEGEND

- *Bridge Closure*
- *Proposed detour route*
- *Temporary sign on post*
- (X) *Signing detail, see details on Sheet EG17*

N

N.T.S.

REGISTERED PROFESSIONAL ENGINEER 56,267 OREGON JULY 9, 2002 SCOTT M. MANSUR

Digitally Signed 2026.01.27 16:15:26-08'00'

EXPIRES: DEC. 31, 2026

FINAL ELECTRONIC DOCUMENT AVAILABLE UPON REQUEST

DKS
117 Commercial St. NE, Suite 310
Salem, Oregon 97301
(503) 391-8773
www.dksassociates.com

OREGON DEPARTMENT OF TRANSPORTATION

OR22: CENTER ST BRIDGE (PHASE 1) PROJECT
WILLAMINA-SALEM HIGHWAY
MARION & POLK COUNTIES

Designer: B. Lindell | Reviewer: B. Copeland
Drafter: C. Tower | Checker: S. Mansur

TRAFFIC CONTROL DETOUR PLAN

SHEET NO. EG18

59V-051

T R A F F I C C O N T R O L D E T O U R P L A N

STAGE VI - PHASE 4

Full Bridge Closure

Portable Changeable Message Sign (PCMS) Plan

INSET "C"

INSET "A"

See Sheet EG27 for additional details.

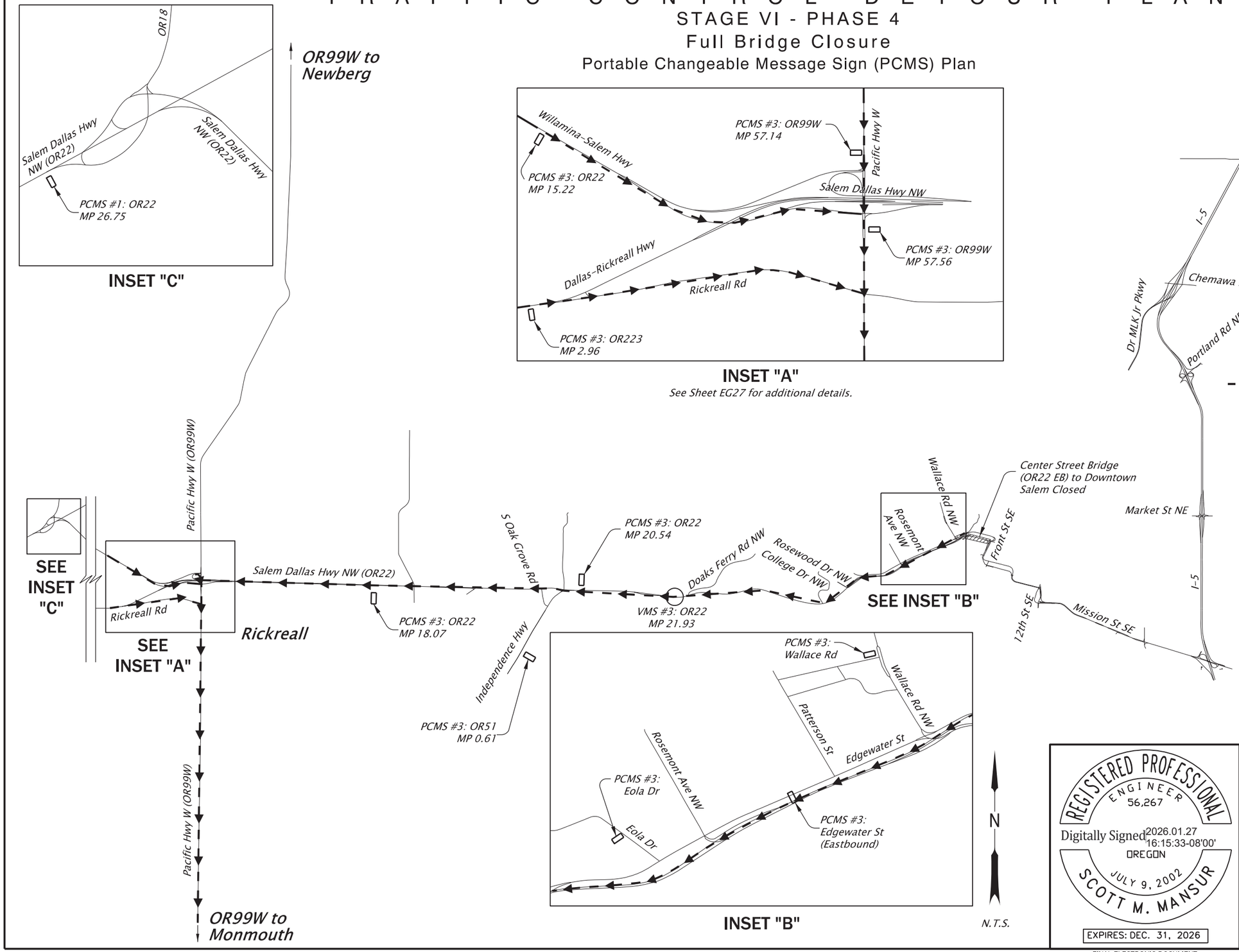

INSET "B"

LEGEND

- Bridge Closure
- Proposed detour route
- Portable changeable message sign (PCMS)

General Notes:

1. See sheet EG16 for variable message sign (VMS) and portable changeable message details.
2. Display advance notification messages 14 days prior to closure.
3. Place PCMS shown a minimum of 500 feet from the nearest interchange or terminal intersection unless otherwise shown, or directed.
4. Install PCMS according to the PCMS installation detail shown on ODOT Std. Dwg. TM800.
5. Exact sign locations to be verified by the Engineer.

REGISTERED PROFESSIONAL ENGINEER 56,267
Digitally Signed 2026.01.27 16:15:33-08'00'
OREGON
JULY 9, 2002
SCOTT M. MANSUR
EXPIRES: DEC. 31, 2026

FINAL ELECTRONIC DOCUMENT AVAILABLE UPON REQUEST

DKS
117 Commercial St. NE, Suite 310
Salem, Oregon 97301
(503) 391-8773
www.dksassociates.com

OR22: CENTER ST BRIDGE (PHASE 1) PROJECT
WILLAMINA-SALEM HIGHWAY
MARION & POLK COUNTIES

Designer: B. Lindell | Reviewer: B. Copeland
Drafter: C. Tower | Checker: S. Mansur

TRAFFIC CONTROL DETOUR PLAN

SHEET NO. EG19

59V-051

T R A F F I C C O N T R O L D E T O U R P L A N

STAGE VI - PHASE 4

Full Bridge Closure

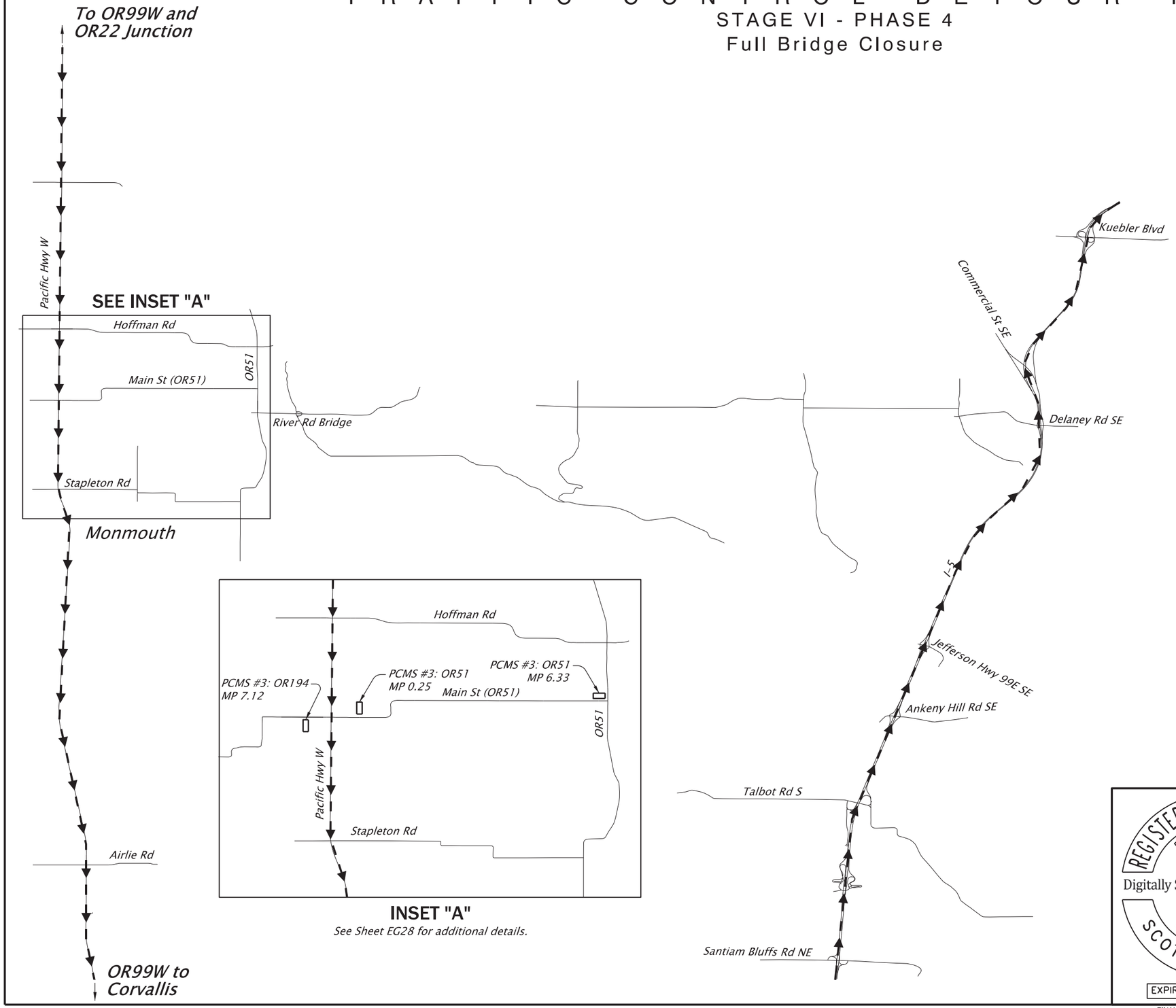

INSET "A"

See Sheet EG28 for additional details.

General Notes:

1. *See sheet EG16 for variable message sign (VMS) and portable changeable message details.*
2. *Display advance notification messages 14 days prior to closure.*
3. *Place PCMS shown a minimum of 500 feet from the nearest interchange or terminal intersection unless otherwise shown, or directed.*
4. *Install PCMS according to the PCMS installation detail shown on ODOT Std. Dwg. TM800.*
5. *Exact sign locations to be verified by the Engineer.*

N

L E G E N D

Temporary sign on post

Proposed detour route

Portable changeable message sign (PCMS)

N.T.S.

REGISTERED PROFESSIONAL ENGINEER 56,267 OREGON JULY 9, 2002 SCOTT M. MANSUR

Digitally Signed 2026.01.27 16:15:39-08'00'

EXPIRES: DEC. 31, 2026

FINAL ELECTRONIC DOCUMENT AVAILABLE UPON REQUEST

DKS
117 Commercial St. NE, Suite 310
Salem, Oregon 97301
(503) 391-8773
www.dksassociates.com

OR22: CENTER ST BRIDGE (PHASE 1) PROJECT
WILLAMINA-SALEM HIGHWAY
MARION & POLK COUNTIES

Designer: B. Lindell | Reviewer: B. Copeland
Drafter: C. Tower | Checker: S. Mansur

TRAFFIC CONTROL DETOUR PLAN

SHEET NO. EG20

59V-051

T R A F F I C C O N T R O L D E T O U R P L A N

STAGE VI - PHASE 4

Full Bridge Closure

General Notes:

1. *See sheet EG16 for variable message sign (VMS) and portable changeable message details.*
2. *Display advance notification messages 14 days prior to closure.*
3. *Place PCMS shown a minimum of 500 feet from the nearest interchange or terminal intersection unless otherwise shown, or directed.*
4. *Install PCMS according to the PCMS installation detail shown on ODOT Std. Dwg. TM800.*
5. *Exact sign locations to be verified by the Engineer.*

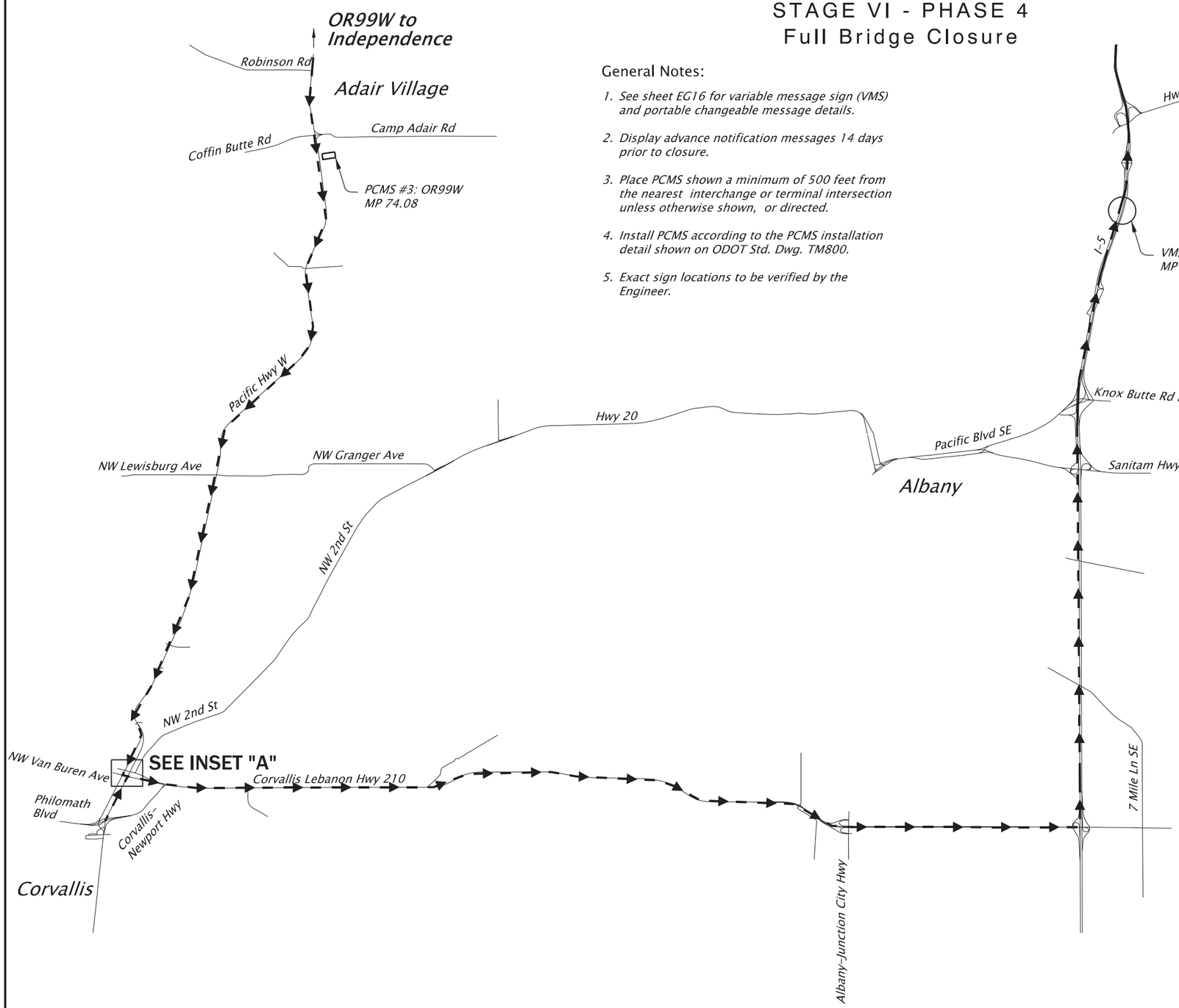

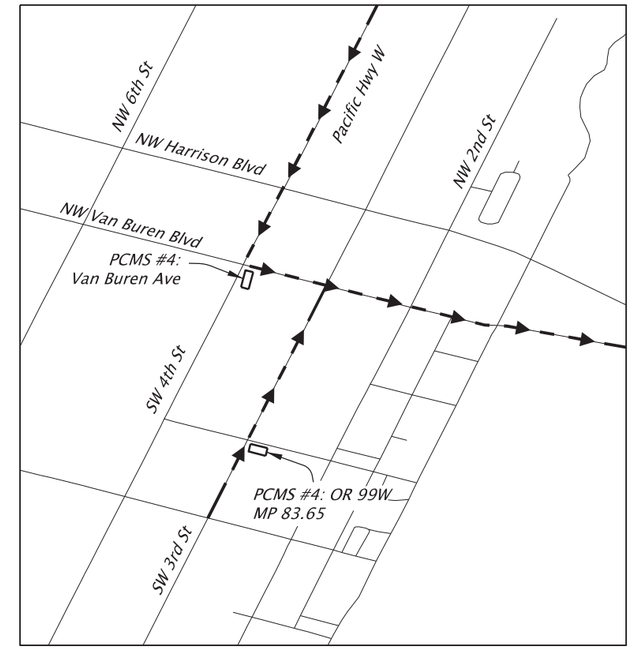

INSET "A"

See Sheet EG29 for additional details.

N

L E G E N D

Proposed detour route

Portable changeable message sign (PCMS)

N.T.S.

REGISTERED PROFESSIONAL ENGINEER 56,267 OREGON JULY 9, 2002 SCOTT M. MANSUR

Digitally Signed: 2026.01.27 16:15:45-08'00'

EXPIRES: DEC. 31, 2026

FINAL ELECTRONIC DOCUMENT AVAILABLE UPON REQUEST

DKS
117 Commercial St. NE, Suite 310
Salem, Oregon 97301
(503) 391-8773
www.dksassociates.com

OR22: CENTER ST BRIDGE (PHASE 1) PROJECT
WILLAMINA-SALEM HIGHWAY
MARION & POLK COUNTIES

Designer: B. Lindell | Reviewer: B. Copeland
Drafter: C. Tower | Checker: S. Mansur

TRAFFIC CONTROL DETOUR PLAN

SHEET NO. EG21

59V-051

T R A F F I C C O N T R O L D E T O U R P L A N

STAGE VI - PHASE 4
Full Bridge Closure

INSET "A"

See Sheet EG31 for additional signing details.

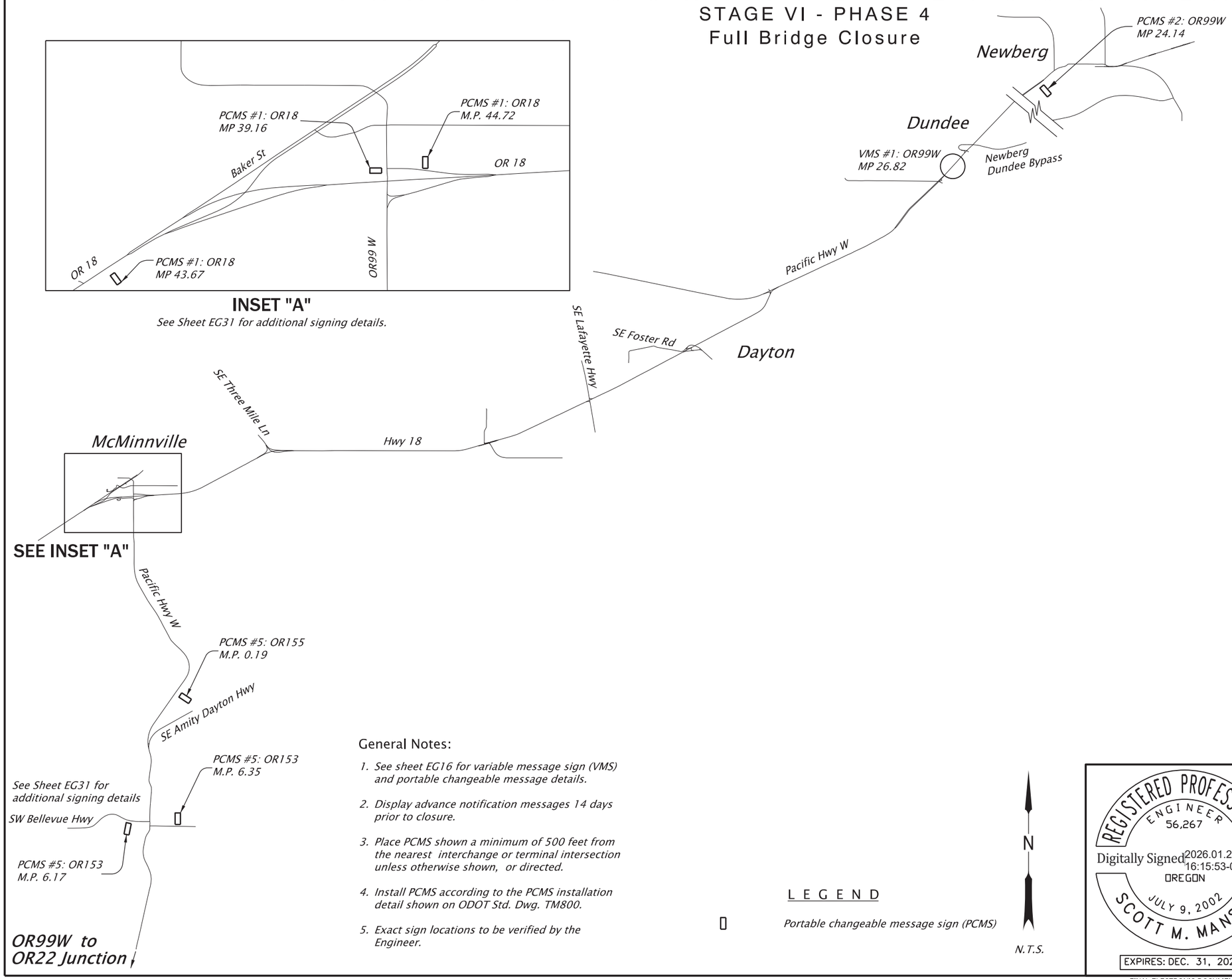

General Notes:

1. *See sheet EG16 for variable message sign (VMS) and portable changeable message details.*
2. *Display advance notification messages 14 days prior to closure.*
3. *Place PCMS shown a minimum of 500 feet from the nearest interchange or terminal intersection unless otherwise shown, or directed.*
4. *Install PCMS according to the PCMS installation detail shown on ODOT Std. Dwg. TM800.*
5. *Exact sign locations to be verified by the Engineer.*

L E G E N D

▯ *Portable changeable message sign (PCMS)*

N

N.T.S.

REGISTERED PROFESSIONAL ENGINEER 56,267
Digitally Signed: 2026.01.27 16:15:53-08'00'
OREGON
JULY 9, 2002
SCOTT M. MANSUR
EXPIRES: DEC. 31, 2026

FINAL ELECTRONIC DOCUMENT
AVAILABLE UPON REQUEST

DKS
117 Commercial St. NE, Suite 310
Salem, Oregon 97301
(503) 391-8773
www.dksassociates.com

OR22: CENTER ST BRIDGE (PHASE 1) PROJECT
WILLAMINA-SALEM HIGHWAY
MARION & POLK COUNTIES

Designer: B. Lindell
Reviewer: B. Copeland
Drafter: C. Tower
Checker: S. Mansur

TRAFFIC CONTROL DETOUR PLAN

SHEET NO. EG22

59V-051

TRAFFIC CONTROL DETOUR PLAN

STAGE VI - PHASE 4
Full Bridge Closure
OR22 - WEST SALEM

LEGEND

- Temporary sign on post
- Proposed detour route
- (X) Signing detail, see details on Sheet EG17
- Bridge closure

REGISTERED PROFESSIONAL ENGINEER 56,267 OREGON JULY 9, 2002 SCOTT M. MANSUR

Digitally Signed 2026.01.27 16:16:01-08'00'

EXPIRES: DEC. 31, 2026

FINAL ELECTRONIC DOCUMENT AVAILABLE UPON REQUEST

DKS
117 Commercial St. NE, Suite 310
Salem, Oregon 97301
(503) 391-8773
www.dksassociates.com

OREGON DEPARTMENT OF TRANSPORTATION

OR22: CENTER ST BRIDGE (PHASE 1) PROJECT
WILLAMINA-SALEM HIGHWAY
MARION & POLK COUNTIES

Designer: B. Lindell | Reviewer: B. Copeland
Drafter: C. Tower | Checker: S. Mansur

TRAFFIC CONTROL DETOUR PLAN

SHEET NO. EG23

59V-051

TRAFFIC CONTROL DETOUR PLAN

STAGE VI - PHASE 4
Full Bridge Closure
OR22 - WEST SALEM

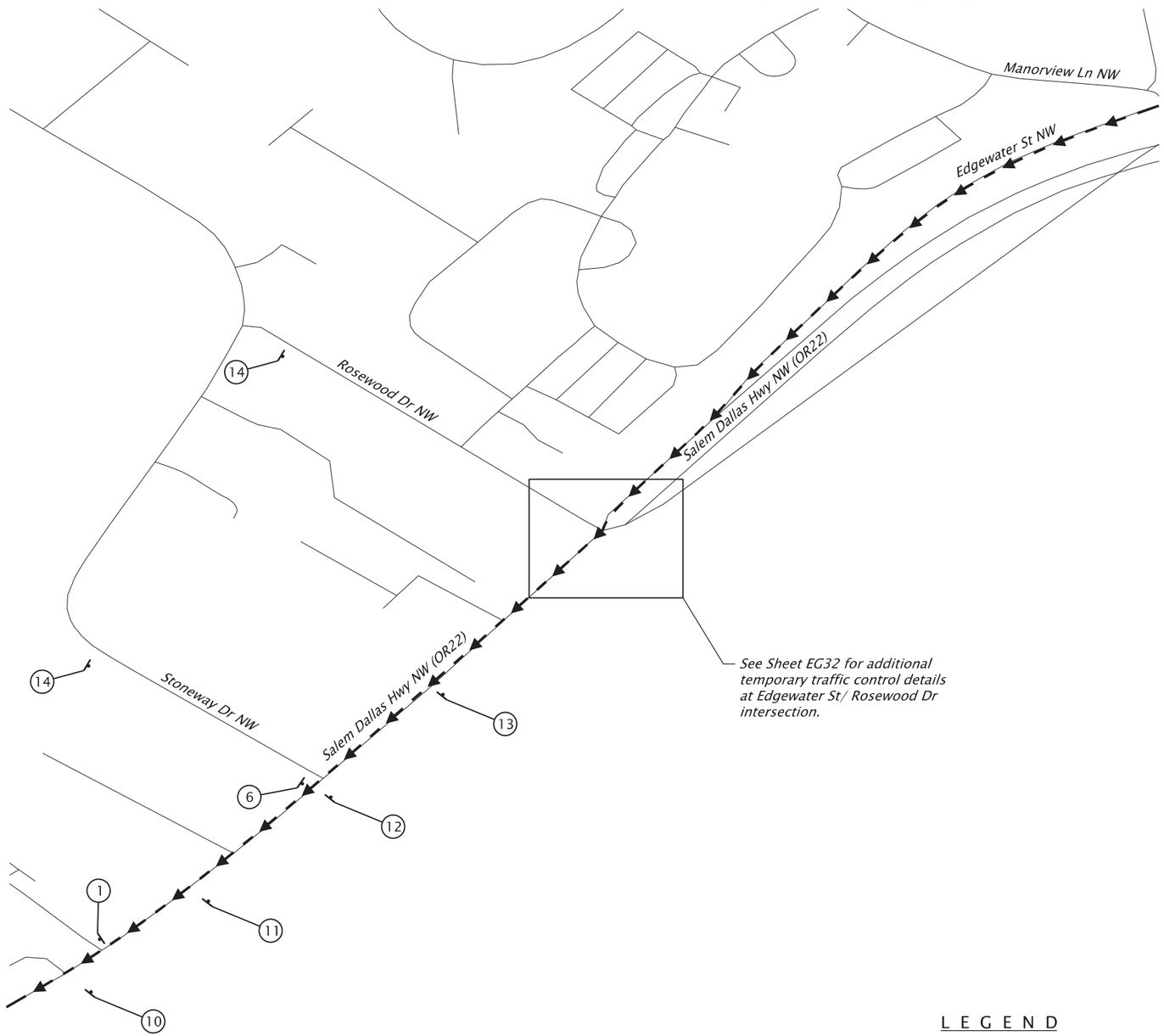

N

N.T.S.

LEGEND

Temporary sign on post

Proposed detour route

(X) Signing detail, see details on Sheet EG17

REGISTERED PROFESSIONAL ENGINEER 56,267 OREGON JULY 9, 2002 SCOTT M. MANSUR

Digitally Signed: 2026.06.22 09:03:01-07'00'

EXPIRES: DEC. 31, 2026

FINAL ELECTRONIC DOCUMENT AVAILABLE UPON REQUEST

DKS
117 Commercial St. NE, Suite 310
Salem, Oregon 97301
(503) 391-8773
www.dksassociates.com

OR22: CENTER ST BRIDGE (PHASE 1) PROJECT
WILLAMINA-SALEM HIGHWAY
MARION & POLK COUNTIES

Designer: B. Lindell | Reviewer: B. Copeland
Drafter: C. Tower | Checker: S. Mansur

TRAFFIC CONTROL DETOUR PLAN

SHEET NO. EG24

59V-051

TRAFFIC CONTROL DETOUR PLAN

STAGE VI - PHASE 4

Full Bridge Closure

DETOUR ROUTE - OR99W TO CORVALLIS
BRUNKS CORNER

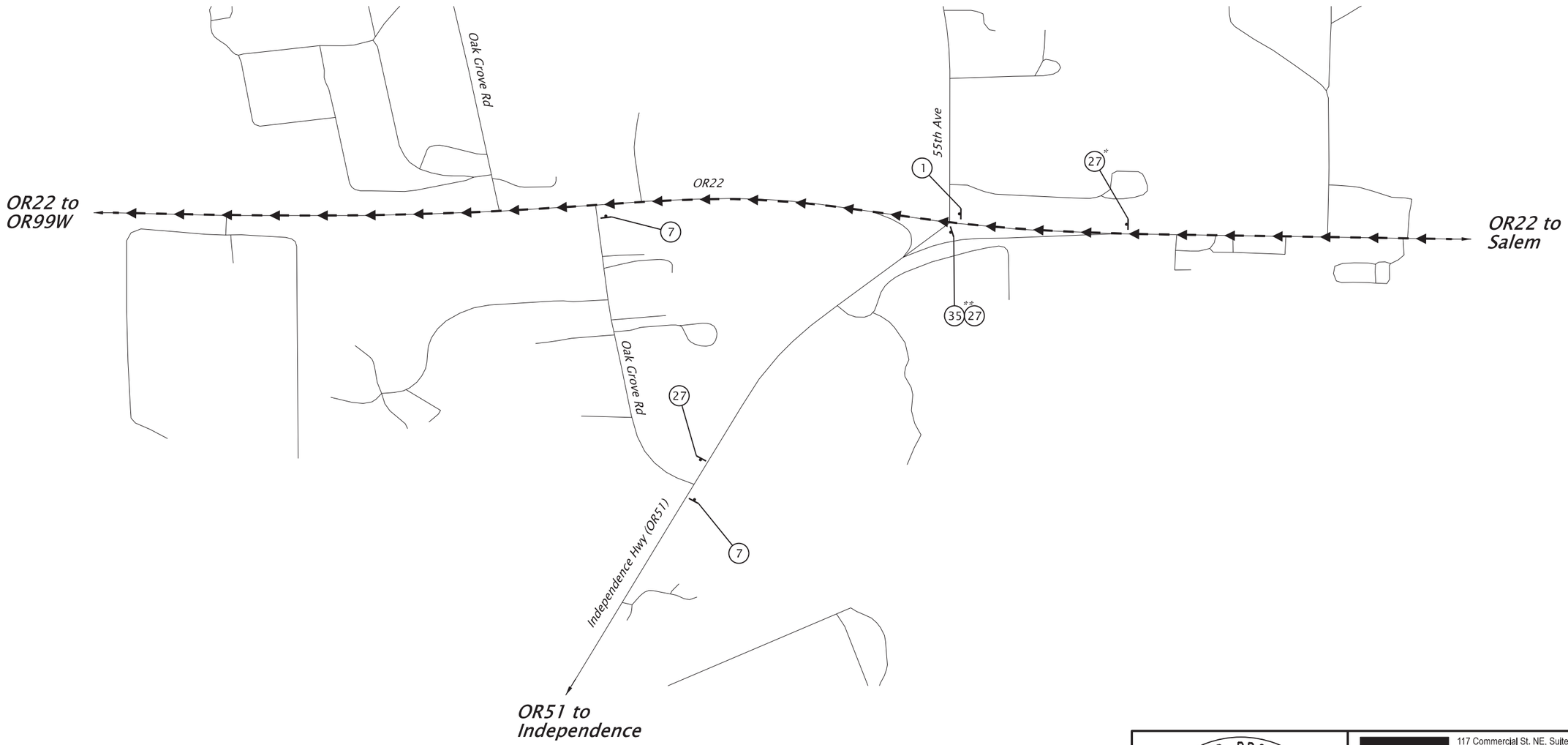

* Mount under existing "OR51 – Independence Left Lane" Multi-Post Guide Sign.

** Install sign assembly on a TSS support in the existing "Pork Chop" buffer area, facing the left turn lane to OR51.

LEGEND

- Temporary sign on post
- Proposed detour route
- (X) Signing detail, see details on Sheet EG17

REGISTERED PROFESSIONAL ENGINEER 56,267
Digitally Signed 2026.01.27 16:16:16-08'00'
OREGON
JULY 9, 2002
SCOTT M. MANSUR
EXPIRES: DEC. 31, 2026

FINAL ELECTRONIC DOCUMENT AVAILABLE UPON REQUEST

DKS
117 Commercial St. NE, Suite 310
Salem, Oregon 97301
(503) 391-8773
www.dksassociates.com

OR22: CENTER ST BRIDGE (PHASE 1) PROJECT
WILLAMINA-SALEM HIGHWAY
MARION & POLK COUNTIES

Designer: B. Lindell
Reviewer: B. Copeland
Drafter: C. Tower
Checker: S. Mansur

TRAFFIC CONTROL DETOUR PLAN

SHEET NO. EG25

59V-051

TRAFFIC CONTROL DETOUR PLAN

STAGE VI - PHASE 4

Full Bridge Closure

DETOUR ROUTE - OR99W TO CORVALLIS
RICKREALL

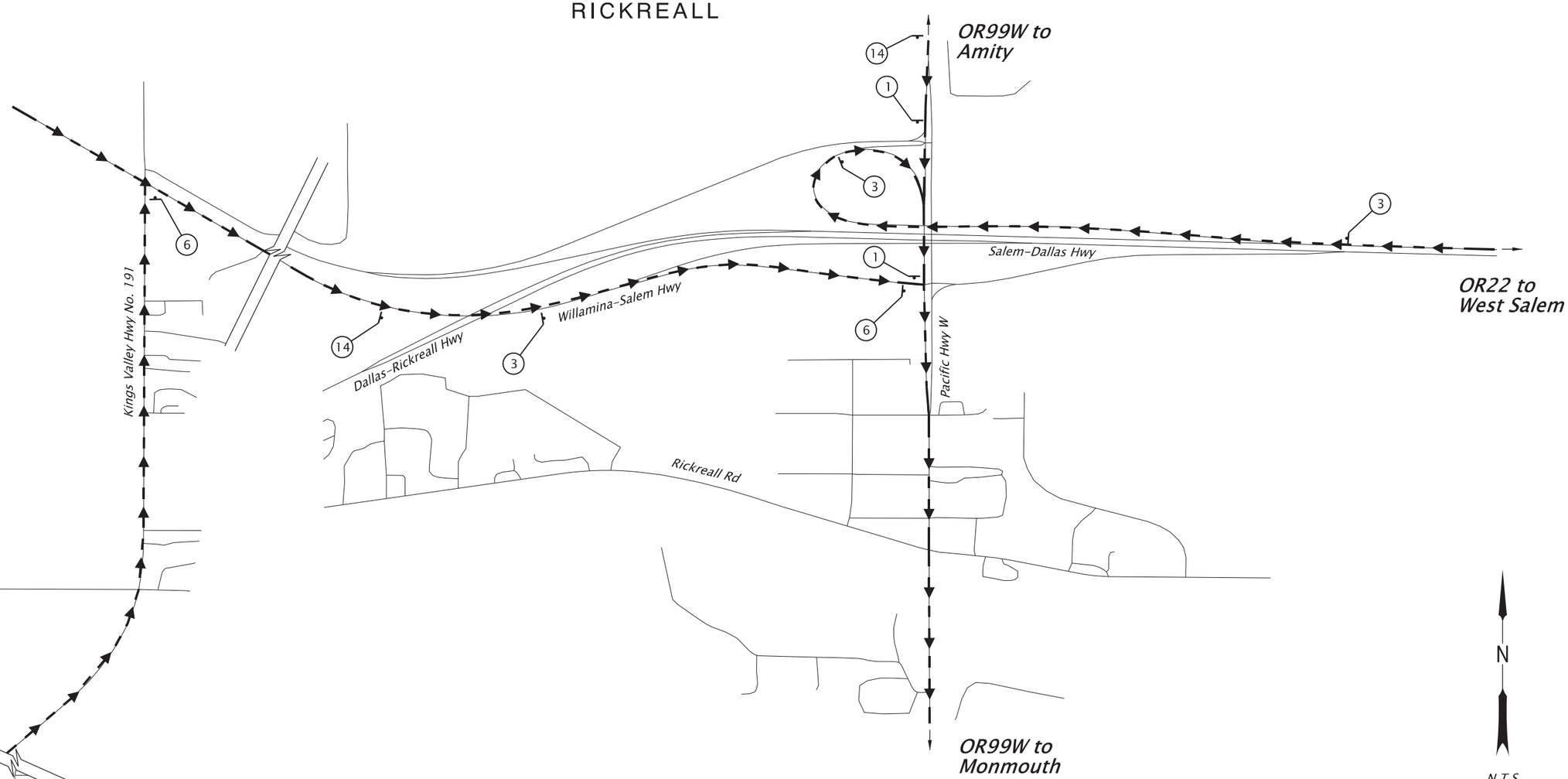

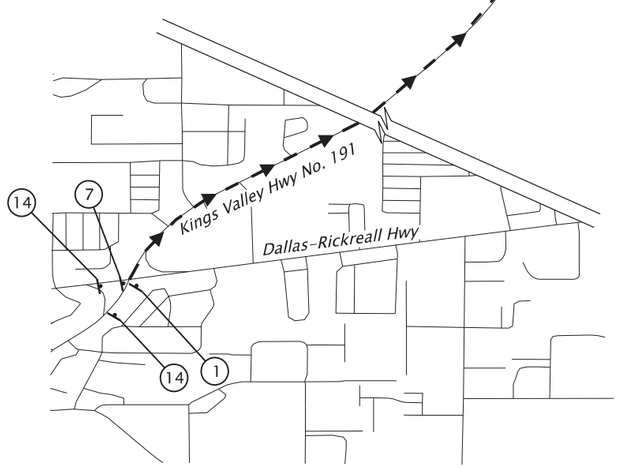

LEGEND

- Temporary sign on post
- Proposed detour route
- (X) Signing detail, see details on Sheet EG17

REGISTERED PROFESSIONAL ENGINEER 56,267
Digitally Signed 2026.01.27 16:16:45-08'00'
OREGON
JULY 9, 2002
SCOTT M. MANSUR
EXPIRES: DEC. 31, 2026

FINAL ELECTRONIC DOCUMENT AVAILABLE UPON REQUEST

DKS
117 Commercial St. NE, Suite 310
Salem, Oregon 97301
(503) 391-8773
www.dksassociates.com

OREGON DEPARTMENT OF TRANSPORTATION

OR22: CENTER ST BRIDGE (PHASE 1) PROJECT
WILLAMINA-SALEM HIGHWAY
MARION & POLK COUNTIES

Designer: B. Lindell | Reviewer: B. Copeland
Drafter: C. Tower | Checker: S. Mansur

TRAFFIC CONTROL DETOUR PLAN

SHEET NO. EG26

59V-051

TRAFFIC CONTROL DETOUR PLAN

STAGE VI - PHASE 4

Full Bridge Closure

DETOUR ROUTE - OR99W TO CORVALLIS
MONMOUTH

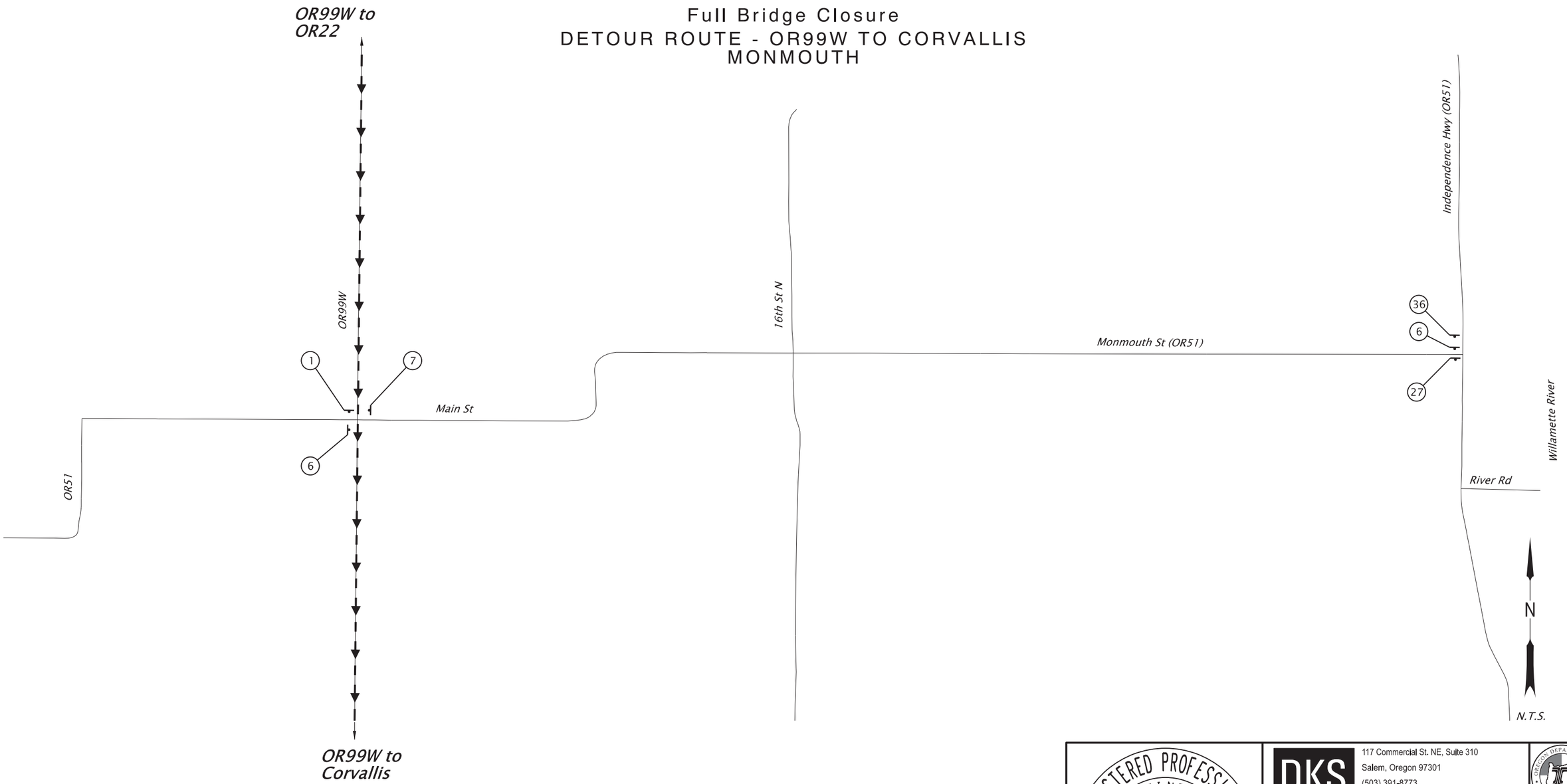

LEGEND

Temporary sign on post

Proposed detour route

(X) Signing detail, see details on Sheet EG17

REGISTERED PROFESSIONAL ENGINEER 56,267 OREGON JULY 9, 2002 SCOTT M. MANSUR

Digitally Signed 2026.01.27 16:16:50-08'00'

EXPIRES: DEC. 31, 2026

FINAL ELECTRONIC DOCUMENT AVAILABLE UPON REQUEST

DKS
117 Commercial St. NE, Suite 310
Salem, Oregon 97301
(503) 391-8773
www.dksassociates.com

OR22: CENTER ST BRIDGE (PHASE 1) PROJECT
WILLAMINA-SALEM HIGHWAY
MARION & POLK COUNTIES

Designer: B. Lindell
Reviewer: B. Copeland
Drafter: C. Tower
Checker: S. Mansur

TRAFFIC CONTROL DETOUR PLAN

SHEET NO. EG27

59V-051

T R A F F I C C O N T R O L D E T O U R P L A N

STAGE VI - PHASE 4

Full Bridge Closure

DETOUR ROUTE - OR99W TO CORVALLIS
CORVALLIS

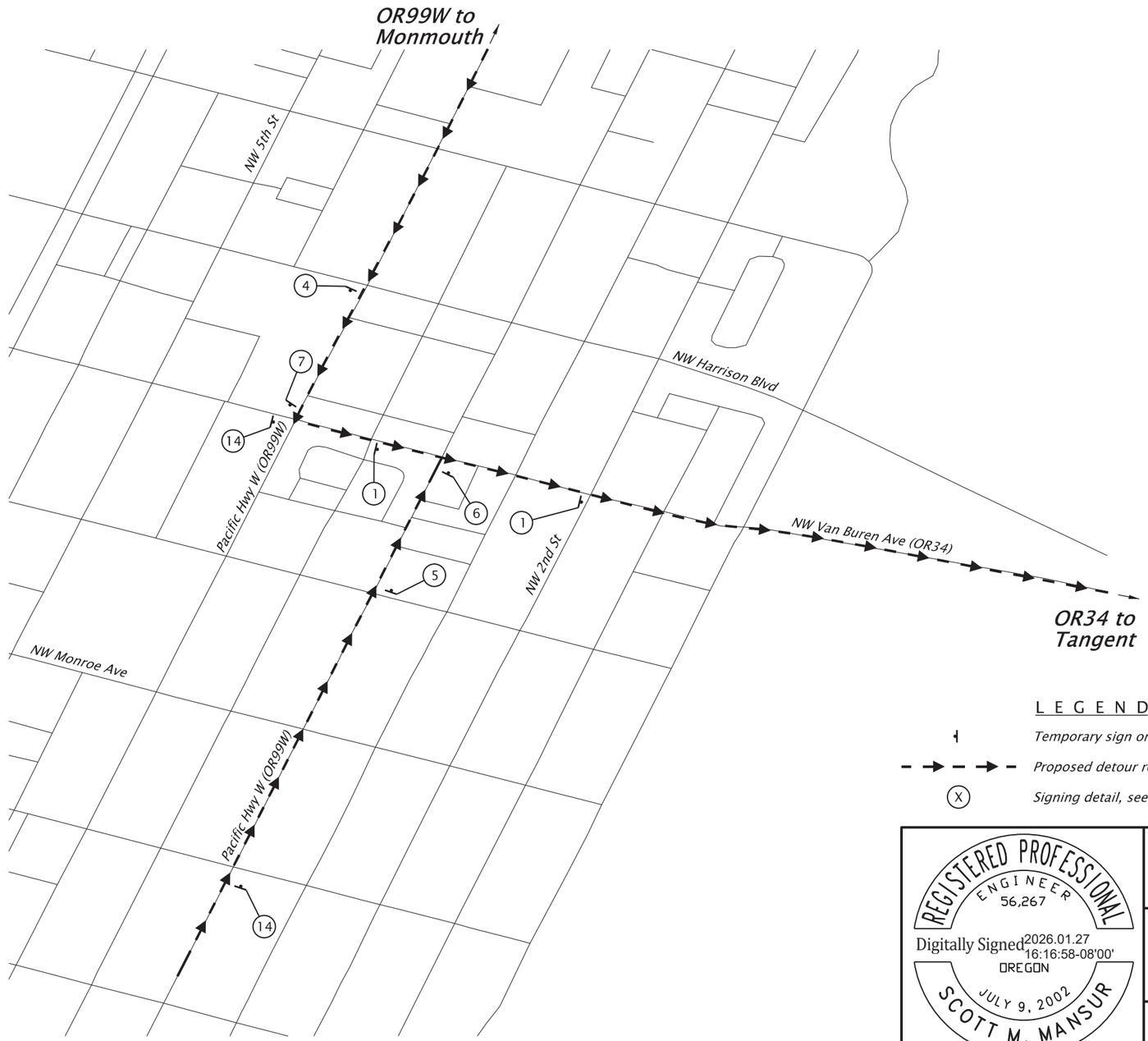

N

N.T.S.

L E G E N D

Temporary sign on post

Proposed detour route

(X) Signing detail, see details on Sheet EG17

REGISTERED PROFESSIONAL ENGINEER 56,267 OREGON JULY 9, 2002 SCOTT M. MANSUR

Digitally Signed 2026.01.27 16:16:58-08'00'

EXPIRES: DEC. 31, 2026

DKS
117 Commercial St. NE, Suite 310
Salem, Oregon 97301
(503) 391-8773
www.dksassociates.com

OR22: CENTER ST BRIDGE (PHASE 1) PROJECT
WILLAMINA-SALEM HIGHWAY
MARION & POLK COUNTIES

Designer: B. Lindell | Reviewer: B. Copeland
Drafter: C. Tower | Checker: S. Mansur

TRAFFIC CONTROL DETOUR PLAN

SHEET NO. EG28

FINAL ELECTRONIC DOCUMENT AVAILABLE UPON REQUEST

59V-051

TRAFFIC CONTROL DETOUR PLAN

STAGE VI - PHASE 4

Full Bridge Closure

DETOUR ROUTE - OR99W TO CORVALLIS TANGENT

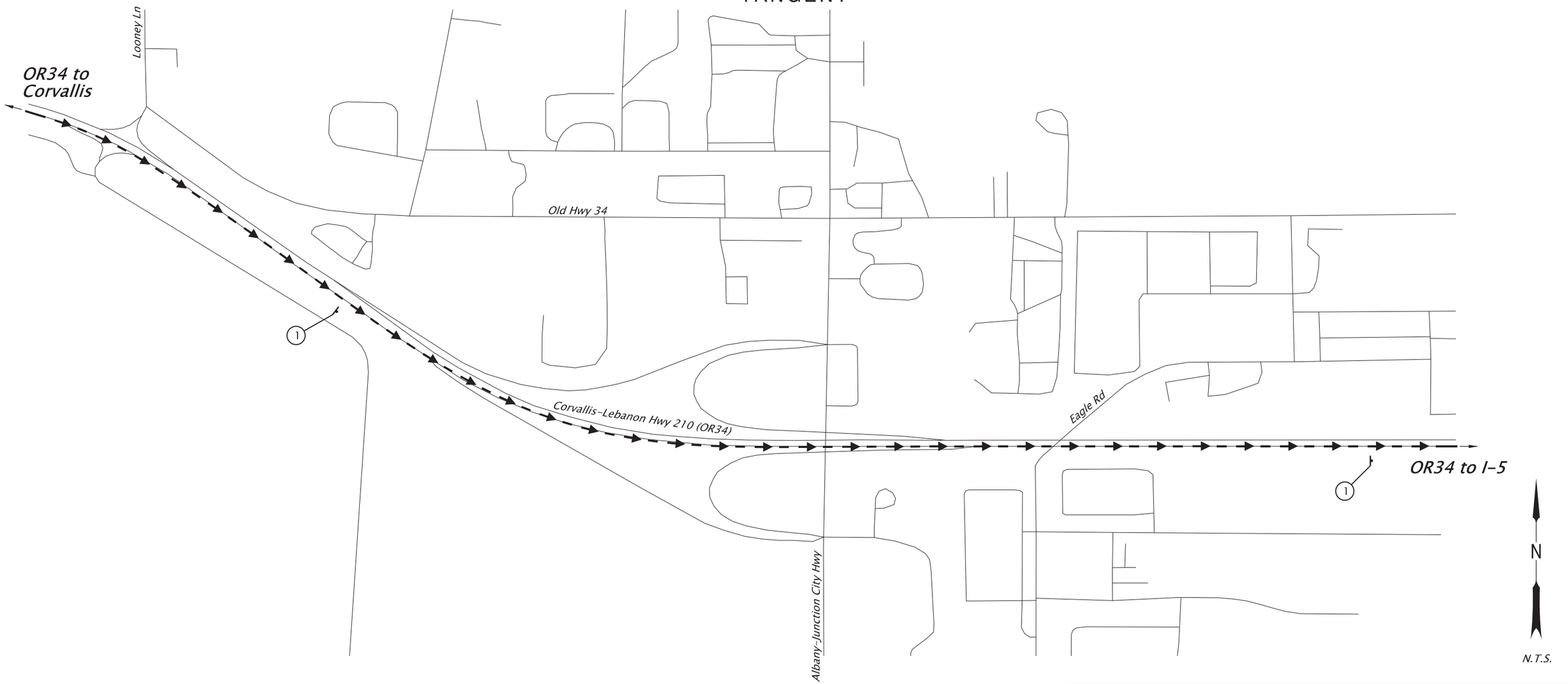

LEGEND

Temporary sign on post

Proposed detour route

(X) *Signing detail, see details on Sheet EG17*

REGISTERED PROFESSIONAL ENGINEER 56,267 OREGON JULY 9, 2002 SCOTT M. MANSUR

Digitally Signed 2026.01.27 16:17:10-08'00'

EXPIRES: DEC. 31, 2026

FINAL ELECTRONIC DOCUMENT AVAILABLE UPON REQUEST

DKS
117 Commercial St. NE, Suite 310
Salem, Oregon 97301
(503) 391-8773
www.dksassociates.com

OREGON DEPARTMENT OF TRANSPORTATION

OR22: CENTER ST BRIDGE (PHASE 1) PROJECT
WILLAMINA-SALEM HIGHWAY
MARION & POLK COUNTIES

Designer: B. Lindell | Reviewer: B. Copeland
Drafter: C. Tower | Checker: S. Mansur

TRAFFIC CONTROL DETOUR PLAN

SHEET NO. EG29

59V-051

TRAFFIC CONTROL PLAN
STAGE VI - PHASE 4
FULL BRIDGE CLOSURE - WALLACE ROAD

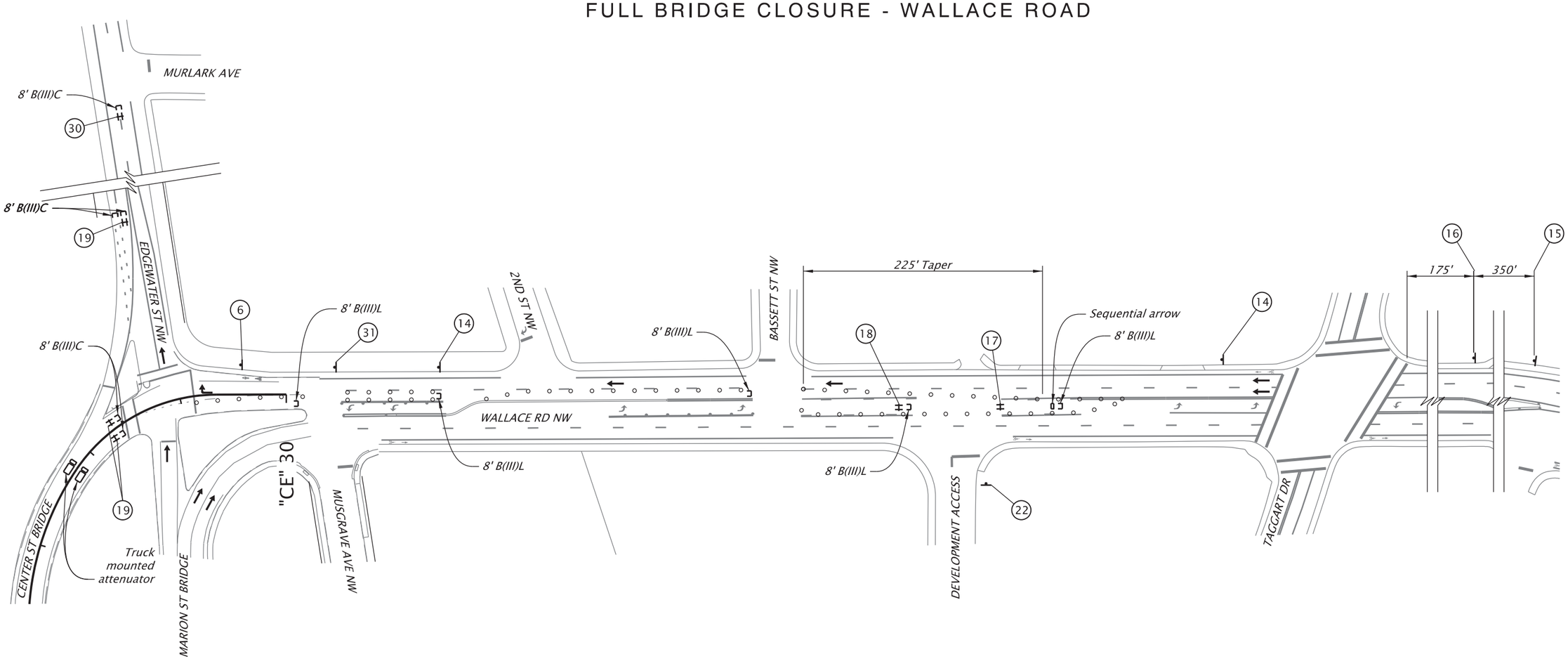

LEGEND

- Direction of traffic
- Temporary sign on post
- 8 Ft Type III Barricade
- Temporary sign support (TSS)
- Temp. plastic drums on 20' max. spacing
- (#) Signing detail, see sht. EG17

N

100 50 0 100
FEET

REGISTERED PROFESSIONAL ENGINEER 56,267
Digitally Signed 2026.01.27 16:17:17-08'00'
OREGON
JULY 9, 2002
SCOTT M. MANSUR
EXPIRES: DEC. 31, 2026

FINAL ELECTRONIC DOCUMENT AVAILABLE UPON REQUEST

DKS
117 Commercial St. NE, Suite 310
Salem, Oregon 97301
(503) 391-8773
www.dksassociates.com

OR22: CENTER ST BRIDGE (PHASE 1) PROJECT
WILLAMINA-SALEM HIGHWAY
MARION & POLK COUNTIES

Designer: B. Lindell | Reviewer: B. Copeland
Drafter: C. Tower | Checker: S. Mansur

TRAFFIC CONTROL PLAN

SHEET NO. EG30

59V-051

T R A F F I C C O N T R O L P L A N

STAGE VI - PHASE 4

FULL BRIDGE CLOSURE - ROSEMONT AVE / OR22 ON-RAMP

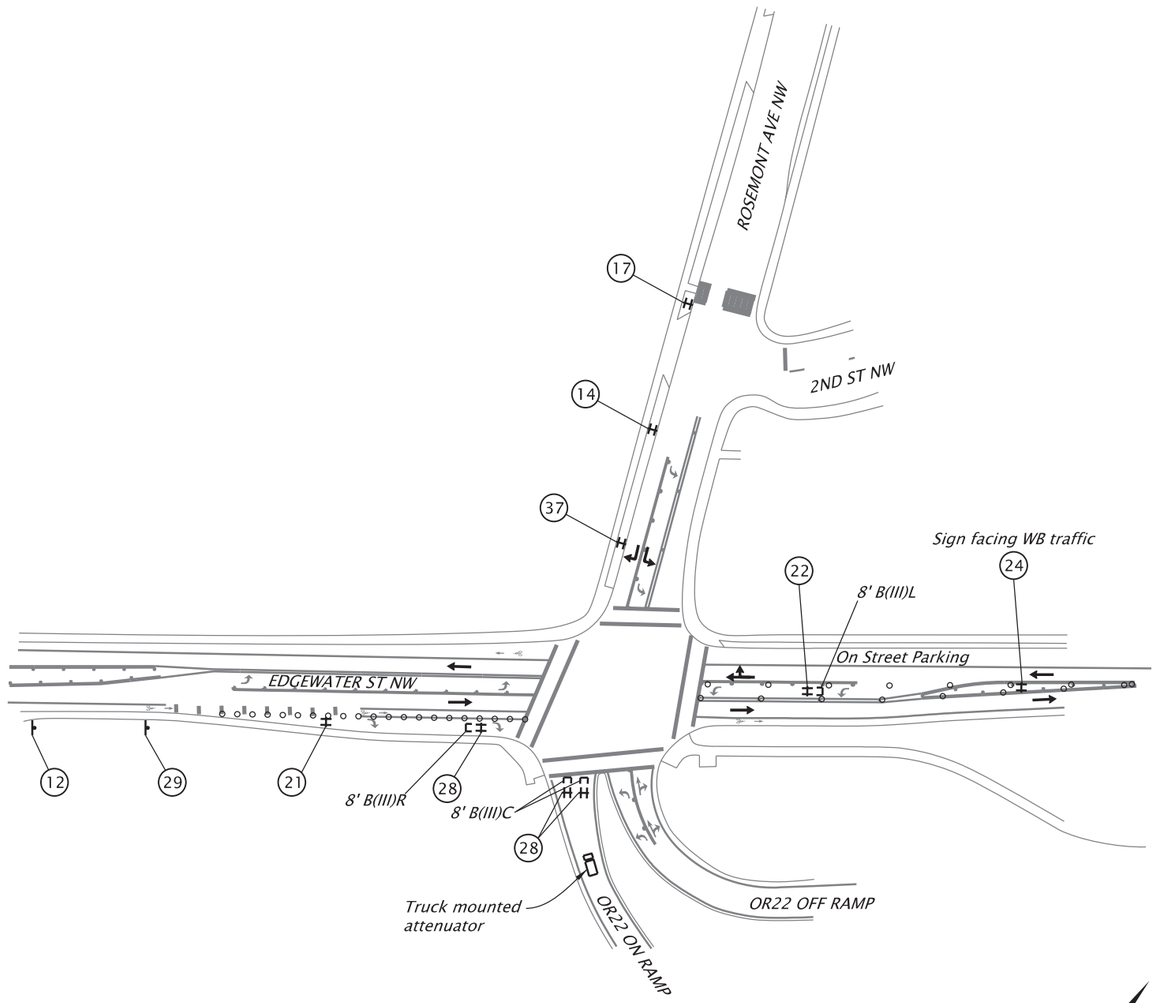

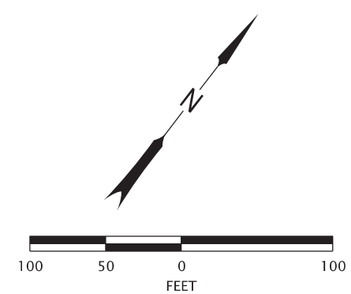

L E G E N D

- Direction of traffic
- Temporary sign on post
- 8' Type III Barricade
- Temporary sign support (TSS)
- Temp. plastic drums on 40' max. spacing
- Temp. plastic drums on 10' max. spacing
- (#) Signing detail, see sht. EG17

REGISTERED PROFESSIONAL ENGINEER 56,267 OREGON JULY 9, 2002 SCOTT M. MANSUR

Digitally Signed: 2026.01.27 16:17:23-08'00'

EXPIRES: DEC. 31, 2026

FINAL ELECTRONIC DOCUMENT AVAILABLE UPON REQUEST

DKS
117 Commercial St. NE, Suite 310
Salem, Oregon 97301
(503) 391-8773
www.dksassociates.com

OR22: CENTER ST BRIDGE (PHASE 1) PROJECT
WILLAMINA-SALEM HIGHWAY
MARION & POLK COUNTIES

Designer: B. Lindell | Reviewer: B. Copeland
Drafter: C. Tower | Checker: S. Mansur

TRAFFIC CONTROL PLAN

SHEET NO. EG31

59V-051

T R A F F I C C O N T R O L P L A N

STAGE VI - PHASE 4

FULL BRIDGE CLOSURE - ROSEWOOD DRIVE NW

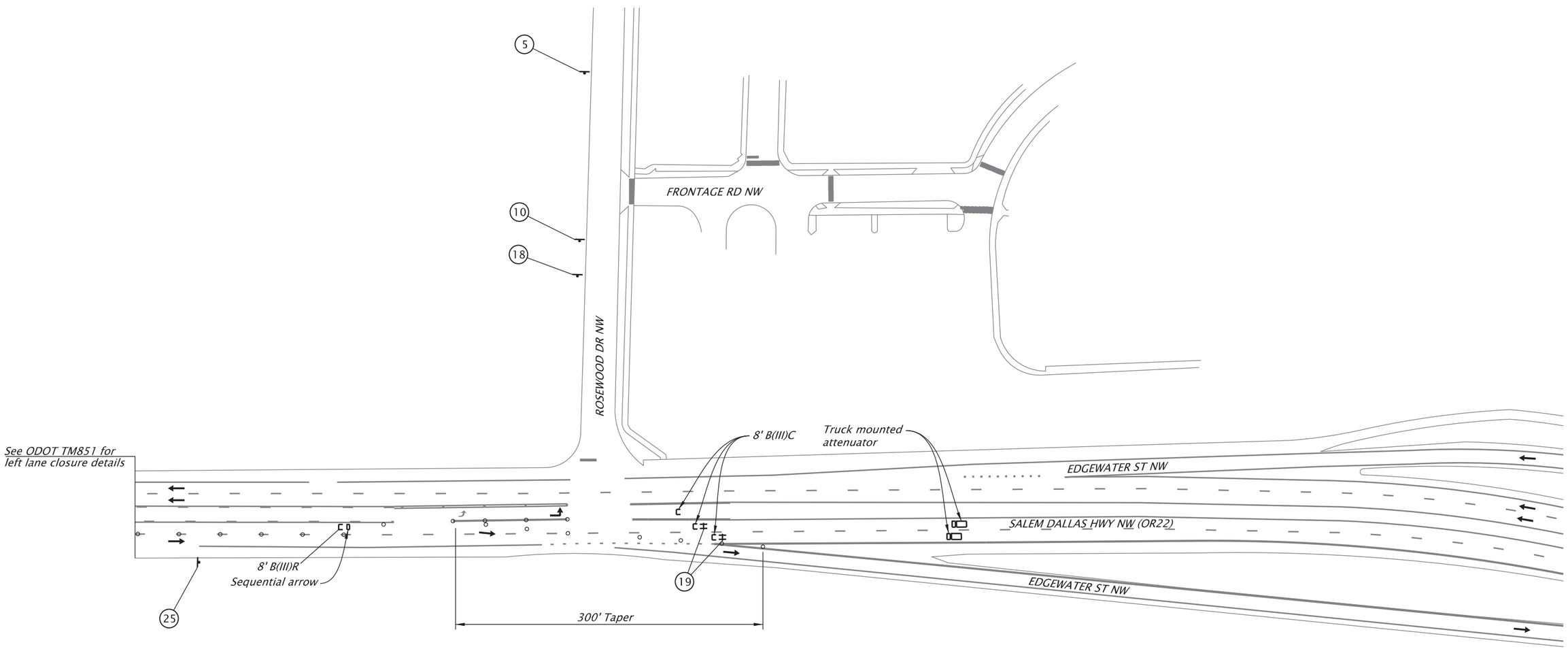

L E G E N D

- Direction of traffic
- Temporary sign on post
- 8' Type III Barricade
- Temporary sign support (TSS)
- Temp. plastic drums on 40' max. spacing
- (#) Signing detail, see sht. EG17

N

100 50 0 100
FEET

REGISTERED PROFESSIONAL ENGINEER 56,267
Digitally Signed 2026.01.27 16:17:30-08'00'
OREGON
JULY 9, 2002
SCOTT M. MANSUR
EXPIRES: DEC. 31, 2026

FINAL ELECTRONIC DOCUMENT
AVAILABLE UPON REQUEST

DKS
117 Commercial St. NE, Suite 310
Salem, Oregon 97301
(503) 391-8773
www.dksassociates.com

OREGON DEPARTMENT OF TRANSPORTATION

OR22: CENTER ST BRIDGE (PHASE 1) PROJECT
WILLAMINA-SALEM HIGHWAY
MARION & POLK COUNTIES

Designer: B. Lindell
Reviewer: B. Copeland
Drafter: C. Tower
Checker: S. Mansur

TRAFFIC CONTROL PLAN

SHEET NO.
EG32

59V-051

TRAFFIC CONTROL DETOUR PLAN

STAGE VI - PHASE 4

FULL BRIDGE CLOSURE - EMERGENCY VEHICLE DETOUR ROUTE

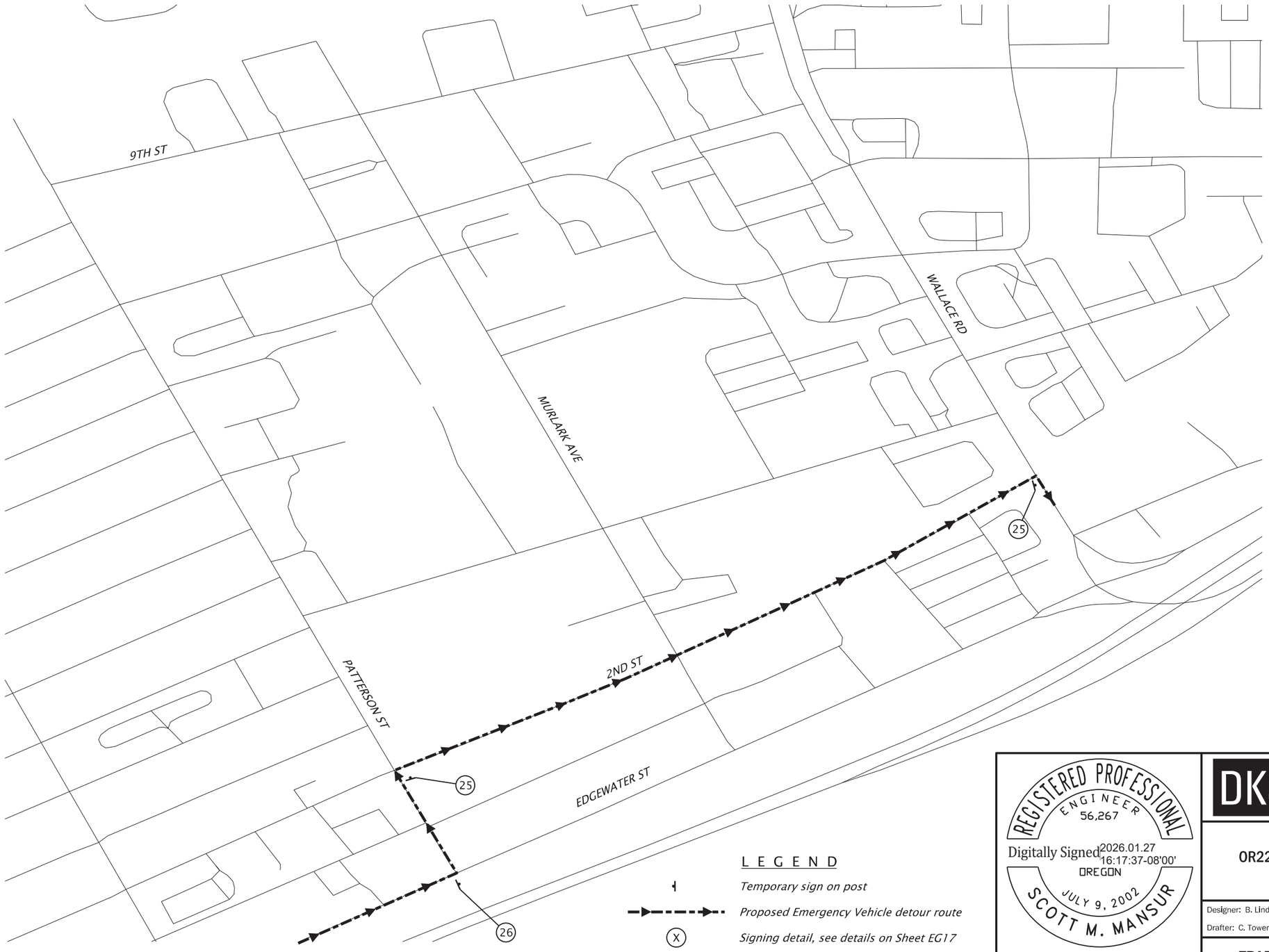

LEGEND

Temporary sign on post

Proposed Emergency Vehicle detour route

(X) *Signing detail, see details on Sheet EG17*

REGISTERED PROFESSIONAL ENGINEER 56,267 OREGON JULY 9, 2002 SCOTT M. MANSUR

Digitally Signed 2026.01.27 16:17:37-08'00'

EXPIRES: DEC. 31, 2026

FINAL ELECTRONIC DOCUMENT AVAILABLE UPON REQUEST

DKS
117 Commercial St. NE, Suite 310
Salem, Oregon 97301
(503) 391-8773
www.dksassociates.com

OREGON DEPARTMENT OF TRANSPORTATION

OR22: CENTER ST BRIDGE (PHASE 1) PROJECT
WILLAMINA-SALEM HIGHWAY
MARION & POLK COUNTIES

Designer: B. Lindell
Reviewer: B. Copeland
Drafter: C. Tower
Checker: S. Mansur

TRAFFIC CONTROL DETOUR PLAN

SHEET NO. EG33

59V-051

TRAFFIC CONTROL PLAN
STAGE VI - PHASE 4
FULL BRIDGE CLOSURE - EMERGENCY VEHICLE DETOUR ROUTE

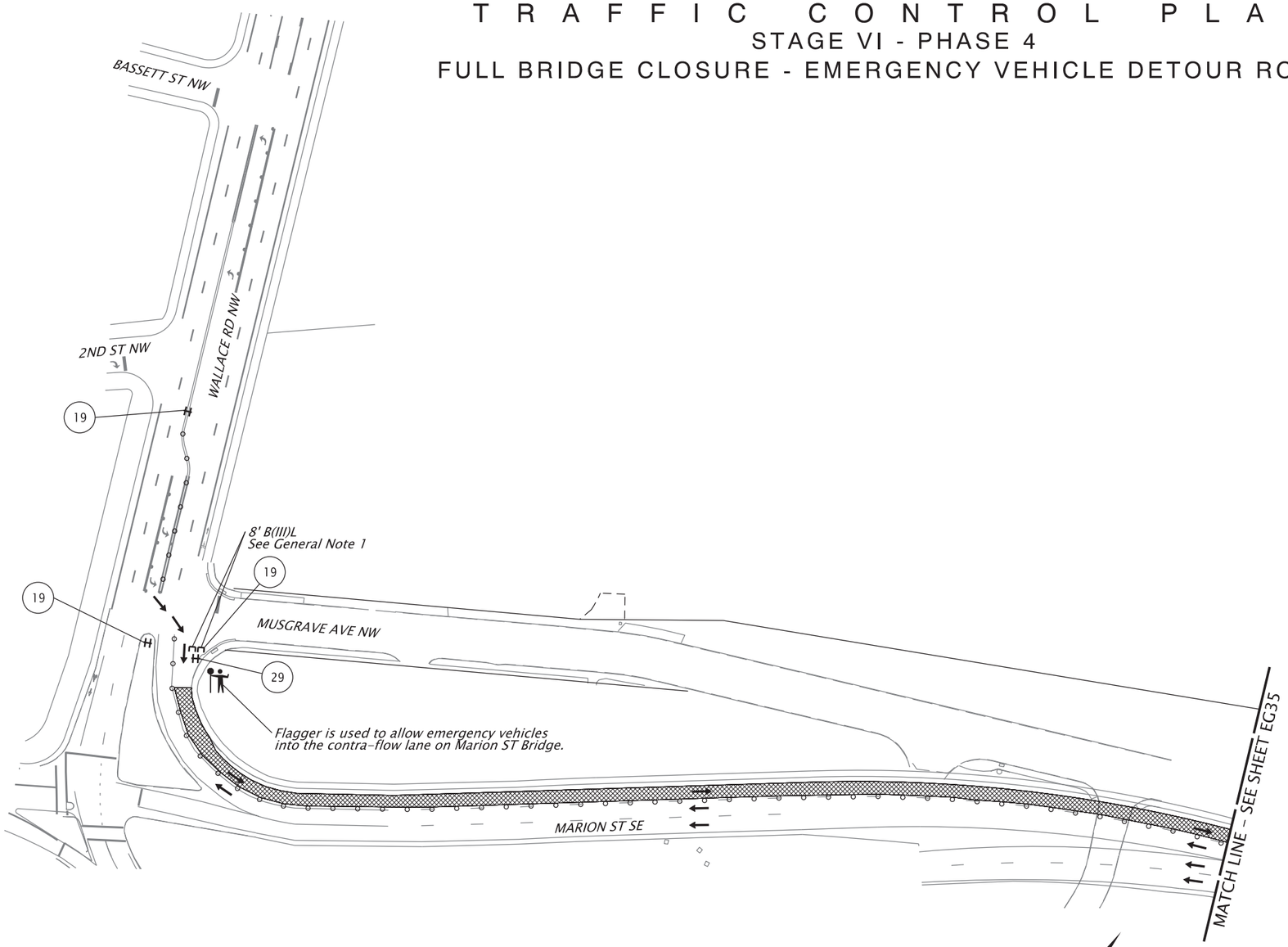

LEGEND

- Open to Emergency Vehicles Only
- Direction of traffic
- Barricade
- Temporary sign support (TSS)
- Temp. plastic drums on 20' max. spacing
- Flagger station
- # Signing detail, see details on Sheet EG17

General Note:

1. Type 3 barricade to be removed by contractor in presence of an emergency vehicle.

N

100 50 0 100
FEET

REGISTERED PROFESSIONAL ENGINEER 56,267 OREGON JULY 9, 2002 SCOTT M. MANSUR

Digitally Signed 2026.01.27 16:22:50-08'00'

EXPIRES: DEC. 31, 2026

FINAL ELECTRONIC DOCUMENT AVAILABLE UPON REQUEST

DKS
117 Commercial St. NE, Suite 310
Salem, Oregon 97301
(503) 391-8773
www.dksassociates.com

OREGON DEPARTMENT OF TRANSPORTATION

OR22: CENTER ST BRIDGE (PHASE 1) PROJECT
WILLAMINA-SALEM HIGHWAY
MARION & POLK COUNTIES

Designer: B. Lindell
Reviewer: B. Copeland
Drafter: C. Tower
Checker: S. Mansur

TRAFFIC CONTROL PLAN

SHEET NO. EG34

TRAFFIC CONTROL PLAN
STAGE VI - PHASE 4
FULL BRIDGE CLOSURE - EMERGENCY VEHICLE DETOUR ROUTE

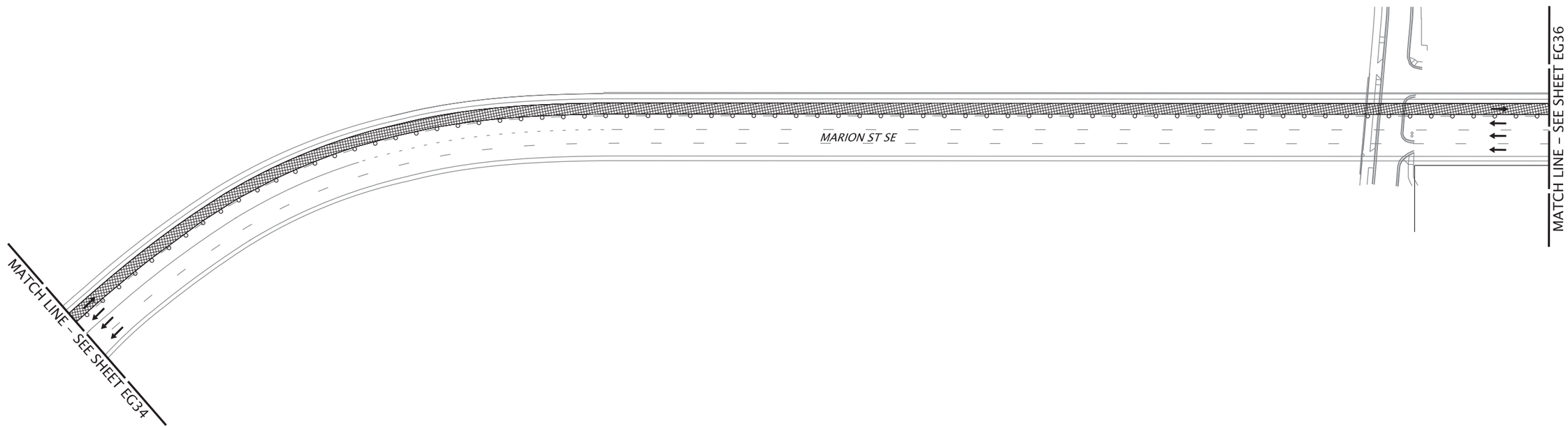

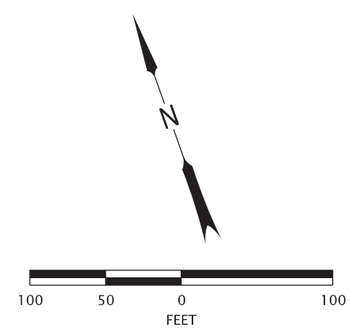

LEGEND

- *Open to Emergency Vehicles Only*
- *Direction of traffic*
- *Barricade*
- *Temporary sign support (TSS)*
- *Temp. plastic drums on 20' max. spacing*

General Note:

1. *Type 3 barricade to be removed by contractor in presence of an emergency vehicle.*

REGISTERED PROFESSIONAL ENGINEER 56,267
Digitally Signed 2026.01.27 16:22:56-08'00'
OREGON
JULY 9, 2002
SCOTT M. MANSUR
EXPIRES: DEC. 31, 2026

FINAL ELECTRONIC DOCUMENT AVAILABLE UPON REQUEST

DKS
117 Commercial St. NE, Suite 310
Salem, Oregon 97301
(503) 391-8773
www.dksassociates.com

OR22: CENTER ST BRIDGE (PHASE 1) PROJECT
WILLAMINA-SALEM HIGHWAY
MARION & POLK COUNTIES

Designer: B. Lindell | Reviewer: B. Copeland
Drafter: C. Tower | Checker: S. Mansur

TRAFFIC CONTROL PLAN

SHEET NO. EG35

59V-051

TRAFFIC CONTROL PLAN
STAGE VI - PHASE 4
FULL BRIDGE CLOSURE - EMERGENCY VEHICLE DETOUR ROUTE

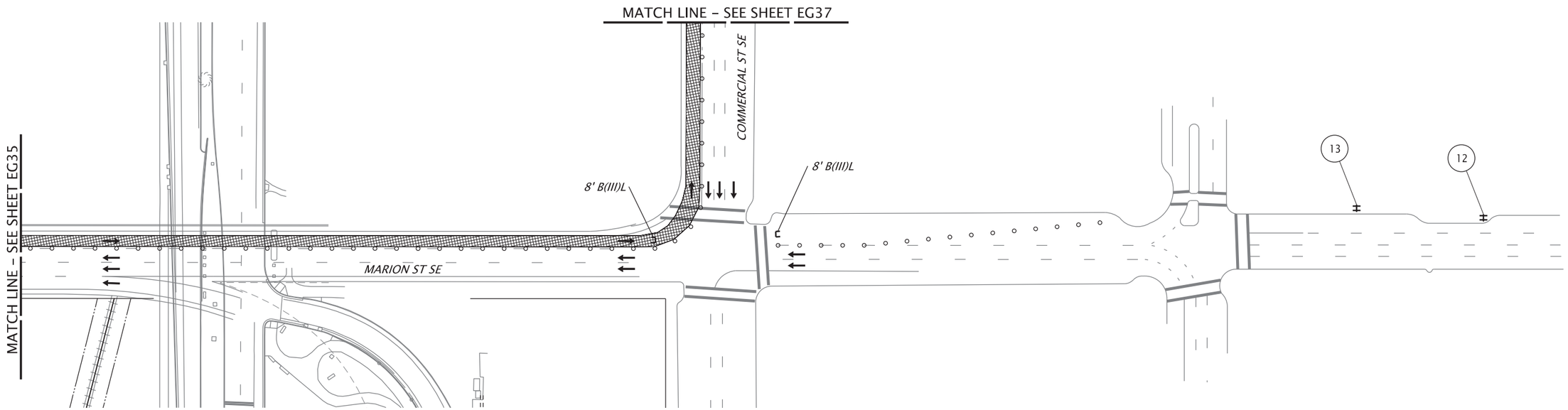

LEGEND

- *Open to Emergency Vehicles Only*
- *Direction of traffic*
- *Barricade*
- *Temporary sign support (TSS)*
- *Temp. plastic drums on 20' max. spacing*
- *Signing detail, see details on Sheet EG17*

General Note:

1. *Type 3 barricade to be removed by contractor in presence of an emergency vehicle.*

N

100 50 0 100
FEET

REGISTERED PROFESSIONAL ENGINEER 56,267
Digitally Signed 2026.01.27 16:23:03-08'00'
OREGON
JULY 9, 2002
SCOTT M. MANSUR
EXPIRES: DEC. 31, 2026

FINAL ELECTRONIC DOCUMENT AVAILABLE UPON REQUEST

DKS
117 Commercial St. NE, Suite 310
Salem, Oregon 97301
(503) 391-8773
www.dksassociates.com

OR22: CENTER ST BRIDGE (PHASE 1) PROJECT
WILLAMINA-SALEM HIGHWAY
MARION & POLK COUNTIES

Designer: B. Lindell
Reviewer: B. Copeland
Drafter: C. Tower
Checker: S. Mansur

TRAFFIC CONTROL PLAN

SHEET NO. EG36

59V-051

TRAFFIC CONTROL PLAN
STAGE VI - PHASE 4
FULL BRIDGE CLOSURE - EMERGENCY VEHICLE DETOUR ROUTE

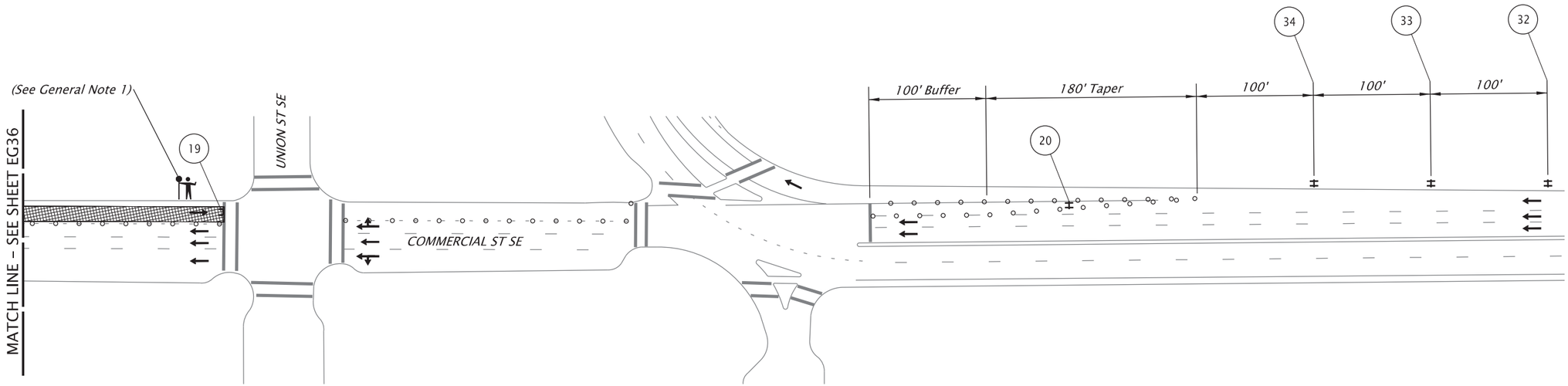

LEGEND

- Open to Emergency Vehicles Only
- Direction of traffic
- Barricade
- Temporary sign support (TSS)
- Temp. plastic drums on 20' max. spacing
- Flagger station
- # Signing detail, see details on Sheet EG17

General Note:

1. Type 3 barricade to be removed by contractor in presence of an emergency vehicle.

N

100 50 0 100
FEET

REGISTERED PROFESSIONAL ENGINEER 56,267 OREGON JULY 9, 2002 SCOTT M. MANSUR

Digitally Signed: 2026.01.27 16:13:31-08'00'

EXPIRES: DEC. 31, 2026

FINAL ELECTRONIC DOCUMENT AVAILABLE UPON REQUEST

DKS
117 Commercial St. NE, Suite 310
Salem, Oregon 97301
(503) 391-8773
www.dksassociates.com

OR22: CENTER ST BRIDGE (PHASE 1) PROJECT
WILLAMINA-SALEM HIGHWAY
MARION & POLK COUNTIES

Designer: B. Lindell
Reviewer: B. Copeland
Drafter: C. Tower
Checker: S. Mansur

TRAFFIC CONTROL PLAN

SHEET NO. EG37

59V-051

TRAFFIC CONTROL PLAN
STAGE VII - PHASE 1
SHORT TERM (20 MINUTE MAX CLOSURES)

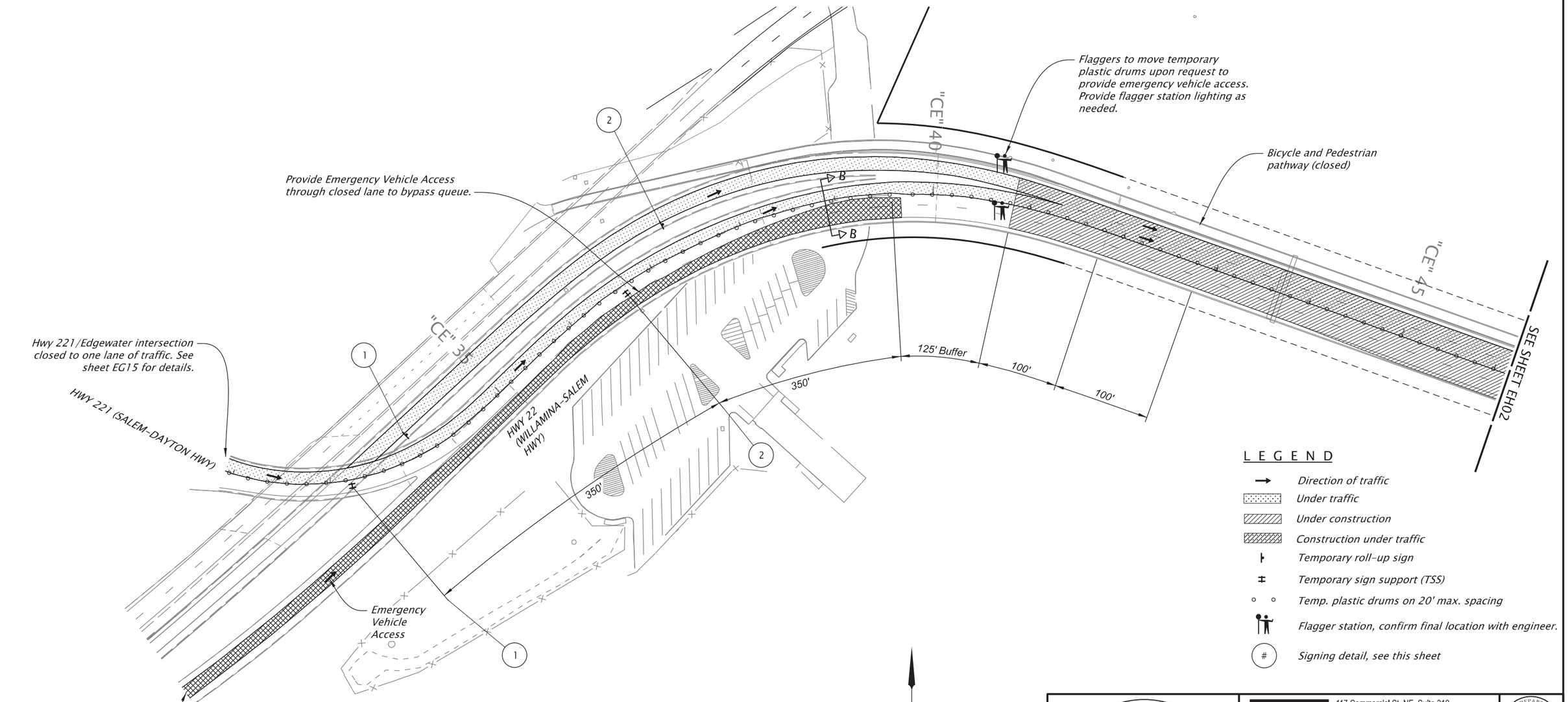

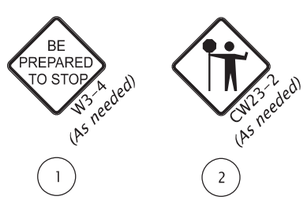

Note:
1. See Sheet EA02 for Advanced Area Signage.

REGISTERED PROFESSIONAL ENGINEER 56,267
Digitally Signed 2026.03.04 10:07:31-08'00'
OREGON
JULY 9, 2002
SCOTT M. MANSUR
EXPIRES: DEC. 31, 2026

FINAL ELECTRONIC DOCUMENT AVAILABLE UPON REQUEST

DKS
117 Commercial St. NE, Suite 310
Salem, Oregon 97301
(503) 391-8773
www.dksassociates.com

OR22: CENTER ST BRIDGE (PHASE 1) PROJECT
WILLAMINA-SALEM HIGHWAY
MARION & POLK COUNTIES

Designer: B. Lindell
Reviewer: B. Copeland
Drafter: C. Tower
Checker: S. Mansur

TRAFFIC CONTROL PLAN

SHEET NO. EH01

TRAFFIC CONTROL PLAN
STAGE VII - PHASE 1
SHORT TERM (20 MINUTE MAX CLOSURES)

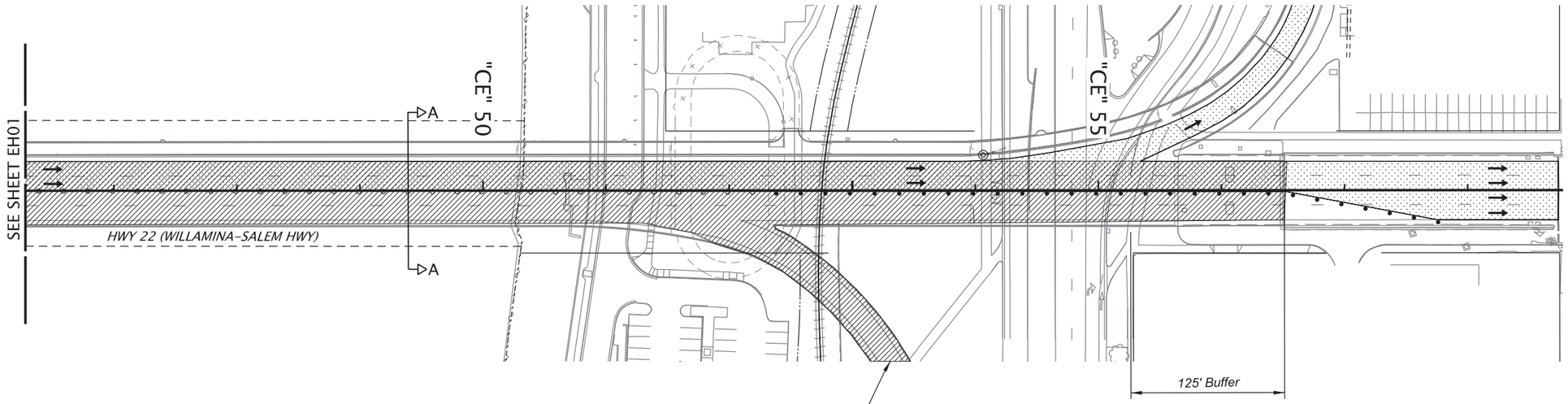

Exit Ramp to Front St. (OR99W) Southbound Closed. See sheet EG13 for ramp detour plan.

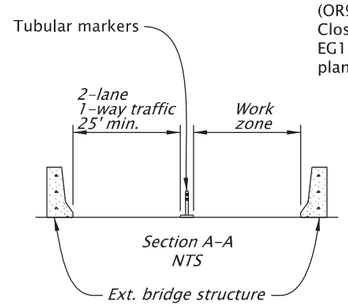

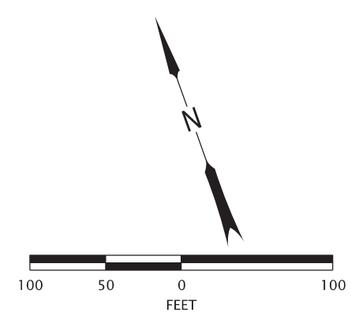

LEGEND

- → Direction of traffic
- Under traffic
- Under construction
- Construction under traffic
- • • Tubular markers on 20' max. spacing

Notes:

1. See Sheet EA02 for Advanced Area Signage.

REGISTERED PROFESSIONAL ENGINEER 56,267 OREGON JULY 9, 2002 SCOTT M. MANSUR

Digitally Signed 2026.03.04 10:07:40-08'00'

EXPIRES: DEC. 31, 2026

FINAL ELECTRONIC DOCUMENT AVAILABLE UPON REQUEST

DKS
117 Commercial St. NE, Suite 310
Salem, Oregon 97301
(503) 391-8773
www.dksassociates.com

OR22: CENTER ST BRIDGE (PHASE 1) PROJECT
WILLAMINA-SALEM HIGHWAY
MARION & POLK COUNTIES

Designer: B. Lindell | Reviewer: B. Copeland
Drafter: C. Tower | Checker: S. Mansur

TRAFFIC CONTROL PLAN

SHEET NO. EH02

59V-051

WILLAMETTE RIVER NAVIGATION PLAN

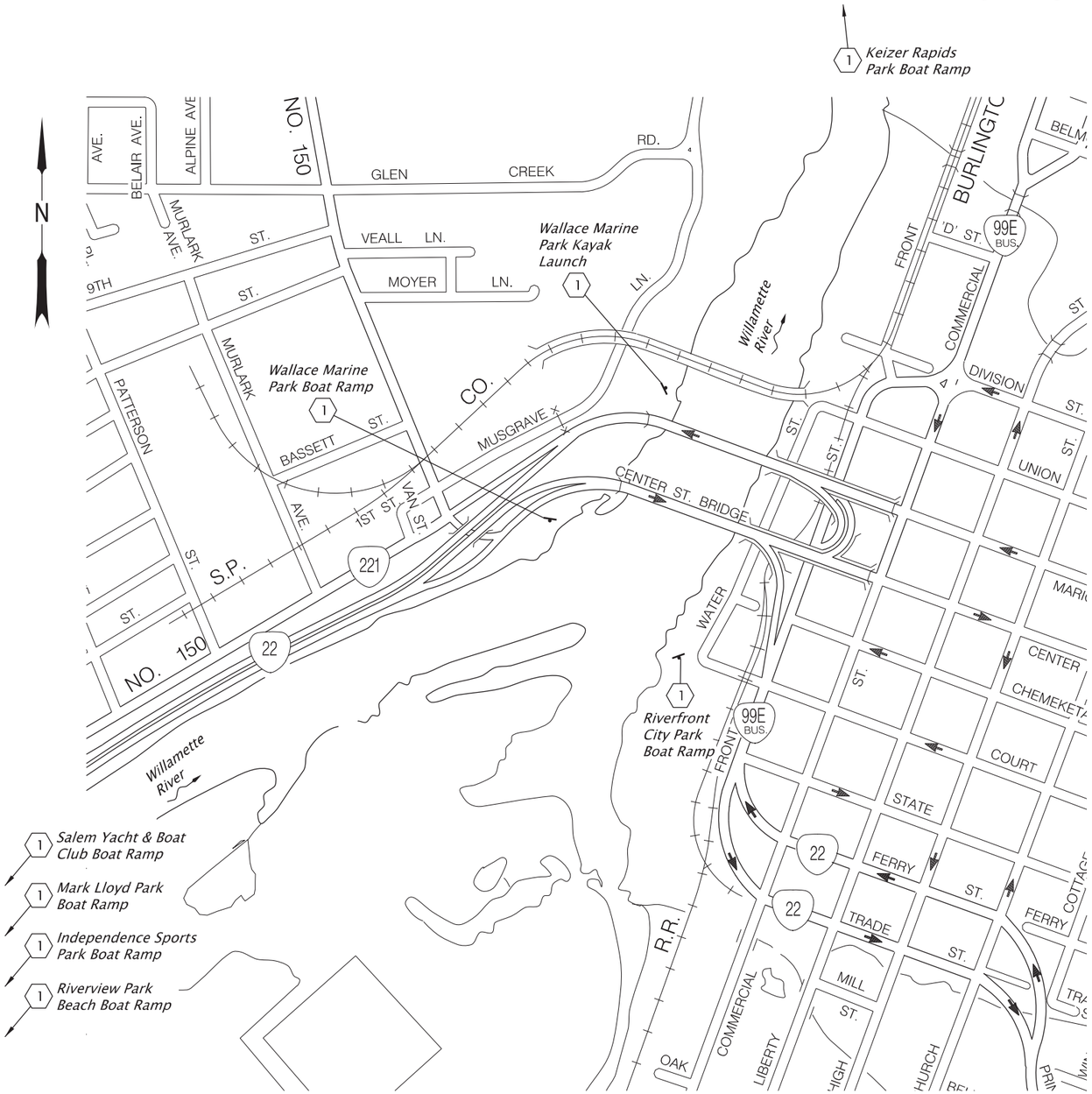

OFFSITE BOAT RAMP LOCATION	LONGITUDE	LATITUDE
Keizer Rapids Park	*44.99091° N*	*123.05472° W*
Salem Yacht & Boat Club	*44.92910° N*	*123.11366° W*
Mark Lloyd Park	*44.88667° N*	*123.13964° W*
Independence Sports Park	*44.86340° N*	*123.17590° W*
Riverview Park Beach	*44.85278° N*	*123.18152° W*

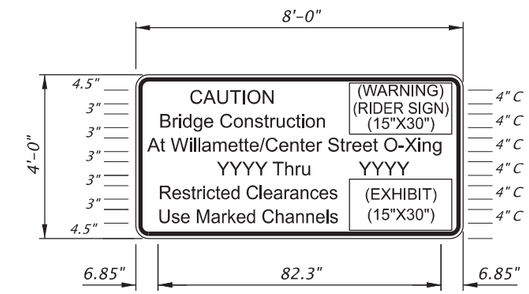

Temporary River Navigation Sign

NOTES:

1. Sign locations as shown are approximate.

2. See table on this sht. for GPS location of boat ramp facilities that are outside of plan view. Coordinates are approximate and only provided to aid in locating the facilites.

3. Coordinate sign locations and placement with the Engineer.

REGISTERED PROFESSIONAL ENGINEER
100246PE
Digitally Signed 2026.01.28 10:29:51-08'00'
OREGON
JULY 12, 2022
JASON BENJAMIN GALEAZZI
EXPIRES: 06/30/2027

FINAL ELECTRONIC DOCUMENT AVAILABLE UPON REQUEST

DOWL WWW.DOWL.COM

OREGON DEPARTMENT OF TRANSPORTATION

OR22: CENTER ST BRIDGE (PHASE 1) PROJECT
WILLAMINA-SALEM HIGHWAY
MARION & POLK COUNTIES

Designer: Jason Galeazzi
Reviewer: Bob Goodrich
Drafter: Steve Wolfer
Checker: Kyle Farnsworth

TRAFFIC CONTROL DETOUR PLAN

SHEET NO. EJ01

59V-051

WILLAMETTE RIVER NAVIGATION PLAN

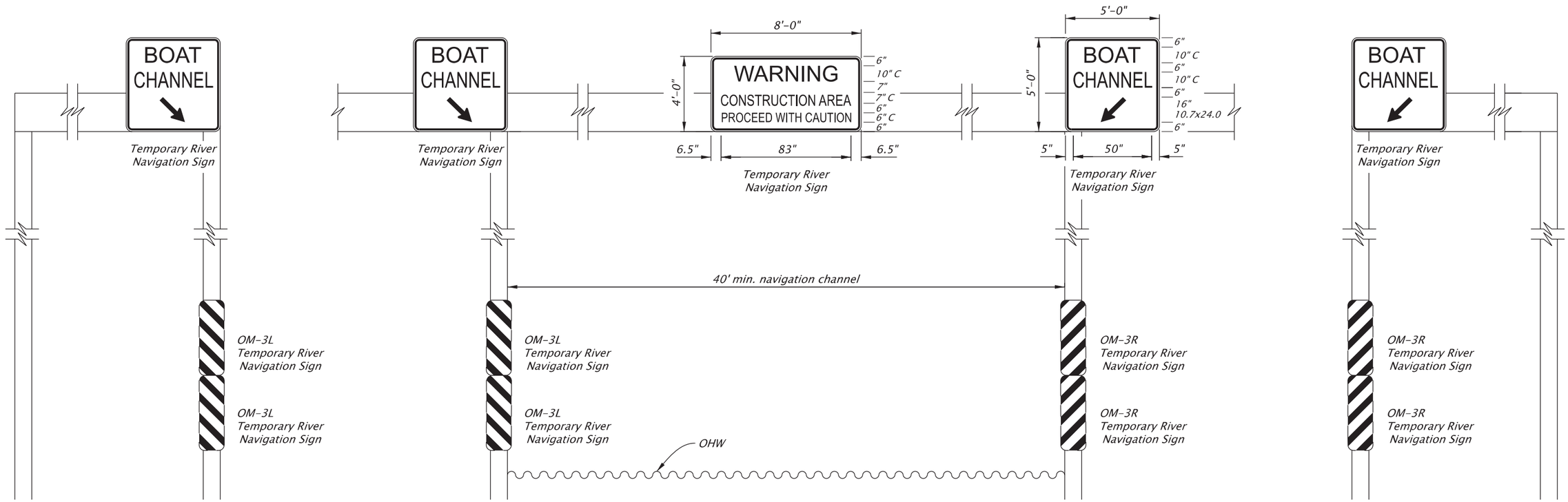

ADJACENT UPSTREAM/DOWNSTREAM WORK PIER (WHEN REQUIRED)
SEE NOTE 3

WORK BRIDGE NAVIGABLE CHANNEL (MINIMUM TEMPORARY NAVIGABLE CHANNEL REQUIREMENTS)

ADJACENT UPSTREAM/DOWNSTREAM WORK PIER (WHEN REQUIRED)
SEE NOTE 3

NOTES:

1. *Non-standard signs to be constructed with red letters and symbols on a white, reflective background. Use aluminum sheet or marine grade plywood.*
2. *Place signs on the work bridge navigable channel opening at each side of the bridge for upstream and downstream river traffic.*
3. *When work piers are constructed extending more than 50' upriver or downriver from the work bridge place additional "boat channel" indication signs and object markers on the ends of the piers as shown above.*
4. *Adjust temporary signs as required during different stages of construction to maintain their position and the channel opening. Clean signs as appropriate to maintain sign visibility as water levels change.*

REGISTERED PROFESSIONAL ENGINEER
100246PE
Digitally Signed 2026.01.28 10:30:42-08'00'
OREGON
JULY 12, 2022
JASON BENJAMIN GALEAZZI
EXPIRES: 06/30/2027

FINAL ELECTRONIC DOCUMENT AVAILABLE UPON REQUEST

DOWL WWW.DOWL.COM

OREGON DEPARTMENT OF TRANSPORTATION

OR22: CENTER ST BRIDGE (PHASE 1) PROJECT
WILLAMINA-SALEM HIGHWAY
MARION & POLK COUNTIES

Designer: Jason Galeazzi
Reviewer: Bob Goodrich
Drafter: Steve Wolfer
Checker: Kyle Farnsworth

TRAFFIC CONTROL DETOUR PLAN

SHEET NO. EJ02

59V-051

WILLAMETTE RIVER NAVIGATION PLAN

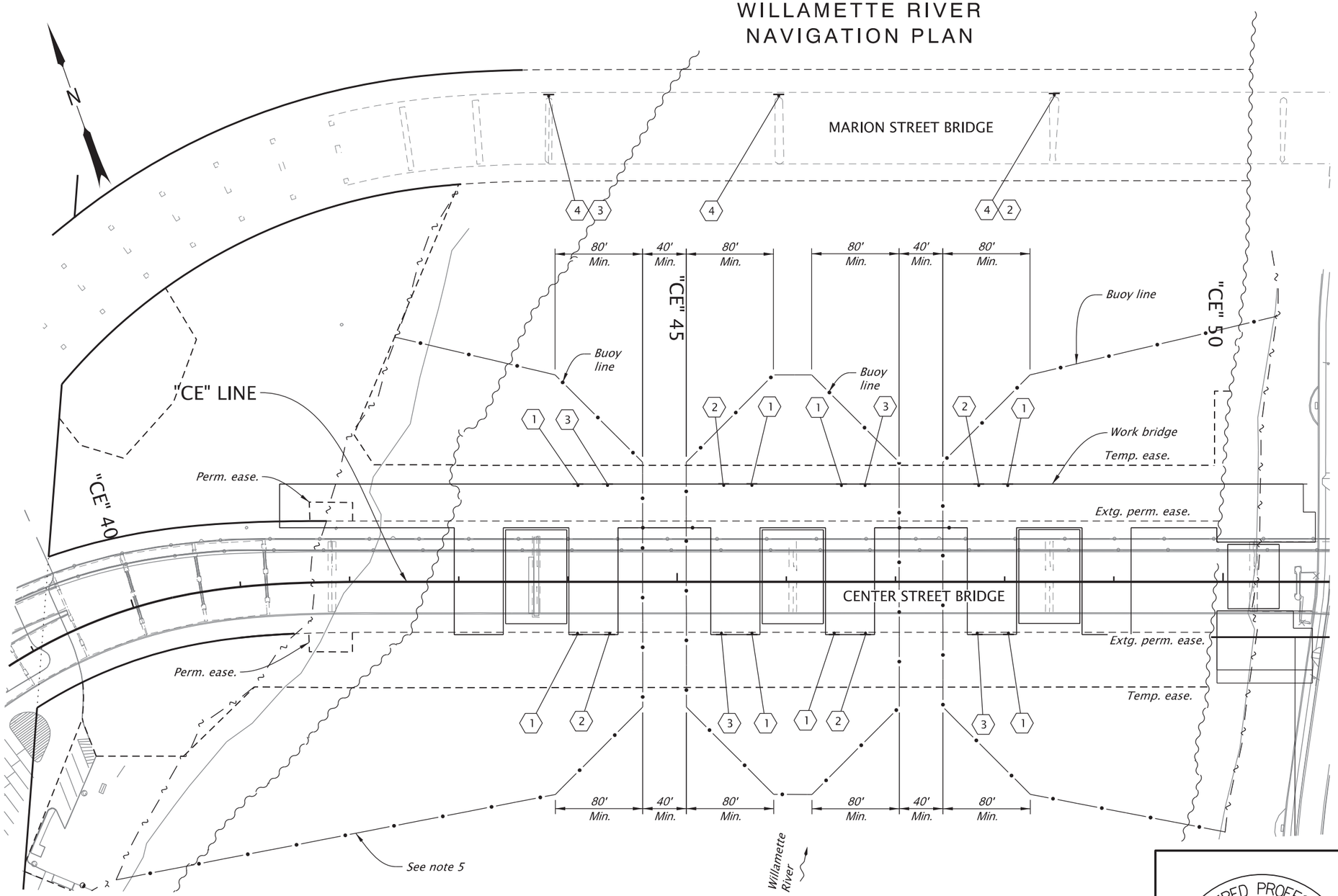

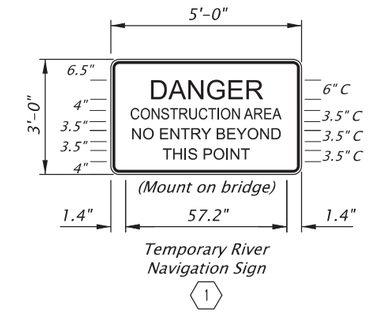

Temporary River Navigation Sign (1)

R4-7a 36x48 — Temporary River Navigation Sign (2)

R4-8a 36x48 — Temporary River Navigation Sign (3)

48x48

Temporary River Navigation Sign (4)

LEGEND

- Ordinary low water
- OHW – Regulated work area

NOTES:

1. See sht. EJ02, note 1.
2. Before fabricating sign supports investigate the site and determine preferred sign locations for visibility and ease of placement/securing.
3. Where practical place bottom of sign 4' above ordinary high water line. Fabricate custom sign support as required for each installation.
4. Provide anchor and cable supports for buoy lines or other supports approved by the Engineer.
5. Consider river current and coordinate with Engineer to locate and adjust buoy line to ensure recreational users can readily access the navigable channel.
6. Adjust buoy anchor lines as needed for changes in water level or as required.
7. See sht. EJ04, for details on mounting signs to the Marion Street Bridge.

REGISTERED PROFESSIONAL ENGINEER
100246PE
Digitally Signed 2026.06.02 15:59:34-07'00'
OREGON
JULY 12, 2022
JASON BENJAMIN GALEAZZI
EXPIRES: 06/30/2027

FINAL ELECTRONIC DOCUMENT AVAILABLE UPON REQUEST

DOWL WWW.DOWL.COM

OREGON DEPARTMENT OF TRANSPORTATION

OR22: CENTER ST BRIDGE (PHASE 1) PROJECT
WILLAMINA-SALEM HIGHWAY
MARION & POLK COUNTIES

Designer: Jason Galeazzi | Reviewer: Bob Goodrich
Drafter: Steve Wolfer | Checker: Kyle Farnsworth

TRAFFIC CONTROL DETOUR PLAN

SHEET NO. EJ03

WILLAMETTE RIVER NAVIGATION PLAN

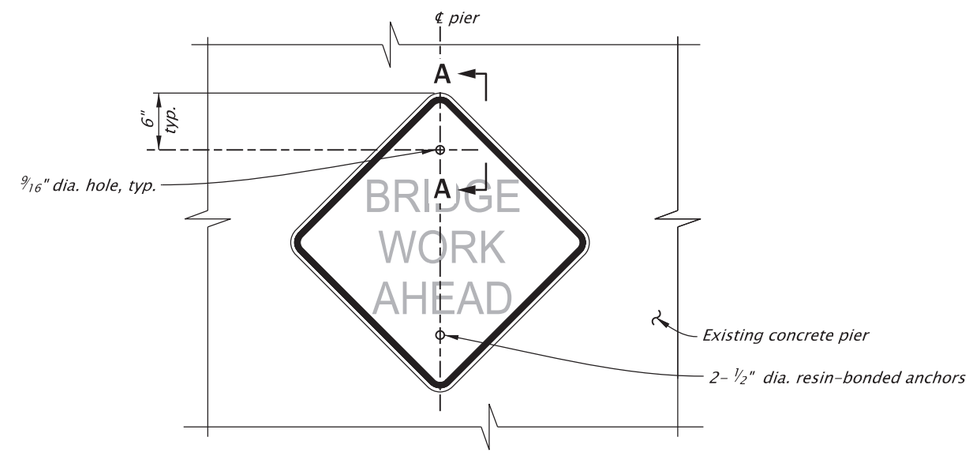

SIGN NO. 4 ELEVATION
(SIGN NO. 2 AND SIGN NO. 3 SIMILAR)

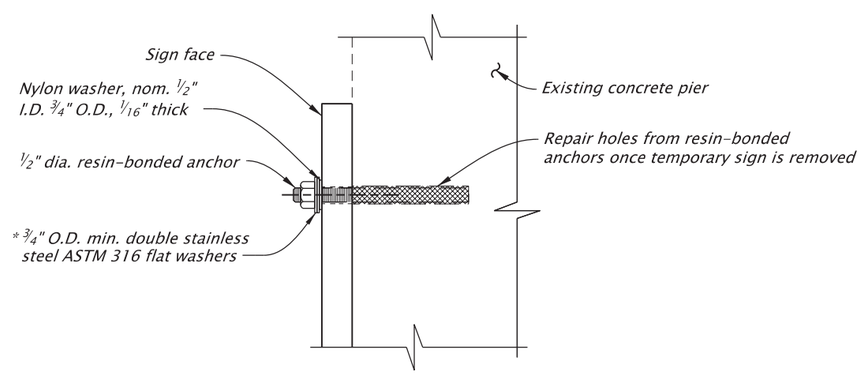

*Stainless steel bonded sealing washer with neoprene layer is an acceptable substitute

SECTION A-A

NOTES:
1. See sht. EJ03 for temporary sign notes and locations of Sign 4.

2. Determine the location of the existing reinforcement and adjust resin-bonded anchors 2" ± (max.) vertically to avoid severing existing reinforcement.

REGISTERED PROFESSIONAL ENGINEER
100246PE
Digitally Signed 2026.01.28 10:36:22-08'00'
OREGON
JULY 12, 2022
JASON BENJAMIN GALEAZZI
EXPIRES: 06/30/2027
FINAL ELECTRONIC DOCUMENT AVAILABLE UPON REQUEST

DOWL WWW.DOWL.COM

OR22: CENTER ST BRIDGE (PHASE 1) PROJECT
WILLAMINA-SALEM HIGHWAY
MARION & POLK COUNTIES

Designer: Jason Galeazzi | Reviewer: Bob Goodrich
Drafter: Steve Wolfer | Checker: Kyle Farnsworth

TRAFFIC CONTROL DETAILS

SHEET NO. EJ04

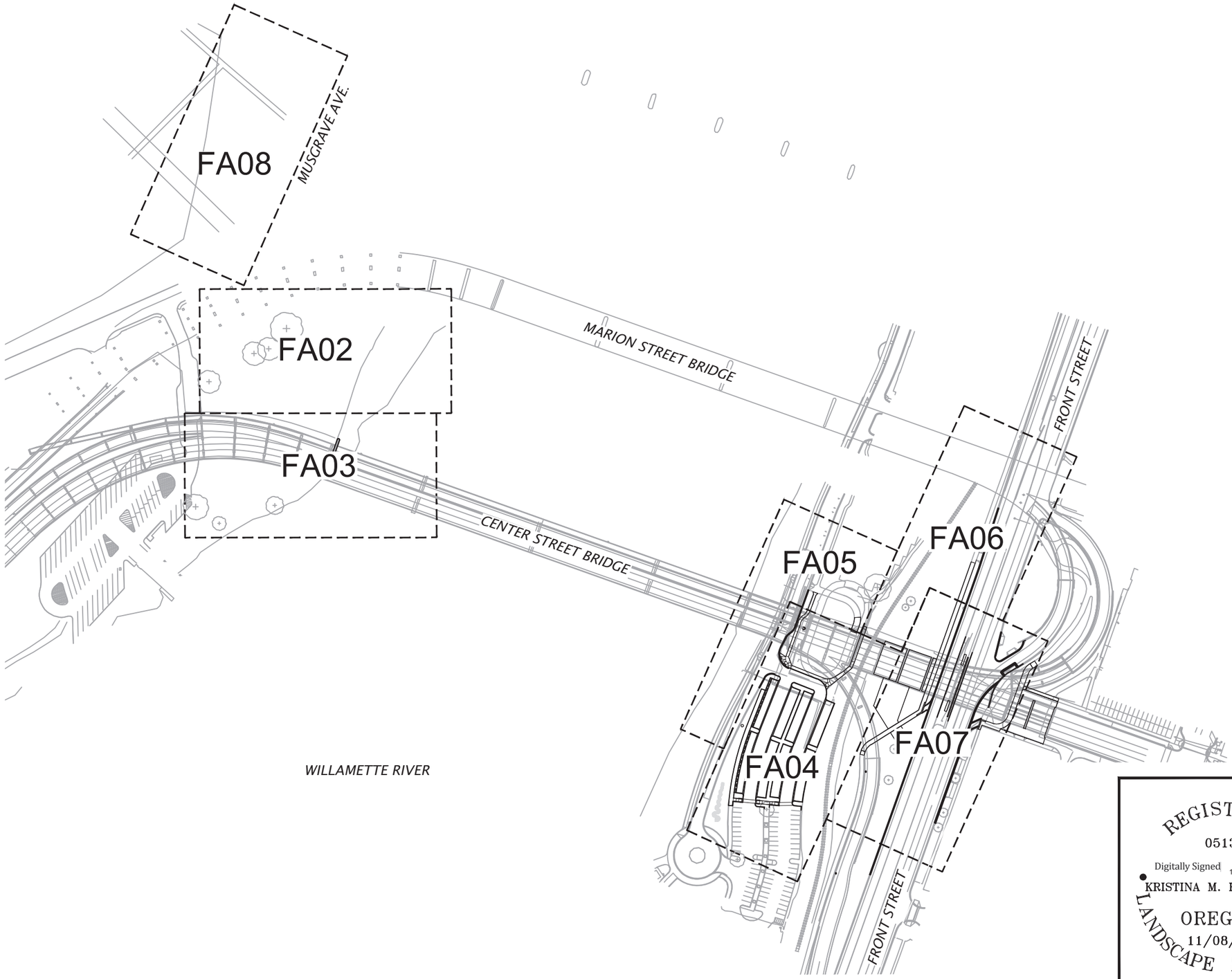

PLANTING SHEETS:

FA01 – PLANTING PLAN – SHEET KEY
FA02 – PLANTING PLAN – WALLACE MARINE NORTH
FA03 – PLANTING PLAN – WALLACE MARINE SOUTH
FA04 – PLANTING PLAN – RIVERFRONT PARK SOUTH
FA05 – PLANTING PLAN – RIVERFRONT PARK NORTH
FA06 – PLANTING PLAN – FRONT STREET NORTH
FA07 – PLANTING PLAN – FRONT STREET SOUTH
FA08 – PLANTING PLAN – MUSGRAVE AVENUE
FA09 – PLANTING SCHEDULES & NOTES
FA10 – LANDSCAPE DETAILS & NOTES
FA11 – LANDSCAPE DETAILS & NOTES
FA12 – LANDSCAPE DETAILS & NOTES

N

SCALE IN FEET
0 100 200

REGISTERED
0513
Digitally Signed 2026.06.24 15:43:51-07'00'
KRISTINA M. KOLTAVARY
OREGON
11/08/02
LANDSCAPE ARCHITECT
EXPIRES 11/30/2026

DOWL WWW.DOWL.COM

OREGON DEPARTMENT OF TRANSPORTATION

OR22: CENTER ST BRIDGE (PHASE 1)
WILLAMINA-SALEM HIGHWAY
MARION & POLK COUNTIES

Designer: Carson Butler
Reviewer: Bob Goodrich, PE
Drafter: Carson Butler
Checker: Kristina Koltavary, PLA

PLANTING PLAN - SHEET KEY

SHEET NO. FA01

FINAL ELECTRONIC DOCUMENT AVAILABLE UPON REQUEST

59V-051

MATCHLINE FA03

LEGEND:

- E.O.R. — Extent of Revegetation
- O.H.W. — Approx. Ordinary High Water line
- T.O.B. — Approximate Top of Bank line
- R/W — ODOT Right-of-Way
- P.E. — Permanent Easement
- T.E. — Temporary Easement
- Permanent Seeding and Erosion Control Blanket
- Riparian Buffer: Outer Section
- Park Restoration Planting

KEY NOTES:

1. New waterline, see Waterline Plans.
2. Existing waterline easement; no tree planting.
3. Minimum 10 foot width clear for mowing.
4. Existing tree to protect; see Tree Plans.

PLANTING NOTES:

1. For planting species, quantities, size and spacing, refer to Planting Schedules, sheet FA09.
2. See FA10 for Outer Section, Park Restoration planting plan enlargements and tree replacement tables.
3. No new tree planting within 25 feet of overhead bridge structure. No proposed tree planting within 10 feet of park roadway.
4. See specs. for seed mixes.

REGISTERED
0513
Digitally Signed 2026.06.24 15:43:10-07'00'
KRISTINA M. KOLTAVARY
OREGON
11/08/02
LANDSCAPE ARCHITECT
EXPIRES 11/30/2026

FINAL ELECTRONIC DOCUMENT AVAILABLE UPON REQUEST

DOWL WWW.DOWL.COM

OREGON DEPARTMENT OF TRANSPORTATION

OR22: CENTER ST BRIDGE (PHASE 1)
WILLAMINA-SALEM HIGHWAY
MARION & POLK COUNTIES

Designer: Carson Butler
Reviewer: Bob Goodrich, PE
Drafter: Carson Butler
Checker: Kristina Koltavary, PLA

PLANTING PLAN - WALLACE MARINE NORTH

SHEET NO. FA02

59V-051

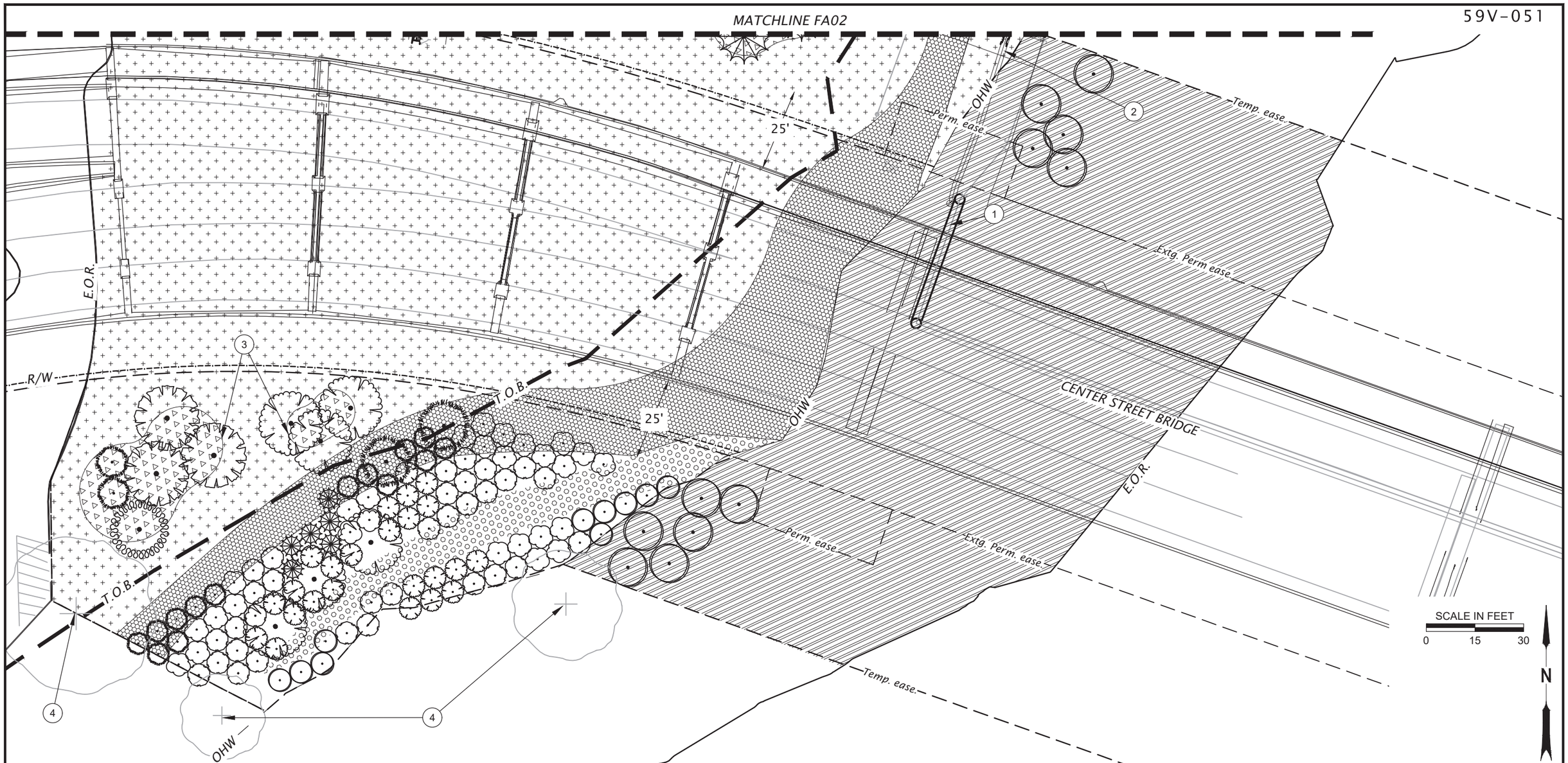

LEGEND:

- E.O.R. — Extent of Revegetation
- O.H.W. — Approx. Ordinary High Water line
- T.O.B. — Approximate Top of Bank line
- R/W — ODOT Right-of-Way
- P.E. — Permanent Easement
- T.E. — Temporary Easement
- Permanent Seeding and Erosion Control Blanket
- Riparian Buffer: Escarpment Section
- Riparian Buffer: Outer Section
- Park Restoration Planting
- Below Ordinary High-Water Line

PLANTING NOTES:

1. For planting species, quantities, size and spacing, refer to Planting Schedules, sheet FA09.
2. See FA10 for Typical Escarpment, Outer Section, Park Restoration planting plan enlargements and tree replacement tables.
3. No new tree planting within 25 feet of overhead bridge structure. No proposed tree planting within 10 feet of park roadway.

KEY NOTES:

1. New waterline, see Waterline Plans.
2. Existing waterline easement; no tree planting.
3. Minimum 10 foot width clear for mowing.
4. Existing tree to protect, see Tree Plans.

REGISTERED
0513
Digitally Signed 2026.06.24 15:42:28-07'00'
KRISTINA M. KOLTAVARY
OREGON
11/08/02
LANDSCAPE ARCHITECT
EXPIRES 11/30/2026
FINAL ELECTRONIC DOCUMENT AVAILABLE UPON REQUEST

DOWL WWW.DOWL.COM

OR22: CENTER ST BRIDGE (PHASE 1)
WILLAMINA-SALEM HIGHWAY
MARION & POLK COUNTIES

Designer: Carson Butler
Reviewer: Bob Goodrich, PE
Drafter: Carson Butler
Checker: Kristina Koltavary, PLA

PLANTING PLAN - WALLACE MARINE SOUTH

SHEET NO. FA03

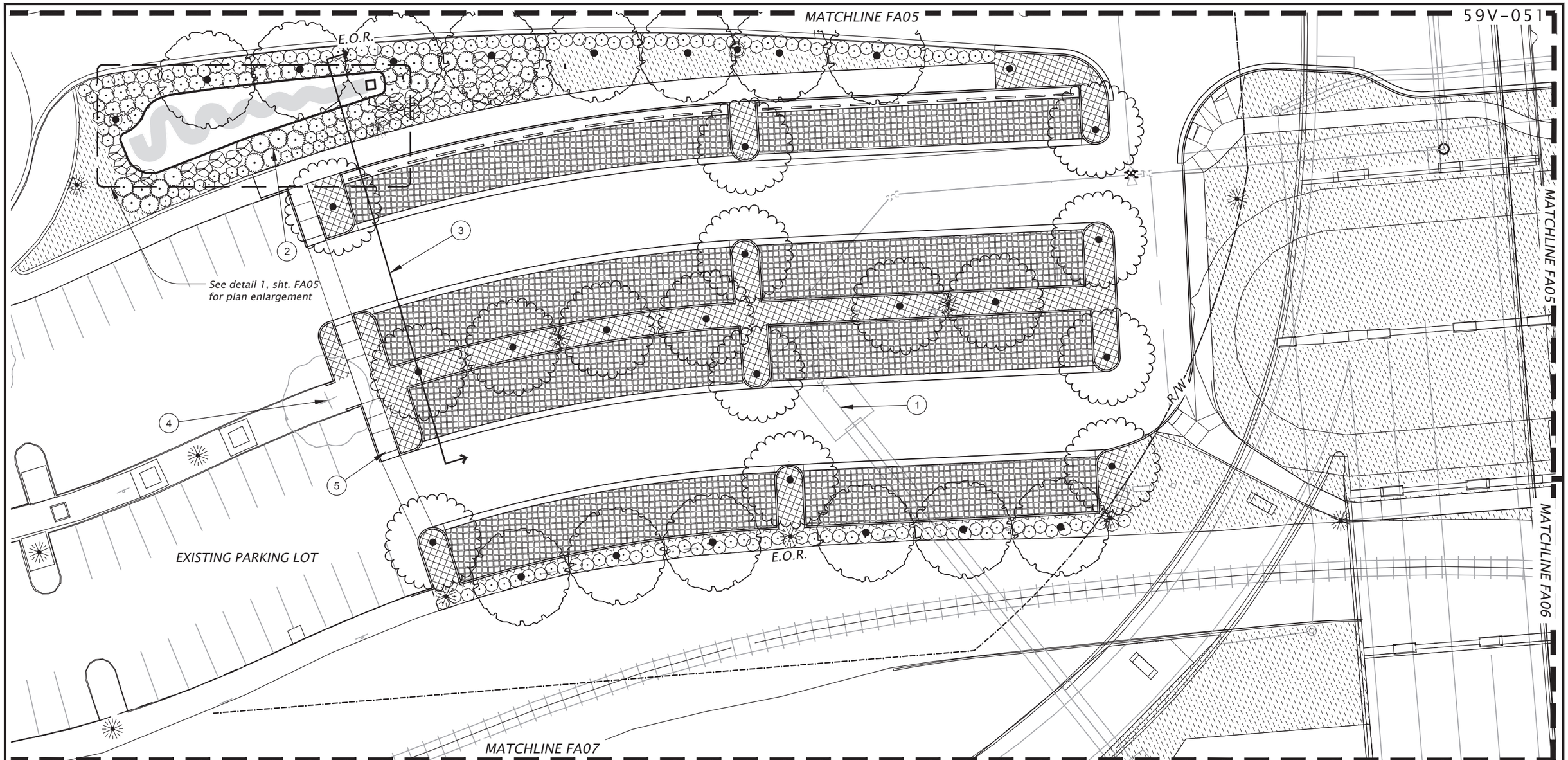

LEGEND:

- E.O.R. — Extent of Revegetation
- R/W — ODOT Right-of-Way
- P.E. — Permanent Easement
- T.E. — Temporary Easement
- Bark mulch at 4" depth with weed geotextile
- Parking lot planting area
- Soil Cell / Unit Paving Area

KEY NOTES:

1. New waterline, see Waterline Plans.
2. New stormwater treatment facility - See HA01
3. Section | Elevation enlargement - See FA12.
4. Existing tree to protect, see Tree Plans.
5. New pedestrian crosswalk See Roadway Plans.

3" of 3/4-1" Round Rock

PLANTING NOTES:

1. For planting species, quantities, size and spacing, refer to Planting Schedules, sheet FA09.
2. No proposed tree planting within 25 feet of overhead bridge structure.

N

SCALE IN FEET
0 15 30

REGISTERED
0513
Digitally Signed 2026.06.24 15:41:58-07'00'
KRISTINA M. KOLTAVARY
OREGON
11/08/02
LANDSCAPE ARCHITECT
EXPIRES 11/30/2026

DOWL WWW.DOWL.COM

OREGON DEPARTMENT OF TRANSPORTATION

OR22: CENTER ST BRIDGE (PHASE 1)
WILLAMINA-SALEM HIGHWAY
MARION & POLK COUNTIES

Designer: Carson Butler
Reviewer: Bob Goodrich, PE
Drafter: Carson Butler
Checker: Kristina Koltavary, PLA

PLANTING PLAN - RIVERFRONT PARK SOUTH

SHEET NO. FA04

FINAL ELECTRONIC DOCUMENT AVAILABLE UPON REQUEST

59V-051

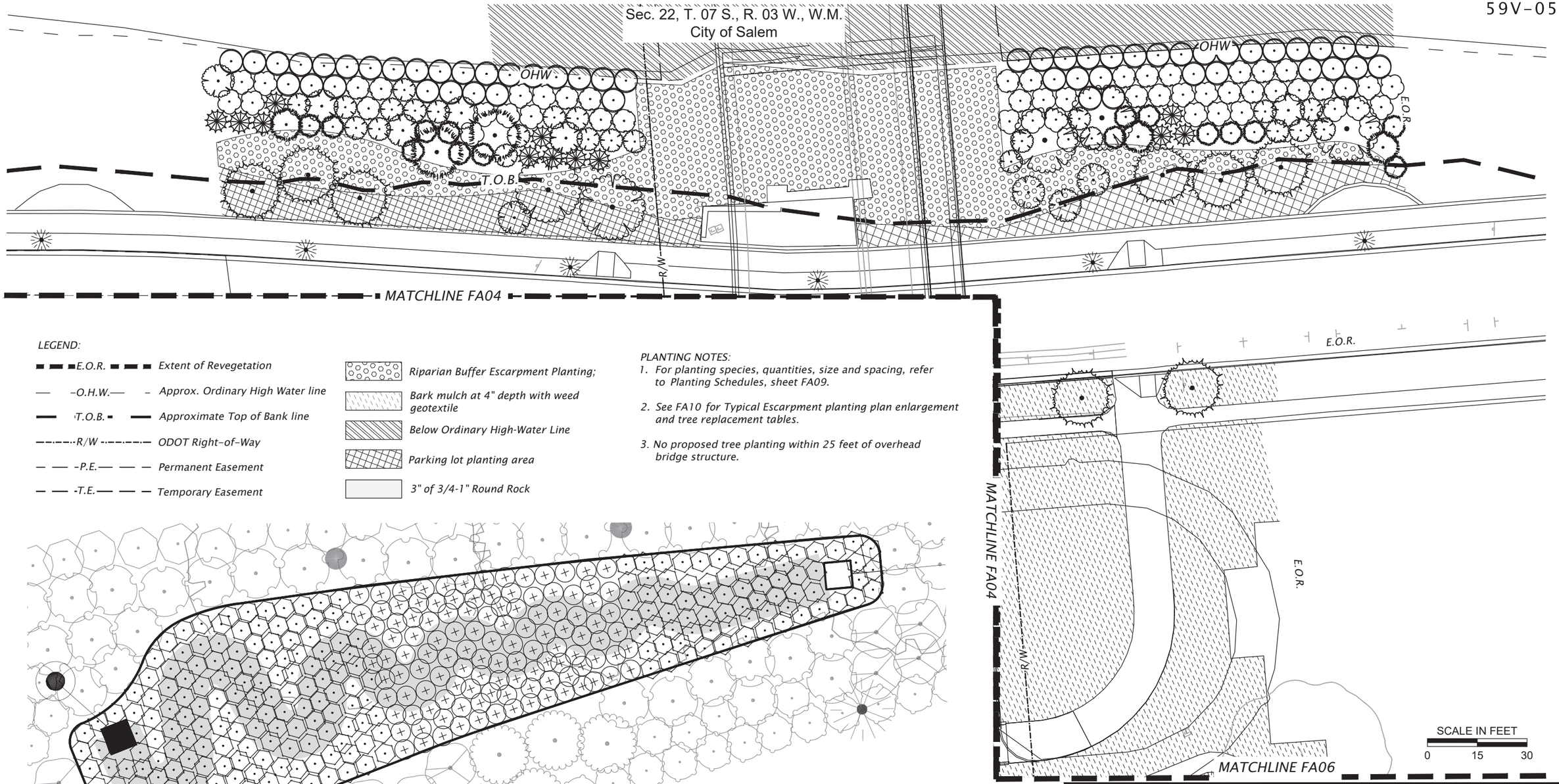

LEGEND:

- E.O.R. — Extent of Revegetation
- O.H.W. — Approx. Ordinary High Water line
- T.O.B. — Approximate Top of Bank line
- R/W — ODOT Right-of-Way
- P.E. — Permanent Easement
- T.E. — Temporary Easement
- Riparian Buffer Escarpment Planting;
- Bark mulch at 4" depth with weed geotextile
- Below Ordinary High-Water Line
- Parking lot planting area
- 3" of 3/4-1" Round Rock

PLANTING NOTES:

1. For planting species, quantities, size and spacing, refer to Planting Schedules, sheet FA09.
2. See FA10 for Typical Escarpment planting plan enlargement and tree replacement tables.
3. No proposed tree planting within 25 feet of overhead bridge structure.

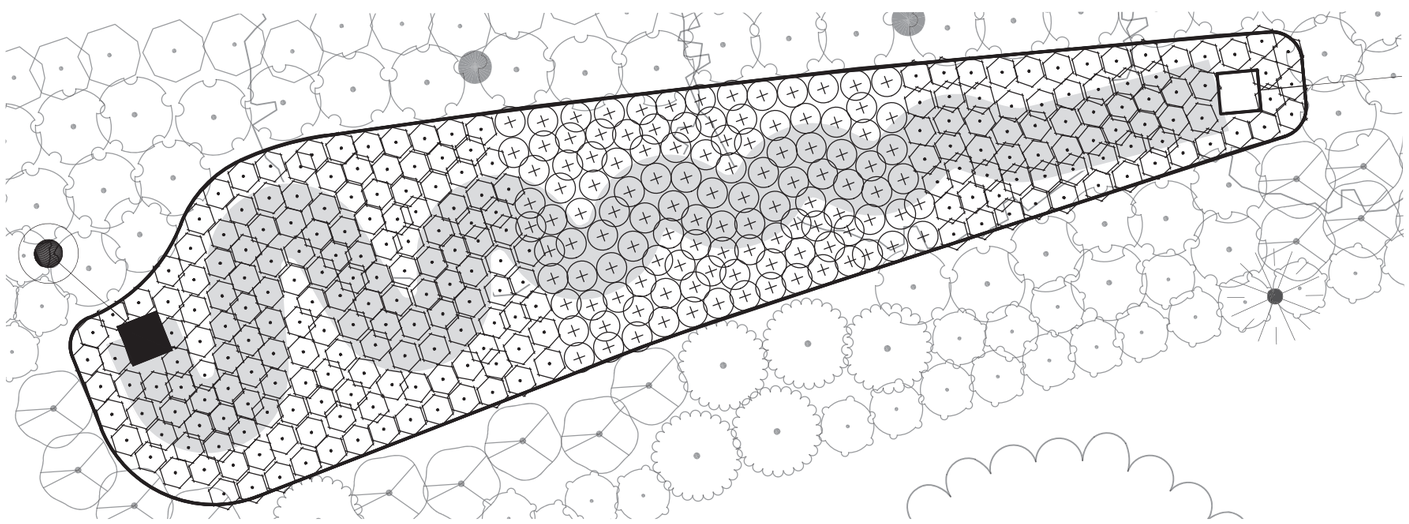

1 STORMWATER SWALE - Plan Enlargement

SCALE IN FEET
0 05 10

N

REGISTERED
0513
Digitally Signed 2026.06.24 15:41:13-07'00'
KRISTINA M. KOLTAVARY
OREGON
11/08/02
LANDSCAPE ARCHITECT
EXPIRES 11/30/2026

FINAL ELECTRONIC DOCUMENT AVAILABLE UPON REQUEST

DOWL WWW.DOWL.COM

OREGON DEPARTMENT OF TRANSPORTATION

OR22: CENTER ST BRIDGE (PHASE 1)
WILLAMINA-SALEM HIGHWAY
MARION & POLK COUNTIES

Designer: Carson Butler
Reviewer: Bob Goodrich, PE
Drafter: Carson Butler
Checker: Kristina Koltavary, PLA

PLANTING PLAN - RIVERFRONT PARK NORTH

SHEET NO. FA05

59V-051

Sec. 22, T. 07 S., R. 03 W., W.M.
City of Salem

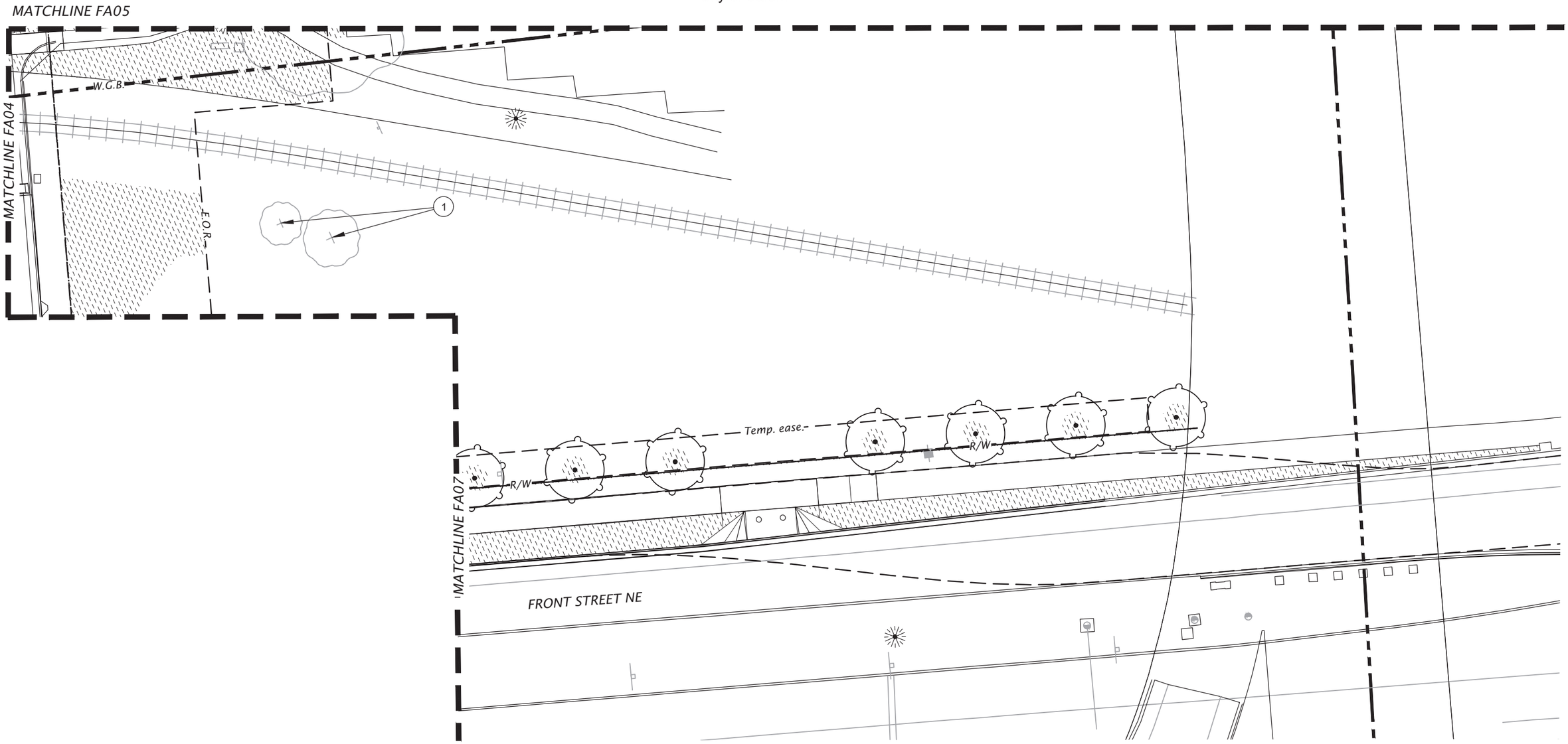

LEGEND:

- E.O.R. — Extent of Revegetation
- R/W — ODOT Right-of-Way
- P.E. — Permanent Easement
- T.E. — Temporary Easement
- Bark mulch at 4" depth with weed geotextile

KEY NOTES:

1. Existing tree to protect, see Tree Plans.

PLANTING NOTES:

1. For planting species, quantities, size and spacing, refer Planting Schedules, sheet FA09.

N

SCALE IN FEET
0 15 30

REGISTERED
0513
Digitally Signed 2026.06.24 15:40:28-07'00'
KRISTINA M. KOLTAVARY
OREGON
11/08/02
LANDSCAPE ARCHITECT
EXPIRES 11/30/2026

FINAL ELECTRONIC DOCUMENT AVAILABLE UPON REQUEST

DOWL WWW.DOWL.COM

OREGON DEPARTMENT OF TRANSPORTATION

OR22: CENTER ST BRIDGE (PHASE 1)
WILLAMINA-SALEM HIGHWAY
MARION & POLK COUNTIES

Designer: Carson Butler
Reviewer: Bob Goodrich, PE
Drafter: Carson Butler
Checker: Kristina Koltavary, PLA

PLANTING PLAN - FRONT STREET NORTH

SHEET NO. FA06

59V-051

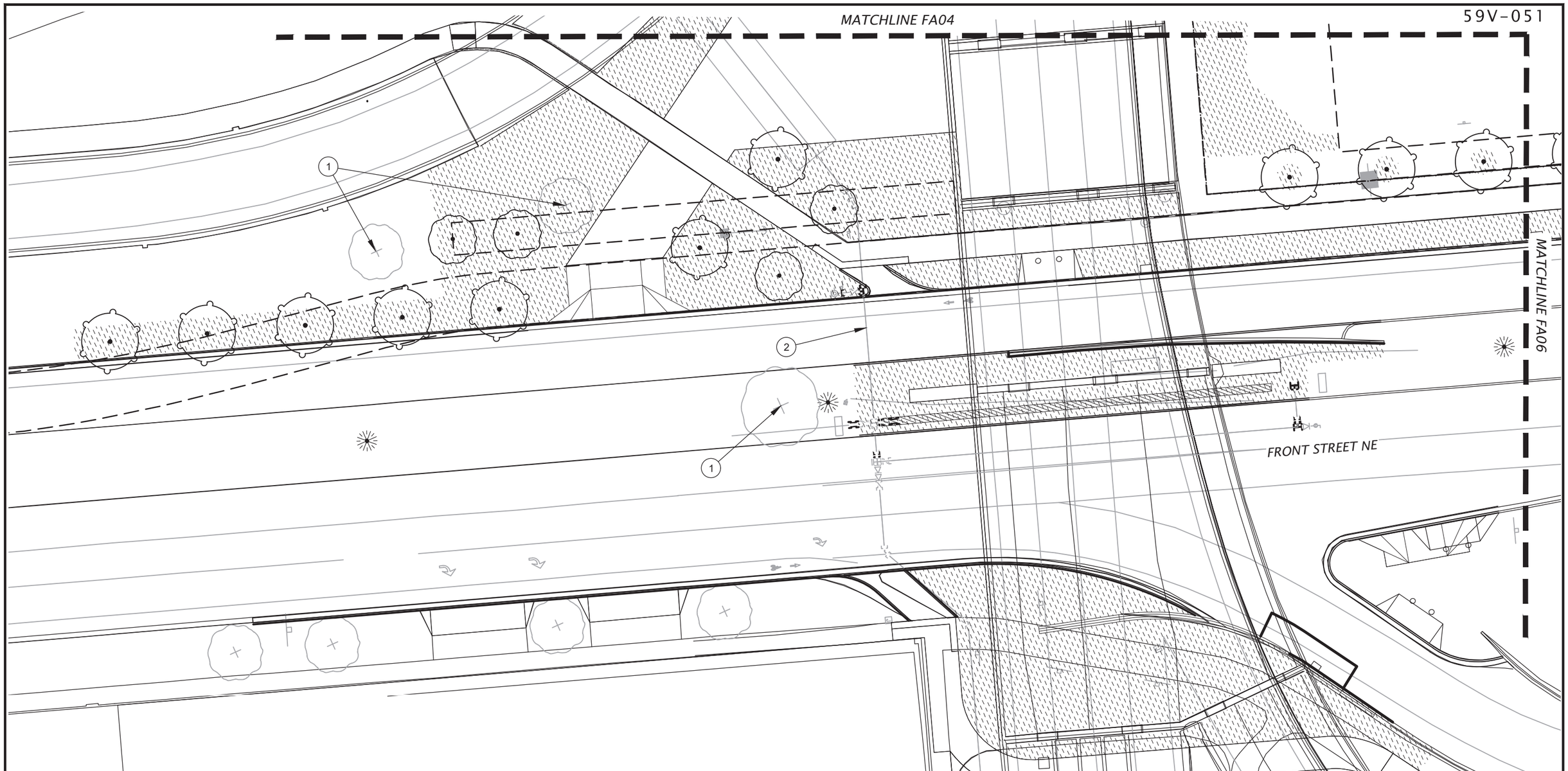

LEGEND:

R/W — *ODOT Right-of-Way*

Bark mulch at 4" depth with weed geotextile

KEY NOTES:

1. *Existing tree to protect, see Tree Plans.*
2. *New waterline, see Waterline Plans.*

PLANTING NOTES:

1. *For planting species, quantities, size and spacing, refer to Planting Schedules, sheet FA09.*
2. *For tree replacement tables see sheet FB107.*

N

SCALE IN FEET

0 15 30

REGISTERED
0513
Digitally Signed 2026.06.24 15:37:08-07'00'
KRISTINA M. KOLTAVARY
OREGON
11/08/02
LANDSCAPE ARCHITECT
EXPIRES 11/30/2026

FINAL ELECTRONIC DOCUMENT AVAILABLE UPON REQUEST

DOWL WWW.DOWL.COM

OREGON DEPARTMENT OF TRANSPORTATION

OR22: CENTER ST BRIDGE (PHASE 1)
WILLAMINA-SALEM HIGHWAY
MARION & POLK COUNTIES

Designer: Carson Butler
Reviewer: Bob Goodrich, PE
Drafter: Carson Butler
Checker: Kristina Koltavary, PLA

PLANTING PLAN - FRONT STREET SOUTH

SHEET NO. FA07

59V-051

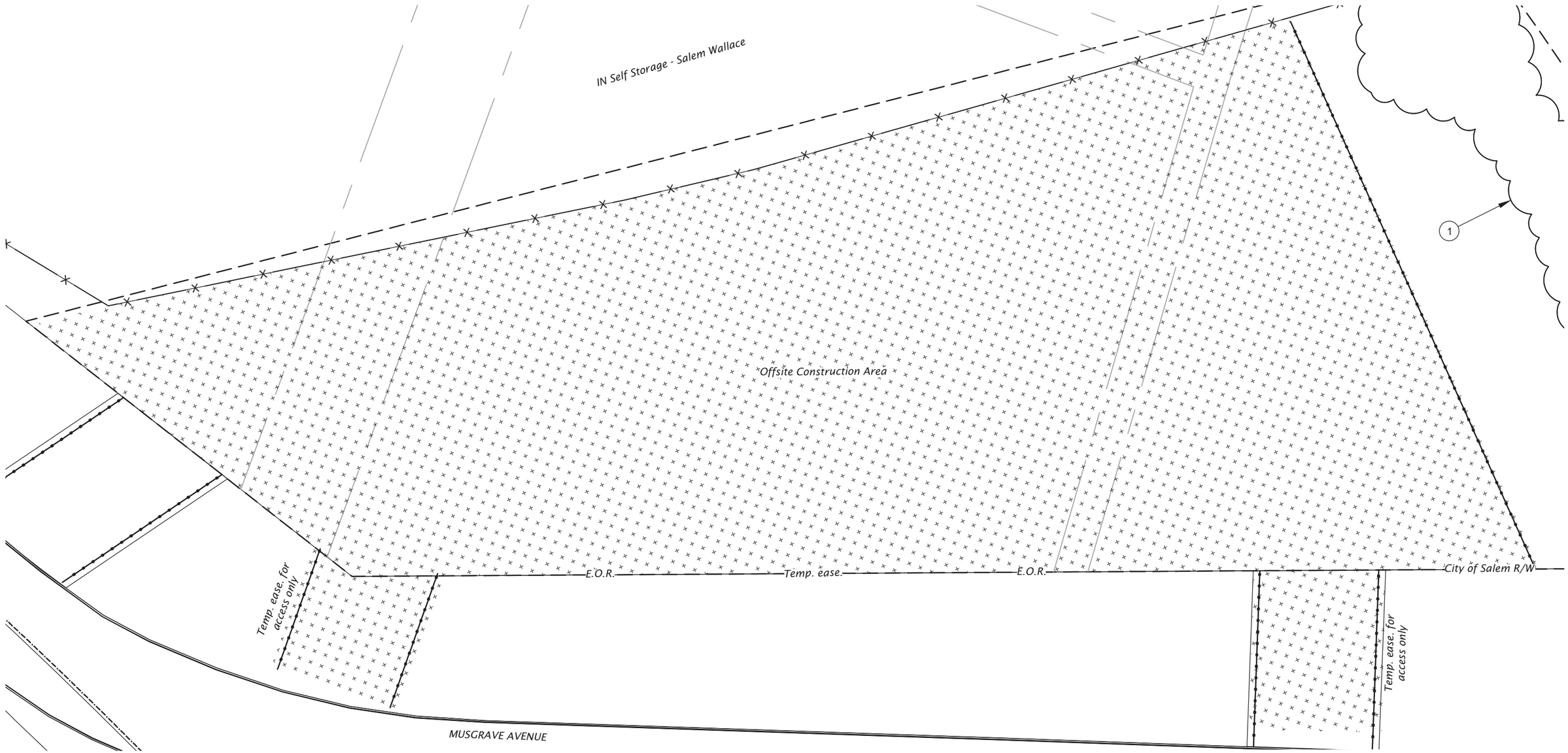

LEGEND:

- Permanent Seeding and Erosion Control Blanket
- E.O.R. — Extent of Revegetation
- R/W — ODOT Right-of-Way
- P.E. — Permanent Easement

KEY NOTES:

1. Existing vegetation to remain and protect.

N

SCALE IN FEET
0 15 30

REGISTERED
0513
Digitally Signed 2026.06.24 15:38:00-07'00'
KRISTINA M. KOLTAVARY
OREGON
11/08/02
LANDSCAPE ARCHITECT
EXPIRES 11/30/2026

FINAL ELECTRONIC DOCUMENT AVAILABLE UPON REQUEST

DOWL WWW.DOWL.COM

OREGON DEPARTMENT OF TRANSPORTATION

OR22: CENTER ST BRIDGE (PHASE 1)
WILLAMINA-SALEM HIGHWAY
MARION & POLK COUNTIES

Designer: Carson Butler
Reviewer: Bob Goodrich, PE
Drafter: Carson Butler
Checker: Kristina Koltavary, PLA

PLANTING PLAN - MUSGRAVE AVENUE

SHEET NO. FA08

PLANTING SCHEDULE - WALLACE MARINE PARK RIPARIAN ENHANCEMENT

SYMBOL	BOTANICAL NAME	COMMON NAME	SIZE	QTY
ESCARPMENT PLANTING				
	Acer macrophyllum	Big Leaf Maple	#1 CONT.	52
	Alnus rubra	Red Alder	#1 CONT.	58
	Calocedrus decurrens	Incense Cedar	#1 CONT.	22
	Pseudotsuga menziesii	Douglas Fir	#1 CONT.	17
	Rhamnus purshiana	Cascara	#1 CONT.	54
	Salix scouleriana	Scouler's Willow	#1 CONT.	45
RIPARIAN CORRIDOR TREE REPLACEMENT				
	Acer macrophyllum	Big Leaf Maple	#5 CONT.	8
	Acer macrophyllum	Big Leaf Maple	1.5" Cal.	18
	Arbutus menziesii	Pacific Madrone	1.5" Cal.	1
	Calocedrus decurrens	Incense Cedar	#5 CONT.	6
	Calocedrus decurrens	Incense Cedar	4` Ht.	13
	Pseudotsuga menziesii	Douglas Fir	4` Ht.	6
	Quercus garryana	Oregon White Oak	1.5" Cal.	8
	Rhamnus purshiana	Cascara	1.5" Cal.	8
	Salix scouleriana	Scouler's Willow	#5 CONT.	11

RIPARIAN BUFFER - ESCARPMENT SECTION PLANTING

SYMBOL	BOTANICAL NAME	COMMON NAME	SIZE	QTY	REMARKS
	CORNUS SERICEA	REDTWIG DOGWOOD	#1 CONT.	20	4' O.C.
	SALIX HOOKERIANA	DUNE WILLOW	#1 CONT.	20	4' O.C.
	SYMPHORICARPOS ALBUS	SNOWBERRY	#1 CONT.	20	4' O.C.
	SPIRAEA DOUGLASII	DOUGLAS SPIREA	#1 CONT.	20	4' O.C.
	PHYSOCARPUS CAPITATUS	PACIFIC NINEBARK	#1 CONT.	20	4' O.C.
	ROSA PISOCARPA	SWAMP ROSE	#1 CONT.	20	4' O.C.

RIPARIAN BUFFER - OUTER SECTION PLANTING

SYMBOL	BOTANICAL NAME	COMMON NAME	SIZE	QTY	REMARKS
	CORNUS SERICEA	REDTWIG DOGWOOD	#1 CONT.	90	4' O.C.
	SALIX HOOKERIANA	DUNE WILLOW	#1 CONT.	90	4' O.C.
	SYMPHORICARPOS ALBUS	SNOWBERRY	#1 CONT.	90	4' O.C.
	SPIRAEA DOUGLASII	DOUGLAS SPIREA	#1 CONT.	90	4' O.C.
	PHYSOCARPUS CAPITATUS	PACIFIC NINEBARK	#1 CONT.	90	4' O.C.
	ROSA PISOCARPA	SWAMP ROSE	#1 CONT.	90	4' O.C.

PARK RESTORATION PLANTING

SYMBOL	BOTANICAL NAME	COMMON NAME	SIZE	QTY	REMARKS
	ACER CIRCINATUM	VINE MAPLE	#5 CONT.	123	8' O.C.
	ROSA PISOCARPA	SWAMP ROSE	#1 CONT.	306	4' O.C.
	MAHONIA AQUIFOLIUM	OREGON GRAPE	#1 CONT.	306	4' O.C.

BELOW ORDINARY HIGH WATER

SYMBOL	BOTANICAL NAME	COMMON NAME	SIZE	QTY	REMARKS
	CORNUS SERICEA	REDTWIG DOGWOOD	#1 CONT.	380	8' O.C
	SALIX HOOKERIANA	DUNE WILLOW	#1 CONT.	380	8' O.C.

PLANTING SCHEDULE - RIVERFRONT PARK RIPARIAN ENHANCEMENT

SYMBOL	BOTANICAL NAME	COMMON NAME	SIZE	QTY
ESCARPMENT PLANTING				
	Acer macrophyllum	Big Leaf Maple	#1 CONT.	24
	Alnus rubra	Red Alder	#1 CONT.	27
	Calocedrus decurrens	Incense Cedar	#1 CONT.	15
	Pseudotsuga menziesii	Douglas Fir	#1 CONT.	12
	Rhamnus purshiana	Cascara	#1 CONT.	23
	Salix scouleriana	Scouler's Willow	#1 CONT.	54
RIPARIAN CORRIDOR TREE REPLACEMENT				
	Acer macrophyllum	Big Leaf Maple	#5 CONT.	10
	Acer macrophyllum	Big Leaf Maple	1.5" Cal.	5
	Calocedrus decurrens	Incense Cedar	#5 CONT.	3
	Calocedrus decurrens	Incense Cedar	4` Ht.	2
	Thuja plicata	Western Red Cedar	5-6' HT.	8
TYPE A LANDSCAPE				
	Choisya ternata	Mexican Orange	#5 CONT.	77

RIPARIAN BUFFER - ESCARPMENT SECTION PLANTING

SYMBOL	BOTANICAL NAME	COMMON NAME	SIZE	QTY	REMARKS
	CORNUS SERICEA	REDTWIG DOGWOOD	#1 CONT.	85	4' O.C.
	SALIX HOOKERIANA	DUNE WILLOW	#1 CONT.	85	4' O.C.
	SYMPHORICARPOS ALBUS	SNOWBERRY	#1 CONT.	85	4' O.C.
	SPIRAEA DOUGLASII	DOUGLAS SPIREA	#1 CONT.	85	4' O.C.
	PHYSOCARPUS CAPITATUS	PACIFIC NINEBARK	#1 CONT.	85	4' O.C.
	ROSA PISOCARPA	SWAMP ROSE	#1 CONT.	85	4' O.C.

EAST PARKING LOT & UPPER PARK UNDERSTORY / GROUNDCOVER

SYMBOL	BOTANICAL NAME	COMMON NAME	SIZE	QTY	REMARKS
	POLYSTICHUM MUNITUM	WESTERN SWORD FERN	#1 CONT.	450	3' O.C.
	MAHONIA REPENS	CREEPING MAHONIA	#1 CONT.	500	3' O.C.

PLANTINGS BELOW ORDINARY HIGH WATER

SYMBOL	BOTANICAL NAME	COMMON NAME	SIZE	QTY	REMARKS
	CORNUS SERICEA	REDTWIG DOGWOOD	#1 CONT.	155	8' O.C.
	SALIX HOOKERIANA	DUNE WILLOW	#1 CONT.	155	8' O.C.

PERMANENT SEEDING

3 ACRES

PLANTING SCHEDULE - FRONT STREET & RIVERFRONT PARKING LOT

SYMBOL	BOTANICAL NAME	COMMON NAME	SIZE	QTY
STREET TREES				
	Zelkova serrata 'Green Vase'	Green Vase Zelkova	1.5" Cal.	17
	Zelkova serrata 'Wireless'	Wireless Zelkova	1.5" Cal.	4
LANDSCAPE REPAIR - EAST PARKING LOT				
	Nyssa sylvatica	Tupelo	1.5" Cal.	15
	Quercus rubra	Northern Red Oak	1.5" Cal.	16
STORMWATER FACILITY PLANTING				
	Carex obnupta	Slough Sedge	#1 CONT.	118
	Cornus sericea	Red Twig Dogwood	#5 CONT.	45
	Juncus patens	California Gray Rush	#1 CONT.	142
	Ribes sanguineum	Red Flowering Currant	#5 CONT.	22
	Spiraea douglasii	Western Spirea	#3 CONT.	24
	Symphoricarpos albus	Common Snowberry	#3 CONT.	238
TYPE A LANDSCAPE				
	Choisya ternata	Mexican Orange	#5 CONT.	77

EAST PARKING LOT & UPPER PARK UNDERSTORY / GROUNDCOVER

SYMBOL	BOTANICAL NAME	COMMON NAME	SIZE	QTY	REMARKS
	POLYSTICHUM MUNITUM	WESTERN SWORD FERN	#1 CONT.	450	3' O.C.
	MAHONIA REPENS	CREEPING MAHONIA	#1 CONT.	500	3' O.C.

PLANTING NOTES:

1. See "American Standard for Nursery Stock" (ANSI Z60.1 -2014) for minimum plant quality standards.
2. Seed permanent seed mix with compost mulch blanket application. Include all incidental disturbed roadside areas beyond those indicated with permanent seed mix.

REGISTERED
0513
Digitally Signed 2026.06.24 15:38:52-07'00'
KRISTINA M. KOLTAVARY
OREGON
11/08/02
LANDSCAPE ARCHITECT
EXPIRES 11/30/2026

DOWL WWW.DOWL.COM

OREGON DEPARTMENT OF TRANSPORTATION

OR22: CENTER ST BRIDGE (PHASE 1)
WILLAMINA-SALEM HIGHWAY
MARION & POLK COUNTIES

Designer: Carson Butler
Reviewer: Bob Goodrich, PE
Drafter: Carson Butler
Checker: Kristina Koltavary, PLA

PLANTING SCHEDULES & NOTES

SHEET NO. FA09

FINAL ELECTRONIC DOCUMENT AVAILABLE UPON REQUEST

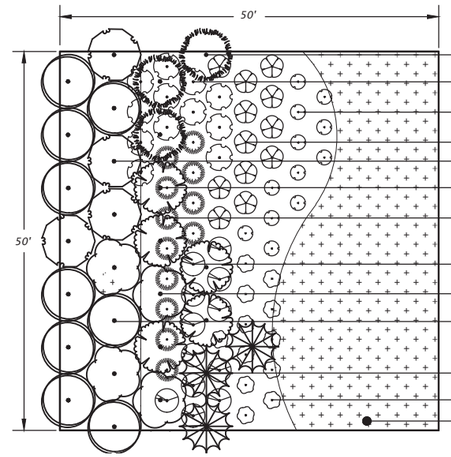

ESCARPMENT SECTION - Plan Enlargement
Typical Plant Layout per 2,500 SF *NTS*

- *(3) Native Trees - Species Vary, See FA01-FA03*
- *(12) Cornus sericea*
- *(12) Salix hookeriana*
- *(12) Symphoricarpos albus*
- *(3) Native Trees - Species Vary, See FA01-FA03*
- *(5) Native Trees - Species Vary, See FA01-FA03*
- *(12) Spiraea douglasii*
- *(12) Physocarpus capitatus*
- *(3) Native Trees - Species Vary, See FA01-FA03*
- *(9) Salix scouleriana*
- *(3) Native Trees - Species Vary, See FA01-FA03*
- *(12) Rosa pisocarpa*
- *Permanent Seeding*

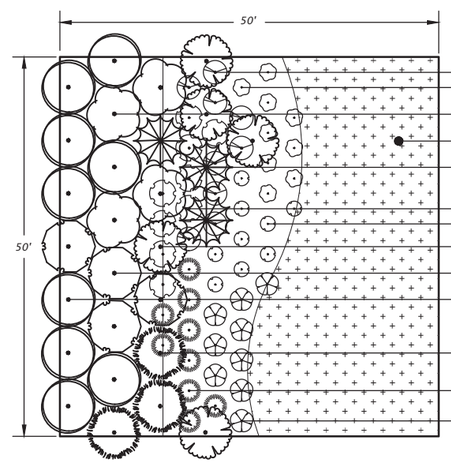

OUTER SECTION - Plan Enlargement
Typical Plant Layout per 2,500 SF *NTS*

- *(9) Physocarpus capitatus*
- *(9) Rosa pisocarpa*
- *(4) Native Trees - Species Vary, See FA01-FA03*
- *Permanent Seeding*
- *(3) Native Trees - Species Vary, See FA01-FA03*
- *(9) Cornus sericea*
- *(9) Salix hookeriana*
- *(5) Native Trees - Species Vary, See FA01-FA03*
- *(4) Native Trees - Species Vary, See FA01-FA03*
- *(9) Salix scouleriana*
- *(3) Native Trees - Species Vary, See FA01-FA03*
- *(9) Spiraea douglasii*
- *(9) Symphoricarpos albus*

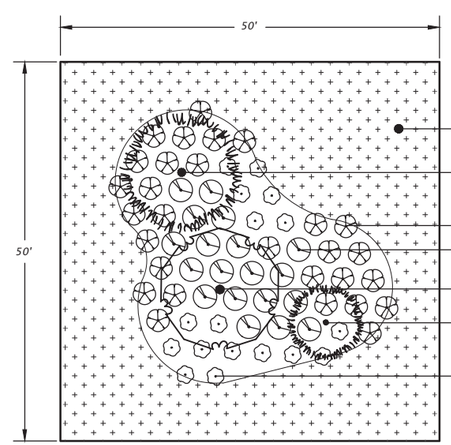

PARK RESTORATION - Plan Enlargement
Typical Plant Layout per 2,500 SF *NTS*

- *Permanent Seedimg*
- *(1) Native Tree - Species & Sizes Vary See FA01-FA03 and Plant Schedule FA09*
- *(28) Mahonia aquifolium*
- *(19) Acer circinatum*
- *(1) Native Tree - Species & Sizes Vary See FA01-FA03 and Plant Schedule FA09*
- *(1) Native Tree - Species & Sizes Vary See FA01-FA03 and Plant Schedule FA09*
- *(17) Rosa pisocarpa*

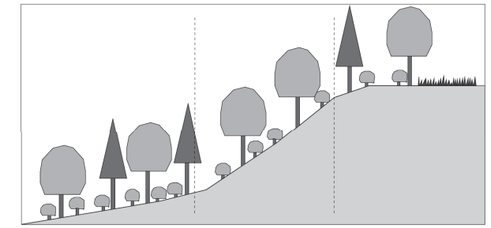

Riverside Section	Escarpment Section	Outer Section
Trees 70-90% Cover 6-7 ft. oc	Trees 40-60% Cover 6-7 ft. oc	Trees 30-50% Cover 7 ft. oc
Shrubs 10-30% Cover 3-4 ft. oc	Shrubs 40-60% Cover 3-4 ft. oc	Shrubs 10-30% Cover 3-4 ft. oc
	Groundcover openings up to 20%	Groundcover openings up to 40%

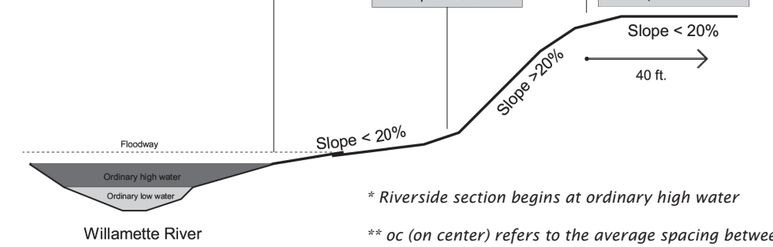

** Riverside section begins at ordinary high water*

*** oc (on center) refers to the average spacing between plants. Plant spacing can be doubled if irrigation is provided for two years*

**** Permanent Seeding shall be a native grass and forbs seed mixture*

REGISTERED
0513
Digitally Signed 2026.06.04 10:45:50-07'00'
KRISTINA M. KOLTAVARY
OREGON
11/08/02
LANDSCAPE ARCHITECT
EXPIRES 11/30/2026

DOWL WWW.DOWL.COM

OREGON DEPARTMENT OF TRANSPORTATION

OR22: CENTER ST BRIDGE (PHASE 1)
WILLAMINA-SALEM HIGHWAY
MARION & POLK COUNTIES

Designer: Carson Butler
Reviewer: Bob Goodrich, PE
Drafter: Carson Butler
Checker: Kristina Koltavary, PLA

LANDSCAPE DETAILS & NOTES

SHEET NO. FA10

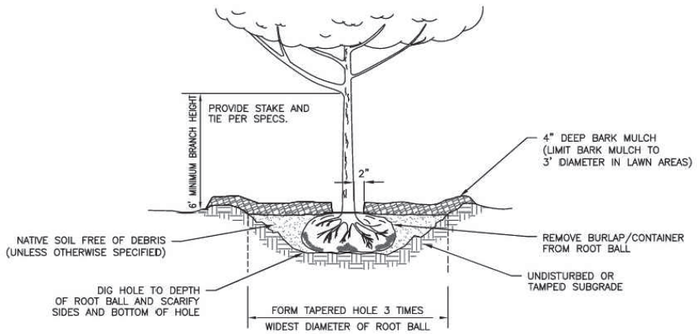

TREE PLANTING DETAIL
NOT TO SCALE

NOTE:
FORM A 3' DIAMETER SAUCER OR DEPRESSED AREA AROUND TRUNK. UNDER NO CONDITIONS SHOULD FILL OR MULCH BE PLACED IN CONTACT WITH TRUNK OR TOP OF BALL BE EXPOSED

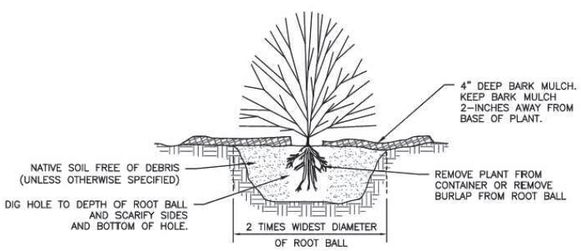

SHRUB AND GROUND COVER PLANTING DETAIL
NOT TO SCALE

NOTE:
FORM A 3' DIAMETER SAUCER OR DEPRESSED AREA AROUND TRUNK. UNDER NO CONDITIONS SHOULD FILL OR MULCH BE PLACED IN CONTACT WITH TRUNK OR TOP OF BALL BE EXPOSED

CITY OF SALEM
DEPARTMENT OF PUBLIC WORKS
STANDARD PLAN
TREE-SHRUB PLANTING DETAIL

CHANGES:
CHANGED NOTE ABOUT PLANTING HOLE DIAMETER.
DELETED NOTE ABOUT POOR DRAINAGE. ADD 2" SPACE BETWEEN PLANT AND BARK MULCH.
BARK MULCH DEPTH INCREASED TO 4", CHANGE "PLANTING MIXTURE" TO "NATIVE SOIL".

APPROVED	CITY ENGINEER	5/5/2017 DATE	DRAWN BY	ALT	11/2016	**NO.803**
			CHECKED BY	KLR	11/2016	

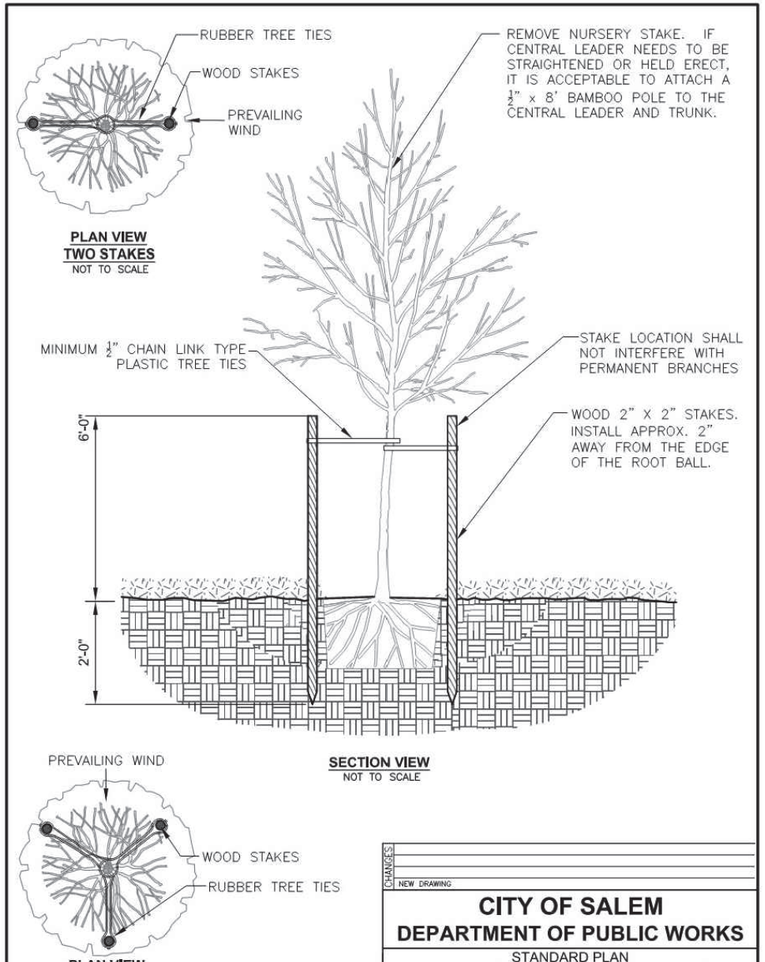

CHANGES:
NEW DRAWING

CITY OF SALEM
DEPARTMENT OF PUBLIC WORKS
STANDARD PLAN
TREE STAKING - DOUGLAS FIR
TWO STAKES AND THREE STAKES

APPROVED	CITY ENGINEER	5/5/2017 DATE	DRAWN BY	ALT	10/2016	**NO.812**
			CHECKED BY	KLR	10/2016	

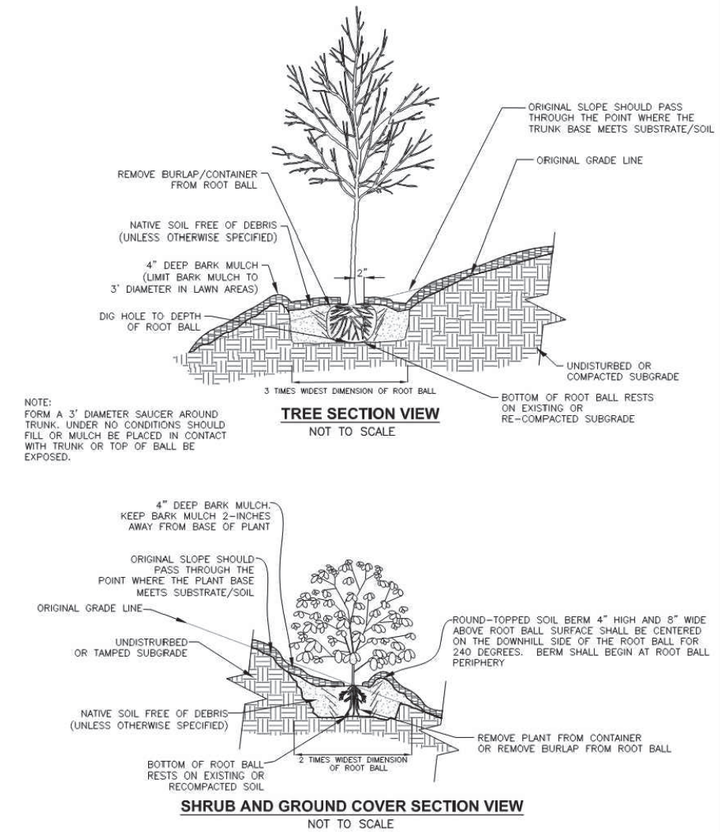

NOTES:
1. SHRUBS SHALL BE OF QUALITY AS PRESCRIBED IN THE SPECIFICATIONS.
2. SEE SPECIFICATIONS FOR FURTHER REQUIREMENTS RELATED TO THIS DETAIL.

CHANGES:
NEW DRAWING

CITY OF SALEM
DEPARTMENT OF PUBLIC WORKS
STANDARD PLAN
TREE AND SHRUB PLANTING DETAIL ON SLOPE
5% (20:1) TO 50% (2:1)

APPROVED	CITY ENGINEER	5/5/2017 DATE	DRAWN BY	ALT	11/2016	**NO.809**
			CHECKED BY	KLR	11/2016	

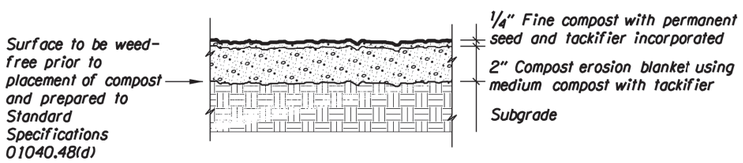

Include all incidental disturbed roadside areas beyond those indicated with permanent seed mix.

COMPOST BLANKET FOR PERMANENT SEEDING AREAS
Section *NTS*

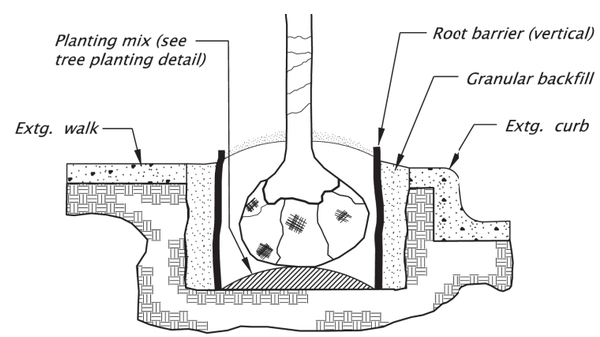

ROOT BARRIER AT PARKING LOT TREES
Section *NTS*

REGISTERED
0513
Digitally Signed 2026.06.24 15:39:35-07'00'
KRISTINA M. KOLTAVARY
OREGON
11/08/02
LANDSCAPE ARCHITECT
EXPIRES 11/30/2026

DOWL WWW.DOWL.COM

OREGON DEPARTMENT OF TRANSPORTATION

OR22: CENTER ST BRIDGE (PHASE 1)
WILLAMINA-SALEM HIGHWAY
MARION & POLK COUNTIES

Designer: Carson Butler
Drafter: Carson Butler
Reviewer: Bob Goodrich, PE
Checker: Kristina Koltavary, PLA

LANDSCAPE DETAILS & NOTES

SHEET NO. FA11

FINAL ELECTRONIC DOCUMENT AVAILABLE UPON REQUEST

59V-051

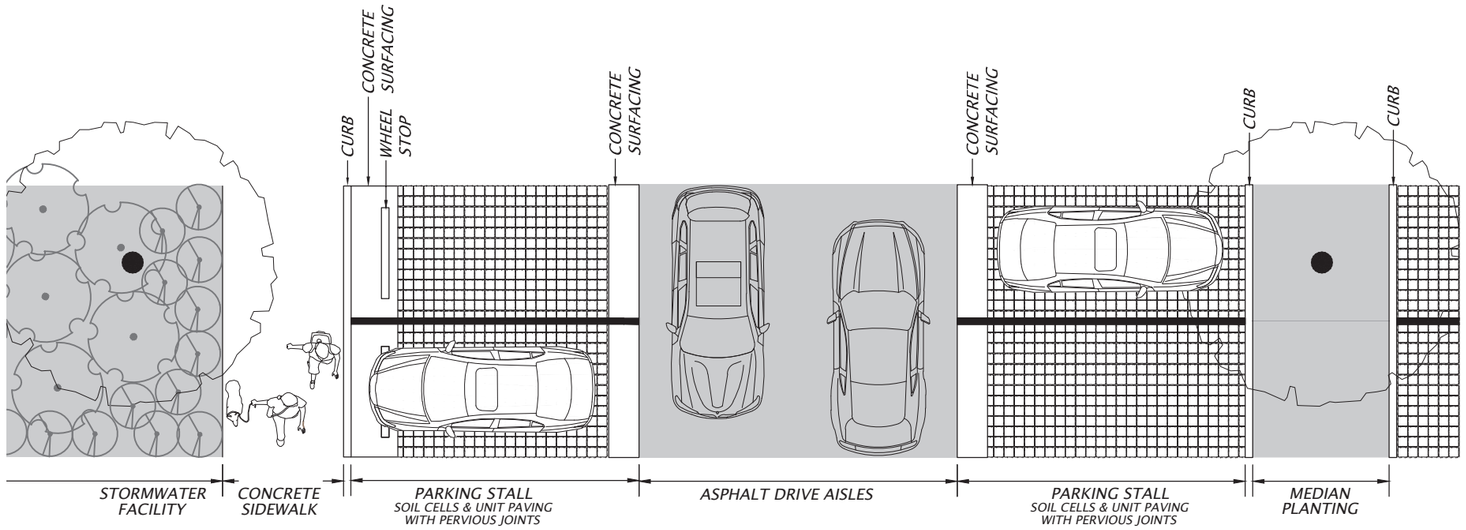

SOIL CELLS AT PARKING LOT TREE PLANTING
Plan Enlargement

NTS

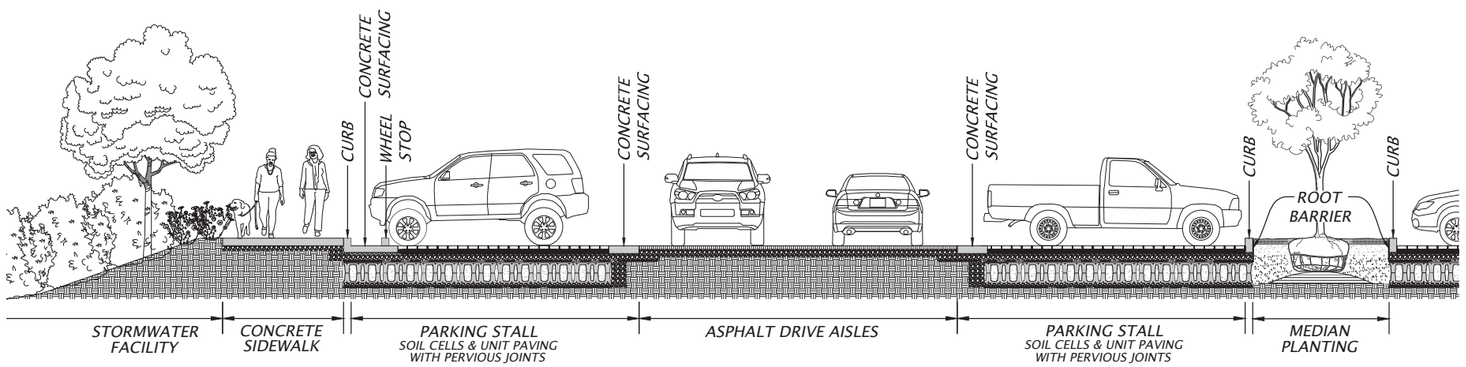

SOIL CELLS AT PARKING LOT TREE PLANTING
Section | Elevation

NTS

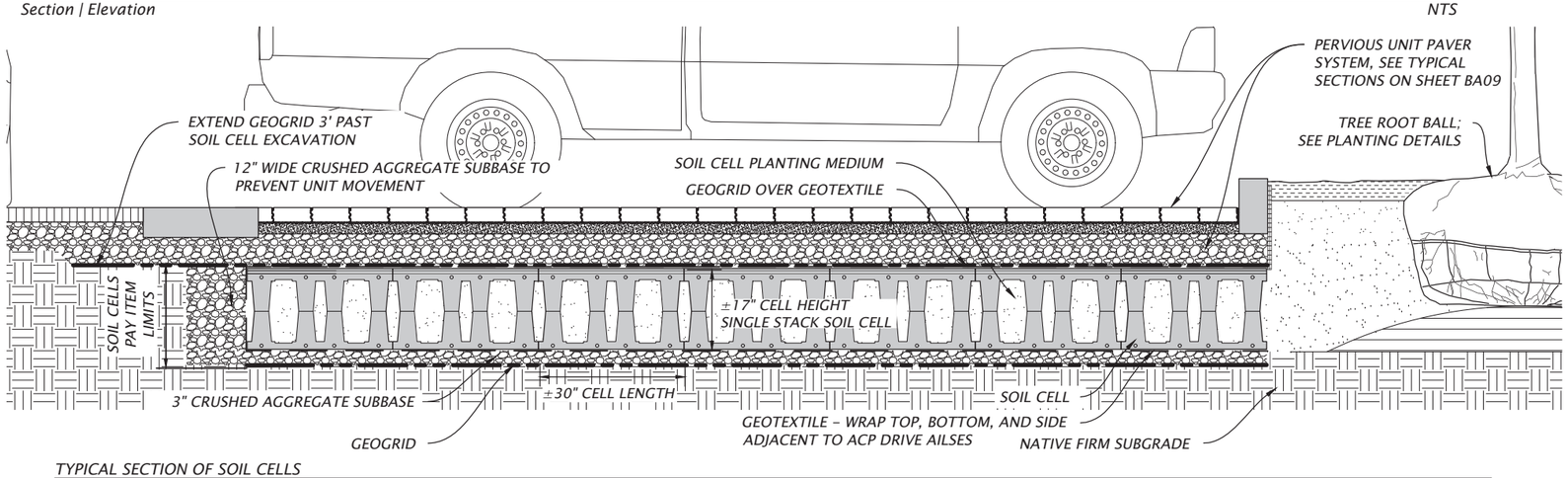

TYPICAL SECTION OF SOIL CELLS
Section | Elevation

NTS

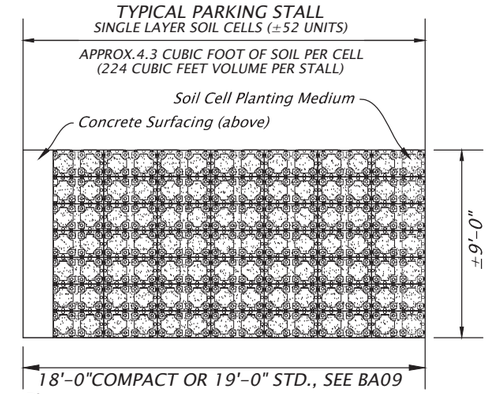

Plan

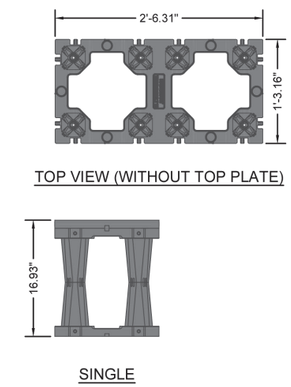

TYPICAL MODULE DIMENSIONS
Plan | Section

NTS

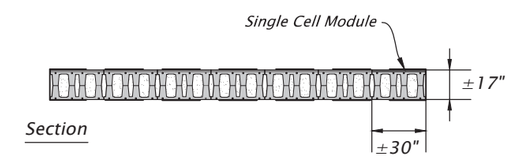

Section

TYPICAL SOIL CELL MODULES & SOIL STORAGE VOLUMES
Plan | Section

NTS

REGISTERED
0513
Digitally Signed 2026.06.24 15:44:33-07'00'
KRISTINA M. KOLTAVARY
OREGON
11/08/02
LANDSCAPE ARCHITECT
EXPIRES 11/30/2026

DOWL WWW.DOWL.COM

OREGON DEPARTMENT OF TRANSPORTATION

OR22: CENTER ST BRIDGE (PHASE 1)
WILLAMINA-SALEM HIGHWAY
MARION & POLK COUNTIES

Designer: Wayne Iazzetti, PLA
Reviewer: Bob Goodrich, PE
Drafter: Wayne Iazzetti, PLA
Checker: Kristina Koltavary, PLA

LANDSCAPE DETAILS & NOTES

SHEET NO. FA12

FINAL ELECTRONIC DOCUMENT AVAILABLE UPON REQUEST

59V-051

Sec. 22, T. 07 S., R. 03 W., W.M.
City of Salem

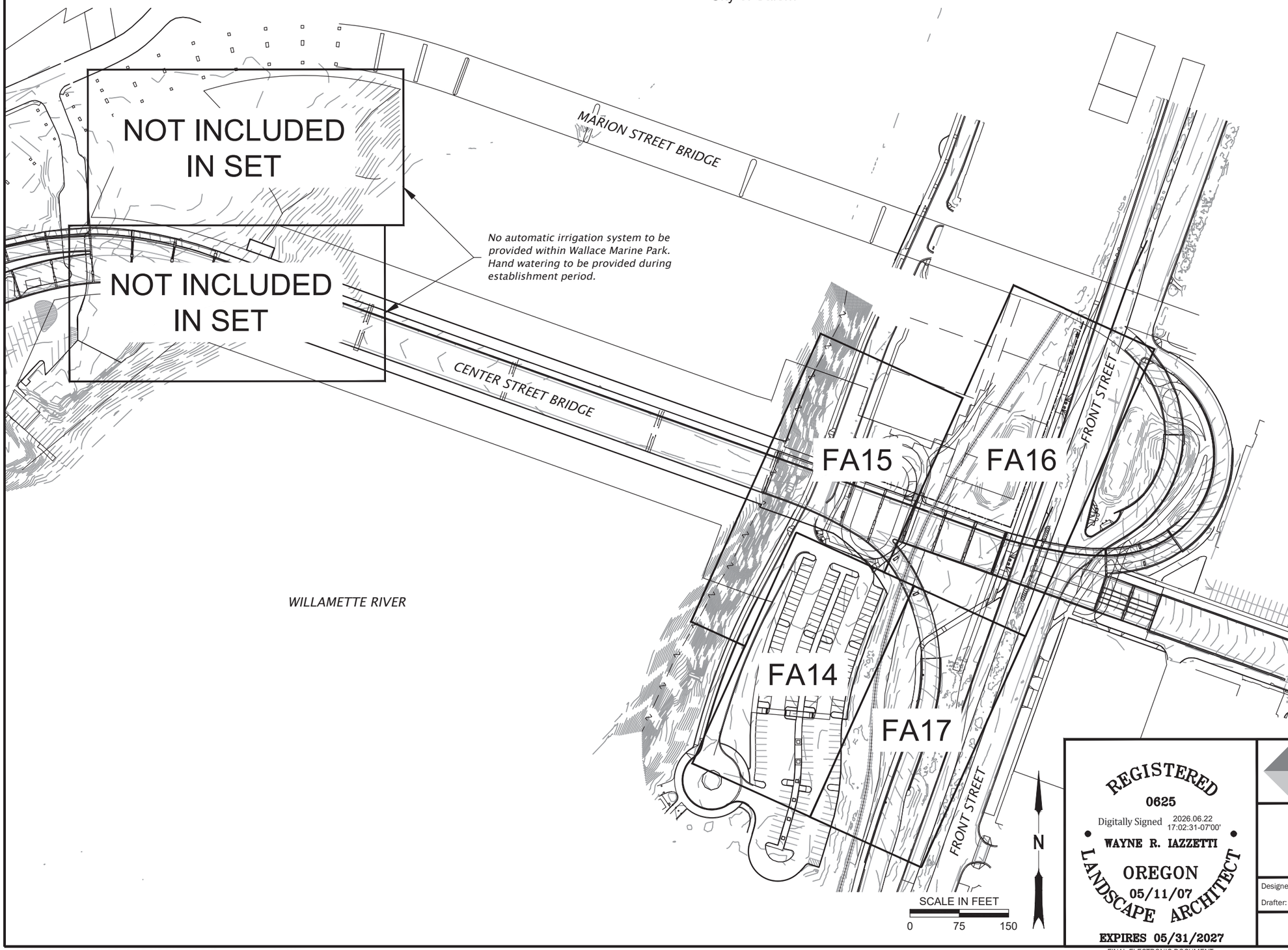

IRRIGATION SHEETS:

FA13 – IRRIGATION PLAN – SHEET KEY

FA14 – IRRIGATION PLAN – RIVERFRONT PARK SOUTH

FA15 – IRRIGATION PLAN – RIVERFRONT PARK NORTH

FA16 – IRRIGATION PLAN – FRONT STREET NORTH

FA17 – IRRIGATION PLAN – FRONT STREET SOUTH

FA18 – IRRIGATION SCHEDULE & NOTES

FA19 – IRRIGATION DETAILS & NOTES

REGISTERED
0625
Digitally Signed 2026.06.22 17:02:31-07'00'
WAYNE R. IAZZETTI
OREGON
05/11/07
LANDSCAPE ARCHITECT
EXPIRES 05/31/2027

DOWL WWW.DOWL.COM

OREGON DEPARTMENT OF TRANSPORTATION

OR22: CENTER ST BRIDGE (PHASE 1)
WILLAMINA-SALEM HIGHWAY
MARION & POLK COUNTIES

Designer: Wayne Iazzetti, PLA
Reviewer: Bob Goodrich, PE
Drafter: Carson Butler
Checker: Kristina Koltavary, PLA

IRRIGATION PLAN - SHEET KEY

SHEET NO. FA13

FINAL ELECTRONIC DOCUMENT AVAILABLE UPON REQUEST

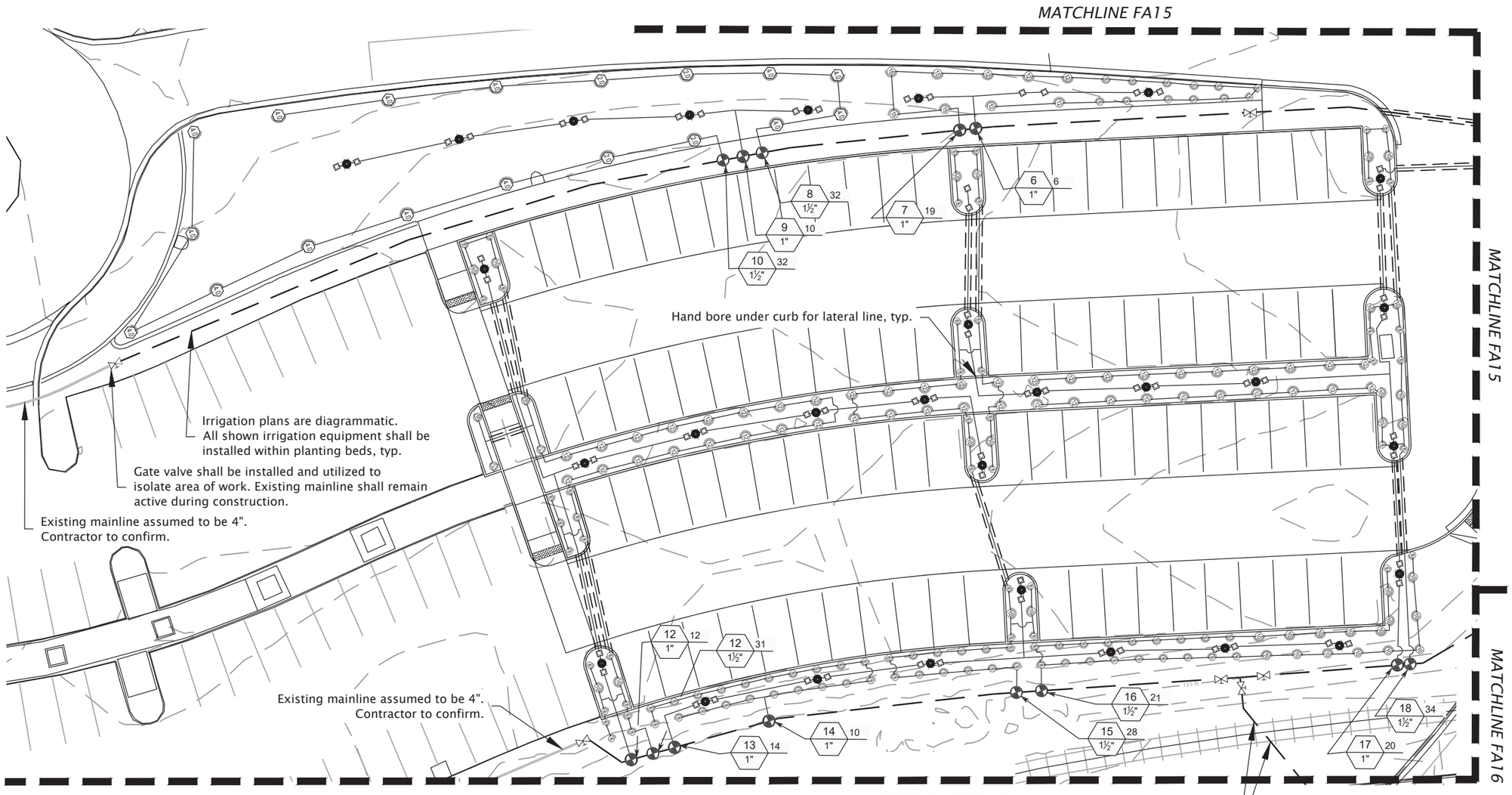

NOTES:

1. *See FA18-19 for irrigation legend and details.*

N

SCALE IN FEET
0 15 30

REGISTERED
0625
Digitally Signed 2026.02.11 09:27:28-08'00'
WAYNE R. IAZZETTI
OREGON
05/11/07
LANDSCAPE ARCHITECT
EXPIRES 05/31/2026

DOWL WWW.DOWL.COM

OREGON DEPARTMENT OF TRANSPORTATION

OR22: CENTER ST BRIDGE (PHASE 1)
WILLAMINA-SALEM HIGHWAY
MARION & POLK COUNTIES

Designer: Jay Battleson, PLA
Reviewer: Bob Goodrich, PE
Drafter: Grace Youngblood, LD
Checker: Wayne Iazetti, PLA

IRRIGATION PLAN - RIVERFRONT PARK SOUTH

SHEET NO. FA14

FINAL ELECTRONIC DOCUMENT
AVAILABLE UPON REQUEST

59V-051

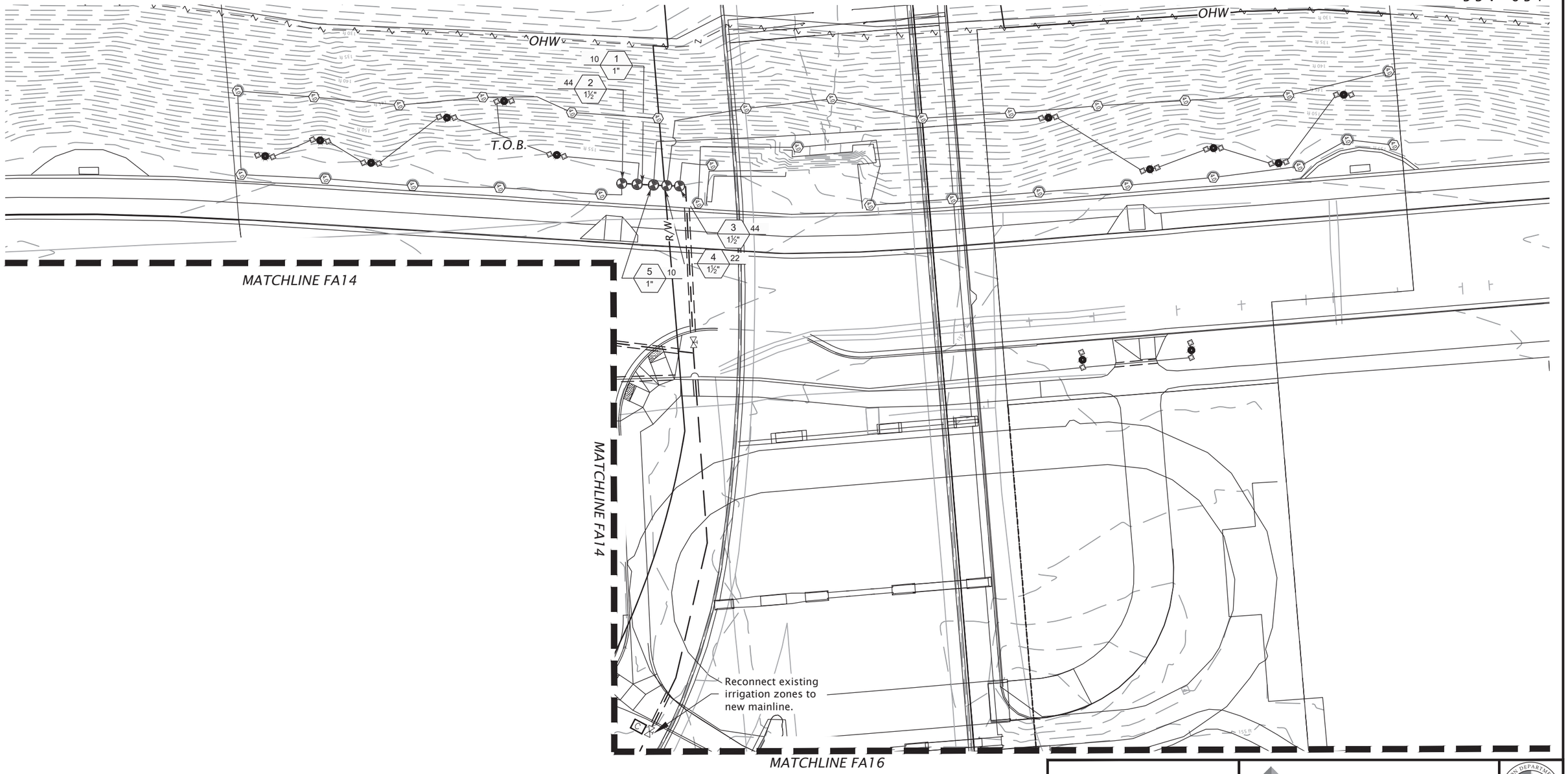

NOTES:
1. See FA18-19 for irrigation legend and details.

SCALE IN FEET
0 15 30

REGISTERED
0625
Digitally Signed 2026.06.22 16:59:34-07'00'
WAYNE R. IAZZETTI
OREGON
05/11/07
LANDSCAPE ARCHITECT
EXPIRES 05/31/2027

DOWL WWW.DOWL.COM

OR22: CENTER ST BRIDGE (PHASE 1)
WILLAMINA-SALEM HIGHWAY
MARION & POLK COUNTIES

Designer: Wayne Iazzetti, PLA
Reviewer: Bob Goodrich, PE
Drafter: Carson Butler
Checker: Kristina Koltavary, PLA

IRRIGATION PLAN - RIVERFRONT PARK NORTH

SHEET NO. FA15

FINAL ELECTRONIC DOCUMENT AVAILABLE UPON REQUEST

59V-051

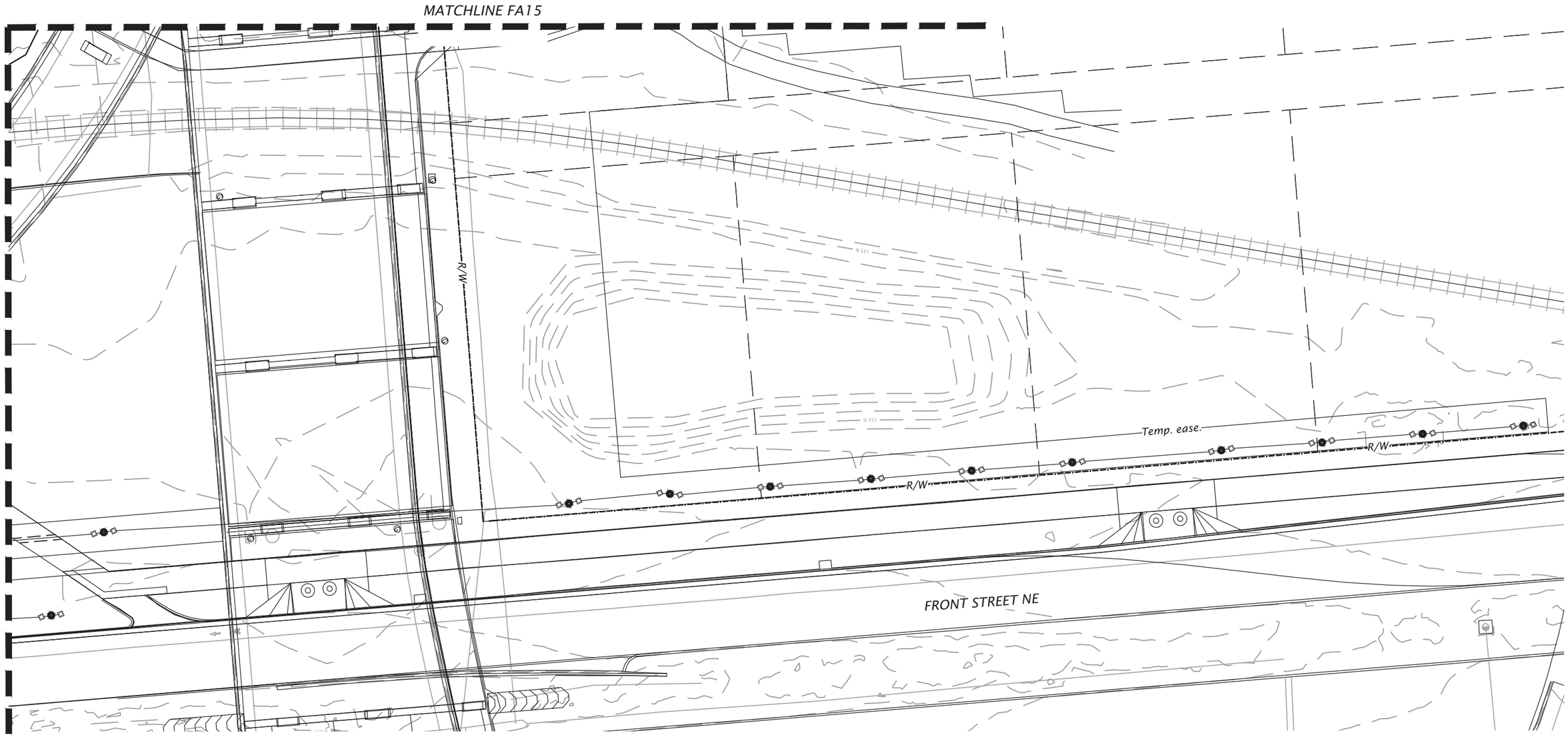

NOTES:
1. See FA18-19 for irrigation legend and details.

SCALE IN FEET
0 15 30

REGISTERED
0625
Digitally Signed 2026.06.22 17:00:02-07'00'
WAYNE R. IAZZETTI
OREGON
05/11/07
LANDSCAPE ARCHITECT
EXPIRES 05/31/2027

DOWL WWW.DOWL.COM

OR22: CENTER ST BRIDGE (PHASE 1)
WILLAMINA-SALEM HIGHWAY
MARION & POLK COUNTIES

Designer: Wayne Iazzetti, PLA
Reviewer: Bob Goodrich, PE
Drafter: Carson Butler
Checker: Kristina Koltavary, PLA

IRRIGATION PLAN - FRONT STREET NORTH

SHEET NO. FA16

FINAL ELECTRONIC DOCUMENT AVAILABLE UPON REQUEST

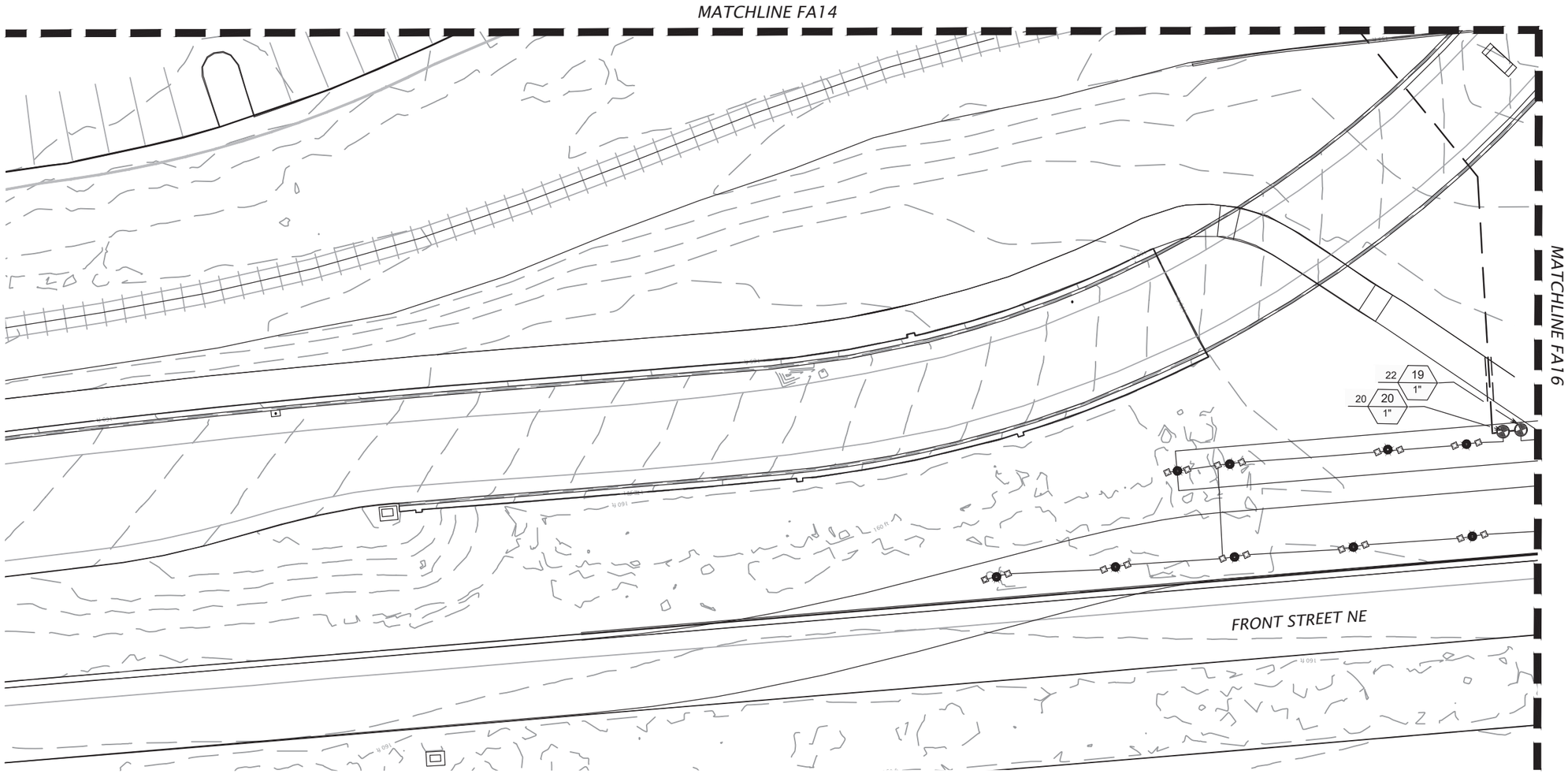

NOTES:
1. See FA18-19 for irrigation legend and details.

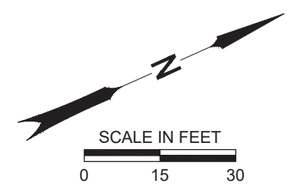

REGISTERED
0625
Digitally Signed 2026.06.22 17:01:23-07'00'
WAYNE R. IAZZETTI
OREGON
05/11/07
LANDSCAPE ARCHITECT
EXPIRES 05/31/2027
FINAL ELECTRONIC DOCUMENT AVAILABLE UPON REQUEST

DOWL WWW.DOWL.COM

OREGON DEPARTMENT OF TRANSPORTATION

OR22: CENTER ST BRIDGE (PHASE 1)
WILLAMINA-SALEM HIGHWAY
MARION & POLK COUNTIES

Designer: Wayne Iazzetti, PLA
Reviewer: Bob Goodrich, PE
Drafter: Carson Butler
Checker: Kristina Koltavary, PLA

IRRIGATION PLAN - FRONT STREET SOUTH

SHEET NO. FA17

SYMBOL	MANUFACTURER/MODEL/DESCRIPTION	QTY	PSI
EST LCS RCS CST SST	Rain Bird RD-06-S-P30-F-U 15 Strip Series 6in. Pop-Up, with 30 psi in-stem pressure regulation, Seal-A-Matic check valve, and Flow-Shield Technology. 1/2in. NPT female threaded inlet.	4	30
Q T H F	Rain Bird RD-06-S-P30-F-U U8 Series 6in. Pop-Up, with 30 psi in-stem pressure regulation, Seal-A-Matic check valve, and Flow-Shield Technology. 1/2in. NPT female threaded inlet.	108	30
Q T H F	Rain Bird RD-06-S-P30-F-U U10 Series 6in. Pop-Up, with 30 psi in-stem pressure regulation, Seal-A-Matic check valve, and Flow-Shield Technology. 1/2in. NPT female threaded inlet.	33	30
Q T H TT TQ F	Rain Bird RD-06-S-P30-F-U U12 Series 6in. Pop-Up, with 30 psi in-stem pressure regulation, Seal-A-Matic check valve, and Flow-Shield Technology. 1/2in. NPT female threaded inlet.	51	30
Q T H TT TQ F	Rain Bird RD-06-S-P30-F-U U15 Series 6in. Pop-Up, with 30 psi in-stem pressure regulation, Seal-A-Matic check valve, and Flow-Shield Technology. 1/2in. NPT female threaded inlet.	4	30
Root Watering System, typ. Tree Trunk 1401 1402 1404	Rain Bird RWS-B-C-P 1400 Series Root Watering System with 4.0in. diameter x 36.0in. long with locking grate, semi-rigid mesh tube. Check Valve and Purple Grate. Rain Bird bubbler option as indicated: 1401 0.25 GPM, 1402 0.5 GPM, 1404 1.0 GPM, 1408 2.0 GPM.	128	30

SYMBOL	MANUFACTURER/MODEL/DESCRIPTION	QTY	PSI	GPM
2.0	Rain Bird 5006-PL-PC-SAM-R 2.0 Shrub Rotor, 6in. Pop-Up with Plastic Riser. Adjustable to Full Circle. Standard Angle Nozzle, In-Stem Pressure Regulator, and Flow Shut-Off Device. With Seal-A-Matic Check Valve.	4	35	1.81
4.0	Rain Bird 5006-PL-PC-SAM-R 4.0 Shrub Rotor, 6in. Pop-Up with Plastic Riser. Adjustable to Full Circle. Standard Angle Nozzle, In-Stem Pressure Regulator, and Flow Shut-Off Device. With Seal-A-Matic Check Valve.	44	35	3.5

SYMBOL	MANUFACTURER/MODEL/DESCRIPTION	QTY
	Rain Bird PEB 1" 1in., 1-1/2in., 2in. Plastic Industrial Remote Control Valve. Low Flow Operating Capability, Globe Configuration.	11
	Rain Bird PEB 1-1/2" 1in., 1-1/2in., 2in. Plastic Industrial Remote Control Valve. Low Flow Operating Capability, Globe Configuration.	9
	Nibco T-113-K Class 125 bronze gate shut off valve with cross handle, same size as mainline pipe diameter at valve location. Size Range - 1/4in. - 3in.	7
C	Baseline BL-3200X-R36 Irrigation Controller 48 station controller to replace existing controller. Utilize existing strong box and associated operational requirements. Coordinate work with City of Salem. City of Salem Contact info to: City of Salem, Parks and Recreation Salemparks@cityofsalem.net 503-588-6336	1
	Irrigation Lateral Line: PVC Class 200 SDR 21	5,189 lf
	Irrigation Mainline: PVC Schedule 40, Match Existing 4"	990.2 lf
	Pipe Sleeve: PVC Schedule 40	451.8 lf

Valve Callout

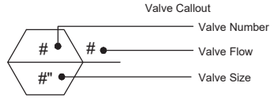

IRRIGATION NOTES

1. IRRIGATION PLAN IS DIAGRAMMATIC. IRRIGATION HEADS, DRIP AREAS AND OTHER WATERING DEVICES ARE GRAPHICALLY SHOWN IN THE DESIRED LOCATIONS; PIPE AND OTHER SUPPORT EQUIPMENT IS SHOWN IN PAVED AREAS FOR GRAPHIC CLARITY. INSTALL ALL IRRIGATION EQUIPMENT IN LANDSCAPE AREAS UNLESS OTHERWISE INDICATED. PLACE PIPE AND CONTROL WIRE IN COMMON TRENCHES WHERE POSSIBLE.
2. VERIFY STATIC PRESSURE AT THE POINT-OF-CONNECTION AT THE COMMENCEMENT OF CONTRACT. VERIFY ACTUAL FIELD P.S.I PRIOR TO COMMENCING IRRIGATION WORK. IRRIGATION SYSTEM IS DESIGNED FOR A MINIMUM OF 50 PSI AT EACH VALVE. NOTIFY GENERAL CONTRACTOR IF ACTUAL FIELD DATA DIFFERS.
3. VERIFY AND COORDINATE WORK AROUND ALL UNDERGROUND UTILITIES BEFORE EXCAVATION.
4. VERIFY THAT CONDITIONS ARE SUITABLE TO PROVIDE A COMPLETE WORKING SYSTEM. DO NOT PROCEED IF CONDITIONS ARE PRESENT THAT ARE DETRIMENTAL TO THE EQUIPMENT OR WILL NOT SUPPORT A HEALTHY GROWING ENVIRONMENT FOR PLANTS.
5. COORDINATE WITH OTHER SUBCONTRACTORS AND TRADES TO ENSURE PROTECTION OF THE SYSTEM INCLUDING BUT NOT LIMITED TO, WATER SERVICE, WATER METER, BACKFLOW DEVICES, CONTROLLER LOCATION, CONTROLLER ELECTRICAL SERVICE, AND WIRE CONDUITS FOR CONTROLLER.
6. ANY NUMERICAL QUANTITIES SHOWN ARE FOR CONTRACTOR CONVENIENCE; QUANTITIES SHALL BE BASED ON THE GRAPHIC REPRESENTATION ON THE PLANS.
7. INSTALL IRRIGATION SYSTEM IN COMPLIANCE WITH ALL STATE AND LOCAL CODES.
8. LOCATE ALL VALVE BOXES TO ALLOW EASE OF ACCESS FOR MAINTENANCE, CONSIDERING PLANT MATERIAL AND OBSTRUCTIONS. SIZE BOXES TO ACCOMMODATE COMPLETE VALVE ASSEMBLY INCLUDING WIRE, ISOLATION VALVES, AND UNIONS. SET VALVE BOXES IN A UNIFORM MANNER, SQUARE TO ADJACENT PAVING. ALIGN AND EVENLY SPACE GROUPS OF BOXES IN A UNIFORM AND ORDERLY FASHION. ONLY ONE VALVE PER BOX. BOX LOCATIONS SHALL BE STAKED IN FIELD AND APPROVED BY ENGINEER PRIOR TO INSTALLATION.
9. ADJUST THE ENTIRE SYSTEM TO PROVIDE UNIFORM EVEN COVERAGE.
10. INSTALL ALL IRRIGATION PIPE AND WIRE IN SCHEDULE 40 PVC SLEEVES BELOW ALL PAVED SURFACES OR STRUCTURES SUCH AS WALLS, STAIRS, AND OTHER IMPROVEMENTS. SIZE OF SLEEVES SHALL BE MINIMUM 6" WITH 24" COVER, MINIMUM. COORDINATE PLACEMENT OF SLEEVES WITH OTHER TRADES.
11. SIZE PIPE TO ENSURE THAT MAXIMUM WATER VELOCITY DOES NOT EXCEED 5 FT./SEC
12. CONTRACTOR SHALL ISOLATE CITY PARK IRRIGATION SYSTEMS AFFECTED BY THE PROJECT TO ENSURE THE REMAINING SYSTEMS IN EACH PARK REMAIN OPERATIONAL THROUGHOUT CONSTRUCTION.

PVC SCHEDULE 200 - PIPE SIZING CHART

GPM	PIPE SIZE
0-10	3/4"
11-16	1"
17-35	1.5"
36-55	2"
56-80	2.5"
81-120	3"

REGISTERED 0625
Digitally Signed 2026.06.22 17:00:27-07'00'
WAYNE R. IAZZETTI
OREGON 05/11/07
LANDSCAPE ARCHITECT
EXPIRES 05/31/2027

DOWL WWW.DOWL.COM

OR22: CENTER ST BRIDGE (PHASE 1)
WILLAMINA-SALEM HIGHWAY
MARION & POLK COUNTIES

Designer: Wayne Iazzetti, PLA
Reviewer: Bob Goodrich, PE
Drafter: Carson Butler
Checker: Kristina Koltavary, PLA

IRRIGATION SCHEDULE & NOTES

SHEET NO. FA18

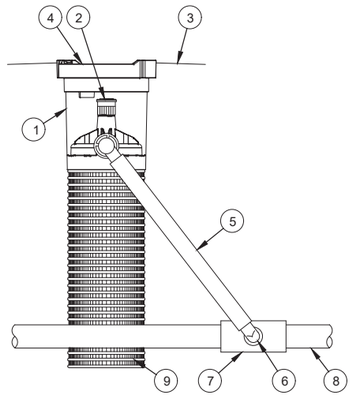

KEY NOTES:

1. Deep root watering system
2. Bubbler
3. Finish grade/top of mulch
4. 4" locking grate
5. 18"swing gate assembly
6. 1/2"male npt inlet
7. Pvc sch 40 tee or eel
8. Pvc or polyethylene lateral pipe
9. 4" wide x 36" long rigid basket weave canister

NOTES:

1. Install product so that the grate is even with finish grade or top of mulch.
2. Include 34" length sand sock to cover mesh basket area.
3. Add 3/4" gravel under and around the unit.
4. Once RWS has been installed fill the basket with pea gravel before locking lid.

1 FA21 *Tree Root Watering System*
Not to Scale

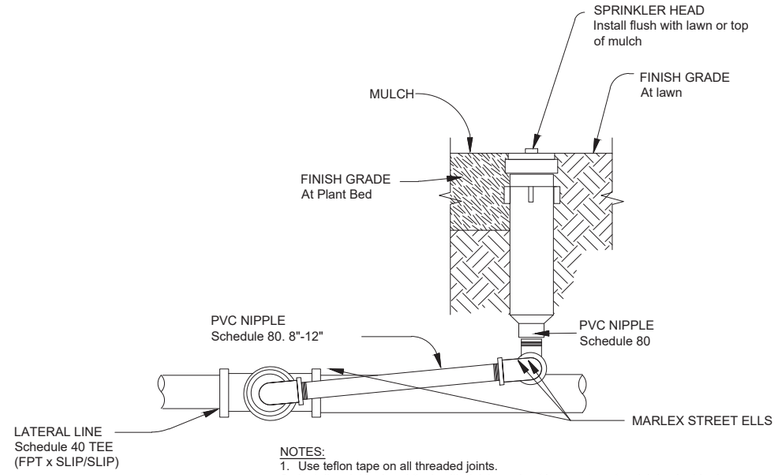

NOTES:

1. Use teflon tape on all threaded joints.
2. Install sprinkler head flush with finish grade of lawn or top of mulch in plant beds
3. Install sprinkler head 3 inches from pavement or curbs

2 FA21 *Rotor Head Swing Riser Assembly*
Not to Scale

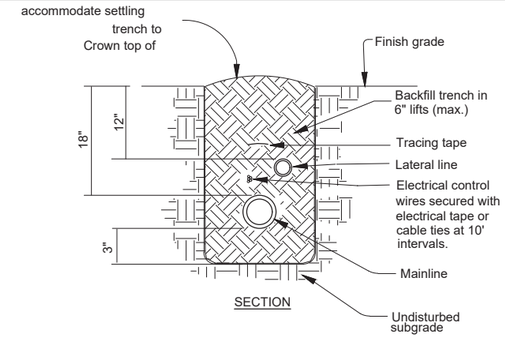

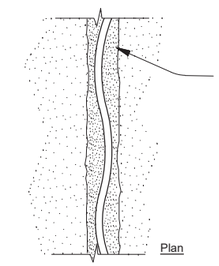

Snake irrigation pipe in trench to allow for expansion & contraction

NOTES:

Backfill material shall be clean & fraiable, free of rocks and foreign material 2"larger

3 FA21 *Trenching & Backfill*
Not to Scale

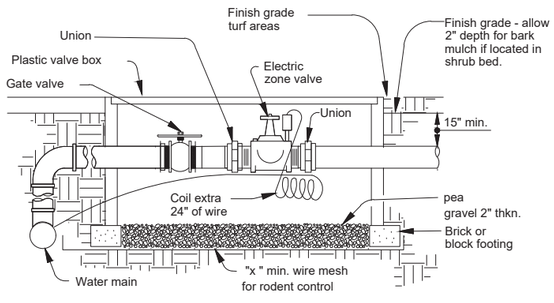

4 FA21 *Electric Zone Valve*
Not to Scale

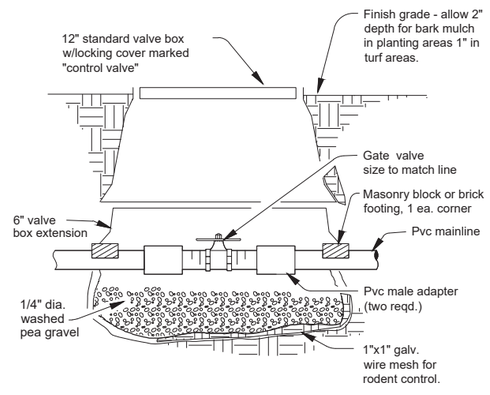

5 FA21 *Gate Valve & Box*
Not to Scale

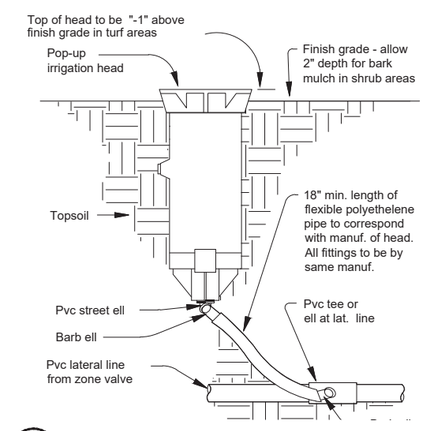

6 FA21 *Sprinkler Head and Joints*
Not to Scale

REGISTERED
0625
Digitally Signed 2026.06.22 17:01:54-07'00'
WAYNE R. IAZZETTI
OREGON
05/11/07
LANDSCAPE ARCHITECT
EXPIRES 05/31/2027

DOWL WWW.DOWL.COM

OREGON DEPARTMENT OF TRANSPORTATION

OR22: CENTER ST BRIDGE (PHASE 1)
WILLAMINA-SALEM HIGHWAY
MARION & POLK COUNTIES

Designer: Wayne Iazzetti, PLA
Reviewer: Bob Goodrich, PE
Drafter: Carson Butler
Checker: Kristina Koltavary, PLA

IRRIGATION DETAILS & NOTES

SHEET NO. FA19

59V-051

EROSION AND SEDIMENT CONTROL GENERAL NOTES

The construction, adjustment, maintenance, and upgrading of these Erosion and Sediment Control measures is the responsibility of the contractor for the duration of the project to comply with Section 00280 of the Oregon Standard Specifications for construction and the NPDES 1200-CA permit.

Erosion and Sediment Control measures shown on this plan are for anticipated site conditions. Adjust or upgrade these measures for unexpected storm events to ensure that sediment and sediment-laden water does not leave the site.

Develop a revised plan of the Erosion and Sediment Control measures shown as required by Section 00280, Oregon Standard Specifications for Construction. Implement this plan for all clearing and grading activities and in segments applicable to each staging phase. Construct in such a manner so as to ensure that sediment and sediment-ladenwater does not enter the roadway or drainage system, or violate applicable water standards.

Install measures within the right-of-way unless directed otherwise.

Graphic symbols are approximate. Place Erosion Control measures as required or directed.

STANDARD DRAWINGS

- ■ *RD1000 Construction Entrances*
- ☐ *RD1005 Check Dams Type 1, 3 and 4*
- ☐ *RD1006 Check Dams Type 2 and 6*
- ■ *RD1010 Inlet Protection Type 2, 3, 6, 7 10 and 11*
- ■ *RD1015 Inlet Protection Type 4*
- ☐ *RD1030 Sediment Barrier Type 2, 3 and 4*
- ☐ *RD1031 Sediment Barrier Type 5 and 6*
- ■ *RD1032 Sediment Barrier Type 8*
- ☐ *RD1033 Sediment Barrier Type 9*
- ■ *RD1040 Sediment Fence*
- ☐ *RD1045 Temporary Slope Drain With Energy Dissipator*
- ☐ *RD1050 Temporary Scour Basin / Energy Dissipator*
- ☐ *RD1055 Slope and Channel Matting*
- ☐ *RD1060 Tire Wash Facility Type 1 and 2*
- ☐ *RD1065 Sediment Trap*
- ■ *RD1070 Concrete Truck Wash Out*

REGISTERED PROFESSIONAL ENGINEER
100246PE
Digitally Signed 2026.01.28 10:37:09-08'00'
OREGON
JULY 12, 2022
JASON BENJAMIN GALEAZZI

EXPIRES: 06/30/2027

FINAL ELECTRONIC DOCUMENT AVAILABLE UPON REQUEST

DOWL WWW.DOWL.COM

OREGON DEPARTMENT OF TRANSPORTATION

OR22: CENTER ST BRIDGE (PHASE 1) PROJECT
WILLAMINA-SALEM HIGHWAY
MARION & POLK COUNTIES

Designer: Jason Galeazzi | Reviewer: Bob Goodrich
Drafter: Steve Wolfer | Checker: Kyle Farnsworth

EROSION AND SEDIMENT CONTROL PLAN

SHEET NO. FB01

59V-051

Sec. 22, T. 7 S., R. 3 W., W.M.
(DEMOLITION, CLEARING, & EARTHWORK)

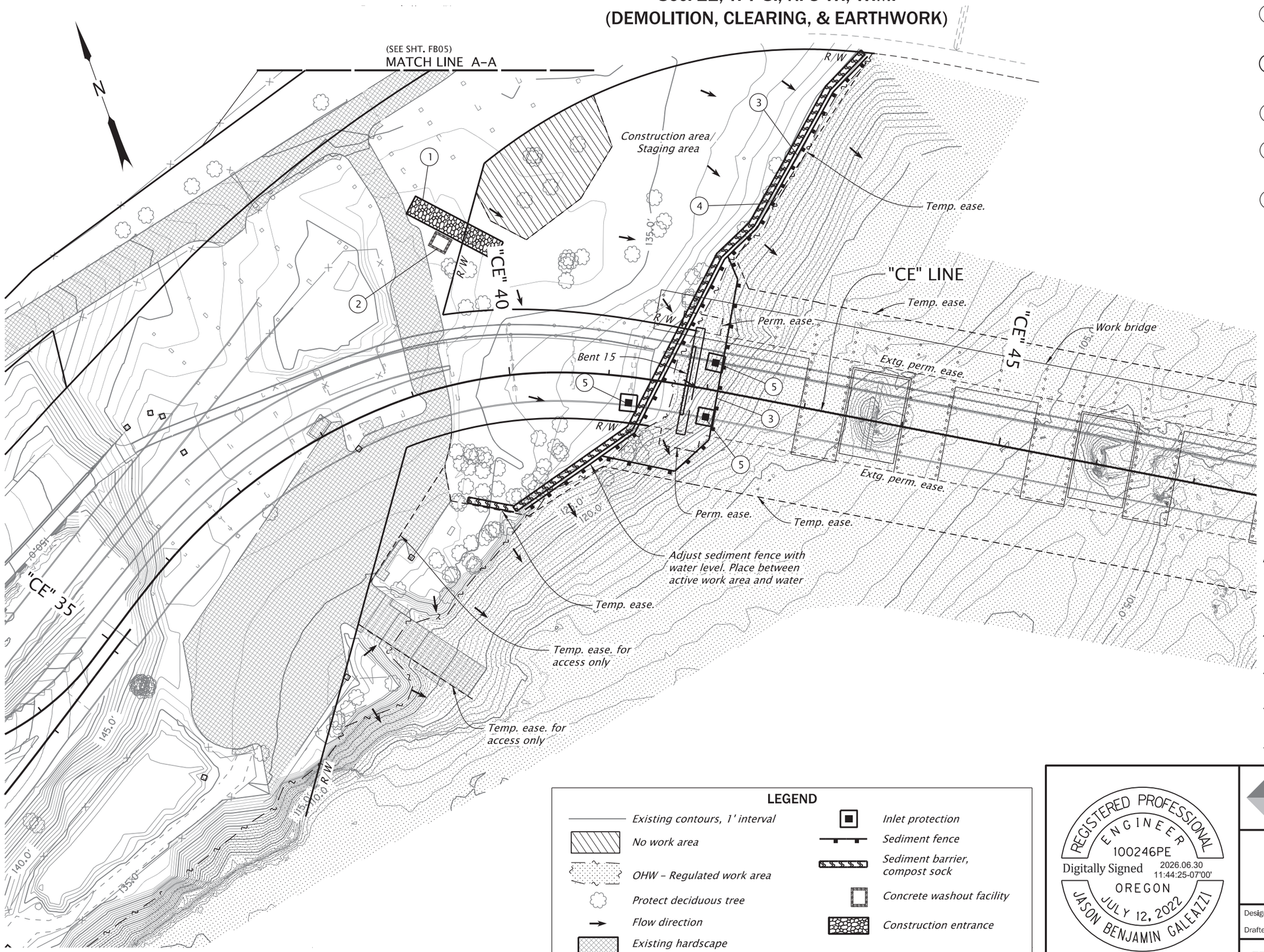

1. Const. construction entrance, type 1 - 1 each (See dwg. no. RD1000)
2. Const. concrete truck wash out facility - 1 each (See dwg. no. RD1070)
3. Const. sediment fence - 897 ft. (See dwg. no. RD1040)
4. Inst. sediment barrier type 8 - 640 ft. (See dwg. no. RD1032)
5. Const. inlet protection type 3 - 3 each (See dwg. no. RD1010)

NOTES:

1. Adjust erosion control measures as necessary to access Bent 15 and to accommodate construction of temporary work bridge. See sht. JA07 for work bridge plan.
2. Const. sediment fence around Bent 15 perimeter prior to starting any constructing work on structure.
3. Const. inlet protection type 3 on bridge deck prior to starting bridge superstructure work.
4. See shts. FB01 thru FB07 for tree protection and tree removal plan.
5. Hardscape bridge surfaces are not patterned.

LEGEND

- Existing contours, 1' interval
- No work area
- OHW - Regulated work area
- Protect deciduous tree
- Flow direction
- Existing hardscape
- Inlet protection
- Sediment fence
- Sediment barrier, compost sock
- Concrete washout facility
- Construction entrance

REGISTERED PROFESSIONAL ENGINEER
100246PE
Digitally Signed 2026.06.30 11:44:25-07'00'
OREGON
JULY 12, 2022
JASON BENJAMIN GALEAZZI

EXPIRES: 06/30/2027

FINAL ELECTRONIC DOCUMENT AVAILABLE UPON REQUEST

DOWL WWW.DOWL.COM

OREGON DEPARTMENT OF TRANSPORTATION

OR22: CENTER ST BRIDGE (PHASE 1) PROJECT
WILLAMINA-SALEM HIGHWAY
MARION & POLK COUNTIES

Designer: Jason Galeazzi | Reviewer: Bob Goodrich
Drafter: Steve Wolfer | Checker: Kyle Farnsworth

EROSION AND SEDIMENT CONTROL PLAN

SHEET NO. FB02

59V-051

Sec. 22, T. 7 S., R. 3 W., W.M.
(DEMOLITION, CLEARING, & EARTHWORK)

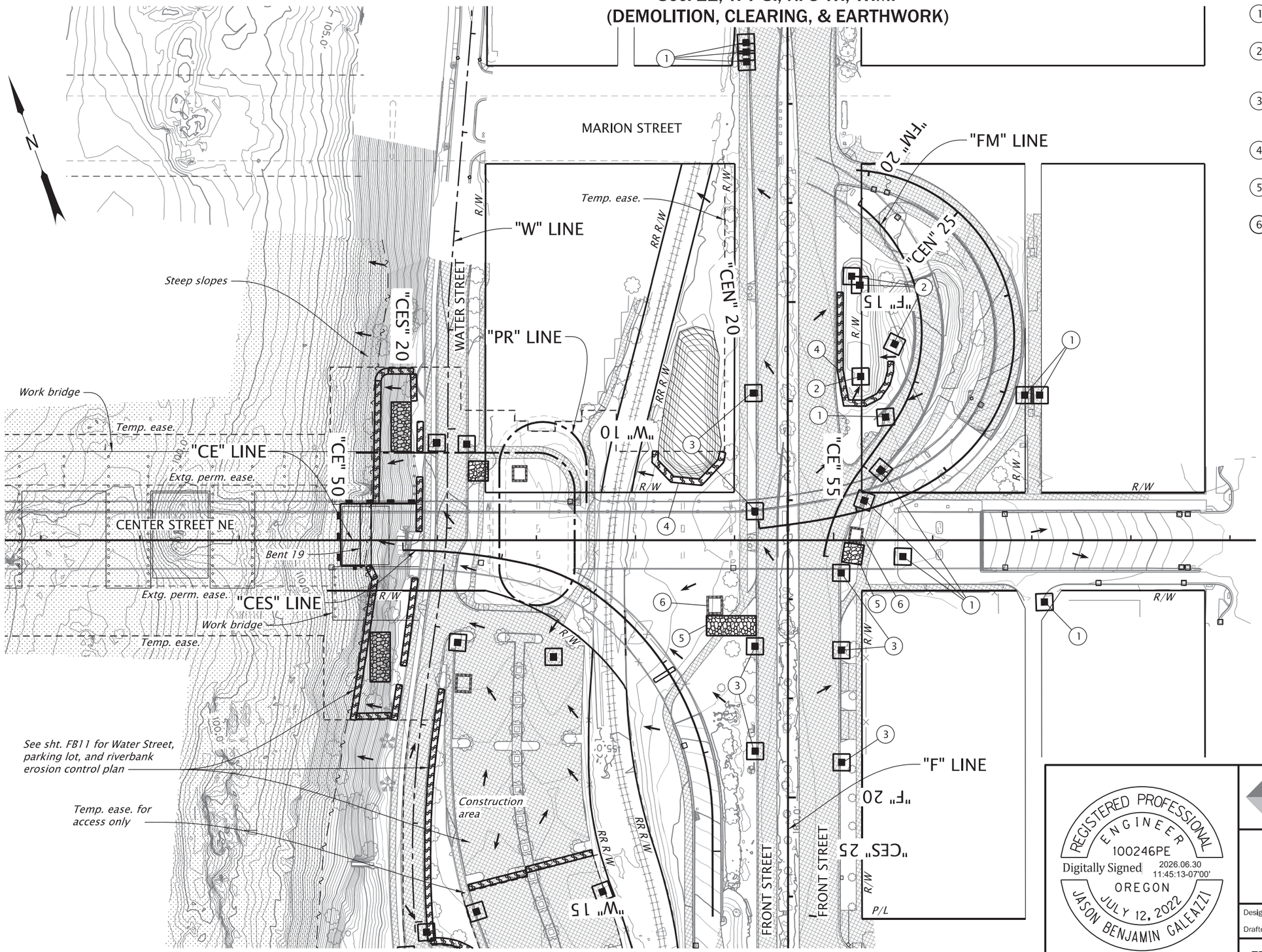

1. Const. inlet protection type 3 – 10 each
2. Const. inlet protection type 4 – biofilter bags – 4 each (See dwg. no. RD1015)
3. Const. inlet protection type 10 – 7 each (See dwg. no. RD1010)
4. Inst. sediment barrier type 8 – 288 ft.
5. Const. construction entrance, type 1 – 2 each
6. Const. concrete truck wash out facility – 2 each

NOTES:
1. See shts. FB01 thru FB07 for tree protection and tree removal plan.
2. Hardscape bridge surfaces are not patterned.

LEGEND

- Existing contours, 1' interval
- No work area
- OHW – Regulated work area
- Protect deciduous tree
- Inlet protection
- Flow direction
- Sediment barrier, compost sock
- Concrete washout facility
- Construction entrance
- Existing hardscape

REGISTERED PROFESSIONAL ENGINEER
100246PE
Digitally Signed 2026.06.30 11:45:13-07'00'
OREGON
JULY 12, 2022
JASON BENJAMIN GALEAZZI
EXPIRES: 06/30/2027

FINAL ELECTRONIC DOCUMENT AVAILABLE UPON REQUEST

DOWL WWW.DOWL.COM

OREGON DEPARTMENT OF TRANSPORTATION

OR22: CENTER ST BRIDGE (PHASE 1) PROJECT
WILLAMINA-SALEM HIGHWAY
MARION & POLK COUNTIES

Designer: Jason Galeazzi | Reviewer: Bob Goodrich
Drafter: Steve Wolfer | Checker: Kyle Farnsworth

EROSION AND SEDIMENT CONTROL PLAN

SHEET NO. FB03

59V-051

Sec. 22, T. 7 S., R. 3 W., W.M.
(DEMOLITION, CLEARING, & EARTHWORK)

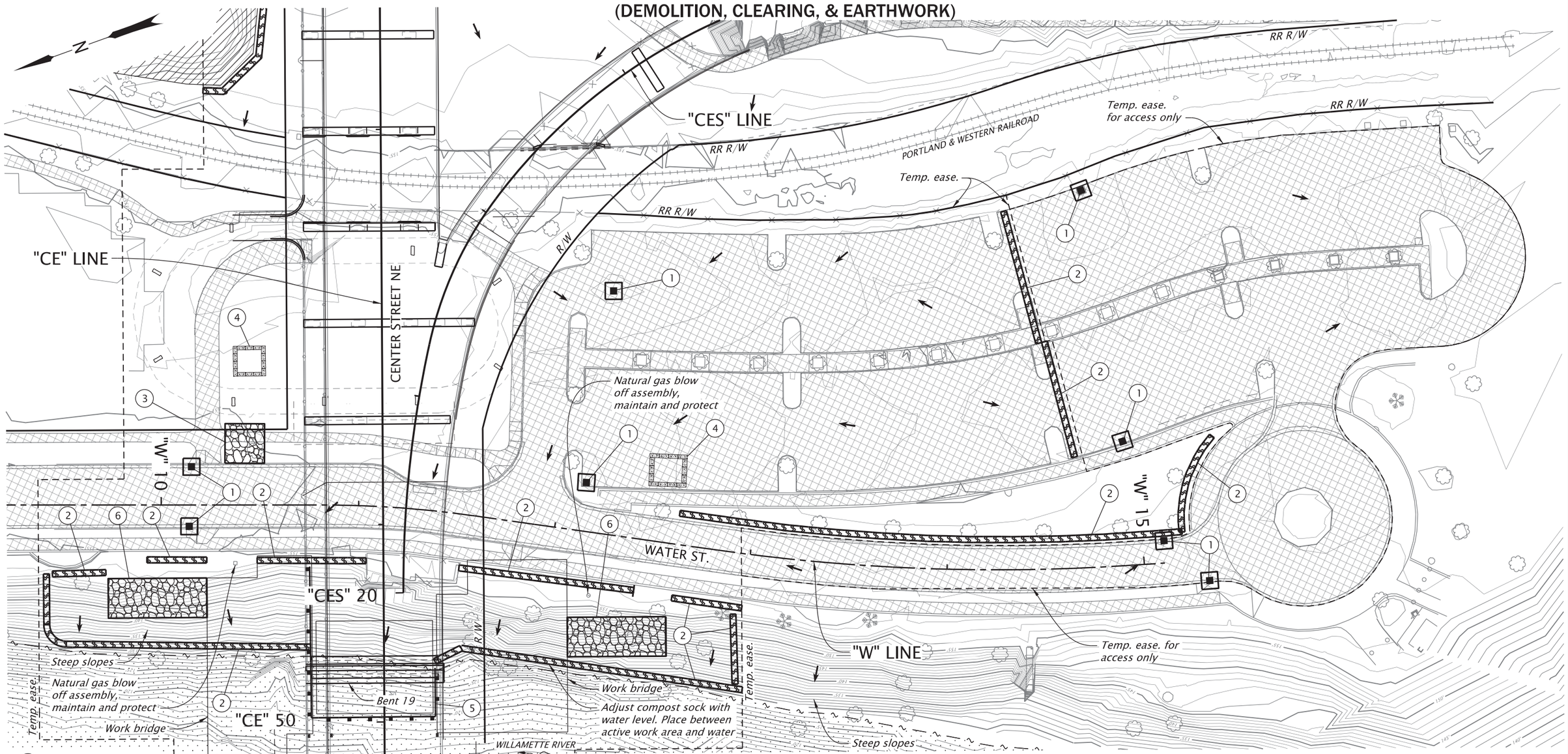

1. Const. inlet protection type 3 - 8 each
2. Inst. sediment barrier type 8 - 1,106 ft.
3. Const. construction entrance, type 1 - 1 each
4. Const. concrete truck wash out facility - 2 each
5. Const. sediment fence - 164 ft.
6. Const. construction entrance, type 3 - 2 each

NOTES:

1. Adjust erosion control measures as necessary to access Bent 19, construct cofferdam as required, and accommodate construction of temporary work bridge.
2. Adjust compost sock in parking lot asnecessary to facilitate access and circulation through the parking lot.
3. See shts. FB01 thru FB07 for tree protection and tree removal plan.
4. Hardscape bridge surfaces are not patterned.

LEGEND

- Existing contours, 1' interval
- No work area
- OHW - Regulated work area
- Protect deciduous tree
- Existing hardscape
- Inlet protection
- Flow direction
- Sediment fence
- Sediment barrier, compost sock
- Concrete washout facility
- Construction entrance

REGISTERED PROFESSIONAL ENGINEER
100246PE
Digitally Signed 2026.06.02 16:06:07-07'00'
OREGON
JULY 12, 2022
JASON BENJAMIN GALEAZZI
EXPIRES: 06/30/2027

FINAL ELECTRONIC DOCUMENT AVAILABLE UPON REQUEST

DOWL WWW.DOWL.COM

OREGON DEPARTMENT OF TRANSPORTATION

OR22: CENTER ST BRIDGE (PHASE 1) PROJECT
WILLAMINA-SALEM HIGHWAY
MARION & POLK COUNTIES

Designer: Jason Galeazzi
Reviewer: Bob Goodrich
Drafter: Steve Wolfer
Checker: Kyle Farnsworth

EROSION AND SEDIMENT CONTROL PLAN

SHEET NO. FB04

59V-051

Sec. 22, T. 7 S., R. 3 W., W.M.
(DEMOLITION, CLEARING, & EARTHWORK)

1. Const. construction entrance, type 3 - 2 each
2. Const. sediment fence - 979 ft.
3. Const. inlet protection type 11 - 2 each (See dwg. no. RD1010)

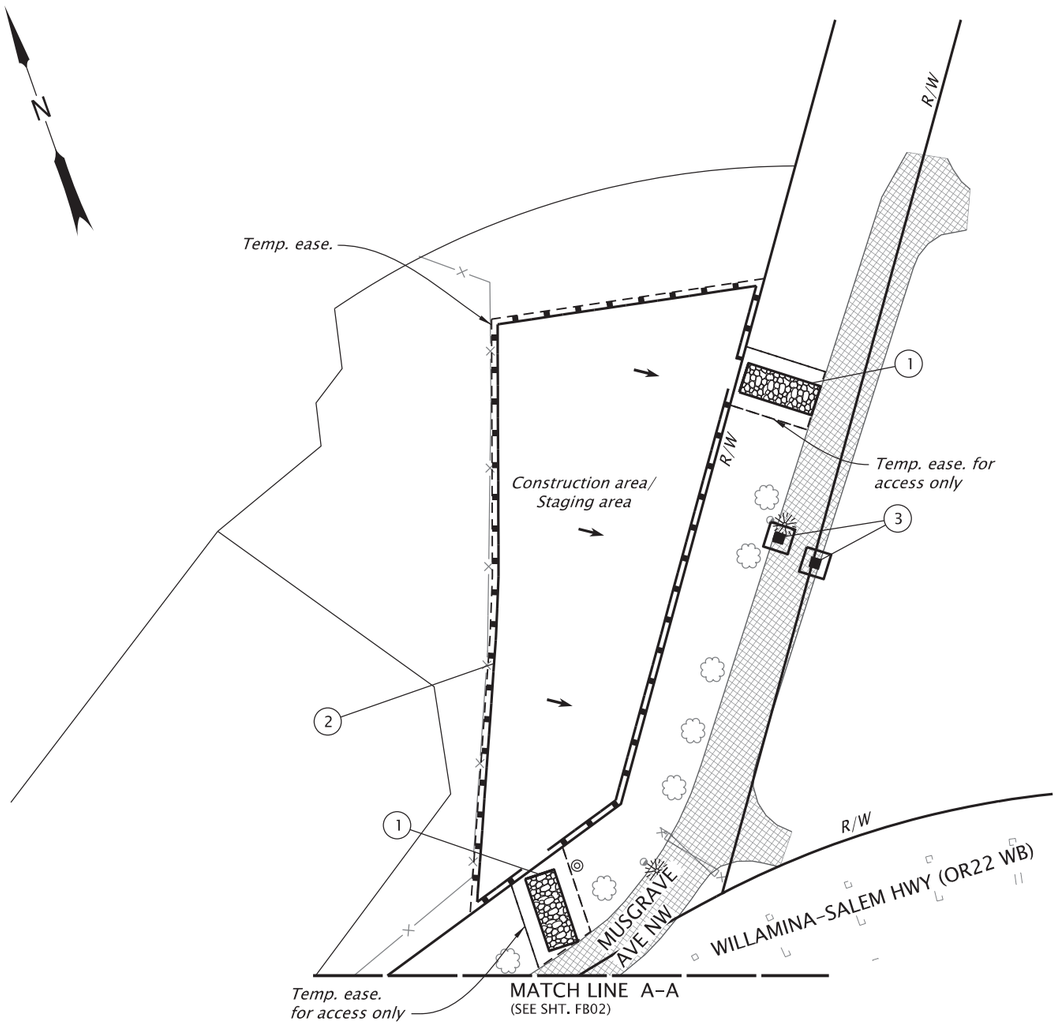

NOTES:
1. See shts. FB01 thru FB07 for tree protection and tree removal plan.
2. Hardscape bridge surfaces are not patterned.

LEGEND

- Construction entrance
- Existing hardscape
- Sediment fence

REGISTERED PROFESSIONAL ENGINEER
100246PE
Digitally Signed 2026.06.02 16:07:16-07'00'
OREGON
JULY 12, 2022
JASON BENJAMIN GALEAZZI
EXPIRES: 06/30/2027

FINAL ELECTRONIC DOCUMENT AVAILABLE UPON REQUEST

DOWL WWW.DOWL.COM

OREGON DEPARTMENT OF TRANSPORTATION

OR22: CENTER ST BRIDGE (PHASE 1) PROJECT
WILLAMINA-SALEM HIGHWAY
MARION & POLK COUNTIES

Designer: Jason Galeazzi
Reviewer: Bob Goodrich
Drafter: Steve Wolfer
Checker: Kyle Farnsworth

EROSION AND SEDIMENT CONTROL PLAN

SHEET NO. FB05

59V-051

Sec. 22, T. 7 S., R. 3 W., W.M.
(DEMOLITION, CLEARING, & EARTHWORK)

1 *Const. inlet protection type 3 - 2 each*

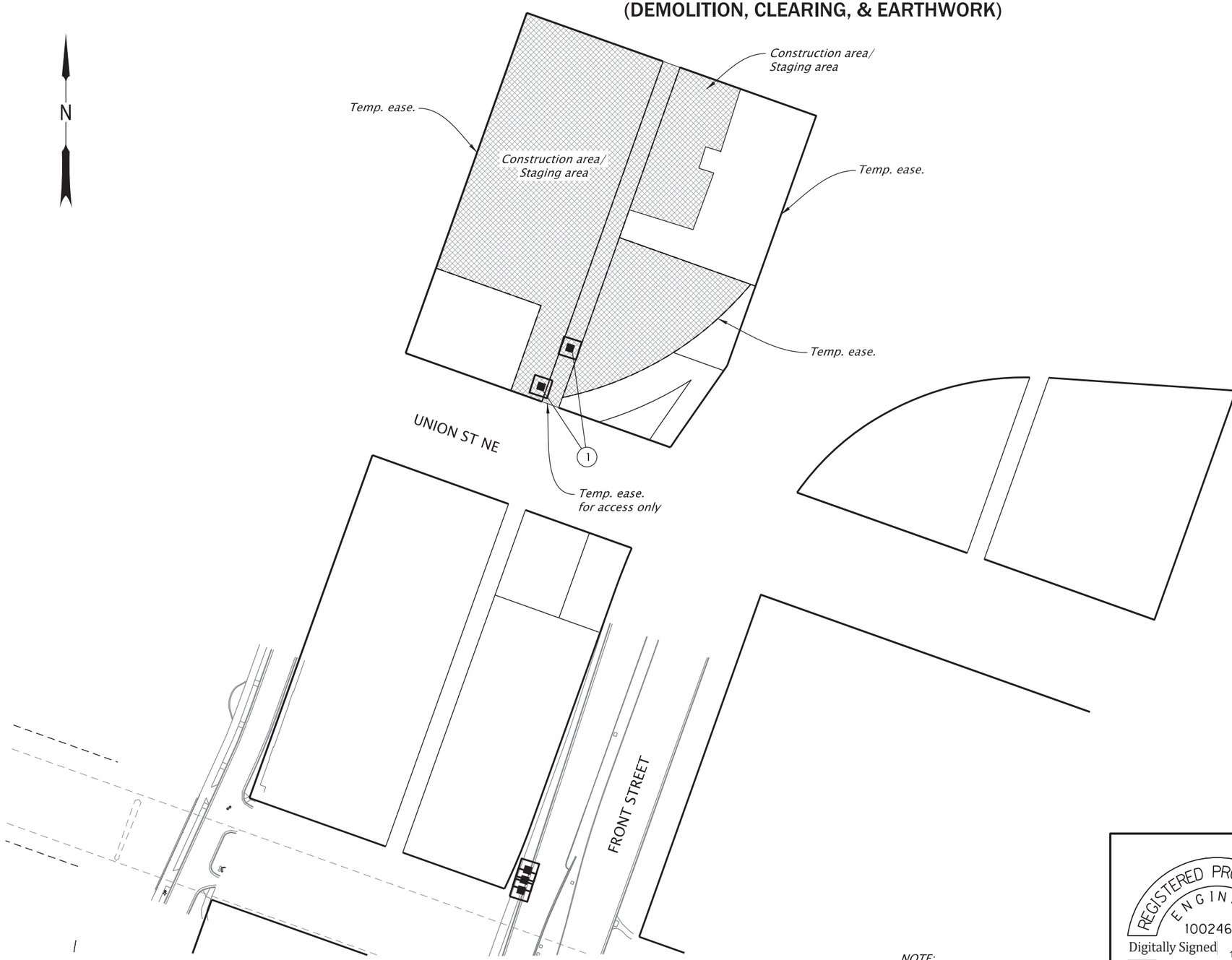

NOTE:
Hardscape bridge surfaces are not patterned.

LEGEND

Existing hardscape

REGISTERED PROFESSIONAL ENGINEER
100246PE
Digitally Signed 2026.06.30 14:37:58-07'00'
OREGON
JULY 12, 2022
JASON BENJAMIN GALEAZZI
EXPIRES: 06/30/2027

FINAL ELECTRONIC DOCUMENT AVAILABLE UPON REQUEST

DOWL WWW.DOWL.COM

OREGON DEPARTMENT OF TRANSPORTATION

OR22: CENTER ST BRIDGE (PHASE 1) PROJECT
WILLAMINA-SALEM HIGHWAY
MARION & POLK COUNTIES

Designer: Jason Galeazzi
Reviewer: Bob Goodrich
Drafter: Steve Wolfer
Checker: Kyle Farnsworth

EROSION AND SEDIMENT CONTROL PLAN

SHEET NO. FB06

59V-051

Sec. 22, T. 7 S., R. 3 W., W.M.
(STREETS & UTILITIES)

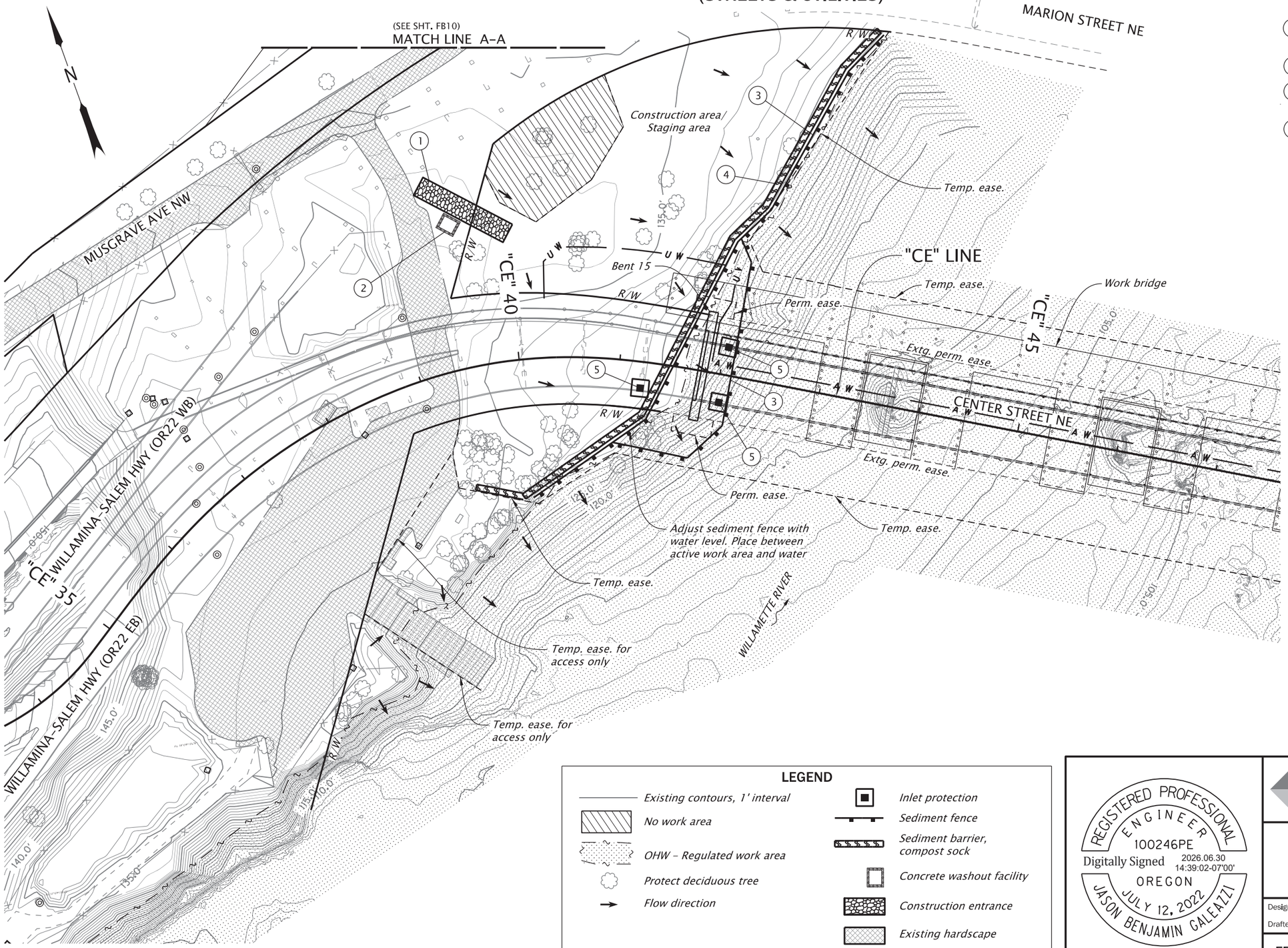

1. Maintain construction entrance, type 1 - 1 each
2. Maintain concrete truck wash out facility - 1 each
3. Maintain sediment fence - 897 ft.
4. Maintain sediment barrier type 8 - 640 ft.
5. Maintain inlet protection type 3 - 3 each

NOTES:
1. Adjust erosion control measures as necessary to access Bent 15.
2. Maintain sediment fence around Bent 15 for duration of work on structure.
3. Maintain inlet protection type 3 on bridge deck for duration of work on bridge superstructure.
4. Hardscape bridge surfaces are not patterned.

LEGEND

- Existing contours, 1' interval
- No work area
- OHW - Regulated work area
- Protect deciduous tree
- Flow direction
- Inlet protection
- Sediment fence
- Sediment barrier, compost sock
- Concrete washout facility
- Construction entrance
- Existing hardscape

REGISTERED PROFESSIONAL ENGINEER
100246PE
Digitally Signed 2026.06.30 14:39:02-07'00'
OREGON
JULY 12, 2022
JASON BENJAMIN GALEAZZI

EXPIRES: 06/30/2027

FINAL ELECTRONIC DOCUMENT AVAILABLE UPON REQUEST

DOWL WWW.DOWL.COM

OREGON DEPARTMENT OF TRANSPORTATION

OR22: CENTER ST BRIDGE (PHASE 1) PROJECT
WILLAMINA-SALEM HIGHWAY
MARION & POLK COUNTIES

Designer: Jason Galeazzi
Reviewer: Bob Goodrich
Drafter: Steve Wolfer
Checker: Kyle Farnsworth

EROSION AND SEDIMENT CONTROL PLAN

SHEET NO. FB07

59V-051

Sec. 22, T. 7 S., R. 3 W., W.M.
(STREETS & UTILITIES)

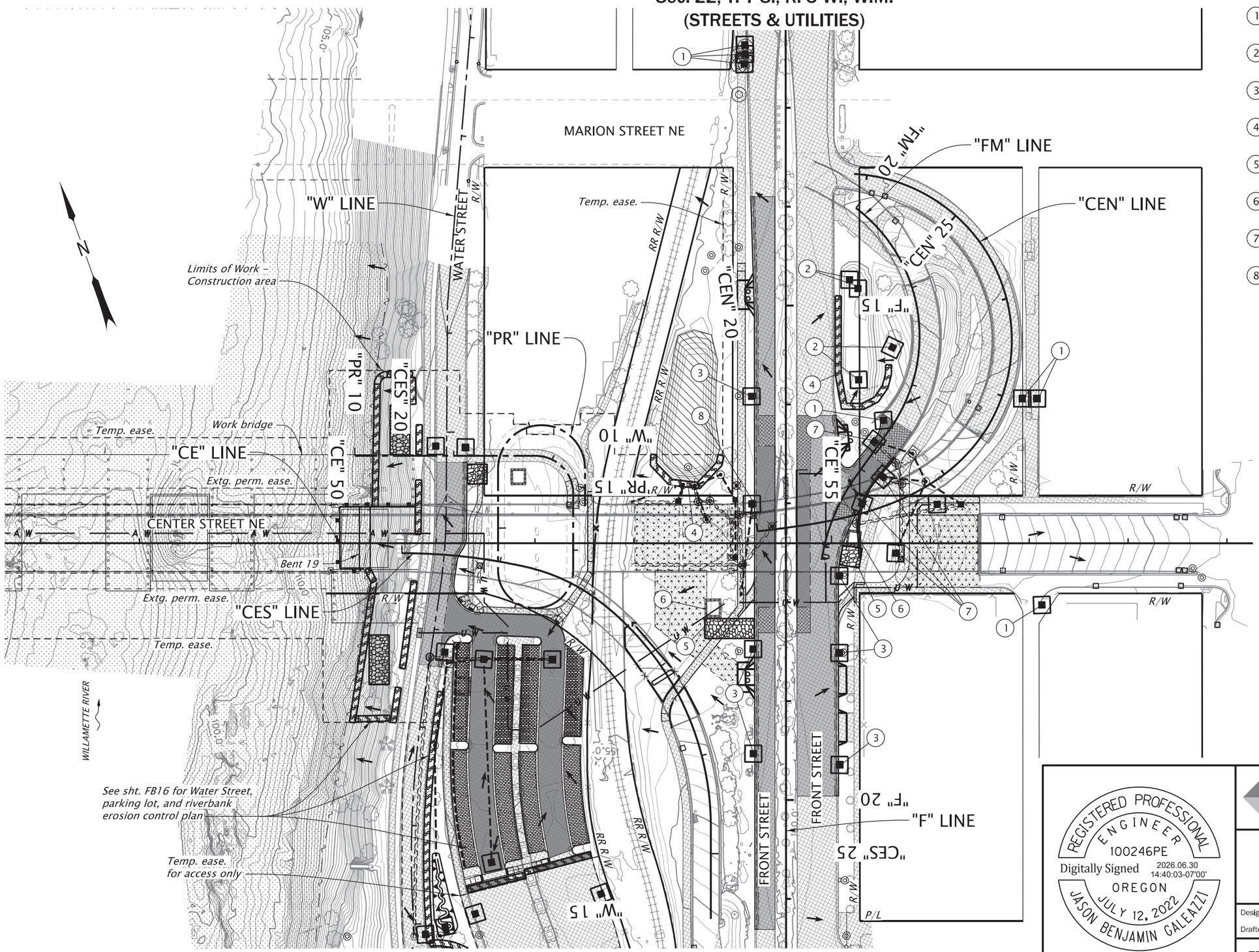

1. Maintain inlet protection type 3 – 7 each
2. Maintain inlet protection type 4 – biofilter bags – 4 each
3. Maintain inlet protection type 10 – 6 each
4. Maintain sediment barrier type 8 – 288 ft.
5. Maintain construction entrance, type 1 – 2 each
6. Maintain concrete truck wash out facility – 2 each
7. Const. inlet protection type 3 – 4 each
8. Const. inlet protection type 10 – 1 each

NOTE:
Hardscape bridge surfaces are not patterned.

LEGEND

- Existing contours, 1' interval
- No work area
- OHW – Regulated work area
- Protect deciduous tree
- Inlet protection
- Flow direction
- Sediment barrier, compost sock
- Concrete washout facility
- Construction entrance
- Existing hardscape

REGISTERED PROFESSIONAL ENGINEER
100246PE
Digitally Signed 2026.06.30 14:40:03-07'00'
OREGON
JULY 12, 2022
JASON BENJAMIN GALEAZZI
EXPIRES: 06/30/2027
FINAL ELECTRONIC DOCUMENT AVAILABLE UPON REQUEST

DOWL WWW.DOWL.COM

OREGON DEPARTMENT OF TRANSPORTATION

OR22: CENTER ST BRIDGE (PHASE 1) PROJECT
WILLAMINA-SALEM HIGHWAY
MARION & POLK COUNTIES

Designer: Jason Galeazzi | Reviewer: Bob Goodrich
Drafter: Steve Wolfer | Checker: Kyle Farnsworth

EROSION AND SEDIMENT CONTROL PLAN

SHEET NO. FB08

Sec. 22, T. 7 S., R. 3 W., W.M.
(STREETS & UTILITIES)

59V-051

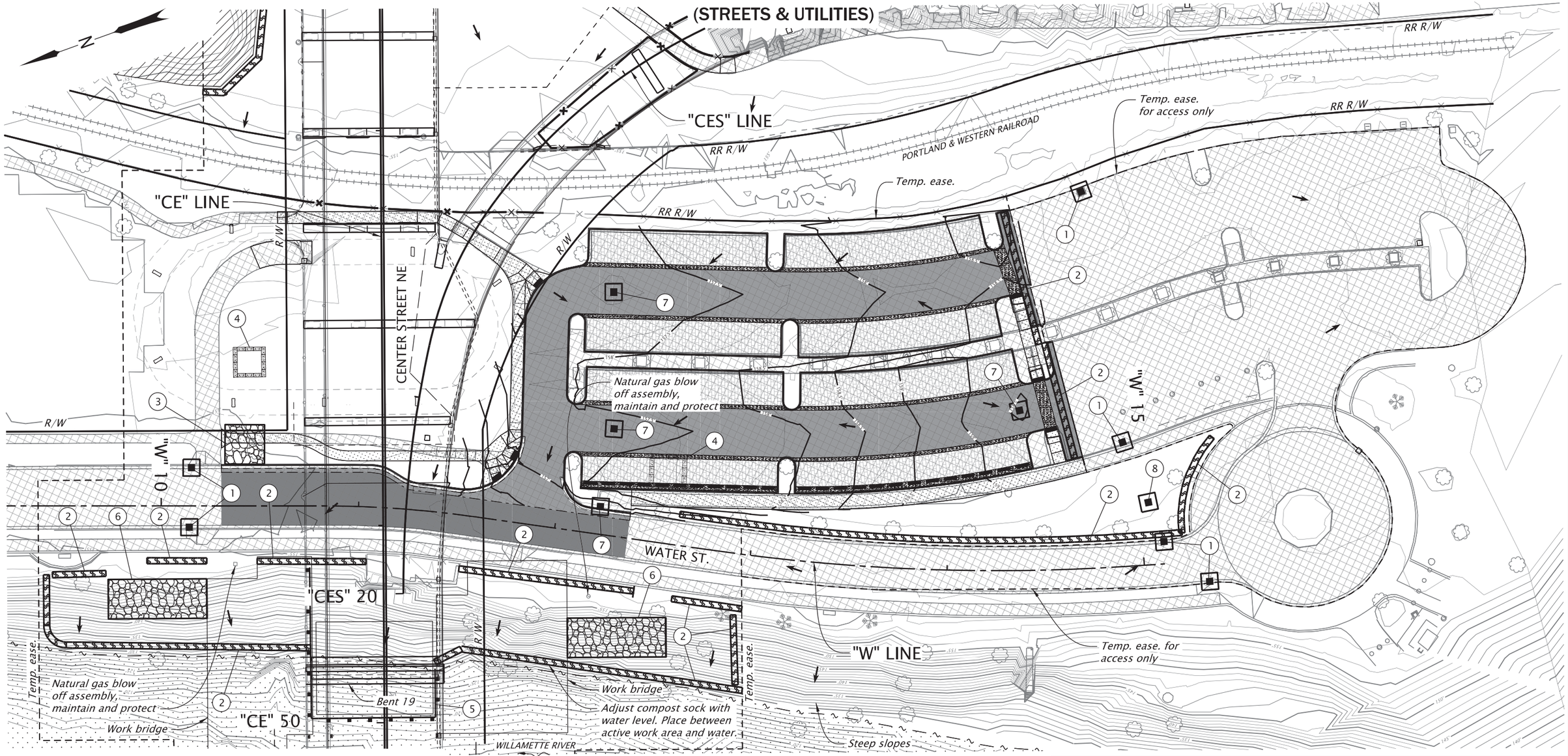

1. Maintain inlet protection type 3 – 6 each
2. Maintain sediment barrier type 8 – 1,106 ft.
3. Maintain construction entrance, type 1 – 1 each
4. Maintain concrete truck wash out facility – 2 each
5. Maintain sediment fence – 164 ft.
6. Maintain construction entrance, type 3 – 2 each
7. Const. inlet protection type 3 – 4 each
8. Const. inlet protection type 4 – 1 each

NOTES:
1. Adjust erosion control measures as necessary to access Bent 19.
2. Adjust compost sock in parking lot as necessary to facilitate access and circulation through the parking lot.
3. Hardscape bridge surfaces are not patterned.

LEGEND

- Existing contours, 1' interval
- No work area
- OHW – Regulated work area
- Protect deciduous tree
- Existing hardscape
- Inlet protection
- Flow direction
- Sediment fence
- Sediment barrier, compost sock
- Concrete washout facility
- Construction entrance

REGISTERED PROFESSIONAL ENGINEER
100246PE
Digitally Signed 2026.06.02 16:16:06-07'00'
OREGON
JULY 12, 2022
JASON BENJAMIN GALEAZZI
EXPIRES: 06/30/2027

FINAL ELECTRONIC DOCUMENT AVAILABLE UPON REQUEST

DOWL WWW.DOWL.COM

OREGON DEPARTMENT OF TRANSPORTATION

OR22: CENTER ST BRIDGE (PHASE 1) PROJECT
WILLAMINA-SALEM HIGHWAY
MARION & POLK COUNTIES

Designer: Jason Galeazzi
Reviewer: Bob Goodrich
Drafter: Steve Wolfer
Checker: Kyle Farnsworth

EROSION AND SEDIMENT CONTROL PLAN

SHEET NO. FB09

59V-051

Sec. 22, T. 7 S., R. 3 W., W.M.
(STREETS & UTILITIES)

1. *Maintain construction entrance, type 3 - 2 each*
2. *Maintain sediment fence - 979 ft.*
3. *Maintain inlet protection type 11 - 2 each*

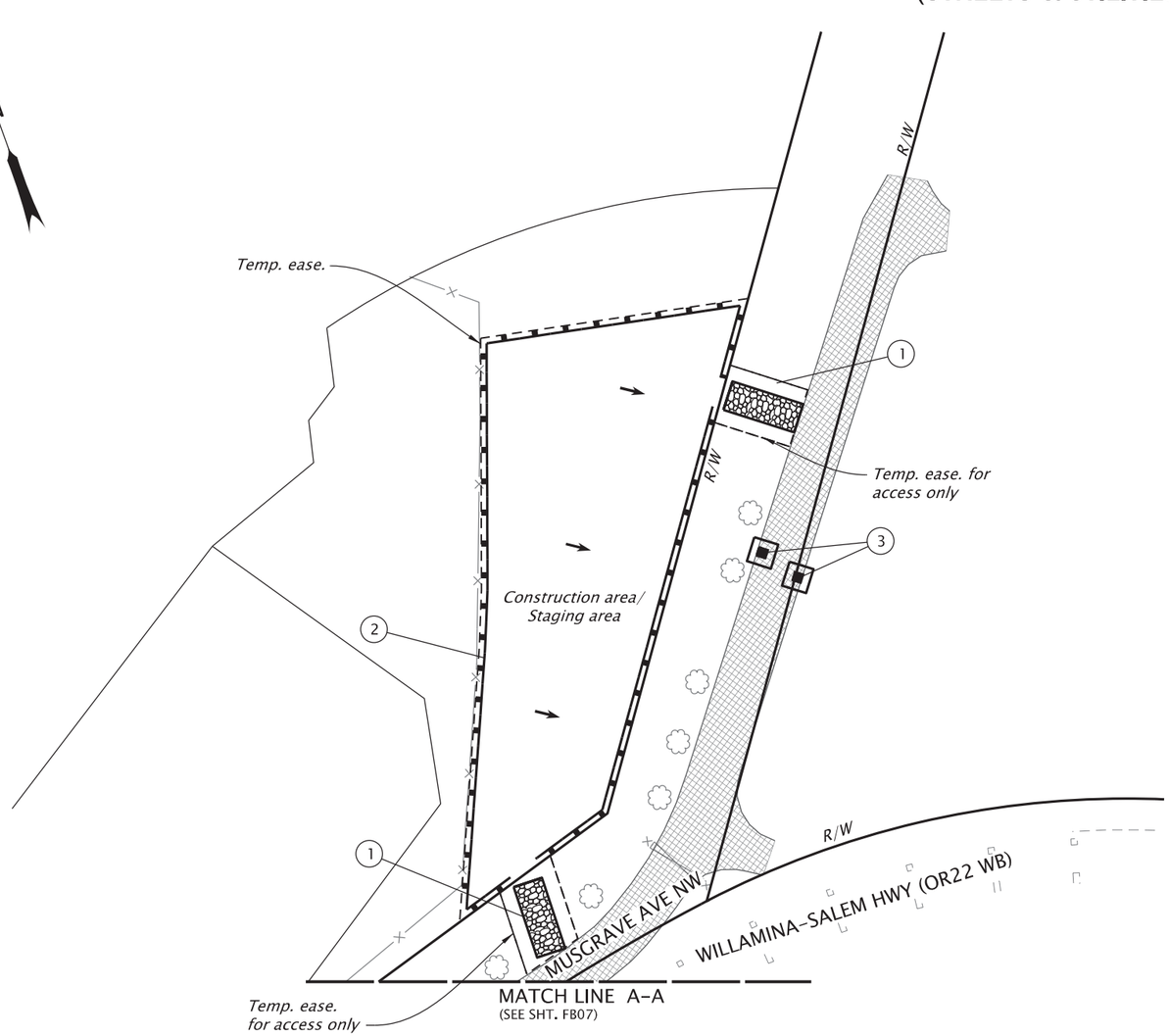

NOTE:
Hardscape bridge surfaces are not patterned.

LEGEND

- *Construction entrance*
- *Existing hardscape*
- *Sediment fence*

REGISTERED PROFESSIONAL ENGINEER
100246PE
Digitally Signed 2026.06.02 16:17:20-07'00'
OREGON
JULY 12, 2022
JASON BENJAMIN GALEAZZI
EXPIRES: 06/30/2027

FINAL ELECTRONIC DOCUMENT AVAILABLE UPON REQUEST

DOWL WWW.DOWL.COM

OREGON DEPARTMENT OF TRANSPORTATION

OR22: CENTER ST BRIDGE (PHASE 1) PROJECT
WILLAMINA-SALEM HIGHWAY
MARION & POLK COUNTIES

Designer: Jason Galeazzi
Reviewer: Bob Goodrich
Drafter: Steve Wolfer
Checker: Kyle Farnsworth

EROSION AND SEDIMENT CONTROL PLAN

SHEET NO. FB10

59V-051

Sec. 22, T. 7 S., R. 3 W., W.M.
(STREETS & UTILITIES)

1 *Maintain inlet protection type 3 - 2 each*

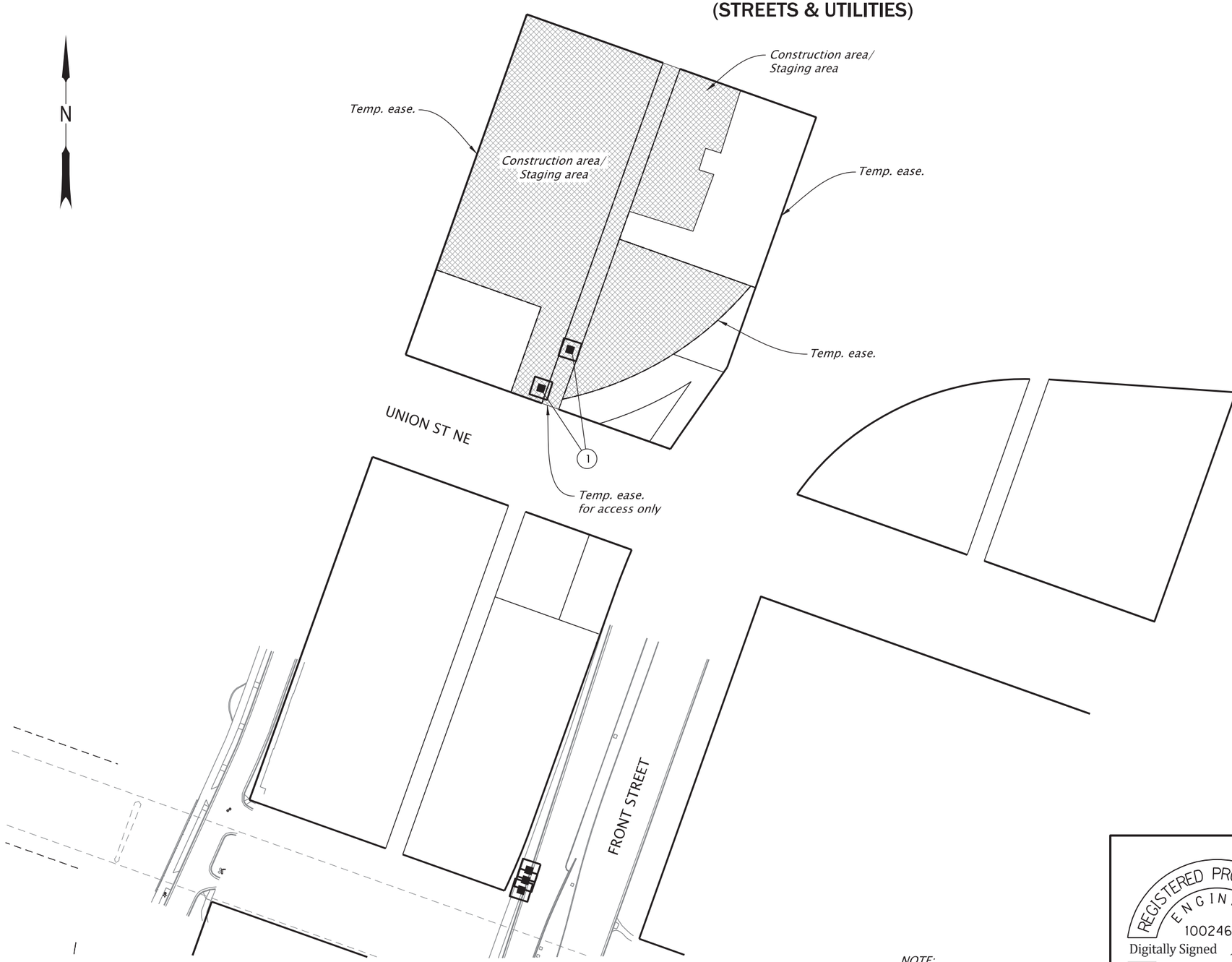

NOTE:
Hardscape bridge surfaces are not patterned.

LEGEND

Existing hardscape

REGISTERED PROFESSIONAL ENGINEER
100246PE
Digitally Signed 2026.06.30 14:41:14-07'00'
OREGON
JULY 12, 2022
JASON BENJAMIN GALEAZZI
EXPIRES: 06/30/2027

FINAL ELECTRONIC DOCUMENT AVAILABLE UPON REQUEST

DOWL WWW.DOWL.COM

OREGON DEPARTMENT OF TRANSPORTATION

OR22: CENTER ST BRIDGE (PHASE 1) PROJECT
WILLAMINA-SALEM HIGHWAY
MARION & POLK COUNTIES

Designer: Jason Galeazzi
Reviewer: Bob Goodrich
Drafter: Steve Wolfer
Checker: Kyle Farnsworth

EROSION AND SEDIMENT CONTROL PLAN

SHEET NO. FB11

59V-051

Sec. 22, T. 07 S., R. 03 W., W.M.
City of Salem

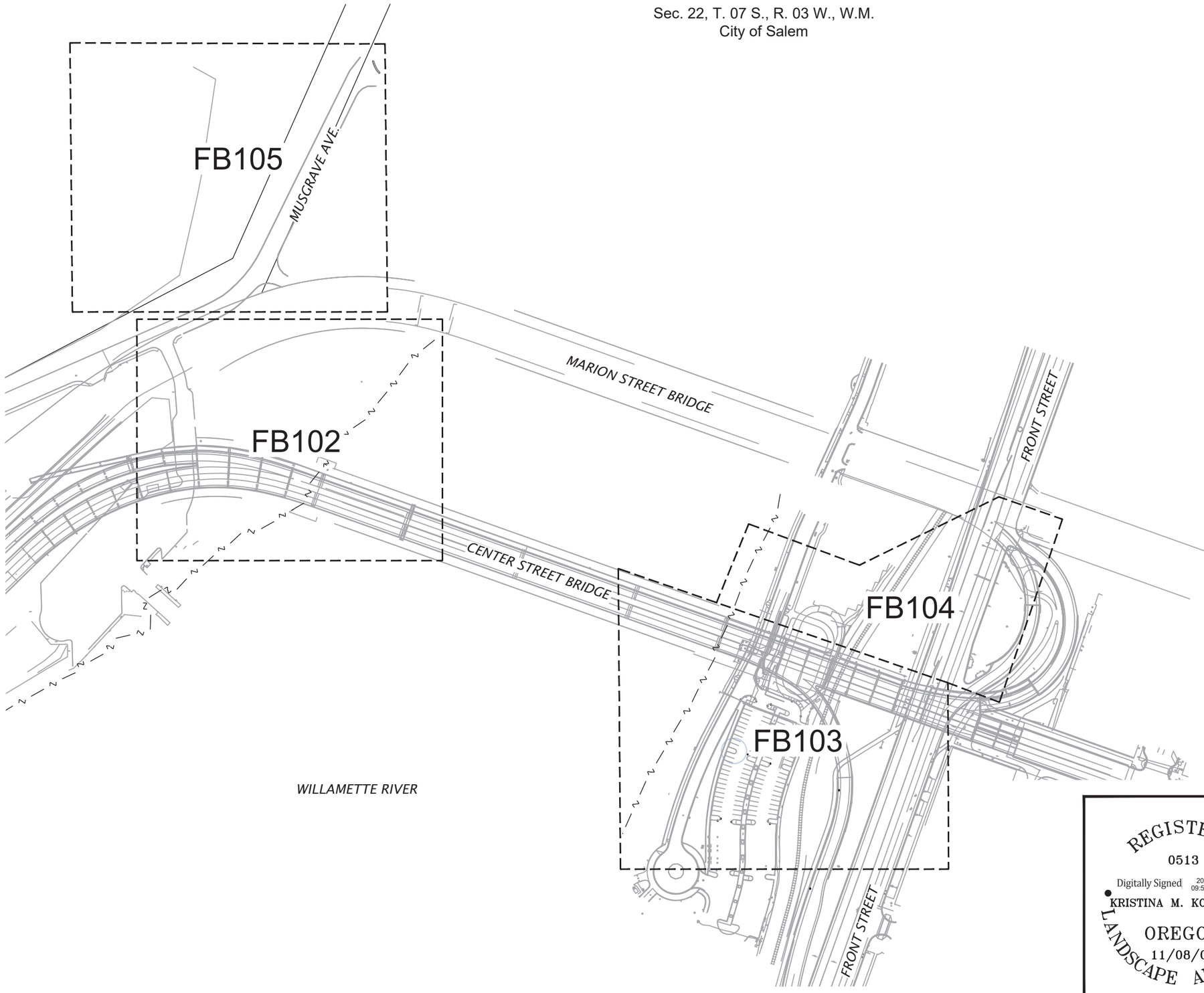

TREE SHEETS:

FB101 – TREE PLAN – SHEET KEY

FB102 – TREE PLAN – WALLACE MARINE PARK

FB103 – TREE PLAN – RIVERFRONT PARK & FRONT STREET SOUTH

FB104 – TREE PLAN – RIVERFRONT PARK & FRONT STREET NORTH

FB105 – TREE PLAN – MUSGRAVE AVENUE

FB106 – TREE PROTECTION & REMOVAL TABLES

FB107 – TREE PLAN REQUIREMENTS & PROTECTION

SCALE IN FEET
0 100 200

N

REGISTERED
0513
Digitally Signed 2026.02.11 09:50:15-08'00'
KRISTINA M. KOLTAVARY
OREGON
11/08/02
LANDSCAPE ARCHITECT
EXPIRES 11/30/2026

DOWL WWW.DOWL.COM

OREGON DEPARTMENT OF TRANSPORTATION

OR22: CENTER ST BRIDGE (SALEM) PROJECT
WILLAMINA-SALEM HIGHWAY
MARION & POLK COUNTIES

Designer: Carson Butler, LD
Reviewer: Bob Goodrich, PE
Drafter: Carson Butler, LD
Checker: Jay Battleson, PLA

TREE PLAN - SHEET KEY

SHEET NO. FB101

FINAL ELECTRONIC DOCUMENT
AVAILABLE UPON REQUEST

59V-051

Sec. 22, T. 07 S., R. 03 W., W.M.
City of Salem

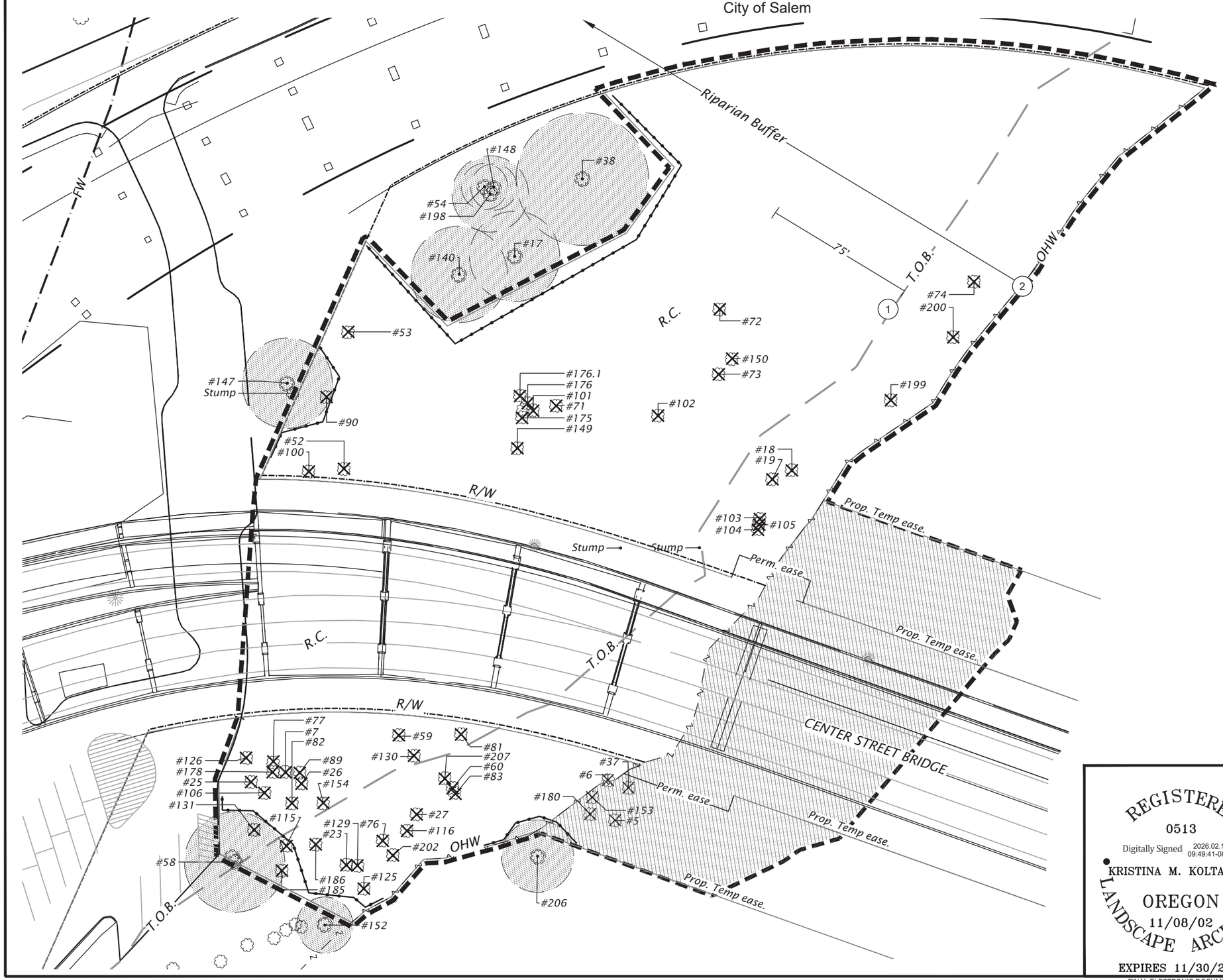

LEGEND:

L.O.W.	Limit of Work
O.H.W.	Approx. Ordinary High Water line
T.O.B.	Approximate Top of Bank line
P.E.	Permanent Easement
T.E.	Temporary Easement
	Revegetation Area Below OHW
R.B.	Riparian Buffer
R.C.	Riparian Corridor
FW	FEMA 100 Year Floodway
#XX	Existing tree to be removed
#XX	Tree or tree massing to protect
	Tree protection fencing
	Tree protection area at root zone

Refer to tree codes & tables on sheets FB106 - FB107.

KEY NOTES:

1. Riparian Corridor measured 75 feet horizontally from the Top of Bank (T.O.B) on each side of the waterway.
2. Floodway is greater than 75 feet, therefore Riparian Buffer goes to the extent of the floodway, measured from Ordinary High Water line.

N

SCALE IN FEET
0 25 50

REGISTERED
0513
Digitally Signed 2026.02.11 09:49:41-08'00'
KRISTINA M. KOLTAVARY
OREGON
11/08/02
LANDSCAPE ARCHITECT
EXPIRES 11/30/2026

DOWL WWW.DOWL.COM

OREGON DEPARTMENT OF TRANSPORTATION

OR22: CENTER ST BRIDGE (SALEM) PROJECT
WILLAMINA-SALEM HIGHWAY
MARION & POLK COUNTIES

Designer: Carson Butler, LD
Reviewer: Bob Goodrich, PE
Drafter: Carson Butler, LD
Checker: Kristina Koltavary, PLA

TREE PLAN - WALLACE MARINE PARK

SHEET NO. FB102

FINAL ELECTRONIC DOCUMENT AVAILABLE UPON REQUEST

59V-051

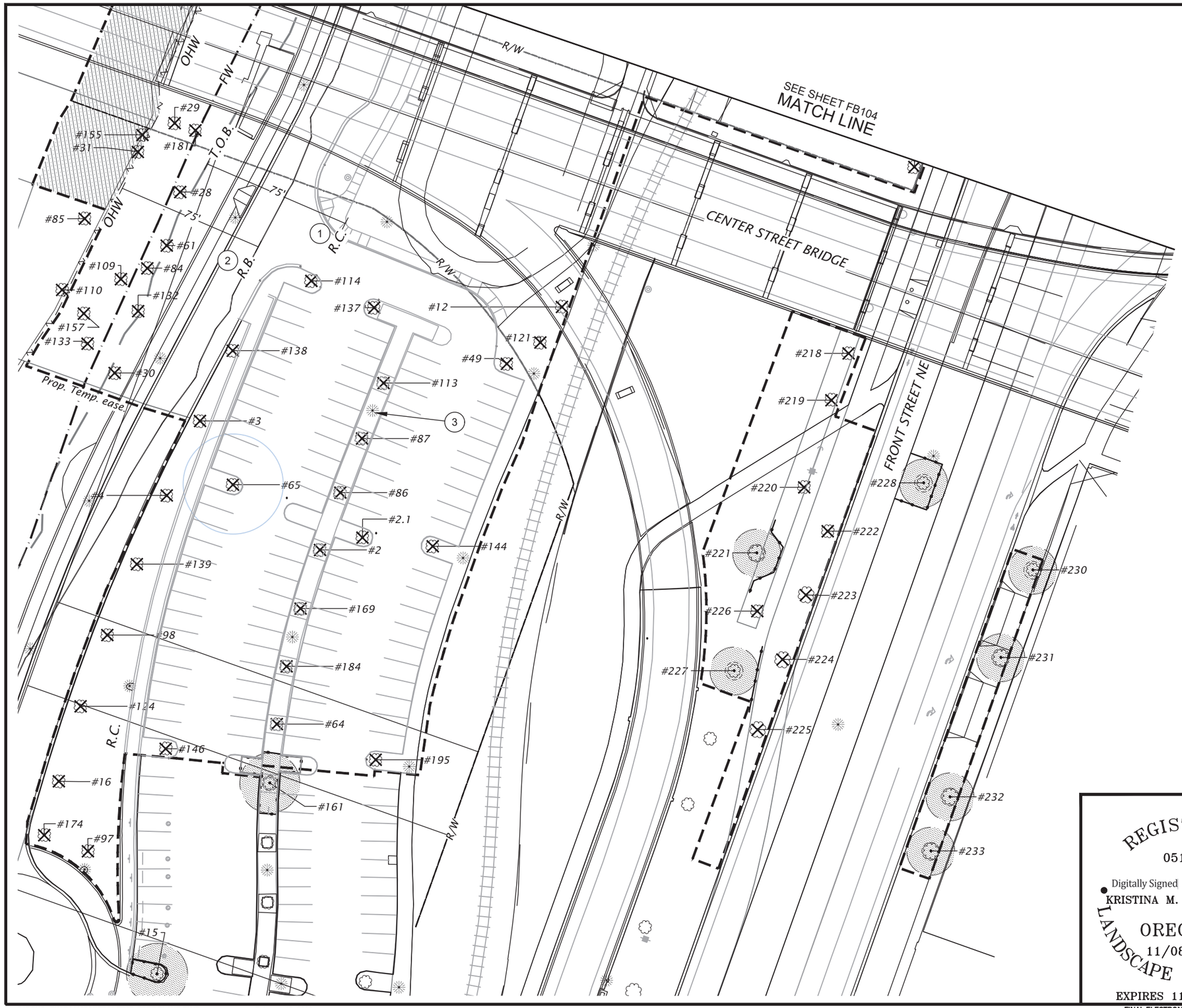

LEGEND:

L.O.W.	Limit of Work
O.H.W.	Approx. Ordinary High Water line
T.O.B.	Approximate Top of Bank line
R/W	ODOT Right-of-Way
P.E.	Permanent Easement
T.E.	Temporary Easement
	Revegetation Area Below OHW
R.B.	Riparian Buffer
R.C.	Riparian Corridor
FW	FEMA 100 Year Floodway
#XX	Existing tree to be removed
#XX	Tree or tree massing to protect
	Tree protection fencing
	Tree protection area at root zone

Refer to tree codes & tables on sheets FB106 - FB107.

KEY NOTES:

1. Riparian Corridor measured 75 feet horizontally from the Top of Bank (T.O.B) on each side of the waterway.
2. Riparian Buffer measured 75' from Ordinary High Water in this location.
3. Existing light to be salvaged and reinstalled, see Illumination Plans.

N

SCALE IN FEET
0 25 50

REGISTERED
0513
Digitally Signed 2026.02.11 09:49:21-08'00'
KRISTINA M. KOLTAVARY
OREGON
11/08/02
LANDSCAPE ARCHITECT
EXPIRES 11/30/2026

DOWL WWW.DOWL.COM

OREGON DEPARTMENT OF TRANSPORTATION

OR22: CENTER ST BRIDGE (SALEM) PROJECT
WILLAMINA-SALEM HIGHWAY
MARION & POLK COUNTIES

Designer: Carson Butler, LD
Reviewer: Bob Goodrich, PE
Drafter: Carson Butler, LD
Checker: Jay Battleson, PLA

TREE PLAN - RIVERFRONT PARK & FRONT STREET SOUTH

SHEET NO. FB103

FINAL ELECTRONIC DOCUMENT AVAILABLE UPON REQUEST

59V-051

Sec. 22, T. 07 S., R. 03 W., W.M.
City of Salem

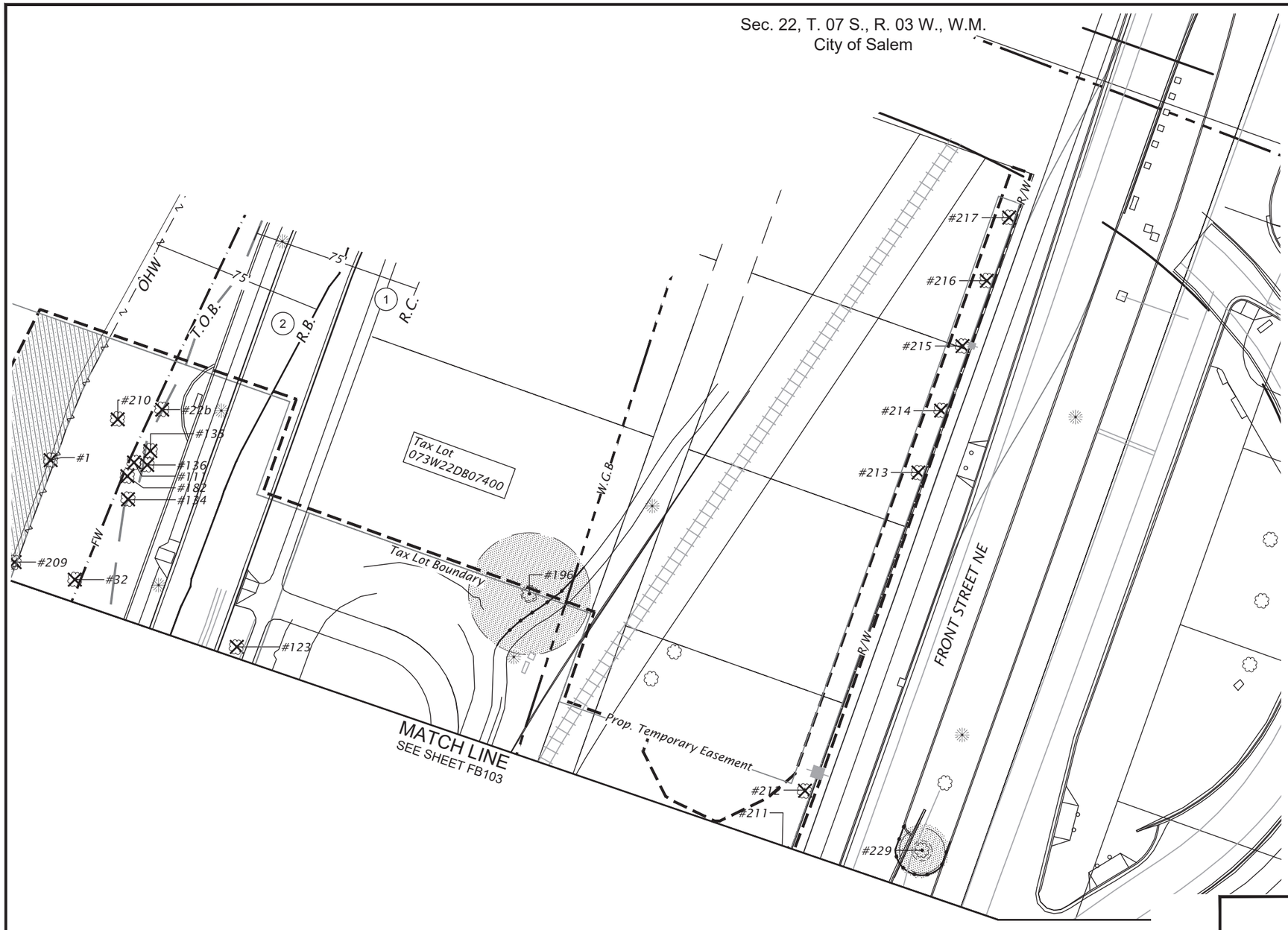

LEGEND:

- L.O.W. — Limit of Work
- O.H.W. — Approx. Ordinary High Water line
- T.O.B. — Approximate Top of Bank line
- R/W — ODOT Right-of-Way
- P.E. — Permanent Easement
- T.E. — Temporary Easement
- Revegetation Area Below OHW
- R.B. — Riparian Buffer
- R.C. — Riparian Corridor
- FW — FEMA 100 Year Floodway
- #XX — Existing tree to be removed
- #XX — Tree or tree massing to protect
- Tree protection fencing
- Tree protection area at root zone

Refer to tree codes & tables on sheets FB106 - FB107.

KEY NOTES:

1. Riparian Corridor measured 75 feet horizontally from the from Top of Bank (T.O.B) on each side of the waterway.
2. Riparian Buffer measured 75' from Ordinary High Water in this location.

N

SCALE IN FEET
0 25 50

REGISTERED
0513
Digitally Signed 2026.02.11 09:49:00-08'00'
KRISTINA M. KOLTAVARY
OREGON
11/08/02
LANDSCAPE ARCHITECT
EXPIRES 11/30/2026

FINAL ELECTRONIC DOCUMENT
AVAILABLE UPON REQUEST

DOWL WWW.DOWL.COM

OREGON DEPARTMENT OF TRANSPORTATION

OR22: CENTER ST BRIDGE (SALEM) PROJECT
WILLAMINA-SALEM HIGHWAY
MARION & POLK COUNTIES

Designer: Carson Butler, LD
Reviewer: Bob Goodrich, PE
Drafter: Carson Butler, LD
Checker: Kristina Koltavary, PLA

TREE PLAN - RIVERFRONT PARK & FRONT STREET NORTH

SHEET NO. FB104

59V-051

Sec. 22, T. 07 S., R. 03 W., W.M.
City of Salem

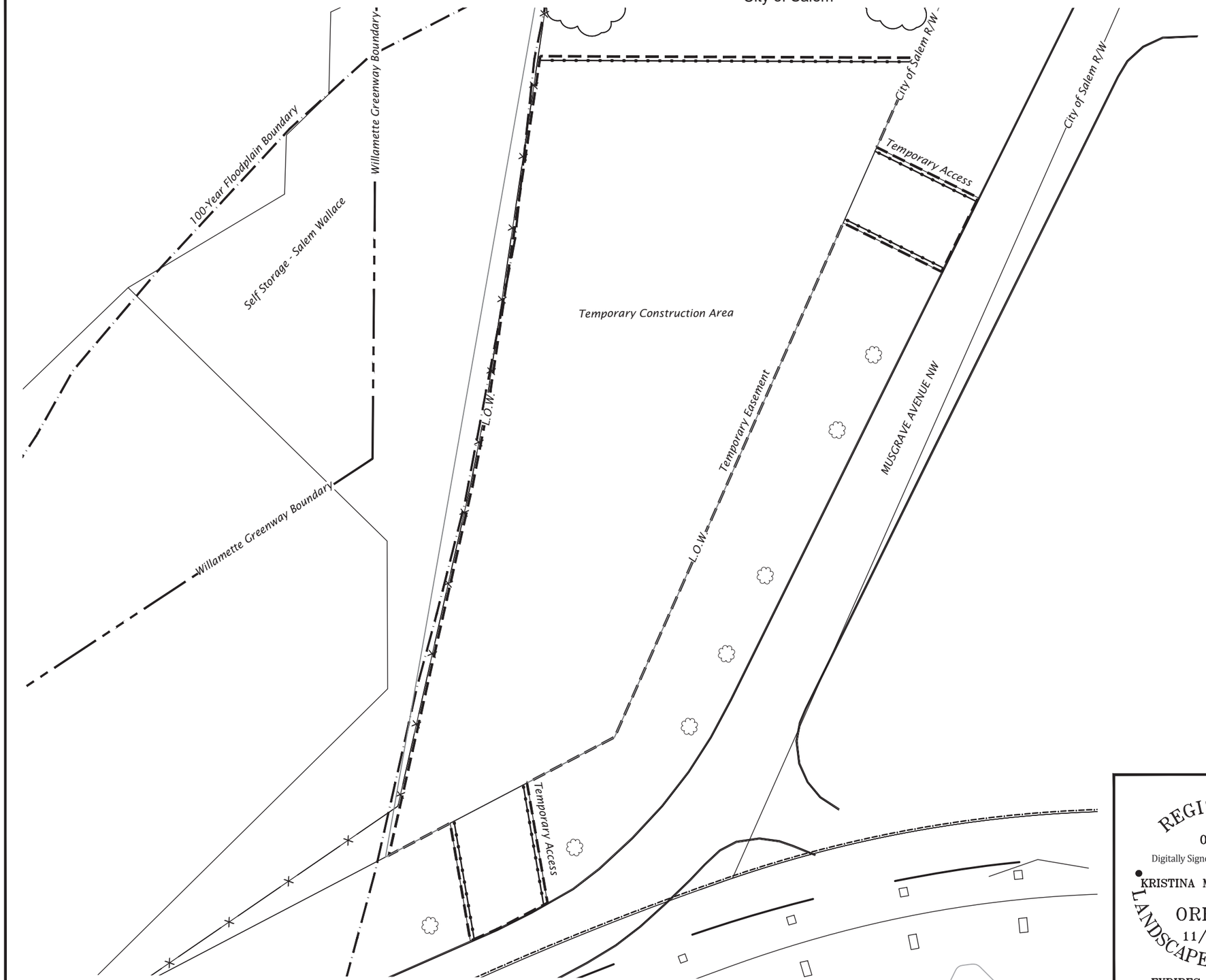

LEGEND:

L.O.W. Limit of Work

Tree protection fencing

N

SCALE IN FEET
0 25 50

REGISTERED
0513
Digitally Signed 2026.02.11 09:48:35-08'00'
KRISTINA M. KOLTAVARY
OREGON
11/08/02
LANDSCAPE ARCHITECT
EXPIRES 11/30/2026

DOWL WWW.DOWL.COM

OREGON DEPARTMENT OF TRANSPORTATION

OR22: CENTER ST BRIDGE (SALEM) PROJECT
WILLAMINA-SALEM HIGHWAY
MARION & POLK COUNTIES

Designer: Carson Butler, LD
Reviewer: Bob Goodrich, PE
Drafter: Carson Butler, LD
Checker: Kristina Koltavary, PLA

TREE PLAN - MUSGRAVE AVENUE

SHEET NO. FB105

C:\DOWL_PW\D0413721\FB01-FB07_TREE PLANS.DWG February 10, 2026

FINAL ELECTRONIC DOCUMENT AVAILABLE UPON REQUEST

59V-051

EXISTING TREE TABLE (EAST) - CITY OF SALEM OWNED TO REMOVE

NUMBER	SIZE (DBH)*	SPECIES	STATUS	NOTES
1	48" DBH	POPULUS TRICHOCARPA	Remove for Const.	
22B	14" DBH	ACER MACROPHYLLUM	Remove for Const.	W/in Riparian Corridor
28	23.8" DBH	ACER MACROPHYLLUM	Remove for Const.	
29	25" DBH	ACER MACROPHYLLUM	Remove for Const.	
30	36" DBH	PSEUDOTSUGA MENZIESII	Remove for Const.	W/in Riparian Corridor
31	34" DBH	POPULUS TRICHOCARPA	Remove for Const.	
32	28" DBH	ACER MACROPHYLLUM	Remove for Const.	
61	20.8" DBH	ACER MACROPHYLLUM	Remove for Const.	W/in Riparian Corridor
84	17" DBH	ACER MACROPHYLLUM	Remove for Const.	
85	18" DBH	FRAXINUS LATIFOLIA	Remove for Const.	
109	25" DBH	ACER MACROPHYLLUM	Remove for Const.	
110	30" DBH	FRAXINUS LATIFOLIA	Remove for Const.	
111	25" DBH	ACER MACROPHYLLUM	Remove for Const.	
132	28.6" DBH	ACER MACROPHYLLUM	Remove for Const.	
133	14" DBH	ACER MACROPHYLLUM	Remove for Const.	
134	15.5" DBH	ACER MACROPHYLLUM	Remove for Const.	W/in Riparian Corridor
135	16.3" DBH	ACER MACROPHYLLUM	Remove for Const.	W/in Riparian Corridor
136	9.5" DBH	ACER MACROPHYLLUM	Remove for Const.	W/in Riparian Corridor
157	14" DBH	ACER MACROPHYLLUM	Remove for Const.	
155	14" DBH	FRAXINUS LATIFOLIA	Remove for Const.	
181	30" DBH	ACER MACROPHYLLUM	Remove for Const.	
182	13.8" DBH	ACER MACROPHYLLUM	Remove for Const.	
209	50" DBH	POPULUS TRICHOCARPA	Remove for Const.	
210	12" DBH	ACER MACROPHYLLUM	Remove for Const.	
2	11" DBH	QUERCUS RUBRA	Remove for Const.	East Parking Lot
2.1	NA	QUERCUS RUBRA	Remove for Const.	East Parking Lot
3	11.3" DBH	ACER PLATANOIDES	Remove for Const.	East Parking Lot, Nuisance Species, RC
4	12.8" DBH	ACER PLATANOIDES	Remove for Const.	East Parking Lot, Nuisance Species, RC
12	16.4" DBH	ACER MACROPHYLLUM	Remove for Const.	East Parking Lot
16	14.8" DBH	ACER PLATANOIDES	Remove for Const.	East Parking Lot, Nuisance Species, RC
49	24.1" DBH	QUERCUS RUBRA	Remove for Const.	East Parking Lot
64	17.3" DBH	QUERCUS RUBRA	Remove for Const.	East Parking Lot
65	15.2" DBH	QUERCUS RUBRA	Remove for Const.	East Parking Lot
86	11.5" DBH	QUERCUS RUBRA	Remove for Const.	East Parking Lot
87	12.5" DBH	QUERCUS RUBRA	Remove for Const.	East Parking Lot
97	13.6" DBH	ACER PLATANOIDES	Remove for Const.	East Parking Lot, Nuisance Species
98	13.2" DBH	ACER PLATANOIDES	Remove for Const.	East Parking Lot, Nuisance Species, RC
113	13" DBH	QUERCUS RUBRA	Remove for Const.	East Parking Lot
114	16.3" DBH	QUERCUS RUBRA	Remove for Const.	East Parking Lot W/in Riparian Corridor
121	10.4" DBH	ACER X FREEMANII	Remove for Const.	East Parking Lot W/in Riparian Corridor
123	22.8" DBH	ACER PLATANOIDES	Remove for Const.	East Parking Lot, Nuisance Species
124	15.6" DBH	ACER PLATANOIDES	Remove for Const.	East Parking Lot, Nuisance Species, RC
137	14" DBH	QUERCUS RUBRA	Remove for Const.	East Parking Lot
138	9" DBH	ACER PLATANOIDES	Remove for Const.	East Parking Lot, Nuisance Species, RC
139	16.1" DBH	ACER PLATANOIDES	Remove for Const.	East Parking Lot, Nuisance Species, RC
144	23.8" DBH	QUERCUS RUBRA	Remove for Const.	East Parking Lot
146	16" DBH	QUERCUS RUBRA	Remove for Const.	East Parking Lot
169	13.5" DBH	QUERCUS RUBRA	Remove for Const.	East Parking Lot
174	12.2" DBH	ACER PLATANOIDES	Remove for Const.	East Parking Lot, Nuisance Species, RC
184	13" DBH	QUERCUS RUBRA	Remove for Const.	East Parking Lot
195	17.2" DBH	QUERCUS RUBRA	Remove for Const.	East Parking Lot
211	±"16 DBH	ZELKOVA SERRATA	Remove for Const.	No GIS Points, size + species confirm in field
212	±"16 DBH	ZELKOVA SERRATA	Remove for Const.	No GIS Points
213	±"16 DBH	ZELKOVA SERRATA	Remove for Const.	No GIS Points
214	±"16 DBH	ZELKOVA SERRATA	Remove for Const.	No GIS Points
215	±"16 DBH	ZELKOVA SERRATA	Remove for Const.	No GIS Points
216	±"16 DBH	ZELKOVA SERRATA	Remove for Const.	No GIS Points
217	±"16 DBH	ZELKOVA SERRATA	Remove for Const.	No GIS Points
218	±"16 DBH	ZELKOVA SERRATA	Remove for Const.	No GIS Points
219	±"16 DBH	ZELKOVA SERRATA	Remove for Const.	No GIS Points
220	±"16 DBH	ZELKOVA SERRATA	Remove for Const.	No GIS Points
222	±"16 DBH	ZELKOVA SERRATA	Remove for Const.	No GIS Points
223	±"16 DBH	ZELKOVA SERRATA	Remove for Const.	No GIS Points
224	±"16 DBH	ZELKOVA SERRATA	Remove for Const.	No GIS Points
225	±"16 DBH	ZELKOVA SERRATA	Remove for Const.	No GIS Points
226	±"16 DBH	ZELKOVA SERRATA	Remove for Const.	No GIS Points

EXISTING TREE TABLE (WEST) - CITY OF SALEM OWNED TO REMOVE

NUMBER	SIZE (DBH)*	SPECIES	STATUS	NOTES
5	8" DBH	FRAXINUS LATIFOLIA	Remove for Const.	
6	9" DBH	ACER MACROPHYLLUM	Remove for Const.	
7	15.5" DBH	FRAXINUS LATIFOLIA	Remove for Const.	W/in Riparian Corridor
18	43" DBH	POPULUS TRICHOCARPA	Remove for Const.	
19	42.5" DBH	POPULUS TRICHOCARPA	Remove for Const.	
23	10" DBH	ACER MACROPHYLLUM	Remove for Const.	
25	12" DBH	ARBUTUS MENZIESII	Remove for Const.	W/in Riparian Corridor
26	14.5" DBH	ACER MACROPHYLLUM	Remove for Const.	W/in Riparian Corridor
27	46.5" DBH	POPULUS TRICHOCARPA	Remove for Const.	
37	45" DBH	POPULUS TRICHOCARPA	Remove for Const.	
52	25.6" DBH	ACER MACROPHYLLUM	Remove for Const.	
53	24.5" DBH	ACER MACROPHYLLUM	Remove for Const.	
59	26.5" DBH	FRAXINUS LATIFOLIA	Remove for Const.	W/in Riparian Corridor
60	22" DBH	ACER MACROPHYLLUM	Remove for Const.	
71	25" DBH	ACER MACROPHYLLUM	Remove for Const.	
72	55" DBH	POPULUS TRICHOCARPA	Remove for Const.	W/in Riparian Corridor
73	45" DBH	POPULUS TRICHOCARPA	Remove for Const.	W/in Riparian Corridor
74	51" DBH	FRAXINUS LATIFOLIA	Remove for Const.	
76	10" DBH	FRAXINUS LATIFOLIA	Remove for Const.	W/in Riparian Corridor
77	35" DBH	POPULUS TRICHOCARPA	Remove for Const.	W/in Riparian Corridor
81	52" DBH	POPULUS TRICHOCARPA	Remove for Const.	W/in Riparian Corridor
82	51" DBH	POPULUS TRICHOCARPA	Remove for Const.	W/in Riparian Corridor
83	25" DBH	ACER MACROPHYLLUM	Remove for Const.	
89	16.5" DBH	ACER MACROPHYLLUM	Remove for Const.	W/in Riparian Corridor
90	30" DBH	FRAXINUS LATIFOLIA	Remove for Const.	
100	31.6" DBH	ACER MACROPHYLLUM	Remove for Const.	
101	27.5" DBH	ACER MACROPHYLLUM	Remove for Const.	
102	30" DBH	ACER MACROPHYLLUM	Remove for Const.	W/in Riparian Corridor
103	40" DBH	POPULUS TRICHOCARPA	Remove for Const.	
104	28.5" DBH	POPULUS TRICHOCARPA	Remove for Const.	
105	20" DBH	POPULUS TRICHOCARPA	Remove for Const.	
106	43" DBH	POPULUS TRICHOCARPA	Remove for Const.	W/in Riparian Corridor
115	30" DBH	POPULUS TRICHOCARPA	Remove for Const.	
116	18" DBH	FRAXINUS LATIFOLIA	Remove for Const.	
125	15" DBH	POPULUS TRICHOCARPA	Remove for Const.	
126	9" DBH	FRAXINUS LATIFOLIA	Remove for Const.	W/in Riparian Corridor
129	19.5" DBH	ACER MACROPHYLLUM	Remove for Const.	
130	8" DBH	FRAXINUS LATIFOLIA	Remove for Const.	W/in Riparian Corridor
131	42" DBH	ACER MACROPHYLLUM	Remove for Const.	W/in Riparian Corridor
149	30" DBH	ACER MACROPHYLLUM	Remove for Const.	
150	50" DBH	POPULUS TRICHOCARPA	Remove for Const.	W/in Riparian Corridor
153	10" DBH	ACER MACROPHYLLUM	Remove for Const.	
154	18.5" DBH	ACER MACROPHYLLUM	Remove for Const.	W/in Riparian Corridor
175	11.5" DBH	ACER MACROPHYLLUM	Remove for Const.	Multi-trunk Tree
176	24.5" DBH	ACER MACROPHYLLUM	Remove for Const.	Multi-trunk Tree
176.1	XX" DBH	NA	Remove for Const.	
178	41" DBH	POPULUS TRICHOCARPA	Remove for Const.	W/in Riparian Corridor
180	8" DBH	ACER MACROPHYLLUM	Remove for Const.	
185	17" DBH	FRAXINUS LATIFOLIA	Remove for Const.	
186	17.5" DBH	FRAXINUS LATIFOLIA	Remove for Const.	
199	51.5" DBH	POPULUS TRICHOCARPA	Remove for Const.	
200	55" DBH	POPULUS TRICHOCARPA	Remove for Const.	
202	45" DBH	POPULUS TRICHOCARPA	Remove for Const.	
207	30" DBH	ACER MACROPHYLLUM	Remove for Const.	

EXISTING TREE TABLE (EAST) - CITY OF SALEM OWNED TO PROTECT

NUMBER	SIZE (DBH)*	SPECIES	CRZ	STATUS	NOTES
15	15.3" DBH	QUERCUS RUBRA	30.6'	Protect	
161	15" DBH	QUERCUS RUBRA	30'	Protect	
196	27" DBH	ACER MACROPHYLLUM	54'	Protect	
227	±"12 DBH	PSEUDOTSUGA MENZIESII	24'	Protect	No GIS Points
221	±"12 DBH	ZELKOVA SERRATA	24'	Protect	No GIS Points
228	±"12 DBH	ZELKOVA SERRATA	X'	Protect	No GIS Points
229	±"12 DBH	ZELKOVA SERRATA	X'	Protect	No GIS Points
230	±"16 DBH	ZELKOVA SERRATA	X'	Protect	No GIS Points
231	±"16 DBH	ZELKOVA SERRATA	X'	Protect	No GIS Points
232	±"16 DBH	ZELKOVA SERRATA	X'	Protect	No GIS Points
233	±"16 DBH	ZELKOVA SERRATA	X'	Protect	No GIS Points

EXISTING TREE TABLE (WEST) - CITY OF SALEM OWNED TO PROTECT

NUMBER	SIZE (DBH)*	SPECIES	TPZ	STATUS	NOTES
17	22.5" DBH	ACER MACROPHYLLUM	45'	Protect	W/in Riparian Corridor
38	32.8" DBH	FRAXINUS LATIFOLIA	66'	Protect	W/in Riparian Corridor
54	11.5" DBH	ACER MACROPHYLLUM	23'	Protect	W/in Riparian Corridor
58	25" DBH	ARBUTUS MENZIESII	50''	Protect	Multi-trunk Tree
140	23.8" DBH	FRAXINUS LATIFOLIA	48'	Protect	W/in Riparian Corridor
147	22.4" DBH	ACER MACROPHYLLUM	45'	Protect	W/in Riparian Corridor
148	11.5" DBH	ACER MACROPHYLLUM	23'	Protect	W/in Riparian Corridor
152	14" DBH	FRAXINUS LATIFOLIA	28'	Protect	W/in Riparian Corridor
198	19" DBH	ACER MACROPHYLLUM	38'	Protect	W/in Riparian Corridor
206	9" DBH	FRAXINUS LATIFOLIA	18'	Protect	W/in Riparian Corridor

GENERAL NOTES:
1. DBH = Diameter at Breast Height.
2. Below Ordinary High Water line (O.H.W.) assumed to be under jurisdiction of Department of State Lands (D.S.L.)

REGISTERED
0513
Digitally Signed 2026.02.11 09:48:08-08'00'
KRISTINA M. KOLTAVARY
OREGON
11/08/02
LANDSCAPE ARCHITECT
EXPIRES 11/30/2026

DOWL WWW.DOWL.COM

OREGON DEPARTMENT OF TRANSPORTATION

OR22: CENTER ST BRIDGE (SALEM) PROJECT
WILLAMINA-SALEM HIGHWAY
MARION & POLK COUNTIES

Designer: Carson Butler, LD
Reviewer: Bob Goodrich, PE
Drafter: Carson Butler, LD
Checker: Kristina Koltavary, PLA

TREE PROTECTION & REMOVAL TABLES

SHEET NO. FB106

FINAL ELECTRONIC DOCUMENT
AVAILABLE UPON REQUEST

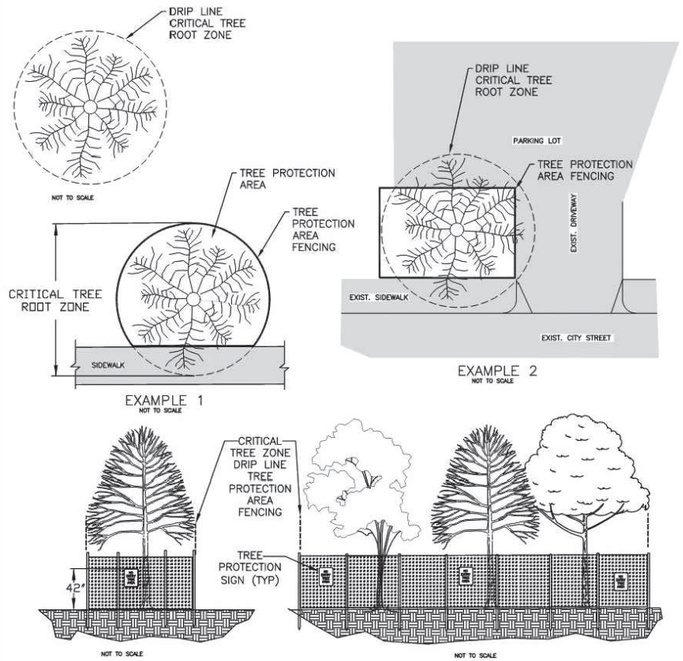

NOTES:

1. FENCE SHALL BE 4 TO 6 FT. IN HEIGHT AND SET AT TREE DRIP LINE, OR EDGE OF HARDSCAPE AS INDICATED ABOVE, OR AS DIRECTED BY CITY'S URBAN FORESTER.
2. FENCE MATERIALS SHALL CONSIST OF A 4 FT. HIGH, HIGH DENSITY POLYETHYLENE FENCING WITH 3.5" X 1.5" OPENINGS ORANGE COLOR, AND 1.25" X 6' "T" POSTS, OR APPROVED EQUAL.
3. POSTS SHALL BE SPACED 8 FEET APART AND SHALL BE DRIVEN TO SUCH A DEPTH TO SECURELY ANCHOR THE POSTS, TYPICALLY 18" DEEP.
4. FENCE SHALL REMAIN IN PLACE UNTIL THE COMPLETION OF ADJACENT CONSTRUCTION ACTIVITIES. MOVEMENT OR REMOVAL OF FENCE REQUIRES APPROVAL BY CITY'S AUTHORIZED REPRESENTATIVE.
5. NO EQUIPMENT SHALL OPERATE INSIDE THE TREE PROTECTIVE FENCING INCLUDING DURING FENCE INSTALLATION AND REMOVAL UNLESS APPROVED BY THE URBAN FORESTER.
6. PLACE TREE PROTECTION SIGNS (STANDARD PLAN 822) SECURELY ON TREE PROTECTION FENCING WITH WIRE TIES OR PLASTIC "ZIP" TIES. SIGN SHALL BE PLACED 42 INCHES ABOVE GROUND ON 50 FT. SPACING, O.C. AND MUST BE CLEARLY VISIBLE TO CONTRACTORS AND PUBLIC.

CITY OF SALEM
DEPARTMENT OF PUBLIC WORKS
STANDARD PLAN
TREE PROTECTION FENCING

APPROVED	CITY ENGINEER	6/03/16 DATE	DRAWN BY	ALT	6/2016	**NO.820**
			CHECKED BY	KLR	6/2016	

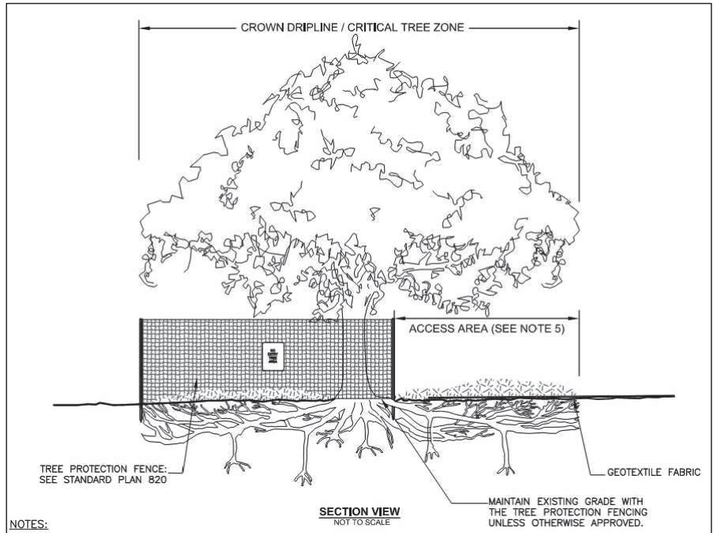

SECTION VIEW
NOT TO SCALE

NOTES:

1. SEE SPECIFICATIONS FOR ADDITIONAL TREE PROTECTION REQUIREMENTS.
2. IF THERE IS NO EXISTING IRRIGATION, SEE SPECIFICATIONS FOR WATERING REQUIREMENTS.
3. TREE PRUNING SHALL BE PREPARED BY A CERTIFIED ARBORIST.
4. NO EQUIPMENT SHALL OPERATE INSIDE THE TREE PROTECTION FENCING INCLUDING DURING FENCE INSTALLATION AND REMOVAL, UNLESS OTHERWISE APPROVED BY THE URBAN FORESTER.
5. FOR ACCESS WITHIN THE CRITICAL TREE ZONE WHERE MATERIALS WILL BE STORED TEMPORARILY OR WHERE OPERATING OR MOVING EQUIPMENT IS PERMITTED, PLACE GEOTEXTILE FABRIC ON GROUND SURFACE WHERE THE ACCESS AREA IS LOCATED WITHIN THE CRITICAL TREE ZONE. PROVIDE ONE OF THE SURFACE PROTECTION MEASURES LISTED BELOW OVER THE GEOTEXTILE FABRIC:
   A. APPLY 6-INCHES TO 12-INCHES OF WOOD MULCH.
   B. PLACE 3/4-INCH PLYWOOD OR 4" x 4" WOODEN BEAMS OVER A MINIMUM 4-INCHES OF WOOD CHIP MULCH.
   C. APPLICATION OF 4-INCHES TO 6-INCHES OF 3" OPEN GRADED ROCK.
   D. PLACEMENT OF STEEL PLATES ON TOP OF A MINIMUM 4-INCH LAYER OF WOOD MULCH.
   E. PLACEMENT OF COMMERCIAL OR LOGGING ROAD MATS ON TOP OF A MINIMUM 4-INCH LAYER OF WOOD CHIP MULCH.

NO
UNAUTHORIZED
ENTRY
TREE PROTECTION ZONE

PROHIBIDO
ENTRAR
SIN AUTORIZACIÓN
ZONA DE PROTECTION DEL ARBOL

CITY OF SALEM
DEPARTMENT OF PUBLIC WORKS
STANDARD PLAN
MITIGATION MEASURES FOR WORK IN CRITICAL TREE AREA

APPROVED	CITY ENGINEER	6/03/16 DATE	DRAWN BY	ALT	12/2015	**NO.821**
			CHECKED BY	KLR	12/2015	

TREE REMOVAL AND REPLACEMENT TABLE: Refer to Planting Plans

TREE REMOVAL TOTAL	
WEST	*EAST*
(19) Trees removed within Riparian Corridor boundary	*(16) Trees removed within Riparian Corridor boundary*
(35) Trees removed outside of Riparian Corridor boundary	*(54) Trees removed outside of Riparian Corridor boundary*
(54) Trees removed total	*(70) Trees removed total*
TREE REPLACEMENT TOTAL	
WEST	*EAST*
(19) Trees replaced within Riparian Corridor to 1:1 ratio @ 1.5" cal (per 808.055)	*(16) Trees replaced in Riparian Corridor to 1:1 ratio @ 1.5" cal (per 808.055)*
(35) Trees replaced above the Riparian Enhancement Buffer and not required by Riparian Corridor replacement requirements at 1:1 ratio @1.5" caliper.	*(54) Trees replaced above the Riparian Enhancement Buffer and not required by Riparian Corridor replacement requirements at 1:1 ratio @1.5" cal*
(263) Trees replaced within Riparian Enhancement Buffer to Escarpment & Outer Section Requirements (7' O.C.)	*(168) Trees replaced within Riparian Enhancement Buffer to Escarpment Section Requirements (7' O.C.)*
(327) Total Tree Replacements	*(238) Total Tree Replacements*
(54) Trees at 1.5" Caliper	*(62) Trees at 1.5" Caliper*
(263) Trees at #1 container	*(8) Trees at 5-6' height*
(10) Trees at #5 container	*(155) Trees at #1 container*
	(13) Trees at #5 container

REGISTERED
0513
Digitally Signed 2026.02.11 09:47:41-08'00'
KRISTINA M. KOLTAVARY
OREGON
11/08/02
LANDSCAPE ARCHITECT
EXPIRES 11/30/2026

DOWL WWW.DOWL.COM

OR22: CENTER ST BRIDGE (SALEM) PROJECT
WILLAMINA-SALEM HIGHWAY
MARION & POLK COUNTIES

Designer: Carson Butler, LD
Reviewer: Bob Goodrich, PE
Drafter: Carson Butler, LD
Checker: Kristina Koltavary, PLA

TREE PLAN REQUIREMENTS & PROTECTION

SHEET NO.
FB107

FINAL ELECTRONIC DOCUMENT
AVAILABLE UPON REQUEST

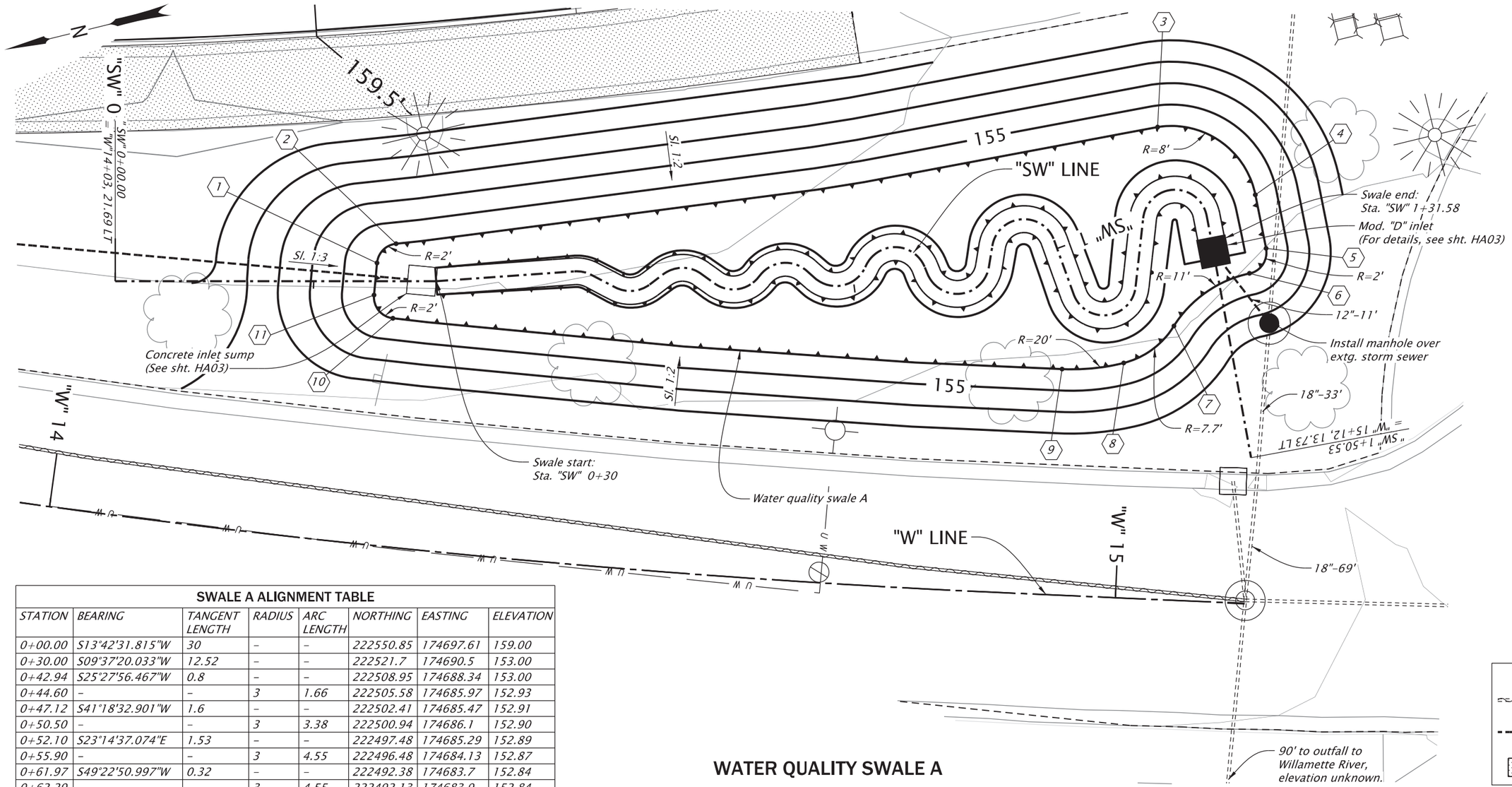

WATER QUALITY SWALE A

SWALE A ALIGNMENT TABLE

STATION	BEARING	TANGENT LENGTH	RADIUS	ARC LENGTH	NORTHING	EASTING	ELEVATION
0+00.00	S13°42'31.815"W	30	–	–	222550.85	174697.61	159.00
0+30.00	S09°37'20.033"W	12.52	–	–	222521.7	174690.5	153.00
0+42.94	S25°27'56.467"W	0.8	–	–	222508.95	174688.34	153.00
0+44.60	–	–	3	1.66	222505.58	174685.97	152.93
0+47.12	S41°18'32.901"W	1.6	–	–	222502.41	174685.47	152.91
0+50.50	–	–	3	3.38	222500.94	174686.1	152.90
0+52.10	S23°14'37.074"E	1.53	–	–	222497.48	174685.29	152.89
0+55.90	–	–	3	4.55	222496.48	174684.13	152.87
0+61.97	S49°22'50.997"W	0.32	–	–	222492.38	174683.7	152.84
0+62.29	–	–	3	4.55	222492.13	174683.9	152.84
0+67.14	S55°04'48.949"W	1.01	–	–	222487.85	174683.23	152.81
0+68.15	–	–	3	4.84	222487.27	174682.4	152.81
0+73.74	S51°45'20.223"E	0.14	–	–	222482.45	174682.26	152.78
0+73.88	–	–	3	5.59	222482.36	174682.37	152.78
0+80.89	S81°59'37.770"W	0.64	–	–	222477.04	174680.93	152.75
0+81.52	–	–	3	7.00	222476.95	174680.3	152.74
0+89.33	S67°06'16.434"E	1.96	–	–	222471.21	174679.55	152.70
0+91.29	–	–	3	7.81	222470.45	174681.36	152.69
0+99.20	S83°50'38.202"W	5.34	–	–	222464.70	174680.52	152.65
1+04.54	–	–	3	7.90	222464.13	174675.21	152.63
1+12.60	S70°03'04.964"E	6.43	–		222458.33	174674.51	152.59
1+19.02	–	–	3	8.06	222456.13	174680.55	152.55
1+23.28	N87°17'07.524"W	2.44	–	–	222449.38	174699.16	152.50
1+50.23	–	–	–	–	222451.63	174656.44	158.00

SWALE TOP TABLE

POINT	STATION, ELEVATION
1	0+24, 1.60' LT
2	0+26, 3.49' LT
3	1+23, 6.00' LT
4	1+27, 4.91' LT
5	1+31, 4.89' LT
6	1+34, 2.97' LT
7	1+11, 4.68' RT
8	1+08, 4.68' RT
9	1+07, 5.68' RT
10	0+25, 3.46' RT
11	0+24, 1.29' RT

GENERAL NOTES:

1. For paving details, see sht. D01.
2. For planting details, see sht. FA04.
3. For storm system upstream of swale, see shts. D01B & D01C.

LEGEND

- Remove/abandon pipe
- Storm pipe
- Concrete sidewalk

REGISTERED PROFESSIONAL ENGINEER
79131
Digitally Signed 2026.06.10 20:11:52-07'00'
OREGON
JUNE 14, 2007
BENJAMIN P. WEWERKA
EXPIRES: 06/30/2028

FINAL ELECTRONIC DOCUMENT
AVAILABLE UPON REQUEST

DOWL WWW.DOWL.COM

OREGON DEPARTMENT OF TRANSPORTATION

OR22: CENTER ST BRIDGE (PHASE 1) PROJECT
WILLAMINA-SALEM HIGHWAY
MARION & POLK COUNTIES

Designer: Abigail Hale/Logan Morrison
Reviewer: Bob Goodrich
Drafter: Steve Wolfer
Checker: Benjamin Wewerka

STORMWATER PLAN

SHEET NO. HA01

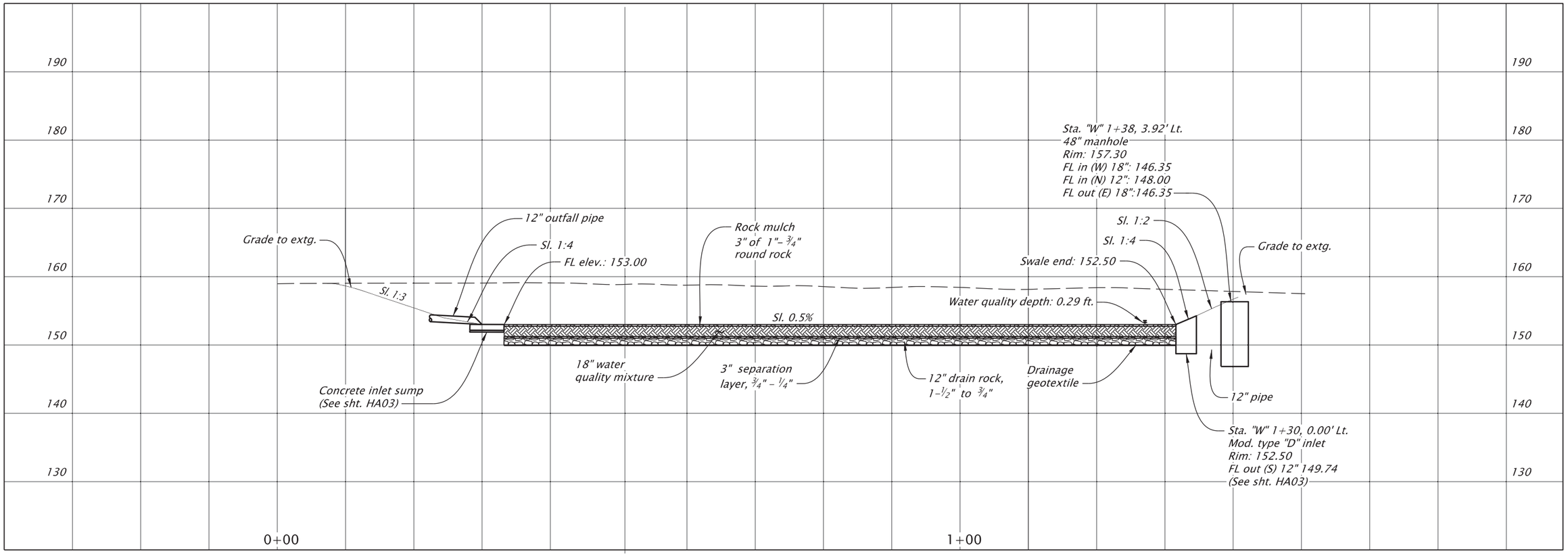

WATER QUALITY SWALE A - "SW" PROFILE

NOT TO SCALE

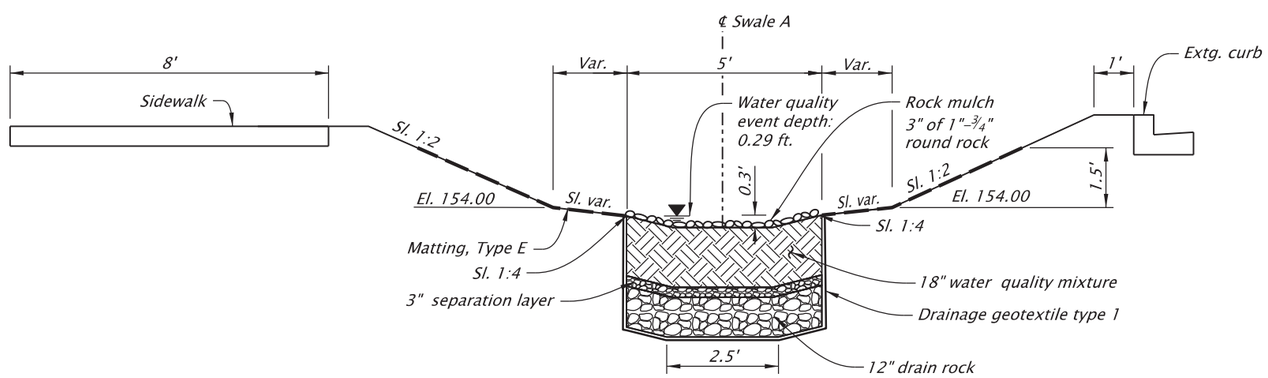

WATER QUALITY SWALE A, TYPICAL SECTION

NOT TO SCALE

REGISTERED PROFESSIONAL ENGINEER
79131
Digitally Signed 2026.06.10 20:11:20-07'00'
OREGON
JUNE 14, 2007
BENJAMIN P. WEWERKA
EXPIRES: 06/30/2028

FINAL ELECTRONIC DOCUMENT
AVAILABLE UPON REQUEST

DOWL WWW.DOWL.COM

OREGON DEPARTMENT OF TRANSPORTATION

OR22: CENTER ST BRIDGE (PHASE 1) PROJECT
WILLAMINA-SALEM HIGHWAY
MARION & POLK COUNTIES

Designer: Abigail Hale
Reviewer: Bob Goodrich
Drafter: Steve Wolfer
Checker: Benjamin Wewerka

STORMWATER DETAILS

SHEET NO.
HA02

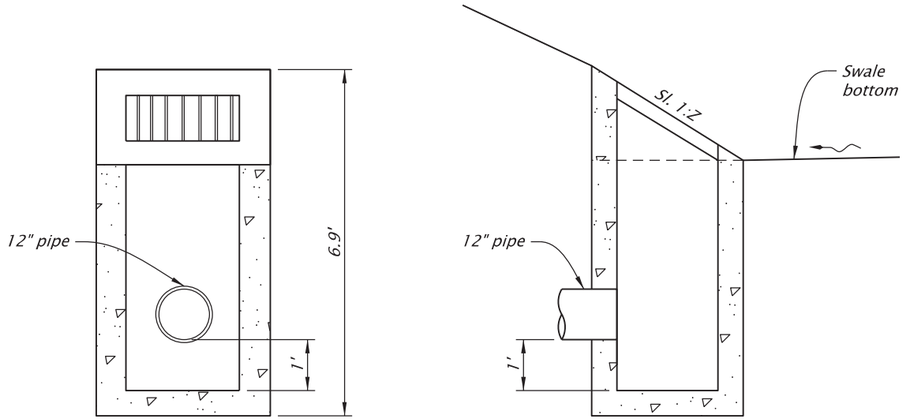

NOTES:
1. For details not shown, see dwg. no. RD370.

2. See pipe data sheet for slope.

MODIFIED TYPE "D" INLET

NOT TO SCALE

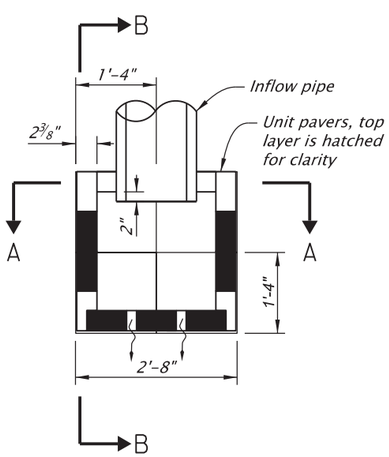

PLAN VIEW

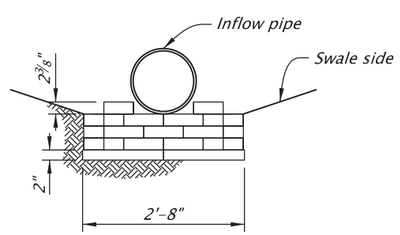

SECTION A-A

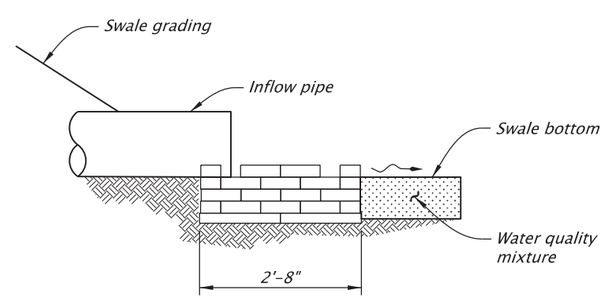

SECTION B-B

CONCRETE INLET SUMP

NOT TO SCALE

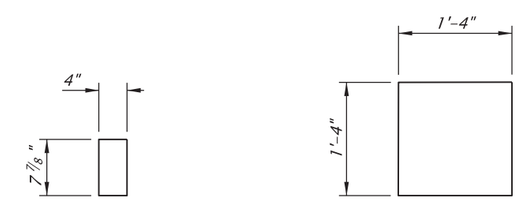

UNIT PAVER
4" X 8" X 2-3/8"

UNIT PAVER
16" X 16" X 2"

PAVERS

NOT TO SCALE

REGISTERED PROFESSIONAL ENGINEER
79131
Digitally Signed 2026.06.10 20:10:32-07'00'
OREGON
JUNE 14, 2007
BENJAMIN P. WEWERKA
EXPIRES: 06/30/2028

FINAL ELECTRONIC DOCUMENT AVAILABLE UPON REQUEST

DOWL WWW.DOWL.COM

OREGON DEPARTMENT OF TRANSPORTATION

OR22: CENTER ST BRIDGE (PHASE 1) PROJECT
WILLAMINA-SALEM HIGHWAY
MARION & POLK COUNTIES

Designer: Abigail Hale/Logan Morrison
Reviewer: Bob Goodrich
Drafter: Steve Wolfer
Checker: Benjamin Wewerka

STORMWATER DETAILS

SHEET NO. HA03

59V-051

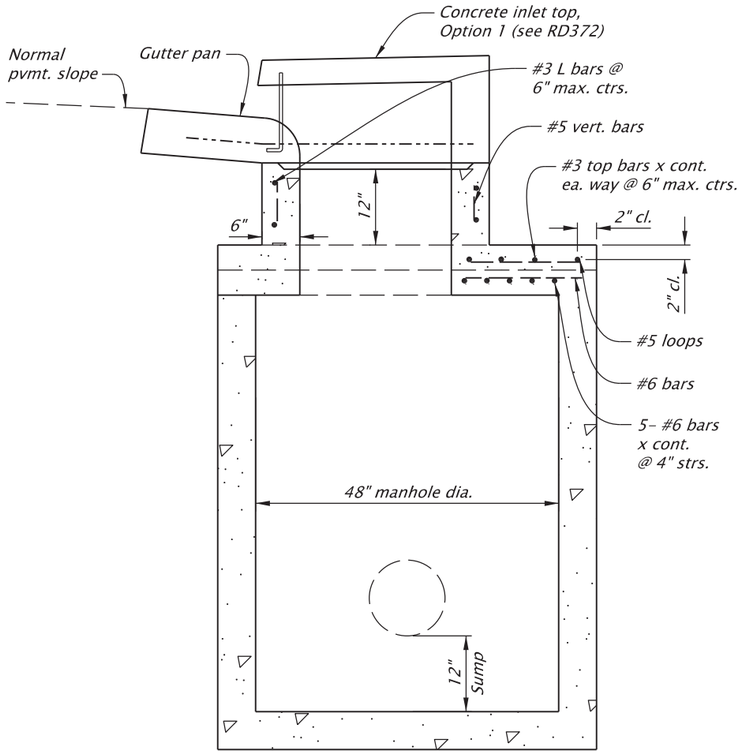

SECTION A-A

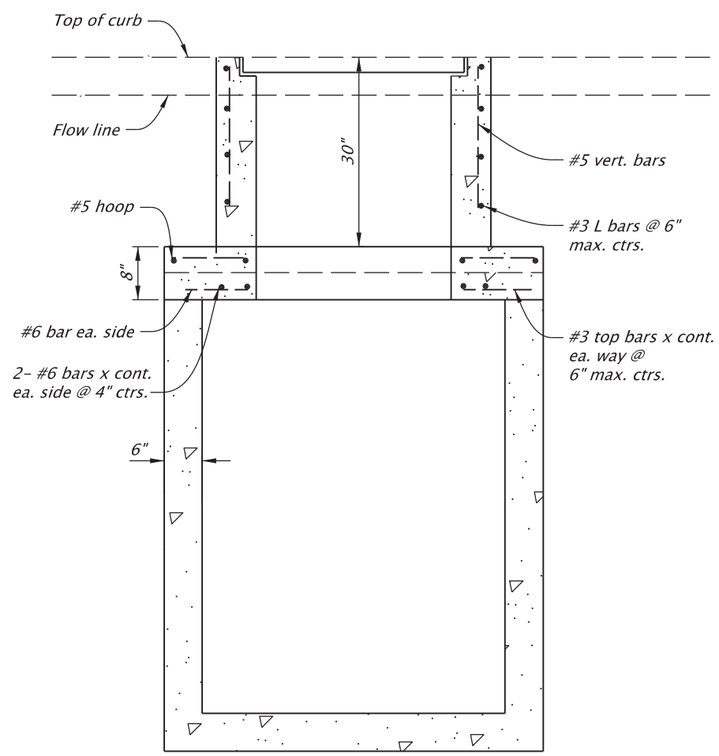

SECTION B-B

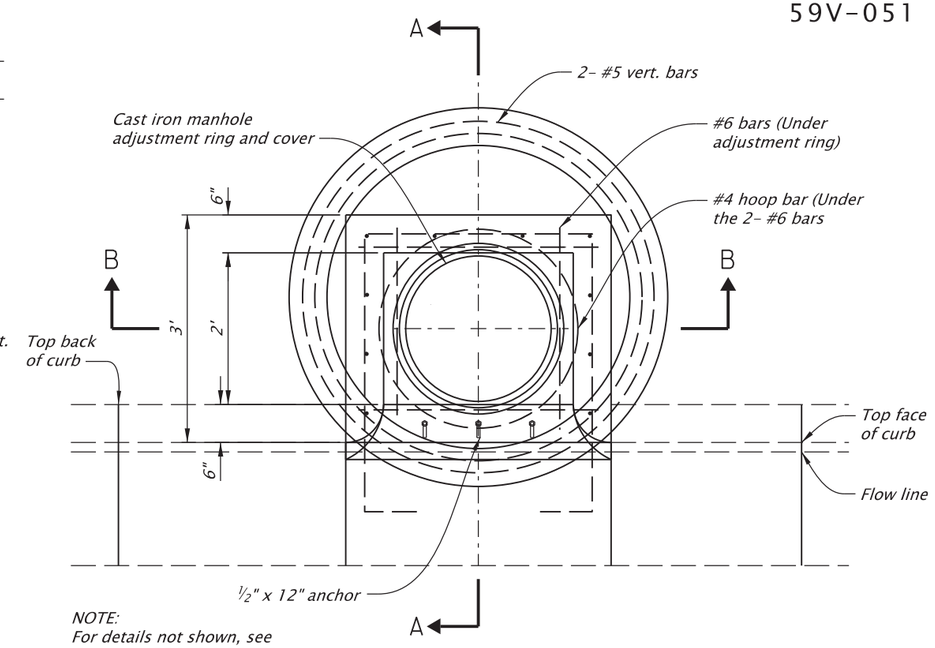

NOTE:
For details not shown, see
dwg. nos. RD348 & RD372.

PLAN VIEW

MANHOLE WITH TYPE "CG-3" INLET

NOT TO SCALE

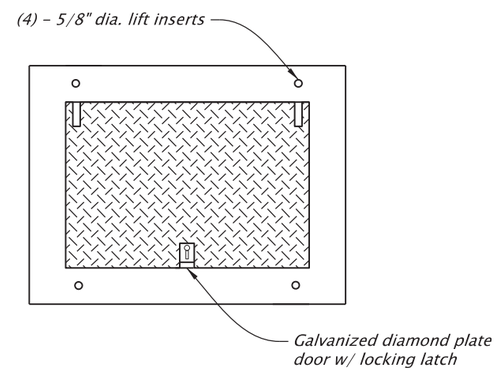

SOLID TOP FOR TYPE G-2 INLET

NOT TO SCALE

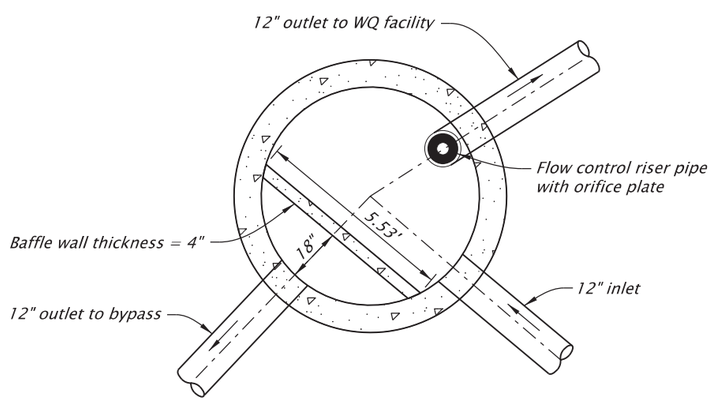

PLAN VIEW

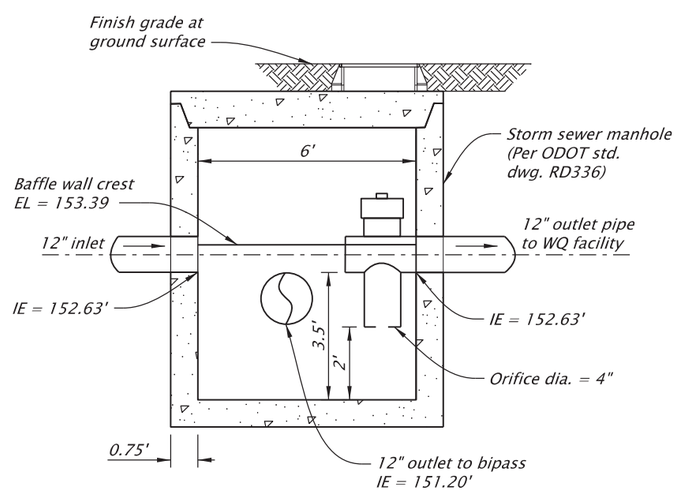

PLAN VIEW

FLOW CONTROL MANHOLE #1 - POND D00636

NOT TO SCALE

REGISTERED PROFESSIONAL ENGINEER
79131
Digitally Signed 2026.06.10 20:10:01-07'00'
OREGON
JUNE 14, 2007
BENJAMIN P. WEWERKA
EXPIRES: 06/30/2028

FINAL ELECTRONIC DOCUMENT
AVAILABLE UPON REQUEST

DOWL WWW.DOWL.COM

OREGON DEPARTMENT OF TRANSPORTATION

OR22: CENTER ST BRIDGE (PHASE 1) PROJECT
WILLAMINA-SALEM HIGHWAY
MARION & POLK COUNTIES

Designer: Abigail Hale
Reviewer: Bob Goodrich
Drafter: Steve Wolfer
Checker: Benjamin Wewerka

STORMWATER DETAILS

SHEET NO.
HA04

59V-051

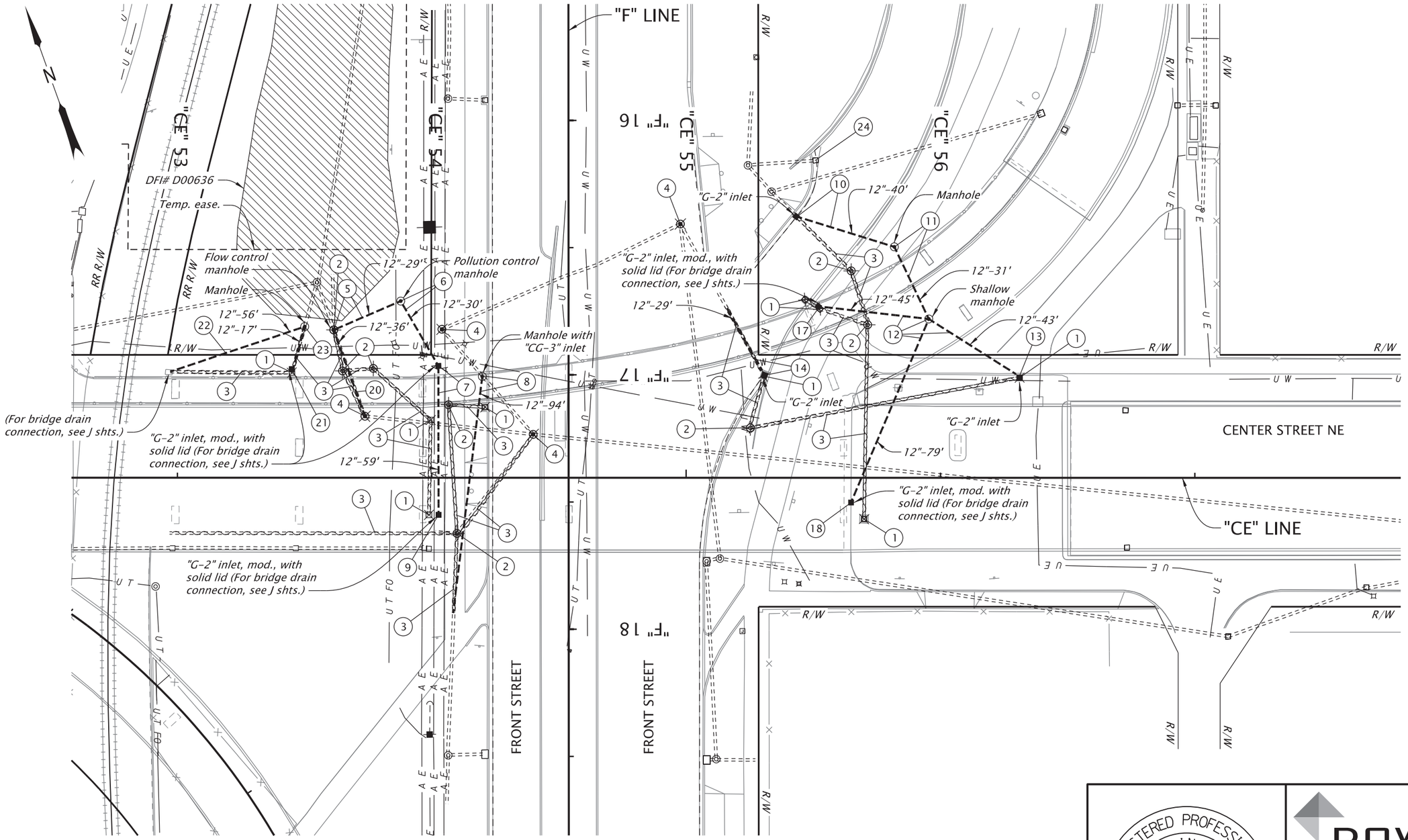

GENERAL NOTES:

1. For construction notes, see shts. C02C & C02D.
2. Non-drainage related notes omitted for clarity.

LEGEND

- Remove/abandon pipe
- Storm pipe
- No work area

FRONT STREET STORM SEWER ENLARGEMENT

REGISTERED PROFESSIONAL ENGINEER 79131 OREGON JUNE 14, 2007 BENJAMIN P. WEWERKA

Digitally Signed 2026.06.10 20:09:17-07'00'

EXPIRES: 06/30/2028

FINAL ELECTRONIC DOCUMENT AVAILABLE UPON REQUEST

DOWL WWW.DOWL.COM

OREGON DEPARTMENT OF TRANSPORTATION

OR22: CENTER ST BRIDGE (PHASE 1) PROJECT
WILLAMINA-SALEM HIGHWAY
MARION & POLK COUNTIES

Designer: Abigail Hale/Logan Morrison
Reviewer: Bob Goodrich
Drafter: Steve Wolfer
Checker: Benjamin Wewerka

STORMWATER DETAILS

SHEET NO. HA05

59V-051

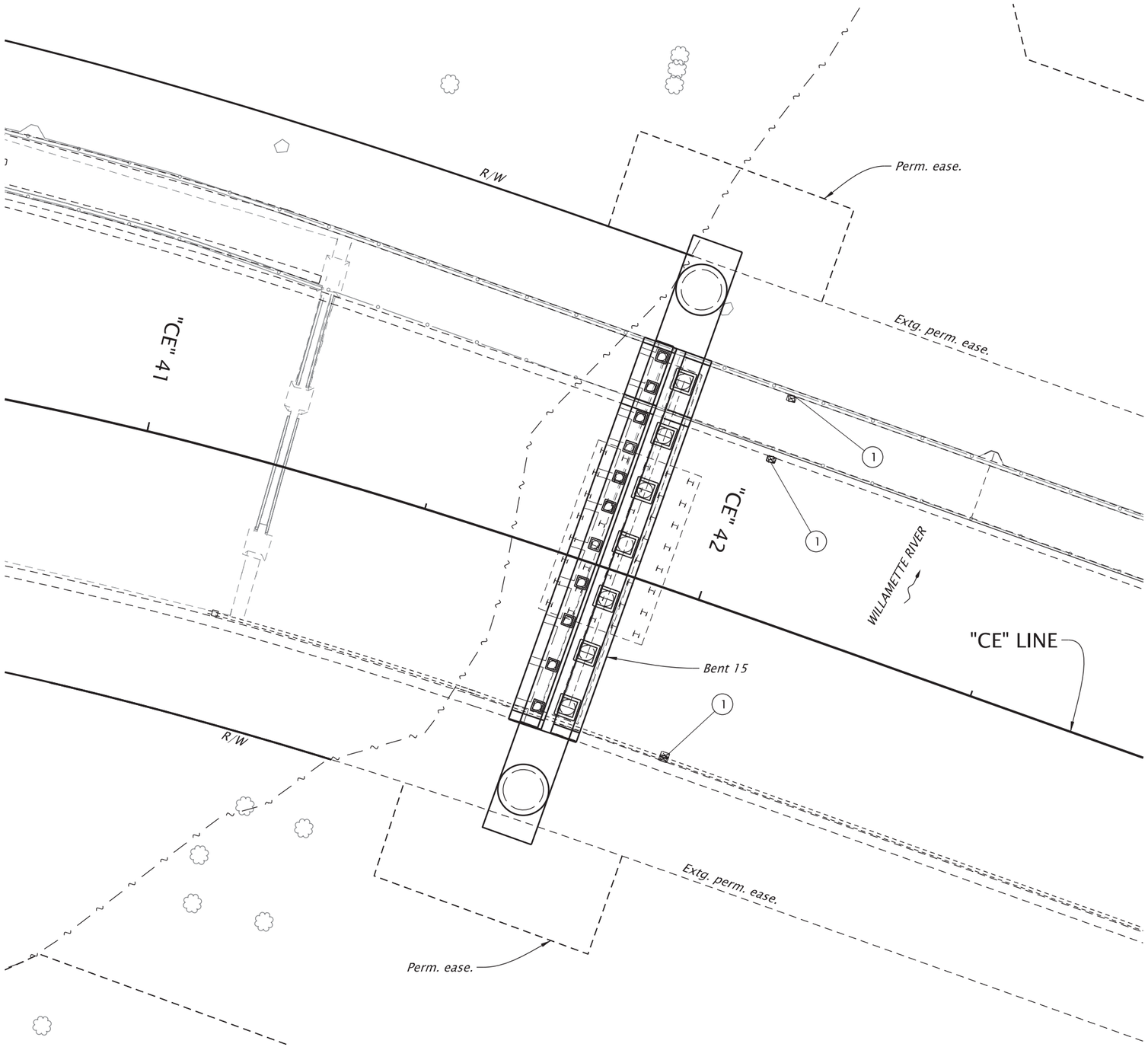

GENERAL NOTES:

1. *South side bridge drains between Sta. "CE" 41+84.65 and Sta. "CE" 48+73.13 are to be temporarily plugged until bridge drain piping is reconnected and operational.*
2. *The temporary drainage facilities shown on this plan are the minimum requirements for anticipated site conditions. During construction the facilities shall be upgraded as necessary to convey runoff around the limits of work to the existing storm sewer system.*

TEMPORARY DRAINAGE NOTES:

(1) *Temp. plug bridge drains*

LEGEND

- *Extg. storm pipe*
- *Storm pipe*
- *Extg. manhole*
- *Manhole*
- *Extg. inlet*
- *Inlet*
- *Extg. bridge drain*

REGISTERED PROFESSIONAL ENGINEER
79131
Digitally Signed 2026.06.10 20:08:43-07'00'
OREGON
JUNE 14, 2007
BENJAMIN P. WEWERKA
EXPIRES: 06/30/2028

FINAL ELECTRONIC DOCUMENT AVAILABLE UPON REQUEST

DOWL WWW.DOWL.COM

OREGON DEPARTMENT OF TRANSPORTATION

OR22: CENTER ST BRIDGE (PHASE 1) PROJECT
WILLAMINA-SALEM HIGHWAY
MARION & POLK COUNTIES

Designer: Logan Morrison | Reviewer: Bob Goodrich
Drafter: Steve Wolfer | Checker: Benjamin Wewerka

TEMPORARY DRAINAGE FACILITIES BENT 15

SHEET NO. HD01

59V-051

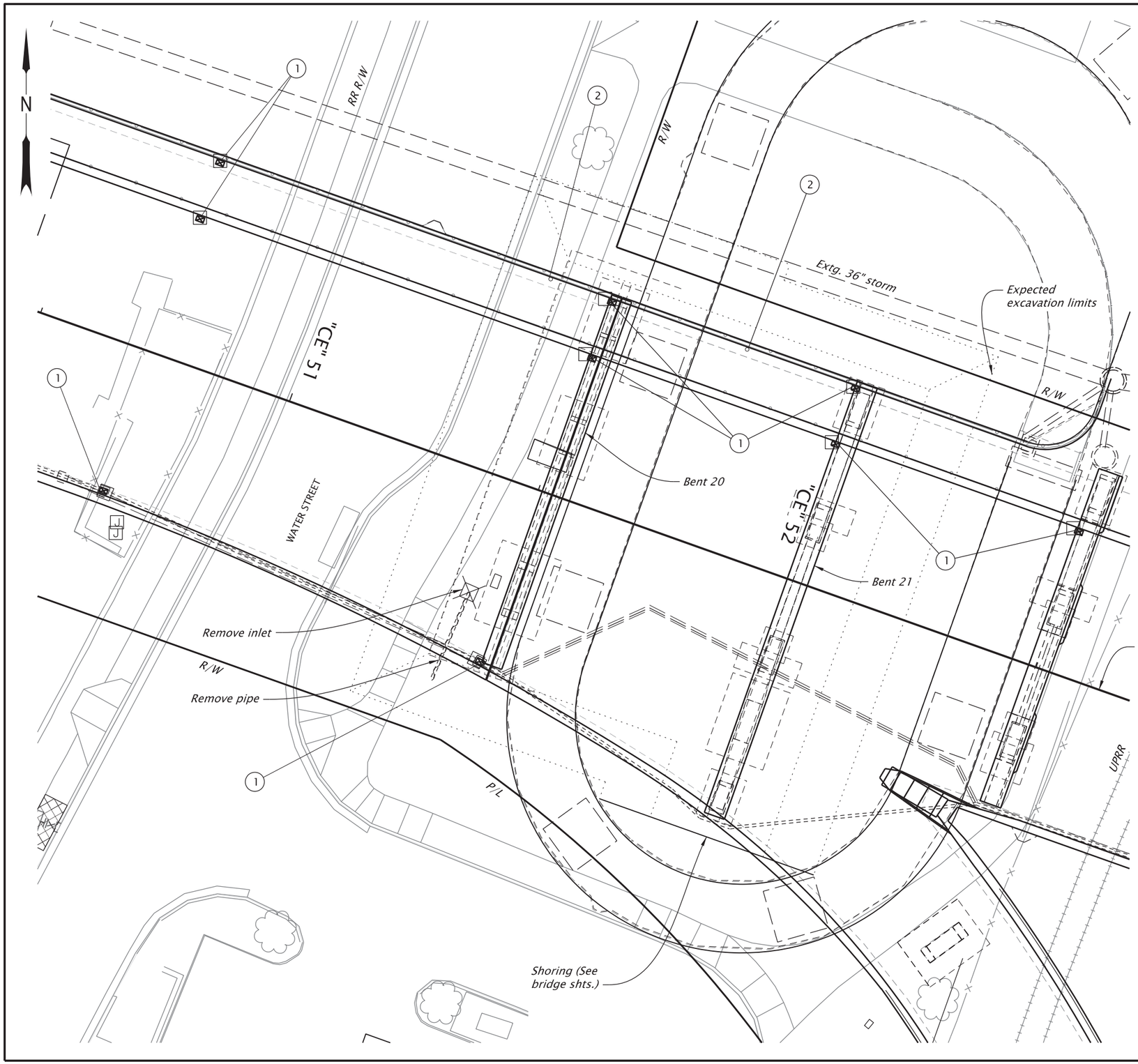

GENERAL NOTES:

1. *South side bridge drains between Sta. "CE" 48+73.13 and Sta. "CE" 55+65.24 are to be temporarily plugged until bridge drain piping is completed and/or stormwater system is operational.*

2. *The temporary drainage facilities shown on this plan are the minimum requirements for anticipated site conditions. During construction the facilities shall be upgraded as necessary to convey runoff around the limits of work to the existing storm sewer system.*

TEMPORARY DRAINAGE NOTES:

(1) *Temp. plug bridge drains*

(2) *Temp. plug 2" concrete holes on pedestrian path. Locations marked are approximate*

LEGEND

- *Extg. storm pipe*
- *Storm pipe*
- *Extg. manhole*
- *Manhole*
- *Extg. inlet*
- *Inlet*
- *Extg. bridge drain*

REGISTERED PROFESSIONAL ENGINEER
79131
Digitally Signed 2026.06.10 20:08:10-07'00'
OREGON
JUNE 14, 2007
BENJAMIN P. WEWERKA
EXPIRES: 06/30/2028

FINAL ELECTRONIC DOCUMENT AVAILABLE UPON REQUEST

DOWL WWW.DOWL.COM

OREGON DEPARTMENT OF TRANSPORTATION

OR22: CENTER ST BRIDGE (PHASE 1) PROJECT
WILLAMINA-SALEM HIGHWAY
MARION & POLK COUNTIES

Designer: Logan Morrison
Reviewer: Bob Goodrich
Drafter: Steve Wolfer
Checker: Benjamin Wewerka

TEMPORARY DRAINAGE FACILITIES BENTS 20 & 21

SHEET NO. HD02

59V-051

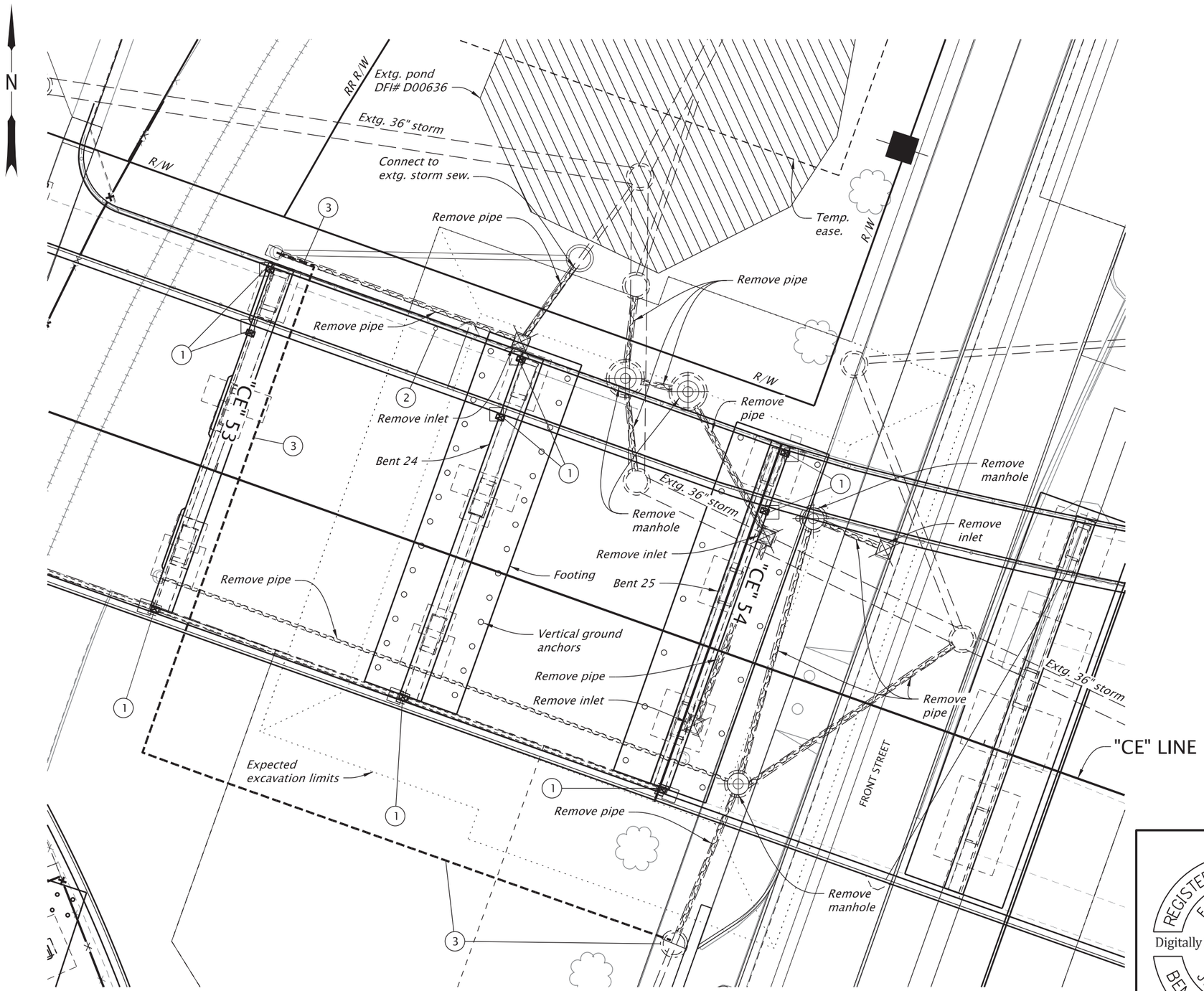

GENERAL NOTES:

1. *Install manhole and 12" storm pipe before excavation. Refer to drainage and utilities notes 22 and 23 (See shts. C02C and C02D). Connect storm sewer to extg. system to ensure postive drainage during excavation.*
2. *South side bridge drains between Sta. "CE" 48+73.13 and Sta. "CE" 55+65.24 are to be temporarily plugged until bridge drain piping is completed and/or stormwater system is operational.*
3. *The temporary drainage facilities shown on this plan are the minimum requirements for anticipated site conditions. During construction the facilities shall be upgraded as necessary to convey runoff around the limits of work to the existing storm sewer system.*
4. *The temporary manhole and temporary piping around the expected excavation limits for bents 24, 25 and 26 must be in operation during the work on all three bents.*

TEMPORARY DRAINAGE NOTES:

1. *Temp. plug bridge drains*
2. *Temp. plug 2" concrete holes on pedestrian path. Locations marked are approximate*
3. *Inst. temp. manhole and temp. drainage and connect to storm sewer system*

LEGEND

- *Extg. storm pipe*
- *Storm pipe*
- *Temp. storm pipe*
- *Extg. manhole*
- *Temp. manhole*
- *Manhole*
- *Extg. inlet*
- *Extg. bridge drain*
- *No work area*

REGISTERED PROFESSIONAL ENGINEER
79131
Digitally Signed 2026.06.10 20:07:33-07'00'
OREGON
JUNE 14, 2007
BENJAMIN P. WEWERKA
EXPIRES: 06/30/2028

FINAL ELECTRONIC DOCUMENT AVAILABLE UPON REQUEST

DOWL WWW.DOWL.COM

OREGON DEPARTMENT OF TRANSPORTATION

OR22: CENTER ST BRIDGE (PHASE 1) PROJECT
WILLAMINA-SALEM HIGHWAY
MARION & POLK COUNTIES

Designer: Logan Morrison
Reviewer: Bob Goodrich
Drafter: Steve Wolfer
Checker: Benjamin Wewerka

TEMPORARY DRAINAGE FACILITIES BENTS 24 & 25

SHEET NO. HD03

59V-051

GENERAL NOTES:

1. Install manhole and 12" storm pipe before excavation. Refer to drainage and utilities notes 22 and 23 (See shts. C02C and C02D). Connect storm sewer to extg. system to ensure postive drainage during excavation.

2. South side bridge drains between Sta. "CE" 48+73.13 and Sta. "CE" 55+65.24 are to be temporarily plugged until bridge drain piping is completed and/or stormwater system is operational.

3. The temporary drainage facilities shown on this plan are the minimum requirements for anticipated site conditions. During construction the facilities shall be upgraded as necessary to convey runoff around the limits of work to the existing storm sewer system.

4. The temporary manhole and temporary piping around the expected excavation limits for bents 24, 25 and 26 must be in operation during the work on all three bents.

TEMPORARY DRAINAGE NOTES:

1. Temp. plug bridge drains
2. Temp. plug 2" concrete holes on pedestrian path. Locations marked are approximate
3. Temp. reconst. "CG-3" inlet to "G-2" inlet and adjust to temp. widening grade. Reconst. temp. "G-2" to "CG-3" upon completion of Bent 26 construction
4. Temp. adjust extg. manhole to temp. road grade. Adjust manhole to finish grade upon removal of temp. road
5. See sht. HD03, note 3
Inst. temp. manhole and temp. drainage and connect to storm sewer system

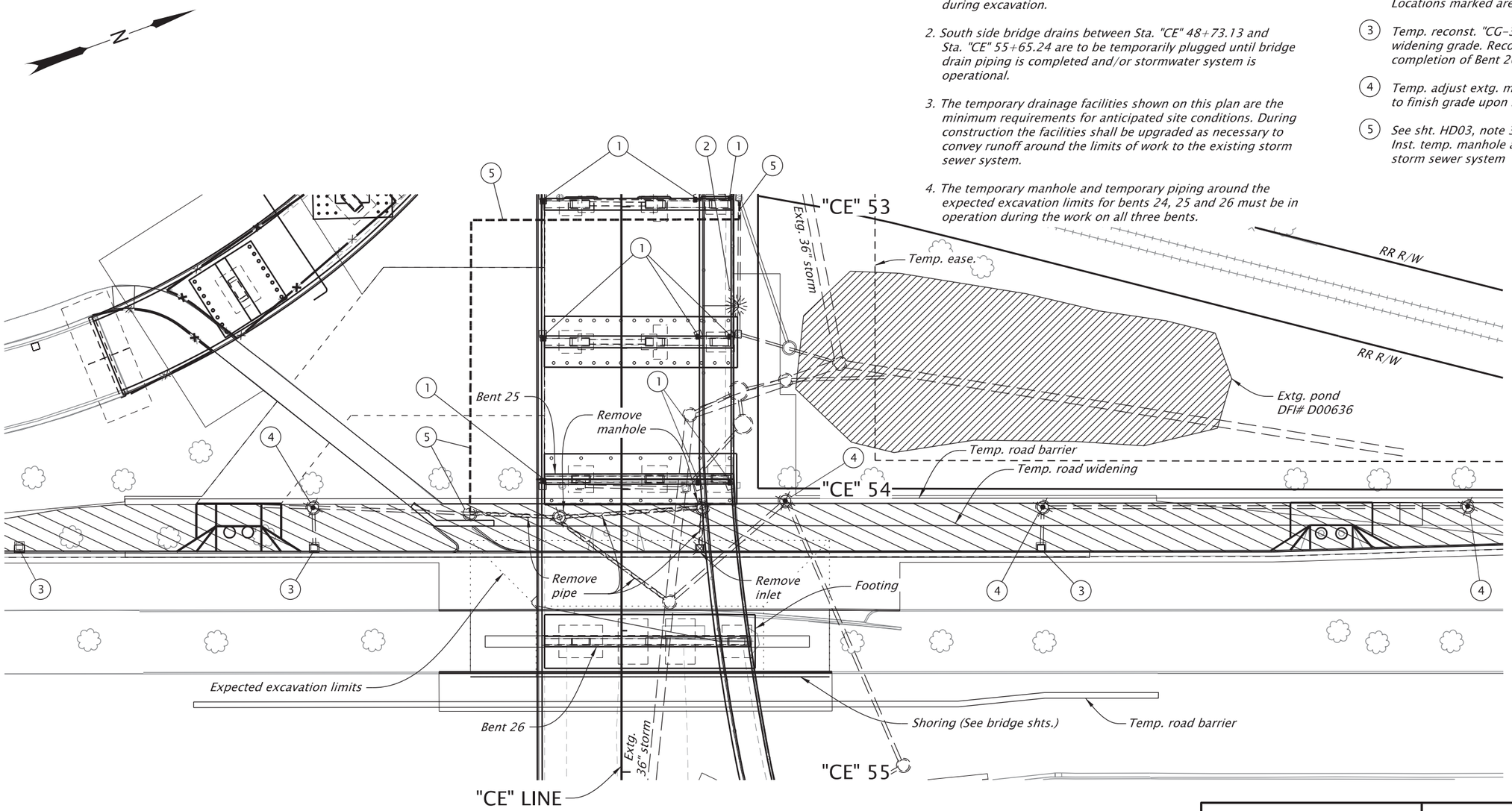

LEGEND

- Extg. storm pipe
- Storm pipe
- Temp. storm pipe
- Extg. manhole
- Temp. manhole
- Manhole
- Extg. inlet
- Inlet
- Extg. bridge drain
- No work area

REGISTERED PROFESSIONAL ENGINEER
79131
Digitally Signed 2026.06.10 20:06:57-07'00'
OREGON
JUNE 14, 2007
BENJAMIN P. WEWERKA
EXPIRES: 06/30/2028

FINAL ELECTRONIC DOCUMENT AVAILABLE UPON REQUEST

DOWL WWW.DOWL.COM

OREGON DEPARTMENT OF TRANSPORTATION

OR22: CENTER ST BRIDGE (PHASE 1) PROJECT
WILLAMINA-SALEM HIGHWAY
MARION & POLK COUNTIES

Designer: Logan Morrison
Reviewer: Bob Goodrich
Drafter: Steve Wolfer
Checker: Benjamin Wewerka

TEMPORARY DRAINAGE FACILITIES BENT 26

SHEET NO. HD04

59V-051

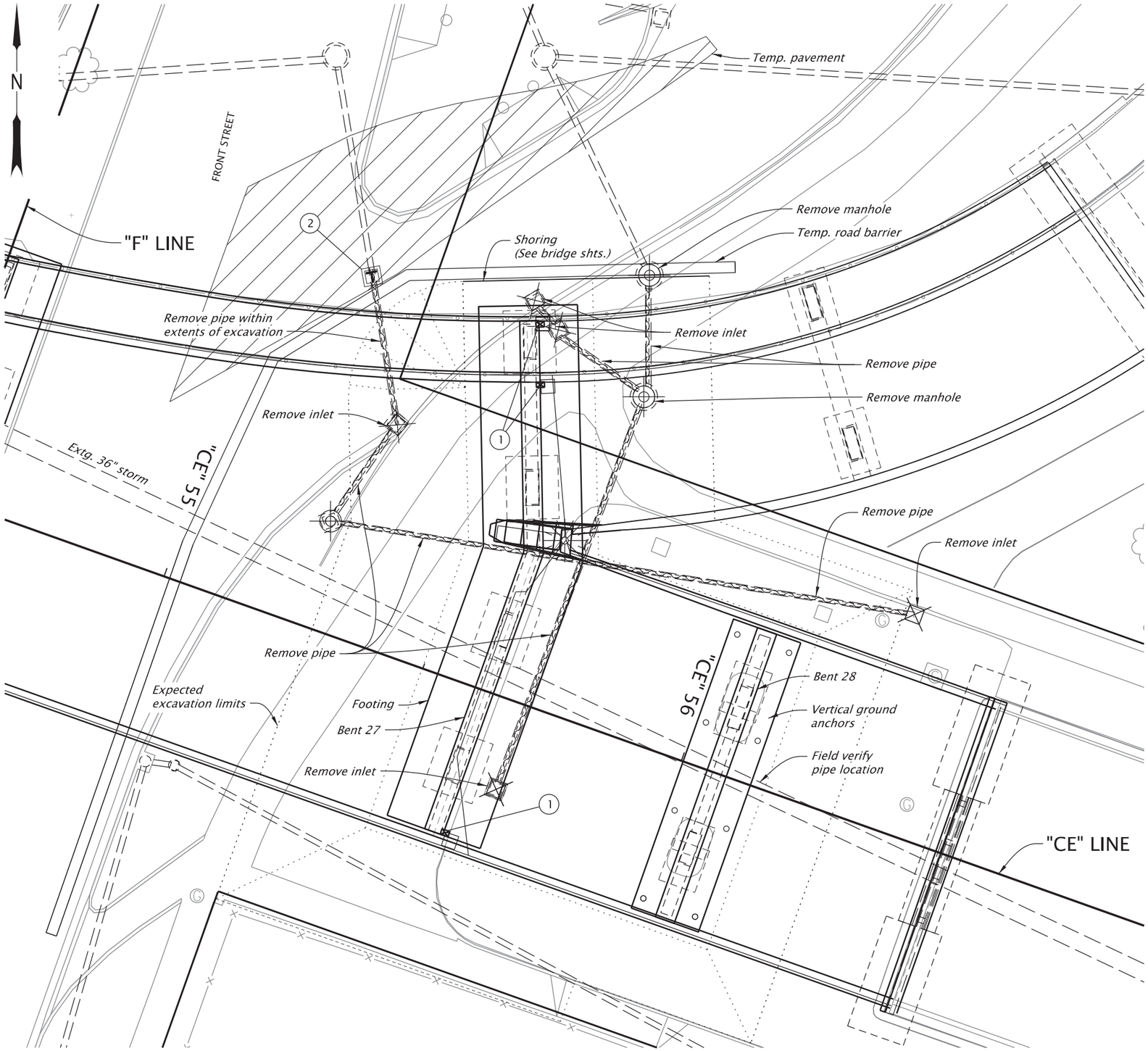

GENERAL NOTES:

1. *South side bridge drains between Sta. "CE" 48+73.13 and Sta. "CE" 55+65.24 are to be temporarily plugged until bridge drain piping is completed and/or stormwater system is operational.*

2. *The temporary drainage facilities shown on this plan are the minimum requirements for anticipated site conditions. During construction the facilities shall be upgraded as necessary to convey runoff around the limits of work to the existing storm sewer system.*

TEMPORARY DRAINAGE NOTES:

(1) *Temp. plug bridge drains*

(2) *Inst. temp. "G-2" inlet to temp. pavement grades. Remove temp. "G-2" inlet upon completion of Bent 27 construction.*

LEGEND

- *Extg. storm pipe*
- *Storm pipe*
- *Extg. manhole*
- *Manhole*
- *Extg. inlet*
- *Inlet*
- *Temp. inlet*
- *Extg. bridge drain*
- *Temp. pavement*

REGISTERED PROFESSIONAL ENGINEER
79131
Digitally Signed 2026.06.10 20:06:19-07'00'
OREGON
JUNE 14, 2007
BENJAMIN P. WEWERKA
EXPIRES: 06/30/2028

FINAL ELECTRONIC DOCUMENT
AVAILABLE UPON REQUEST

DOWL WWW.DOWL.COM

OR22: CENTER ST BRIDGE (PHASE 1) PROJECT
WILLAMINA-SALEM HIGHWAY
MARION & POLK COUNTIES

Designer: Logan Morrison
Reviewer: Bob Goodrich
Drafter: Steve Wolfer
Checker: Benjamin Wewerka

TEMPORARY DRAINAGE FACILITIES
BENTS 27 & 28

SHEET NO.
HD05

59V-051

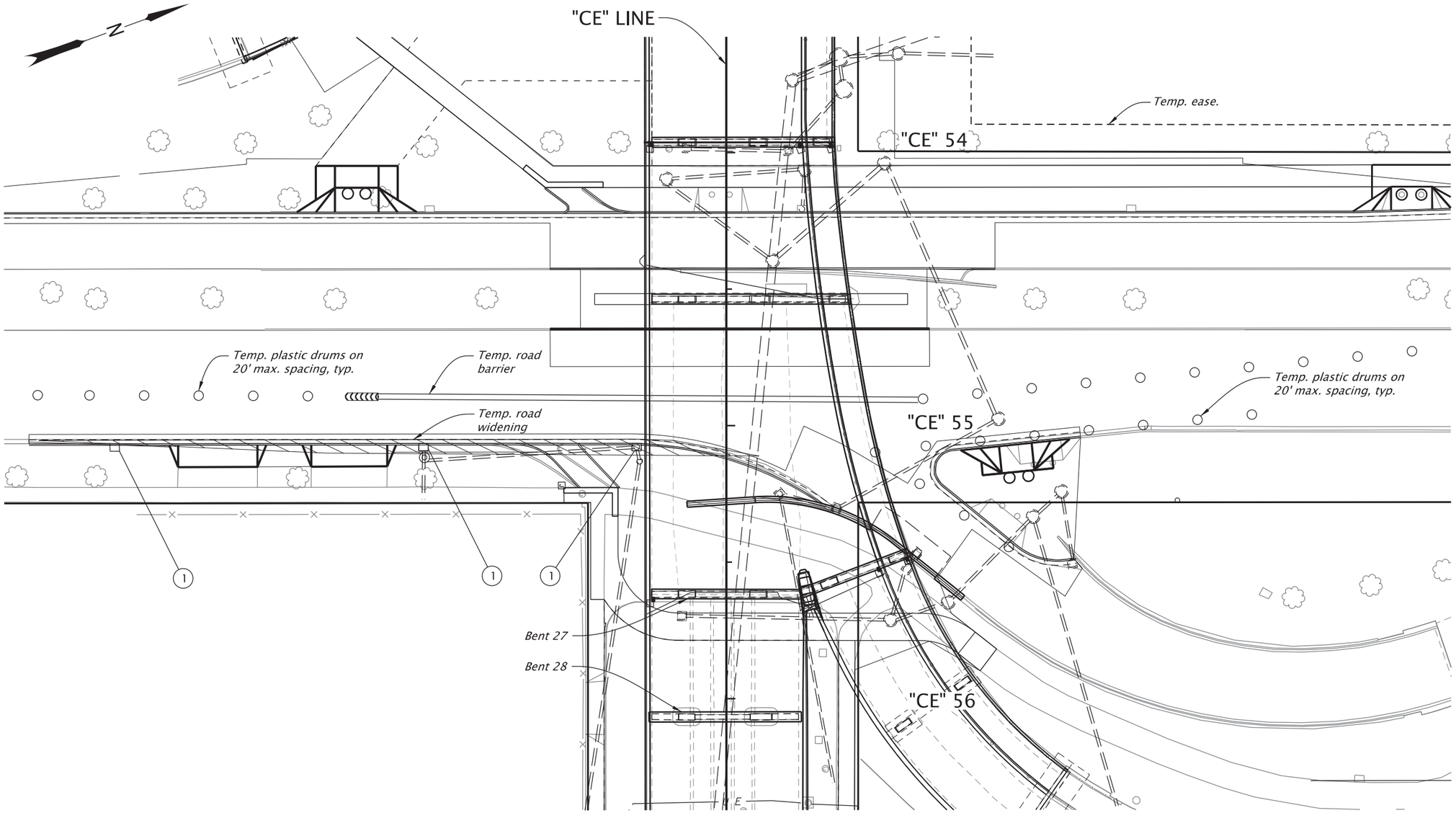

GENERAL NOTES:

1. *The temporary drainage facilities shown on this plan are the minimum requirements for anticipated site conditions. During construction the facilities shall be upgraded as necessary to convey runoff around the limits of work to the existing storm sewer system.*

TEMPORARY DRAINAGE NOTES:

1. *Temp. cap inlet below temp. pavement. Reconstruct inlet top during curb reconstruction*

LEGEND

- *Extg. storm pipe*
- *Storm pipe*
- *Temp. storm pipe*
- *Extg. manhole*
- *Manhole*
- *Extg. inlet*
- *Inlet*
- *Extg. bridge drain*
- *No work area*

REGISTERED PROFESSIONAL ENGINEER
79131
Digitally Signed 2026.06.10 20:05:43-07'00'
OREGON
JUNE 14, 2007
BENJAMIN P. WEWERKA
EXPIRES: 06/30/2028

FINAL ELECTRONIC DOCUMENT AVAILABLE UPON REQUEST

DOWL WWW.DOWL.COM

OREGON DEPARTMENT OF TRANSPORTATION

OR22: CENTER ST BRIDGE (PHASE 1) PROJECT
WILLAMINA-SALEM HIGHWAY
MARION & POLK COUNTIES

Designer: Logan Morrison
Reviewer: Bob Goodrich
Drafter: Steve Wolfer
Checker: Benjamin Wewerka

TEMPORARY DRAINAGE FACILITIES WATERLINE

SHEET NO. HD06

Sec. 22, T. 7 S., R. 3 W., W.M.

59V-051

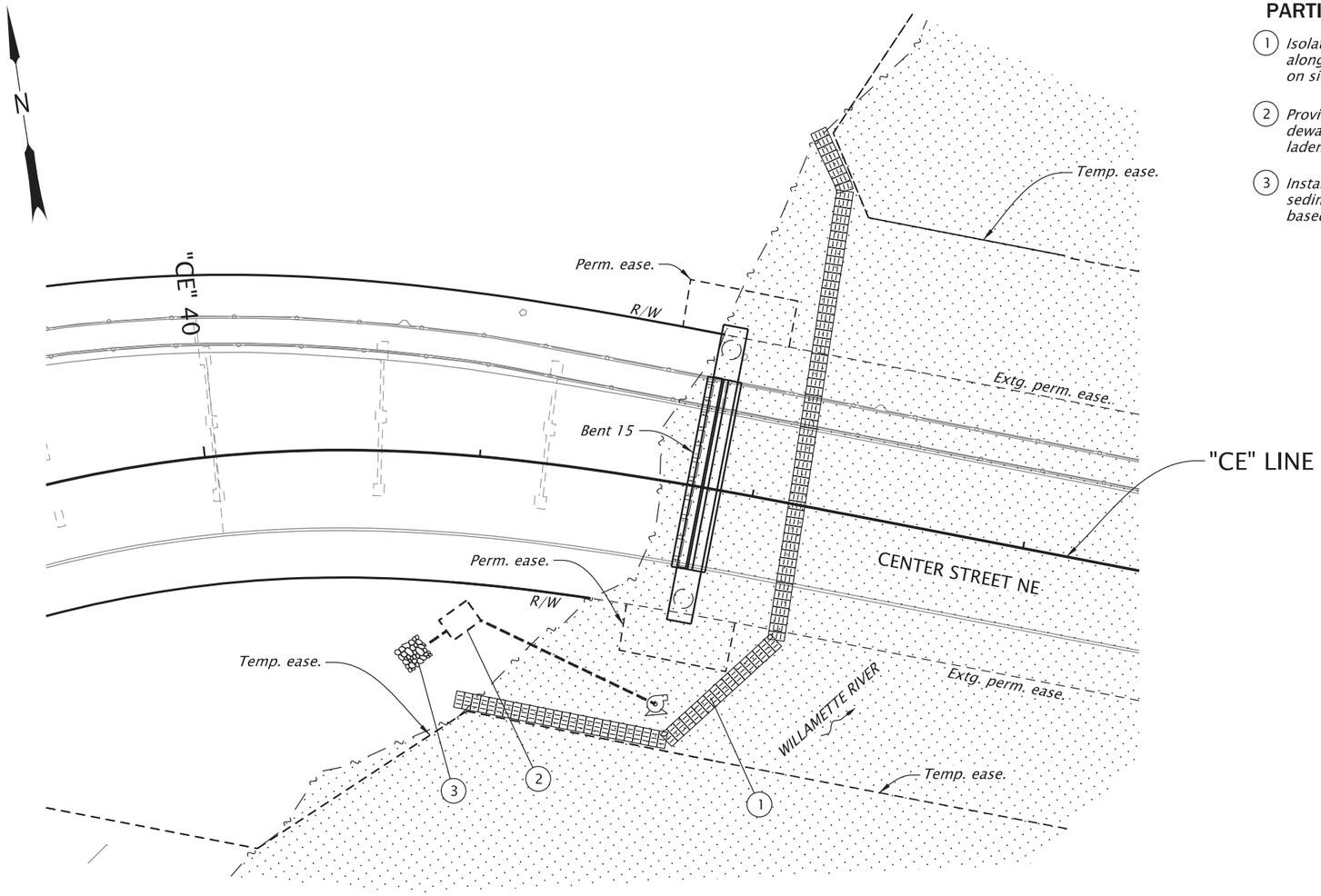

PARTIAL ISOLATION NOTES

1. *Isolating the work site: Install sandbag barrier along the river channel. Size the barrier based on site and river flow conditions.*
2. *Provide adequate sediment control measures during dewatering of the work area to insure sediment laden water does not leave the site.*
3. *Install energy dissipator pad downstream from sediment control facility. Location to be set based on topography and easements available.*

GENERAL NOTES

The implementation of this Temporary Water Management Plan and the construction, maintenance, replacement and upgrading of this facility is the responsibility of the contractor until all construction is completed and approved.

The Temporary Water Management Facility shown on this plan is the minimum requirements for anticipated site conditions. During the construction periods, this facility shall be upgraded for unexpected storm events and to insure that sediment and sediment-laden water does not leave the site.

Remove all Temporary Water Management features before the end of the in water work window (June 1 to October 31) and restore site as per plans and specifications.

A common recommendation is to make the sandbag barrier twice as wide as its height (e.g., a one foot high wall would have a base width of 2 feet). This is the minimum width-to-height ratio that should be used to construct a sandbag barrier. This is based on each bag having a placed dimension of about 4 to 5 inches high by 9 to 10 inches wide by 14 inches long. This is a 30 pound bag of dry sand.

The estimated number of bags needed for 100 linear feet of barrier that is twice as wide as its height is:

Height (ft)	# bags
1	600
2	1700
3	3000
4	5500

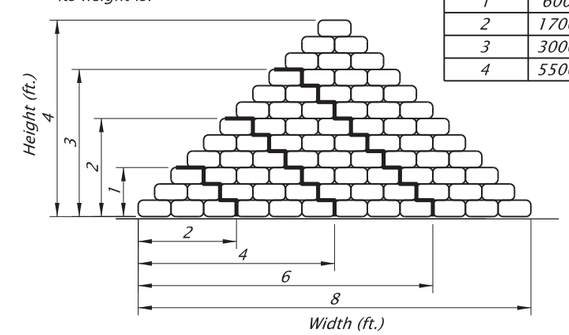

SANDBAG FOOTPRINT DETAIL

NO SCALE

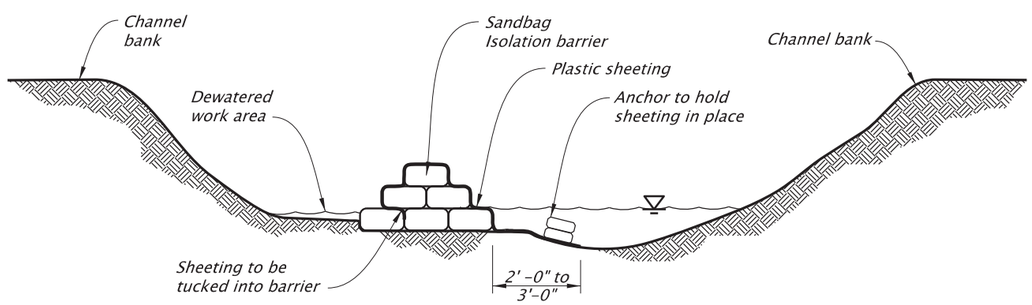

PARTIAL ISOLATION DETAIL

NO SCALE

LEGEND

- *Sandbag barrier line*
- *Energy dissipator*
- *Sediment control facility*
- *Dewatering sump pump*
- *OHW - Regulated work area*

REGISTERED PROFESSIONAL ENGINEER 79131 OREGON JUNE 14, 2007 BENJAMIN P. WEWERKA

Digitally Signed 2026.06.10 20:04:59-07'00'

EXPIRES: 06/30/2028

FINAL ELECTRONIC DOCUMENT AVAILABLE UPON REQUEST

DOWL WWW.DOWL.COM

OREGON DEPARTMENT OF TRANSPORTATION

OR22: CENTER ST BRIDGE (PHASE 1) PROJECT
WILLAMINA-SALEM HIGHWAY
MARION & POLK COUNTIES

Designer: Abigail Hale/Logan Morrison
Reviewer: Bob Goodrich
Drafter: Steve Wolfer
Checker: Benjamin Wewerka

TEMPORARY WATER MANAGEMENT FACILITY AT STATION "CE" 41+80

SHEET NO. HD07

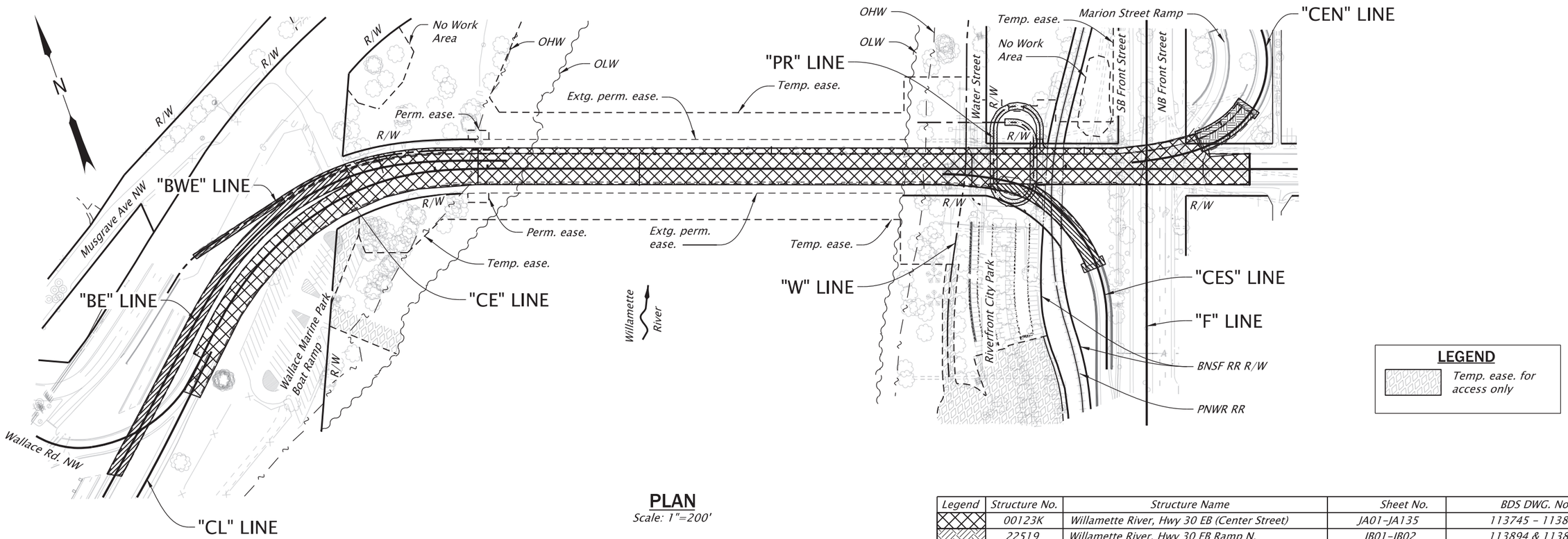

LEGEND

Temp. ease. for access only

PLAN

Scale: 1"=200'

Legend	Structure No.	Structure Name	Sheet No.	BDS DWG. No.
	00123K	Willamette River, Hwy 30 EB (Center Street)	JA01–JA135	113745 – 113879
	22519	Willamette River, Hwy 30 EB Ramp N.	JB01–JB02	113894 & 113895
	00123G	Willamette River, EB Hwy 30 Ramp to SB Hwy 72	JC01–JC21	113897 – 113917
	22524	Willamette River, Hwy 30 Spiral Bike Ramp	JD01–JD06	113918 – 113923
	22523	Willamette River, Hwy 30AZ EB Ramp	N/A No work	N/A
	22601	W. Salem Boat Ramp Access, Ped Bike Path	N/A No work	N/A
	Various	Common details	J01, J02, & JZ01–JZ14	113743, 113744, 113880 – 113893

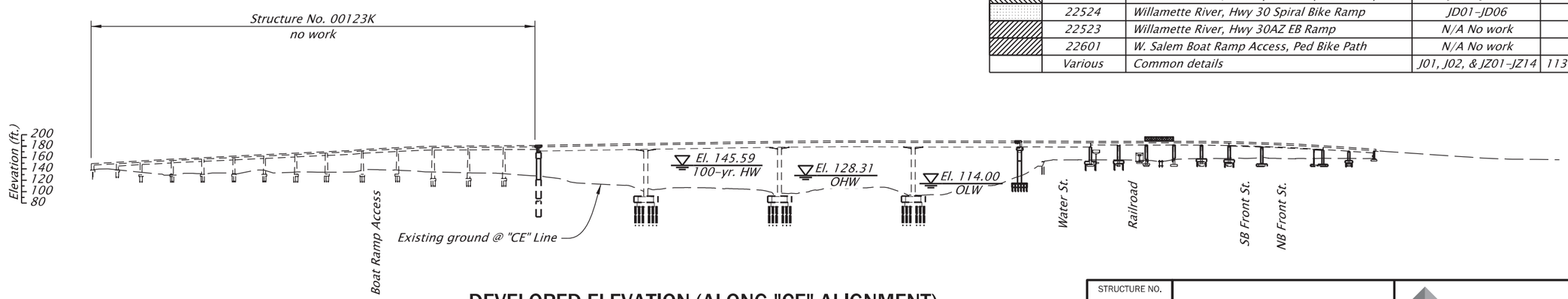

DEVELOPED ELEVATION (ALONG "CE" ALIGNMENT)

Scale: 1"=200'

NOTE:
Elevations shown are based on North American Vertical Datum 1988 (NAVD88).

SCALE WARNING

IF THIS SCALE LINE DOES NOT MEASURE ONE INCH, THEN DRAWING IS NOT TO SCALE

STRUCTURE NO.	See table
BDS DWG NO.	113743
CALC. BOOK	7997
HWY: Varies	M.P.: Varies
COUNTY	Marion/Polk
DATE	6/26

REGISTERED PROFESSIONAL ENGINEER
85555PE
Digitally Signed 2026.06.25 09:11:11-07'00'
OREGON
DEC. 21, 2011
MICHAEL G. McNULTY
EXPIRES: 12/31/2026

FINAL ELECTRONIC DOCUMENT AVAILABLE UPON REQUEST

DOWL
3500 Chad Drive, Suite 200
Eugene, Oregon 97408
541-683-6090
WWW.DOWL.COM

VARIOUS STRUCTURES

OR22: CENTER ST BRIDGE (PHASE 1) PROJECT
WILLAMINA - SALEM HIGHWAY
MARION & POLK COUNTIES

Designer: Mike McNulty, PE
Reviewer: Bob Goodrich, PE
Drafter: Jake Williams
Checker: Eric Bonn, PE

KEY PLAN

SHEET NO. J01

GENERAL NOTES
The following general notes are common to all the structures within this project. See individual structure sheets for structure specific general notes.

CONSTRUCTION NOTES
Provide all materials and perform all work according to the "Oregon Standard Specification for Construction 2024."

Dimensions and geometry of existing features shown are based on a combination of Informational Drawings and project survey data, and are considered approximate. Field verify all dimensions and elevations prior to submitting Working Drawings and prior to ordering or fabricating any materials. Report dimension discrepancies to the Engineer and obtain approval for changes before proceeding.

See Bent Plan and Elevation sheets for construction control working points (WP's) to establish bent centerlines. Review WP's and established bent centerlines with the Engineer in the field prior to proceeding.

Use field verified dimensions and elevations to prepare Working Drawings that represent actual existing features. Clearly show how and where this information is incorporated into Working Drawings.

Provide spiral and welded hoop column and drilled shaft reinforcement according to ASTM Specifications A706 Grade 60.

Provide vertical column and drilled shaft reinforcement according to ASTM Specifications A706 Grade 80.

Provide all pier wall reinforcement according to ASTM Specifications A706 Grade 60.

Provide pile cap, Bent 29 ledger beam, and spread footing reinforcement according to ASTM Specifications A706 Grade 80, as shown.

Provide Bent 15 crossbeam longitudinal, end cap, and stirrup reinforcement according to ASTM Specifications A706 Grade 80.

Provide Bent 19 #11 longitudinal crossbeam reinforcement according to ASTM Specifications A706 Grade 80.

Provide Type 2 mechanical splices for vertical reinforcement in drilled shaft as required. Do not splice column vertical reinforcement.

Provide Type 2 mechanical splices for footing reinforcement as noted. Splice pier wall vertical reinforcement as noted.

Provide all near surface mounted (NSM) reinforcement according to ASTM Specification A706 Grade 80.

Provide structural concrete overlay reinforcement according to ASTM A1035 CM Grade 100.

Provide reinforcing steel according to ASTM Specifications A706 for all welded bars.

Provide all other reinforcement according to ASTM Specifications A706, or AASHTO Specifications M31 (ASTM A615) Grade 60.

Use the following splice lengths, unless shown otherwise:

Reinforcing Splice Lengths (Class B) Grade 60 f'c = 4.0 ksi, λ_{rc} = 0.4, 2in min. concrete clear cover										
Bar Size	#3	#4	#5	#6	#7	#8	#9	#10	#11	#14 & #18
Uncoated	1'-4"	1'-7"	2'-0"	2'-5"	2'-9"	3'-2"	3'-7"	4'-0"	4'-5"	Not permitted
Reinforcing Splice Lengths (Class B) Grade 60 f'c = 4.5 ksi, λ_{rc} = 0.4, 2in min. concrete clear cover										
Bar Size	#3	#4	#5	#6	#7	#8	#9	#10	#11	#14 & #18
Uncoated	1'-4"	1'-6"	1'-11"	2'-3"	2'-7"	3'-0"	3'-4"	3'-9"	4'-2"	Not permitted
Reinforcing Splice Lengths (Class B) Grade 80 f'c = 4.0 ksi, λ_{rc} = 0.4, 2in min. concrete clear cover										
Bar Size	#3	#4	#5	#6	#7	#8	#9	#10	#11	#14 & #18
Uncoated	1'-7"	2'-1"	2'-8"	3'-2"	3'-8"	4'-2"	4'-9"	5'-4"	5'-11"	Not permitted
Reinforcing Splice Lengths (Class B) Grade 80 f'c = 5.0 ksi, λ_{rc} = 0.4, 2in min. concrete clear cover										
Bar Size	#3	#4	#5	#6	#7	#8	#9	#10	#11	#14 & #18
Uncoated	1'-5"	1'-11"	2'-4"	2'-10"	3'-4"	3'-9"	4'-3"	4'-9"	5'-3"	Not permitted

Increase all splice lengths 30% for horizontal or nearly horizontal bars so placed that more than 1'-0" of fresh concrete is cast below the bar.

Splice reinforcing steel at alternate bars, staggered at least one splice length or as far as possible, unless shown otherwise.

Support the bottom mat reinforcing steel from the forms with precast mortar blocks at 2'-0" maximum centers each way. Support the top mat of reinforcing steel from the bottom mat of reinforcing steel with wire bar supports as shown in Chapter 3 of the "CRSI Manual of Standard Practice" (SBU, BBU, or CHCU). Place wire bar supports at 2'-0" maximum centers.

Place bars 2" clear of the nearest face of concrete, unless shown otherwise.

Provide Class HPC(IC)4500 - ¾ concrete for structural concrete overlay.

Provide Class HPC4500 - 1½ concrete in deck.

Provide Class 5000 - ¾ concrete in post-tensioned crossbeam.

Provide Class 5000 - ¾ concrete in columns.

Provide Class 4000 - ⅜ concrete for all drilled shafts and pier walls.

Provide Class 5000 - ⅜ drilled shaft concrete for column joint blockout pours.

Provide Class 3300 (Seal Concrete) - 1 or ¾ concrete in seals.

Provide Class 4500 - 1 or ¾ concrete for concrete filled steel piles.

Provide Class 4000 - 1 or ¾ concrete for all other concrete.

Provide prestressing steel according to detail plans.

STRUCTURAL STEEL NOTES
Provide all structural steel according to the following unless shown otherwise.

Element	ASTM Specification
Steel plate	A709, Gr. 50
Rolled channels	A572, Gr. 50 or A992
Round HSS	A500, Gr. C, tested per A1085

Provide all steel plate or rolled shapes subject to tensile stresses as shown according to ASTM A709 Impact Testing Temperature Zone 2 requirements.

For the purpose of Charpy toughness testing and welding inspection/repair, etc., primary members are bearing stiffeners and cross-frame members at bents.

Provide shear connectors according to ASTM A108 headed concrete anchor studs.

Do not punch bolt holes through girder flanges or webs.

Provide high-strength bolts according to ASTM Specifications F3125, Gr. A325 unless shown otherwise. All structural steel connections are bearing-type connections unless shown otherwise. Tighten all high-strength bolts using the "Turn-of-Nut Tightening" method. Exclude bolt threads from shear planes.

WELDING NOTES
Produce welds for bearing stiffeners, bearing assemblies, and cross-frame elements according to the latest edition of AWS D 1.5 Bridge Welding Code.

Produce all other welds according to the latest edition of AWS D 1.1 Welding Code.

STRUCTURAL RODS NOTES
Provide all thread high tensile strength bars according to ASTM Specification A722 Type 2 deformed bars and coat with zinc/aluminum according to ASTM Specifications F1136, ASTM F2833, or ASTM F3019, unless shown otherwise.

Provide plate washers according to ASTM Specifications A36.

Hot dip galvanize all plates, nuts, and washers after fabrication.

LONGITUDINAL RESTRAINER NOTES
Provide all thread high tensile strength bars according to ASTM Specification A722 Type 2 deformed bars and coat with zinc/aluminum according to ASTM Specifications F1136, ASTM F2833, or ASTM F3019

Provide steel plates according to ASTM Specification A709 Grade 50 for crossbeam and girder brackets.

Provide sleeve nuts according to ASTM Specification A563, Gr. DH. Provide clevis pins according to ASTM Specification A668, Cl. F.

Provide clevis according to ASTM Specification A668, Cl. F.

Provide all thread rods, washers, nuts, clevises, and plates according to ASTM Specifications in accordance with the detail plans.

Hot dip galvanize all plates, nuts, washers and clevises after fabrication, unless shown otherwise.

RESIN BONDED BAR AND ANCHOR NOTES
Install bars or anchors on vertical concrete faces at a 15° decline, unless otherwise shown. A 5° decline can be allowed with Engineers approval.

Place bars or anchors 3" clear from the nearest face of concrete, unless shown otherwise.

OTHER
Oregon law requires the rules set forth in OAR 952-001-0010 through 952-001-0090, adopted by the Oregon Utility Notification Center, to be observed. Copies of these rules may be obtained from the Center by calling 1-800-332-2344 or 811.

INFORMATIONAL DRAWINGS	
Structure	Drawing Numbers
00123K Hwy 30 EB (Center Street)	9233, 10086-10108, 10672, 31016, 31117, 31118, 31129, 31825, 35009, 35091, 35214, 35215, 35270, 35276-35279, 35720, 35722, 35776, 36025, 36844-36853, 36856, 37001-37017, 37019-37035, 37041-37045, 37047-37142, 39123,40831, 41333, 97433, 97434: City of Salem G01-G03, EB01-EB20
22519 Hwy 30 EB Ramp N.	35279, 35720, 35722, 36844, 37001-37004, 37006, 37008, 37018, 37024, 37025, 37036-37040, 97433, 97434
00123G EB Hwy 30 Ramp to SB Hwy 72	21355, 21356, 29122, 29878, 30040, 30742-30757, 30991-30994, 31016, 31021, 31022, 31127-31130, 31835, 37001, 37003, 37007, 37017, 37019, 37041, 97433-97435
22524 Hwy Spiral Bike Ramp	34959, 41290, 42600-42610, 42647

ACCOMPANIED BY DWGS.:
J01, JA01-JA135, JB01-JB02, JC01-JC21, JD01-JD06,
JZ01-JZ14, BR140, BR157, BR240, BR241, BR242, BR246, BR250, BR256 & BR500

STRUCTURE NO. See table
BDS DWG NO. 113744
CALC. BOOK 7997
HWY: Various
M.P.: Various
COUNTY Marion/Polk
DATE 2/26

REGISTERED PROFESSIONAL ENGINEER 85555PE
Digitally Signed 2026.02.12 12:54:48-08'00'
OREGON DEC. 21, 2011 MICHAEL G. McNULTY
EXPIRES: 12/31/2026
FINAL ELECTRONIC DOCUMENT AVAILABLE UPON REQUEST

DOWL
3500 Chad Drive, Suite 200
Eugene, Oregon 97408
541-683-6090
WWW.DOWL.COM

VARIOUS STRUCTURES

OR22: CENTER ST BRIDGE (PHASE 1) PROJECT
WILLAMINA - SALEM HIGHWAY
MARION & POLK COUNTIES

Designer: Mike McNulty, PE
Reviewer: Bob Goodrich, PE
Drafter: Jake Williams
Checker: Eric Bonn, PE

COMMON GENERAL NOTES
SHEET NO. J02

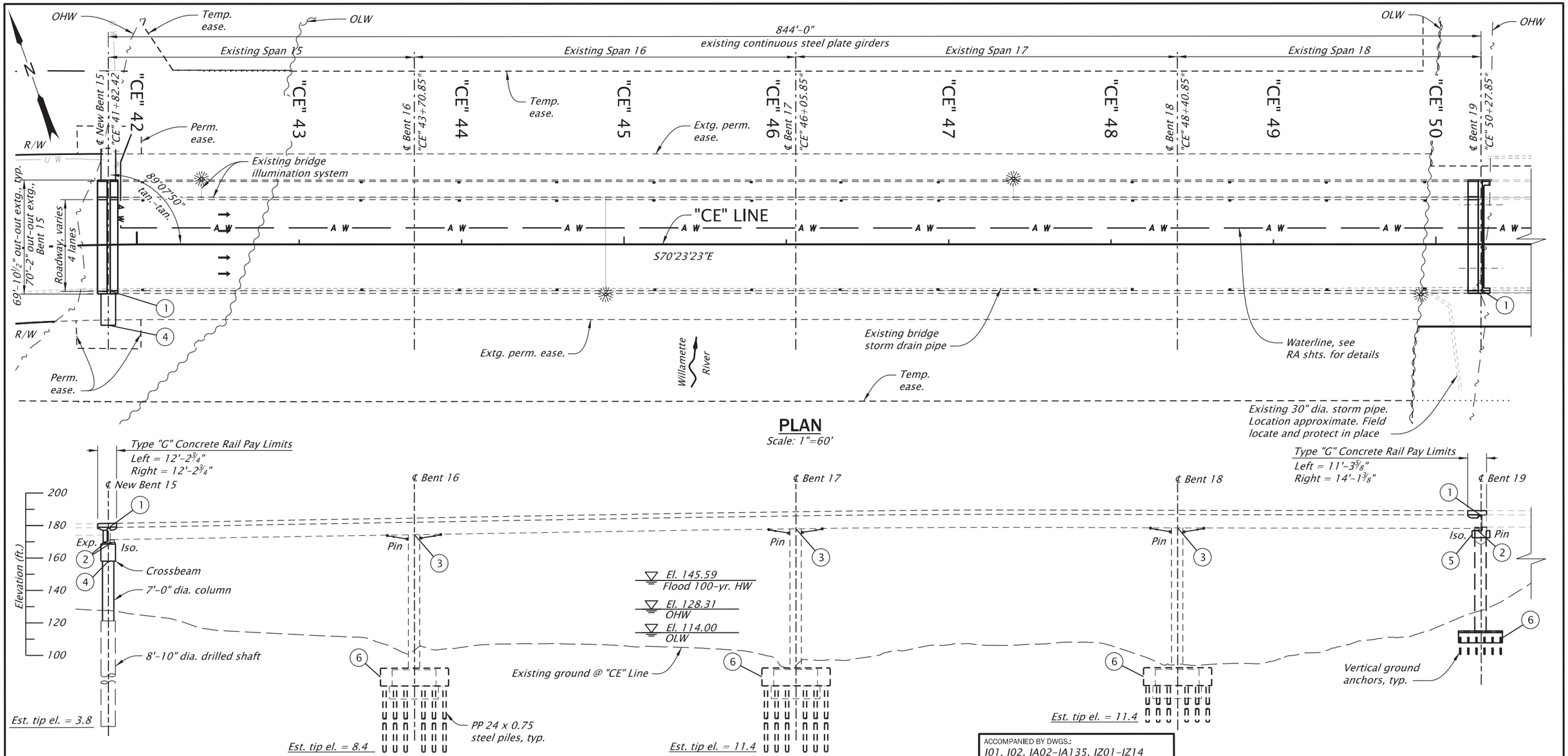

PLAN

Scale: 1"=60'

ELEVATION

Scale: 1"=60'

NOTES:

1. Utilities to be maintained and protected unless otherwise shown.
2. Existing bridge piles are not shown for clarity.
3. Bents 16-18 vertical ground anchors are not shown for clarity.
4. Waterline not shown in the elevation view for clarity.
5. * Existing Bent centerline stationing is approximate. See Bent Plan and Elevation sheets for construction control working points to establish bent centerline.
6. Field verify all dimensions and elevations prior to submitting Working Drawings and prior to ordering or fabricating any materials. See sht. J02 for more details.
7. Elevations shown are based on North American Vertical Datum 1988 (NAVD88).

RETROFIT ITEMS:

1. Install new bridge joint system and other associated work, see shts. JA28 & JA29.
2. Install new bridge bearings, see shts. JA115, JA116, & JA117.
3. Install seismic restrainers and new cross-frames, see sht. JA69.
4. Remove existing bent and construct super bent, see sht. JA56.
5. Strengthen existing crossbeam, see sht. JA75.
6. Strengthen existing foundation, see shts. JA23, JA24, & JA25.

SCALE WARNING

IF THIS SCALE LINE DOES NOT MEASURE ONE INCH, THEN DRAWING IS NOT TO SCALE

ACCOMPANIED BY DWGS.:
J01, J02, JA02-JA135, JZ01-JZ14

STRUCTURE NO.	00123K
BDS DWG NO.	113745
CALC. BOOK	7997
HWY: 030 M.P.: 25.88	
COUNTY	Marion/Polk
DATE	6/26

REGISTERED PROFESSIONAL ENGINEER
85555PE
Digitally Signed 2026.07.01 12:52:03-07'00'
OREGON
DEC. 21, 2011
MICHAEL G. McNULTY
EXPIRES: 12/31/2026

FINAL ELECTRONIC DOCUMENT AVAILABLE UPON REQUEST

DOWL
3500 Chad Drive, Suite 200
Eugene, Oregon 97408
541-683-6090
WWW.DOWL.COM

WILLAMETTE RIVER, HWY 30 EB (CENTER ST)

OR22: CENTER ST BRIDGE (PHASE 1) PROJECT
WILLAMINA - SALEM HIGHWAY
MARION & POLK COUNTIES

Designer: Mike McNulty, PE
Reviewer: Bob Goodrich, PE
Drafter: Jake Williams
Checker: Eric Bonn, PE

PLAN AND ELEVATION - 1

SHEET NO. JA01

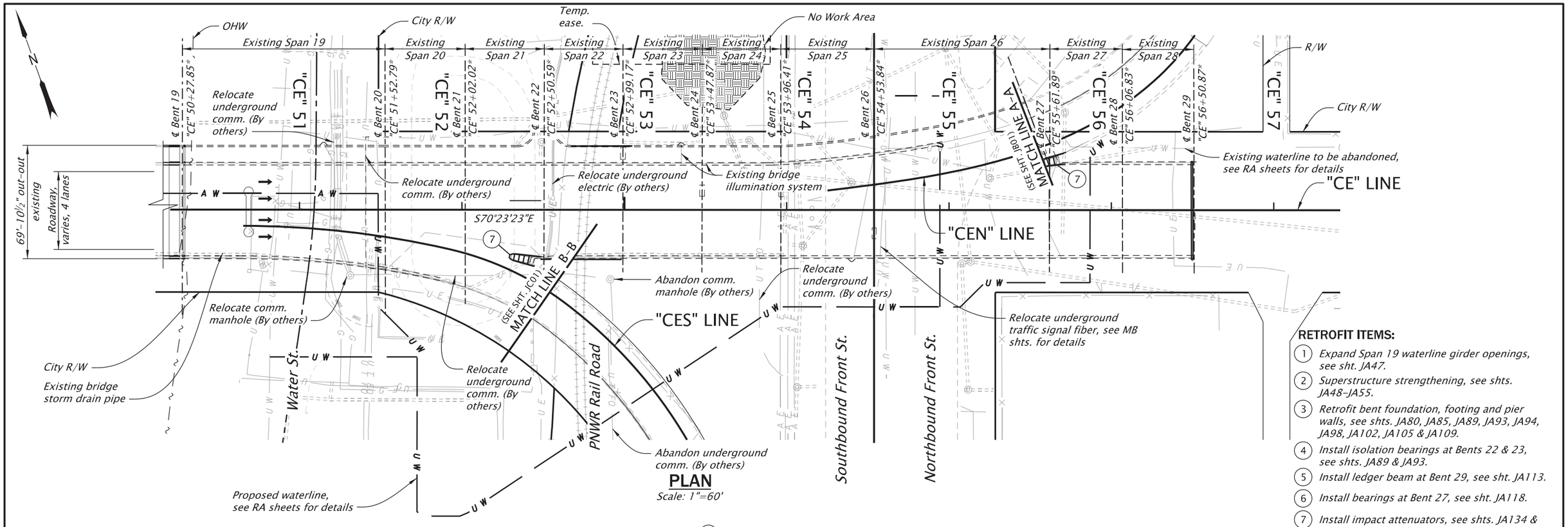

PLAN

Scale: 1"=60'

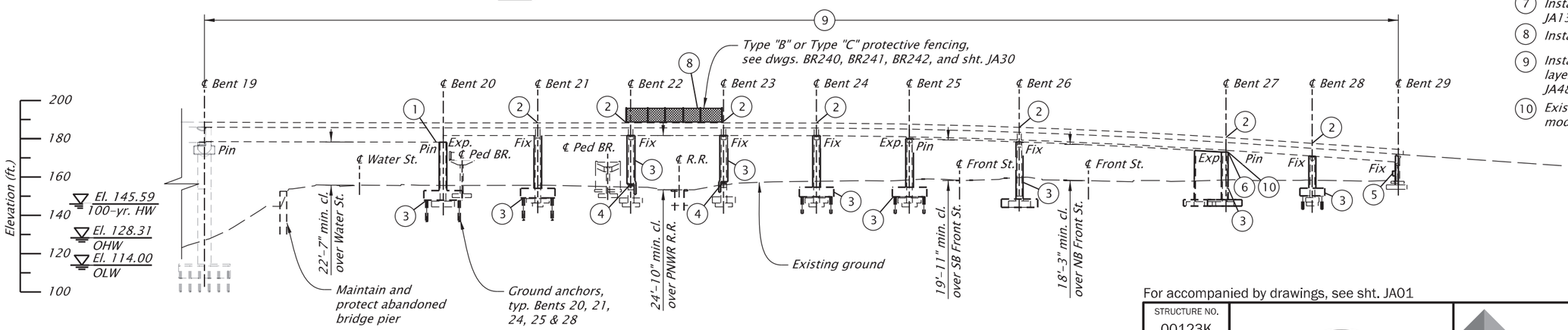

ELEVATION

Scale: 1"=60'

RETROFIT ITEMS:

1. Expand Span 19 waterline girder openings, see sht. JA47.
2. Superstructure strengthening, see shts. JA48–JA55.
3. Retrofit bent foundation, footing and pier walls, see shts. JA80, JA85, JA89, JA93, JA94, JA98, JA102, JA105 & JA109.
4. Install isolation bearings at Bents 22 & 23, see shts. JA89 & JA93.
5. Install ledger beam at Bent 29, see sht. JA113.
6. Install bearings at Bent 27, see sht. JA118.
7. Install impact attenuators, see shts. JA134 & JA135.
8. Install protective fencing, see sht. JA30 for limits.
9. Install structural concrete overlay and single layer polymer concrete overlay, see shts. JA48–JA54 for details.
10. Existing under deck bridge illumination modifications. See sht. JA133 for details.

NOTES:

1. Utilities to be maintained and protected unless otherwise shown.
2. New storm utilities not shown for clarity. For storm utility details, see shts. C02C and C02D.
3. * Existing bent centerline stationing is approximate. See Bent Plan and Elevation sheets for construction control working points to establish bent centerline.
4. Elevations shown are based on North American Vertical Datum 1988 (NAVD88).
5. Field verify all dimensions and elevations before submitting Working Drawings and prior to ordering or fabricating any materials. See sht. J02 for more details.

SCALE WARNING

IF THIS SCALE LINE DOES NOT MEASURE ONE INCH, THEN DRAWING IS NOT TO SCALE

For accompanied by drawings, see sht. JA01

STRUCTURE NO.	00123K
BDS DWG NO.	113746
CALC. BOOK	7997
HWY: 030 M.P.: 25.88	
COUNTY	Marion
DATE	6/26

REGISTERED PROFESSIONAL ENGINEER 099941PE OREGON JULY 21, 2022 BERNARD ANTHONY FRANKL

Digitally Signed 2026.06.10 13:34:32-07'00'

EXPIRES: 12/31/2027

FINAL ELECTRONIC DOCUMENT AVAILABLE UPON REQUEST

DOWL
3500 Chad Drive, Suite 200
Eugene, Oregon 97408
541-683-6090
WWW.DOWL.COM

WILLAMETTE RIVER, HWY 30 EB (CENTER ST)

OR22: CENTER ST BRIDGE (PHASE 1) PROJECT
WILLAMINA - SALEM HIGHWAY
MARION & POLK COUNTIES

Designer: Bernard A. Frankl, PhD, PE
Reviewer: Bob Goodrich, PE
Drafter: Jake Williams
Checker: Tanner Torkelson, PE

PLAN AND ELEVATION - 2

SHEET NO. JA02

GENERAL NOTES

See Sht. J02 for bridge common general notes.

Prepare existing concrete surfaces to be encased in new concrete by cleaning and removing all existing concrete coating, unless shown otherwise.

DESIGN NOTES

Work on Bridge 00123K is designed in accordance with the 2020 edition of the "AASHTO LRFD Bridge Design Specifications" and the 2023 edition of the "ODOT Bridge Design Manual", in the Bridge Design Category "Bridge Modernization", as modified by the following:

Design Deviation DD-01 for use of type-3 global seismic design strategy with isolation bearings at Bents 15 and 19.
Design Deviation DD-02 for use of type-3 global seismic design strategy with isolation bearings at Bents 22 and 23.
Design Deviation DD-03 for capacity-protected member forces.
Design Deviation DD-04 for operational seismic performance criteria, Bent 15.
Design Deviation DD-05 for seismic foundation rocking.
Design Deviation DD-07 for high strength reinforcement.
Design Deviation DD-09 for Structural Concrete Overlay.

Design Exception 21705-01 for bridge rail crash test rating.

Bent 15 replacement and Bent 19 crossbeam strengthening was designed for the following live loads:

Service and Strength I Limit States:
HL-93: Design truck (or trucks per LRFD 3.6.1.3) or the design tandems and the design lane load.

Strength II Limit State:
ODOT Type STP-5BW Permit truck
ODOT Type STP-4E Permit truck
EV3 truck

Seismic design is performed by multi-mode analysis in accordance with the project-specific "Seismic Design Criteria". A bridge site-specific Seismic Hazard Evaluation was performed to develop the following design response spectrum plots:

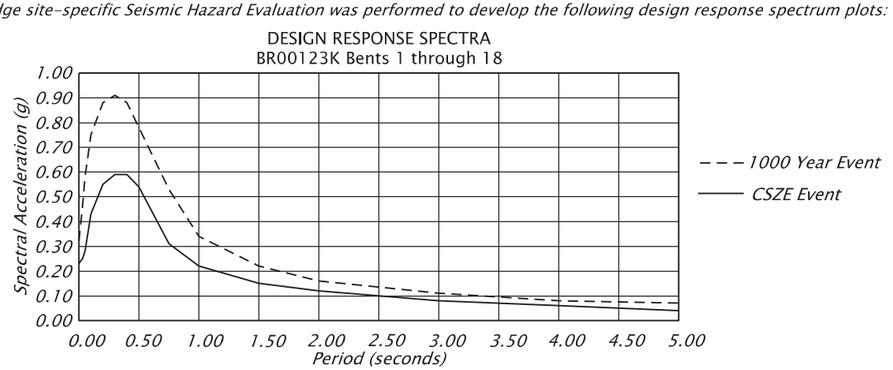

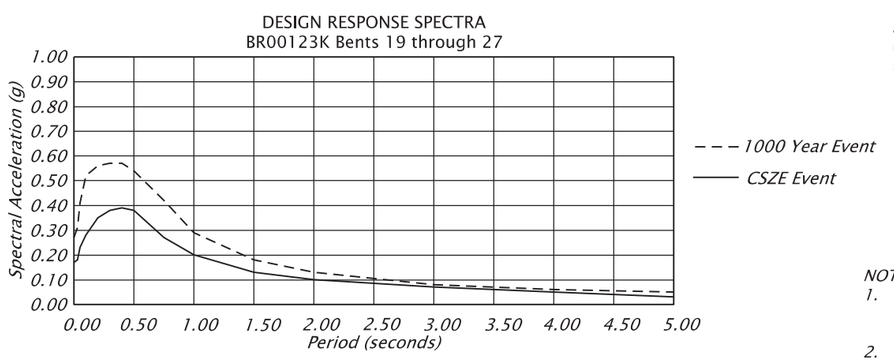

FOUNDATION NOTE

See sht. JA23 for Footing General Notes.

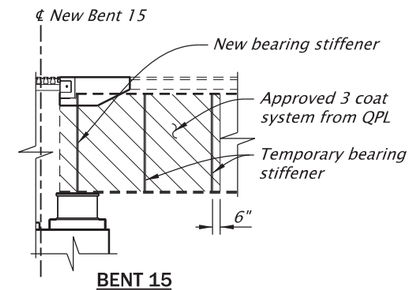

BENT 15

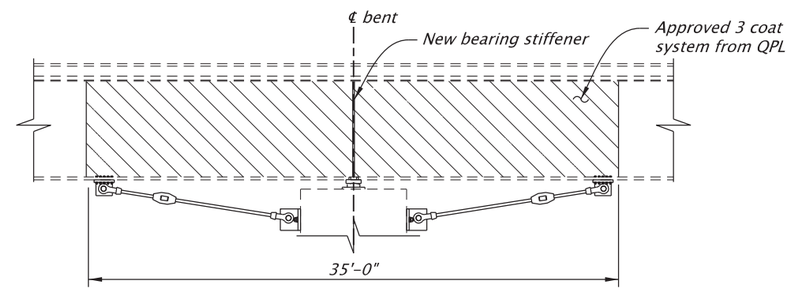

BENTS 16-18

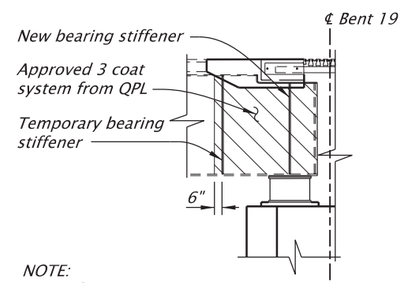

NOTE:
Cross-frames are not shown for clarity.

BENT 19

EXISTING STEEL MAINTENANCE COATING LIMITS

No Scale

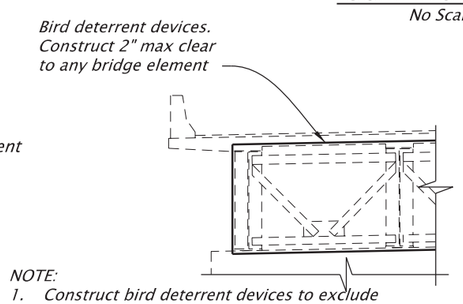

NOTE:
1. *Construct bird deterrent devices to exclude birds from horizontal or near horizontal concrete surfaces on the Bent 15 crossbeam.*
2. *Span 15 shown, looking back on station.*

BIRD DETERRENT DEVICES

No Scale

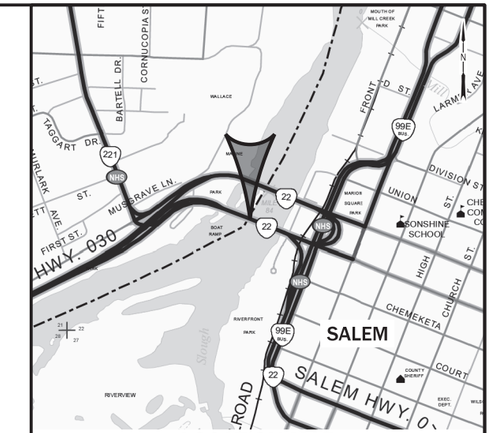

LOCATION MAP

S.W. ¼ & S.E. ¼, SEC. 22, T. 07 S., R. 03 W., W.M.
LAT. 44.9449, LONG. -123.0433

EXISTING UTILITIES ON BRIDGE

1. City of Salem 24" diameter water main
2. City of Salem storm drain system
3. ODOT bridge illumination system

NOTE:
Field verify all dimensions and elevations prior to submitting Working Drawings and prior to ordering or fabricating any materials. See J02 for more details.

HYDRAULIC DATA

ITEMS	(UNITS)	DESIGN FLOOD	BASE FLOOD	MAX. PROBABLE FLOOD
DISCHARGE	(cfs)	280,000	280,000	363,000
RECURRENCE INTERVAL	(yrs.)	100	100	500
H.W. ELEVATION AT UPSTREAM FACE OF BRIDGE	(ft.)	145.59	145.59	148.96
BACKWATER	(ft.)	–	–	–
SCOUR ELEVATION (Bent 15)	(ft.)	110.40	110.40	108.86
SCOUR ELEVATION (Bent 16)	(ft.)	92.36	92.36	92.36
SCOUR ELEVATION (Bent 17)	(ft.)	92.36	92.36	92.36
SCOUR ELEVATION (Bent 18)	(ft.)	92.36	92.36	92.36
SCOUR ELEVATION (Bent 19)	(ft.)	111.80	111.80	107.91

For accompanied by drawings, see sht. JA01

STRUCTURE NO. 00123K
BDS DWG NO. 113747
CALC. BOOK 7997
HWY: 030
M.P.: 25.88
COUNTY Marion/Polk
DATE 6/26

REGISTERED PROFESSIONAL ENGINEER 85555PE
Digitally Signed 2026.06.30 12:31:25-07'00'
OREGON
DEC. 21, 2011
MICHAEL G. McNULTY
EXPIRES: 12/31/2026

FINAL ELECTRONIC DOCUMENT AVAILABLE UPON REQUEST

DOWL
3500 Chad Drive, Suite 200
Eugene, Oregon 97408
541-683-6090
WWW.DOWL.COM

WILLAMETTE RIVER, HWY 30 EB (CENTER ST)

OR22: CENTER ST BRIDGE (PHASE 1) PROJECT
WILLAMINA - SALEM HIGHWAY
MARION & POLK COUNTIES

Designer: Mike McNulty, PE
Reviewer: Bob Goodrich, PE
Drafter: Jake Williams
Checker: Eric Bonn, PE

GENERAL NOTES

SHEET NO. JA03

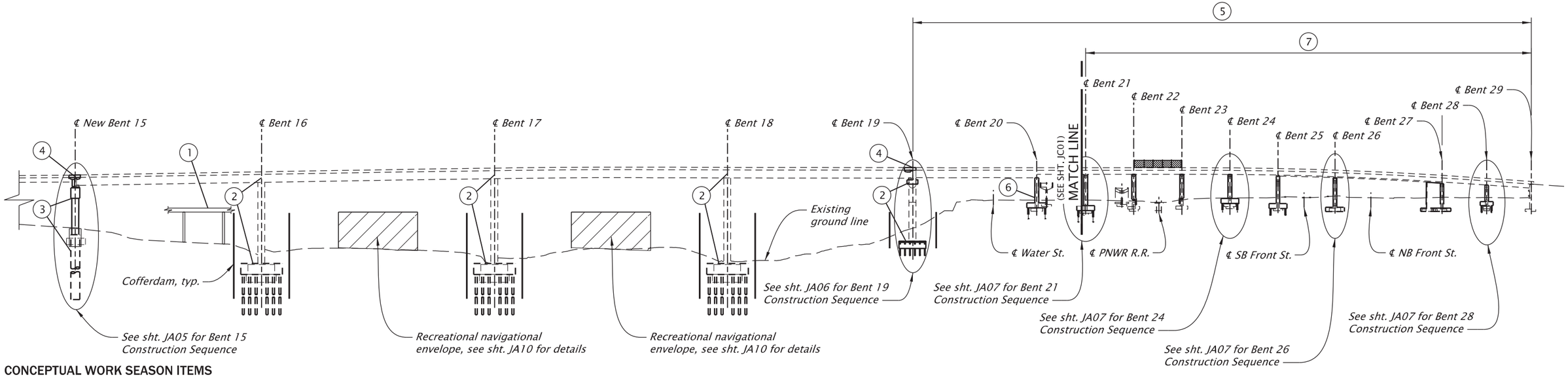

ELEVATION - CONSTRUCTION SEQUENCE

Scale: 1"=100'

CONCEPTUAL WORK SEASON ITEMS

Season 1 (2027):

- *Waterline Phases 1, 2 and 3, work.*
- *Bents 20 and 21, start seismic retrofit work.*
- *Temporary work bridge and work access.*
- *Bent 16, install cofferdam, construct foundation strengthening and seismic retrofits.*

Season 2 (2028):

- *Bent 16, remove cofferdam.*
- *Bents 17 and 18, install cofferdams and construct foundation strengthening and seismic retrofits.*
- *Bents 20 and 21, complete seismic retrofit work.*
- *Bents 22 and 23, construct seismic retrofit work.*
- *Bents 24 and 28, start seismic retrofit work.*
- *Waterline Phase 4, at Bent 20, work.*
- *Waterline Phase 5, start work.*

Season 3 (2029):

- *Bents 17 and 18, remove cofferdams.*
- *Remove work bridge at Bent 15.*
- *Bent 15, construct drilled shafts, columns, and superbent.*
- *Bent 19, install cofferdam, construction foundation strengthening, remove cofferdam and start crossbeam strengthening.*
- *Bents 24 and 28, complete seismic retrofit work.*
- *Bents 25, 26, and 27, construct seismic retrofit work.*
- *Bent 29, construct seismic retrofit work.*
- *Waterline Phase 5, continue work.*

Season 4 (2030):

- *Bent 19, complete crossbeam strengthening.*
- *Bents 15 and 19, bearings, superstructure and expansion joint seismic retrofit work.*
- *Structural concrete overlay.*
- *Waterline Phase 5, complete work.*
- *Remove temporary work bridge.*

NOTE:
For Waterline Phases 1 through 5 work, see sht. RA sheets for details.

CONSTRUCTION WORK SEQUENCE

1. *Install temporary work bridge and work access, see sht. JA10 for details.*
2. *Construct Bents 16 through 19 seismic retrofits. Work may be concurrent with (1).*
3. *Remove existing and construct new Bent 15 superbent.*
4. *Construct Bents 15 and 19 bearings, superstructure, and expansion joint retrofits.*
5. *Construct structural concrete overlay. May be concurrent with (4).*
6. *Construct Bent 20 seismic retrofits. Work may be concurrent with (1).*
7. *Construct Bents 21 through 29 seismic retrofits. May be concurrent with (2)(3)(4)(5).*

NOTES:
1. *Temporary work bridge is only partially shown for clarity.*
2. *Waterline construction sequence not shown for clarity, see RA shts. for details.*
3. *See Bent Plan and Elevation sheets for construction control working points to establish bent centerline.*
4. *Field verify all dimensions and elevations prior to submitting Working Drawings and prior to ordering or fabricating any materials. See sht. J02 for more details.*

For accompanied by drawings, see sht. JA01

SCALE WARNING
IF THIS SCALE LINE DOES NOT MEASURE ONE INCH, THEN DRAWING IS NOT TO SCALE

STRUCTURE NO.	00123K
BDS DWG NO.	113748
CALC. BOOK	7997
HWY: 030	M.P.: 25.88
COUNTY	Marion/Polk
DATE	6/26

REGISTERED PROFESSIONAL ENGINEER
85555PE
Digitally Signed 2026.06.22 15:09:39-07'00'
OREGON
DEC. 21, 2011
MICHAEL G. McNULTY
EXPIRES: 12/31/2026

DOWL
3500 Chad Drive, Suite 200
Eugene, Oregon 97408
541-683-6090
WWW.DOWL.COM

OREGON DEPARTMENT OF TRANSPORTATION

WILLAMETTE RIVER, HWY 30 EB (CENTER ST)

OR22: CENTER ST BRIDGE (PHASE 1) PROJECT
WILLAMINA - SALEM HIGHWAY
MARION & POLK COUNTIES

Designer: Mike McNulty, PE
Reviewer: Bob Goodrich, PE
Drafter: Jake Williams
Checker: Eric Bonn, PE

CONSTRUCTION SEQUENCE - 1

SHEET NO. JA04

FINAL ELECTRONIC DOCUMENT AVAILABLE UPON REQUEST

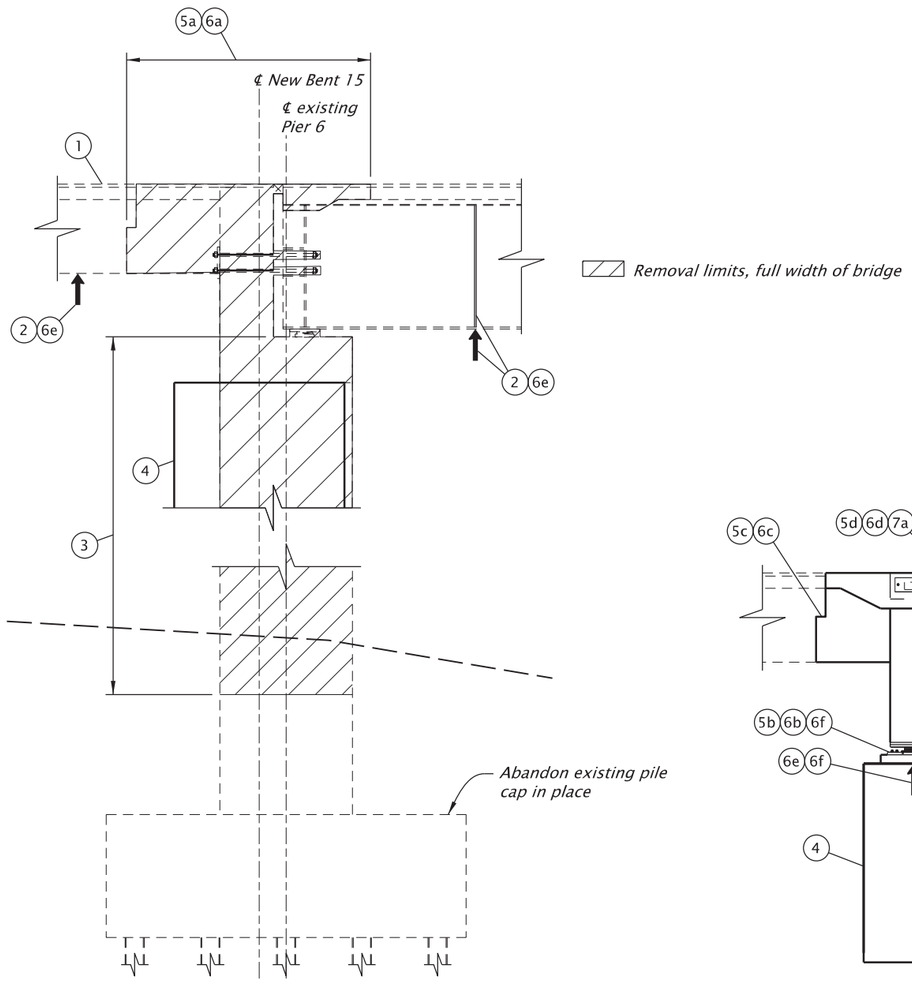

BENT 15 - REMOVAL CONSTRUCTION SEQUENCE

Scale: 1/8"=1'-0"

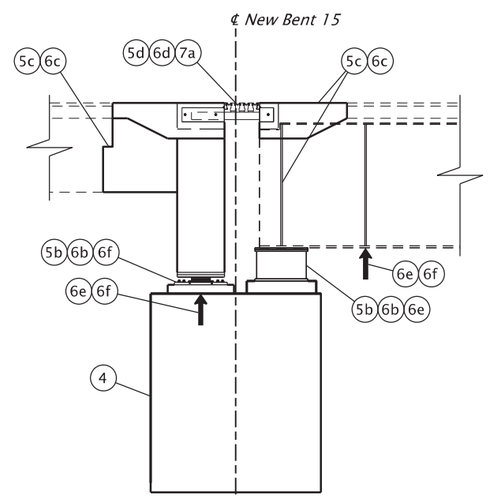

BENT 15 - CONSTRUCTION SEQUENCE

Scale: 1/8"=1'-0"

CONSTRUCTION WORK SEQUENCE

1. *Perform girder negative moment strengthening, see sht. JA37 for details.*
2. *Install temporary bearing stiffeners and cross-frames, see sht. JA43 for details. Install Phase A bridge jacking and jacking support systems, see sht. JA67 for details.*
3. *Remove existing crossbeam and portion of column, see sht. JA67 for details.*
4. *Construct crossbeam, see sht. JA64 for construction sequence notes.*
5. *Install traffic control Stage VI - Phase 2 North Half Construction, see sht. JA11 for details*.*

5a. *Remove portions of Span 14 and Span 15, see sht. JA67 for details.*

5b. *Install Span 14 and Span 15 bearings, 4 each span, on crossbeam. Do not load bearings. See sht. JA67 for bearing installation sequence.*

5c. *Install Span 15 cross-frames, 3 total, and reconstruct portions of Span 14 and Span 15. See shts. JA32, JA38 and JA39 for details. Do not load crossbeam.*

5d. *Install modular joint control boxes and support beams. Install temporary modular joint center beam system, see sht. JA124 for details.*

6. *Install traffic control Stage VI - Phase 3 South Half Construction, see sht. JA11 for details*.*

6a. *Remove remaining portions of Span 14 and Span 15, see sht. JA67 for details.*

6b. *Install Span 14 and Span 15 bearings, 3 each span, on crossbeam. Do not load bearings. See sht. JA67 for bearing installation sequence.*

6c. *Install Span 15 cross-frames, 3 total, and reconstruct remaining portions of Span 14 and Span 15. See shts. JA32, JA38 and JA39 for details. Do not load crossbeam.*

6d. *Install modular joint control boxes and support beams, see sht. JA124 for details.*

6e. *Install temporary bearing stiffeners, see sht. JA43 for details. Install Phase B bridge jacking and jacking support system and load crossbeam. Remove Phase A bridge jacking and jacking support system installed in (2). See sht. JA67 for details.*

6f. *Adjust and level all bearings to their final vertical position and load bearings. Remove bridge jacking and jacking support system. See sht. JA67 for bearing installation sequence.*

7. *Close bridge, see sht. JA11 for details.**

7a. *Remove temporary modular joint center beam system and install full width permanent modular joint center beam system, see sht. JA124 for details.*

NOTES:
1. ** Construction activities not shown for clarity.*
2. *Construct drilled shafts and columns, not shown in construction sequence, prior to item (4). See shts. JA58 and JA59 for details.*
3. *Field verify all dimensions and elevations prior to submitting Working Drawings and prior to ordering or fabricating any materials. See sht. J02 for more details.*

For accompanied by drawings, see sht. JA01

SCALE WARNING
IF THIS SCALE LINE DOES NOT MEASURE ONE INCH, THEN DRAWING IS NOT TO SCALE

STRUCTURE NO.	00123K
BDS DWG NO.	113749
CALC. BOOK	7997
HWY: 030 M.P.: 25.88	
COUNTY	Marion/Polk
DATE	2/26

REGISTERED PROFESSIONAL ENGINEER
85555PE
Digitally Signed 2026.02.12 12:29:16-08'00'
OREGON
DEC. 21, 2011
MICHAEL G. McNULTY
EXPIRES: 12/31/2026

FINAL ELECTRONIC DOCUMENT AVAILABLE UPON REQUEST

DOWL
3500 Chad Drive, Suite 200
Eugene, Oregon 97408
541-683-6090
WWW.DOWL.COM

OREGON DEPARTMENT OF TRANSPORTATION

WILLAMETTE RIVER, HWY 30 EB (CENTER ST)

OR22: CENTER ST BRIDGE (PHASE 1) PROJECT
WILLAMINA - SALEM HIGHWAY
MARION & POLK COUNTIES

Designer: Mike McNulty, PE
Reviewer: Bob Goodrich, PE
Drafter: Jake Williams
Checker: Eric Bonn, PE

CONSTRUCTION SEQUENCE - 2

SHEET NO. JA05

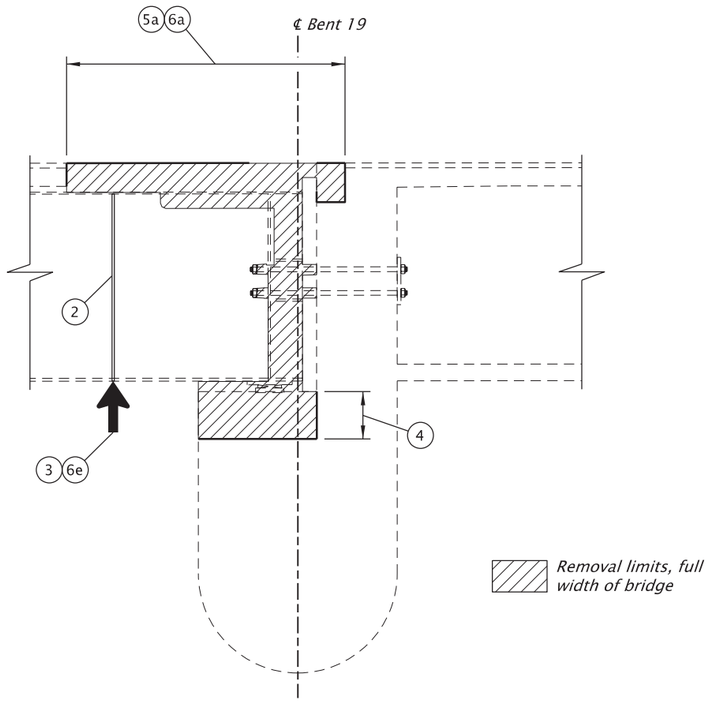

BENT 19 - REMOVAL CONSTRUCTION SEQUENCE

Scale: 3/16"=1'-0"

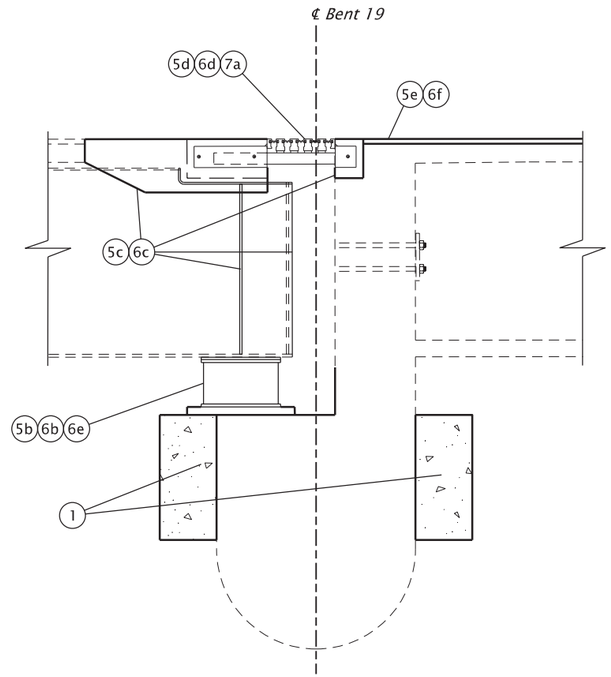

BENT 19 CONSTRUCTION SEQUENCE

Scale: 3/16"=1'-0"

CONSTRUCTION WORK SEQUENCE

1. *Strengthen existing crossbeam, see sht. JA77 for details.*
2. *Install temporary bearing stiffeners and cross-frames, see sht. JA43 for details.*
3. *Install bridge jacking and jacking support system, see shts. JA79 for details.*
4. *Remove portions of existing crossbeam, see sht. JA79 for details.*
5. *Install traffic control Stage VI - Phase 2 North Half Construction, see sht. JA11 for details*.*
5a. *Remove portions of Span 18 and Span 19, see sht. JA79 for details.*
5b. *Install Span 18 bearings, 4 total, on crossbeam. Do not load bearings. See sht. JA79 for bearing installation sequence.*
5c. *Install Span 18 cross-frames, 3 total, and reconstruct portions Span 18 and Span 19. See shts. JA39, JA44 and JA46 for details.*
5d. *Install modular joint control boxes and support beams. Install temporary modular joint center beam system. See sht. JA124 for details.*
5e. *Install structural concrete overlay, see sht. JA48-JA55 for details.*
6. *Install traffic control Stage VI - Phase 3 South Half Construction, see sht. JA11 for details*.*
6a. *Remove remaining portions of Span 18 and Span 19, see sht. JA78 for details.*
6b. *Install Span 18 bearings, 3 total, on crossbeam. Do not load bearings. See sht. JA79 for bearing installation sequence.*
6c. *Install Span 18 cross-frames, 3 total, and reconstruct remaining portions of Span 18 and Span 19. See shts. JA39, JA44 and JA46 for details.*
6d. *Install modular joint control boxes and support beams, see sht. JA124 for details.*
6e. *Adjust and level all bearings to their final vertical positions and load bearings. Remove bridge jacking and jacking support system. See sht. JA79 for details.*
6f. *Install structural concrete overlay and single layer polymer concrete overlay, see sht. JA48-JA55 for details.*
7. *Close bridge, see sht. JA11 for details.**
7a. *Remove temporary modular joint center beam system and install full width permanent modular joint center beam system. See sht. JA124 for details.*

NOTES:
1. ** Construction activities not shown for clarity.*
2. *See Bent Plan and Elevation sheets for construction control working points to establish bent centerline.*
3. *Field verify all dimensions and elevations prior to submitting Working Drawings and prior to ordering or fabricating any materials. See sht. J02 for more details.*

For accompanied by drawings, see sht. JA01

SCALE WARNING
IF THIS SCALE LINE DOES NOT MEASURE ONE INCH, THEN DRAWING IS NOT TO SCALE

STRUCTURE NO.	00123K
BDS DWG NO.	113750
CALC. BOOK	7997
HWY: 030	M.P.: 25.88
COUNTY	Marion/Polk
DATE	2/26

REGISTERED PROFESSIONAL ENGINEER
85555PE
Digitally Signed 2026.02.12 12:29:26-08'00'
OREGON
DEC. 21, 2011
MICHAEL G. McNULTY
EXPIRES: 12/31/2026

FINAL ELECTRONIC DOCUMENT AVAILABLE UPON REQUEST

DOWL
3500 Chad Drive, Suite 200
Eugene, Oregon 97408
541-683-6090
WWW.DOWL.COM

OREGON DEPARTMENT OF TRANSPORTATION

WILLAMETTE RIVER, HWY 30 EB (CENTER ST)

OR22: CENTER ST BRIDGE (PHASE 1) PROJECT
WILLAMINA - SALEM HIGHWAY
MARION & POLK COUNTIES

Designer: Mike McNulty, PE
Reviewer: Bob Goodrich, PE
Drafter: Jake Williams
Checker: Eric Bonn, PE

CONSTRUCTION SEQUENCE - 3

SHEET NO. JA06

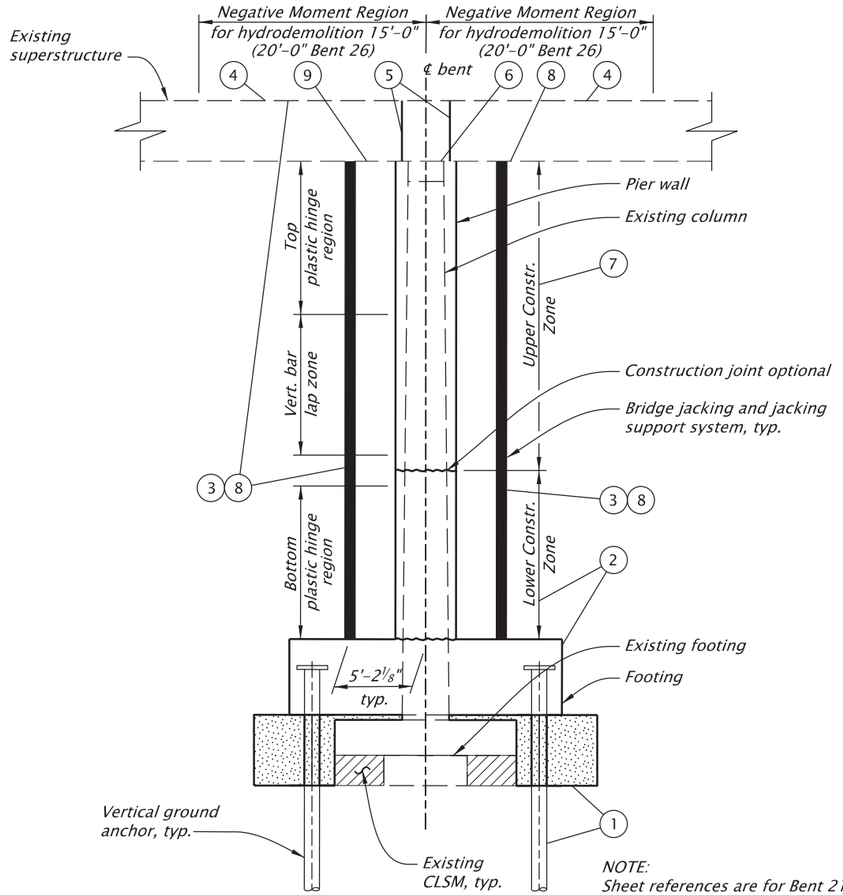

NOTE:
Sheet references are for Bent 21.
See detail plans for Bents 24, 26 and 28.

BENT 21 CONSTRUCTION SEQUENCE (BENTS 24, 26, AND 28 SIMILAR)

No Scale

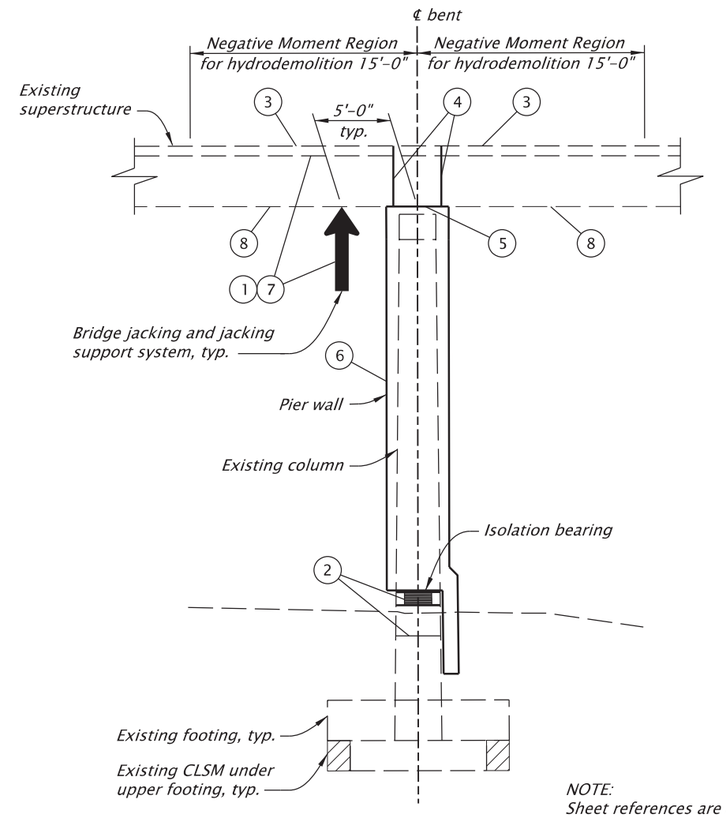

NOTE:
Sheet references are for Bent 22.
See detail plans for Bents 23.

BENT 22 CONSTRUCTION SEQUENCE (BENT 23 SIMILAR)

No Scale

CONSTRUCTION SEQUENCE FOR BENTS 22 AND 23

1. Perform bridge jacking, jacking support system, see sht. JA89 for jacking loads.
2. Install isolation bearings as described on JA91.
3. Install top of deck NSM reinforcing. Perform bridge deck cold plane removal, concrete deck micro-milling and selective hydrodemolition.
4. Perform vertical coring, see sht. JA90.
5. Perform horizontal coring on crossbeam, see sht. JA90.
6. Blockout NSM reinforcement horizontal coring and place pier wall, see sht. JA90.
7. Install structural concrete overlay, single layer polymer concrete overlay, and surface texturing, then remove bridge jacking and jacking support system.
8. Install underside box girder NSM reinforcing.

CONSTRUCTION SEQUENCE FOR BENTS 21, 24, 26 AND 28

1. Install and tension ground anchors then place CLSM, see shts. JA25 and JA85.
2. Construct footing and lower construction zone pier wall, see shts. JA86-JA88.
3. Install bridge jacking and jacking support system, see sht. JA85 for jacking loads.
4. Install top of deck NSM reinforcing. Perform bridge deck cold plane removal, concrete deck micro-milling and selective hydrodemolition.
5. Perform vertical coring, see shts. JA87 and JA88.
6. Perform horizontal coring on crossbeam, see shts. JA87 and JA88.
7. Blockout NSM reinforcement horizontal coring and place upper construction zone pier wall, see shts. JA87 and JA88.
8. Install structural concrete overlay, single layer polymer concrete overlay, and surface texturing, then remove bridge jacking and jacking support system.
9. Install underside box girder NSM reinforcing.

NOTES:
1. See Bent Plan and Elevation sheets for construction control working points to establish bent centerline.
2. Field verify all dimensions and elevations prior to submitting Working Drawings and prior to ordering or fabricating any materials. See sht. J02 for more details.

For accompanied by drawings, see sht. JA01

SCALE WARNING
IF THIS SCALE LINE DOES NOT MEASURE ONE INCH, THEN DRAWING IS NOT TO SCALE

STRUCTURE NO.	00123K
BDS DWG NO.	113751
CALC. BOOK	7997
HWY: 030 M.P.: 25.88	
COUNTY	Marion
DATE	2/26

REGISTERED PROFESSIONAL ENGINEER
099941PE
Digitally Signed 2026.02.12 11:20:29-08'00'
OREGON
JULY 21, 2022
BERNARD ANTHONY FRANKL
EXPIRES: 12/31/2027

FINAL ELECTRONIC DOCUMENT AVAILABLE UPON REQUEST

DOWL
3500 Chad Drive, Suite 200
Eugene, Oregon 97408
541-683-6090
WWW.DOWL.COM

WILLAMETTE RIVER, HWY 30 EB (CENTER ST)

OR22: CENTER ST BRIDGE (PHASE 1) PROJECT
WILLAMINA - SALEM HIGHWAY
MARION & POLK COUNTIES

Designer: Bernard A. Frankl, PhD, PE
Reviewer: Bob Goodrich, PE
Drafter: Jake Williams
Checker: Tanner Torkelson, PE

CONSTRUCTION SEQUENCE - 4

SHEET NO. JA07

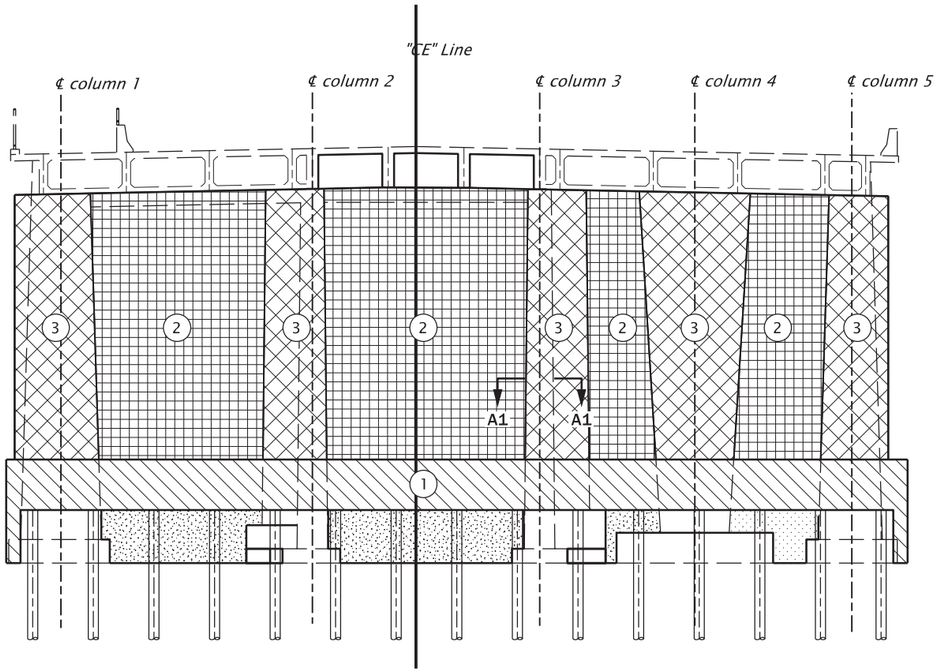

BENT 21 POUR SEQUENCE (20, 22, 23, 24, 25, 26, 27, AND 28 SIMILAR)

No Scale

BENT POUR SEQUENCE

Make Pour (1), place footing.

After a minimum of 14 days of the completion of Pour (1) and concrete has reached 70% of design strength, make pours (2), place pier wall between existing columns.

After a minimum of 14 days of the completion of Pours (2) and concrete has reached 70% of design strength, make pours (3), place pier wall around existing columns.

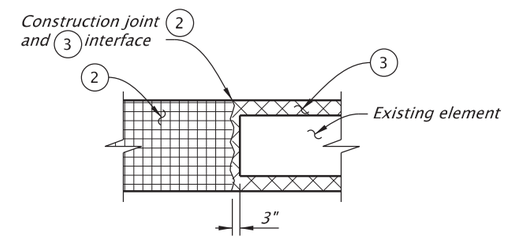

SECTION A1-A1

Scale: 1"=5'

NOTE:
Provide 3" gap between Pour (2) and existing element at all locations to minimize shrinkage voids.

NOTES:

1. *Field verify all dimensions and elevations prior to submitting Working Drawings and prior to ordering or fabricating any materials. See sht. J02 for more details.*
2. *Inject and seal shrinkage cracks in new concrete pours as directed.*
3. *Recommended mass concrete pour sequence shown, alternatives may be submitted for approval by Engineer.*

For accompanied by drawings, see sht. JA01

SCALE WARNING
IF THIS SCALE LINE DOES NOT MEASURE ONE INCH, THEN DRAWING IS NOT TO SCALE

STRUCTURE NO.	00123K
BDS DWG NO.	113752
CALC. BOOK	7997
HWY: 030 M.P.: 25.88	
COUNTY	Marion
DATE	2/26

REGISTERED PROFESSIONAL ENGINEER 099941PE
Digitally Signed 2026.02.12 11:20:56-08'00'
OREGON JULY 21, 2022 BERNARD ANTHONY FRANKL
EXPIRES: 12/31/2027

FINAL ELECTRONIC DOCUMENT AVAILABLE UPON REQUEST

DOWL
3500 Chad Drive, Suite 200
Eugene, Oregon 97408
541-683-6090
WWW.DOWL.COM

WILLAMETTE RIVER, HWY 30 EB (CENTER ST)

OR22: CENTER ST BRIDGE (PHASE 1) PROJECT
WILLAMINA - SALEM HIGHWAY
MARION & POLK COUNTIES

Designer: Bernard A. Frankl, PhD, PE
Reviewer: Bob Goodrich, PE
Drafter: Jake Williams
Checker: Nasario Lopez-Francisco, PE

CONSTRUCTION SEQUENCE - 5

SHEET NO. JA08

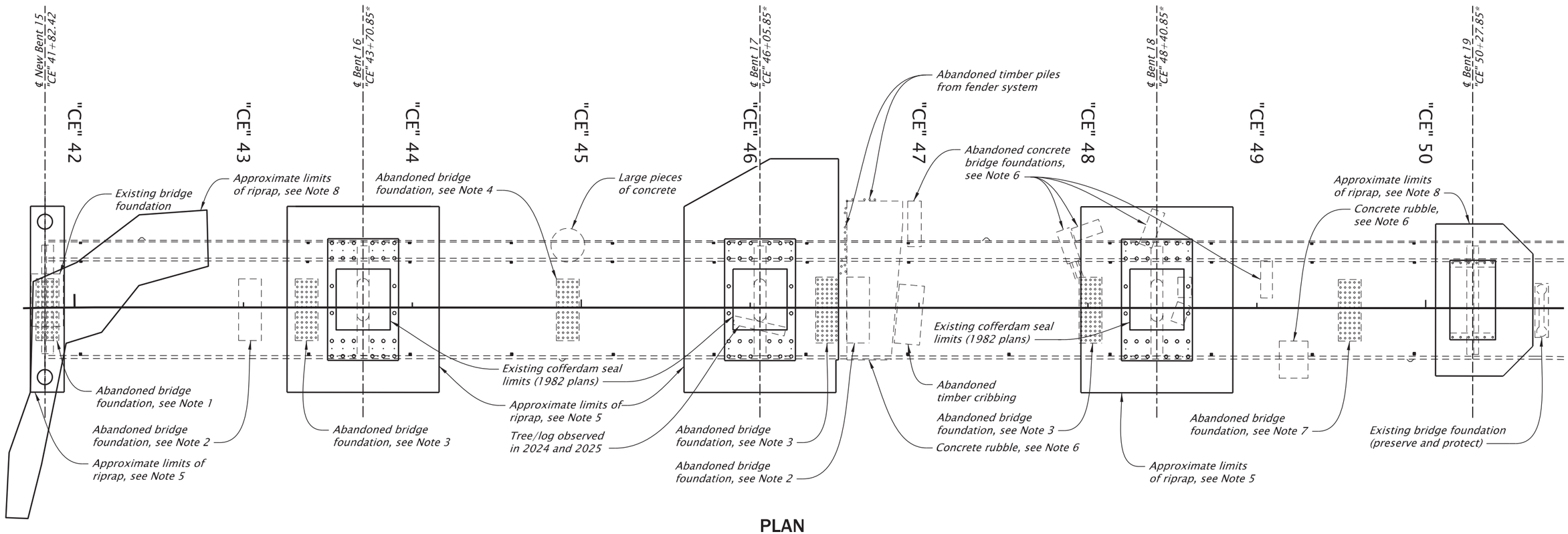

PLAN

Scale: 1"=60'

NOTES:

1. *1917 foundation removed to bottom of 1982 foundation, Elev. 111 (1982 plans).*
2. *Foundation inferred from 1917 plans. Details unknown.*
3. *1917 foundation removed to bottom of riprap excavation, Elev. 78 (1982 plans).*
4. *1917 foundation removed to bottom of stream bed (1982 plans), bottom of footing Elev 89 estimated from 1917 and 1982 plans.*
5. *Existing riprap noted to be Class 700 (1982 plans).*
6. *Existing concrete rubble and abandoned bridge foundations (1982 plans).*
7. *1917 foundation removed to bottom of stream bed (1982 plans), bottom of footing Elev. 92 estimated from 1917 and 1982 plans.*
8. *Existing riprap limits inferred from aerial photos. (1982–1985).*
9. ** Existing Bent centerline stationing is approximate. See Bent Plan and Elevation sheets for construction control working points to establish bent centerline.*
10. *Field verify all dimensions and elevations prior to submitting Working Drawings and prior to ordering or fabricating any materials. See sht. J02 for more details.*

For accompanied by drawings, see sht. JA01

SCALE WARNING

IF THIS SCALE LINE DOES NOT MEASURE ONE INCH, THEN DRAWING IS NOT TO SCALE

STRUCTURE NO.	00123K
BDS DWG NO.	113753
CALC. BOOK	7997
HWY: 030 M.P.: 25.88	
COUNTY	Marion/Polk
DATE	2/26

REGISTERED PROFESSIONAL ENGINEER
85555PE
Digitally Signed 2026.02.12 12:31:37-08'00'
OREGON
DEC. 21, 2011
MICHAEL G. McNULTY
EXPIRES: 12/31/2026

FINAL ELECTRONIC DOCUMENT AVAILABLE UPON REQUEST

DOWL
3500 Chad Drive, Suite 200
Eugene, Oregon 97408
541-683-6090
WWW.DOWL.COM

OREGON DEPARTMENT OF TRANSPORTATION

WILLAMETTE RIVER, HWY 30 EB (CENTER ST)

OR22: CENTER ST BRIDGE (PHASE 1) PROJECT
WILLAMINA - SALEM HIGHWAY
MARION & POLK COUNTIES

Designer: Mike McNulty, PE
Reviewer: Bob Goodrich, PE
Drafter: Jake Williams
Checker: Andy Howe, PE

SUBSURFACE OBSTRUCTION PLAN

SHEET NO. JA09

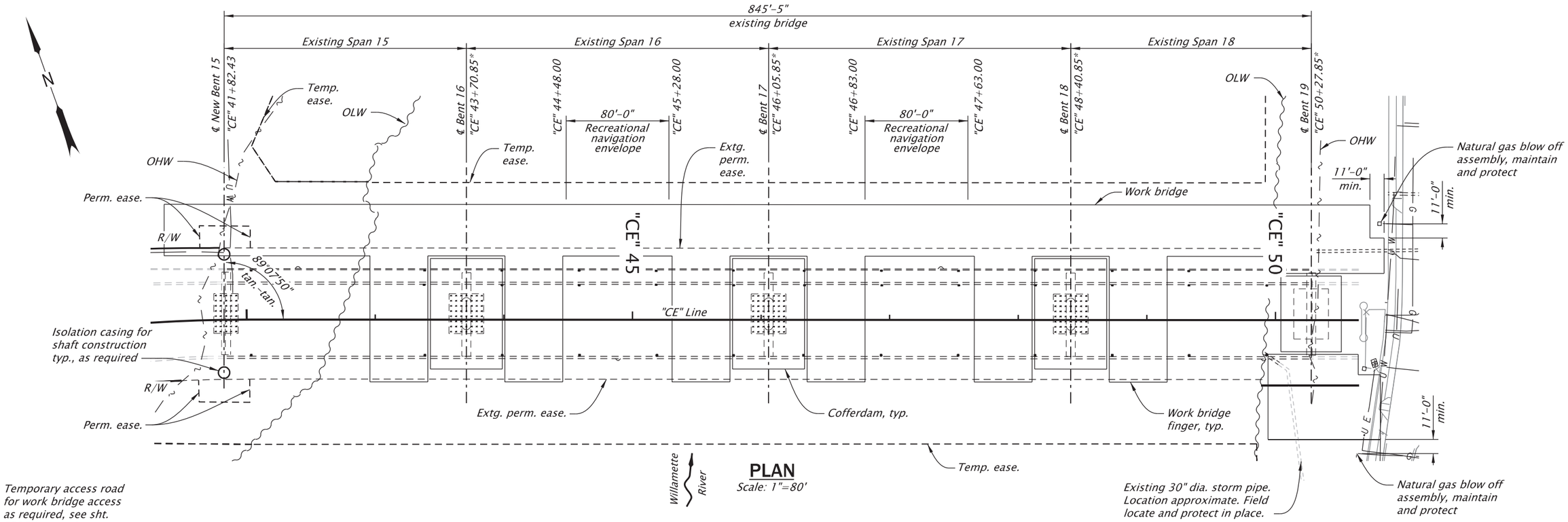

PLAN
Scale: 1"=80'

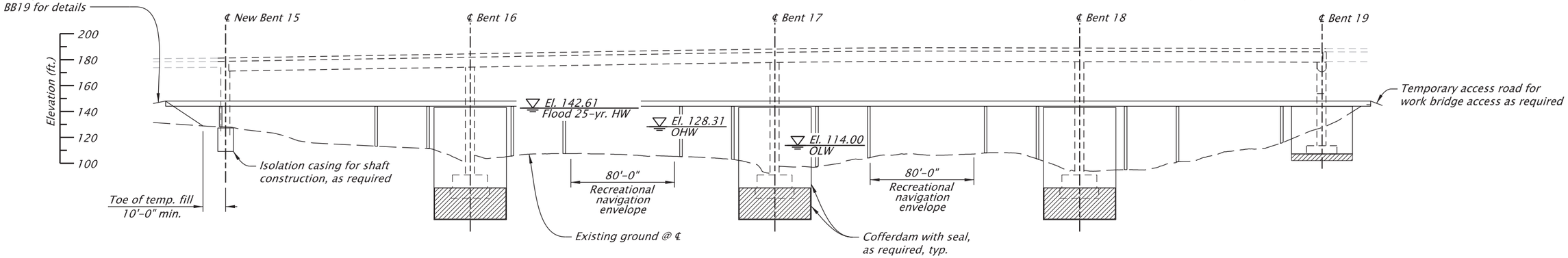

ELEVATION
Scale: 1"=80'

For accompanied by drawings, see sht. JA01

NOTES:
1. Soffit elevation of temporary work bridge and fingers shall be no lower than elevation 143.61.
2. Top of cofferdam shall be no lower than elevation 142.61.
3. At contractor discretion cofferdams can be vented to allow flooding at Elevations lower than 142.61. If vents are used, screen all vents to prevent entry of fish.
4. No more than two cofferdams may be in place outside in-water work window.
5. Provide a minimum 40'-0" wide navigation channel within the 80'-0" navigation envelope, see sht. EH03 for details.
6. * Existing Bent centerline stationing is approximate. See Bent Plan and Elevation sheets for construction control working points to establish bent centerline.
7. Field verify all dimensions and elevations prior to submitting Working Drawings and prior to ordering or fabricating any materials. See sht. J02 for more details.

SCALE WARNING
IF THIS SCALE LINE DOES NOT MEASURE ONE INCH, THEN DRAWING IS NOT TO SCALE

STRUCTURE NO.	00123K
BDS DWG NO.	113754
CALC. BOOK	7997
HWY: 030 M.P.: 25.88	
COUNTY	Marion/Polk
DATE	6/26

REGISTERED PROFESSIONAL ENGINEER
85555PE
Digitally Signed 2026.06.10 13:41:53-07'00'
OREGON
DEC. 21, 2011
MICHAEL G. McNULTY
EXPIRES: 12/31/2026

FINAL ELECTRONIC DOCUMENT AVAILABLE UPON REQUEST

DOWL
3500 Chad Drive, Suite 200
Eugene, Oregon 97408
541-683-6090
WWW.DOWL.COM

WILLAMETTE RIVER, HWY 30 EB (CENTER ST)

OR22: CENTER ST BRIDGE (PHASE 1) PROJECT
WILLAMINA - SALEM HIGHWAY
MARION & POLK COUNTIES

Designer: Mike McNulty, PE
Reviewer: Bob Goodrich, PE
Drafter: Jake Williams
Checker: Eric Bonn, PE

TEMPORARY WORK STRUCTURE

SHEET NO. JA10

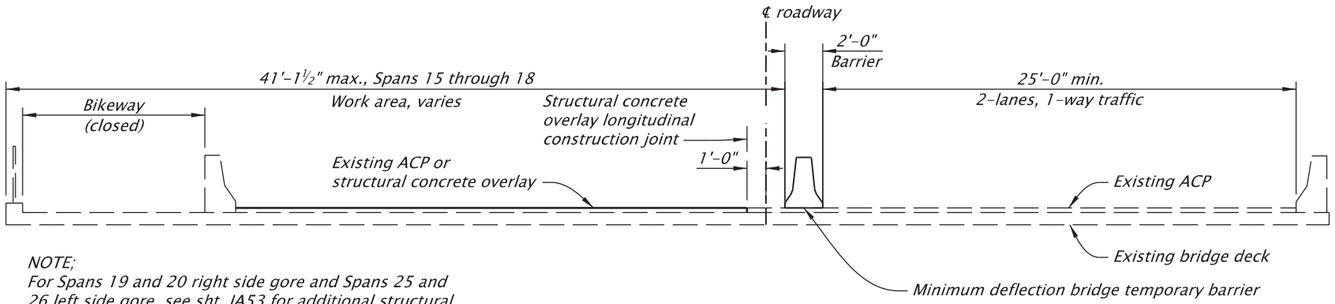

NOTE;
For Spans 19 and 20 right side gore and Spans 25 and 26 left side gore, see sht. JA53 for additional structural concrete overlay longitudinal construction joints.

STAGE VI - PHASE 2
NORTH HALF CONSTRUCTION

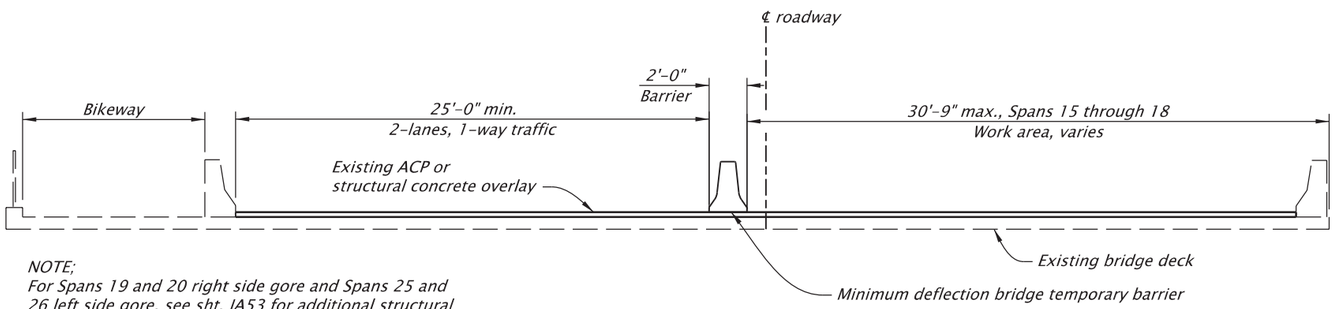

NOTE;
For Spans 19 and 20 right side gore and Spans 25 and 26 left side gore, see sht. JA53 for additional structural concrete overlay longitudinal construction joints.

STAGE VI - PHASE 3
SOUTH HALF CONSTRUCTION

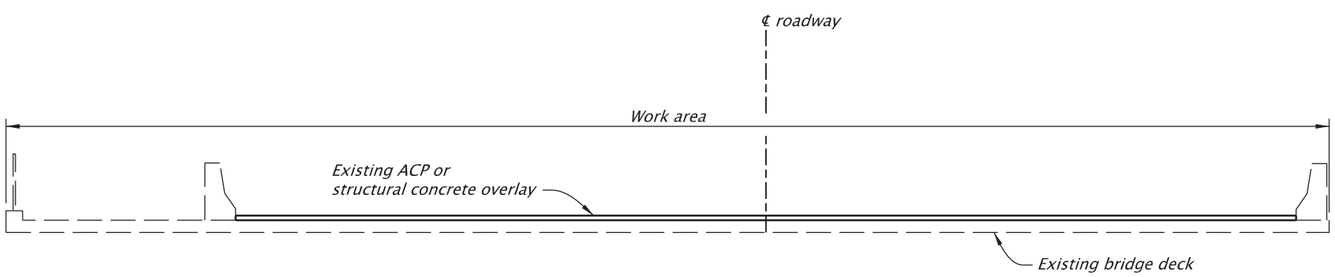

STAGE VI - PHASE 4
FULL BRIDGE CLOSURE

STAGING SEQUENCE

Scale: 1/8"=1'-0"

STAGE VI - PHASE 2 NORTH HALF CONSTRUCTION NOTES:

See sht. EG03 for traffic control details.

Work to be done-

Bent 15, 5a through 5d, see sht. JA05 for details.
Bent 19, 5a through 5e, see sht. JA06.

Spans 15 through 18, maintain and protect existing ACP wearing surface.
Spans 19 through 28, construct structural concrete overlay, see shts. JA48-JA55 for details.

STAGE VI - PHASE 3 SOUTH HALF CONSTRUCTION NOTES:

See sht. EG10 for traffic control details.

Work to be done-

Bent 15, 6a through 6f, see sht. JA05 for details.
Bent 19, 6a through 6f, see sht. JA06.

Spans 15 through 18, maintain and protect existing ACP wearing surface.
Spans 19 through 28, construct structural concrete overlay, see shts. JA48-JA55 for details.

STAGE VI - PHASE 4 FULL BRIDGE CLOSURE CONSTRUCTION NOTES:

See sht. EG16 for traffic control details.

Work to be done-

Bent 15, 7a, see sht. JA05 for details.
Bent 19, 7a, see sht. JA06.

NOTE:
Field verify all dimensions and elevations prior to submitting Working Drawings and prior to ordering or fabricating any materials. See sht. J02 for more details.

For accompanied by drawings, see sht. JA01

STRUCTURE NO.	00123K
BDS DWG NO.	113755
CALC. BOOK	7997
HWY: 030 M.P.: 25.88	
COUNTY	Marion/Polk
DATE	2/26

SCALE WARNING
IF THIS SCALE LINE DOES NOT MEASURE ONE INCH, THEN DRAWING IS NOT TO SCALE

REGISTERED PROFESSIONAL ENGINEER
85555PE
Digitally Signed 2026.02.12 12:31:55-08'00'
OREGON
DEC. 21, 2011
MICHAEL G. McNULTY
EXPIRES: 12/31/2026

FINAL ELECTRONIC DOCUMENT AVAILABLE UPON REQUEST

DOWL
3500 Chad Drive, Suite 200
Eugene, Oregon 97408
541-683-6090
WWW.DOWL.COM

OREGON DEPARTMENT OF TRANSPORTATION

WILLAMETTE RIVER, HWY 30 EB (CENTER ST)

OR22: CENTER ST BRIDGE (PHASE 1) PROJECT
WILLAMINA - SALEM HIGHWAY
MARION & POLK COUNTIES

Designer: Mike McNulty, PE
Reviewer: Bob Goodrich, PE
Drafter: Jake Williams
Checker: Eric Bonn, PE

CONSTRUCTION STAGING - 1

SHEET NO. JA11

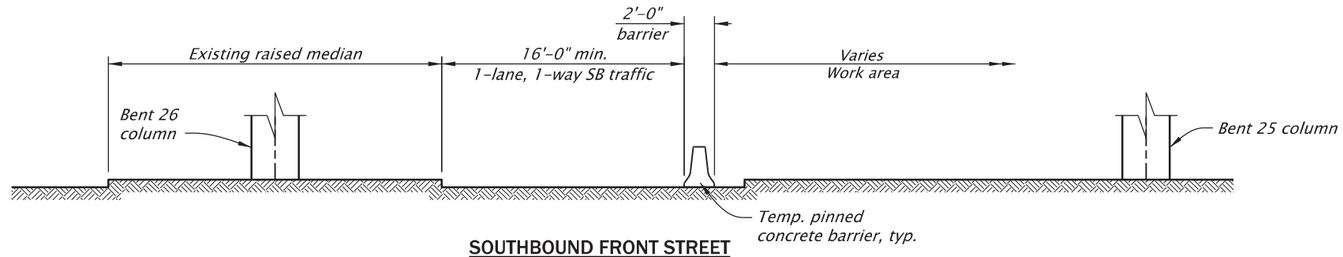

SOUTHBOUND FRONT STREET

STAGE II : BENT 25 CONSTRUCTION

Scale: 1"=10'

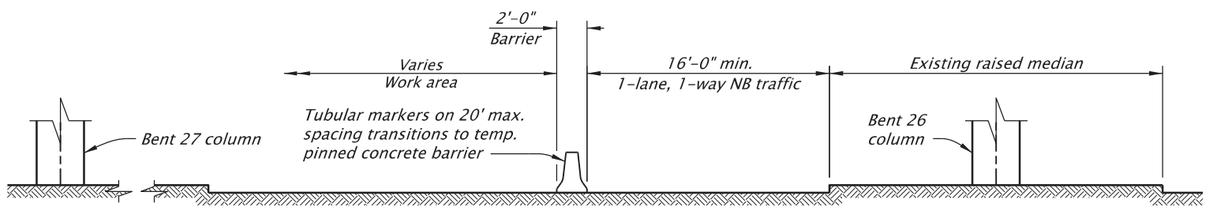

NORTHBOUND FRONT STREET

STAGE III - PHASE 2 : BENT 27 CONSTRUCTION

Scale: 1"=10'

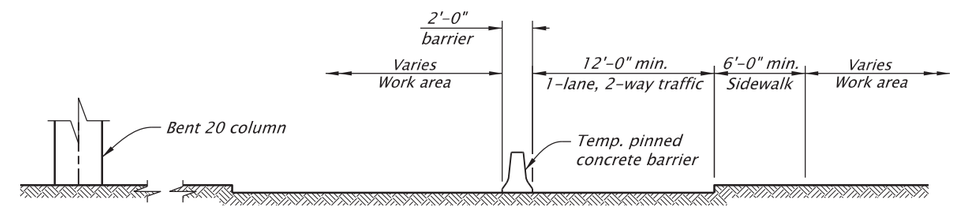

WATER STREET

STAGE IV : BENT 20 CONSTRUCTION - WATER STREET

Scale: 1"=10'

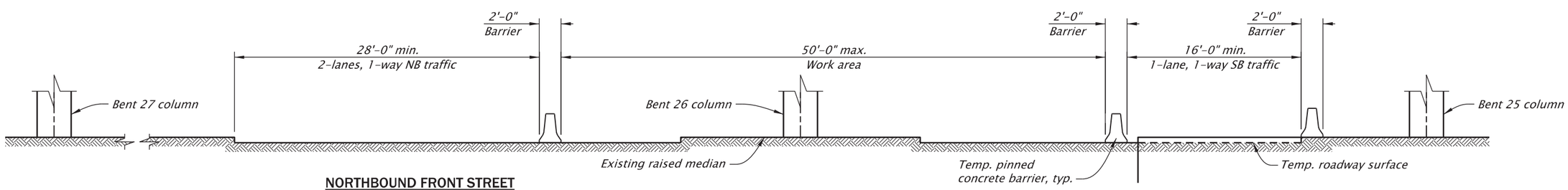

NORTHBOUND FRONT STREET

SOUTHBOUND FRONT STREET

STAGE VI - PHASE 1 : BENT 26 CONSTRUCTION

Scale: 1"=10'

For accompanied by drawings, see sht. JA01

NOTES:
1. *Sections looking south.*
2. *See EC01 for Stage II : Bent 25 Construction traffic control plan.*
3. *See ED03 for Stage III – Phase 2 : Bent 27 Construction traffic control plan.*
4. *See EE01 for Stage IV : Bent 20 Construction – Water Street traffic control plan.*
5. *See EG02 for Stage VI – Phase 1 : Bent 26 Construction traffic control plan.*
6. *Field verify all dimensions and elevations before submitting Working Drawings and prior to ordering or fabricating any materials. See sht. J02 for more details.*

SCALE WARNING

IF THIS SCALE LINE DOES NOT MEASURE ONE INCH, THEN DRAWING IS NOT TO SCALE

STRUCTURE NO.	00123K
BDS DWG NO.	113756
CALC. BOOK	7997
HWY: 030	M.P.: 25.88
COUNTY	Marion
DATE	2/26

REGISTERED PROFESSIONAL ENGINEER
099941PE
Digitally Signed 2026.02.12 11:21:16-08'00'
OREGON
JULY 21, 2022
BERNARD ANTHONY FRANKL
EXPIRES: 12/31/2027

FINAL ELECTRONIC DOCUMENT AVAILABLE UPON REQUEST

DOWL
3500 Chad Drive, Suite 200
Eugene, Oregon 97408
541-683-6090
WWW.DOWL.COM

OREGON DEPARTMENT OF TRANSPORTATION

WILLAMETTE RIVER, HWY 30 EB (CENTER ST)

OR22: CENTER ST BRIDGE (PHASE 1) PROJECT
WILLAMINA - SALEM HIGHWAY
MARION & POLK COUNTIES

Designer: Bernard A. Frankl, PhD, PE
Reviewer: Bob Goodrich, PE
Drafter: Jake Williams
Checker: Nasario Lopez-Francisco, PE

CONSTRUCTION STAGING - 2

SHEET NO. JA12

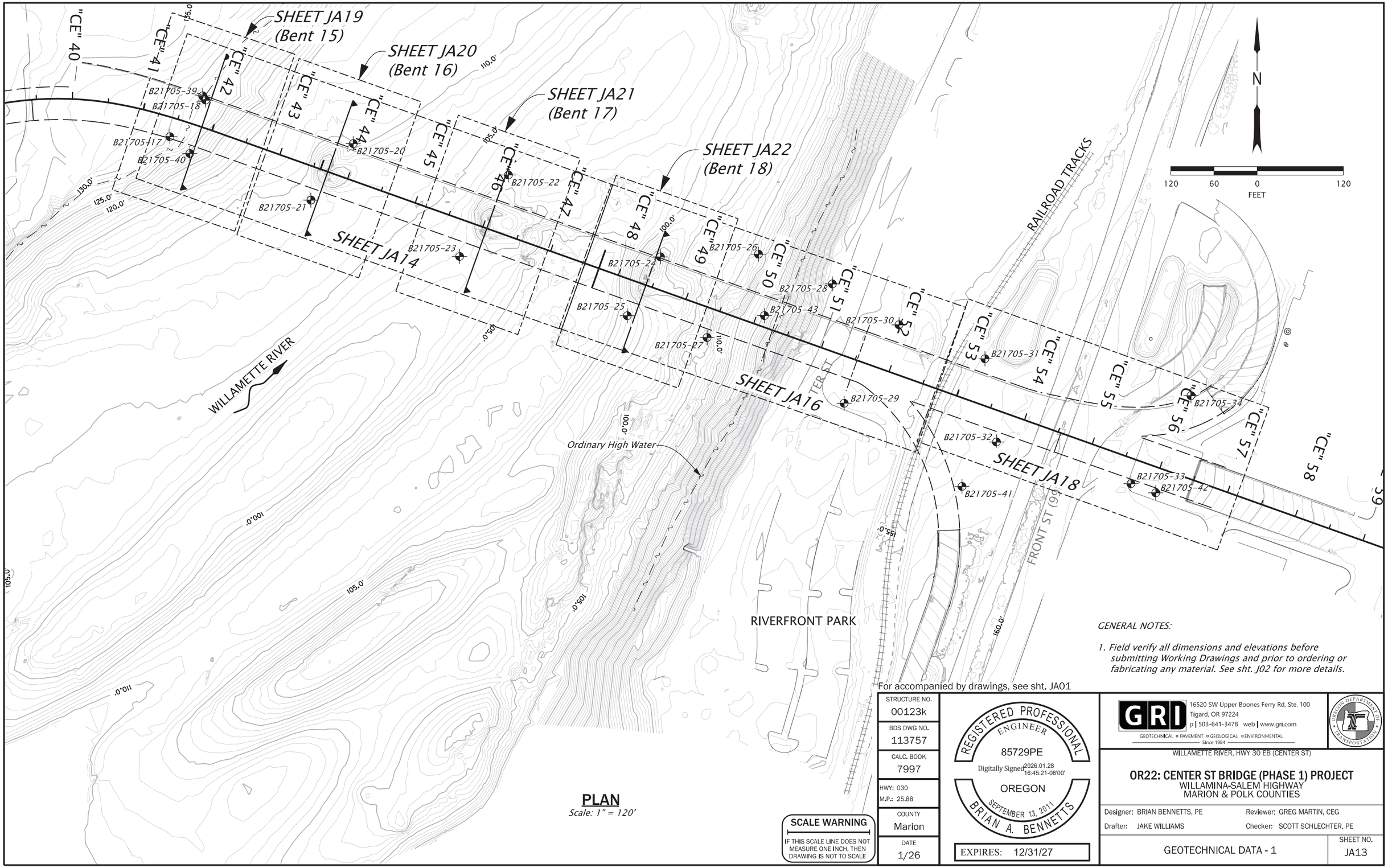

PLAN

Scale: 1" = 120'

SCALE WARNING

IF THIS SCALE LINE DOES NOT MEASURE ONE INCH, THEN DRAWING IS NOT TO SCALE

GENERAL NOTES:

1. *Field verify all dimensions and elevations before submitting Working Drawings and prior to ordering or fabricating any material. See sht. J02 for more details.*

For accompanied by drawings, see sht. JA01

STRUCTURE NO.	00123k
BDS DWG NO.	113757
CALC. BOOK	7997
HWY: 030	M.P.: 25.88
COUNTY	Marion
DATE	1/26

REGISTERED PROFESSIONAL ENGINEER
85729PE
Digitally Signed 2026.01.28 16:45:21-08'00'
OREGON
SEPTEMBER 13, 2011
BRIAN A. BENNETTS

EXPIRES: 12/31/27

GRI
16520 SW Upper Boones Ferry Rd, Ste. 100
Tigard, OR 97224
p | 503-641-3478 web | www.gri.com
GEOTECHNICAL ▫ PAVEMENT ▫ GEOLOGICAL ▫ ENVIRONMENTAL
Since 1984

OREGON DEPARTMENT OF TRANSPORTATION

WILLAMETTE RIVER, HWY 30 EB (CENTER ST)

OR22: CENTER ST BRIDGE (PHASE 1) PROJECT

WILLAMINA-SALEM HIGHWAY
MARION & POLK COUNTIES

Designer: BRIAN BENNETTS, PE
Reviewer: GREG MARTIN, CEG
Drafter: JAKE WILLIAMS
Checker: SCOTT SCHLECHTER, PE

GEOTECHNICAL DATA - 1

SHEET NO. JA13

FINAL ELECTRONIC DOCUMENT
AVAILABLE UPON REQUEST

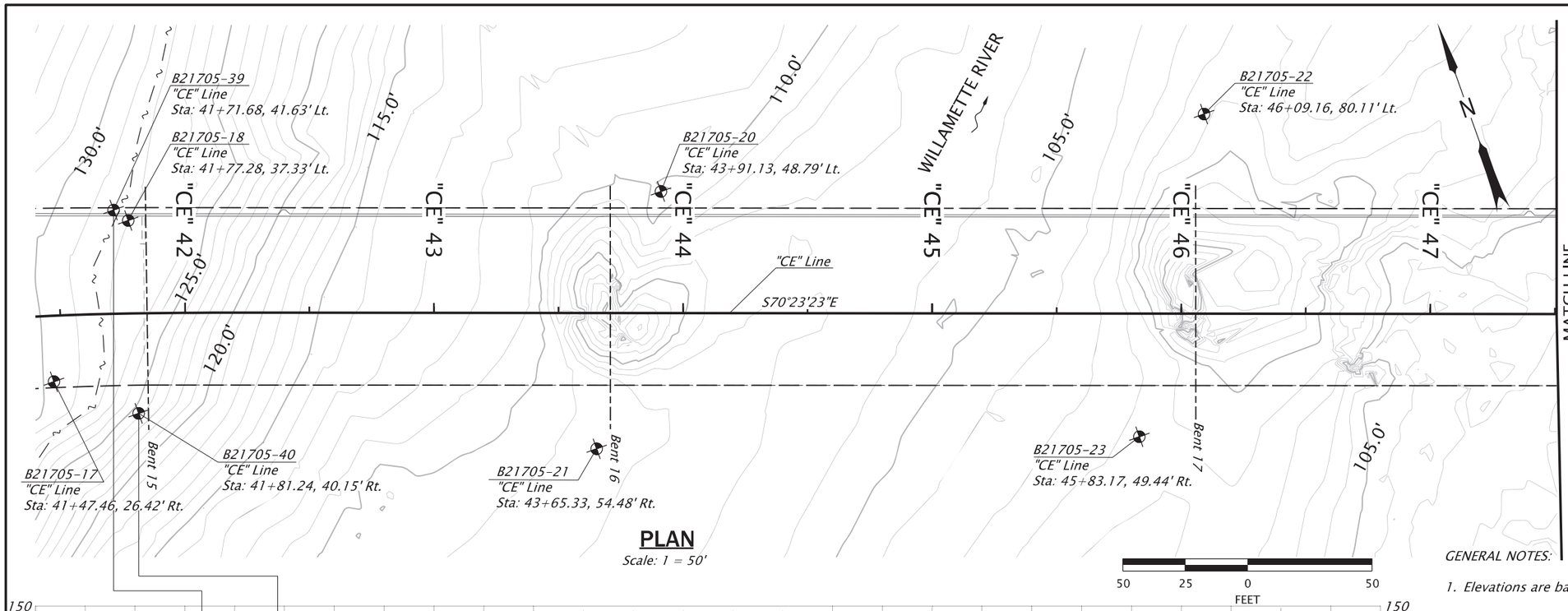

PLAN

Scale: 1 = 50'

LEGEND:

- = Borehole location
- C-3 = Core sample
- RQD = Rock Quality Designation
- 50/1st 5" = Standard Penetration Test refusal length
- 19 = Standard Penetration Test -N value
- U-1 = Undisturbed sample
- 29"* = Oversized sampler (modified California) blow count

GENERAL NOTES:

1. Elevations are based on North American Vertical Datum (1988).
2. Geotechnical data shown in this drawing are a consolidation of information and/or revision in terminology from the drill logs. More detailed subsurface data is available on the drill logs in the Geotechnical Report, which is available from the Engineer.
3. 1' Contour Interval.
4. In accordance with ASTM D1586-84, N values are reported for intervals of 1' except as noted.
5. Core drilling used to extend boring depth upon mud rotary drilling refusal in borings B21705-21, B21705-22, B21705-39, and B21705-40.
6. Refer to sheet JA15 for unit descriptions and rock core information.
7. Borings B21705-18, B21705-20 and B21705-23 were completed using Rotosonic drilling techniques and SPT N-values were not collected.
8. Refer to sheet JA09 for approximate extent of riprap and other obstructions around in-water piers.
9. Field verify all dimensions and elevations before submitting Working Drawings and prior to ordering or fabricating any materials. See sht. J02 for more details.

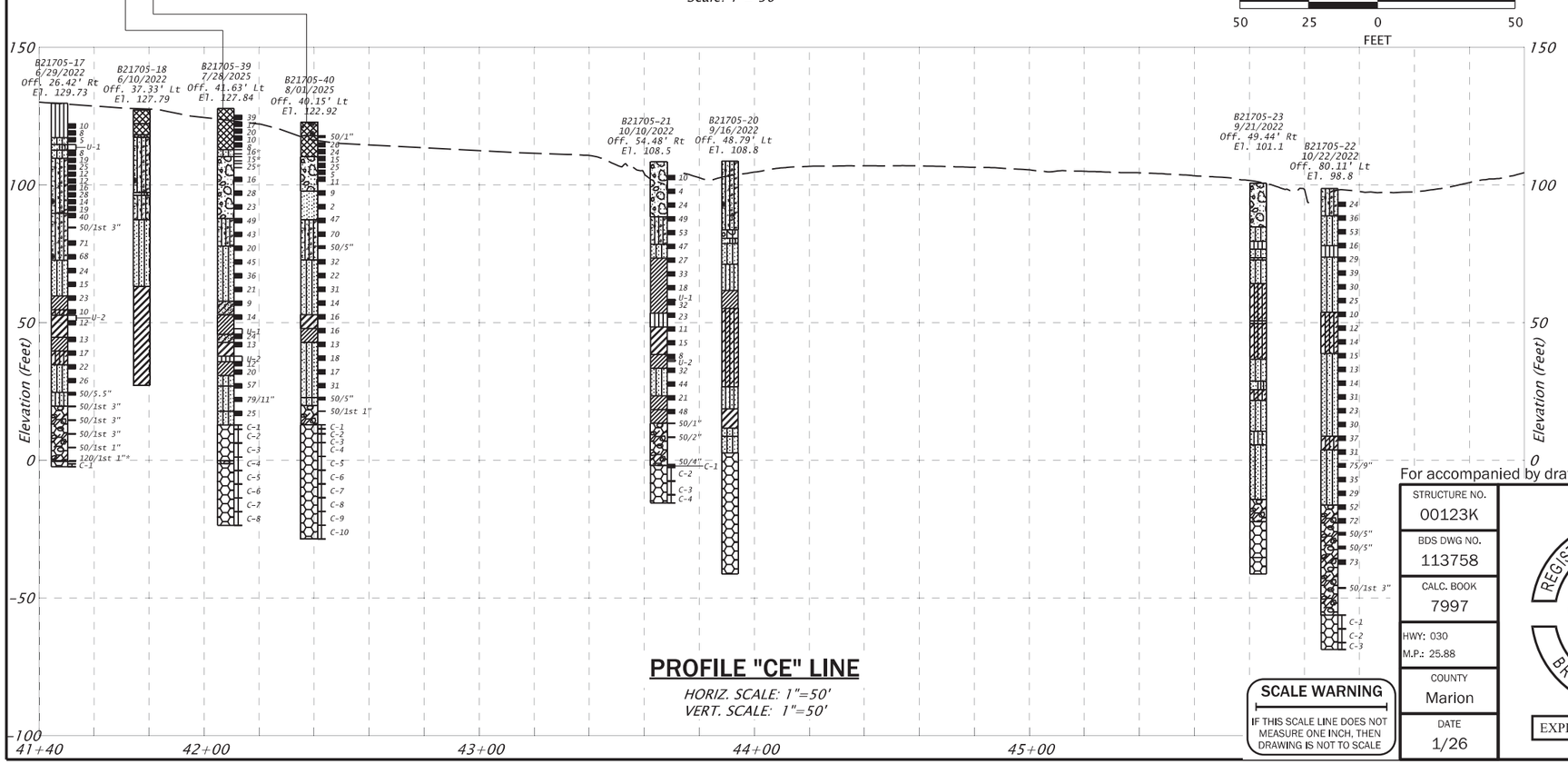

PROFILE "CE" LINE

HORIZ. SCALE: 1"=50'
VERT. SCALE: 1"=50'

For accompanied by drawings, see sht. JA01

STRUCTURE NO.	00123K
BDS DWG NO.	113758
CALC. BOOK	7997
HWY: 030	M.P.: 25.88
COUNTY	Marion
DATE	1/26

SCALE WARNING

IF THIS SCALE LINE DOES NOT MEASURE ONE INCH, THEN DRAWING IS NOT TO SCALE

REGISTERED PROFESSIONAL ENGINEER
85729PE
Digitally Signed 2026.01.28 16:46:30-08'00'
OREGON
SEPTEMBER 13, 2011
BRIAN A. BENNETTS

EXPIRES: 12/31/27

GRI
16520 SW Upper Boones Ferry Rd, Ste. 100
Tigard, OR 97224
p | 503-641-3478 web | www.gri.com
GEOTECHNICAL ▫ PAVEMENT ▫ GEOLOGICAL ▫ ENVIRONMENTAL
Since 1984

OREGON DEPARTMENT OF TRANSPORTATION

WILLAMETTE RIVER, HWY 30 EB (CENTER ST)

OR22: CENTER ST BRIDGE (PHASE 1) PROJECT

WILLAMINA-SALEM HIGHWAY
MARION & POLK COUNTIES

Designer: BRIAN BENNETTS, PE
Reviewer: GREG MARTIN, CEG
Drafter: JAKE WILLIAMS
Checker: SCOTT SCHLECHTER, PE

GEOTECHNICAL DATA - 2

SHEET NO. JA14

FINAL ELECTRONIC DOCUMENT
AVAILABLE UPON REQUEST

UNIT DESCRIPTIONS:

GRAVEL, COBBLES, and BOULDERS, trace to some fine-to coarse-grained sand, trace silt, GP and GP-GM (Riprap Fill)

GRAVEL, some sand to sandy, some silt to silty, GP-GM and GM, damp to wet, fine- to coarse-grained sand, angular to rounded gravel (Fill)

SAND, trace GRAVEL to gravelly, trace silt, trace to some cobbles, SP, dark gray, wet, very loose to medium dense, fine-to coarse-grained sand (Alluvium)

Silty, sandy Gravel, trace to some cobbles, GM, wet, fine-to coarse-grained sand, subrounded to rounded gravel (Alluvium)

GRAVEL, some sand to sandy, trace silt, trace to some cobbles, GP, typically gray and brown, wet, very loose to medium dense, fine-to coarse-grained sand, subrounded to rounded gravel (Alluvium)

SAND, some silt, trace gravel to gravelly, SP-SM, typically brown and gray, wet, loose, fine-to coarse-grained sand (Alluvium or Older Alluvium)

SILT, trace to some fine-grained sand, trace to some clay, trace gravel, ML, typically brown to blue-gray, nonplastic to low plasticity, wet, medium stiff to stiff, contains organics including wood debris (Alluvium or Older Alluvium)

Silty SAND, trace gravel to gravelly, trace to some clay, SM, typically dark gray, blue-gray, dark brown, and red-brown, nonplastic to medium plasticity, wet, loose to very dense, fine-to coarse-grained sand, contains organics (Alluvium, Older Alluvium or Residual Soil)

SILT, some fine-to coarse-grained sand to sandy, trace to some clay, trace angular gravel, ML, typically brown, blue-gray, nonplastic to low plasticity, wet (Older Alluvium or Residual Soil)

SAND, trace gravel to gravelly to GRAVEL, trace sand to sandy, trace to some silt, trace to some cobbles, SP-SM, GW, GW-GM, and GP-GM, typically dark gray, gray, and brown, wet, medium dense to very dense, subrounded to rounded gravel, fine-to coarse-grained sand (Alluvium or Older Alluvium)

CLAY, some fine-grained sand to sandy, trace to some silt, CH, typically blue-gray, gray, and brown, medium to high plasticity, wet, stiff to very stiff (Older Alluvium)

Clayey SAND, trace silt to silty, SC, typically gray, brown, and red-brown, medium plasticity, moist to wet, loose to medium dense, fine-grained sand (Older Alluvium)

SILT, come clay to clayey, trace to some fine-grained sand, ML and MH, typically blue-gray, brown, and red-brown, low to high plasticity, wet, stiff to hard (Older Alluvium)

CLAY, some silt to silty, trace fine-grained sand to sandy, CL, typically blue-gray, red-brown, brown and dark brown, low to medium plasticity, wet, stiff to hard (Older Alluvium or Residual Soil)

BASALT, nonvesicular to some vesicles, typically dark-gray, decomposed to moderately weathered, extremely soft to soft (R0 to R2) rock, contains zones of moderately to slightly weathered, soft to hard (R2 to R4) rock (Columbia River Basalt)

BASALT, nonvesicular to some vesicles, gray to dark gray, fresh to predominately decomposed, very soft to very hard (R1 to R5) rock (Columbia River Basalt)

B21705-17

Core	%Rec.	Hardness	RQD
C1	100	R4	0%

B21705-21

Core	%Rec.	Hardness	RQD
C1	25	R3-R4	0%
C2	98	R1-R2	0%
C3	97	R4	0%
C4	33	R4	0%

B21705-22

Core	%Rec.	Hardness	RQD
C1	80	R3-R4	0%
C2	80	R3-R4	0%
C3	23	R3-R4	0%

B21705-39

Core	%Rec.	Hardness	RQD
C1	100	R3-R4	0%
C2	90	R3-R4	0%
C3	100	R2-R4	15%
C4	100	R2-R4	8%
C5	100	R3-R5	0%
C6	83	R2-R4	0%
C7	87	R2-R4	0%
C8	80	R2-R4	12%

B21705-40

Core	%Rec.	Hardness	RQD
C1	100	R2-R4	22%
C2	100	R3-R4	0%
C3	100	R3-R4	10%
C4	100	R2-R4	13%
C5	100	R1-R4	8%
C6	100	R2-R4	0%
C7	100	R1-R5	0%
C8	72	R4-R5	0%
C9	92	R3-R5	15%
C10	100	R4-R5	72%

GENERAL NOTES:

1. *Unit descriptions and rock core tables refer to borings on sheet JA14*
2. *Field verify all dimensions and elevations before submitting Working Drawings and prior to ordering or fabricating any materials. See sht. J02 for more details.*

For accompanied by drawings, see sht. JA01

SCALE WARNING

IF THIS SCALE LINE DOES NOT MEASURE ONE INCH, THEN DRAWING IS NOT TO SCALE

STRUCTURE NO.	00123K
BDS DWG NO.	113759
CALC. BOOK	7997
HWY: 030 M.P.: 25.88	
COUNTY	Marion
DATE	1/26

REGISTERED PROFESSIONAL ENGINEER
85729PE
Digitally Signed 2026.01.28 16:47:12-08'00'
OREGON
SEPTEMBER 13, 2011
BRIAN A. BENNETTS

EXPIRES: 12/31/27

GRI
16520 SW Upper Boones Ferry Rd, Ste. 100
Tigard, OR 97224
p | 503-641-3478 web | www.gri.com
GEOTECHNICAL ▫ PAVEMENT ▫ GEOLOGICAL ▫ ENVIRONMENTAL
Since 1984

OREGON DEPARTMENT OF TRANSPORTATION

WILLAMETTE RIVER, HWY 30 EB (CENTER ST)

OR22: CENTER ST BRIDGE (PHASE 1) PROJECT
WILLAMINA-SALEM HIGHWAY
MARION & POLK COUNTIES

Designer: BRIAN BENNETTS, PE
Reviewer: GREG MARTIN, CEG
Drafter: JAKE WILLIAMS
Checker: SCOTT SCHLECHTER, PE

GEOTECHNICAL DATA - 3

SHEET NO. JA15

FINAL ELECTRONIC DOCUMENT AVAILABLE UPON REQUEST

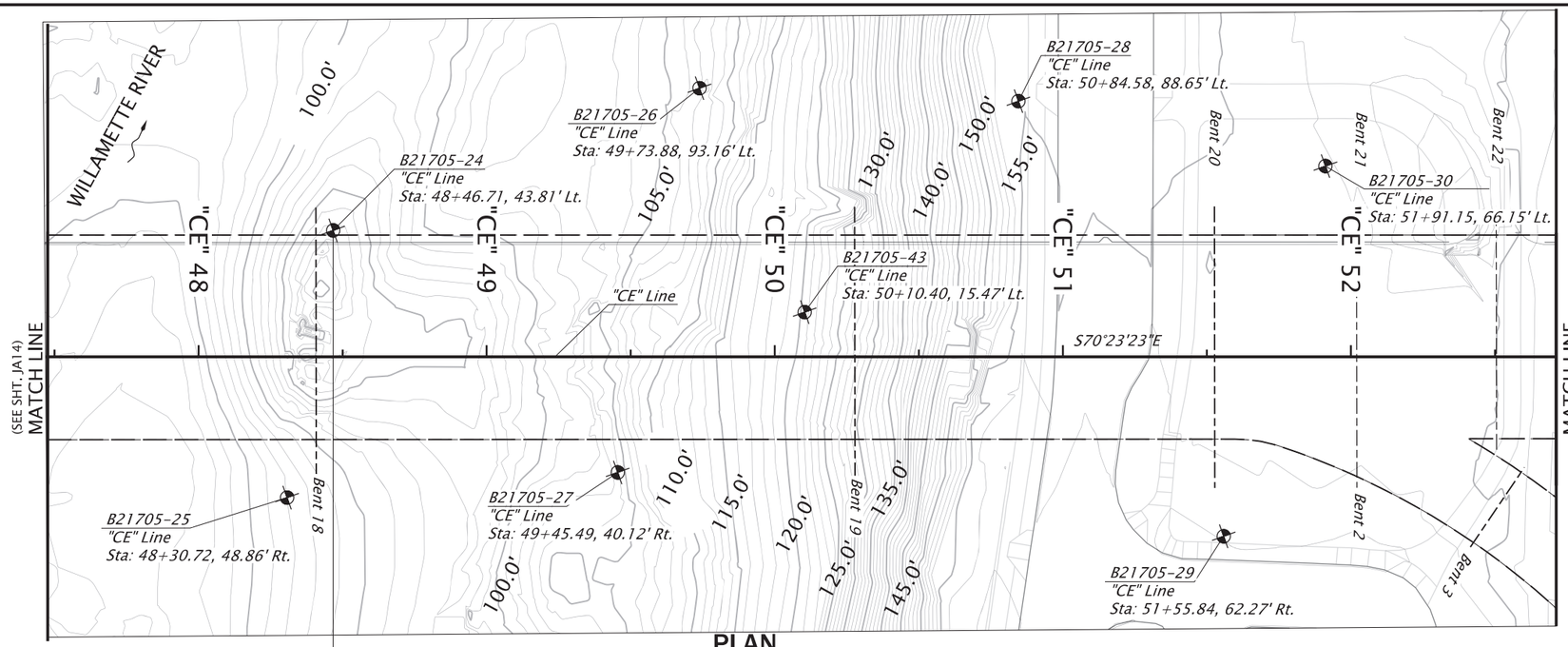

PLAN

Scale: 1 = 50'

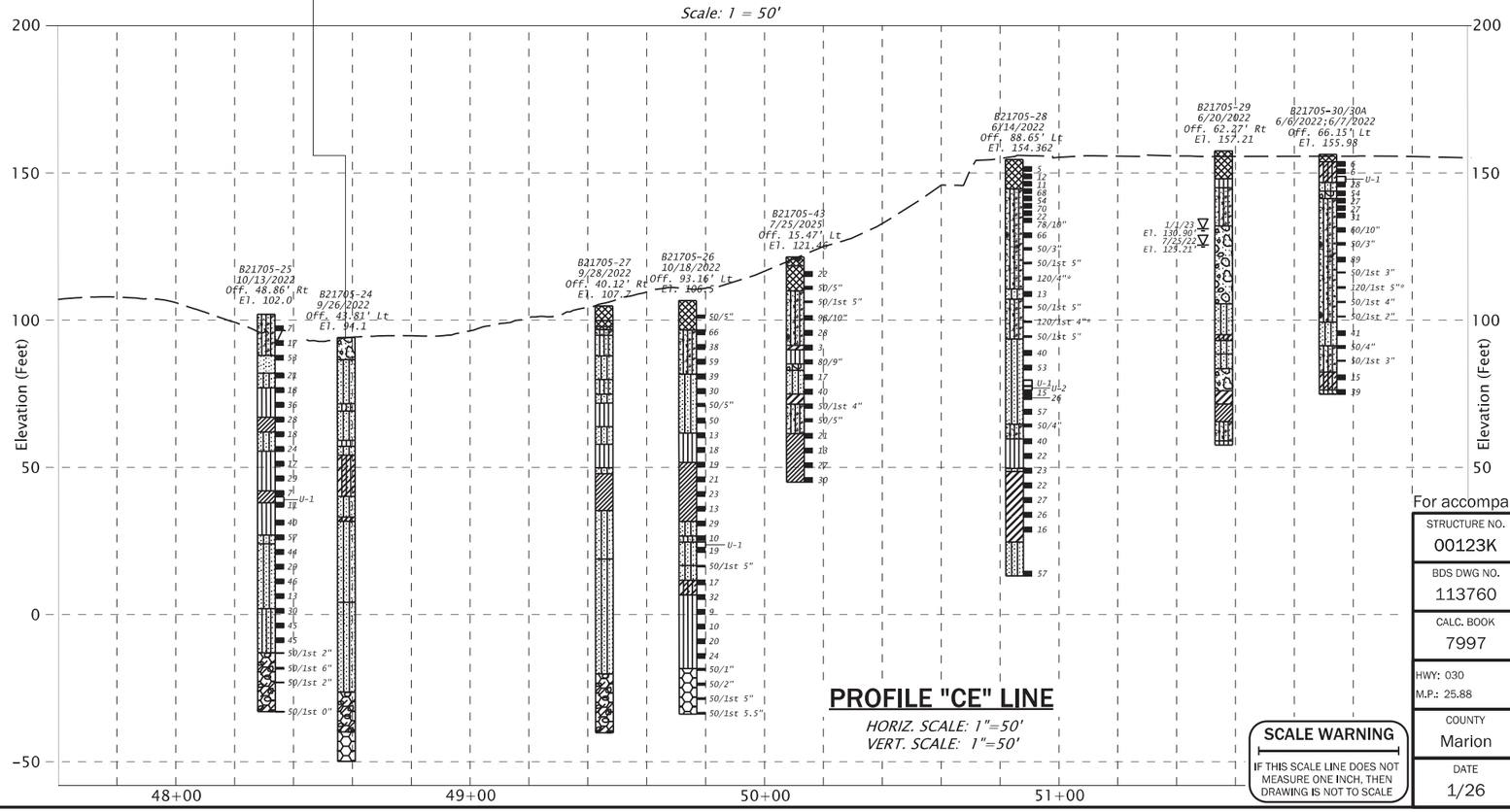

PROFILE "CE" LINE

HORIZ. SCALE: 1"=50'
VERT. SCALE: 1"=50'

SCALE WARNING

IF THIS SCALE LINE DOES NOT MEASURE ONE INCH, THEN DRAWING IS NOT TO SCALE

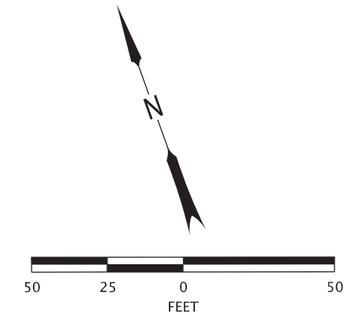

LEGEND:

- = Borehole location
- = Groundwater measured in the borehole location
- El. 133.58 = Elevation
- 12/29/22 = Date of measurement
- C-3 = Core sample
- RQD = Rock Quality Designation
- 50/1st 5" = Standard Penetration Test refusal length
- 19 = Standard Penetration Test -N value
- U-1 = Undisturbed sample
- 29"⁰ = Oversized sampler (modified California) blow count

GENERAL NOTES:

1. Elevations are based on North American Vertical Datum (1988).
2. Geotechnical data shown on this drawing are a consolidation of information and/or revision in terminology from the drill logs. More detailed subsurface data is available on the drill logs in the Geotechnical Report, which is available from the Engineer.
3. 1' Contour interval.
4. In accordance with ASTM D1586-84, N values are reported for intervals of 1' except as noted.
5. RST VW2100-0.35 vibrating-wire piezometer (SN: VW146424) installed at 49' in B21705-29.
6. Refer to sheet JA17 for unit descriptions.
7. Borings B21705-24, B21705-27, B21705-29, and B21705-43 were completed using Rotosonic drilling techniques. SPT N-values were not collected during advancement of borings B21705-24, B21705-27, and B21705-29. SPT N-values collected during advancement of B21705-43 may not be representative due to disturbance caused by Rotosonic drilling.
8. Refer to sheet JA09 for approximate extent of riprap and other obstructions around in-water piers.
9. Field verify all dimensions and elevations before submitting Working Drawings and prior to ordering or fabricating any materials. See sht. J02 for more details.

For accompanied by drawings, see sht. JA01

STRUCTURE NO.	00123K
BDS DWG NO.	113760
CALC. BOOK	7997
HWY: 030	M.P.: 25.88
COUNTY	Marion
DATE	1/26

REGISTERED PROFESSIONAL ENGINEER
85729PE
Digitally Signed 2026.01.28 16:47:53-08'00'
OREGON
SEPTEMBER 13, 2011
BRIAN A. BENNETTS
EXPIRES: 12/31/27

GRI
16520 SW Upper Boones Ferry Rd, Ste. 100
Tigard, OR 97224
p | 503-641-3478 web | www.gri.com
GEOTECHNICAL ▫ PAVEMENT ▫ GEOLOGICAL ▫ ENVIRONMENTAL
Since 1984

OREGON DEPARTMENT OF TRANSPORTATION

WILLAMETTE RIVER, HWY 30 EB (CENTER ST)

OR22: CENTER ST BRIDGE (PHASE 1) PROJECT
WILLAMINA-SALEM HIGHWAY
MARION & POLK COUNTIES

Designer: BRIAN BENNETTS, PE
Reviewer: GREG MARTIN, CEG
Drafter: JAKE WILLIAMS
Checker: SCOTT SCHLECHTER, PE

GEOTECHNICAL DATA - 4

SHEET NO. JA16

FINAL ELECTRONIC DOCUMENT
AVAILABLE UPON REQUEST

UNIT DESCRIPTIONS:

GRAVEL, COBBLES, and BOULDERS, trace to some fine to coarse-grained sand and silt, GP, GP-GM (Riprap Fill)

SAND, trace gravel to gravelly, some silt, trace to some cobbles to sandy GRAVEL, trace silt to silty, trace to some cobbles and boulders to sandy SILT, trace to some clay, trace gravel, SP-SM, GP, GP-GM, and ML, typically gray, dark-gray, brown and dark brown, moist to wet, medium dense to very dense to medium stiff to stiff, angular to rounded gravel, contains brick debris, glass, wood, and other organics (Fill)

SAND, trace silt, SP, dark gray, loose to medium dense, fine-to coarse-grained sand (Alluvium)

Sandy GRAVEL, trace silt, trace to some cobbles, GP, brown to gray, wet, fine-to coarse-grained sand, angular to rounded gravel (Alluvium or Older Alluvium)

GRAVEL, trace sand to sandy to sandy GRAVEL, trace to some silt, trace to some cobbles, SP-SM, SM, GP. GP-GM, brown to gray, moist to wet, loose to very dense, fine-to coarse-grained sand, subrounded to rounded gravel (Alluvium or Older Alluvium)

SILT, trace to some fine-grained sand, trace clay to clayey, trace angular gravel, ML, typically gray, brown, blue-gray, and red-brown, nonplastic to medium plasticity, wet, medium stiff to hard (Alluvium, Older Alluvium or Residual Soil)

Sandy SILT, up to some clay, trace rounded to angular gravel, ML, typically light-gray, red brown, blue-gray, and brown, nonplastic to low plasticity, wet, hard, fine-grained sand (Alluvium, Older Alluvium or Residual Soil)

Silty SAND, trace gravel to gravelly, trace to some clay, SM, brown to gray, nonplastic to medium plasticity, wet, medium dense, fine-to coarse-grained sand (Alluvium, Older Alluvmium or Residual Soil)

Silty, sandy GRAVEL, up to some cobbles, GM, dark to brown, wet, very dense, fine-to coarse-grained sand, subrounded to rounded gravel (Older Alluvium)

CLAY, some fine-grained sand to sandy, trace silt to silty, CH, typically gray and brown, low to high plasticity, wet, soft to very stiff, contains wood debris (Older Alluvium)

Clayey SILT, trace to some fine-to coarse-grained sand, trace gravel, MH, typically gray and brown with red mottling, low to high plasticity, wet, medium stiff to very stiff, contains wood debris (Older Alluvium)

CLAY, trace silt to silty, trace fine- to coarse-grained sand to sandy, CL, typically blue-gray to brown, medium plasticity, wet, stiff to very stiff, contains organics (Older Alluvium)

BASALT, some vesicles, dark gray, predominately decomposed to moderately weathered, extremely soft to very soft (R0 to R1) rock, contains zones of moderately to slightly weathered, soft to hard (R2 to R4) rock (Columbia River Basalt)

BASALT, nonvesicular to some vesicles, dark gray, predominantly decomposed to slightly weathered, extremely soft to hard (R0 to R4) rock, contains zones of moderatley weathered to slightly weathered, soft to hard (R2 to R4) rock (Columbia River Basalt)

GENERAL NOTES:

1. *Unit descriptions and rock core tables refer to borings on sheet JA16.*
2. *Field verify all dimensions and elevations before submitting Working Drawings and prior to ordering or fabricating any materials. See sht. J02 for more details.*

For accompanied by drawings, see sht. JA01

SCALE WARNING

IF THIS SCALE LINE DOES NOT MEASURE ONE INCH, THEN DRAWING IS NOT TO SCALE

STRUCTURE NO.	00123K
BDS DWG NO.	113761
CALC. BOOK	7997
HWY: 030	M.P.: 25.88
COUNTY	Marion
DATE	1/26

REGISTERED PROFESSIONAL ENGINEER
85729PE
Digitally Signed 2026.01.28 16:48:41-08'00'
OREGON
SEPTEMBER 13, 2011
BRIAN A. BENNETTS

EXPIRES: 12/31/27

GRI
16520 SW Upper Boones Ferry Rd, Ste. 100
Tigard, OR 97224
p | 503-641-3478 web | www.gri.com
GEOTECHNICAL ▫ PAVEMENT ▫ GEOLOGICAL ▫ ENVIRONMENTAL
Since 1984

OREGON DEPARTMENT OF TRANSPORTATION

WILLAMETTE RIVER, HWY 30 EB (CENTER ST)

OR22: CENTER ST BRIDGE (PHASE 1) PROJECT
WILLAMINA-SALEM HIGHWAY
MARION & POLK COUNTIES

Designer: BRIAN BENNETTS, PE
Reviewer: GREG MARTIN, CEG
Drafter: JAKE WILLIAMS
Checker: SCOTT SCHLECHTER, PE

GEOTECHNICAL DATA - 5

SHEET NO. JA17

FINAL ELECTRONIC DOCUMENT
AVAILABLE UPON REQUEST

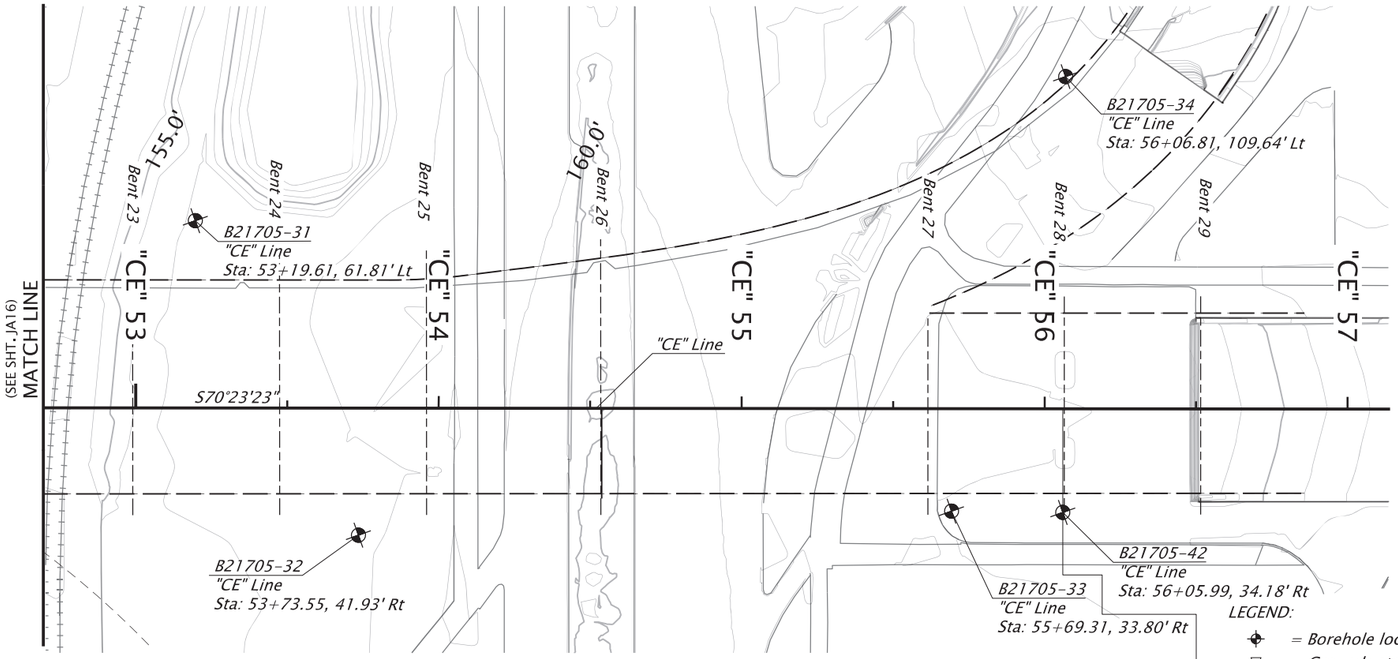

PLAN

Scale: 1 = 50'

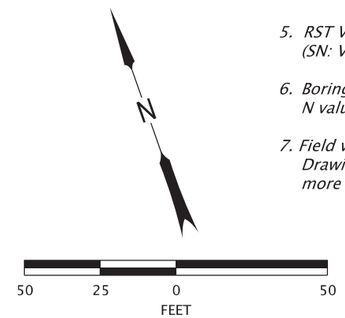

GENERAL NOTES:

1. Elevations are based on North American Vertical Datum (1988).
2. Geotechnical data shown on this drawing are a consolidation of information and/or revision in terminology from the drill logs. More detailed subsurface data is available on the drill logs in the Geotechnical Report, which is available from the Engineer.
3. 1' Contour interval.
4. In accordance with ASTM D1586-84, N values are reported for intervals of 1' except as noted.
5. RST VW2100-0.35 vibrating-wire piezometer (SN: VW146440) installed at 48' in B21705-32.
6. Boring B21705-31 was completed using Rotosonic drilling techniques and SPT N values were not collected.
7. Field verify all dimensions and elevations before submitting Working Drawings and prior to ordering or fabricating any materials. See sht. J02 for more details.

LEGEND:

- = Borehole location
- = Groundwater measured in the borehole location
- E1. 133.58 = Elevation
- 12/29/22 = Date of measurement
- 50/1st 5" = Standard Penetration Test refusal length
- 19 = Standard Penetration Test -N value
- U-1 = Undisturbed sample
- 29"* = Oversized sampler (modified California) blow count

UNIT DESCRIPTIONS:

- Silty, sandy GRAVEL to silty SAND, up to trace of gravel to SILT, trace fine-grained sand to sandy, trace gravel, GM, SM, and ML, brown, nonplastic to low plasticity, wet, loose to soft to stiff, fine-to coarse-grained sand, angular to rounded gravel, contains organics (Fill)
- SILT, trace clay, trace to some fine-grained sand, trace rounded gravel, ML, typically red brown to dark gray, low plasticity, wet, soft to medium stiff, contains organics (Alluvium or Older Alluvium)
- Gravelly SAND, some silt, SP-SM, wet, subrounded to rounded gravel, fine-to coarse-grained sand (Older Alluvium)
- Silty, sandy GRAVEL, trace to some cobbles, GM, wet, very dense, fine-to coarse-grained sand, subrounded to rounded gravel (Older Alluvium)
- GRAVEL, some fine-to coarse-grained sand to sandy, trace silt to silty, GP, GP-GM, GW-GM, and GM, moist to wet, medium dense to very dense, subrounded to rounded gravel (Older Alluvium)
- GRAVEL, some sand to sandy, trace silt, trace to some cobbles, GP, wet, fine-to coarse-grained sand, subrounded to rounded gravel (Older Alluvium)
- Silty SAND, some gravel to gravelly, SM, typically dark gray to dark brown, wet, subrounded to rounded gravel, fine-to coarse-grained sand (Older Alluvium)
- Clayey SILT, trace to some subrounded gravel, MH, brown, low to medium plasticity, wet (Older Alluvium)

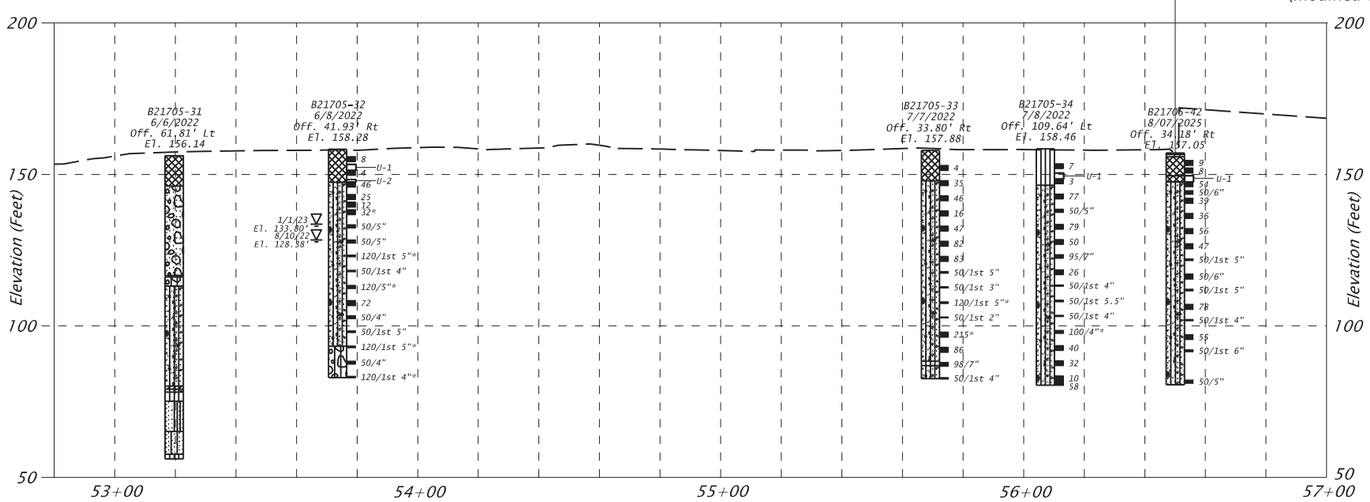

PROFILE "CE" LINE

HORIZ. SCALE: 1"=50'
VERT. SCALE: 1"=50'

For accompanied by drawings, see sht. JA01

STRUCTURE NO.	00123K
BDS DWG NO.	113762
CALC. BOOK	7997
HWY: 030	M.P.: 25.88
COUNTY	Marion
DATE	1/26

REGISTERED PROFESSIONAL ENGINEER
85729PE
Digitally Signed 2026.01.28 16:49:29-08'00'
OREGON
SEPTEMBER 13, 2011
BRIAN A. BENNETTS
EXPIRES: 12/31/27

SCALE WARNING
IF THIS SCALE LINE DOES NOT MEASURE ONE INCH, THEN DRAWING IS NOT TO SCALE

GRI
16520 SW Upper Boones Ferry Rd, Ste. 100
Tigard, OR 97224
p | 503-641-3478 web | www.gri.com
GEOTECHNICAL ▫ PAVEMENT ▫ GEOLOGICAL ▫ ENVIRONMENTAL
Since 1984

OREGON DEPARTMENT OF TRANSPORTATION

WILLAMETTE RIVER, HWY 30 EB (CENTER ST)

OR22: CENTER ST BRIDGE (PHASE 1) PROJECT

WILLAMINA-SALEM HIGHWAY
MARION & POLK COUNTIES

Designer: BRIAN BENNETTS, PE
Reviewer: GREG MARTIN, CEG
Drafter: JAKE WILLIAMS
Checker: SCOTT SCHLECHTER, PE

GEOTECHNICAL DATA - 6

SHEET NO. JA18

FINAL ELECTRONIC DOCUMENT AVAILABLE UPON REQUEST

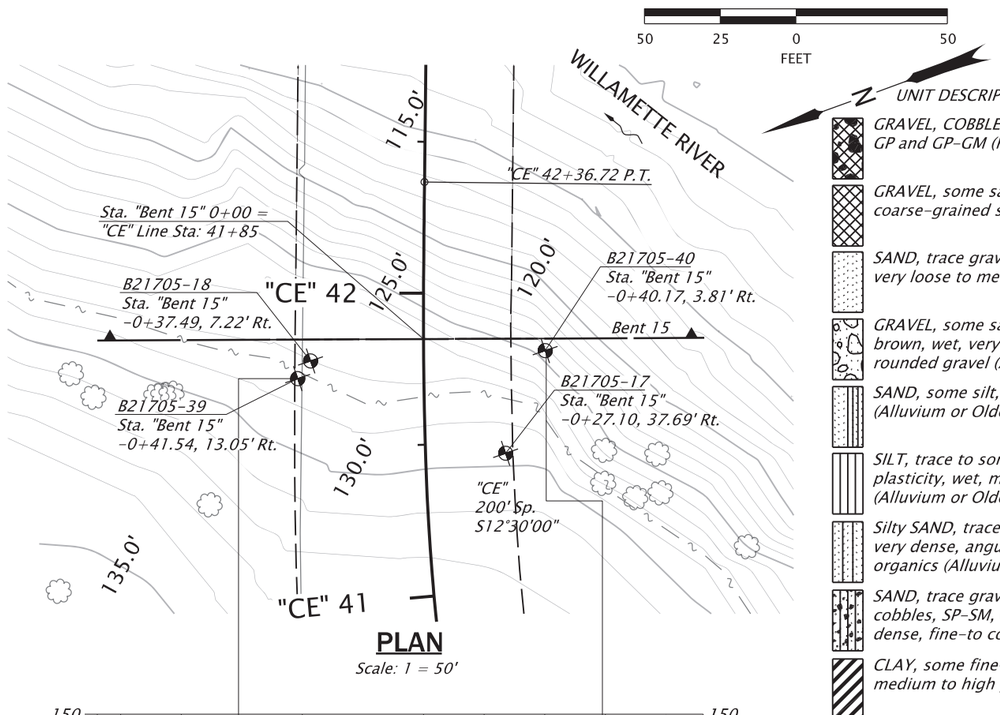

PLAN

Scale: 1 = 50'

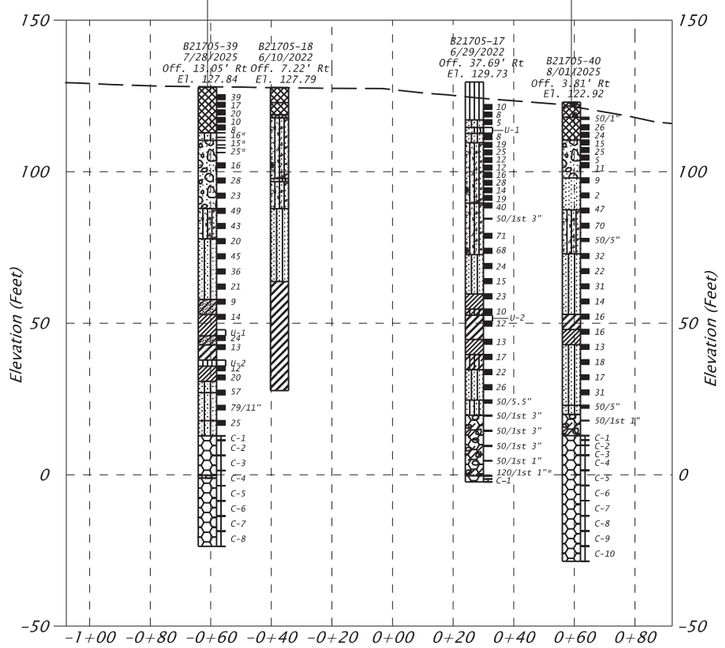

PROFILE "BENT 15" LINE

HORIZ. SCALE: 1"=50'
VERT. SCALE: 1"=50'

UNIT DESCRIPTIONS:

- GRAVEL, COBBLES, and BOULDERS, trace to some fine-to coarse-grained sand and silt, GP and GP-GM (Riprap Fill)
- GRAVEL, some sand to sandy, some silt to silty, GP-GM and GM, damp to wet, fine-to coarse-grained sand, angular to rounded gravel (Fill)
- SAND, trace gravel to gravelly, trace silt, trace to some cobbles, SP, dark gray, wet, very loose to medium dense, fine-to coarse-grained sand (Alluvium)
- GRAVEL, some sand to sandy, trace silt, trace to some cobbles, GP, typically gray and brown, wet, very loose to medium dense, fine-to coarse-grained sand, subrounded to rounded gravel (Alluvium)
- SAND, some silt, SP-SM, dark gray to dark brown, wet, loose, fine-to coarse-gained (Alluvium or Older Alluvium)
- SILT, trace to some fine-to coarse-grained sand, ML, brown to dark brown, low plasticity, wet, medium stiff to stiff, contains organics including wood debris (Alluvium or Older Alluvium)
- Silty SAND, trace gravel to gravelly, SM, blue-gray to brown, moist to wet, loose to very dense, angular to rounded gravel, fine-to coarse-grained sand, contains organics (Alluvium, Older Alluvium or Residual Soil)
- SAND, trace gravel to gravelly to GRAVEL, some sand to sandy, trace to some silt, trace to some cobbles, SP-SM, GW, GW-GM, and GP-GM, typically gray and brown, wet, medium dense to very dense, fine-to coarse-grained sand, subrounded to rounded gravel (Alluvium or Older Alluvium)
- CLAY, some fine-grained sand to sandy, trace to some silt, CH, typically blue-gray to red-brown, medium to high plasticity, wet, stiff to very stiff (Older Alluvium)
- Clayey SAND, trace silt to silty, SC, typically gray, brown, and red-brown, medium plasticity, moist to wet, loose to medium dense, fine-grained sand (Older Alluvium)
- SILT, some clay to clayey, trace fine-grained sand, MH, typically blue-gray to brown, medium plasticity, wet, stiff to very stiff (Older Alluvium)
- CLAY, some silt to silty, trace fine-grained sand to sandy, CL, typically blue-gray, red-brown, brown and dark brown, low to medium platicity, wet, stiff to hard (Older Alluvium or Residual Soil)
- Sandy SILT, trace angular gravel, ML, blue-gray to yellow-brown, nonplastic to low plasticity, wet, hard (Residual Soil)
- BASALT, nonvesicular to some vesicles, typically dark-gray, decomposed to moderately weathered, extremely soft to soft (R0 to R2) rock, contains zones of moderately to slightly weathered, soft to hard (R2 to R4) rock (Columbia River Basalt)
- BASALT, some vesicles, gray to dark gray, fresh to predominately decomposed, very soft to very hard (R1 to R5) rock (Columbia River Basalt)

LEGEND:

- = Borehole location
- C-3 = Core sample
- RQD = Rock Quality Designation
- 50/1st 5" = Standard Penetration Test refusal length
- 19 = Standard Penetration Test -N value
- U-1 = Undisturbed sample
- 29"* = Oversized sampler (modified California) blow count

B21705-17

Core	%Rec.	Hardness	RQD
C1	100	R4	0%

B21705-39

Core	%Rec.	Hardness	RQD
C1	100	R3-R4	0%
C2	90	R3-R4	0%
C3	100	R2-R4	15%
C4	100	R5	8%
C5	100	R3-R4	0%
C6	83	R2-R4	0%
C7	87	R2-R4	0%
C8	80	R2-R4	12%

B21705-40

Core	%Rec.	Hardness	RQD
C1	100	R2-R4	22%
C2	100	R3-R4	0%
C3	100	R3-R4	10%
C4	100	R2-R4	13%
C5	100	R1-R4	8%
C6	100	R2-R4	0%
C7	100	R1-R5	0%
C8	72	R4-R5	0%
C9	92	R3-R5	15%
C10	100	R4-R5	72%

GENERAL NOTES:

1. Elevations are based on North American Vertical Datum (1988).
2. Geotechnical data shown on this drawing are a consolidation of information and/or revision in terminology from the drill logs. More detailed subsurface data is available on the drill logs in the Geotechnical Report, which is available from the Engineer.
3. 1' Contour interval.
4. In accordance with ASTM D1586-84, N values are reported for intervals of 1' except as noted.
5. Core drilling used to extend boring depth upon mud-rotary refusal in borings B21705-17, B21705-39, B21705-40.
6. Borings B21705-18 was completed using Rotosonic drilling techniques and SPT N values were not collected.
7. Refer to sheet JA09 for approximate extent of riprap and other obstructions around in-water piers.
8. Field verify all dimensions and elevations before submitting Working Drawings and prior to ordering or fabricating any materials. See sht. J02 for more details.

For accompanied by drawings, see sht. JA01

SCALE WARNING
IF THIS SCALE LINE DOES NOT MEASURE ONE INCH, THEN DRAWING IS NOT TO SCALE

STRUCTURE NO.	00123K
BDS DWG NO.	113763
CALC. BOOK	7997
HWY: 030	M.P.: 25.88
COUNTY	Marion
DATE	1/26

REGISTERED PROFESSIONAL ENGINEER
85729PE
Digitally Signed 2026.01.28 16:50:07-08'00'
OREGON
SEPTEMBER 13, 2011
BRIAN A. BENNETTS
EXPIRES: 12/31/27

GRI
16520 SW Upper Boones Ferry Rd, Ste. 100
Tigard, OR 97224
p | 503-641-3478 web | www.gri.com
GEOTECHNICAL ▫ PAVEMENT ▫ GEOLOGICAL ▫ ENVIRONMENTAL
Since 1984

OREGON DEPARTMENT OF TRANSPORTATION

WILLAMETTE RIVER, HWY 30 EB (CENTER ST)

OR22: CENTER ST BRIDGE (PHASE 1) PROJECT
WILLAMINA-SALEM HIGHWAY
MARION & POLK COUNTIES

Designer: BRIAN BENNETTS, PE
Reviewer: GREG MARTIN, CEG
Drafter: JAKE WILLIAMS
Checker: SCOTT SCHLECHTER, PE

GEOTECHNICAL DATA - 7

SHEET NO. JA19

FINAL ELECTRONIC DOCUMENT
AVAILABLE UPON REQUEST

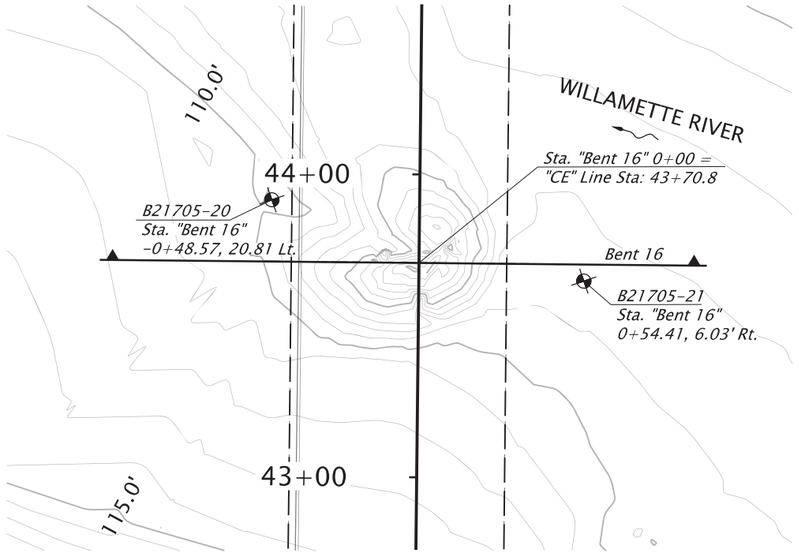

PLAN

Scale: 1 = 50'

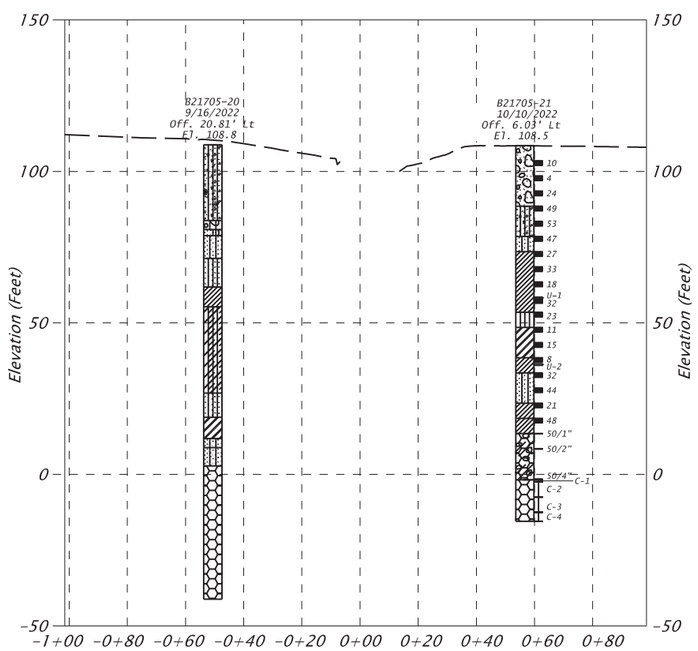

PROFILE "BENT 16" LINE

HORIZ. SCALE: 1"=50'
VERT. SCALE: 1"=50'

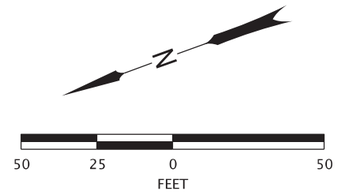

UNIT DESCRIPTIONS:

- Silty, sandy GRAVEL, trace to some cobbles, GM, wet, fine-to coarse-grained sand, subrounded to rounded gravel (Alluvium)
- GRAVEL, some sand to sandy, trace silt, trace to some cobbles, GP, dark brown to dark gray, wet, very loose to medium dense, fine-to coarse-grained sand, subrounded to rounded gravel (Alluvium)
- Gravelly SAND, some silt, SP-SM, brown, wet, subrounded to rounded gravel, fine-to coarse-grained sand (Alluvium)
- GRAVEL, trace sand to sandy, trace to some silt, trace to some cobbles, GP, GW, and GP-GM, dark gray to brown, dense to very dense, fine-to coarse-grained sand, subrounded to rounded gravel (Alluvium or Older Alluvium)
- SILT, some fine-grained sand, ML, brown, nonplastic, wet, very stiff (Older Alluvium)
- Sandy SILT, trace to some clay, ML, typically brown, blue-gray to brown, nonplastic to low plasticity, wet, very stiff to stiff (Older Alluvium)
- CLAY, trace to some silt, trace to some fine-grained sand, CH, blue-gray and brown, high plasticity, wet, stiff to very stiff (Older Alluvium)
- Clayey SILT, trace fine-grained sand, MH, red-brown and blue-gray, medium plasticity, wet (Older Alluvium)
- CLAY, some silt to silty, trace sand to sandy, some gravel, CL, typically blue-gray to brown, low to medium plasticity, wet, medium stiff to hard, fine-to coarse-grained sand, angular to subangular gravel (Older Alluvium or Residual Soil)
- Silty SAND, trace to some gravel, SM, typically blue-gray to brown, wet, dense, angular to rounded gravel, fine-to coarse-grained sand (Older Alluvium or Residual Soil)
- BASALT, nonvesicular to some vesicles, typically dark-gray, decomposed to moderately weathered, extremely soft to soft (R0 to R2) rock, contains zones of moderately to slightly weathered, soft to hard (R2 to R4) rock (Columbia River Basalt)
- BASALT, nonvesicular to some vesicles, gray to dark gray, fresh to predominately decomposed, soft to hard (R1 to R4) rock (Columbia River Basalt)

GENERAL NOTES:

1. Elevations are based on North American Vertical Datum (1988).
2. Geotechnical data shown on this drawing are a consolidation of information and/or revision in terminology from the drill logs. More detailed subsurface data is available on the drill logs in the Geotechnical Report, which is available from the Engineer.
3. 1' Contour interval.
4. In accordance with ASTM D1586-84, N values are reported for intervals of 1' except as noted.
5. Core drilling used to extend boring depth upon mud rotary drilling refusal in boring B21705-21.
6. Boring B21705-20 was completed using Rotosonic drilling techniques and SPT N values were not collected.
7. Refer to sheet JA09 for approximate extent of riprap and other obstructions around in-water piers.
8. Field verify all dimensions and elevations before submitting Working Drawings and prior to ordering or fabricating any materials. See sht. J02 for more details.

LEGEND:

- = Borehole location
- C-3 = Core sample
- RQD = Rock Quality Designation
- 50/1st 5" = Standard Penetration Test refusal length
- 19 = Standard Penetration Test -N value
- U-1 = Undisturbed sample
- 29"⁰ = Oversized sampler (modified California) blow count

B21705-21

Core	%Rec.	Hardness	RQD
C1	25	R3-R4	0%
C2	98	R1-R2	0%
C3	97	R4	0%
C4	33	R4	0%

SCALE WARNING

IF THIS SCALE LINE DOES NOT MEASURE ONE INCH, THEN DRAWING IS NOT TO SCALE

For accompanied by drawings, see sht. JA01

STRUCTURE NO.	00123K
BDS DWG NO.	113764
CALC. BOOK	7997
HWY: 030 M.P.: 25.88	
COUNTY	Marion
DATE	1/26

REGISTERED PROFESSIONAL ENGINEER
85729PE
Digitally Signed 2026.01.28 16:50:54-08'00'
OREGON
SEPTEMBER 13, 2011
BRIAN A. BENNETTS
EXPIRES: 12/31/27

GRI
16520 SW Upper Boones Ferry Rd, Ste. 100
Tigard, OR 97224
p | 503-641-3478 web | www.gri.com
GEOTECHNICAL ▫ PAVEMENT ▫ GEOLOGICAL ▫ ENVIRONMENTAL
Since 1984

OREGON DEPARTMENT OF TRANSPORTATION

WILLAMETTE RIVER, HWY 30 EB (CENTER ST)

OR22: CENTER ST BRIDGE (PHASE 1) PROJECT
WILLAMINA-SALEM HIGHWAY
MARION & POLK COUNTIES

Designer: BRIAN BENNETTS, PE
Reviewer: GREG MARTIN, CEG
Drafter: JAKE WILLIAMS
Checker: SCOTT SCHLECHTER, PE

GEOTECHNICAL DATA - 8

SHEET NO. JA20

FINAL ELECTRONIC DOCUMENT
AVAILABLE UPON REQUEST

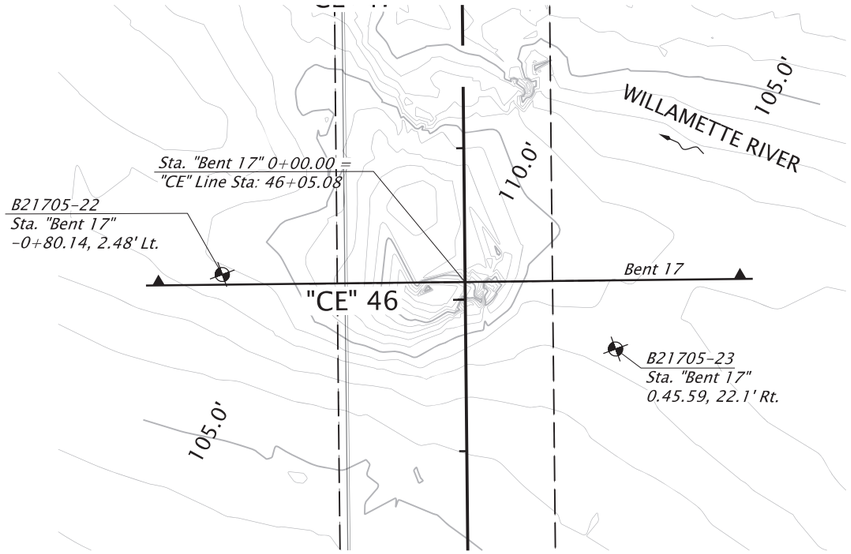

PLAN

Scale: 1 = 50'

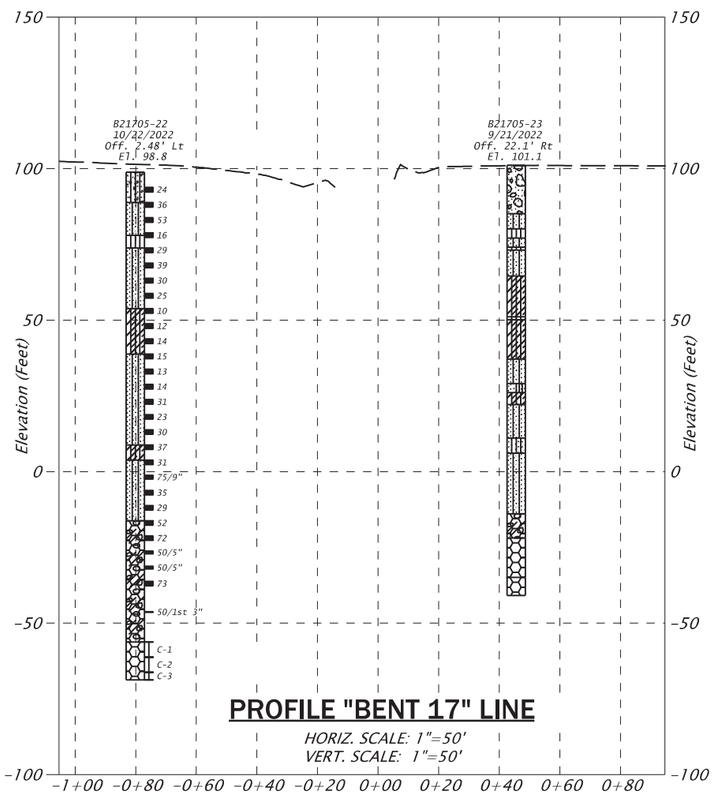

PROFILE "BENT 17" LINE

HORIZ. SCALE: 1"=50'
VERT. SCALE: 1"=50'

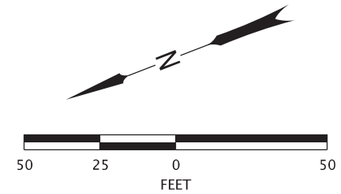

UNIT DESCRIPTIONS:

- Sandy GRAVEL, some silt, trace to some cobbles, GP-GM, dark-gray, wet, medium dense, fine- to coarse-grained sand, subrounded to rounded gravel (Alluvium)
- Sandy GRAVEL, trace silt, trace to some cobbles, GP, dark gray, wet, fine-to coarse-grained sand, subrounded to rounded gravel, contains organics (Alluvium)
- Silty SAND, trace clay to clayey, trace gravel to gravelly, trace to some cobbles, SM, typically brown to blue-gray, nonplastic to medium plasticity, wet, medium dense to very dense, fine- to coarse-grained sand, residual soil contains zones of R0 to R1 basalt, contains organics (Alluvium, Older Alluvium or Residual Soil)
- SAND, some silt, SP-SM, dark brown, wet, fine-to coarse-grained sand (Older Alluvium)
- SILT, trace to some fine-grained sand, trace some clay, ML, blue-gray, nonplastic to low plasticity, wet, very stiff, contains organics (Older Alluvium)
- SILT, some clay to clayey, trace to some fine-grained sand, ML and MH, typically blue-gray to brown, low to high plasticity, wet, stiff to hard (Older Alluvium)
- SILT, some fine-to coarse-grained sand to sandy, up to some clay, trace angular gravel, ML, typically brown to red-brown, nonplastic to low plasticity, wet (Older Alluvium or Residual Soil)
- BASALT, nonvesicular to some vesicles, dark-gray, predominately decomposed to moderately weathered, extremely soft to soft (R0 to R2) rock, contains zones of moderately weathered, soft to hard (R2 to R4) rock (Columbia River Basalt)
- BASALT, nonvesicular, gray to dark gray, fresh to moderately weathered, soft to hard (R2 to R4) rock (Columbia River Basalt)

B21705-22

Core	%Rec.	Hardness	RQD
C1	80	R3-R4	0%
C2	80	R3-R4	0%
C3	23	R3-R4	0%

GENERAL NOTES:

1. Elevations are based on North American Vertical Datum (1988).
2. Geotechnical data shown on this drawing are a consolidation of information and/or revision in terminology from the drill logs. More detailed subsurface data is available on the drill logs in the Geotechnical Report, which is available from the Engineer.
3. 1' Contour interval.
4. In accordance with ASTM D1586-84, N values are reported for intervals of 1' except as noted.
5. Core drilling used to extend boring depth upon mud rotary drilling refusal in boring B21705-21.
6. Borings B21705-23 was completed using Rotosonic drilling techniques and SPT N values were not collected.
7. Refer to sheet JA09 for approximate extent of riprap and other obstructions around in-water piers.
8. Field verify all dimensions and elevations before submitting Working Drawings and prior to ordering or fabricating any materials. See sht. J02 for more details.

LEGEND:

- = Borehole location
- C-3 = Core sample
- RQD = Rock Quality Designation
- 50/1st 5" = Standard Penetration Test refusal length
- 19 = Standard Penetration Test -N value
- U-1 = Undisturbed sample
- 29"⁶ = Oversized sampler (modified California) blow count

SCALE WARNING

IF THIS SCALE LINE DOES NOT MEASURE ONE INCH, THEN DRAWING IS NOT TO SCALE

For accompanied by drawings, see sht. JA01

STRUCTURE NO.	00123K
BDS DWG NO.	113765
CALC. BOOK	7997
HWY: 030	M.P.: 25.88
COUNTY	Marion
DATE	1/26

REGISTERED PROFESSIONAL ENGINEER
85729PE
Digitally Signed 2026.01.28 16:51:41-08'00'
OREGON
SEPTEMBER 13, 2011
BRIAN A. BENNETTS
EXPIRES: 12/31/27

GRI
16520 SW Upper Boones Ferry Rd, Ste. 100
Tigard, OR 97224
p | 503-641-3478 web | www.gri.com
GEOTECHNICAL ▫ PAVEMENT ▫ GEOLOGICAL ▫ ENVIRONMENTAL
Since 1984

OREGON DEPARTMENT OF TRANSPORTATION

WILLAMETTE RIVER, HWY 30 EB (CENTER ST)

OR22: CENTER ST BRIDGE (PHASE 1) PROJECT
WILLAMINA-SALEM HIGHWAY
MARION & POLK COUNTIES

Designer: BRIAN BENNETTS, PE
Reviewer: GREG MARTIN, CEG
Drafter: JAKE WILLIAMS
Checker: SCOTT SCHLECHTER, PE

GEOTECHNICAL DATA - 9

SHEET NO. JA21

FINAL ELECTRONIC DOCUMENT AVAILABLE UPON REQUEST

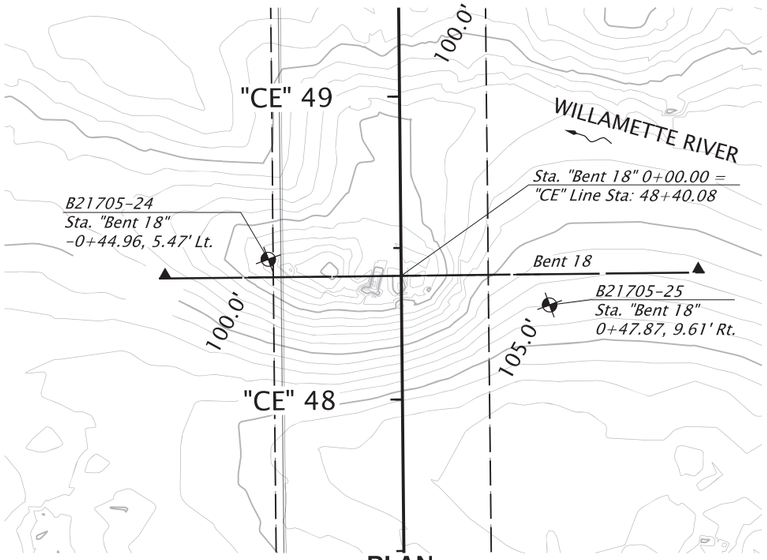

PLAN

Scale: 1 = 50'

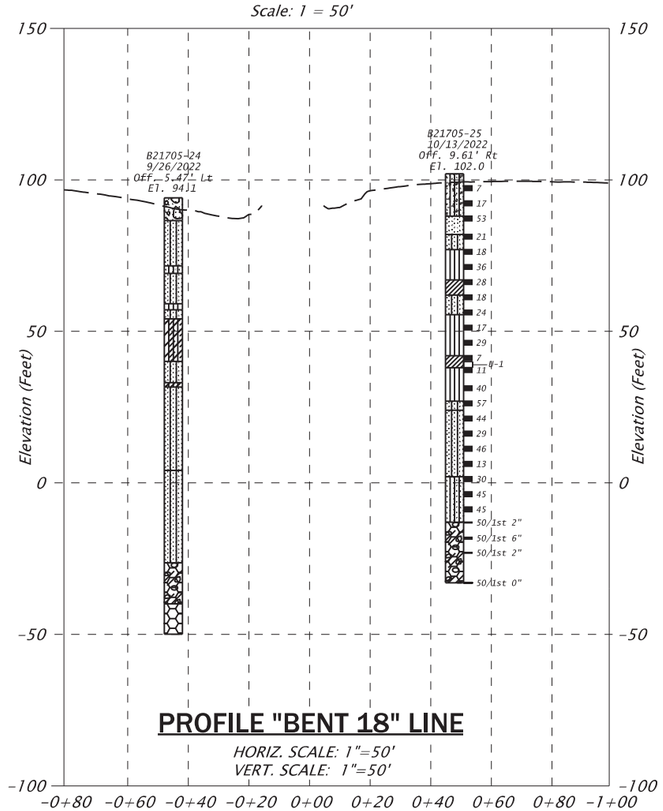

PROFILE "BENT 18" LINE

HORIZ. SCALE: 1"=50'
VERT. SCALE: 1"=50'

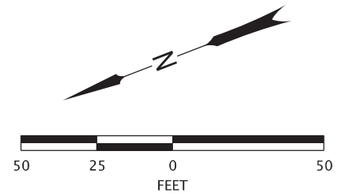

UNIT DESCRIPTIONS:

- SAND, trace silt, SP, dark gray, loose to medium dense, fine-to coarse-grained sand (Alluvium)
- Sandy GRAVEL, trace silt, trace to some cobbles, GP, wet, fine-to coarse-grained sand, subrounded to rounded gravel (Alluvium)
- Gravelly SAND to sandy GRAVEL, trace to some silt, trace to some cobbles, SP-SM and GP, wet, loose to medium dense, fine-to coarse-grained sand, rounded to subrounded gravel (Alluvium)
- Silty SAND, trace to some clay, trace to some angular to rounded gravel, SM, typically blue-gray to red-brown, nonplastic to low plasticity, wet, medium dense to very dense, fine-to coarse-grained sand, contains organics (Alluvium, Older Alluvium or Residual Soil)
- SILT, trace clay to clayey, trace to some fine-grained sand, ML, blue-gray to brown, nonplastic to medium plasticity, wet, medium stiff to hard (Older Alluvium)
- Clayey SILT, trace fine-grained sand, MH, brown to gray, medium to high plasticity, wet, contains wood debris (Older Alluvium)
- Silty CLAY, trace to some fine-grained sand, CL, blue-gray to brown, medium plasticity, wet, medium stiff to very stiff, contains organics (Older Alluvium)
- Sandy SILT, trace to some clay, trace rounded to angular gravel, ML, light gray to red-brown, nonplastic to low plasticity, wet, hard, fine-grained sand (Older Alluvium or Residual Soil)
- BASALT, some vesicles, dark gray, predominately decomposed to moderately weathered, extremely soft to very soft (R0 to R1) rock, contains zones of moderately to slightly weathered, soft to hard (R2 to R4) rock (Columbia River Basalt)
- BASALT, dark gray, moderately to slightly weathered, medium hard to hard (R3 to R4) rock (Columbia River Basalt)

GENERAL NOTES:

1. Elevations are based on North American Vertical Datum (1988).
2. Geotechnical data shown on this drawing are a consolidation of information and/or revision in terminology from the drill logs. More detailed subsurface data is available on the drill logs in the Geotechnical Report, which is available from the Engineer.
3. 1' Contour interval.
4. In accordance with ASTM D1586-84, N values are reported for intervals of 1' except as noted.
5. Borings B21705-24 was completed using Rotosonic drilling techniques and SPT N values were not collected.
6. Refer to sheet JA09 for approximate extent of riprap and other obstructions around in-water piers.
7. Field verify all dimensions and elevations before submitting Working Drawings and prior to ordering or fabricating any materials. See sht. J02 for more details.

LEGEND:

- = Borehole location
- 50/1st 5" = Standard Penetration Test refusal length
- 19 = Standard Penetration Test -N value
- U-1 = Undisturbed sample
- 29"* = Oversized sampler (modified California) blow count

For accompanied by drawings, see sht. JA01

STRUCTURE NO.	00123K
BDS DWG NO.	113766
CALC. BOOK	7997
HWY: 030 M.P.: 25.88	
COUNTY	Marion
DATE	1/26

SCALE WARNING
IF THIS SCALE LINE DOES NOT MEASURE ONE INCH, THEN DRAWING IS NOT TO SCALE

REGISTERED PROFESSIONAL ENGINEER
85729PE
Digitally Signed 2026.01.28 16:52:15-08'00'
OREGON
SEPTEMBER 13, 2011
BRIAN A. BENNETTS
EXPIRES: 12/31/27

GRI
16520 SW Upper Boones Ferry Rd, Ste. 100
Tigard, OR 97224
p | 503-641-3478 web | www.gri.com
GEOTECHNICAL ▫ PAVEMENT ▫ GEOLOGICAL ▫ ENVIRONMENTAL
Since 1984

OREGON DEPARTMENT OF TRANSPORTATION

WILLAMETTE RIVER, HWY 30 EB (CENTER ST)

OR22: CENTER ST BRIDGE (PHASE 1) PROJECT
WILLAMINA-SALEM HIGHWAY
MARION & POLK COUNTIES

Designer: BRIAN BENNETTS, PE
Reviewer: GREG MARTIN, CEG
Drafter: JAKE WILLIAMS
Checker: SCOTT SCHLECHTER, PE

GEOTECHNICAL DATA - 10

SHEET NO. JA22

FINAL ELECTRONIC DOCUMENT
AVAILABLE UPON REQUEST

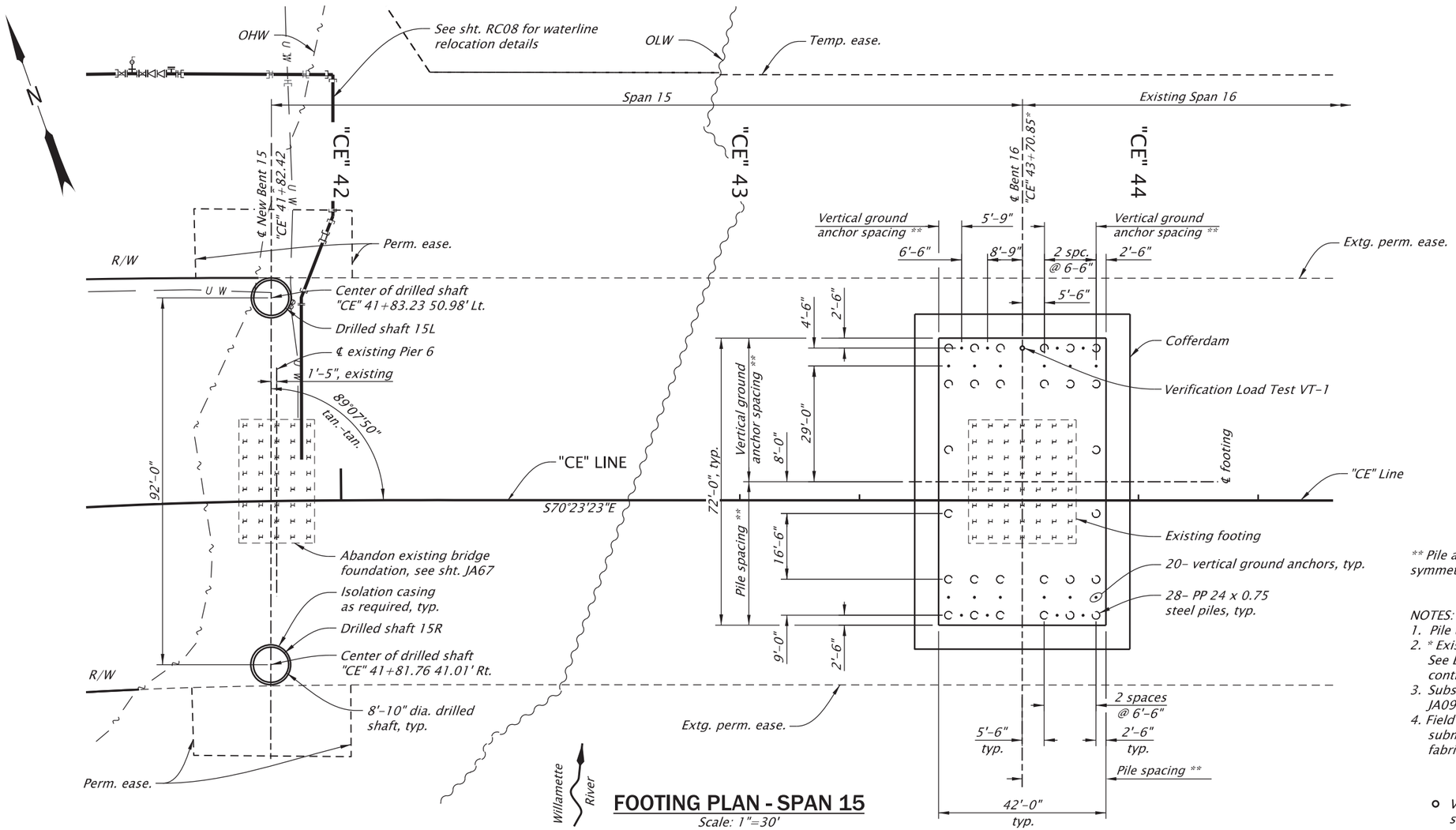

FOOTING PLAN - SPAN 15

Scale: 1"=30'

** Pile and vertical ground anchor spacing are symmetric about the footing and bent centerlines.

NOTES:
1. Pile top ring not shown for clarity.
2. * Existing Bent centerline stationing is approximate. See Bent Plan and Elevation sheets for construction control working points to establish bent centerline.
3. Subsurface obstructions not shown for clarity. See sht. JA09 for details.
4. Field verify all dimensions and elevations prior to submitting Working Drawings and prior to ordering or fabricating any materials. See sht. J02 for more details.

○ Verification load test vertical ground anchor, see sht. JZ09 for details.

FOOTING GENERAL NOTES
1. All piling shall be PP 24 x 0.75 steel pipe piles conforming to API 5L X60 or ASTM A252 Grade 3 with a 60 ksi minimum yield strength. Piles shall be driven open-ended with pile cutting shoes to a nominal pile bearing resistance as listed in the Foundation Table. Determine pile resistances from the results of Dynamic Pile Load Tests.
2. Permanent structural casing is required at Bent 15. Provide 1¼" thick ASTM A572 Grade 50 with the diameter shown and to the depth shown.
3. Permanent casing is required at Bent 15. Provide minimum 1" thick casing matching permanent structural casing outside diameter and to the depth shown.
4. See sht. JA24 for additional drilled shaft and pile details.
5. See sht. JZ09 for vertical ground anchor details.
6. See sht. JA25 for Bents 19 through 29 spread footing nominal bearing resistances.
7. Temporary drainage facilities not shown for clarity. See HD shts. for details.

FOUNDATION TABLE

Location	Type	Required shaft tip El.	Shaft top El.	Bottom of structural casing El.	Bottom of permanent casing El.
		(feet)			
Bent 15L	Cased 8'-10" dia. shaft	3.8	126.0	40.0	Terminate casing at top of rock
Bent 15R	Cased 8'-10" dia. shaft	3.8	121.0	35.0	Terminate casing at top of rock

FOUNDATION TABLE

Location	Type	Est. tip El.	Min. tip El.	As const. avg. tip El.	Cut off/ top El.	Nominal Bearing Resistance Rn
		(feet)				(kips/pile)
Bent 16	PP 24 x 0.75	8.4	21.4		84.9	650
Bent 17	PP 24 x 0.75	11.4	11.4		84.9	530
Bent 18	PP 24 x 0.75	11.4	11.4		84.9	550

SCALE WARNING
IF THIS SCALE LINE DOES NOT MEASURE ONE INCH, THEN DRAWING IS NOT TO SCALE

For accompanied by drawings, see sht. JA01

STRUCTURE NO. 00123K
BDS DWG NO. 113767
CALC. BOOK 7997
HWY: 030
M.P.: 25.88
COUNTY Marion/Polk
DATE 6/26

REGISTERED PROFESSIONAL ENGINEER 85555PE
Digitally Signed 2026.06.10 13:42:07-07'00'
OREGON
DEC. 21, 2011
MICHAEL G. McNULTY
EXPIRES: 12/31/2026

FINAL ELECTRONIC DOCUMENT AVAILABLE UPON REQUEST

DOWL
3500 Chad Drive, Suite 200
Eugene, Oregon 97408
541-683-6090
WWW.DOWL.COM

OREGON DEPARTMENT OF TRANSPORTATION

WILLAMETTE RIVER, HWY 30 EB (CENTER ST)

OR22: CENTER ST BRIDGE (PHASE 1) PROJECT
WILLAMINA - SALEM HIGHWAY
MARION & POLK COUNTIES

Designer: Mike McNulty, PE
Reviewer: Bob Goodrich, PE
Drafter: Jake Williams
Checker: Eric Bonn, PE

FOUNDATION PLAN - 1

SHEET NO. JA23

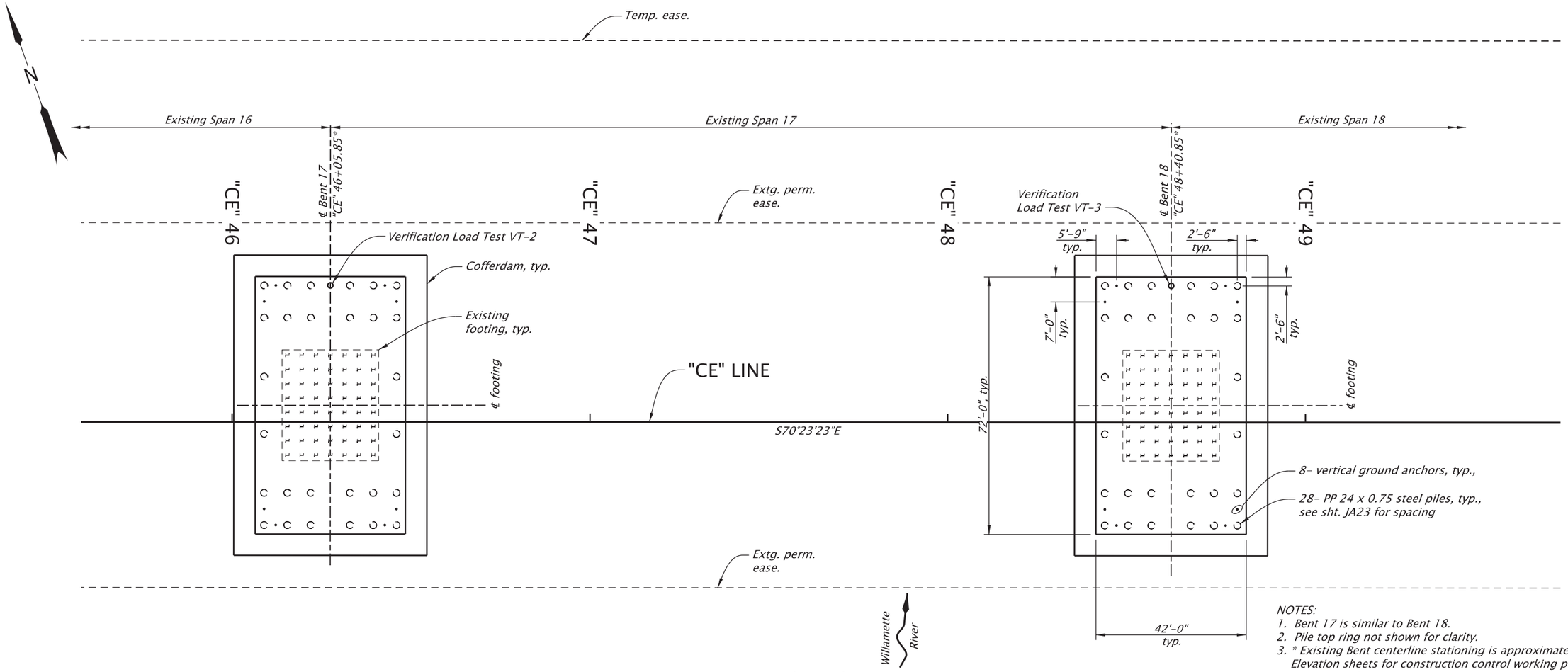

FOOTING PLAN - SPANS 17 & 18

Scale: 1"=30'

NOTES:
1. Bent 17 is similar to Bent 18.
2. Pile top ring not shown for clarity.
3. * Existing Bent centerline stationing is approximate. See Bent Plan and Elevation sheets for construction control working points to establish bent centerline.
4. Subsurface obstructions not shown for clarity. See sht. JA09 for details.
5. Field verify all dimensions and elevations prior to submitting Working Drawings and prior to ordering or fabricating any materials. See sht. J02 for more details.

○ Verification load test vertical ground anchor, see sht. JZ09 for details.

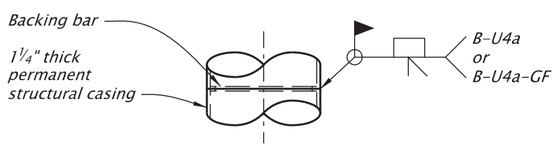

DRILLED SHAFT PERMANENT STRUCTURAL CASING SPLICE DETAIL

Scale: 3/8"=1'-0"

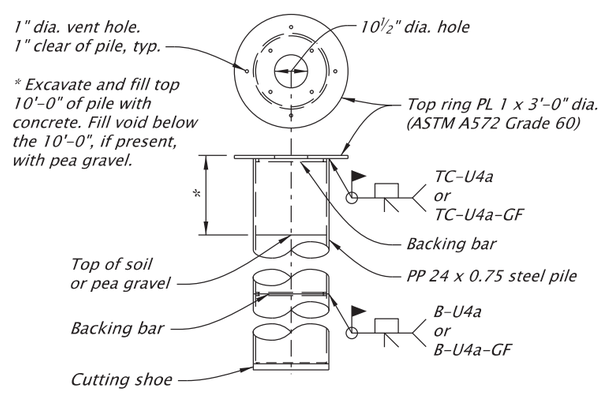

PIPE PILE DETAIL

No Scale

For accompanied by drawings, see sht. JA01

STRUCTURE NO.	00123K
BDS DWG NO.	113768
CALC. BOOK	7997
HWY: 030	M.P.: 25.88
COUNTY	Marion/Polk
DATE	6/26

SCALE WARNING
IF THIS SCALE LINE DOES NOT MEASURE ONE INCH, THEN DRAWING IS NOT TO SCALE

REGISTERED PROFESSIONAL ENGINEER
85555PE
Digitally Signed 2026.06.10 13:42:19-07'00'
OREGON
DEC. 21, 2011
MICHAEL G. McNULTY
EXPIRES: 12/31/2026

FINAL ELECTRONIC DOCUMENT AVAILABLE UPON REQUEST

DOWL
3500 Chad Drive, Suite 200
Eugene, Oregon 97408
541-683-6090
WWW.DOWL.COM

WILLAMETTE RIVER, HWY 30 EB (CENTER ST)

OR22: CENTER ST BRIDGE (PHASE 1) PROJECT
WILLAMINA - SALEM HIGHWAY
MARION & POLK COUNTIES

Designer: Mike McNulty, PE
Reviewer: Bob Goodrich, PE
Drafter: Jake Williams
Checker: Eric Bonn, PE

FOUNDATION PLAN - 2

SHEET NO. JA24

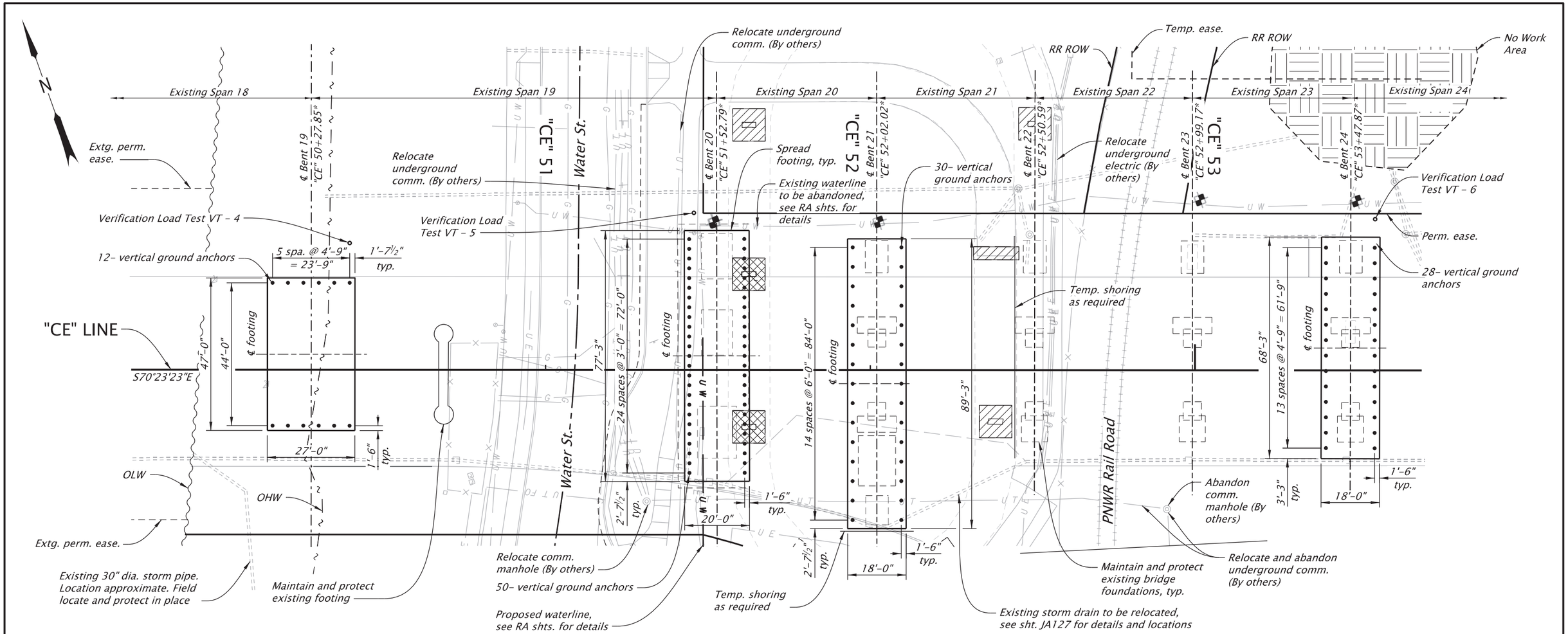

FOOTING PLAN - SPANS 19, 20, 21, 22, & 23

Scale: 1"=30'

NOTES:
1. Pile top ring not shown for clarity.
2. Utilities to be maintained and protected unless otherwise shown.
3. Place verification load tests a minimum of 4 feet from edge of proposed footing limits.
4. * Existing Bent centerline stationing is approximate. See Bent Plan and Elevation sheets for construction control working points to establish bent centerline.
5. Subsurface obstructions not shown for clarity. See sht. JA09 for details.
6. Field verify all dimensions and elevations before submitting Working Drawings and prior to ordering or fabricating any materials. See sht. J02 for more details.

Protect and maintain existing footing.

Remove and replace Spiral Bike Ramp footing around Bent 20 footing construction, typ., see sht. JD02 for details.

Maintain and protect existing Spiral Bike Ramp bridge foundations, typ.

○ Verification load test vertical ground anchor, see sht. JZ09 for details.

● Vertical ground anchor, see sht. JZ09 for details.

SPREAD FOOTING FOUNDATION TABLE	
Location	Nominal Bearing Resistance (ksf)
Bent 19	23
Bent 20	65
Bent 21	64
Bent 22	65
Bent 23	65
Bent 24	64

For accompanied by drawings, see sht. JA01

SCALE WARNING
IF THIS SCALE LINE DOES NOT MEASURE ONE INCH, THEN DRAWING IS NOT TO SCALE

STRUCTURE NO. 00123K
BDS DWG NO. 113769
CALC. BOOK 7997
HWY: 030
M.P.: 25.88
COUNTY Marion
DATE 6/26

REGISTERED PROFESSIONAL ENGINEER
099941PE
Digitally Signed 2026.06.10 13:35:33-07'00'
OREGON
JULY 21, 2022
BERNARD ANTHONY FRANKL
EXPIRES: 12/31/2027

FINAL ELECTRONIC DOCUMENT AVAILABLE UPON REQUEST

DOWL
3500 Chad Drive, Suite 200
Eugene, Oregon 97408
541-683-6090
WWW.DOWL.COM

WILLAMETTE RIVER, HWY 30 EB (CENTER ST)

OR22: CENTER ST BRIDGE (PHASE 1) PROJECT
WILLAMINA - SALEM HIGHWAY
MARION & POLK COUNTIES

Designer: Bernard A. Frankl, PhD, PE
Reviewer: Bob Goodrich, PE
Drafter: Jake Williams
Checker: Nasario Lopez-Francisco, PE

FOUNDATION PLAN - 3

SHEET NO. JA25

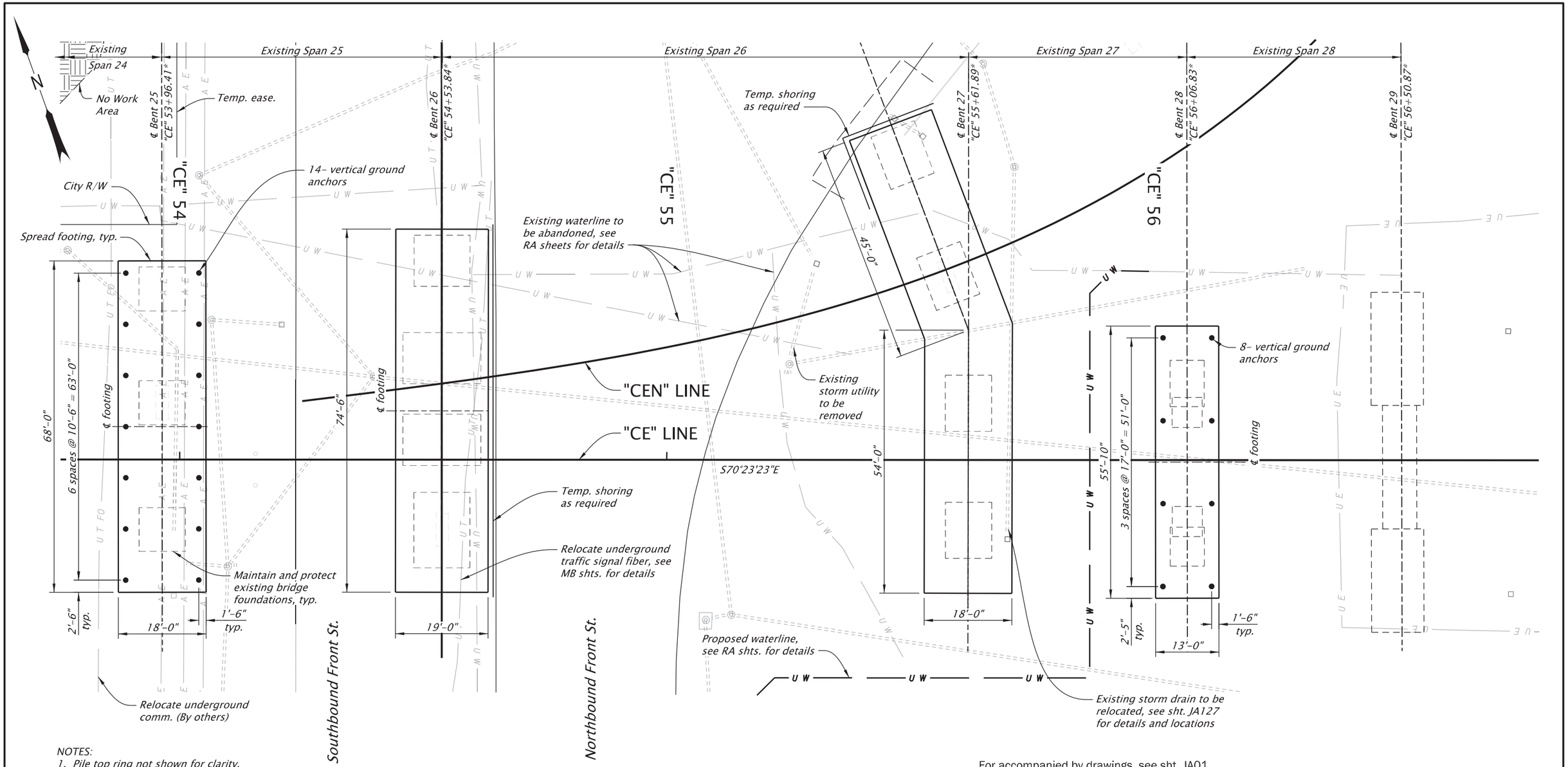

FOOTING PLAN - SPANS 24, 25, 26, 27, & 28

Scale: 1"=20'

For accompanied by drawings, see sht. JA01

NOTES:

1. Pile top ring not shown for clarity.
2. Utilities to be maintained and protected unless otherwise shown.
3. Place verification load tests a minimum of 4 feet from edge of proposed footing limits.
4. For Bents 24 through 28 spread footing nominal bearing resistances, see sht. JA25.
5. * Existing bent centerline stationing is approximate. See Bent Plan and Elevation sheets for construction control working points to establish bent centerline.
5. Field verify all dimensions and elevations before submitting Working Drawings and prior to ordering or fabricating any materials. See sht. J02 for more details.

Protect and maintain existing footing

○ Verification load test vertical ground anchor, see sht. JZ09 for details.

● Vertical ground anchor, see sht. JZ09 for details.

SPREAD FOOTING FOUNDATION TABLE	
Location	Nominal Bearing Resistance (ksf)
Bent 25	65
Bent 26	35
Bent 27	34
Bent 28	65
Bent 29	8

SCALE WARNING

IF THIS SCALE LINE DOES NOT MEASURE ONE INCH, THEN DRAWING IS NOT TO SCALE

STRUCTURE NO.	00123K
BDS DWG NO.	113770
CALC. BOOK	7997
HWY: 030 M.P.: 25.88	
COUNTY	Marion
DATE	6/26

REGISTERED PROFESSIONAL ENGINEER 099941PE OREGON JULY 21, 2022 BERNARD ANTHONY FRANKL

Digitally Signed 2026.06.10 13:36:34-07'00'

EXPIRES: 12/31/2027

FINAL ELECTRONIC DOCUMENT AVAILABLE UPON REQUEST

DOWL
3500 Chad Drive, Suite 200
Eugene, Oregon 97408
541-683-6090
WWW.DOWL.COM

OREGON DEPARTMENT OF TRANSPORTATION

WILLAMETTE RIVER, HWY 30 EB (CENTER ST)

OR22: CENTER ST BRIDGE (PHASE 1) PROJECT
WILLAMINA - SALEM HIGHWAY
MARION & POLK COUNTIES

Designer: Bernard A. Frankl, PhD, PE
Reviewer: Bob Goodrich, PE
Drafter: Jake Williams
Checker: Nasario Lopez-Francisco, PE

FOUNDATION PLAN - 4

SHEET NO. JA26

Bent No.	Dimension "A"
16	29'-6"
17	33'-3"
18	33'-11"

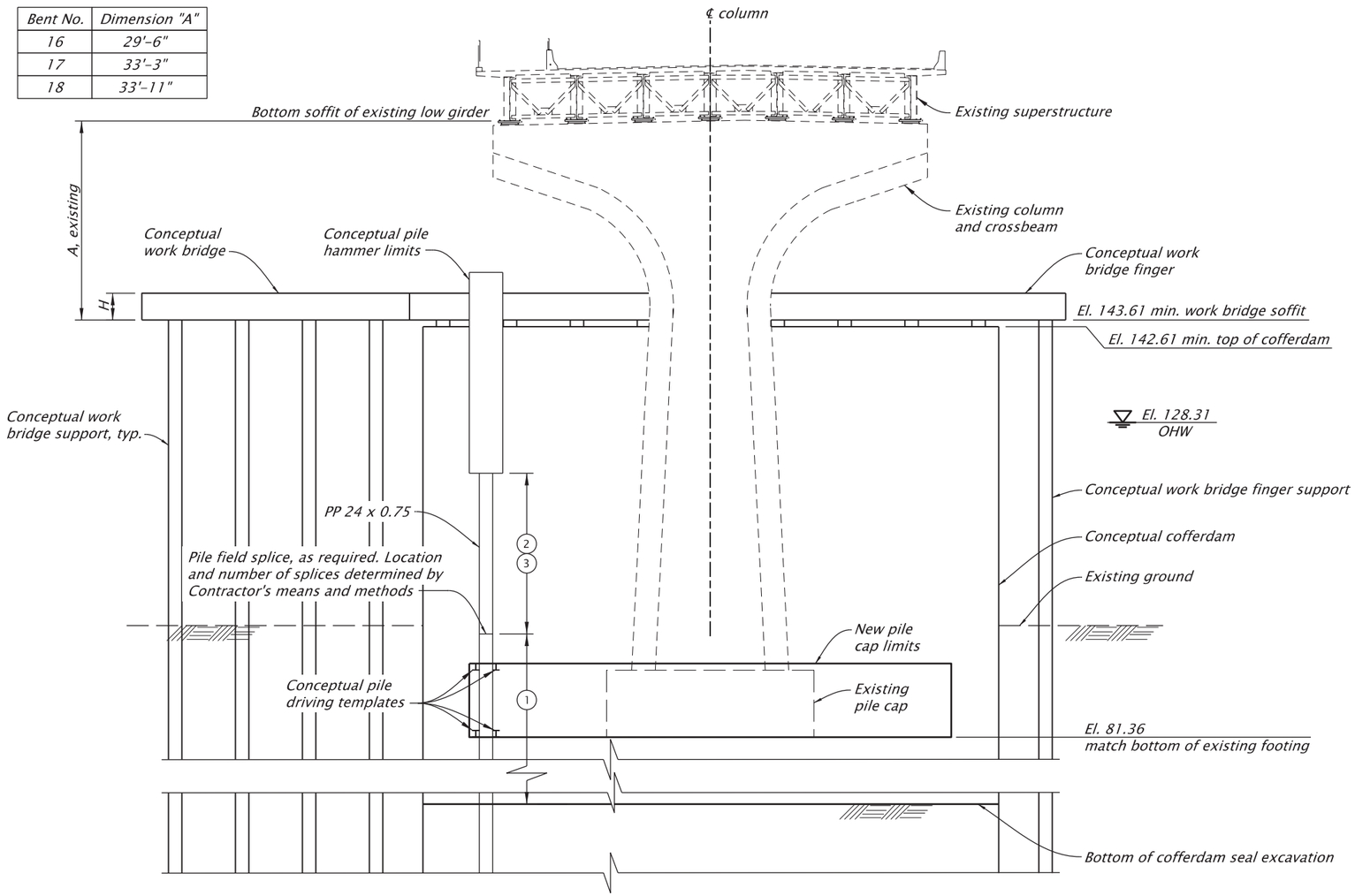

BENT 16 PILE INSTALLATION CONCEPT PLAN (BENTS 17 AND 18 SIMILAR)

Scale: 1"=20'

PILE INSTALLATION NOTES:

The conceptual plan shows the Project Permitting restrictions for cofferdam and work bridge installation. Driven piles are anticipated to require field splicing during pile driving installation due to limited headroom. The number of field splices will be determined by the Contractor's means and methods to install driven piles as specified.

CONCEPTUAL PILE INSTALLATION NOTES SEQUENCE

1. *Drive first pile segment, length determined by Contractor's means and methods.*
2. *Field splice pile segment, max. length determined by Contractor's means and methods.*
3. *Repeat step 2 until the pile has met installation requirements as shown on sht. JA23.*

NOTES:
1. *H=depth of contractor's work bridge.*
2. *Vertical ground anchors not shown for clarity.*
3. *Existing piles not shown for clarity.*
4. *Field verify all dimensions and elevations prior to submitting Working Drawings and prior to ordering or fabricating any materials. See sht. J02 for more details.*

For accompanied by drawings, see sht. JA01

SCALE WARNING
IF THIS SCALE LINE DOES NOT MEASURE ONE INCH, THEN DRAWING IS NOT TO SCALE

STRUCTURE NO.	00123K
BDS DWG NO.	113771
CALC. BOOK	7997
HWY: 030 M.P.: 25.88	
COUNTY	Marion/Polk
DATE	2/26

REGISTERED PROFESSIONAL ENGINEER 85555PE
Digitally Signed 2026.02.12 12:33:40-08'00'
OREGON DEC. 21, 2011 MICHAEL G. McNULTY
EXPIRES: 12/31/2026
FINAL ELECTRONIC DOCUMENT AVAILABLE UPON REQUEST

DOWL
3500 Chad Drive, Suite 200
Eugene, Oregon 97408
541-683-6090
WWW.DOWL.COM

WILLAMETTE RIVER, HWY 30 EB (CENTER ST)

OR22: CENTER ST BRIDGE (PHASE 1) PROJECT
WILLAMINA - SALEM HIGHWAY
MARION & POLK COUNTIES

Designer: Mike McNulty, PE
Reviewer: Bob Goodrich, PE
Drafter: Jake Williams
Checker: Eric Bonn, PE

FOUNDATION PLAN - PILE INSTALLATION CONCEPT PLAN

SHEET NO. JA27

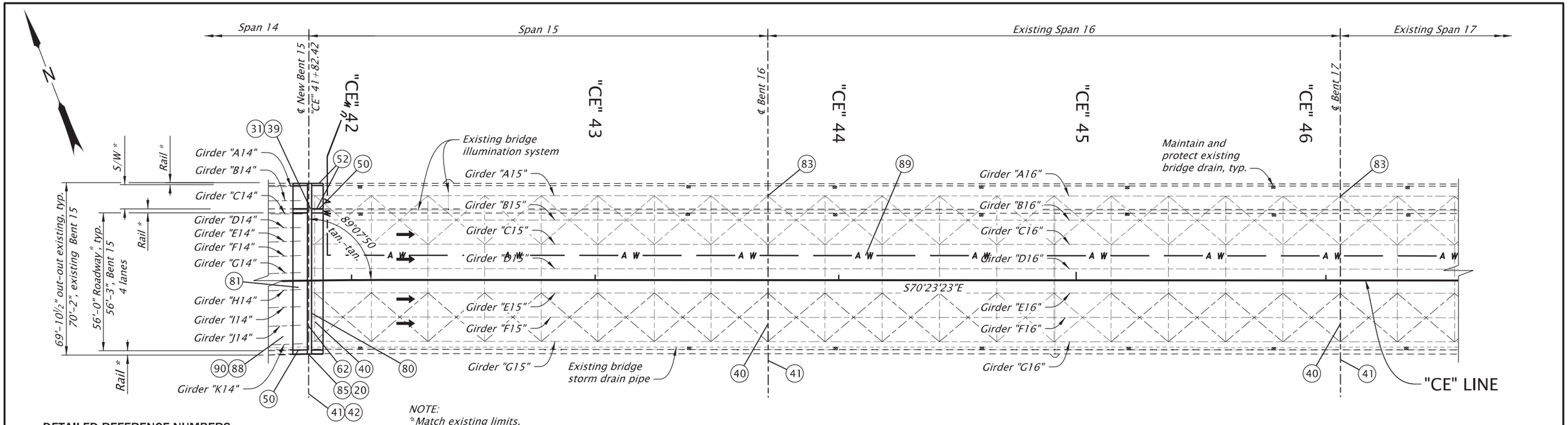

NOTE:
*Match existing limits.

DECK PLAN - SPANS 15 & 16

Scale: 1"=40'

DETAILED REFERENCE NUMBERS:

(20) Remove and reinstall storm drain pipe expansion joint.

(21) Remove and replace and/or modify existing bridge drainage system, see shts. JA127, JA128, JA129 and JA130 for details.

(22) Install box girder drainage nozzle at box girder drainage openings, see shts. JA127, JA128, JA129 and JA130.

(23) Replace missing deck inlet grates, see sht. JA131 for details.

(24) Adjust existing bridge drain inlet, see sht. JA131 for details.

(31) Electrical conduit expansion joint, see details this sheet.

(39) 2" diameter GRC electrical conduit in bridge rail. See sht. JA122 for details.

(40) Remove and replace bent cross-frames, see shts. JA29, JA39 and JA40 for details.

(41) Remove bottom flange lateral bracing near bent, see sht. JA42 for details.

(42) Install temporary cross-frames, see shts. JA05 and JA06 for details.

(50) Remove and replace Concrete Bridge Rail, Type "G", see shts. JA36, JA38 and JA44 for details.

(52) Remove and replace Pedestrian Rail, see sht. JA122 for details.

(53) Install 10'-0" Type "B" Protective Fencing, see shts. JZ05, JZ10 and JA30 for details.

(56) Install 8'-0" Type "C" Protection fencing with splash boards over railroad, see dwgs. BR240 and BR241 for details, see sht. JA30 for details.

(57) Install Attenuator, Type "D", see shts. JA134 and JA135 for details.

(60) Install poured joint seal, see shts. JA126 and JA135 for details.

(62) Remove and replace modular deck expansion joint, see sht. JA124 for details.

(63) Install precompressed foam silicone joint seal (full roadway width), see sht. JA126 for details.

(64) Install precompressed foam silicone joint seal with elastomeric nosing, see sht. JA126 for details.

(65) Sawcut joint w/ hot applied joint sealant (full roadway width), see sht. JA126 for details.

(80) Modify ends of steel girders, see sht. JA41 for details.

(81) Remove and replace existing deck, see shts. JA36, JA27, JA44 and JA47 for details. Remove and replace Span 14 girders and end beam, see shts. JA32, JA33, JA34, JA36 and JA37 for details.

(82) Remove existing seismic restrainers, see shts. JA79, JA83, JA101, and JA108 for details.

(83) Install seismic restrainers, see sht. JA119 and JA120 for details.

(85) Remove portion of diaphragm and install bridge bearings, see sht. JA118 for details.

(86) Core vertically through superstructure and install cap headed reinforcing bars, see sht. JA132 for details.

(88) Install near-surface mounted reinforcing, see shts. JA37, JA49, JA50, and JA52 for details.

(89) Waterline, see RA shts. for details.

(90) Bridge deck cold plane pavement removal, 3" - 4" deep and bonded membrane removal. Install rolled waterproof membrane. Install ACP wearing course, see sht. BA01 for details.

(91) Bridge deck cold plane pavement removal, 3" - 4" deep, concrete deck micro-milling, 0.25" deep, and selective hydrodemolition. Construct 3¾" min. structural concrete overlay with surface texturing, see sht. JA30 for details.

(92) Locate concrete repair, concrete repair and inject and seal cracks across box girder soffit, see shts. JA49 and JA50 for details.

(93) Install single layer polymer concrete overlay across sidewalk, see shts. JA48 thru JA50 for details.

Conduit Nominal Dia.	Conduit Exp. Joint	
	Nominal Dia.	Length
2"	4"	12½"

NOTE:
Conduit Exp. Joint lengths and diameters shown are approximate only. See manufacturer's literature for exact dimensions. Design movement may be increased or decreased as required.

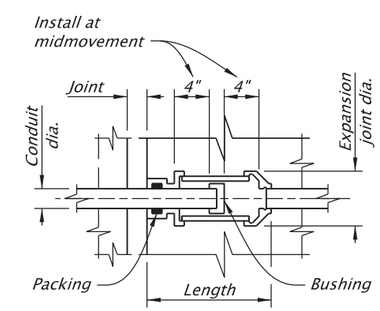

ELECTRICAL CONDUIT EXPANSION JOINT

No Scale
(8" maximum movement)

NOTES:
1. Field verify all dimensions and elevations prior to submitting Working Drawings and prior to ordering or fabricating any materials. See sht. J02 for more details.
2. See Bent Plan and Elevation sheets for construction control working points to establish bent centerlines.

For accompanied by drawings, see sht. JA01

SCALE WARNING
IF THIS SCALE LINE DOES NOT MEASURE ONE INCH, THEN DRAWING IS NOT TO SCALE

STRUCTURE NO.	00123K
BDS DWG NO.	113772
CALC. BOOK	7997
HWY: 030 M.P.: 25.88	
COUNTY	Marion/Polk
DATE	2/26

REGISTERED PROFESSIONAL ENGINEER 85555PE
Digitally Signed 2026.02.12 12:33:52-08'00'
OREGON
DEC. 21, 2011
MICHAEL G. McNULTY
EXPIRES: 12/31/2026

FINAL ELECTRONIC DOCUMENT AVAILABLE UPON REQUEST

DOWL
3500 Chad Drive, Suite 200
Eugene, Oregon 97408
541-683-6090
WWW.DOWL.COM

OREGON DEPARTMENT OF TRANSPORTATION

WILLAMETTE RIVER, HWY 30 EB (CENTER ST)

OR22: CENTER ST BRIDGE (PHASE 1) PROJECT
WILLAMINA - SALEM HIGHWAY
MARION & POLK COUNTIES

Designer: Mike McNulty, PE
Reviewer: Bob Goodrich, PE
Drafter: Jake Williams
Checker: Eric Bonn, PE

DECK PLAN - 1

SHEET NO. JA28

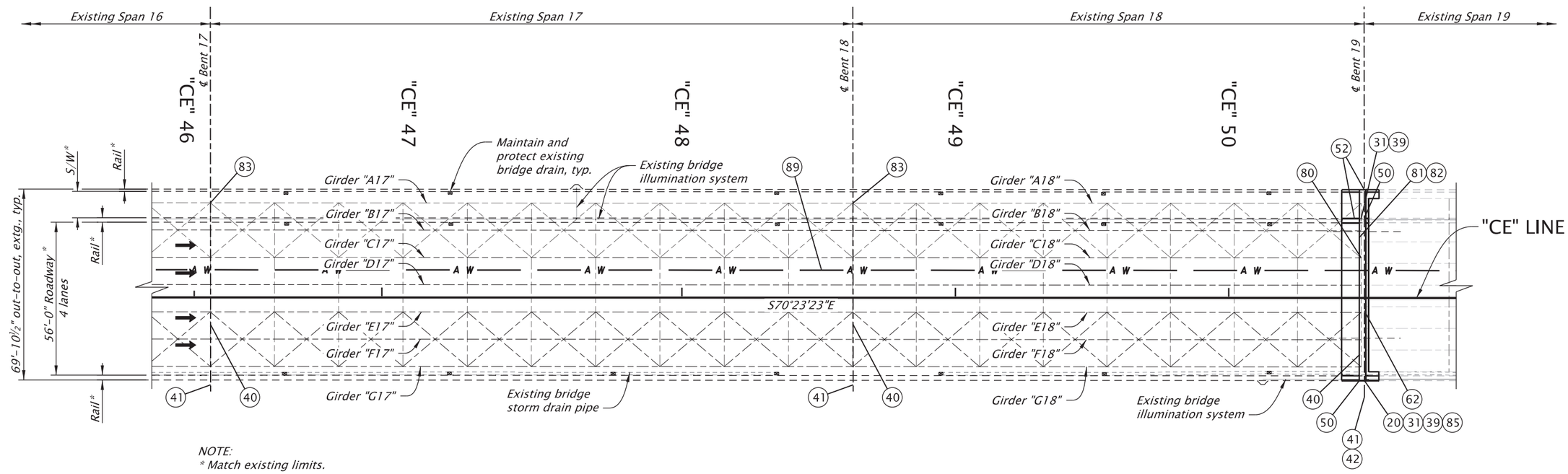

NOTE:
* Match existing limits.

DECK PLAN - SPANS 17 & 18

Scale: 1"=40'

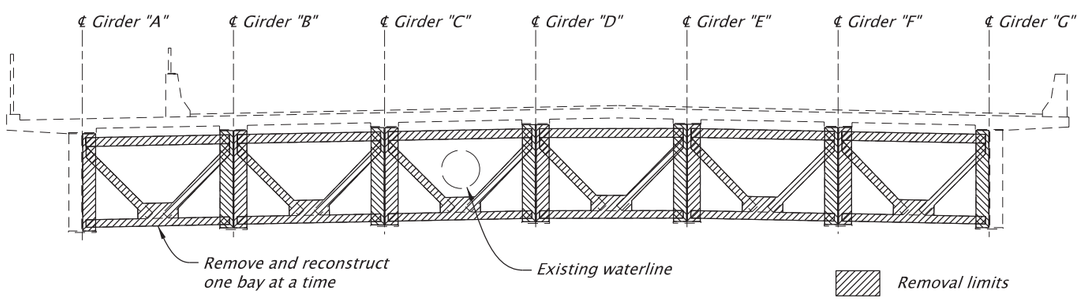

BENT 17 CROSS-FRAME REMOVAL (BENTS 15, 16, 18, AND 19 SIMILAR)

Scale: 1"=10'

NOTES:
1. For deck plan detailed reference number notes, see sht. JA28.
2. Field verify all dimensions and elevations prior to submitting Working Drawings and prior to ordering or fabricating any materials. See sht. J02 for more details.
3. See Bent Plan and Elevation sheets for construction control working points to establish bent centerlines.

SCALE WARNING
IF THIS SCALE LINE DOES NOT MEASURE ONE INCH, THEN DRAWING IS NOT TO SCALE

For accompanied by drawings, see sht. JA01

STRUCTURE NO.	00123K
BDS DWG NO.	113773
CALC. BOOK	7997
HWY: 030	M.P.: 25.88
COUNTY	Marion/Polk
DATE	6/26

REGISTERED PROFESSIONAL ENGINEER 85555PE
Digitally Signed 2026.06.30 12:31:37-07'00'
OREGON
DEC. 21, 2011
MICHAEL G. McNULTY
EXPIRES: 12/31/2026

FINAL ELECTRONIC DOCUMENT AVAILABLE UPON REQUEST

DOWL
3500 Chad Drive, Suite 200
Eugene, Oregon 97408
541-683-6090
WWW.DOWL.COM

WILLAMETTE RIVER, HWY 30 EB (CENTER ST)

OR22: CENTER ST BRIDGE (PHASE 1) PROJECT
WILLAMINA - SALEM HIGHWAY
MARION & POLK COUNTIES

Designer: Mike McNulty, PE
Reviewer: Bob Goodrich, PE
Drafter: Jake Williams
Checker: Eric Bonn, PE

DECK PLAN - 2

SHEET NO. JA29

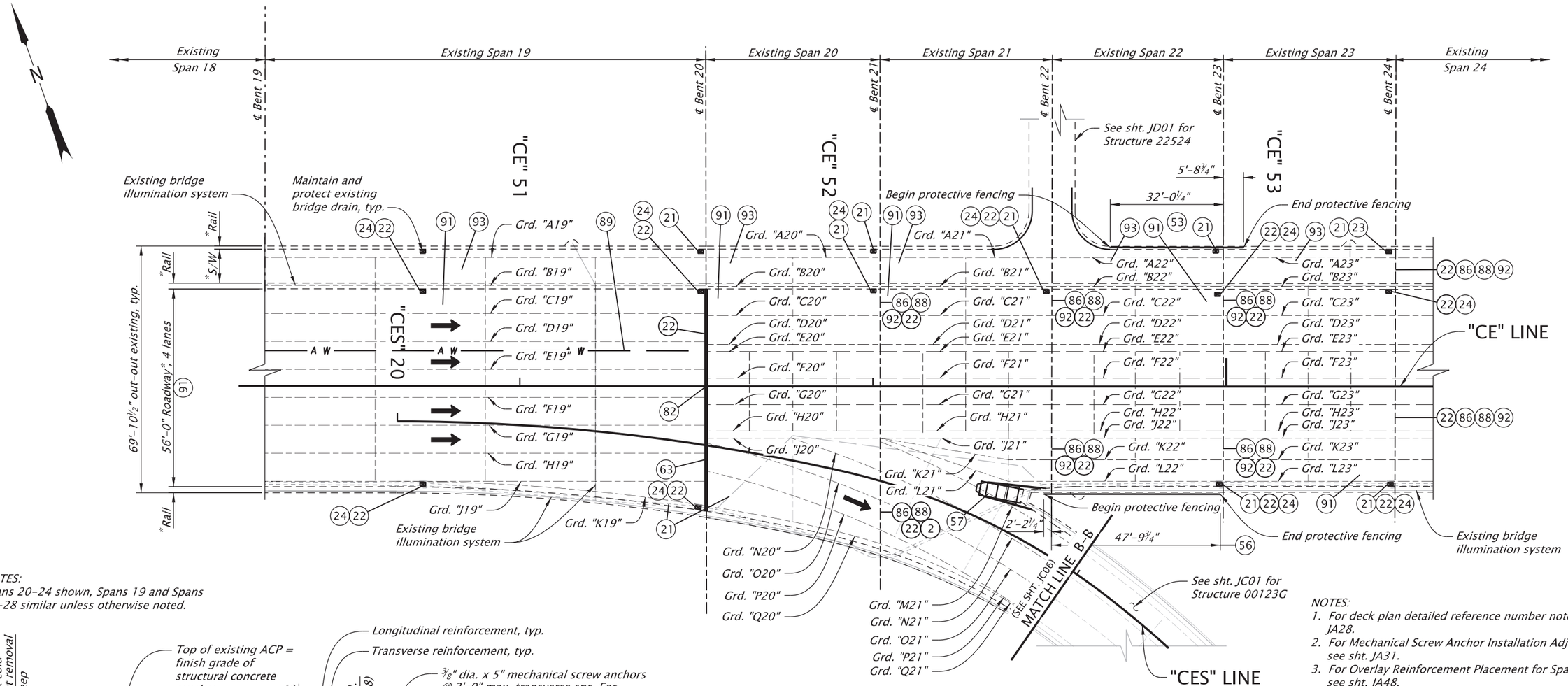

DECK PLAN - SPANS 19, 20, 21, 22 & 23

Scale: 1"=30'

NOTES:
Spans 20-24 shown, Spans 19 and Spans 25-28 similar unless otherwise noted.

NOTES:
1. For deck plan detailed reference number notes, see sht. JA28.
2. For Mechanical Screw Anchor Installation Adjustments, see sht. JA31.
3. For Overlay Reinforcement Placement for Spans 19 - 28, see sht. JA48.
4. For Span 19 - 21 Gore Overlay Reinforcing, see sht. JA53.
5. For Span 25 - 26 Gore Overlay Reinforcing, see sht. JA54.
6. Field verify all dimensions and elevations before submitting Working Drawings and prior to ordering or fabricating any materials. See sht. J02 for more details
7. See Bent Plan and Elevation sheets for construction control working points to establish bent centerlines.
8. * Match existing limits.

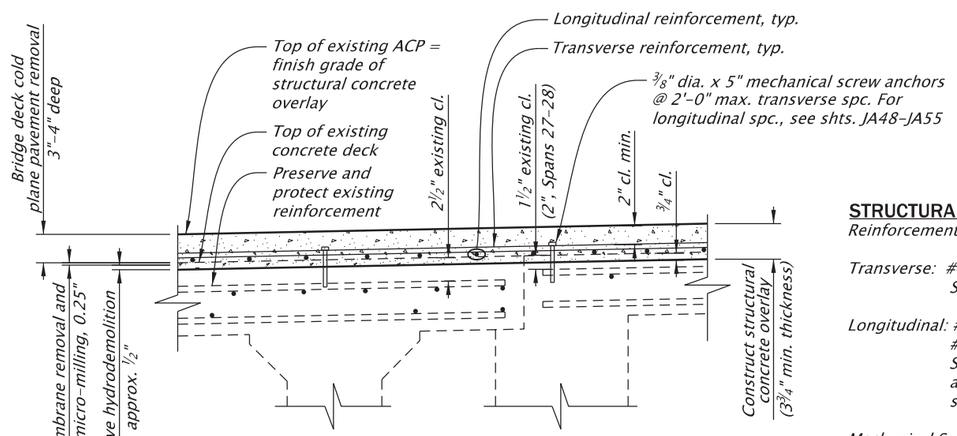

STRUCTURAL CONCRETE OVERLAY DETAIL

Scale: ¾"=1'-0"

STRUCTURAL CONCRETE OVERLAY NOTES:

Reinforcement:

Transverse: #4 @ 8"
Splice length = 1'-7"

Longitudinal: #4 @ 8", Spans 19 and 25 - 28
#4 @ 6", Spans 20 - 24
Splice length = 2'-0", splice at alternate bars, staggered at least one splice length or as far as possible, unless shown otherwise

Mechanical Screw Anchor:

Embed a minimum of 3¼" or maximum of 3¾" into existing deck.

Install anchors 6" off face of rail.

The minimum pullout stength is 3,900 lbs with a minimum effective embedment depth (hef) of 2⅛".

SCALE WARNING
IF THIS SCALE LINE DOES NOT MEASURE ONE INCH, THEN DRAWING IS NOT TO SCALE

For accompanied by drawings, see sht. JA01

STRUCTURE NO.	00123K
BDS DWG NO.	113774
CALC. BOOK	7997
HWY: 030 M.P.: 25.88	
COUNTY	Marion
DATE	2/26

REGISTERED PROFESSIONAL ENGINEER 099941PE OREGON JULY 21, 2022 BERNARD ANTHONY FRANKL
Digitally Signed 2026.02.12 11:22:12-08'00'
EXPIRES: 12/31/2027

FINAL ELECTRONIC DOCUMENT AVAILABLE UPON REQUEST

DOWL
3500 Chad Drive, Suite 200
Eugene, Oregon 97408
541-683-6090
WWW.DOWL.COM

WILLAMETTE RIVER, HWY 30 EB (CENTER ST)

OR22: CENTER ST BRIDGE (PHASE 1) PROJECT
WILLAMINA - SALEM HIGHWAY
MARION & POLK COUNTIES

Designer: Bernard A. Frankl, PhD, PE
Reviewer: Bob Goodrich, PE
Drafter: Jake Williams
Checker: Fred M. Gomez, PE

DECK PLAN - 3

SHEET NO. JA30

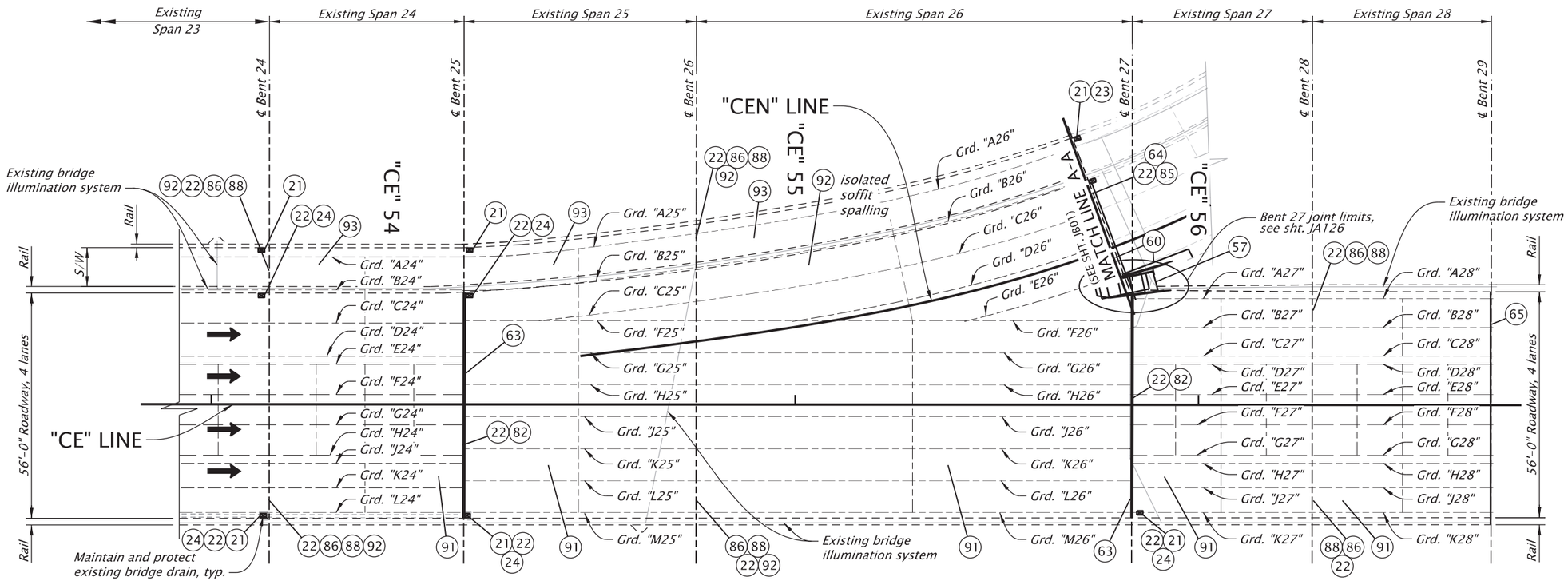

DECK PLAN - SPANS 24, 25, 26, 27 & 28

Scale: 1"=30'

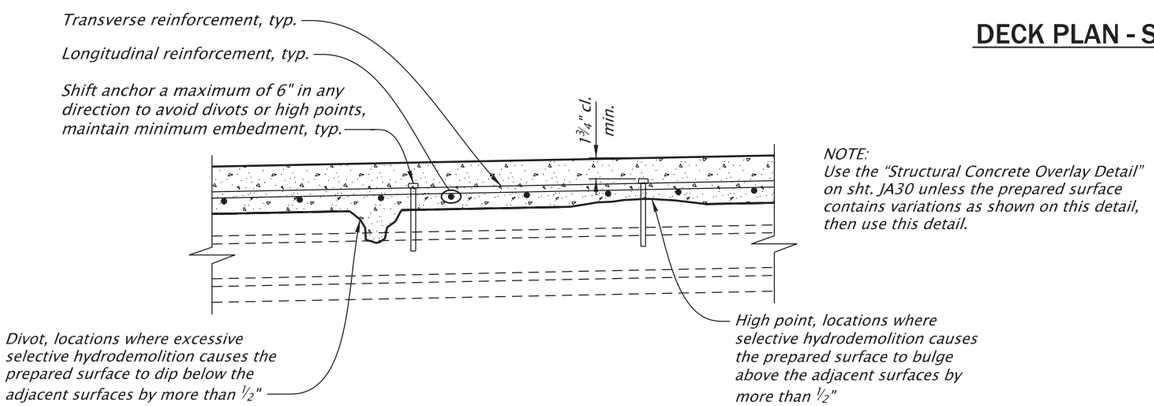

NOTE:
Use the "Structural Concrete Overlay Detail" on sht. JA30 unless the prepared surface contains variations as shown on this detail, then use this detail.

MECHANICAL SCREW ANCHOR INSTALLATION ADJUSTMENTS

Scale: 1"=1'-0"

NOTES:
1. For deck plan detailed reference number notes, see sht. JA28.
2. See Bent Plan and Elevation sheets for construction control working points to establish bent centerlines.
3. Field verify all dimensions and elevations before submitting Working Drawings and prior to ordering or fabricating any materials. See sht. J02 for more details.

For accompanied by drawings, see sht. JA01

STRUCTURE NO.	00123K
BDS DWG NO.	113775
CALC. BOOK	7997
HWY: 030	M.P.: 25.88
COUNTY	Marion
DATE	2/26

SCALE WARNING
IF THIS SCALE LINE DOES NOT MEASURE ONE INCH, THEN DRAWING IS NOT TO SCALE

REGISTERED PROFESSIONAL ENGINEER
099941PE
Digitally Signed 2026.02.12 11:22:27-08'00'
OREGON
JULY 21, 2022
BERNARD ANTHONY FRANKL
EXPIRES: 12/31/2027

FINAL ELECTRONIC DOCUMENT AVAILABLE UPON REQUEST

DOWL
3500 Chad Drive, Suite 200
Eugene, Oregon 97408
541-683-6090
WWW.DOWL.COM

OREGON DEPARTMENT OF TRANSPORTATION

WILLAMETTE RIVER, HWY 30 EB (CENTER ST)

OR22: CENTER ST BRIDGE (PHASE 1) PROJECT
WILLAMINA - SALEM HIGHWAY
MARION & POLK COUNTIES

Designer: Bernard A. Frankl, PhD, PE
Reviewer: Bob Goodrich, PE
Drafter: Jake Williams
Checker: Fred M. Gomez, PE

DECK PLAN - 4

SHEET NO. JA31

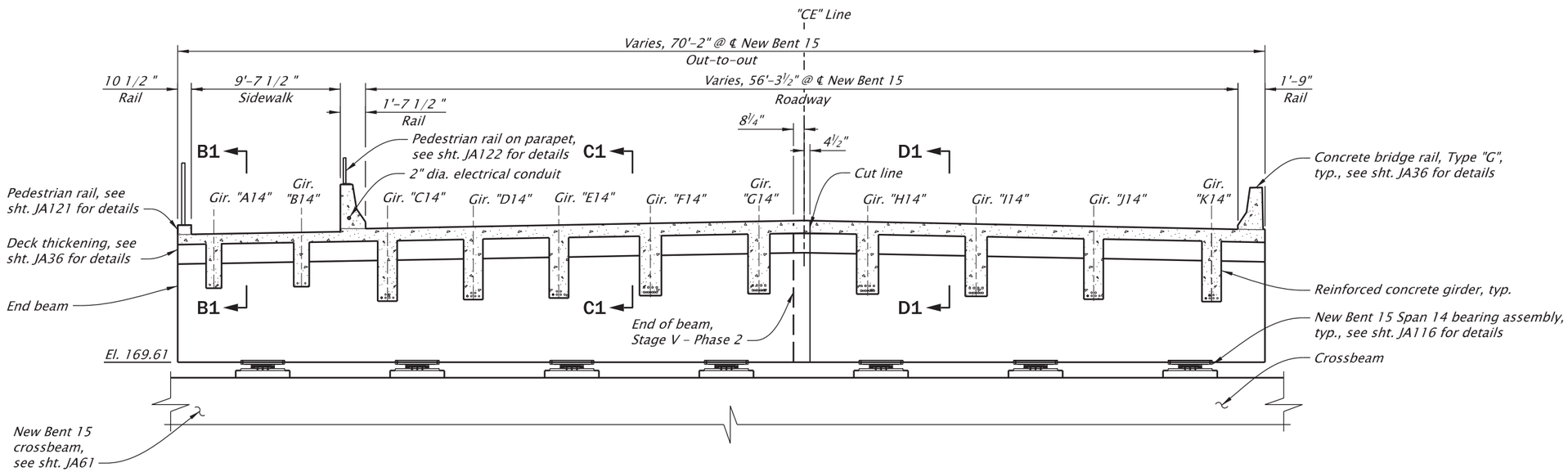

NOTE:
For sections B1-B1, C1-C1, and D1-D1, see shts. JA33 and JA34.

SPAN 14 - TYPICAL SECTION

Scale: 1/8"=1'-0"

STIRRUP TABLE			
Group No.	Number in group	spacing or location	Height "h"
1	3	8"	6'-7 1/2"
2	1	Centered on Gir. "A14"	4'-7"
3	7	8"	6'-8 1/2"
4	1	Centered on Gir. "B14"	4'-8"
5	3	8"	6'-9 1/2"
6	4	8"	6'-11 1/2"
7	1	Centered on Gir. "C14"	3'-9"
8	7	8"	7'-1"
9	1	Centered on Gir. "D14"	3'-10"
10	7	8"	7'-2"
11	1	Centered on Gir. "E14"	3'-11"
12	7	8"	7-3 1/2"
13	1	Centered on Gir. "F14"	4'-1"
14	9	8"	7'-5"
15	1	Centered on Gir. "G14"	4'-3"
16	9	8"	7'-5 1/2"
17	1	Centered on Gir. "H14"	4'-2"
18	9	8"	7'-4 1/2"
19	1	Centered on Gir. "I14"	4'-1"
20	10	8"	7'-2 1/2"
21	1	Centered on Gir. "J14"	3'-10"
22	10	8"	7'-1"
23	1	Centered on Gir. "K14"	3'-9"
24	4	8"	6'-11 1/2"

NOTE:
Center all stirrup groups @ 8" spacing between girders or in the available length outside of girders.

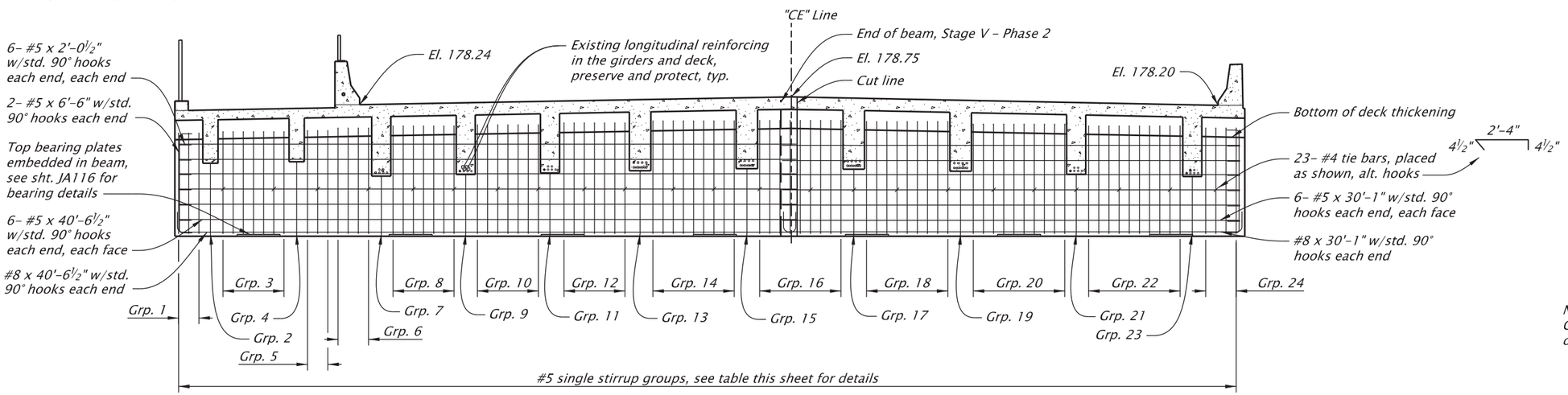

NOTES:
1. Elevations are at the Span 14 centerline.
2. Bridge bearing assembly not shown for clarity.

SPAN 14 - END BEAM REINFORCING

Scale: 1/8"=1'-0"

For accompanied by drawings, see sht. JA01

NOTES:
1. Deck, NSM strengthening, deck thickening, rail, and girder reinforcement not shown for clarity.
2. Elevations shown are based on North American Vertical Datum 1988 (NAVD88).
3. Field verify all dimensions and elevations prior to submitting Working Drawings and prior to ordering or fabricating any materials. See sht. J02 for more details.

SCALE WARNING
IF THIS SCALE LINE DOES NOT MEASURE ONE INCH, THEN DRAWING IS NOT TO SCALE

STRUCTURE NO.	00123K
BDS DWG NO.	113776
CALC. BOOK	7997
HWY: 030	M.P.: 25.88
COUNTY	Marion/Polk
DATE	2/26

REGISTERED PROFESSIONAL ENGINEER 16588 OREGON JULY 20, 1993 ERIC EDWARD BONN
Digitally Signed 2026.02.12 12:23:03-08'00'
EXPIRES: 12/31/2027

FINAL ELECTRONIC DOCUMENT AVAILABLE UPON REQUEST

DOWL
3500 Chad Drive, Suite 200
Eugene, Oregon 97408
541-683-6090
WWW.DOWL.COM

WILLAMETTE RIVER, HWY 30 EB (CENTER ST)

OR22: CENTER ST BRIDGE (PHASE 1) PROJECT
WILLAMINA - SALEM HIGHWAY
MARION & POLK COUNTIES

Designer: Eric Bonn, PE
Reviewer: Bob Goodrich, PE
Drafter: Jake Williams
Checker: Mike McNulty, PE

SPAN 14 TYPICAL SECTION

SHEET NO. JA32

NOTE:
* Joint size based on installation temperature of 52° F, see sht. JA124.

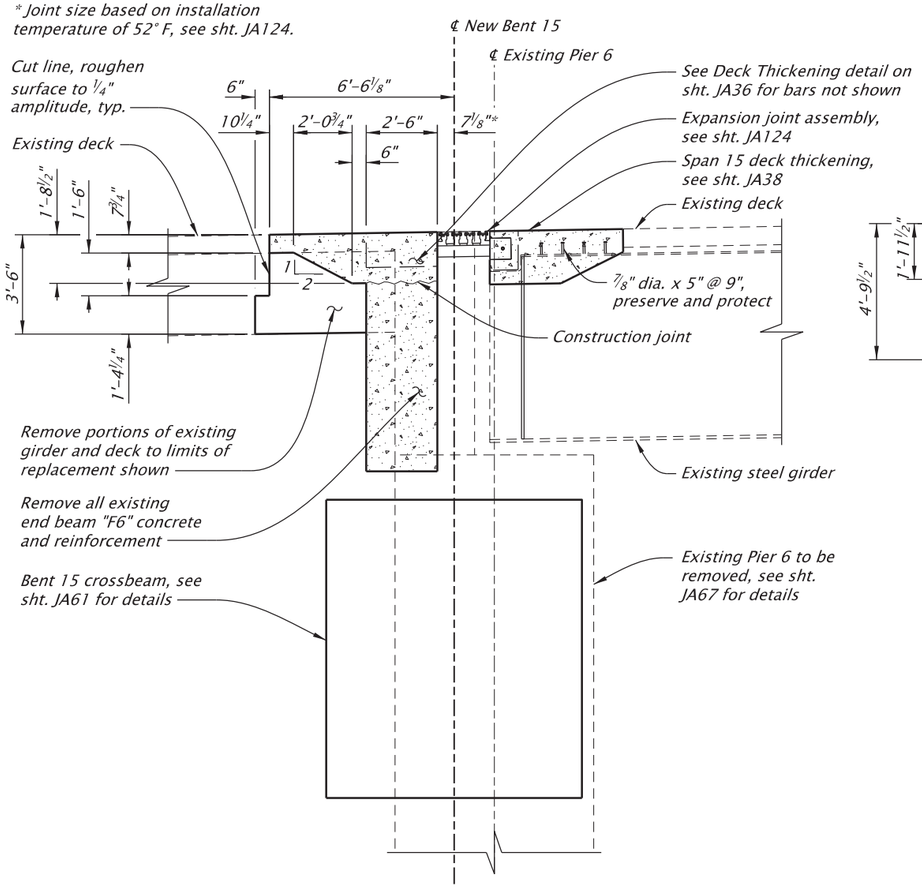

SECTION B1-B1 - GIRDERS "A14" & "B14"

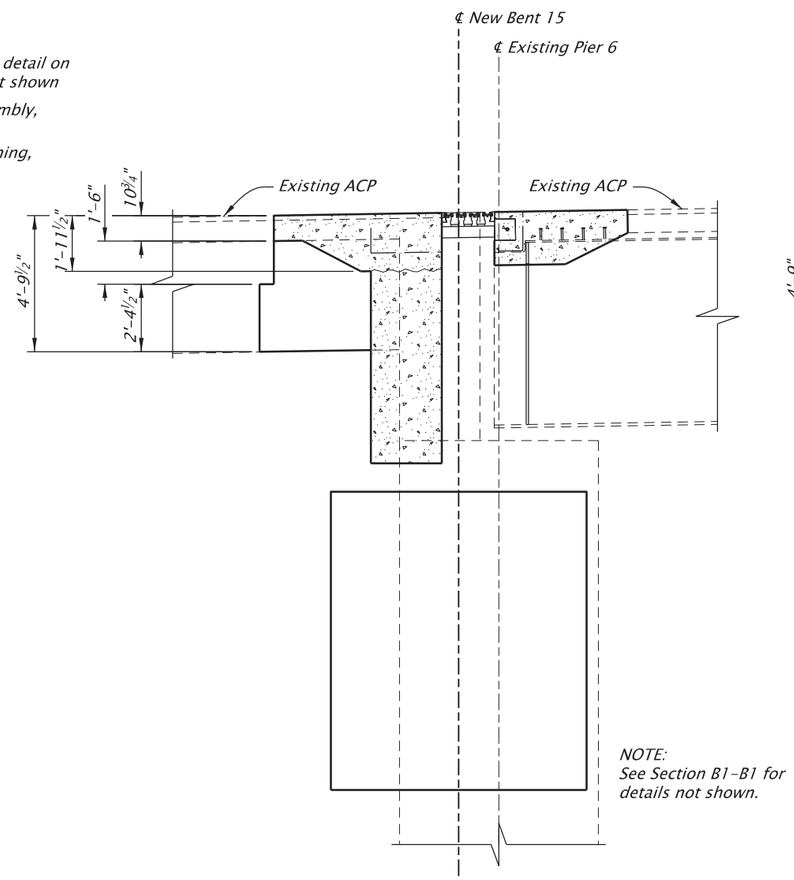

NOTE:
See Section B1-B1 for details not shown.

SECTION C1-C1 - GIRDERS "C14", "D14", "E14", "J14", & "K14"

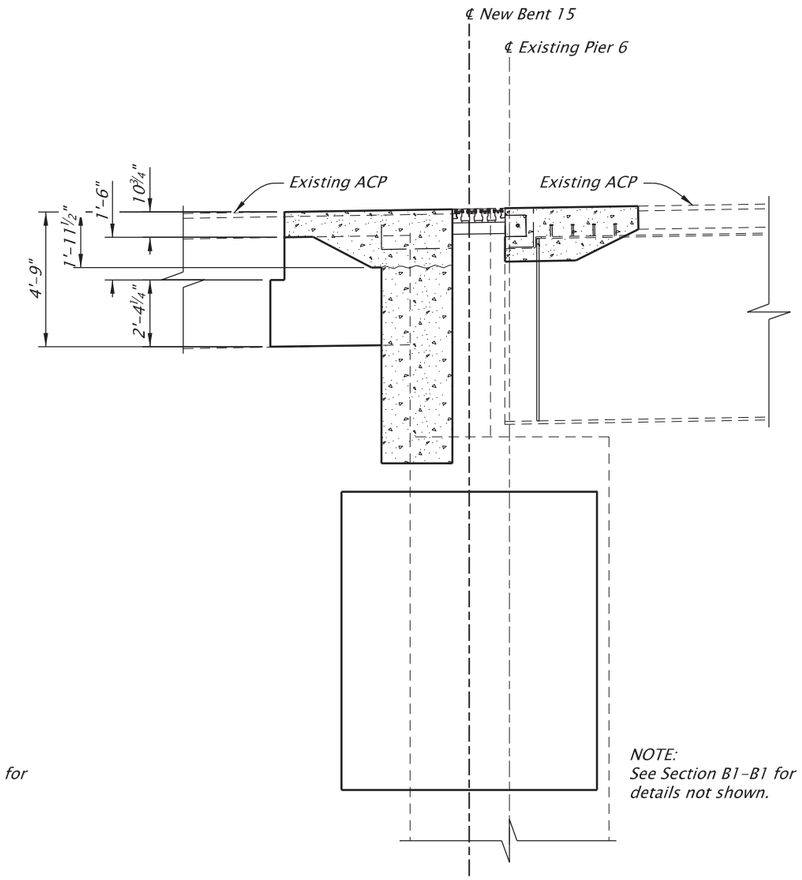

NOTE:
See Section B1-B1 for details not shown.

SECTION D1-D1 GIRDERS "F14", "G14", "H14", & "I14"

GIRDER ELEVATIONS - DIMENSIONS

Scale: 3/16"=1'-0"

For accompanied by drawings, see sht. JA01

NOTES:
1. For location of sections, see sht. JA32.
2. For existing and new reinforcing details, see sht. JA34.
3. Field verify all dimensions and elevations prior to submitting Working Drawings and prior to ordering or fabricating any materials. See sht. J02 for more details.

SCALE WARNING
IF THIS SCALE LINE DOES NOT MEASURE ONE INCH, THEN DRAWING IS NOT TO SCALE

STRUCTURE NO.	00123K
BDS DWG NO.	113777
CALC. BOOK	7997
HWY: 030 M.P.: 25.88	
COUNTY	Marion/Polk
DATE	2/26

REGISTERED PROFESSIONAL ENGINEER 16588 OREGON JULY 20, 1993 ERIC EDWARD BONN
Digitally Signed 2026.02.12 12:23:28-08'00'
EXPIRES: 12/31/2027
FINAL ELECTRONIC DOCUMENT AVAILABLE UPON REQUEST

DOWL
3500 Chad Drive, Suite 200
Eugene, Oregon 97408
541-683-6090
WWW.DOWL.COM

WILLAMETTE RIVER, HWY 30 EB (CENTER ST)

OR22: CENTER ST BRIDGE (PHASE 1) PROJECT
WILLAMINA - SALEM HIGHWAY
MARION & POLK COUNTIES

Designer: Eric Bonn, PE
Reviewer: Bob Goodrich, PE
Drafter: Jake Williams
Checker: Mike McNulty, PE

SPAN 14 DETAILS - GIRDER ELEVATIONS

SHEET NO. JA33

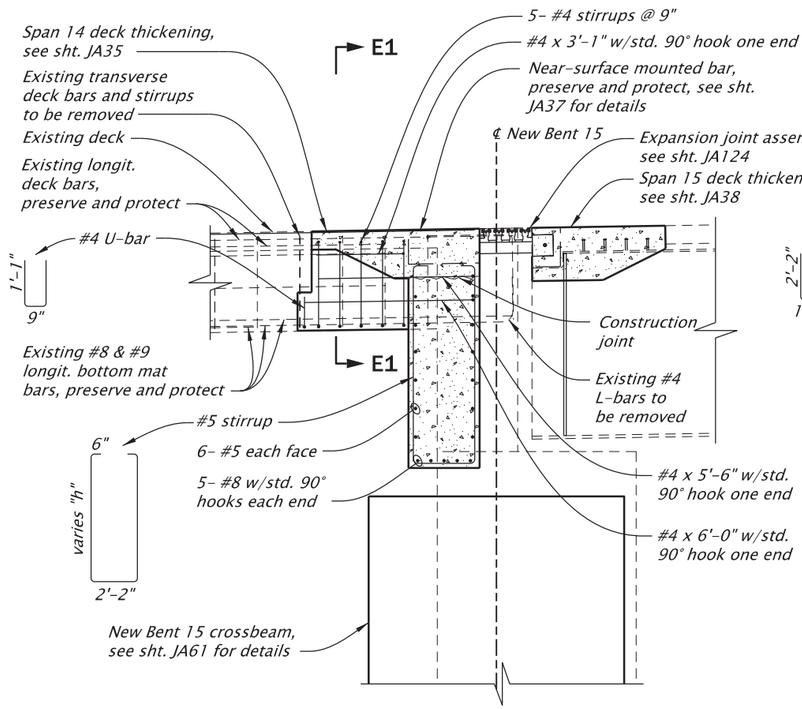

SECTION B1-B1 - GIRDERS "A14" & "B14"

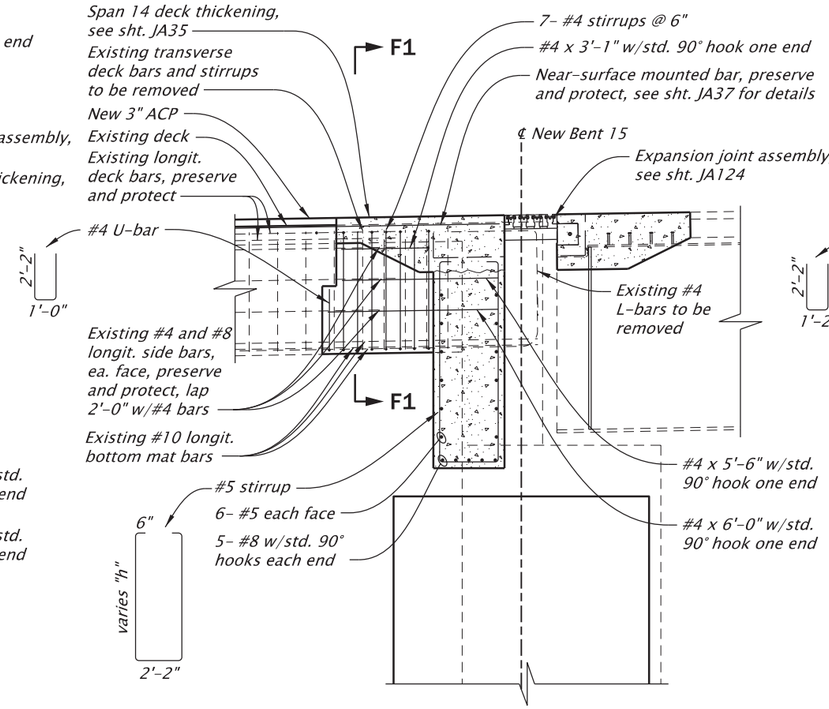

SECTION C1-C1 - GIRDERS "C14", "D14", "E14", "J14", & "K14"

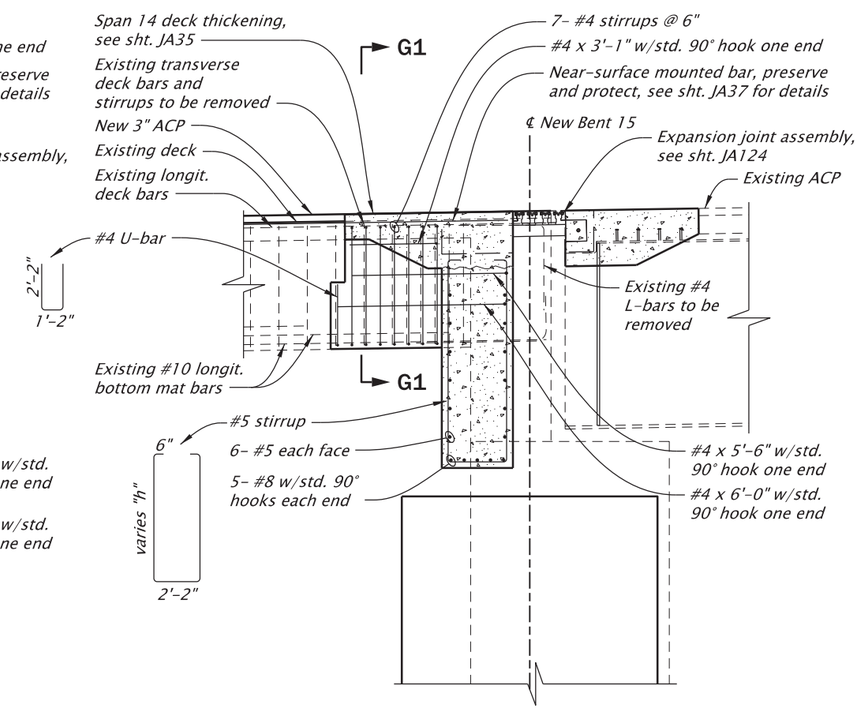

SECTION D1-D1 - GIRDERS "F14", "G14", "H14", & "I14"

GIRDER ELEVATIONS - REINFORCEMENT

Scale: 3/16"=1'-0"

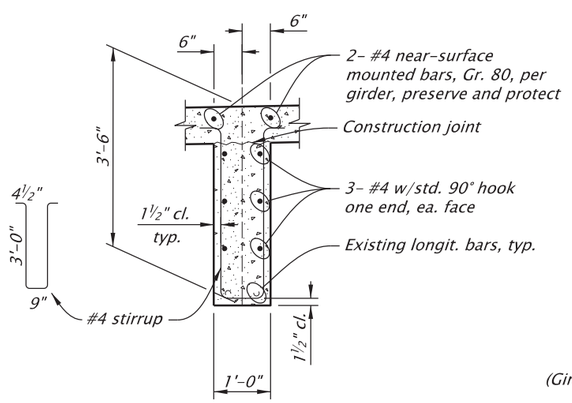

SECTION E1-E1

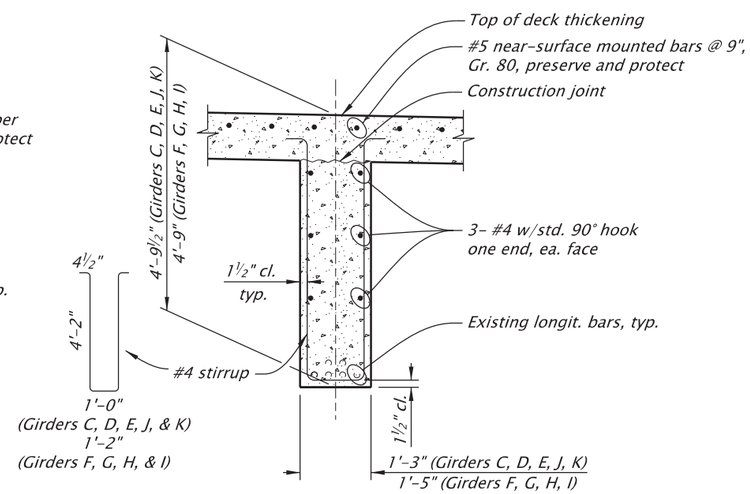

SECTION F1-F1
(SECTION G1-G1 SIMILAR)

LONGITUDINAL GIRDER SECTIONS

Scale: 3/8" = 1'-0"

NOTES:

1. *For location of sections B1-B1, C1-C1, and D1-D1 see sht. JA32.*
2. *Existing end beam "F6" reinforcement not shown for clarity.*
3. *See sht. JA32 for "h" dimension.*
4. *Trim existing longitudinal bottom mat bars 2" from expansion joint face of end beam.*
5. *Trim existing deck and side face bars 2'-2" into new girder concrete.*
6. *Field verify all dimensions and elevations prior to submitting Working Drawings and prior to ordering or fabricating any materials. See sht. J02 for more details.*

For accompanied by drawings, see sht. JA01

SCALE WARNING
IF THIS SCALE LINE DOES NOT MEASURE ONE INCH, THEN DRAWING IS NOT TO SCALE

STRUCTURE NO.	00123K
BDS DWG NO.	113778
CALC. BOOK	7997
HWY: 030	M.P.: 25.88
COUNTY	Marion/Polk
DATE	2/26

REGISTERED PROFESSIONAL ENGINEER 16588 OREGON JULY 20, 1993 ERIC EDWARD BONN
Digitally Signed 2026.02.12 12:23:46-08'00'
EXPIRES: 12/31/2027

FINAL ELECTRONIC DOCUMENT AVAILABLE UPON REQUEST

DOWL
3500 Chad Drive, Suite 200
Eugene, Oregon 97408
541-683-6090
WWW.DOWL.COM

WILLAMETTE RIVER, HWY 30 EB (CENTER ST)

OR22: CENTER ST BRIDGE (PHASE 1) PROJECT
WILLAMINA - SALEM HIGHWAY
MARION & POLK COUNTIES

Designer: Eric Bonn, PE Reviewer: Bob Goodrich, PE
Drafter: Jake Williams Checker: Mike McNulty, PE

SPAN 14 DETAILS - GIRDER REINFORCEMENT

SHEET NO. JA34

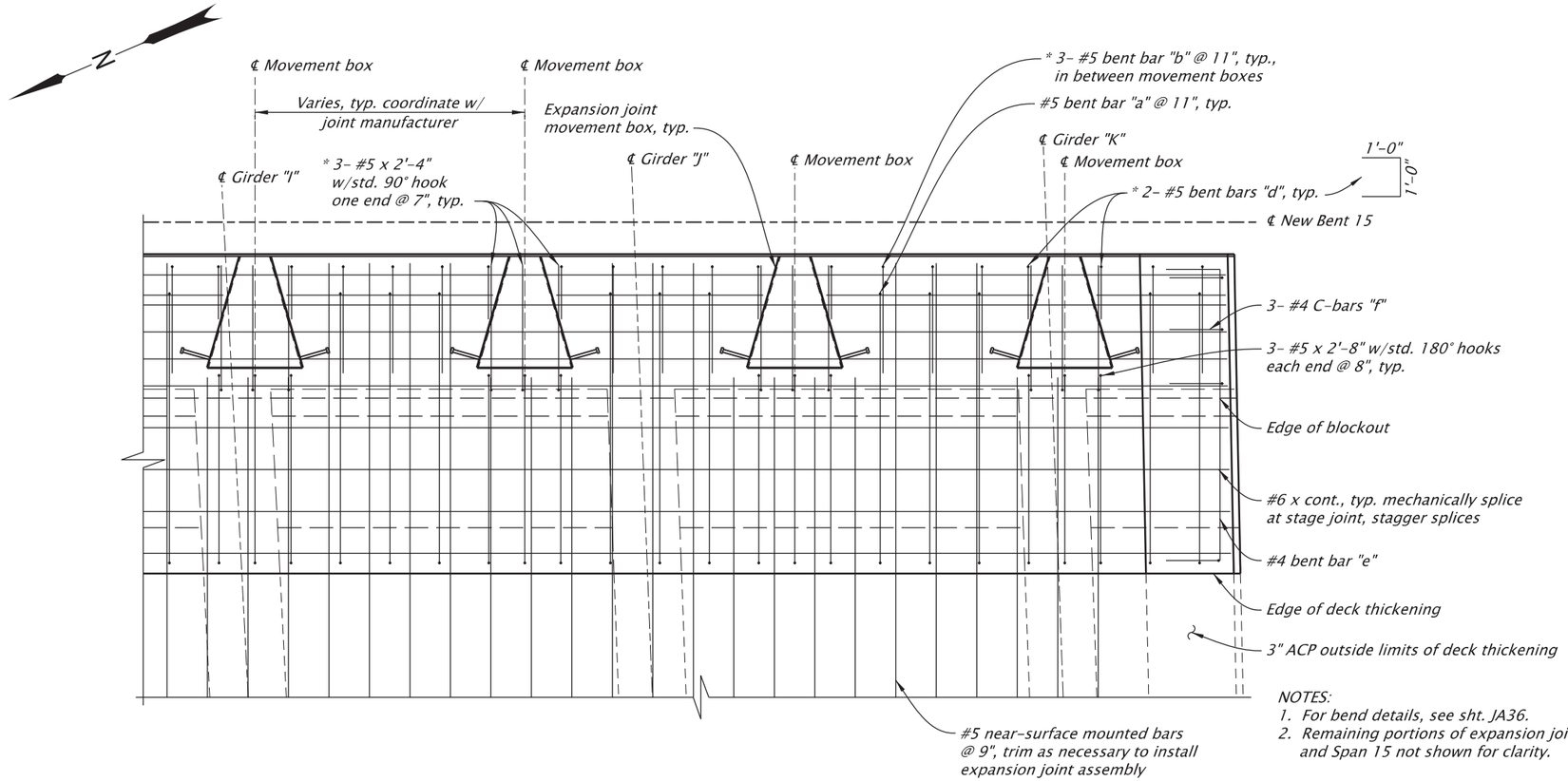

NOTES:
1. For bend details, see sht. JA36.
2. Remaining portions of expansion joint and Span 15 not shown for clarity.

PARTIAL PLAN

Scale: 3/8"=1'-0"

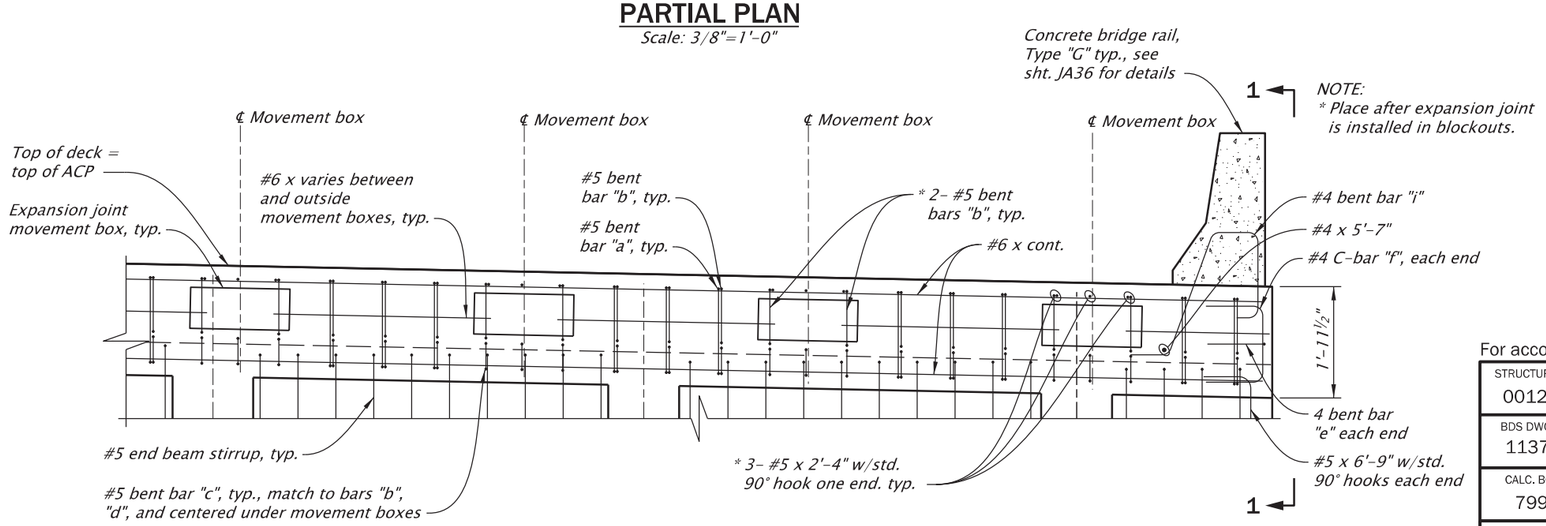

NOTE:
* Place after expansion joint is installed in blockouts.

PARTIAL ELEVATION AT FACE OF END BEAM

Scale: 3/8"=1'-0"

NOTES:
1. For bar bend details, see sht. JA36.
2. For View 1-1, see sht. JA36.
3. Field verify all dimensions and elevations prior to submitting Working Drawings and prior to ordering or fabricating any materials. See sht. J02 for more details.

SCALE WARNING
IF THIS SCALE LINE DOES NOT MEASURE ONE INCH, THEN DRAWING IS NOT TO SCALE

For accompanied by drawings, see sht. JA01

STRUCTURE NO.	00123K
BDS DWG NO.	113779
CALC. BOOK	7997
HWY: 030	M.P.: 25.88
COUNTY	Marion/Polk
DATE	2/26

REGISTERED PROFESSIONAL ENGINEER 16588 OREGON JULY 20, 1993 ERIC EDWARD BONN
Digitally Signed 2026.02.12 12:24:17-08'00'
EXPIRES: 12/31/2027

FINAL ELECTRONIC DOCUMENT AVAILABLE UPON REQUEST

DOWL
3500 Chad Drive, Suite 200
Eugene, Oregon 97408
541-683-6090
WWW.DOWL.COM

WILLAMETTE RIVER, HWY 30 EB (CENTER ST)

OR22: CENTER ST BRIDGE (PHASE 1) PROJECT
WILLAMINA - SALEM HIGHWAY
MARION & POLK COUNTIES

Designer: Eric Bonn, PE
Reviewer: Bob Goodrich, PE
Drafter: Jake Williams
Checker: Mike McNulty, PE

SPAN 14 DETAILS - BENT 15 DECK THICKENING

SHEET NO. JA35

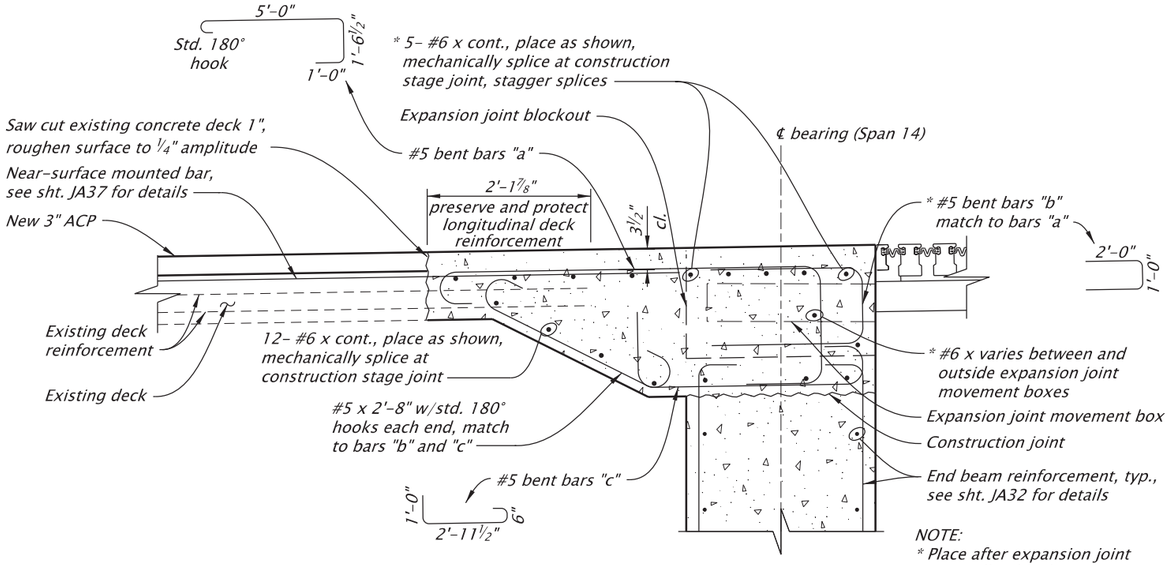

NOTE:
* Place after expansion joint is install in blockouts.

ROADWAY SECTION

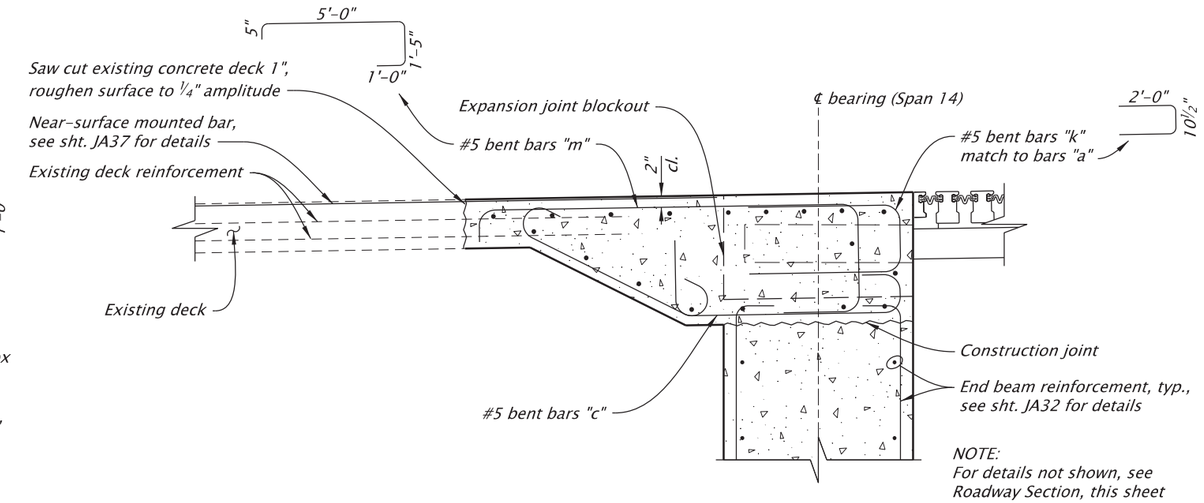

NOTE:
For details not shown, see Roadway Section, this sheet

SIDEWALK SECTION

DECK THICKENING DETAILS

Scale: 1/2"=1'-0"

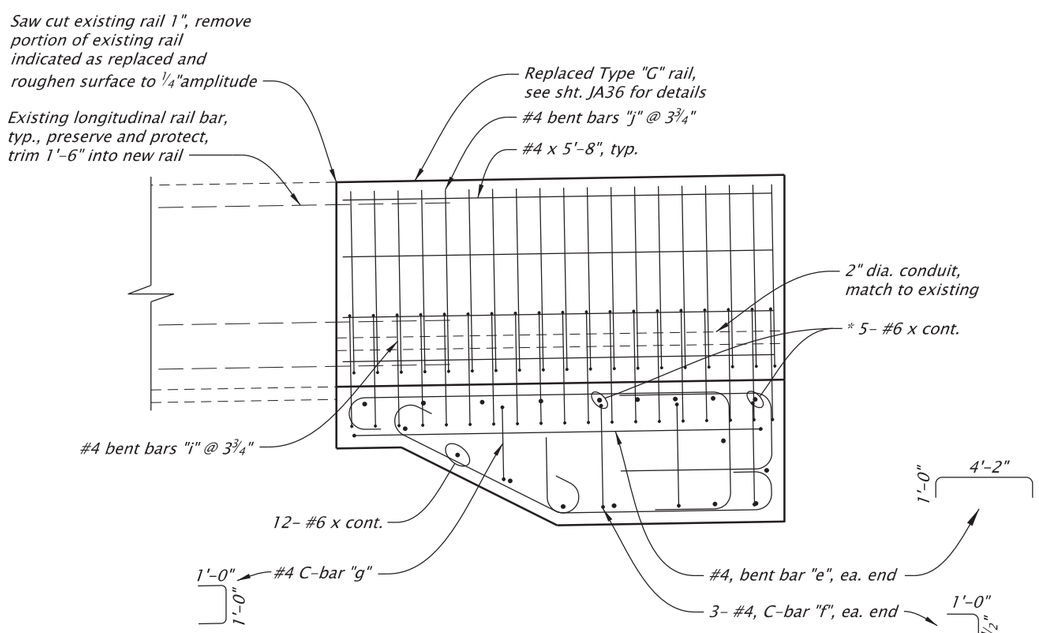

VIEW 1-1

Scale: 1/2"=1'-0"

NOTE:
For location of View 1-1, see sht. JA35.

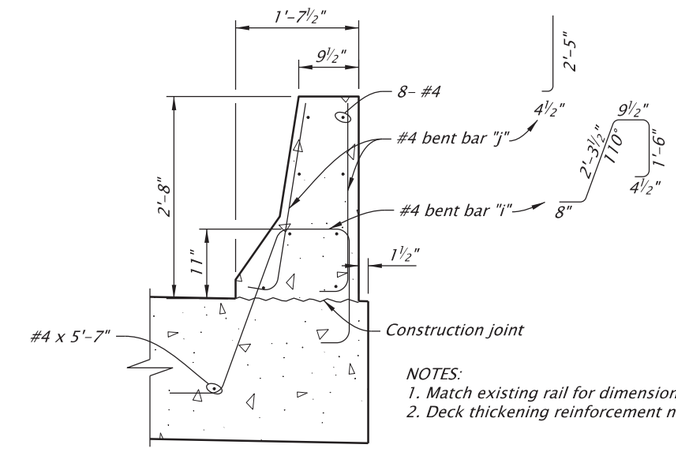

NOTES:
1. Match existing rail for dimensions not shown.
2. Deck thickening reinforcement not shown for clarity.

TYPE "G" RAIL DETAIL

Scale: 1/2"=1'-0"

NOTES:
1. For the pedestrian rail curb reinforcement, see sht. JA121.
2. Field verify all dimensions and elevations prior to submitting Working Drawings and prior to ordering or fabricating any materials. See sht. J02 for more details.

SCALE WARNING

IF THIS SCALE LINE DOES NOT MEASURE ONE INCH, THEN DRAWING IS NOT TO SCALE

For accompanied by drawings, see sht. JA01

STRUCTURE NO.	00123K
BDS DWG NO.	113780
CALC. BOOK	7997
HWY: 030	M.P.: 25.88
COUNTY	Marion/Polk
DATE	2/26

REGISTERED PROFESSIONAL ENGINEER 16588 OREGON JULY 20, 1993 ERIC EDWARD BONN

Digitally Signed 2026.02.12 12:24:30-08'00'

EXPIRES: 12/31/2027

FINAL ELECTRONIC DOCUMENT AVAILABLE UPON REQUEST

DOWL
3500 Chad Drive, Suite 200
Eugene, Oregon 97408
541-683-6090
WWW.DOWL.COM

WILLAMETTE RIVER, HWY 30 EB (CENTER ST)

OR22: CENTER ST BRIDGE (PHASE 1) PROJECT
WILLAMINA - SALEM HIGHWAY
MARION & POLK COUNTIES

Designer: Eric Bonn, PE | Reviewer: Bob Goodrich, PE
Drafter: Jake Williams | Checker: Mike McNulty, PE

SPAN 14 DETAILS - DECK THICKENING

SHEET NO. JA36

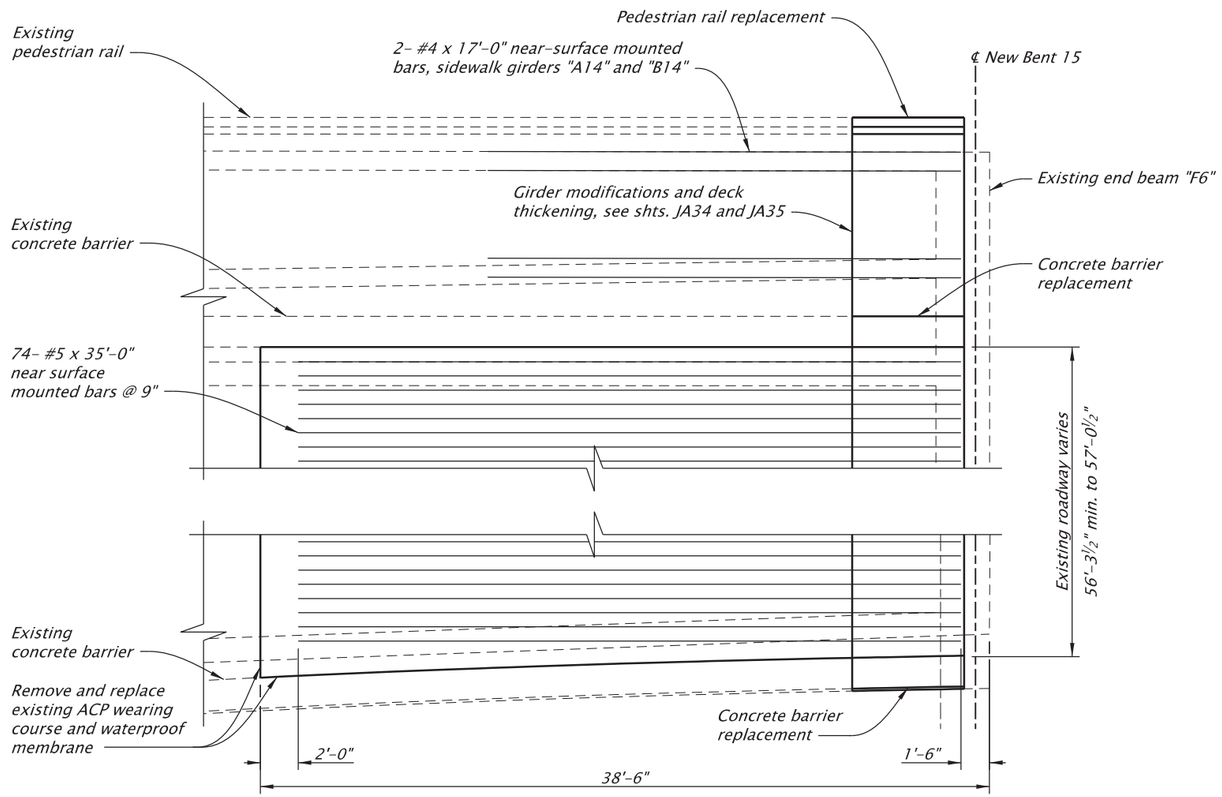

Note:
Span 15 not shown for clarity.

NEAR SURFACE MOUNTED BAR PLAN LAYOUT

Scale: 1/8"=1'-0"

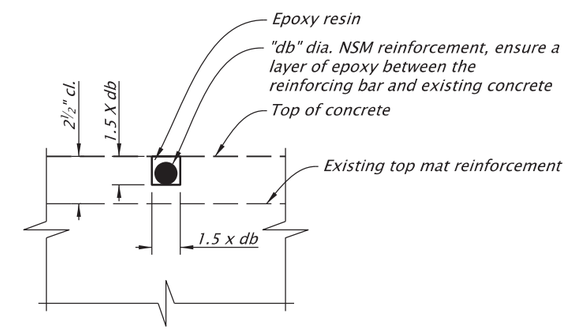

NEAR SURFACE MOUNTED BAR DETAIL

No Scale

For accompanied by drawings, see sht. JA01

NOTES:
1. *Trim near surface mounted bars as necessary to install expansion joint.*
2. *Locate existing reinforcement for potential conflicts. Adjust grooves ±3" to avoid conflicts.*
3. *Field verify all dimensions and elevations prior to submitting Working Drawings and prior to ordering or fabricating any materials. See sht. J02 for more details.*

SCALE WARNING
IF THIS SCALE LINE DOES NOT MEASURE ONE INCH, THEN DRAWING IS NOT TO SCALE

STRUCTURE NO.	00123K
BDS DWG NO.	113781
CALC. BOOK	7997
HWY: 030 M.P.: 25.88	
COUNTY	Marion/Polk
DATE	2/26

REGISTERED PROFESSIONAL ENGINEER 16588 OREGON JULY 20, 1993 ERIC EDWARD BONN
Digitally Signed 2026.02.12 12:24:42-08'00'
EXPIRES: 12/31/2027
FINAL ELECTRONIC DOCUMENT AVAILABLE UPON REQUEST

DOWL
3500 Chad Drive, Suite 200
Eugene, Oregon 97408
541-683-6090
WWW.DOWL.COM

WILLAMETTE RIVER, HWY 30 EB (CENTER ST)

OR22: CENTER ST BRIDGE (PHASE 1) PROJECT
WILLAMINA - SALEM HIGHWAY
MARION & POLK COUNTIES

Designer: Eric Bonn, PE
Reviewer: Bob Goodrich, PE
Drafter: Jake Williams
Checker: Mike McNulty, PE

SPAN 14 DETAILS - NEAR SURFACE MOUNTED BARS

SHEET NO. JA37

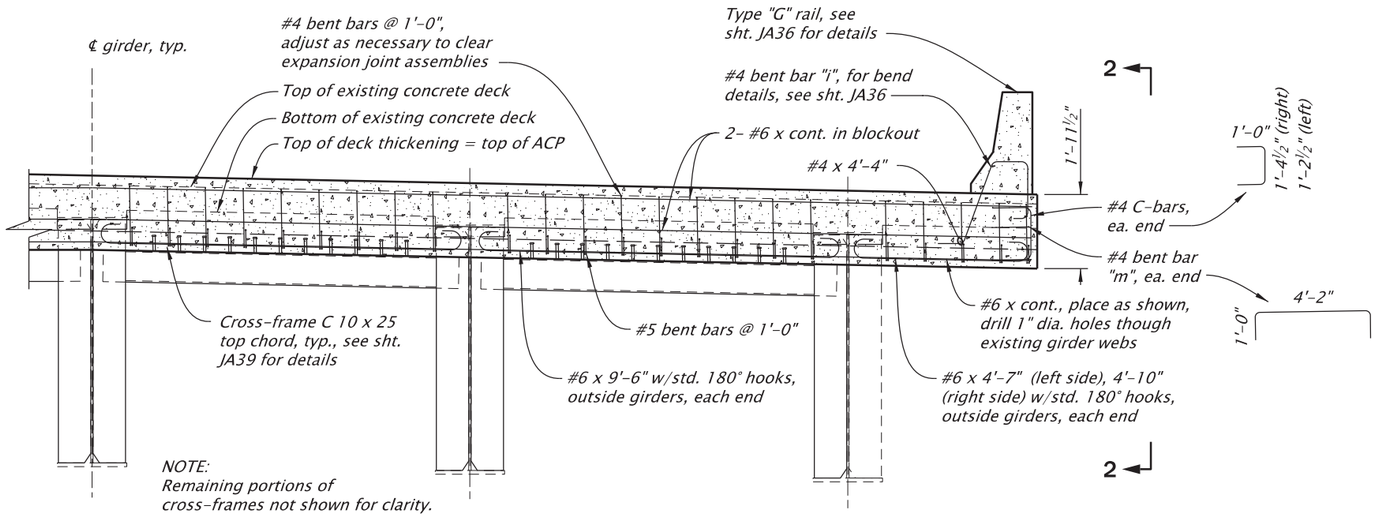

ELEVATION

Scale: 1/4"=1'-0"

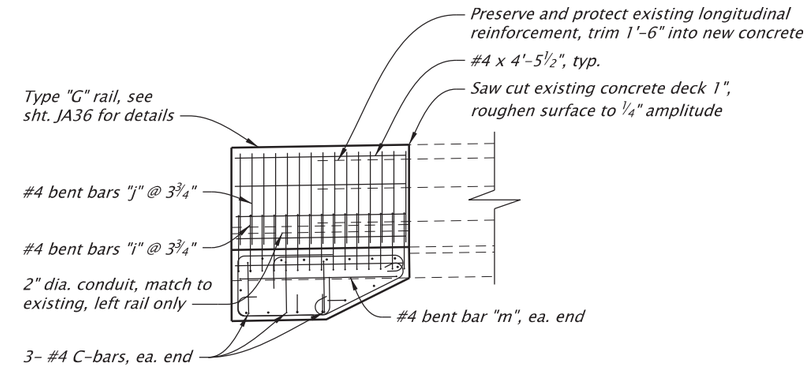

VIEW 2-2

Scale: 1/4"=1'-0"

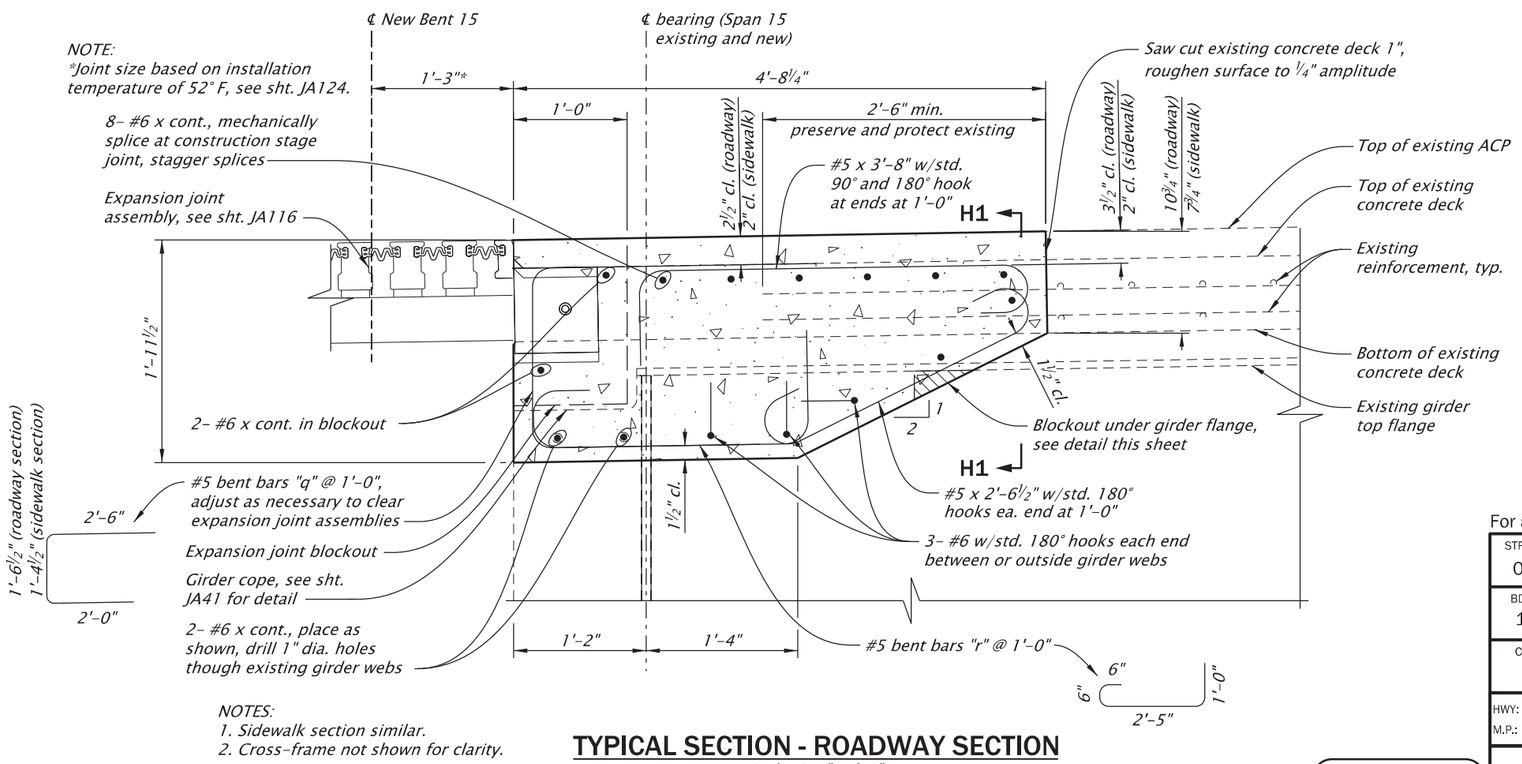

NOTES:
1. Sidewalk section similar.
2. Cross-frame not shown for clarity.

TYPICAL SECTION - ROADWAY SECTION

Scale: 3/4"=1'-0"

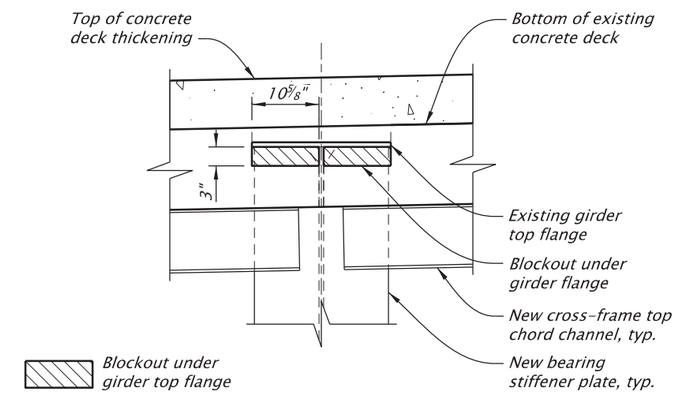

SECTION H1-H1 - BLOCKOUT UNDER FLANGE DETAIL

Scale: 1/2"=1'-0"

NOTES:
1. For pedestrian rail curb reinforcement, see sht. JA121.
2. Field verify all dimensions and elevations prior to submitting Working Drawings and prior to ordering or fabricating any materials. See sht. J02 for more details.

SCALE WARNING
IF THIS SCALE LINE DOES NOT MEASURE ONE INCH, THEN DRAWING IS NOT TO SCALE

For accompanied by drawings, see sht. JA01

STRUCTURE NO.	00123K
BDS DWG NO.	113782
CALC. BOOK	7997
HWY: 030	M.P.: 25.88
COUNTY	Marion/Polk
DATE	2/26

REGISTERED PROFESSIONAL ENGINEER 16588 OREGON JULY 20, 1993 ERIC EDWARD BONN
Digitally Signed 2026.02.12 12:24:58-08'00'
EXPIRES: 12/31/2027

FINAL ELECTRONIC DOCUMENT AVAILABLE UPON REQUEST

DOWL
3500 Chad Drive, Suite 200
Eugene, Oregon 97408
541-683-6090
WWW.DOWL.COM

OREGON DEPARTMENT OF TRANSPORTATION

WILLAMETTE RIVER, HWY 30 EB (CENTER ST)

OR22: CENTER ST BRIDGE (PHASE 1) PROJECT
WILLAMINA - SALEM HIGHWAY
MARION & POLK COUNTIES

Designer: Eric Bonn, PE
Reviewer: Bob Goodrich, PE
Drafter: Jake Williams
Checker: Mike McNulty, PE

SPAN 15 DETAILS - BENT 15 DECK THICKENING

SHEET NO. JA38

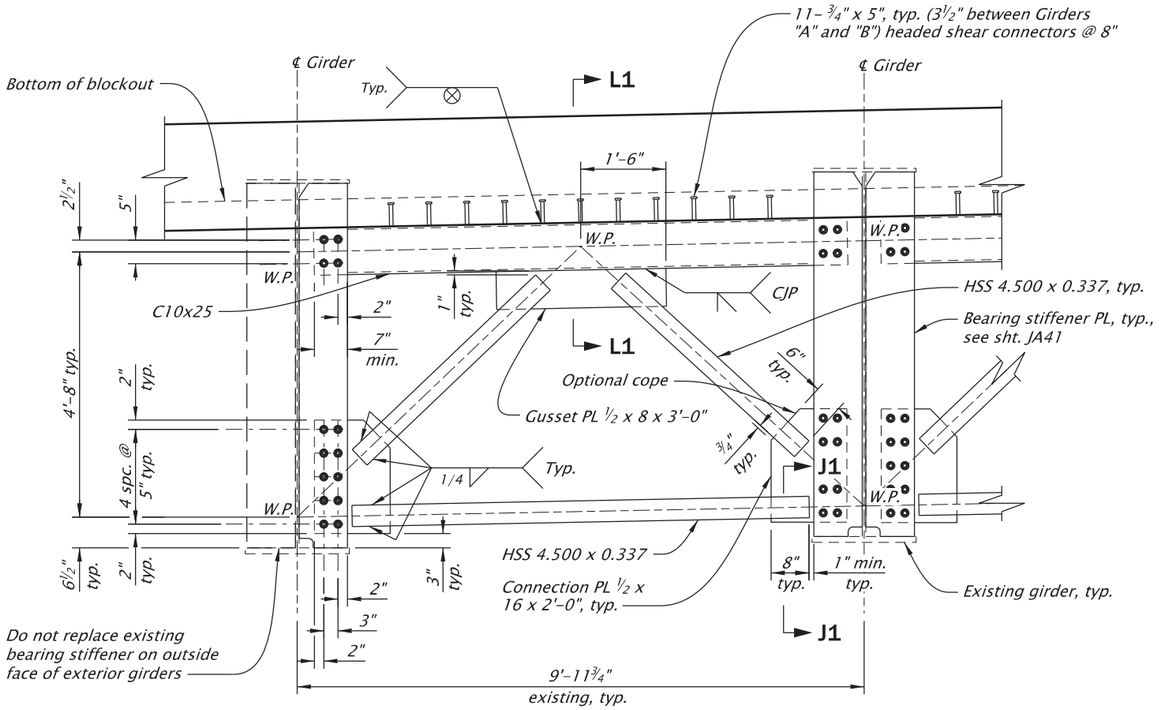

NOTES:
1. Stop welds 1/4" from end of member or edge of plate.
2. Chamfer ends of HSS members as necessary to maintain minimum connection lengths.
3. Provide 7/8" dia. high-strength bolts.

TYPICAL CROSS-FRAME DETAILS

Scale: 3/8"=1'-0"

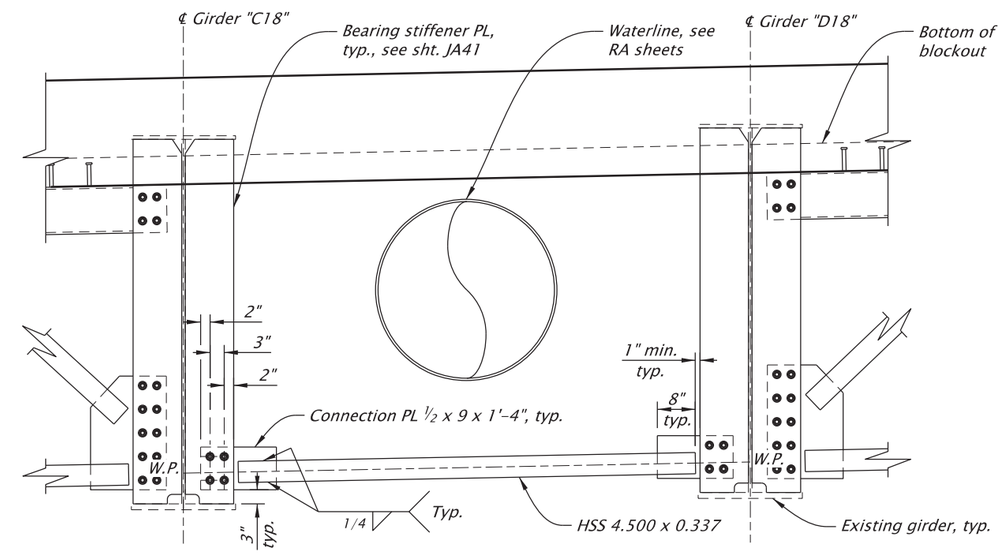

NOTE:
See Typical Cross-Frame Details for typical notes.

CROSS-FRAME DETAILS IN GIRDER BAY C-D (BENT 19 ONLY)

Scale: 3/8"=1'-0"

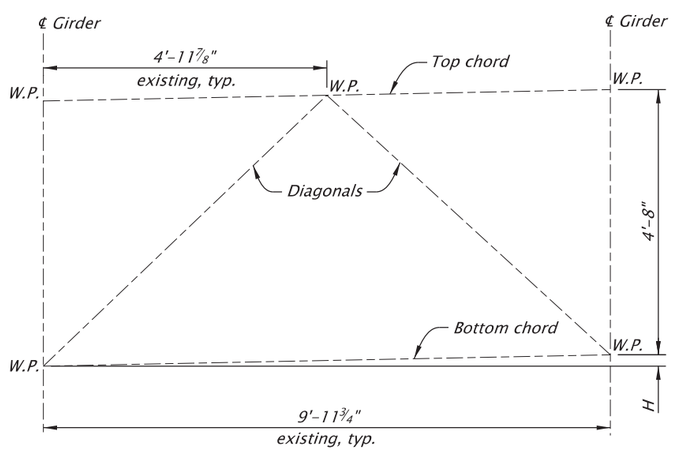

CROSS-FRAME LAYOUT

Scale: 3/8"=1'-0"

NOTE:
Field verify all dimensions and elevations prior to submitting Working Drawings and prior to ordering to fabricating any materials. See sht. J02 for more details.

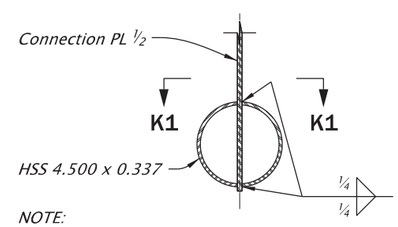

NOTE:
Permanent bottom chord connection shown, other connections similar.

SECTION J1-J1

Scale: 3/4"=1'-0"

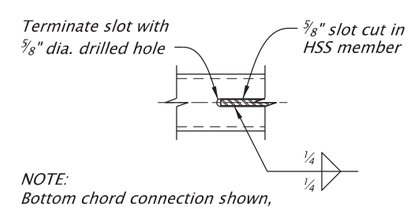

NOTE:
Bottom chord connection shown, other connections similar.

SECTION K1-K1

Scale: 1"=1'-0"

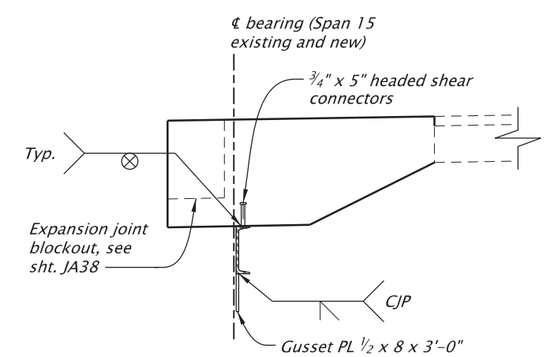

(Bent 15 shown, Bent 19 similar)

SECTION L1-L1

Scale: 3/8"=1'-0"

NOTE:
Dimension "H" varies.

For accompanied by drawings, see sht. JA01

STRUCTURE NO.	00123K
BDS DWG NO.	113783
CALC. BOOK	7997
HWY: 030 M.P.: 25.88	
COUNTY	Marion/Polk
DATE	2/26

SCALE WARNING
IF THIS SCALE LINE DOES NOT MEASURE ONE INCH, THEN DRAWING IS NOT TO SCALE

REGISTERED PROFESSIONAL ENGINEER 16588 OREGON JULY 20, 1993 ERIC EDWARD BONN
Digitally Signed 2026.02.12 12:25:10-08'00'
EXPIRES: 12/31/2027

FINAL ELECTRONIC DOCUMENT AVAILABLE UPON REQUEST

DOWL
3500 Chad Drive, Suite 200
Eugene, Oregon 97408
541-683-6090
WWW.DOWL.COM

WILLAMETTE RIVER, HWY 30 EB (CENTER ST)

OR22: CENTER ST BRIDGE (PHASE 1) PROJECT
WILLAMINA - SALEM HIGHWAY
MARION & POLK COUNTIES

Designer: Eric Bonn, PE
Reviewer: Bob Goodrich, PE
Drafter: Jake Williams
Checker: Mike McNulty, PE

CROSS-FRAME DETAILS BENT 15 AND 19

SHEET NO. JA39

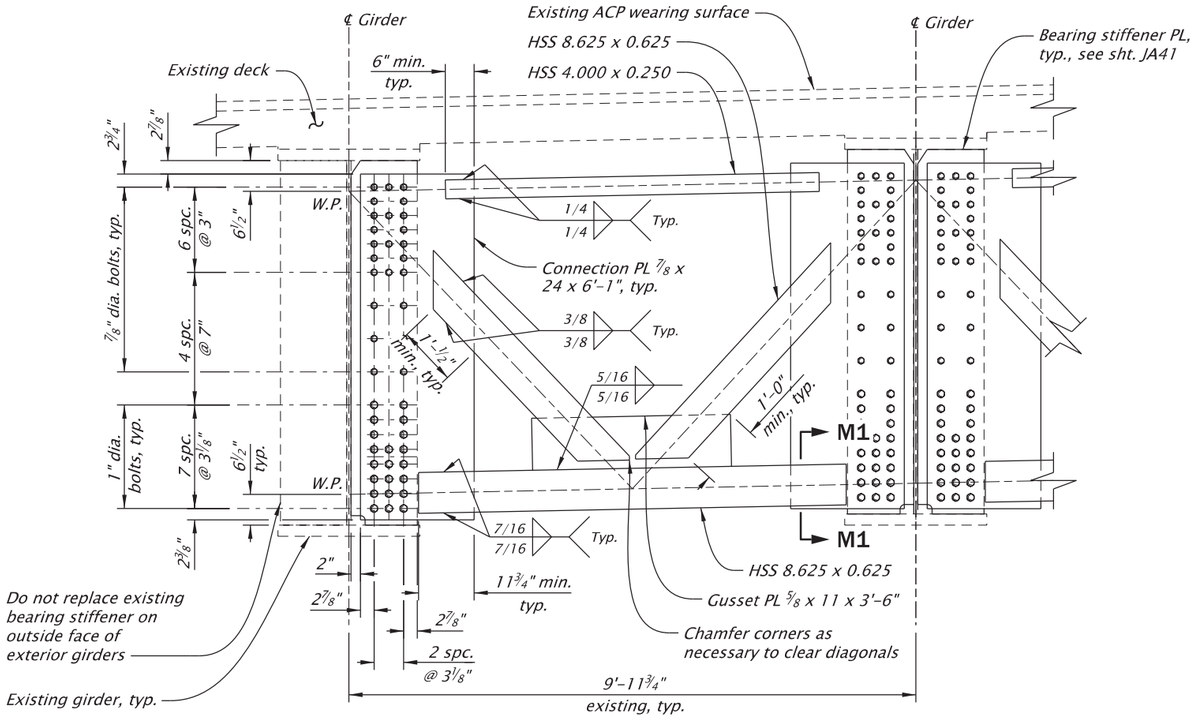

NOTES:

1. Stop welds ¼" from end of member or edge of plate.
2. Chamfer ends of HSS members as necessary to maintain minimum connection lengths.
3. Provide ⅞" dia. high-strength bolts.

TYPICAL CROSS-FRAME DETAILS

Scale: 3/8"=1'-0"

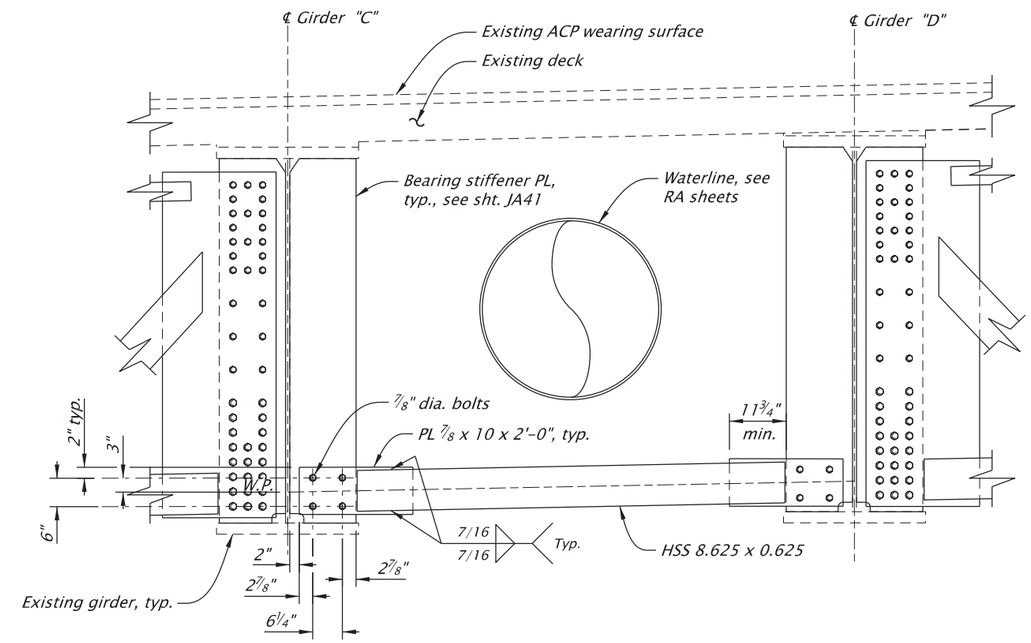

CROSS-FRAME DETAILS IN GIRDER BAY C-D

Scale: 3/8"=1'-0"

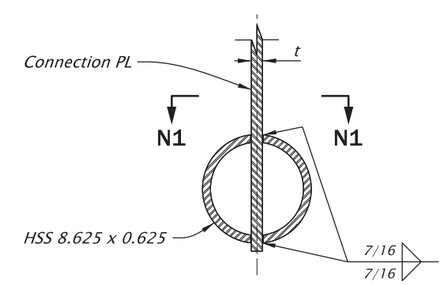

NOTE:
Bottom chord connection shown, other connections similar.

SECTION M1-M1

Scale: 1"=1'-0"

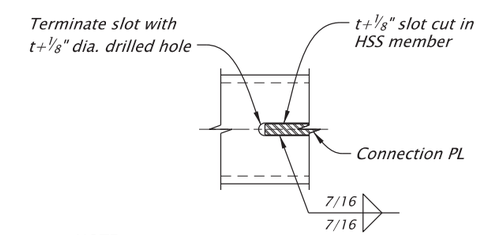

NOTE:
Bottom chord connection shown, other connections similar.

SECTION N1-N1

Scale: 1"=1'-0"

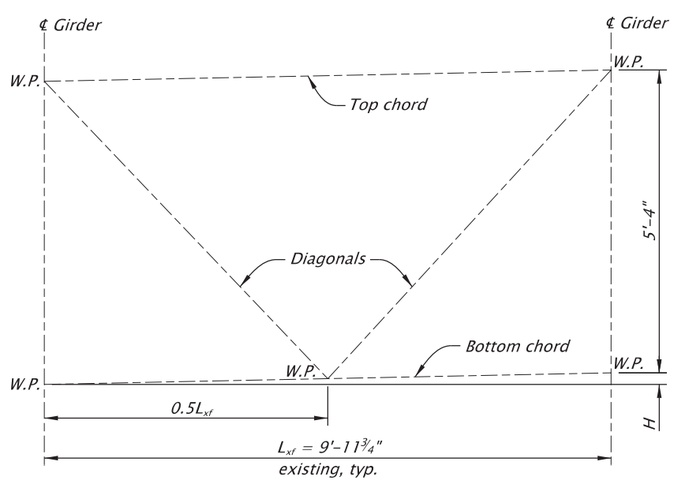

NOTES:
Dimension "H" varies

NOTE:
Field verify all dimensions and elevations prior to submitting Working Drawings and prior to ordering or fabricating any materials. See sht. J02 for more details.

CROSS-FRAME LAYOUT

Scale: 3/8"=1'-0"

For accompanied by drawings, see sht. JA01

STRUCTURE NO.	00123K
BDS DWG NO.	113784
CALC. BOOK	7997
HWY: 030	M.P.: 25.88
COUNTY	Marion/Polk
DATE	2/26

SCALE WARNING
IF THIS SCALE LINE DOES NOT MEASURE ONE INCH, THEN DRAWING IS NOT TO SCALE

REGISTERED PROFESSIONAL ENGINEER 16588 OREGON JULY 20, 1993 ERIC EDWARD BONN
Digitally Signed 2026.02.12 12:25:21-08'00'
EXPIRES: 12/31/2027

FINAL ELECTRONIC DOCUMENT AVAILABLE UPON REQUEST

DOWL
3500 Chad Drive, Suite 200
Eugene, Oregon 97408
541-683-6090
WWW.DOWL.COM

OREGON DEPARTMENT OF TRANSPORTATION

WILLAMETTE RIVER, HWY 30 EB (CENTER ST)

OR22: CENTER ST BRIDGE (PHASE 1) PROJECT
WILLAMINA - SALEM HIGHWAY
MARION & POLK COUNTIES

Designer: Eric Bonn, PE
Reviewer: Bob Goodrich, PE
Drafter: Jake Williams
Checker: Mike McNulty, PE

CROSS-FRAME DETAILS BENTS 16-18

SHEET NO. JA40

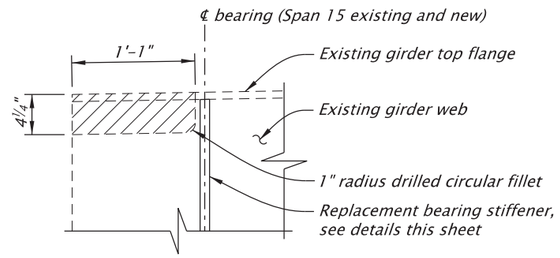

BENT 15

Removal limits

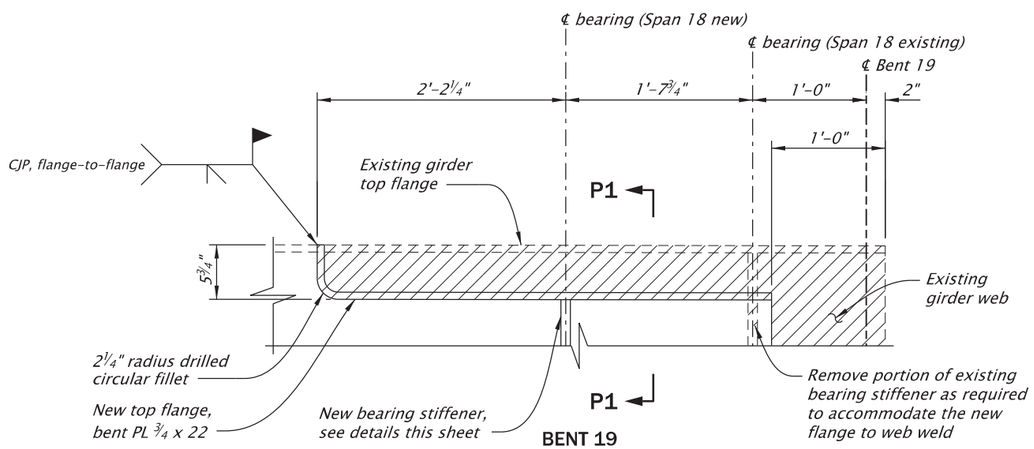

BENT 19

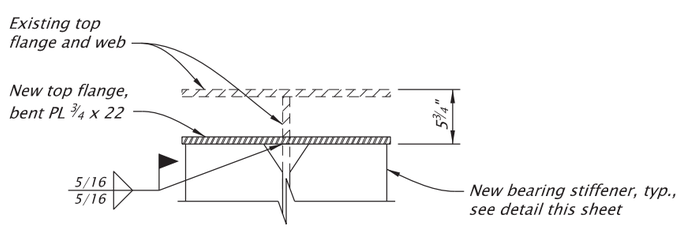

SECTION P1-P1

EXISTING GIRDER COPING DETAILS

Scale: 3/4"=1'-0"

NOTES:

1. Cross-frame connection bolt holes not shown for clarity.
2. Retain existing exterior bearing stiffener on exterior girders at Bents 15-18.
3. Remove all other existing bearing stiffeners at Bents 15-18. Do not damage existing girder flanges or webs. Grind all existing welds smooth with the face of the girder web and flanges.
4. Seal all weld terminations, unwelded portions of welded connections, and edges of plates in bolted connections to cross-frames with structural steel caulking from ODOT QPL.
5. Field verify all dimensions and elevations prior to submitting Working Drawings and prior to ordering or fabricating any materials. See sht. J02 for more details.

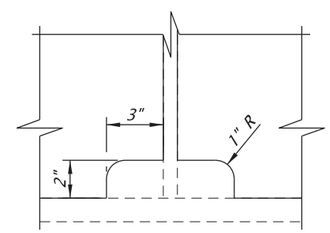

DETAIL A

No Scale

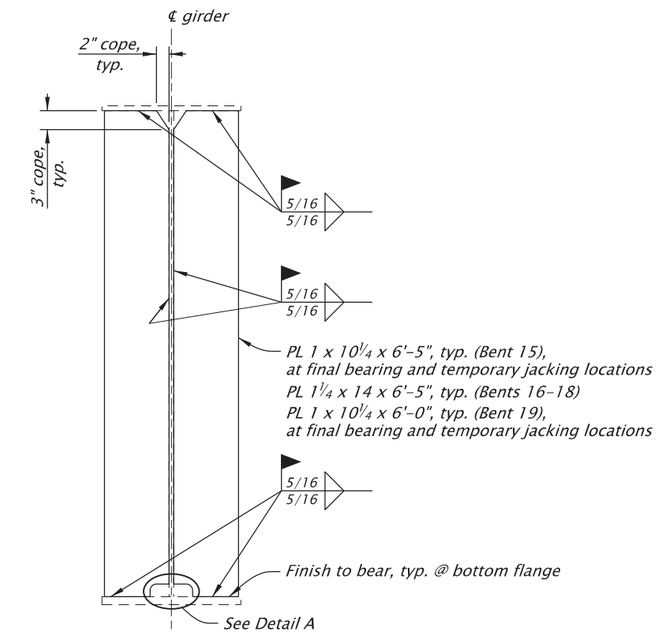

BEARING STIFFENERS

No Scale

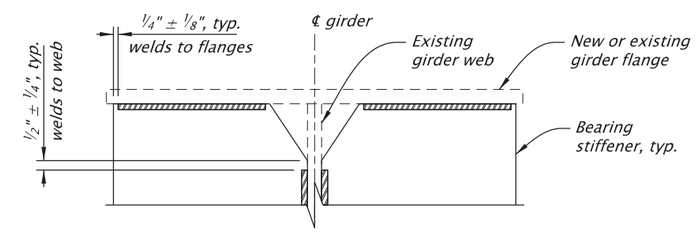

WELD TERMINATION DETAIL

No Scale

For accompanied by drawings, see sht. JA01

STRUCTURE NO.	00123K
BDS DWG NO.	113785
CALC. BOOK	7997
HWY: 030 M.P.: 25.88	
COUNTY	Marion/Polk
DATE	2/26

SCALE WARNING
IF THIS SCALE LINE DOES NOT MEASURE ONE INCH, THEN DRAWING IS NOT TO SCALE

REGISTERED PROFESSIONAL ENGINEER 16588 OREGON JULY 20, 1993 ERIC EDWARD BONN
Digitally Signed 2026.02.12 12:25:33-08'00'
EXPIRES: 12/31/2027

FINAL ELECTRONIC DOCUMENT AVAILABLE UPON REQUEST

DOWL
3500 Chad Drive, Suite 200
Eugene, Oregon 97408
541-683-6090
WWW.DOWL.COM

WILLAMETTE RIVER, HWY 30 EB (CENTER ST)

OR22: CENTER ST BRIDGE (PHASE 1) PROJECT
WILLAMINA - SALEM HIGHWAY
MARION & POLK COUNTIES

Designer: Eric Bonn, PE
Reviewer: Bob Goodrich, PE
Drafter: Jake Williams
Checker: Mike McNulty, PE

MISCELLANEOUS STEEL DETAILS

SHEET NO. JA41

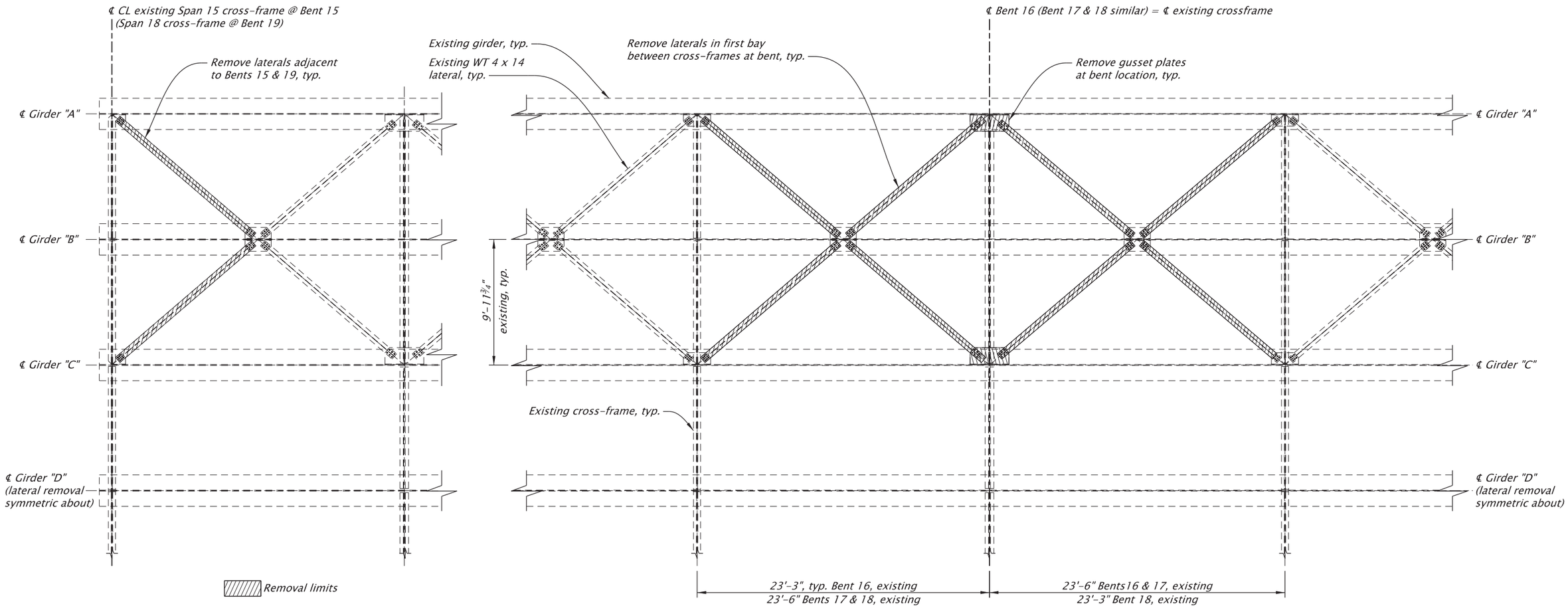

LATERAL BRACING REMOVAL

Scale: 1/8"=1'-0"

For accompanied by drawings, see sht. JA01

NOTES:

1. *Remove lateral members by unbolting each end. Install high strength bolts in holes in web. Do not reinstall bolts in gusset plates to remain.*
2. *Field verify all dimensions and elevations prior to submitting Working Drawings and prior to ordering or fabricating any materials. See sht. J02 for more details.*

SCALE WARNING

IF THIS SCALE LINE DOES NOT MEASURE ONE INCH, THEN DRAWING IS NOT TO SCALE

STRUCTURE NO.	00123K
BDS DWG NO.	113786
CALC. BOOK	7997
HWY: 030	M.P.: 25.88
COUNTY	Marion/Polk
DATE	2/26

REGISTERED PROFESSIONAL ENGINEER
16588
Digitally Signed 2026.02.12 12:25:46-08'00'
OREGON
JULY 20, 1993
ERIC EDWARD BONN
EXPIRES: 12/31/2027

FINAL ELECTRONIC DOCUMENT AVAILABLE UPON REQUEST

DOWL
3500 Chad Drive, Suite 200
Eugene, Oregon 97408
541-683-6090
WWW.DOWL.COM

OREGON DEPARTMENT OF TRANSPORTATION

WILLAMETTE RIVER, HWY 30 EB (CENTER ST)

OR22: CENTER ST BRIDGE (PHASE 1) PROJECT
WILLAMINA - SALEM HIGHWAY
MARION & POLK COUNTIES

Designer: Eric Bonn, PE
Reviewer: Bob Goodrich, PE
Drafter: Jake Williams
Checker: Mike McNulty, PE

LATERAL BRACING REMOVAL

SHEET NO. JA42

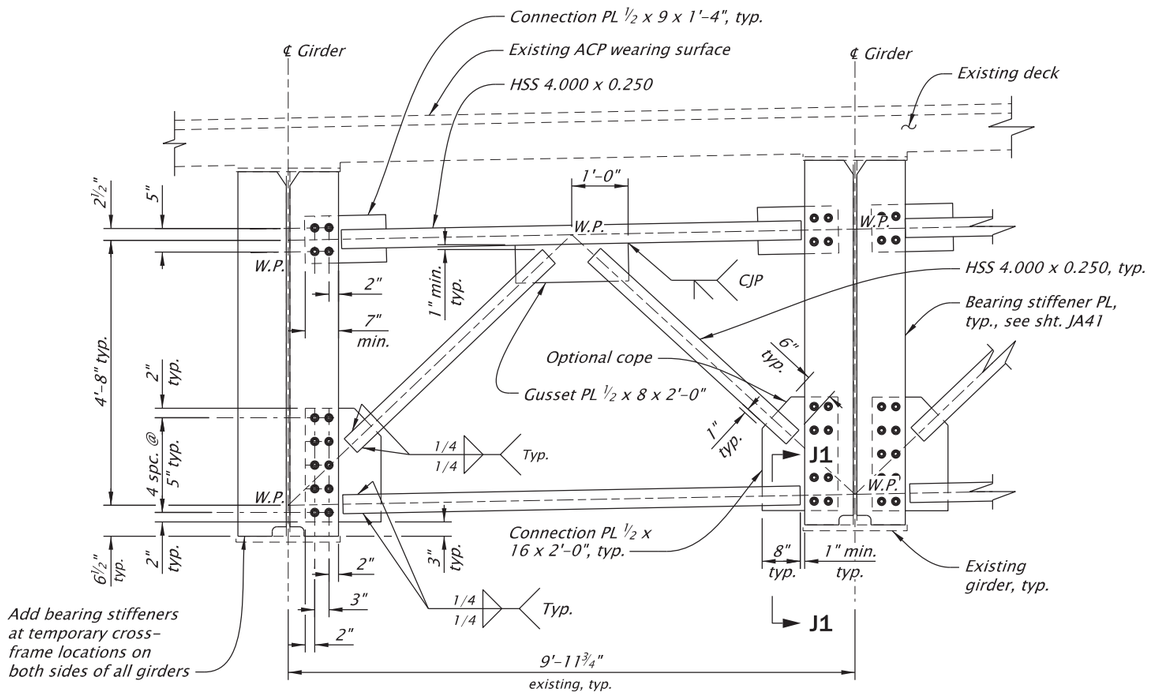

NOTES:
1. Stop welds ¼" from end of member or edge of plate.
2. Chamfer ends of HSS members as necessary to maintain minimum connection lengths.
3. Provide ⅞" dia. high-strength bolts.

TYPICAL CROSS-FRAME DETAILS

Scale: 3/8"=1'-0"

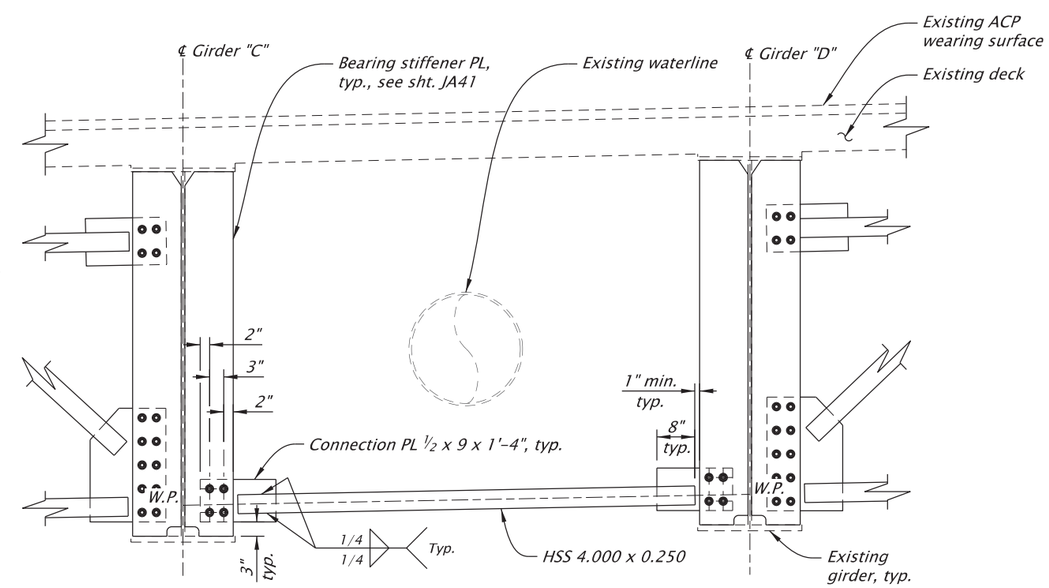

NOTE:
See Typical Cross-Frame Details for typical notes.

CROSS-FRAME DETAILS IN GIRDER BAY C-D

Scale: 3/8"=1'-0"

NOTES:
1. For Section J1-J1, see sht. JA39.
2. For cross-frame layout detail, see sht. JA39.
3. For location and timing of temporary cross-frames, see shts. JA05 and JA06.
4. Field verify all dimensions and elevations prior to submitting Working Drawings and prior to ordering or fabricating any materials. See sht. J02 for more details.

For accompanied by drawings, see sht. JA01

SCALE WARNING
IF THIS SCALE LINE DOES NOT MEASURE ONE INCH, THEN DRAWING IS NOT TO SCALE

STRUCTURE NO.	00123K
BDS DWG NO.	113787
CALC. BOOK	7997
HWY: 030 M.P.: 25.88	
COUNTY	Marion/Polk
DATE	2/26

REGISTERED PROFESSIONAL ENGINEER 16588 OREGON JULY 20, 1993 ERIC EDWARD BONN
Digitally Signed 2026.02.12 12:26:00-08'00'
EXPIRES: 12/31/2027

FINAL ELECTRONIC DOCUMENT AVAILABLE UPON REQUEST

DOWL
3500 Chad Drive, Suite 200
Eugene, Oregon 97408
541-683-6090
WWW.DOWL.COM

WILLAMETTE RIVER, HWY 30 EB (CENTER ST)

OR22: CENTER ST BRIDGE (PHASE 1) PROJECT
WILLAMINA - SALEM HIGHWAY
MARION & POLK COUNTIES

Designer: Eric Bonn, PE
Reviewer: Bob Goodrich, PE
Drafter: Jake Williams
Checker: Mike McNulty, PE

TEMPORARY CROSS-FRAME DETAILS

SHEET NO. JA43

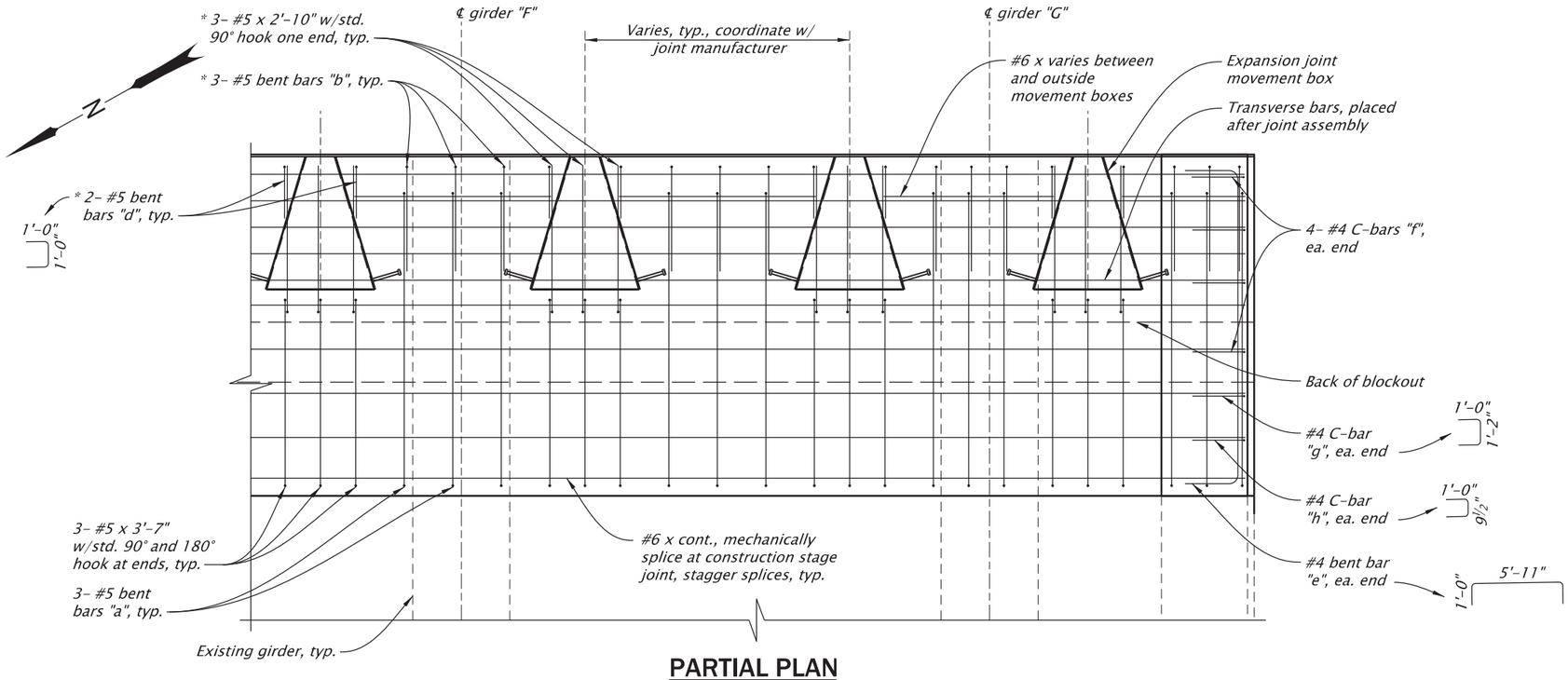

PARTIAL PLAN

Scale: 3/8"=1'-0"

NOTE:
* Place after expansion joint is installed in blockouts

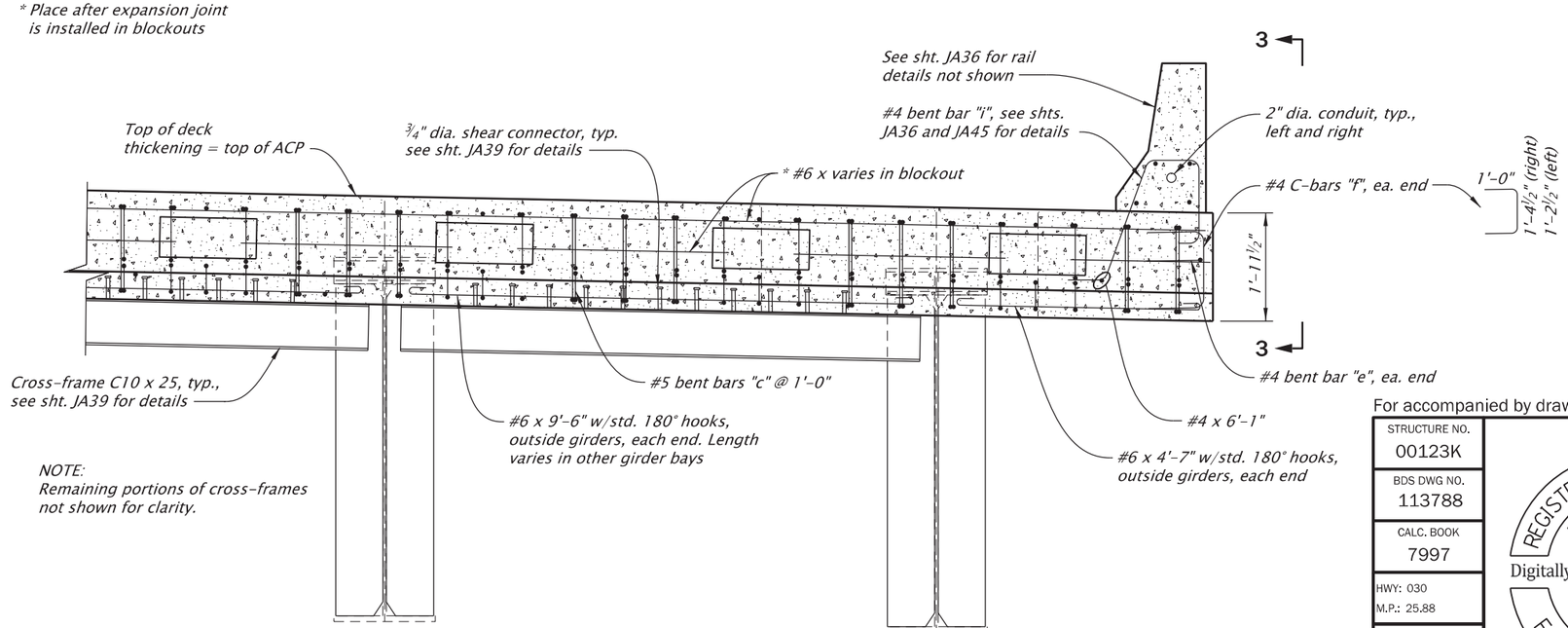

NOTE:
Remaining portions of cross-frames not shown for clarity.

PARTIAL ELEVATION

Scale: 3/8"=1'-0"

NOTES:
1. For the pedestrian rail curb reinforcement, see sht. JA121.
2. For View 3-3, see sht. JA45.
3. Field verify all dimensions and elevations prior to submitting Working Drawings and prior to ordering or fabricating any materials. See sht. J02 for more details.

For accompanied by drawings, see sht. JA01

SCALE WARNING
IF THIS SCALE LINE DOES NOT MEASURE ONE INCH, THEN DRAWING IS NOT TO SCALE

STRUCTURE NO.	00123K
BDS DWG NO.	113788
CALC. BOOK	7997
HWY: 030 M.P.: 25.88	
COUNTY	Marion/Polk
DATE	2/26

REGISTERED PROFESSIONAL ENGINEER 16588 OREGON JULY 20, 1993 ERIC EDWARD BONN
Digitally Signed 2026.02.12 12:26:11-08'00'
EXPIRES: 12/31/2027

FINAL ELECTRONIC DOCUMENT AVAILABLE UPON REQUEST

DOWL
3500 Chad Drive, Suite 200
Eugene, Oregon 97408
541-683-6090
WWW.DOWL.COM

OREGON DEPARTMENT OF TRANSPORTATION

WILLAMETTE RIVER, HWY 30 EB (CENTER ST)

OR22: CENTER ST BRIDGE (PHASE 1) PROJECT
WILLAMINA - SALEM HIGHWAY
MARION & POLK COUNTIES

Designer: Eric Bonn, PE
Reviewer: Bob Goodrich, PE
Drafter: Jake Williams
Checker: Mike McNulty, PE

SPAN 18 DETAILS - BENT 19 DECK THICKENING -1

SHEET NO. JA44

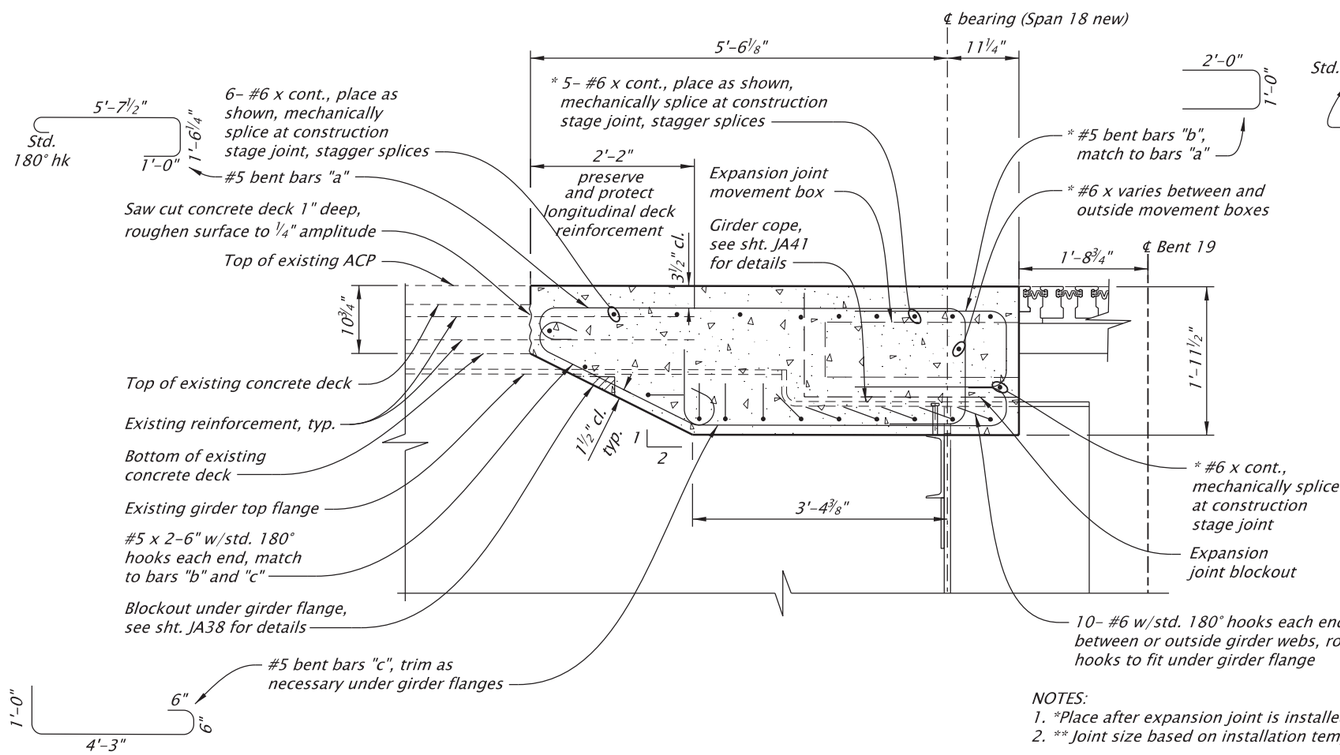

ROADWAY SECTION

Scale: 1/2"=1'-0"

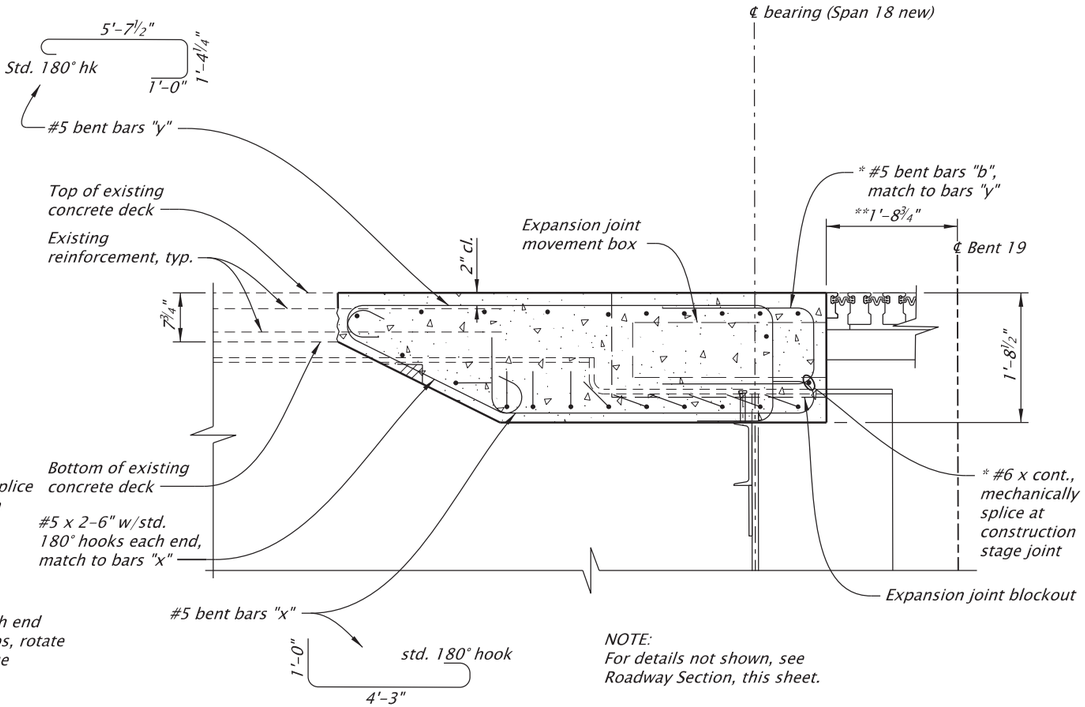

NOTE:
For details not shown, see Roadway Section, this sheet.

SIDEWALK SECTION

Scale: 1/2"=1'-0"

NOTES:
1. *Place after expansion joint is installed in blockouts.
2. **Joint size based on installation temperature of 52° F, see sht. JA124.

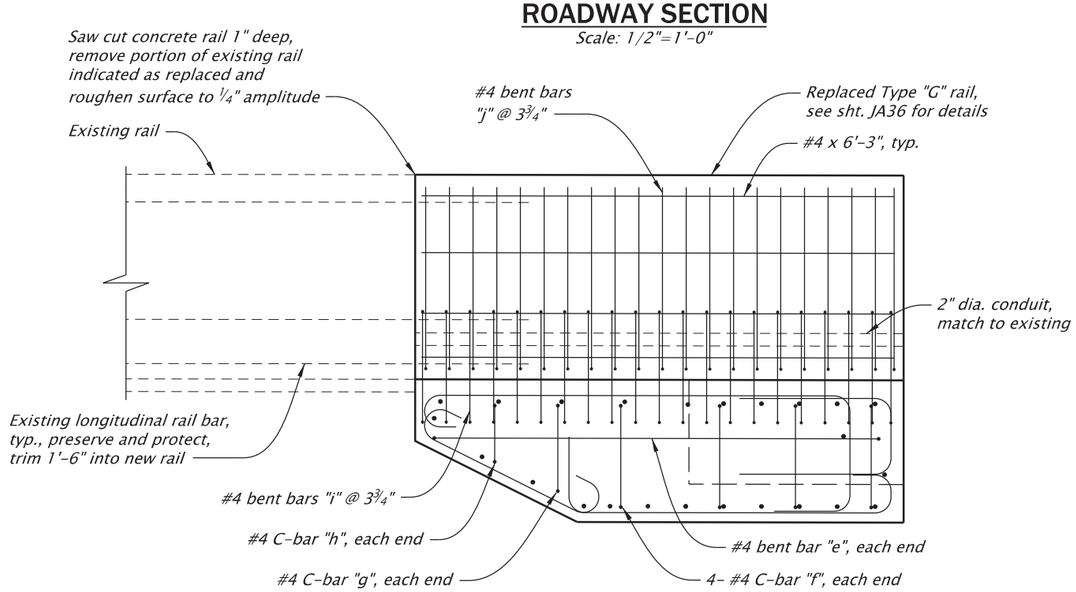

VIEW 3-3

Scale: 1/2"=1'-0"

NOTES:
1. See sht. JA44 for View 3-3 location.
2. See Bent Plan and Elevation sheets for construction control working points to establish bent centerlines.
3. Field verify all dimensions and elevations prior to submitting Working Drawings and prior to ordering or fabricating any materials. See sht. J02 for more details.

For accompanied by drawings, see sht. JA01

STRUCTURE NO.	00123K
BDS DWG NO.	113789
CALC. BOOK	7997
HWY: 030 M.P.: 25.88	
COUNTY	Marion/Polk
DATE	2/26

SCALE WARNING
IF THIS SCALE LINE DOES NOT MEASURE ONE INCH, THEN DRAWING IS NOT TO SCALE

REGISTERED PROFESSIONAL ENGINEER 16588 OREGON JULY 20, 1993 ERIC EDWARD BONN
Digitally Signed 2026.02.12 12:26:24-08'00'
EXPIRES: 12/31/2027

FINAL ELECTRONIC DOCUMENT AVAILABLE UPON REQUEST

DOWL
3500 Chad Drive, Suite 200
Eugene, Oregon 97408
541-683-6090
WWW.DOWL.COM

WILLAMETTE RIVER, HWY 30 EB (CENTER ST)

OR22: CENTER ST BRIDGE (PHASE 1) PROJECT
WILLAMINA - SALEM HIGHWAY
MARION & POLK COUNTIES

Designer: Eric Bonn, PE
Reviewer: Bob Goodrich, PE
Drafter: Jake Williams
Checker: Mike McNulty, PE

SPAN 18 DETAILS - BENT 19 DECK THICKENING - 2

SHEET NO. JA45

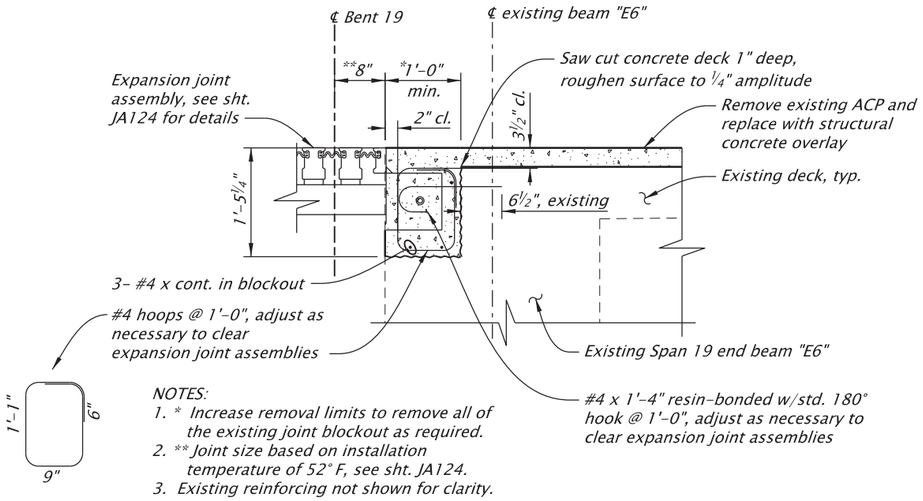

NOTES:
1. * Increase removal limits to remove all of the existing joint blockout as required.
2. ** Joint size based on installation temperature of 52° F, see sht. JA124.
3. Existing reinforcing not shown for clarity.

ROADWAY SECTION

Scale: 1/2"=1'-0"

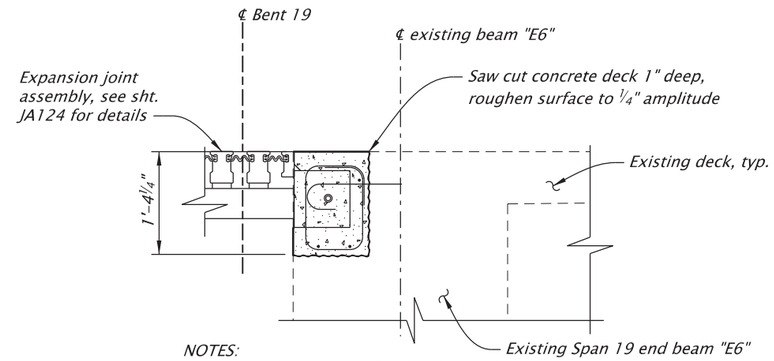

NOTES:
1. See Roadway Section for details not shown.
2. Existing reinforcing not shown for clarity.

SIDEWALK SECTION

Scale: 1/2"=1'-0"

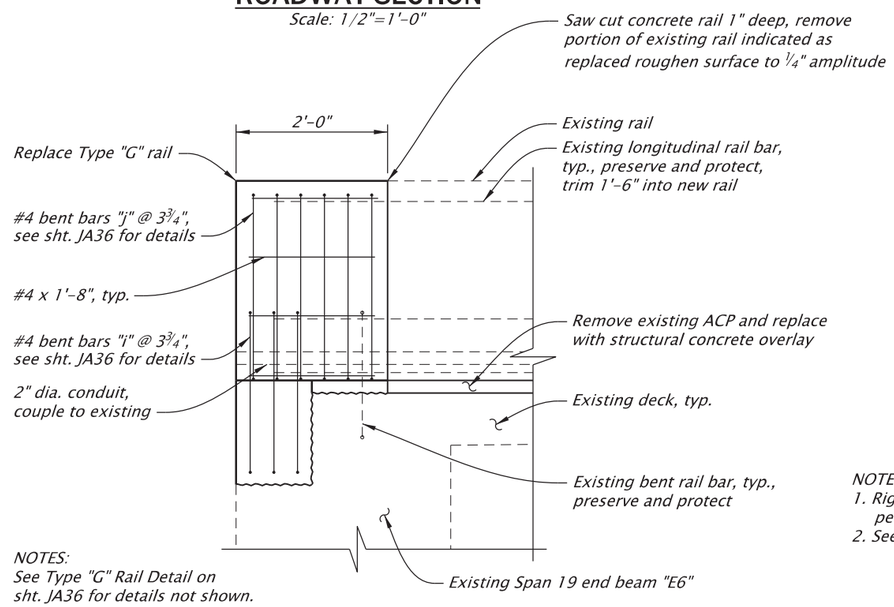

NOTES:
See Type "G" Rail Detail on sht. JA36 for details not shown.

LEFT BRIDGE RAIL ELEVATION (ROADWAY RAIL FACE)

Scale: 1/2"=1'-0"

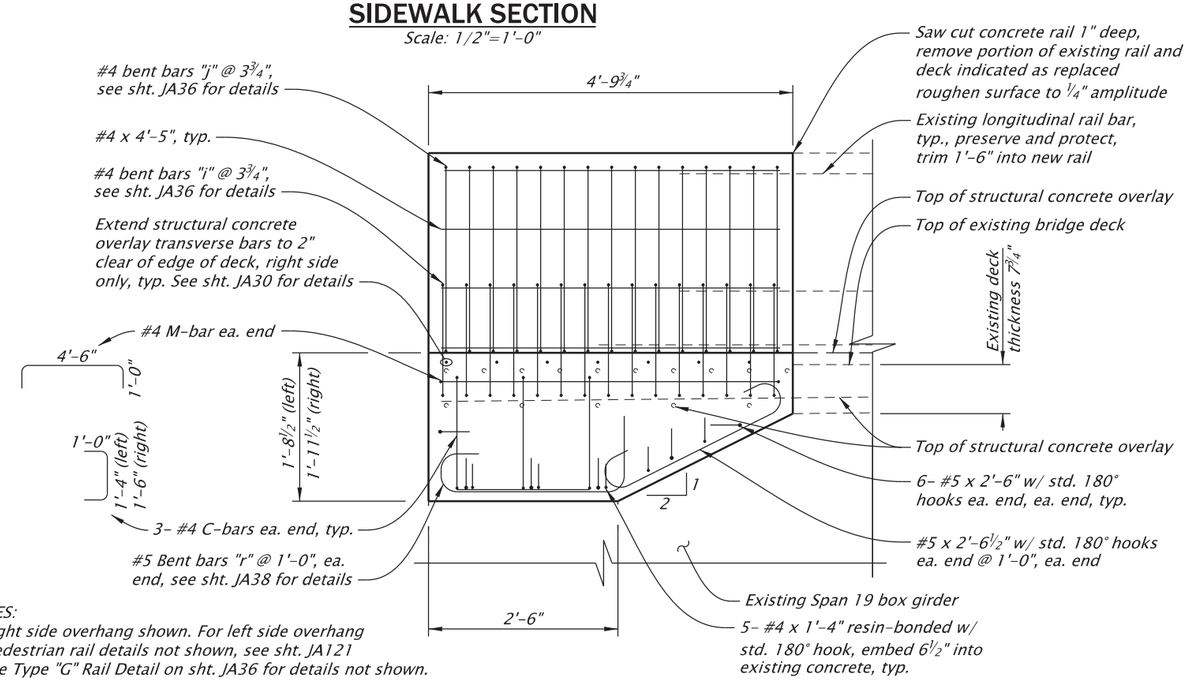

NOTES:
1. Right side overhang shown. For left side overhang pedestrian rail details not shown, see sht. JA121
2. See Type "G" Rail Detail on sht. JA36 for details not shown.

RIGHT BRIDGE RAIL ELEVATION (EXTERIOR RAIL FACE)

Scale: 1/2"=1'-0"

NOTE:
1. For pedestrian rail details not shown, see sht. JA121 for details.
2. See Bent Plan and Elevation sheets for construction control working points to establish bent centerlines.
3. Field verify all dimensions and elevations prior to submitting Working Drawings and prior to ordering or fabricating any materials. See sht. J02 for more details.

For accompanied by drawings, see sht. JA01

SCALE WARNING
IF THIS SCALE LINE DOES NOT MEASURE ONE INCH, THEN DRAWING IS NOT TO SCALE

STRUCTURE NO.	00123K
BDS DWG NO.	113790
CALC. BOOK	7997
HWY: 030 M.P.: 25.88	
COUNTY	Marion/Polk
DATE	6/26

REGISTERED PROFESSIONAL ENGINEER 85555PE
Digitally Signed 2026.06.30 12:31:51-07'00'
OREGON DEC. 21, 2011 MICHAEL G. McNULTY
EXPIRES: 12/31/2026
FINAL ELECTRONIC DOCUMENT AVAILABLE UPON REQUEST

DOWL
3500 Chad Drive, Suite 200
Eugene, Oregon 97408
541-683-6090
WWW.DOWL.COM

WILLAMETTE RIVER, HWY 30 EB (CENTER ST)

OR22: CENTER ST BRIDGE (PHASE 1) PROJECT
WILLAMINA - SALEM HIGHWAY
MARION & POLK COUNTIES

Designer: Mike McNulty, PE
Reviewer: Bob Goodrich, PE
Drafter: Jake Williams
Checker: Eric Bonn, PE

SPAN 19 DETAILS - BENT 19 DECK THICKENING

SHEET NO. JA46

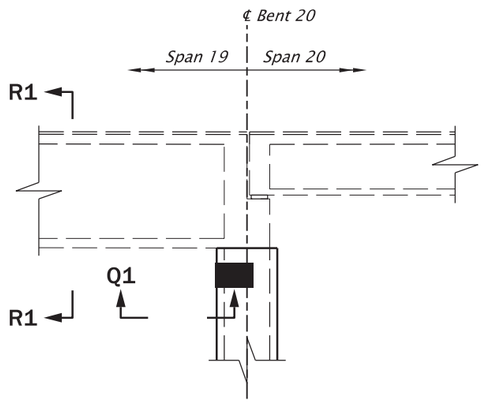

SPAN 19 SUPERSTRUCTURE REMOVAL LIMITS

Scale: 1"=10'

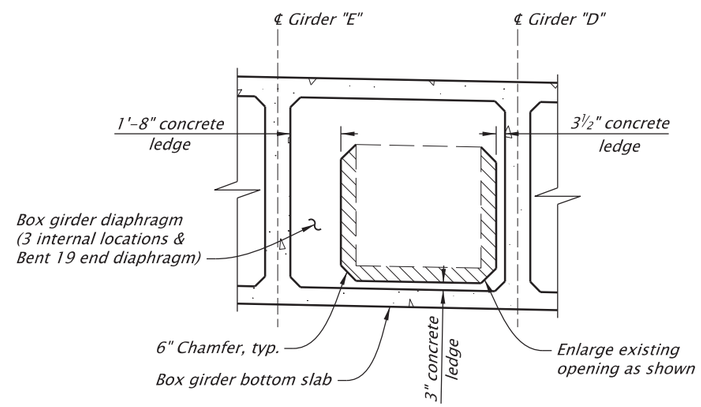

SECTION R1-R1

Scale: 1"=5'

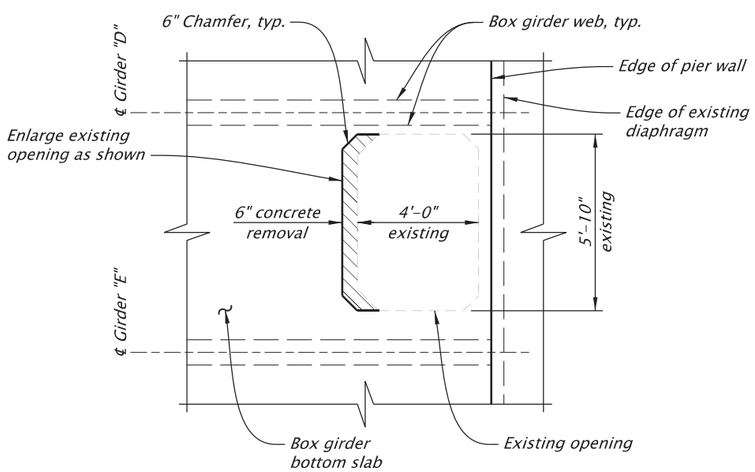

SECTION Q1-Q1

Scale: 1"=5'

Concrete removal

For accompanied by drawings, see sht. JA01

NOTES:
1. See RA sheets for pipe roll stand removal limits.
2. Cut back and patch over any exposed reinforcing steel, and finish cut surfaces to uncoated class 2 surface finish.
3. See Bent Plan and Elevation sheets for construction control working points to establish bent centerlines.
4. Field verify all dimensions and elevations before submitting Working Drawings and prior to ordering or fabricating any materials. See sht. J02 for more details.

SCALE WARNING
IF THIS SCALE LINE DOES NOT MEASURE ONE INCH, THEN DRAWING IS NOT TO SCALE

STRUCTURE NO.	00123K
BDS DWG NO.	113791
CALC. BOOK	7997
HWY: 030	
M.P.:	
COUNTY	Marion
DATE	2/26

REGISTERED PROFESSIONAL ENGINEER
099941PE
Digitally Signed 2026.02.12 11:22:47-08'00'
OREGON
JULY 21, 2022
BERNARD ANTHONY FRANKL
EXPIRES: 12/31/2027

FINAL ELECTRONIC DOCUMENT AVAILABLE UPON REQUEST

DOWL
3500 Chad Drive, Suite 200
Eugene, Oregon 97408
541-683-6090
WWW.DOWL.COM

WILLAMETTE RIVER, HWY 30 EB (CENTER ST)

OR22: CENTER ST BRIDGE (PHASE 1) PROJECT
WILLAMINA - SALEM HIGHWAY
MARION & POLK COUNTIES

Designer: Bernard A. Frankl, PhD, PE
Reviewer: Bob Goodrich, PE
Drafter: Jake Williams
Checker: Andy Howe, PE

SPAN 19 DETAILS - WATERLINE OPENING ADJUSTMENTS

SHEET NO. JA47

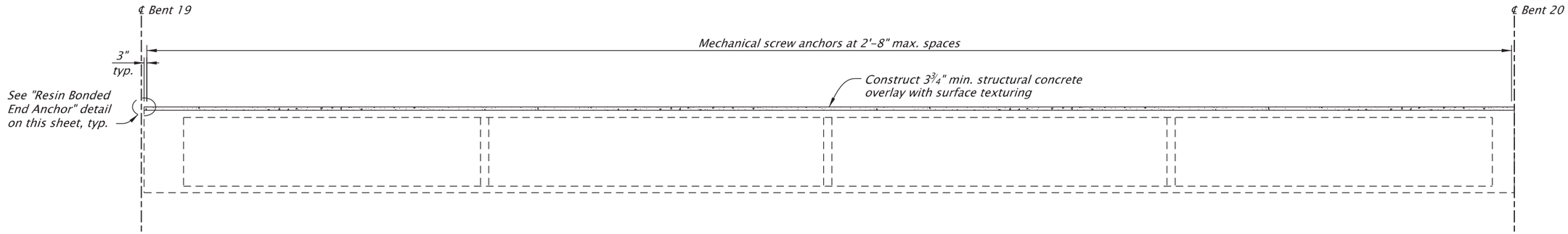

LONGITUDINAL BEAM ELEVATION

Scale: 1"=10'

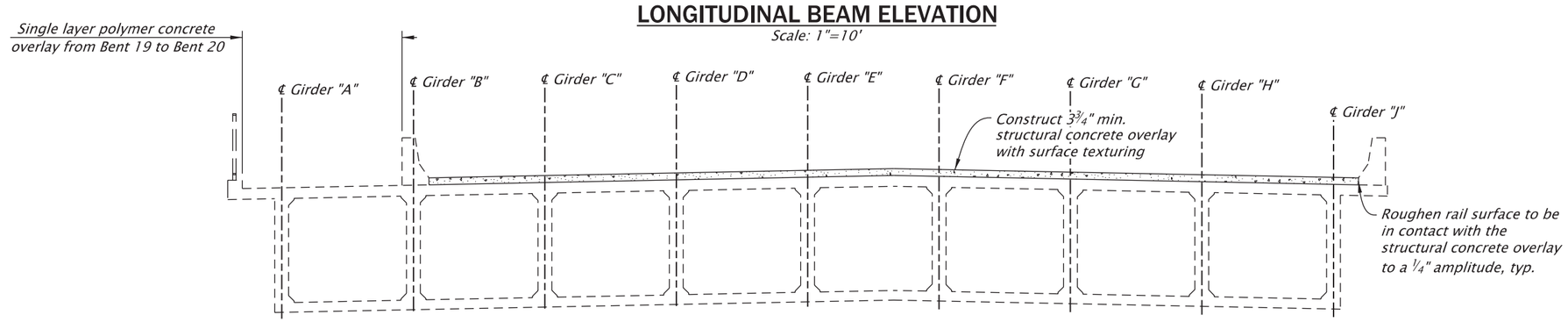

TYPICAL SECTION

Scale: 1/8"=1'-0"

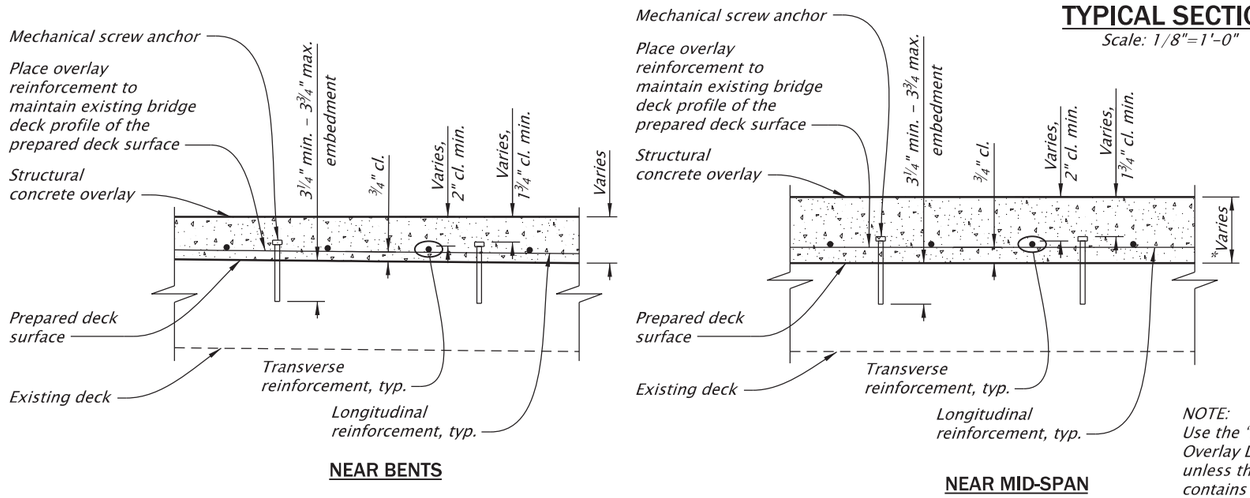

NEAR BENTS

NEAR MID-SPAN

NOTE:
Use the "Structural Concrete Overlay Detail" on sht. JA30 unless the prepared surface contains variations as shown on this detail, then use this detail.

*Overlay thickness may increase due to permanent dead load deflection of the girders.

OVERLAY REINFORCEMENT PLACEMENT ALONG SPAN

Scale: 1"=1'-0"

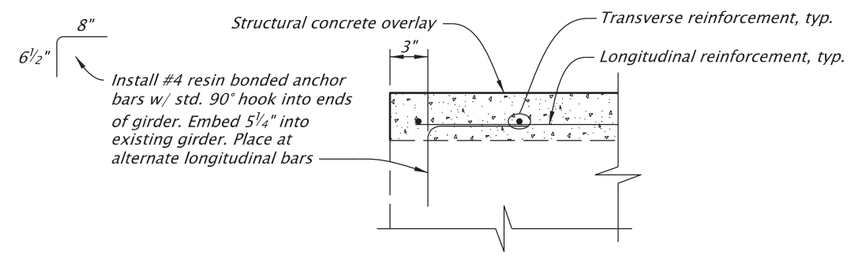

RESIN BONDED END ANCHOR

Scale: 1"=1'-0"

For accompanied by drawings, see sht. JA01

NOTES:
1. See sht. JA30 for structural concrete overlay details not shown.
2. See Bent Plan and Elevation sheets for construction working points to establish bent centerlines.
3. Field verify all dimensions and elevations before submitting Working Drawings and prior to ordering or fabricating any materials. See sht. J02 for more details.

SCALE WARNING
IF THIS SCALE LINE DOES NOT MEASURE ONE INCH, THEN DRAWING IS NOT TO SCALE

STRUCTURE NO.	00123K
BDS DWG NO.	113792
CALC. BOOK	7997
HWY: 030	M.P.: 25.88
COUNTY	Marion
DATE	2/26

REGISTERED PROFESSIONAL ENGINEER 105234PE
Digitally Signed 2026.02.12 12:19:02-08'00'
OREGON MAY 14, 2024
NASARIO LOPEZ-FRANCISCO
EXPIRES: 12/31/2026
FINAL ELECTRONIC DOCUMENT AVAILABLE UPON REQUEST

DOWL
3500 Chad Drive, Suite 200
Eugene, Oregon 97408
541-683-6090
WWW.DOWL.COM

WILLAMETTE RIVER, HWY 30 EB (CENTER ST)

OR22: CENTER ST BRIDGE (PHASE 1) PROJECT
WILLAMINA - SALEM HIGHWAY
MARION & POLK COUNTIES

Designer: Nasario Lopez-Francisco, PE
Reviewer: Bob Goodrich, PE
Drafter: Jake Williams
Checker: Fred M. Gomez, PE

SPAN 19 OVERLAY

SHEET NO. JA48

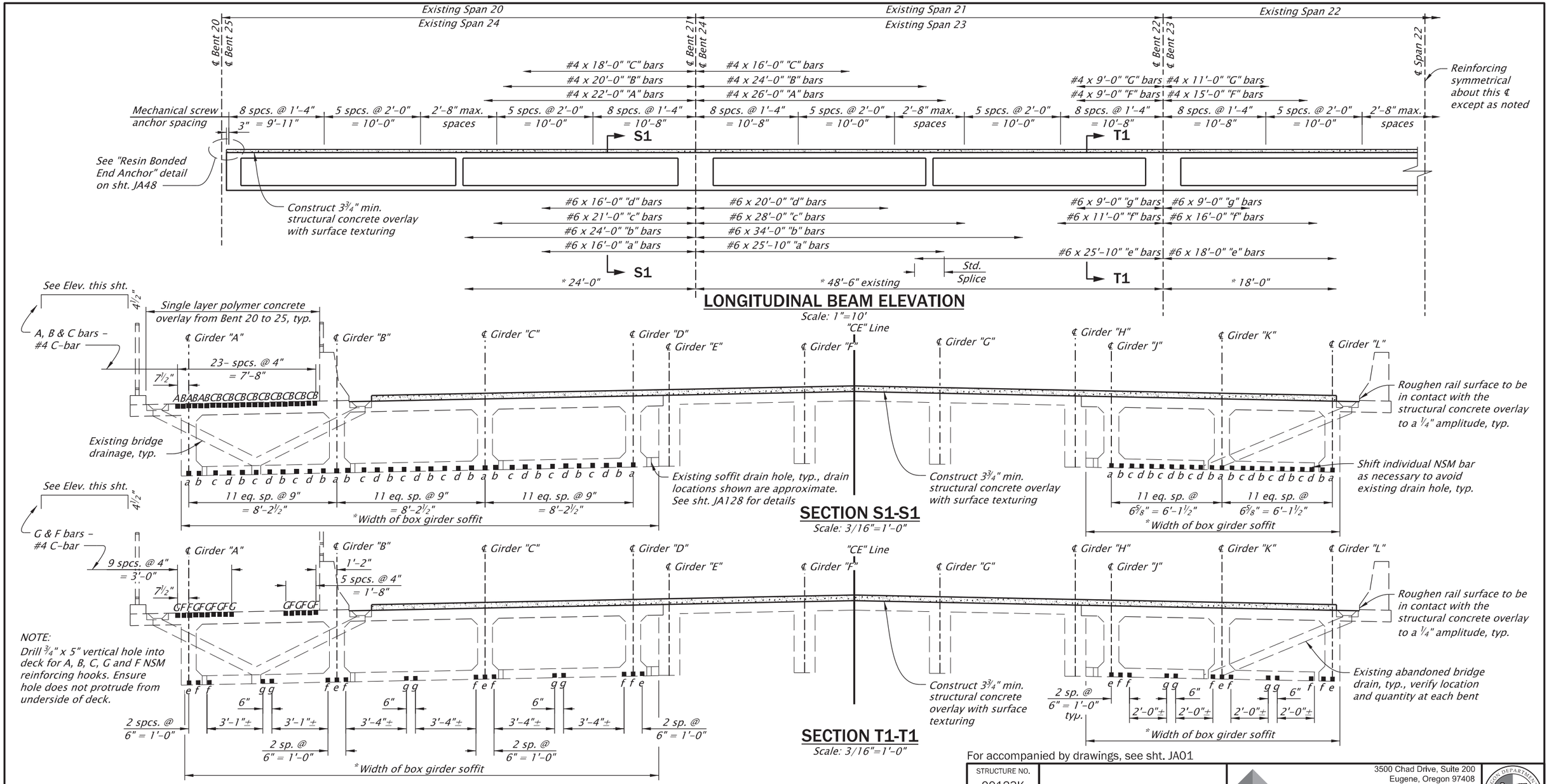

For accompanied by drawings, see sht. JA01

NOTES:
1. * Locate concrete repair, concrete repair and inject and seal cracks across box girder soffit.
2. See shts. JA30 and JA31 for structural concrete overlay details not shown.
3. See sht. JA52 for Bent 21 gore zone girder strengthening layout.
4. See sht. JA55 for Cross-Beam Coring Detail.
5. See sht. JA55 for NSM Reinforcing Bar Detail.
6. See sht. JA55 for NSM Reinforcing Adjustment Detail.
7. See sht. JA55 for Abandoned Pipe Removal Limits.
8. Maintain a minimum of 3" ctr. to ctr. between grooves for NSM reinforcing.
9. See Bent Plan and Elevation sheets for construction working points to establish bent centerlines.
10. Field verify all dimensions and elevations before submitting Working Drawings and prior to ordering or fabricating any materials. See sht. J02 for more details.
11. See dwg. BR500 for concrete repair details.

SCALE WARNING
IF THIS SCALE LINE DOES NOT MEASURE ONE INCH, THEN DRAWING IS NOT TO SCALE

STRUCTURE NO.	00123K
BDS DWG NO.	113793
CALC. BOOK	7997
HWY: 030	M.P.: 25.88
COUNTY	Marion
DATE	2/26

REGISTERED PROFESSIONAL ENGINEER
099941PE
Digitally Signed 2026.03.03 09:16:24-08'00'
OREGON
JULY 21, 2022
BERNARD ANTHONY FRANKL
EXPIRES: 12/31/2027

FINAL ELECTRONIC DOCUMENT AVAILABLE UPON REQUEST

DOWL
3500 Chad Drive, Suite 200
Eugene, Oregon 97408
541-683-6090
WWW.DOWL.COM

WILLAMETTE RIVER, HWY 30 EB (CENTER ST)

OR22: CENTER ST BRIDGE (PHASE 1) PROJECT
WILLAMINA - SALEM HIGHWAY
MARION & POLK COUNTIES

Designer: Bernard A. Frankl, PhD, PE
Reviewer: Bob Goodrich, PE
Drafter: Jake Williams
Checker: Fred M. Gomez, PE

SPAN 20 THRU 24
GIRDER STRENGTHENING AND OVERLAY

SHEET NO. JA49

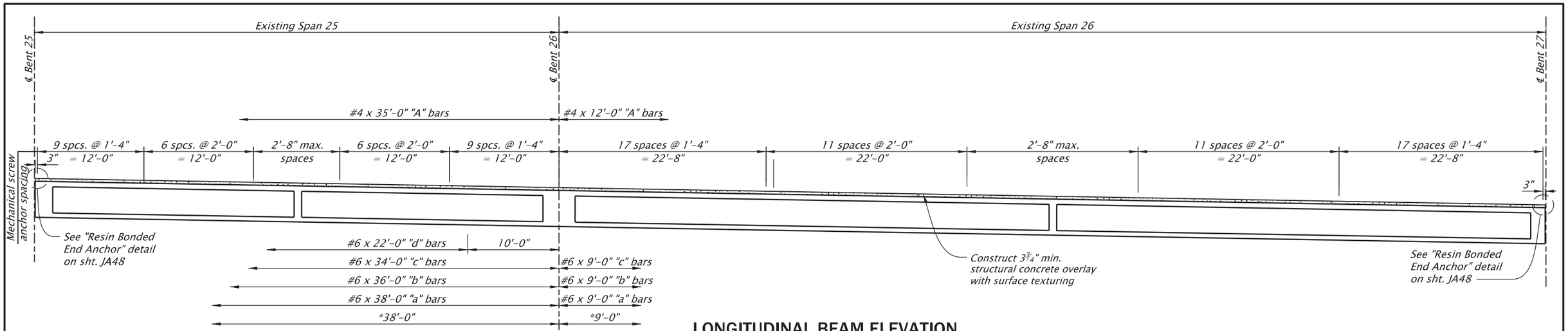

LONGITUDINAL BEAM ELEVATION

Scale: 3/32" = 1'-0"

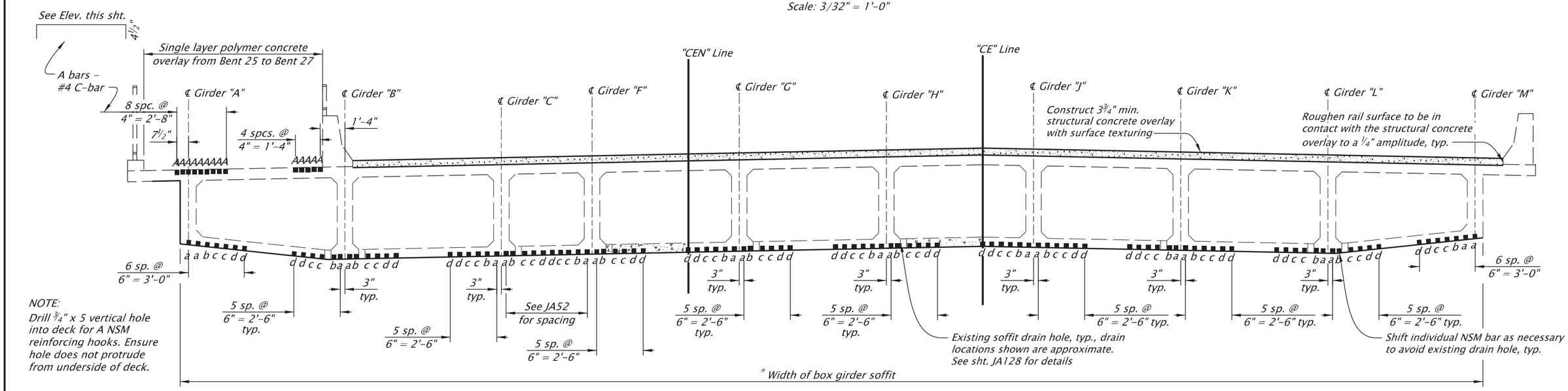

TYPICAL SECTION

Scale: 3/16"=1'-0"

For accompanied by drawings, see sht. JA01

NOTES:

1. * Locate concrete repair, concrete repair and inject and seal cracks across box girder soffit.
2. See sht. JA30 for structural concrete overlay details not shown.
3. See sht. JA52 for Bent 26 gore zone girder strengthening layout.
4. See sht. JA55 for Cross-Beam Coring Detail.
5. See sht. JA55 for NSM Reinforcing Bar Detail.
6. See sht. JA55 for NSM Reinforcing Adjustment Detail.
7. Maintain a minimum of 3" ctr. to ctr. between grooves for NSM reinforcing.
8. See Bent Plan and Elevation sheets for construction control working points to establish bent centerline.
9. Field verify all dimensions and elevations before submitting Working Drawings and prior to ordering or fabricating any materials. See sht. J02 for more details.
10. See dwg. BR500 for concrete repair details.

SCALE WARNING

IF THIS SCALE LINE DOES NOT MEASURE ONE INCH, THEN DRAWING IS NOT TO SCALE

STRUCTURE NO.	00123K
BDS DWG NO.	113794
CALC. BOOK	7997
HWY: 030 M.P.: 25.88	
COUNTY	Marion
DATE	2/26

REGISTERED PROFESSIONAL ENGINEER 099941PE OREGON JULY 21, 2022 BERNARD ANTHONY FRANKL

Digitally Signed 2026.03.03 09:17:53-08'00'

EXPIRES: 12/31/2027

FINAL ELECTRONIC DOCUMENT AVAILABLE UPON REQUEST

DOWL
3500 Chad Drive, Suite 200
Eugene, Oregon 97408
541-683-6090
WWW.DOWL.COM

WILLAMETTE RIVER, HWY 30 EB (CENTER ST)

OR22: CENTER ST BRIDGE (PHASE 1) PROJECT
WILLAMINA - SALEM HIGHWAY
MARION & POLK COUNTIES

Designer: Bernard A. Frankl, PhD, PE
Reviewer: Bob Goodrich, PE
Drafter: Jake Williams
Checker: Fred M. Gomez, PE

SPAN 25 AND 26 GIRDER STRENGTHENING AND OVERLAY

SHEET NO. JA50

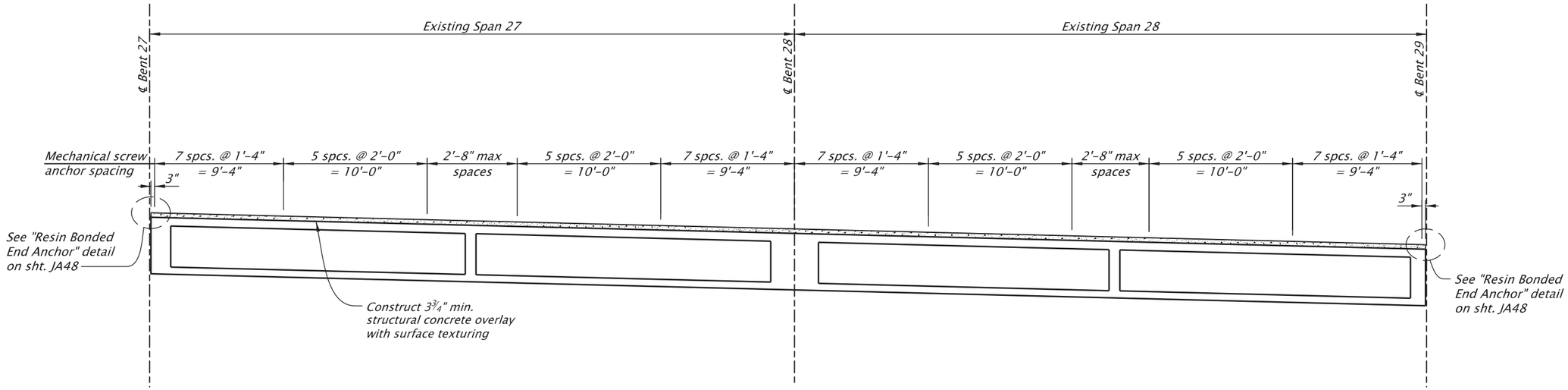

LONGITUDINAL BEAM ELEVATION

Scale: 1/8"=1'-0"

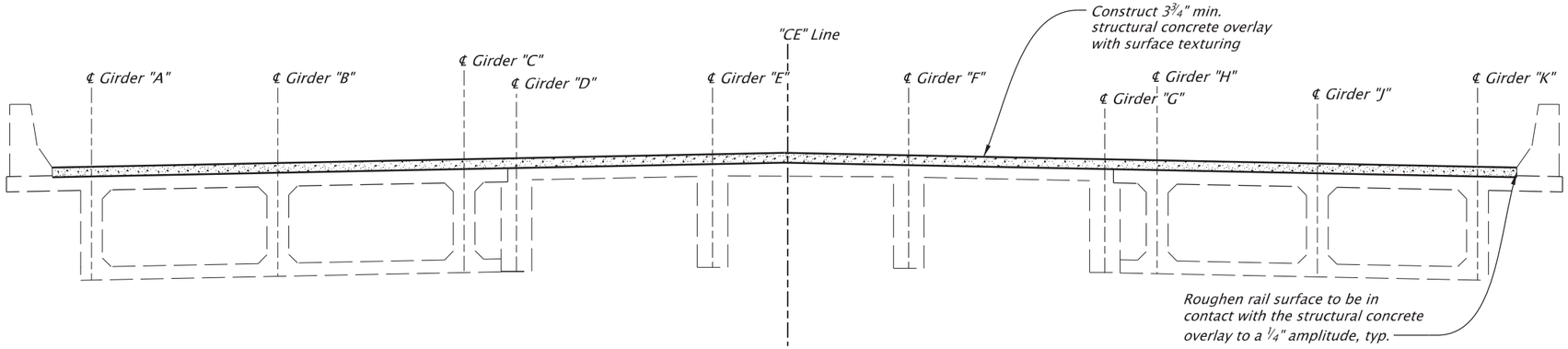

TYPICAL SECTION

Scale: 3/16"=1'-0"

For accompanied by drawings, see sht. JA01

NOTES:
1. *See sht. JA30 for structural concrete overlay details not shown.*
2. *See Bent Plan and Elevation sheets for construction control working points to establish bent centerline.*
3. *Field verify all dimensions and elevations before submitting Working Drawings and prior to ordering or fabricating any materials. See sht. J02 for more details.*

SCALE WARNING

IF THIS SCALE LINE DOES NOT MEASURE ONE INCH, THEN DRAWING IS NOT TO SCALE

STRUCTURE NO.	00123K
BDS DWG NO.	113795
CALC. BOOK	7997
HWY: 030 M.P.: 25.88	
COUNTY	Marion
DATE	2/26

REGISTERED PROFESSIONAL ENGINEER
099941PE
Digitally Signed 2026.02.12 11:23:32-08'00'
OREGON
JULY 21, 2022
BERNARD ANTHONY FRANKL
EXPIRES: 12/31/2027

FINAL ELECTRONIC DOCUMENT AVAILABLE UPON REQUEST

DOWL
3500 Chad Drive, Suite 200
Eugene, Oregon 97408
541-683-6090
WWW.DOWL.COM

OREGON DEPARTMENT OF TRANSPORTATION

WILLAMETTE RIVER, HWY 30 EB (CENTER ST)

OR22: CENTER ST BRIDGE (PHASE 1) PROJECT
WILLAMINA - SALEM HIGHWAY
MARION & POLK COUNTIES

Designer: Bernard A. Frankl, PhD, PE
Reviewer: Bob Goodrich, PE
Drafter: Jake Williams
Checker: Fred M. Gomez, PE

SPAN 27 AND 28 GIRDER STRENGTHENING AND OVERLAY

SHEET NO. JA51

NOTE:
Bar lengths are measured from centerline bent to end of bar.

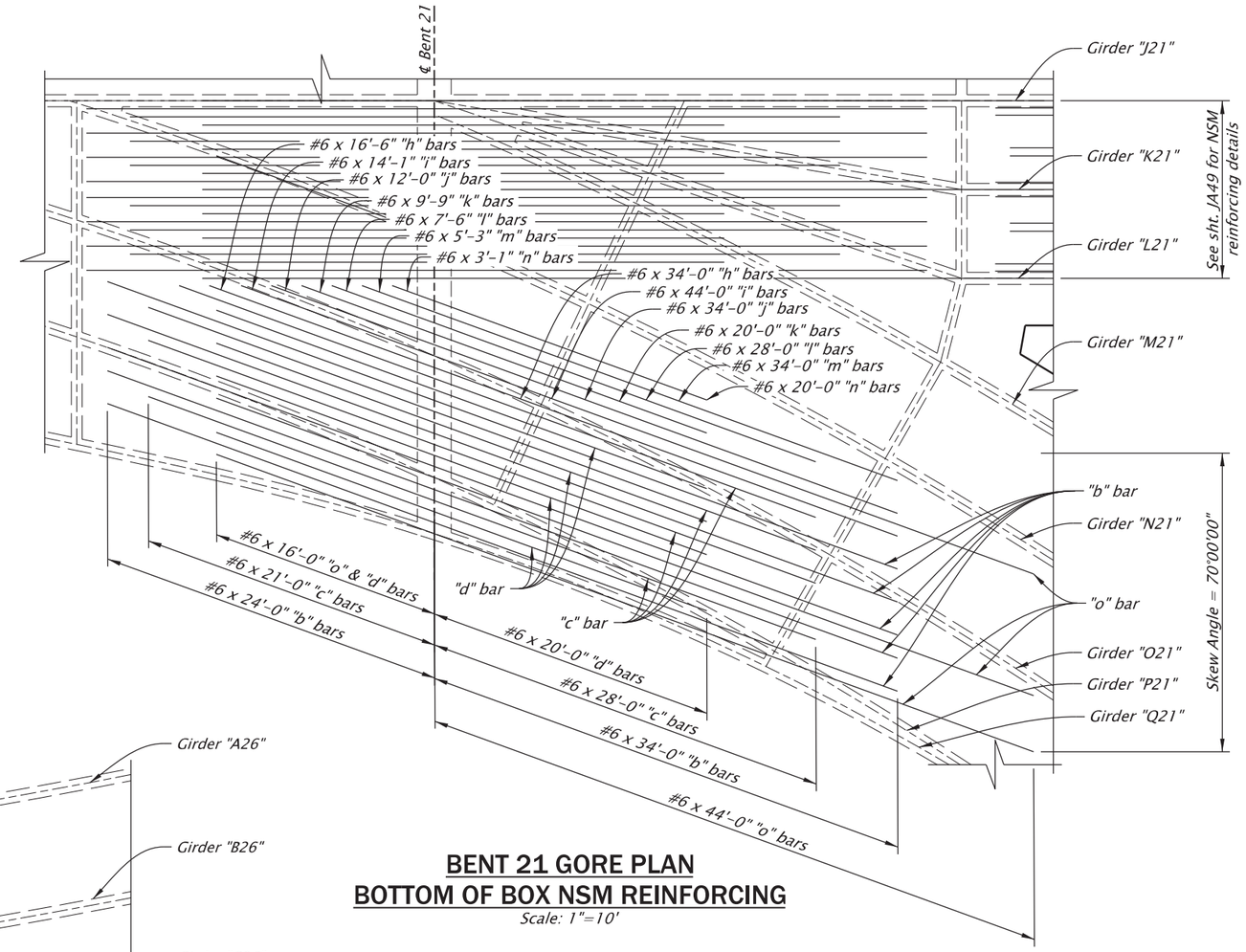

BENT 21 GORE PLAN
BOTTOM OF BOX NSM REINFORCING

Scale: 1"=10'

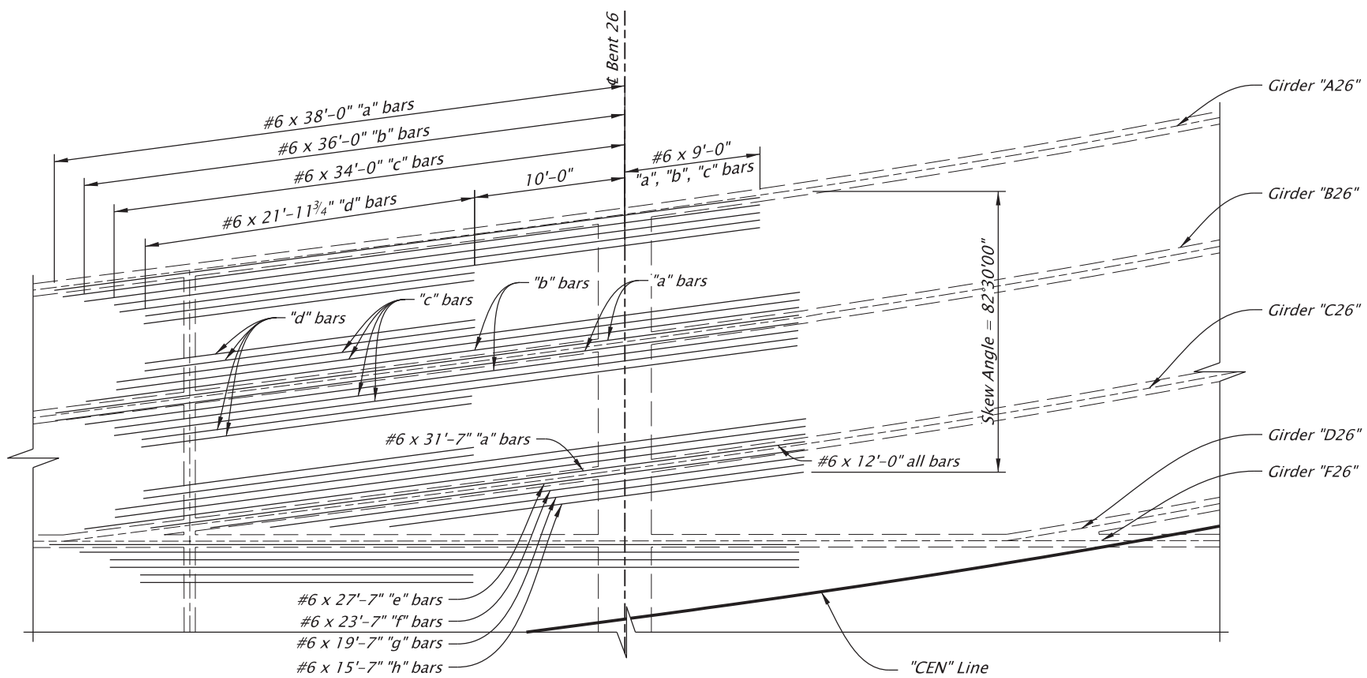

NOTE:
Bar lengths are measured from centerline bent to end of bar.

BENT 26 GORE PLAN
BOTTOM OF BOX NSM REINFORCING

Scale: 1"=10'

NOTES:
1. See shts. JA49 and JA50 for spacing of girder strengthening bars.
2. See sht. JA55 for Cross-Beam Coring Detail.
3. See sht. JA55 for NSM reinforcing bar detail.
4. See Bent Plan and Elevation sheets for construction control working points to establish bent centerline.
5. Field verify all dimensions and elevations prior to submitting Working Drawings and prior to ordering or fabricating any materials. See sht. J02 for more details.
6. See dwg. BR500 for concrete repair details.

For accompanied by drawings, see sht. JA01

SCALE WARNING
IF THIS SCALE LINE DOES NOT MEASURE ONE INCH, THEN DRAWING IS NOT TO SCALE

STRUCTURE NO.	00123K
BDS DWG NO.	113796
CALC. BOOK	7997
HWY: 030 M.P.: 25.88	
COUNTY	Marion
DATE	2/26

REGISTERED PROFESSIONAL ENGINEER
099941PE
Digitally Signed 2026.02.12 11:23:46-08'00'
OREGON
JULY 21, 2022
BERNARD ANTHONY FRANKL
EXPIRES: 12/31/2027

FINAL ELECTRONIC DOCUMENT AVAILABLE UPON REQUEST

DOWL
3500 Chad Drive, Suite 200
Eugene, Oregon 97408
541-683-6090
WWW.DOWL.COM

WILLAMETTE RIVER, HWY 30 EB (CENTER ST)

OR22: CENTER ST BRIDGE (PHASE 1) PROJECT
WILLAMINA - SALEM HIGHWAY
MARION & POLK COUNTIES

Designer: Bernard A. Frankl, PhD, PE
Reviewer: Bob Goodrich, PE
Drafter: Jake Williams
Checker: Fred M. Gomez, PE

SPAN 21 AND 26 GORE GIRDER SOFFIT STRENGTHENING

SHEET NO. JA52

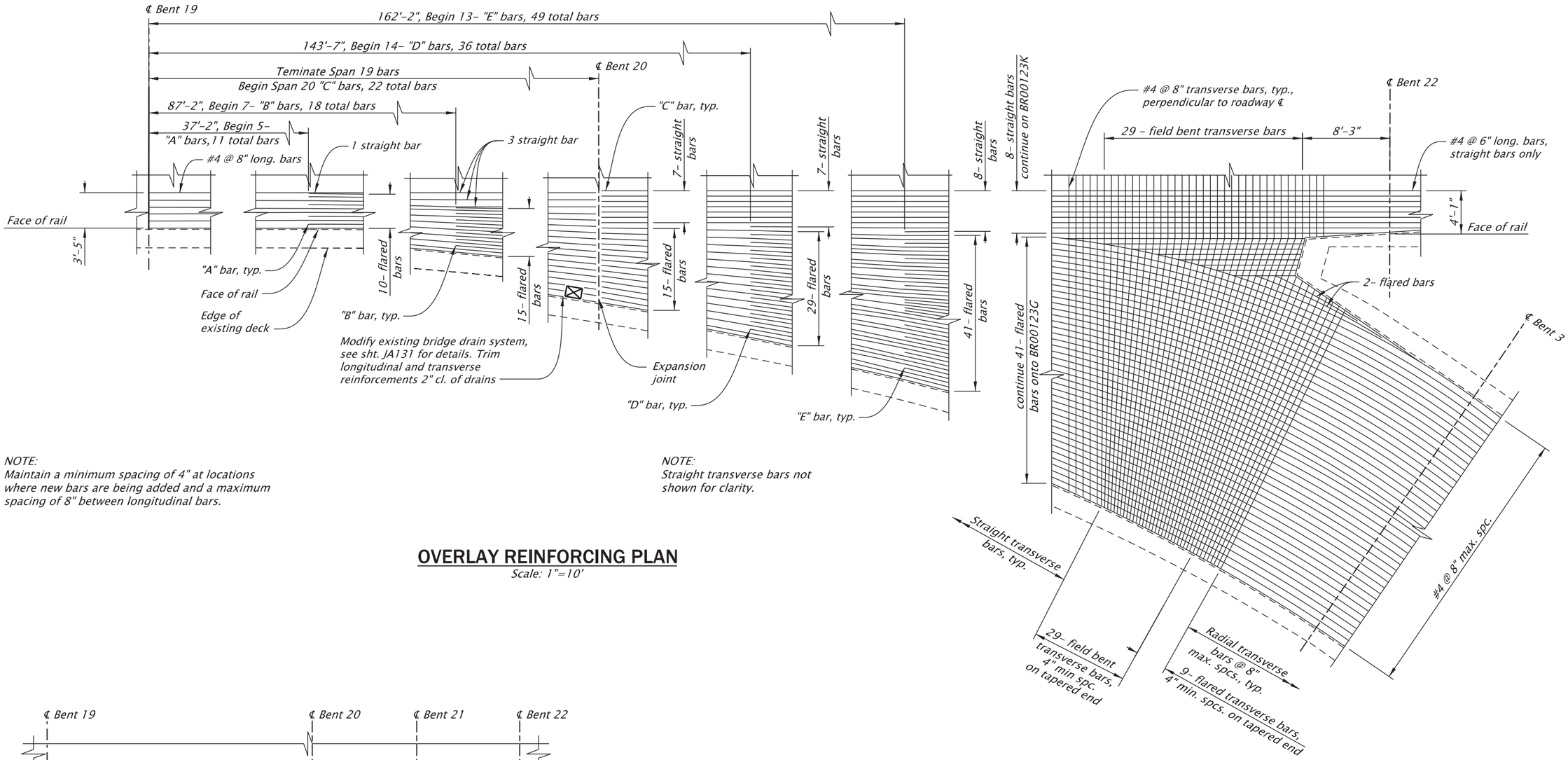

NOTE:
Maintain a minimum spacing of 4" at locations where new bars are being added and a maximum spacing of 8" between longitudinal bars.

NOTE:
Straight transverse bars not shown for clarity.

OVERLAY REINFORCING PLAN

Scale: 1"=10'

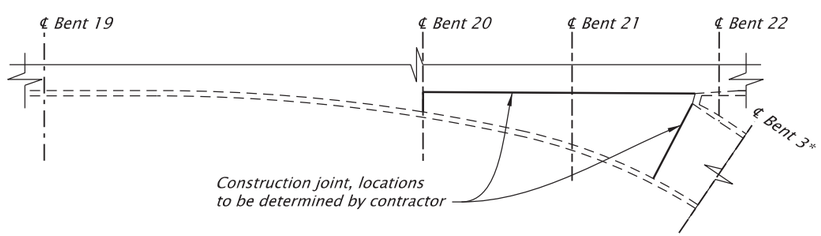

CONSTRUCTION JOINT LOCATIONS

No Scale

NOTES:
1. Spring longitudinal bars into place as needed.
2. For structural concrete overlay details not shown, see sht. JA30.
3. For impact attenuator details, see sht. JA134.
4. * Bridge 00123G
5. See Bent Plan and Elevation sheets for construction control working points to establish bent centerlines.
6. Field verify all dimensions and elevations prior to submitting Working Drawings and prior to ordering or fabricating any materials. See sht. J02 for more details.

For accompanied by drawings, see sht. JA01

SCALE WARNING
IF THIS SCALE LINE DOES NOT MEASURE ONE INCH, THEN DRAWING IS NOT TO SCALE

STRUCTURE NO.	00123K
BDS DWG NO.	113797
CALC. BOOK	7997
HWY: 030 M.P.: 25.88	
COUNTY	Marion
DATE	2/26

REGISTERED PROFESSIONAL ENGINEER 105234PE
Digitally Signed 2026.02.12 12:19:27-08'00'
OREGON MAY 14, 2024
NASARIO LOPEZ-FRANCISCO
EXPIRES: 12/31/2026

FINAL ELECTRONIC DOCUMENT AVAILABLE UPON REQUEST

DOWL
3500 Chad Drive, Suite 200
Eugene, Oregon 97408
541-683-6090
WWW.DOWL.COM

WILLAMETTE RIVER, HWY 30 EB (CENTER ST)

OR22: CENTER ST BRIDGE (PHASE 1) PROJECT
WILLAMINA - SALEM HIGHWAY
MARION & POLK COUNTIES

Designer: Nasario Lopez-Francisco, PE
Reviewer: Bob Goodrich, PE
Drafter: Jake Williams
Checker: Fred M. Gomez, PE

SPAN 19 THRU 21 GORE OVERLAY REINFORCING

SHEET NO. JA53

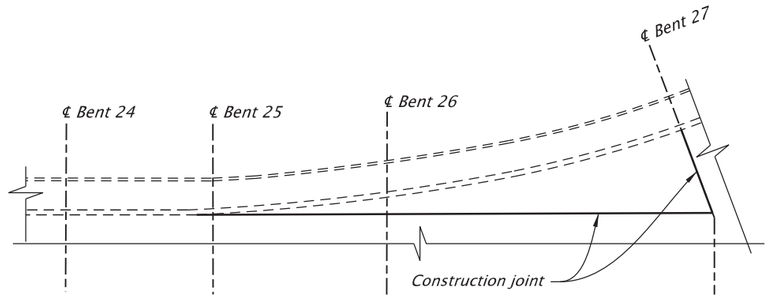

CONSTRUCTION JOINT LOCATIONS

No Scale

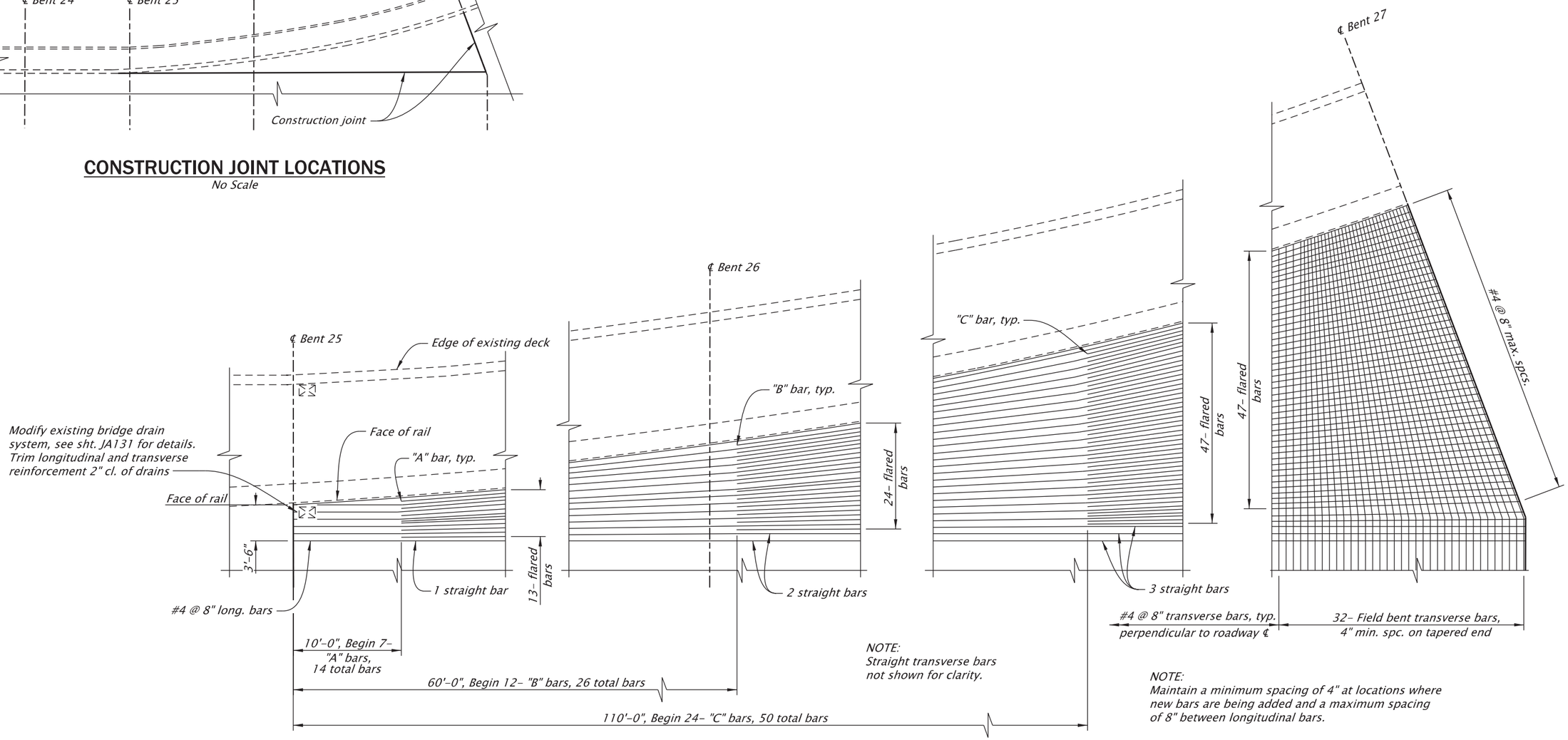

NOTE:
Straight transverse bars not shown for clarity.

NOTE:
Maintain a minimum spacing of 4" at locations where new bars are being added and a maximum spacing of 8" between longitudinal bars.

OVERLAY REINFORCING PLAN

Scale: 1"=10'

For accompanied by drawings, see sht. JA01

NOTES:
1. Spring longitudinal bars into place as needed.
2. For structural concrete overlay details not shown, see sht. JA30.
3. For impact attenuator details, see sht. JA135.
4. See Bent Plan and Elevation sheets for construction control working points to establish bent centerlines.
5. Field verify all dimensions and elevations prior to submitting Working Drawings and prior to ordering or fabricating any materials. See sht. J02 for more details.

SCALE WARNING
IF THIS SCALE LINE DOES NOT MEASURE ONE INCH, THEN DRAWING IS NOT TO SCALE

STRUCTURE NO.	00123K
BDS DWG NO.	113798
CALC. BOOK	7997
HWY: 030	M.P.: 25.88
COUNTY	Marion
DATE	2/26

REGISTERED PROFESSIONAL ENGINEER
105234PE
Digitally Signed 2026.02.12 12:19:41-08'00'
OREGON
MAY 14, 2024
NASARIO LOPEZ-FRANCISCO
EXPIRES: 12/31/2026

FINAL ELECTRONIC DOCUMENT AVAILABLE UPON REQUEST

DOWL
3500 Chad Drive, Suite 200
Eugene, Oregon 97408
541-683-6090
WWW.DOWL.COM

OREGON DEPARTMENT OF TRANSPORTATION

WILLAMETTE RIVER, HWY 30 EB (CENTER ST)

OR22: CENTER ST BRIDGE (PHASE 1) PROJECT
WILLAMINA - SALEM HIGHWAY
MARION & POLK COUNTIES

Designer: Nasario Lopez-Francisco, PE
Reviewer: Bob Goodrich, PE
Drafter: Jake Williams
Checker: Fred M. Gomez, PE

SPAN 25 THRU 26 GORE OVERLAY REINFORCING

SHEET NO. JA54

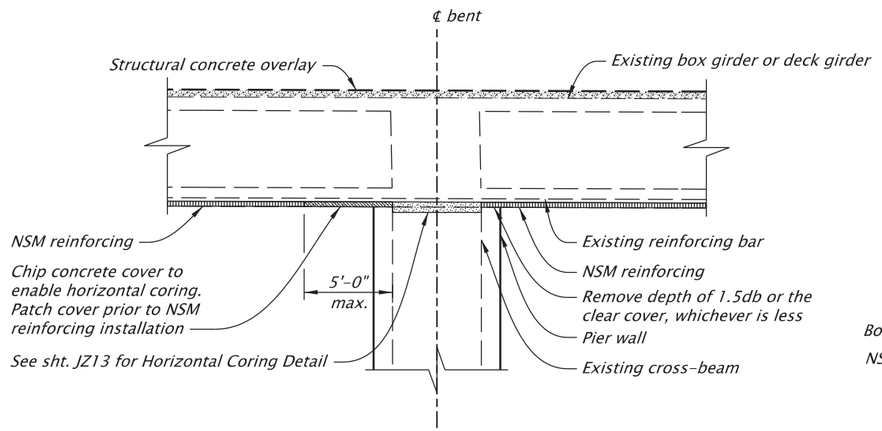

CROSS-BEAM CORING DETAIL

No Scale

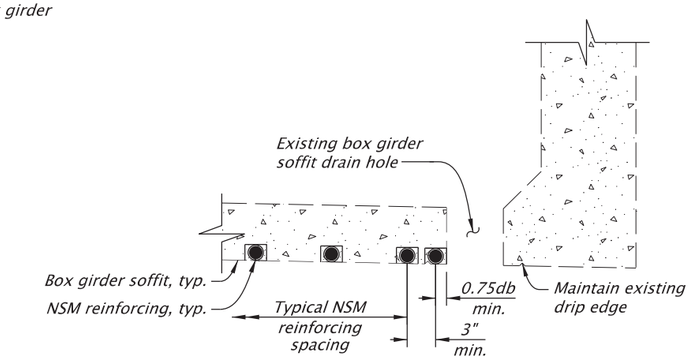

NSM REINFORCING ADJUSTMENT DETAIL

No Scale

CONSTRUCTION SEQUENCE:

1. *Locate existing reinforcement and drainage penetrations for potential conflicts. Adjust grooves ±3" to avoid conflicts. Coordinate NSM reinforcing locations with vertical and horizontal coring needs.*
2. *Where existing drain holes conflict with NSM limits, modify as per NSM Reinforcing Adjustment Detail this sheet.*
3. *Drill holes in existing cross-beam if needed, see Cross-Beam Coring Detail this sheet. Blockout cored hole if needed during pier wall placement.*
4. *Where existing abandoned drainage pipes conflixt with NSM, remove as per Abandoned Pipe Removal Limits this sheet and patch with grout.*
5. *Saw cut grooves for near surface mounted reinforcement.*
6. *Clean grooves and holes as specified.*
7. *Place reinforcing bars as specified then fill holes and grooves. Ensure a layer of epoxy between reinforcing bar and concrete surface.*

NOTES:

1. *NSM reinforcing - near surface mounted reinforcing.*
2. *db - diameter of bar.*
3. *Orient sawcut grooves and reinforcing bars perpendicular to bent centerline unless noted otherwise. Skewing bars is allowed if required to avoid existing reinforcement.*
4. *Contact the Engineer if NSM reinforcing groove depth can not be achieved as detailed in order to avoid severing existing reinforcing steel.*
5. *See Bent Plan and Elevation sheets for construction working points to establish bent centerline.*
6. *Field verify all dimensions and elevations before submitting Working Drawings and prior to ordering or fabricating any materials. See sht. J02 for more details.*

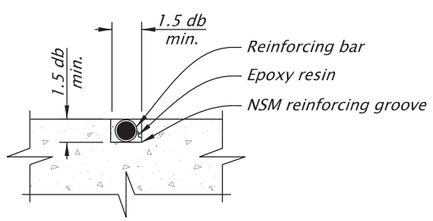

NSM REINFORCING BAR DETAIL

Scale: 3/4"=1'-0"

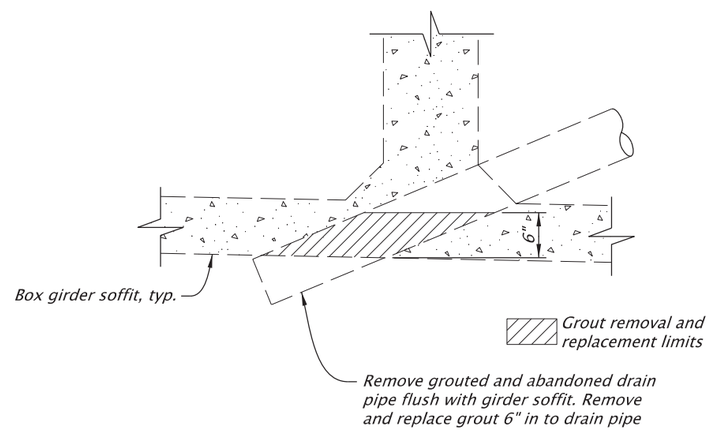

ABANDONED PIPE REMOVAL AND PATCHING LIMITS

No Scale

For accompanied by drawings, see sht. JA01

SCALE WARNING

IF THIS SCALE LINE DOES NOT MEASURE ONE INCH, THEN DRAWING IS NOT TO SCALE

STRUCTURE NO.	00123K
BDS DWG NO.	113799
CALC. BOOK	7997
HWY: 030	M.P.: 25.88
COUNTY	Marion
DATE	2/26

REGISTERED PROFESSIONAL ENGINEER 099941PE OREGON JULY 21, 2022 BERNARD ANTHONY FRANKL

Digitally Signed 2026.02.12 11:24:03-08'00'

EXPIRES: 12/31/2027

FINAL ELECTRONIC DOCUMENT AVAILABLE UPON REQUEST

DOWL
3500 Chad Drive, Suite 200
Eugene, Oregon 97408
541-683-6090
WWW.DOWL.COM

WILLAMETTE RIVER, HWY 30 EB (CENTER ST)

OR22: CENTER ST BRIDGE (PHASE 1) PROJECT
WILLAMINA - SALEM HIGHWAY
MARION & POLK COUNTIES

Designer: Bernard A. Frankl, PhD, PE
Reviewer: Bob Goodrich, PE
Drafter: Jake Williams
Checker: Fred M. Gomez, PE

GIRDER STRENGTHENING DETAILS

SHEET NO. JA55

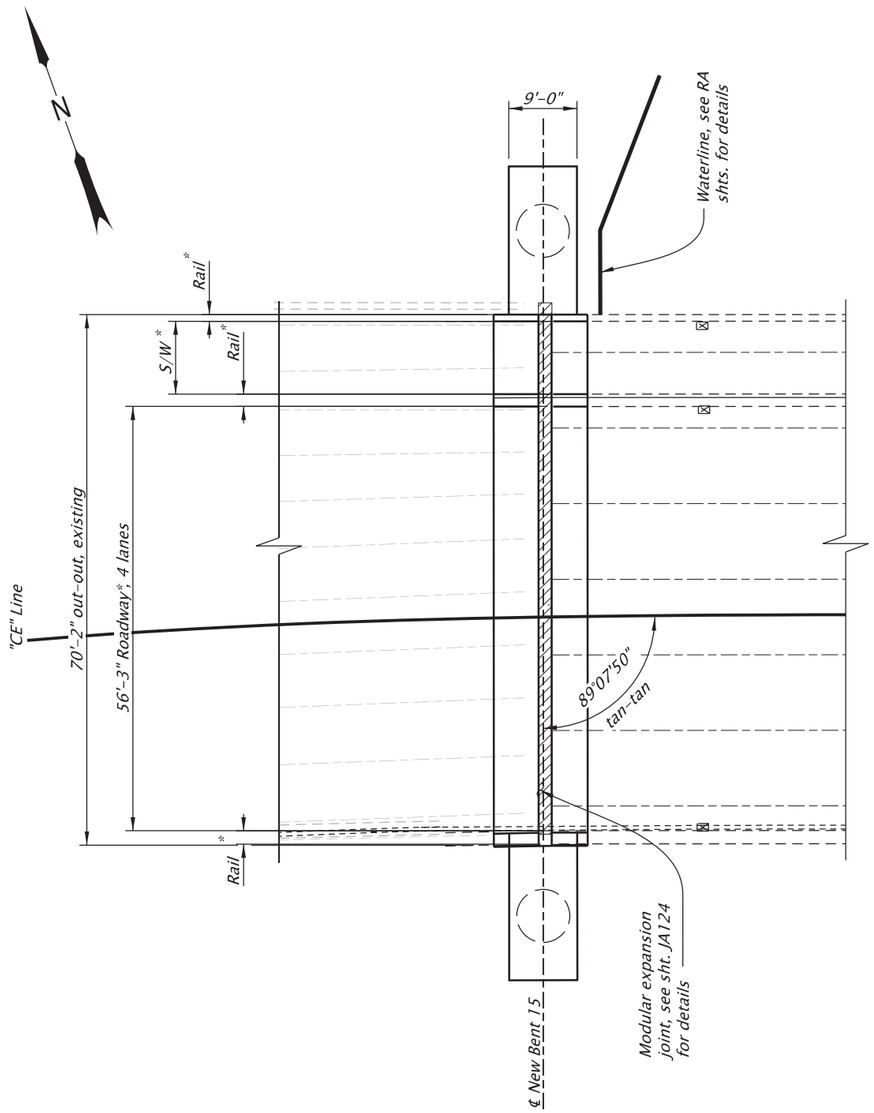

NOTE:
* Match existing limits.

PLAN
Scale: 1"=20'

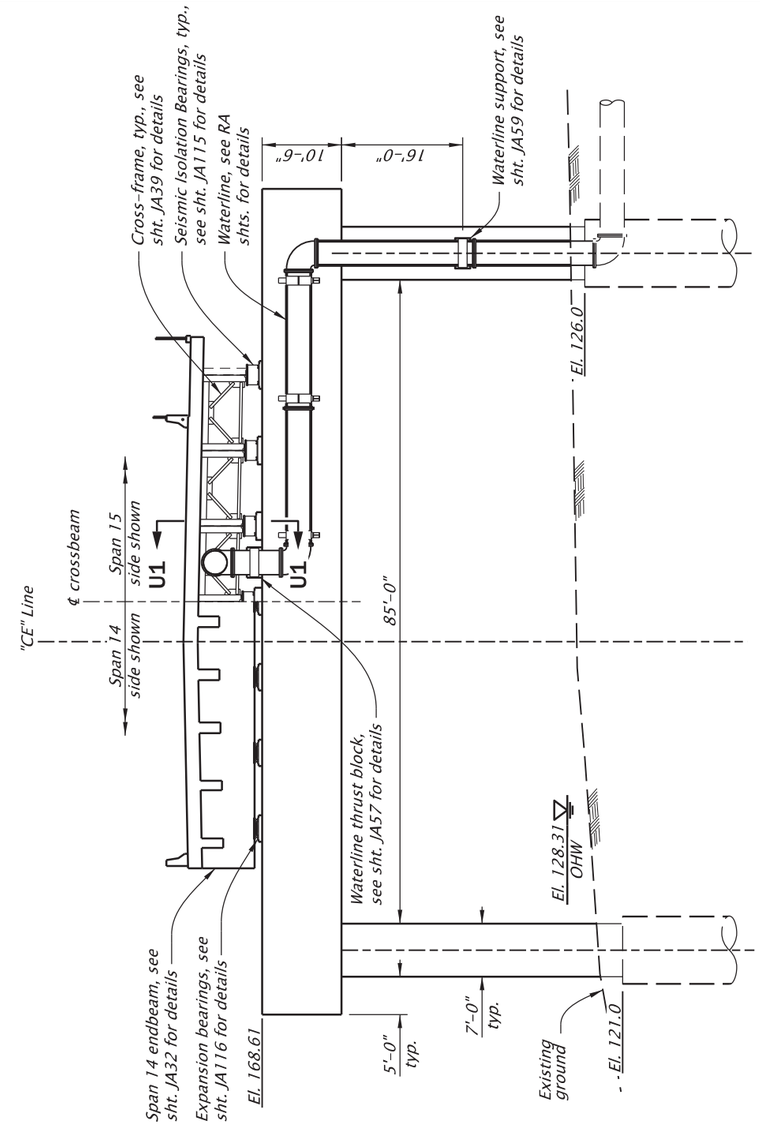

NOTES:
1. Existing bridge substructure not shown for clarity.
2. See sht. JA63 for Section U1-U1.

ELEVATION
Scale: 1"=20'
Looking back on station

NOTES:
1. See sht. JA23 for foundation details.
2. See sht. JA58 for drilled shaft details.
3. See shts. JA59 and JA60 for column details.
4. See shts. JA57, JA61 through JA68 for crossbeam details.
5. Field verify all dimensions and elevations prior to submitting Working Drawings and prior to ordering or fabricating any materials. See sht. J02 for more details.

For accompanied by drawings, see sht. JA01

STRUCTURE NO.	00123K
BDS DWG NO.	113800
CALC. BOOK	7997
HWY: 030	
M.P.: 25.88	
COUNTY	Marion/Polk
DATE	2/26

REGISTERED PROFESSIONAL ENGINEER
85555PE
Digitally Signed 2026.02.12 12:48:34-08'00'
OREGON
DEC. 21, 2011
MICHAEL G. McNULTY
EXPIRES: 12/31/2026

FINAL ELECTRONIC DOCUMENT AVAILABLE UPON REQUEST

DOWL
3500 Chad Drive, Suite 200
Eugene, Oregon 97408
541-683-6090
WWW.DOWL.COM

OREGON DEPARTMENT OF TRANSPORTATION

WILLAMETTE RIVER, HWY 30 EB (CENTER ST)

OR22: CENTER ST BRIDGE (PHASE 1) PROJECT
WILLAMINA - SALEM HIGHWAY
MARION & POLK COUNTIES

Designer: Mike McNulty, PE
Reviewer: Bob Goodrich, PE
Drafter: Jake Williams
Checker: Eric Bonn, PE

BENT 15 PLAN AND ELEVATION

SHEET NO. JA56

SCALE WARNING
IF THIS SCALE LINE DOES NOT MEASURE ONE INCH, THEN DRAWING IS NOT TO SCALE

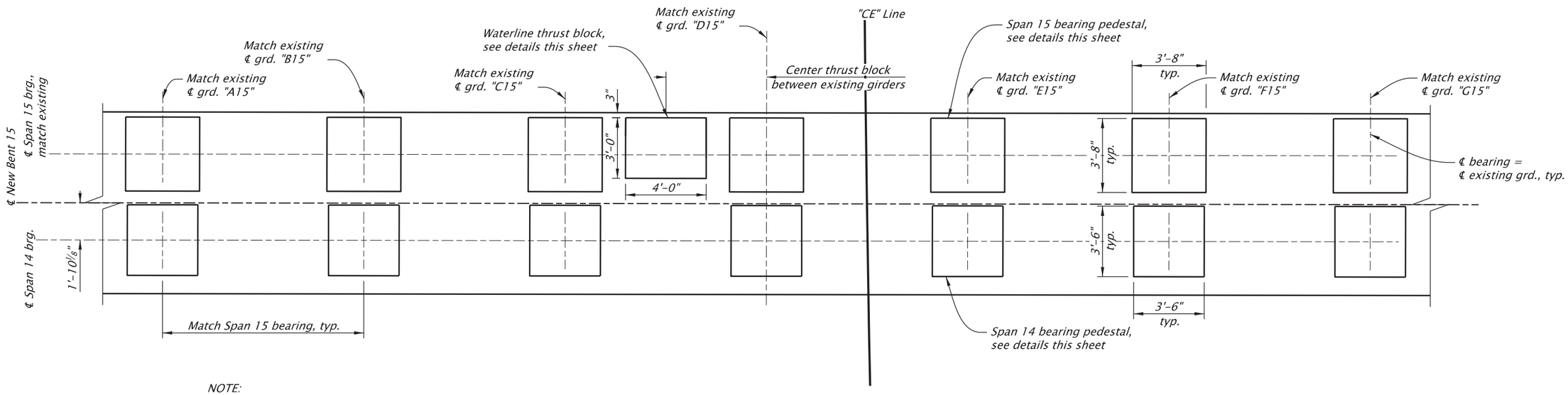

NOTE:
Superstructure, bearing assemblies and waterline not shown for clarity.

BEARING PEDESTAL AND THRUST BLOCK LAYOUT

Scale: 3/16"=1'-0"

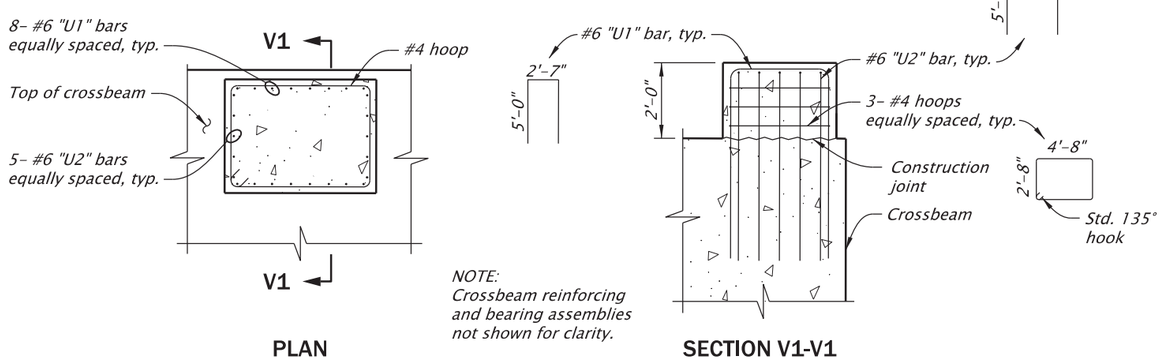

NOTE:
Crossbeam reinforcing and bearing assemblies not shown for clarity.

WATERLINE THRUST BLOCK DETAIL

Scale: 1/4"=1'-0"

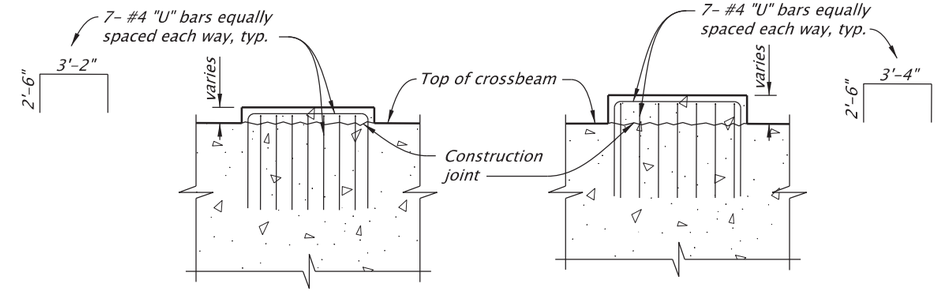

NOTE:
Crossbeam reinforcing and bearing assemblies not shown for clarity.

BEARING PEDESTAL DETAIL

Scale: 1/4"=1'-0"

NOTES:
1. For bearing assembly details see sheets JA115 and JA116.
2. For waterline details see RA series sheets.
3. Field verify all dimensions and elevations before submitting Working Drawings and prior to ordering or fabricating any materials. See sht. J02 for more details.

SCALE WARNING
IF THIS SCALE LINE DOES NOT MEASURE ONE INCH, THEN DRAWING IS NOT TO SCALE

For accompanied by drawings, see sht. JA01

STRUCTURE NO.	00123K
BDS DWG NO.	113801
CALC. BOOK	7997
HWY: 030 M.P.: 25.88	
COUNTY	Marion/Polk
DATE	2/26

REGISTERED PROFESSIONAL ENGINEER 85555PE
Digitally Signed 2026.02.12 12:48:55-08'00'
OREGON DEC. 21, 2011 MICHAEL G. McNULTY
EXPIRES: 12/31/2026
FINAL ELECTRONIC DOCUMENT AVAILABLE UPON REQUEST

DOWL
3500 Chad Drive, Suite 200
Eugene, Oregon 97408
541-683-6090
WWW.DOWL.COM

WILLAMETTE RIVER, HWY 30 EB (CENTER ST)

OR22: CENTER ST BRIDGE (PHASE 1) PROJECT
WILLAMINA - SALEM HIGHWAY
MARION & POLK COUNTIES

Designer: Mike McNulty, PE
Reviewer: Bob Goodrich, PE
Drafter: Jake Williams
Checker: Eric Bonn, PE

BENT 15 DETAILS

SHEET NO. JA57

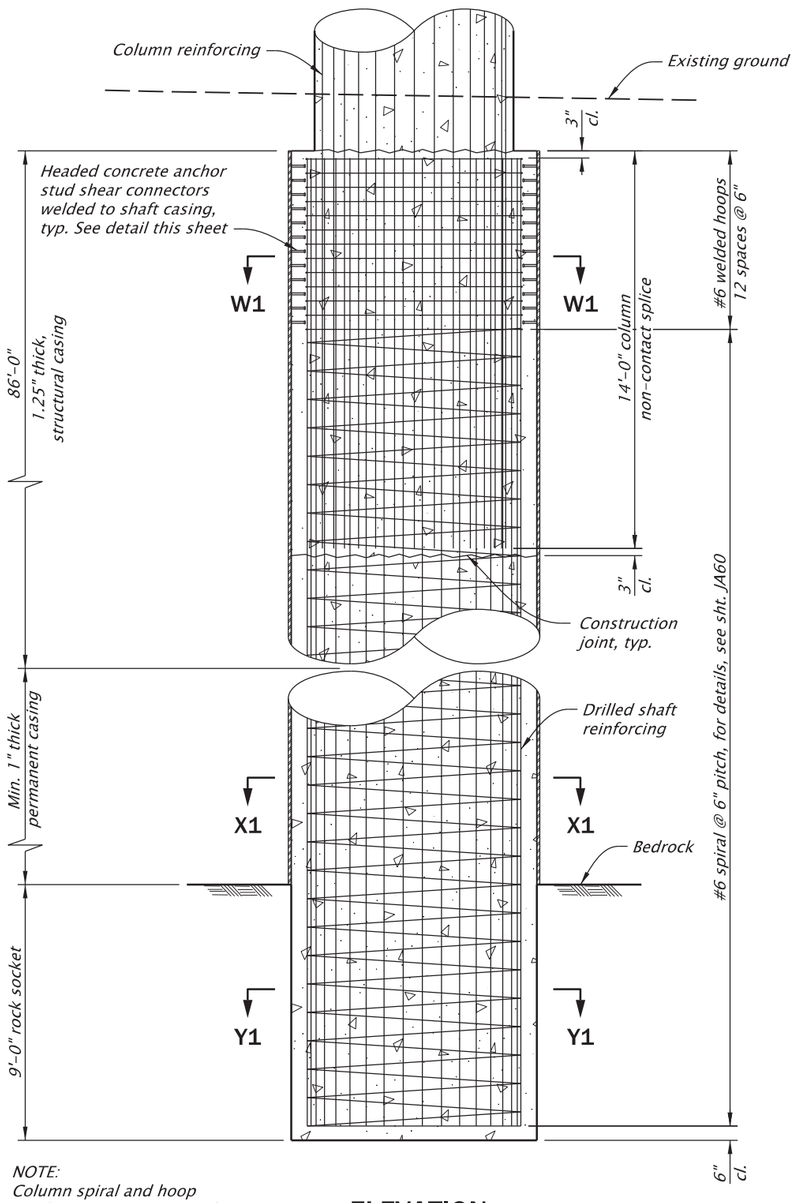

NOTE:
Column spiral and hoop reinforcement not shown for clarity.

ELEVATION
Scale: 3/16"=1'-0"

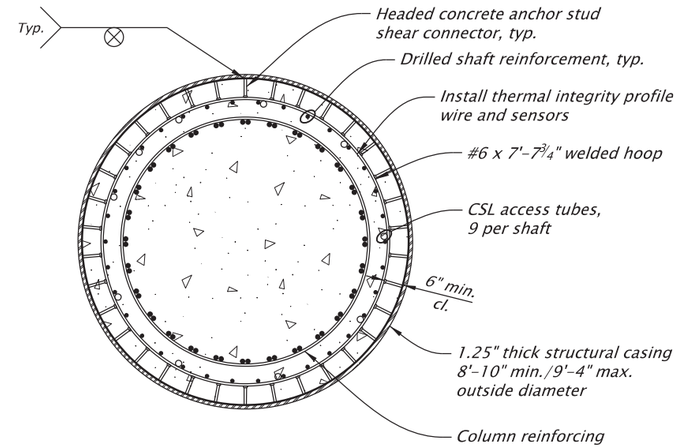

SECTION W1-W1

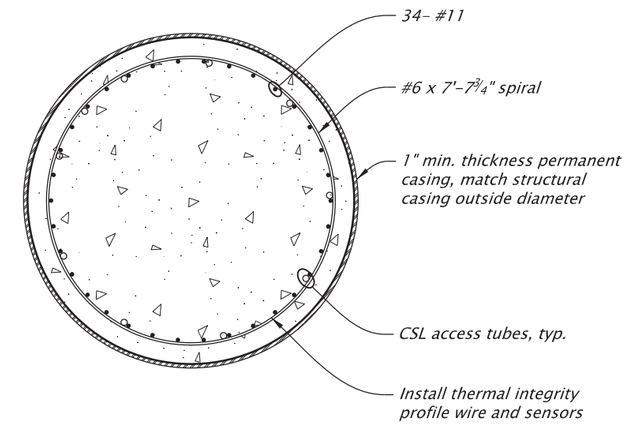

SECTION X1-X1

DRILLED SHAFT SECTIONS
Scale: 1/4"=1'-0"

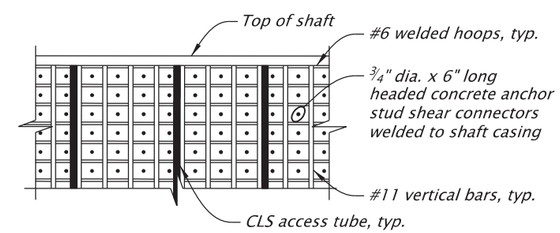

NOTES:
1. Place headed concrete anchor studs shear connectors, studs, in 12 rows of 34 studs (408 total studs) around inside of circumference of structural casing.
2. Locate studs in spaces between vertical bars and welded hoops.

STRUCTURAL CASING STUD LOCATION DETAIL
Scale: 1/4"=1'-0"

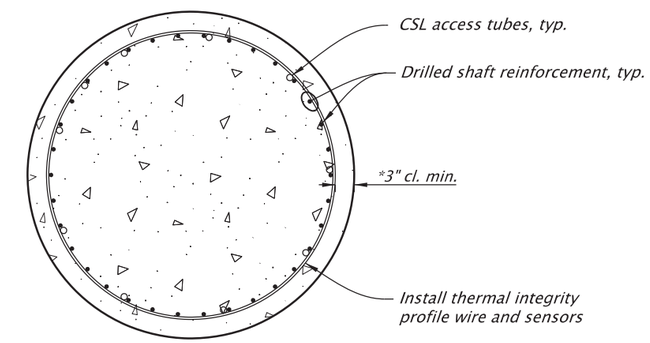

NOTE:
1. *Contractor may reduce drilled shaft diameter a maximum 6" to excavate rock socket below permanent casing.

SECTION Y1-Y1

NOTE:
Field verify all dimensions and elevations before submitting Working Drawings and prior to ordering or fabricating any materials. See sht. J02 for more details.

For accompanied by drawings, see sht. JA01

STRUCTURE NO.	00123K
BDS DWG NO.	113802
CALC. BOOK	7997
HWY: 030	M.P.: 25.88
COUNTY	Marion/Polk
DATE	2/26

SCALE WARNING
IF THIS SCALE LINE DOES NOT MEASURE ONE INCH, THEN DRAWING IS NOT TO SCALE

REGISTERED PROFESSIONAL ENGINEER 85555PE
Digitally Signed 2026.02.12 12:49:04-08'00'
OREGON DEC. 21, 2011 MICHAEL G. McNULTY
EXPIRES: 12/31/2026
FINAL ELECTRONIC DOCUMENT AVAILABLE UPON REQUEST

DOWL
3500 Chad Drive, Suite 200
Eugene, Oregon 97408
541-683-6090
WWW.DOWL.COM

WILLAMETTE RIVER, HWY 30 EB (CENTER ST)

OR22: CENTER ST BRIDGE (PHASE 1) PROJECT
WILLAMINA - SALEM HIGHWAY
MARION & POLK COUNTIES

Designer: Mike McNulty, PE
Reviewer: Bob Goodrich, PE
Drafter: Jake Williams
Checker: Eric Bonn, PE

BENT 15 DRILLED SHAFTS DETAILS
SHEET NO. JA58

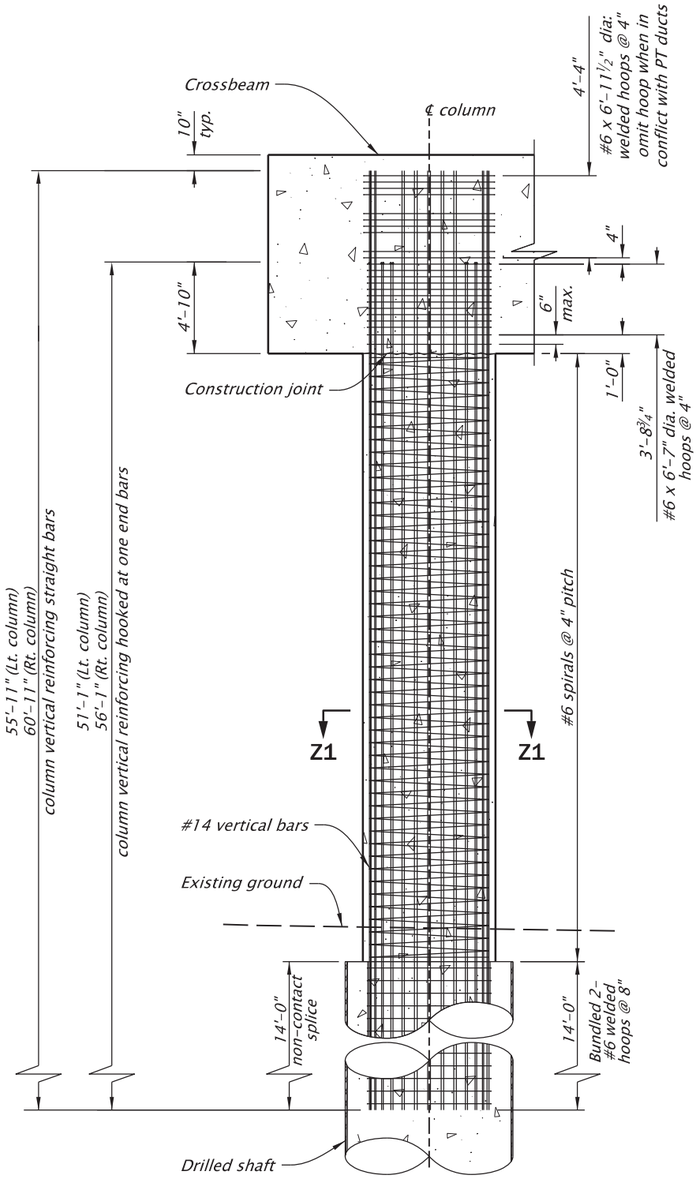

ELEVATION

Scale: 1/8"=1'-0"

NOTE:
Crossbeam reinforcement, post-tensioning ducts and anchors, and drilled shaft reinforcing not shown for clarity.

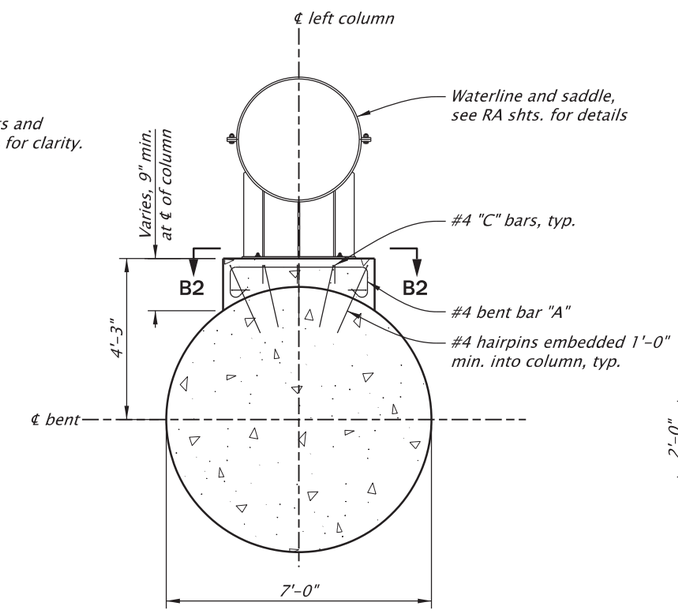

NOTE:
Column reinforcing steel not shown for clarity.

PLAN

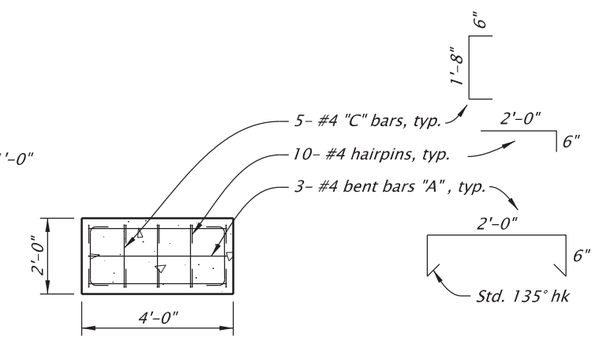

NOTE:
Waterline saddle not shown for clarity.

SECTION B2-B2

WATERLINE SUPPORT DETAIL

Scale: 1/4"=1'-0"

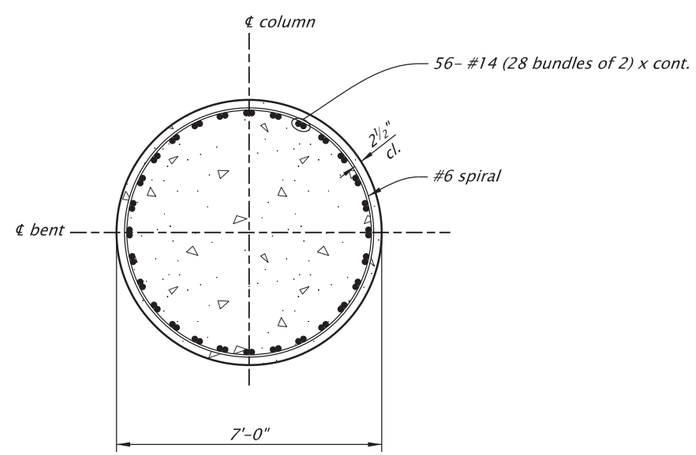

SECTION Z1-Z1

Scale: 1/4"=1'-0"

NOTE:
Field verify all dimensions and elevations before submitting Working Drawings and prior to ordering or fabricating any materials. See sht. J02 for more details.

For accompanied by drawings, see sht. JA01

STRUCTURE NO.	00123K
BDS DWG NO.	113803
CALC. BOOK	7997
HWY: 030 M.P.: 25.88	
COUNTY	Marion/Polk
DATE	2/26

SCALE WARNING
IF THIS SCALE LINE DOES NOT MEASURE ONE INCH, THEN DRAWING IS NOT TO SCALE

REGISTERED PROFESSIONAL ENGINEER 85555PE
Digitally Signed 2026.02.12 12:49:14-08'00'
OREGON
DEC. 21, 2011
MICHAEL G. McNULTY
EXPIRES: 12/31/2026

FINAL ELECTRONIC DOCUMENT AVAILABLE UPON REQUEST

DOWL
3500 Chad Drive, Suite 200
Eugene, Oregon 97408
541-683-6090
WWW.DOWL.COM

OREGON DEPARTMENT OF TRANSPORTATION

WILLAMETTE RIVER, HWY 30 EB (CENTER ST)

OR22: CENTER ST BRIDGE (PHASE 1) PROJECT
WILLAMINA - SALEM HIGHWAY
MARION & POLK COUNTIES

Designer: Mike McNulty, PE
Reviewer: Bob Goodrich, PE
Drafter: Jake Williams
Checker: Eric Bonn, PE

BENT 15 COLUMN DETAILS - 1

SHEET NO. JA59

NOTE:
Make flare weld in direction shown.

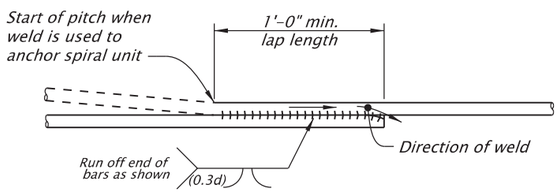

LAP-WELDED SPLICE

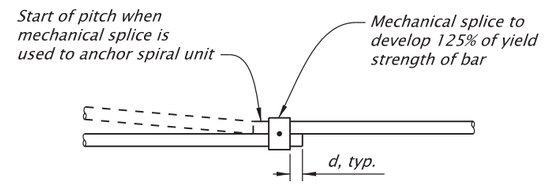

MECHANICAL SPLICE

SPLICE METHODS FOR SPIRALS

Not To Scale

RESISTANCE BUTT WELDED SPLICE

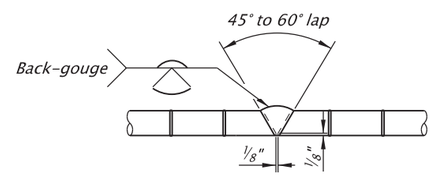

SINGLE V-GROOVE BUTT WELDED SPLICE

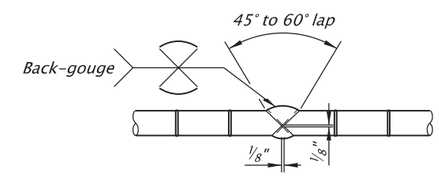

DOUBLE V-GROOVE BUTT WELDED SPLICE

SPLICE METHODS FOR HOOPS

Not To Scale

NOTES:
1. Use ASTM A706 for welded spirals.
2. Terminate spirals at end or discontinuity with one extra turn and a splice to itself with one of the details shown above.
3. Splice spirals using one of the details shown above. Spiral splices are not allowed within one column diameter from the top of the drilled shaft or bottom of crossbeam. Hoop splice methods may be used to splice spirals located within one column diameter from the top of drilled shaft or bottom of crossbeam with the Engineer's approval.
4. Field verify all dimensions and elevations before submitting Working Drawings and prior to ordering or fabricating any materials. See sht. J02 for more details.

For accompanied by drawings, see sht. JA01

SCALE WARNING
IF THIS SCALE LINE DOES NOT MEASURE ONE INCH, THEN DRAWING IS NOT TO SCALE

STRUCTURE NO.	00123K
BDS DWG NO.	113804
CALC. BOOK	7997
HWY: 030 M.P.: 25.88	
COUNTY	Marion/Polk
DATE	2/26

REGISTERED PROFESSIONAL ENGINEER
85555PE
Digitally Signed 2026.02.12 12:49:24-08'00'
OREGON
DEC. 21, 2011
MICHAEL G. McNULTY
EXPIRES: 12/31/2026

FINAL ELECTRONIC DOCUMENT AVAILABLE UPON REQUEST

DOWL
3500 Chad Drive, Suite 200
Eugene, Oregon 97408
541-683-6090
WWW.DOWL.COM

OREGON DEPARTMENT OF TRANSPORTATION

WILLAMETTE RIVER, HWY 30 EB (CENTER ST)

OR22: CENTER ST BRIDGE (PHASE 1) PROJECT
WILLAMINA - SALEM HIGHWAY
MARION & POLK COUNTIES

Designer: Mike McNulty, PE
Reviewer: Bob Goodrich, PE
Drafter: Jake Williams
Checker: Eric Bonn, PE

BENT 15 COLUMN DETAILS - 2

SHEET NO. JA60

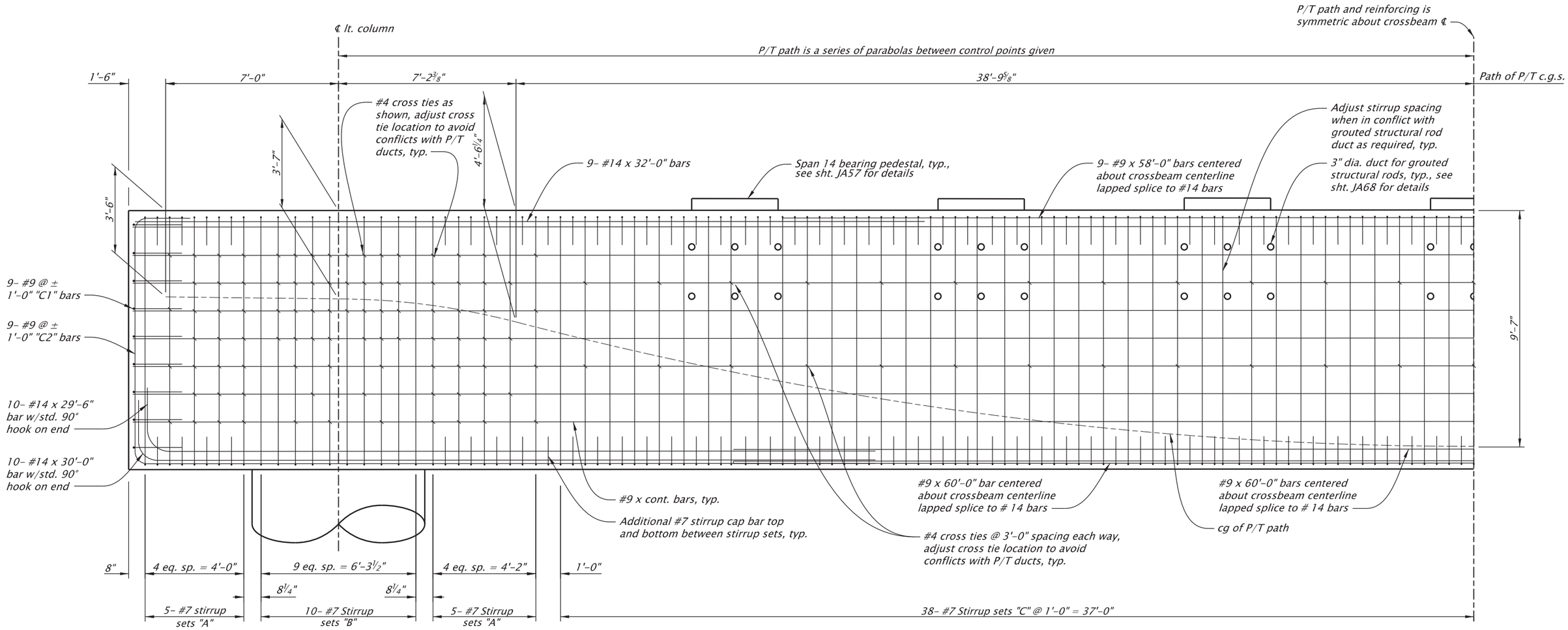

ELEVATION - CROSSBEAM

Scale: 1/4"=1'-0"

NOTE:
Column reinforcing, column joint blockouts, and bridge bearings not shown for clarity.

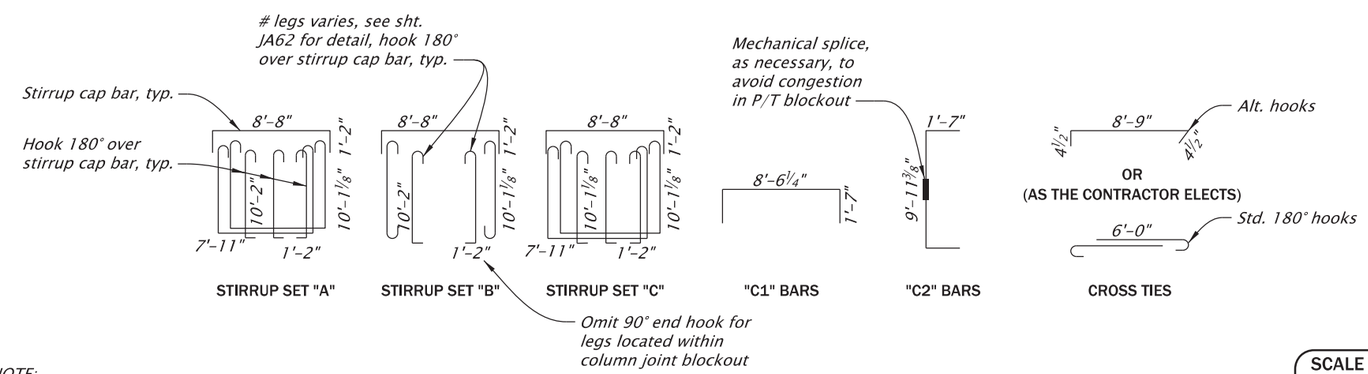

NOTE:
Field verify all dimensions and elevations before submitting Working Drawings and prior to ordering or fabricating any materials. See sht. J02 for more details.

SCALE WARNING
IF THIS SCALE LINE DOES NOT MEASURE ONE INCH, THEN DRAWING IS NOT TO SCALE

For accompanied by drawings, see sht. JA01

STRUCTURE NO.	00123K
BDS DWG NO.	113805
CALC. BOOK	7997
HWY: 030	
M.P.: 25.88	
COUNTY	Marion/Polk
DATE	2/26

REGISTERED PROFESSIONAL ENGINEER 85555PE OREGON DEC. 21, 2011 MICHAEL G. McNULTY
Digitally Signed 2026.02.12 12:49:32-08'00'
EXPIRES: 12/31/2026
FINAL ELECTRONIC DOCUMENT AVAILABLE UPON REQUEST

DOWL
3500 Chad Drive, Suite 200
Eugene, Oregon 97408
541-683-6090
WWW.DOWL.COM

WILLAMETTE RIVER, HWY 30 EB (CENTER ST)

OR22: CENTER ST BRIDGE (PHASE 1) PROJECT
WILLAMINA - SALEM HIGHWAY
MARION & POLK COUNTIES

Designer: Mike McNulty, PE
Reviewer: Bob Goodrich, PE
Drafter: Jake Williams
Checker: Eric Bonn, PE

BENT 15 CROSSBEAM DETAILS - 1

SHEET NO. JA61

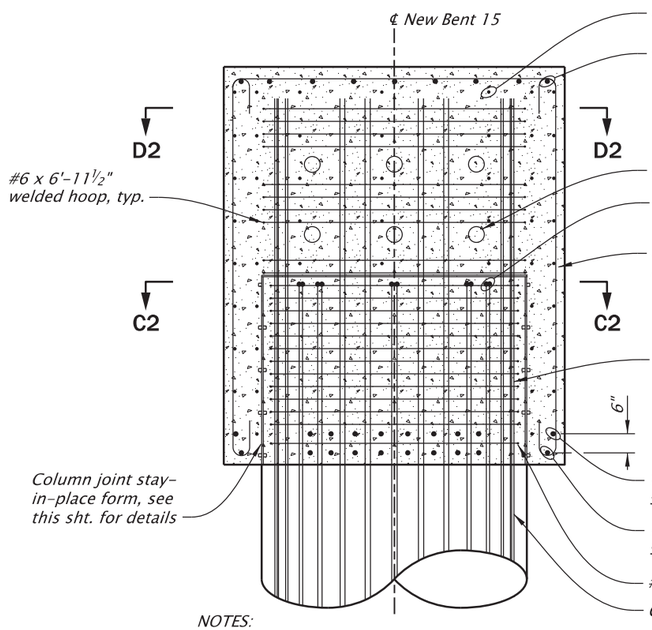

#9 x cont., typ.
9- #9 #14 x 30'-0" top bars, typ.
7' dia. column joint blockout, see column joint stay-in-place form detail, this sht.
P/T duct, typ.
10- #14 2 bar bundles w/std. 180° hooks at one end, typ.
#7 stirrup sets "B" with add'l legs, not shown
18- #14 2-bar bundles, typ.
10- #14 x 29'-6" bar w/std. 90° hook one end, typ.
10- #14 x 30'-0" bar w/std. 90° hook one end, typ.
#6 x 6'-7" welded hoop, typ.
Column vertical steel

NOTES:
1. See shts. JA59, JA61 and JA63 for crossbeam, column, and section details not shown.
2. Column bar extension and column joint pour access blockouts not shown for clarity.

TYPICAL SECTION AT COLUMNS

Scale: 1/4"=1'-0"

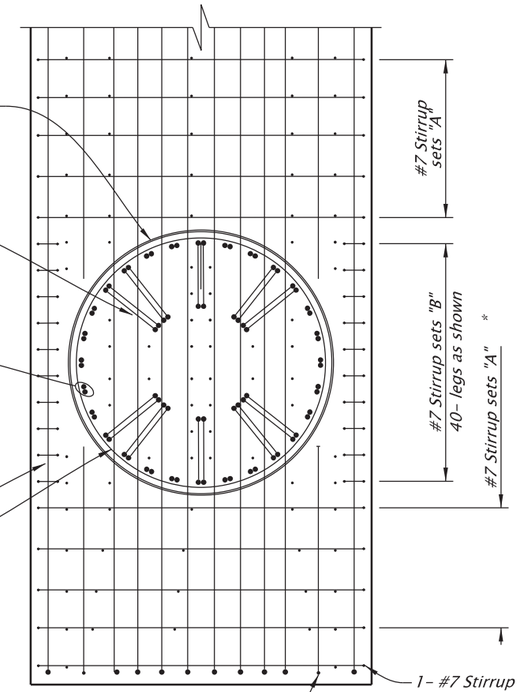

#9 x cont., trim up to 6" from column joint blockout, typ.

1- #7 Stirrup set "A" w/no add'l legs

NOTE:
*Adjust add'l stirrup legs to avoid conficts with P/T ducts.

SECTION C2-C2 (BOTTOM OF JOINT PERSPECTIVE)

Scale: 1/4"=1'-0"

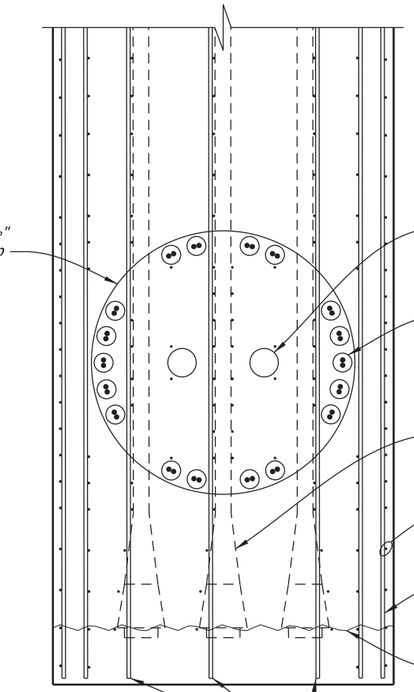

#6 x 6'-11½" welded hoop

9" max. blockout for column joint pour access, typ.
6" dia. column bar extension blockout, typ.
P/T ducts, typ.
#7 stirrups with add'l legs, typ.
#9 bars at exterior and interior stirrup legs, typ.
P/T anchorage blockout
Adjust #9 bars vertically up to 6" to avoid P/T anchorage conflicts

SECTION D2-D2 (TOP OF JOINT PERSPECTIVE)

Scale: 1/4"=1'-0"

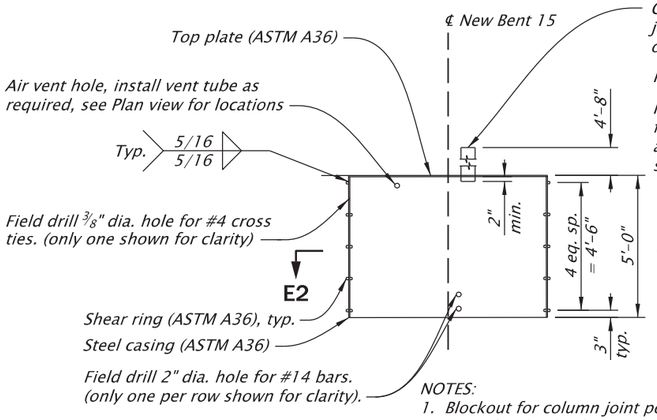

ELEVATION

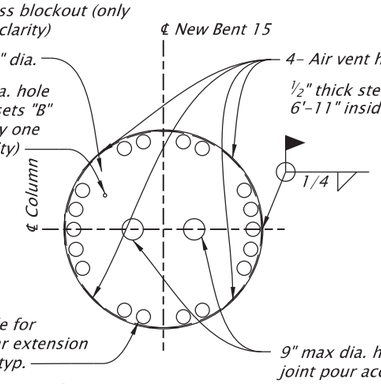

Column bar extension or column joint pour access blockout (only one shown for clarity)
PL ½ x 6'-11½" dia.
Field drill 1" dia. hole for #7 stirrup sets "B" add'l legs. (only one shown for clarity)
4- Air vent holes, as shown.
½" thick steel casing x 6'-11" inside diameter
6" dia. hole for column bar extension blockout, typ.
9" max dia. hole for column joint pour access blockout

PLAN

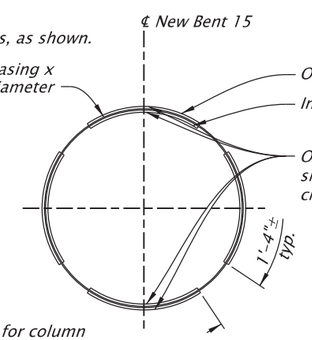

Outside shear ring bar 1 x 1 x 4'-3", typ.
Inside shear ring bar 1 x 1 x 4'-0", typ.
Omit lower inside and outside shear rings in conflict with #14 crossbeam bottom mat bars

SECTION E2-E2

NOTES:
1. Blockout for column joint pour access not shown for clarity.
2. Furnish ridged galvanized steel post-tensioning tendon ducts for column bar extension and column joint pour access blockouts.
3. Hot dip galvanize steel casing after fabrication.
4. Seal around all holes in casing around reinforcing steel and blockouts with structural steel caulking.
5. For construction sequence notes, see sht. JA64.

COLUMN JOINT STAY-IN-PLACE FORM DETAIL

Scale: 3/16"=1'-0"

NOTE:
Field verify all dimensions and elevations before submitting Working Drawings and prior to ordering or fabricating any materials. See sht. J02 for more details.

For accompanied by drawings, see sht. JA01

SCALE WARNING
IF THIS SCALE LINE DOES NOT MEASURE ONE INCH, THEN DRAWING IS NOT TO SCALE

STRUCTURE NO.	00123K
BDS DWG NO.	113806
CALC. BOOK	7997
HWY: 030	M.P.: 25.88
COUNTY	Marion/Polk
DATE	2/26

REGISTERED PROFESSIONAL ENGINEER 85555PE
Digitally Signed 2026.02.12 12:49:43-08'00'
OREGON DEC. 21, 2011 MICHAEL G. McNULTY
EXPIRES: 12/31/2026
FINAL ELECTRONIC DOCUMENT AVAILABLE UPON REQUEST

DOWL
3500 Chad Drive, Suite 200
Eugene, Oregon 97408
541-683-6090
WWW.DOWL.COM

OREGON DEPARTMENT OF TRANSPORTATION

WILLAMETTE RIVER, HWY 30 EB (CENTER ST)

OR22: CENTER ST BRIDGE (PHASE 1) PROJECT
WILLAMINA - SALEM HIGHWAY
MARION & POLK COUNTIES

Designer: Mike McNulty, PE
Reviewer: Bob Goodrich, PE
Drafter: Jake Williams
Checker: Eric Bonn, PE

BENT 15 CROSSBEAM DETAILS - 2

SHEET NO. JA62

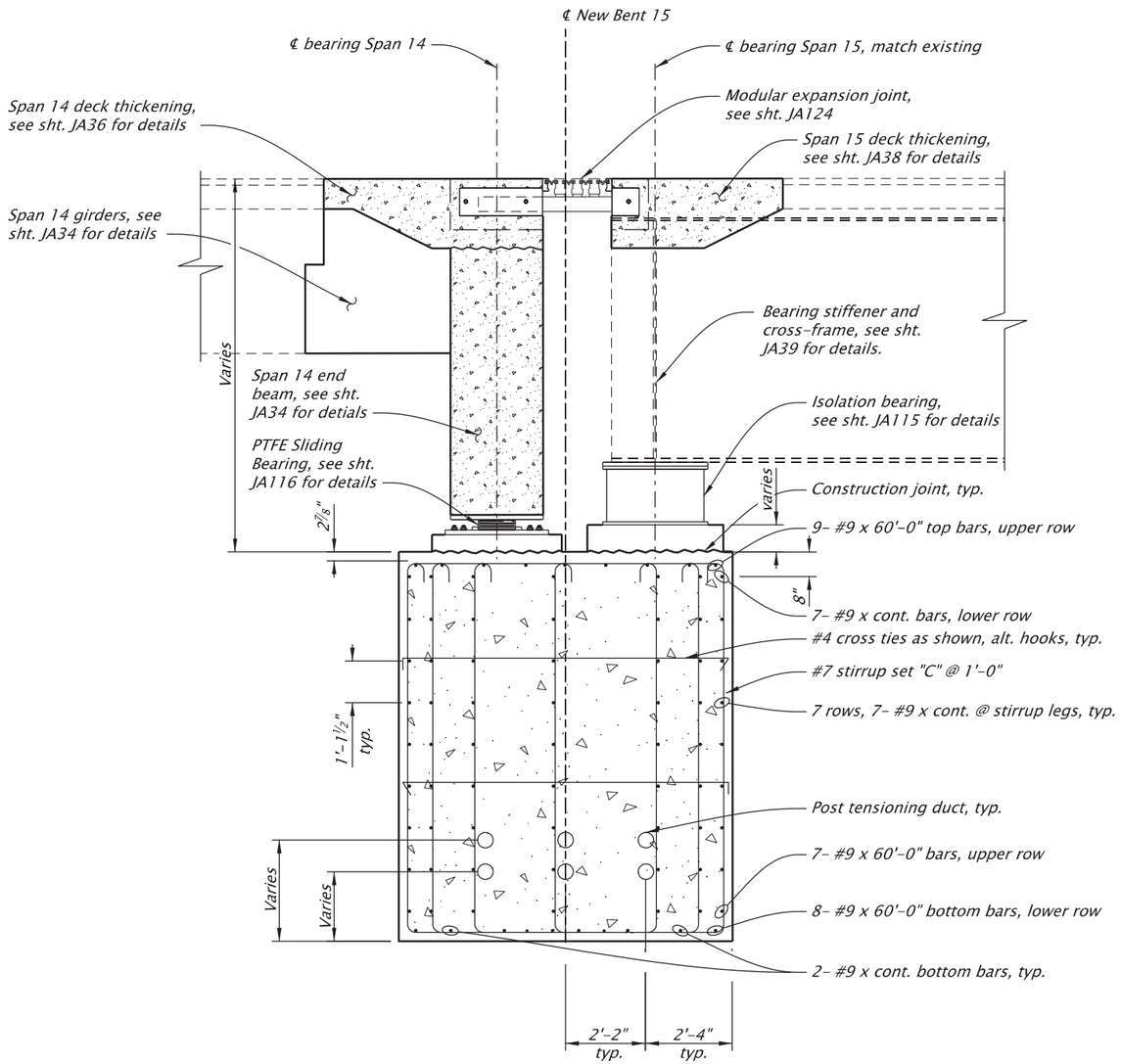

SECTION U1-U1

Scale: 1/4"=1'-0"

NOTES:

1. *See sht. JA56 for Section U1-U1 location.*
2. *Cross-frame not shown for clarity.*
3. *Waterline not shown, see RA sheets for details.*
4. *Field verify all dimensions and elevations before submitting Working Drawings and prior to ordering or fabricating any materials. See sht. J02 for more details.*

For accompanied by drawings, see sht. JA01

STRUCTURE NO.	00123K
BDS DWG NO.	113807
CALC. BOOK	7997
HWY: 030	M.P.: 25.88
COUNTY	Marion/Polk
DATE	2/26

SCALE WARNING

IF THIS SCALE LINE DOES NOT MEASURE ONE INCH, THEN DRAWING IS NOT TO SCALE

REGISTERED PROFESSIONAL ENGINEER
85555PE
Digitally Signed 2026.02.12 12:49:51-08'00'
OREGON
DEC. 21, 2011
MICHAEL G. McNULTY
EXPIRES: 12/31/2026

FINAL ELECTRONIC DOCUMENT AVAILABLE UPON REQUEST

DOWL
3500 Chad Drive, Suite 200
Eugene, Oregon 97408
541-683-6090
WWW.DOWL.COM

OREGON DEPARTMENT OF TRANSPORTATION

WILLAMETTE RIVER, HWY 30 EB (CENTER ST)

OR22: CENTER ST BRIDGE (PHASE 1) PROJECT
WILLAMINA - SALEM HIGHWAY
MARION & POLK COUNTIES

Designer: Mike McNulty, PE
Reviewer: Bob Goodrich, PE
Drafter: Jake Williams
Checker: Eric Bonn, PE

BENT 15 CROSSBEAM DETAILS - 3

SHEET NO. JA63

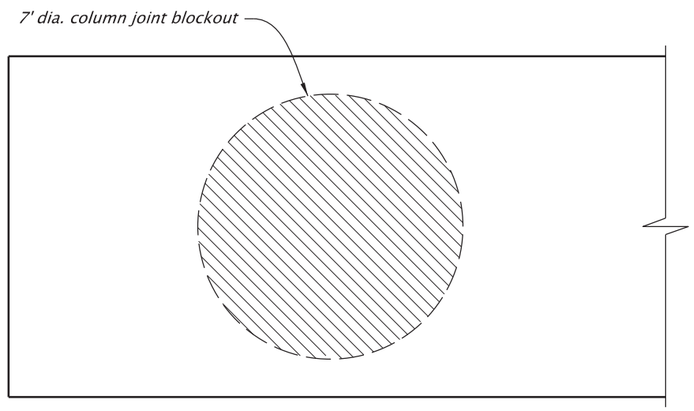

NOTE:
Column and crossbeam reinforcement not shown for clarity.

VIEW F2-F2 (BOTTOM OF JOINT PERSPECTIVE)

Scale: 1/4"=1'-0"

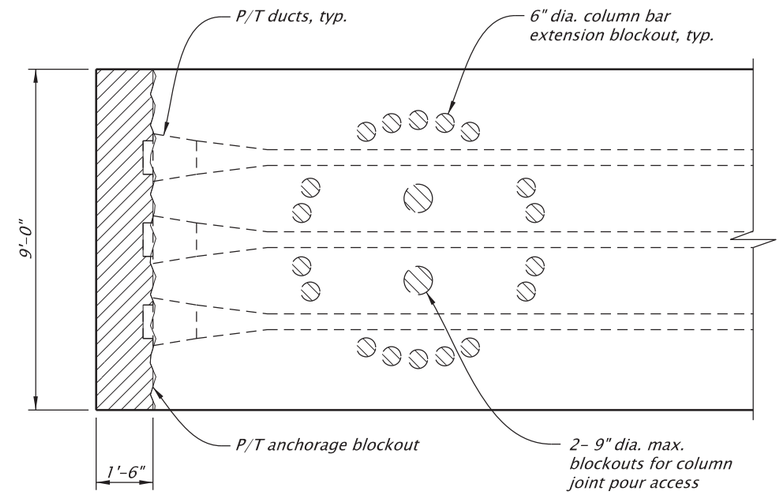

NOTE:
Column and crossbeam reinforcement not shown for clarity.

VIEW G2-G2 (TOP OF JOINT PERSPECTIVE)

Scale: 1/4"=1'-0"

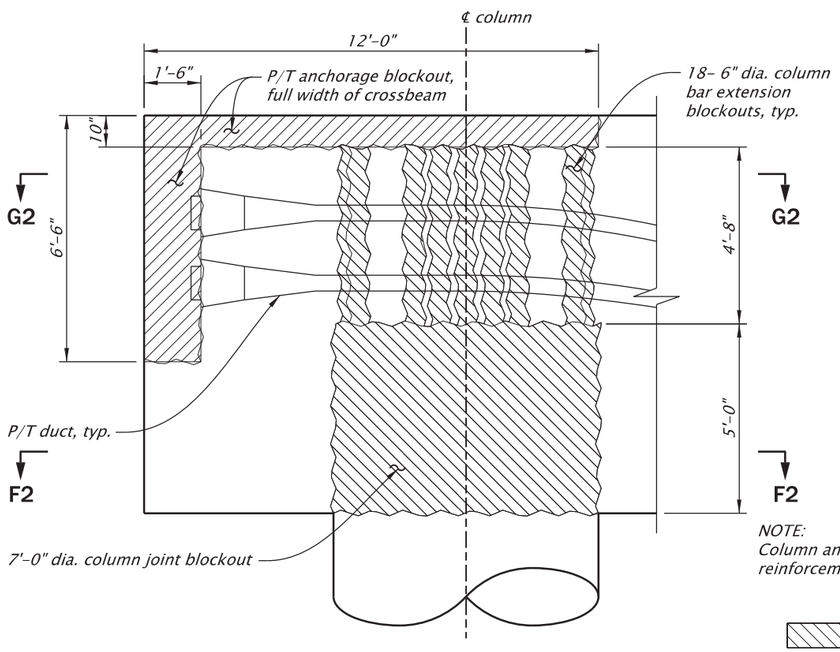

NOTE:
Column and crossbeam reinforcement not shown for clarity.

Column joint blockout

P/T anchorage blockout

COLUMN JOINT BLOCKOUT DETAIL

Scale: 1/4"=1'-0"

CROSSBEAM CONSTRUCTION SEQUENCE:

1. *Construct drilled shafts.*
2. *Construct columns up to crossbeam level.*
3. *Install crossbeam falsework system. Do not support falsework from new columns.*
4. *Form and pour crossbeam except for column joint and P/T anchorage block out as shown.*
5. *Post tension crossbeam, see sht. JA65 for details. Allow crossbeam to displace laterally and vertically from falsework.*
6. *Pour column joint blockout with Drilled Shaft Concrete, Class 5000*
7. *Pour P/T anchorage blockouts.*
8. *Remove falsework.*

NOTE:
Field verify all dimensions and elevations before submitting Working Drawings and prior to ordering or fabricating any materials. See sht. J02 for more details.

For accompanied by drawings, see sht. JA01

SCALE WARNING
IF THIS SCALE LINE DOES NOT MEASURE ONE INCH, THEN DRAWING IS NOT TO SCALE

STRUCTURE NO.	00123K
BDS DWG NO.	113808
CALC. BOOK	7997
HWY: 030 M.P.: 25.88	
COUNTY	Marion/Polk
DATE	2/26

REGISTERED PROFESSIONAL ENGINEER 85555PE
Digitally Signed 2026.02.12 12:50:00-08'00'
OREGON
DEC. 21, 2011
MICHAEL G. McNULTY
EXPIRES: 12/31/2026

FINAL ELECTRONIC DOCUMENT AVAILABLE UPON REQUEST

DOWL
3500 Chad Drive, Suite 200
Eugene, Oregon 97408
541-683-6090
WWW.DOWL.COM

OREGON DEPARTMENT OF TRANSPORTATION

WILLAMETTE RIVER, HWY 30 EB (CENTER ST)

OR22: CENTER ST BRIDGE (PHASE 1) PROJECT
WILLAMINA - SALEM HIGHWAY
MARION & POLK COUNTIES

Designer: Mike McNulty, PE
Reviewer: Bob Goodrich, PE
Drafter: Jake Williams
Checker: Eric Bonn, PE

BENT 15 CROSSBEAM DETAILS - 4

SHEET NO. JA64

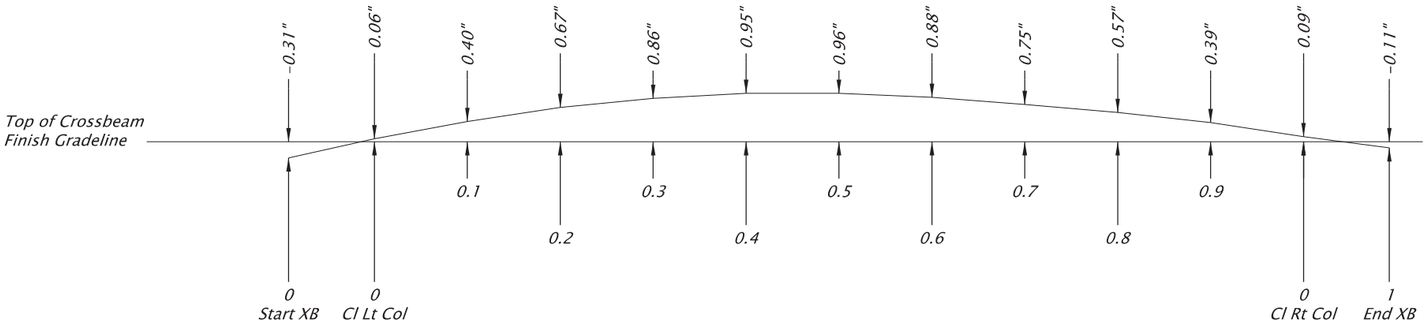

NOTE:
Camber shown is adjustment to the crossbeam profile grade line. Camber is designed to compensate for deflection due to post-tensioning, the dead load of all concrete, reinforcing steel, and long-term affects of shrinkage and creep. No allowance is given for falsework deflection or crush, to be determined by contractor.

CAMBER DIAGRAM

No Scale

STRESSING DETAILS

Initial force before anchor set at the left and right ends of the crossbeam is 8,827 kips = Pj

$$As = \frac{Pj}{0.9\ fpy}$$

Minimum final force at the left end of the crossbeam is 6,870 kips and the right end of the crossbeam is 6,870 kips.

Jack tendons to (As) (0.9 fpy) and anchor at the equivalent anchor set of 3/8 inch.

Stress half of the tendons from the left end and the other half of the tendons from the right end of the crossbeam using the following pattern.

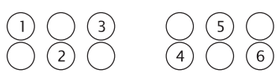

Left End *Right End*

The jacking force may not exceed 1,471 kips per anchorage.

Design Data:

Use friction factors of u = 0.25. k = 0.0002 to compute losses.

Assumed average long term loss of stress in post-tensioning steel is 16.3 ksi.

DUCT SIZE (in.)	"Z" (in.)
3" O.D. and less	1/2"
Over 3" O.D. to 4"	3/4"
Over 4" O.D.	1"

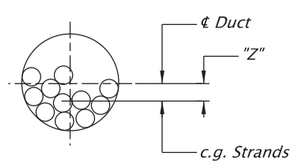

Consider the amount of tendon offset ("z") within the duct as shown for the purpose of calculating the center of gravity of prestressing steel.

TENDON OFFSET DETAIL
No Scale

NOTE:
Field verify all dimensions and elevations before submitting Working Drawings and prior to ordering or fabricating any materials. See sht. J02 for more details.

PRESTRESSING NOTES

Concrete:
Provide Class 5000 - 3/4 concrete in post-tensioned crossbeam.

Apply post-tensioning force after concrete has attained a strength of 5000 psi and a minimum 14 days after final placement.

Prestressing steel:
For prestressing force c.g.s. (center of gravity of strand) diagram, see sht. JA61.

Use low relaxation seven wire strand (bright wire) (AASHTO M203 (ASTM A416), grade 270, Supplement 1, with a minimum ultimate strength fpu = 270 ksi.

Strand yield strength fpy = 0.90 fpu

Allowable short term stress immediately prior to seating is 0.90 fpy .

Allowable initial stress at anchorages after anchor set is 0.70 fpu .

Allowable initial stress at any other point after anchor set is 0.74 fpu .

Allowable final service load stress after losses at any point is 0.80 fpy .

Ducts:
Provide ducts for prestressing steel in accordance with the Specifications. Securely fasten ducts to stirrups and tie bars as shown to prevent movement. The maximum permissible duct diameter is 0.4 times the minimum stem thickness. Provide duct area at least 2.5 times the net prestressing steel contained.

Grouting:
Pressure grout prestressing steel in accordance with the Specifications.

CONSTRUCTION NOTES

Allow for initial short-term structure shortening due at post-tensioning (due to effects of prestressing and elastic shortening).

The anticipated total elastic shortening is 0.65".

Construct falsework to permit the crossbeam to lift off the falsework and shorten during stressing operations. Ensure column joint blockout stay-in-place forms do not resist shortening during stressing operations. Do not remove false work under the crossbeam until after stressing and the column joint blockout has been poured and reached 5000 psi strength.

Dimensions of concrete sections and the anchorage reinforcement shown on plans determine pay quantities. Changes requested by contractor to accommodate a given post-tensioning system is not reason for extra payment.

Obtain approval from the Engineer for any changes.

For accompanied by drawings, see sht. JA01

SCALE WARNING
IF THIS SCALE LINE DOES NOT MEASURE ONE INCH, THEN DRAWING IS NOT TO SCALE

STRUCTURE NO.	00123K
BDS DWG NO.	113809
CALC. BOOK	7997
HWY: 030	M.P.: 25.88
COUNTY	Marion/Polk
DATE	2/26

REGISTERED PROFESSIONAL ENGINEER
85555PE
Digitally Signed 2026.02.12 12:50:11-08'00'
OREGON
DEC. 21, 2011
MICHAEL G. McNULTY
EXPIRES: 12/31/2026

FINAL ELECTRONIC DOCUMENT AVAILABLE UPON REQUEST

DOWL
3500 Chad Drive, Suite 200
Eugene, Oregon 97408
541-683-6090
WWW.DOWL.COM

WILLAMETTE RIVER, HWY 30 EB (CENTER ST)

OR22: CENTER ST BRIDGE (PHASE 1) PROJECT
WILLAMINA - SALEM HIGHWAY
MARION & POLK COUNTIES

Designer: Mike McNulty, PE
Reviewer: Bob Goodrich, PE
Drafter: Jake Williams
Checker: Eric Bonn, PE

BENT 15 POST-TENSIONING DETAILS - 1

SHEET NO. JA65

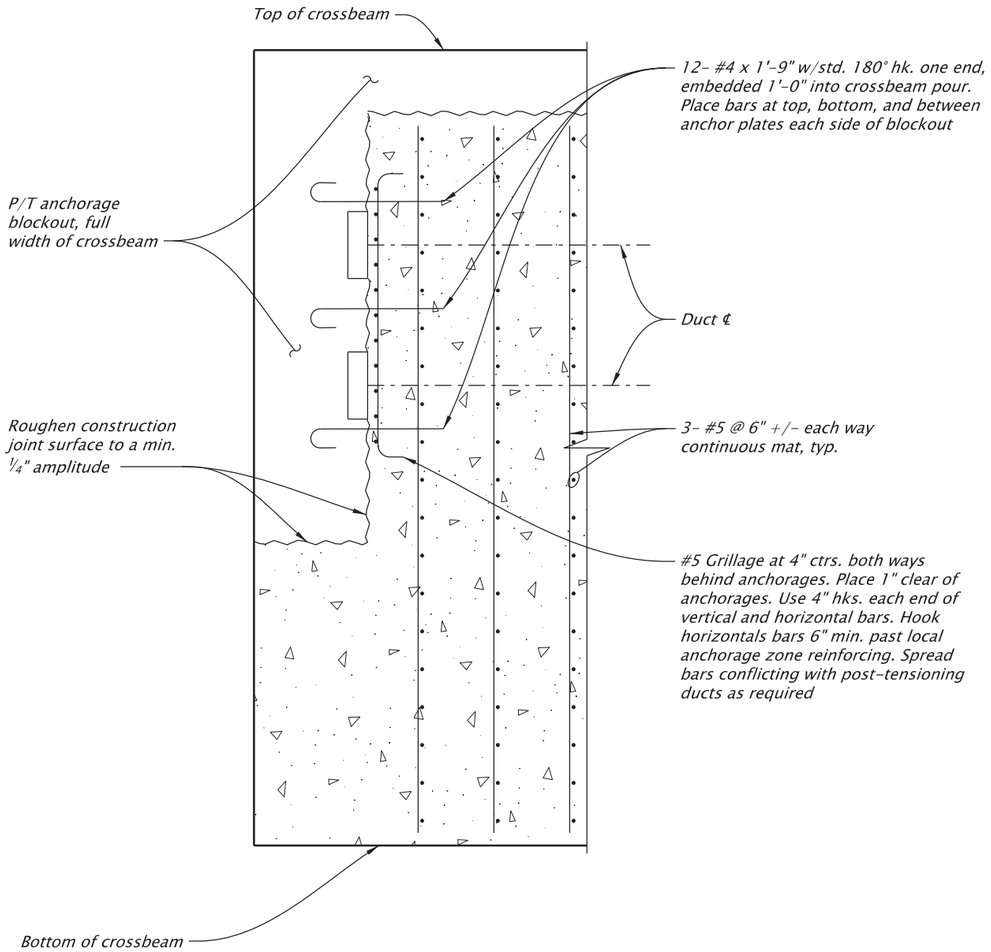

GRILLAGE AT ANCHORAGE

No Scale

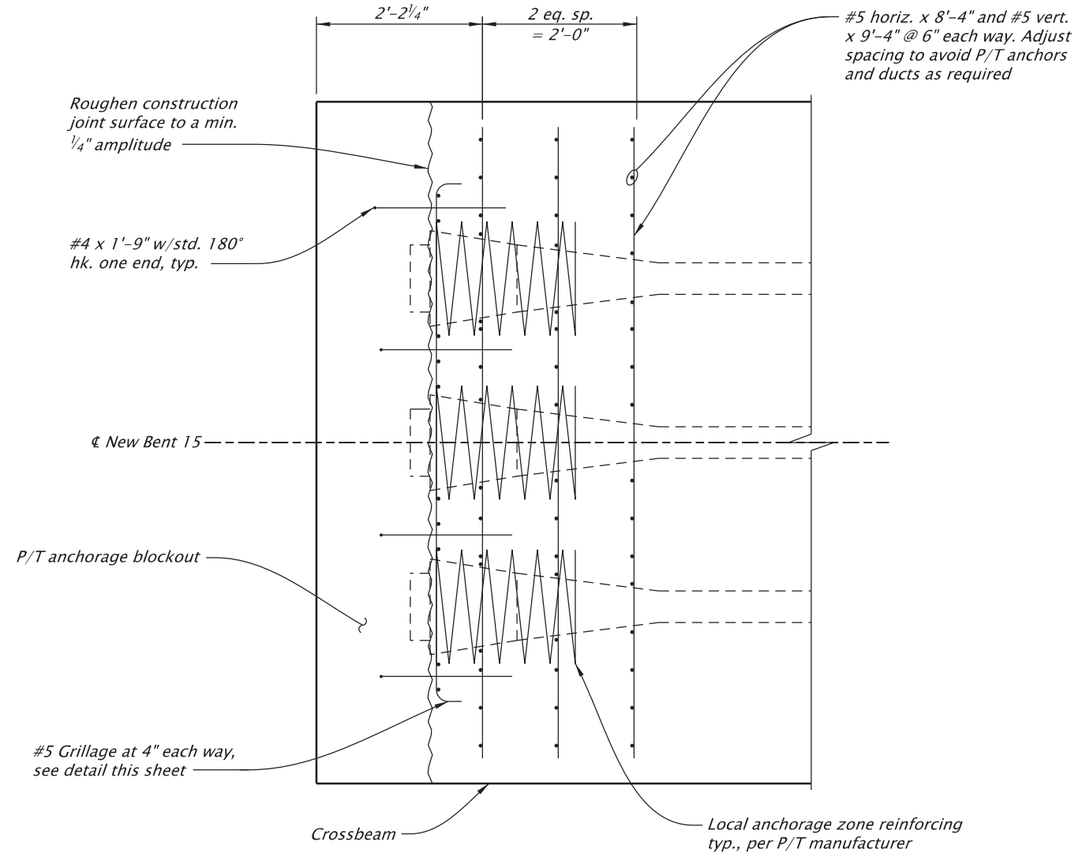

ANCHORAGE REINFORCEMENT

No Scale

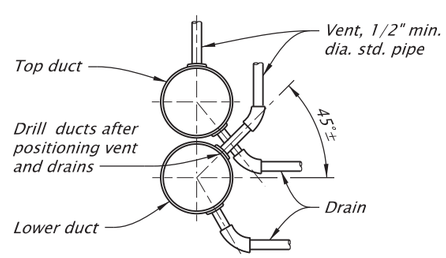

GROUT VENT DETAIL FOR HIGH POINT VENTS AND LOW POINT DRAINS

No Scale

For accompanied by drawings, see sht. JA01

STRUCTURE NO.	00123K
BDS DWG NO.	113810
CALC. BOOK	7997
HWY: 030 M.P.: 25.88	
COUNTY	Marion/Polk
DATE	2/26

REGISTERED PROFESSIONAL ENGINEER 85555PE
Digitally Signed 2026.02.12 12:50:20-08'00'
OREGON DEC. 21, 2011 MICHAEL G. McNULTY
EXPIRES: 12/31/2026

FINAL ELECTRONIC DOCUMENT AVAILABLE UPON REQUEST

DOWL
3500 Chad Drive, Suite 200
Eugene, Oregon 97408
541-683-6090
WWW.DOWL.COM

OREGON DEPARTMENT OF TRANSPORTATION

WILLAMETTE RIVER, HWY 30 EB (CENTER ST)

OR22: CENTER ST BRIDGE (PHASE 1) PROJECT
WILLAMINA - SALEM HIGHWAY
MARION & POLK COUNTIES

Designer: Mike McNulty, PE
Reviewer: Bob Goodrich, PE
Drafter: Jake Williams
Checker: Eric Bonn, PE

BENT 15 POST-TENSIONING DETAILS - 2

SHEET NO. JA66

SCALE WARNING
IF THIS SCALE LINE DOES NOT MEASURE ONE INCH, THEN DRAWING IS NOT TO SCALE

NOTE:
Field verify all dimensions and elevations before submitting Working Drawings and prior to ordering or fabricating any materials. See sht. J02 for more details.

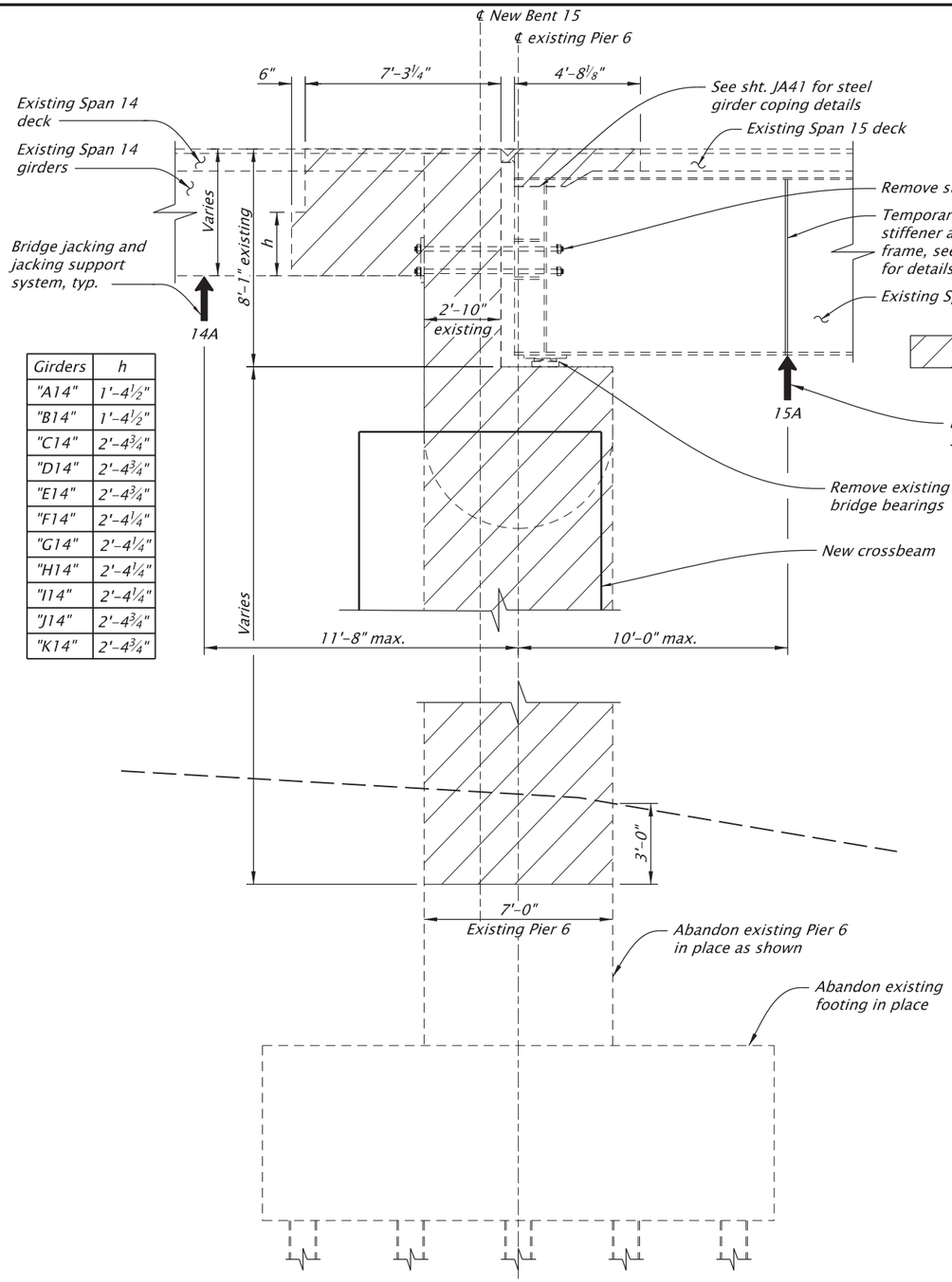

Girders	h
"A14"	1'-4½"
"B14"	1'-4½"
"C14"	2'-4¾"
"D14"	2'-4¾"
"E14"	2'-4¾"
"F14"	2'-4¼"
"G14"	2'-4¼"
"H14"	2'-4¼"
"I14"	2'-4¼"
"J14"	2'-4¾"
"K14"	2'-4¾"

REMOVAL LIMITS AND PHASE A BRIDGE JACKING DIAGRAM

Scale: 3/16"=1'-0"

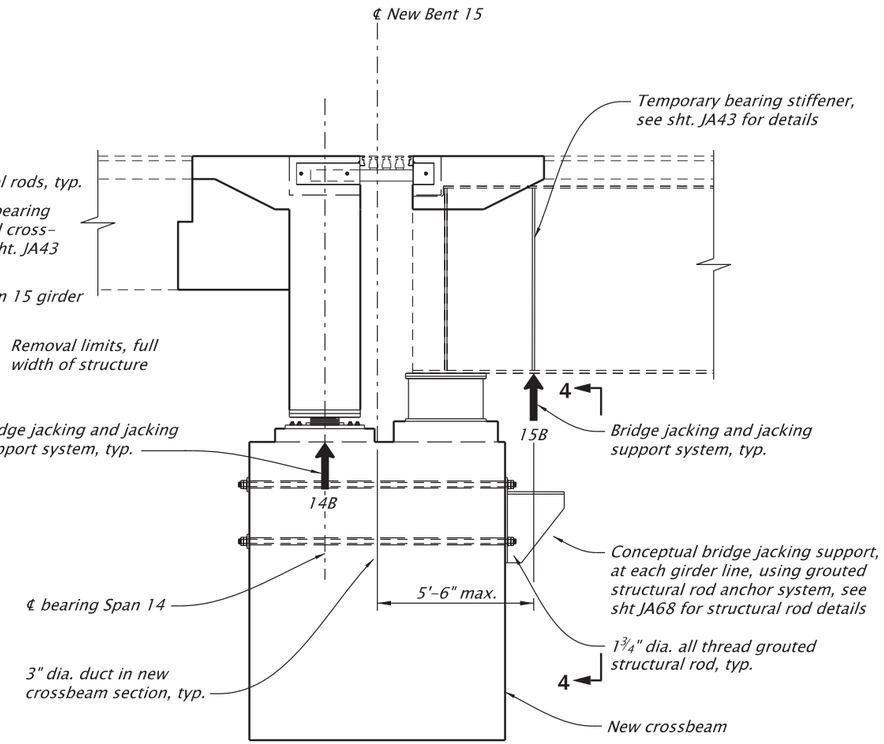

PHASE B BRIDGE JACKING DIAGRAM

Scale: 3/16"=1'-0"

BEARING ASSEMBLY INSTALLATION SEQUENCE:

1. Install each bearing assembly level and low on leveling nuts.
2. Install bridge jacking and jacking support system at 14B and 15B. Uniformly jack and load crossbeam at 14B and 15B jacking locations and unload temporary jacking supports at 14A and 15A. Verify superstructure elevations are within ± ⅛" of veritcal control elevations before locking off jacks at jacking support 14B and 15B locations.
3. Raise bearings assemblies, using leveling nuts, until uniformly bearing against the end beam or girder bottom flange.
4. Uniformly unload temporary jacking supports at 14B and 15B locations and load bearings.
5. Verify all bearings are uniformly bearing against the end beam or girder bottom flange and superstucture elevations are within ± ⅛" of vertical control elevations. If not, uniformly jack bridge at temporary jacking supports 14B or 15B locations to unload bearings and repeat steps 3 and 4, until all bearings are uniformly bearing against the end beam or girder bottom flange and superstucture elevations are within ± ⅛" of vertical control elevations.
6. Form and pour concrete bearing pedestals. See sht. JA57 for details.
7. Field weld Span 15 tapered distribution plates to girder bottom flange. See sht. JA117 for details.
8. Remove temporary bridge jacking support and install grouted structural rod plate washers and nuts, see sht. JA68 for details.

BRIDGE JACKING LOADS				
Location	Dead	Live	Location	Conceptual System Type
14A & 14B	597 kips	168 kips	14A & 15A	Self supported
15A & 15B	902 kips	283 kips	14B & 15B	Supported from new crossbeam

NOTES:
1. Loads are for jacking locations shown.
2. Dead load represents the total unfactored reaction.
3. Live load represents the factored, controlling single lane HL-93 or Permit Truck reaction, adjusted for dynamic load allowance, and a multiple presence factor of 1.0.
4. Contractor is responsible for determining all construction loading including, materials, equipment and live loading.

For accompanied by drawings, see sht. JA01

NOTES:
1. Field verify all dimesions and elevations before submitting Working Drawings and prior to ordering or fabricating any materials. See sht. J02 for more details.
2. See sht. JA68 for View 4-4.

SCALE WARNING
IF THIS SCALE LINE DOES NOT MEASURE ONE INCH, THEN DRAWING IS NOT TO SCALE

STRUCTURE NO. 00123K
BDS DWG NO. 113811
CALC. BOOK 7997
HWY: 030
M.P.: 25.88
COUNTY Marion/Polk
DATE 2/26

REGISTERED PROFESSIONAL ENGINEER 85555PE
Digitally Signed 2026.02.12 12:52:41-08'00'
OREGON DEC. 21, 2011 MICHAEL G. McNULTY
EXPIRES: 12/31/2026
FINAL ELECTRONIC DOCUMENT AVAILABLE UPON REQUEST

DOWL
3500 Chad Drive, Suite 200
Eugene, Oregon 97408
541-683-6090
WWW.DOWL.COM

WILLAMETTE RIVER, HWY 30 EB (CENTER ST)

OR22: CENTER ST BRIDGE (PHASE 1) PROJECT
WILLAMINA - SALEM HIGHWAY
MARION & POLK COUNTIES

Designer: Mike McNulty, PE
Reviewer: Bob Goodrich, PE
Drafter: Jake Williams
Checker: Eric Bonn, PE

BENT 15 MISCELLANEOUS DETAILS - 1
SHEET NO. JA67

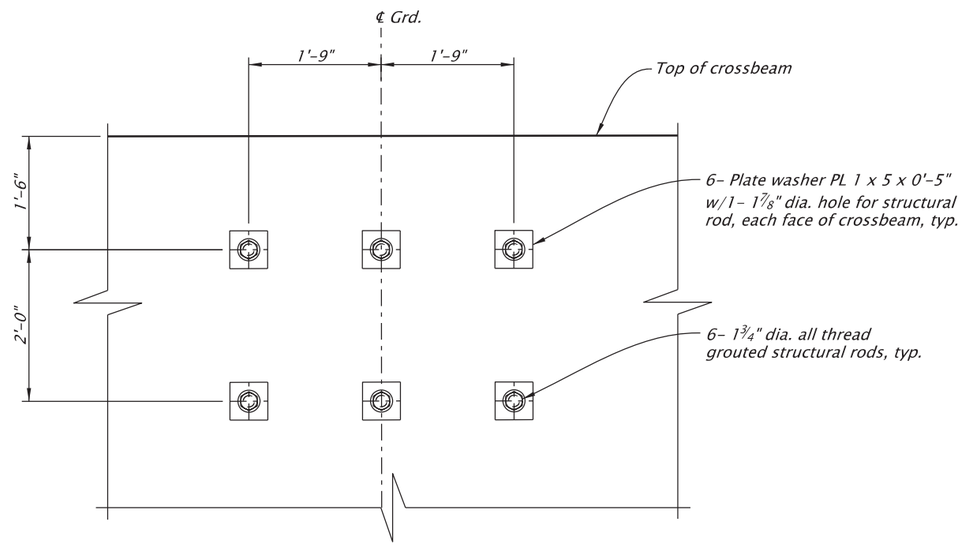

NOTES:
1. Final condition shown. Temporary jacking support not shown.
2. Superstructure, bearing assembly and reinforcing not shown for clarity.

VIEW 4-4

Scale: 1/2"=1'-0"

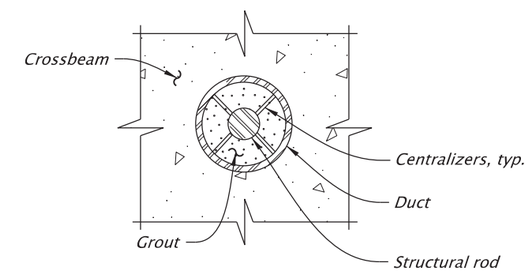

TYPICAL SECTION

NOTES:
1. Crossbeam reinforcing not shown for clarity.
2. Do not tighten nuts until concrete has reached minimum 28 day strength. Grout annular space around the all thread rod in duct after tightening.
3. Install double nut after tightening.
4. See sht. JA66 for grout vent details.

STRUCTURAL ROD DETAILS

No Scale

NOTES:
1. See sht. JA67 for View 4-4 location.
2. Field verify all dimensions and elevations before submitting Working Drawings and prior to ordering or fabricating any materials. See sht. J02 for more details.

For accompanied by drawings, see sht. JA01

SCALE WARNING
IF THIS SCALE LINE DOES NOT MEASURE ONE INCH, THEN DRAWING IS NOT TO SCALE

STRUCTURE NO.	00123K
BDS DWG NO.	113812
CALC. BOOK	7997
HWY: 030	M.P.: 25.88
COUNTY	Marion/Polk
DATE	2/26

REGISTERED PROFESSIONAL ENGINEER
85555PE
Digitally Signed 2026.02.12 12:51:41-08'00'
OREGON
DEC. 21, 2011
MICHAEL G. McNULTY
EXPIRES: 12/31/2026

FINAL ELECTRONIC DOCUMENT AVAILABLE UPON REQUEST

DOWL
3500 Chad Drive, Suite 200
Eugene, Oregon 97408
541-683-6090
WWW.DOWL.COM

OREGON DEPARTMENT OF TRANSPORTATION

WILLAMETTE RIVER, HWY 30 EB (CENTER ST)

OR22: CENTER ST BRIDGE (PHASE 1) PROJECT
WILLAMINA - SALEM HIGHWAY
MARION & POLK COUNTIES

Designer: Mike McNulty, PE
Reviewer: Bob Goodrich, PE
Drafter: Jake Williams
Checker: Eric Bonn, PE

BENT 15 MISCELLANEOUS DETAILS - 2

SHEET NO. JA68

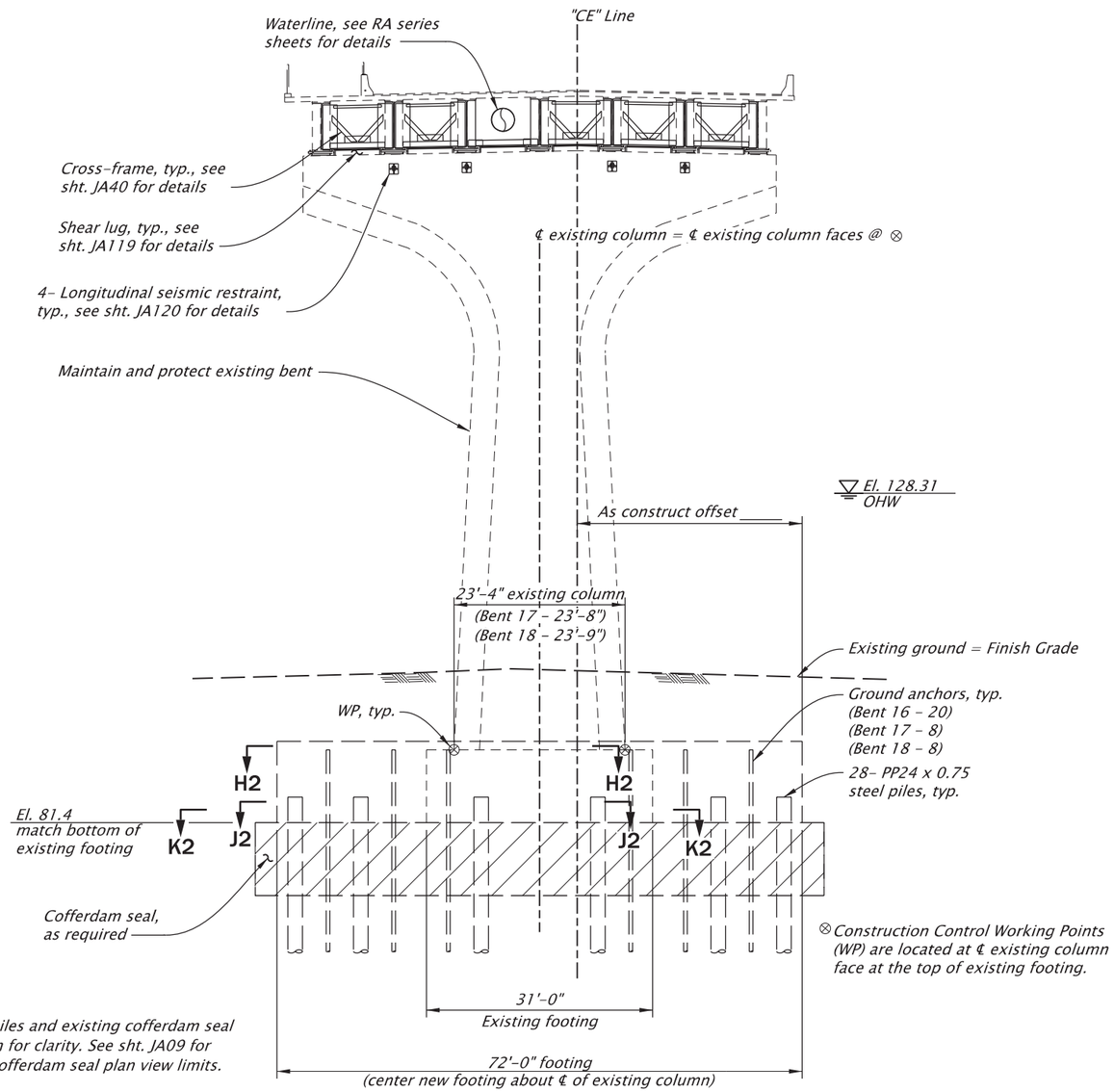

ELEVATION - BENT 16 (BENTS 17 & 18 SIMILAR)

Scale: 1"=20'

NOTE:
Existing piles and existing cofferdam seal not shown for clarity. See sht. JA09 for existing cofferdam seal plan view limits.

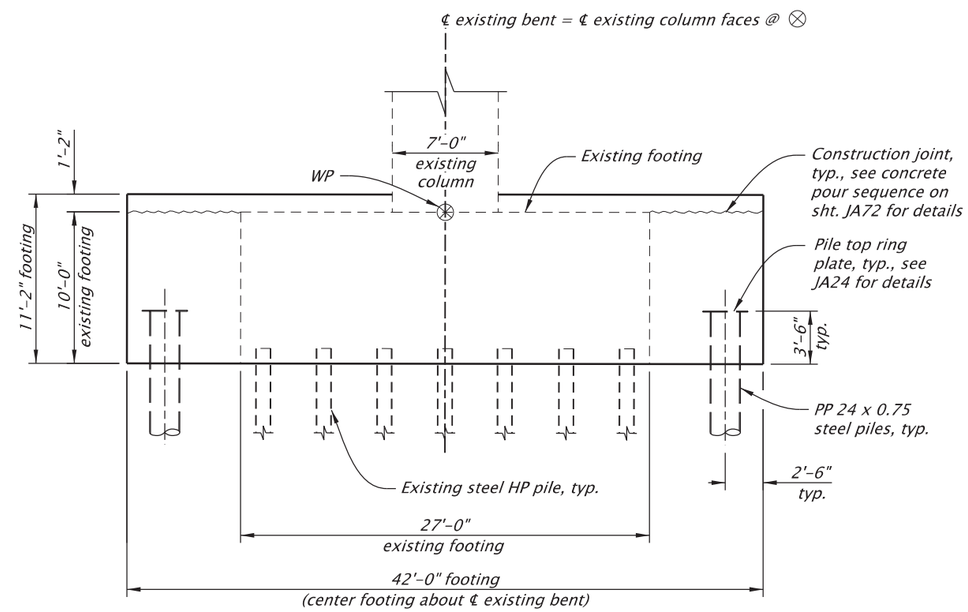

TYPICAL SECTION - BENT 16 (BENTS 17 & 18 SIMILAR)

Scale: 1" = 10'

NOTES:
1. See sht. JA70 for Section H2-H2 details.
2. See sht. JA71 for Section J2-J2 details.
3. See sht. JA72 for Section K2-K2 details.
4. Field verify all dimensions and elevations prior to submitting Working Drawings and prior to ordering or fabricating any materials. See sht. J02 for more details.

For accompanied by drawings, see sht. JA01

SCALE WARNING
IF THIS SCALE LINE DOES NOT MEASURE ONE INCH, THEN DRAWING IS NOT TO SCALE

STRUCTURE NO.	00123K
BDS DWG NO.	113813
CALC. BOOK	7997
HWY: 030	M.P.: 25.88
COUNTY	Marion/Polk
DATE	2/26

REGISTERED PROFESSIONAL ENGINEER
85555PE
Digitally Signed 2026.02.12 12:51:52-08'00'
OREGON
DEC. 21, 2011
MICHAEL G. McNULTY
EXPIRES: 12/31/2026

FINAL ELECTRONIC DOCUMENT AVAILABLE UPON REQUEST

DOWL
3500 Chad Drive, Suite 200
Eugene, Oregon 97408
541-683-6090
WWW.DOWL.COM

WILLAMETTE RIVER, HWY 30 EB (CENTER ST)

OR22: CENTER ST BRIDGE (PHASE 1) PROJECT
WILLAMINA - SALEM HIGHWAY
MARION & POLK COUNTIES

Designer: Mike McNulty, PE
Reviewer: Bob Goodrich, PE
Drafter: Jake Williams
Checker: Eric Bonn, PE

BENT 16 ELEVATION (BENT 17 & 18 SIMILAR)

SHEET NO. JA69

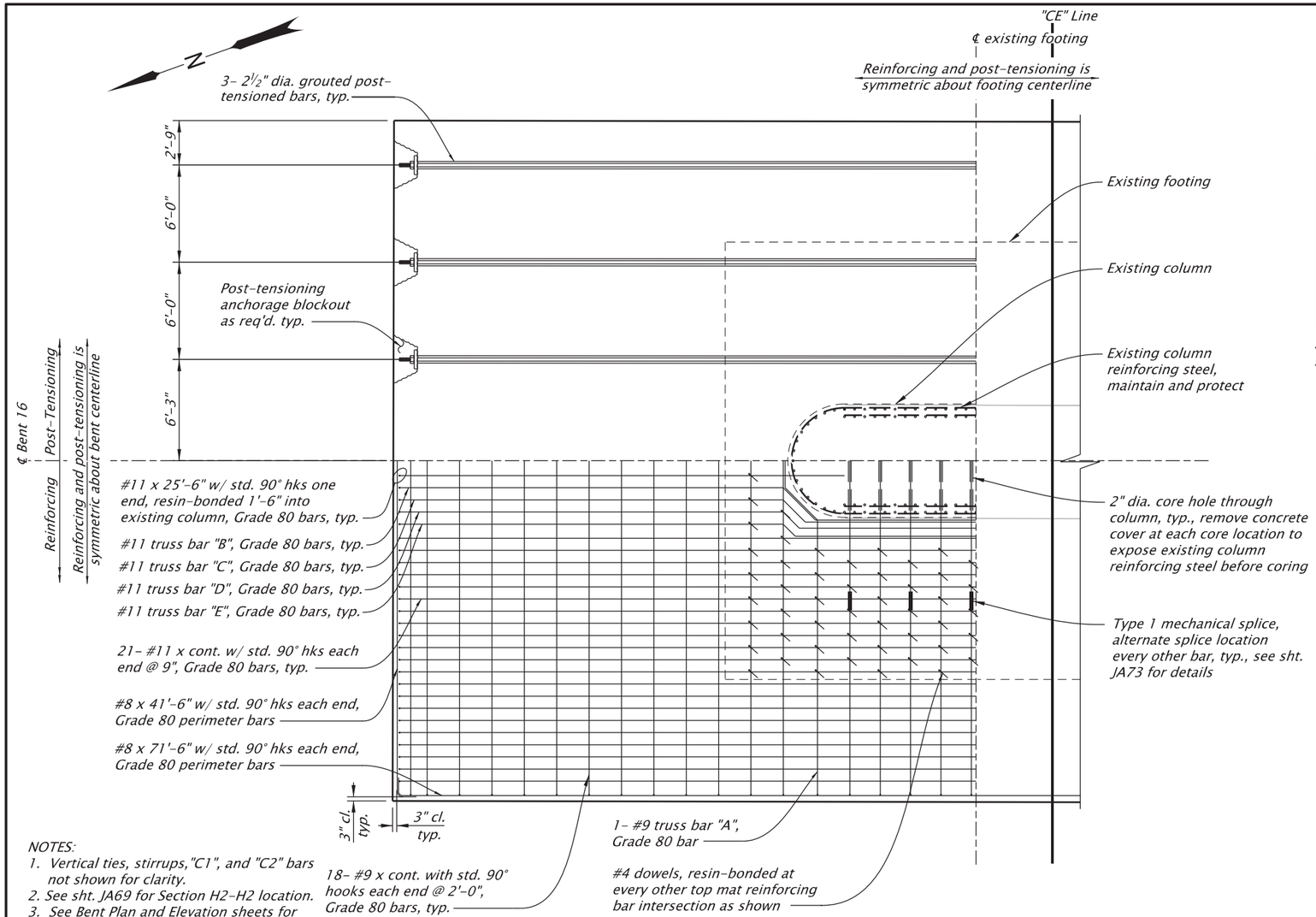

NOTES:
1. Vertical ties, stirrups, "C1", and "C2" bars not shown for clarity.
2. See sht. JA69 for Section H2-H2 location.
3. See Bent Plan and Elevation sheets for construction control working points to establish bent and footing centerlines.

SECTION H2-H2 TOP MAT REINFORCING AND POST-TENSIONING

Scale: 1/8"=1'-0"

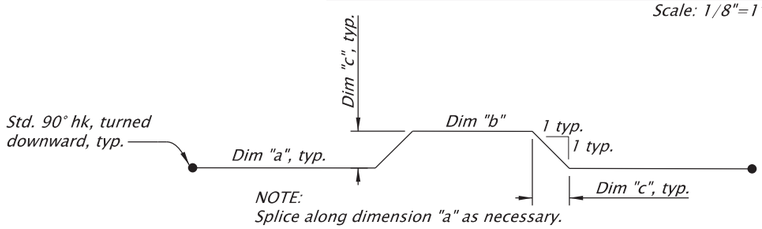

NOTE:
Splice along dimension "a" as necessary.

TRUSS BAR DETAIL

No Scale

Truss Bar	Dim "a"	Dim "b"	Dim "c"
"A"	17'-0"	3'-4"	2'-0"
"B"	23'-11"	20'-2"	2'-0"
"C"	23'-11"	21'-4"	1'-4⅜"
"D"	23'-11"	22'-2"	1'-0"
"E"	23'-11"	22'-6"	9"

NOTES:
1. Field verify all dimensions and elevations prior to submitting Working Drawings and prior to ordering or fabricating any materials. See sht. J02 for more details.
2. See sht JA71 for additional post-tensioning details.

PRESTRESSING NOTES

Concrete:

Provide Class 4000 - 1 or ¾ concrete in post-tensioned footing.

Apply post-tensioning force after concrete has attained a strength of 3000 psi and a minimum 7 days after final placement.

Prestressing Steel:

	Alternative "A"	Alternative "B"
Type:	ASTM A722 Type 2 Deformed Bars	ASTM A416 low relaxation 7-wire strand
f_{pu}(ksi):	150	270
f_{py} (ksi):	$0.80 \times f_{pu}$	$0.90 \times f_{pu}$
Allowable short term stress immediately prior to seating:	$0.90 \times f_{py}$	$0.90 \times f_{py}$
Allowable short term stress at anchorages after anchor set:	$0.70 \times f_{pu}$	$0.70 \times f_{pu}$
Allowable initial stress at any other point after anchor set:	$0.70 \times f_{pu}$	$0.74 \times f_{pu}$
Allowable final service load stress after losses at any point:	$0.80 \times f_{py}$	$0.80 \times f_{py}$

Alternative "A" shown. Alternative "B" is not shown, but is similar to Alternative "A". Contractor to choose from Alternative "A" or "B". Use same Contractor selected alternative for Bents 16, 17, and 18 footing retrofits.

Ducts:

Provide ducts for prestressing steel in accordance with the Specifications. Securely fasten ducts to stirrups and tie bars as required to prevent movement. Provide duct area at least 2.5 times the net prestressing steel contained.

Grouting:

Pressure grout prestressing steel in accordance with the Specifications. See sht. JA66 for grout vent details.

CONSTRUCTION NOTES

For concrete pour sequence see sht. JA72 for details.

Post-tensioning anchorage blockouts are conceptually shown. Size blockouts to accomodate Contractor selected post-tensioning system.

Dimensions of concrete sections and the anchorage reinforcement shown on plans determine pay quantities. Changes requested by contractor to accommodate a given post-tensioning system is not reason for extra payment.

Obtain approval from the Engineer for any changes.

STRESSING DETAILS

Initial force before anchor set at the left and right ends of the footing is 10,089 kips = Pj

$$As = \frac{Pj}{0.9\ fpy}$$

Minimum final force at the end of the footing is 9,688 kips.

Jack tendons to (As) (0.9 fpy).

Stress from one end of footing using the following pattern.

13 9 3 4 10 14
17 15 11 7 5 1 2 6 8 12 16 18

The jacking force may not exceed 560 kips per anchorage.

Design Data:

Use friction factors of u = 0.30. k = 0.0002 to compute losses.

Assumed average long term loss of stress in post-tensioning steel is 22.8 ksi.

For accompanied by drawings, see sht. JA01

SCALE WARNING
IF THIS SCALE LINE DOES NOT MEASURE ONE INCH, THEN DRAWING IS NOT TO SCALE

STRUCTURE NO. 00123K
BDS DWG NO. 113814
CALC. BOOK 7997
HWY: 030
M.P.: 25.88
COUNTY Marion/Polk
DATE 6/26

REGISTERED PROFESSIONAL ENGINEER 85555PE
Digitally Signed 2026.06.11 10:00:05-07'00'
OREGON DEC. 21, 2011
MICHAEL G. McNULTY
EXPIRES: 12/31/2026

FINAL ELECTRONIC DOCUMENT AVAILABLE UPON REQUEST

DOWL
3500 Chad Drive, Suite 200
Eugene, Oregon 97408
541-683-6090
WWW.DOWL.COM

WILLAMETTE RIVER, HWY 30 EB (CENTER ST)

OR22: CENTER ST BRIDGE (PHASE 1) PROJECT
WILLAMINA - SALEM HIGHWAY
MARION & POLK COUNTIES

Designer: Mike McNulty, PE
Reviewer: Bob Goodrich, PE
Drafter: Jake Williams
Checker: Eric Bonn, PE

BENT 16 FOOTING DETAILS - 1
(BENTS 17 & 18 SIMILAR)

SHEET NO. JA70

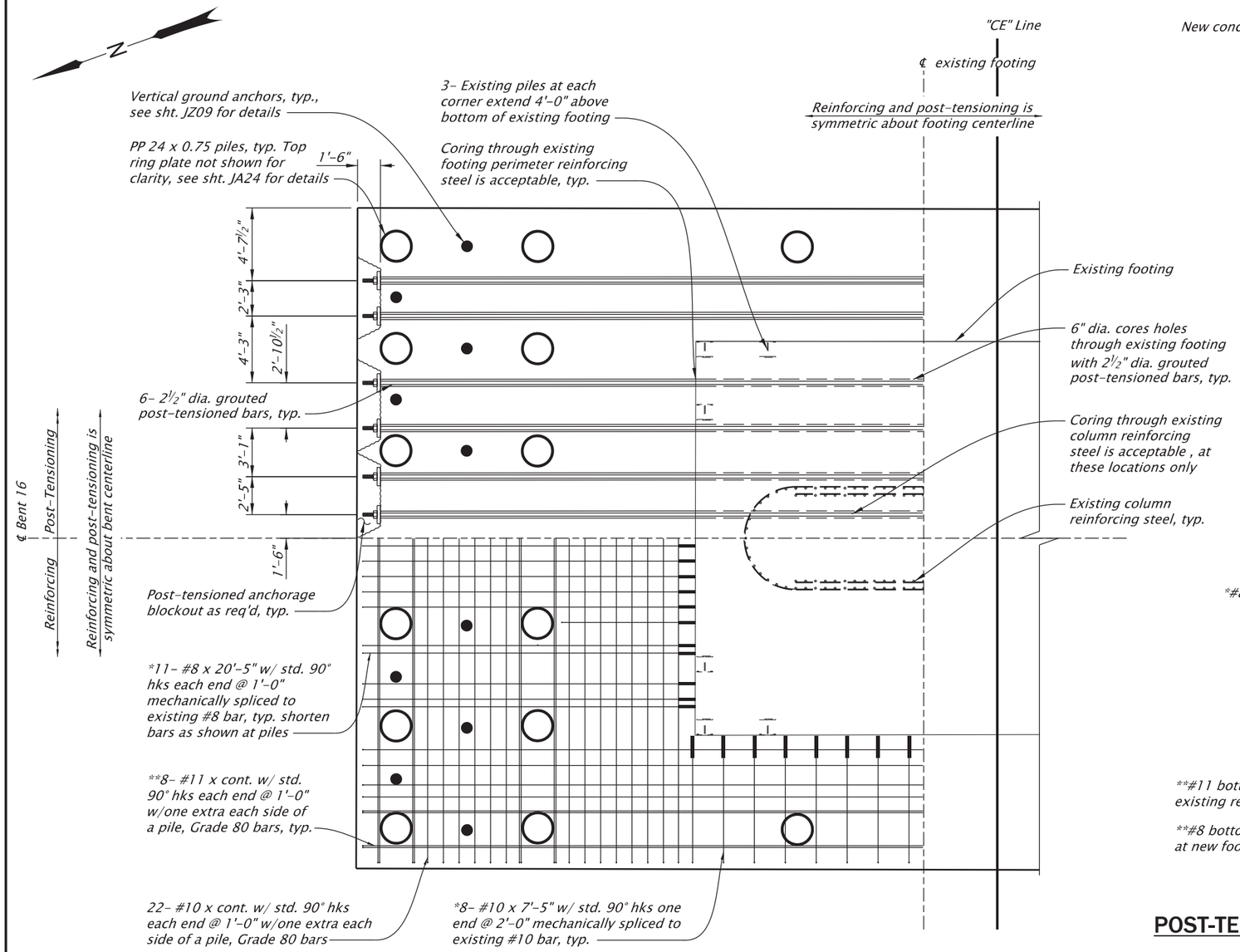

SECTION J2-J2 BOTTOM MAT REINFORCING AND POST-TENSIONING AT EXISTING FOOTING LEVEL

Scale: 1/8"=1'-0"

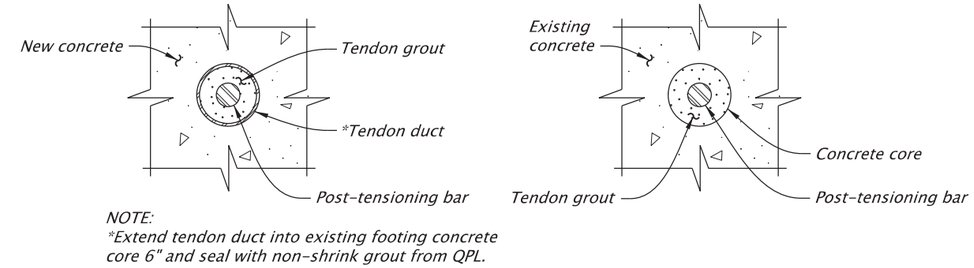

NOTE:
**Extend tendon duct into existing footing concrete core 6" and seal with non-shrink grout from QPL.*

SECTION (NEW FOOTING) **SECTION (EXISTING FOOTING)**

GROUTED POST-TENSIONED BAR DETAIL

No Scale

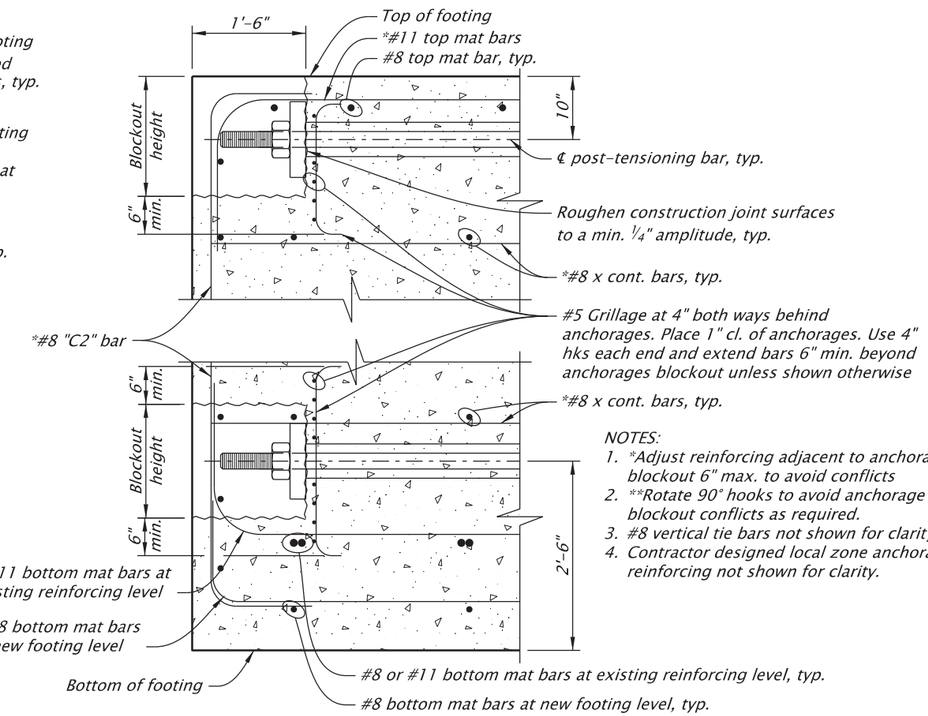

NOTES:
1. **Adjust reinforcing adjacent to anchorage blockout 6" max. to avoid conflicts*
2. ***Rotate 90° hooks to avoid anchorage blockout conflicts as required.*
3. *#8 vertical tie bars not shown for clarity.*
4. *Contractor designed local zone anchorage reinforcing not shown for clarity.*

POST-TENSIONING ANCHORAGE BLOCKOUT AND REINFORCING DETAIL

No Scale

For accompanied by drawings, see sht. JA01

NOTES:
1. **Adjust bar spacing by 1 existing bar spacing to avoid conflicts with piles and ground anchors.*
2. ***Turn hooked ends to avoid conflicts w/ post-tensioning anchorages as required.*
3. *#8 Vertical ties,"C1" bars, "C2" bars and perimeter bars not shown for clarity.*
4. *Existing reinforcing not shown for clarity.*
5. *See sht. JA69 for Section J2-J2 location.*
6. *See sht. JA73 for footing removal limits to expose bottom mat existing bars to be mechanically spliced to.*
7. *See sht. JA70 for prestressing notes.*
8. *See Bent Plan and Elevation sheets for construction control working points to establish bent and footing centerlines.*
9. *Field verify all dimensions and elevations prior to submitting Working Drawings and prior to ordering or fabricating any materials. See sht. J02 for more details.*

SCALE WARNING
IF THIS SCALE LINE DOES NOT MEASURE ONE INCH, THEN DRAWING IS NOT TO SCALE

STRUCTURE NO.	00123K
BDS DWG NO.	113815
CALC. BOOK	7997
HWY: 030 M.P.: 25.88	
COUNTY	Marion/Polk
DATE	2/26

REGISTERED PROFESSIONAL ENGINEER 85555PE OREGON DEC. 21, 2011 MICHAEL G. McNULTY
Digitally Signed 2026.02.12 12:52:09-08'00'
EXPIRES: 12/31/2026
FINAL ELECTRONIC DOCUMENT AVAILABLE UPON REQUEST

DOWL
3500 Chad Drive, Suite 200
Eugene, Oregon 97408
541-683-6090
WWW.DOWL.COM

OREGON DEPARTMENT OF TRANSPORTATION

WILLAMETTE RIVER, HWY 30 EB (CENTER ST)

OR22: CENTER ST BRIDGE (PHASE 1) PROJECT
WILLAMINA - SALEM HIGHWAY
MARION & POLK COUNTIES

Designer: Mike McNulty, PE Reviewer: Bob Goodrich, PE
Drafter: Jake Williams Checker: Eric Bonn, PE

BENT 16 FOOTING DETAILS - 2 (BENTS 17 & 18 SIMILAR)

SHEET NO. JA71

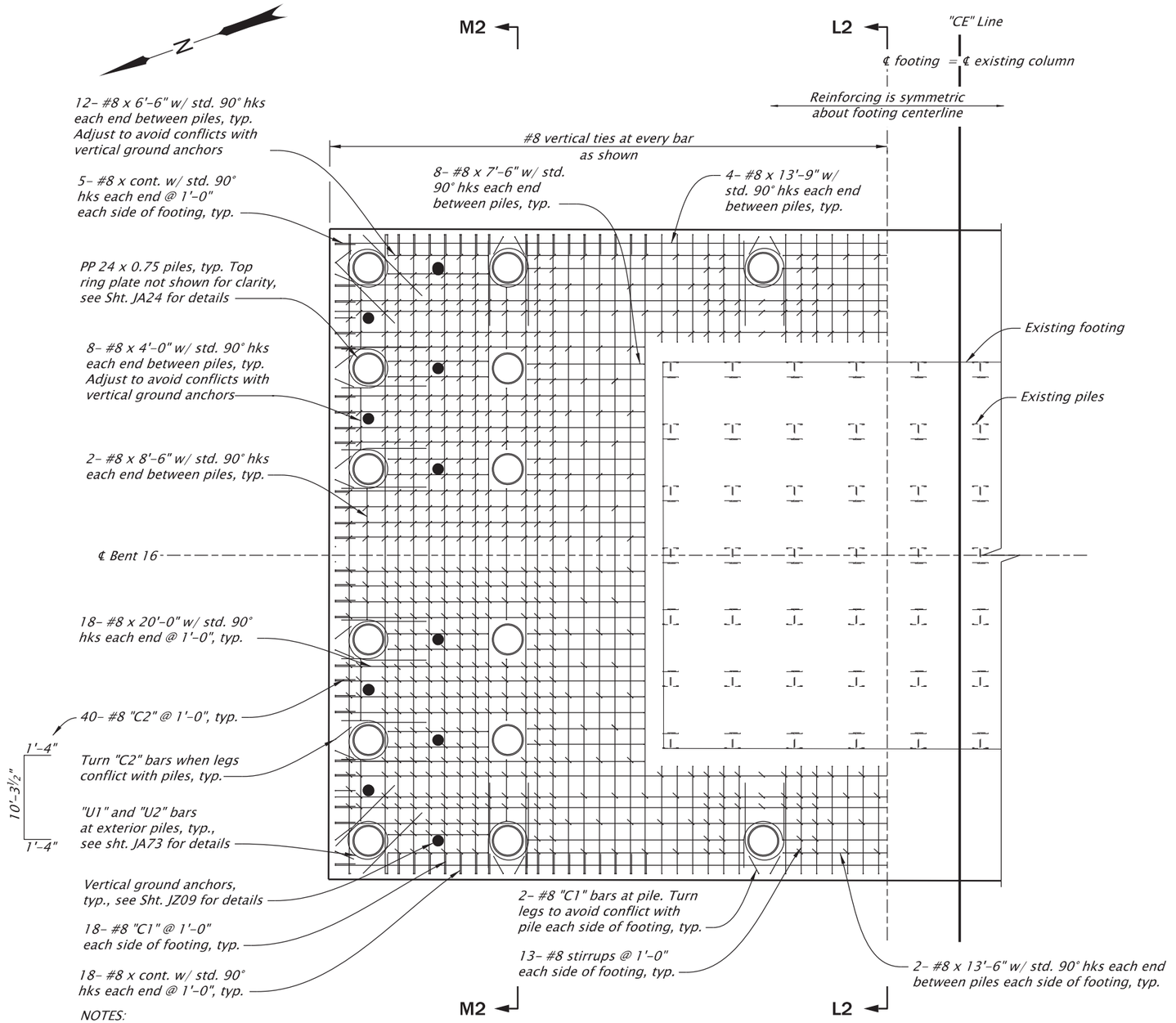

NOTES:
1. Existing reinforcing and #8 perimeter bars not shown for clarity.
2. See sht. JA73 for Section L2-L2.
3. See sht. JA74 for Section M2-M2.
4. See sht. JA69 for Section K2-K2 location.
5. See Bent Plan and Elevation sheets for construction control working points to establish bent and footing centerlines.
6. Field verify all dimensions and elevations prior to submitting Working Drawings and prior to ordering or fabricating any materials. See sht. J02 for more details.

SECTION K2-K2 BOTTOM MAT REINFORCING AT NEW FOOTING LEVEL

Scale: 1/8"=1'-0"

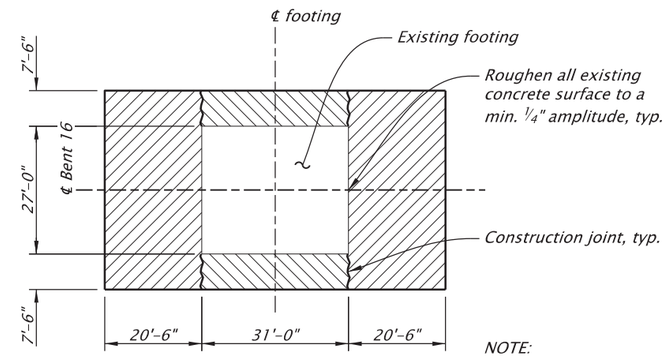

NOTE:
Existing column and Pour #3 limits not shown for clarity.

PLAN

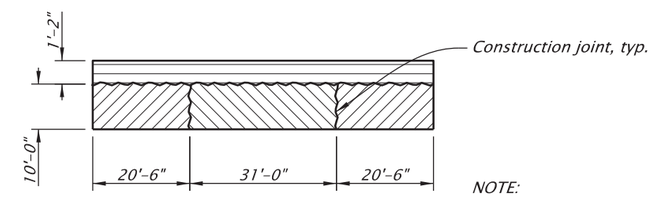

NOTE:
Existing column not shown for clarity.

ELEVATION

Pour #1 limits.

Pour #2 limits. Delay Pour #2 until at least 14 days after Pour #1.

Pour #3 limits. Delay Pour #3 until at least 7 days after Pour #2.

Note:
Inject and seal shrinkage cracks in new concrete pours as directed.

CONCRETE POUR SEQUENCE

No Scale

For accompanied by drawings, see sht. JA01

STRUCTURE NO.	00123K
BDS DWG NO.	113816
CALC. BOOK	7997
HWY: 030 M.P.: 25.88	
COUNTY	Marion/Polk
DATE	2/26

SCALE WARNING
IF THIS SCALE LINE DOES NOT MEASURE ONE INCH, THEN DRAWING IS NOT TO SCALE

REGISTERED PROFESSIONAL ENGINEER
85555PE
Digitally Signed 2026.02.12 12:52:17-08'00'
OREGON
DEC. 21, 2011
MICHAEL G. McNULTY
EXPIRES: 12/31/2026
FINAL ELECTRONIC DOCUMENT AVAILABLE UPON REQUEST

DOWL
3500 Chad Drive, Suite 200
Eugene, Oregon 97408
541-683-6090
WWW.DOWL.COM

OREGON DEPARTMENT OF TRANSPORTATION

WILLAMETTE RIVER, HWY 30 EB (CENTER ST)

OR22: CENTER ST BRIDGE (PHASE 1) PROJECT
WILLAMINA - SALEM HIGHWAY
MARION & POLK COUNTIES

Designer: Mike McNulty, PE
Reviewer: Bob Goodrich, PE
Drafter: Jake Williams
Checker: Eric Bonn, PE

BENT 16 FOOTING DETAILS - 3 (BENTS 17 & 18 SIMILAR)

SHEET NO. JA72

NOTES:
1. * Not all vertical ties are shown for clarity. See sht. JA72 for additional details. Hook tie around at least one top and bottom mat bar at each location.
2. Existing cofferdam seal is not shown for clarity. See sht. JA09 for plan view limits.

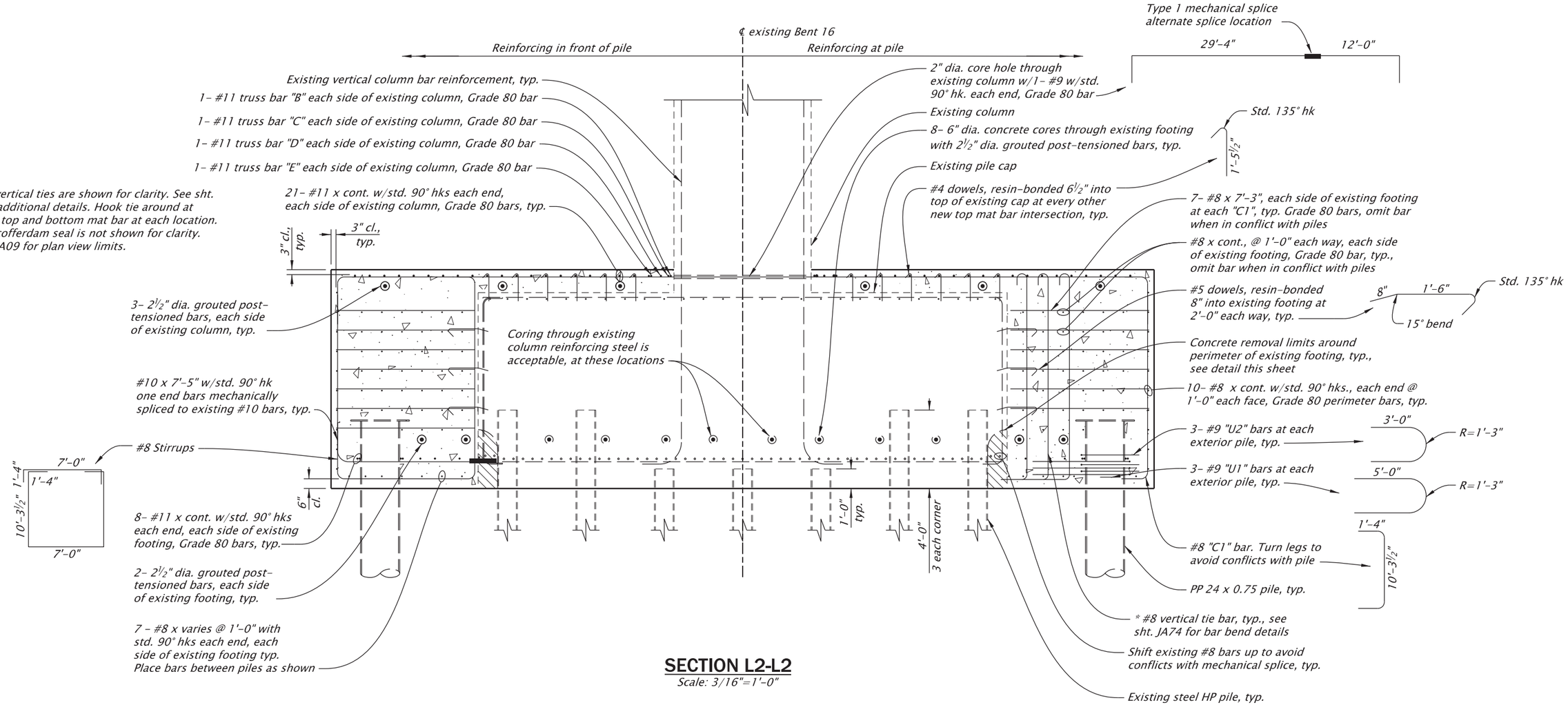

SECTION L2-L2

Scale: 3/16"=1'-0"

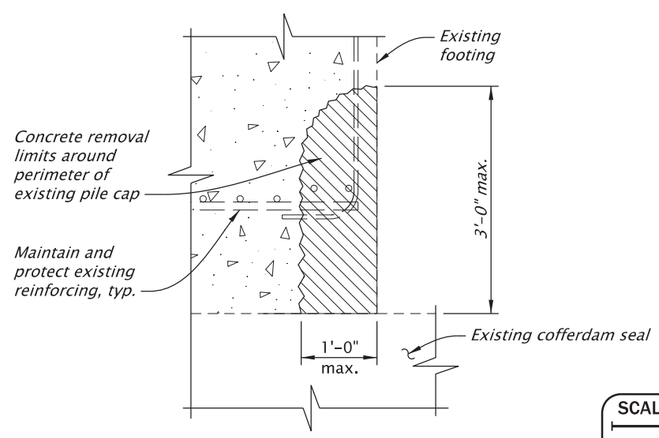

PILE CAP CONCRETE REMOVAL DETAIL

No Scale

NOTES:
1. See sht. JA72 for Section L2-L2 location.
2. See sht. JA70 for truss bar diagrams.
3. See Bent Plan and Elevation sheets for construction control working points to establish bent centerline.
4. Field verify all dimensions and elevations prior to submitting Working Drawings and prior to ordering or fabricating any materials. See sht. J02 for more details.

SCALE WARNING

IF THIS SCALE LINE DOES NOT MEASURE ONE INCH, THEN DRAWING IS NOT TO SCALE

For accompanied by drawings, see sht. JA01

STRUCTURE NO.	00123K
BDS DWG NO.	113817
CALC. BOOK	7997
HWY: 030 M.P.: 25.88	
COUNTY	Marion/Polk
DATE	2/26

REGISTERED PROFESSIONAL ENGINEER 85555PE OREGON DEC. 21, 2011 MICHAEL G. McNULTY

Digitally Signed 2026.02.12 12:52:26-08'00'

EXPIRES: 12/31/2026

FINAL ELECTRONIC DOCUMENT AVAILABLE UPON REQUEST

DOWL
3500 Chad Drive, Suite 200
Eugene, Oregon 97408
541-683-6090
WWW.DOWL.COM

OREGON DEPARTMENT OF TRANSPORTATION

WILLAMETTE RIVER, HWY 30 EB (CENTER ST)

OR22: CENTER ST BRIDGE (PHASE 1) PROJECT
WILLAMINA - SALEM HIGHWAY
MARION & POLK COUNTIES

Designer: Mike McNulty, PE
Reviewer: Bob Goodrich, PE
Drafter: Jake Williams
Checker: Eric Bonn, PE

BENT 16 FOOTING DETAILS - 4 (BENTS 17 & 18 SIMILAR)

SHEET NO. JA73

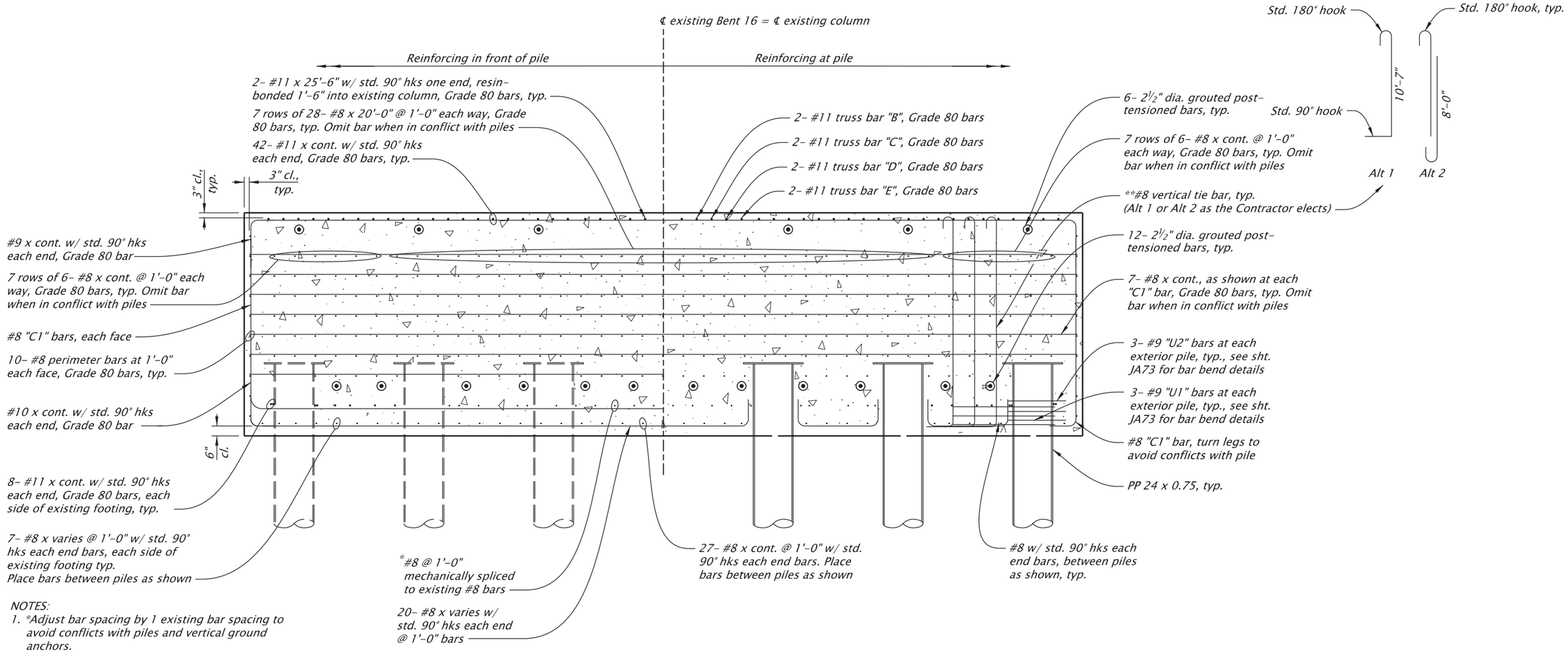

NOTES:
1. *Adjust bar spacing by 1 existing bar spacing to avoid conflicts with piles and vertical ground anchors.
2. ** Not all vertical ties are shown for clarity. See sht. JA72 for additional details. Hook tie around at least one top and bottom mat bar at each location.

SECTION M2-M2

Scale: 3/16"=1'-0"

For accompanied by drawings, see sht. JA01

NOTES:
1. See sht. JA72 for Section M2-M2 location.
2. See sht. JA70 for truss bar diagrams.
3. See Bent Plan and Elevation sheets for construction control working points toestablish bent centerline.
4. Field verify all dimensions and elevations prior to submitting Working Drawings and prior to ordering or fabricating any materials. See sht. J02 for more details.

SCALE WARNING
IF THIS SCALE LINE DOES NOT MEASURE ONE INCH, THEN DRAWING IS NOT TO SCALE

STRUCTURE NO.	00123K
BDS DWG NO.	113818
CALC. BOOK	7997
HWY: 030 M.P.: 25.88	
COUNTY	Marion/Polk
DATE	2/26

REGISTERED PROFESSIONAL ENGINEER 85555PE
Digitally Signed 2026.02.12 12:48:43-08'00'
OREGON DEC. 21, 2011 MICHAEL G. McNULTY
EXPIRES: 12/31/2026
FINAL ELECTRONIC DOCUMENT AVAILABLE UPON REQUEST

DOWL
3500 Chad Drive, Suite 200
Eugene, Oregon 97408
541-683-6090
WWW.DOWL.COM

WILLAMETTE RIVER, HWY 30 EB (CENTER ST)

OR22: CENTER ST BRIDGE (PHASE 1) PROJECT
WILLAMINA - SALEM HIGHWAY
MARION & POLK COUNTIES

Designer: Mike McNulty, PE
Reviewer: Bob Goodrich, PE
Drafter: Jake Williams
Checker: Eric Bonn, PE

BENT 16 FOOTING DETAILS - 5 (BENTS 17 & 18 SIMILAR)

SHEET NO. JA74

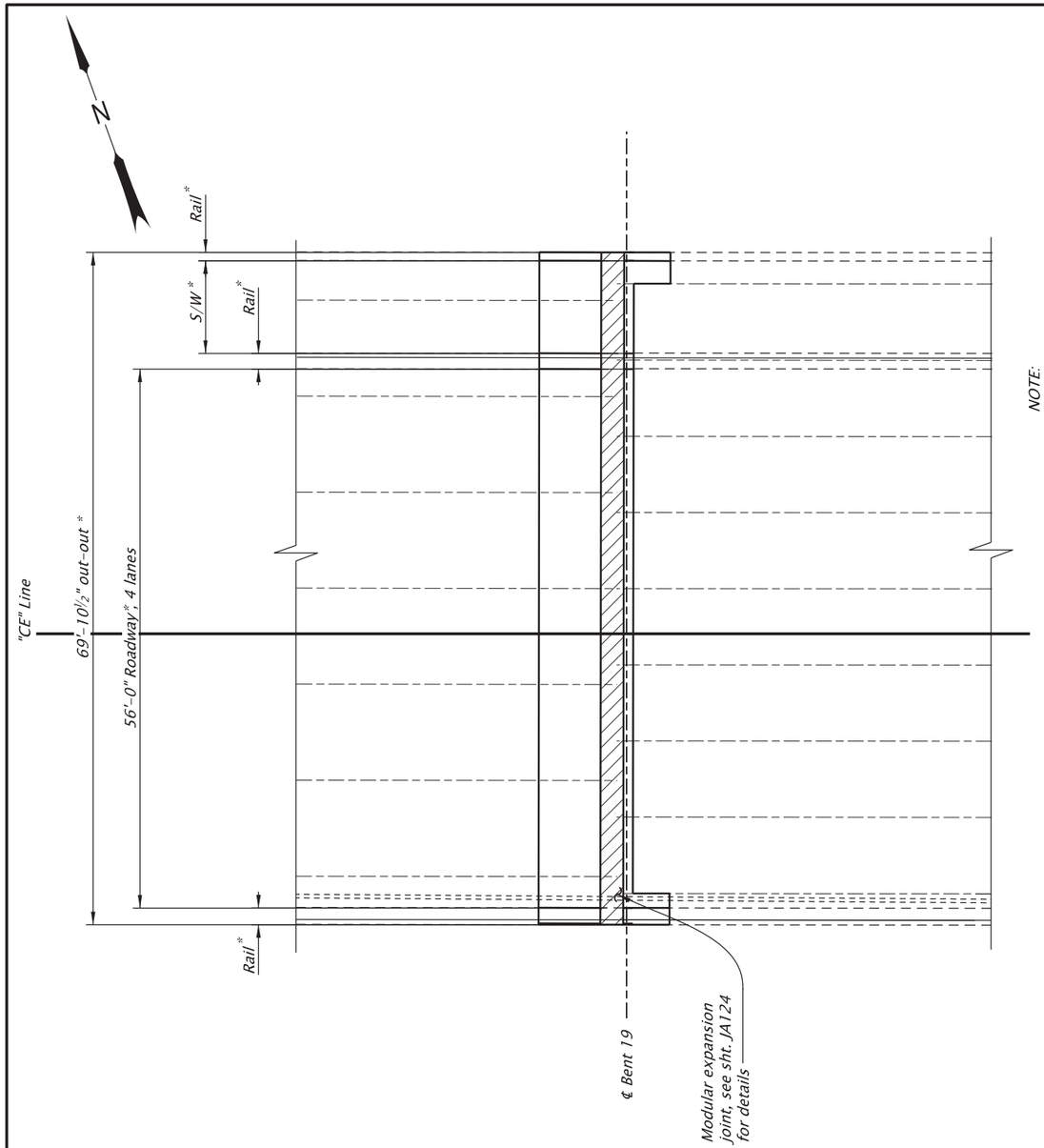

NOTE:
* Match existing limits.

PLAN
Scale: 1"=15'

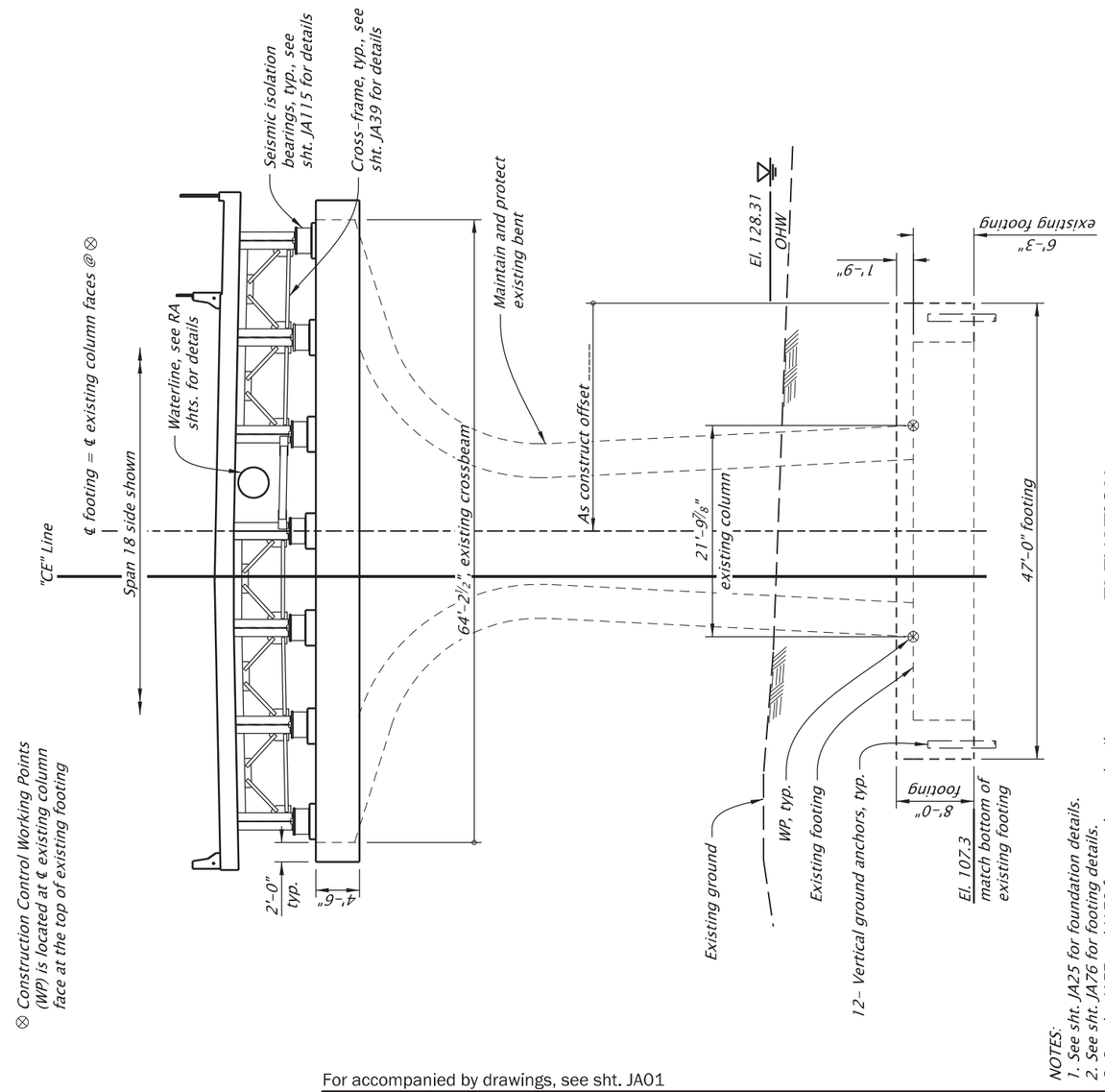

⊗ Construction Control Working Points (WP) is located at ℄ existing column face at the top of existing footing

ELEVATION
Scale: 1"=15'
Looking back on station

NOTES:
1. See sht. JA25 for foundation details.
2. See sht. JA76 for footing details.
3. See sht. JA77 and JA78 for crossbeam details.
4. See sht. JA79 for miscellaneous details.
5. Field verify all dimensions and elevations before submitting Working Drawings and prior to ordering or fabricating any materials. See sht. J02 for more details

For accompanied by drawings, see sht. JA01

STRUCTURE NO.	00123K
BDS DWG NO.	113819
CALC. BOOK	7997
HWY: 030 M.P.: 25.88	
COUNTY	Marion
DATE	6/26

REGISTERED PROFESSIONAL ENGINEER 099941PE OREGON JULY 21, 2022 BERNARD ANTHONY FRANKL
Digitally Signed 2026.06.30 12:36:17-07'00'
EXPIRES: 12/31/2027

FINAL ELECTRONIC DOCUMENT AVAILABLE UPON REQUEST

DOWL
3500 Chad Drive, Suite 200
Eugene, Oregon 97408
541-683-6090
WWW.DOWL.COM

OREGON DEPARTMENT OF TRANSPORTATION

WILLAMETTE RIVER, HWY 30 EB (CENTER ST)

OR22: CENTER ST BRIDGE (PHASE 1) PROJECT
WILLAMINA - SALEM HIGHWAY
MARION & POLK COUNTIES

Designer: Bernard A. Frankl, PhD, PE
Reviewer: Bob Goodrich, PE
Drafter: Jake Williams
Checker: Mike McNulty, PE

BENT 19 PLAN AND ELEVATION

SHEET NO. JA75

SCALE WARNING
IF THIS SCALE LINE DOES NOT MEASURE ONE INCH, THEN DRAWING IS NOT TO SCALE

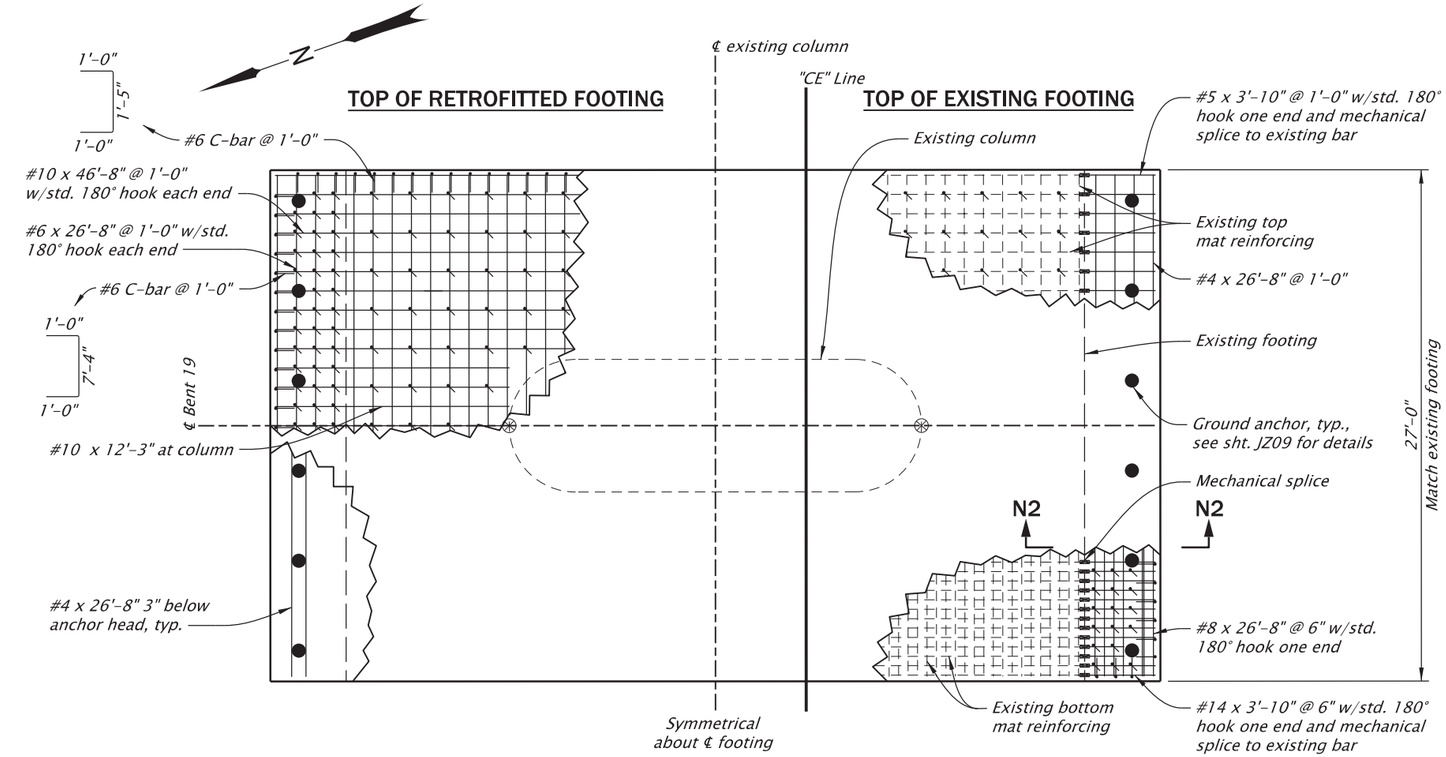

REINFORCING AT GROUND ANCHOR HEADS

BOTTOM OF EXISTING FOOTING

PLAN

Scale: 1/8"=1'-0"

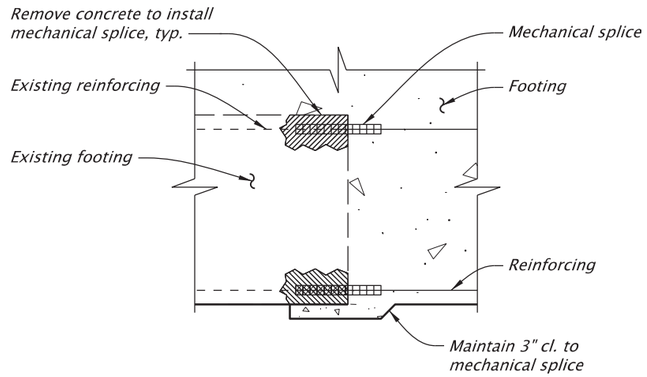

SECTION N2-N2

Scale: 3/8"=1'-0"

⊗ Construction Control Working Point (WP) is located at ℄ existing column face at top of existing footing.

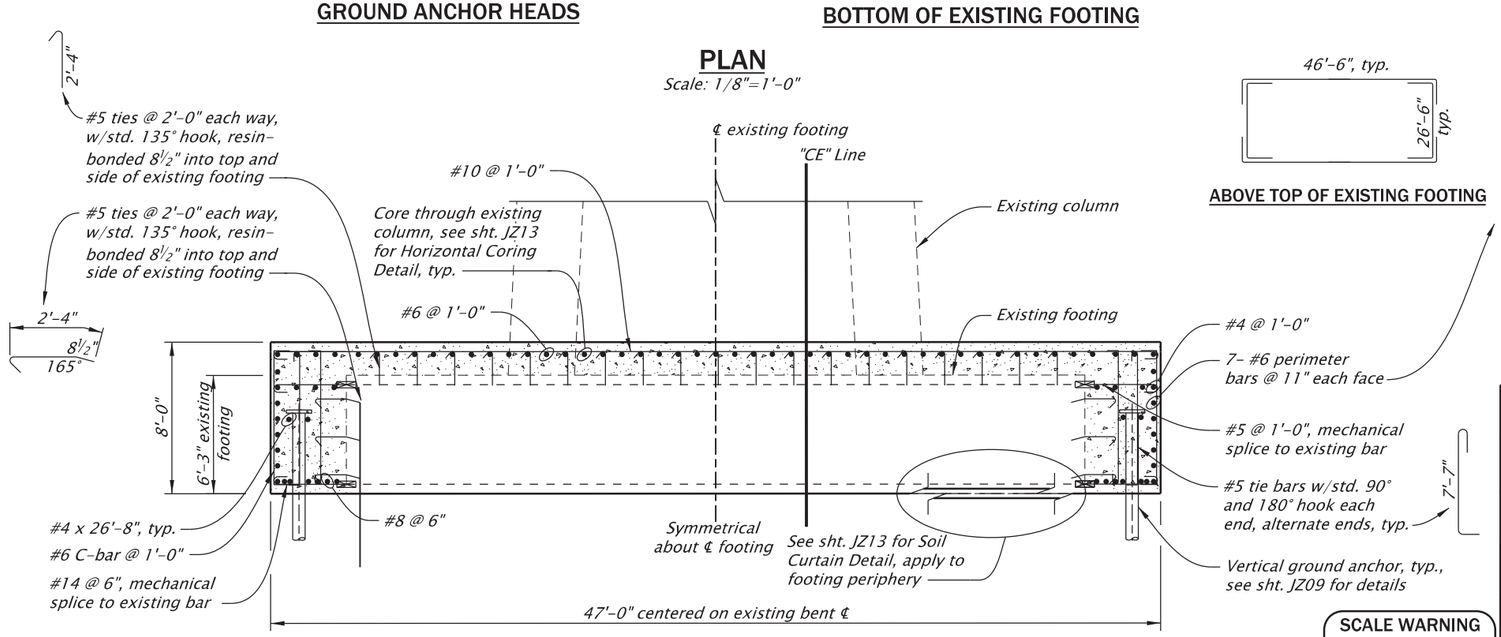

ELEVATION

Scale: 1/8"=1'-0"

ABOVE TOP OF EXISTING FOOTING

BELOW TOP OF EXISTING FOOTING

NOTES:

1. Shift footing bars to maintain 2" clear to vertical ground anchors and existing footing.
2. Two-bar bundles allowed to avoid vertical ground anchors and existing vertical column steel.
3. One splice is permitted per reinforcing bar.
4. Provide footing reinforcement according to ASTM Specifications A706 Grade 80.
5. See Bent Plan and Elevation sheets for construction working points to establish bent and footing centerlines.
6. Field verify all dimensions and elevations before submitting Working Drawings and prior to ordering or fabricating any materials. See sht. J02 for more details.

SCALE WARNING

IF THIS SCALE LINE DOES NOT MEASURE ONE INCH, THEN DRAWING IS NOT TO SCALE

STRUCTURE NO.	00123K
BDS DWG NO.	113820
CALC. BOOK	7997
HWY: 030	
M.P.:	
COUNTY	Marion
DATE	2/26

REGISTERED PROFESSIONAL ENGINEER 099941PE OREGON JULY 21, 2022 BERNARD ANTHONY FRANKL

Digitally Signed 2026.02.12 11:28:20-08'00'

EXPIRES: 12/31/2027

FINAL ELECTRONIC DOCUMENT AVAILABLE UPON REQUEST

DOWL

3500 Chad Drive, Suite 200
Eugene, Oregon 97408
541-683-6090
WWW.DOWL.COM

OREGON DEPARTMENT OF TRANSPORTATION

WILLAMETTE RIVER, HWY 30 EB (CENTER ST)

OR22: CENTER ST BRIDGE (PHASE 1) PROJECT
WILLAMINA - SALEM HIGHWAY
MARION & POLK COUNTIES

Designer: Bernard A. Frankl, PhD, PE
Reviewer: Bob Goodrich, PE
Drafter: Jake Williams
Checker: Nasario Lopez-Francisco, PE

BENT 19 FOOTING DETAILS

SHEET NO. JA76

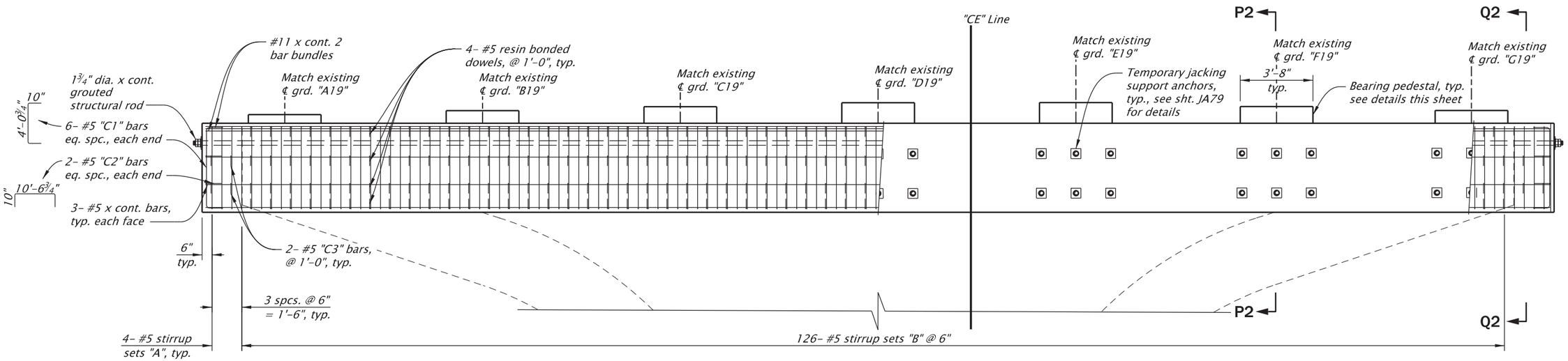

NOTE:
Superstructure and Span 19 end beam not shown for clarity.

ELEVATION - CROSSBEAM

Scale: 3/16"=1'-0"

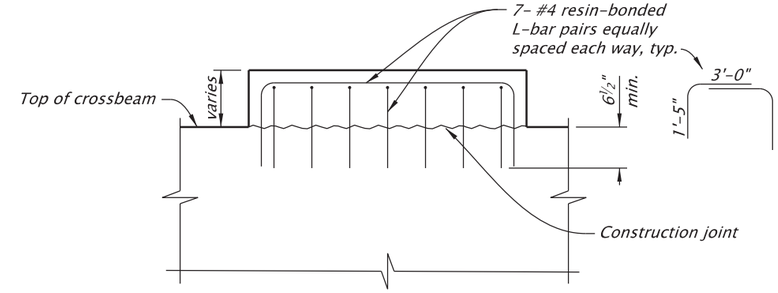

NOTE:
Crossbeam reinforcing and bearing assemblies not shown for clarity.

BEARING PEDESTAL DETAIL

Scale: 1/2"=1'-0"

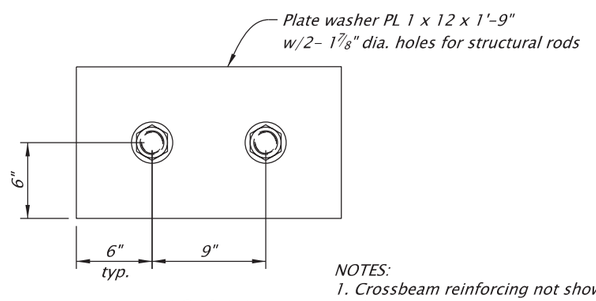

ANCHOR PLATE

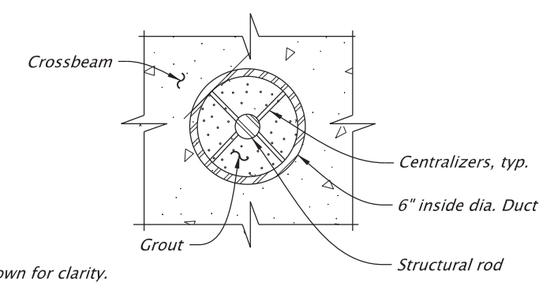

TYPICAL SECTION

NOTES:
1. Crossbeam reinforcing not shown for clarity.
2. Do not tighten nuts until concrete has reached minimum 28 day strength. Grout annular space around the all thread rod in duct after tightening.
3. Install double nut after tightening.
4. See sht. JA66 for grout vent details.
5. Couple rods as necessary, not to exceed two couplers per rod.

GROUTED STRUCTURAL ROD DETAILS - IN NEW CROSSBEAM

Scale: 1"=1'-0"

NOTES:
1. See sht. JA78 for Section P2-P2 and Q2-Q2 details.
2. Field verify all dimesions and elevations before submitting Working Drawings and prior to ordering or fabricating any materials. See sht. J02 for more details.

For accompanied by drawings, see sht. JA01

SCALE WARNING
IF THIS SCALE LINE DOES NOT MEASURE ONE INCH, THEN DRAWING IS NOT TO SCALE

STRUCTURE NO.	00123K
BDS DWG NO.	113821
CALC. BOOK	7997
HWY: 030	M.P.: 25.88
COUNTY	Marion/Polk
DATE	6/26

REGISTERED PROFESSIONAL ENGINEER 85555PE
Digitally Signed 2026.06.10 13:42:45-07'00'
OREGON DEC. 21, 2011 MICHAEL G. McNULTY
EXPIRES: 12/31/2026
FINAL ELECTRONIC DOCUMENT AVAILABLE UPON REQUEST

DOWL
3500 Chad Drive, Suite 200
Eugene, Oregon 97408
541-683-6090
WWW.DOWL.COM

WILLAMETTE RIVER, HWY 30 EB (CENTER ST)

OR22: CENTER ST BRIDGE (PHASE 1) PROJECT
WILLAMINA - SALEM HIGHWAY
MARION & POLK COUNTIES

Designer: Mike McNulty, PE | Reviewer: Bob Goodrich, PE
Drafter: Jake Williams | Checker: Eric Bonn, PE

BENT 19 CROSSBEAM DETAILS - 1

SHEET NO. JA77

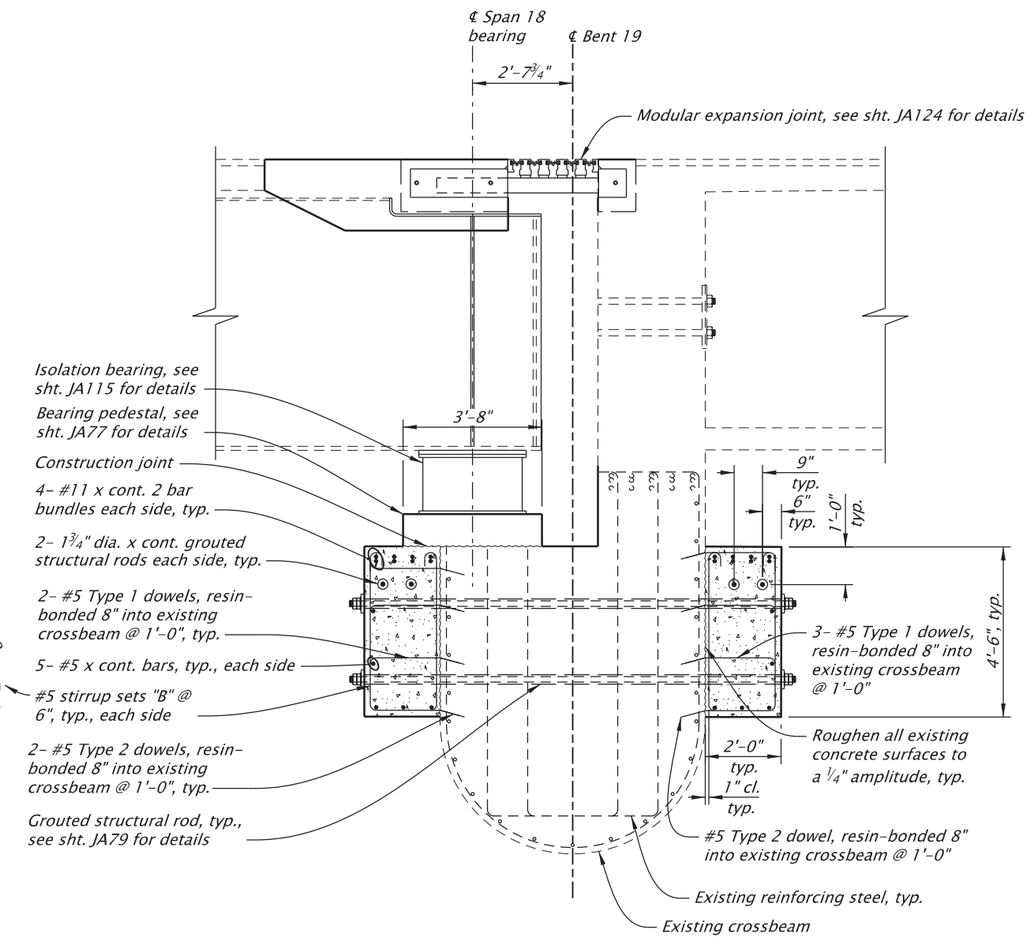

SECTION P2-P2

Scale: 1/4"=1'-0"

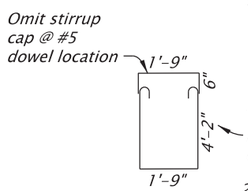

TYPE 1 **TYPE 2**

#5 DOWEL DETAIL

No Scale

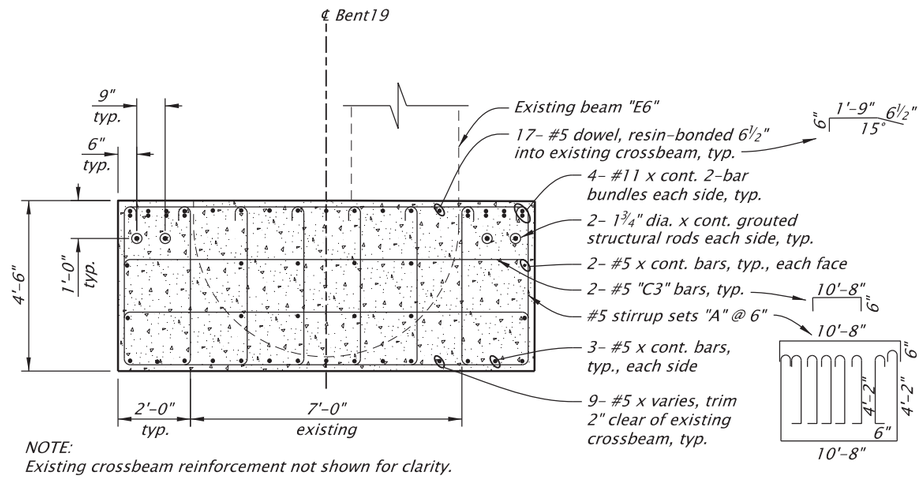

NOTE:
Existing crossbeam reinforcement not shown for clarity.

SECTION Q2-Q2

Scale: 1/4"=1'-0"

NOTES:
1. See sht. JA77 for Sections P2-P2 and Q2-Q2 locations.
2. See Bent Plan and Elevation sheets for construction control working points to establish bent centerlines.
3. Field verify all dimensions and elevations before submitting Working Drawings and prior to ordering or fabricating any materials. See sht. J02 for more details.

For accompanied by drawings, see sht. JA01

STRUCTURE NO.	00123K
BDS DWG NO.	113822
CALC. BOOK	7997
HWY: 030	M.P.: 25.88
COUNTY	Marion/Polk
DATE	6/26

SCALE WARNING
IF THIS SCALE LINE DOES NOT MEASURE ONE INCH, THEN DRAWING IS NOT TO SCALE

REGISTERED PROFESSIONAL ENGINEER
85555PE
Digitally Signed 2026.06.10 13:42:59-07'00'
OREGON
DEC. 21, 2011
MICHAEL G. McNULTY
EXPIRES: 12/31/2026

FINAL ELECTRONIC DOCUMENT AVAILABLE UPON REQUEST

DOWL
3500 Chad Drive, Suite 200
Eugene, Oregon 97408
541-683-6090
WWW.DOWL.COM

OREGON DEPARTMENT OF TRANSPORTATION

WILLAMETTE RIVER, HWY 30 EB (CENTER ST)

OR22: CENTER ST BRIDGE (PHASE 1) PROJECT
WILLAMINA - SALEM HIGHWAY
MARION & POLK COUNTIES

Designer: Mike McNulty, PE Reviewer: Bob Goodrich, PE
Drafter: Jake Williams Checker: Eric Bonn, PE

BENT 19 CROSSBEAM DETAILS - 2

SHEET NO. JA78

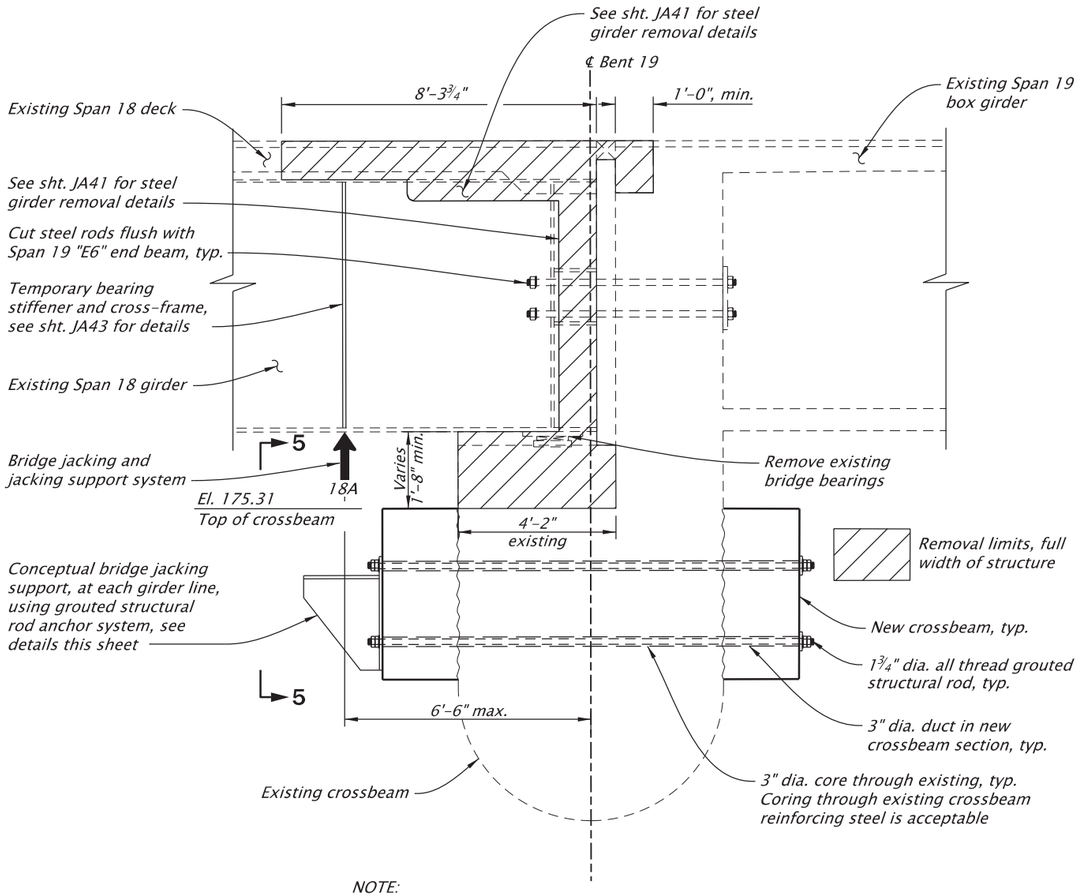

NOTE:
Existing and new steel reinforcing not shown for clarity.

TYPICAL SECTION - REMOVAL LIMITS AND BRIDGE JACKING DIAGRAM

Scale: 1/4"=1'-0"

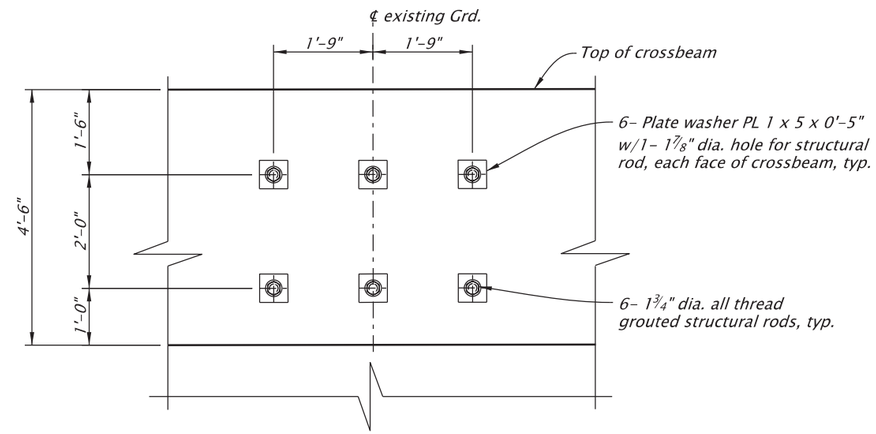

NOTES:
1. Final condition shown. Temporary jacking support not shown.
2. Superstructure, bearing assembly and reinforcing not shown for clarity.

VIEW 5-5

Scale: 3/8"=1'-0"

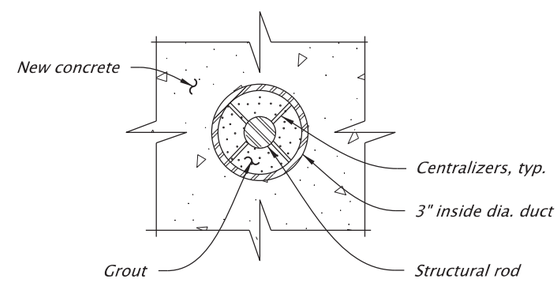

SECTION (NEW CROSSBEAM)

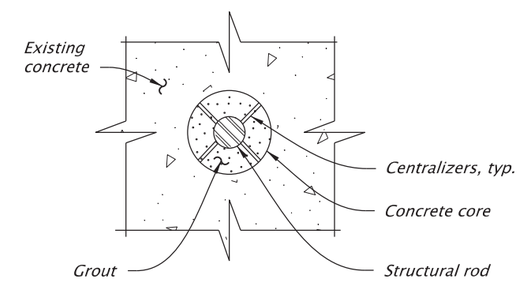

SECTION (EXISTING CROSSBEAM)

NOTES:
1. Crossbeam reinforcing not shown for clarity.
2. Do not tighten nuts until concrete has reached minimum 28 day strength. Grout annular space around the all thread rod in core hole and duct after tightening.
3. Install double nut after tightening.
4. See sht. JA66 for grout vent details.

GROUTED STRUCTURAL ROD DETAIL

No Scale

For accompanied by drawings, see sht. JA01

BEARING ASSEMBLY INSTALLATION SEQUENCE:

1. Install each bearing assembly level and low on leveling nuts.
2. Raise bearings assemblies, using leveling nuts, until uniformly bearing against girder bottom flange.
3. Uniformly unload temporary jacking supports at 18A locations and load bearings.
4. Verify all bearings are uniformly bearing against the girder bottom flange and superstructure elevations are within ± ⅛" of vertical control elevations. If not, uniformly jack bridge at temporary jacking support 18A locations to unload bearings and repeat steps 2 and 3, until all bearings are uniformly bearing against the bottom girder flange and superstructure elevations are within ± ⅛" of vertical control elevations.
5. Form and pour concrete bearing pedestals. See sht. JA77 for details.
6. Field weld taper distribution plate to girder bottom flange. See sht. JA117 for details.
7. Remove temporary bridge jacking support and install grouted structural rod plate washers and nuts, see this sheet for details.

NOTES:
1. See Bent Plan and Elevation sheets for construction working points to establish bent centerline.
2. Field verify all dimensions and elevations before submitting Working Drawings and prior to ordering or fabricating any materials. See sht. J02 for more details.

BRIDGE JACKING LOADS			
Location	Dead	Live	Conceptual System Type
18A	902 kips	283 kips	Supported from existing crossbeam

NOTES:
1. Loads are for jacking locations shown.
2. Dead load represents the total unfactored span 18 reaction.
3. Live load represents the factored, controlling single lane HL-93 or Permit Truck reaction, adjusted for dynamic load allowance, and a multiple presence factor of 1.0.
4. Contractor is responsible for determining all construction loading including, materials, equipment and live loading.

SCALE WARNING
IF THIS SCALE LINE DOES NOT MEASURE ONE INCH, THEN DRAWING IS NOT TO SCALE

STRUCTURE NO. 00123K
BDS DWG NO. 113823
CALC. BOOK 7997
HWY: 030
M.P.: 25.88
COUNTY Marion/Polk
DATE 2/26

REGISTERED PROFESSIONAL ENGINEER 85555PE
Digitally Signed 2026.02.12 12:58:58-08'00'
OREGON
DEC. 21, 2011
MICHAEL G. McNULTY
EXPIRES: 12/31/2026

FINAL ELECTRONIC DOCUMENT AVAILABLE UPON REQUEST

DOWL
3500 Chad Drive, Suite 200
Eugene, Oregon 97408
541-683-6090
WWW.DOWL.COM

WILLAMETTE RIVER, HWY 30 EB (CENTER ST)

OR22: CENTER ST BRIDGE (PHASE 1) PROJECT
WILLAMINA - SALEM HIGHWAY
MARION & POLK COUNTIES

Designer: Mike McNulty, PE
Reviewer: Bob Goodrich, PE
Drafter: Jake Williams
Checker: Eric Bonn, PE

BENT 19 MISCELLANEOUS DETAILS

SHEET NO. JA79

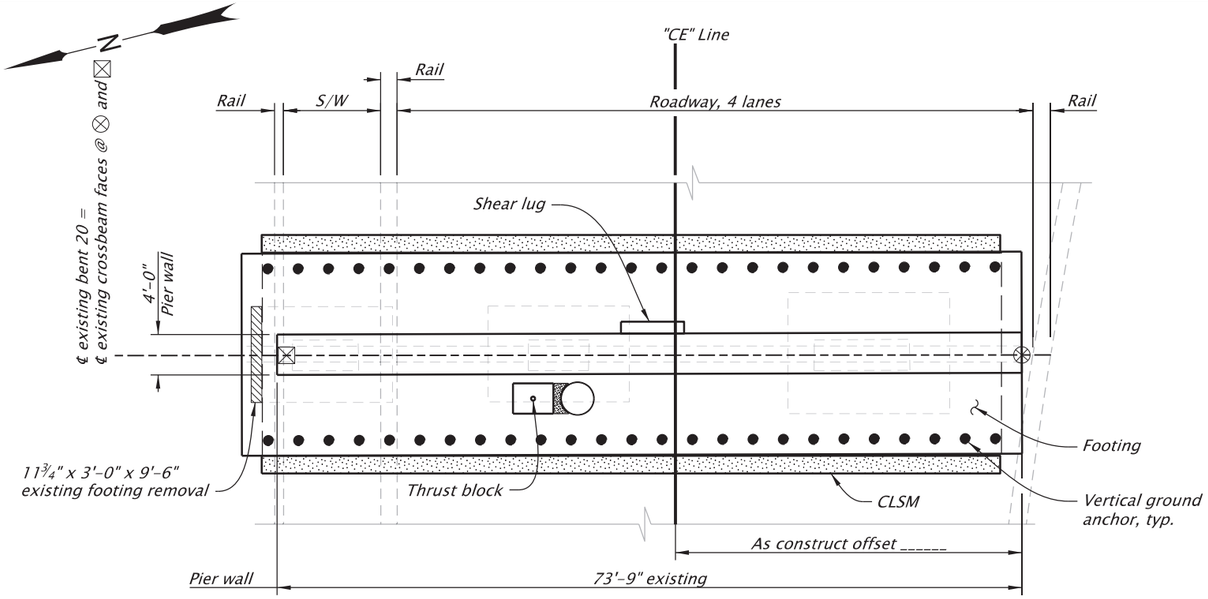

PLAN

Scale: 1"=15'

⊗ Construction Control Working Point (WP) is located at ℄ existing crossbeam face at bottom soffit of box girder.

⊠ Reference point to establish existing bent centerline located at ℄ existing column face at bottom soffit of box girder.

△ Construction pinch point. Provide a minimum of 6" concrete from existing surface to new surface as shown.

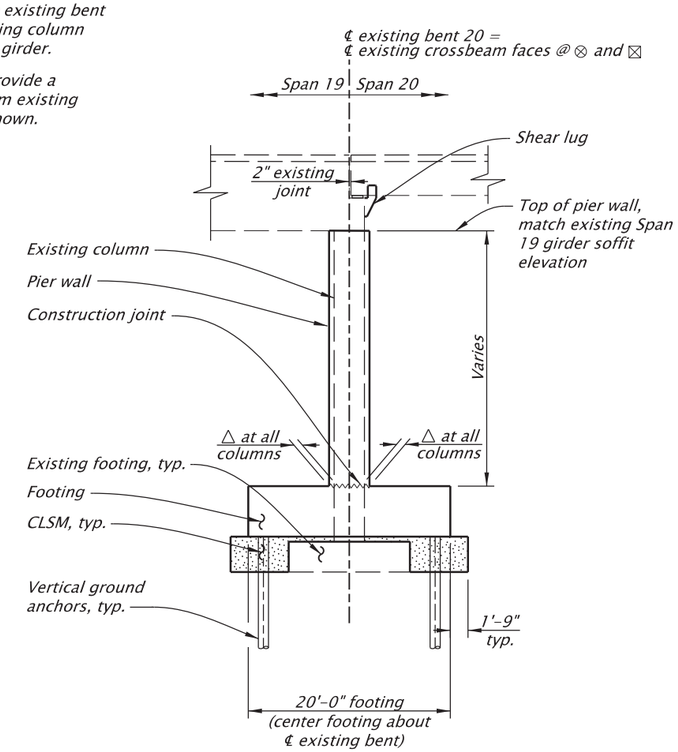

TYPICAL SECTION

Scale: 1"=15'

WATERLINE NOTES:
1. Remove existing ductile iron pipe and box girder access cage.
2. Enlarge access hole and install new waterline.
3. See RA shts. for details.

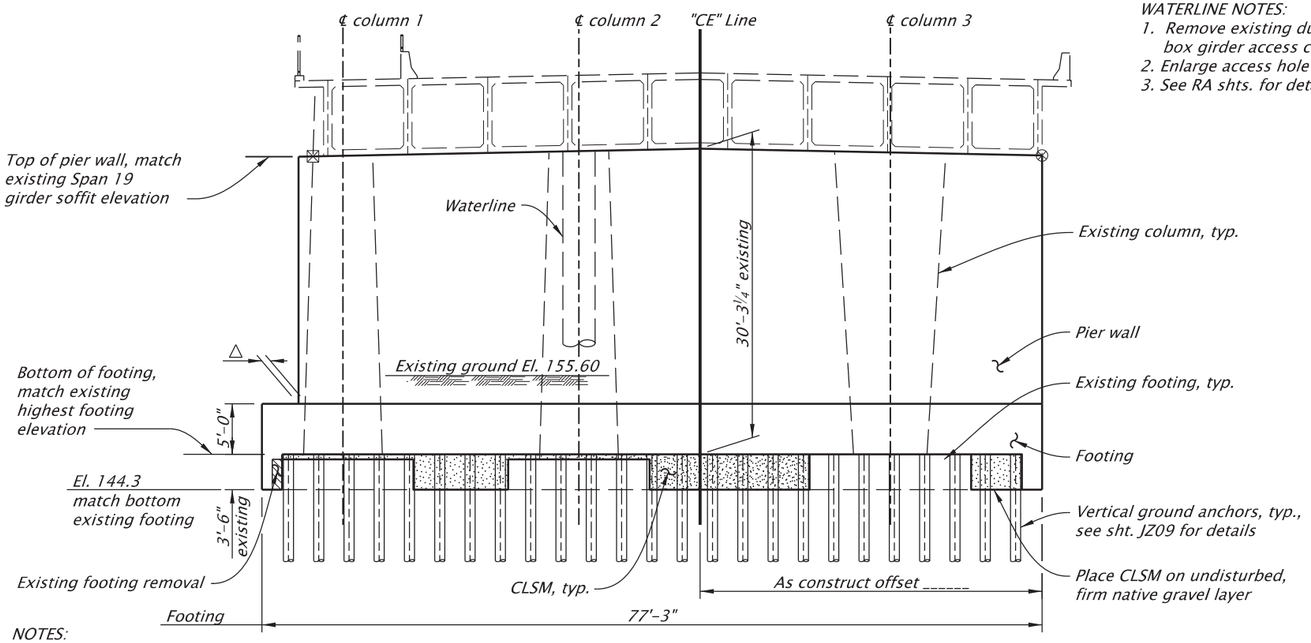

ELEVATION

Scale: 1"=15'

Concrete removal

CLSM

NOTES:
1. See sht. JA25 for foundation details.
2. See sht. JA81 for footing details.
3. See sht. JA82 for pier wall details.
4. See sht. JA83 for shear lug details and miscellaneous details.
5. See sht. JA84 for thrust block details.
6. See shts. JA28 –JA31 for joint limits and details.
7. Waterline and thrust block not shown for clarity, see RB and RC shts. for details.
8. See sht. JD02 for pedestrian bridge footing removal and replacement details.
9. Field verify all dimensions and elevations before submitting Working Drawings and prior to ordering or fabricating any materials. See sht. J02 for more details.

SCALE WARNING

IF THIS SCALE LINE DOES NOT MEASURE ONE INCH, THEN DRAWING IS NOT TO SCALE

For accompanied by drawings, see sht. JA01

STRUCTURE NO.	00123K
BDS DWG NO.	113824
CALC. BOOK	7997
HWY: 030	
M.P.: 25.88	
COUNTY	Marion
DATE	2/26

REGISTERED PROFESSIONAL ENGINEER
099941PE
Digitally Signed 2026.02.12 11:28:39-08'00'
OREGON
JULY 21, 2022
BERNARD ANTHONY FRANKL
EXPIRES: 12/31/2027

FINAL ELECTRONIC DOCUMENT AVAILABLE UPON REQUEST

DOWL
3500 Chad Drive, Suite 200
Eugene, Oregon 97408
541-683-6090
WWW.DOWL.COM

WILLAMETTE RIVER, HWY 30 EB (CENTER ST)

OR22: CENTER ST BRIDGE (PHASE 1) PROJECT
WILLAMINA - SALEM HIGHWAY
MARION & POLK COUNTIES

Designer: Bernard A. Frankl, PhD, PE
Reviewer: Bob Goodrich, PE
Drafter: Jake Williams
Checker: Tanner Torkelson, PE

BENT 20 PLAN AND ELEVATION

SHEET NO. JA80

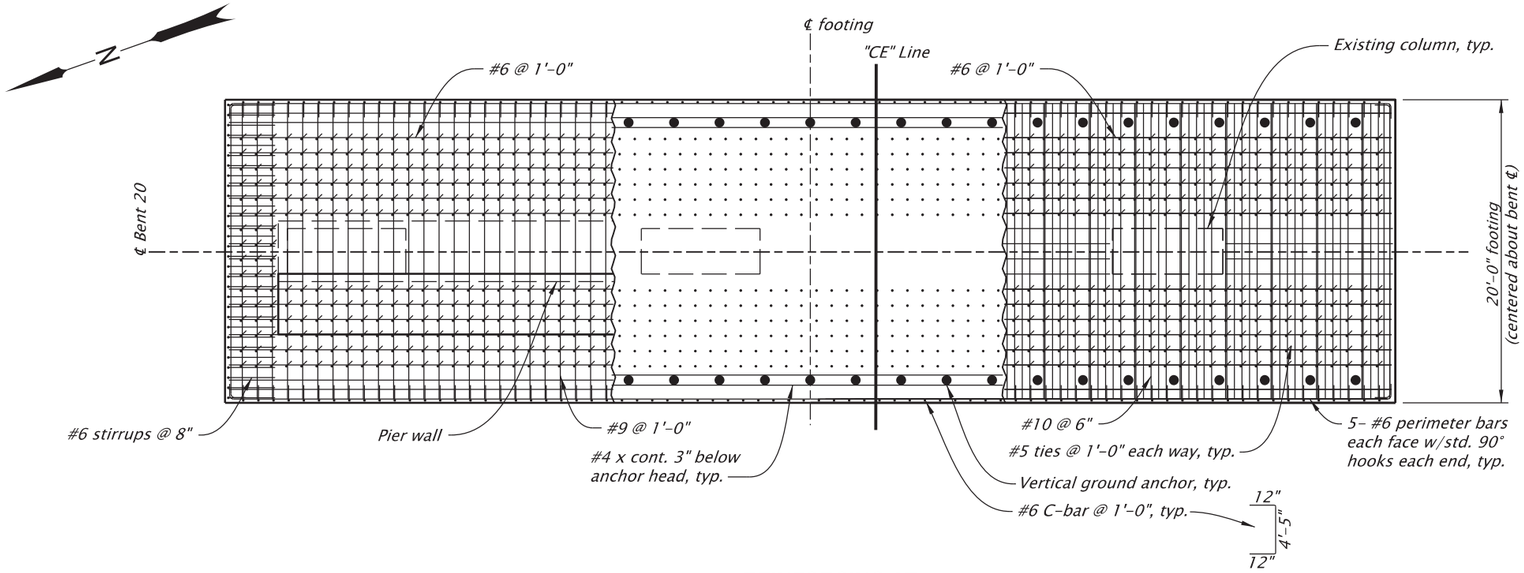

TOP MAT REINFORCING

REINFORCING AT GROUND ANCHOR HEADS

BOTTOM MAT REINFORCING

PLAN

Scale: 1"=10'

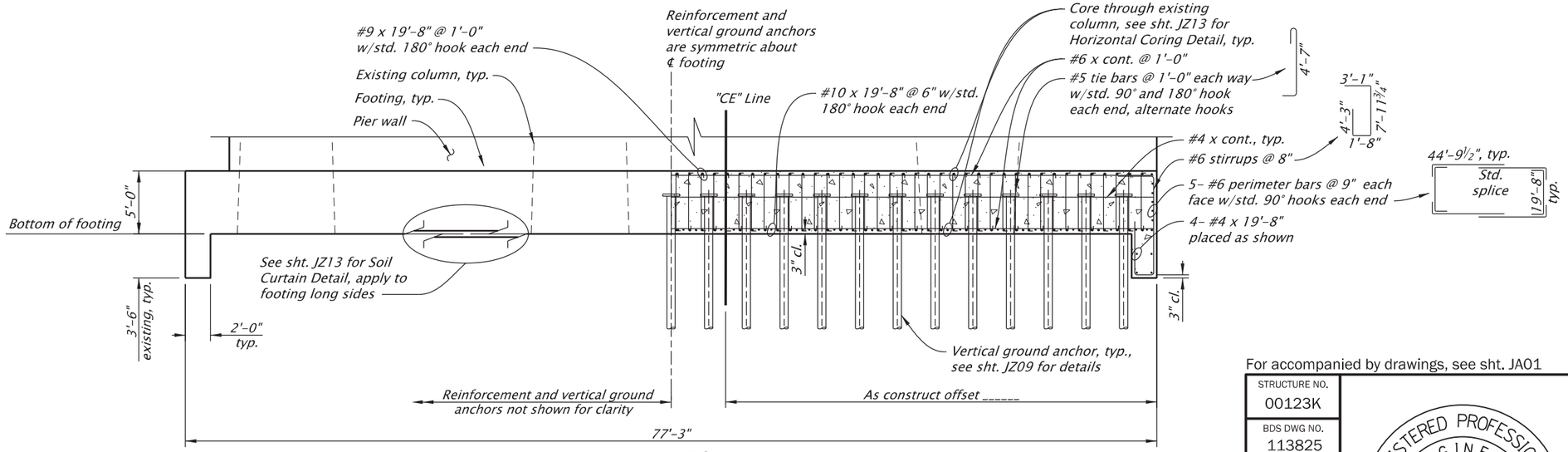

ELEVATION

Scale: 1"=10'

NOTES:
1. Existing footing and CLSM not shown in elevation view for clarity.
2. Shift footing bars to maintain 2" clear to vertical ground anchors.
3. Two-bar bundles allowed to avoid vertical ground anchors or existing vertical column steel.
4. One splice is permitted per reinforcing bar.
5. Provide footing reinforcement according to ASTM Specifications A706 Grade 80.
6. See Bent Plan and Elevation sheet for construction control working points to establish bent centerline.
7. Field verify all dimensions and elevations prior to submitting Working Drawings and prior to ordering or fabricating any materials. See sht. J02 for more details.

SCALE WARNING

IF THIS SCALE LINE DOES NOT MEASURE ONE INCH, THEN DRAWING IS NOT TO SCALE

For accompanied by drawings, see sht. JA01

STRUCTURE NO.	00123K
BDS DWG NO.	113825
CALC. BOOK	7997
HWY: 030	M.P.: 25.88
COUNTY	Marion
DATE	2/26

REGISTERED PROFESSIONAL ENGINEER 099941PE
Digitally Signed 2026.02.12 11:28:55-08'00'
OREGON
JULY 21, 2022
BERNARD ANTHONY FRANKL
EXPIRES: 12/31/2027

FINAL ELECTRONIC DOCUMENT AVAILABLE UPON REQUEST

DOWL
3500 Chad Drive, Suite 200
Eugene, Oregon 97408
541-683-6090
WWW.DOWL.COM

OREGON DEPARTMENT OF TRANSPORTATION

WILLAMETTE RIVER, HWY 30 EB (CENTER ST)

OR22: CENTER ST BRIDGE (PHASE 1) PROJECT
WILLAMINA - SALEM HIGHWAY
MARION & POLK COUNTIES

Designer: Bernard A. Frankl, PhD, PE
Reviewer: Bob Goodrich, PE
Drafter: Jake Williams
Checker: Nasario Lopez-Francisco, PE

BENT 20 FOOTING DETAILS

SHEET NO. JA81

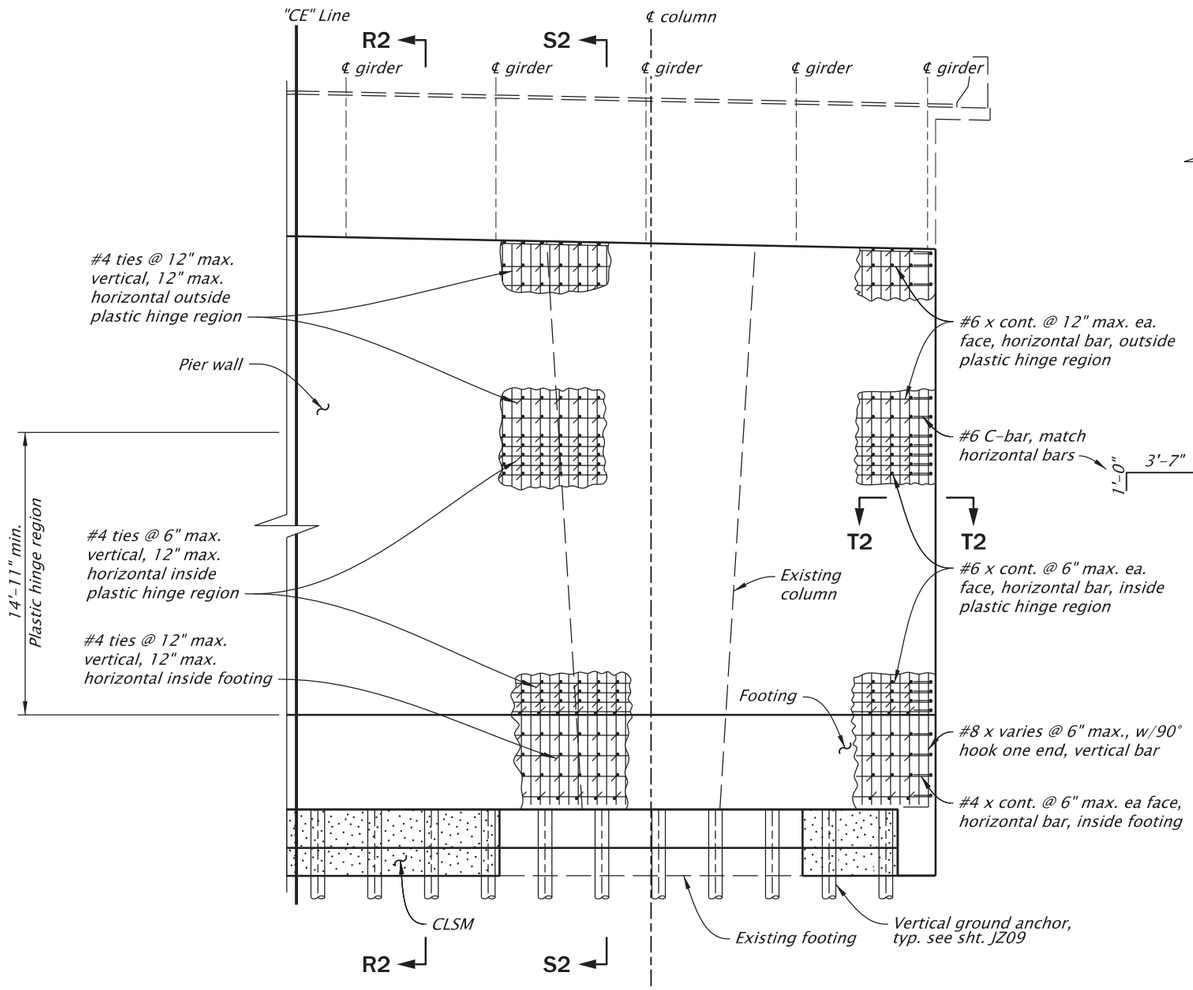

ELEVATION

Scale: 1/8"=1'-0"

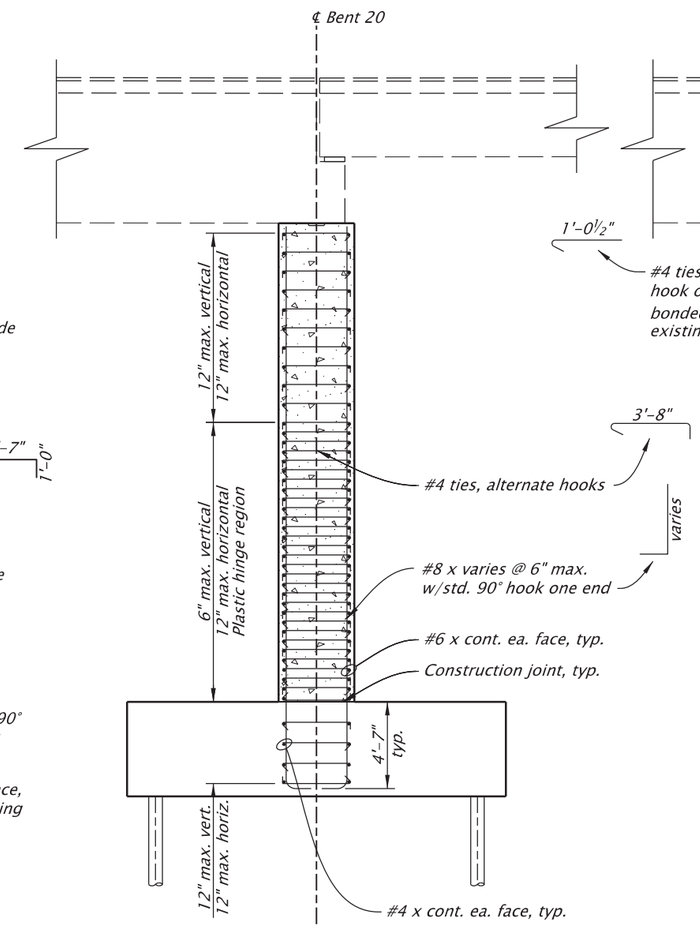

SECTION R2-R2

Scale: 1/8"=1'-0"

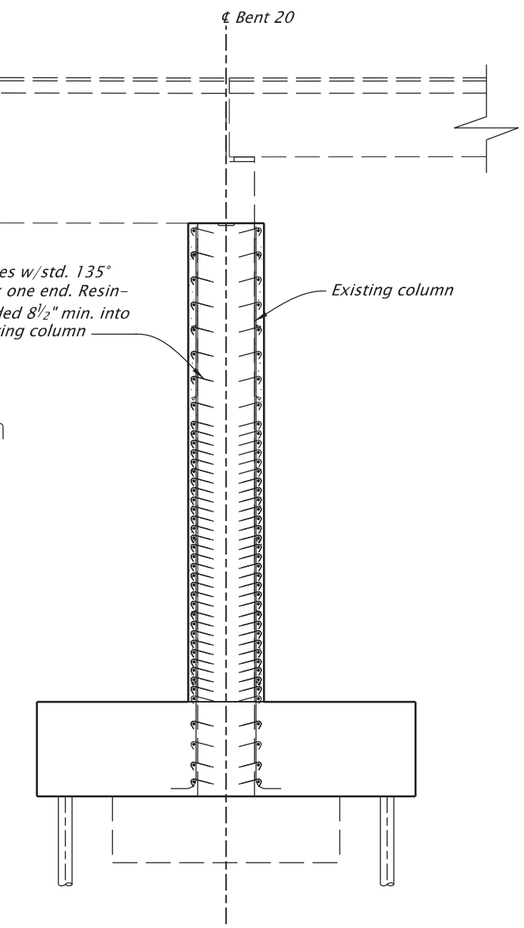

SECTION S2-S2

Scale: 1/8"=1'-0"

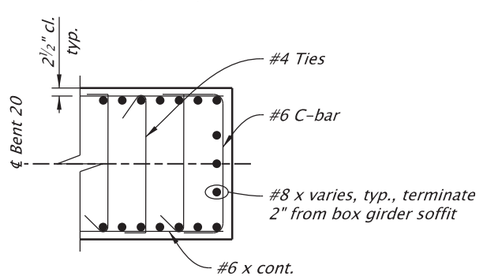

SECTION T2-T2

Scale: 1/4"=1'-0"

NOTES:
1. See sht. JA80 for pier wall geometry.
2. See Bent Plan and Elevation sheet for construction working points to establish bent centerlines.
2. Field verify all dimensions and elevations before submitting Working Drawings and prior to ordering or fabricating any materials. See sht. J02 for more details.

For accompanied by drawings, see sht. JA01

STRUCTURE NO.	00123K
BDS DWG NO.	113826
CALC. BOOK	7997
HWY: 030 M.P.: 25.88	
COUNTY	Marion
DATE	2/26

SCALE WARNING
IF THIS SCALE LINE DOES NOT MEASURE ONE INCH, THEN DRAWING IS NOT TO SCALE

REGISTERED PROFESSIONAL ENGINEER 099941PE OREGON JULY 21, 2022 BERNARD ANTHONY FRANKL
Digitally Signed 2026.02.12 11:29:13-08'00'
EXPIRES: 12/31/2027

FINAL ELECTRONIC DOCUMENT AVAILABLE UPON REQUEST

DOWL
3500 Chad Drive, Suite 200
Eugene, Oregon 97408
541-683-6090
WWW.DOWL.COM

WILLAMETTE RIVER, HWY 30 EB (CENTER ST)

OR22: CENTER ST BRIDGE (PHASE 1) PROJECT
WILLAMINA - SALEM HIGHWAY
MARION & POLK COUNTIES

Designer: Bernard A. Frankl, PhD, PE
Reviewer: Bob Goodrich, PE
Drafter: Jake Williams
Checker: Tanner Torkelson, PE

BENT 20 PIER WALL DETAILS

SHEET NO. JA82

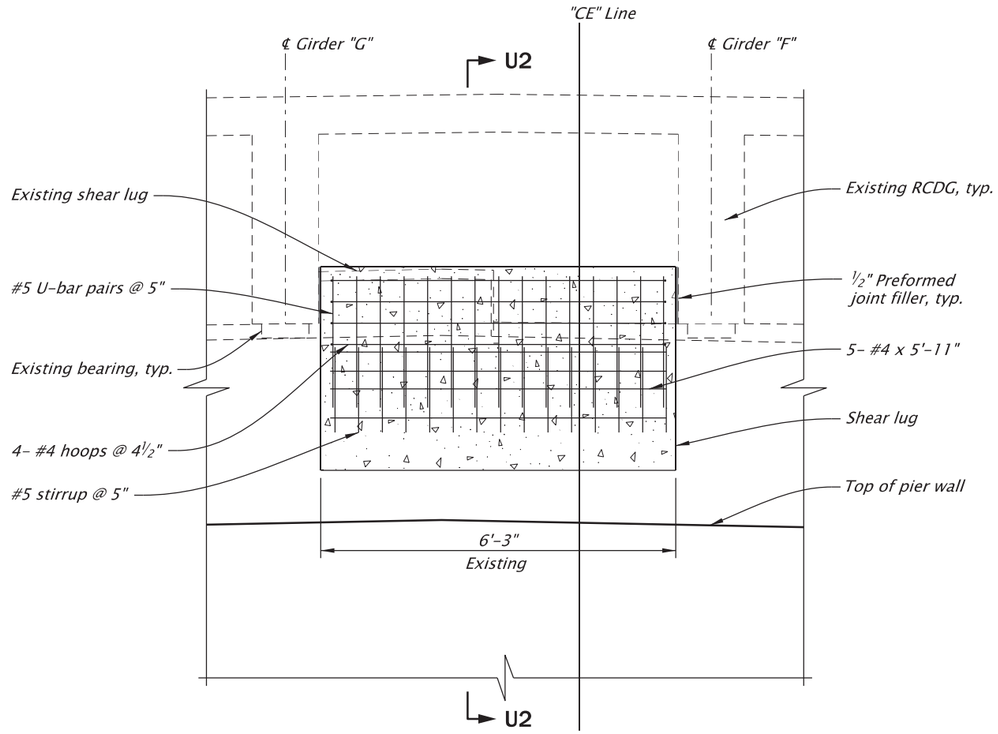

SHEAR LUG DETAIL

Scale: 3/8"=1'-0"

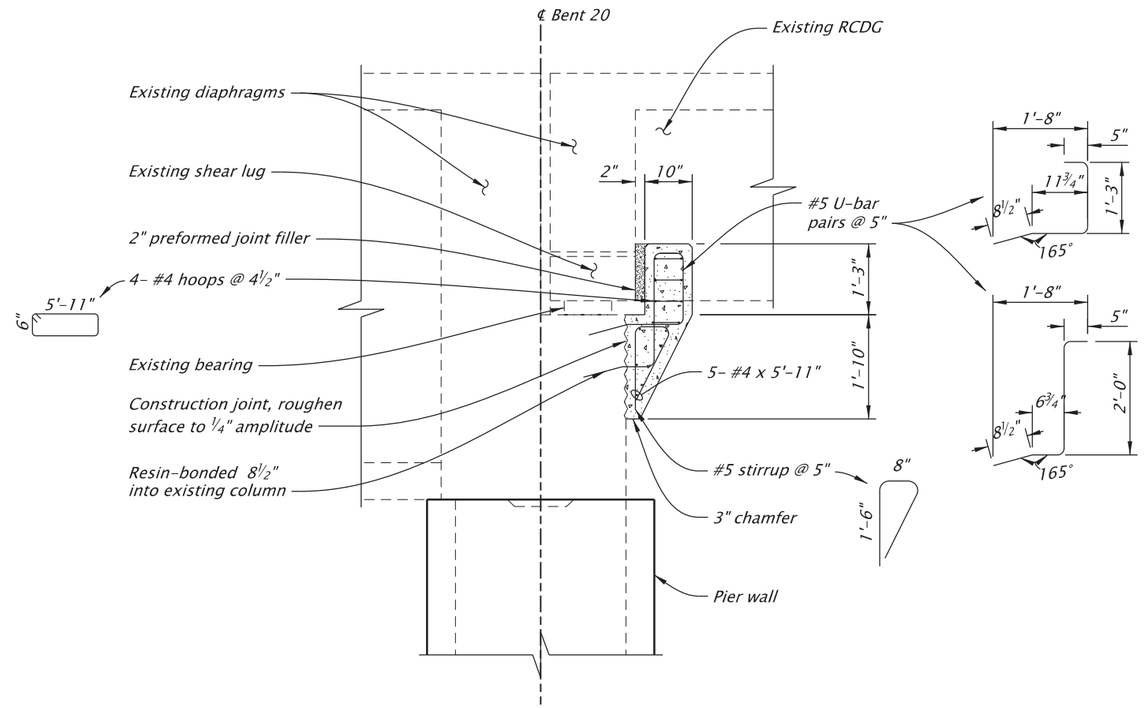

SECTION U2-U2

Scale: 3/8"=1'-0"

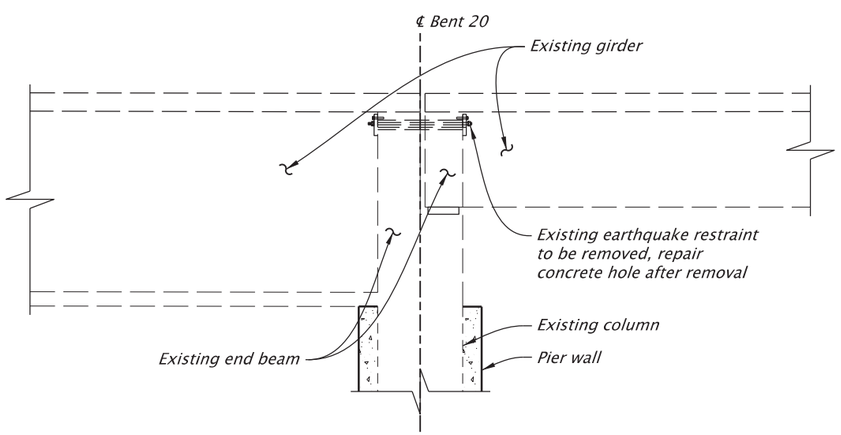

RESTRAINT REMOVAL DETAIL

Scale: 3/16"=1'-0"

NOTES:

1. *See Bent Plan and Elevation sheet for construction control working points to establish bent centerline.*
2. *Field verify all dimensions and elevations prior to submitting Working Drawings and prior to ordering or fabricating any materials. See sht. J02 for more details.*

SCALE WARNING

IF THIS SCALE LINE DOES NOT MEASURE ONE INCH, THEN DRAWING IS NOT TO SCALE

For accompanied by drawings, see sht. JA01

STRUCTURE NO.	00123K
BDS DWG NO.	113827
CALC. BOOK	7997
HWY: 030	M.P.: 25.88
COUNTY	Marion
DATE	2/26

REGISTERED PROFESSIONAL ENGINEER 099941PE OREGON JULY 21, 2022 BERNARD ANTHONY FRANKL

Digitally Signed 2026.02.12 11:29:30-08'00'

EXPIRES: 12/31/2027

FINAL ELECTRONIC DOCUMENT AVAILABLE UPON REQUEST

DOWL
3500 Chad Drive, Suite 200
Eugene, Oregon 97408
541-683-6090
WWW.DOWL.COM

OREGON DEPARTMENT OF TRANSPORTATION

WILLAMETTE RIVER, HWY 30 EB (CENTER ST)

OR22: CENTER ST BRIDGE (PHASE 1) PROJECT
WILLAMINA - SALEM HIGHWAY
MARION & POLK COUNTIES

Designer: Bernard A. Frankl, PhD, PE
Reviewer: Bob Goodrich, PE
Drafter: Jake Williams
Checker: Tanner Torkelson, PE

BENT 20 MISCELLANEOUS DETAILS - 1

SHEET NO. JA83

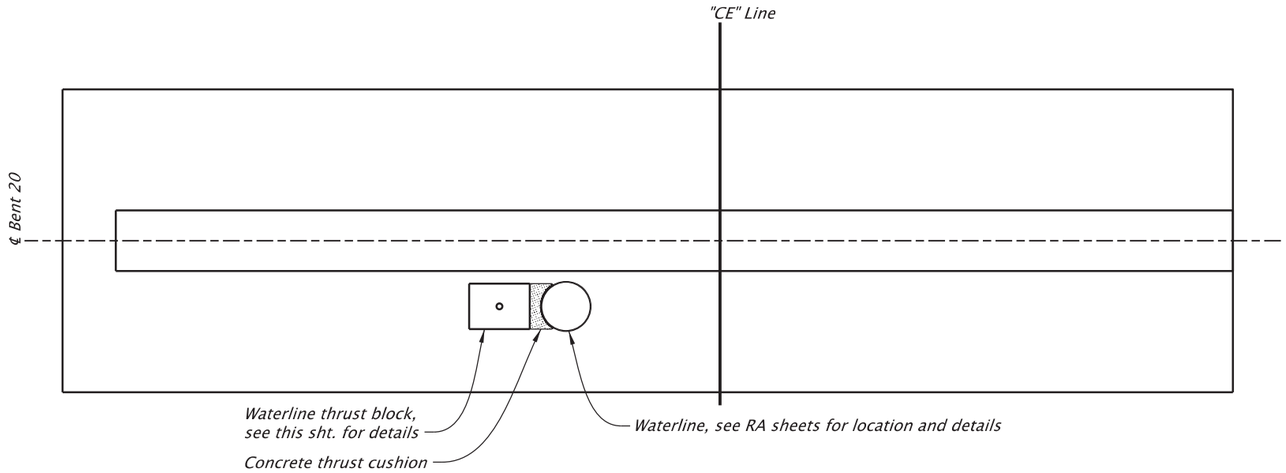

PLAN

Scale: 1"=10'

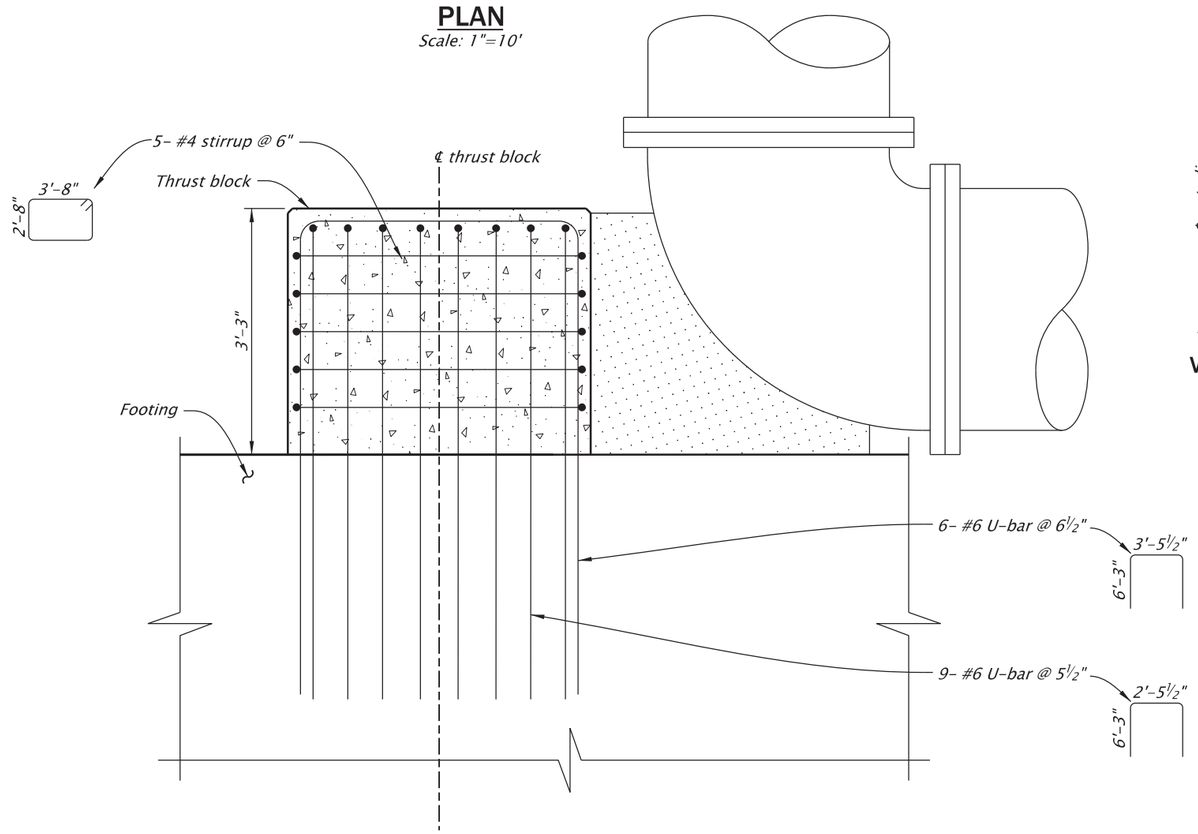

SECTION V2-V2

Scale: 1/2"=1'-0"

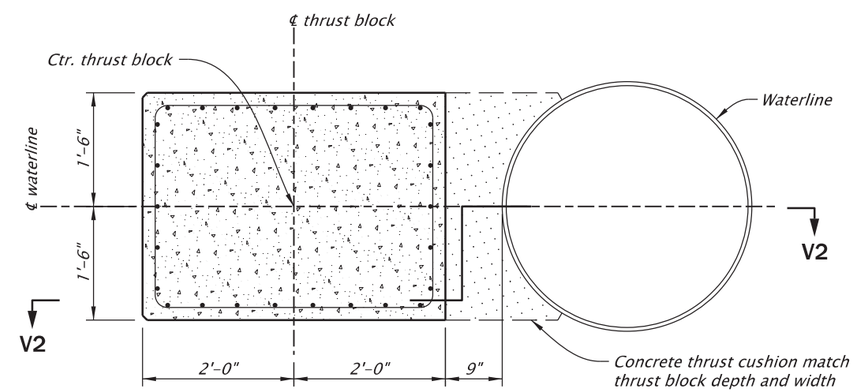

WATERLINE THRUST BLOCK

Scale: 1/2"=1'-0"

NOTES:

1. See Bent Plan and Elevation sheet for construction control working points to establish bent centerline.
2. Field verify all dimensions and elevations prior to submitting Working Drawings and prior to ordering or fabricating any materials. See sht. J02 for more details.

SCALE WARNING

IF THIS SCALE LINE DOES NOT MEASURE ONE INCH, THEN DRAWING IS NOT TO SCALE

For accompanied by drawings, see sht. JA01

STRUCTURE NO.	00123K
BDS DWG NO.	113828
CALC. BOOK	7997
HWY: 030	M.P.: 25.88
COUNTY	Marion
DATE	2/26

REGISTERED PROFESSIONAL ENGINEER 099941PE
Digitally Signed 2026.02.12 11:29:50-08'00'
OREGON
JULY 21, 2022
BERNARD ANTHONY FRANKL
EXPIRES: 12/31/2027

FINAL ELECTRONIC DOCUMENT AVAILABLE UPON REQUEST

DOWL
3500 Chad Drive, Suite 200
Eugene, Oregon 97408
541-683-6090
WWW.DOWL.COM

WILLAMETTE RIVER, HWY 30 EB (CENTER ST)

OR22: CENTER ST BRIDGE (PHASE 1) PROJECT
WILLAMINA - SALEM HIGHWAY
MARION & POLK COUNTIES

Designer: Bernard A. Frankl, PhD, PE
Reviewer: Bob Goodrich, PE
Drafter: Jake Williams
Checker: Jonathon Stark, EI

BENT 20 MISCELLANEOUS DETAILS - 2

SHEET NO. JA84

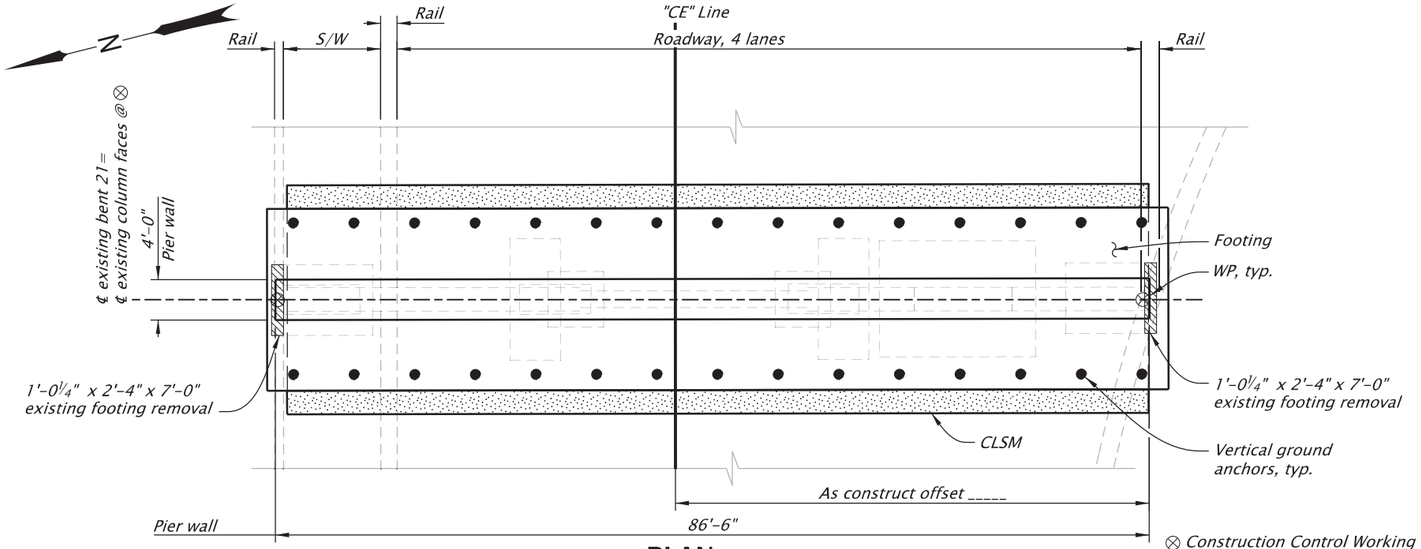

PLAN

Scale: 1"=15'

⊗ Construction Control Working Points (WP) are located at ℄ existing column face at the top of existing footing.

△ Construction pinch point. Provide a minimum of 6" concrete from existing surface to new surface as shown.

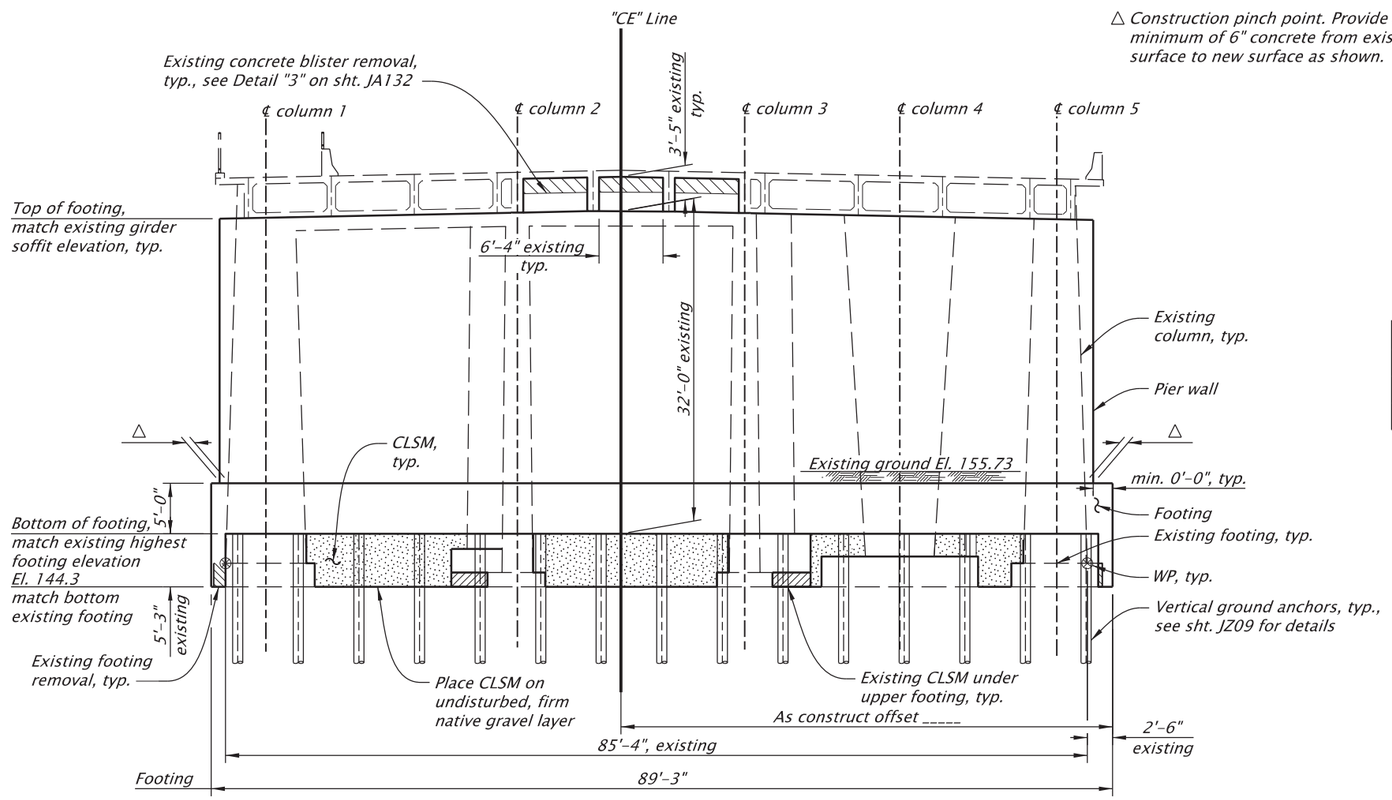

ELEVATION

Scale: 1"=15'

Concrete removal
Existing CLSM
CLSM

NOTES:
1. See sht. JA25 for foundation details.
2. See sht. JA86 for footing details.
3. See shts. JA87-JA88 for pier wall details.
4. Drainage details not shown for clarity, see sht. JA127 for drainage details.
5. Field verify all dimensions and elevations before submitting Working Drawings and prior to ordering or fabricating any materials. See sht. J02 for more details

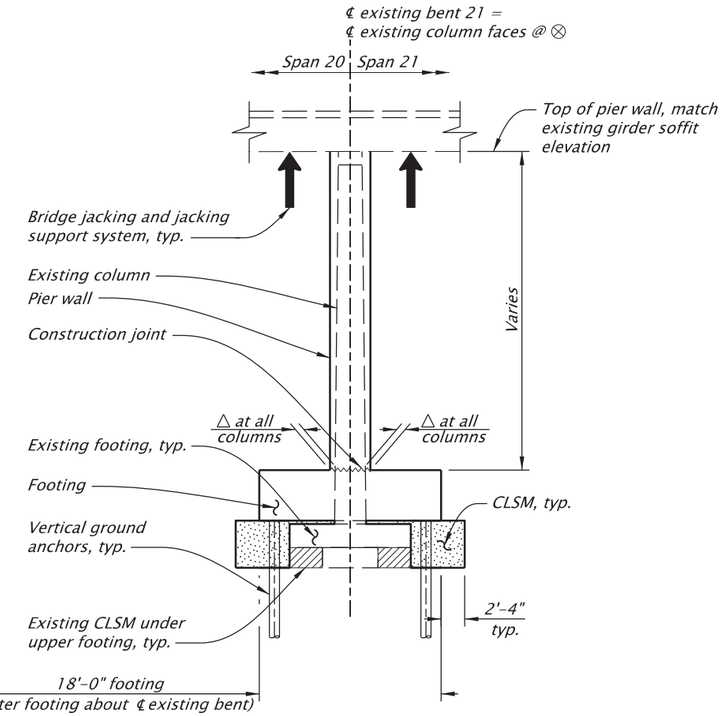

TYPICAL SECTION

Scale: 1"=15'

BRIDGE JACKING LOADS (kips)			
Location	Unfactored Dead Load	Factored Lane Load	Conceptual System Type
Span 20	730	113	Self supported
Span 21	730	113	Self supported

NOTES:
1. Dead load represents the total unfactored bent reaction.
2. Live load represents factored, controlling single HL-93 or Permit Truck reaction, adjusted for dynamic load allowance, and a multiple presence factor of 1.0.
3. Contractor is responsible for determining all construction loading including, materials, equipment and live loading.

For accompanied by drawings, see sht. JA01

SCALE WARNING
IF THIS SCALE LINE DOES NOT MEASURE ONE INCH, THEN DRAWING IS NOT TO SCALE

STRUCTURE NO.	00123K
BDS DWG NO.	113829
CALC. BOOK	7997
HWY: 030 M.P.: 25.88	
COUNTY	Marion
DATE	2/26

REGISTERED PROFESSIONAL ENGINEER 099941PE OREGON JULY 21, 2022 BERNARD ANTHONY FRANKL
Digitally Signed 2026.02.12 11:30:10-08'00'
EXPIRES: 12/31/2027

FINAL ELECTRONIC DOCUMENT AVAILABLE UPON REQUEST

DOWL
3500 Chad Drive, Suite 200
Eugene, Oregon 97408
541-683-6090
WWW.DOWL.COM

OREGON DEPARTMENT OF TRANSPORTATION

WILLAMETTE RIVER, HWY 30 EB (CENTER ST)

OR22: CENTER ST BRIDGE (PHASE 1) PROJECT
WILLAMINA - SALEM HIGHWAY
MARION & POLK COUNTIES

Designer: Bernard A. Frankl, PhD, PE
Reviewer: Bob Goodrich, PE
Drafter: Jake Williams
Checker: Tanner Torkelson, PE

BENT 21 PLAN AND ELEVATION

SHEET NO. JA85

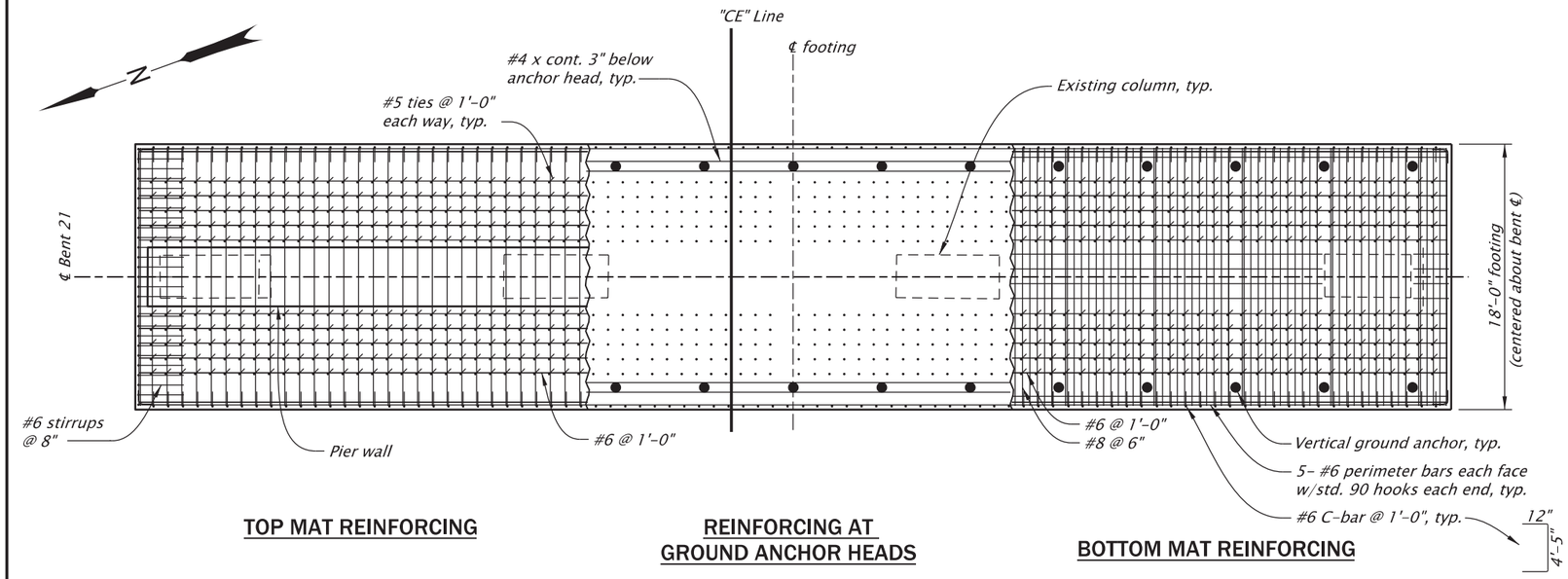

PLAN

Scale: 1"=10'

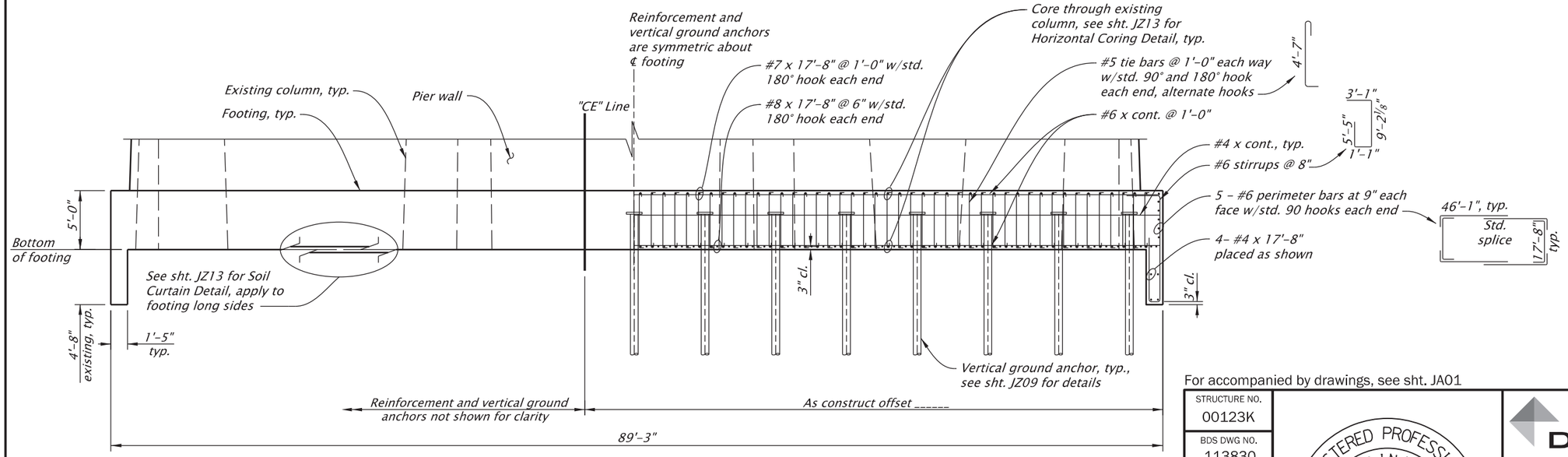

ELEVATION

Scale: 1"=10'

NOTES:
1. Existing footing and CLSM not shown in elevation view for clarity.
2. Shift footing bars to maintain 2" clear to vertical ground anchors.
3. Two-bar bundles allowed to avoid vertical ground anchors or existing vertical column steel.
4. One splice is permitted per reinforcing bar.
5. Provide footing reinforcement according to ASTM Specifications A706 Grade 80.
6. See Bent Plan and Elevation sheet for construction control working points to establish bent centerline.
5. Field verify all dimensions and elevations prior to submitting Working Drawings and prior to ordering or fabricating any materials. See sht. J02 for more details.

SCALE WARNING
IF THIS SCALE LINE DOES NOT MEASURE ONE INCH, THEN DRAWING IS NOT TO SCALE

For accompanied by drawings, see sht. JA01

STRUCTURE NO.	00123K
BDS DWG NO.	113830
CALC. BOOK	7997
HWY: 030	M.P.: 25.88
COUNTY	Marion
DATE	2/26

REGISTERED PROFESSIONAL ENGINEER 099941PE OREGON JULY 21, 2022 BERNARD ANTHONY FRANKL
Digitally Signed 2026.02.12 11:30:27-08'00'
EXPIRES: 12/31/2027
FINAL ELECTRONIC DOCUMENT AVAILABLE UPON REQUEST

DOWL
3500 Chad Drive, Suite 200
Eugene, Oregon 97408
541-683-6090
WWW.DOWL.COM

WILLAMETTE RIVER, HWY 30 EB (CENTER ST)

OR22: CENTER ST BRIDGE (PHASE 1) PROJECT
WILLAMINA - SALEM HIGHWAY
MARION & POLK COUNTIES

Designer: Bernard A. Frankl, PhD, PE
Reviewer: Bob Goodrich, PE
Drafter: Jake Williams
Checker: Nasario Lopez-Francisco, PE

BENT 21 FOOTING DETAILS

SHEET NO. JA86

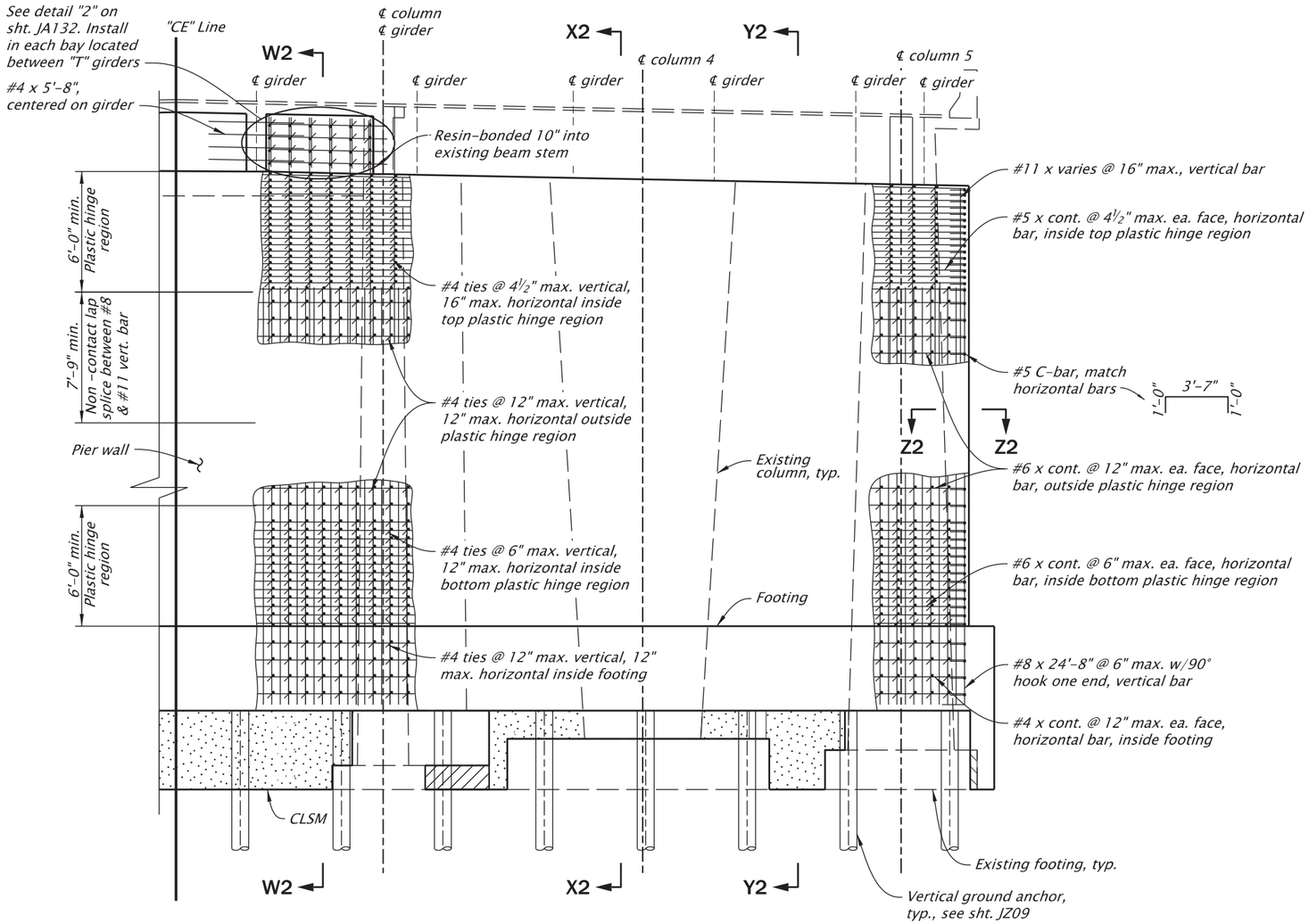

ELEVATION

Scale: 1/8"=1'-0"

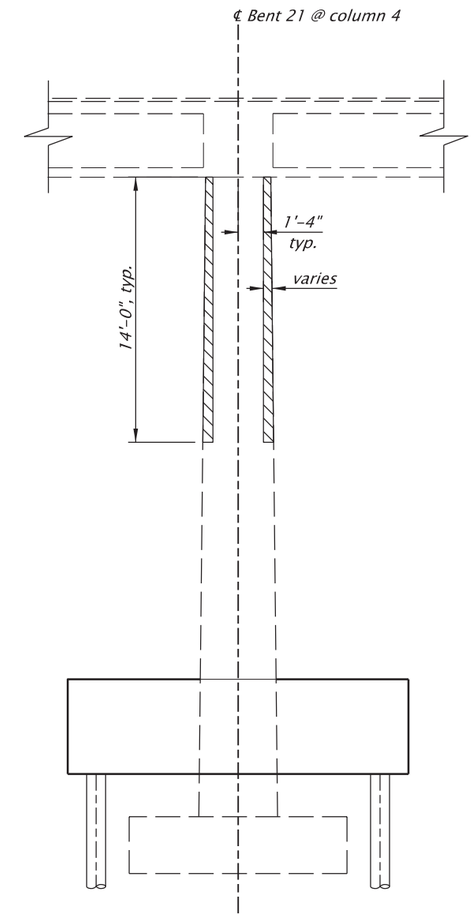

COLUMN 4 REMOVAL LIMITS

Scale: 1/8"=1'-0"

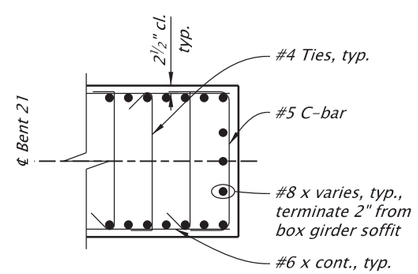

SECTION Z2-Z2

Scale: 1/4"=1'-0"

NOTES:

1. See sht. JA85 for pier wall geometry.
2. See sht. JA88 for Sections W2-W2, X2-X2, and Y2-Y2.
3. See Bent Plan and Elevation sheet for construction control working points to establish bent centerline.
4. Field verify all dimensions and elevations prior to submitting Working Drawings and prior to ordering or fabricating any materials. See sht. J02 for more details.

SCALE WARNING

IF THIS SCALE LINE DOES NOT MEASURE ONE INCH, THEN DRAWING IS NOT TO SCALE

For accompanied by drawings, see sht. JA01

STRUCTURE NO.	00123K
BDS DWG NO.	113831
CALC. BOOK	7997
HWY: 030	M.P.: 25.88
COUNTY	Marion
DATE	2/26

REGISTERED PROFESSIONAL ENGINEER 099941PE OREGON JULY 21, 2022 BERNARD ANTHONY FRANKL

Digitally Signed 2026.02.12 11:30:43-08'00'

EXPIRES: 12/31/2027

FINAL ELECTRONIC DOCUMENT AVAILABLE UPON REQUEST

DOWL
3500 Chad Drive, Suite 200
Eugene, Oregon 97408
541-683-6090
WWW.DOWL.COM

OREGON DEPARTMENT OF TRANSPORTATION

WILLAMETTE RIVER, HWY 30 EB (CENTER ST)

OR22: CENTER ST BRIDGE (PHASE 1) PROJECT
WILLAMINA - SALEM HIGHWAY
MARION & POLK COUNTIES

Designer: Bernard A. Frankl, PhD, PE
Reviewer: Bob Goodrich, PE
Drafter: Jake Williams
Checker: Tanner Torkelson, PE

BENT 21 PIER WALL DETAILS - 1

SHEET NO. JA87

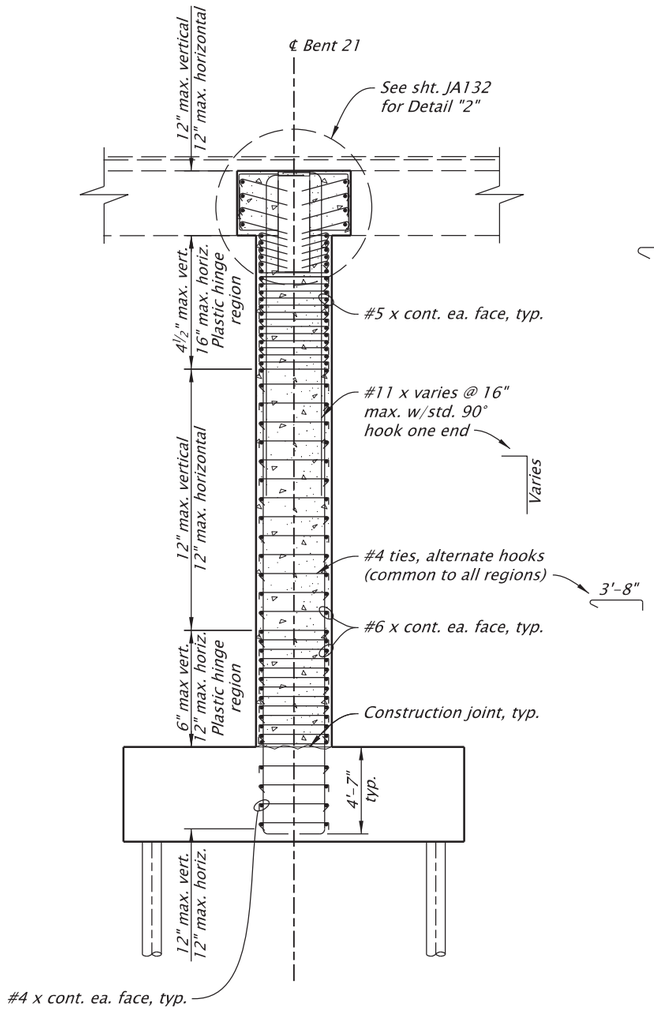

SECTION W2-W2

Scale: 1/8"=1'-0"

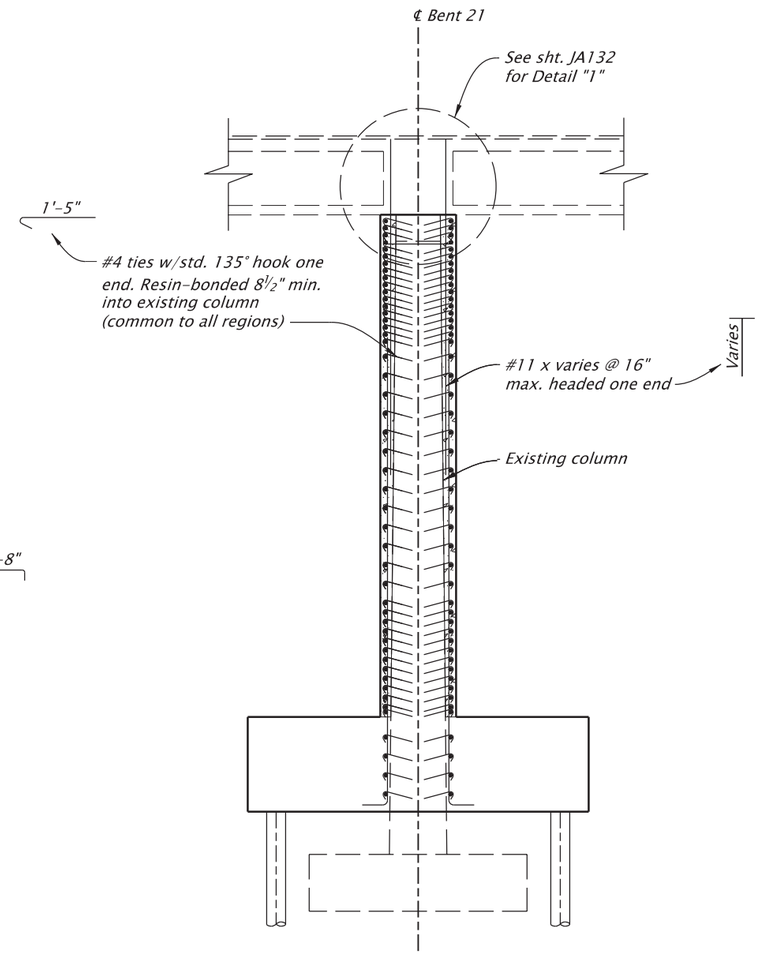

SECTION X2-X2

Scale: 1/8"=1'-0"

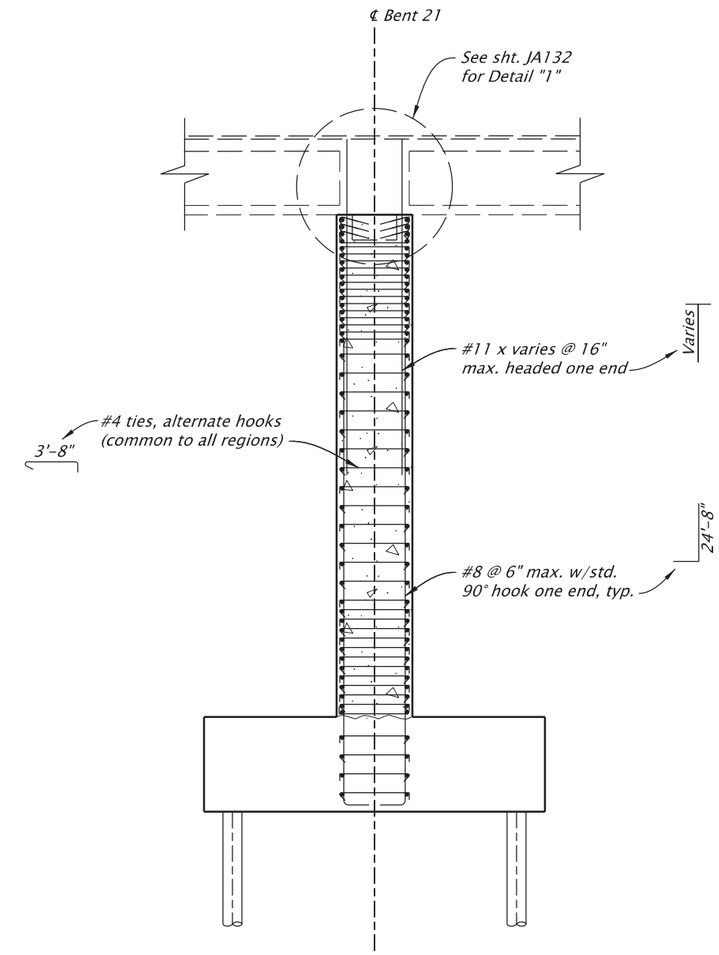

SECTION Y2-Y2

Scale: 1/8"=1'-0"

For accompanied by drawings, see sht. JA01

NOTES:
1. *See sht. JA87 for Sections W2-W2, X2-X2, and Y2-Y2 location.*
2. *See Bent Plan and Elevation sheet for construction control working points to establish bent centerline.*
3. *Field verify all dimensions and elevations prior to submitting Working Drawings and prior to ordering or fabricating any materials. See sht. J02 for more details.*

SCALE WARNING
IF THIS SCALE LINE DOES NOT MEASURE ONE INCH, THEN DRAWING IS NOT TO SCALE

STRUCTURE NO.	00123K
BDS DWG NO.	113832
CALC. BOOK	7997
HWY: 030 M.P.: 25.88	
COUNTY	Marion
DATE	2/26

REGISTERED PROFESSIONAL ENGINEER
099941PE
Digitally Signed 2026.02.12 11:31:01-08'00'
OREGON
JULY 21, 2022
BERNARD ANTHONY FRANKL
EXPIRES: 12/31/2027

FINAL ELECTRONIC DOCUMENT AVAILABLE UPON REQUEST

DOWL
3500 Chad Drive, Suite 200
Eugene, Oregon 97408
541-683-6090
WWW.DOWL.COM

OREGON DEPARTMENT OF TRANSPORTATION

WILLAMETTE RIVER, HWY 30 EB (CENTER ST)

OR22: CENTER ST BRIDGE (PHASE 1) PROJECT
WILLAMINA - SALEM HIGHWAY
MARION & POLK COUNTIES

Designer: Bernard A. Frankl, PhD, PE
Reviewer: Bob Goodrich, PE
Drafter: Jake Williams
Checker: Tanner Torkelson, PE

BENT 21 PIER WALL DETAILS - 2

SHEET NO. JA88

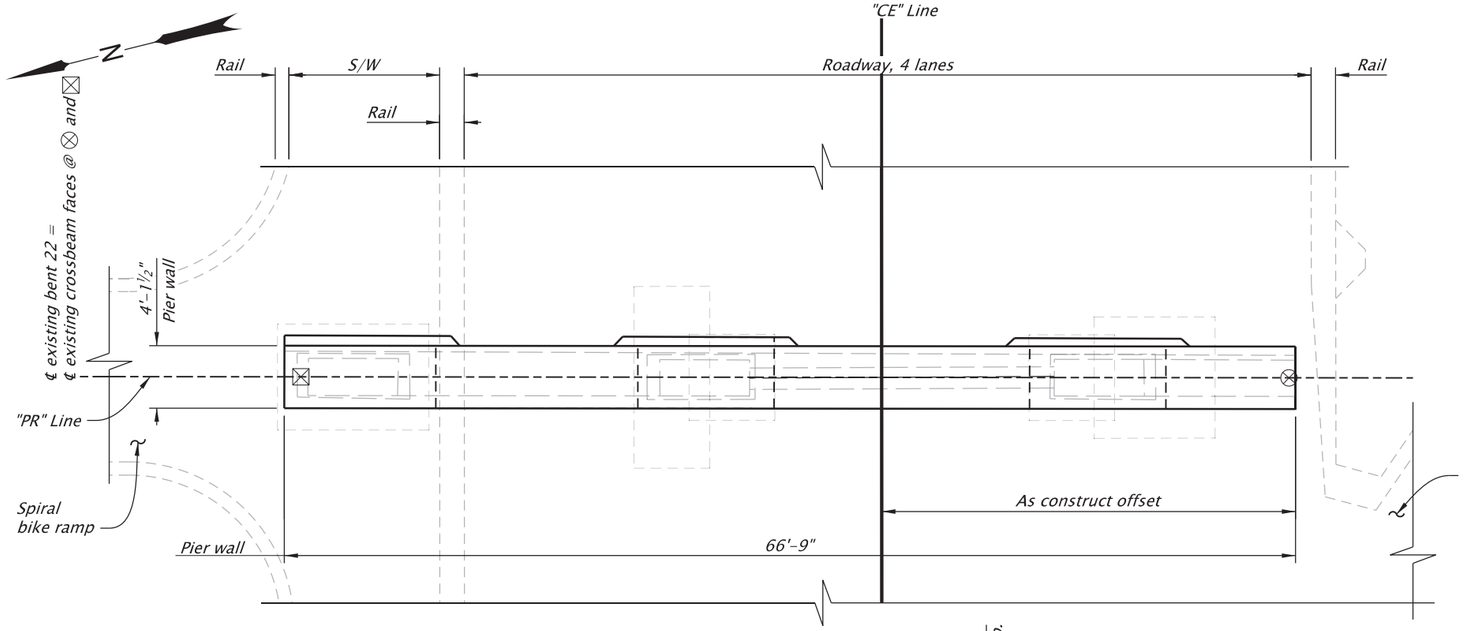

PLAN

Scale: 1"=10'

BRIDGE JACKING LOADS (kips)		
Unfactored Dead Load	Factored Lane Load	Conceptual System Type
1,034	220	Self supported

NOTES:
1. Dead load represents the total unfactored bent reaction.
2. Live load represents factored, controlling single HL-93 or Permit Truck reaction, adjusted for dynamic load allowance, and a multiple presence factor of 1.0.
3. Contractor is responsible for determining all construction loading including, materials, equipment and live loading.
4. Loading represents bent reactions from both adjacent spans.

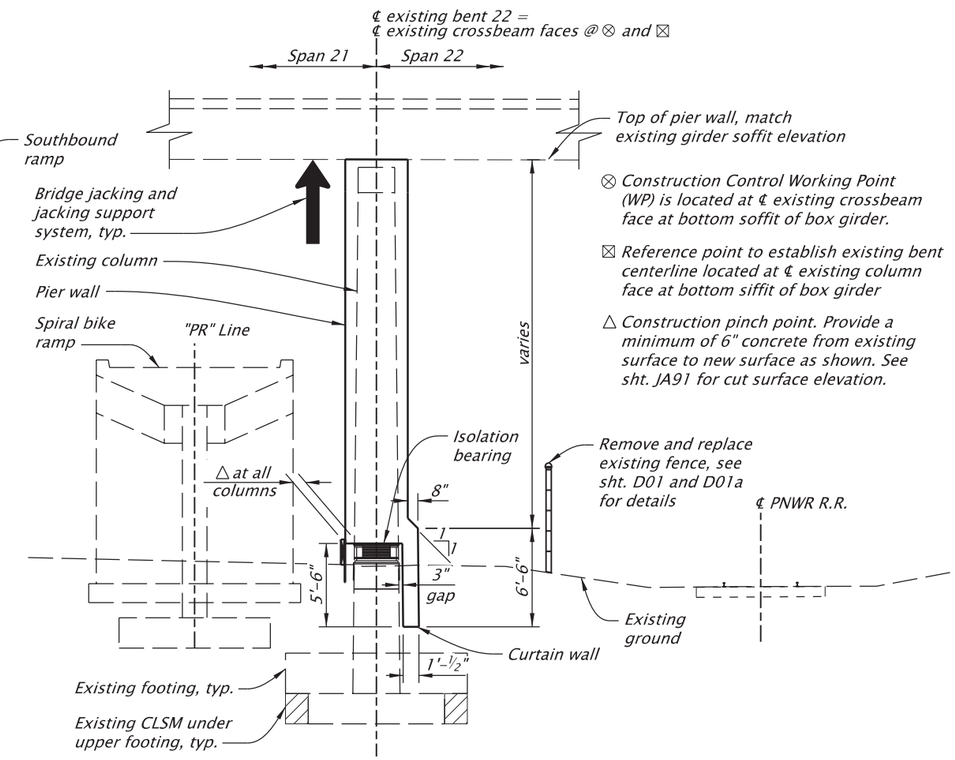

TYPICAL SECTION

Scale: 1"=10'

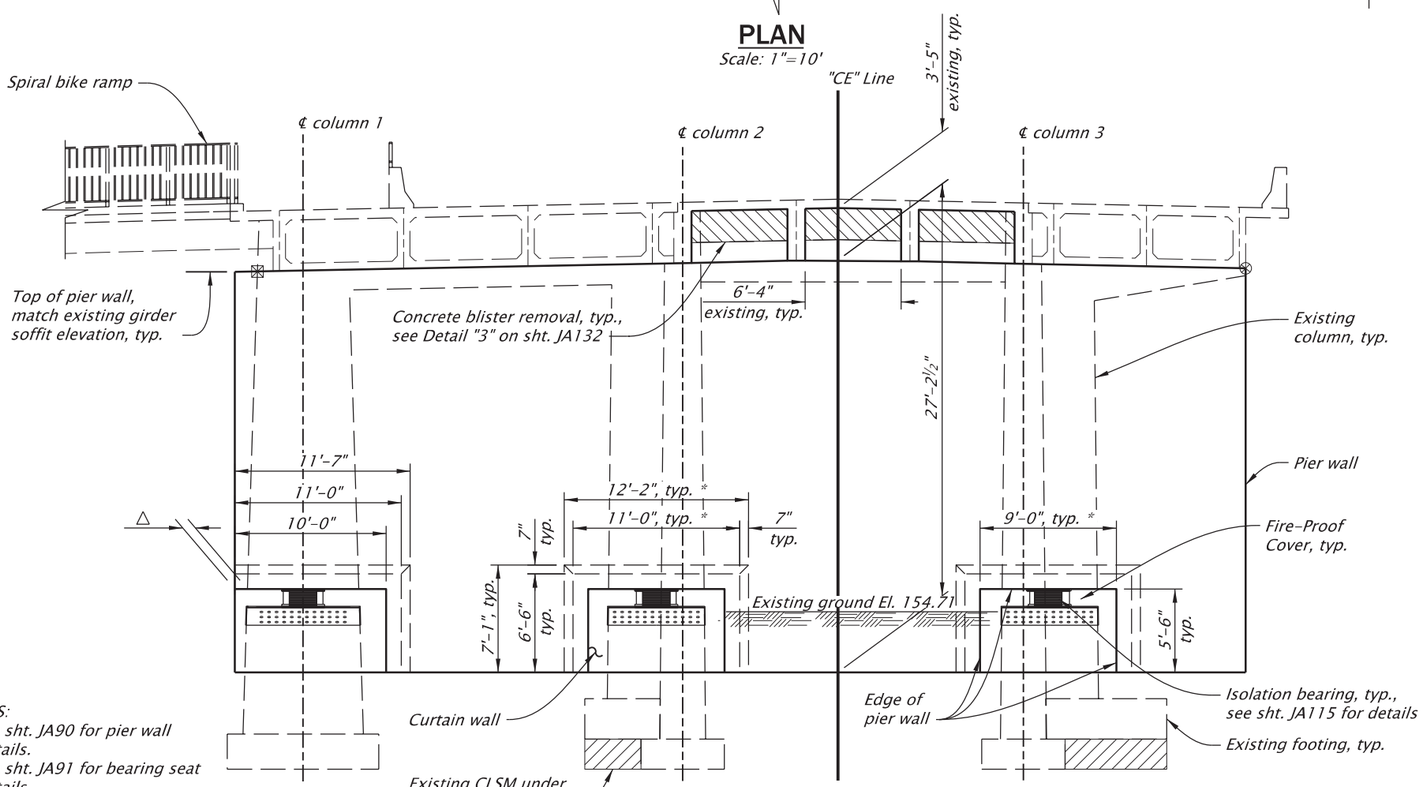

ELEVATION

Scale: 1"=10'

NOTES:
1. See sht. JA90 for pier wall details.
2. See sht. JA91 for bearing seat details.
3. Fire-proof cover not shown for clarity, see sht. JA92 for details.
4. See shts. JZ01-JZ08 for railroad details.
5. Field verify all dimensions and elevations before submitting Working Drawings and prior to ordering or fabricating any materials. See sht. J02 for more details.

NOTE:
* Centered about brg. ℄

SCALE WARNING
IF THIS SCALE LINE DOES NOT MEASURE ONE INCH, THEN DRAWING IS NOT TO SCALE

For accompanied by drawings, see sht. JA01

STRUCTURE NO.	00123K
BDS DWG NO.	113833
CALC. BOOK	7997
HWY: 030	M.P.: 25.88
COUNTY	Marion
DATE	2/26

REGISTERED PROFESSIONAL ENGINEER 099941PE
Digitally Signed 2026.03.03 09:17:32-08'00'
OREGON
JULY 21, 2022
BERNARD ANTHONY FRANKL
EXPIRES: 12/31/2027

FINAL ELECTRONIC DOCUMENT AVAILABLE UPON REQUEST

DOWL
3500 Chad Drive, Suite 200
Eugene, Oregon 97408
541-683-6090
WWW.DOWL.COM

WILLAMETTE RIVER, HWY 30 EB (CENTER ST)

OR22: CENTER ST BRIDGE (PHASE 1) PROJECT
WILLAMINA - SALEM HIGHWAY
MARION & POLK COUNTIES

Designer: Bernard A. Frankl, PhD, PE
Reviewer: Bob Goodrich, PE
Drafter: Jake Williams
Checker: Nasario Lopez-Francisco, PE

BENT 22 PLAN AND ELEVATION

SHEET NO. JA89

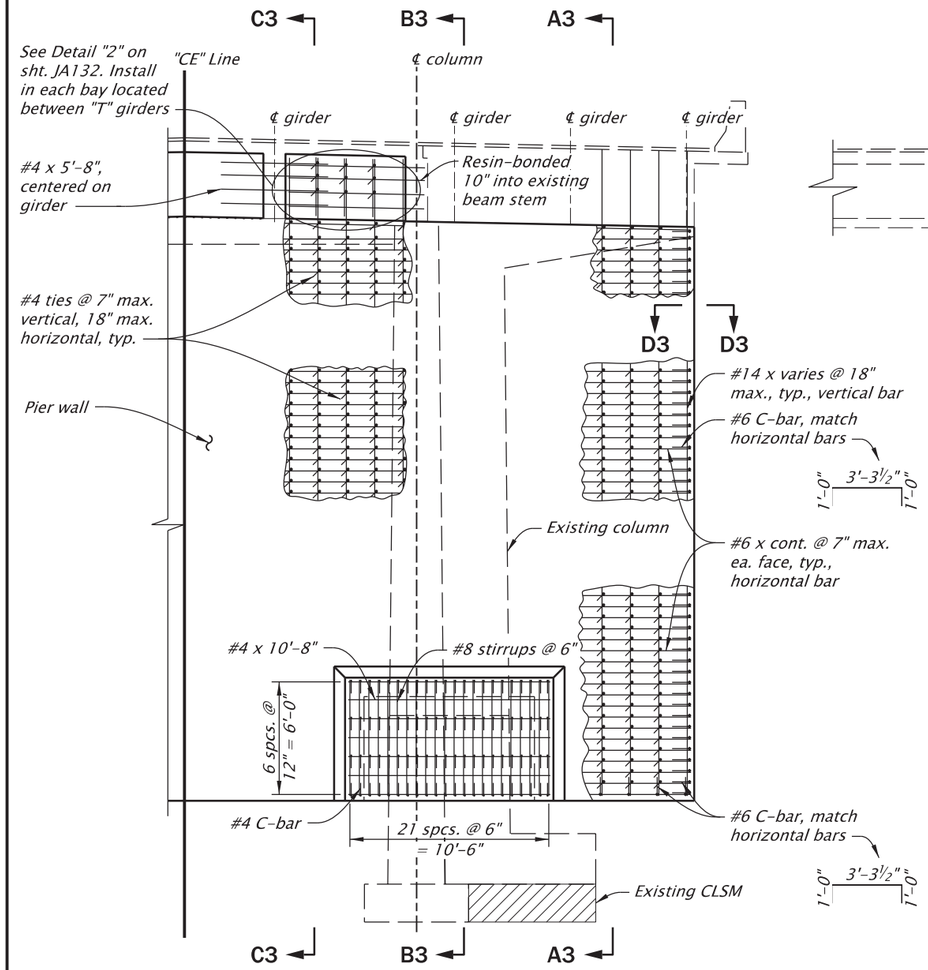

ELEVATION

Scale: 1/8"=1'-0"

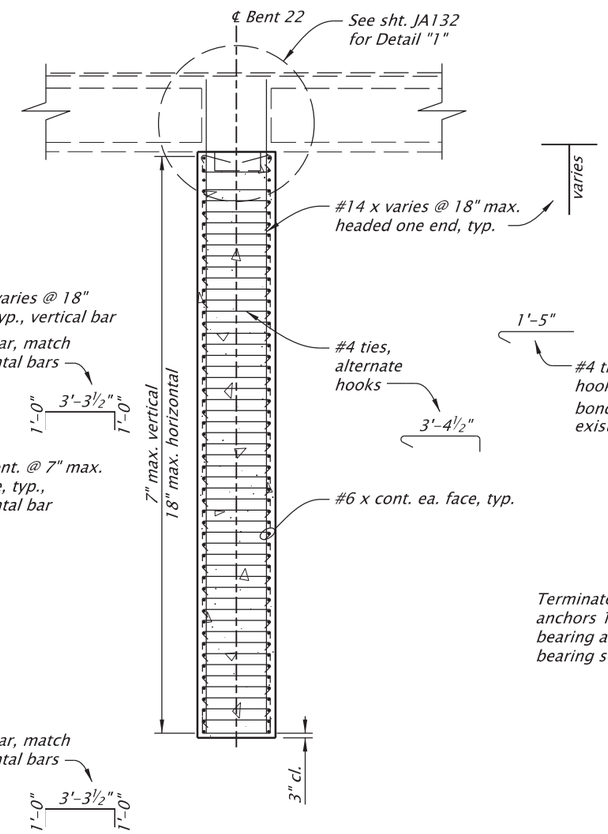

SECTION A3-A3

Scale: 1/8"=1'-0"

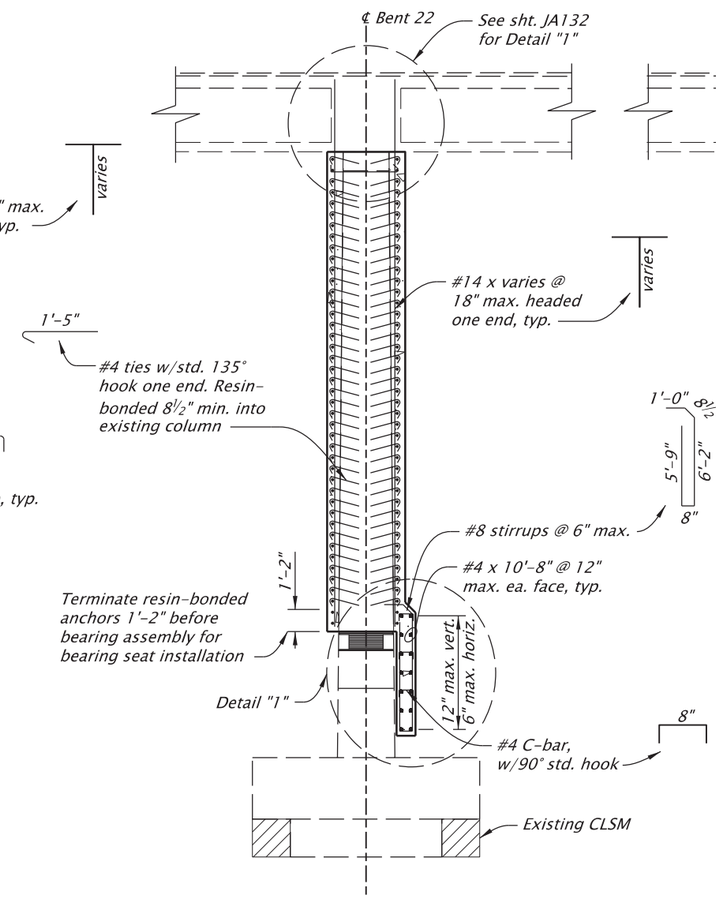

SECTION B3-B3

Scale: 1/8"=1'-0"

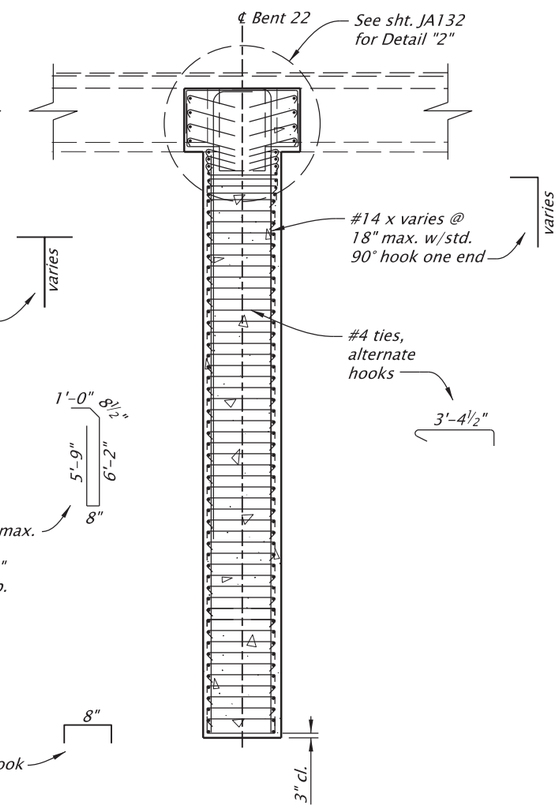

SECTION C3-C3

Scale: 1/8"=1'-0"

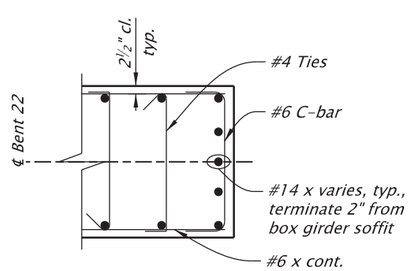

SECTION D3-D3

Scale: 1/4"=1'-0"

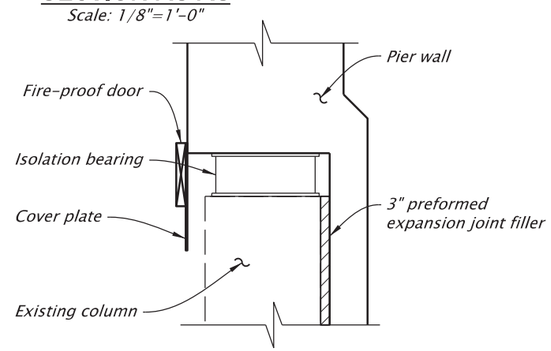

DETAIL "1"

Scale: 1/4"=1'-0"

NOTES:
1. See sht. JA89 for pier wall geometry.
2. Bearing seat details and cover not shown for clarity. see shts. JA91-JA92 for details.
3. See Bent Plan and Elevation sheet for construction control working points to establish bent centerline.
4. Field verify all dimensions and elevations prior to submitting Working Drawings and prior to ordering or fabricating any materials. See sht. J02 for more details.

SCALE WARNING
IF THIS SCALE LINE DOES NOT MEASURE ONE INCH, THEN DRAWING IS NOT TO SCALE

For accompanied by drawings, see sht. JA01

STRUCTURE NO.	00123K
BDS DWG NO.	113834
CALC. BOOK	7997
HWY: 030	M.P.: 25.88
COUNTY	Marion
DATE	2/26

REGISTERED PROFESSIONAL ENGINEER 099941PE
Digitally Signed 2026.02.12 11:31:35-08'00'
OREGON
JULY 21, 2022
BERNARD ANTHONY FRANKL
EXPIRES: 12/31/2027

FINAL ELECTRONIC DOCUMENT AVAILABLE UPON REQUEST

DOWL
3500 Chad Drive, Suite 200
Eugene, Oregon 97408
541-683-6090
WWW.DOWL.COM

WILLAMETTE RIVER, HWY 30 EB (CENTER ST)

OR22: CENTER ST BRIDGE (PHASE 1) PROJECT
WILLAMINA - SALEM HIGHWAY
MARION & POLK COUNTIES

Designer: Bernard A. Frankl, PhD, PE
Reviewer: Bob Goodrich, PE
Drafter: Jake Williams
Checker: Tanner Torkelson, PE

BENT 22 PIER WALL DETAILS

SHEET NO. JA90

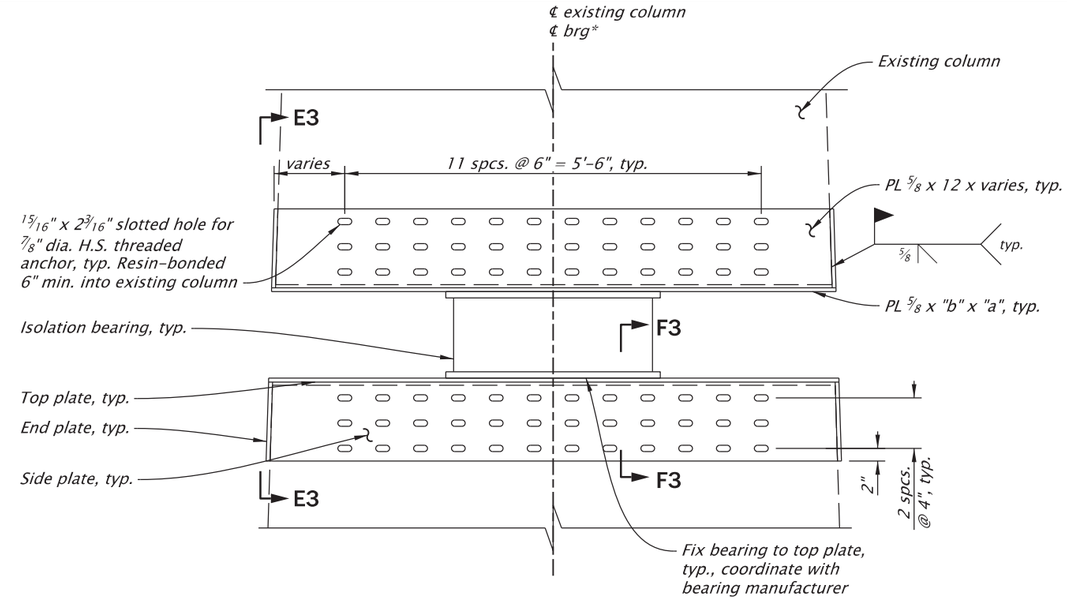

STEEL PLATE JACKET

Scale: 1/2"=1'-0"

	Existing Dimension "a"		Existing Dimension "b"	
	Top PL	Bottom PL	Top PL	Bottom PL
Column 1	7'-5 1/2"	7'-6 1/4"	2'-10 3/4"	2'-11 1/8"
Column 2	6'-5"	6'-5 1/4"	2'-10 3/4"	2'-11 1/8"
Column 3	6'-4 3/4"	6'-5"	2'-10 3/4"	2'-11 1/8"

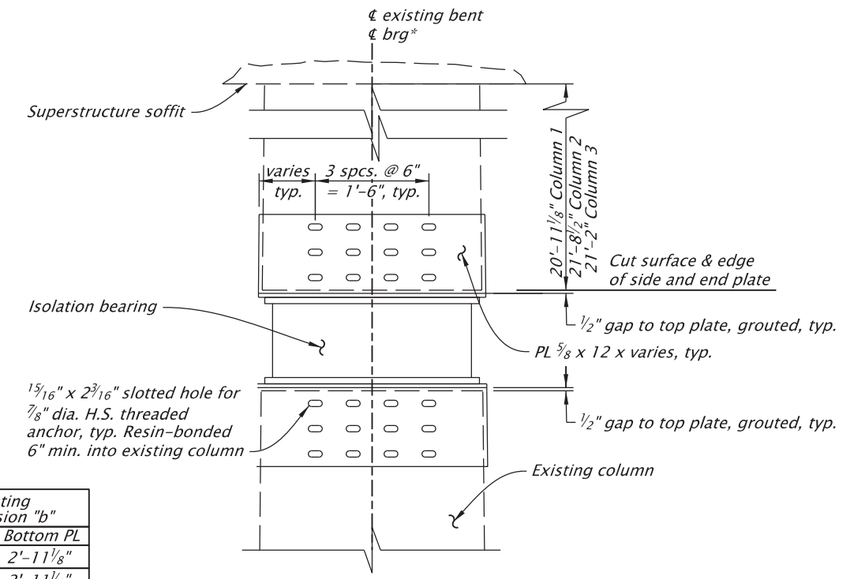

SECTION E3-E3

Scale: 1/2"=1'-0"

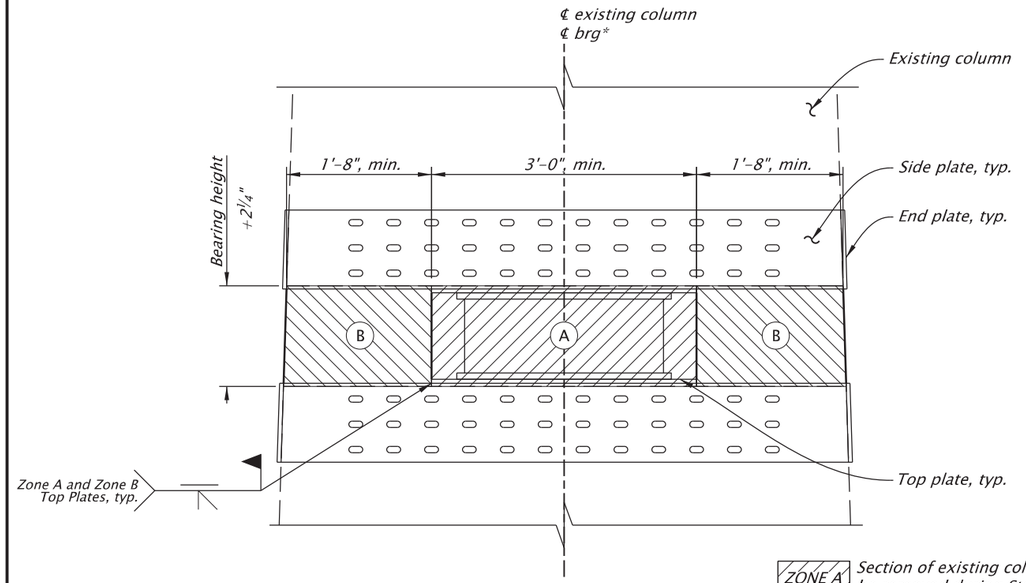

CONSTRUCTION SEQUENCE

Scale: 1/2"=1'-0"

ZONE A — Section of existing column to be removed during Step 2.

ZONE B — Section of existing column to be removed during Step 6.

CONSTRUCTION SEQUENCE

1. Install steel side and end steel jacket plates.
2. Remove concrete column within Zone A.
3. Weld steel jacket top plate within Zone A, maintain grouting ports on opposite sides of assembly.
4. Pressure grout 1/2" gap between concrete surfaces and steel jacket top plate within Zone A. Seal grouting ports with specified welds.
5. Install pre-compressed bearings, fasten to steel jacket top plate and release pre-compression. Pre-compress bearings to Dead Load displacements.
6. Remove concrete column within Zone B, maintain grouting ports.
7. Weld steel jacket top plate within Zones B, maintain grouting ports.
8. Pressure grout 1/2" gap between concrete surfaces and steel jacket top plate within Zone B. Seal grouting ports with specified welds.
9. Install locking cover with fire protection.

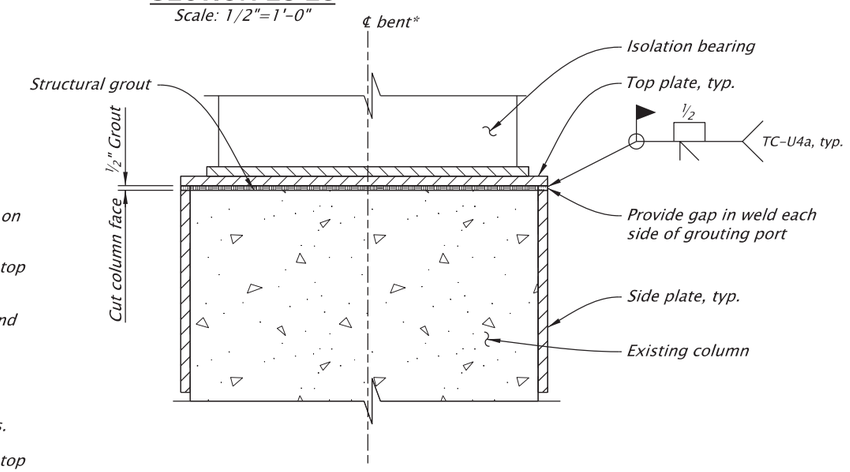

SECTION F3-F3

Scale: 3/4"=1'-0"

NOTES:
1. * Center bearing on top of existing column footprint at bottom cut line.
2. Fire protective lid details not shown for clarity. See sht. JA92 for details.
3. Pier wall and curtain wall not shown for clarity. See sht. JA89 for details.
4. See sht. JA116 Bearing Details.
5. Steel plate jacket details apply to Bents 22 and 23.
6. Hot dip galvanize all plates, anchors, nuts and washers after fabrication.
7. See Bent Plan and Elevation sheet for construction control working points to establish bent centerline.
8. Field verify all dimensions and elevations prior to submitting Working Drawings and prior to ordering or fabricating any materials. See sht. J02 for more details.

For accompanied by drawings, see sht. JA01

SCALE WARNING
IF THIS SCALE LINE DOES NOT MEASURE ONE INCH, THEN DRAWING IS NOT TO SCALE

STRUCTURE NO. 00123K
BDS DWG NO. 113835
CALC. BOOK 7997
HWY: 030
M.P.: 25.88
COUNTY Marion
DATE 2/26

REGISTERED PROFESSIONAL ENGINEER 099941PE OREGON JULY 21, 2022 BERNARD ANTHONY FRANKL
Digitally Signed 2026.02.12 11:31:51-08'00'
EXPIRES: 12/31/2027

FINAL ELECTRONIC DOCUMENT AVAILABLE UPON REQUEST

DOWL
3500 Chad Drive, Suite 200
Eugene, Oregon 97408
541-683-6090
WWW.DOWL.COM

WILLAMETTE RIVER, HWY 30 EB (CENTER ST)

OR22: CENTER ST BRIDGE (PHASE 1) PROJECT
WILLAMINA - SALEM HIGHWAY
MARION & POLK COUNTIES

Designer: Bernard A. Frankl, PhD, PE
Reviewer: Bob Goodrich, PE
Drafter: Jake Williams
Checker: Jonathon Stark, EI

BENT 22 BEARING SEAT DETAILS

SHEET NO. JA91

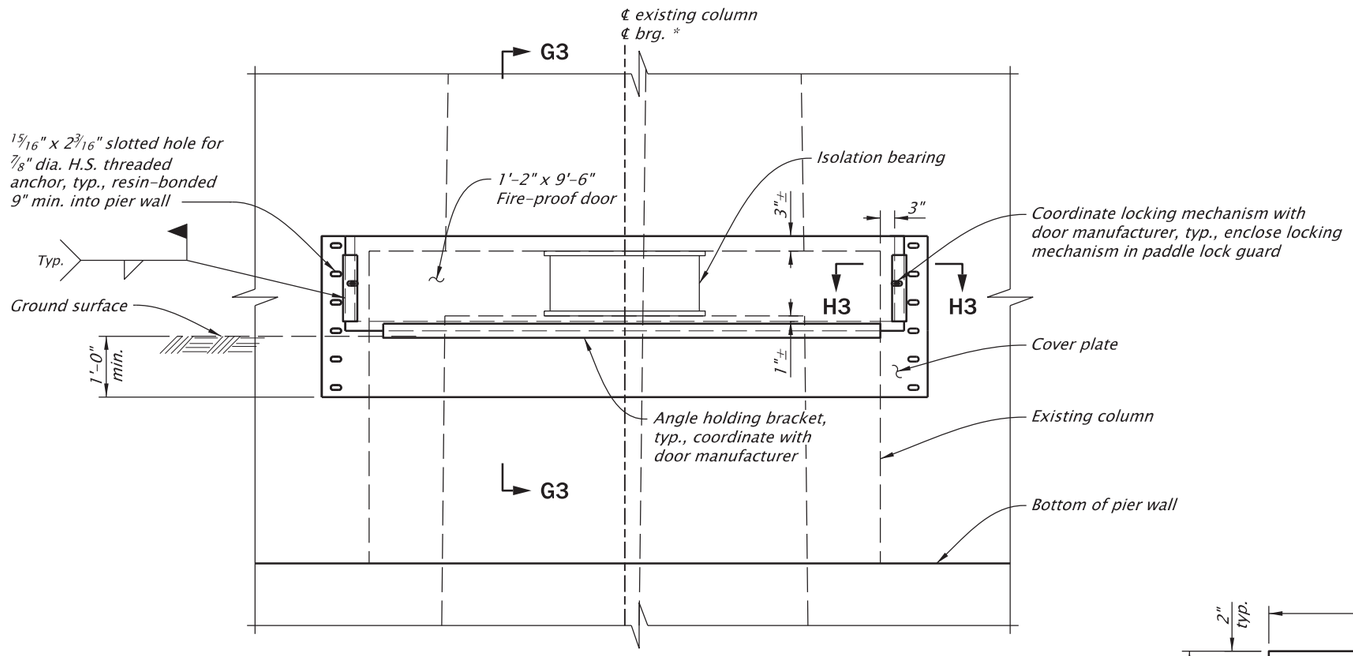

FIRE-PROOF COVER

Scale: 3/8"=1'-0"

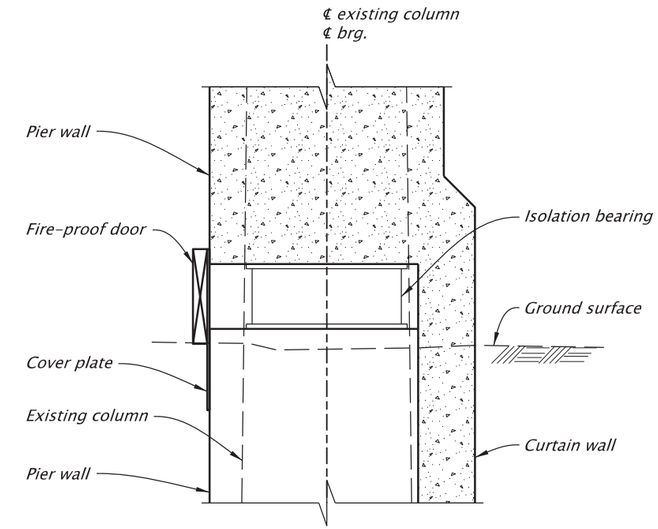

SECTION G3-G3

Scale: 3/8"=1'-0"

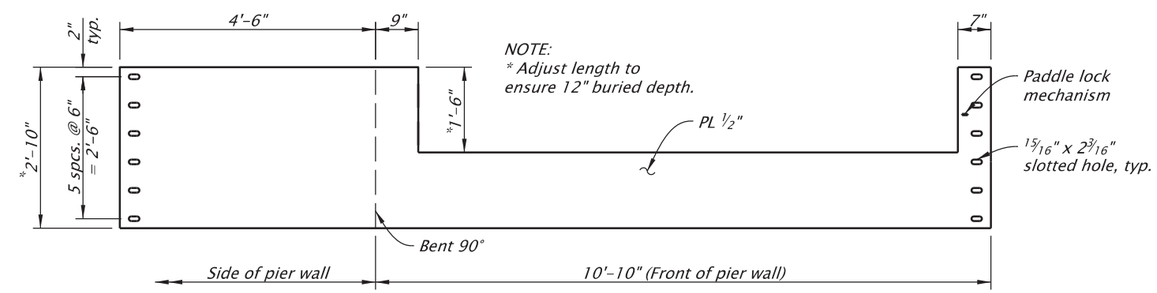

COLUMN 1 COVER PLATE

Scale: 3/8"=1'-0"

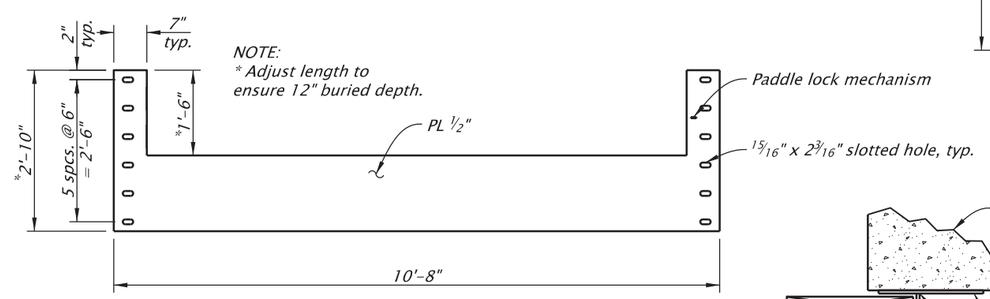

COLUMN 2 & 3 COVER PLATE

Scale: 3/8"=1'-0"

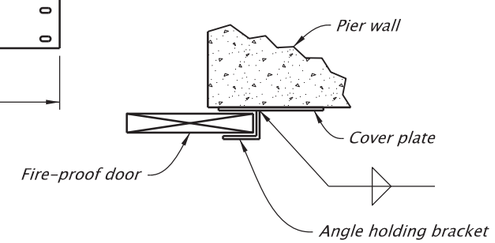

SECTION H3-H3

Scale: 1/2"=1'-0"

NOTES:

1. * Center bearing on top of existing footprint at bottom cut line.
2. See sht. JA89 for installation locations.
3. Provide steel clad, Class A fire protected, corrosion resistant, 16 gage minimum door assembly rated for hour exposure to 2000°F. Door assembly to have minimum R-value of 4.
4. Rate door for 175 lb radial loading and 300 lb vertical loading in addition to self weight.
5. Provide corrosion resistant coating to door.
6. Bearing steel plate jacket not shown for clarity. See sht. JA91 for details.
7. Hot dip galvanize all plates, anchors, nuts and washers after fabrication.
8. Furnish 7/8" dia. anchor rods according to ASTM Specification F1554 Grade 105. Provide ASTM A563, Grade C3 heavy hex nuts and ASTM F436 steel washers used with Type 3 bolts. Tighten anchor rods to snug-tight.
9. See Bent Plan and Elevation sheet for construction control working points to establish bent centerline.
10. Field verify all dimensions and elevations before submitting Working Drawings and prior to ordering or fabricating any materials. See sht. J02 for more details.

For accompanied by drawings, see sht. JA01

SCALE WARNING

IF THIS SCALE LINE DOES NOT MEASURE ONE INCH, THEN DRAWING IS NOT TO SCALE

STRUCTURE NO.	00123K
BDS DWG NO.	113836
CALC. BOOK	7997
HWY: 030	M.P.: 25.88
COUNTY	Marion
DATE	2/26

REGISTERED PROFESSIONAL ENGINEER 099941PE OREGON JULY 21, 2022 BERNARD ANTHONY FRANKL

Digitally Signed 2026.02.12 11:32:06-08'00'

EXPIRES: 12/31/2027

FINAL ELECTRONIC DOCUMENT AVAILABLE UPON REQUEST

DOWL
3500 Chad Drive, Suite 200
Eugene, Oregon 97408
541-683-6090
WWW.DOWL.COM

WILLAMETTE RIVER, HWY 30 EB (CENTER ST)

OR22: CENTER ST BRIDGE (PHASE 1) PROJECT
WILLAMINA - SALEM HIGHWAY
MARION & POLK COUNTIES

Designer: Bernard A. Frankl, PhD, PE
Reviewer: Bob Goodrich, PE
Drafter: Jake Williams
Checker: Jonathon Stark, EI

BENT 22 BEARING FIRE-PROOF COVER DETAILS

SHEET NO. JA92

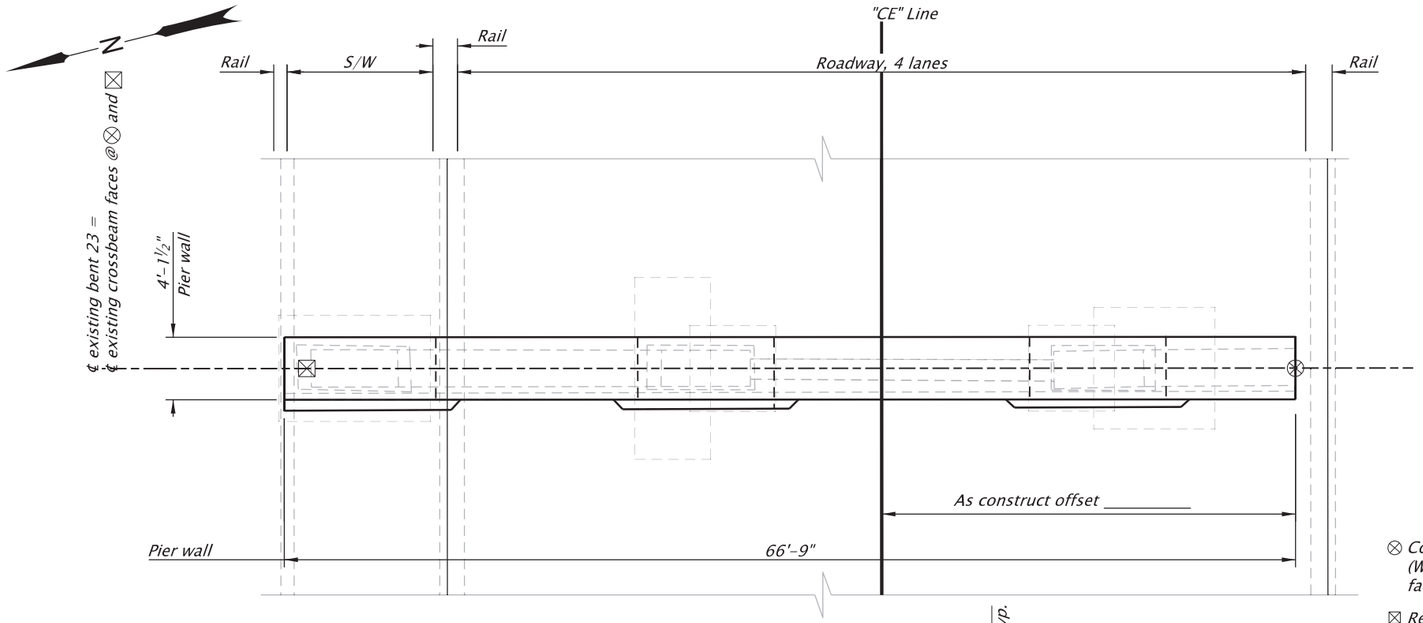

PLAN

Scale: 1"=10'

BRIDGE JACKING LOADS (kips)		
Unfactored Dead Load	Factored Lane Load	Conceptual System Type
1,004	220	Self supported

NOTES:
1. Dead load represents the total unfactored bent reaction.
2. Live load represents factored, controlling single HL-93 or Permit Truck rection, adjusted for dynamic load allowance, and a multiple presence factor of 1.0.
3. Contractor is responsible for determining all construction loading including, materials, equipment and live loading.
4. Loading represents bent reactions from both adjacent spans.

⊗ Construction Control Working Point (WP) is located at ℄ existing crossbeam face at bottom soffit of box girder.

⊠ Reference point to establish existing bent centerline located at ℄ existing column face at bottom soffit of box girder

△ Construction pinch point. Provide a minimum of 6" concrete from existing surface to new surface as shown. See sht JA91 for cut surface elevation.

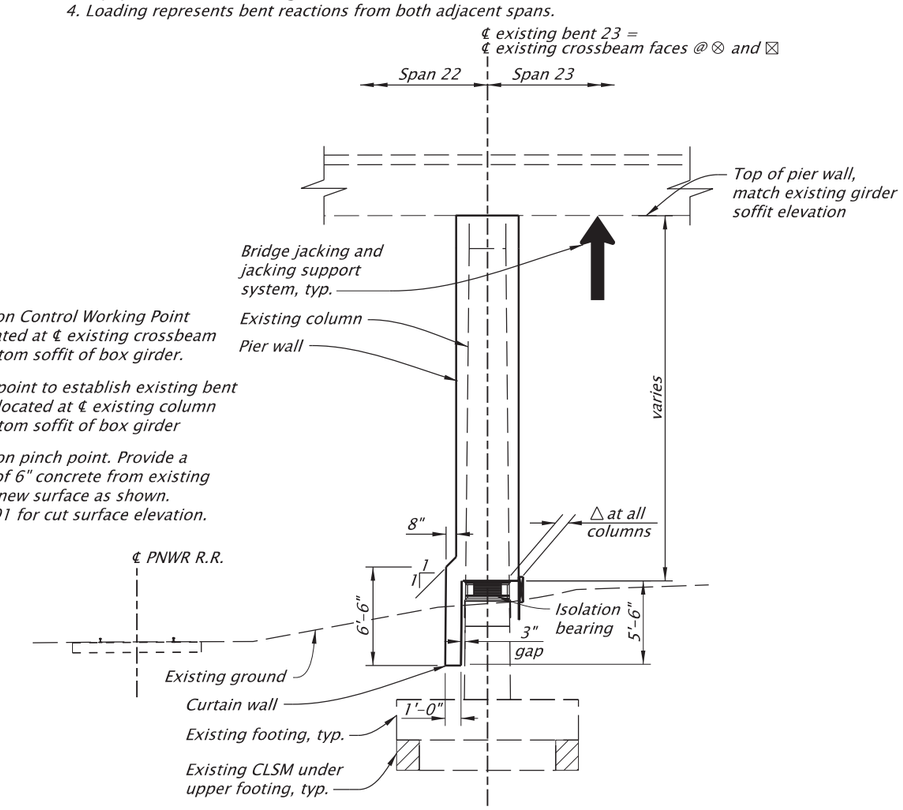

TYPICAL SECTION

Scale: 1"=10'

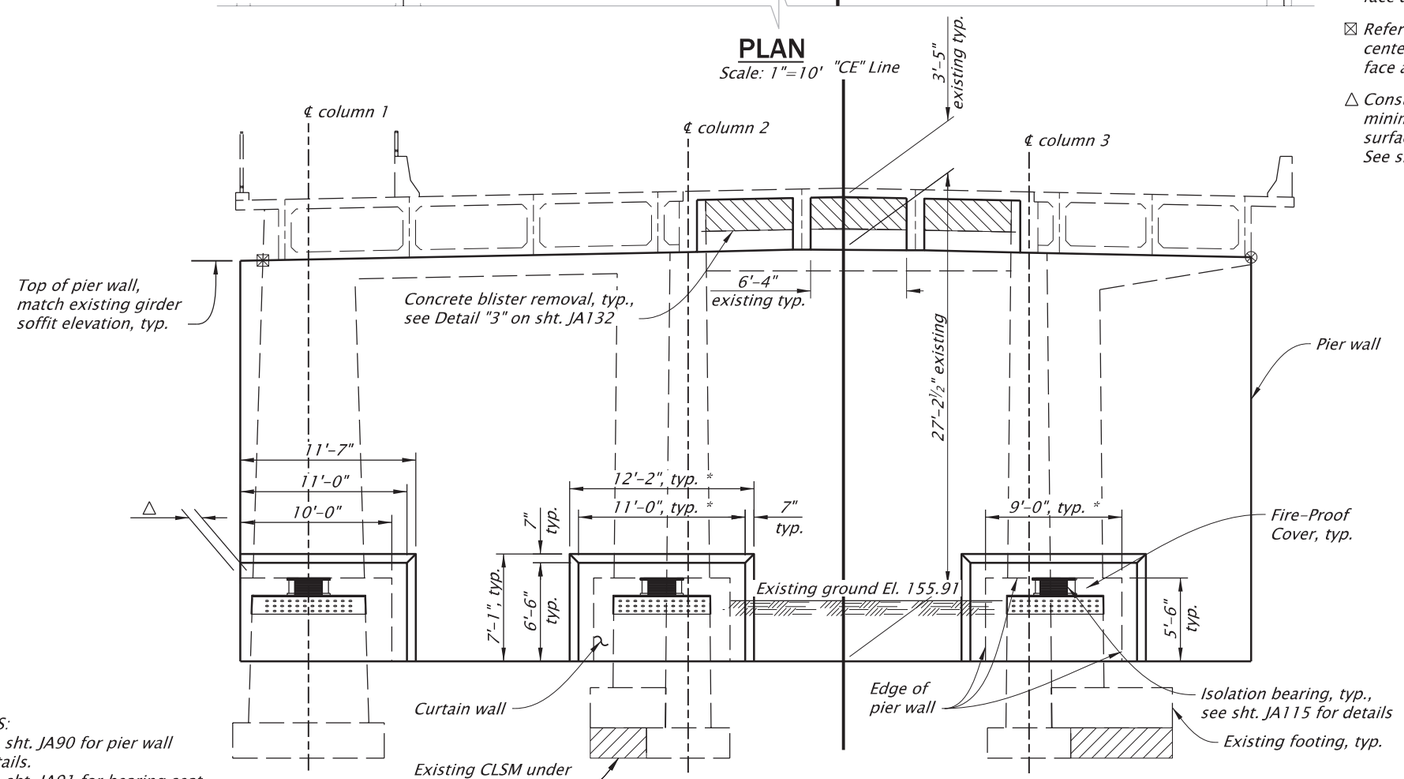

ELEVATION

Scale: 1"=10'

Concrete removal

Existing CLSM

NOTES:
1. See sht. JA90 for pier wall details.
2. See sht. JA91 for bearing seat details.
3. Fire-proof cover not shown for clarity. See sht. JA92 fot details.
4. See sht. JZ01-JZ08 for railroad details.
5. Field verify all dimensions and elevations before submitting Working Drawings and prior to ordering or fabricating any materials. See sht. J02 for more details.

NOTE:
* Centered about brg. ℄

SCALE WARNING
IF THIS SCALE LINE DOES NOT MEASURE ONE INCH, THEN DRAWING IS NOT TO SCALE

For accompanied by drawings, see sht. JA01

STRUCTURE NO.	00123K
BDS DWG NO.	113837
CALC. BOOK	7997
HWY: 030 M.P.: 25.88	
COUNTY	Marion
DATE	2/26

REGISTERED PROFESSIONAL ENGINEER 099941PE
Digitally Signed 2026.03.03 09:17:12-08'00'
OREGON JULY 21, 2022
BERNARD ANTHONY FRANKL
EXPIRES: 12/31/2027

FINAL ELECTRONIC DOCUMENT AVAILABLE UPON REQUEST

DOWL
3500 Chad Drive, Suite 200
Eugene, Oregon 97408
541-683-6090
WWW.DOWL.COM

WILLAMETTE RIVER, HWY 30 EB (CENTER ST)

OR22: CENTER ST BRIDGE (PHASE 1) PROJECT
WILLAMINA - SALEM HIGHWAY
MARION & POLK COUNTIES

Designer: Bernard A. Frankl, PhD, PE
Reviewer: Bob Goodrich, PE
Drafter: Jake Williams
Checker: Nasario Lopez-Francisco, PE

BENT 23 PLAN AND ELEVATION

SHEET NO. JA93

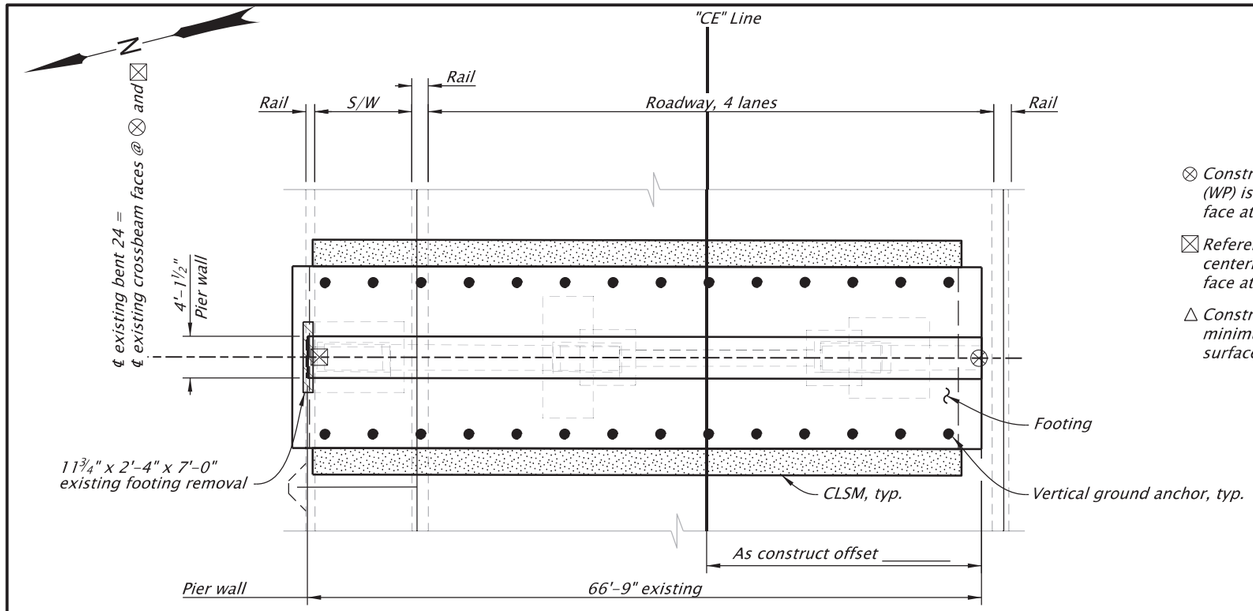

⊗ Construction Control Working Point (WP) is located at ℄ existing crossbeam face at bottom soffit of box girder.

⊠ Reference point to establish existing bent centerline located at ℄ existing column face at bottom soffit of box girder.

△ Construction pinch point. Provide a minimum of 6" concrete from existing surface to new surface as shown.

PLAN

Scale: 1"=15'

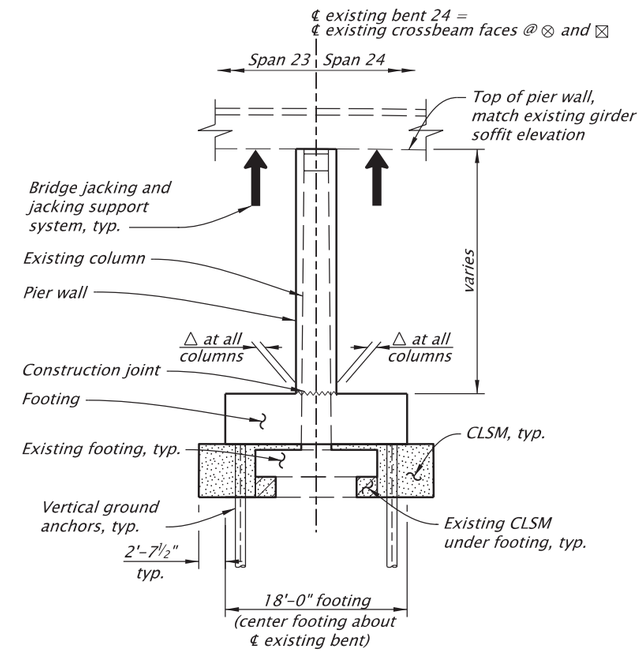

TYPICAL SECTION

Scale: 1"=15'

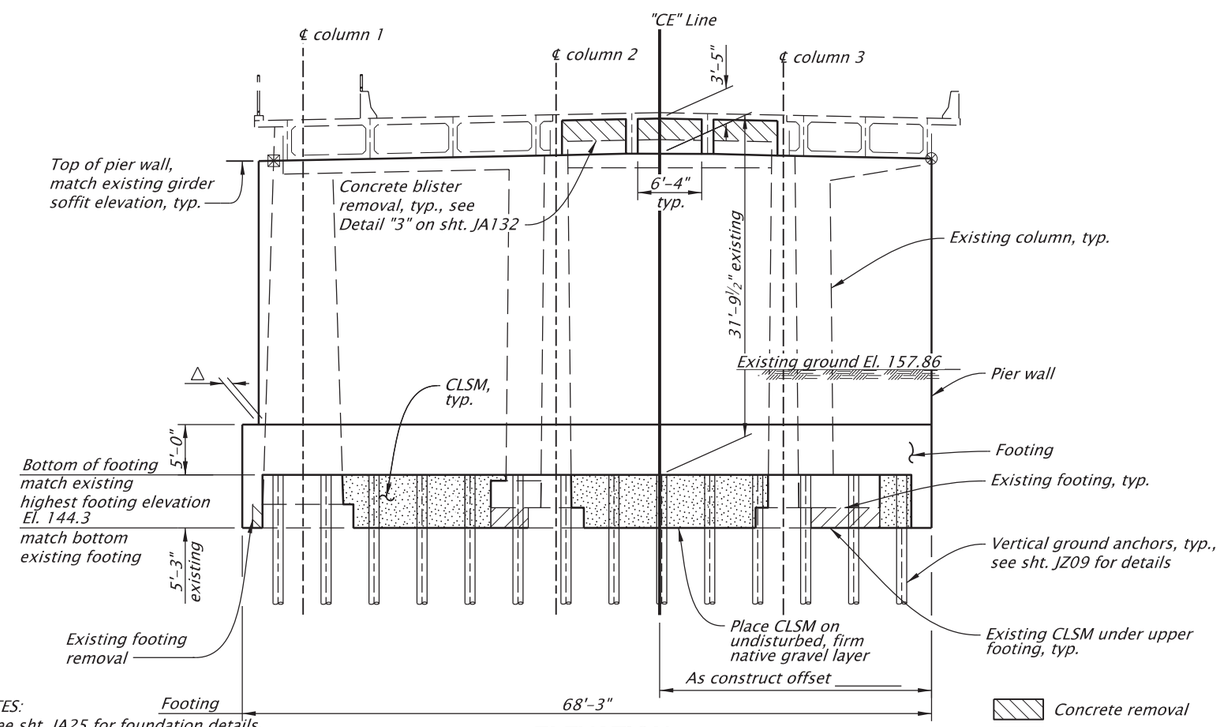

NOTES:
1. See sht. JA25 for foundation details.
2. See sht. JA95 for footing details.
3. See sht. JA96-JA97 for pier wall details.
4. Field verify all dimensions and elevations before submitting Working Drawings and prior to ordering or fabricating any materials. See sht. J02 for more details.

ELEVATION

Scale: 1"=15'

BRIDGE JACKING LOADS (kips)			
Location	Unfactored Dead Load	Factored Lane Load	Conceptual System Type
Span 23	567	113	Self supported
Span 24	567	113	Self supported

NOTES:
1. Dead load represents the total unfactored bent reaction.
2. Live load represents factored, controlling single HL-93 or Permit Truck rection, adjusted for dynamic load allowance, and a multiple presence factor of 1.0.
3. Contractor is responsible for determining all construction loading including, materials, equipment and live loading.

For accompanied by drawings, see sht. JA01

SCALE WARNING
IF THIS SCALE LINE DOES NOT MEASURE ONE INCH, THEN DRAWING IS NOT TO SCALE

STRUCTURE NO.	00123K
BDS DWG NO.	113838
CALC. BOOK	7997
HWY: 030 M.P.: 25.88	
COUNTY	Marion
DATE	2/26

REGISTERED PROFESSIONAL ENGINEER 099941PE OREGON JULY 21, 2022 BERNARD ANTHONY FRANKL
Digitally Signed 2026.02.12 11:33:40-08'00'
EXPIRES: 12/31/2027

FINAL ELECTRONIC DOCUMENT AVAILABLE UPON REQUEST

DOWL
3500 Chad Drive, Suite 200
Eugene, Oregon 97408
541-683-6090
WWW.DOWL.COM

OREGON DEPARTMENT OF TRANSPORTATION

WILLAMETTE RIVER, HWY 30 EB (CENTER ST)

OR22: CENTER ST BRIDGE (PHASE 1) PROJECT
WILLAMINA - SALEM HIGHWAY
MARION & POLK COUNTIES

Designer: Bernard A. Frankl, PhD, PE
Reviewer: Bob Goodrich, PE
Drafter: Jake Williams
Checker: Nasario Lopez-Francisco, PE

BENT 24 PLAN AND ELEVATION

SHEET NO. JA94

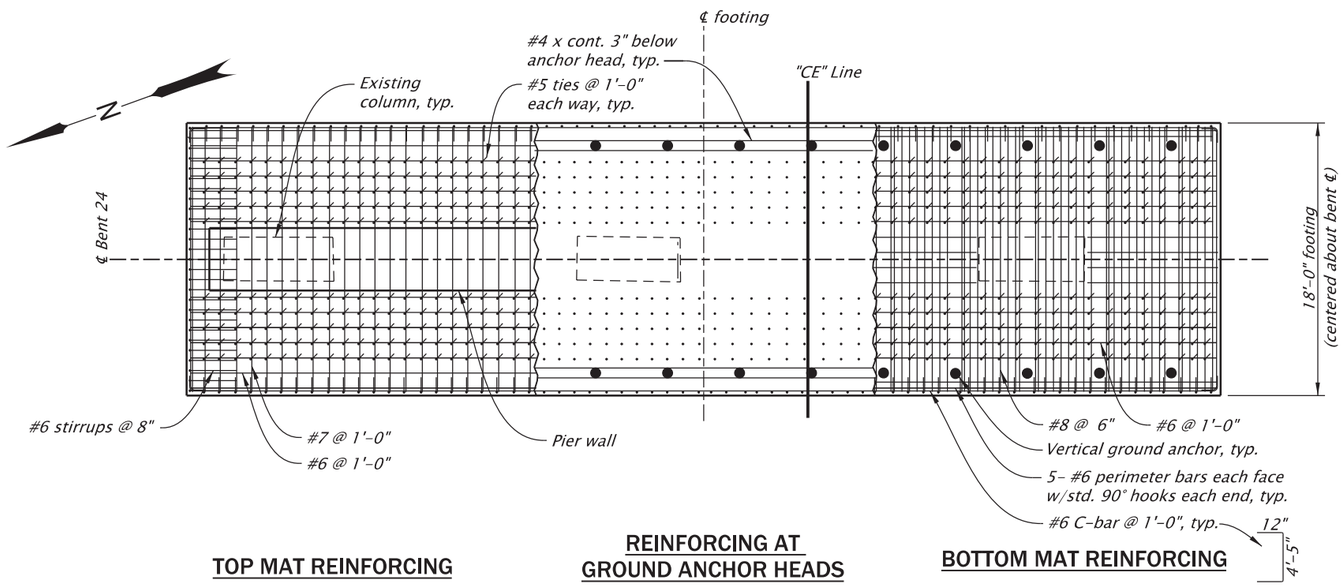

TOP MAT REINFORCING

REINFORCING AT GROUND ANCHOR HEADS

BOTTOM MAT REINFORCING

PLAN

Scale: 1"=10'

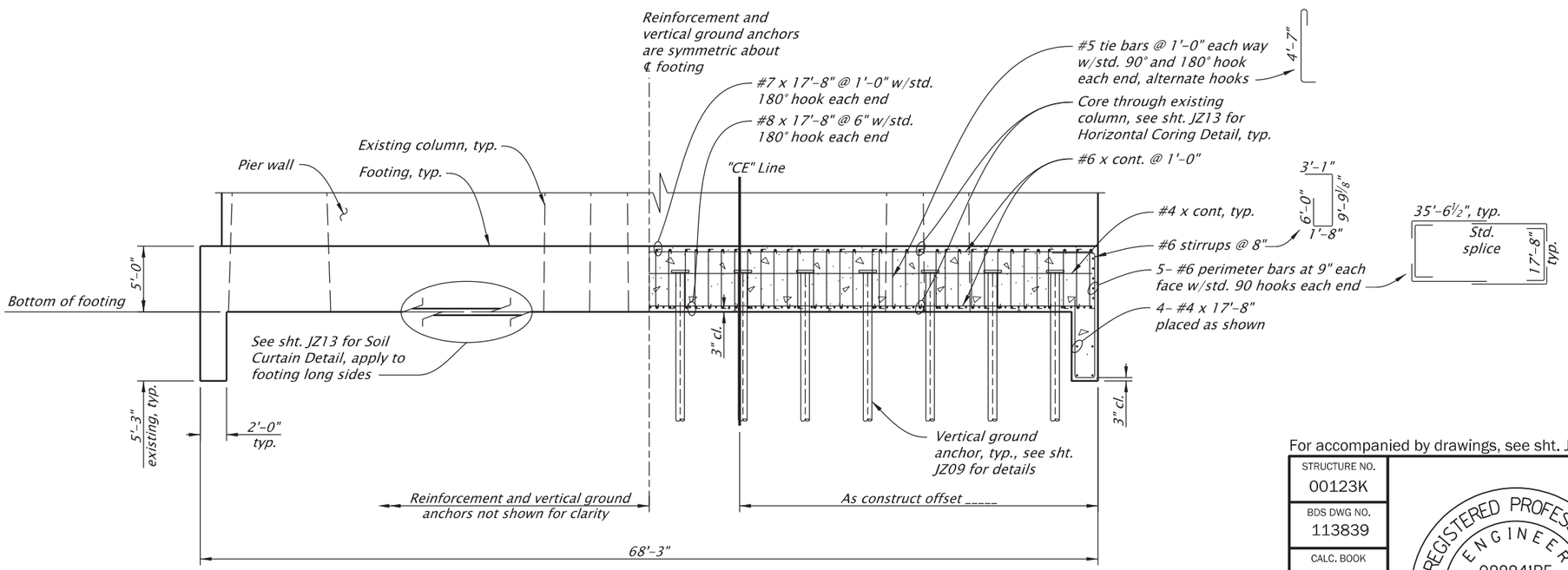

ELEVATION

Scale: 1"=10'

NOTES:

1. *Existing footing and CLSM not shown in elevation view for clarity.*
2. *Shift footing bars to maintain 2" clear to vertical ground anchors.*
3. *Two-bar bundles allowed to avoid vertical ground anchors or existing vertical column steel.*
4. *One splice is permitted per reinforcing bar.*
5. *Provide footing reinforcement according to ASTM Specifications A706 Grade 80.*
6. *See Bent Plan and Elevation sheet for construction control working points to establish bent centerline.*
7. *Field verify all dimensions and elevations prior to submitting Working Drawings and prior to ordering or fabricating any materials. See sht. J02 for more details.*

SCALE WARNING

IF THIS SCALE LINE DOES NOT MEASURE ONE INCH, THEN DRAWING IS NOT TO SCALE

For accompanied by drawings, see sht. JA01

STRUCTURE NO.	00123K
BDS DWG NO.	113839
CALC. BOOK	7997
HWY: 030	M.P.: 25.88
COUNTY	Marion
DATE	2/26

REGISTERED PROFESSIONAL ENGINEER
099941PE
Digitally Signed 2026.02.12 11:33:27-08'00'
OREGON
JULY 21, 2022
BERNARD ANTHONY FRANKL
EXPIRES: 12/31/2027

FINAL ELECTRONIC DOCUMENT AVAILABLE UPON REQUEST

DOWL
3500 Chad Drive, Suite 200
Eugene, Oregon 97408
541-683-6090
WWW.DOWL.COM

WILLAMETTE RIVER, HWY 30 EB (CENTER ST)

OR22: CENTER ST BRIDGE (PHASE 1) PROJECT
WILLAMINA - SALEM HIGHWAY
MARION & POLK COUNTIES

Designer: Bernard A. Frankl, PhD, PE
Reviewer: Bob Goodrich, PE
Drafter: Jake Williams
Checker: Nasario Lopez-Francisco, PE

BENT 24 FOOTING DETAILS

SHEET NO. JA95

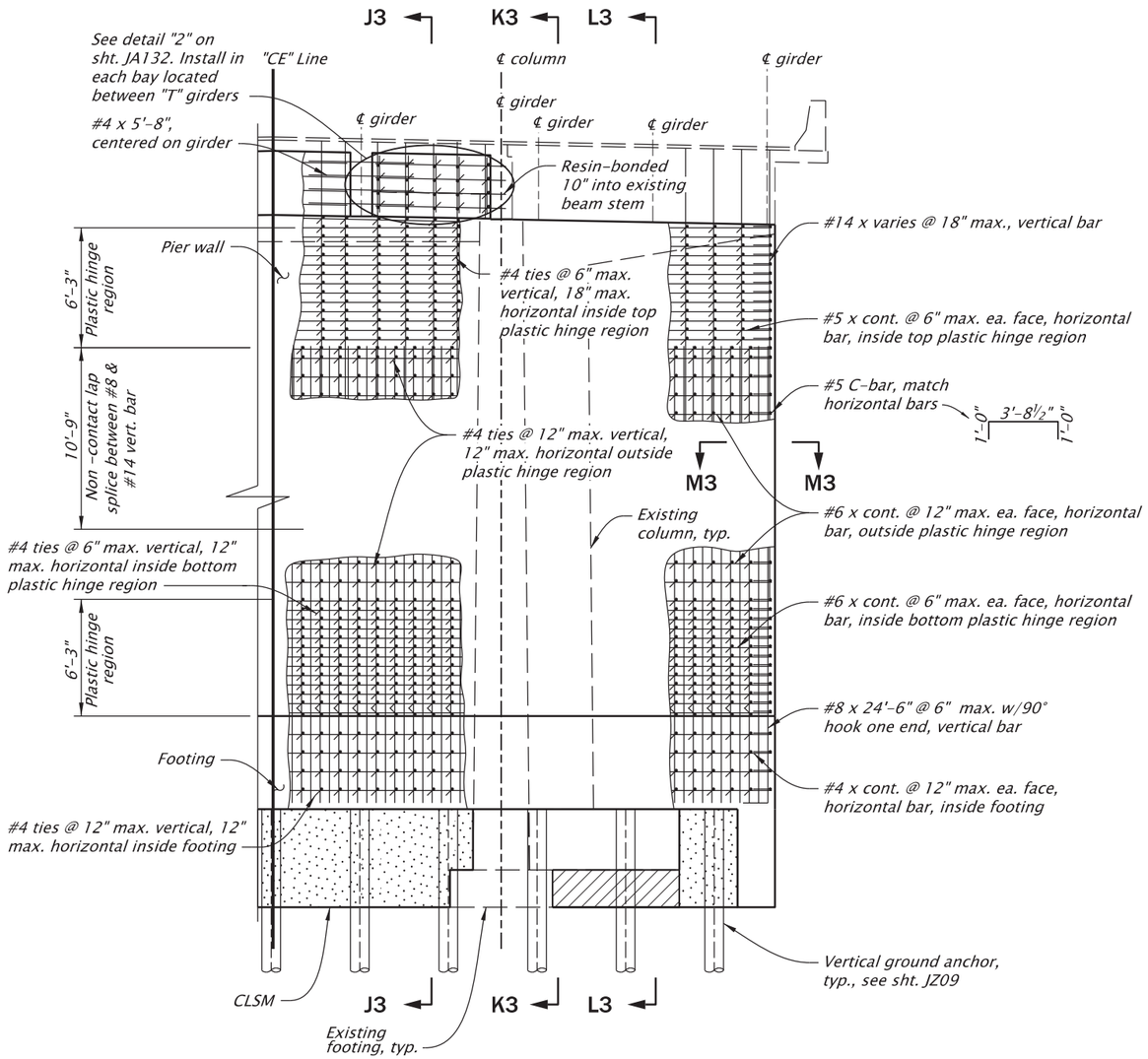

ELEVATION

Scale: 1/8"=1'-0"

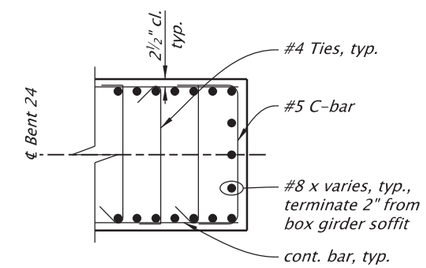

SECTION M3-M3

Scale: 1/4"=1'-0"

NOTES:

1. *See sht. JA94 for pier wall geometry.*
2. *See sht. JA97 for Sections J3-J3, K3-K3, and L3-L3.*
3. *Field verify all dimensions and elevations prior to submitting Working Drawings and prior to ordering or fabricating any materials. See sht. J02 for more details.*
4. *See Bent Plan and Elevation sheet for construction control working points to establish bent centerline.*

For accompanied by drawings, see sht. JA01

SCALE WARNING

IF THIS SCALE LINE DOES NOT MEASURE ONE INCH, THEN DRAWING IS NOT TO SCALE

STRUCTURE NO.	00123K
BDS DWG NO.	113840
CALC. BOOK	7997
HWY: 030 M.P.: 25.88	
COUNTY	Marion
DATE	2/26

REGISTERED PROFESSIONAL ENGINEER 099941PE OREGON JULY 21, 2022 BERNARD ANTHONY FRANKL

Digitally Signed 2026.02.12 11:33:11-08'00'

EXPIRES: 12/31/2027

FINAL ELECTRONIC DOCUMENT AVAILABLE UPON REQUEST

DOWL
3500 Chad Drive, Suite 200
Eugene, Oregon 97408
541-683-6090
WWW.DOWL.COM

OREGON DEPARTMENT OF TRANSPORTATION

WILLAMETTE RIVER, HWY 30 EB (CENTER ST)

OR22: CENTER ST BRIDGE (PHASE 1) PROJECT
WILLAMINA - SALEM HIGHWAY
MARION & POLK COUNTIES

Designer: Bernard A. Frankl, PhD, PE
Reviewer: Bob Goodrich, PE
Drafter: Jake Williams
Checker: Tanner Torkelson, PE

BENT 24 PIER WALL DETAILS - 1

SHEET NO. JA96

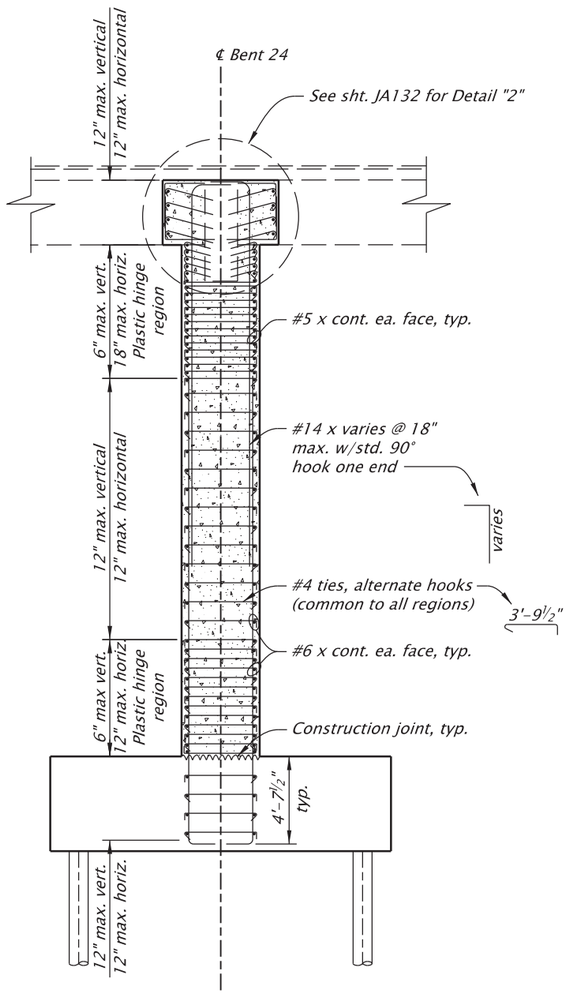

SECTION J3-J3

Scale: 1/8"=1'-0"

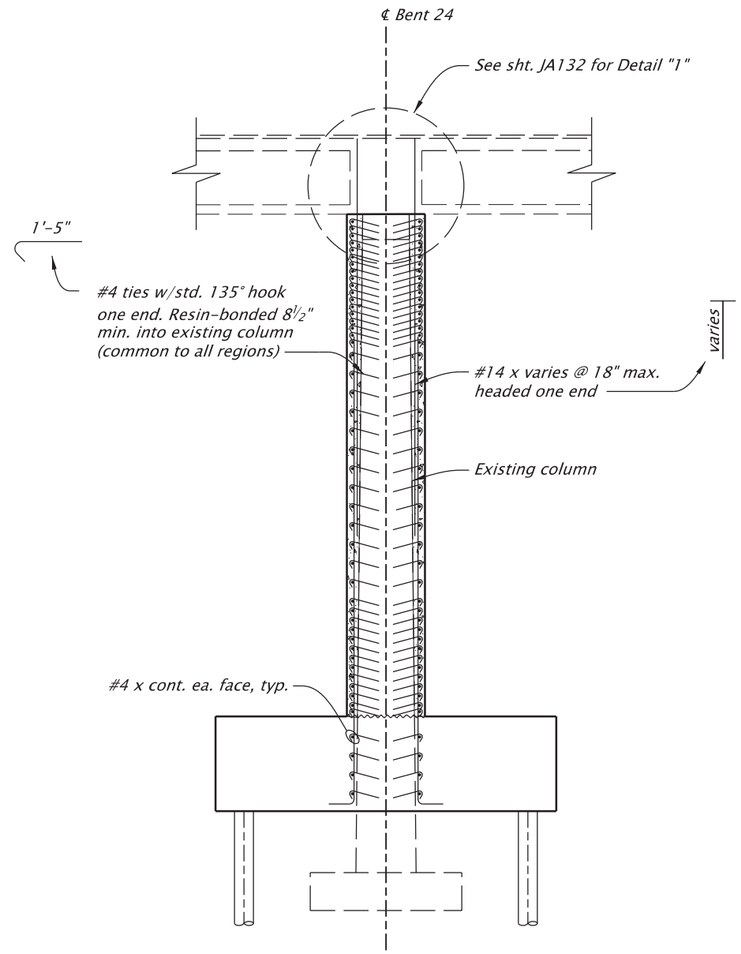

SECTION K3-K3

Scale: 1/8"=1'-0"

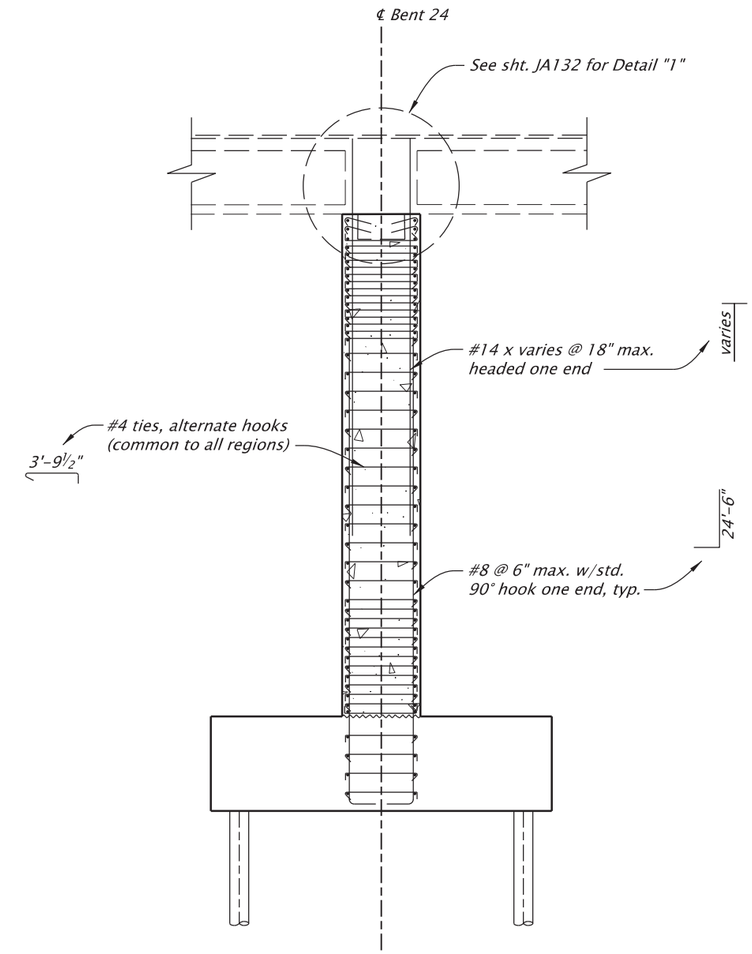

SECTION L3-L3

Scale: 1/8"=1'-0"

For accompanied by drawings, see sht. JA01

NOTES:
1. *See sht. JA94 for pier wall geometry.*
2. *See sht. JA96 for Sections J3-J3, K3-K3, and L3-L3 location.*
3. *Field verify all dimensions and elevations prior to submitting Working Drawings and prior to ordering or fabricating any materials. See sht. J02 for more details.*
4. *See Bent Plan and Elevation sheet for construction control working points to establish bent centerline.*

SCALE WARNING
IF THIS SCALE LINE DOES NOT MEASURE ONE INCH, THEN DRAWING IS NOT TO SCALE

STRUCTURE NO.	00123K
BDS DWG NO.	113841
CALC. BOOK	7997
HWY: 030	M.P.: 25.88
COUNTY	Marion
DATE	2/26

REGISTERED PROFESSIONAL ENGINEER
099941PE
Digitally Signed 2026.02.12 11:32:57-08'00'
OREGON
JULY 21, 2022
BERNARD ANTHONY FRANKL
EXPIRES: 12/31/2027

FINAL ELECTRONIC DOCUMENT AVAILABLE UPON REQUEST

DOWL
3500 Chad Drive, Suite 200
Eugene, Oregon 97408
541-683-6090
WWW.DOWL.COM

OREGON DEPARTMENT OF TRANSPORTATION

WILLAMETTE RIVER, HWY 30 EB (CENTER ST)

OR22: CENTER ST BRIDGE (PHASE 1) PROJECT
WILLAMINA - SALEM HIGHWAY
MARION & POLK COUNTIES

Designer: Bernard A. Frankl, PhD, PE
Reviewer: Bob Goodrich, PE
Drafter: Jake Williams
Checker: Tanner Torkelson, PE

BENT 24 PIER WALL DETAILS - 2

SHEET NO. JA97

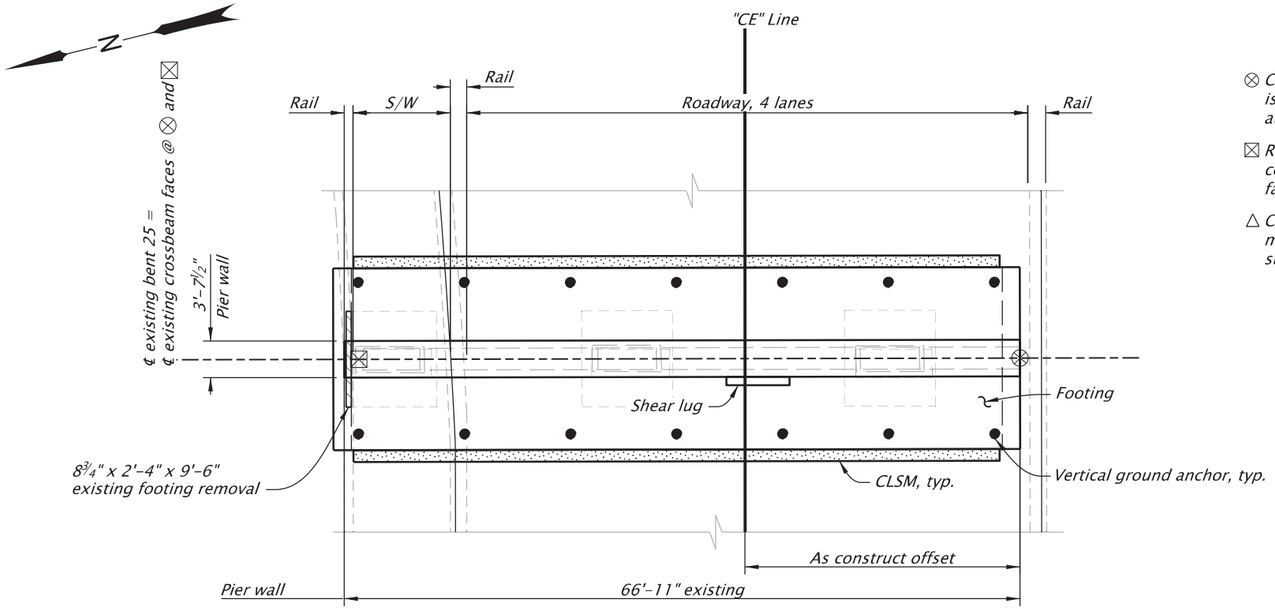

PLAN

Scale: 1"=15'

⊗ Construction Control Working Point (WP) is located at ℄ existing crossbeam face at bottom soffit of box girder.

⊠ Reference point to establish existing bent centerline located at ℄ existing column face at bottom soffit of box girder

△ Construction pinch point. Provide a minimum of 6" concrete from existing surface to new surface as shown.

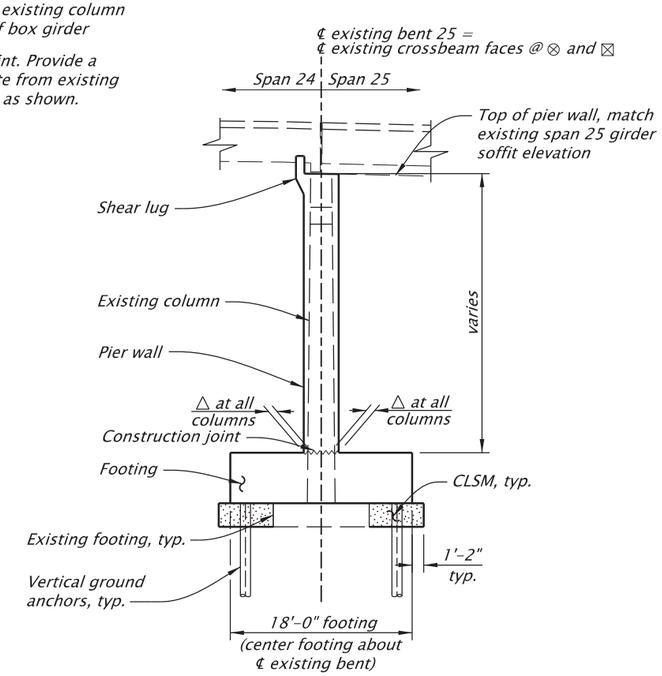

TYPICAL SECTION

Scale: 1"=15'

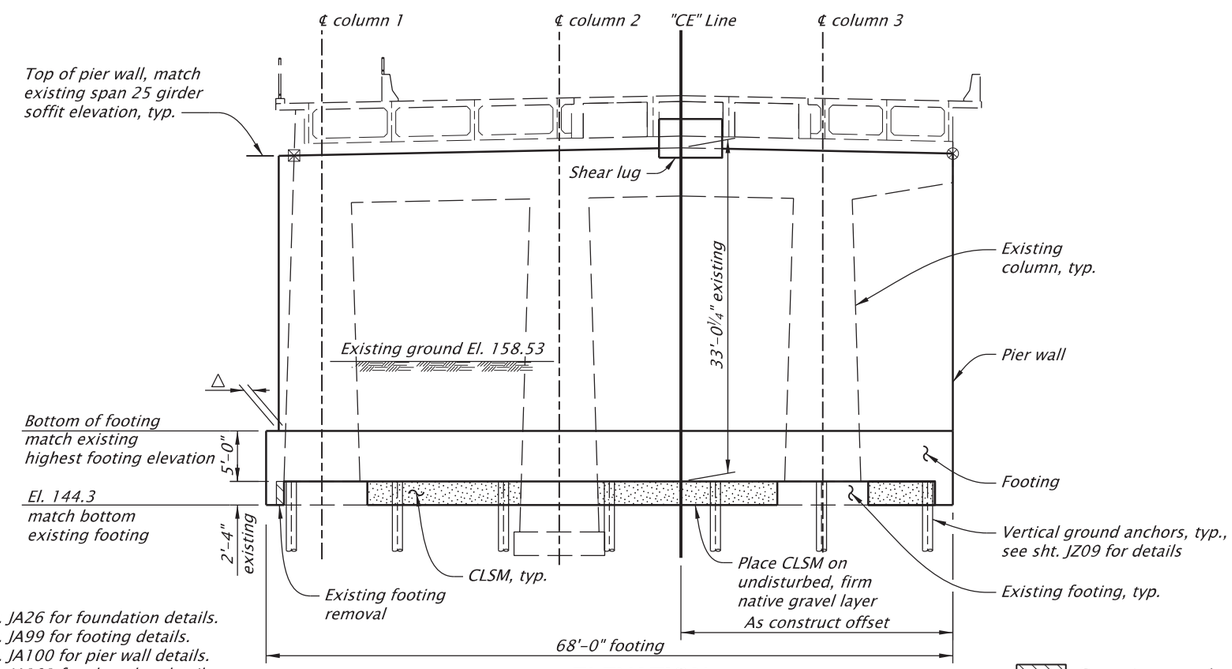

ELEVATION

Scale: 1"=15'

NOTES:
1. See sht. JA26 for foundation details.
2. See sht. JA99 for footing details.
3. See sht. JA100 for pier wall details.
4. See sht. JA101 for shear lug details.
5. See shts. JA28 – JA31 for joint limits and details.
6. Field verify all dimensions and elevations before submitting Working Drawings and prior to ordering or fabricating any materials. See sht. J02 for more details.

SCALE WARNING

IF THIS SCALE LINE DOES NOT MEASURE ONE INCH, THEN DRAWING IS NOT TO SCALE

For accompanied by drawings, see sht. JA01

STRUCTURE NO.	00123K
BDS DWG NO.	113842
CALC. BOOK	7997
HWY: 030 M.P.: 25.88	
COUNTY	Marion
DATE	2/26

REGISTERED PROFESSIONAL ENGINEER 099941PE OREGON JULY 21, 2022 BERNARD ANTHONY FRANKL

Digitally Signed 2026.02.12 11:32:41-08'00'

EXPIRES: 12/31/2027

FINAL ELECTRONIC DOCUMENT AVAILABLE UPON REQUEST

DOWL
3500 Chad Drive, Suite 200
Eugene, Oregon 97408
541-683-6090
WWW.DOWL.COM

WILLAMETTE RIVER, HWY 30 EB (CENTER ST)

OR22: CENTER ST BRIDGE (PHASE 1) PROJECT
WILLAMINA - SALEM HIGHWAY
MARION & POLK COUNTIES

Designer: Bernard A. Frankl, PhD, PE
Reviewer: Bob Goodrich, PE
Drafter: Jake Williams
Checker: Tanner Torkelson, PE

BENT 25 PLAN AND ELEVATION

SHEET NO. JA98

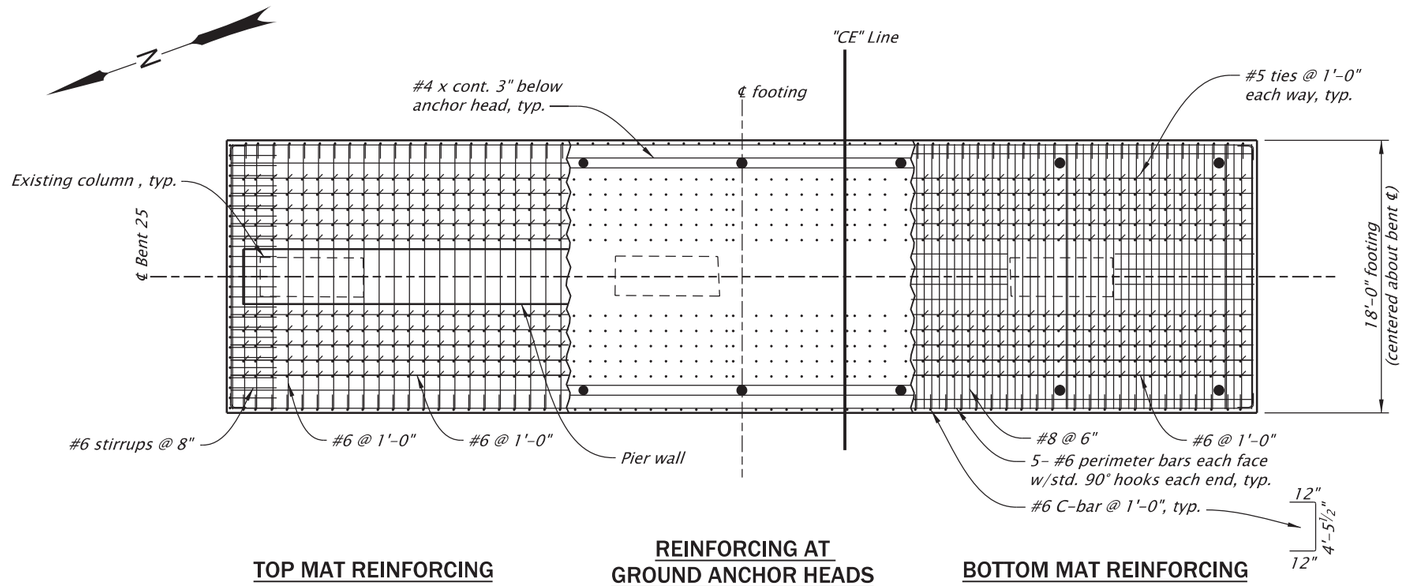

TOP MAT REINFORCING | **REINFORCING AT GROUND ANCHOR HEADS** | **BOTTOM MAT REINFORCING**

PLAN

Scale: 1"=10'

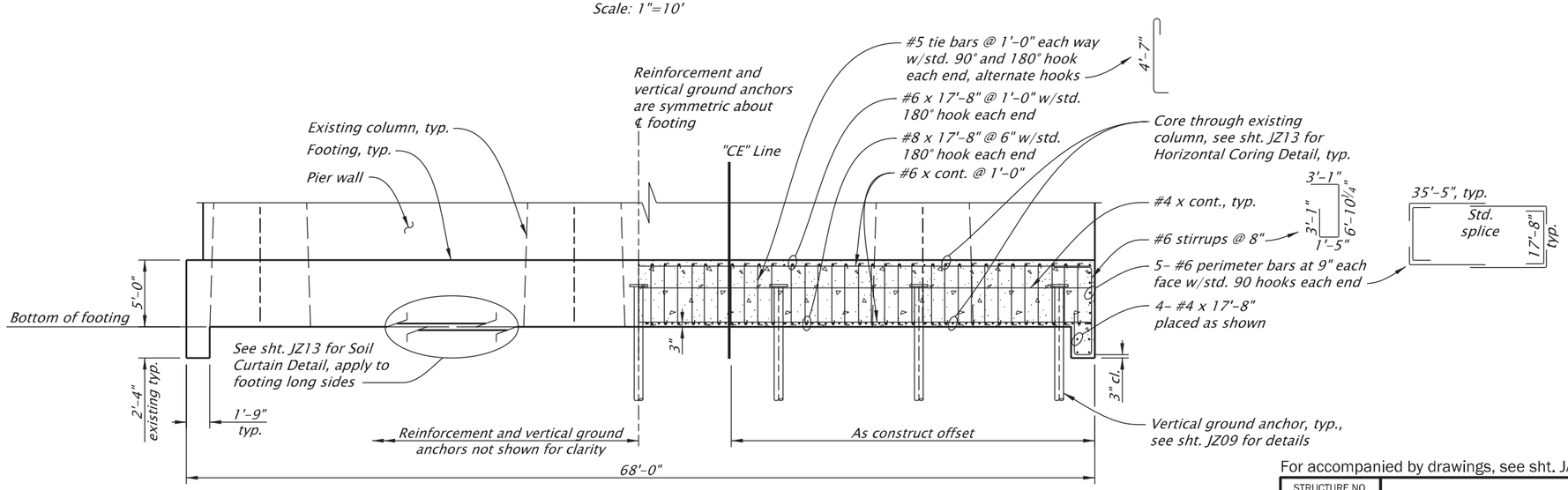

ELEVATION

Scale: 1"=10'

For accompanied by drawings, see sht. JA01

NOTES:

1. *Existing footing and CLSM not shown in elevation view for clarity.*
2. *Shift footing bars to maintain 2" clear to ground anchors.*
3. *Two-bar bundles allowed to avoid ground anchors or existing vertical column steel.*
4. *One splice is permitted per reinforcing bar.*
5. *Provide footing reinforcement according to ASTM Specifications A706 Grade 80.*
6. *See Bent Plan and Elevation sheet for construction working points to establish bent centerline.*
7. *Field verify all dimensions and elevations before submitting Working Drawings and prior to ordering or fabricating any materials. See sht. J02 for more details.*

SCALE WARNING

IF THIS SCALE LINE DOES NOT MEASURE ONE INCH, THEN DRAWING IS NOT TO SCALE

STRUCTURE NO.	00123K
BDS DWG NO.	113843
CALC. BOOK	7997
HWY: 030 M.P.: 25.88	
COUNTY	Marion
DATE	2/26

REGISTERED PROFESSIONAL ENGINEER 099941PE OREGON JULY 21, 2022 BERNARD ANTHONY FRANKL

Digitally Signed 2026.02.12 11:32:21-08'00'

EXPIRES: 12/31/2027

FINAL ELECTRONIC DOCUMENT AVAILABLE UPON REQUEST

DOWL
3500 Chad Drive, Suite 200
Eugene, Oregon 97408
541-683-6090
WWW.DOWL.COM

OREGON DEPARTMENT OF TRANSPORTATION

WILLAMETTE RIVER, HWY 30 EB (CENTER ST)

OR22: CENTER ST BRIDGE (PHASE 1) PROJECT
WILLAMINA - SALEM HIGHWAY
MARION & POLK COUNTIES

Designer: Bernard A. Frankl, PhD, PE | Reviewer: Bob Goodrich, PE
Drafter: Jake Williams | Checker: Nasario Lopez-Francisco, PE

BENT 25 FOOTING DETAILS

SHEET NO. JA99

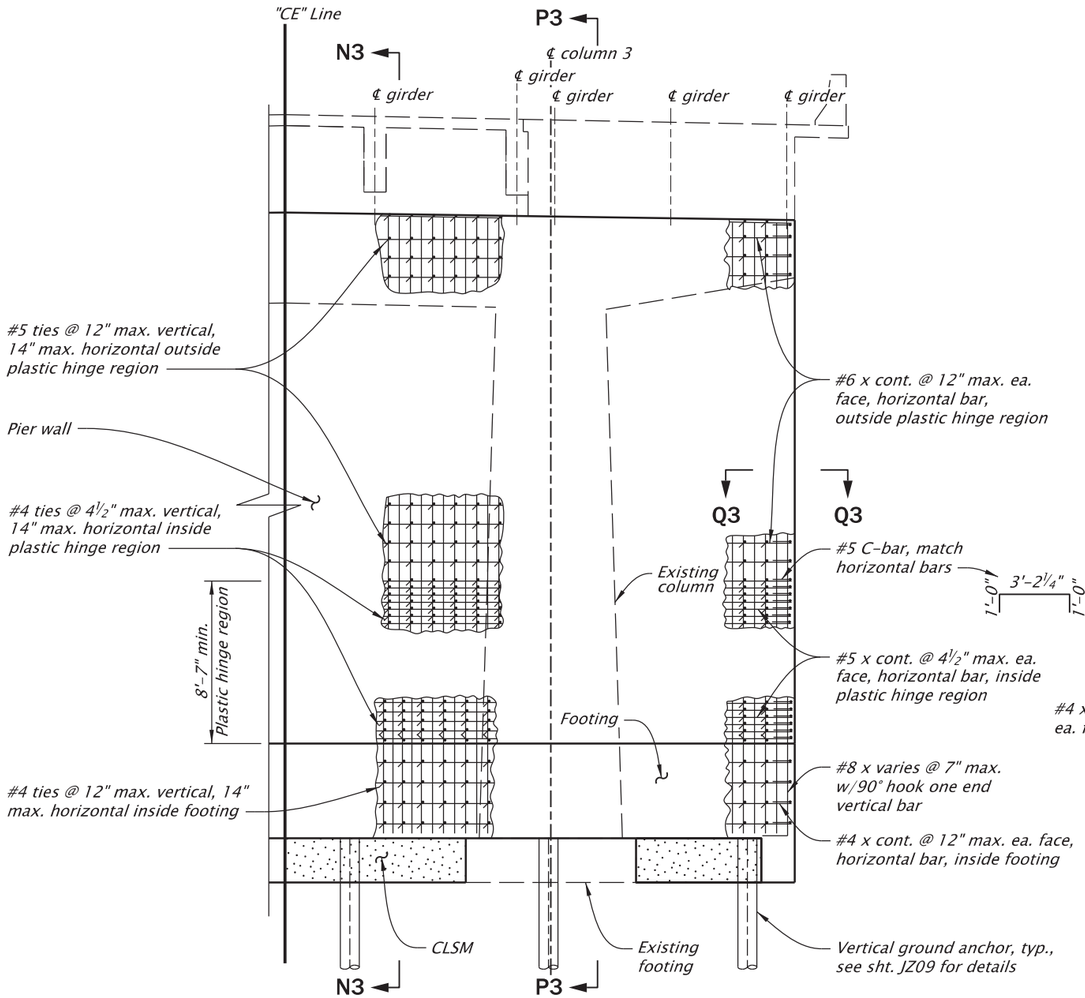

ELEVATION
Scale: 1/8"=1'-0"

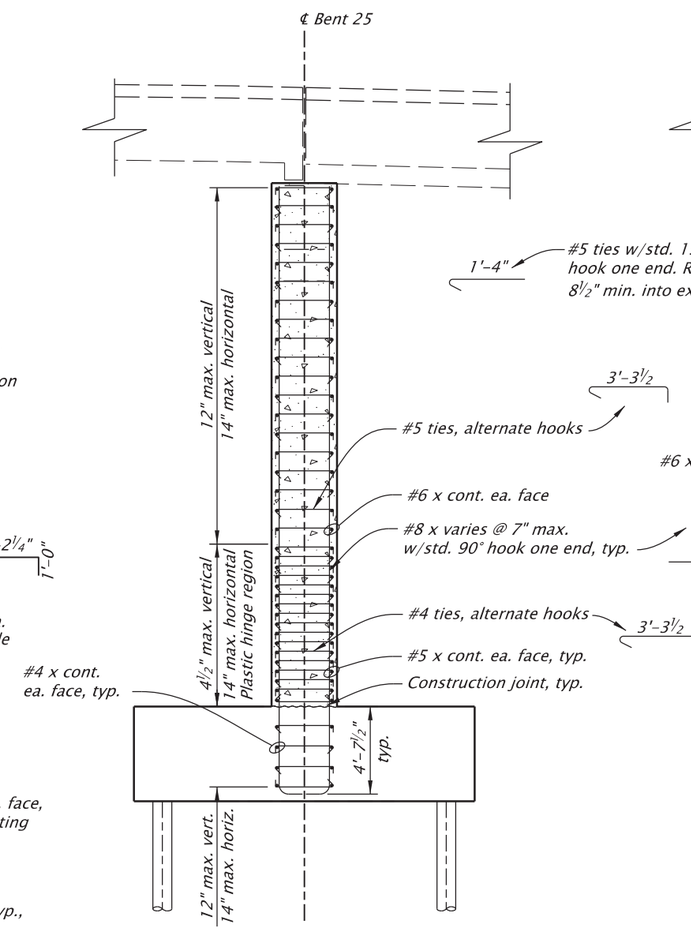

SECTION N3-N3
Scale: 1/8"=1'-0"

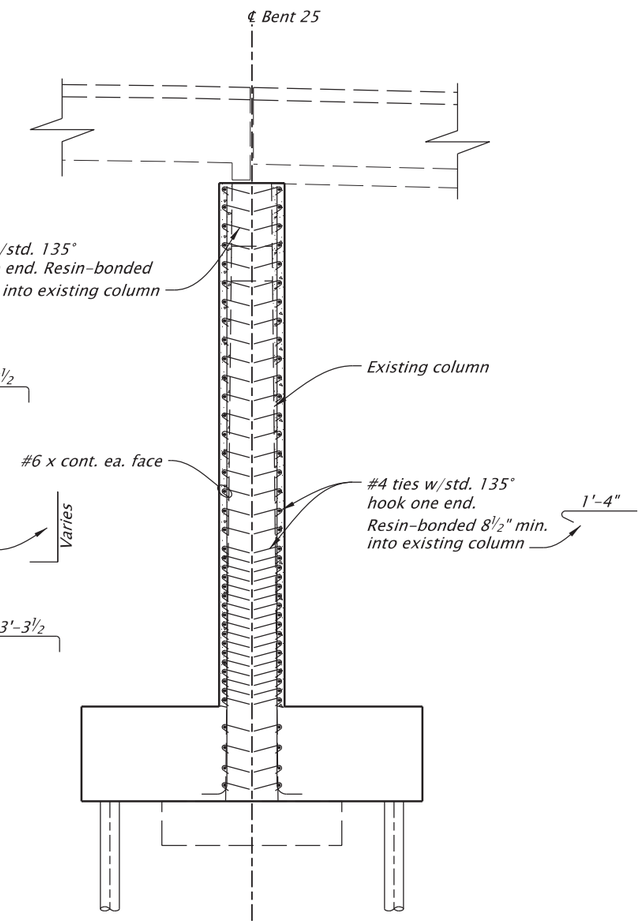

SECTION P3-P3
Scale: 1/8"=1'-0"

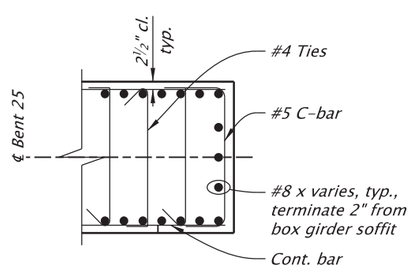

SECTION Q3-Q3
Scale: 1/4"=1'-0"

NOTES:
1. See sht. JA94 for pier wall geometry.
2. Field verify all dimensions and elevations prior to submitting Working Drawings and prior to ordering or fabricating any materials. See sht. J02 for more details.
3. See Bent Plan and Elevation sheet for construction control working points to establish bent centerline.

For accompanied by drawings, see sht. JA01

STRUCTURE NO.	00123K
BDS DWG NO.	113844
CALC. BOOK	7997
HWY: 030 M.P.: 25.88	
COUNTY	Marion
DATE	2/26

SCALE WARNING
IF THIS SCALE LINE DOES NOT MEASURE ONE INCH, THEN DRAWING IS NOT TO SCALE

REGISTERED PROFESSIONAL ENGINEER 099941PE OREGON JULY 21, 2022 BERNARD ANTHONY FRANKL
Digitally Signed 2026.02.12 11:38:07-08'00'
EXPIRES: 12/31/2027

FINAL ELECTRONIC DOCUMENT AVAILABLE UPON REQUEST

DOWL
3500 Chad Drive, Suite 200
Eugene, Oregon 97408
541-683-6090
WWW.DOWL.COM

WILLAMETTE RIVER, HWY 30 EB (CENTER ST)

OR22: CENTER ST BRIDGE (PHASE 1) PROJECT
WILLAMINA - SALEM HIGHWAY
MARION & POLK COUNTIES

Designer: Bernard A. Frankl, PhD, PE
Reviewer: Bob Goodrich, PE
Drafter: Jake Williams
Checker: Tanner Torkelson, PE

BENT 25 PIER WALL DETAILS
SHEET NO. JA100

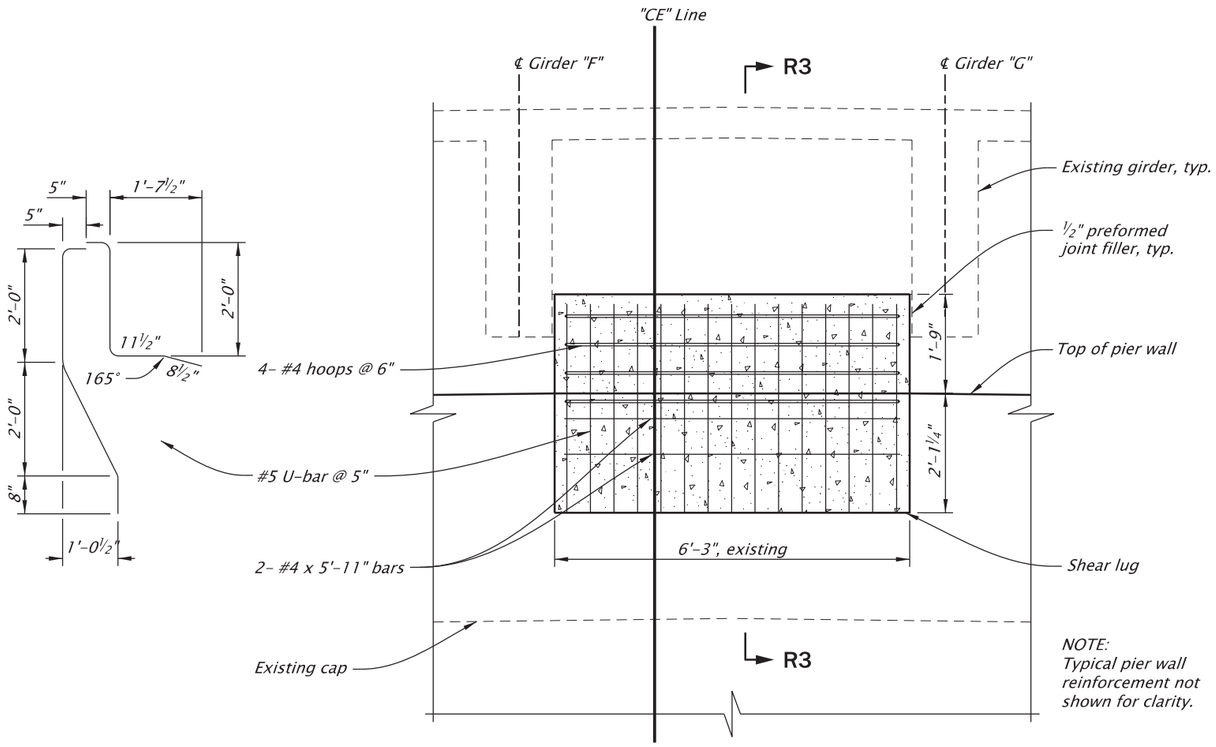

SHEAR LUG DETAIL

Scale: 3/8"=1'-0"

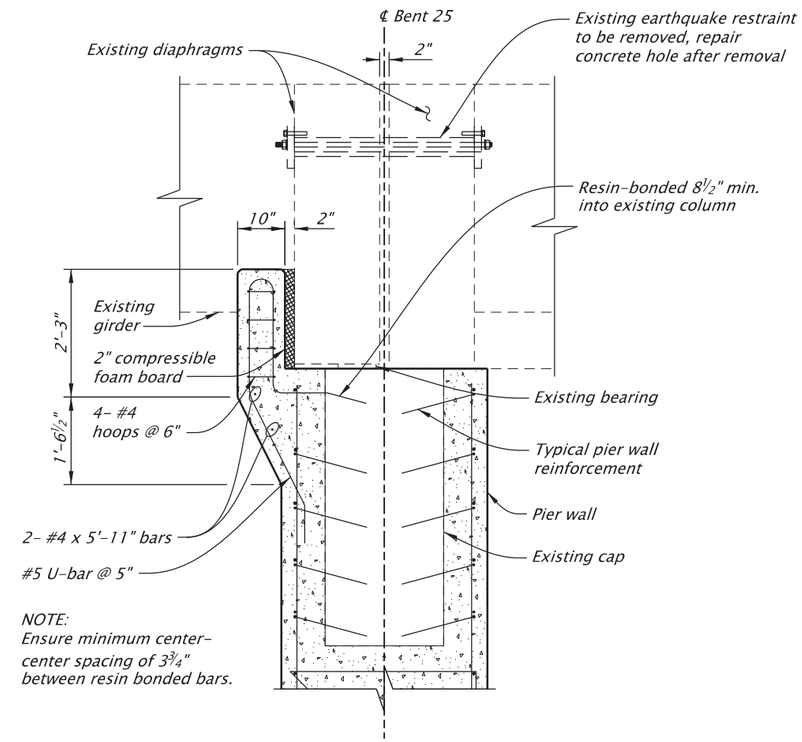

SECTION R3-R3

Scale: 3/8"=1'-0"

For accompanied by drawings, see sht. JA01

NOTES:
1. *Field verify all dimensions and elevations prior to submitting Working Drawings and prior to ordering or fabricating any materials. See sht. J02 for more details.*
2. *See Bent Plan and Elevation sheet for construction control working points to establish bent centerline.*

SCALE WARNING
IF THIS SCALE LINE DOES NOT MEASURE ONE INCH, THEN DRAWING IS NOT TO SCALE

STRUCTURE NO.	00123K
BDS DWG NO.	113845
CALC. BOOK	7997
HWY: 030	M.P.: 25.88
COUNTY	Marion
DATE	2/26

REGISTERED PROFESSIONAL ENGINEER
099941PE
Digitally Signed 2026.02.12 11:38:26-08'00'
OREGON
JULY 21, 2022
BERNARD ANTHONY FRANKL
EXPIRES: 12/31/2027

FINAL ELECTRONIC DOCUMENT AVAILABLE UPON REQUEST

DOWL
3500 Chad Drive, Suite 200
Eugene, Oregon 97408
541-683-6090
WWW.DOWL.COM

WILLAMETTE RIVER, HWY 30 EB (CENTER ST)

OR22: CENTER ST BRIDGE (PHASE 1) PROJECT
WILLAMINA - SALEM HIGHWAY
MARION & POLK COUNTIES

Designer: Bernard A. Frankl, PhD, PE
Reviewer: Bob Goodrich, PE
Drafter: Jake Williams
Checker: Tanner Torkelson, PE

BENT 25 MISCELLANEOUS DETAILS

SHEET NO. JA101

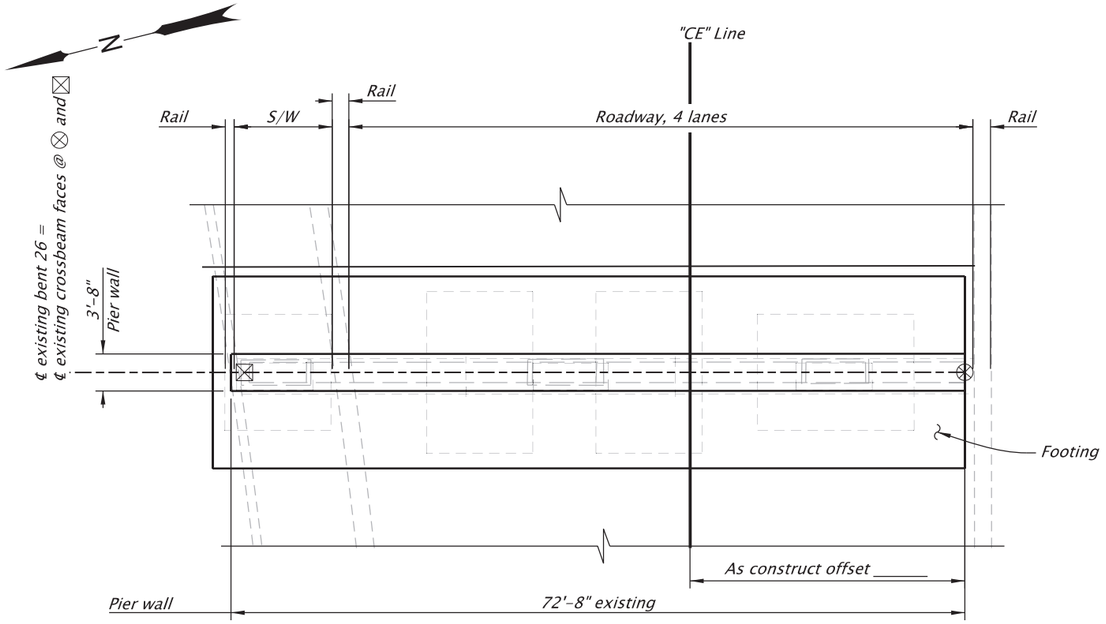

PLAN

Scale: 1"=15'

⊗ Construction Control Working Point (WP) is located at ℄ existing crossbeam face at bottom soffit of box girder.

⊠ Reference point to establish existing bent centerline located at ℄ existing column face at bottom soffit of box girder.

△ Construction pinch point. Provide a minimum of 6" concrete from existing surface to new surface as shown.

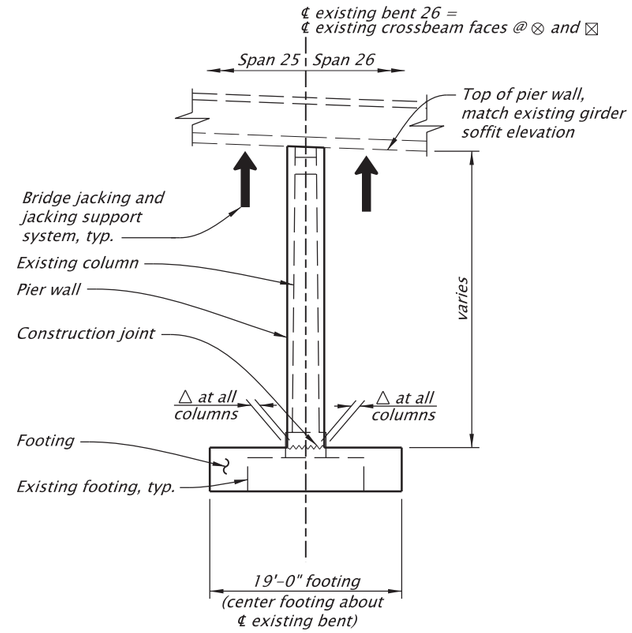

TYPICAL SECTION

Scale: 1"=15'

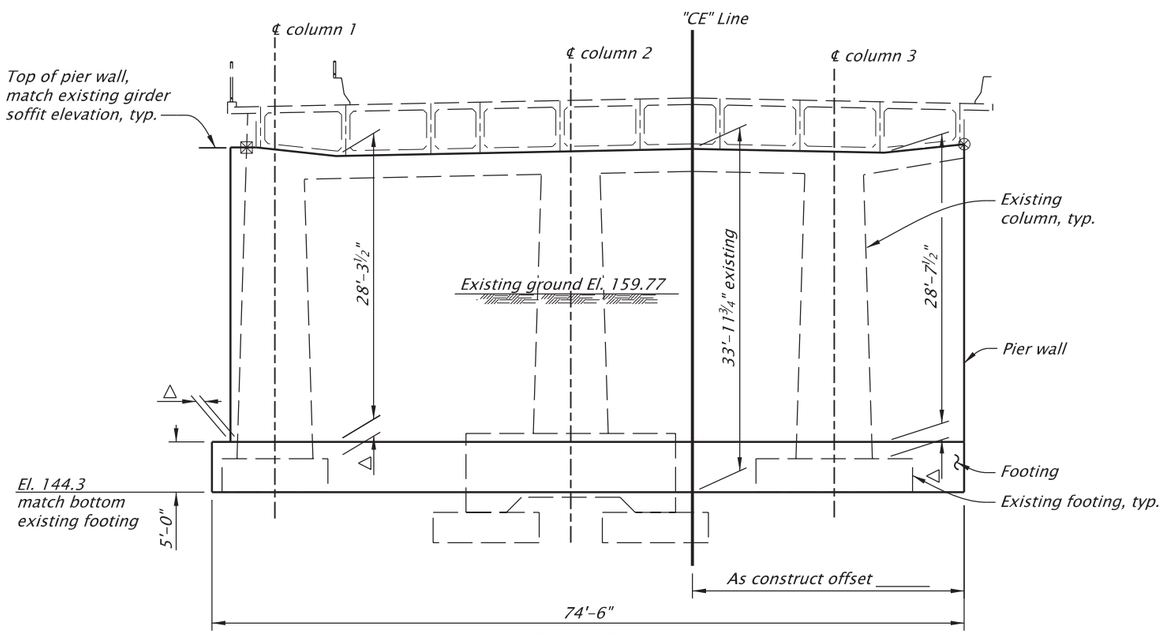

ELEVATION

Scale: 1"=15'

BRIDGE JACKING LOADS (kips)			
Location	Unfactored Dead Load	Factored Lane Load	Conceptual System Type
Span 25	1,164	182	Self supported
Span 26	1,164	182	Self supported

NOTES:
1. Dead load represents the total unfactored bent reaction.
2. Live load represents factored, controlling single HL-93 or Permit Truck reaction, adjusted for dynamic load allowance, and a multiple presence factor of 1.0.
3. Contractor is responsible for determining all construction loading including, materials, equipment and live loading.

For accompanied by drawings, see sht. JA01

NOTES:
1. See sht. JA26 for foundation details.
2. See sht. JA103 for footing details.
3. See sht. JA104 for pier wall details.
4. Field verify all dimensions and elevations before submitting Working Drawings and prior to ordering or fabricating any materials. See sht. J02 for more details.

SCALE WARNING
IF THIS SCALE LINE DOES NOT MEASURE ONE INCH, THEN DRAWING IS NOT TO SCALE

STRUCTURE NO. 00123K
BDS DWG NO. 113846
CALC. BOOK 7997
HWY: 030
M.P.: 25.88
COUNTY Marion
DATE 2/26

REGISTERED PROFESSIONAL ENGINEER 099941PE OREGON JULY 21, 2022 BERNARD ANTHONY FRANKL
Digitally Signed 2026.02.12 11:38:41-08'00'
EXPIRES: 12/31/2027

FINAL ELECTRONIC DOCUMENT AVAILABLE UPON REQUEST

DOWL
3500 Chad Drive, Suite 200
Eugene, Oregon 97408
541-683-6090
WWW.DOWL.COM

WILLAMETTE RIVER, HWY 30 EB (CENTER ST)

OR22: CENTER ST BRIDGE (PHASE 1) PROJECT
WILLAMINA - SALEM HIGHWAY
MARION & POLK COUNTIES

Designer: Bernard A. Frankl, PhD, PE
Reviewer: Bob Goodrich, PE
Drafter: Jake Williams
Checker: Nasario Lopez-Francisco, PE

BENT 26 PLAN AND ELEVATION

SHEET NO. JA102

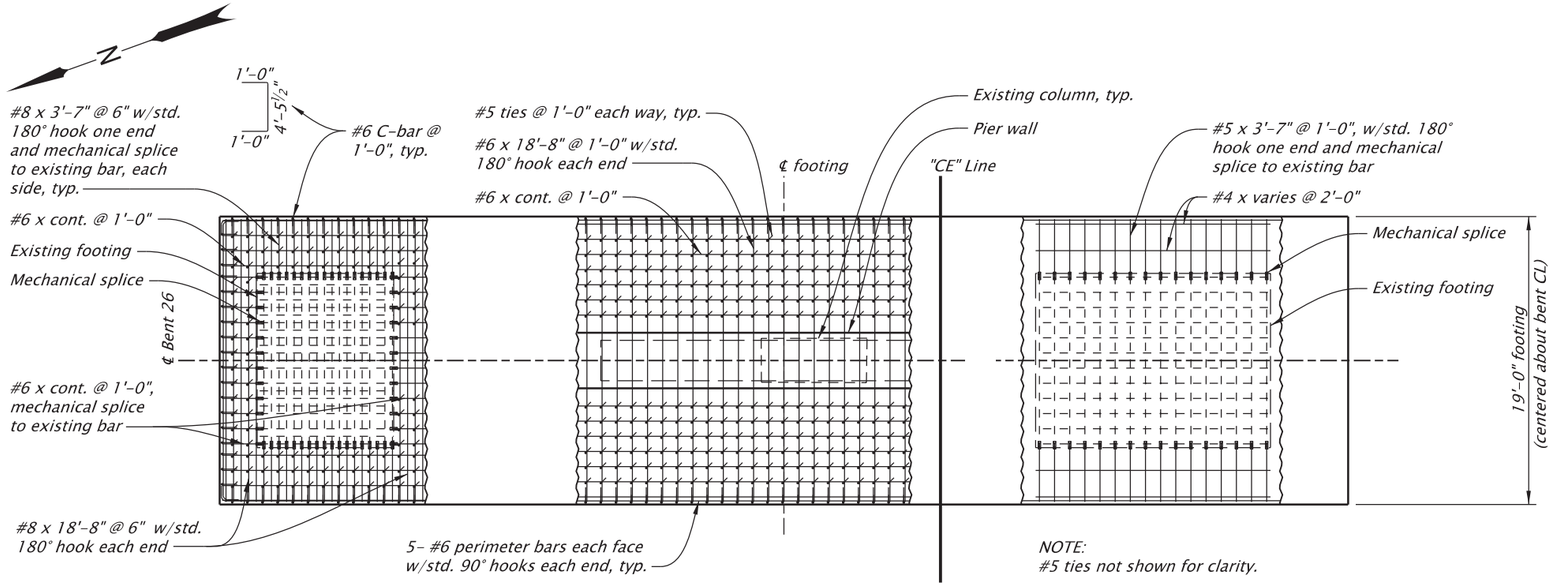

BOTTOM OF FOOTING **TOP OF RETROFITTED FOOTING** **TOP OF EXISTING FOOTING**

PLAN
Scale: 1"=10'

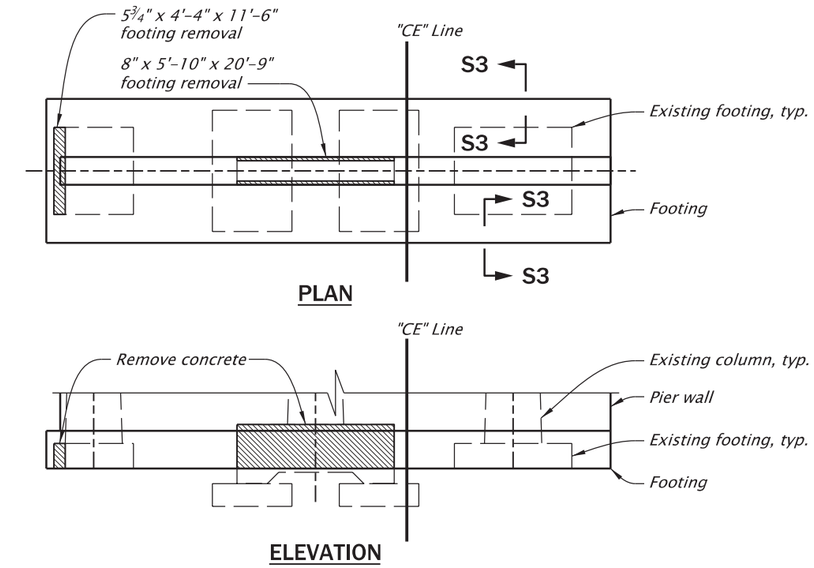

CONCRETE REMOVAL
Scale: 1"=20'

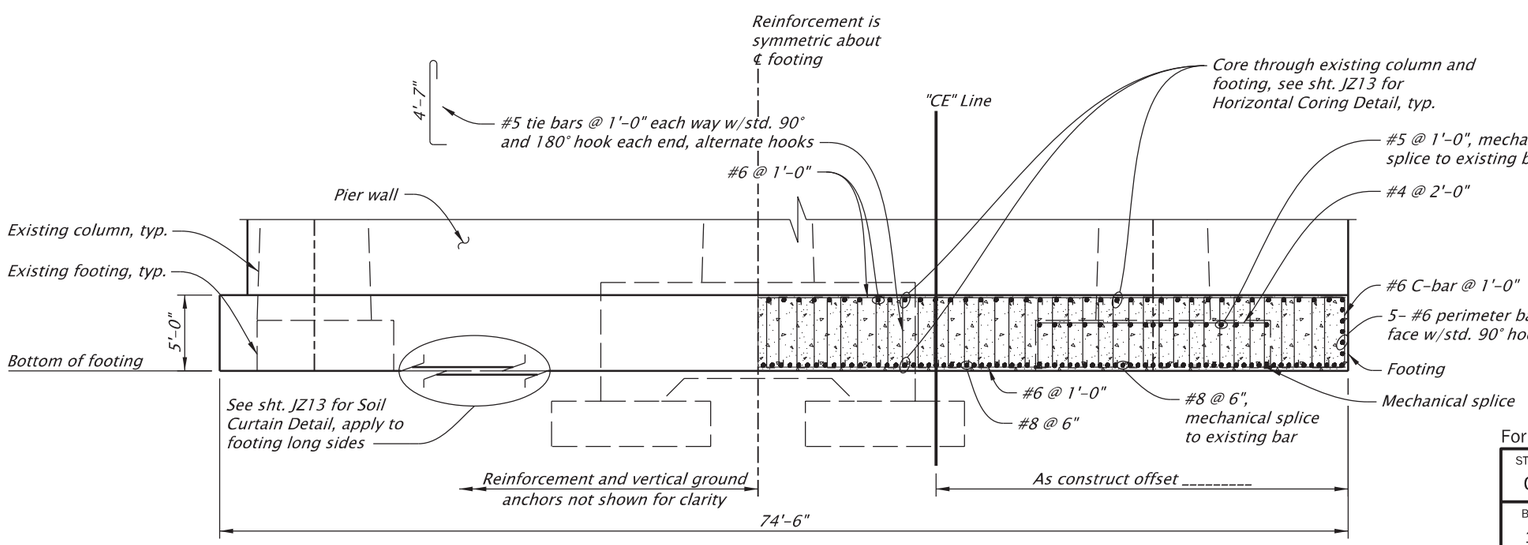

ELEVATION
Scale: 1"=10'

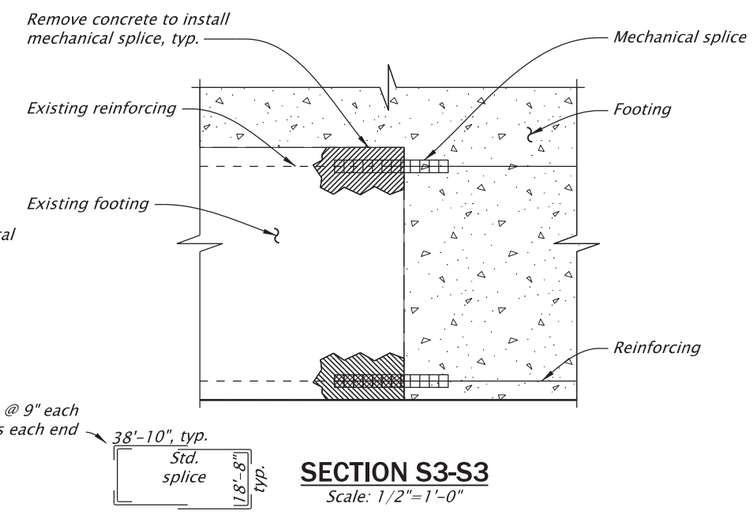

SECTION S3-S3
Scale: 1/2"=1'-0"

For accompanied by drawings, see sht. JA01

NOTES:
1. *Two-bar bundles allowed to avoid existing vertical column steel.*
2. *One splice permitted per reinforcing bar.*
3. *Provide footing reinforcement according to ASTM Specifications A706 Grade 80.*
4. *Field verify all dimensions and elevations prior to submitting Working Drawings and prior to ordering or fabricating any materials. See sht. J02 for more details.*
5. *See Bent Plan and Elevation sheet for construction control working points to establish bent centerline.*

SCALE WARNING
IF THIS SCALE LINE DOES NOT MEASURE ONE INCH, THEN DRAWING IS NOT TO SCALE

STRUCTURE NO.	00123K
BDS DWG NO.	113847
CALC. BOOK	7997
HWY: 030 M.P.: 25.88	
COUNTY	Marion
DATE	2/26

REGISTERED PROFESSIONAL ENGINEER 099941PE OREGON JULY 21, 2022 BERNARD ANTHONY FRANKL
Digitally Signed 2026.02.12 11:39:00-08'00'
EXPIRES: 12/31/2027

FINAL ELECTRONIC DOCUMENT AVAILABLE UPON REQUEST

DOWL
3500 Chad Drive, Suite 200
Eugene, Oregon 97408
541-683-6090
WWW.DOWL.COM

OREGON DEPARTMENT OF TRANSPORTATION

WILLAMETTE RIVER, HWY 30 EB (CENTER ST)

OR22: CENTER ST BRIDGE (PHASE 1) PROJECT
WILLAMINA - SALEM HIGHWAY
MARION & POLK COUNTIES

Designer: Bernard A. Frankl, PhD, PE Reviewer: Bob Goodrich, PE
Drafter: Jake Williams Checker: Nasario Lopez-Francisco, PE

BENT 26 FOOTING DETAILS SHEET NO. JA103

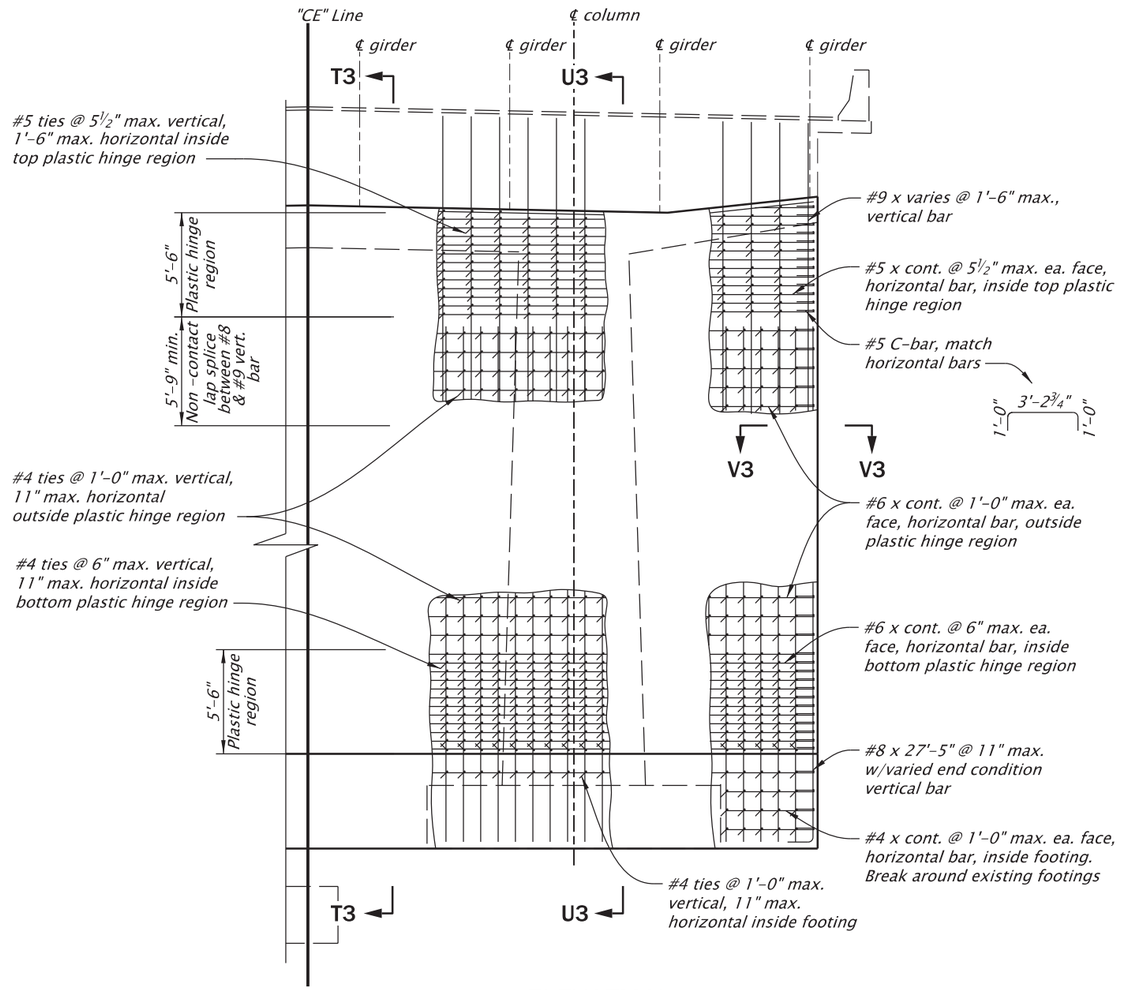

ELEVATION

Scale: 1/8"=1'-0"

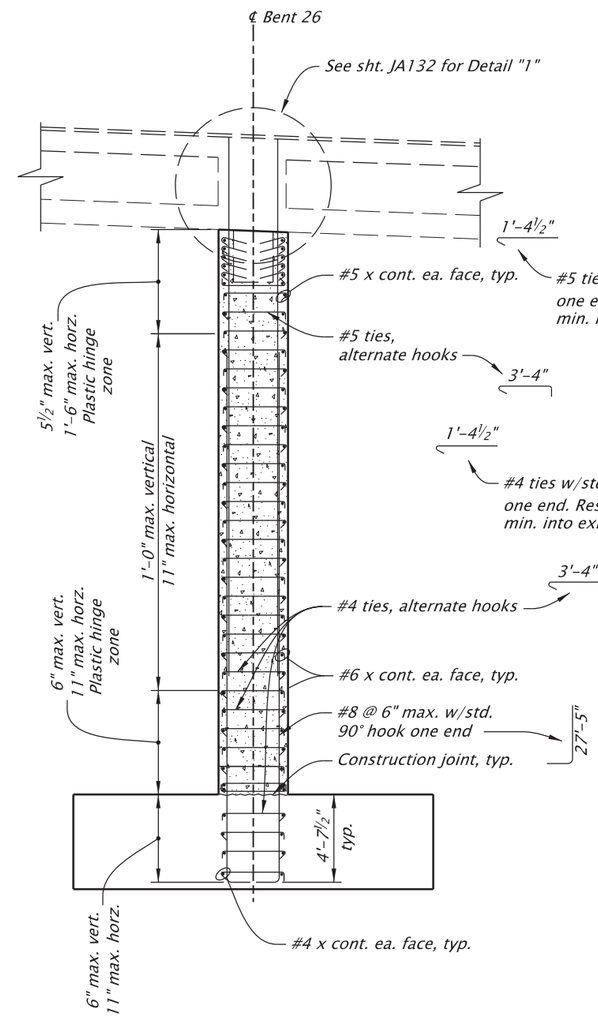

SECTION T3-T3

Scale: 1/8"=1'-0"

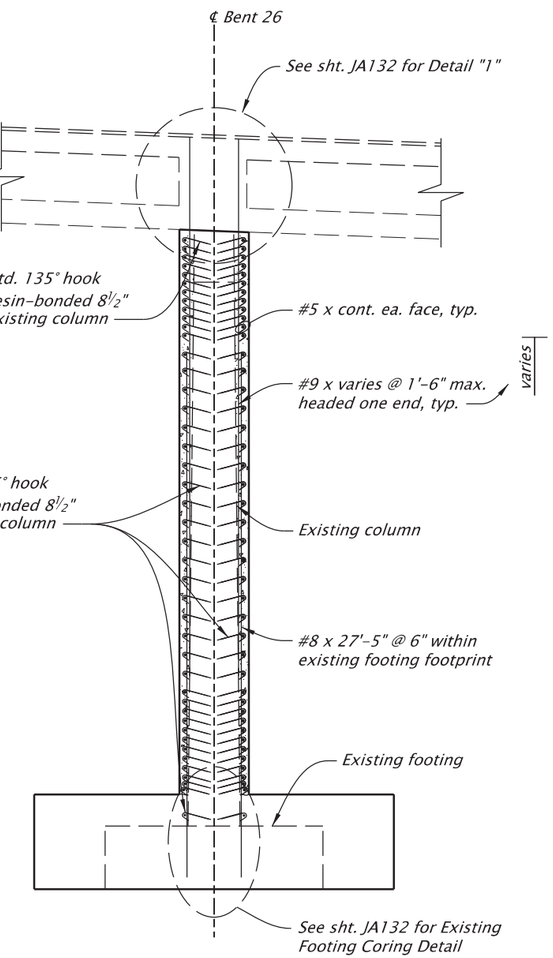

SECTION U3-U3

Scale: 1/8"=1'-0"

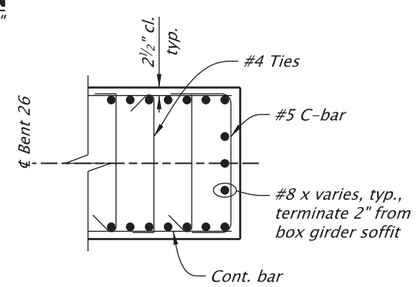

SECTION V3-V3

Scale: 1/4"=1'-0"

NOTES:
1. See sht. JA102 for pier wall geometry.
2. Field verify all dimensions and elevations prior to submitting Working Drawings and prior to ordering or fabricating any materials. See sht. J02 for more details.
3. See Bent Plan and Elevation sheet for construction control working points to establish bent centerline.

For accompanied by drawings, see sht. JA01

SCALE WARNING
IF THIS SCALE LINE DOES NOT MEASURE ONE INCH, THEN DRAWING IS NOT TO SCALE

STRUCTURE NO.	00123K
BDS DWG NO.	113848
CALC. BOOK	7997
HWY: 030	M.P.: 25.88
COUNTY	Marion
DATE	2/26

REGISTERED PROFESSIONAL ENGINEER 099941PE OREGON JULY 21, 2022 BERNARD ANTHONY FRANKL
Digitally Signed 2026.02.12 11:39:20-08'00'
EXPIRES: 12/31/2027

FINAL ELECTRONIC DOCUMENT AVAILABLE UPON REQUEST

DOWL
3500 Chad Drive, Suite 200
Eugene, Oregon 97408
541-683-6090
WWW.DOWL.COM

OREGON DEPARTMENT OF TRANSPORTATION

WILLAMETTE RIVER, HWY 30 EB (CENTER ST)

OR22: CENTER ST BRIDGE (PHASE 1) PROJECT
WILLAMINA - SALEM HIGHWAY
MARION & POLK COUNTIES

Designer: Bernard A. Frankl, PhD, PE
Reviewer: Bob Goodrich, PE
Drafter: Jake Williams
Checker: Tanner Torkelson, PE

BENT 26 PIER WALL DETAILS

SHEET NO. JA104

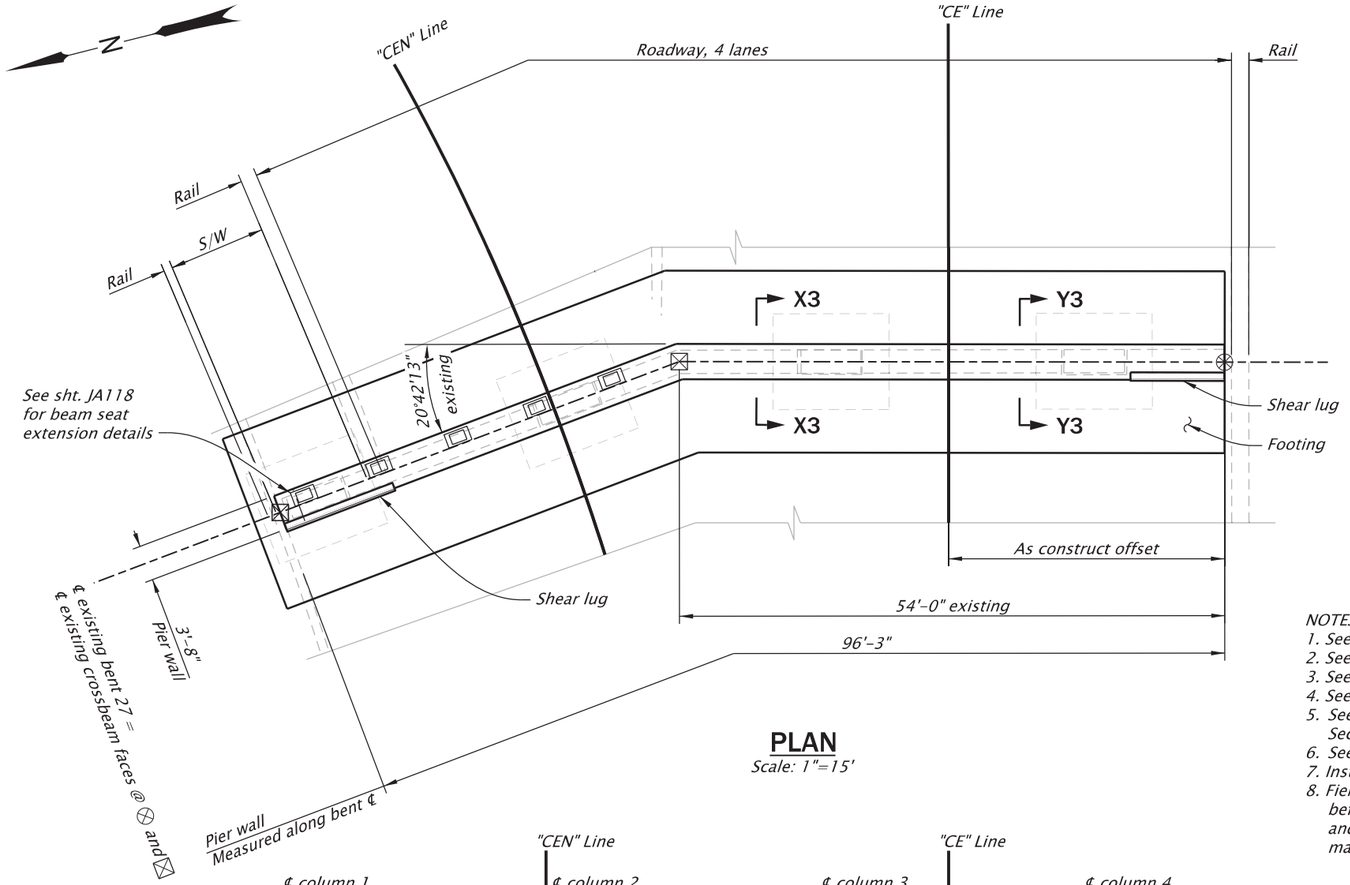

PLAN

Scale: 1"=15'

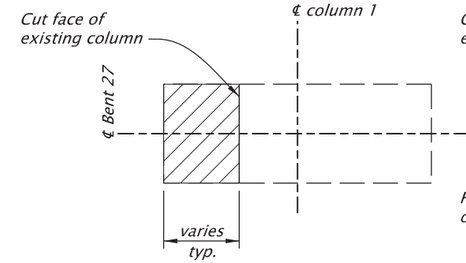

REMOVAL LIMITS

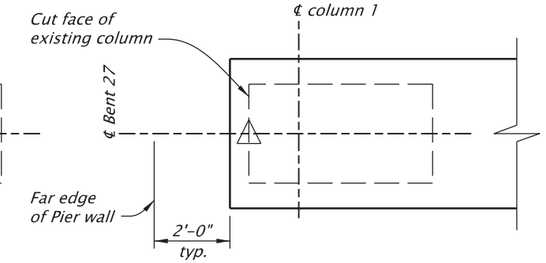

NEW CONSTRUCTION LIMITS

⊗ Construction Control Working Point (WP) is located at ℄ existing crossbeam at bottom soffit of box girder.

⊠ Reference point to establish existing bent centerline located at ℄ existing column face at bottom soffit of box girder.

△ Construction pinch point. Provide a minimum of 6" concrete from existing surface to new surface as shown.

NOTES:
1. See sht. JA26 for foundation details.
2. See sht. JA106 for footing details.
3. See sht. JA107 for pier wall details.
4. See sht. JA108 for shear lug details.
5. See sht. JA133 for illumination detail Section X3-X3 & Y3-Y3
6. See shts. JA28 - JA31 for joint limits and details.
7. Install shoring prior to concrete removal.
8. Field verify all dimensions and elevations before submitting Working Drawings and prior to ordering or fabricating any materials. See sht. J02 for more details.

W3-W3

Scale: 1/4"=1'-0"

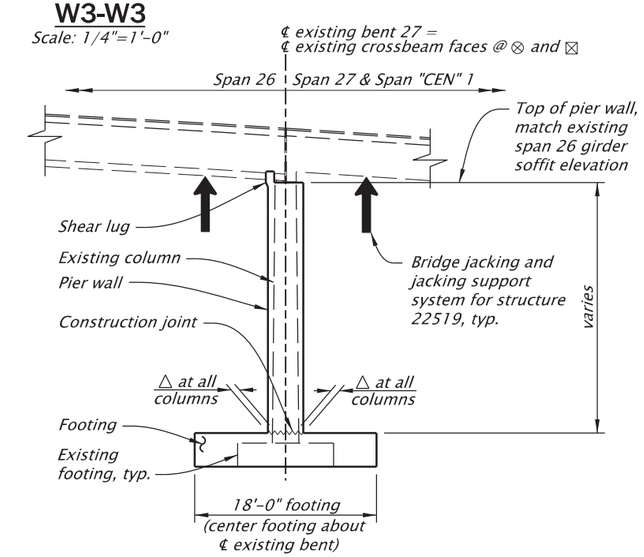

TYPICAL SECTION

Scale: 1"=15'

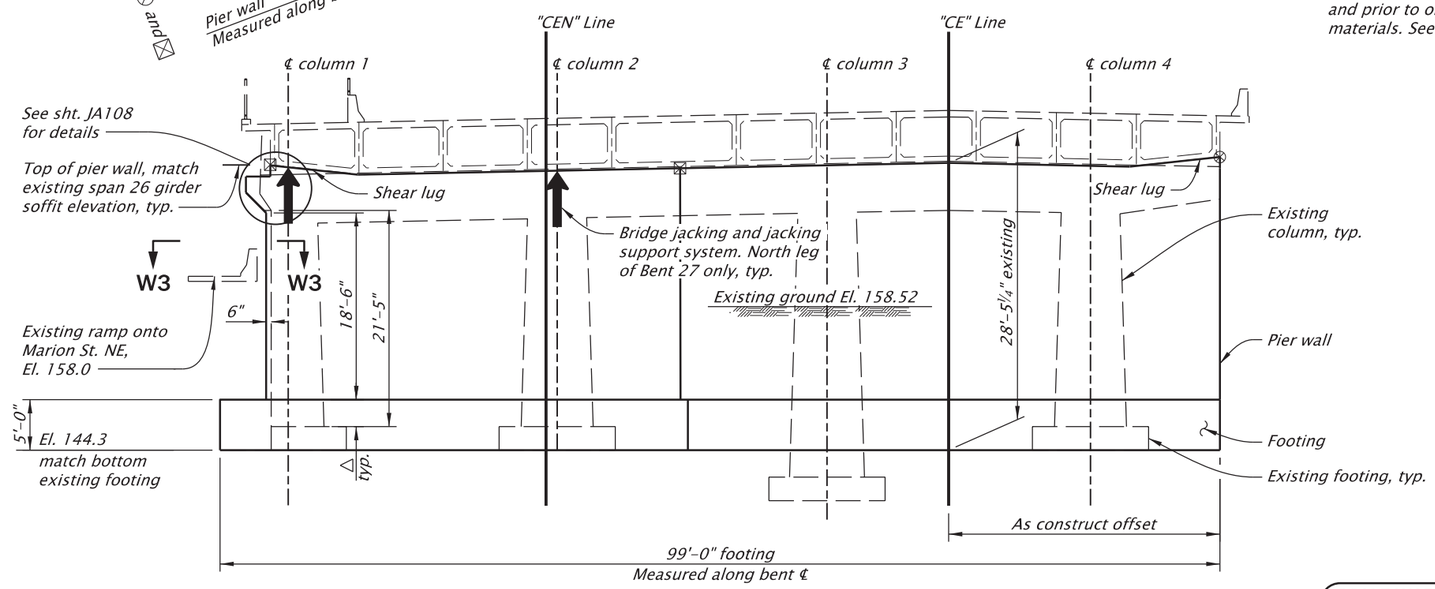

DEVELOPED ELEVATION

Scale: 1"=15'

BRIDGE JACKING LOADS (kips)			
Location	Unfactored Dead Load	Factored Lane Load	Conceptual System Type
Grd. A26-E26	520	197	Self supported
Structure 22519	272	165	Self supported

NOTES:
1. Dead load represents the total unfactored bent reaction.
2. Live load represents factored, controlling single HL-93 or Permit Truck Reaction, adjusted for dynamic load allowance, and a multiple presence factor of 1.0.
3. Contractor is responsible for determining all construction loading including materials, equipment and live loading.
4. Reactions represent loads acting on Bent 27 from girders A26-E26 and Structure 22519.

For accompanied by drawings, see sht. JA01

SCALE WARNING
IF THIS SCALE LINE DOES NOT MEASURE ONE INCH, THEN DRAWING IS NOT TO SCALE

STRUCTURE NO.	00123K
BDS DWG NO.	113849
CALC. BOOK	7997
HWY: 030 M.P.: 25.88	
COUNTY	Marion
DATE	2/26

REGISTERED PROFESSIONAL ENGINEER 099941PE
Digitally Signed 2026.02.12 11:39:37-08'00'
OREGON JULY 21, 2022 BERNARD ANTHONY FRANKL
EXPIRES: 12/31/2027

FINAL ELECTRONIC DOCUMENT AVAILABLE UPON REQUEST

DOWL
3500 Chad Drive, Suite 200
Eugene, Oregon 97408
541-683-6090
WWW.DOWL.COM

WILLAMETTE RIVER, HWY 30 EB (CENTER ST)

OR22: CENTER ST BRIDGE (PHASE 1) PROJECT
WILLAMINA - SALEM HIGHWAY
MARION & POLK COUNTIES

Designer: Bernard A. Frankl, PhD, PE
Reviewer: Bob Goodrich, PE
Drafter: Jake Williams
Checker: Nasario Lopez-Francisco, PE

BENT 27 PLAN AND ELEVATION

SHEET NO. JA105

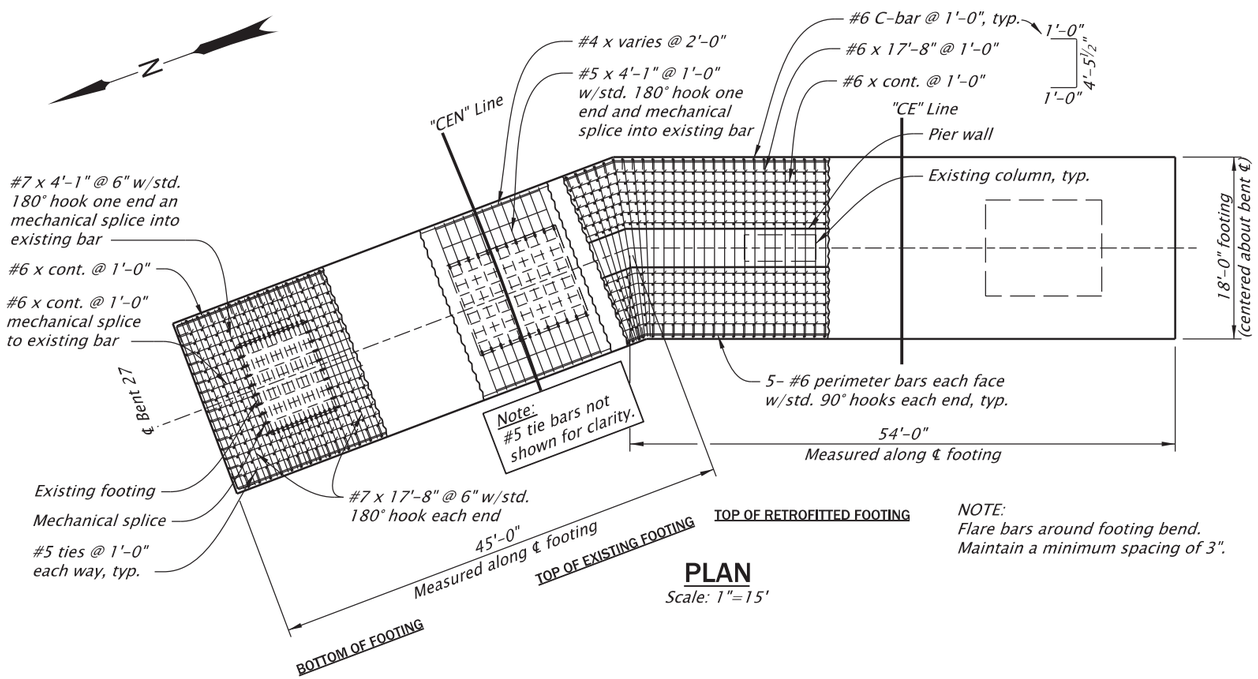

PLAN

Scale: 1"=15'

NOTE:
Flare bars around footing bend.
Maintain a minimum spacing of 3".

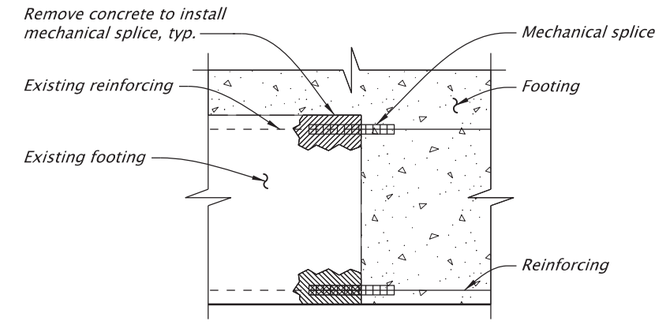

SECTION Z3-Z3

Scale: 3/8"=1'-0"

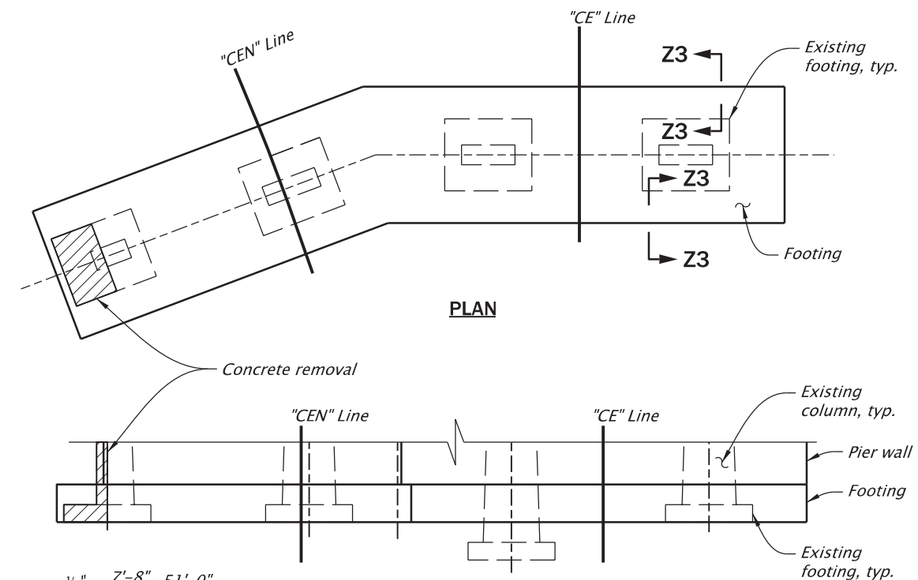

CONCRETE REMOVAL

Scale: 1"=20'

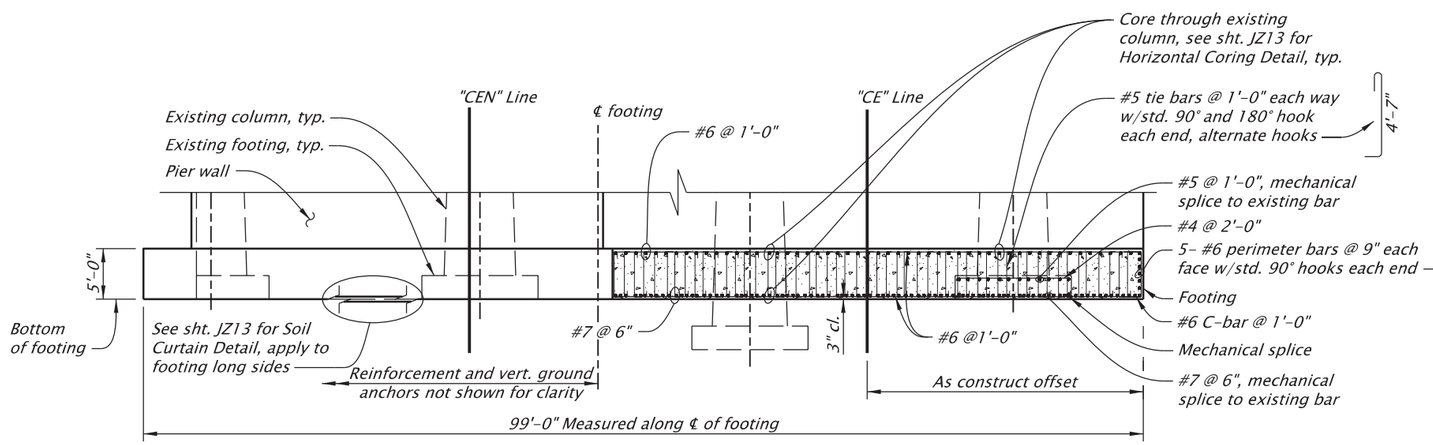

DEVELOPED ELEVATION

Scale: 1"=15'

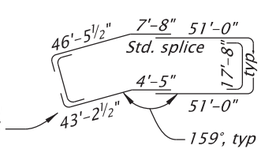

For accompanied by drawings, see sht. JA01

NOTES:
1. Two-bar bundles allowed to avoid existing vertical column steel.
2. One splice is permitted per reinforcing bar.
3. Provide footing reinforcement according to ASTM Specifications A706 Grade 80.
4. See Bent Plan and Elevation sheet for construction control working points to establish bent centerline.
5. Field verify all dimensions and elevations before submitting Working Drawings and prior to ordering or fabricating any materials. See sht. J02 for more details.

SCALE WARNING
IF THIS SCALE LINE DOES NOT MEASURE ONE INCH, THEN DRAWING IS NOT TO SCALE

STRUCTURE NO.	00123K
BDS DWG NO.	113850
CALC. BOOK	7997
HWY: 030 M.P.: 25.88	
COUNTY	Marion
DATE	2/26

REGISTERED PROFESSIONAL ENGINEER 099941PE
Digitally Signed 2026.02.12 11:39:57-08'00'
OREGON JULY 21, 2022
BERNARD ANTHONY FRANKL
EXPIRES: 12/31/2027

FINAL ELECTRONIC DOCUMENT AVAILABLE UPON REQUEST

DOWL
3500 Chad Drive, Suite 200
Eugene, Oregon 97408
541-683-6090
WWW.DOWL.COM

WILLAMETTE RIVER, HWY 30 EB (CENTER ST)

OR22: CENTER ST BRIDGE (PHASE 1) PROJECT
WILLAMINA - SALEM HIGHWAY
MARION & POLK COUNTIES

Designer: Bernard A. Frankl, PhD, PE
Reviewer: Bob Goodrich, PE
Drafter: Jake Williams
Checker: Nasario Lopez-Francisco, PE

BENT 27 FOOTING DETAILS

SHEET NO. JA106

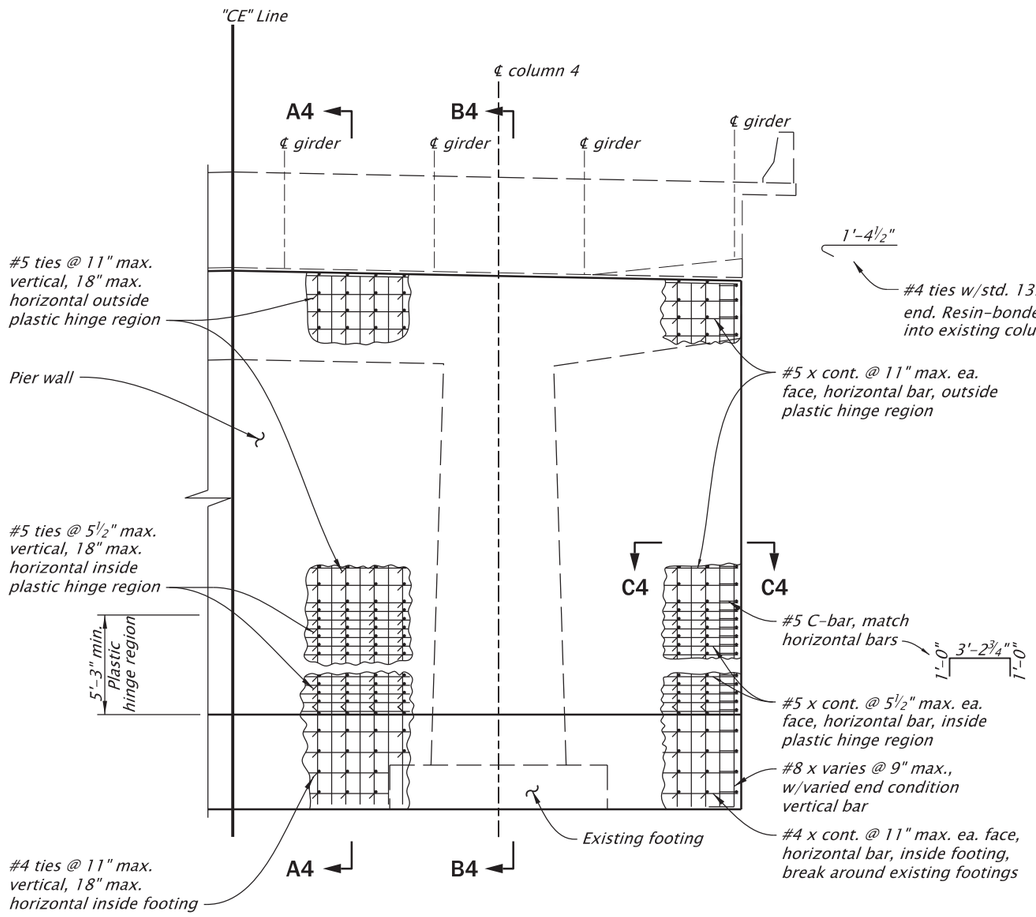

ELEVATION

Scale: 1/8"=1'-0"

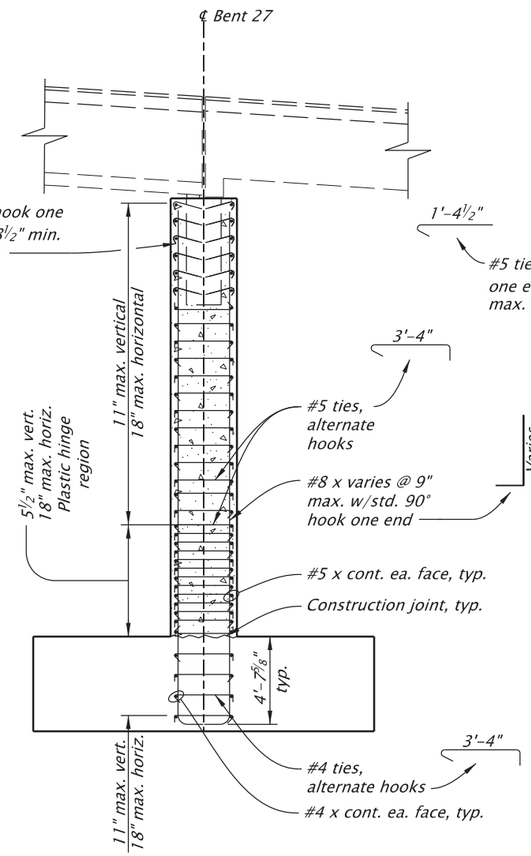

SECTION A4-A4

Scale: 1/8"=1'-0"

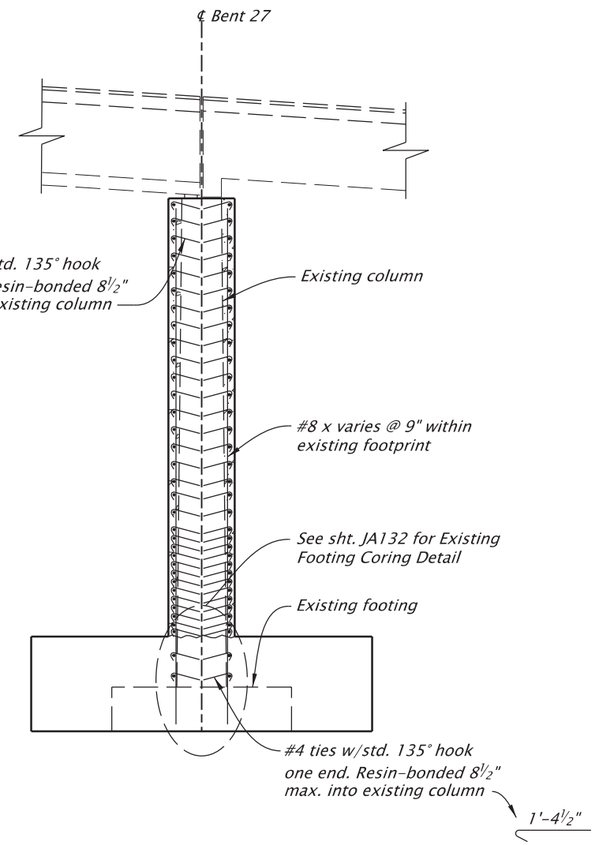

SECTION B4-B4

Scale: 1/8"=1'-0"

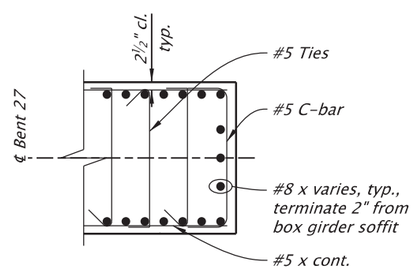

SECTION C4-C4

Scale: 1/4"=1'-0"

NOTES:

1. See sht. JA105 for pier wall geometry.
2. See Bent Plan and Elevation sheet for construction control working points to establish bent centerline.
3. Field verify all dimensions and elevations before submitting Working Drawings and prior to ordering or fabricating any materials. See sht. J02 for more details.

For accompanied by drawings, see sht. JA01

STRUCTURE NO.	00123K
BDS DWG NO.	113851
CALC. BOOK	7997
HWY: 030 M.P.: 25.88	
COUNTY	Marion
DATE	2/26

SCALE WARNING

IF THIS SCALE LINE DOES NOT MEASURE ONE INCH, THEN DRAWING IS NOT TO SCALE

REGISTERED PROFESSIONAL ENGINEER 099941PE OREGON JULY 21, 2022 BERNARD ANTHONY FRANKL

Digitally Signed 2026.02.12 11:40:15-08'00'

EXPIRES: 12/31/2027

FINAL ELECTRONIC DOCUMENT AVAILABLE UPON REQUEST

DOWL
3500 Chad Drive, Suite 200
Eugene, Oregon 97408
541-683-6090
WWW.DOWL.COM

OREGON DEPARTMENT OF TRANSPORTATION

WILLAMETTE RIVER, HWY 30 EB (CENTER ST)

OR22: CENTER ST BRIDGE (PHASE 1) PROJECT
WILLAMINA - SALEM HIGHWAY
MARION & POLK COUNTIES

Designer: Bernard A. Frankl, PhD, PE
Reviewer: Bob Goodrich, PE
Drafter: Jake Williams
Checker: Tanner Torkelson, PE

BENT 27 PIER WALL DETAILS

SHEET NO. JA107

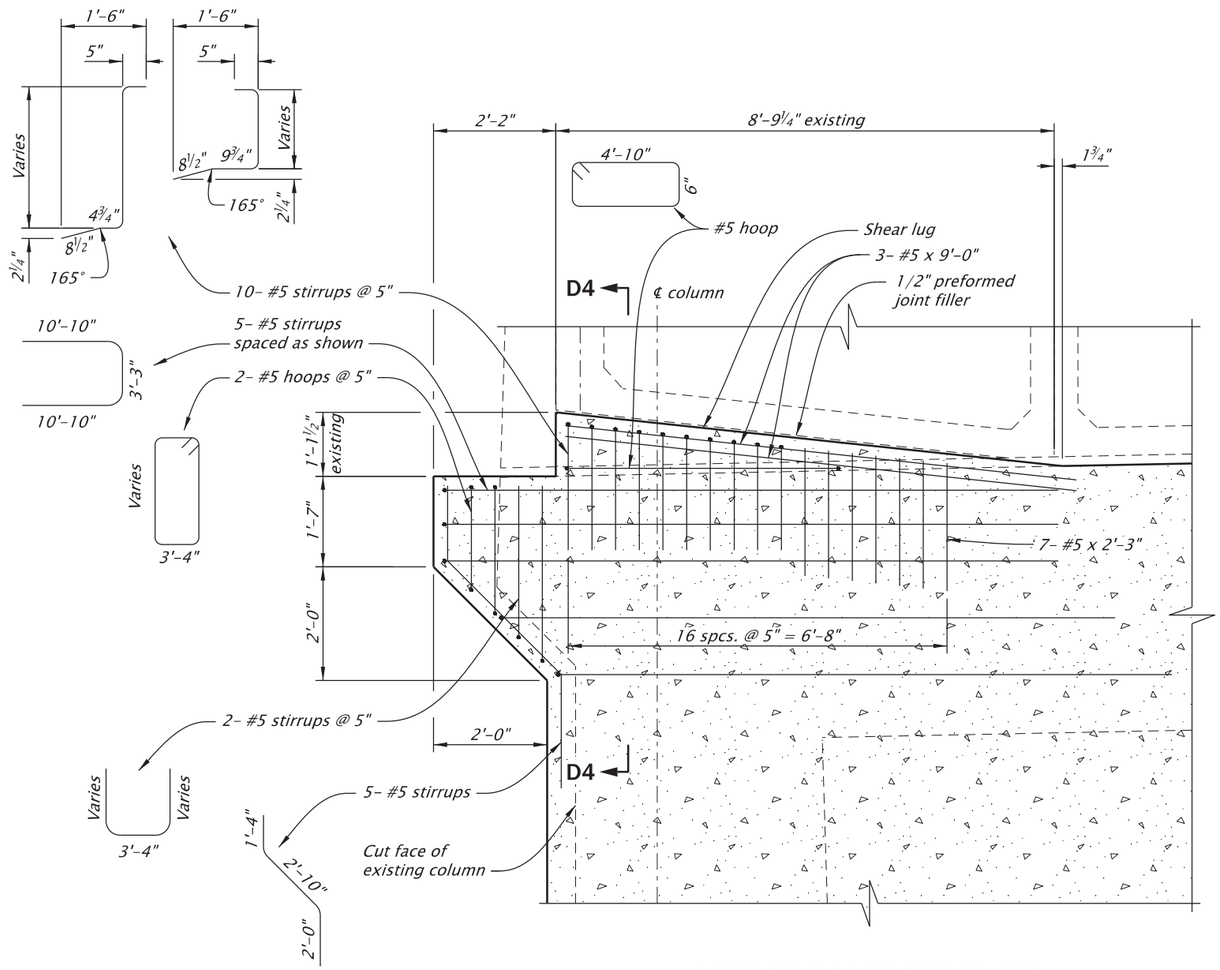

BENT 27 NORTH SHEAR LUG
(SOUTH SHEAR LUG SIMILAR)

Scale: 3/8"=1'-0"

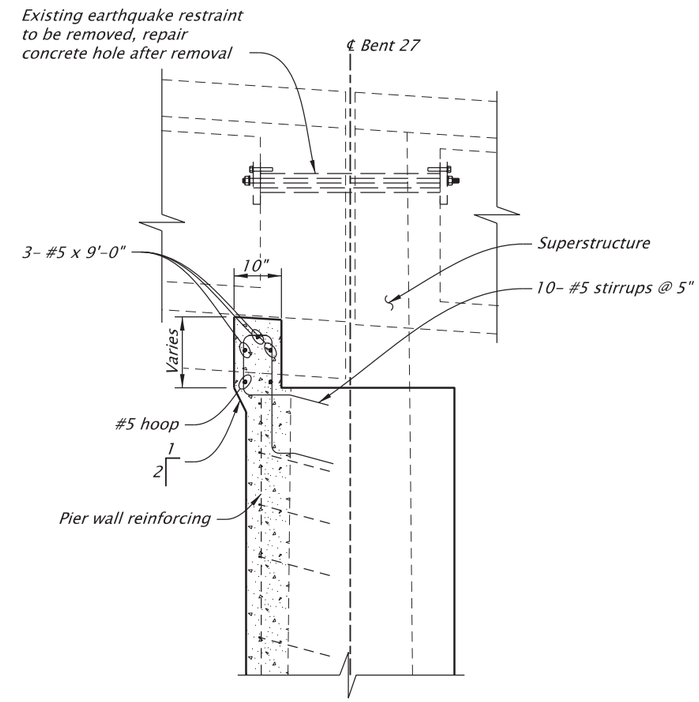

SECTION D4-D4

Scale: 3/8"=1'-0"

For accompanied by drawings, see sht. JA01

NOTES:
1. *See Bent Plan and Elevation sheet for construction control working points to establish bent centerline.*
2. *Field verify all dimensions and elevation before submitting Working Drawings and prior to ordering or fabricating any materials. See sht. J02 for more details.*

SCALE WARNING
IF THIS SCALE LINE DOES NOT MEASURE ONE INCH, THEN DRAWING IS NOT TO SCALE

STRUCTURE NO.	00123K
BDS DWG NO.	113852
CALC. BOOK	7997
HWY: 030 M.P.: 25.88	
COUNTY	Marion
DATE	2/26

REGISTERED PROFESSIONAL ENGINEER 099941PE
Digitally Signed 2026.02.12 11:40:30-08'00'
OREGON JULY 21, 2022
BERNARD ANTHONY FRANKL
EXPIRES: 12/31/2027

FINAL ELECTRONIC DOCUMENT AVAILABLE UPON REQUEST

DOWL
3500 Chad Drive, Suite 200
Eugene, Oregon 97408
541-683-6090
WWW.DOWL.COM

OREGON DEPARTMENT OF TRANSPORTATION

WILLAMETTE RIVER, HWY 30 EB (CENTER ST)

OR22: CENTER ST BRIDGE (PHASE 1) PROJECT
WILLAMINA - SALEM HIGHWAY
MARION & POLK COUNTIES

Designer: Bernard A. Frankl, PhD, PE
Reviewer: Bob Goodrich, PE
Drafter: Jake Williams
Checker: Tanner Torkelson, PE

BENT 27 MISCELLANEOUS DETAILS

SHEET NO. JA108

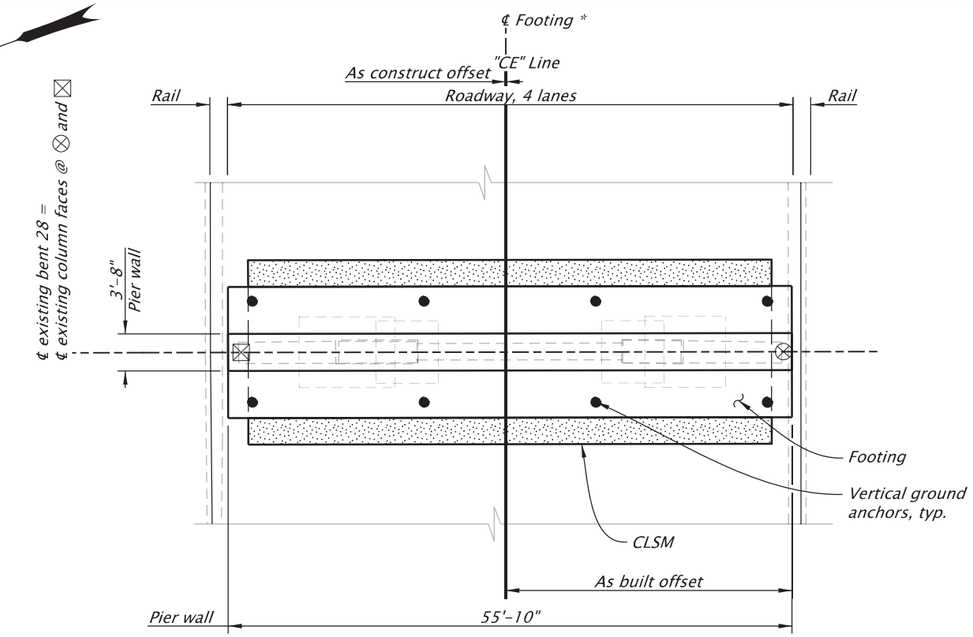

PLAN
Scale: 1"=15'

⊗ Construction Control Working Point (WP) is located at ℄ existing crossbeam face at bottom soffit of box girder.

⊠ Reference point to establish new footing centerline located at ℄ existing crossbeam face at bottom soffit of box girder.

△ Construction pinch point. Provide a minimum of 6" concrete from existing surface to new surface as shown.

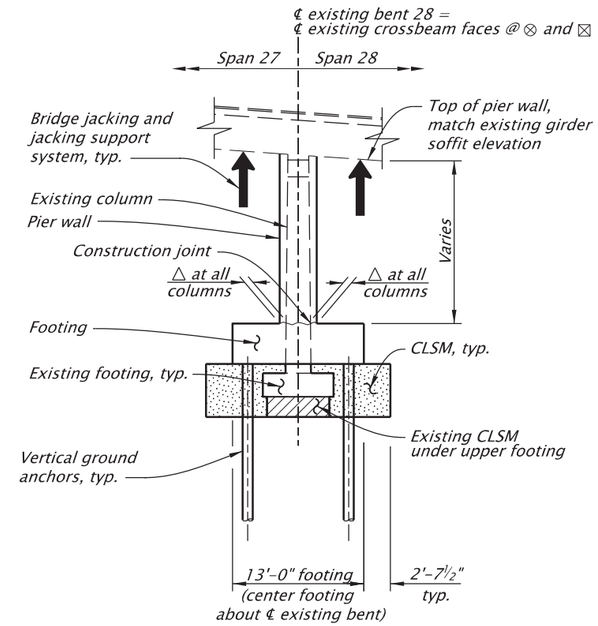

SECTION E4-E4
Scale: 1"=15'

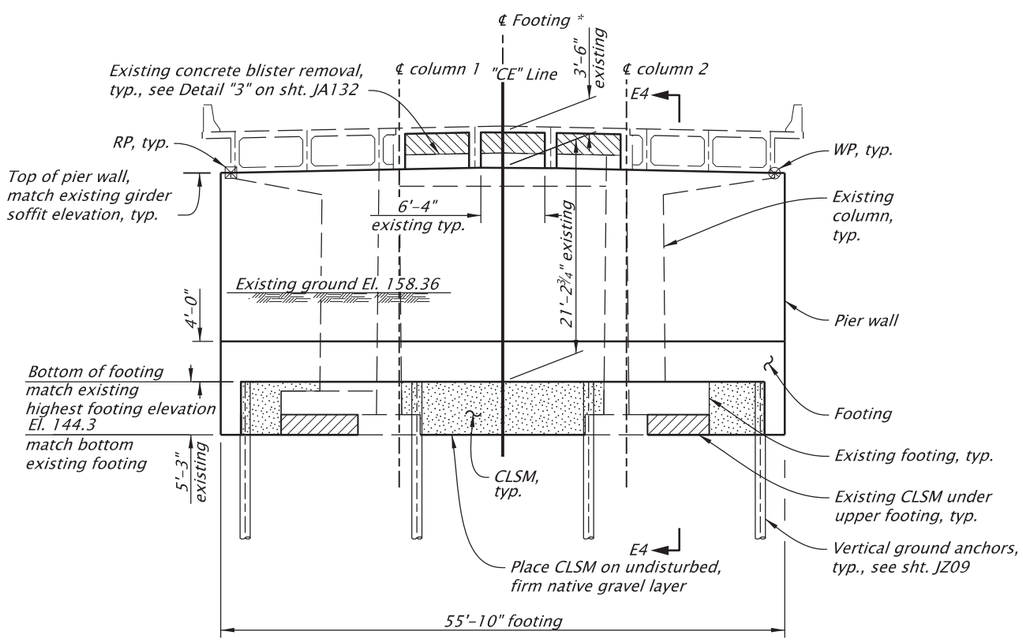

ELEVATION
Scale: 1"=15'

Concrete removal
Existing CLSM
CLSM

BRIDGE JACKING LOADS (kips)			
Location	Unfactored Dead Load	Factored Lane Load	Conceptual System Type
Span 27	730	113	Self supported
Span 28	730	113	Self supported

NOTES:
1. Dead load represents the total unfactored bent reaction.
2. Live load represents factored, controlling single HL-93 or Permit Truck rection, adjusted for dynamic load allowance, and a multiple presence factor of 1.0.
3. Contractor is responsible for determining all construction loading including, materials, equipment and live loading.

NOTES:
1. See sht. JA26 for foundation details.
2. See sht. JA110 for footing details.
3. See sht. JA111 - JA112 for pier wall details.
4. * ℄ Footing defined as centerline of superstructure using WP and RP as shown.
5. Field verify all dimensions and elevations before submitting Working Drawings and prior to ordering or fabricating any materials. See sht. J02 for more details.

For accompanied by drawings, see sht. JA01

SCALE WARNING
IF THIS SCALE LINE DOES NOT MEASURE ONE INCH, THEN DRAWING IS NOT TO SCALE

STRUCTURE NO. 00123K
BDS DWG NO. 113853
CALC. BOOK 7997
HWY: 030
M.P.: 25.88
COUNTY Marion
DATE 2/26

REGISTERED PROFESSIONAL ENGINEER 099941PE OREGON JULY 21, 2022 BERNARD ANTHONY FRANKL
Digitally Signed 2026.02.12 11:40:47-08'00'
EXPIRES: 12/31/2027

FINAL ELECTRONIC DOCUMENT AVAILABLE UPON REQUEST

DOWL
3500 Chad Drive, Suite 200
Eugene, Oregon 97408
541-683-6090
WWW.DOWL.COM

WILLAMETTE RIVER, HWY 30 EB (CENTER ST)

OR22: CENTER ST BRIDGE (PHASE 1) PROJECT
WILLAMINA - SALEM HIGHWAY
MARION & POLK COUNTIES

Designer: Bernard A. Frankl, PhD, PE
Reviewer: Bob Goodrich, PE
Drafter: Jake Williams
Checker: Tanner Torkelson, PE

BENT 28 PLAN AND ELEVATION
SHEET NO. JA109

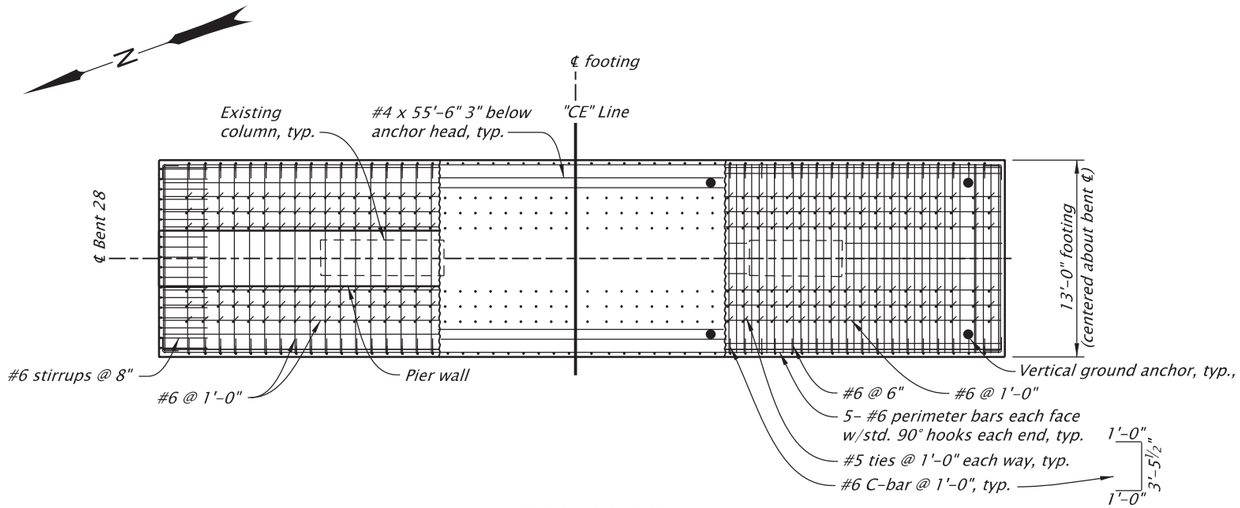

TOP MAT REINFORCING

REINFORCING AT GROUND ANCHOR HEADS

BOTTOM MAT REINFORCING

PLAN

Scale: 1"=10'

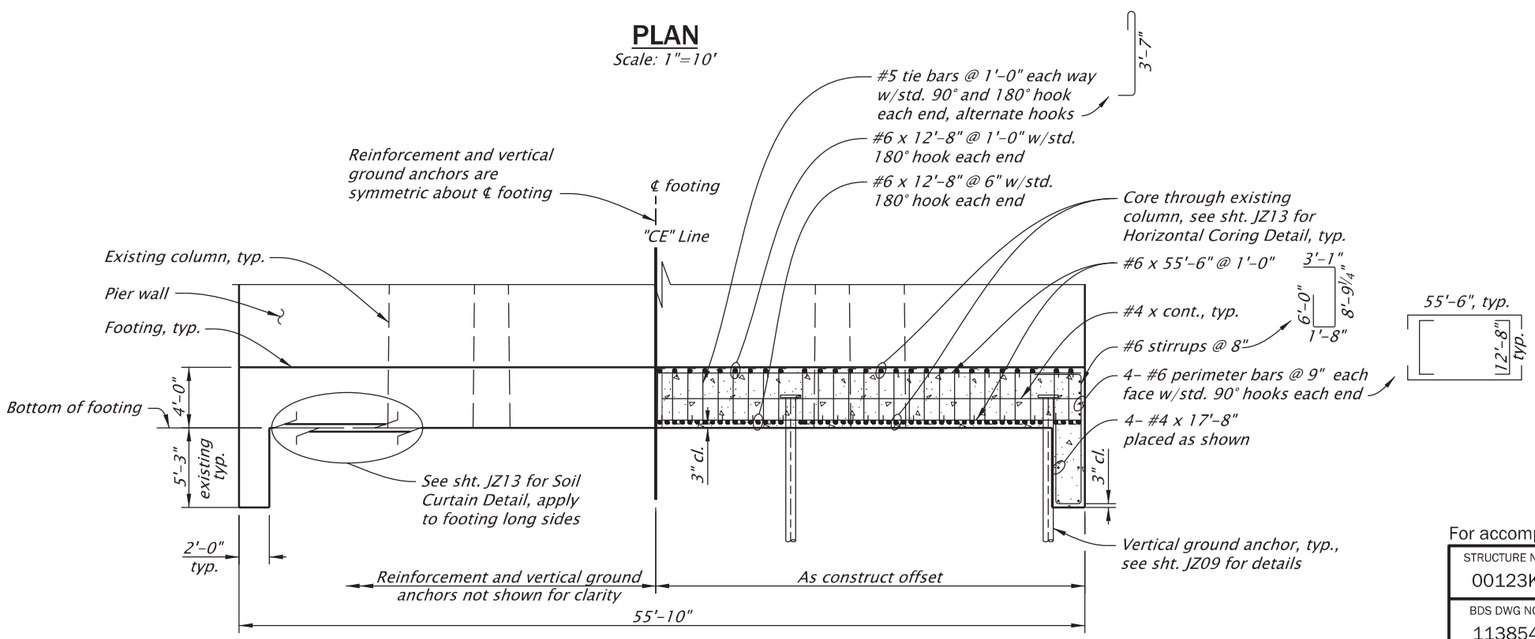

ELEVATION

Scale: 1"=10'

NOTES:
1. Existing footing and CLSM not shown in elevation view for clarity.
2. Shift footing bars to maintain 2" clear to vertical ground anchors.
3. Two-bar bundles allowed to avoid vertical ground anchors or existing vertical column steel.
4. One splice is permitted per reinforcing bar.
5. Provide footing reinforcement according to ASTM Specifications A706 Grade 80.
6. See Bent Plan and Elevation sheet for construction control working points to establish bent centerline.
7. Field verify all dimensions and elevations before submitting Working Drawings and prior to ordering or fabricating any materials. See sht. J02 for more details.

For accompanied by drawings, see sht. JA01

STRUCTURE NO.	00123K
BDS DWG NO.	113854
CALC. BOOK	7997
HWY: 030 M.P.: 25.88	
COUNTY	Marion
DATE	2/26

SCALE WARNING
IF THIS SCALE LINE DOES NOT MEASURE ONE INCH, THEN DRAWING IS NOT TO SCALE

REGISTERED PROFESSIONAL ENGINEER 099941PE OREGON JULY 21, 2022 BERNARD ANTHONY FRANKL
Digitally Signed 2026.02.12 11:41:04-08'00'
EXPIRES: 12/31/2027

FINAL ELECTRONIC DOCUMENT AVAILABLE UPON REQUEST

DOWL
3500 Chad Drive, Suite 200
Eugene, Oregon 97408
541-683-6090
WWW.DOWL.COM

WILLAMETTE RIVER, HWY 30 EB (CENTER ST)

OR22: CENTER ST BRIDGE (PHASE 1) PROJECT
WILLAMINA - SALEM HIGHWAY
MARION & POLK COUNTIES

Designer: Bernard A. Frankl, PhD, PE
Reviewer: Bob Goodrich, PE
Drafter: Jake Williams
Checker: Nasario Lopez-Francisco, PE

BENT 28 FOOTING DETAILS

SHEET NO. JA110

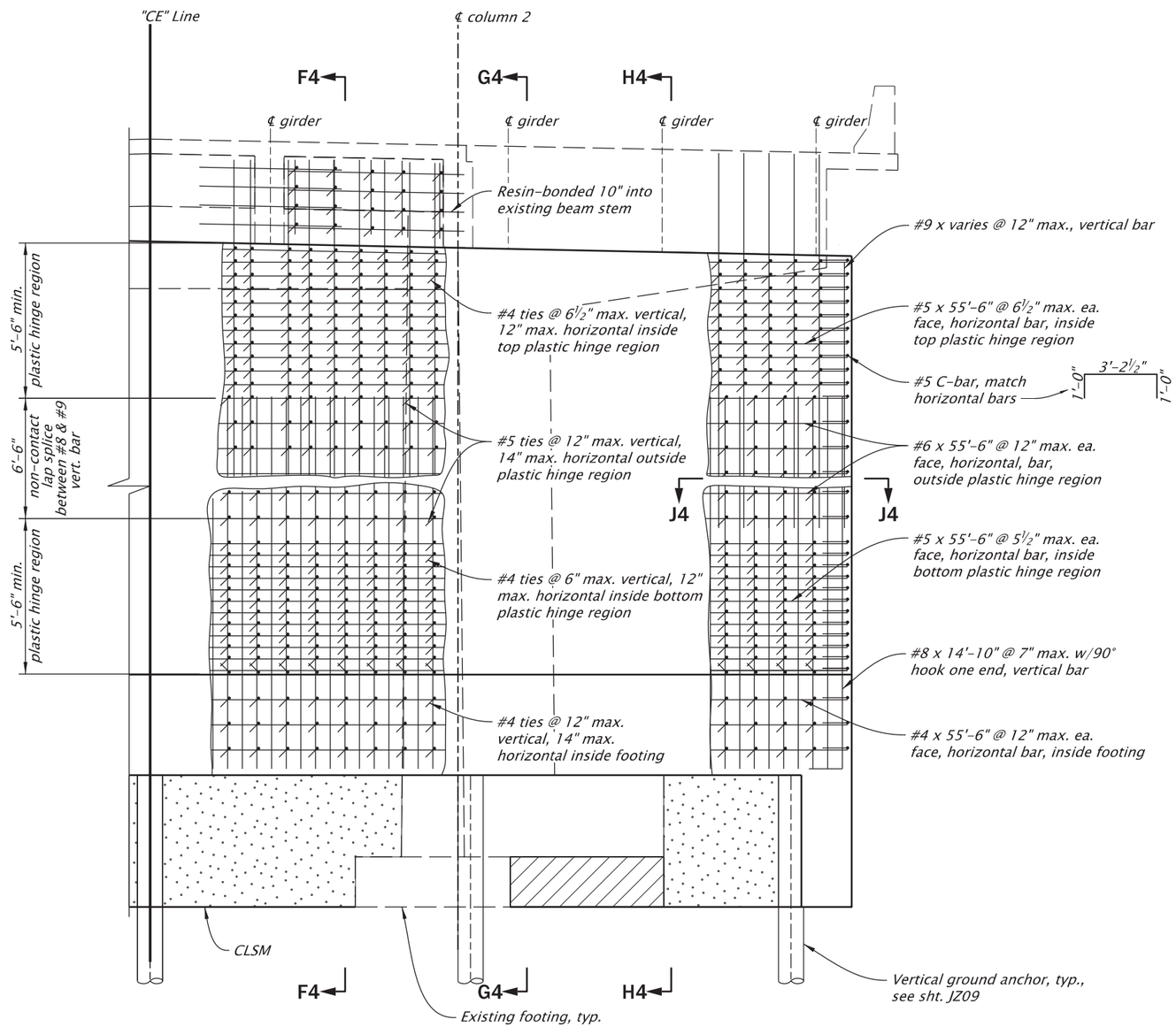

ELEVATION

Scale: 3/16"=1'-0"

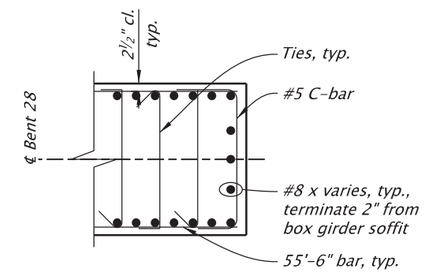

SECTION J4-J4

Scale: 1/4"=1'-0"

NOTES:

1. *See sht. JA109 for Pier wall geometry.*
2. *See sht. JA112 for Section F4-F4, G4-G4, and H4-H4.*
3. *See Bent Plan and Elevation sheet for construction control working points to establish bent centerline.*
4. *Field verify all dimensions and elevations prior to submitting Working Drawings and prior to ordering to fabricating any materials. See sht. J02 for more details.*

SCALE WARNING

IF THIS SCALE LINE DOES NOT MEASURE ONE INCH, THEN DRAWING IS NOT TO SCALE

For accompanied by drawings, see sht. JA01

STRUCTURE NO.	00123K
BDS DWG NO.	113855
CALC. BOOK	7997
HWY: 030 M.P.: 25.88	
COUNTY	Marion
DATE	2/26

REGISTERED PROFESSIONAL ENGINEER 099941PE OREGON JULY 21, 2022 BERNARD ANTHONY FRANKL

Digitally Signed 2026.02.12 11:41:21-08'00'

EXPIRES: 12/31/2027

FINAL ELECTRONIC DOCUMENT AVAILABLE UPON REQUEST

DOWL
3500 Chad Drive, Suite 200
Eugene, Oregon 97408
541-683-6090
WWW.DOWL.COM

WILLAMETTE RIVER, HWY 30 EB (CENTER ST)

OR22: CENTER ST BRIDGE (PHASE 1) PROJECT
WILLAMINA - SALEM HIGHWAY
MARION & POLK COUNTIES

Designer: Bernard A. Frankl, PhD, PE
Reviewer: Bob Goodrich, PE
Drafter: Jake Williams
Checker: Tanner Torkelson, PE

BENT 28 PIER WALL DETAILS - 1

SHEET NO. JA111

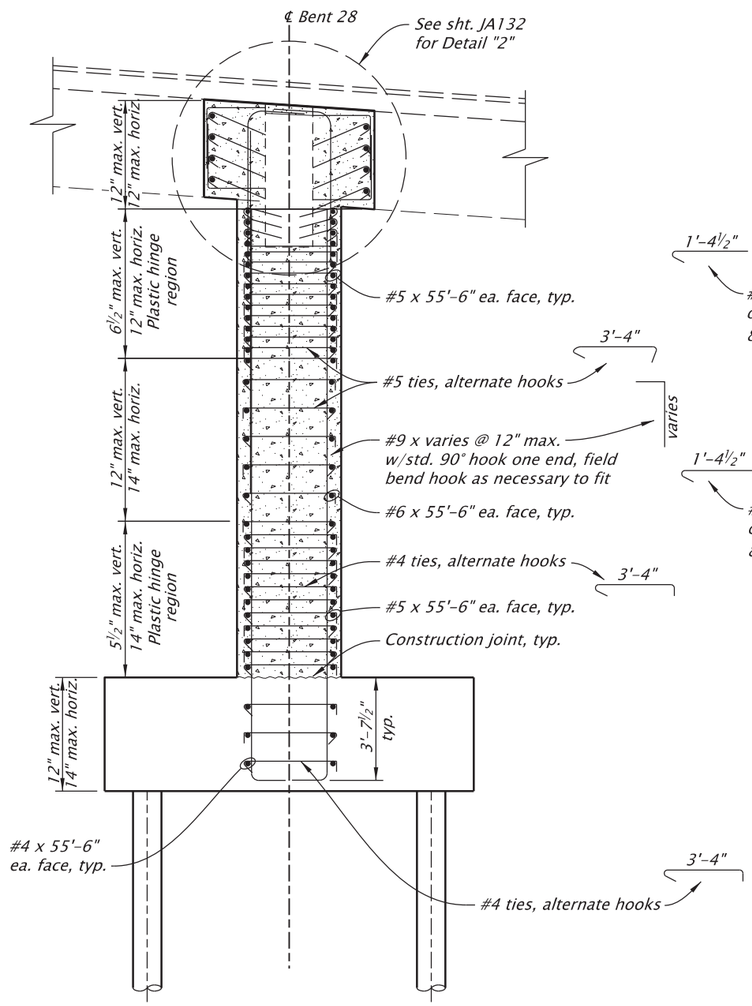

SECTION F4-F4

Scale: 3/16"=1'-0"

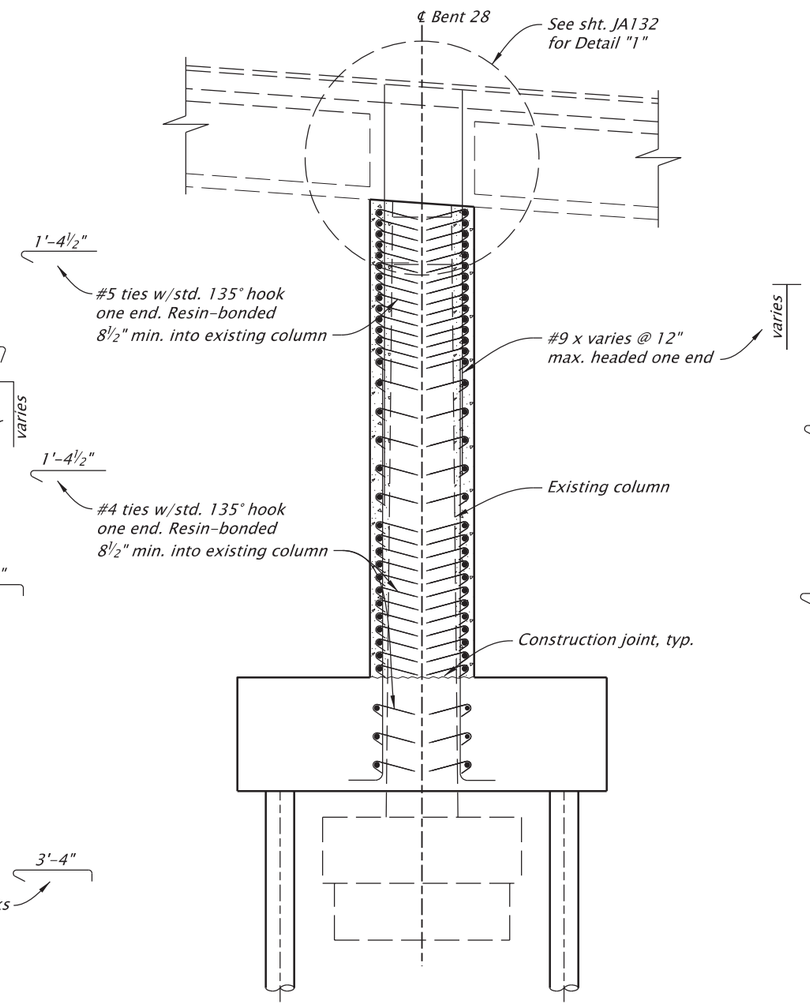

SECTION G4-G4

Scale: 3/16"=1'-0"

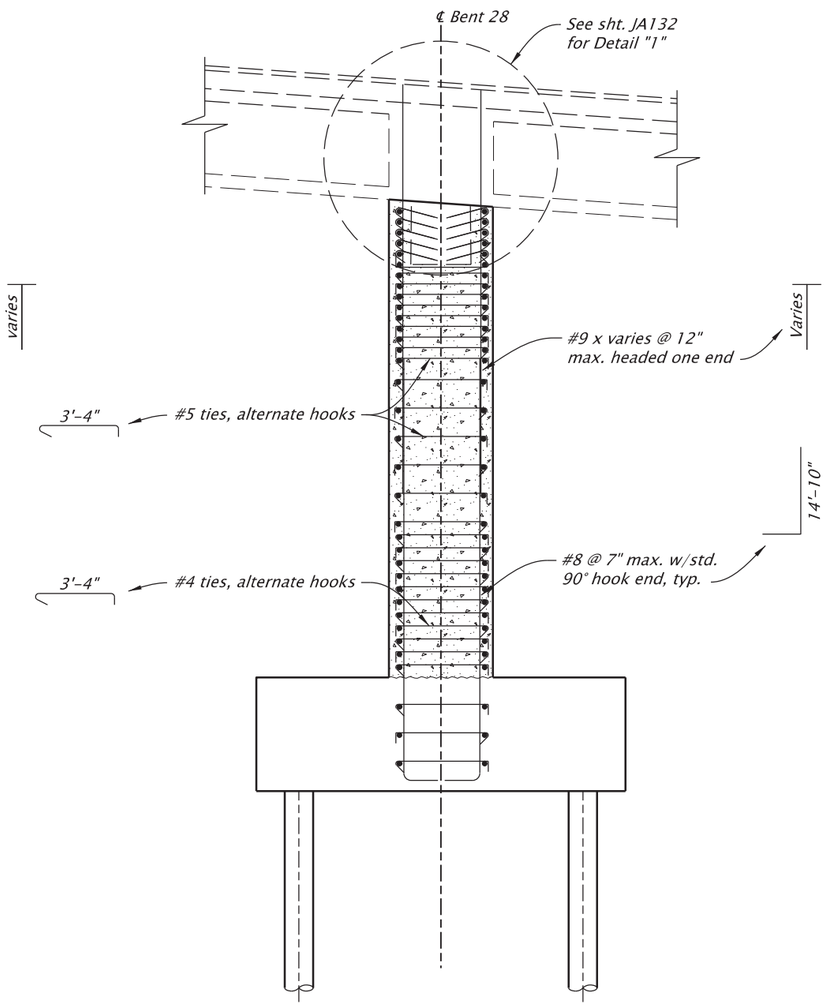

SECTION H4-H4

Scale: 3/16"=1'-0"

For accompanied by drawings, see sht. JA01

NOTES:

1. *See sht. JA111 for Sections F4-F4, G4-G4, and H4-H4 location.*
2. *See Bent Plan and Elevation sheet for construction control working points to establish bent centerline.*
3. *Field verify all dimensions and elevations prior to submitting Working Drawings and prior to ordering to fabricating any materials. See sht. J02 for more details.*

SCALE WARNING

IF THIS SCALE LINE DOES NOT MEASURE ONE INCH, THEN DRAWING IS NOT TO SCALE

STRUCTURE NO.	00123K
BDS DWG NO.	113856
CALC. BOOK	7997
HWY: 030 M.P.: 25.88	
COUNTY	Marion
DATE	2/26

REGISTERED PROFESSIONAL ENGINEER 099941PE OREGON JULY 21, 2022 BERNARD ANTHONY FRANKL

Digitally Signed 2026.02.12 11:41:37-08'00'

EXPIRES: 12/31/2027

FINAL ELECTRONIC DOCUMENT AVAILABLE UPON REQUEST

DOWL
3500 Chad Drive, Suite 200
Eugene, Oregon 97408
541-683-6090
WWW.DOWL.COM

WILLAMETTE RIVER, HWY 30 EB (CENTER ST)

OR22: CENTER ST BRIDGE (PHASE 1) PROJECT
WILLAMINA - SALEM HIGHWAY
MARION & POLK COUNTIES

Designer: Bernard A. Frankl, PhD, PE
Reviewer: Bob Goodrich, PE
Drafter: Jake Williams
Checker: Tanner Torkelson, PE

BENT 28 PIER WALL DETAILS - 2

SHEET NO. JA112

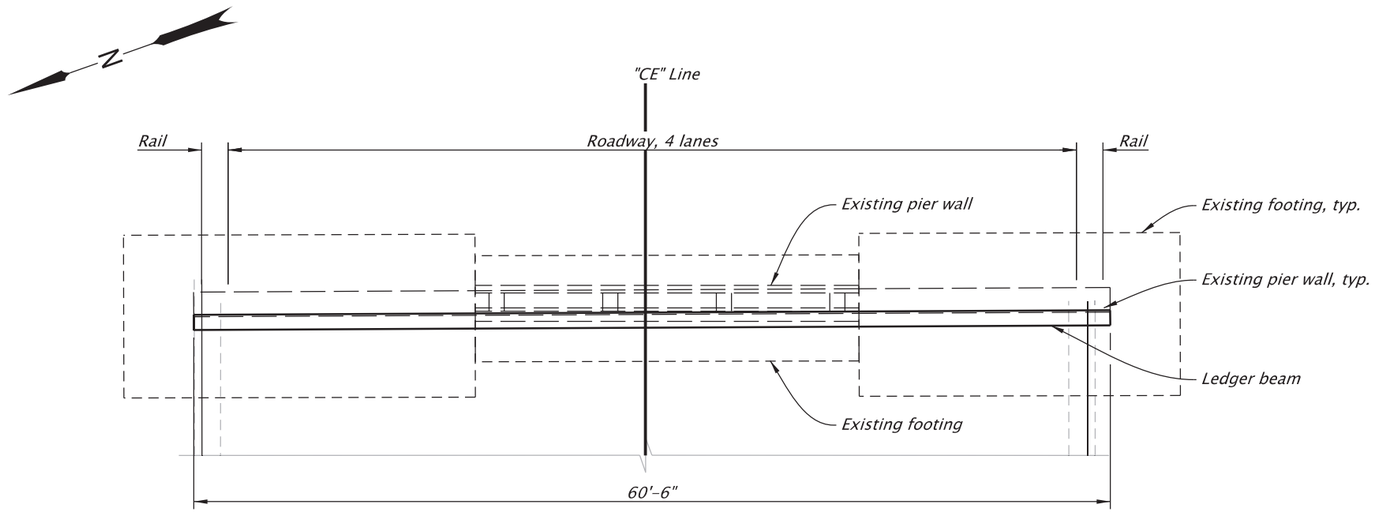

PLAN
Scale: 1"=10'

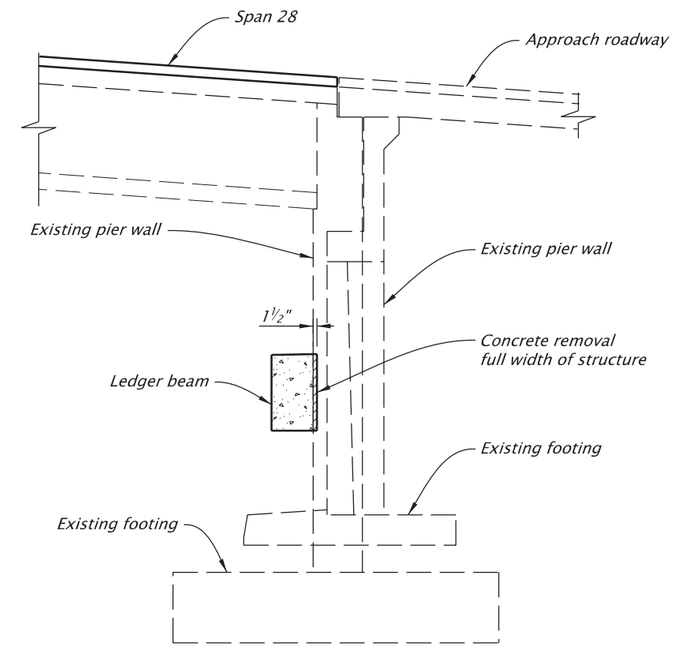

SECTION K4-K4
Scale: 1"=5'

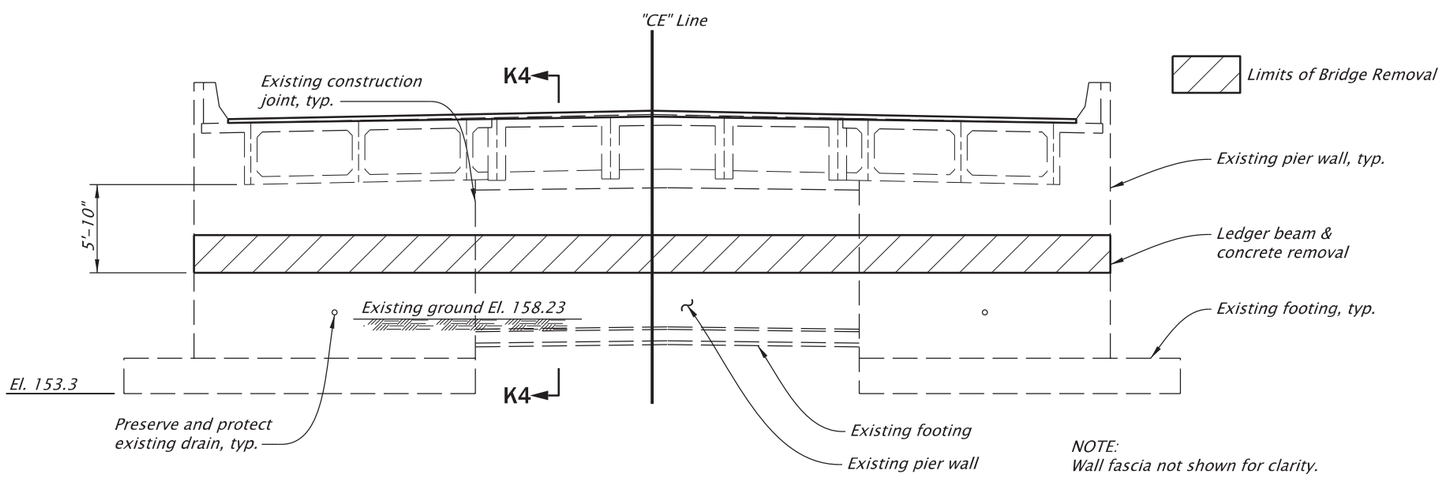

ELEVATION
Scale: 1"=10'

NOTE:
Wall fascia not shown for clarity.

NOTES:
1. See sht. JA26 for foundation details.
2. See shts. JA28 –JA31 for joint limits and details.
3. Field verify all dimensions and elevations prior to submitting Working Drawings and prior to ordering or fabricating any materials. See sht. J02 for more details.

SCALE WARNING
IF THIS SCALE LINE DOES NOT MEASURE ONE INCH, THEN DRAWING IS NOT TO SCALE

For accompanied by drawings, see sht. JA01

STRUCTURE NO.	00123K
BDS DWG NO.	113857
CALC. BOOK	7997
HWY: 030 M.P.: 25.88	
COUNTY	Marion
DATE	6/26

REGISTERED PROFESSIONAL ENGINEER 92505PE
Digitally Signed 2026.06.11 08:51:57-07'00'
OREGON JANUARY 14, 2025 TANNER TORKELSON
EXPIRES: 06/30/2028
FINAL ELECTRONIC DOCUMENT AVAILABLE UPON REQUEST

DOWL
3500 Chad Drive, Suite 200
Eugene, Oregon 97408
541-683-6090
WWW.DOWL.COM

WILLAMETTE RIVER, HWY 30 EB (CENTER ST)

OR22: CENTER ST BRIDGE (PHASE 1) PROJECT
WILLAMINA - SALEM HIGHWAY
MARION & POLK COUNTIES

Designer: Tanner Torkelson, PE
Reviewer: Bob Goodrich, PE
Drafter: Jake Williams
Checker: Nasario Lopez-Francisco, PE

BENT 29 PLAN AND ELEVATION
SHEET NO. JA113

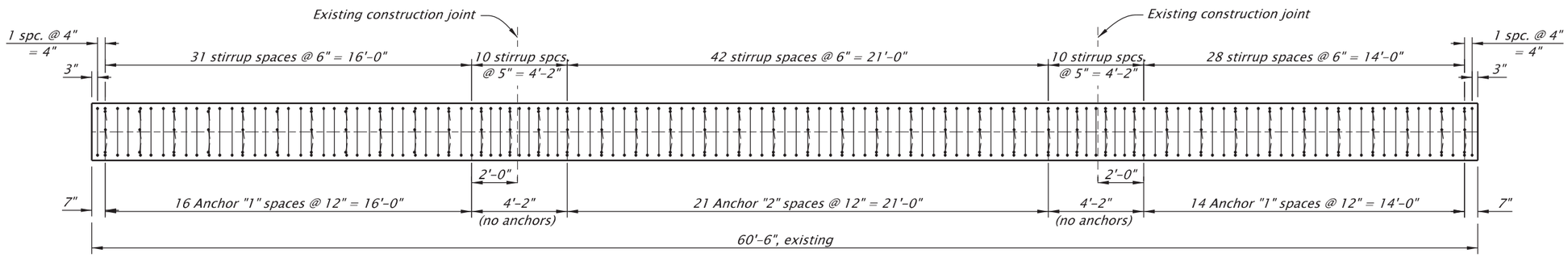

NOTE:
20- #8 x cont. not shown for clarity.

LEDGER BEAM ELEVATION

Scale: 3/16"=1'-0"

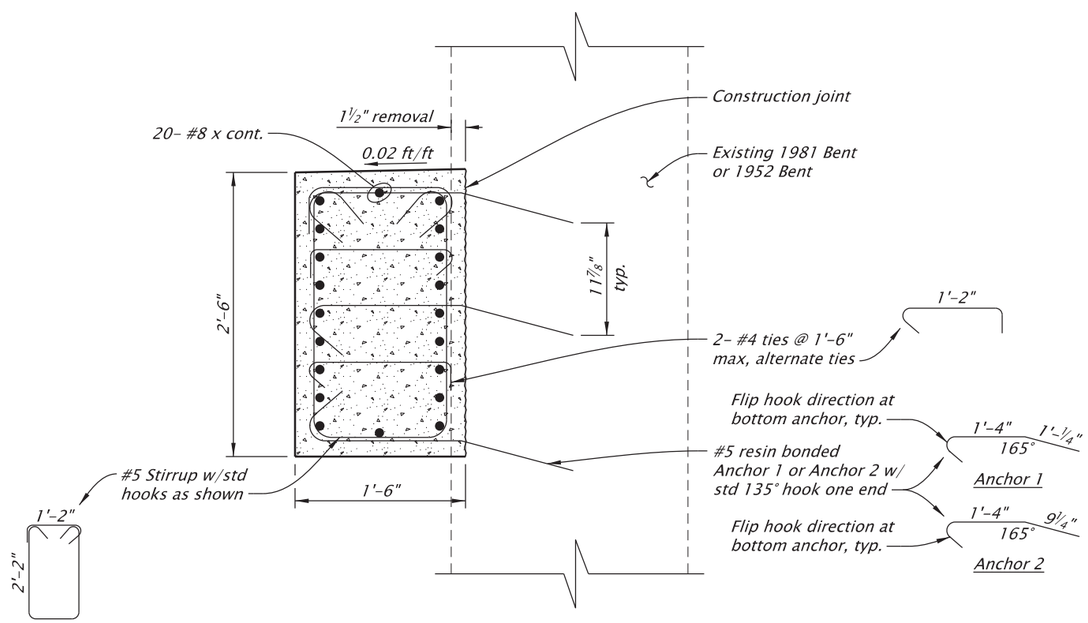

LEDGER BEAM SECTION

Scale: 3/4"=1'-0"

NOTES:
Field verify all dimensions and elevations prior to submitting Working Drawings and prior to ordering or fabricating any materials. See sht. J02 for more details.

For accompanied by drawings, see sht. JA01

STRUCTURE NO.	00123K
BDS DWG NO.	113858
CALC. BOOK	7997
HWY: 030	M.P.: 25.88
COUNTY	Marion
DATE	6/26

SCALE WARNING
IF THIS SCALE LINE DOES NOT MEASURE ONE INCH, THEN DRAWING IS NOT TO SCALE

REGISTERED PROFESSIONAL ENGINEER 92505PE
Digitally Signed 2026.06.11 08:36:22-07'00'
OREGON JANUARY 14, 2025 TANNER TORKELSON
EXPIRES: 06/30/2028

FINAL ELECTRONIC DOCUMENT AVAILABLE UPON REQUEST

DOWL
3500 Chad Drive, Suite 200
Eugene, Oregon 97408
541-683-6090
WWW.DOWL.COM

OREGON DEPARTMENT OF TRANSPORTATION

WILLAMETTE RIVER, HWY 30 EB (CENTER ST)

OR22: CENTER ST BRIDGE (PHASE 1) PROJECT
WILLAMINA - SALEM HIGHWAY
MARION & POLK COUNTIES

Designer: Tanner Torkelson, PE
Reviewer: Bob Goodrich, PE
Drafter: Jake Williams
Checker: Nasario Lopez-Francisco, PE

BENT 29 DETAILS

SHEET NO. JA114

Bearing Schedule													
Bent	No. Reqd.	Type	Design Load Demands in kips per Bearing (Unfactored)			Initial Offset in inches	Calculated Movements in inches (Unfactored)				Movement per 10°F Temp. Change in inches	Bearing Rotations radians	
			Vertical		EQ		68° Temp. Rise	62° Temp. Fall	Deck Pour and Shrinkage	EQ		DL+SH	LL+IM
			DL	LL+IM									
15 Bk	7	Expansion	93	121	N/A	0	0.47	0.43	N/A	N/A	0.07	N/A	N/A
15 Ah	7	Isolation	130	250	*	0	2.42	2.04	N/A	*	0.33	N/A	5.923x10-3
19 Bk	7	Isolation	130	250	*	0	2.42	2.04	N/A	*	0.33	N/A	5.923x10-3
22	3	Isolation	1405	280	*	0	0.12	0.11	N/A	*	0.02	N/A	0.014
23	3	Isolation	1405	280	*	0	0.12	0.11	N/A	*	0.02	N/A	0.014

NOTE:
*See Design EQ Demand per Bearing Table for values.

Design EQ Demands per Bearing (Unfactored)							
Bent	Load in kips per Bearing					Calculated Seismic Movements in inches	
	LL Vertical	Loading Direction	Vertical	Longitudinal	Lateral	Longitudinal	Lateral
15 Ah	29	Longitudinal	59	64	11	3.82	0.05
		Lateral	131	2	77	0.61	4.56
19 Bk	26	Longitudinal	55	92	10	5.22	0.08
		Lateral	145	4	48	0.21	1.63
22	49	Longitudinal	517	20	1	1.65	0.10
		Lateral	418	1	13	0.04	0.57
23	50	Longitudinal	512	18	1	1.65	0.10
		Lateral	460	1	13	0.04	0.54

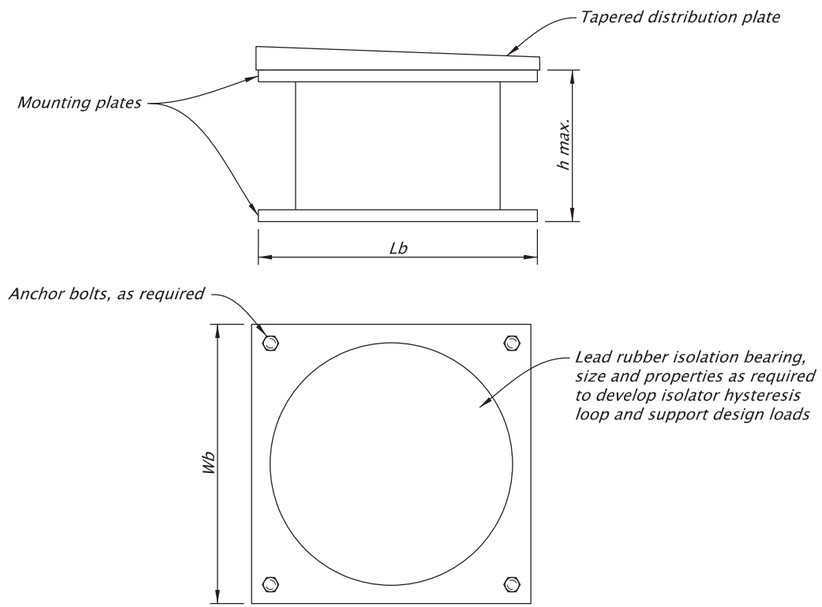

ISOLATION BEARING DIMENSIONS

Scale: 3/4"=1'-0"

Bearing and Tapered Distribution Plate Dimensions						
Bent	t_{BK}	t_{AH}	L	Lb	Wb	h Max.
15 Ah	1¼"	1¼"+**	34"	34"	34"	20"
19 Bk	1¼"+**	1¼"	34"	34"	34"	20"
22	Not Required			34"	34"	13.7"
23	Not Required			34"	34"	13.7"

**Field verify as-built girder bottom soffit vertical grade change from level prior to fabricating tapered distribution plate.

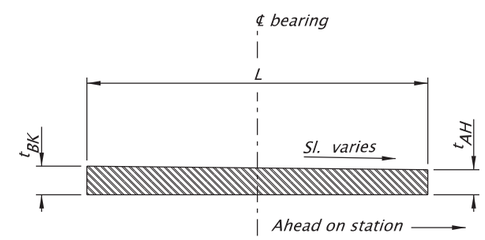

TAPERED DISTRIBUTION PLATE

Scale: 3/4"=1'-0"

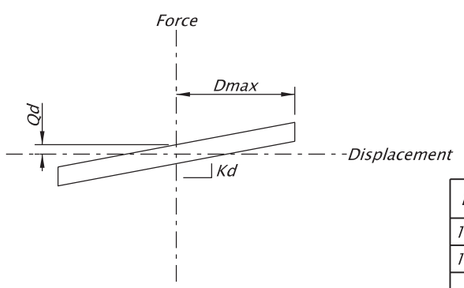

Bent	Dmax (inches)	Qd (kips)	Kd min. (kips/inch)	Kd max. (kips/inch)
15 Ah	6	6	7	9
19 Bk	6	6	7	9
22	3	10	1	6
23	3	10	1	6

ISOLATOR HYSTERESIS LOOP

No Scale

BEARING NOTES:

Furnish unfilled or dimpled unlubricated sheet PTFE for expansion bearings. Vulcanize bond PTFE steel backing plate to steel reinforced elastomeric pads.

Coat sole plates, mounting plates, and tapered distribution plates after fabrication. Use a Shop Coating 3-Coat System from the ODOT QPL. Mask shop coating within 2" of the field weld to the girder bottom flange. After welds are accepted, coat masked areas and field welds with a Maintenance Coating 3-Coat System from the ODOT QPL.

Furnish structural steel sole plates, mounting plates, and tapered distribution plates according to ASTM A709, Grade 50 specifications.

Furnish structural steel keeper bars according to ASTM A709 Grade 50 specifications.

Furnish anchor rods for expansion bearings according to ASTM F1554 Grade 105 specifications.

All anchor bolts, washers, and keeper bars shall be hot-dip galvanized after fabrication.

Use a template to accurately locate anchor bolts during concrete pour.

Monitor and control tapered distribution plate during field welding to avoid warping.

Mark tapered distribution plates with "Ahead on station" and a directional arrow.

Design lead rubber isolation bearings according to the AASHTO Guide Specifications for Seismic isolation Design, 4th Edition (2014), the hysteresis loop shown, the Bearing Schedule, the specifications, and the following extreme event load combinations:

DL + LL +/- EQ
DL +/- EQ.

Install lead rubber isolation bearings to be in the neutral position at 52°F under full structure dead load. Use the information in the Bearing Schedule to adjust the bearings.

Furnish steel reinforced elastomeric bearing pads with a 165 psi shear modulus at 73° F.

Provide pre-compressed bearings at Bents 22 and 23. Pre-compression to be released after installation.

For accompanied by drawings, see sht. JA01

NOTE:
Field verify all dimensions and elevations prior to submitting Working Drawings and prior to ordering or fabricating any materials. See sht. J02 for more details.

SCALE WARNING
IF THIS SCALE LINE DOES NOT MEASURE ONE INCH, THEN DRAWING IS NOT TO SCALE

STRUCTURE NO. 00123K
BDS DWG NO. 113859
CALC. BOOK 7997
HWY: 030
M.P.: 25.88
COUNTY Marion
DATE 2/26

REGISTERED PROFESSIONAL ENGINEER 099941PE
Digitally Signed 2026.02.12 11:45:56-08'00'
OREGON JULY 21, 2022
BERNARD ANTHONY FRANKL
EXPIRES: 12/31/2027

FINAL ELECTRONIC DOCUMENT AVAILABLE UPON REQUEST

DOWL
3500 Chad Drive, Suite 200
Eugene, Oregon 97408
541-683-6090
WWW.DOWL.COM

WILLAMETTE RIVER, HWY 30 EB (CENTER ST)

OR22: CENTER ST BRIDGE (PHASE 1) PROJECT
WILLAMINA - SALEM HIGHWAY
MARION & POLK COUNTIES

Designer: Bernard A. Frankl, PhD, PE
Reviewer: Bob Goodrich, PE
Drafter: Jake Williams
Checker: Michael McNulty, PE

BEARING DETAILS - 1

SHEET NO. JA115

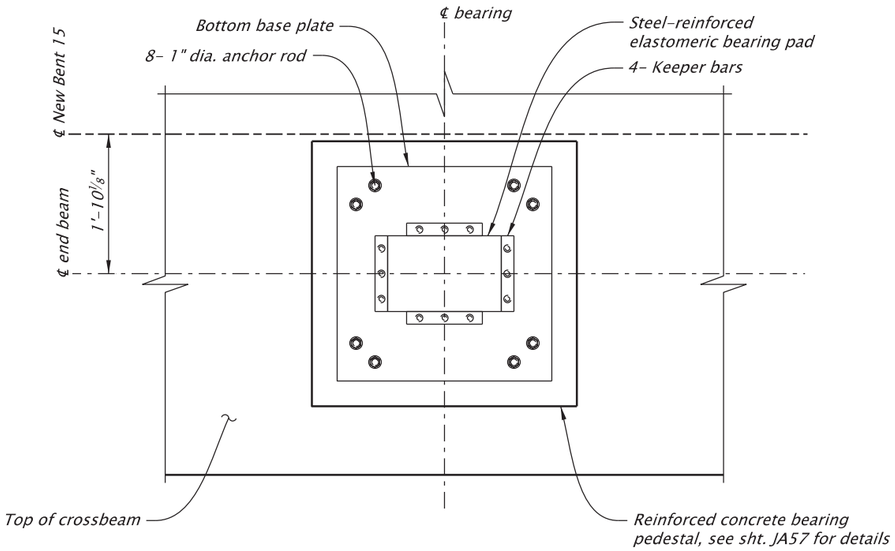

PLAN

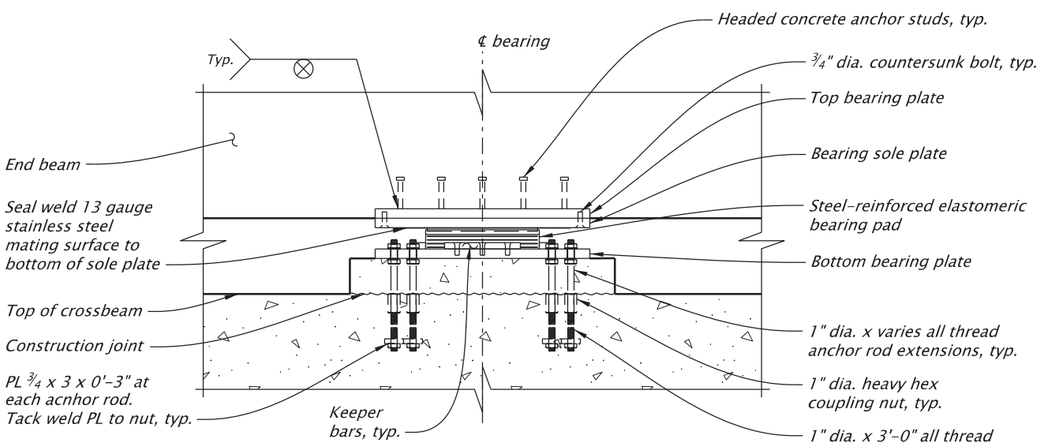

ELEVATION

BENT 15 SPAN 14 BEARING ASSEMBLY

Scale: 1/2"=1'-0"

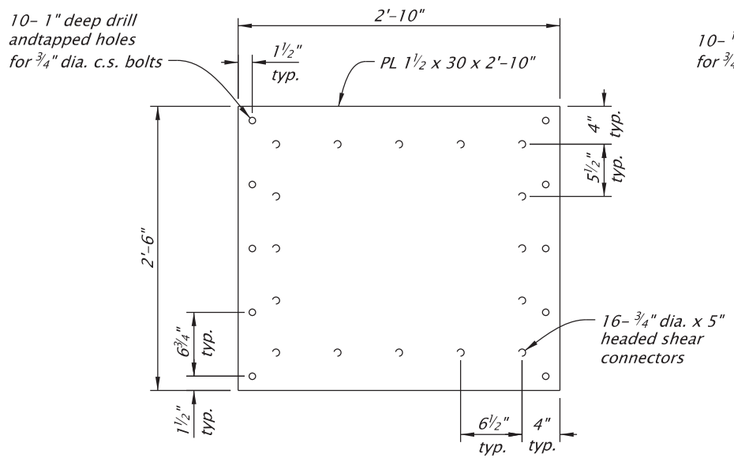

TOP BEARING PLATE (UNDERSIDE SHOWN)

Scale: 3/4"=1'-0"

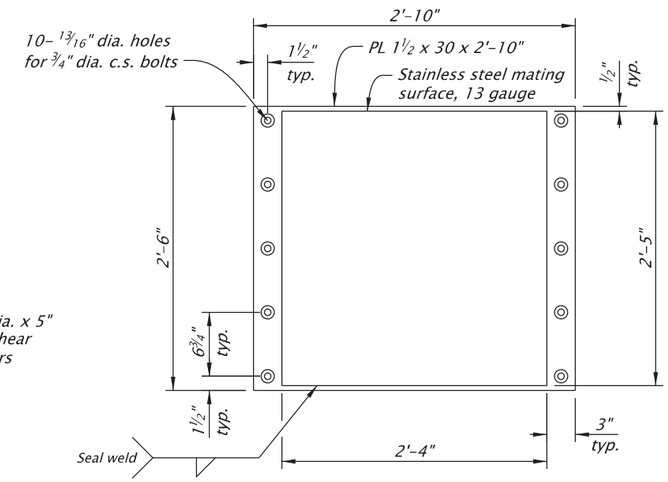

BEARING SOLE PLATE (UNDERSIDE SHOWN)

Scale: 3/4"=1'-0"

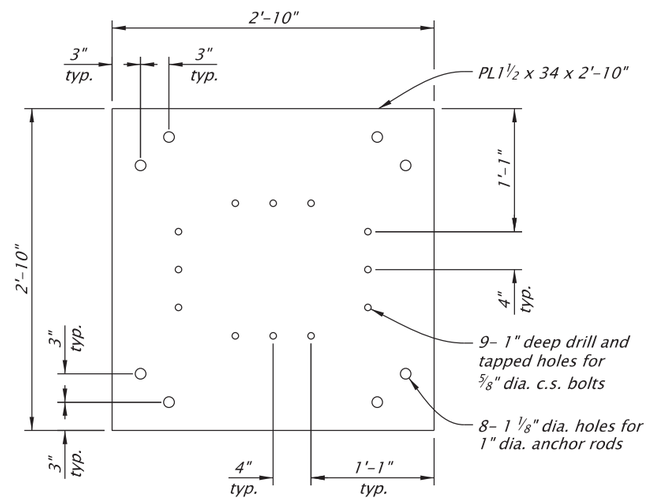

BOTTOM BEARING PLATE

Scale: 3/4"=1'-0"

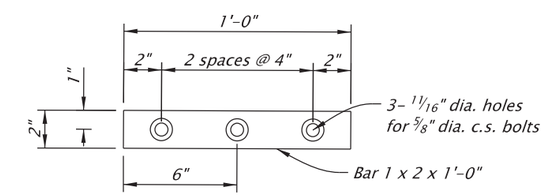

KEEPER BAR DETAIL

Scale: 1 1/2"=1'-0"

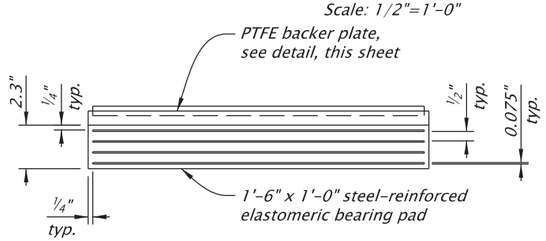

REINFORCED ELASTOMERIC BEARING PAD

Scale: 1 1/2"=1'-0"

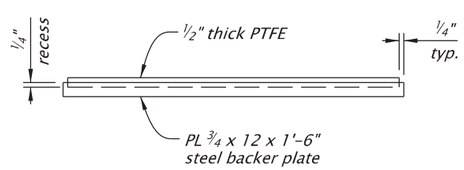

PTFE BACKER PLATE

Scale: 1 1/2"=1'-0"

NOTES:
1. See sht. JA57 for Span 15 bearing centerline location.
2. Field verify all dimensions and elevations before submitting Working Drawings and prior to ordering or fabricating any materials. See sht. J02 for more details.

For accompanied by drawings, see sht. JA01

SCALE WARNING
IF THIS SCALE LINE DOES NOT MEASURE ONE INCH, THEN DRAWING IS NOT TO SCALE

STRUCTURE NO.	00123K
BDS DWG NO.	113860
CALC. BOOK	7997
HWY: 030	M.P.: 25.88
COUNTY	Marion/Polk
DATE	2/26

REGISTERED PROFESSIONAL ENGINEER 85555PE OREGON DEC. 21, 2011 MICHAEL G. McNULTY
Digitally Signed 2026.02.12 12:59:06-08'00'
EXPIRES: 12/31/2026

FINAL ELECTRONIC DOCUMENT AVAILABLE UPON REQUEST

DOWL
3500 Chad Drive, Suite 200
Eugene, Oregon 97408
541-683-6090
WWW.DOWL.COM

WILLAMETTE RIVER, HWY 30 EB (CENTER ST)

OR22: CENTER ST BRIDGE (PHASE 1) PROJECT
WILLAMINA - SALEM HIGHWAY
MARION & POLK COUNTIES

Designer: Mike McNulty, PE
Reviewer: Bob Goodrich, PE
Drafter: Jake Williams
Checker: Eric Bonn, PE

BEARING DETAILS - 2

SHEET NO. JA116

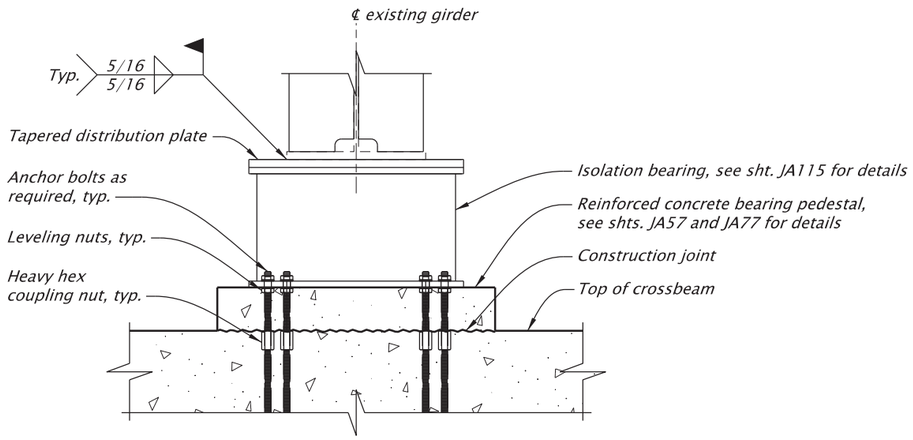

NOTE:
Reinforcing steel cross-frames not shown for clarity.

BENT 15 SPAN 15 BEARING ASSEMBLY SECTION (BENT 19 SPAN 18 SIMILAR)

Scale: 1/2"=1'-0"

NOTE:
Field verify all dimensions and elevations before submitting Working Drawings and prior to ordering or fabricating any materials. See sht. J02 for more details.

For accompanied by drawings, see sht. JA01

STRUCTURE NO.	00123K
BDS DWG NO.	113861
CALC. BOOK	7997
HWY: 030	M.P.: 25.88
COUNTY	Marion/Polk
DATE	2/26

SCALE WARNING
IF THIS SCALE LINE DOES NOT MEASURE ONE INCH, THEN DRAWING IS NOT TO SCALE

REGISTERED PROFESSIONAL ENGINEER
85555PE
Digitally Signed 2026.02.12 12:59:17-08'00'
OREGON
DEC. 21, 2011
MICHAEL G. McNULTY
EXPIRES: 12/31/2026

FINAL ELECTRONIC DOCUMENT AVAILABLE UPON REQUEST

DOWL
3500 Chad Drive, Suite 200
Eugene, Oregon 97408
541-683-6090
WWW.DOWL.COM

OREGON DEPARTMENT OF TRANSPORTATION

WILLAMETTE RIVER, HWY 30 EB (CENTER ST)

OR22: CENTER ST BRIDGE (PHASE 1) PROJECT
WILLAMINA - SALEM HIGHWAY
MARION & POLK COUNTIES

Designer: Mike McNulty, PE
Reviewer: Bob Goodrich, PE
Drafter: Jake Williams
Checker: Eric Bonn, PE

BEARING DETAILS - 3

SHEET NO. JA117

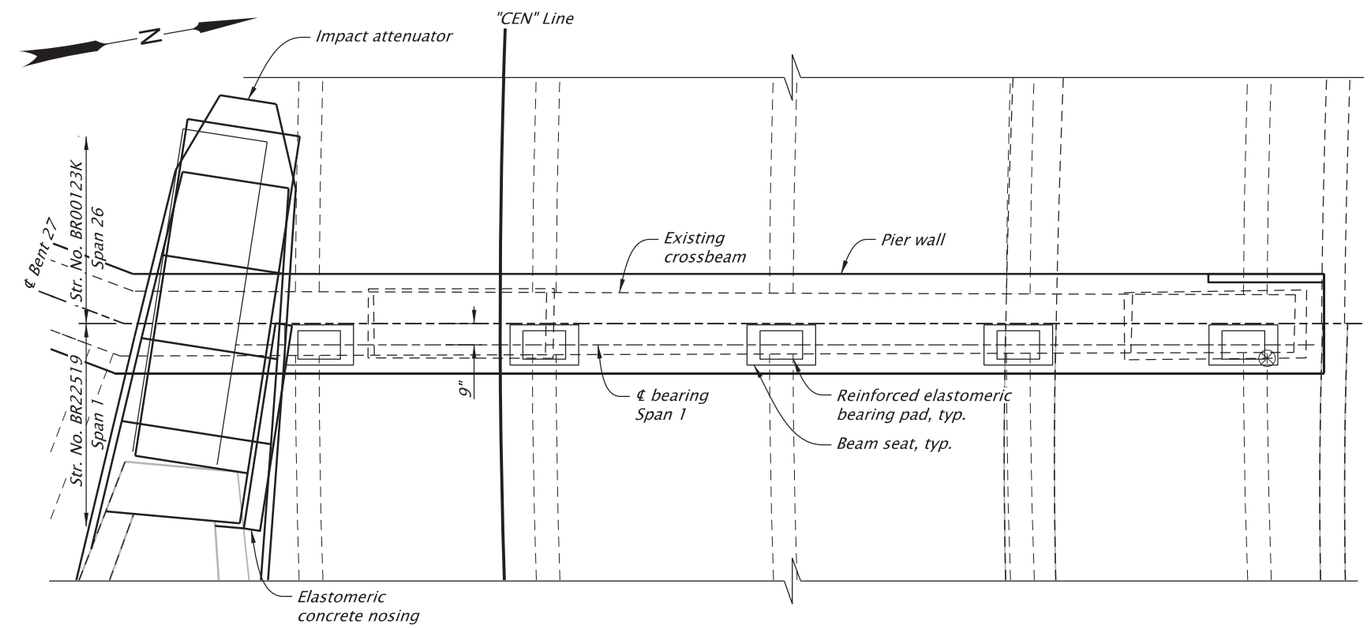

⊗ Construction Control Working Point (WP) is located at edge of box girder soffit on existing column face on Span 1.

PLAN
Scale: 3/16" = 1'-0"

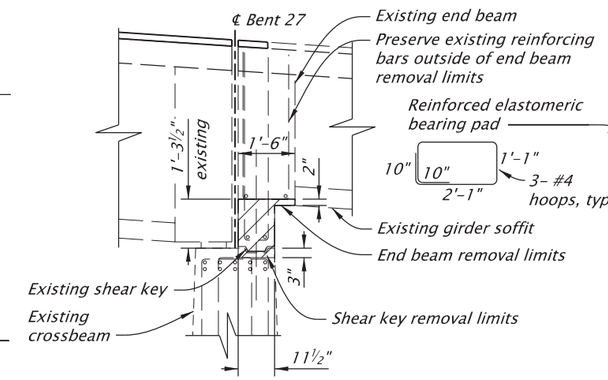

EXISTING SECTION - REMOVAL LIMITS
Scale: 1/4"=1'-0"

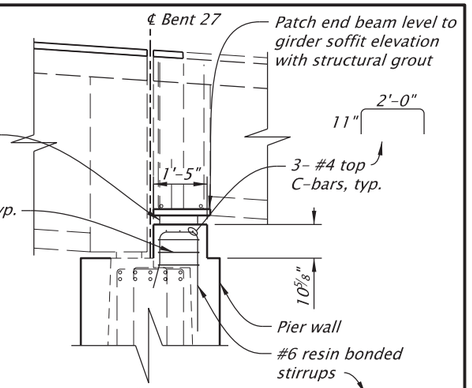

SECTION A-A
Scale: 1/4"=1'-0"

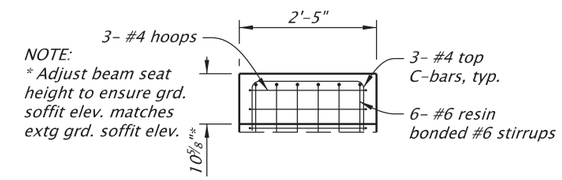

NOTE:
* Adjust beam seat height to ensure grd. soffit elev. matches extg grd. soffit elev.

BEAM SEAT - ELEVATION
Scale: 3/8"=1'-0"

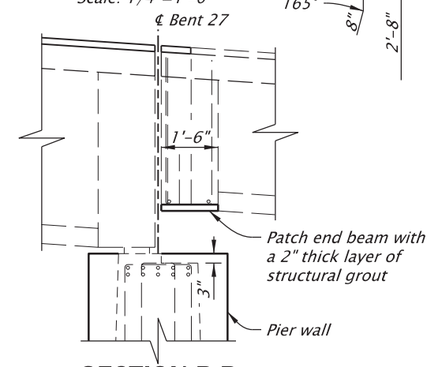

SECTION B-B
Scale: 1/4"=1'-0"

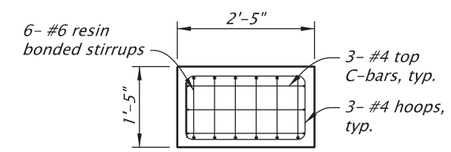

BEAM SEAT - PLAN
Scale: 3/8"=1'-0"

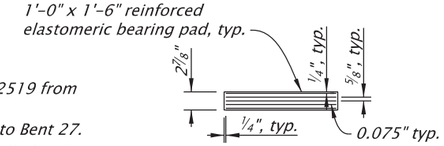

BEARING PAD DETAIL
Scale: 1/2"=1'-0"

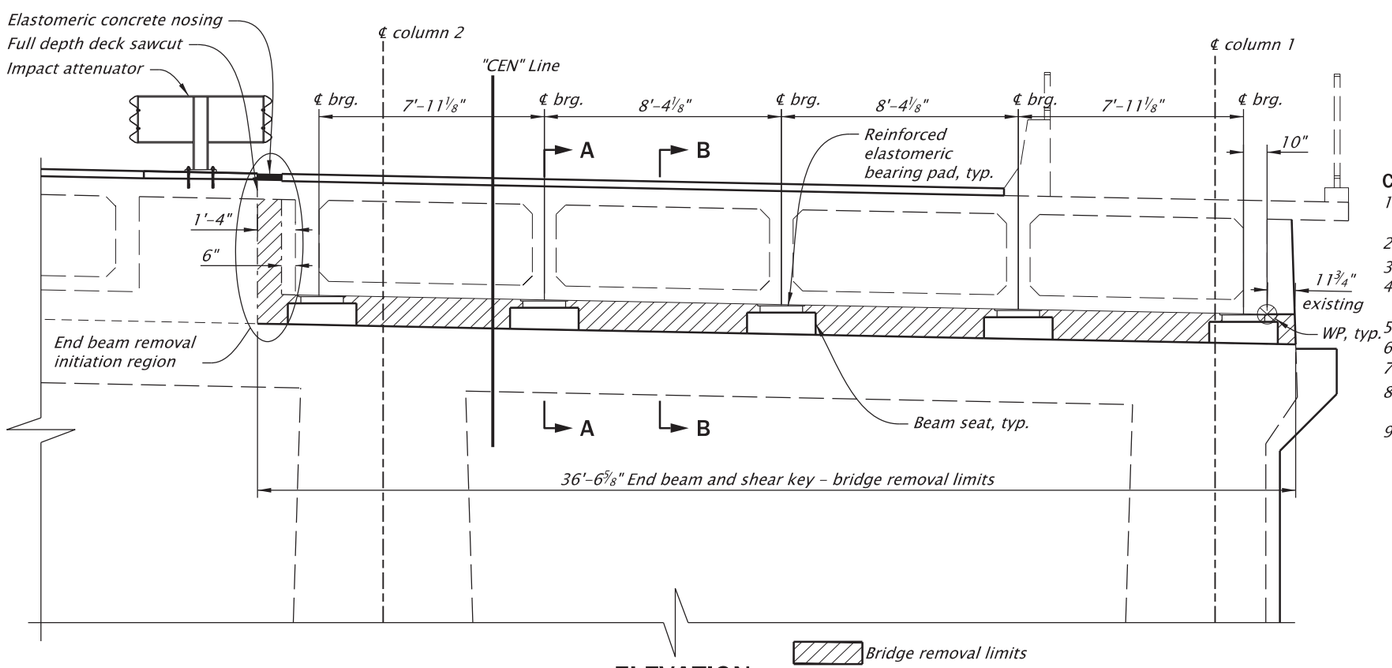

ELEVATION
LOOKING BACK ON STATION
Scale: 3/16" = 1'-0"

CONSTRUCTION SEQUENCE:

1. Sawcut full depth and initiate end beam removal to seperate BR22519 from BR00123k Span 27.
2. Temporarily jack and support Str. No. BR22519 Span 1 adjacent to Bent 27.
3. Remove 11½" width beam seat and shear key on BR22519 to the limits shown.
4. Install beam seat reinforcing bars with pier wall bars. Provide resin-bonded anchors according to Section 00535. Construct pier wall.
5. Construct beam seats. Provide seven days for cure time before loading beam seats.
6. Patch remaining surfaces of end beam and shear key where bridge removal occurred with a 2" thick layer of structural grout.
7. Remove all forms a minimum of 3 days after concrete placement.
8. Place reinforced elastomeric bearing pads on ½" leveling layer of structural grout, and lower bridge on to bearings before the grout has set.
9. Remove temporary support.

For accompanied by drawings, see sht. JA01

NOTES:
1. See sht. JA105 for additional Bent 27 details.
2. See sht. JA134 for impact attenuator details.
3. See Bent Plan and Elevation sheet for construction control working points to establish bent centerlines.
4. Field verify all dimensions and elevations before submitting Working Drawings and prior to ordering or fabricating any materials. See sht. J02 for more details.

SCALE WARNING
IF THIS SCALE LINE DOES NOT MEASURE ONE INCH, THEN DRAWING IS NOT TO SCALE

STRUCTURE NO.	00123K
BDS DWG NO.	113862
CALC. BOOK	7997
HWY: 030 M.P.: 25.88	
COUNTY	Marion/Polk
DATE	1/26

REGISTERED PROFESSIONAL ENGINEER
79997PE
Digitally Signed 2026.01.29 21:24:20-08'00'
OREGON
JULY 14, 2015
FRED M. GOMEZ
EXPIRES: 06-30-2027

DOWL
3500 Chad Drive, Suite 200
Eugene, Oregon 97408
541-683-6090
WWW.DOWL.COM

WILLAMETTE RIVER, HWY 30 EB (CENTER ST)

OR22: CENTER ST BRIDGE (PHASE 1) PROJECT
WILLAMINA - SALEM HIGHWAY
MARION & POLK COUNTIES

Designer: Fred M. Gomez, PE
Reviewer: Bob Goodrich, PE
Drafter: Jake Williams
Checker: Nasario Lopez-Francisco, PE

BEARING DETAILS - 4

SHEET NO. JA118

FINAL ELECTRONIC DOCUMENT AVAILABLE UPON REQUEST

NOTES:
1. Cross-frame not shown for clarity.
2. Longitudinal restraints located under girders, see sht. JA120.

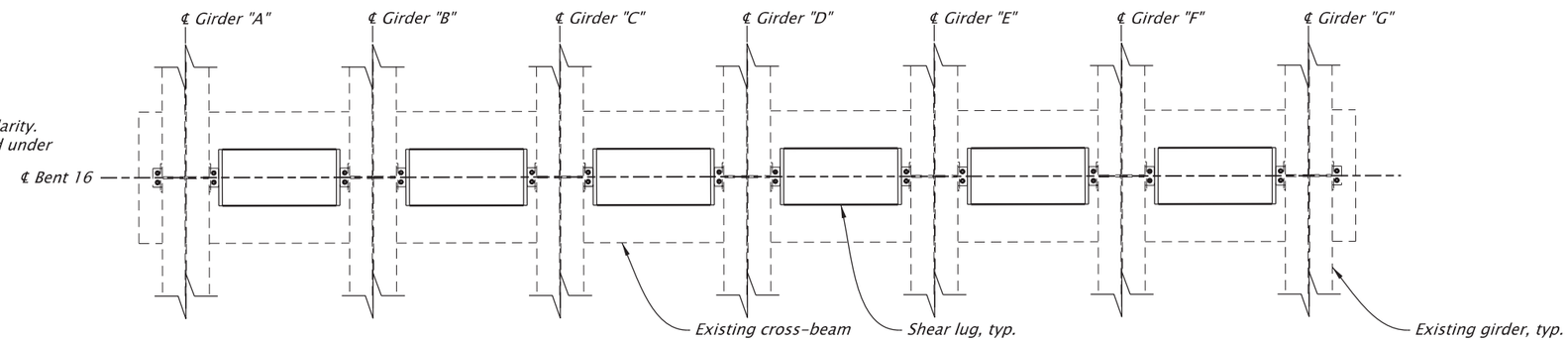

BENT 16 SEISMIC RESTRAINER PLAN (BENT 17 & 18 SIMILAR)

Scale: 1/8"=1'-0"

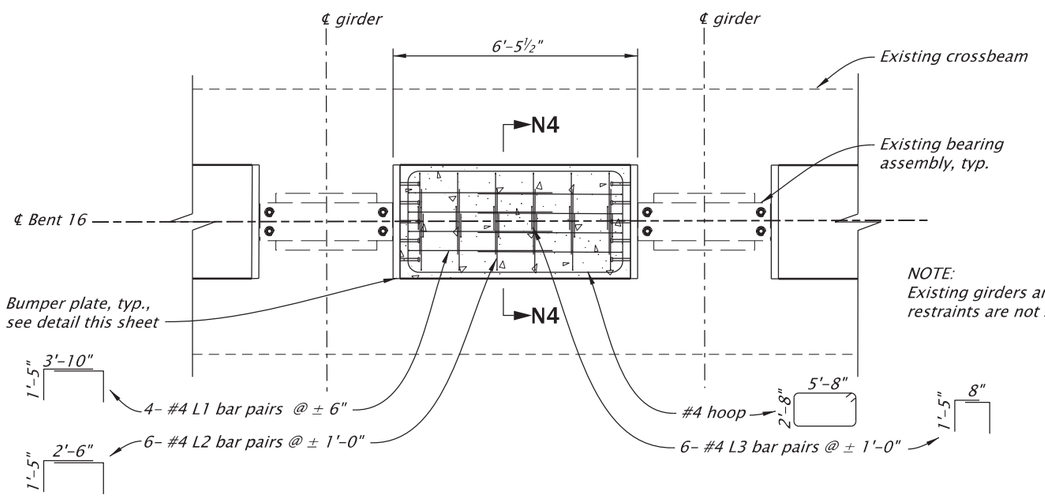

NOTE:
Existing girders and longitudinal restraints are not shown for clarity.

SHEAR LUG PLAN

Scale: 1/4"=1'-0"

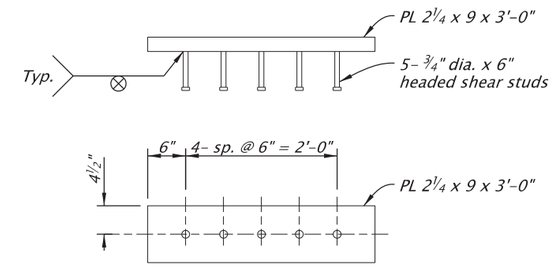

BUMPER PLATE DETAIL

Scale: 1/2"=1'-0"

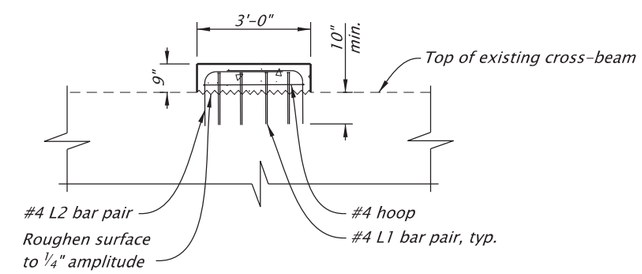

SECTION N4-N4

Scale: 1/4"=1'-0"

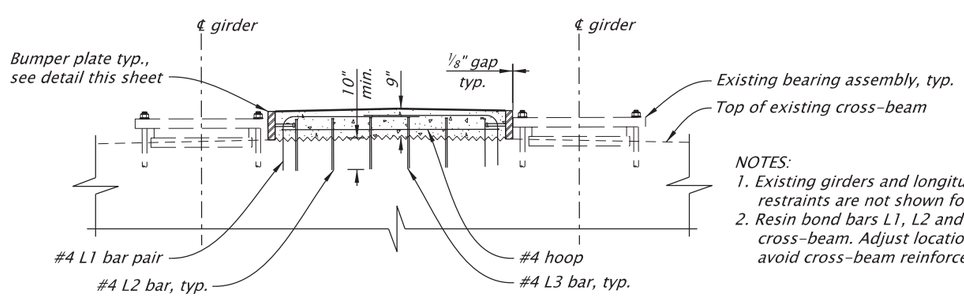

NOTES:
1. Existing girders and longitudinal restraints are not shown for clarity.
2. Resin bond bars L1, L2 and L3 into cross-beam. Adjust locations to avoid cross-beam reinforcement.

SHEAR LUG ELEVATION

Scale: 1/4"=1'-0"

NOTES:
1. Field verify all dimensions and elevations prior to submitting Working Drawings and prior to ordering or fabricating any materials. See sht. J02 for more details.
2. See Bent Plan and Elevation sheet for construction control working points to establish bent centerline.

SCALE WARNING
IF THIS SCALE LINE DOES NOT MEASURE ONE INCH, THEN DRAWING IS NOT TO SCALE

For accompanied by drawings, see sht. JA01

STRUCTURE NO.	00123K
BDS DWG NO.	113863
CALC. BOOK	7997
HWY: 030	M.P.: 25.88
COUNTY	Marion/Polk
DATE	2/26

REGISTERED PROFESSIONAL ENGINEER 16588 OREGON JULY 20, 1993 ERIC EDWARD BONN
Digitally Signed 2026.02.12 12:26:40-08'00'
EXPIRES: 12/31/2027

FINAL ELECTRONIC DOCUMENT AVAILABLE UPON REQUEST

DOWL
3500 Chad Drive, Suite 200
Eugene, Oregon 97408
541-683-6090
WWW.DOWL.COM

WILLAMETTE RIVER, HWY 30 EB (CENTER ST)

OR22: CENTER ST BRIDGE (PHASE 1) PROJECT
WILLAMINA - SALEM HIGHWAY
MARION & POLK COUNTIES

Designer: Eric Bonn, PE
Reviewer: Bob Goodrich, PE
Drafter: Jake Williams
Checker: Mike McNulty, PE

SEISMIC RESTRAINER DETAILS - 1

SHEET NO. JA119

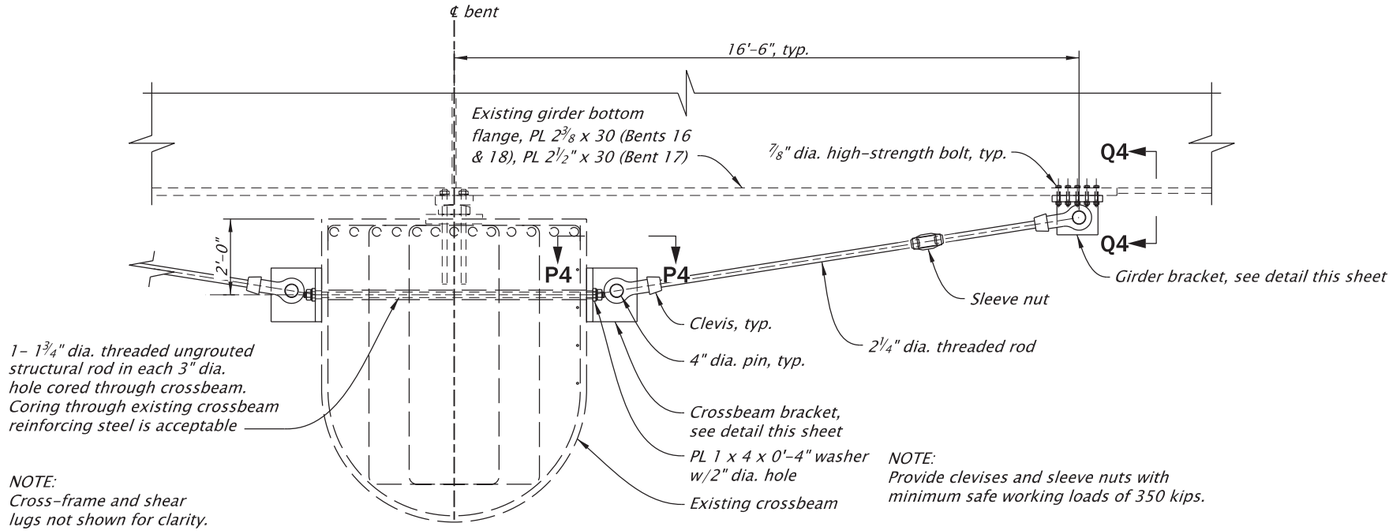

LONGITUDINAL RESTRAINT ELEVATION

Scale: 1/4"=1'-0"

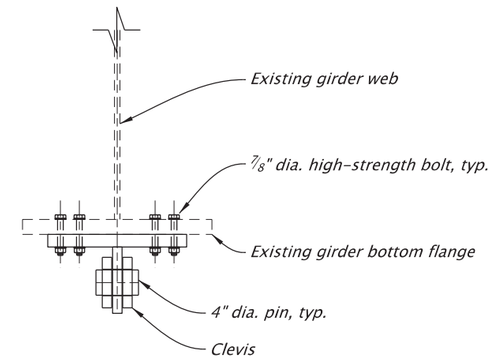

SECTION Q4-Q4

Scale: 1/2"=1'-0"

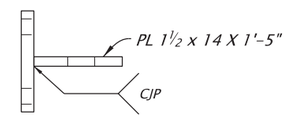

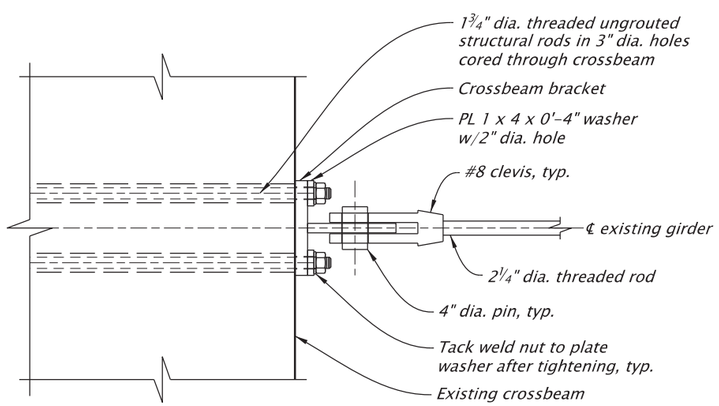

SECTION P4-P4

Scale: 1/2"=1'-0"

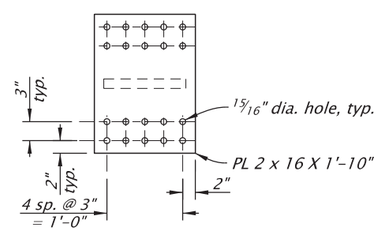

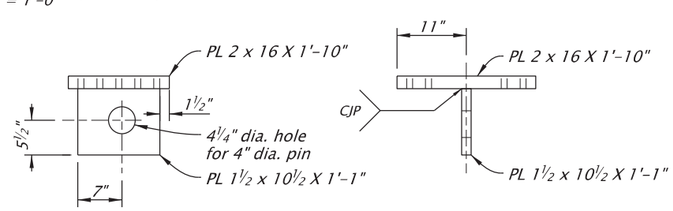

GIRDER BRACKET

Scale: 1/2"=1'-0"

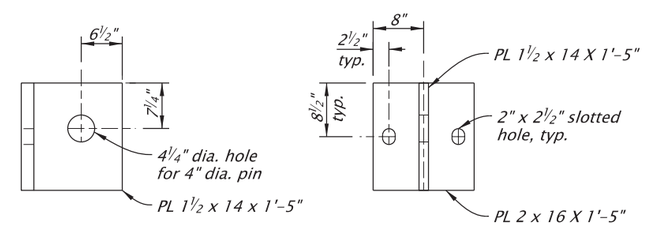

CROSSBEAM BRACKET

Scale: 1/2"=1'-0"

NOTES:
1. Field verify all dimensions and elevations prior to submitting Working Drawings and prior to ordering or fabricating any materials. See sht. J02 for more details.
2. See Bent Plan and Elevation sheet for construction control working points to establish bent centerline.

SCALE WARNING
IF THIS SCALE LINE DOES NOT MEASURE ONE INCH, THEN DRAWING IS NOT TO SCALE

For accompanied by drawings, see sht. JA01

STRUCTURE NO.	00123K
BDS DWG NO.	113864
CALC. BOOK	7997
HWY: 030	
M.P.: 25.88	
COUNTY	Marion/Polk
DATE	2/26

REGISTERED PROFESSIONAL ENGINEER 16588 OREGON JULY 20, 1993 ERIC EDWARD BONN
Digitally Signed 2026.02.12 12:26:53-08'00'
EXPIRES: 12/31/2027

FINAL ELECTRONIC DOCUMENT AVAILABLE UPON REQUEST

DOWL
3500 Chad Drive, Suite 200
Eugene, Oregon 97408
541-683-6090
WWW.DOWL.COM

WILLAMETTE RIVER, HWY 30 EB (CENTER ST)

OR22: CENTER ST BRIDGE (PHASE 1) PROJECT
WILLAMINA - SALEM HIGHWAY
MARION & POLK COUNTIES

Designer: Eric Bonn, PE
Reviewer: Bob Goodrich, PE
Drafter: Jake Williams
Checker: Mike McNulty, PE

SEISMIC RESTRAINER DETAILS - 2

SHEET NO. JA120

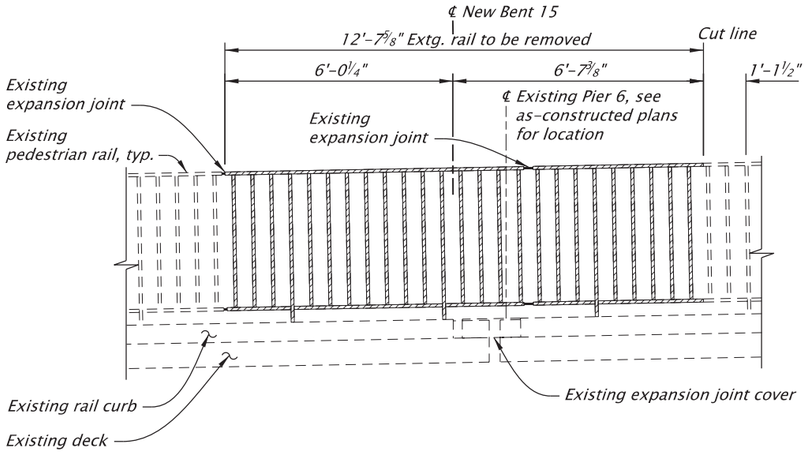

EXISTING

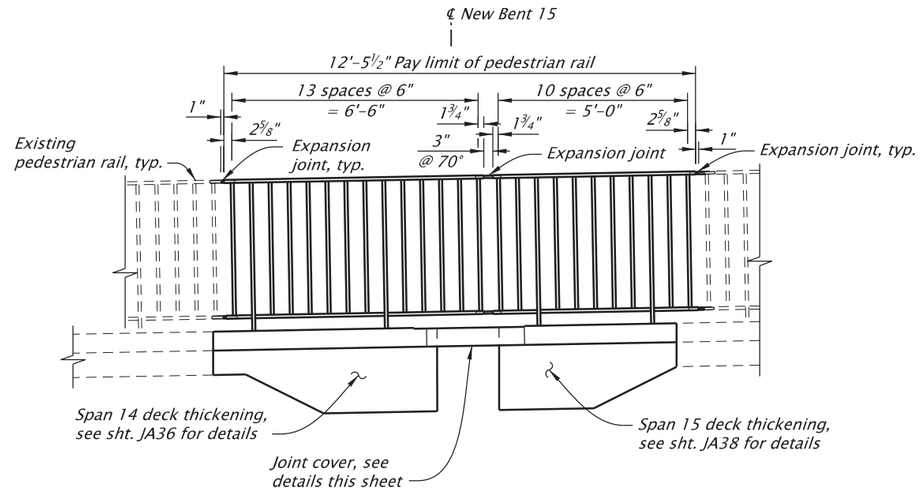

RETROFIT

PEDESTRIAN RAIL - BENT 15

Scale: 1/4"=1'-0"

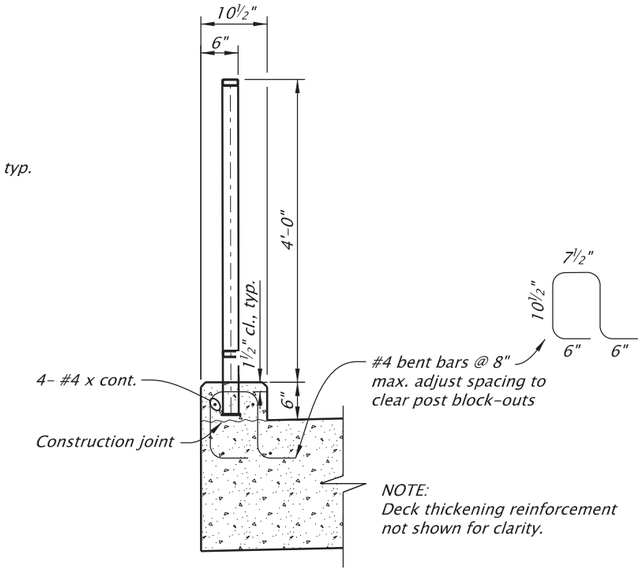

TYPICAL SECTION

Scale: 1/2"=1'-0"

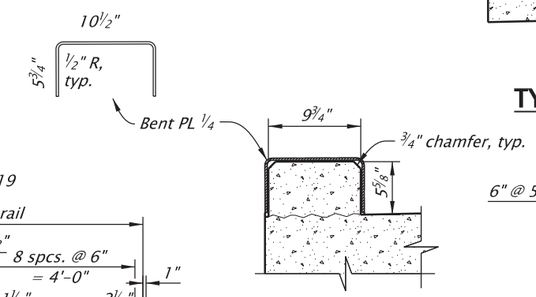

SECTION R4-R4

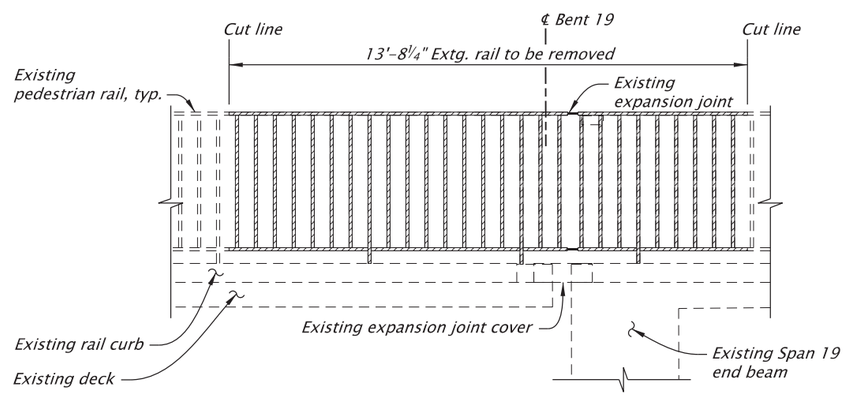

EXISTING

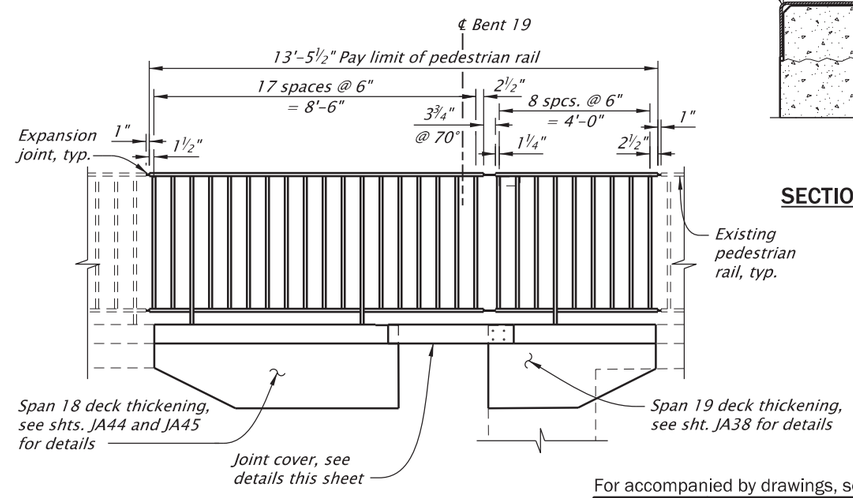

RETROFIT

PEDESTRIAN RAIL - BENT 19

Scale: 1/4"=1'-0"

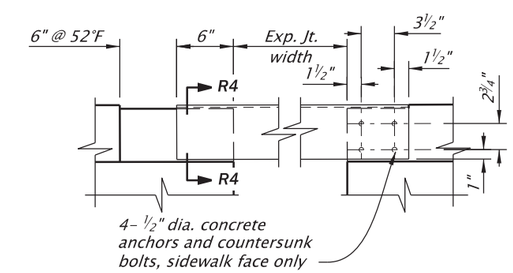

EXPANSION END FIXED END

JOINT COVER DETAIL

Scale: 3/4"=1'-0"

NOTES:
1. See Dwg. BR246 for details not shown.
2. Saw cut existing rail at locations to be removed not at existing expansion joints.
3. Repair galvanizing at all cut lines.
4. Field verify all dimensions and elevations prior to submitting Working Drawings and prior to ordering or fabricating any materials. See sht. J02 for more details.

For accompanied by drawings, see sht. JA01

SCALE WARNING
IF THIS SCALE LINE DOES NOT MEASURE ONE INCH, THEN DRAWING IS NOT TO SCALE

STRUCTURE NO.	00123K
BDS DWG NO.	113865
CALC. BOOK	7997
HWY: 030 M.P.: 25.88	
COUNTY	Marion/Polk
DATE	6/26

REGISTERED PROFESSIONAL ENGINEER 16588 OREGON JULY 20, 1993 ERIC EDWARD BONN
Digitally Signed 2026.07.01 14:38:14-07'00'
EXPIRES: 12/31/2027

FINAL ELECTRONIC DOCUMENT AVAILABLE UPON REQUEST

DOWL
3500 Chad Drive, Suite 200
Eugene, Oregon 97408
541-683-6090
WWW.DOWL.COM

OREGON DEPARTMENT OF TRANSPORTATION

WILLAMETTE RIVER, HWY 30 EB (CENTER ST)

OR22: CENTER ST BRIDGE (PHASE 1) PROJECT
WILLAMINA - SALEM HIGHWAY
MARION & POLK COUNTIES

Designer: Eric Bonn, PE
Reviewer: Bob Goodrich, PE
Drafter: Jake Williams
Checker: Mike McNulty, PE

PEDESTRIAN RAIL DETAILS

SHEET NO. JA121

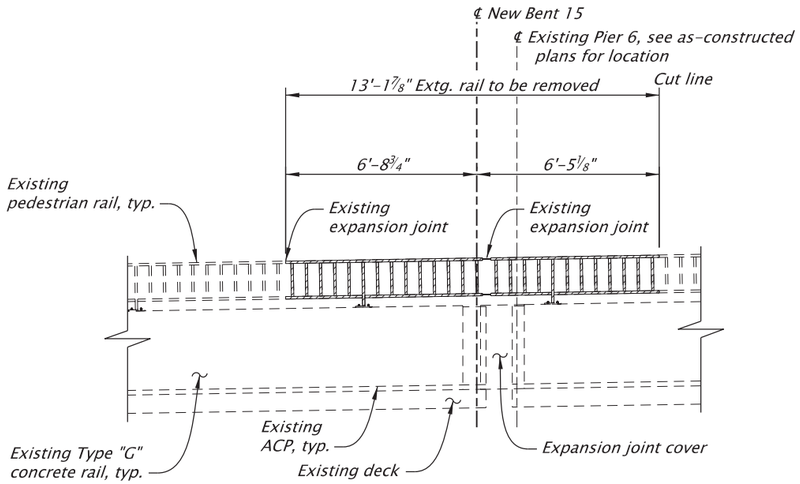

EXISTING

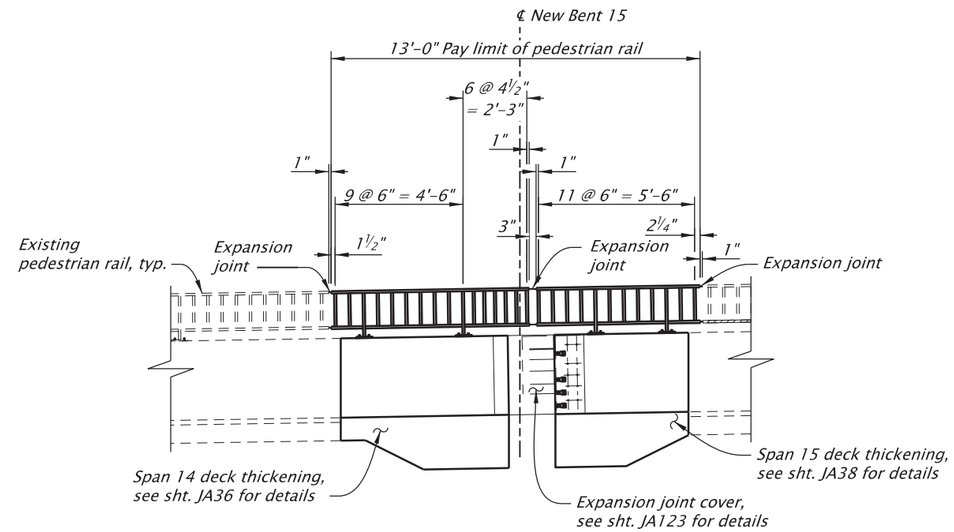

RETROFIT

PEDESTRIAN RAIL ON PARAPET - BENT 15

Scale: 3/16"=1'-0"

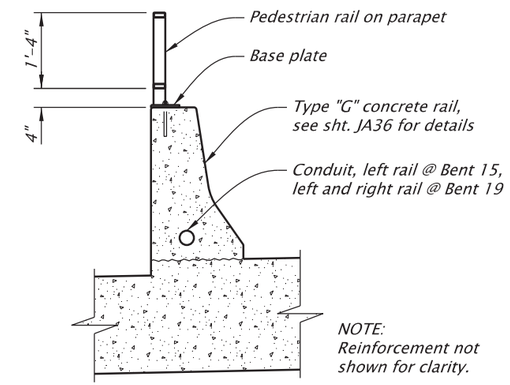

TYPICAL SECTION

Scale: 3/8"=1'-0"

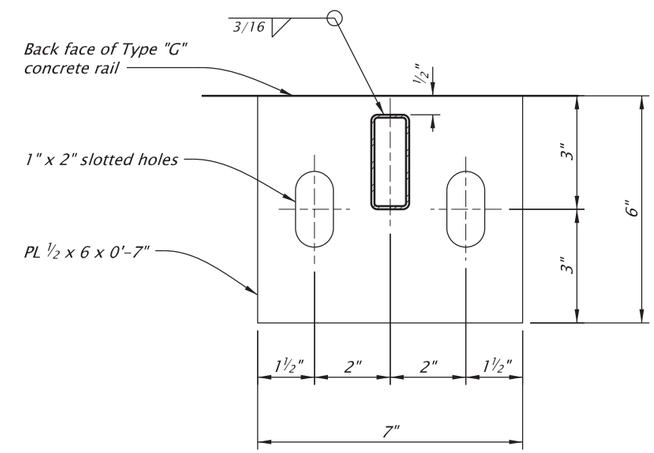

BASE PLATE DETAIL

Scale: 3"=1'-0"

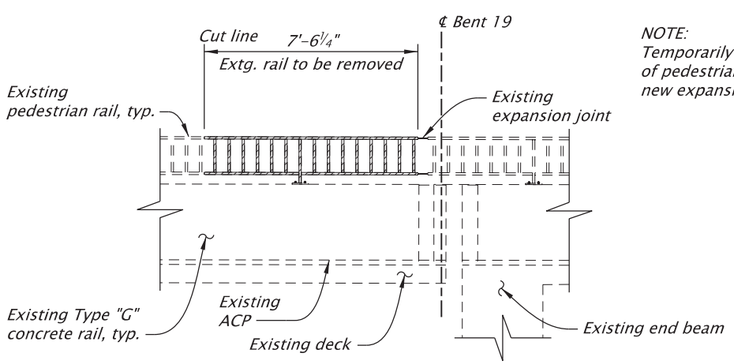

NOTE:
Temporarily remove and reinstall portion of pedestrian rail as necessary to construct new expansion joint.

EXISTING

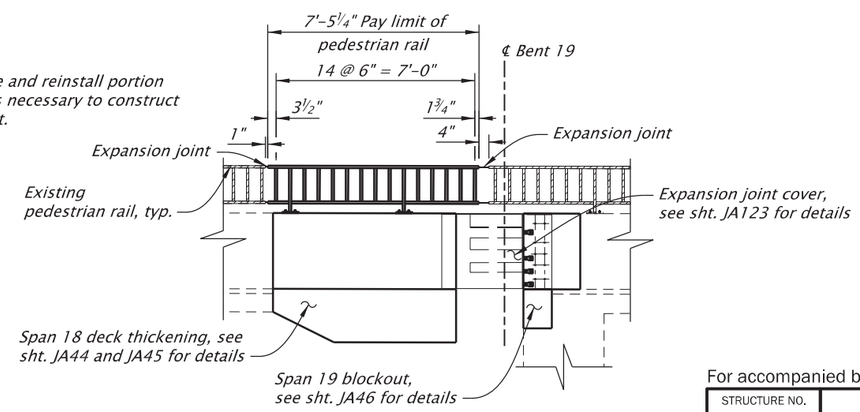

RETROFIT

PEDESTRIAN RAIL ON PARAPET - BENT 19

Scale: 3/16"=1'-0"

NOTES:
1. See Dwg. BR250 for details not shown.
2. Saw cut existing rail at locations to be removed not at existing expansion joints.
3. Repair galvanizing at all cut lines.
4. Field verify all dimensions and elevations prior to submitting Working Drawings and prior to ordering or fabricating any materials. See sht. J02 for more details.

SCALE WARNING
IF THIS SCALE LINE DOES NOT MEASURE ONE INCH, THEN DRAWING IS NOT TO SCALE

For accompanied by drawings, see sht. JA01

STRUCTURE NO.	00123K
BDS DWG NO.	113866
CALC. BOOK	7997
HWY: 030 M.P.: 25.88	
COUNTY	Marion/Polk
DATE	6/26

REGISTERED PROFESSIONAL ENGINEER 16588 OREGON JULY 20, 1993 ERIC EDWARD BONN
Digitally Signed 2026.07.01 14:38:32-07'00'
EXPIRES: 12/31/2027
FINAL ELECTRONIC DOCUMENT AVAILABLE UPON REQUEST

DOWL
3500 Chad Drive, Suite 200
Eugene, Oregon 97408
541-683-6090
WWW.DOWL.COM

WILLAMETTE RIVER, HWY 30 EB (CENTER ST)

OR22: CENTER ST BRIDGE (PHASE 1) PROJECT
WILLAMINA - SALEM HIGHWAY
MARION & POLK COUNTIES

Designer: Eric Bonn, PE
Reviewer: Bob Goodrich, PE
Drafter: Jake Williams
Checker: Mike McNulty, PE

PEDESTRIAN RAIL ON PARAPET DETAILS

SHEET NO. JA122

NOTE:
* Dimension based on installation temperature of 52° F. Adjust 0.39" per 10° F.

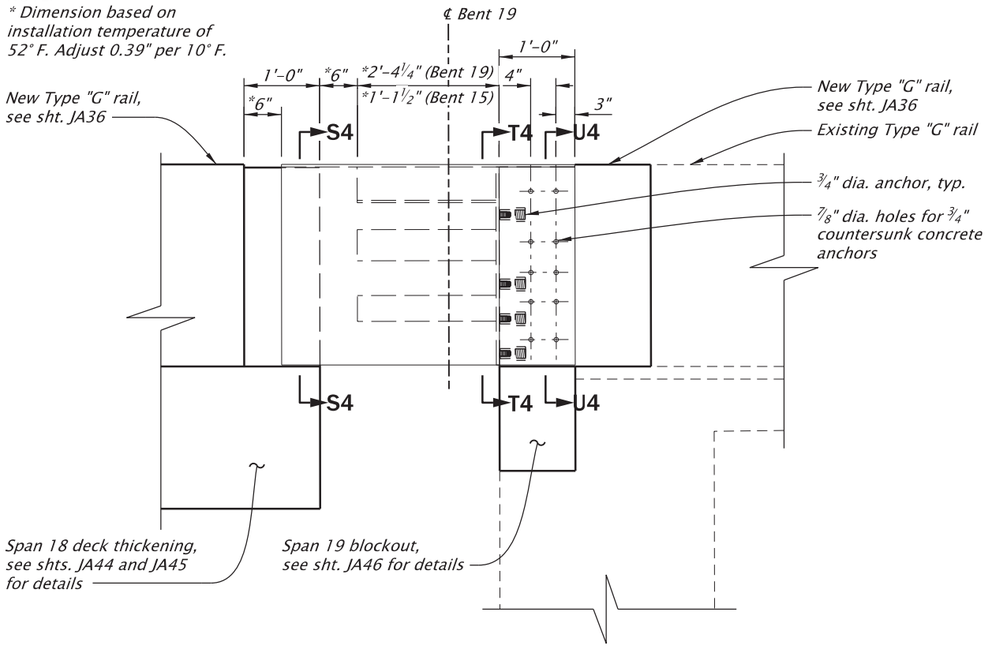

ELEVATION (BENT 19 SHOWN, BENT 15 SIMILAR)

Scale: 1/2"=1'-0"
(Left rail shown, right rail similar)

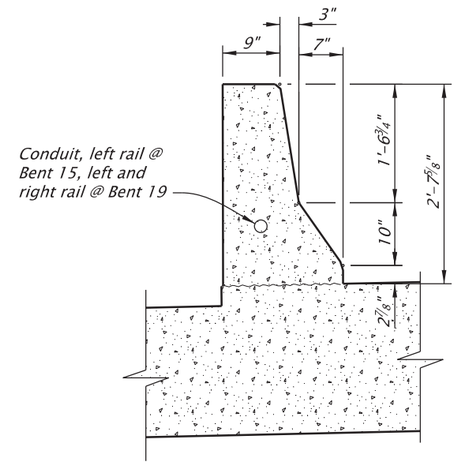

CONCRETE DIMENSIONS

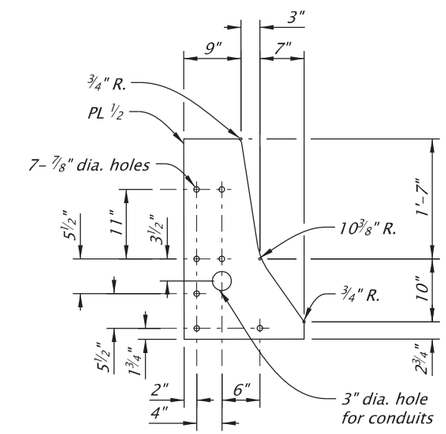

END PLATE

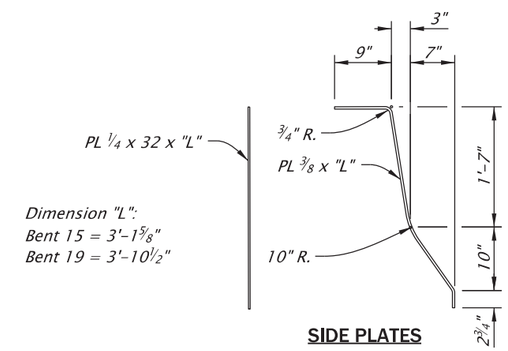

SIDE PLATES

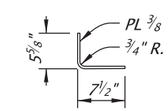

BENT PLATE

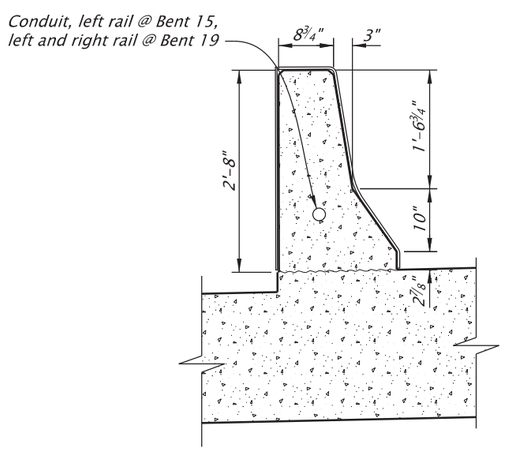

SECTION S4-S4

Scale: 1/2"=1'-0"

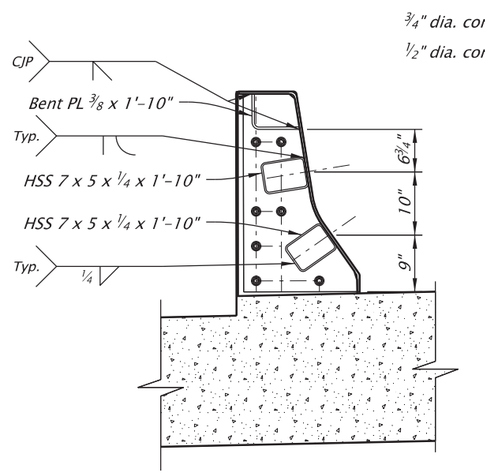

SECTION T4-T4

Scale: 1/2"=1'-0"

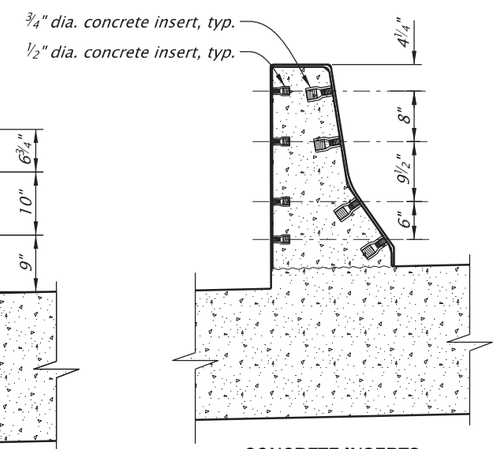

CONCRETE INSERTS

SECTION U4-U4

Scale: 1/2"=1'-0"

NOTES:
1. Rail and deck thickening reinforcement not shown for clarity.
2. Field verify all dimensions and elevations prior to submitting Working Drawings and prior to ordering or fabricating any materials. See sht. J02 for more details.

SCALE WARNING
IF THIS SCALE LINE DOES NOT MEASURE ONE INCH, THEN DRAWING IS NOT TO SCALE

For accompanied by drawings, see sht. JA01

STRUCTURE NO.	00123K
BDS DWG NO.	113867
CALC. BOOK	7997
HWY: 030 M.P.: 25.88	
COUNTY	Marion/Polk
DATE	2/26

REGISTERED PROFESSIONAL ENGINEER 16588 OREGON JULY 20, 1993 ERIC EDWARD BONN
Digitally Signed 2026.03.03 10:48:52-08'00'
EXPIRES: 12/31/2027

FINAL ELECTRONIC DOCUMENT AVAILABLE UPON REQUEST

DOWL
3500 Chad Drive, Suite 200
Eugene, Oregon 97408
541-683-6090
WWW.DOWL.COM

OREGON DEPARTMENT OF TRANSPORTATION

WILLAMETTE RIVER, HWY 30 EB (CENTER ST)

OR22: CENTER ST BRIDGE (PHASE 1) PROJECT
WILLAMINA - SALEM HIGHWAY
MARION & POLK COUNTIES

Designer: Eric Bonn, PE
Reviewer: Bob Goodrich, PE
Drafter: Jake Williams
Checker: Mike McNulty, PE

BRIDGE RAIL JOINT DETAILS

SHEET NO. JA123

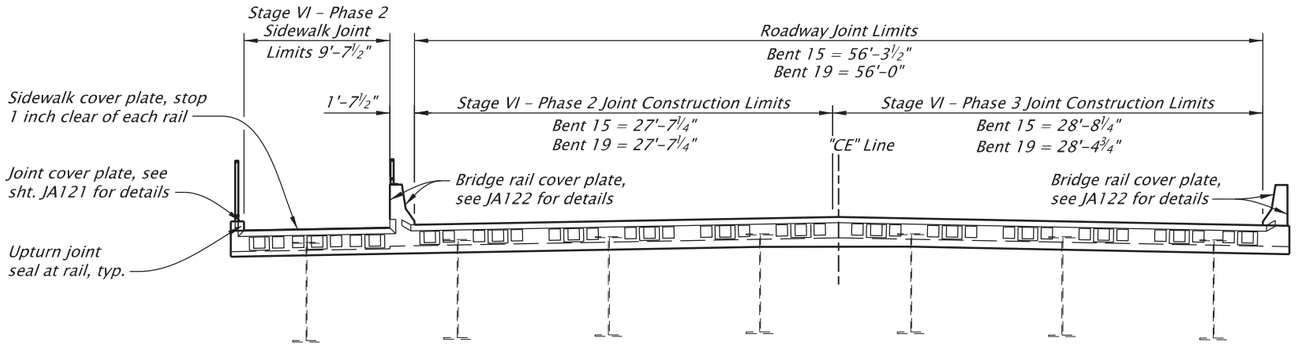

JOINT TYPICAL SECTION - BENT 15 (BENT 19 SIMILAR)

Scale: 1"=10'

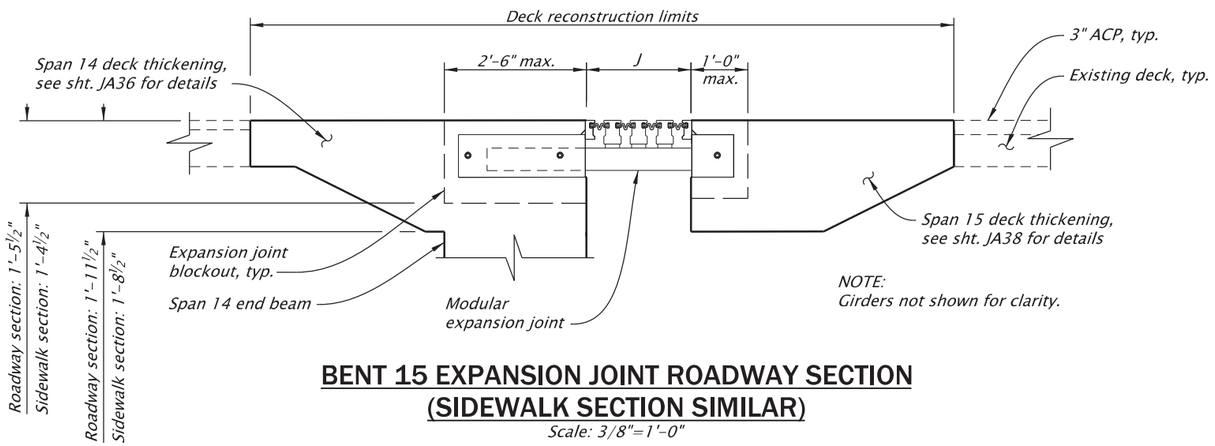

NOTE:
Girders not shown for clarity.

BENT 15 EXPANSION JOINT ROADWAY SECTION (SIDEWALK SECTION SIMILAR)

Scale: 3/8"=1'-0"

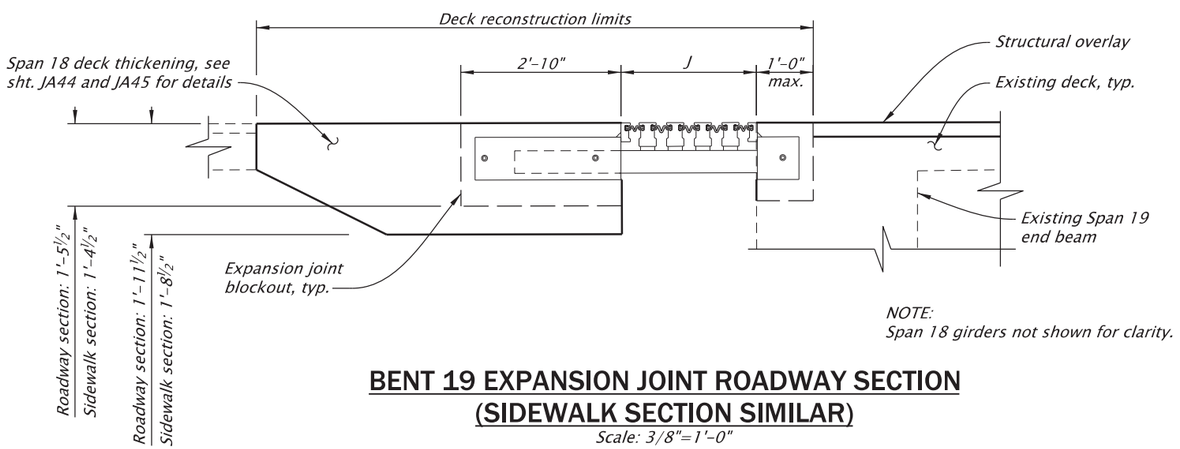

NOTE:
Span 18 girders not shown for clarity.

BENT 19 EXPANSION JOINT ROADWAY SECTION (SIDEWALK SECTION SIMILAR)

Scale: 3/8"=1'-0"

NOTE:
Field verify all dimensions and elevations prior to submitting Working Drawings and prior to ordering or fabricating any materials. See sht. J02 for more details.

NOTES:

Blockout dimensions may need to be revised depending on joint assembly manufacturer's requirements.

Fabricate the joint to accommodate staged construction sequence, see shts. JA05 and JA06 for details.

Joint assembly shop drawings shall be reviewed and approved prior to deck removal work.

"J" = joint opening at installation

Total joint movement range at Bent 15 based on installation temperature of 52° F:
Temperature Rise: 2.94"
Temperature Fall: 2.78"
Longitudinal Seismic Movement (joint opening or closing): 8.25"
Transverse Seismic Movement (either direction): 5.26"
Joint Setting Adjustment per 10° F: 0.39"

Total joint movement range at Bent 19 based on installation temperature of 52° F:
Temperature Rise: 2.85"
Temperature Fall: 2.67"
Longitudinal Seismic Movement (joint opening or closing): 10.95"
Transverse Seismic Movement (either direction): 6.52"
Joint Setting Adjustment per 10° F: 0.39"

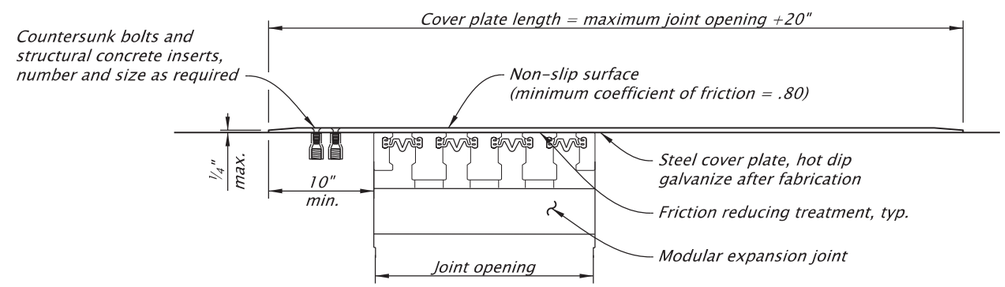

BENT 15 SIDEWALK COVER PLATE DETAILS (BENT 19 SIMILAR)

Scale: 3/4"=1'-0"

For accompanied by drawings, see sht. JA01

STRUCTURE NO.	00123K
BDS DWG NO.	113868
CALC. BOOK	7997
HWY: 030	M.P.: 25.88
COUNTY	Marion/Polk
DATE	2/26

REGISTERED PROFESSIONAL ENGINEER
85555PE
Digitally Signed 2026.02.12 12:59:26-08'00'
OREGON
DEC. 21, 2011
MICHAEL G. McNULTY
EXPIRES: 12/31/2026

FINAL ELECTRONIC DOCUMENT AVAILABLE UPON REQUEST

DOWL
3500 Chad Drive, Suite 200
Eugene, Oregon 97408
541-683-6090
WWW.DOWL.COM

WILLAMETTE RIVER, HWY 30 EB (CENTER ST)

OR22: CENTER ST BRIDGE (PHASE 1) PROJECT
WILLAMINA - SALEM HIGHWAY
MARION & POLK COUNTIES

Designer: Mike McNulty, PE
Reviewer: Bob Goodrich, PE
Drafter: Jake Williams
Checker: Eric Bonn, PE

EXPANSION JOINT DETAILS - 1

SHEET NO. JA124

SCALE WARNING
IF THIS SCALE LINE DOES NOT MEASURE ONE INCH, THEN DRAWING IS NOT TO SCALE

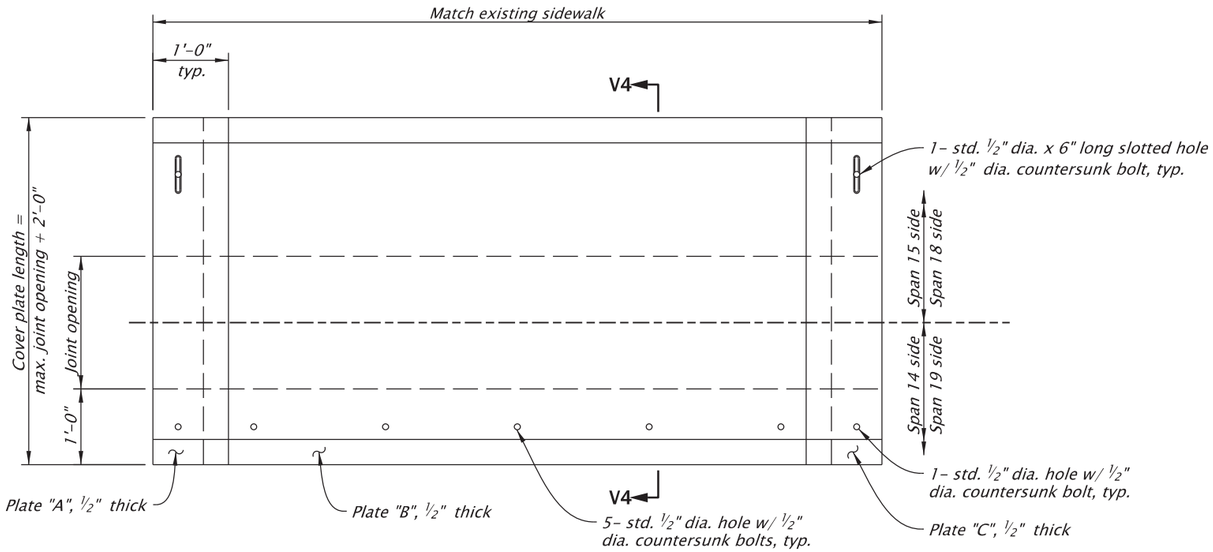

BENT 15 AND 19 SIDEWALK COVER PLATE DETAILS

Scale: 1/2"=1'-0"

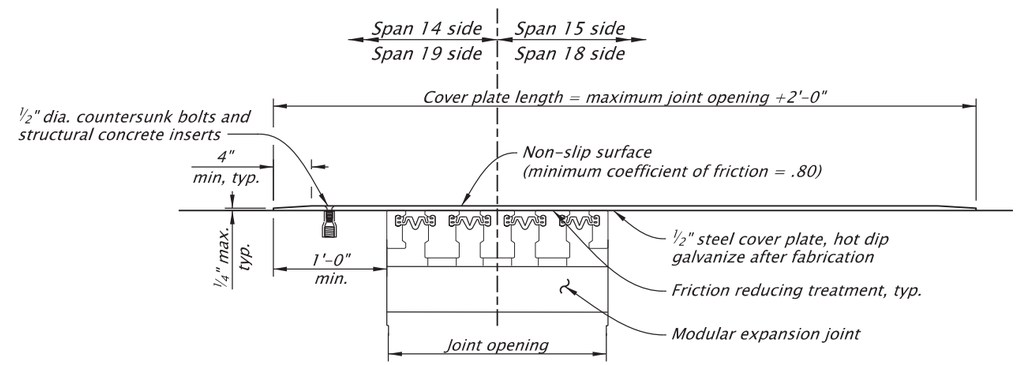

SECTION V4-V4

Scale: 3/4"=1'-0"

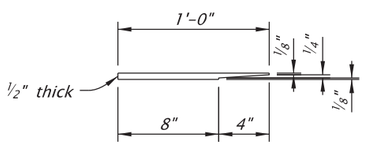

PLATE A

Scale: 1"=1'-0"

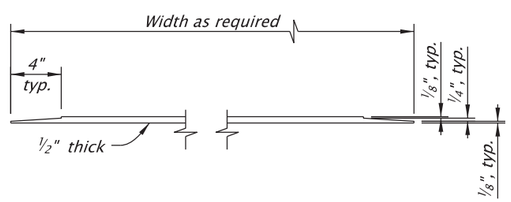

PLATE B

Scale: 1"=1'-0"

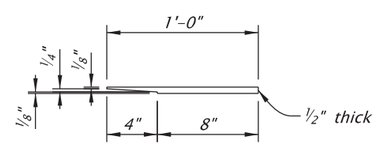

PLATE C

Scale: 1"=1'-0"

For accompanied by drawings, see sht. JA01

SCALE WARNING

IF THIS SCALE LINE DOES NOT MEASURE ONE INCH, THEN DRAWING IS NOT TO SCALE

STRUCTURE NO.	00123K
BDS DWG NO.	113869
CALC. BOOK	7997
HWY: 030 M.P.: 25.88	
COUNTY	Marion/Polk
DATE	2/26

REGISTERED PROFESSIONAL ENGINEER 85555PE
Digitally Signed 2026.02.12 12:59:36-08'00'
OREGON DEC. 21, 2011 MICHAEL G. McNULTY
EXPIRES: 12/31/2026

FINAL ELECTRONIC DOCUMENT AVAILABLE UPON REQUEST

DOWL
3500 Chad Drive, Suite 200
Eugene, Oregon 97408
541-683-6090
WWW.DOWL.COM

OREGON DEPARTMENT OF TRANSPORTATION

WILLAMETTE RIVER, HWY 30 EB (CENTER ST)

OR22: CENTER ST BRIDGE (PHASE 1) PROJECT
WILLAMINA - SALEM HIGHWAY
MARION & POLK COUNTIES

Designer: Mike McNulty, PE
Reviewer: Bob Goodrich, PE
Drafter: Jake Williams
Checker: Eric Bonn, PE

EXPANSION JOINT DETAILS - 2

SHEET NO. JA125

NOTE:
Field verify all dimensions and elevations before submitting Working Drawings and prior to ordering or fabricating any materials. See sht. J02 for more details.

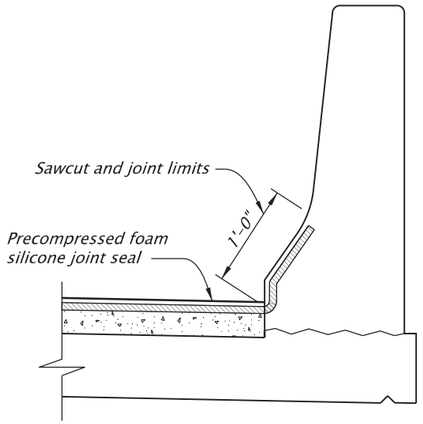

AT BRIDGE RAIL

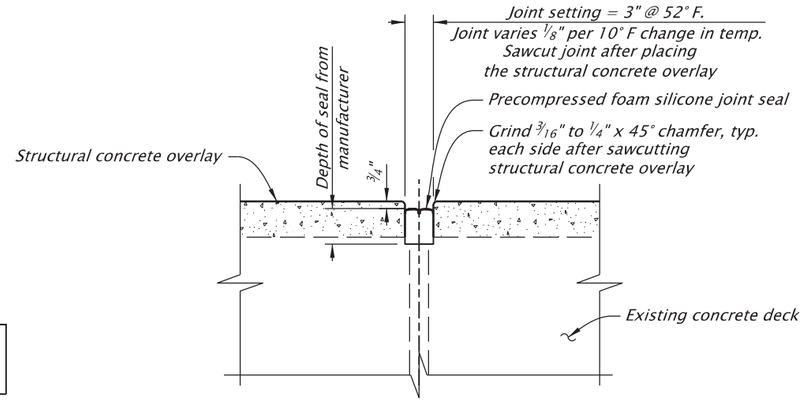

TYPICAL JOINTS

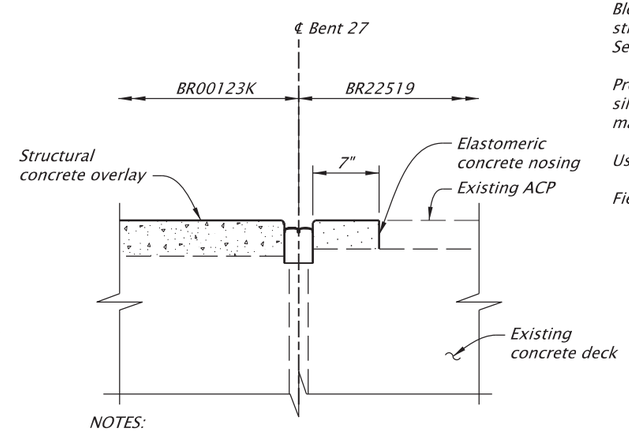

NOTES:
For details not shown, see "Typical Joints" detail this sheet.

BENT 27 AT BR22519

PRECOMPRESSED FOAM SILICONE JOINT SEAL NOTES:

Blockout joint with temporary blockout prior to placing structural concrete overlay or elastomeric concrete nosing. See detail this sheet.

Prepare joint surfaces and install precompressed foam silicone joint seal including bend joint acoording to the manufacturer's recommendations.

Use factory-fabricated bend for inside corner at gutter line.

Field-cut bend for outside corner is acceptable.

Precompressed Foam Silicone Joint Seal					
Total Movement Range	Joint Installation Width @ Mean Temperature	Joint seal size		Min. Joint Closure	Max. Joint Opening
		Nominal Width	Min. Depth		
1 1/4"	3"	3 1/4"	2 1/2"	2 1/2"	3 3/4"

PRECOMPRESSED FOAM SILICONE JOINT DETAILS

Scale: 3/4"=1'-0"

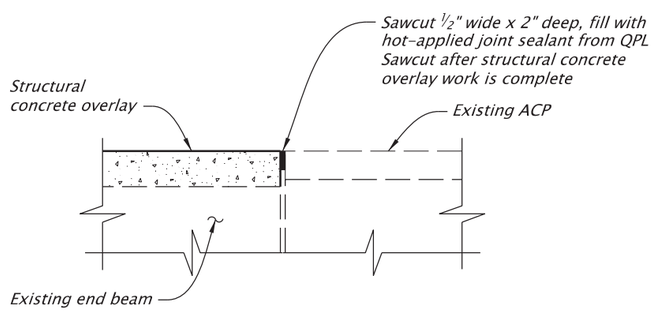

SAWCUT DETAIL

Scale: 3/4"=1'-0"

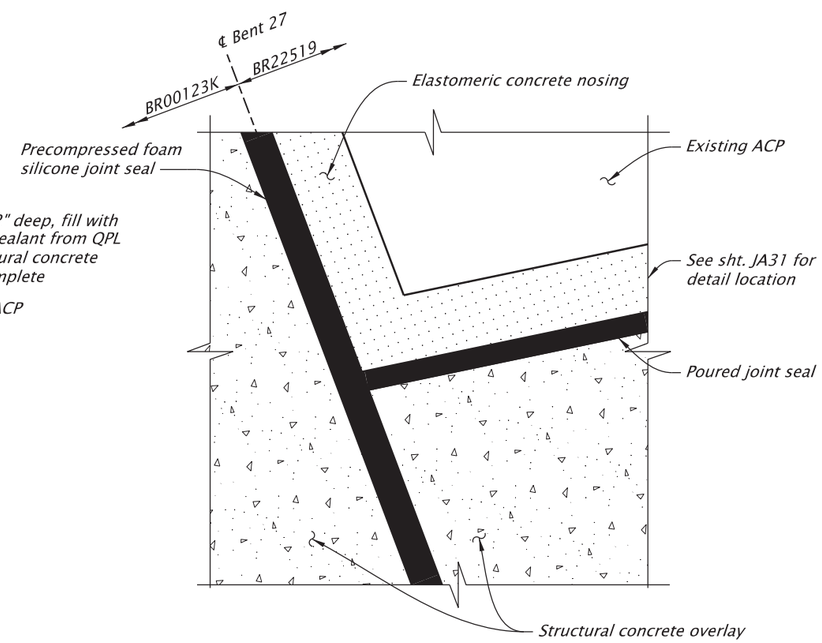

BENT 27 JOINT LIMITS

Scale: 3/4"=1'-0"

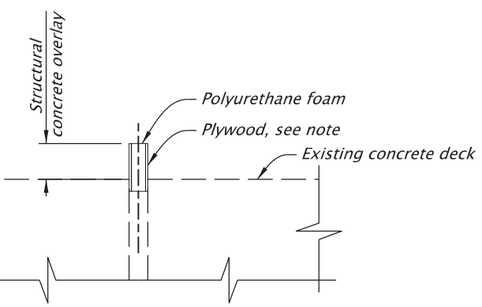

NOTES:
Blockout joint with sandwich of polyurethane foam and 1/4" to 1/2" plywood as shown prior to placing the structural concrete overlay.

PROPOSED TEMPORARY BLOCKOUT

No Scale

NOTES:
1. For joint locations, see sht. JA30 – JA31
2. For Bent 27 poured joint seal details, see sht. JA135.
3. Field verify all dimensions and elevations before submitting Working Drawings and prior to ordering or fabricating any materials. See sht. J02 for more details.

SCALE WARNING
IF THIS SCALE LINE DOES NOT MEASURE ONE INCH, THEN DRAWING IS NOT TO SCALE

For accompanied by drawings, see sht. JA01

STRUCTURE NO.	00123K
BDS DWG NO.	113870
CALC. BOOK	7997
HWY: 030	M.P.: 25.88
COUNTY	Marion
DATE	2/26

REGISTERED PROFESSIONAL ENGINEER 105234PE
Digitally Signed 2026.02.12 12:19:57-08'00'
OREGON
MAY 14, 2024
NASARIO LOPEZ-FRANCISCO
EXPIRES: 12/31/2026
FINAL ELECTRONIC DOCUMENT AVAILABLE UPON REQUEST

DOWL
3500 Chad Drive, Suite 200
Eugene, Oregon 97408
541-683-6090
WWW.DOWL.COM

WILLAMETTE RIVER, HWY 30 EB (CENTER ST)

OR22: CENTER ST BRIDGE (PHASE 1) PROJECT
WILLAMINA - SALEM HIGHWAY
MARION & POLK COUNTIES

Designer: Nasario Lopez-Francisco, PE
Reviewer: Bob Goodrich, PE
Drafter: Jake Williams
Checker: Fred M. Gomez, PE

EXPANSION JOINT DETAILS - 3

SHEET NO. JA126

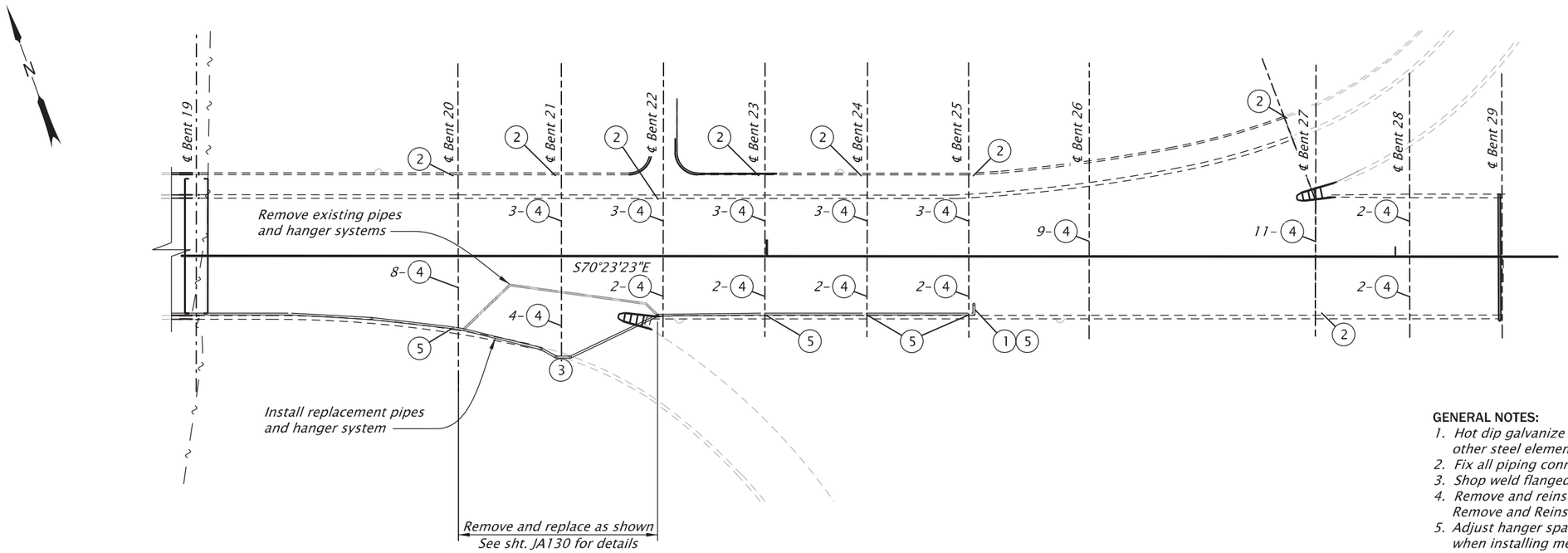

BENTS 19-29
DRAINAGE PLAN
Scale: 1"=60'

DETAILED REFERENCE NUMBERS:

1. *Replace downpipe at Bent 25, see sht. JA128 for details.*
2. *Replace downpipe, see sht. JA129 for details.*
3. *Re-route drainage around Bent 21 pier wall, see sht. JA130 for details.*
4. *Install box girder drainage nozzle at box girder drainage openings, see sht. JA128 for details.*
5. *Remove and reinstall sump between nearest flanges during pier wall construction.*

GENERAL NOTES:

1. *Hot dip galvanize all plates, bracket, nuts, washers, clevis, rods, rollers and other steel elements necessary for construction after fabrication.*
2. *Fix all piping connections except where expansion joints are noted.*
3. *Shop weld flanged fitting to pipe as much as practical.*
4. *Remove and reinstall sumps per existing conditions. See Sump Pump Remove and Reinstall Details on sht. JA130.*
5. *Adjust hanger spacing ±3" to avoid existing and new steel reinforcement when installing mechanical anchors for drainage system.*

DRAINAGE LENGTH AND SLOPE

Pipe #	L (LF)	S (ft/ft)
B2-5a	39	0.0041
B2-5b	43	0.0045

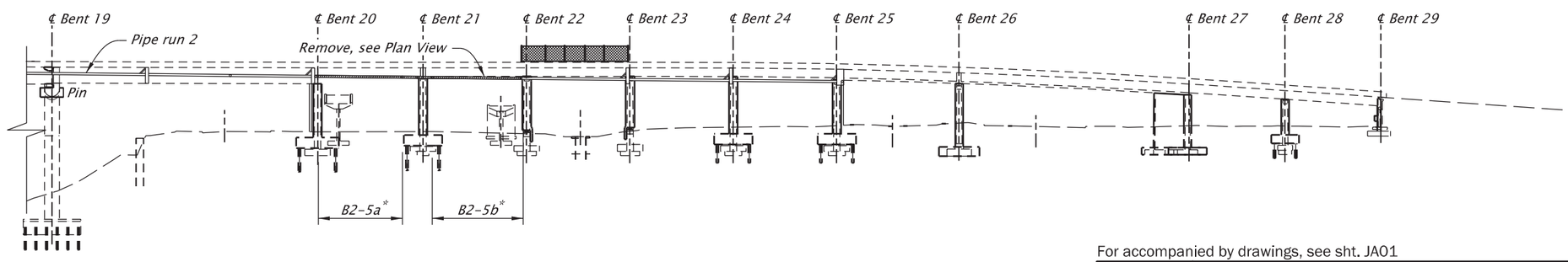

BENTS 19-29
DRAINAGE ELEVATION
Scale: 1"=60'

NOTES:

1. ** See sht. JA130 for B2-5a and B2-5b extents.*
2. *See HA sheets for storm drainage system details.*
3. *Remove and reinstall all inlet grates.*
4. *Field verify all dimensions and elevations before submitting Working Drawings and prior to ordering or fabricating any materials. See sht. J02 for more details.*

SCALE WARNING
IF THIS SCALE LINE DOES NOT MEASURE ONE INCH, THEN DRAWING IS NOT TO SCALE

For accompanied by drawings, see sht. JA01

STRUCTURE NO.	00123K
BDS DWG NO.	113871
CALC. BOOK	7997
HWY: 030 M.P.: 25.88	
COUNTY	Marion
DATE	2/26

REGISTERED PROFESSIONAL ENGINEER 099941PE OREGON JULY 21, 2022 BERNARD ANTHONY FRANKL
Digitally Signed 2026.02.12 11:46:12-08'00'
EXPIRES: 12/31/2027
FINAL ELECTRONIC DOCUMENT AVAILABLE UPON REQUEST

DOWL
3500 Chad Drive, Suite 200
Eugene, Oregon 97408
541-683-6090
WWW.DOWL.COM

WILLAMETTE RIVER, HWY 30 EB (CENTER ST)

OR22: CENTER ST BRIDGE (PHASE 1) PROJECT
WILLAMINA - SALEM HIGHWAY
MARION & POLK COUNTIES

Designer: Bernard A. Frankl, PhD, PE
Reviewer: Bob Goodrich, PE
Drafter: Jake Williams
Checker: Jonathon Stark, EI

DRAINAGE PLAN AND ELEVATION

SHEET NO. JA127

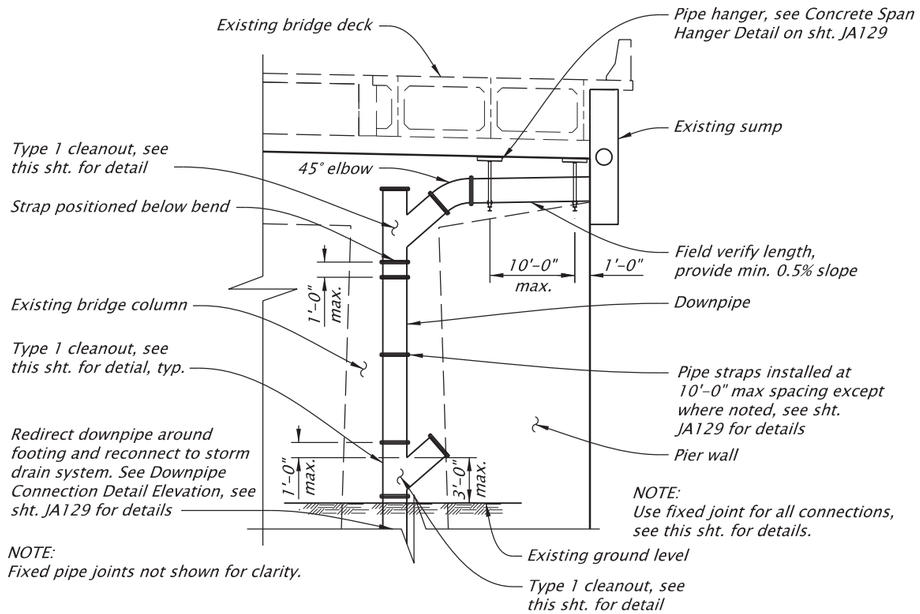

DETAIL AT BENT 25

NTS

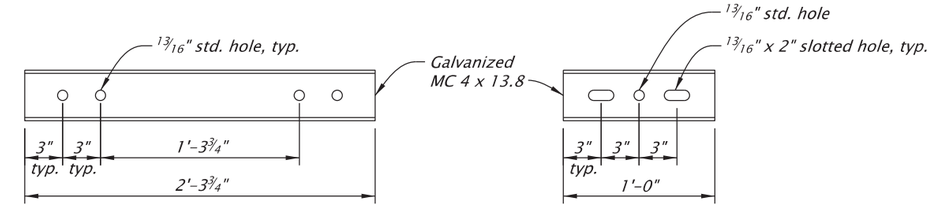

SOFFIT HANGER CHANNEL DETAIL

NTS

OVERHANG HANGER CHANNEL DETAIL

NTS

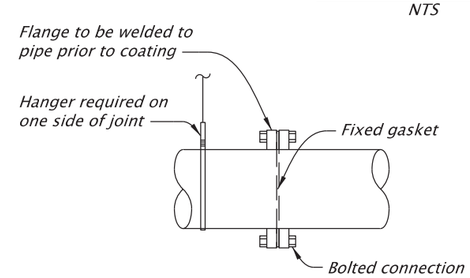

TYPICAL FIXED PIPE JOINT DETAIL

NTS

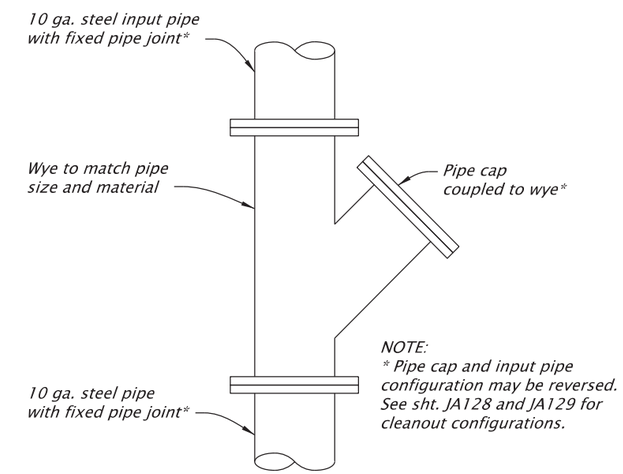

TYPE 1 CLEANOUT DETAIL

NTS

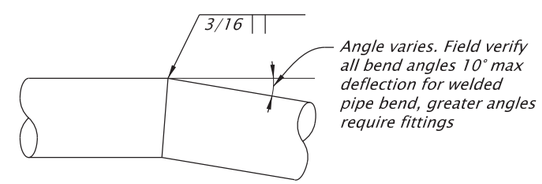

PLAN

NOTE:
Coat pipe after bend is welded.

PIPE BEND DETAIL

NTS

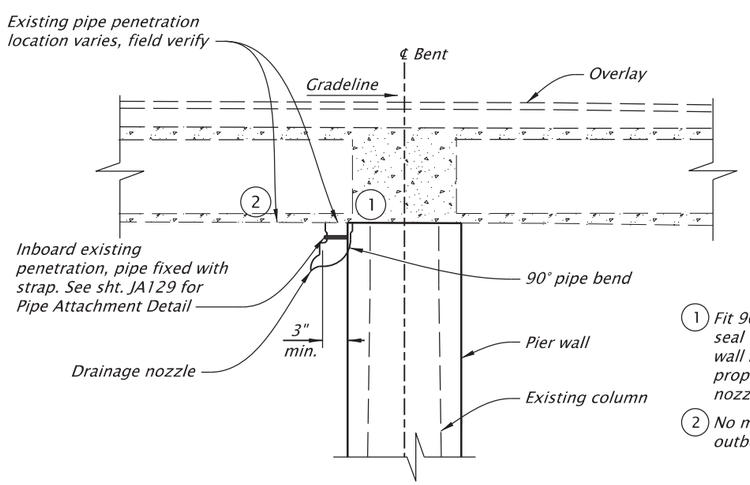

1. Fit 90° pipe bend into existing drain hole and seal with grout, ensuring free end clears pier wall by 3" min where drain hole is inboard of proposed pier wall surface. Attach drainage nozzle to free end of pipe.
2. No modifications needed where drain hole is outboard of proposed pier wall surface.

BOX GIRDER DRAINAGE NOZZLE

NTS

NOTE:
Field verify all dimensions and elevations before submitting Working Drawings and prior to ordering or fabricating any materials. See sht. J02 for more details.

For accompanied by drawings, see sht. JA01

STRUCTURE NO.	00123K
BDS DWG NO.	113872
CALC. BOOK	7997
HWY: 030	M.P.: 25.88
COUNTY	Marion
DATE	2/26

SCALE WARNING
IF THIS SCALE LINE DOES NOT MEASURE ONE INCH, THEN DRAWING IS NOT TO SCALE

REGISTERED PROFESSIONAL ENGINEER
099941PE
Digitally Signed 2026.02.12 11:46:31-08'00'
OREGON
JULY 21, 2022
BERNARD ANTHONY FRANKL
EXPIRES: 12/31/2027

FINAL ELECTRONIC DOCUMENT AVAILABLE UPON REQUEST

DOWL
3500 Chad Drive, Suite 200
Eugene, Oregon 97408
541-683-6090
WWW.DOWL.COM

WILLAMETTE RIVER, HWY 30 EB (CENTER ST)

OR22: CENTER ST BRIDGE (PHASE 1) PROJECT
WILLAMINA - SALEM HIGHWAY
MARION & POLK COUNTIES

Designer: Bernard A. Frankl, PhD, PE
Reviewer: Bob Goodrich, PE
Drafter: Jake Williams
Checker: Jonathon Stark, EI

DRAINAGE DETAILS - 1

SHEET NO. JA128

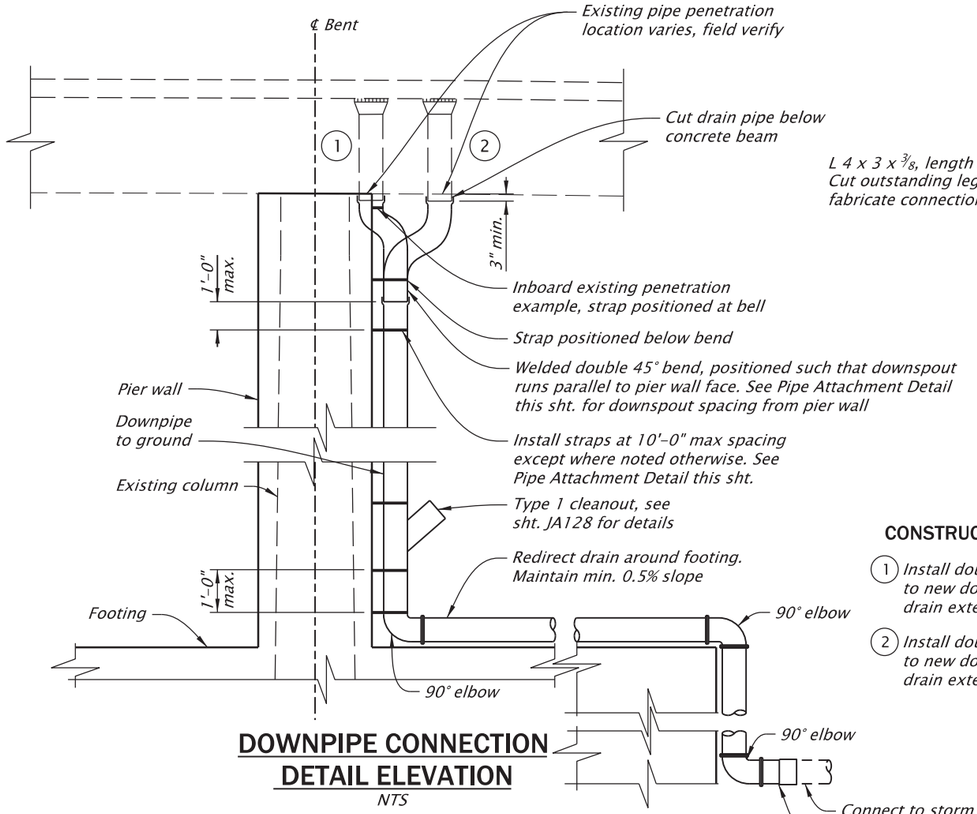

DOWNPIPE CONNECTION DETAIL ELEVATION

NTS

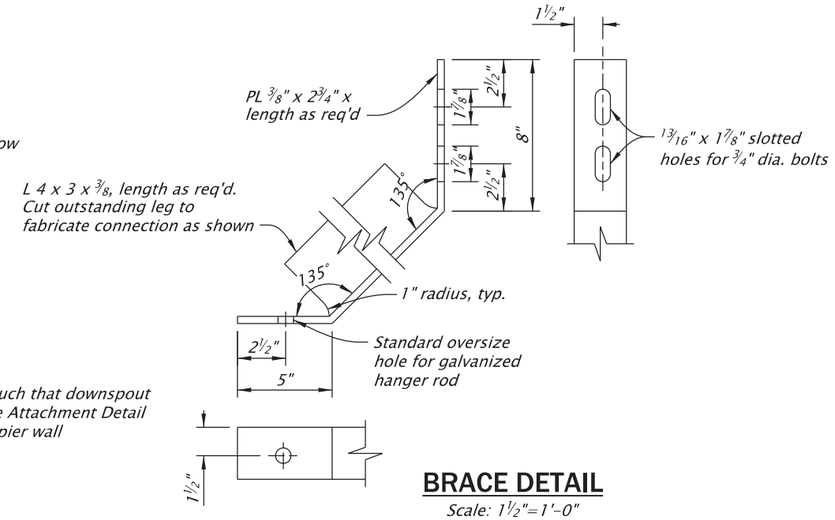

BRACE DETAIL

Scale: 1½"=1'-0"

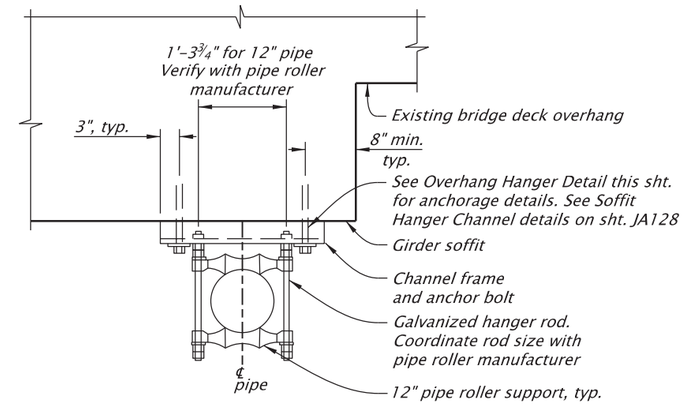

SOFFIT HANGER DETAIL

NTS

CONSTRUCTION NOTES:

1. Install double 45° bend from existing pipe protruding from deck to new downpipe prior to pier wall construction when existing drain extends inboard of pier wall surface. Field verify condition.
2. Install double 45° bend from existing pipe protruding from deck to new downpipe prior to pier wall construction when existing drain extends inboard of pier wall surface. Field verify condition.

NOTES:
1. *Connect to existing storm drain system at Bents 20-22. Connect to new storm drain system at Bents 23-25 and Bent 27
2. **Existing connection condition shown. For connection to new storm drain system, see sht HA05.

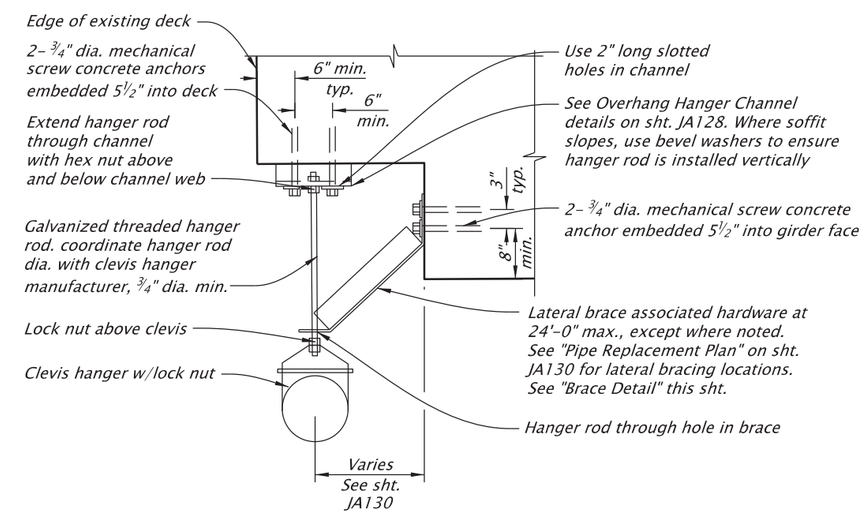

OVERHANG HANGER DETAIL

NTS

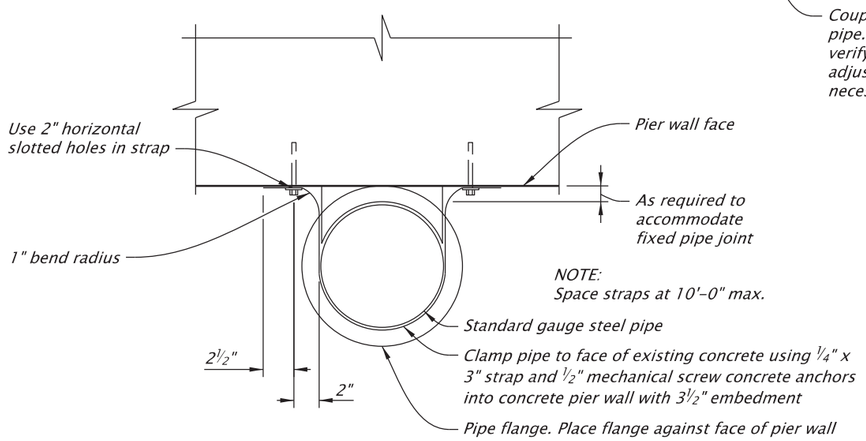

PIPE ATTACHMENT DETAIL

NTS

MECHANICAL SCREW ANCHOR NOTES:

Provide and install ¾" nominal dia. Type C Screw mechanical anchors using a product from the QPL. The minimum pullout strength is 5300 lbs with a minimum effective embedment (hef) of 3.49 in. The maximum depth of the drilled hole is 6 in.

Provide and install ½" nominal dia. Type C Screw mechanical anchors using a product from the QPL. The minimum pullout strength is 2000 lbs with a minimum effective embedment (hef) of 2 in. The maximum depth of the drilled hole is 4 in.

NOTES:
1. Pipe hangers to be located as indicated on JA130.
2. Field verify all dimensions and elevations before submitting Working Drawings and prior to ordering or fabricating any materials. See sht. J02 for more details.

For accompanied by drawings, see sht. JA01

SCALE WARNING
IF THIS SCALE LINE DOES NOT MEASURE ONE INCH, THEN DRAWING IS NOT TO SCALE

STRUCTURE NO.	00123K
BDS DWG NO.	113873
CALC. BOOK	7997
HWY: 030	M.P.: 25.88
COUNTY	Marion
DATE	2/26

REGISTERED PROFESSIONAL ENGINEER 099941PE OREGON JULY 21, 2022 BERNARD ANTHONY FRANKL
Digitally Signed 2026.02.12 11:46:48-08'00'
EXPIRES: 12/31/2027

FINAL ELECTRONIC DOCUMENT AVAILABLE UPON REQUEST

DOWL
3500 Chad Drive, Suite 200
Eugene, Oregon 97408
541-683-6090
WWW.DOWL.COM

OREGON DEPARTMENT OF TRANSPORTATION

WILLAMETTE RIVER, HWY 30 EB (CENTER ST)

OR22: CENTER ST BRIDGE (PHASE 1) PROJECT
WILLAMINA - SALEM HIGHWAY
MARION & POLK COUNTIES

Designer: Bernard A. Frankl, PhD, PE
Reviewer: Bob Goodrich, PE
Drafter: Jake Williams
Checker: Jonathon Stark, EI

DRAINAGE DETAILS - 2

SHEET NO. JA129

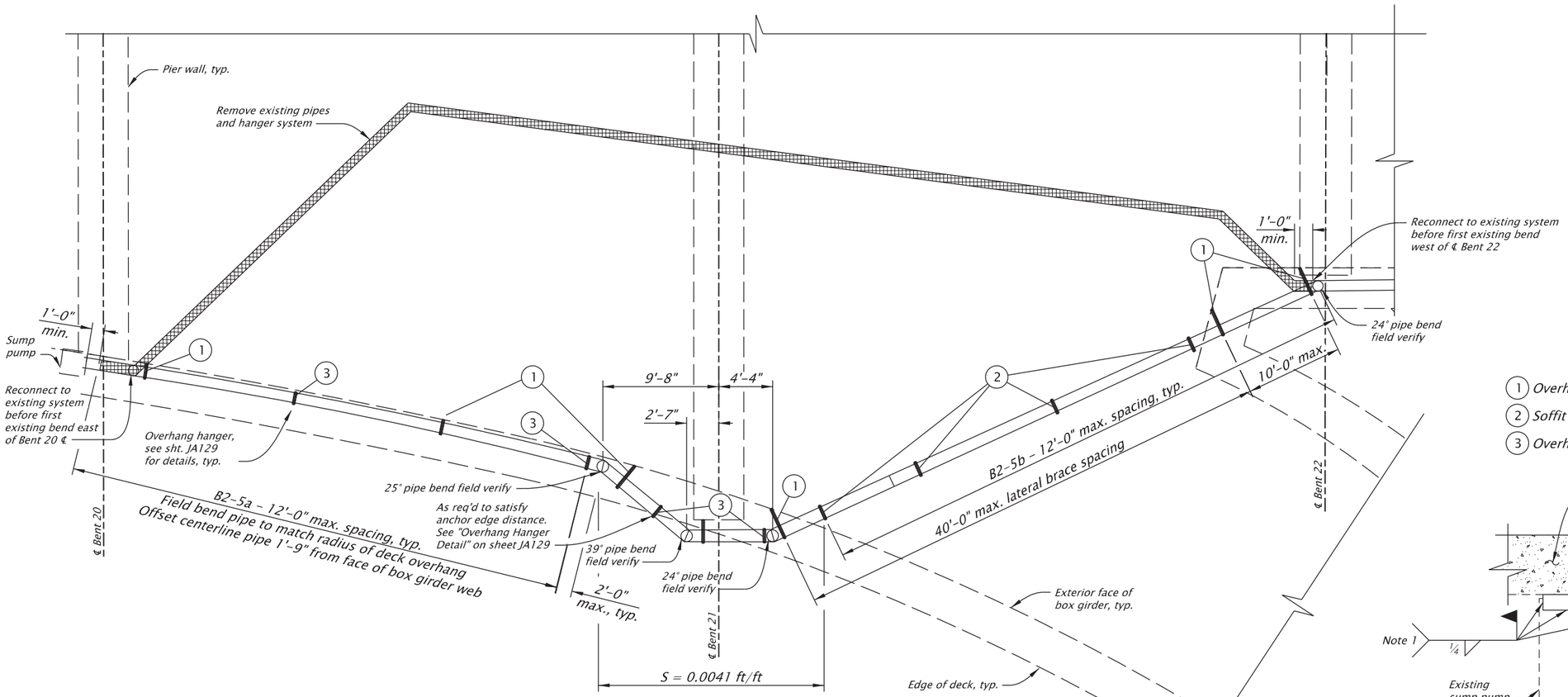

PIPE REPLACEMENT PLAN

Scale: 1"=10'

1. Overhang hanger and lateral brace, see sht. JA129 for details.
2. Soffit hanger, see sht. JA129 for details.
3. Overhang hanger, see sht. JA129 for details.

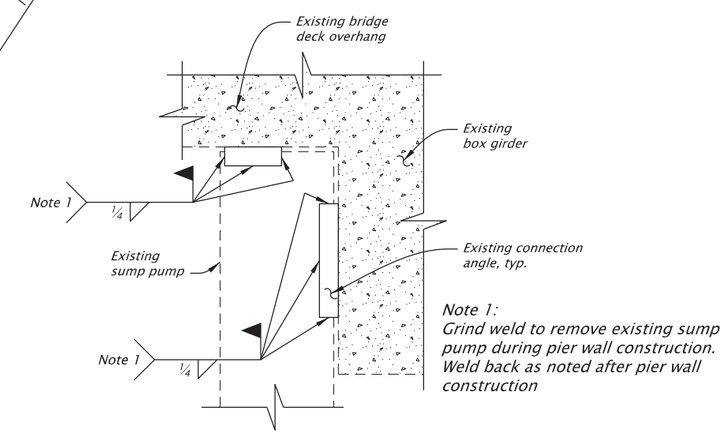

Note 1:
Grind weld to remove existing sump pump during pier wall construction. Weld back as noted after pier wall construction

SUMP PUMP REMOVE AND REINSTALL DETAIL

Scale: ⅜"=1'-0"

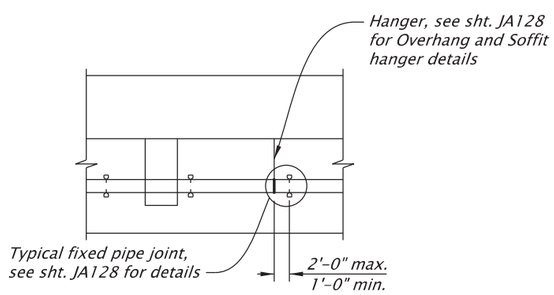

TYPICAL PIPING LAYOUT AND ELEVATION

NTS

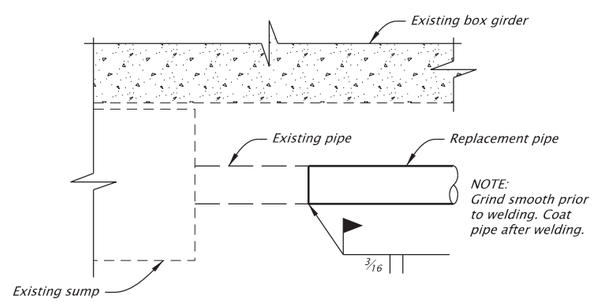

EXISTING PIPE TO REPLACEMENT PIPE CONNECTION

Scale: ¼"=1'-0"

NOTES:
1. See Bent Plan and Elevation sheets for construction control working points to establish bent centerlines
2. Field verify all dimesions and elevations before submitting Working Drawings and prior to ordering or fabricating any materials. See sht. J02 for more details.

For accompanied by drawings, see sht. JA01

STRUCTURE NO.	00123K
BDS DWG NO.	113874
CALC. BOOK	7997
HWY: 030 M.P.: 25.88	
COUNTY	Marion
DATE	2/26

SCALE WARNING
IF THIS SCALE LINE DOES NOT MEASURE ONE INCH, THEN DRAWING IS NOT TO SCALE

REGISTERED PROFESSIONAL ENGINEER 099941PE OREGON JULY 21, 2022 BERNARD ANTHONY FRANKL
Digitally Signed 2026.02.12 11:47:09-08'00'
EXPIRES: 12/31/2027

FINAL ELECTRONIC DOCUMENT AVAILABLE UPON REQUEST

DOWL
3500 Chad Drive, Suite 200
Eugene, Oregon 97408
541-683-6090
WWW.DOWL.COM

OREGON DEPARTMENT OF TRANSPORTATION

WILLAMETTE RIVER, HWY 30 EB (CENTER ST)

OR22: CENTER ST BRIDGE (PHASE 1) PROJECT
WILLAMINA - SALEM HIGHWAY
MARION & POLK COUNTIES

Designer: Bernard A. Frankl, PhD, PE
Reviewer: Bob Goodrich, PE
Drafter: Jake Williams
Checker: Jonathon Stark, EI

DRAINAGE DETAILS - 3

SHEET NO. JA130

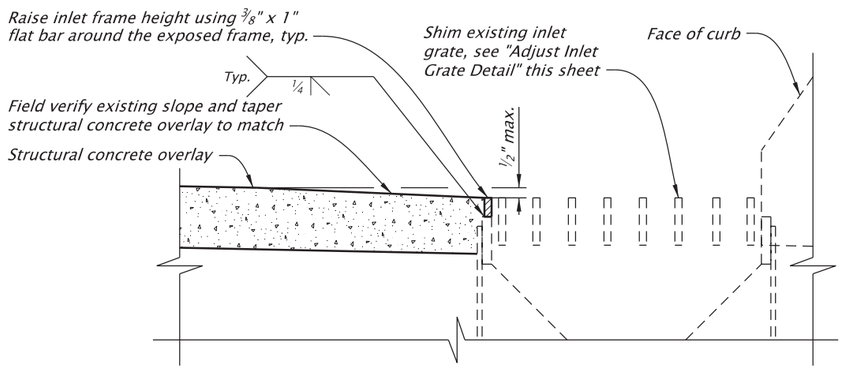

OVERLAY TAPER AT INLET

Scale: 1 1/2"=1'-0"

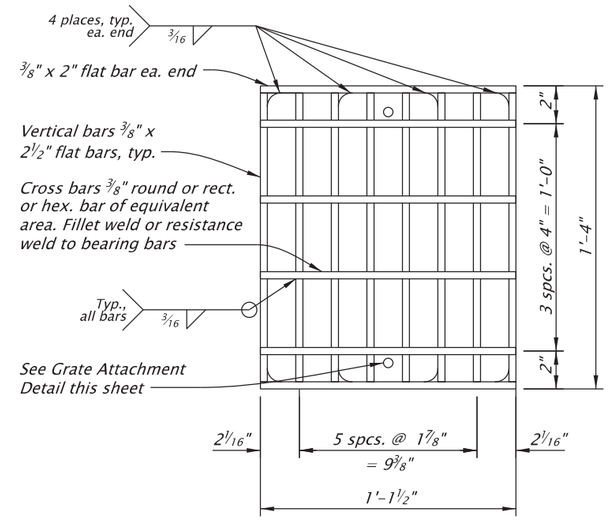

GRATE

Scale: 1 1/2"=1'-0"

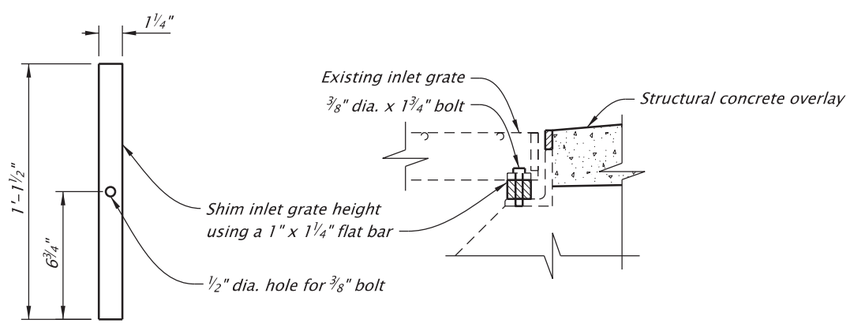

ADJUST INLET GRATE DETAIL

Scale: 1 1/2"=1'-0"

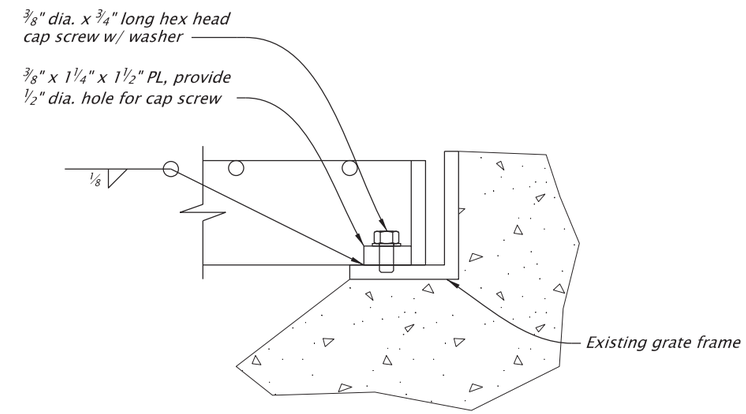

GRATE ATTACHMENT DETAIL

Scale: 3"=1'-0"

NOTES:
1. *For drain locations, see sht. JA30 – JA31*
2. *Field verify all dimensions and elevations before submitting Working Drawings and prior to ordering or fabricating any materials. See sht. J02 for more details.*

SCALE WARNING

IF THIS SCALE LINE DOES NOT MEASURE ONE INCH, THEN DRAWING IS NOT TO SCALE

For accompanied by drawings, see sht. JA01

STRUCTURE NO.	00123K
BDS DWG NO.	113875
CALC. BOOK	7997
HWY: 030	M.P.: 25.88
COUNTY	Marion
DATE	2/26

REGISTERED PROFESSIONAL ENGINEER 099941PE OREGON JULY 21, 2022 BERNARD ANTHONY FRANKL

Digitally Signed 2026.02.12 11:47:37-08'00'

EXPIRES: 12/31/2027

FINAL ELECTRONIC DOCUMENT AVAILABLE UPON REQUEST

DOWL
3500 Chad Drive, Suite 200
Eugene, Oregon 97408
541-683-6090
WWW.DOWL.COM

OREGON DEPARTMENT OF TRANSPORTATION

WILLAMETTE RIVER, HWY 30 EB (CENTER ST)

OR22: CENTER ST BRIDGE (PHASE 1) PROJECT
WILLAMINA - SALEM HIGHWAY
MARION & POLK COUNTIES

Designer: Bernard A, Frankl, PhD, PE
Reviewer: Bob Goodrich, PE
Drafter: Jake Williams
Checker: Jon Stark, EI

DRAINAGE DETAILS - 4

SHEET NO. JA131

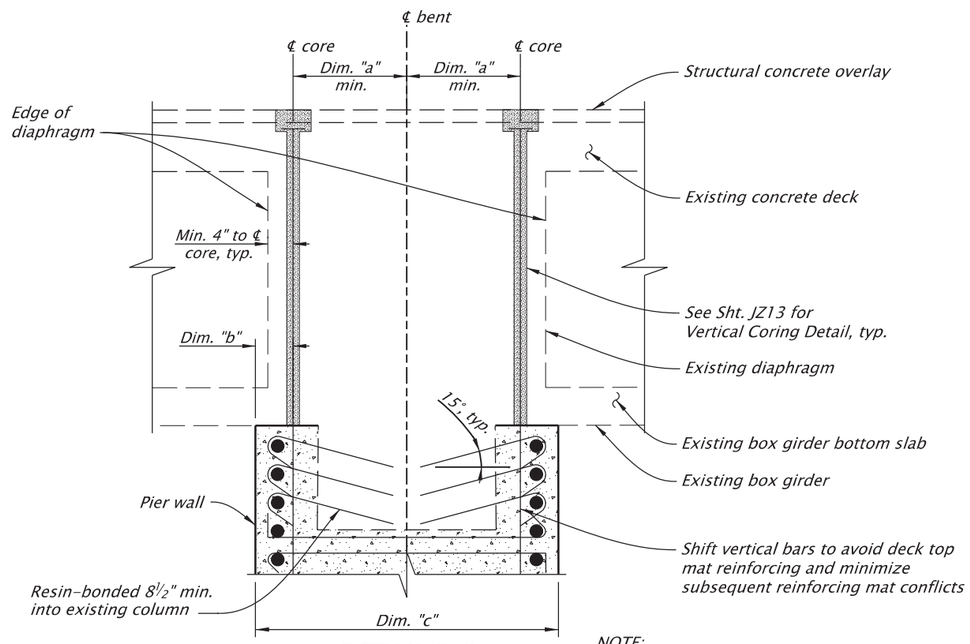

DETAIL "1"
Scale: 1/2"=1'-0"

NOTE:
Mark edge of diaphragm on deck before drilling holes. Locate edge of diaphragm by using an electronic rebar mapping device. Mark location of edge of diaphragm on deck surface and box girder soffit.

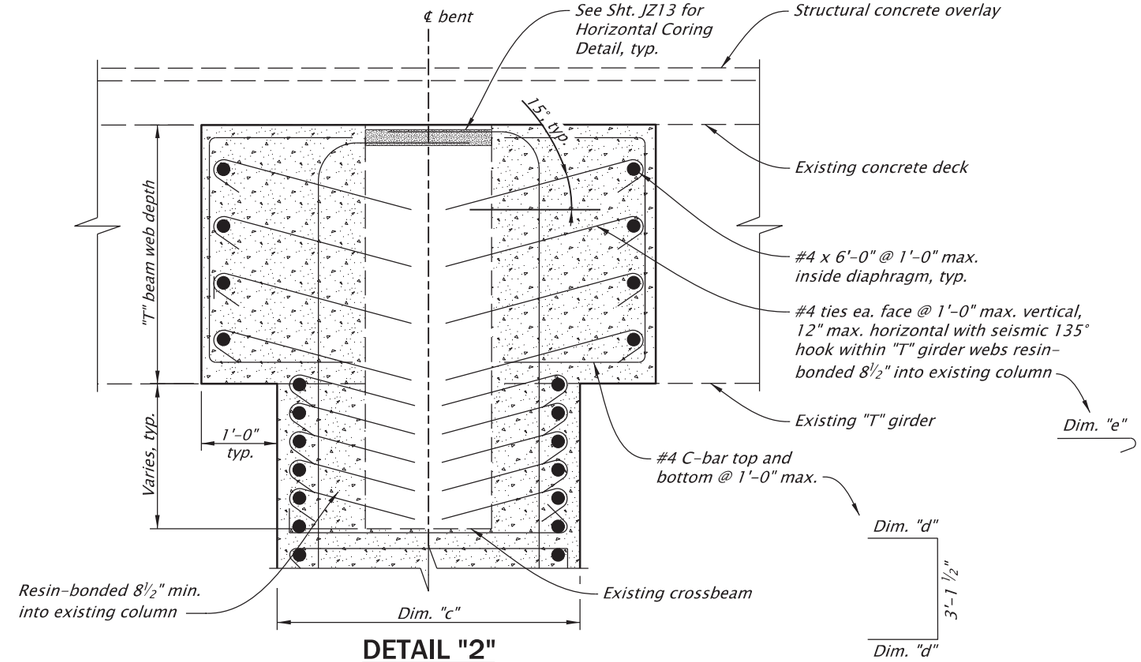

DETAIL "2"
Scale: 1/2"=1'-0"

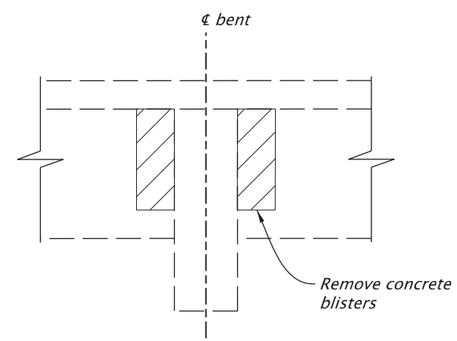

DETAIL "3" REMOVAL LIMITS
Scale: 1/4"=1'-0"

Diaphragm Dimensions						
Bent	Dim "a"	Dim "b"	Dim "c"	Dim "d"	Dim "e"	Hole dia. (in.)
21	Note 1	6"	4'-0"	1'-10"	2'-9½"	2½"
22, 23	1'-6"	6¾"	4'-1½"	2'-0"	2'-11¾"	2¾"
24	1'-6"	6¾"	4'-1½"	2'-0"	2'-10"	2¾"
26	1'-6"	5"	3'-8"	n/a	n/a	2⅛"
28	1'-6"	6¾"	3'-8"	1'-8"	2'-7½"	2⅛"

Note 1: Columns 1 through 3 & Column 5 = 1'-6"
Column 4 = 1'-2¾"

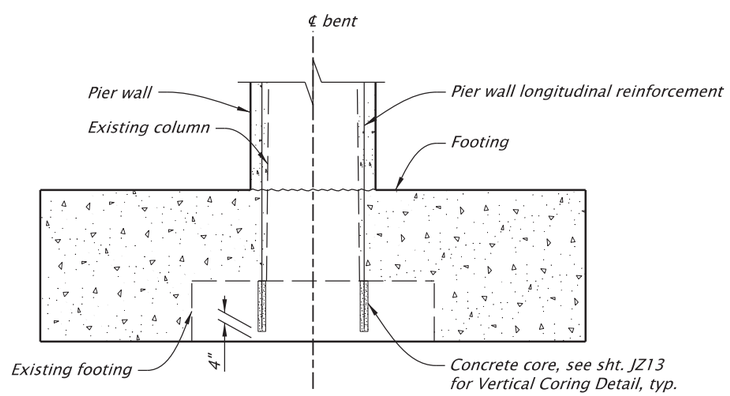

EXISTING FOOTING CORING DETAIL
Scale: 1"=5'

NOTES:
1. Field verify all dimensions and elevations prior to submitting Working Drawings and prior to ordering or fabricating any materials. See sht. J02 for more details.
2. See Bent Plan and Elevation sheet for construction control working points to establish bent centerline.

For accompanied by drawings, see sht. JA01

SCALE WARNING
IF THIS SCALE LINE DOES NOT MEASURE ONE INCH, THEN DRAWING IS NOT TO SCALE

STRUCTURE NO. 00123K
BDS DWG NO. 113876
CALC. BOOK 7997
HWY: 030
M.P.: 25.88
COUNTY Marion
DATE 2/26

REGISTERED PROFESSIONAL ENGINEER 099941PE OREGON JULY 21, 2022 BERNARD ANTHONY FRANKL
Digitally Signed 2026.02.12 11:47:58-08'00'
EXPIRES: 12/31/2027
FINAL ELECTRONIC DOCUMENT AVAILABLE UPON REQUEST

DOWL
3500 Chad Drive, Suite 200
Eugene, Oregon 97408
541-683-6090
WWW.DOWL.COM

WILLAMETTE RIVER, HWY 30 EB (CENTER ST)

OR22: CENTER ST BRIDGE (PHASE 1) PROJECT
WILLAMINA - SALEM HIGHWAY
MARION & POLK COUNTIES

Designer: Bernard A. Frankl, PhD, PE
Reviewer: Bob Goodrich, PE
Drafter: Jake Williams
Checker: Tanner Torkelson, PE

MISCELLANEOUS DETAILS - 1
SHEET NO. JA132

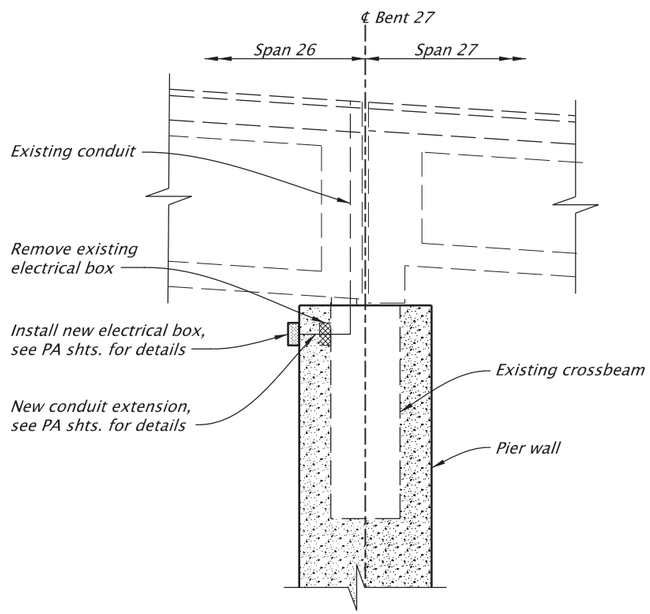

SECTION X3-X3

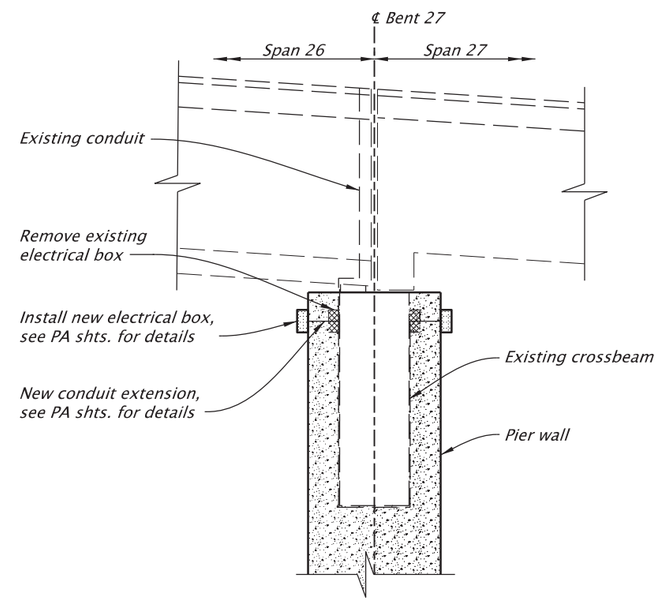

SECTION Y3-Y3

BENT 27 ILLUMINATION DETAILS

Scale: 1/4"=1'-0"

NOTES:

1. *See sht. JA105 for Sections X3-X3, and Y3-Y3 location.*
2. *Field verify all dimensions and elevations prior to submitting Working Drawings and prior to ordering or fabricating any materials. See sht. J02 for more details.*

For accompanied by drawings, see sht. JA01

SCALE WARNING
IF THIS SCALE LINE DOES NOT MEASURE ONE INCH, THEN DRAWING IS NOT TO SCALE

STRUCTURE NO.	00123K
BDS DWG NO.	113877
CALC. BOOK	7997
HWY: 030 M.P.: 25.88	
COUNTY	Marion
DATE	2/26

REGISTERED PROFESSIONAL ENGINEER 099941PE OREGON JULY 21, 2022 BERNARD ANTHONY FRANKL
Digitally Signed 2026.02.12 11:48:19-08'00'
EXPIRES: 12/31/2027

FINAL ELECTRONIC DOCUMENT AVAILABLE UPON REQUEST

DOWL
3500 Chad Drive, Suite 200
Eugene, Oregon 97408
541-683-6090
WWW.DOWL.COM

OREGON DEPARTMENT OF TRANSPORTATION

WILLAMETTE RIVER, HWY 30 EB (CENTER ST)

OR22: CENTER ST BRIDGE (PHASE 1) PROJECT
WILLAMINA - SALEM HIGHWAY
MARION & POLK COUNTIES

Designer: Bernard A. Frankl, PhD, PE
Reviewer: Bob Goodrich, PE
Drafter: Jake Williams
Checker: Tanner Torkelson, PE

MISCELLANEOUS DETAILS - 2

SHEET NO. JA133

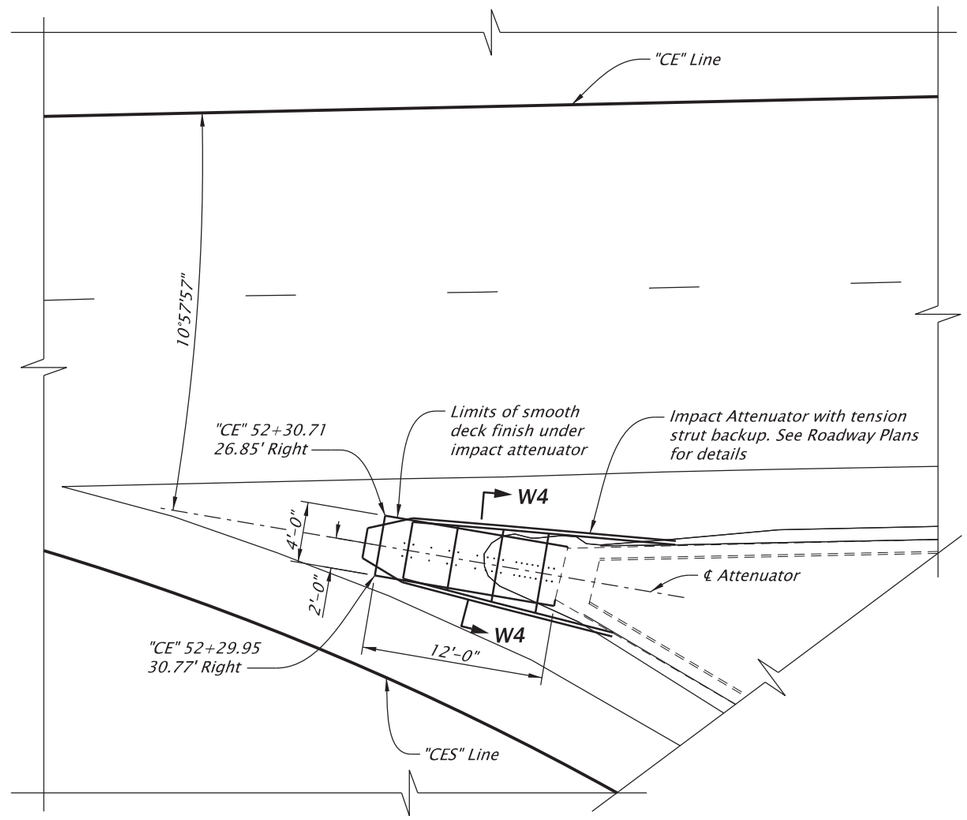

IMPACT ATTENUATOR PLAN

Scale: 1"=10'

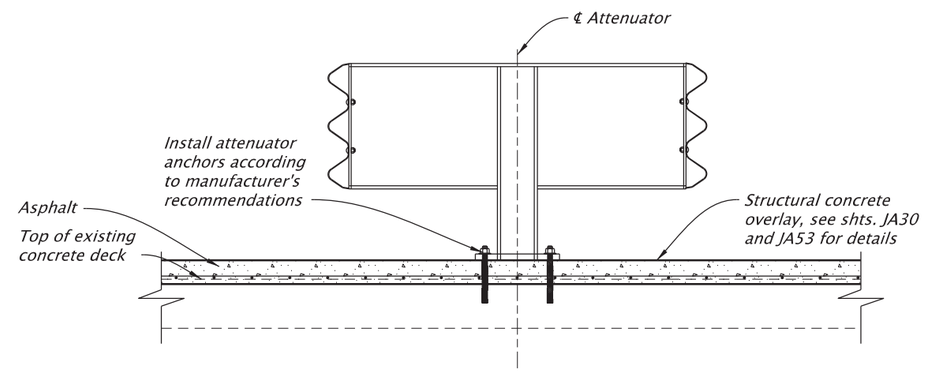

SECTION W4-W4

Scale: 1/2"=1'-0"

For accompanied by drawings, see sht. JA01

NOTES:

1. *Construct structural concrete overlay prior to installing impact attenuator.*
2. *Mechanical screw anchors in structural concrete overlay not shown for clarity.*
3. *Hard trowel finish concrete level under impact attenuator. Do not texture. Warp concrete finished grade around attenuator anchorage as required to match adjacent finished grade.*
4. *Field verify all dimensions and elevations before submitting Working Drawings and prior to ordering or fabricating any materials. See sht. J02 for more details.*

SCALE WARNING

IF THIS SCALE LINE DOES NOT MEASURE ONE INCH, THEN DRAWING IS NOT TO SCALE

STRUCTURE NO.	00123K
BDS DWG NO.	113878
CALC. BOOK	7997
HWY: Various	M.P.: Various
COUNTY	Marion/Polk
DATE	2/26

REGISTERED PROFESSIONAL ENGINEER
60181PE
Digitally Signed 2026.02.12 11:05:18-08'00'
OREGON
JULY 13, 2004
ANDREW DEAN HOWE
EXPIRES: 6/30/2027

FINAL ELECTRONIC DOCUMENT AVAILABLE UPON REQUEST

DOWL
3500 Chad Drive, Suite 200
Eugene, Oregon 97408
541-683-6090
WWW.DOWL.COM

OREGON DEPARTMENT OF TRANSPORTATION

WILLAMETTE RIVER, HWY 30 EB (CENTER ST)

OR22: CENTER ST BRIDGE (PHASE 1) PROJECT
WILLAMINA - SALEM HIGHWAY
MARION & POLK COUNTIES

Designer: Andy Howe, PE
Reviewer: Bob Goodrich, PE
Drafter: Jake Williams
Checker: Nasario Lopez-Francisco, PE

IMPACT ATTENUATOR INSTALLATION DETAILS - 1

SHEET NO. JA134

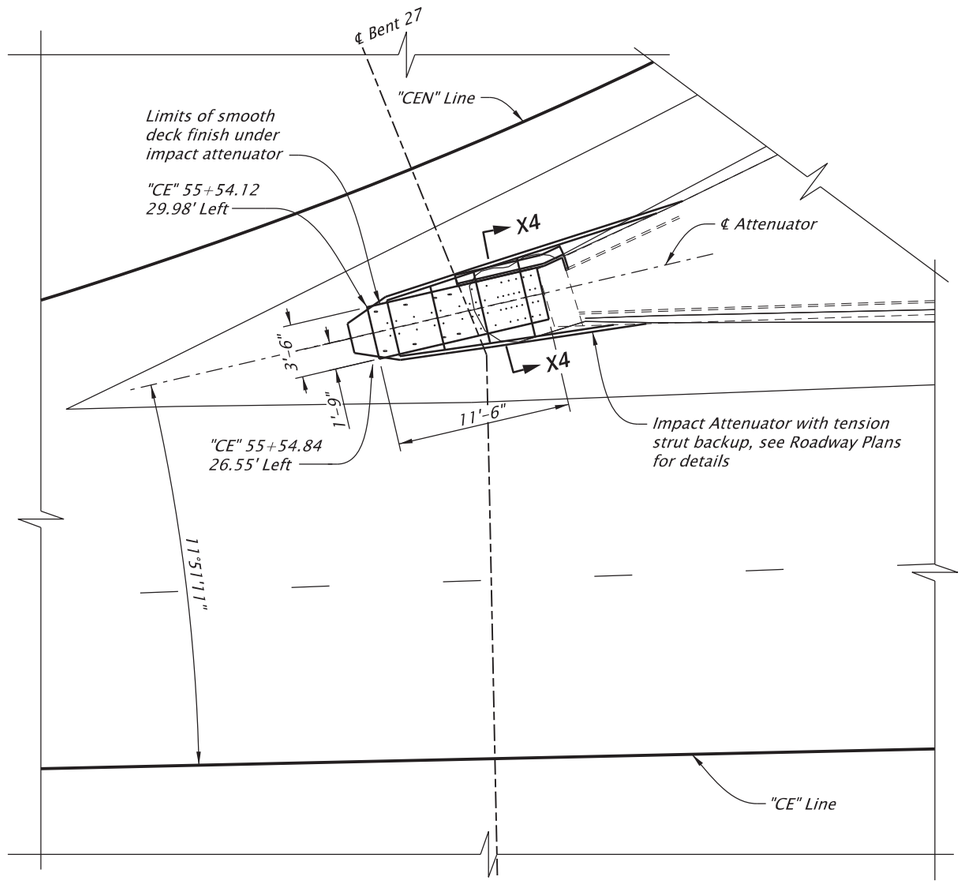

IMPACT ATTENUATOR PLAN

Scale: 1"=10'

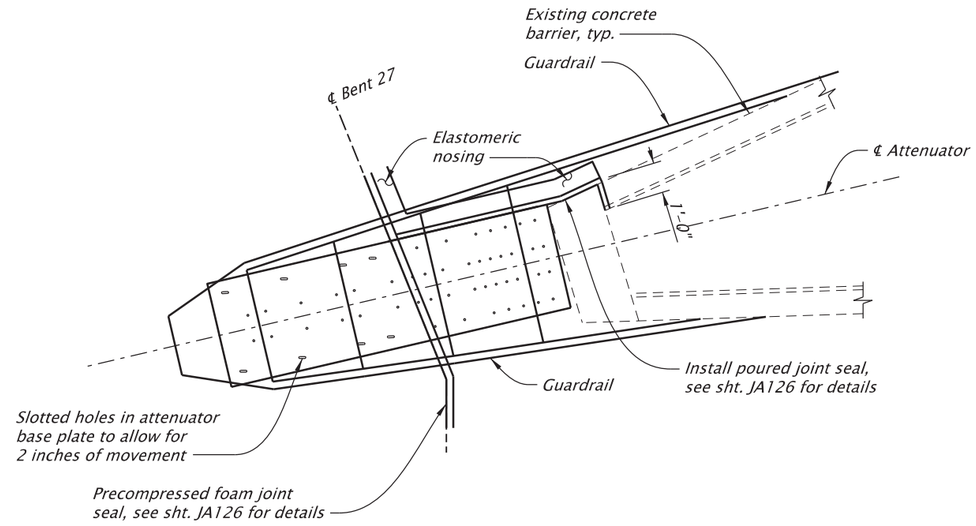

VIEW 6-6

Scale: 1"=10'

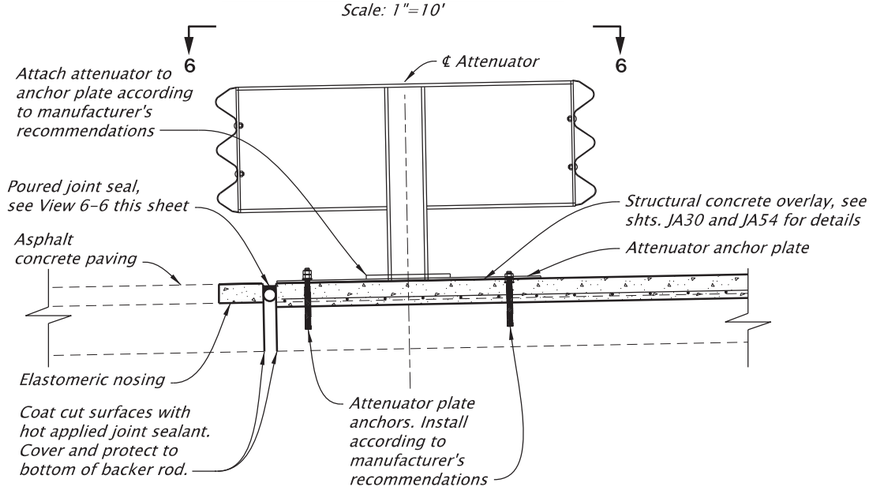

SECTION X4-X4

Scale: 1/2"=1'-0"

NOTES:

1. *Construct structural concrete overlay and expansion joint seals prior to installing impact attenuator.*
2. *Mechanical screw anchors in structural concrete overlay not shown for clarity.*
3. *Hard trowel finish concrete level under impact attenuator anchor plate. Do not texture. Warp concrete finished around attenuator anchor plate as required to match adjacent finished grade.*
4. *See Bent Plan and Elevation sheet for construction control working points to establish bent centerlines.*
5. *Field verify all dimensions and elevations before submitting Working Drawings and prior to ordering or fabricating any materials. See sht. J02 for more details.*

For accompanied by drawings, see sht. JA01

SCALE WARNING
IF THIS SCALE LINE DOES NOT MEASURE ONE INCH, THEN DRAWING IS NOT TO SCALE

STRUCTURE NO.	00123K
BDS DWG NO.	113879
CALC. BOOK	7997
HWY: Various	M.P.: Various
COUNTY	Marion/Polk
DATE	2/26

REGISTERED PROFESSIONAL ENGINEER
60181PE
Digitally Signed 2026.02.12 11:04:58-08'00'
OREGON
JULY 13, 2004
ANDREW DEAN HOWE
EXPIRES: 6/30/2027

FINAL ELECTRONIC DOCUMENT AVAILABLE UPON REQUEST

DOWL
3500 Chad Drive, Suite 200
Eugene, Oregon 97408
541-683-6090
WWW.DOWL.COM

OREGON DEPARTMENT OF TRANSPORTATION

WILLAMETTE RIVER, HWY 30 EB (CENTER ST)

OR22: CENTER ST BRIDGE (PHASE 1) PROJECT
WILLAMINA - SALEM HIGHWAY
MARION & POLK COUNTIES

Designer: Andy Howe, PE
Reviewer: Bob Goodrich, PE
Drafter: Jake Williams
Checker: Nasario Lopez-Francisco, PE

IMPACT ATTENUATOR INSTALLATION DETAILS - 2

SHEET NO. JA135

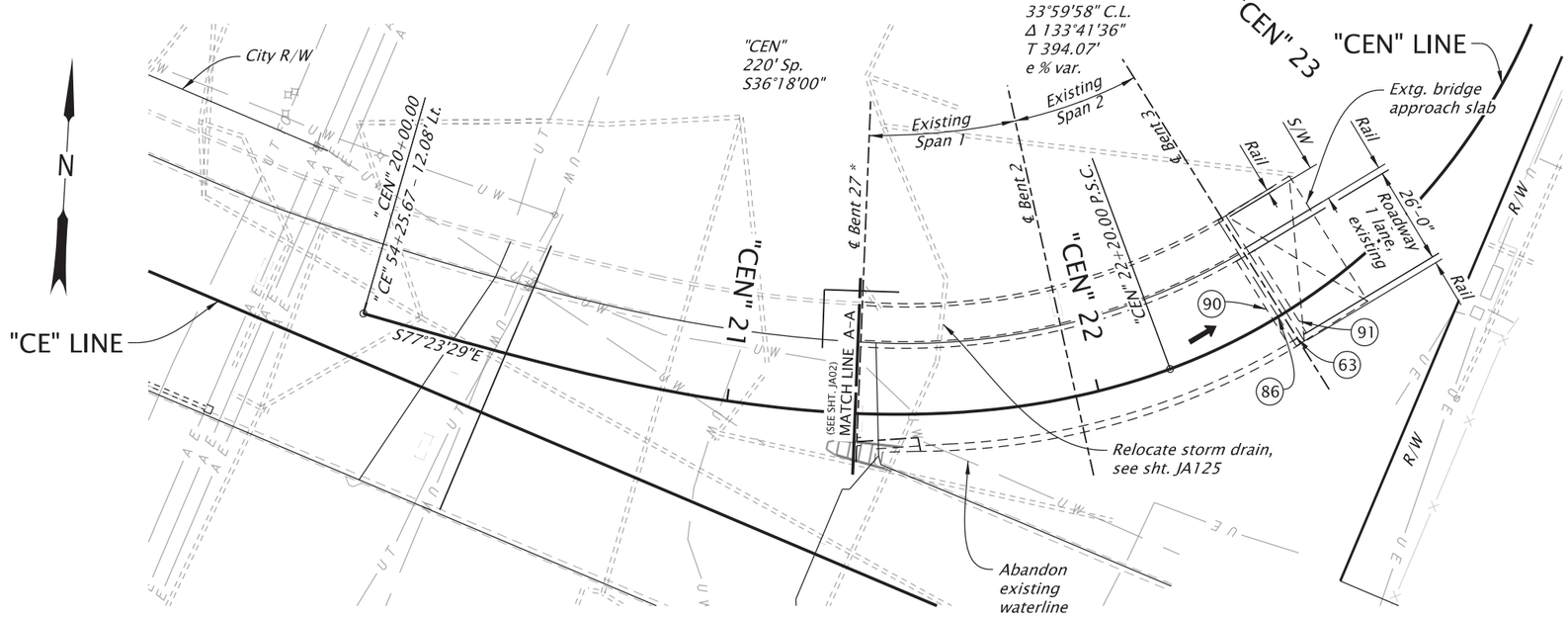

PLAN

Scale: 1"=40'

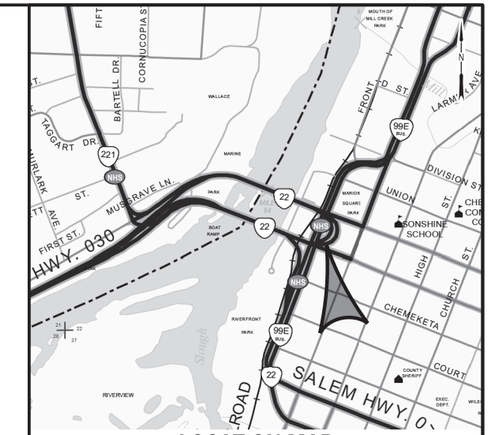

LOCATION MAP

S.W. ¼ & S.E. ¼, SEC. 22, T. 07 S., R. 03 W., W.M.
LAT. 44.9442, LONG. -123.0399

GENERAL NOTES

DESIGN NOTES:
Work on bridge 22519 is designed in accordance with the 2020 edition of "AASHTO LRFD Bridge Design Specifications" and the 2023 edition of the ODOT Bridge Design Manual", in the Bridge Design Category "Bridge Modernization", as modified by the following:

Design exception 21705-01 for bridge rail crash test rating.

CONSTRUCTION NOTE

Provide stainless steel reinforcement according to ASTM A955, AISI 2205, Grade 60.

DETAILED REFERENCE NUMBERS

(63) *Remove extg. asphaltic plug joint seal and replace with a new asphaltic plug joint seal, see dwg. BR157 for details.*

(86) *Core vertically through superstructure and install stainless steel smooth dowel bar, see sht. JB02 for details.*

(90) *Bridge deck cold plane pavement removal, 3-4" deep and bonded membrane removal. Install rolled waterproofing membrane and Level 3, ½" ACP wearing course, see sht. JB02 for details.*

(91) *Bridge approach slab cold plane pavement removal, 3-4" deep and bonded membrane removal. Install rolled waterproofing membrane and Level 3, ½" ACP wearing course, see sht. JB02 for details.*

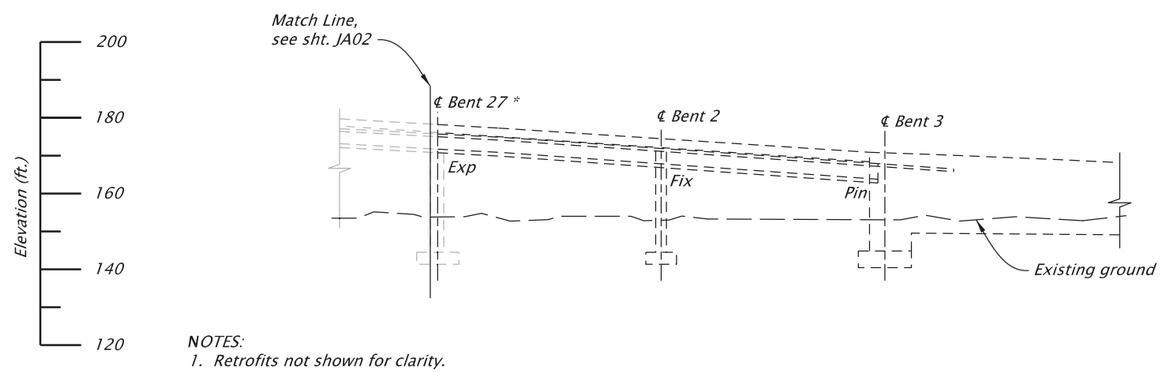

NOTES:
1. *Retrofits not shown for clarity.*
2. *Utilities to be maintained and protected unless otherwise shown.*
3. ** Bridge 00123K*
4. *Field verify all dimensions and elevations prior to submitting Working Drawings and prior to ordering or fabricating any materials. See sht. J02 for more details.*

DEVELOPED ELEVATION

Scale: 1"=40'

NOTE:
Elevations shown are based on North American Vertical Datum 1988 (NAVD88).

SCALE WARNING
IF THIS SCALE LINE DOES NOT MEASURE ONE INCH, THEN DRAWING IS NOT TO SCALE

ACCOMPANIED BY DWGS.: J01, J02, JB02

NOT FOR CONSTRUCTION - INFORMATIONAL DWGS.:

STRUCTURE NO.	22519
BDS DWG NO.	113894
CALC. BOOK	7997
HWY: 030	M.P.: 25.88
COUNTY	Marion/Polk
DATE	1/26

REGISTERED PROFESSIONAL ENGINEER
79997PE
Digitally Signed 2026.01.29 21:26:52-08'00'
OREGON
JULY 14, 2015
FRED M. GOMEZ
EXPIRES: 06-30-2027

FINAL ELECTRONIC DOCUMENT AVAILABLE UPON REQUEST

DOWL
3500 Chad Drive, Suite 200
Eugene, Oregon 97408
541-683-6090
WWW.DOWL.COM

WILLAMETTE RIVER, HWY 30 EB RAMP N.

OR22: CENTER ST BRIDGE (PHASE 1) PROJECT
WILLAMINA - SALEM HIGHWAY
MARION & POLK COUNTIES

Designer: Fred M. Gomez, PE
Reviewer: Bob Goodrich, PE
Drafter: Jake Williams
Checker: Nasario Lopez-Francisco, PE

PLAN AND ELEVATION

SHEET NO. JB01

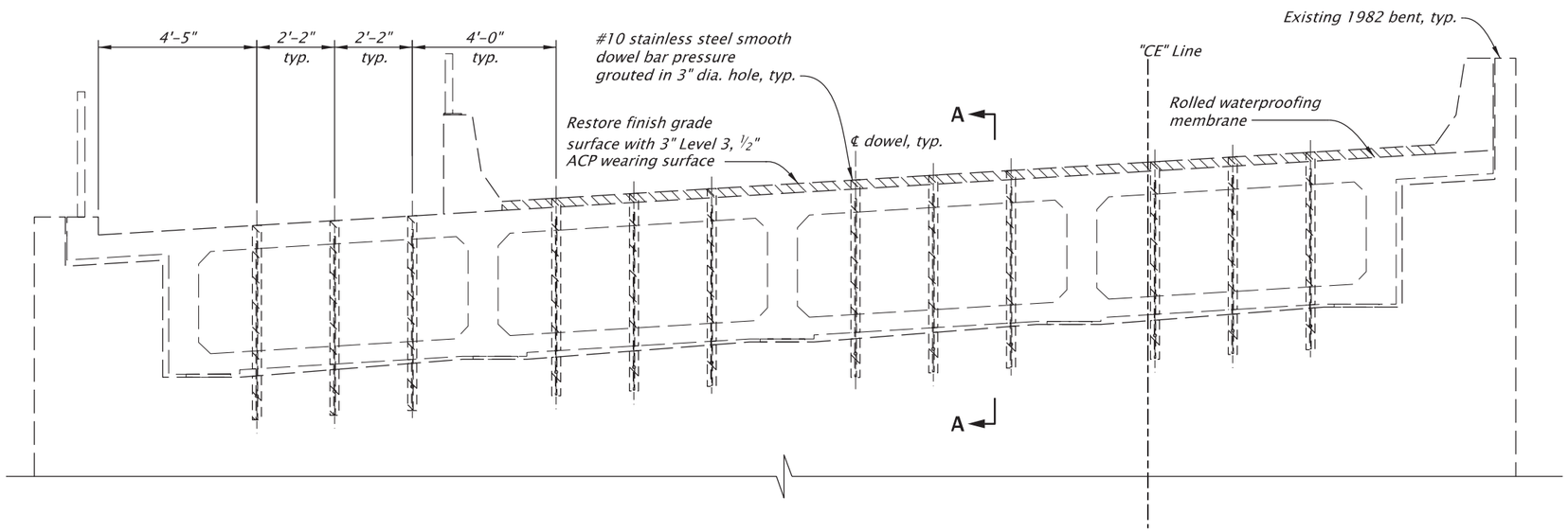

ELEVATION - BENT 3

Scale: 1/4"=1'-0"

CONSTRUCTION SEQUENCE

1. *Remove existing asphalt and bonded membrane to paving limits shown.*
2. *Core drill 3" dia. hole.*
3. *Mechanically scarify interior surface of hole to achieve surface profile CSP 6 according to the International Concrete Repair Institute Guideline 310.2R-2013.*
4. *Place #10 stainless steel smooth dowel bar in the center of the hole.*
5. *Provide water tight formwork on beam seat surface. Pressure grout portion of hole below the beam seat with a non-shrink, rapid set grout that has a minimum 4 ksi 28-day compressive strength from the ODOT Qualified Product List (QPL).*
6. *Provide water tight formwork against the box girder soffit. Repeat pressure grouting procedure on the portion of the hole extending through the box girder.*
7. *Install asphaltic plug joint.*
8. *Install rolled waterproofing membrane. Pave 3" Level 3, 1/2" ACP wearing surface.*

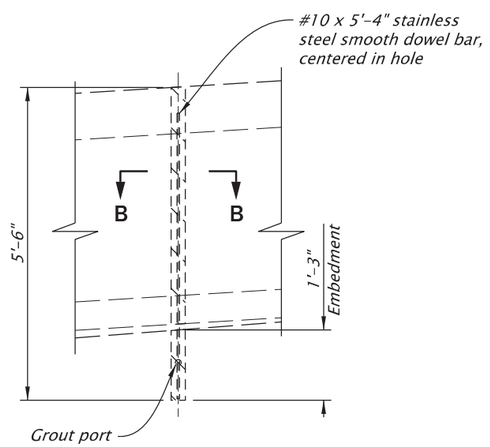

ELEVATION - GROUTED DOWEL

Scale: 3/8"=1'-0"

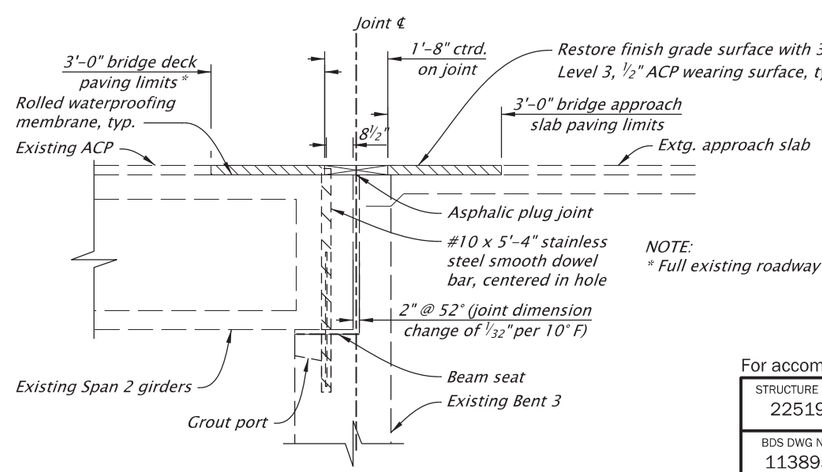

NOTE:
* Full existing roadway width.

SECTION A-A

Scale: 1/4"=1'-0"

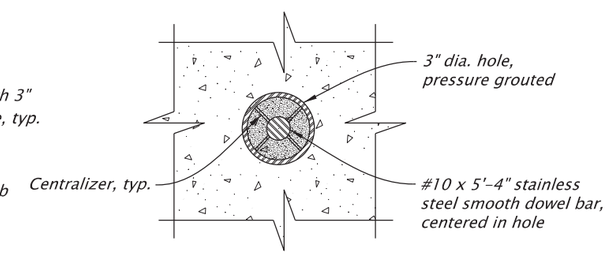

SECTION B-B

Scale: 1 1/2"=1'-0"

NOTE:
Field verify all dimensions and elevations before submitting Working Drawings and prior to ordering or fabricating any materials. See sht. J02 for more details.

SCALE WARNING
IF THIS SCALE LINE DOES NOT MEASURE ONE INCH, THEN DRAWING IS NOT TO SCALE

For accompanied by drawings, see sht. JB01

STRUCTURE NO.	22519
BDS DWG NO.	113895
CALC. BOOK	7997
HWY: 030 M.P.: 25.88	
COUNTY	Marion/Polk
DATE	1/26

REGISTERED PROFESSIONAL ENGINEER
79997PE
Digitally Signed 2026.01.29 21:28:10-08'00'
OREGON
JULY 14, 2015
FRED M. GOMEZ
EXPIRES: 06-30-2027

FINAL ELECTRONIC DOCUMENT AVAILABLE UPON REQUEST

DOWL
3500 Chad Drive, Suite 200
Eugene, Oregon 97408
541-683-6090
WWW.DOWL.COM

WILLAMETTE RIVER, HWY 30 EB RAMP N.

OR22: CENTER ST BRIDGE (PHASE 1) PROJECT
WILLAMINA - SALEM HIGHWAY
MARION & POLK COUNTIES

Designer: Fred M. Gomez, PE
Reviewer: Bob Goodrich, PE
Drafter: Jake Williams
Checker: Nasario Lopez-Francisco, PE

BENT 3 SUPERSTRUCTURE DOWELS DETAILS

SHEET NO. JB02

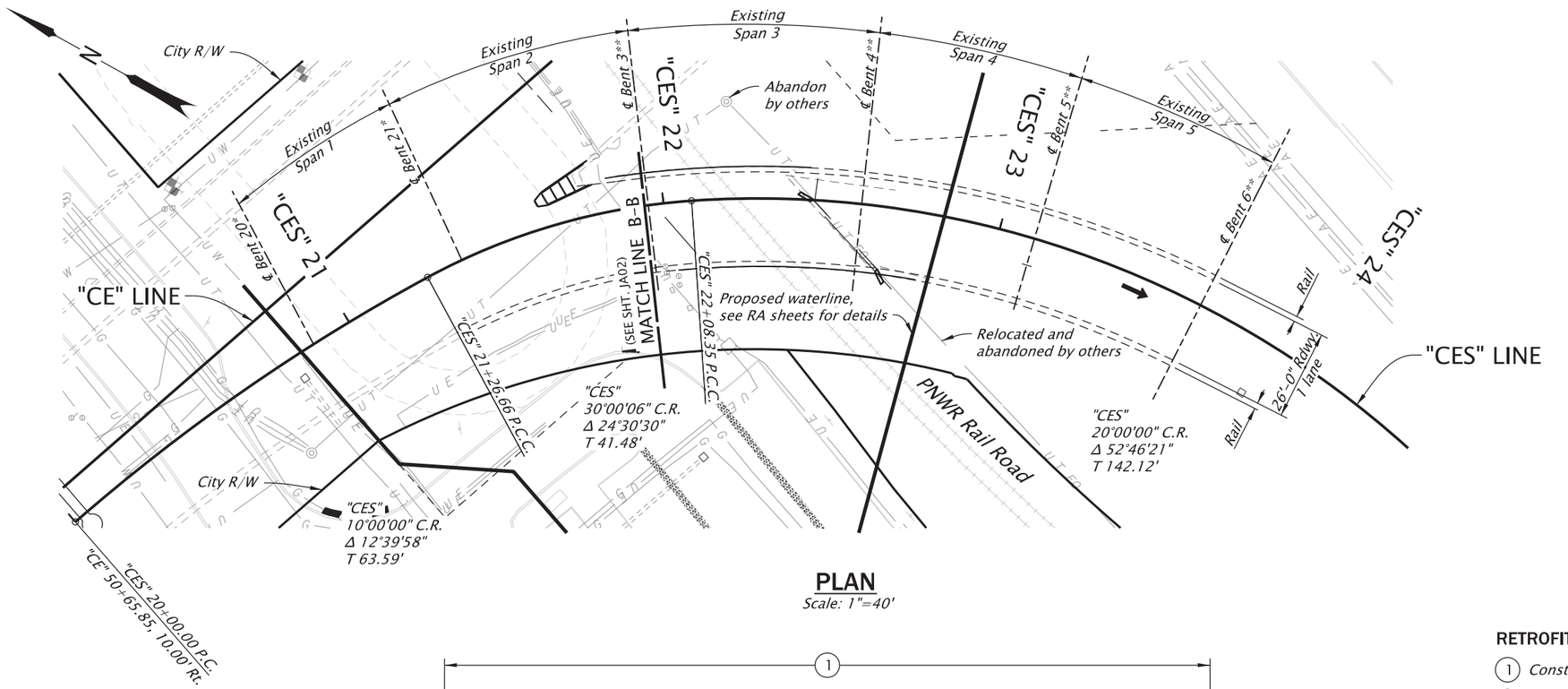

PLAN

Scale: 1"=40'

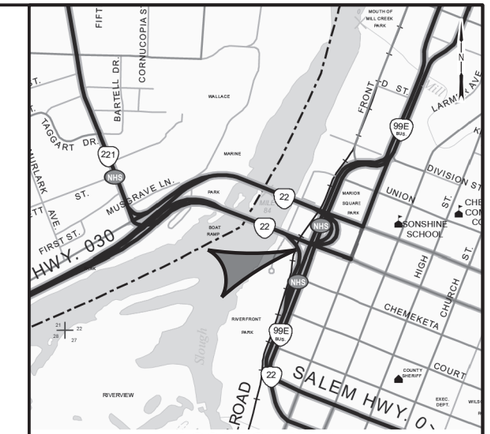

LOCATION MAP

S.W. ¼ & S.E. ¼, SEC. 22, T. 07 S., R. 03 W., W.M.
LAT. 44.9438, LONG. -123.0411

RETROFIT ITEMS:

1. Construct structural concrete overlay and install shear strengthening, see sht. JC07.
2. Retrofit bent foundation, footing and pier walls, see sht. JC13.
3. Install isolation bearings at Bents 3 & 4, see sht. JC10.
4. Install pier protection wall, see shts. JC18-JC21.
5. Install protective fencing.

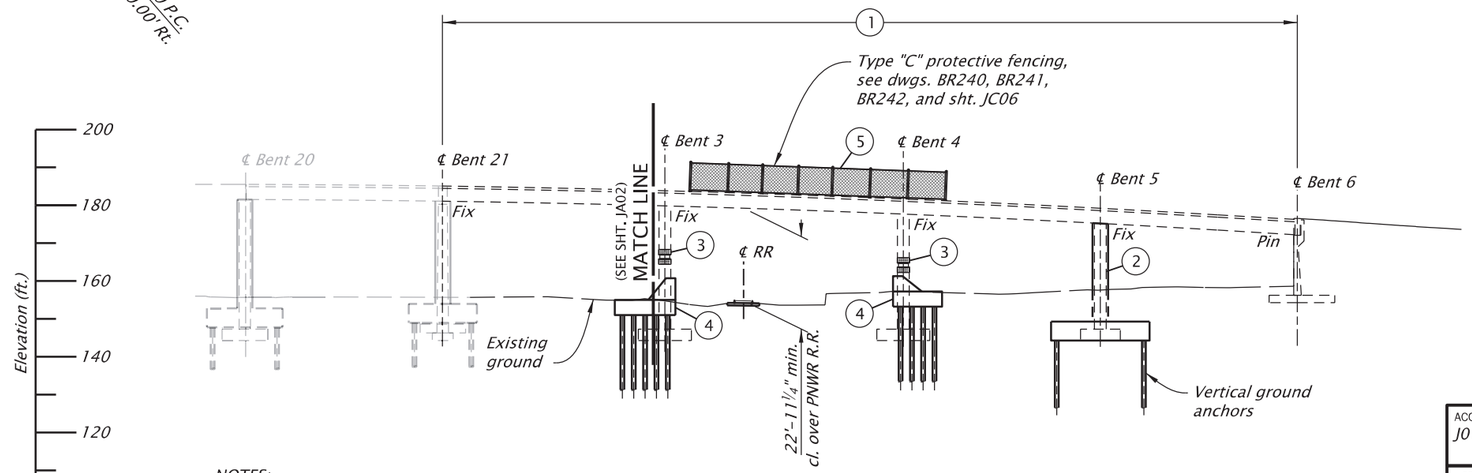

DEVELOPED ELEVATION

Scale: 1"=40'

NOTES:
1. Utilities to be maintained and protected unless otherwise shown.
2. ** See Bent Plan and Elevation sheet for construction control working points to establish bent centerlines.
3. Field verify all dimensions and elevations before submitting Working Drawings and prior to ordering or fabricating any materials. See sht. J02 for more details.

NOTE:
Elevations shown are based on North American Vertical Datum 1988 (NAVD88).

SCALE WARNING
IF THIS SCALE LINE DOES NOT MEASURE ONE INCH, THEN DRAWING IS NOT TO SCALE

ACCOMPANIED BY DWGS.:
J01, J02, JC02-JC21, JZ01-JZ14

STRUCTURE NO.	00123G
BDS DWG NO.	113897
CALC. BOOK	7997
HWY: 030 M.P.: 26.00	
COUNTY	Marion
DATE	2/26

REGISTERED PROFESSIONAL ENGINEER 099941PE
Digitally Signed 2026.02.12 11:48:38-08'00'
OREGON JULY 21, 2022
BERNARD ANTHONY FRANKL
EXPIRES: 12/31/2027

FINAL ELECTRONIC DOCUMENT AVAILABLE UPON REQUEST

DOWL
3500 Chad Drive, Suite 200
Eugene, Oregon 97408
541-683-6090
WWW.DOWL.COM

WILLAMETTE RIVER, EB HWY 30 RAMP TO SB HWY 72

OR22: CENTER ST BRIDGE (PHASE 1) PROJECT
WILLAMINA - SALEM HIGHWAY
MARION & POLK COUNTIES

Designer: Bernard A. Frankl, PhD, PE
Reviewer: Bob Goodrich, PE
Drafter: Jake Williams
Checker: Tanner Torkelson, PE

PLAN AND ELEVATION

SHEET NO. JC01

GENERAL NOTES

See sht. J02 for bridge common general notes.

Prepare existing concrete surfaces to be encased in new concrete by cleaning and removing all existing concrete coating, unless shown otherwise.

DESIGN NOTES

Work on Bridge 00123G is designed in accordance with the 2020 edition of the "AASHTO LRFD Bridge Design Specifications" and the 2023 edition of the "ODOT Bridge Design Manual", in the Bridge Design Category "Bridge Modernization", as modified by the following:

Design Deviation DD-03 for capacity-protected member forces.
Design Deviation DD-06 global seismic design strategy with isolation bearings at Bents 2 and 3.
Design Deviation DD-08 for high strength reinforcement.
Design Deviation DD-10 for structural concrete overlay.
Design Exception 21705-01 for bridge rail crash test rating.

Seismic design is performed by multi-mode analysis in accordance with the project-specific "Seismic Design Criteria". A bridge site-specific Seismic Hazard Evaluation was performed to develop the following design response spectrum plots:

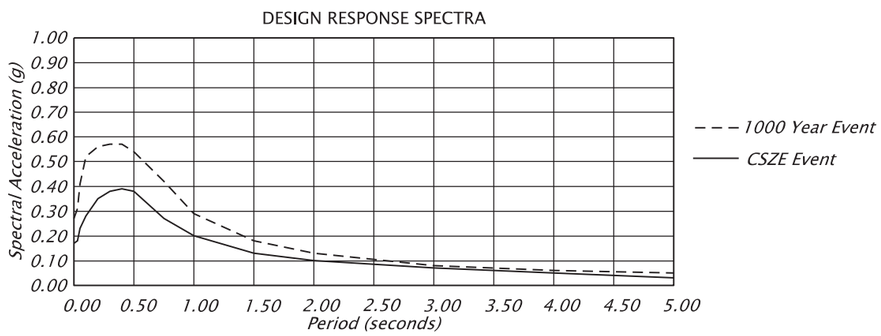

EXISTING UTILITIES ON BRIDGE

1. ODOT bridge illumination system.

For accompanied by drawings, see sht. JC01

SCALE WARNING
IF THIS SCALE LINE DOES NOT MEASURE ONE INCH, THEN DRAWING IS NOT TO SCALE

STRUCTURE NO.	00123G
BDS DWG NO.	113898
CALC. BOOK	7997
HWY: 030 M.P.: 26.00	
COUNTY	Marion
DATE	2/26

REGISTERED PROFESSIONAL ENGINEER
099941PE
Digitally Signed 2026.02.12 11:48:58-08'00'
OREGON
JULY 21, 2022
BERNARD ANTHONY FRANKL
EXPIRES: 12/31/2027

FINAL ELECTRONIC DOCUMENT AVAILABLE UPON REQUEST

DOWL
3500 Chad Drive, Suite 200
Eugene, Oregon 97408
541-683-6090
WWW.DOWL.COM

OREGON DEPARTMENT OF TRANSPORTATION

WILLAMETTE RIVER, EB HWY 30 RAMP TO SB HWY 72

OR22: CENTER ST BRIDGE (PHASE 1) PROJECT
WILLAMINA - SALEM HIGHWAY
MARION & POLK COUNTIES

Designer: Bernard A. Frankl, PhD, PE
Reviewer: Bob Goodrich, PE
Drafter: Jake Williams
Checker: Tanner Torkelson, PE

GENERAL NOTES

SHEET NO. JC02

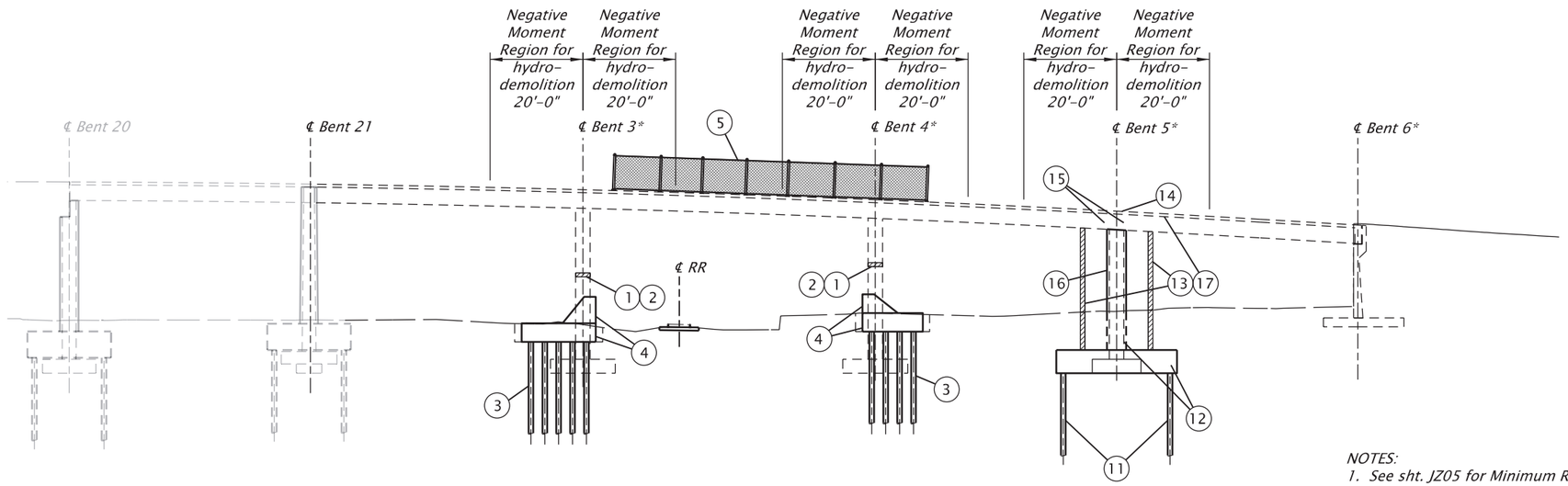

DEVELOPED ELEVATION - CONSTRUCTION SEQUENCE

Scale: 1"=30'

NOTES:

1. *See sht. JZ05 for Minimum Railroad Construction Clearance Envelope.*
2. *Bent 5 Construction Sequence may be concurrent with Bents 3 & 4 Construction Sequence.*
3. ** See Bent Plan and Elevation sheet for construction control working points to establish bent centerlines.*
4. *Field verify all dimensions and elevations prior to submitting Working Drawings and prior to ordering or fabricating any materials. See sht. J02 for more details.*
5. *Inject and seal shrinkage cracks in new concrete pours as directed.*

BENT 3 AND 4 PIER PROTECTION WALL CONSTRUCTION SEQUENCE

1. *Install steel plate jacket, jacking and jacking support system, and column isolation bearings, see shts. JC09, JC10, JC11 and JC17.*
2. *Remove jacking and jacking support system.*
3. *Install pier protection wall micropiles, see shts. JC20 and JC21.*
4. *Construct pier protection wall footing and wall, see shts. JC18, JC19, JC20 and JC21.*
5. *Install protective fencing, see shts. JZ04, JZ05, JZ06 and JZ10. Work can be concurrent with (1) to (4).*

BENT 5 CONSTRUCTION SEQUENCE

11. *Install and tension vertical ground anchors, see sht. JC05.*
12. *Construct footing and lower construction zone pier wall, see shts. JC14 and JC15.*
13. *Install bridge jacking and jacking support system.*
14. *Perform bridge deck cold plane removal, concrete deck micro-milling and selective hydrodemolition.*
15. *Perform vertical coring, see sht. JC15.*
16. *Place upper construction zone pier wall, see sht. JC15.*
17. *Install structural concrete overlay and surface texturing, then remove jacking and jacking support system.*

SCALE WARNING

IF THIS SCALE LINE DOES NOT MEASURE ONE INCH, THEN DRAWING IS NOT TO SCALE

For accompanied by drawings, see sht. JC01

STRUCTURE NO.	00123G
BDS DWG NO.	113899
CALC. BOOK	7997
HWY: 030	M.P.: 26.00
COUNTY	Marion
DATE	2/26

REGISTERED PROFESSIONAL ENGINEER
099941PE
Digitally Signed 2026.02.12 11:49:16-08'00'
OREGON
JULY 21, 2022
BERNARD ANTHONY FRANKL
EXPIRES: 12/31/2027

FINAL ELECTRONIC DOCUMENT AVAILABLE UPON REQUEST

DOWL
3500 Chad Drive, Suite 200
Eugene, Oregon 97408
541-683-6090
WWW.DOWL.COM

WILLAMETTE RIVER, EB HWY 30 RAMP TO SB HWY 72

OR22: CENTER ST BRIDGE (PHASE 1) PROJECT
WILLAMINA - SALEM HIGHWAY
MARION & POLK COUNTIES

Designer: Bernard A. Frankl, PhD, PE
Reviewer: Bob Goodrich, PE
Drafter: Jake Williams
Checker: Tanner Torkelson, PE

CONSTRUCTION SEQUENCE

SHEET NO. JC03

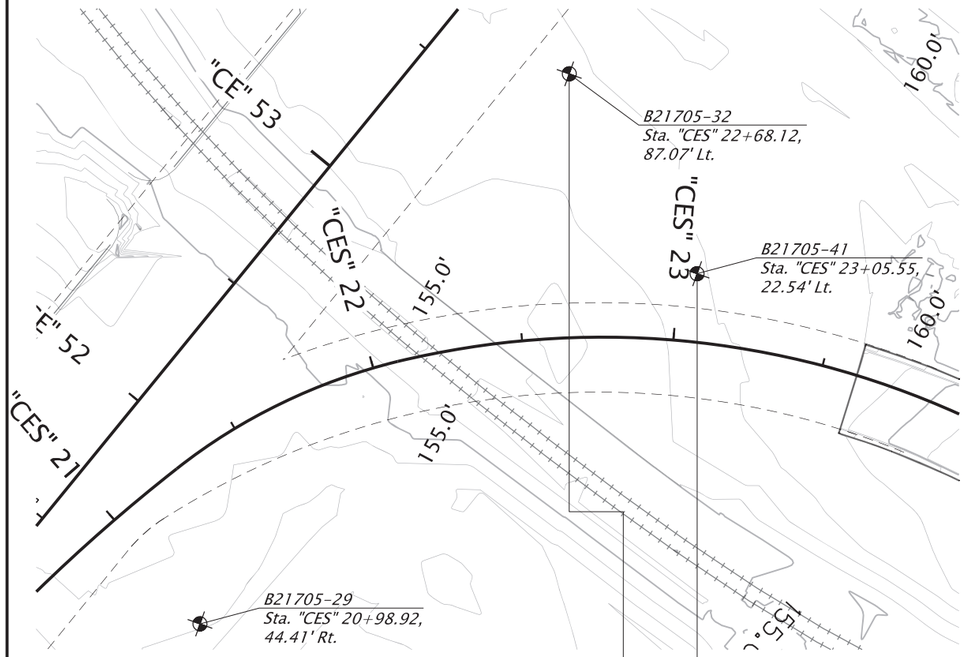

PLAN

Scale: 1 = 50'

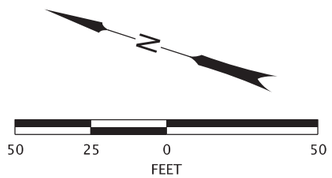

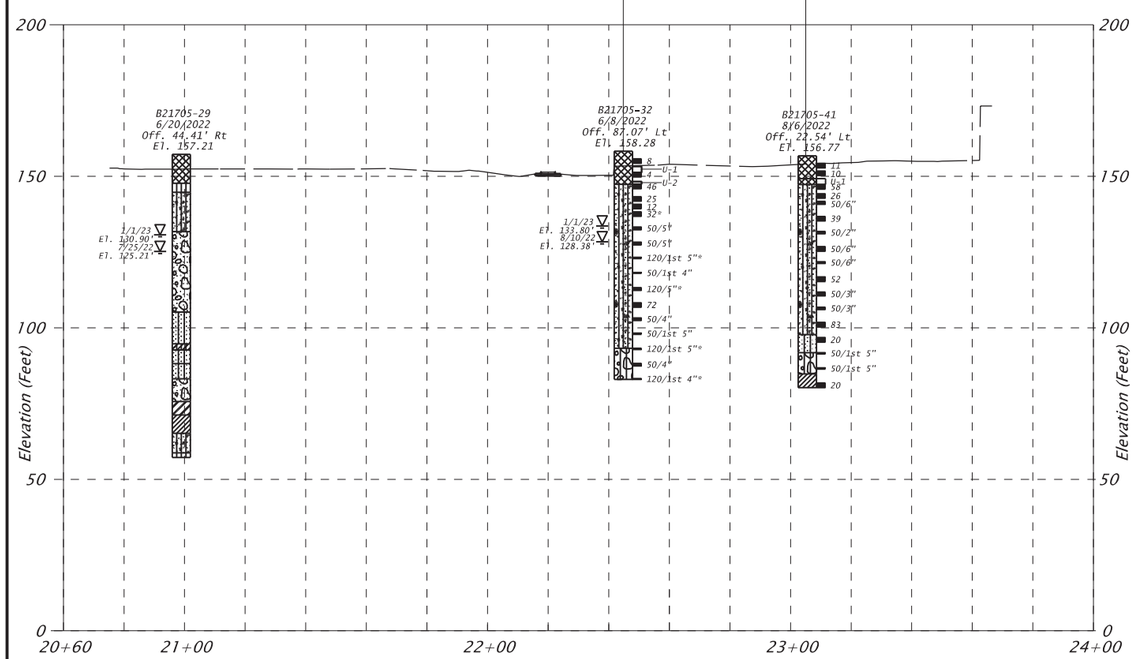

PROFILE "CES" LINE

HORIZ. SCALE: 1"=50'
VERT. SCALE: 1"=50'

UNIT DESCRIPTIONS:

- Silty, sandy GRAVEL to SILT, some sand to sandy, trace gravel to Silty CLAY, some sand, trace gravel, GM, ML, and CL, brown to dark brown, nonplastic to low plasticity, moist to wet, medium dense to soft to stiff, fine-to coarse-grained sand, angular to rounded gravel, contains organics (Fill)
- SILT, trace to some fine-grained sand, ML, blue-gray to brown, nonplastic to low plasticity, wet (Alluvium or Older Alluvium)
- Silty, sandy GRAVEL, trace to some cobbles, GM, wet, very dense, fine-to coarse-grained sand, subrounded to rounded gravel (Older Alluvium)
- GRAVEL, some sand to sandy, trace silt to silty, trace to some cobbles, GP, GP-GM, and GM, moist to wet, medium dense to very dense, fine-to coarse-grained sand, subrounded to rounded gravel (Older Alluvium)
- Sandy GRAVEL, trace silt, trace to some cobbles, GP, brown to gray, wet, fine-to coarse-grained sand, angular to rounded gravel (Older Alluvium)
- Silty SAND, some gravel to gravelly, trace to some cobbles, SM, brown to dark brown, moist to wet, subrounded to rounded gravel, fine-to coarse-grained sand (Older Alluvium)
- Clayey SILT, trace fine-to coarse-grained sand, trace gravel, MH, brown-gray, wet (Older Alluvium)
- Silty CLAY, trace fine-grained sand, CL, blue-gray, medium plasticity, moist to wet, very stiff (Older Alluvium)
- Sandy CLAY, some silt, CH, black-gray, wet, medium plasticity, fine-grained sand (Older Alluvium)

GENERAL NOTES:

1. Elevations are based on North American Vertical Datum (1988).
2. Geotechnical data shown on this drawing are a consolidation of information and/or revision in terminology from the drill logs. More detailed subsurface data is available on the drill logs in the Geotechnical Report, which is available from the Engineer.
3. 1' Contour interval.
4. In accordance with ASTM D1586-84, N values are reported for intervals of 1' except as noted.
5. RST VW2100-0.35 vibrating-wire piezometer (SN: VW146424) installed at 49' in B21705-29.
6. RST VW2100-0.35 vibrating-wire pizometer (SN: VW146440) install at 48' in B21705-32.
7. Boring B21705-29 was completed using Rotosonic drilling techniques and SPT N values were not collected.
8. Field verify all dimensions and elevations before submitting Working Drawings and prior to ordering or fabricating any materials. See sht. J02 for more details.

LEGEND:

- = Borehole location
- = Groundwater measured in the borehole location
- E1. 133.58 = Elevation
- 12/29/22 = Date of measurement
- 50/1st 5" = Standard Penetration Test refusal length
- ■ 19 = Standard Penetration Test -N value
- □ U-1 = Undisturbed sample
- □ 29"*e = Oversized sampler (modified California) blow count

For accompanied by drawings, see sht. JC01

STRUCTURE NO.	00123G
BDS DWG NO.	113900
CALC. BOOK	7997
HWY: 030	M.P.: 26.00
COUNTY	Marion
DATE	1/26

SCALE WARNING
IF THIS SCALE LINE DOES NOT MEASURE ONE INCH, THEN DRAWING IS NOT TO SCALE

REGISTERED PROFESSIONAL ENGINEER
85729PE
Digitally Signed 2026.01.28 16:52:46-08'00'
OREGON
SEPTEMBER 13, 2011
BRIAN A. BENNETTS
EXPIRES: 12/31/27

GRI
16520 SW Upper Boones Ferry Rd, Ste. 100
Tigard, OR 97224
p | 503-641-3478 web | www.gri.com
GEOTECHNICAL ▫ PAVEMENT ▫ GEOLOGICAL ▫ ENVIRONMENTAL
Since 1984
OREGON DEPARTMENT OF TRANSPORTATION

WILLAMETTE RIVER, EB HWY 30 RAMP TO SB HWY 72

OR22: CENTER ST BRIDGE (PHASE 1) PROJECT

WILLAMINA-SALEM HIGHWAY
MARION & POLK COUNTIES

Designer: BRIAN BENNETTS, PE
Reviewer: GREG MARTIN, CEG
Drafter: JAKE WILLIAMS
Checker: SCOTT SCHLECHTER, PE

GEOTECHNICAL DATA

SHEET NO. JC04

FINAL ELECTRONIC DOCUMENT
AVAILABLE UPON REQUEST

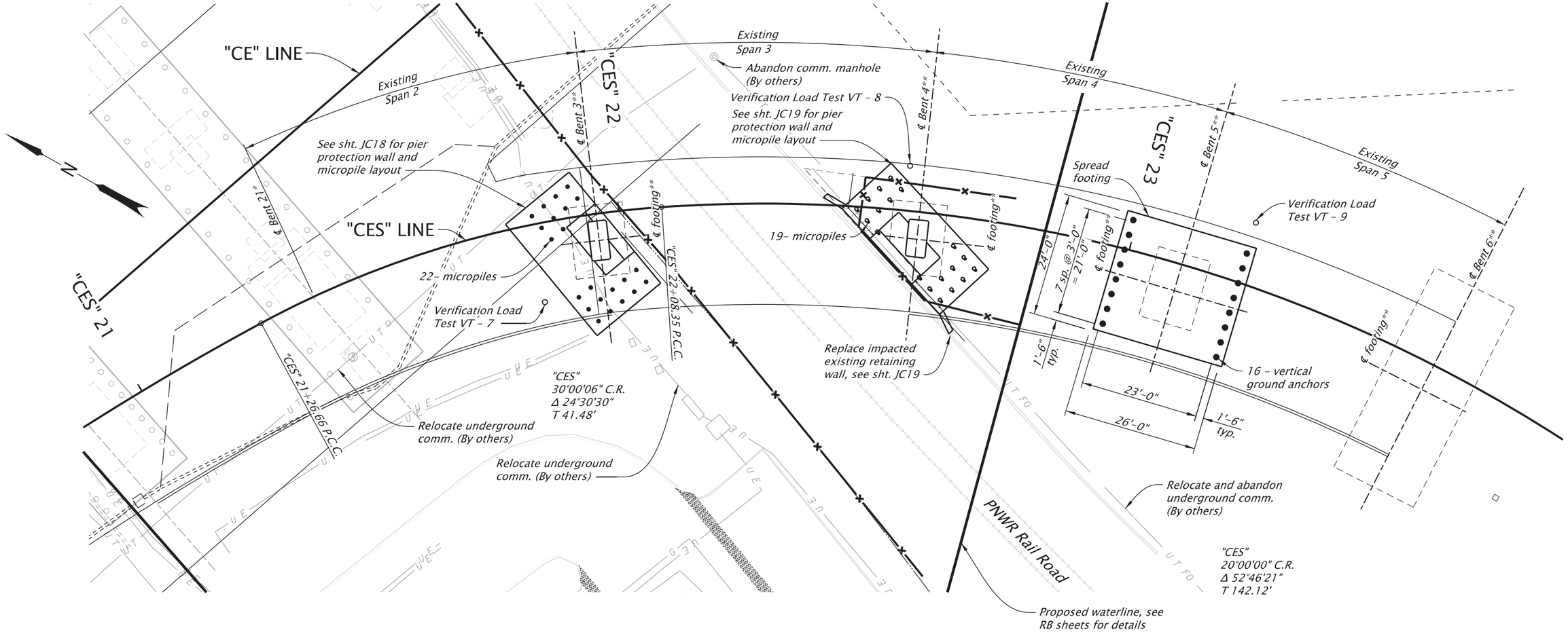

FOOTING PLAN

Scale: 1"=20'

NOTES:

1. *** See Bent Plan and Elevation sheet for construction control working points to establish bent and footing centerlines.*
2. *Pile top ring not shown for clarity.*
3. *Utilities to be maintained and protected unless otherwise shown.*
4. ** Bridge 00123K*
5. *Place verification load tests a minimum of 4 feet from edge of proposed footing limits.*
6. *Field verify all dimensions and elevations prior to submitting Working Drawings and prior to ordering or fabricating any materials. See sht. J02 for more details.*

Protect and maintain existing footing

Verification load test vertical ground anchor, see sht. JZ09 for details

Vertical ground anchor or micropile as noted, see sht. JZ09 for details.

For accompanied by drawings, see sht. JC01

STRUCTURE NO.	00123G
BDS DWG NO.	113901
CALC. BOOK	7997
HWY: 030	M.P.: 26.00
COUNTY	Marion
DATE	2/26

SCALE WARNING
IF THIS SCALE LINE DOES NOT MEASURE ONE INCH, THEN DRAWING IS NOT TO SCALE

REGISTERED PROFESSIONAL ENGINEER 105234PE OREGON MAY 14, 2024 NASARIO LOPEZ-FRANCISCO
Digitally Signed 2026.02.12 12:20:08-08'00'
EXPIRES: 12/31/2026
FINAL ELECTRONIC DOCUMENT AVAILABLE UPON REQUEST

DOWL
3500 Chad Drive, Suite 200
Eugene, Oregon 97408
541-683-6090
WWW.DOWL.COM

WILLAMETTE RIVER, EB HWY 30 RAMP TO SB HWY 72

OR22: CENTER ST BRIDGE (PHASE 1) PROJECT
WILLAMINA - SALEM HIGHWAY
MARION & POLK COUNTIES

Designer: Bernard A. Frankl, PhD, PE
Reviewer: Bob Goodrich, PE
Drafter: Jake Williams
Checker: Nasario Lopez-Francisco, PE

FOUNDATION PLAN

SHEET NO. JC05

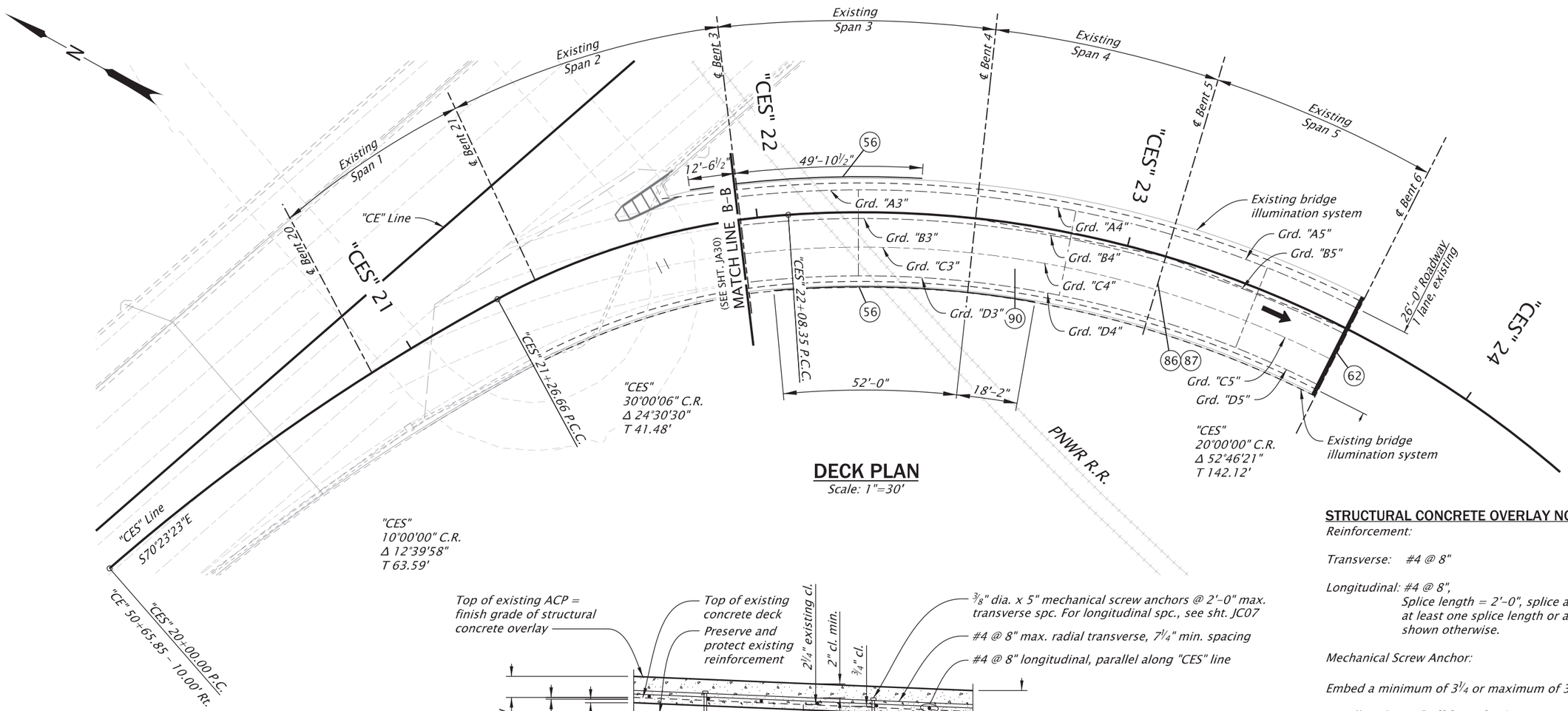

DECK PLAN

Scale: 1"=30'

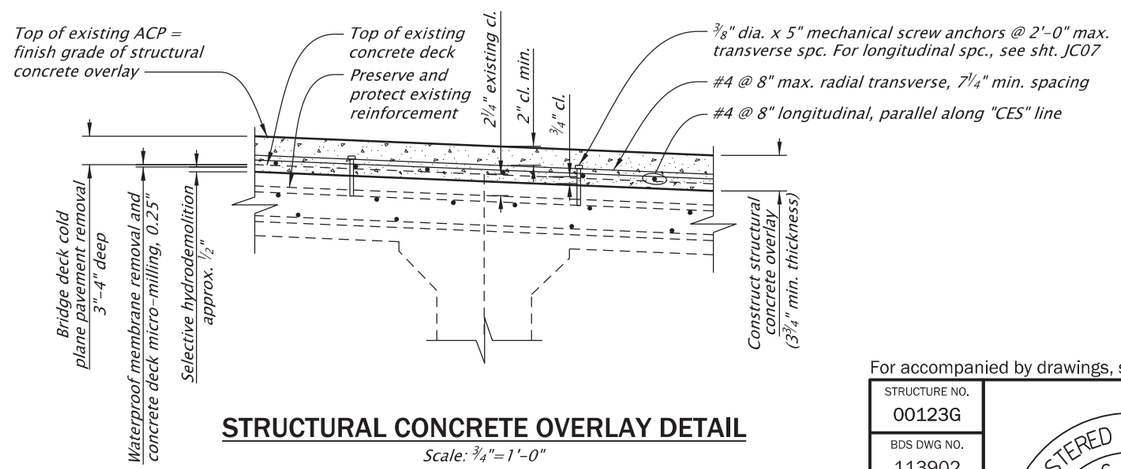

STRUCTURAL CONCRETE OVERLAY DETAIL

Scale: ¾"=1'-0"

STRUCTURAL CONCRETE OVERLAY NOTES:

Reinforcement:

Transverse: #4 @ 8"

Longitudinal: #4 @ 8",
Splice length = 2'-0", splice at alternate bars, staggered at least one splice length or as far as possible, unless shown otherwise.

Mechanical Screw Anchor:

Embed a minimum of 3¼ or maximum of 3¾" into existing deck.

Install anchors 6" off face of rail.

The minimum pullout strength is 3,900 lbs with a minimum effective embedment depth (hef) of 2⅛".

NOTES:

1. * See Bent Plan and Elevation sheet for construction working points to establish bent centerlines.
2. For Mechanical Screw Anchor Installation Adjustments, see sht. JC07.
3. For Overlay Reinforcement Placement for Spans 2 - 5, see sht. JC08.
4. Field verify all dimensions and elevations before submitting Working Drawings and prior to ordering or fabricating any materials. See sht. J02 for more details.

DETAILED REFERENCE NUMBERS:

(56) Install 8'-0" Type "C" Protection fencing with splash boards over railroad, see dwgs. BR240 and BR241 for details.

(62) Install asphaltic plug joint seal (full roadway width), see dwg. BR157 for details.

(86) Core vertically through superstructure and install cap headed reinforcing bars, see sht. JC16 for details.

(87) Install shear strengthening, see shts. JC07 and JC08 for details.

(90) Bridge deck cold plane pavement removal, 3-4" deep concrete deck micro-milling, 0.25" deep, and selective hydrodemolition. Construct 3¾" min. structural concrete overlay with surface texturing, see detail this sheet.

SCALE WARNING

IF THIS SCALE LINE DOES NOT MEASURE ONE INCH, THEN DRAWING IS NOT TO SCALE

For accompanied by drawings, see sht. JC01

STRUCTURE NO.	00123G
BDS DWG NO.	113902
CALC. BOOK	7997
HWY: 030	M.P.: 26.00
COUNTY	Marion
DATE	6/26

REGISTERED PROFESSIONAL ENGINEER
92505PE
Digitally Signed 2026.06.11 08:59:01-07'00'
OREGON
JANUARY 14, 2025
TANNER TORKELSON
EXPIRES: 06/30/2028

FINAL ELECTRONIC DOCUMENT AVAILABLE UPON REQUEST

DOWL
3500 Chad Drive, Suite 200
Eugene, Oregon 97408
541-683-6090
WWW.DOWL.COM

OREGON DEPARTMENT OF TRANSPORTATION

WILLAMETTE RIVER, EB HWY 30 RAMP TO SB HWY 72

OR22: CENTER ST BRIDGE (PHASE 1) PROJECT
WILLAMINA - SALEM HIGHWAY
MARION & POLK COUNTIES

Designer: Bernard A. Frankl, PhD, PE
Reviewer: Bob Goodrich, PE
Drafter: Jake Williams
Checker: Tanner Torkelson, PE

DECK PLAN

SHEET NO. JC06

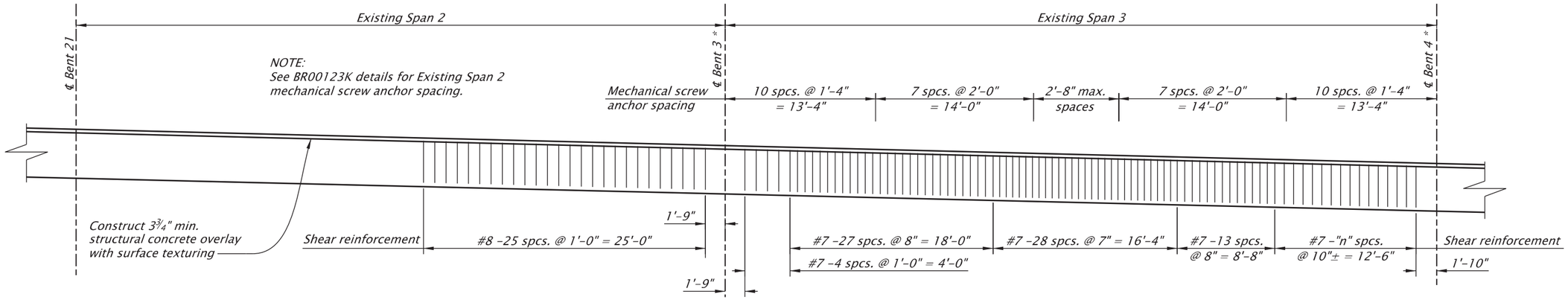

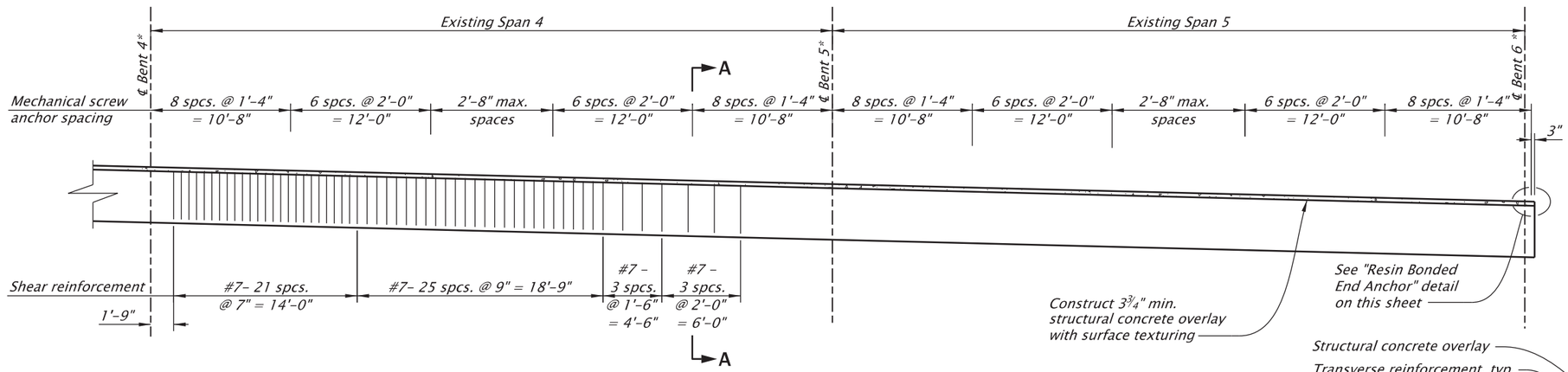

No. spaces "n"	
Grd. "A"	16
Grd. "B"	15
Grd. "C"	12
Grd. "D"	12

LONGITUDINAL BEAM ELEVATION

Scale: 1"=10'

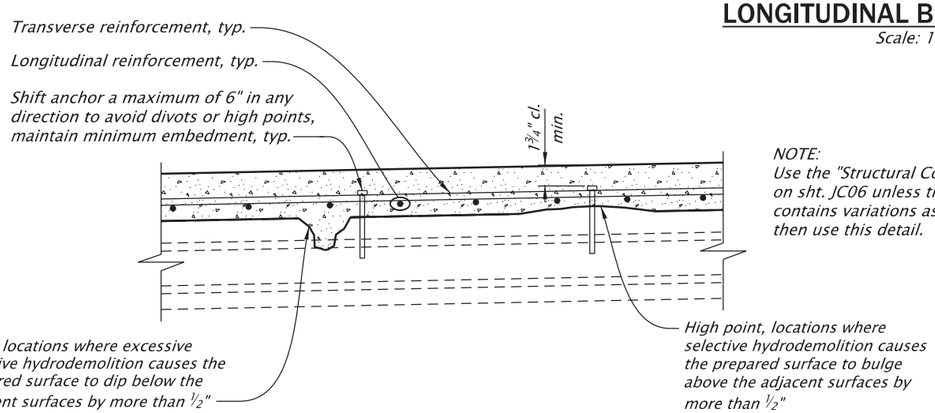

NOTE:
Use the "Structural Concrete Overlay Detail" on sht. JC06 unless the prepared surface contains variations as shown on this detail, then use this detail.

MECHANICAL SCREW ANCHOR INSTALLATION ADJUSTMENTS

Scale: 1"=1'-0"

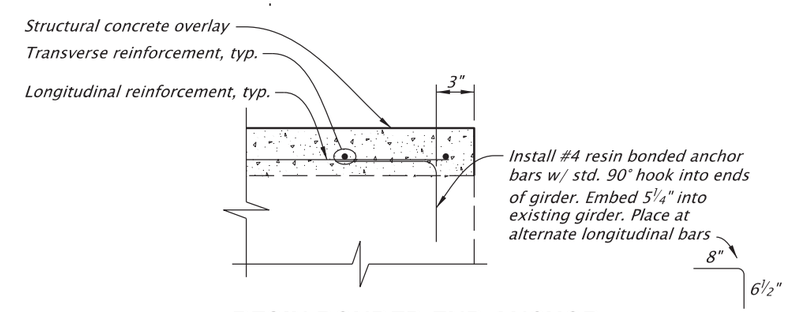

RESIN BONDED END ANCHOR

Scale: 1"=1'-0"

For accompanied by drawings, see sht. JC01

NOTES:
1. See sht. JC06 for structural concrete overlay details not shown.
2. See sht. JC08 for Section A-A and vertical coring for shear reinforcement details.
3. Coring through existing reinforcing steel at center of web during shear reinforcement installation is acceptable.
4. * See Bent Plan and Elevation sheet for construction control working points to establish bent centerlines.
5. Field verify all dimensions and elevations prior to submitting Working Drawings and prior to ordering or fabricating any materials. See sht. J02 for more details.

SCALE WARNING
IF THIS SCALE LINE DOES NOT MEASURE ONE INCH, THEN DRAWING IS NOT TO SCALE

STRUCTURE NO.	00123G
BDS DWG NO.	113903
CALC. BOOK	7997
HWY: 030	M.P.: 26.00
COUNTY	Marion
DATE	2/26

REGISTERED PROFESSIONAL ENGINEER
099941PE
Digitally Signed 2026.02.12 11:49:34-08'00'
OREGON
JULY 21, 2022
BERNARD ANTHONY FRANKL
EXPIRES: 12/31/2027

FINAL ELECTRONIC DOCUMENT
AVAILABLE UPON REQUEST

DOWL
3500 Chad Drive, Suite 200
Eugene, Oregon 97408
541-683-6090
WWW.DOWL.COM

OREGON DEPARTMENT OF TRANSPORTATION

WILLAMETTE RIVER, EB HWY 30 RAMP TO SB HWY 72

OR22: CENTER ST BRIDGE (PHASE 1) PROJECT
WILLAMINA - SALEM HIGHWAY
MARION & POLK COUNTIES

Designer: Barney Frankl, PhD, PE
Reviewer: Bob Goodrich, PE
Drafter: Jake Williams
Checker: Tanner Torkelson, PE

SUPERSTRUCTURE STRENGTHENING DETAILS - 1

SHEET NO. JC07

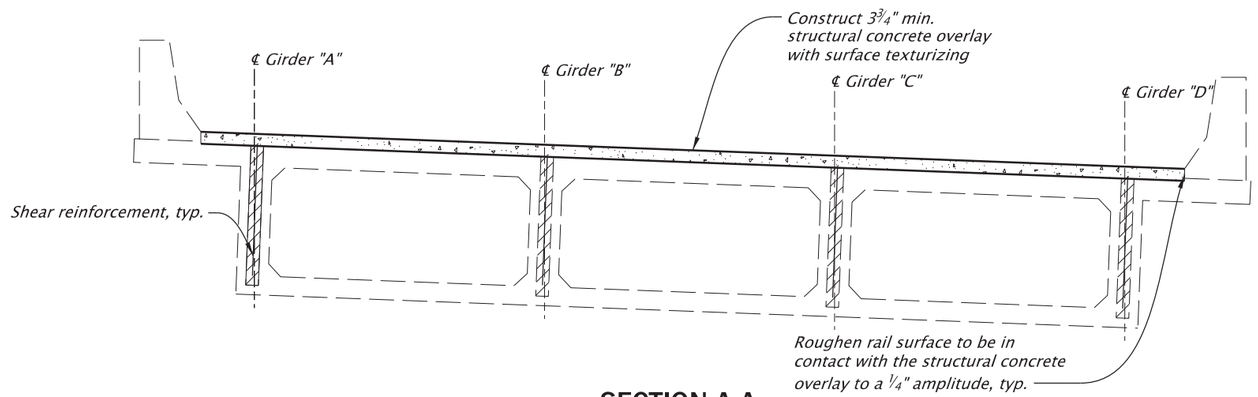

SECTION A-A

Scale: 1/4"=1'-0"

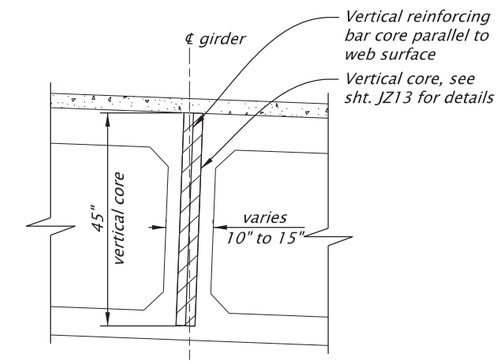

VERTICAL CORING FOR SHEAR REINFORCEMENT

Scale: 3/8"=1'-0"

NOTES:
1. Core concrete 1" larger than bar(s) diameter.
2. Install vertical reinforcing bar along each girder centerline.

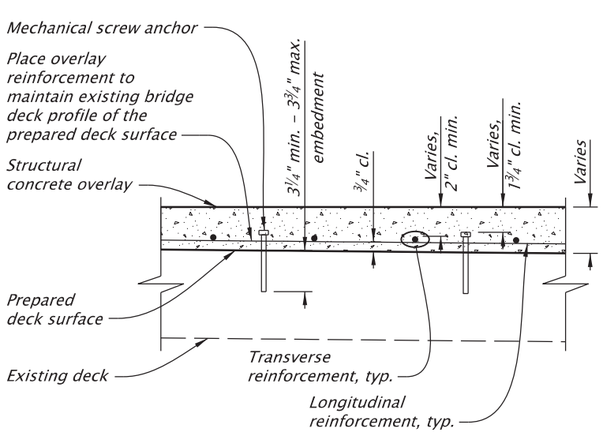

NEAR BENTS

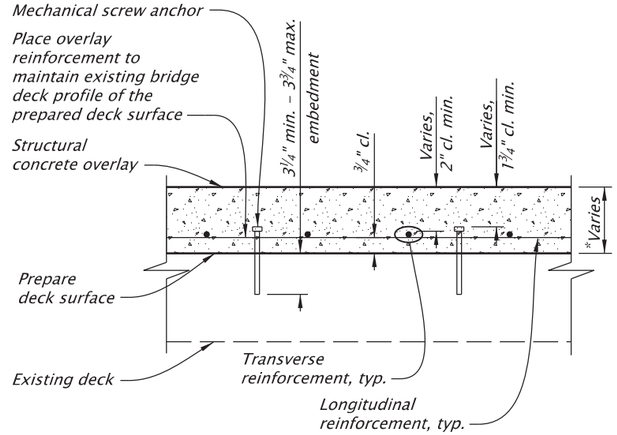

NEAR MID-SPAN

NOTE:
Use the "Structural Concrete Overlay Detail" on sht. JC06 unless the prepared surface contains variations as shown on this detail, then use this detail.

*Overlay thickness may increase due to permanent dead load deflection of the girders.

OVERLAY REINFORCEMENT PLACEMENT ALONG SPAN

Scale: 1"=1'-0"

NOTES:
1. See sht. JC06 for structural concrete overlay details not shown.
2. See sht. JC08 for location of Section A-A.
3. Coring through existing reinforcing steel at center of web during shear reinforcement installation is acceptable.
4. * See Bent Plan and Elevation sheet for construction control working points to establish bent centerlines.
5. Field verify all dimensions and elevations prior to submitting Working Drawings and prior to ordering or fabricating any materials. See sht. J02 for more details.

SCALE WARNING
IF THIS SCALE LINE DOES NOT MEASURE ONE INCH, THEN DRAWING IS NOT TO SCALE

For accompanied by drawings, see sht. JC01

STRUCTURE NO.	00123G
BDS DWG NO.	113904
CALC. BOOK	7997
HWY: 030 M.P.: 26.00	
COUNTY	Marion
DATE	2/26

REGISTERED PROFESSIONAL ENGINEER 099941PE
Digitally Signed 2026.02.12 11:49:51-08'00'
OREGON JULY 21, 2022
BERNARD ANTHONY FRANKL
EXPIRES: 12/31/2027

FINAL ELECTRONIC DOCUMENT AVAILABLE UPON REQUEST

DOWL
3500 Chad Drive, Suite 200
Eugene, Oregon 97408
541-683-6090
WWW.DOWL.COM

OREGON DEPARTMENT OF TRANSPORTATION

WILLAMETTE RIVER, EB HWY 30 RAMP TO SB HWY 72

OR22: CENTER ST BRIDGE (PHASE 1) PROJECT
WILLAMINA - SALEM HIGHWAY
MARION & POLK COUNTIES

Designer: Bernard A. Frankl, PhD, PE
Reviewer: Bob Goodrich, PE
Drafter: Jake Williams
Checker: Tanner Torkelson, PE

SUPERSTRUCTURE STRENGTHENING DETAILS - 2

SHEET NO. JC08

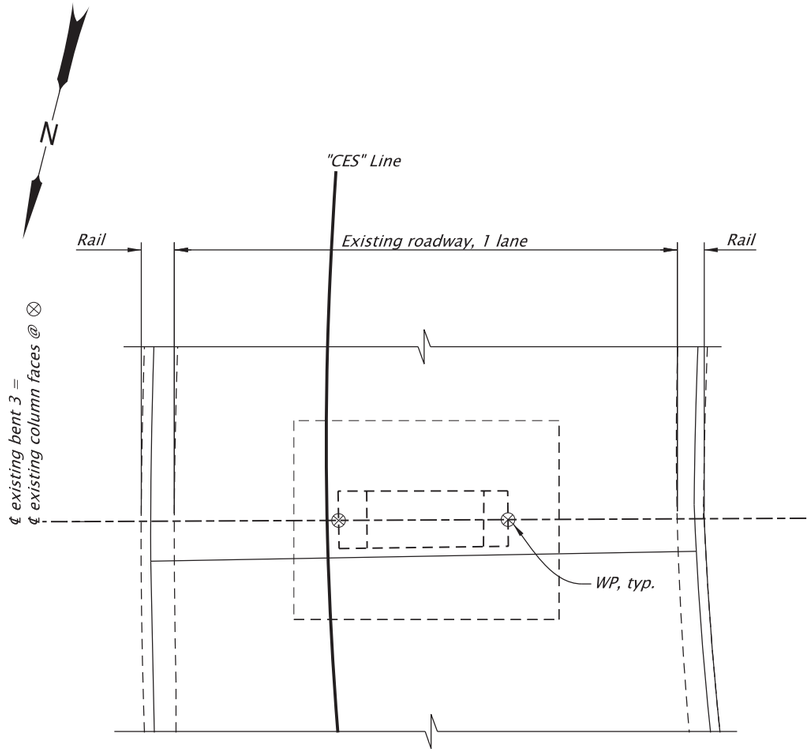

PLAN
Scale: 1/8"=1'-0"

⊗ Construction Control Working Points (WP) is located at ℄ existing column face at the top of existing footing.

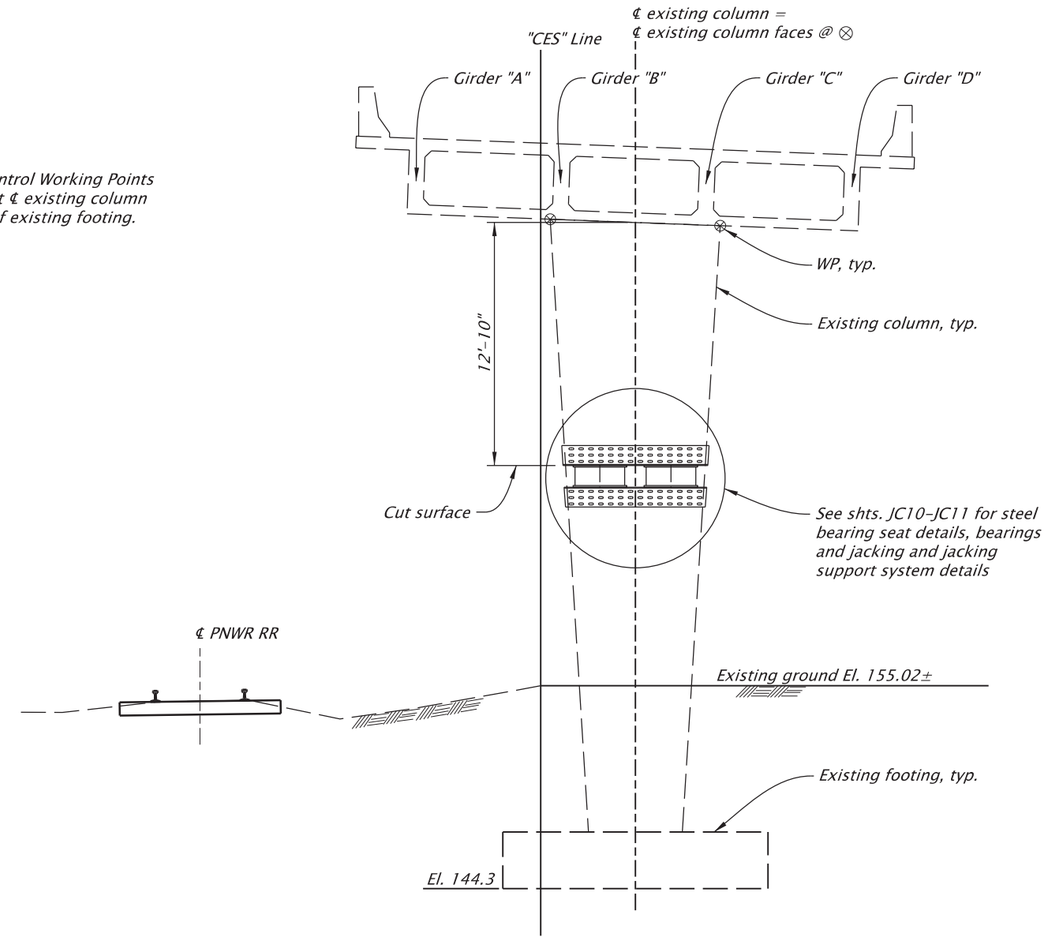

ELEVATION
Scale: 1/8"=1'-0"

For accompanied by drawings, see sht. JC01

NOTES:
1. See sht. JC11 for temporary shoring details.
2. Pier protection wall not shown for clarity, see sht. JC18 for details.
3. See shts. JZ01 - JZ08 for railroad details.
4. Field verify all dimensions and elevations before submitting Working Drawings and prior to ordering or fabricating any materials. See sht. J02 for more details.

SCALE WARNING
IF THIS SCALE LINE DOES NOT MEASURE ONE INCH, THEN DRAWING IS NOT TO SCALE

STRUCTURE NO.	00123G
BDS DWG NO.	113905
CALC. BOOK	7997
HWY: 030 M.P.: 26.00	
COUNTY	Marion
DATE	2/26

REGISTERED PROFESSIONAL ENGINEER
099941PE
Digitally Signed 2026.02.12 11:50:06-08'00'
OREGON
JULY 21, 2022
BERNARD ANTHONY FRANKL
EXPIRES: 12/31/2027

FINAL ELECTRONIC DOCUMENT AVAILABLE UPON REQUEST

DOWL
3500 Chad Drive, Suite 200
Eugene, Oregon 97408
541-683-6090
WWW.DOWL.COM

OREGON DEPARTMENT OF TRANSPORTATION

WILLAMETTE RIVER, EB HWY 30 RAMP TO SB HWY 72

OR22: CENTER ST BRIDGE (PHASE 1) PROJECT
WILLAMINA - SALEM HIGHWAY
MARION & POLK COUNTIES

Designer: Bernard A. Frankl, PhD, PE
Reviewer: Bob Goodrich, PE
Drafter: Jake Williams
Checker: Tanner Torkelson, PE

BENT 3 PLAN AND ELEVATION

SHEET NO. JC09

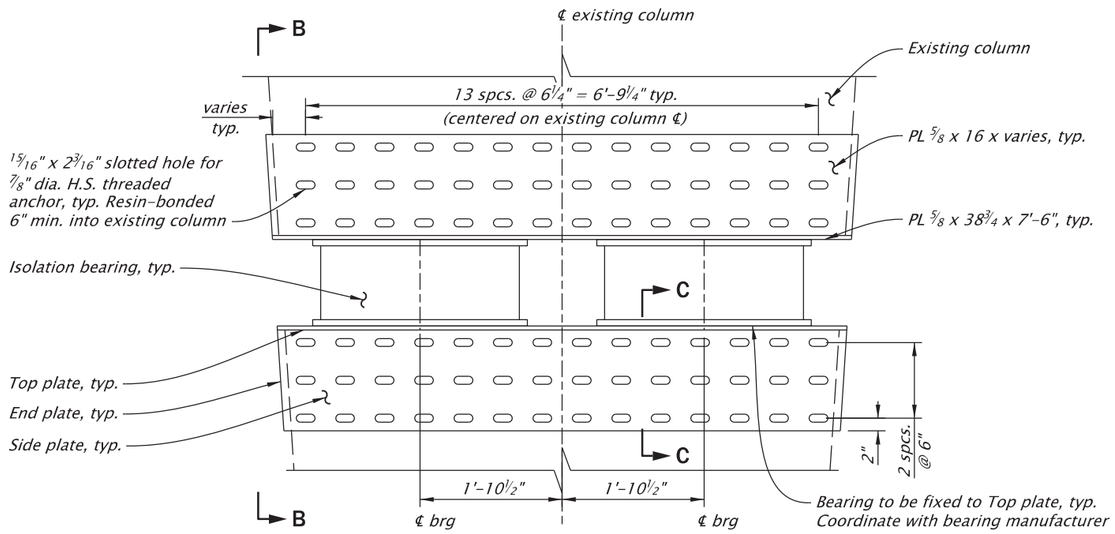

STEEL PLATE JACKET

Scale: 1/2"=1'-0"

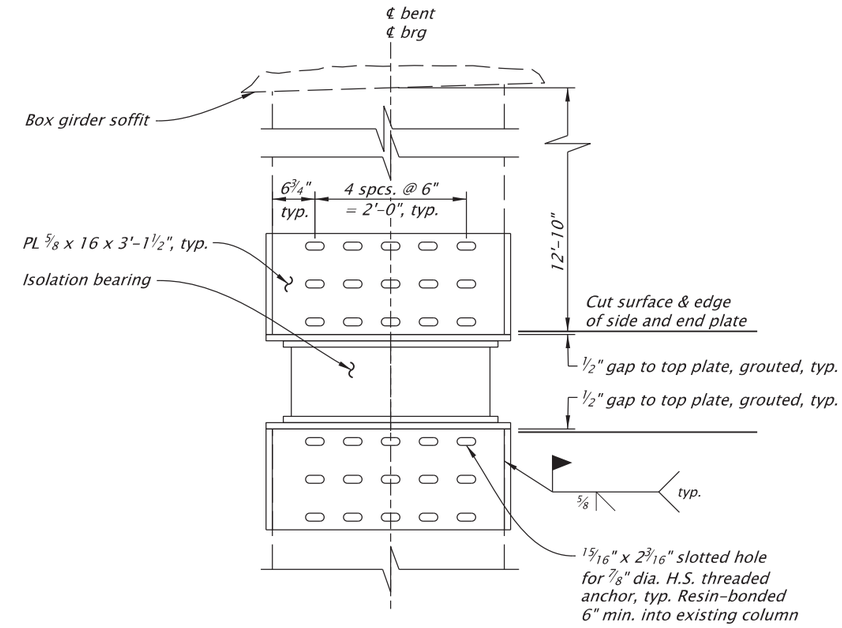

SECTION B-B

Scale: 1/2"=1'-0"

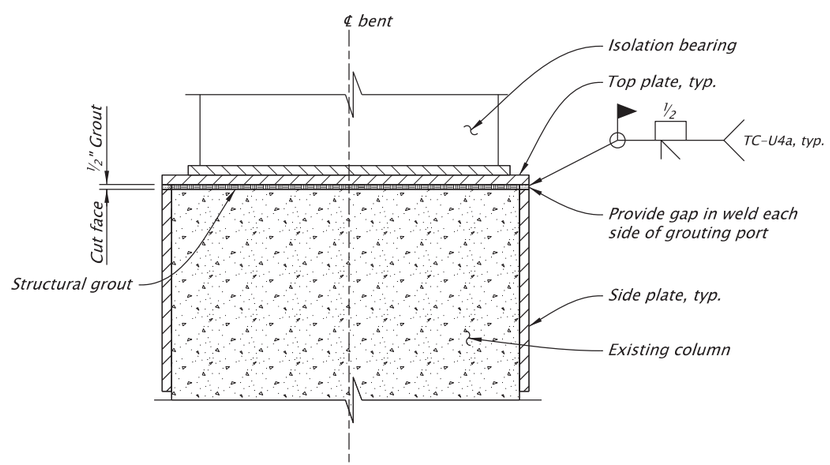

SECTION C-C

Scale: 3/4"=1'-0"

NOTES:

1. See sht. JC11 for Temporary Shoring Details.
2. See sht. JC17 for Bearing Details.
3. Steel plate jacket details apply to Bents 3 and 4.
4. Hot dip galvanize all plates, anchors, nuts and washers after fabrication.
5. Furnish ⅞" dia. anchor rods according to ASTM Specification F1554, Grade 105. Provide ASTM A563, Grade C3 heavy hex nuts and ASTM F436 steel washers used with Type 3 bolts. Tighten anchor rods to snug-tight.
6. See Bent Plan and Elevation sheet for construction control working points to establish bent centerlines.
7. Field verify all dimensions and elevations before submitting Working Drawings and prior to ordering or fabricating any materials. See sht. J02 for more details.

SCALE WARNING

IF THIS SCALE LINE DOES NOT MEASURE ONE INCH, THEN DRAWING IS NOT TO SCALE

For accompanied by drawings, see sht. JC01

STRUCTURE NO.	00123G
BDS DWG NO.	113906
CALC. BOOK	7997
HWY: 030	
M.P.: 26.00	
COUNTY	Marion
DATE	2/26

REGISTERED PROFESSIONAL ENGINEER
099941PE
Digitally Signed 2026.02.12 11:50:26-08'00'
OREGON
JULY 21, 2022
BERNARD ANTHONY FRANKL
EXPIRES: 12/31/2027

FINAL ELECTRONIC DOCUMENT AVAILABLE UPON REQUEST

DOWL
3500 Chad Drive, Suite 200
Eugene, Oregon 97408
541-683-6090
WWW.DOWL.COM

OREGON DEPARTMENT OF TRANSPORTATION

WILLAMETTE RIVER, EB HWY 30 RAMP TO SB HWY 72

OR22: CENTER ST BRIDGE (PHASE 1) PROJECT
WILLAMINA - SALEM HIGHWAY
MARION & POLK COUNTIES

Designer: Bernard A. Frankl, PhD, PE
Reviewer: Bob Goodrich, PE
Drafter: Jake Williams
Checker: Jonathon Stark, EI

BENT 3 BEARING SEAT DETAILS

SHEET NO. JC10

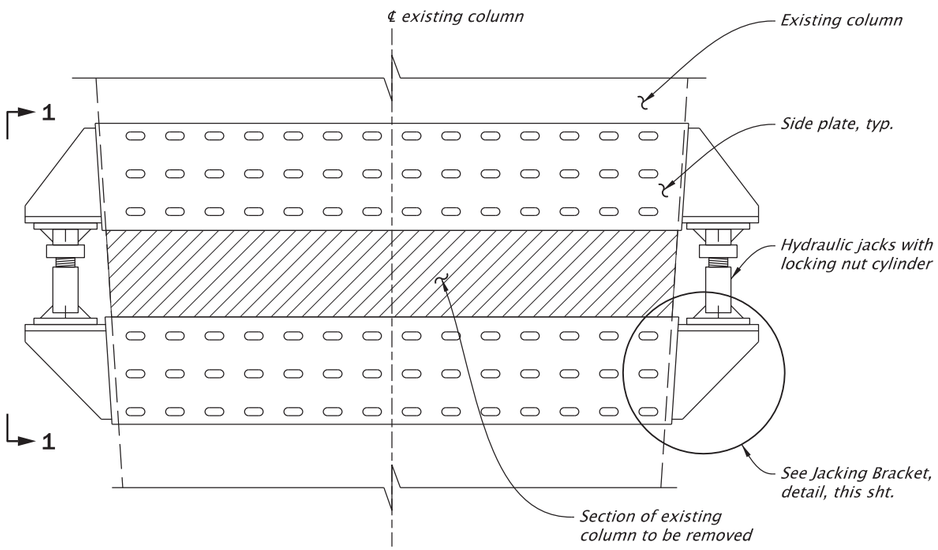

JACKING SUPPORT SYSTEM
Scale: 1/2"=1'-0"

Concrete removal limits

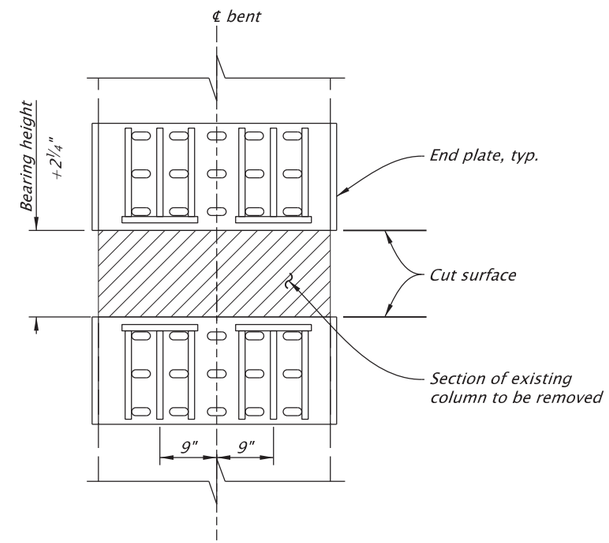

VIEW 1-1
Scale: 1/2"=1'-0"

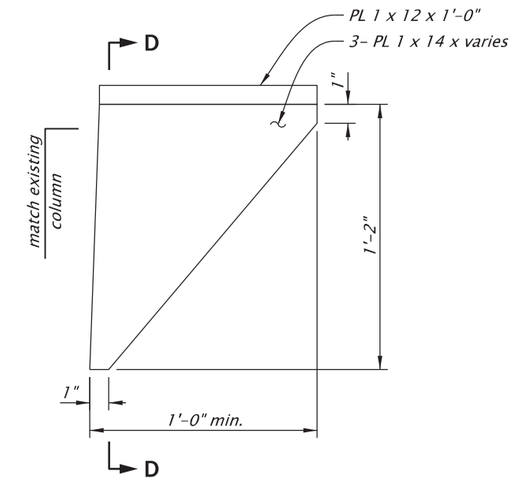

JACKING BRACKET
Scale: 1 1/2"=1'-0"

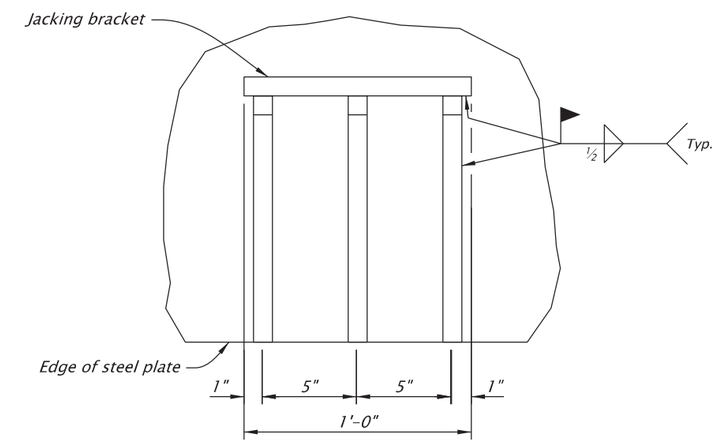

SECTION D-D
Scale: 1 1/2"=1'-0"

CONSTRUCTION SEQUENCE

1. Install steel side and end steel jacket plates.
2. Install jacking brackets to each side of existing column.
3. Load jacks to carry Dead Loads and Live Loads.
4. Remove concrete column between steel jacket side and end plates.
5. Weld steel jacket top plate, maintaining grouting ports on opposite sides of assembly.
6. Pressure grout ½" gap between concrete surface and steel jacket top plate. Seal grouting ports with specified welds.
7. Install pre-compressed bearings, fasten to steel jacket top plate and release pre-compression. Bearings need to be pre-compressed to Dead Load displacement.
8. Remove jacks and jacking brackets.

BRIDGE JACKING LOADS (kips)			
Location	Unfactored Dead Load	Factored Lane Load	Conceptual System Type
Right Jack	215	48	Self supported
Left Jack	222	139	Self supported

NOTES:
1. Dead load represents the total unfactored bent reaction.
2. Live load represents factored, controlling single HL-93 or Permit Truck rection, adjusted for dynamic load allowance, and a multiple presence factor of 1.0.
3. Contractor is responsible for determining all construction loading including, materials, equipment and live loading.
4. Loading represents bent reactions from both adjacent spans.

NOTES:
1. Temporary shoring details apply to Bents 3 and 4.
2. See sht. JC10 for bearing seat details.
3. See Bent Plan and Elevation sheet for construction control working points to establish bent centerlines.
4. Field verify all dimensions and elevations prior to submitting Working Drawings and prior to ordering or fabricating any materials. See sht. J02 for more details.

SCALE WARNING
IF THIS SCALE LINE DOES NOT MEASURE ONE INCH, THEN DRAWING IS NOT TO SCALE

For accompanied by drawings, see sht. JC01

STRUCTURE NO. 00123G
BDS DWG NO. 113907
CALC. BOOK 7997
HWY: 030
M.P.: 26.00
COUNTY Marion
DATE 2/26

REGISTERED PROFESSIONAL ENGINEER 099941PE
Digitally Signed 2026.03.03 09:16:49-08'00'
OREGON
JULY 21, 2022
BERNARD ANTHONY FRANKL
EXPIRES: 12/31/2027

FINAL ELECTRONIC DOCUMENT AVAILABLE UPON REQUEST

DOWL
3500 Chad Drive, Suite 200
Eugene, Oregon 97408
541-683-6090
WWW.DOWL.COM

OREGON DEPARTMENT OF TRANSPORTATION

WILLAMETTE RIVER, EB HWY 30 RAMP TO SB HWY 72

OR22: CENTER ST BRIDGE (PHASE 1) PROJECT
WILLAMINA - SALEM HIGHWAY
MARION & POLK COUNTIES

Designer: Bernard A. Frankl, PhD, PE
Reviewer: Bob Goodrich, PE
Drafter: Jake Williams
Checker: Jonathon Stark, EI

BENT 3 TEMPORARY SHORING DETAILS

SHEET NO. JC11

⊗ Construction Control Working Points (WP) is located at ℄ existing column face at the top of existing footing.

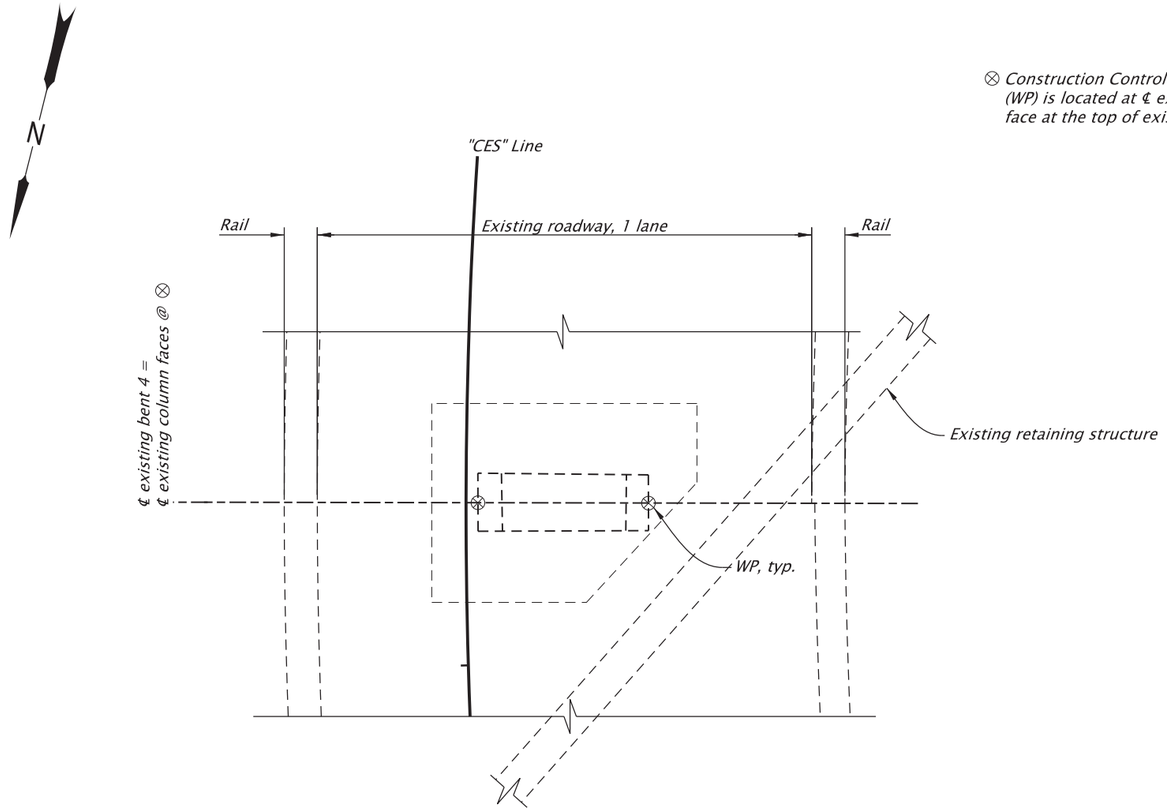

PLAN
Scale: 1/8"=1'-0"

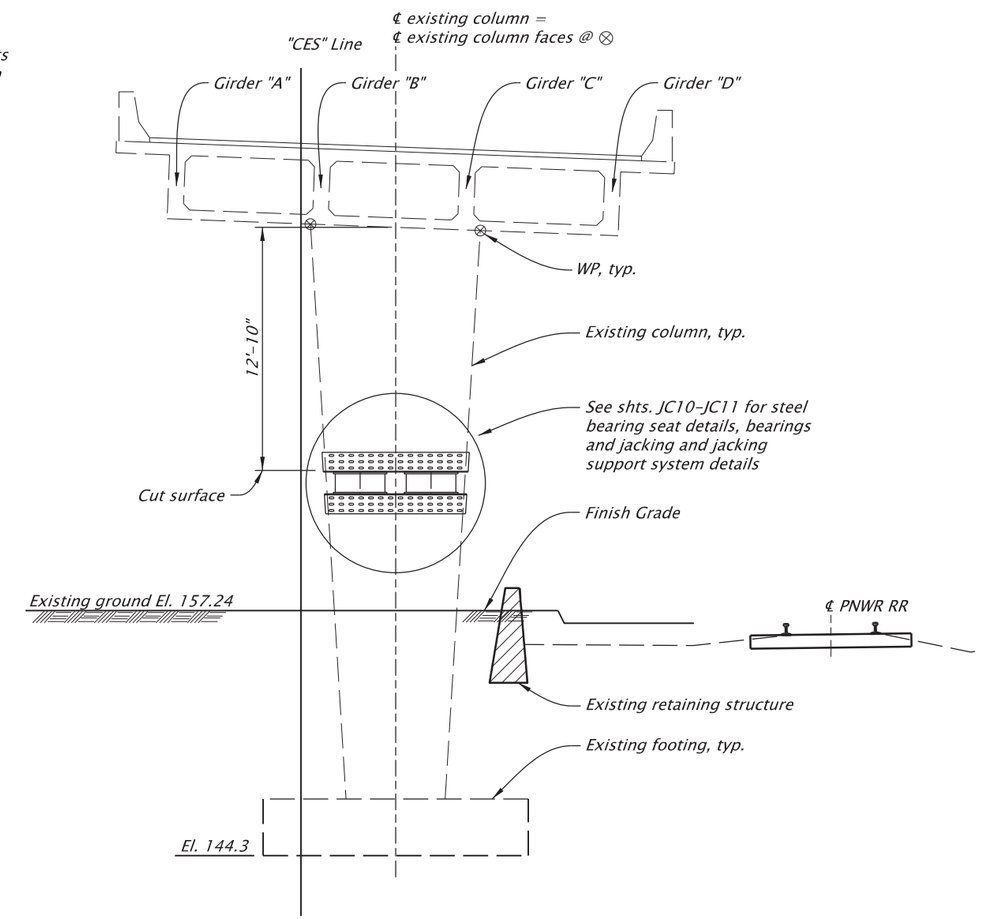

ELEVATION
Scale: 1/8"=1'-0"

For accompanied by drawings, see sht. JC01

NOTES:
1. *Pier protection wall not shown for clarity, see sht. JC19 for details.*
2. *See sht. JC11 for temporary shoring details.*
3. *See shts. JZ01-JZ08 for railroad details.*
4. *Field verify all dimensions and elevations before submitting Working Drawings and prior to ordering or fabricating any materials. See sht. J02 for more details.*

SCALE WARNING
IF THIS SCALE LINE DOES NOT MEASURE ONE INCH, THEN DRAWING IS NOT TO SCALE

STRUCTURE NO.	00123G
BDS DWG NO.	113908
CALC. BOOK	7997
HWY: 030	M.P.: 26.00
COUNTY	Marion
DATE	6/26

REGISTERED PROFESSIONAL ENGINEER
92505PE
Digitally Signed 2026.06.11 08:41:05-07'00'
OREGON
JANUARY 14, 2025
TANNER TORKELSON
EXPIRES: 06/30/2028
FINAL ELECTRONIC DOCUMENT AVAILABLE UPON REQUEST

DOWL
3500 Chad Drive, Suite 200
Eugene, Oregon 97408
541-683-6090
WWW.DOWL.COM

OREGON DEPARTMENT OF TRANSPORTATION

WILLAMETTE RIVER, EB HWY 30 RAMP TO SB HWY 72

OR22: CENTER ST BRIDGE (PHASE 1) PROJECT
WILLAMINA - SALEM HIGHWAY
MARION & POLK COUNTIES

Designer: Bernard A. Frankl, PhD, PE
Reviewer: Bob Goodrich, PE
Drafter: Jake Williams
Checker: Tanner Torkelson, PE

BENT 4 PLAN AND ELEVATION

SHEET NO. JC12

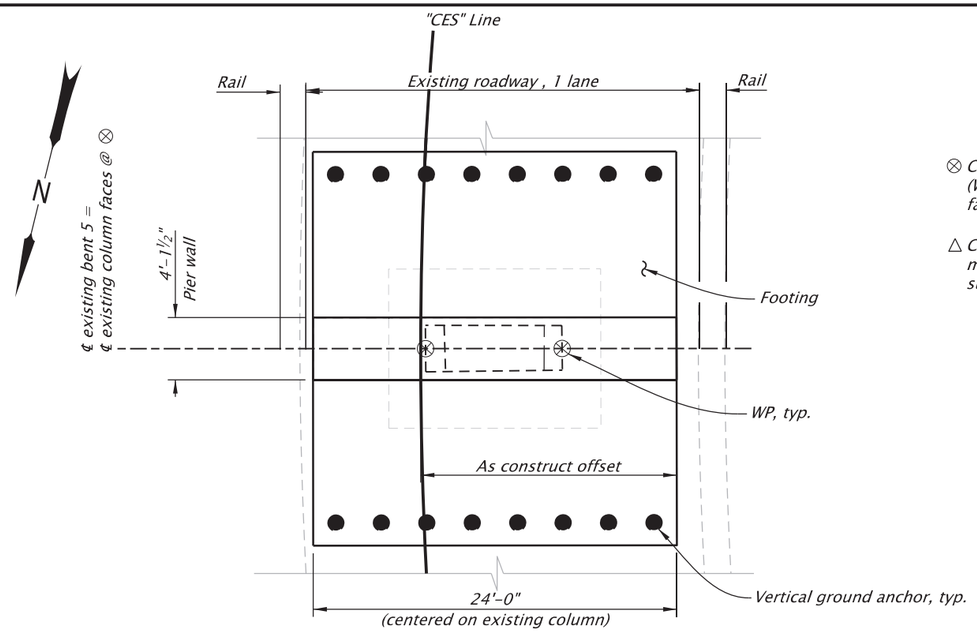

PLAN
Scale: 1"=10'

⊗ Construction Control Working Points (WP) is located at ℄ existing column face at the top of existing footing.

△ Construction pinch point. Provide a minimum of 6" concrete from existing surface to new surface as shown.

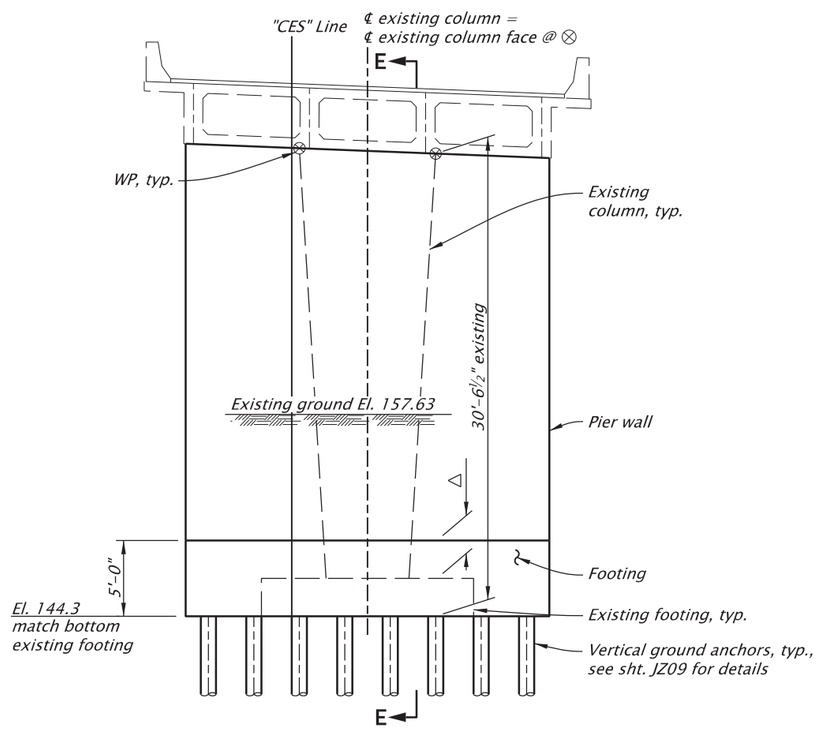

ELEVATION
Scale: 1"=10'

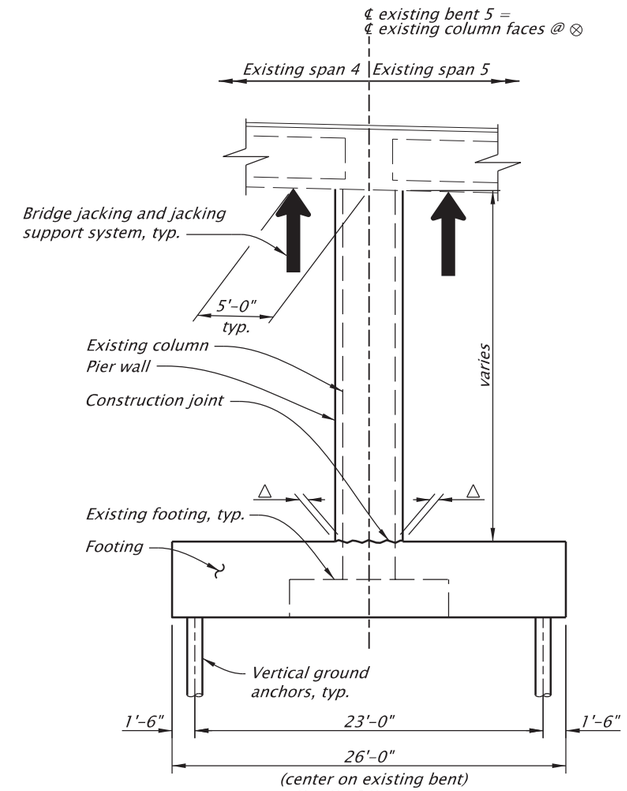

SECTION E-E
Scale: 1"=10'

BRIDGE JACKING LOADS (kips)			
Location	Unfactored Dead Load	Factored Lane Load	Conceptual System Type
Span 4	268	116	Self supported
Span 5	268	116	Self supported

NOTES:
1. Dead load represents the total unfactored bent reaction.
2. Live load represents factored, controlling single HL-93 or Permit Truck reaction, adjusted for dynamic load allowance, and a multiple presence factor of 1.0.
3. Contractor is responsible for determining all construction loading including, materials, equipment and live loading.

For accompanied by drawings, see sht. JC01

NOTES:
1. See sht. JC05 for foundation details.
2. See sht. JC14 for footing details.
3. See sht. JC15 for pier wall details.
4. Field verify all dimensions and elevations before submitting Working Drawings and prior to ordering or fabricating any materials. See sht. J02 for more details.

SCALE WARNING
IF THIS SCALE LINE DOES NOT MEASURE ONE INCH, THEN DRAWING IS NOT TO SCALE

STRUCTURE NO. 00123G
BDS DWG NO. 113909
CALC. BOOK 7997
HWY: 030
M.P.: 26.00
COUNTY Marion
DATE 6/26

REGISTERED PROFESSIONAL ENGINEER 92505PE
Digitally Signed 2026.06.11 08:50:03-07'00'
OREGON JANUARY 14, 2025 TANNER TORKELSON
EXPIRES: 06/30/2028

FINAL ELECTRONIC DOCUMENT AVAILABLE UPON REQUEST

DOWL
3500 Chad Drive, Suite 200
Eugene, Oregon 97408
541-683-6090
WWW.DOWL.COM

WILLAMETTE RIVER, EB HWY 30 RAMP TO SB HWY 72

OR22: CENTER ST BRIDGE (PHASE 1) PROJECT
WILLAMINA - SALEM HIGHWAY
MARION & POLK COUNTIES

Designer: Bernard A. Frankl, PhD, PE
Reviewer: Bob Goodrich, PE
Drafter: Jake Williams
Checker: Tanner Torkelson, PE

BENT 5 PLAN AND ELEVATION
SHEET NO. JC13

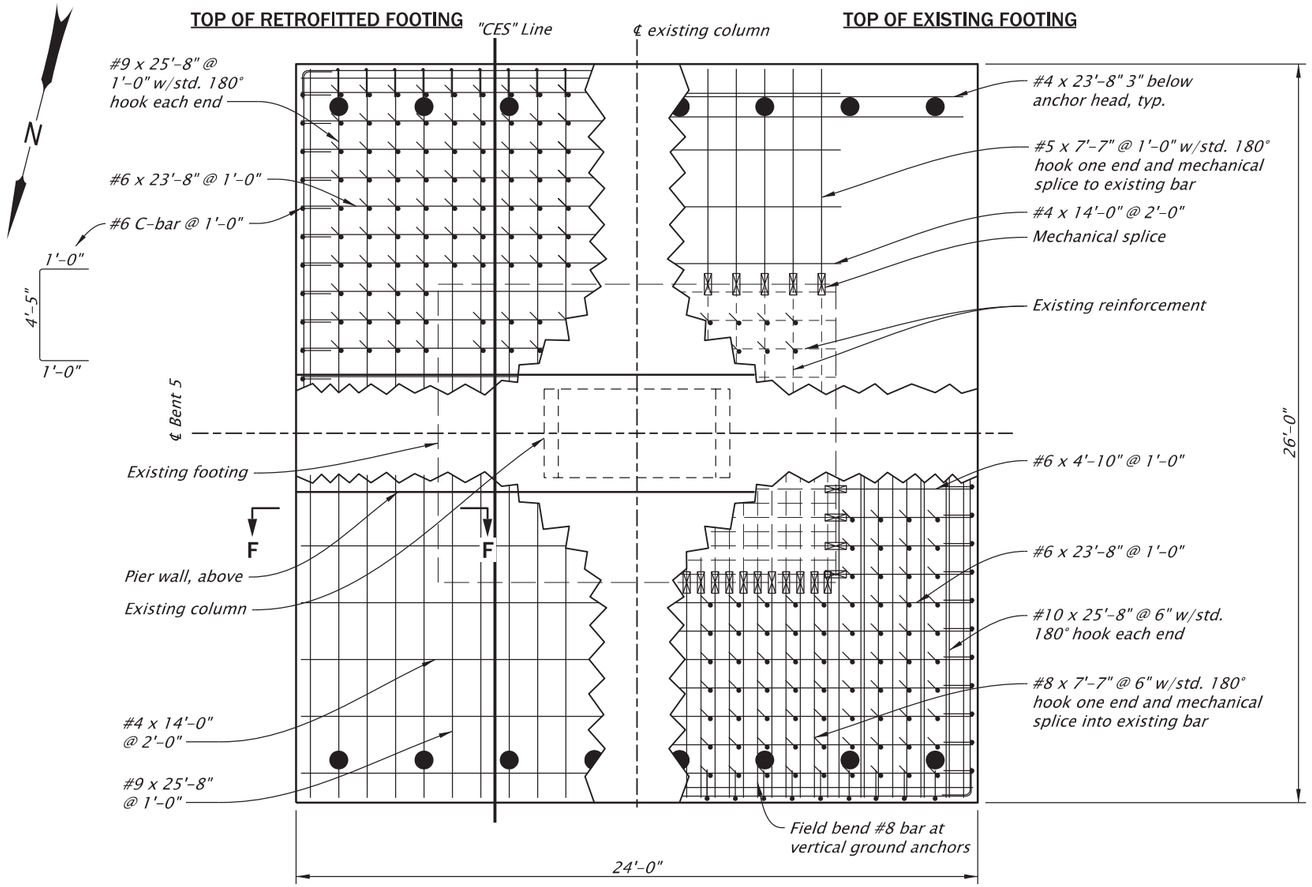

PLAN

Scale: 3/16"=1'-0"

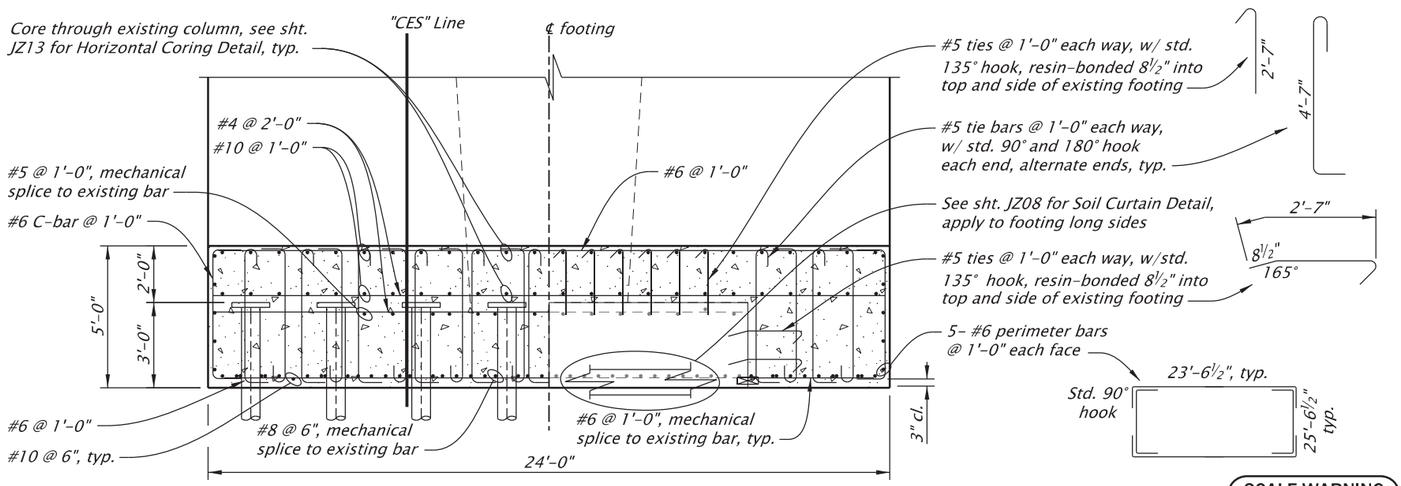

ELEVATION

Scale: 3/16"=1'-0"

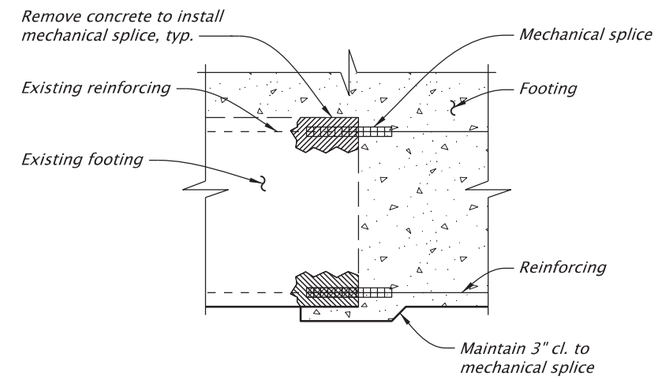

SECTION F-F

Scale: 3/8"=1'-0"

NOTES:

1. Shift footing bars to maintain 2" clear to vertical ground anchors and existing footing.
2. Two-bar bundles allowed to avoid vertical ground anchors and existing vertical column steel.
3. One splice is permitted per reinforcing bar.
4. Provide footing reinforcement according to ASTM Specifications A706 Grade 80.
5. Field verify all dimensions and elevations prior to submitting Working Drawings and prior to ordering or fabricating any materials. See sht. J02 for more details.
6. See Bent Plan and Elevation sheet for construction control working points to establish bent centerlines.

For accompanied by drawings, see sht. JC01

SCALE WARNING

IF THIS SCALE LINE DOES NOT MEASURE ONE INCH, THEN DRAWING IS NOT TO SCALE

STRUCTURE NO.	00123G
BDS DWG NO.	113910
CALC. BOOK	7997
HWY: 030	
M.P.: 26.00	
COUNTY	Marion
DATE	2/26

REGISTERED PROFESSIONAL ENGINEER 105234PE
Digitally Signed 2026.02.12 12:20:22-08'00'
OREGON
MAY 14, 2024
NASARIO LOPEZ-FRANCISCO
EXPIRES: 12/31/2026

FINAL ELECTRONIC DOCUMENT AVAILABLE UPON REQUEST

DOWL
3500 Chad Drive, Suite 200
Eugene, Oregon 97408
541-683-6090
WWW.DOWL.COM

WILLAMETTE RIVER, EB HWY 30 RAMP TO SB HWY 72

OR22: CENTER ST BRIDGE (PHASE 1) PROJECT
WILLAMINA - SALEM HIGHWAY
MARION & POLK COUNTIES

Designer: Bernard A. Frankl, PhD, PE
Reviewer: Bob Goodrich, PE
Drafter: Jake Williams
Checker: Nasario Lopez-Francisco, PE

BENT 5 FOOTING DETAILS

SHEET NO. JC14

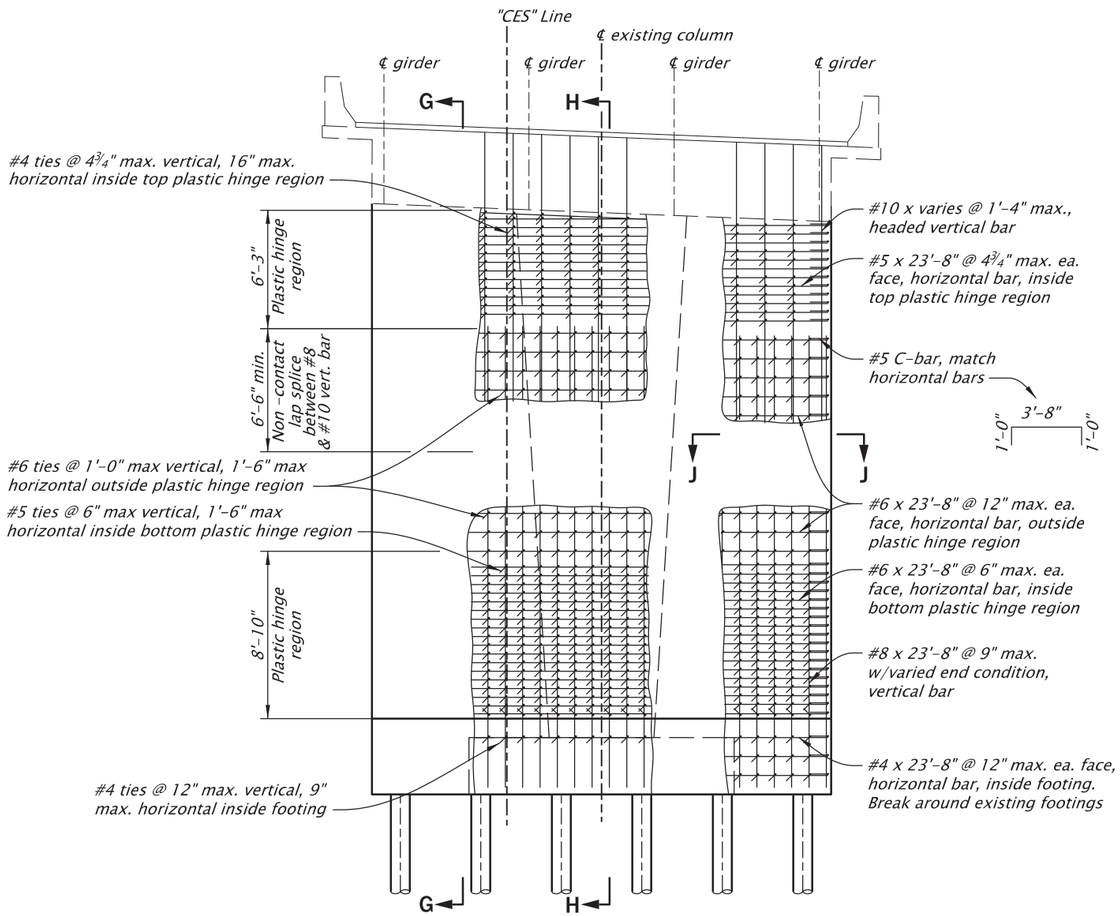

ELEVATION

Scale: 1/8"=1'-0"

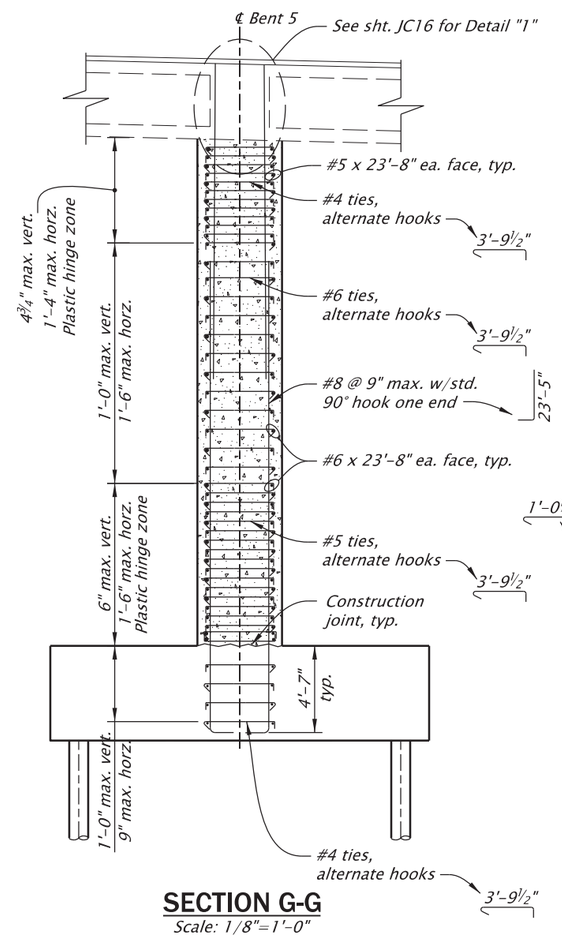

SECTION G-G

Scale: 1/8"=1'-0"

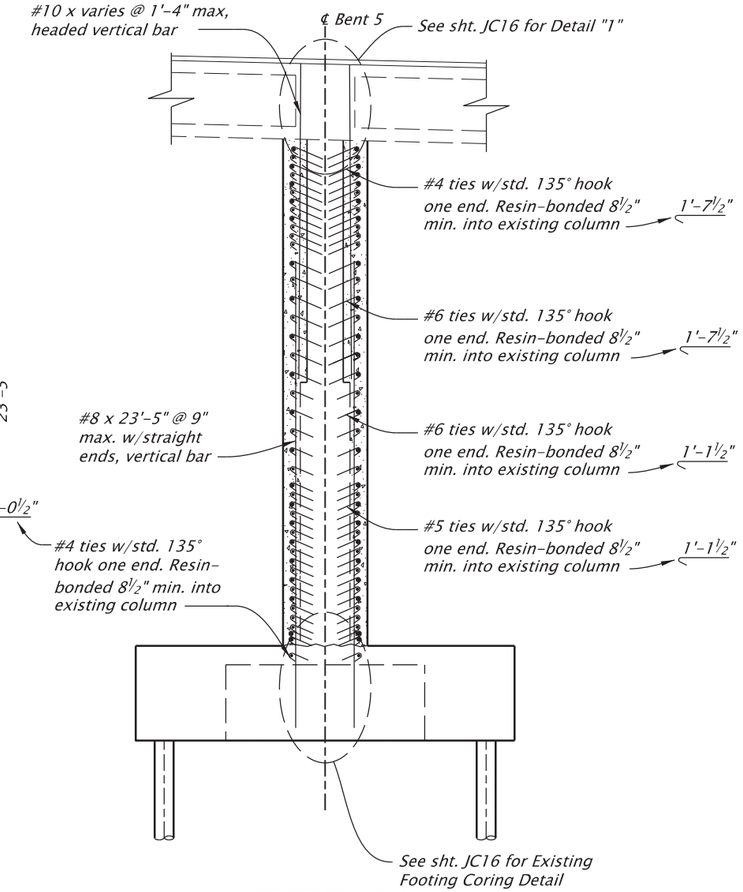

SECTION H-H

Scale: 1/8"=1'-0"

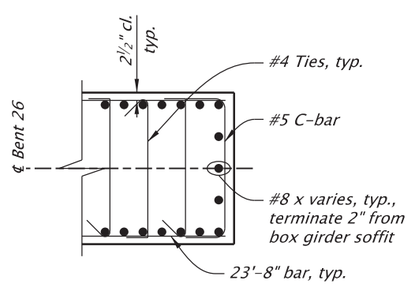

SECTION J-J

Scale: 1/4"=1'-0"

NOTES:
1. See sht. JC13 for pier wall geomoetry.
2. Field verify all dimensions and elevations prior to submitting Working Drawings and prior to ordering or fabricating any materials. See sht. J02 for more details.
3. See Bent Plan and Elevation sheet for construction control working points to establish bent centerlines.

For accompanied by drawings, see sht. JC01

SCALE WARNING
IF THIS SCALE LINE DOES NOT MEASURE ONE INCH, THEN DRAWING IS NOT TO SCALE

STRUCTURE NO.	00123G
BDS DWG NO.	113911
CALC. BOOK	7997
HWY: 030 M.P.: 26.00	
COUNTY	Marion
DATE	6/26

REGISTERED PROFESSIONAL ENGINEER 92505PE
Digitally Signed 2026.06.11 08:53:13-07'00'
OREGON JANUARY 14, 2025 TANNER TORKELSON
EXPIRES: 06/30/2028
FINAL ELECTRONIC DOCUMENT AVAILABLE UPON REQUEST

DOWL
3500 Chad Drive, Suite 200
Eugene, Oregon 97408
541-683-6090
WWW.DOWL.COM

WILLAMETTE RIVER, EB HWY 30 RAMP TO SB HWY 72

OR22: CENTER ST BRIDGE (PHASE 1) PROJECT
WILLAMINA - SALEM HIGHWAY
MARION & POLK COUNTIES

Designer: Bernard A. Frankl, PhD, PE
Reviewer: Bob Goodrich, PE
Drafter: Jake Williams
Checker: Tanner Torkelson, PE

BENT 5 PIER WALL DETAILS

SHEET NO. JC15

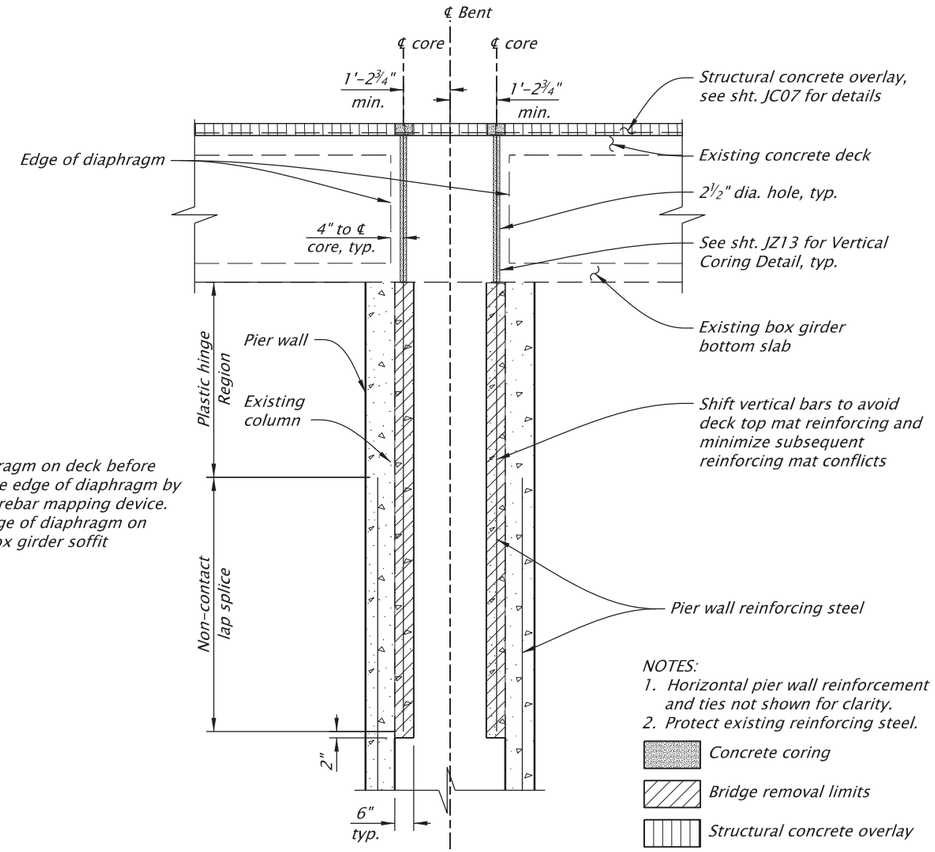

NOTE:
Mark edge of diaphragm on deck before drilling holes. Locate edge of diaphragm by using an electronic rebar mapping device. Mark location of edge of diaphragm on deck surface and box girder soffit

NOTES:
1. Horizontal pier wall reinforcement and ties not shown for clarity.
2. Protect existing reinforcing steel.

Concrete coring

Bridge removal limits

Structural concrete overlay

DETAIL "1"
Scale: 1/4" = 1'-0"

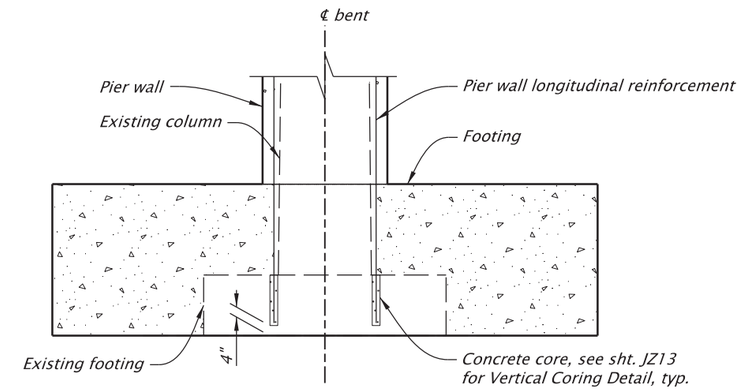

EXISTING FOOTING CORING DETAIL
Scale: 1"=5'

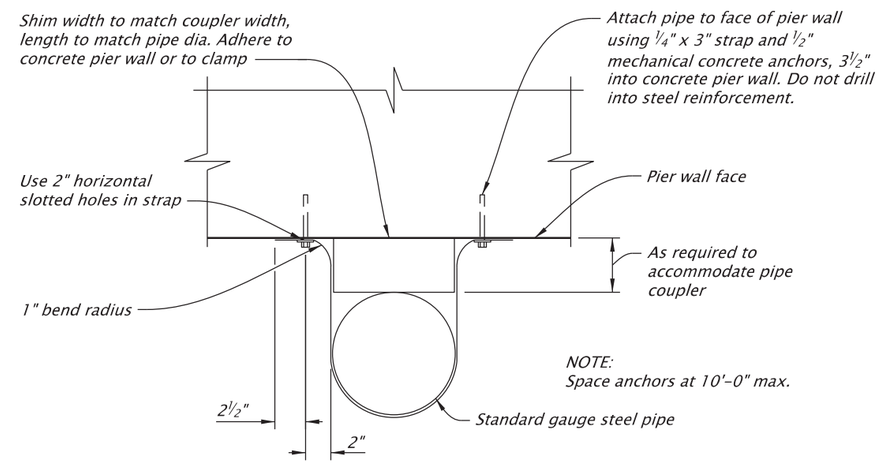

DETAIL A PIPE ATTACHMENT
NTS

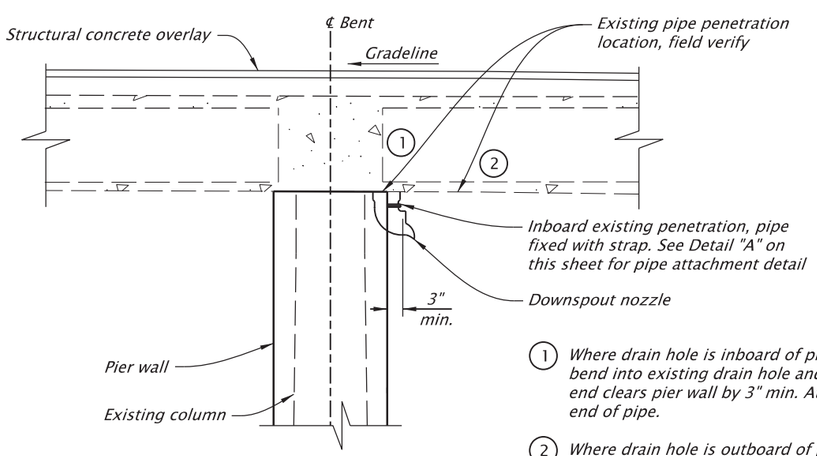

1. Where drain hole is inboard of proposed pier wall, fit 90° pipe bend into existing drain hole and seal with grout, ensuring free end clears pier wall by 3" min. Attach downspout nozzle to free end of pipe.

2. Where drain hole is outboard of proposed pier wall, no modifications needed.

DRAIN HOLE DETAILS
NTS

NOTES:
1. Field verify all dimensions and elevations prior to submitting Working Drawings and prior to ordering or fabricating any materials. See sht. J02 for more details.
2. See Bent Plan and Elevation sheet for construction control working points to establish bent centerlines.

For accompanied by drawings, see sht. JC01

SCALE WARNING
IF THIS SCALE LINE DOES NOT MEASURE ONE INCH, THEN DRAWING IS NOT TO SCALE

STRUCTURE NO.	00123G
BDS DWG NO.	113912
CALC. BOOK	7997
HWY: 030 M.P.: 26.00	
COUNTY	Marion
DATE	6/26

REGISTERED PROFESSIONAL ENGINEER 92505PE OREGON JANUARY 14, 2025 TANNER TORKELSON
Digitally Signed 2026.06.11 08:55:26-07'00'
EXPIRES: 06/30/2028
FINAL ELECTRONIC DOCUMENT AVAILABLE UPON REQUEST

DOWL
3500 Chad Drive, Suite 200
Eugene, Oregon 97408
541-683-6090
WWW.DOWL.COM

WILLAMETTE RIVER, EB HWY 30 RAMP TO SB HWY 72

OR22: CENTER ST BRIDGE (PHASE 1) PROJECT
WILLAMINA - SALEM HIGHWAY
MARION & POLK COUNTIES

Designer: Bernard A. Frankl, PhD, PE
Reviewer: Bob Goodrich, PE
Drafter: Jake Williams
Checker: Tanner Torkelson, PE

BENT 5 MISCELLANEOUS DETAILS

SHEET NO. JC16

Bearing Schedule													
Bent	No. Reqd.	Type	Design Load Demands in kips per Bearing (Unfactored)			Initial Offset in inches	Calculated Movements in inches (Unfactored)				Movement per 10°F Temp. Change in inches	Bearing Rotations radians	
			Vertical		EQ		68° Temp. Rise	62° Temp. Fall	Deck Pour and Shrinkage	EQ		DL+SH	LL+IM
			DL	LL+IM									
2	2	Isolation	274	127	*	0	0.41	0.37	N/A	*	0.06	N/A	0.024
3	2	Isolation	274	127	*	0	0.41	0.37	N/A	*	0.06	N/A	0.024

NOTE:
*See Design EQ Demand per Bearing Table for values.

Design EQ Demands per Bearing (Unfactored)							
Bent	Load in kips per Bearing					Calculated Seismic Movements in inches	
	LL Vertical	Loading Direction	Vertical	Longitudinal	Lateral	Longitudinal	Lateral
2	1	Longitudinal	86	17	2	1.21	0.23
		Lateral	0	3	13	0.09	0.59
3	1	Longitudinal	98	16	7	0.96	0.23
		Lateral	0	4	14	0.34	0.71

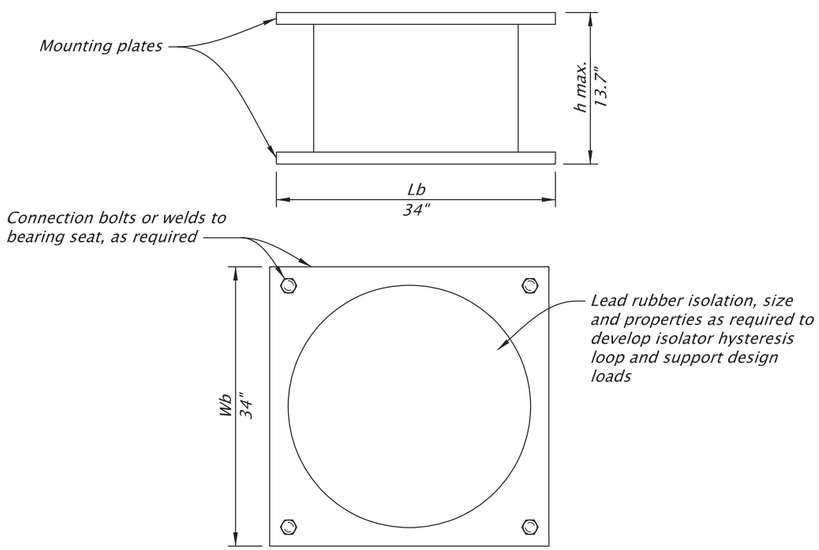

ISOLATION BEARING DIMENSIONS

Scale: 3/4"=1'-0"

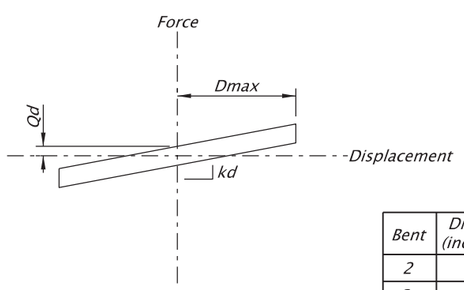

Bent	Dmax (inches)	Qd (kips)	Kd min. (kips/inch)	Kd max. (kips/inch)
2	3	10	1	6
3	3	10	1	6

ISOLATOR HYSTERESIS LOOP

No Scale

NOTE:
Field verify all dimensions and elevations prior to submitting Working Drawings and prior to ordering or fabricating any materials. See sht. J02 for more details.

BEARING NOTES:

Coat mounting plates, after fabrication. Use a Shop Coating 3-Coat System from the ODOT QPL. If bearings are field welded to bearing seat, mark mask shop coating within 2" of the field weld to the bearing seat after welds are accepted, coat masked areas and field welds with a Maintenance Coating 3-Coat System from the ODOT QPL.

Furnish structural steel, mounting plates according to ASTM A709, Grade 50 specifications.

If bearings are bolted to bearing seat, provide high-strength bolts according to ASTM Specifications F3125, Gr. A325.

All bolts, washers, and keeper bars shall be hot-dip galvanized after fabrication.

Use a template to accurately locate bolts during bearing seat fabrication and construction.

Design lead rubber isolation bearings according to the AASHTO Guide Specifications for Seismic isolation Design, 4th Edition (2014), the hysteresis loop shown, the Bearing Schedule specifications, and the following extreme event load combinations:

DL + LL +/- EQ
DL +/- EQ.

Install lead rubber isolation bearings to be in the neutral position at 52°F under full structure dead load. Use the information in the Bearing Schedule to adjust the bearings.

Provide pre-compressed bearings at Bents 2 and 3. Pre-compression to be released after installation.

For accompanied by drawings, see sht. JC01

SCALE WARNING
IF THIS SCALE LINE DOES NOT MEASURE ONE INCH, THEN DRAWING IS NOT TO SCALE

STRUCTURE NO. 00123G
BDS DWG NO. 113913
CALC. BOOK 7997
HWY: 030
M.P.: 26.00
COUNTY Marion
DATE 2/26

REGISTERED PROFESSIONAL ENGINEER 099941PE
Digitally Signed 2026.02.12 11:50:59-08'00'
OREGON
JULY 21, 2022
BERNARD ANTHONY FRANKL
EXPIRES: 12/31/2027

FINAL ELECTRONIC DOCUMENT AVAILABLE UPON REQUEST

DOWL
3500 Chad Drive, Suite 200
Eugene, Oregon 97408
541-683-6090
WWW.DOWL.COM

WILLAMETTE RIVER, EB HWY 30 RAMP TO SB HWY 72

OR22: CENTER ST BRIDGE (PHASE 1) PROJECT
WILLAMINA - SALEM HIGHWAY
MARION & POLK COUNTIES

Designer: Bernard A. Frankl, PhD, PE
Reviewer: Bob Goodrich, PE
Drafter: Jake Williams
Checker: Fred M. Gomez, PE

BEARING DETAILS

SHEET NO. JC17

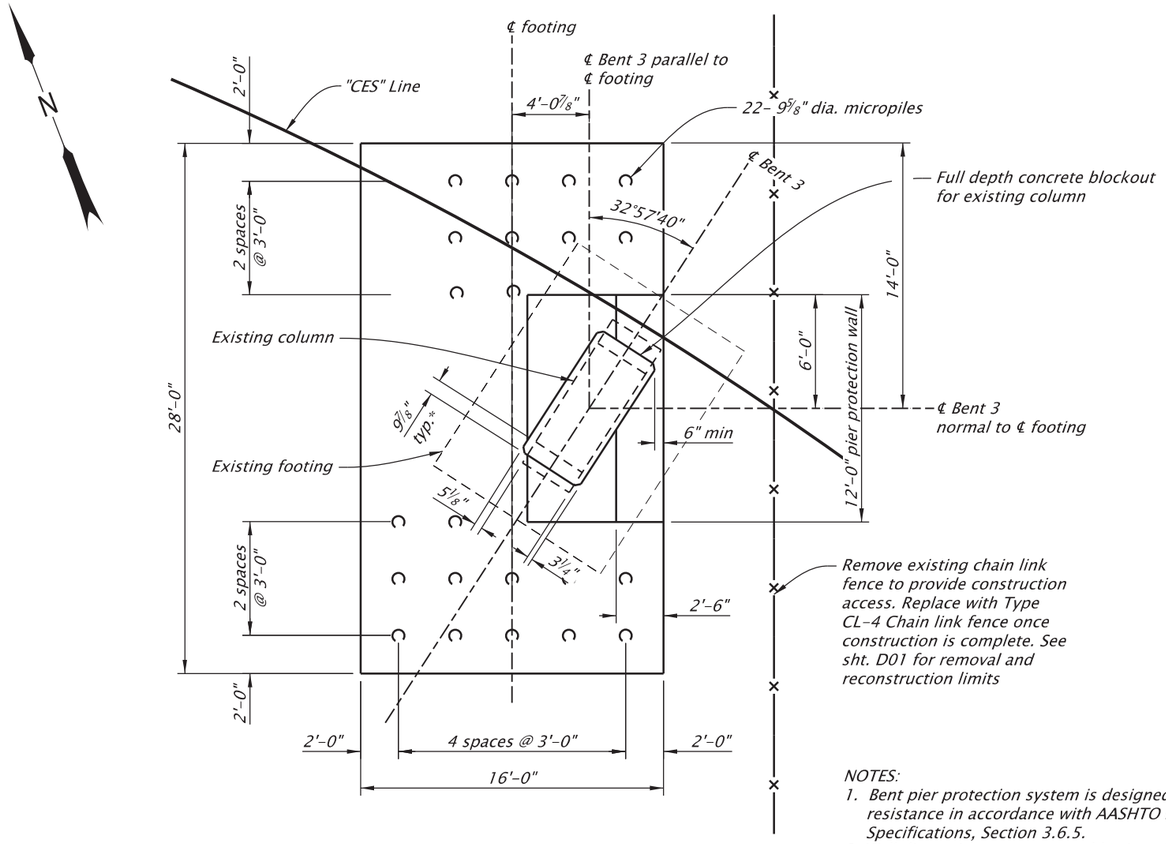

PLAN

Scale: 1/8"=1'-0"

NOTES:

1. Bent pier protection system is designed to provide structural resistance in accordance with AASHTO LRFD Bridge Design Specifications, Section 3.6.5.
2. Wall dimensions are governed by American Railway Engineering and Maintenance Association (AREMA) manual 2005, Section 2.1.5.
3. Fixed-head micropiles, with minimum permanent casing requirements as shown, are required to resist lateral loads.
4. Set top of pile cap elevation to lowest existing grade within horizontal limits of pile cap.
5. * Measured from face of column at top of pile cap elevation.
6. See sht. JZ05 for Minimum Railroad Construction Clearance Envelope.
7. See Bent Plan and Elevation sheet for construction control working points to establish bent centerlines.
8. Field verify all dimensions and elevations before submitting Working Drawings and prior to ordering or fabricating any materials. See sht. J02 for more details.

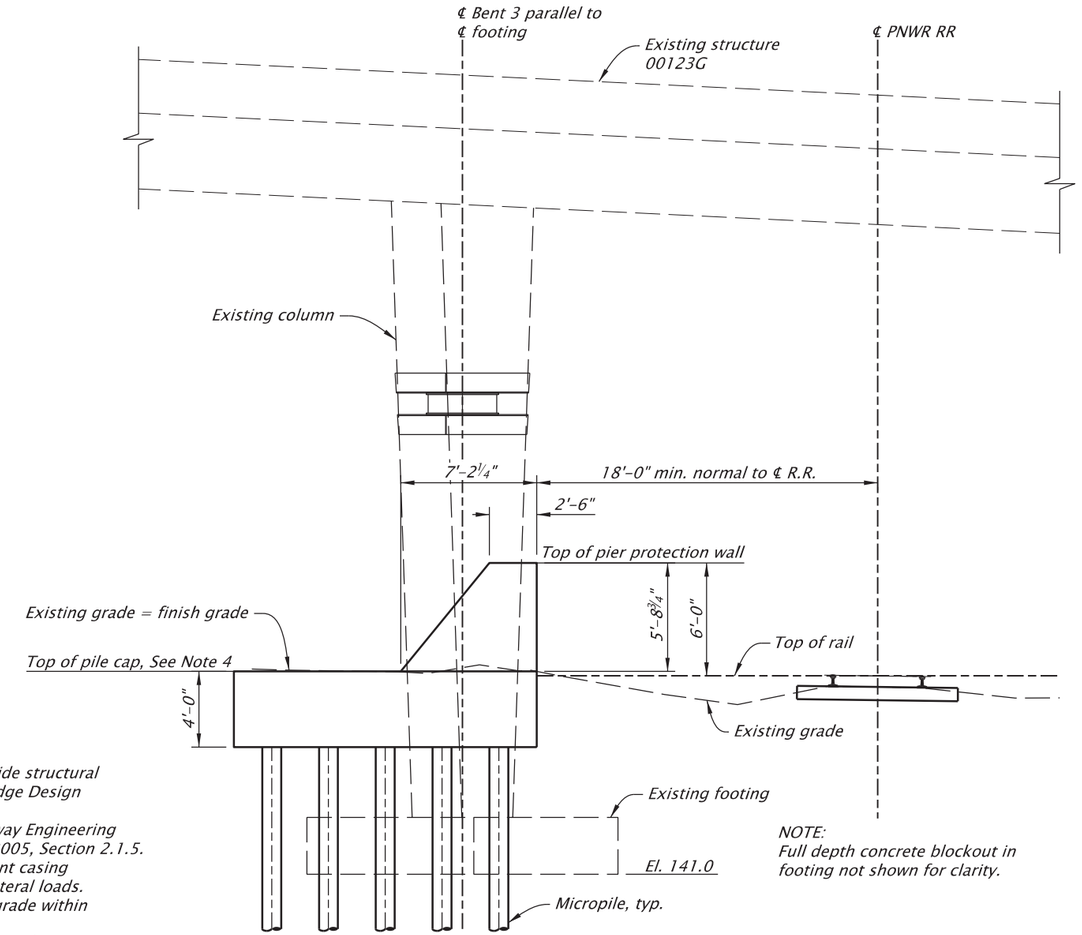

NOTE:
Full depth concrete blockout in footing not shown for clarity.

ELEVATION

Scale: 1/8"=1'-0"

For accompanied by drawings, see sht. JC01

STRUCTURE NO.	00123G
BDS DWG NO.	113914
CALC. BOOK	7997
HWY: 030 M.P.:	
COUNTY	Marion/Polk
DATE	1/26

REGISTERED PROFESSIONAL ENGINEER
79997PE
Digitally Signed 2026.01.29 21:31:35-08'00'
OREGON
JULY 14, 2015
FRED M. GOMEZ
EXPIRES: 06-30-2027

FINAL ELECTRONIC DOCUMENT AVAILABLE UPON REQUEST

SCALE WARNING
IF THIS SCALE LINE DOES NOT MEASURE ONE INCH, THEN DRAWING IS NOT TO SCALE

DOWL
3500 Chad Drive, Suite 200
Eugene, Oregon 97408
541-683-6090
WWW.DOWL.COM

WILLAMETTE RIVER, EB HWY 30 RAMP TO SB HWY 72

OR22: CENTER ST BRIDGE (PHASE 1) PROJECT
WILLAMINA - SALEM HIGHWAY
MARION & POLK COUNTIES

Designer: Fred M. Gomez, PE
Reviewer: Bob Goodrich, PE
Drafter: Jake Williams
Checker: Nasario Lopez-Francisco, PE

BENT 3 PIER PROTECTION WALL PLAN AND ELEVATION

SHEET NO. JC18

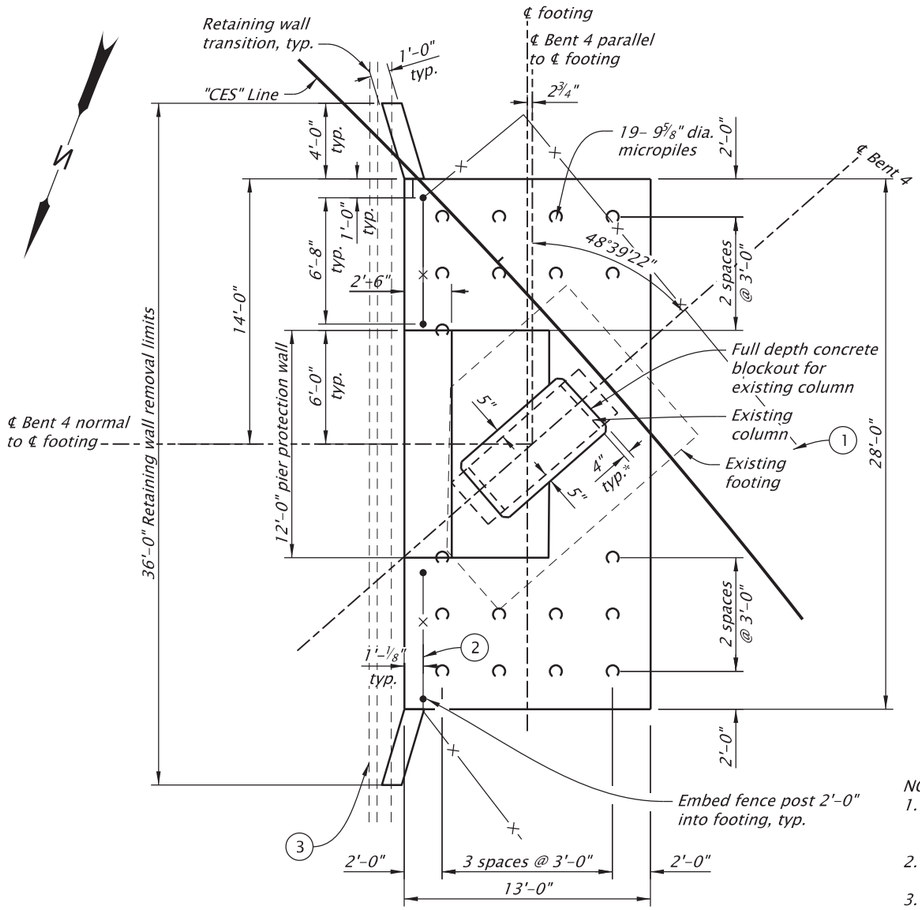

PLAN

Scale: 1/8"=1'-0"

DETAILED REFERENCE NUMBERS:

1. Remove existing chain link fence to provide construction access. Replace with Type CL-4 chain link fence once construction is complete. See sht. C02A for removal and reconstruction limits
2. Reestablish front face of Type CL-4 chain link fence on footing.
3. Remove structure and obstructions - existing retaining wall.

NOTES:

1. Bent pier protection system is designed to provide structural resistance in accordance with AASHTO LRFD Bridge Design Specifications, Section 3.6.5.
2. Wall dimensions are governed by Americal Railway Engineering and Maintenance Association (AREMA) manual 2005, Section 2.1.5.
3. Fixed-head micropiles, with minimum permanent casing requirements as shown, are required to resist lateral loads.
4. Set top of pile cap elevation to lowest existing grade within horizontal limits of pile cap.
5. * Measured from face of column at top of pile cap elevation.
6. See sht. JZ05 for Minimum Railroad Construction Clearance Envelope.
7. See Bent Plan and Elevation sheet for construction control working points to establish bent centerlines.
8. Field verify all dimensions and elevations before submitting Working Drawings and prior to ordering or fabricating any materials. See sht. J02 for more details.

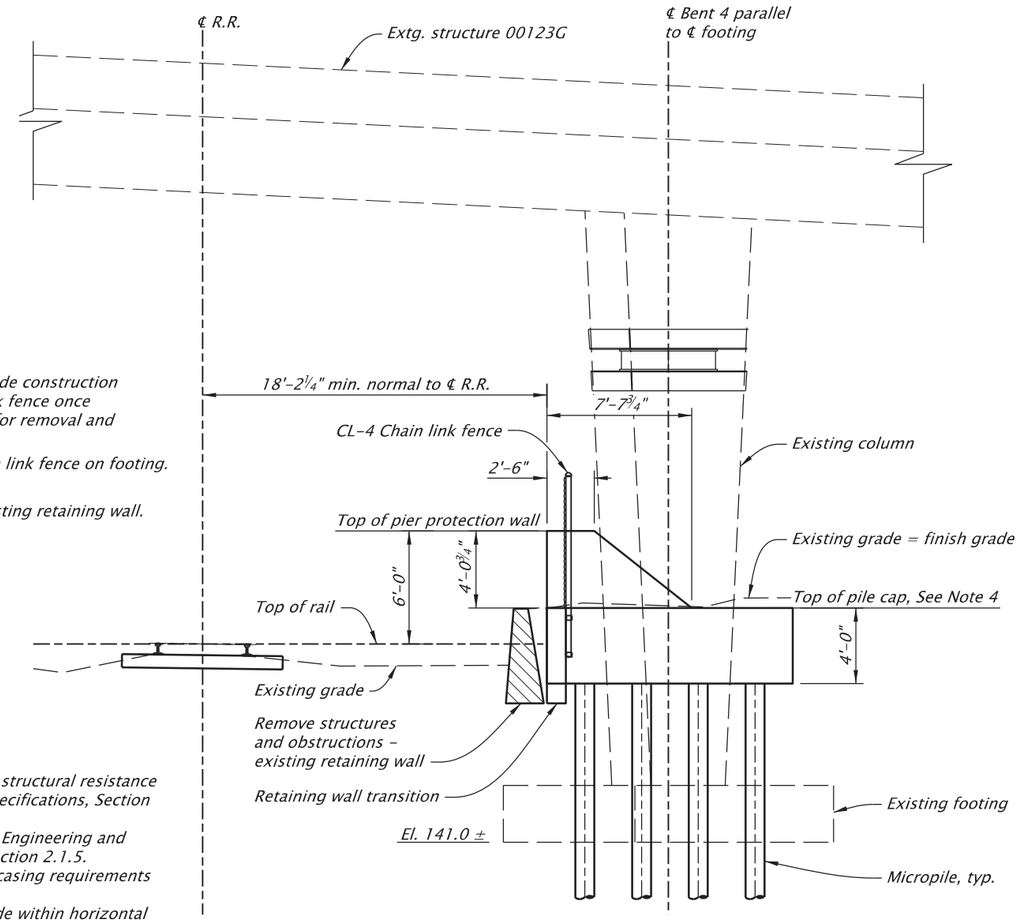

NOTE:
Full depth concrete blockout in footing not shown for clarity.

ELEVATION

Scale: 1/8"=1'-0"

SCALE WARNING

IF THIS SCALE LINE DOES NOT MEASURE ONE INCH, THEN DRAWING IS NOT TO SCALE

STRUCTURE NO.	00123G
BDS DWG NO.	113915
CALC. BOOK	7997
HWY: 030 M.P.: 26.00	
COUNTY	Marion/Polk
DATE	1/26

REGISTERED PROFESSIONAL ENGINEER
79997PE
Digitally Signed 2026.01.29 21:30:43-08'00'
OREGON
JULY 14, 2015
FRED M. GOMEZ
EXPIRES: 06-30-2027

FINAL ELECTRONIC DOCUMENT AVAILABLE UPON REQUEST

DOWL
3500 Chad Drive, Suite 200
Eugene, Oregon 97408
541-683-6090
WWW.DOWL.COM

OREGON DEPARTMENT OF TRANSPORTATION

OR22: CENTER ST BRIDGE (PHASE 1) PROJECT
WILLAMINA - SALEM HIGHWAY
MARION & POLK COUNTIES

Designer: Fred M. Gomez, PE
Reviewer: Bob Goodrich, PE
Drafter: Jake Williams
Checker: Nasario Lopez-Francisco, PE

BENT 4 PIER PROTECTION WALL PLAN AND ELEVATION

SHEET NO. JC19

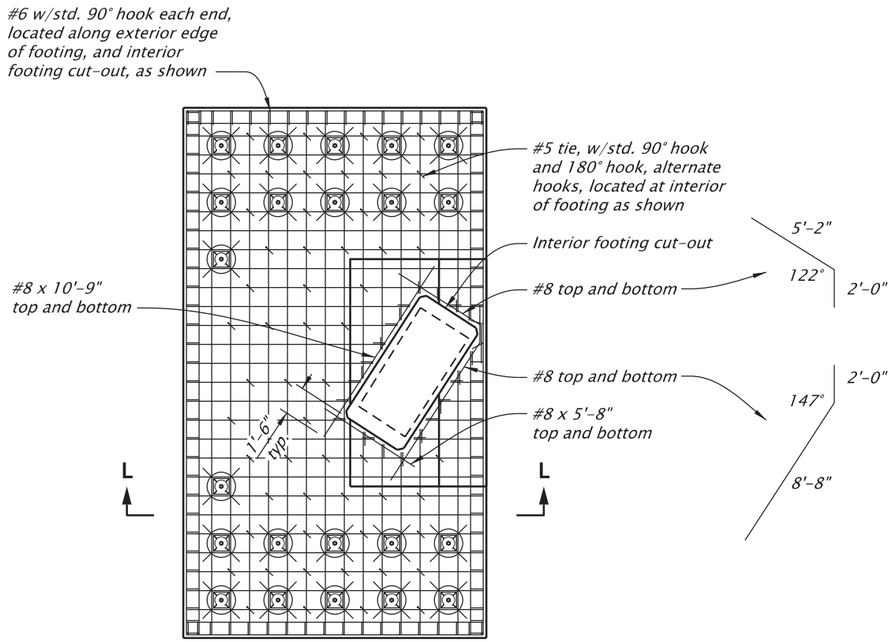

FOOTING DETAIL - TOP & BOTTOM MAT

Scale: 1/8"=1'-0"

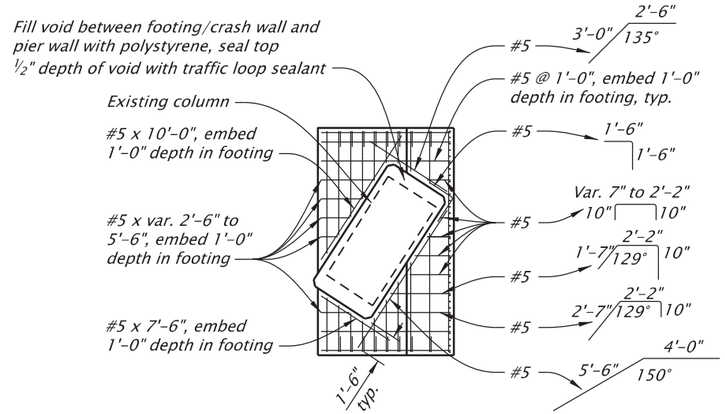

CRASH WALL REINFORCING PLAN

Scale: 1/8"=1'-0"

SECTION M-M

Scale: 1/8"=1'-0"

MICROPILE MINIMUM STRUCTURAL PROPERTY NOTES:

Provide API 5 CT Grade N80 casing.

Provide ASTM A615 Grade 75 deformed bar reinforcement.

Provide grout having a minimum 28-day compressive strength of 6,000 psi.

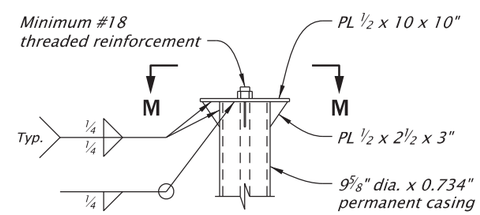

MICROPILE TOP PLATE DETAIL

Scale: 1/8"=1'-0"

NOMINAL MAXIMUM MICROPILE DESIGN LOADS			
Axial Compression (kip)	*Axial Tension (kip)*	*Moment (kip-ft)*	*Shear (kip)*
94	84	203	43

NOTE:
Design loads are included to document the Extreme II load combination demand, which serves as the basis for minimum required micropile geometry and structural properties.

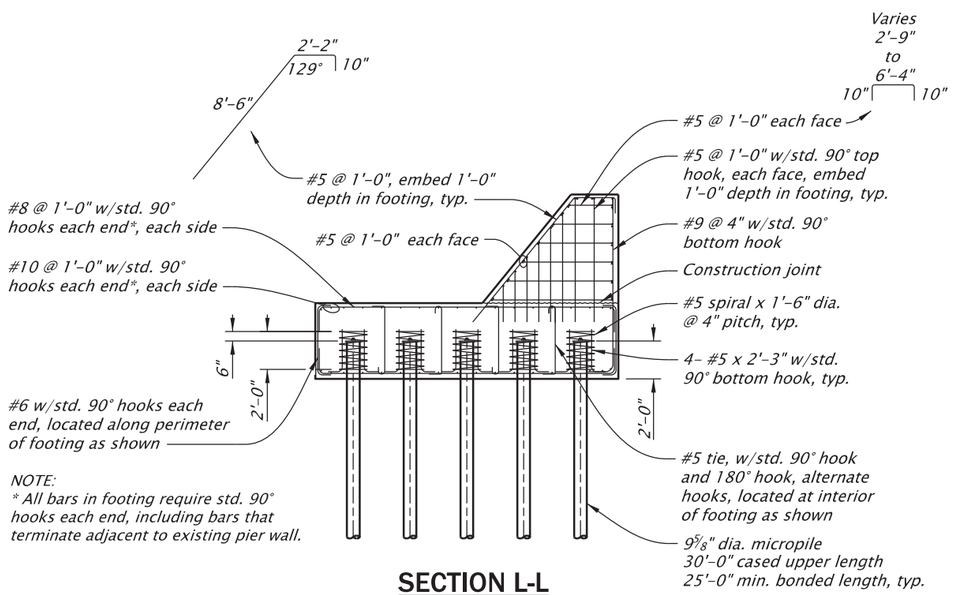

NOTE:
** All bars in footing require std. 90° hooks each end, including bars that terminate adjacent to existing pier wall.*

SECTION L-L

Scale: 1/8"=1'-0"

NOTES:
1. *See sht. JC18 for footing and pier protection wall geometry.*
2. *Field verify all dimensions and elevations prior to submitting Working Drawings and prior to ordering or fabricating any materials. See sht. J02 for more details.*

For accompanied by drawings, see sht. JC01

STRUCTURE NO.	00123G
BDS DWG NO.	113916
CALC. BOOK	7997
HWY: 030	
M.P.: 26.00	
COUNTY	Marion/Polk
DATE	1/26

REGISTERED PROFESSIONAL ENGINEER
79997PE
Digitally Signed 2026.01.29 21:32:40-08'00'
OREGON
JULY 14, 2015
FRED M. GOMEZ
EXPIRES: 06-30-2027

SCALE WARNING
IF THIS SCALE LINE DOES NOT MEASURE ONE INCH, THEN DRAWING IS NOT TO SCALE

DOWL
3500 Chad Drive, Suite 200
Eugene, Oregon 97408
541-683-6090
WWW.DOWL.COM

WILLAMETTE RIVER, EB HWY 30 RAMP TO SB HYW 72

OR22: CENTER ST BRIDGE (PHASE 1) PROJECT
WILLAMINA - SALEM HIGHWAY
MARION & POLK COUNTIES

Designer: Fred M. Gomez, PE
Reviewer: Bob Goodrich, PE
Drafter: Jake Williams
Checker: Nasario Lopez-Francisco, PE

BENT 3 PIER PROTECTION WALL DETAILS

SHEET NO. JC20

FINAL ELECTRONIC DOCUMENT AVAILABLE UPON REQUEST

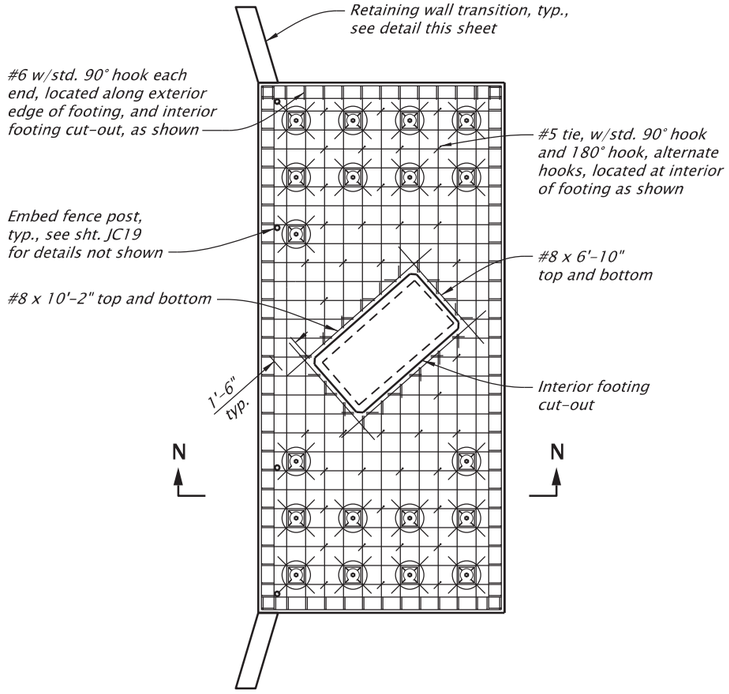

FOOTING DETAIL - TOP & BOTTOM MAT

Scale: 1/8"=1'-0"

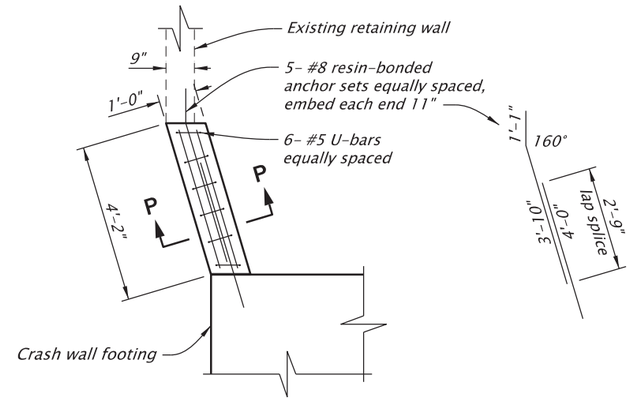

PLAN

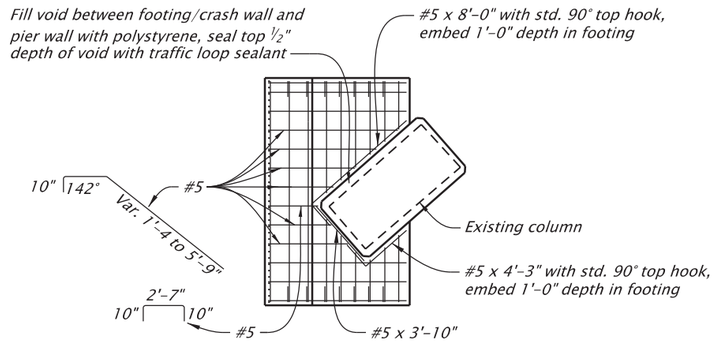

CRASH WALL REINFORCING PLAN

Scale: 1/8"=1'-0"

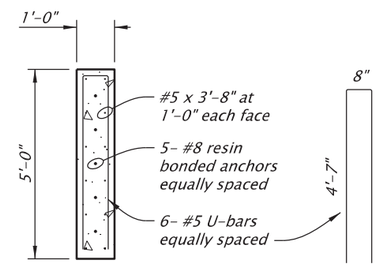

SECTION P-P

RETAINING WALL TRANSITION DETAIL

Scale: 1/4"=1'-0"

NOMINAL MAXIMUM MICROPILE DESIGN LOADS			
Axial Compression (kip)	Axial Tension (kip)	Moment (kip-ft)	Shear (kip)
122	58	233	43

MICROPILE NOTES:
1. Design loads are included to document the Extreme II load combination demand, which serves as the basis for minimum required micropile geometry and structural properties.
2. See sht. JC20 for micropiles details and minimum required structural properties.

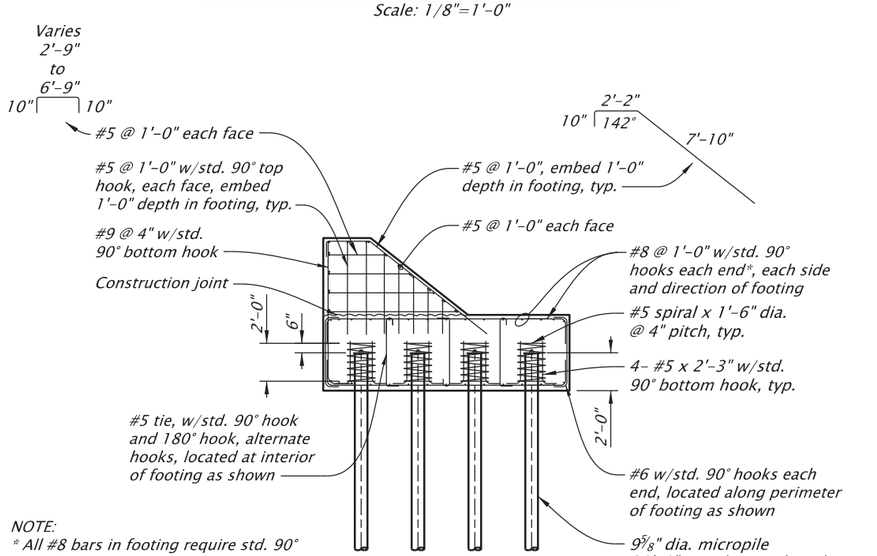

NOTE:
* All #8 bars in footing require std. 90° hooks each end, including bars that terminate adjacent to existing pier wall.

SECTION N-N

Scale: 1/8"=1'-0"

NOTES:
1. See sht. JC19 for footing and pier protection wall geometry.
2. Field verify all dimensions and elevations prior to submitting Working Drawings and prior to ordering or fabricating any materials. See sht. J02 for more details.

For accompanied by drawings, see sht. JC01

SCALE WARNING
IF THIS SCALE LINE DOES NOT MEASURE ONE INCH, THEN DRAWING IS NOT TO SCALE

STRUCTURE NO.	00123G
BDS DWG NO.	113917
CALC. BOOK	7997
HWY: 030 M.P.: 26.00	
UNIT CODE	Marion/Polk
DFI/DASH NO.	1/26

REGISTERED PROFESSIONAL ENGINEER
79997PE
Digitally Signed 2026.01.29 21:33:26-08'00'
OREGON
JULY 14, 2015
FRED M. GOMEZ
EXPIRES: 06-30-2027

FINAL ELECTRONIC DOCUMENT AVAILABLE UPON REQUEST

DOWL
3500 Chad Drive, Suite 200
Eugene, Oregon 97408
541-683-6090
WWW.DOWL.COM

WILLAMETTE RIVER, EB HWY 30 RAMP TO SB HYW 72

OR22: CENTER ST BRIDGE (PHASE 1) PROJECT
WILLAMINA - SALEM HIGHWAY
MARION & POLK COUNTIES

Designer: Fred M. Gomez, PE
Reviewer: Bob Goodrich, PE
Drafter: Jake Williams
Checker: Nasario Lopez-Francisco, PE

BENT 4 PIER PROTECTION WALL DETAILS

SHEET NO. JC21

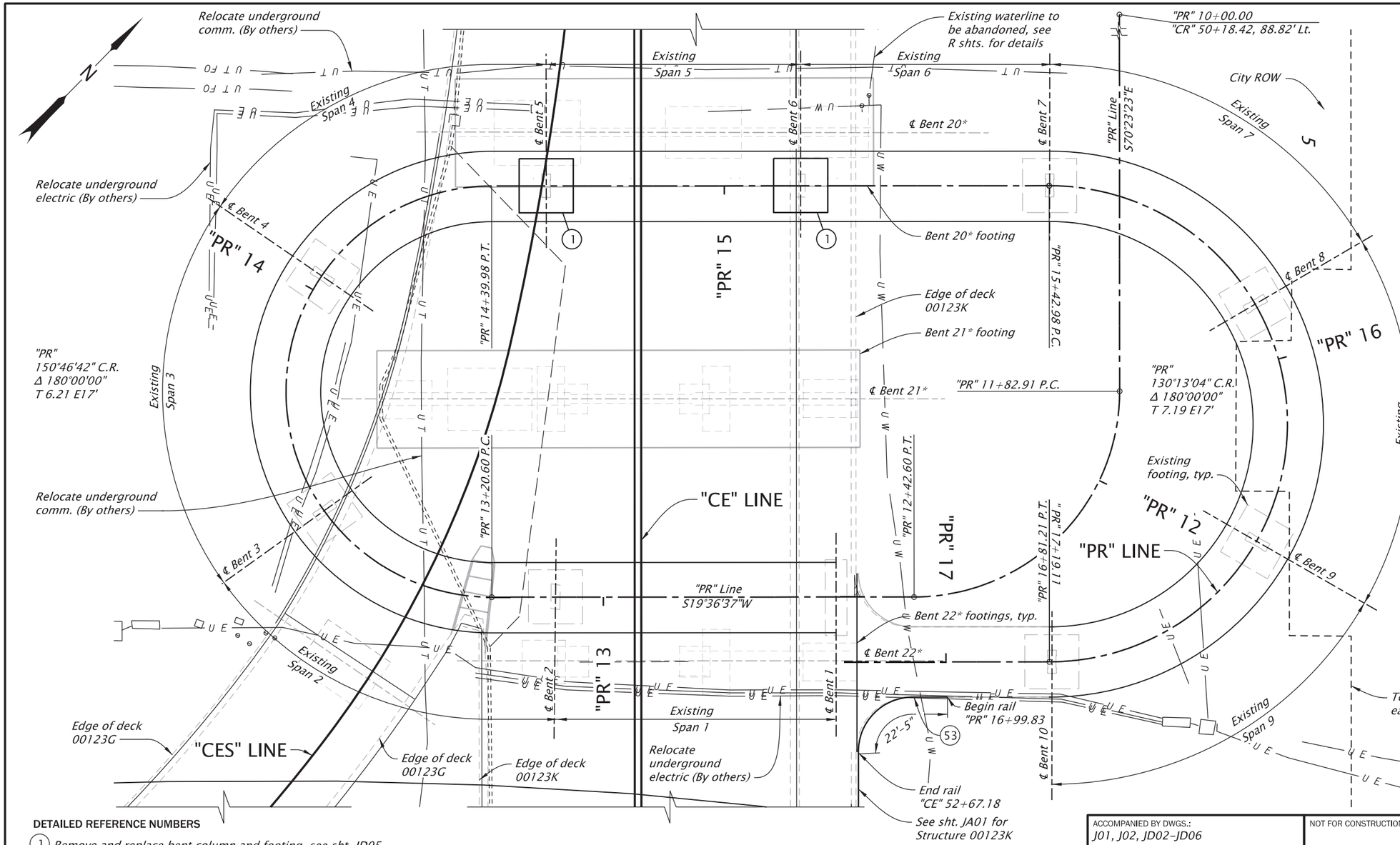

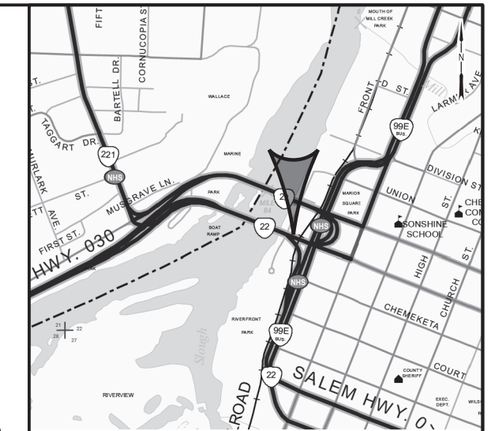

LOCATION MAP

S.W. ¼ & S.E. ¼, SEC. 22, T. 07 S., R. 03 W., W.M.
LAT. 44.9447, LONG. -123.0413

DETAILED REFERENCE NUMBERS

(1) Remove and replace bent column and footing, see sht. JD05.

(53) Install 10'-0" Type "B" protective fencing.

NOTES:

1. ** See Bent Elevation sheet for construction control working points to establish bent centerlines.
2. Utilities to be maintained and protected unless otherwise shown.
3. * Bridge 00123K
4. Design criteria for Str. No. 22524 results in no retrofit work or formal seismic analysis beyond accounting for inertial loading on BR00123K. Bents 5 and 6 are impacted by foundation work on Bent 20 of BR00123K. Bent 5 and 6 reconstruction work is detailed according to AASHTO Guide Specifications for LRFD Seismic Bridge Design, 2nd Edition, sections 8.6 and 8.8.
5. Field verify all dimensions and elevations before submitting Working Drawings and prior to ordering or fabricating any materials. See sht. J02 for more details.

NOTE:
Elevations shown are based on North American Vertical Datum 1988 (NAVD88).

PLAN
Scale: 1"=20'

SCALE WARNING
IF THIS SCALE LINE DOES NOT MEASURE ONE INCH, THEN DRAWING IS NOT TO SCALE

ACCOMPANIED BY DWGS.: J01, J02, JD02-JD06

NOT FOR CONSTRUCTION - INFORMATIONAL DWGS.:

STRUCTURE NO.	22524
BDS DWG NO.	113918
CALC. BOOK	7997
HWY: 030 M.P.: 25.69	
COUNTY	Marion/Polk
DATE	6/26

REGISTERED PROFESSIONAL ENGINEER
79997PE
Digitally Signed 2026.06.29 07:15:24-07'00'
OREGON
JULY 14, 2015
FRED M. GOMEZ
EXPIRES: 06-30-2027

FINAL ELECTRONIC DOCUMENT AVAILABLE UPON REQUEST

DOWL
3500 Chad Drive, Suite 200
Eugene, Oregon 97408
541-683-6090
WWW.DOWL.COM

OREGON DEPARTMENT OF TRANSPORTATION

WILLAMETTE RIVER, HWY 30 SPIRAL BIKE RAMP

OR22: CENTER ST BRIDGE (PHASE 1) PROJECT
WILLAMINA - SALEM HIGHWAY
MARION & POLK COUNTIES

Designer: Fred M. Gomez, PE
Reviewer: Bob Goodrich, PE
Drafter: Jake Williams
Checker: Nasario Lopez-Francisco, PE

PLAN

SHEET NO. JD01

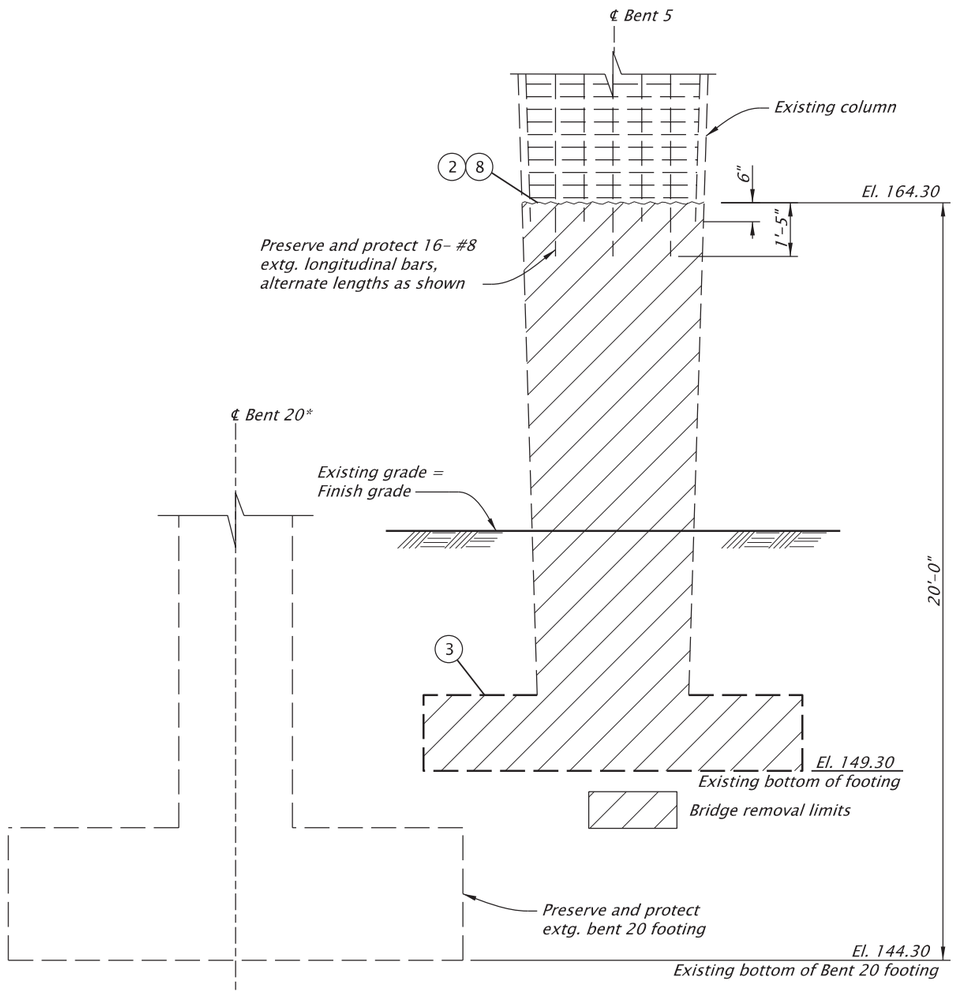

NOTES:
1. Bent 5 shown, Bent 6 similar.
*2. Bridge 00123K
3. Field verify all dimensions and elevations before submitting Working Drawings and prior to ordering or fabricating any materials. See sht. J02 for more detials.

BRIDGE REMOVAL DETAIL

Scale: 1/4"=1'-0"

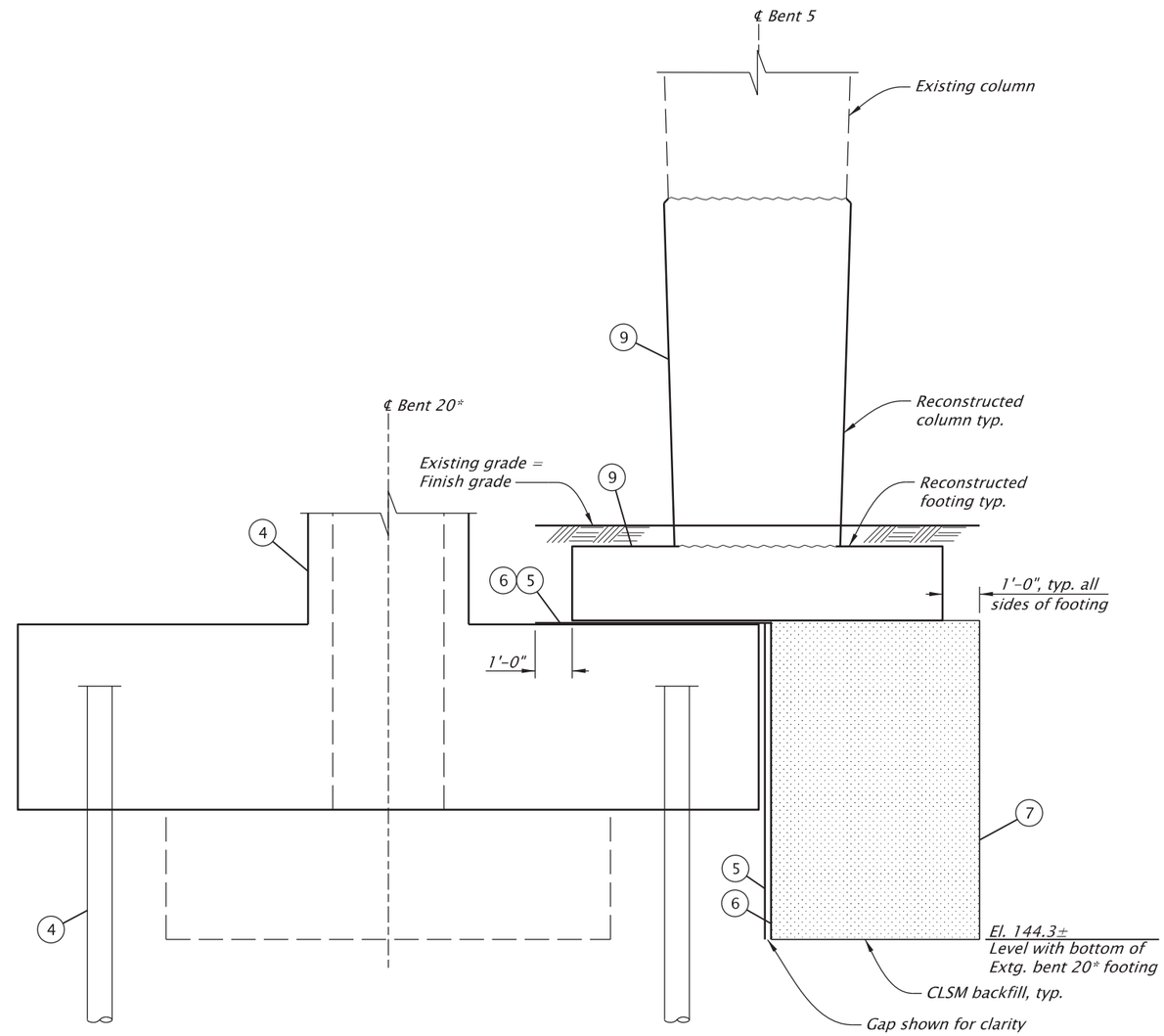

ELEVATION - CONSTRUCTION SEQUENCE

Scale: 1/4"=1'-0"

For accompanied by drawings, see sht. JD01

CONSTRUCTION SEQUENCE

1. Temporarily support spiral bike ramp, see sht. JD03.
2. Sawcut 1½" deep around perimeter of spiral bike ramp structure existing column prior to removal of concrete with chipping equipment.
3. Remove spiral bike ramp structure existing footing and column within "Removal Limits"; preserve and protect spiral bike ramp existing column vertical reinforcing to limits shown.
4. Construct Bent 20 ground anchors and footing, see JA series for details.
5. Install ½" preformed expansion joint filler.
6. Install two layers of 10-mil polyethylene bond-breaker
7. Construct CLSM backfill.
8. Clean and roughen exposed concrete surface to ¼" minimum amplitude.
9. Reconstruct spiral bike ramp column and footing, see shts. JD03-JD06.
10. Remove temporary supports, see sht. JD03.

SCALE WARNING
IF THIS SCALE LINE DOES NOT MEASURE ONE INCH, THEN DRAWING IS NOT TO SCALE

STRUCTURE NO.	22524
BDS DWG NO.	113919
CALC. BOOK	7997
HWY: 030 M.P.: 25.69	
COUNTY	Marion/Polk
DATE	2/26

REGISTERED PROFESSIONAL ENGINEER
79997PE
Digitally Signed 2026.02.12 16:00:42-08'00'
OREGON
JULY 14, 2015
FRED M. GOMEZ
EXPIRES: 06-30-2027

FINAL ELECTRONIC DOCUMENT AVAILABLE UPON REQUEST

DOWL
3500 Chad Drive, Suite 200
Eugene, Oregon 97408
541-683-6090
WWW.DOWL.COM

WILLAMETTE RIVER, HWY 30 SPIRAL BIKE RAMP

OR22: CENTER ST BRIDGE (PHASE 1) PROJECT
WILLAMINA - SALEM HIGHWAY
MARION & POLK COUNTIES

Designer: Fred M. Gomez, PE
Reviewer: Bob Goodrich, PE
Drafter: Jake Williams
Checker: Nasario Lopez-Francisco, PE

BENTS 5 AND 6 CONSTRUCTION SEQUENCE

SHEET NO. JD02

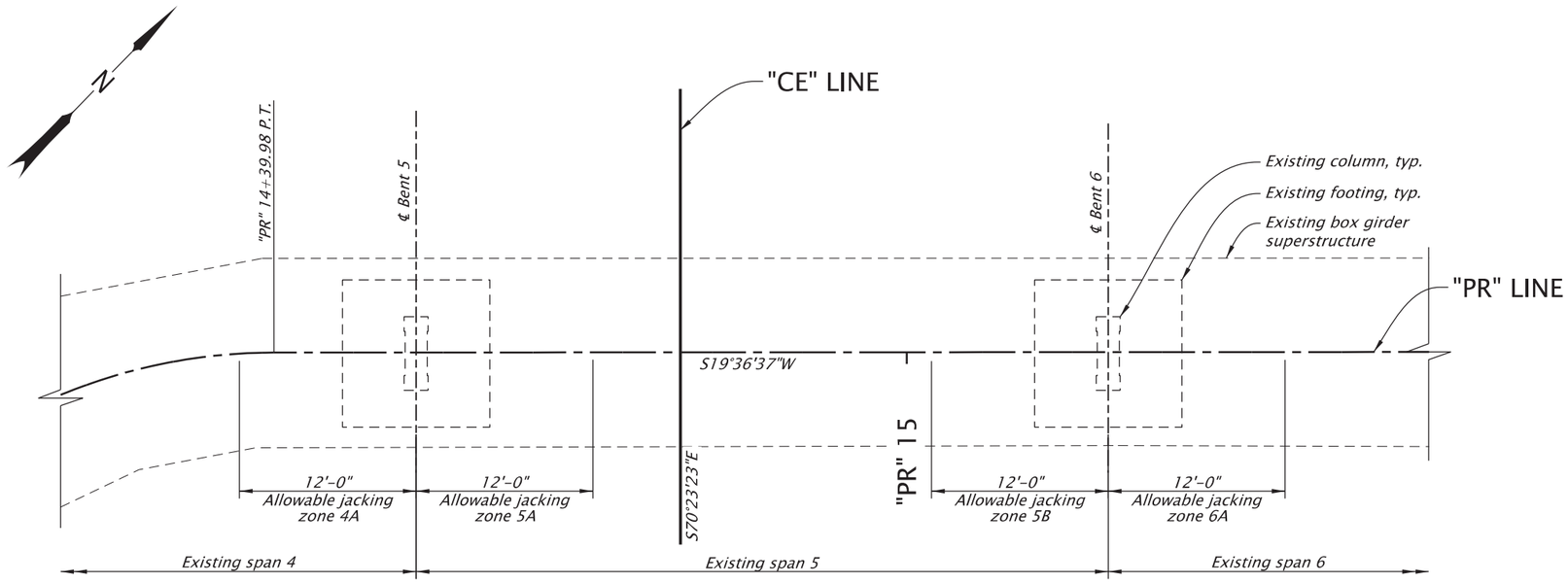

NOTES:
See sht. JD01 for a full overview of potential temporary support obstructions and constraints, including those related to Water Street and the BR00123k foundation, substructure, and superstructure.

PLAN
Scale: 1"=10'

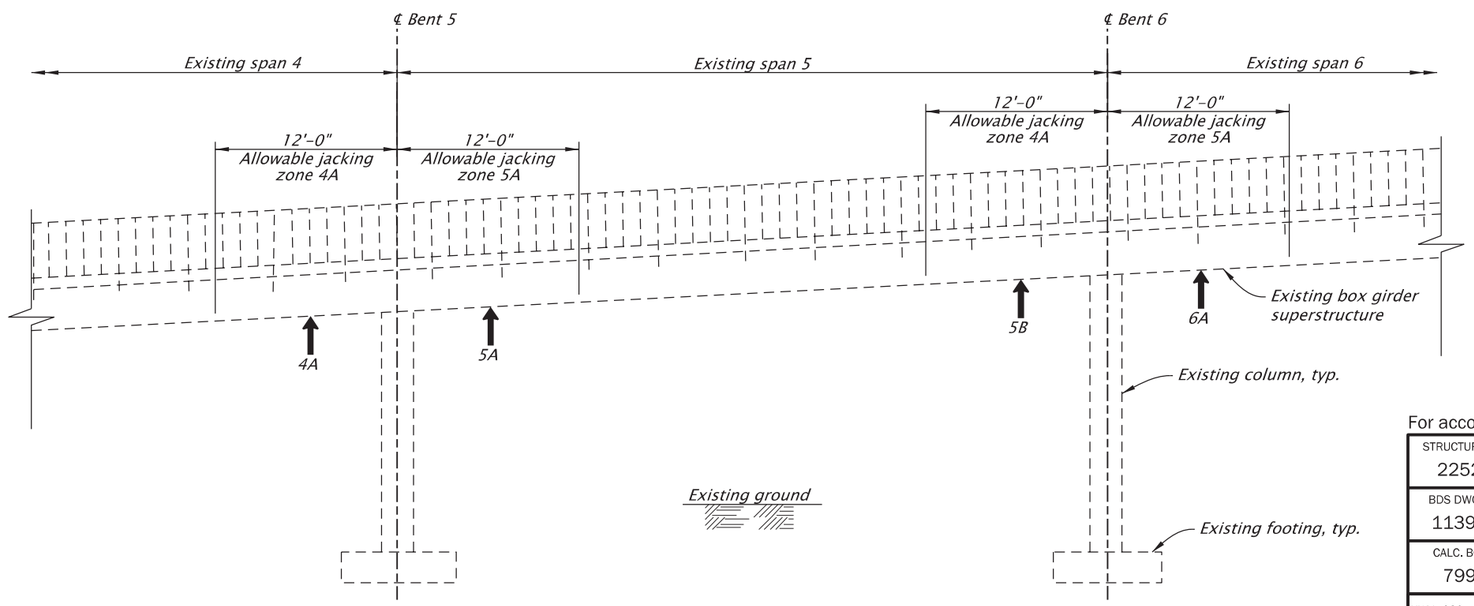

ELEVATION
Scale: 1"=10'

BRIDGE JACKING LOADS (kips)			
Location	Dead Load	Construction Live	Conceptual System Type
4A	75–83	14–15	Ground supported
5A	67	12	Ground supported
5B	67–69	12	Ground supported
6A	71–81	13–15	Ground supported

NOTES:
1. Loads are for jacking locations shown.
2. Dead load represents the total unfactored reaction.
3. Construction live load reactions represent the factored reactions resulting from applying a uniform construction live load of 30 psf to all spans, using a load factor of 1.6.
4. Contractor is responsible for determining all construction loading including, materials, equipment and live loading.
5. See Bent Elevation sheet for construction working points to establish bent centerlines.
6. Field verify all dimensions and elevations prior to submitting Working Drawings and prior to ordering or fabricating any materials. See sht. J02 for more details.

JACKING SEQUENCE:
1. Load all jacks concurrently until the bridge is fully supported by the temporary supports. A maximum $^{1}/_{16}$" upward deflection is allowable. See Bridge Jacking Loads table for the loads to be temporarily supported. Throughout construction maintain a minimum of one temporary support per jacking zone. Maintain 0" – $^{1}/_{16}$" upward deflection at all four jacking locations until the jacks are unloaded in step 6.
2. Remove existing columns at Bent 5 and Bent 6, as shown.
3. Adjust temporary support locations to avoid conflicts between temporary supports and footing retrofit work on BR22524 and BR00123K. When adjusting locations within a zone, fully transfer the load to the new temporary support before unloading the adjacent support within that zone.
4. Upon completion of all footing work, wait a minimum of 3 days before subsequent loading. Pre-load Bent 5 and Bent 6 footings concentrically to 140 kip each.
5. Construct Bent 5 and Bent 6 columns. Wait a minimum of 3 days before subsequent loading.
6. Unload all jacks concurrently until the superstructure is fully supported by permanent Bent 5 and Bent 6.
7. Remove temporary supports.

For accompanied by drawings, see sht. JD01

SCALE WARNING
IF THIS SCALE LINE DOES NOT MEASURE ONE INCH, THEN DRAWING IS NOT TO SCALE

STRUCTURE NO.	22524
BDS DWG NO.	113920
CALC. BOOK	7997
HWY: 030 M.P.: 25.69	
COUNTY	Marion/Polk
DATE	2/26

REGISTERED PROFESSIONAL ENGINEER
79997PE
Digitally Signed 2026.02.12 16:01:41-08'00'
OREGON
JULY 14, 2015
FRED M. GOMEZ
EXPIRES: 06-30-2027
FINAL ELECTRONIC DOCUMENT AVAILABLE UPON REQUEST

DOWL
3500 Chad Drive, Suite 200
Eugene, Oregon 97408
541-683-6090
WWW.DOWL.COM

WILLAMETTE RIVER, HWY 30 SPIRAL BIKE RAMP

OR22: CENTER ST BRIDGE (PHASE 1) PROJECT
WILLAMINA - SALEM HIGHWAY
MARION & POLK COUNTIES

Designer: Fred M. Gomez, PE
Reviewer: Bob Goodrich, PE
Drafter: Jake Williams
Checker: Nasario Lopez-Francisco, PE

TEMPORARY SUPPORT SEQUENCE
SHEET NO. JD03

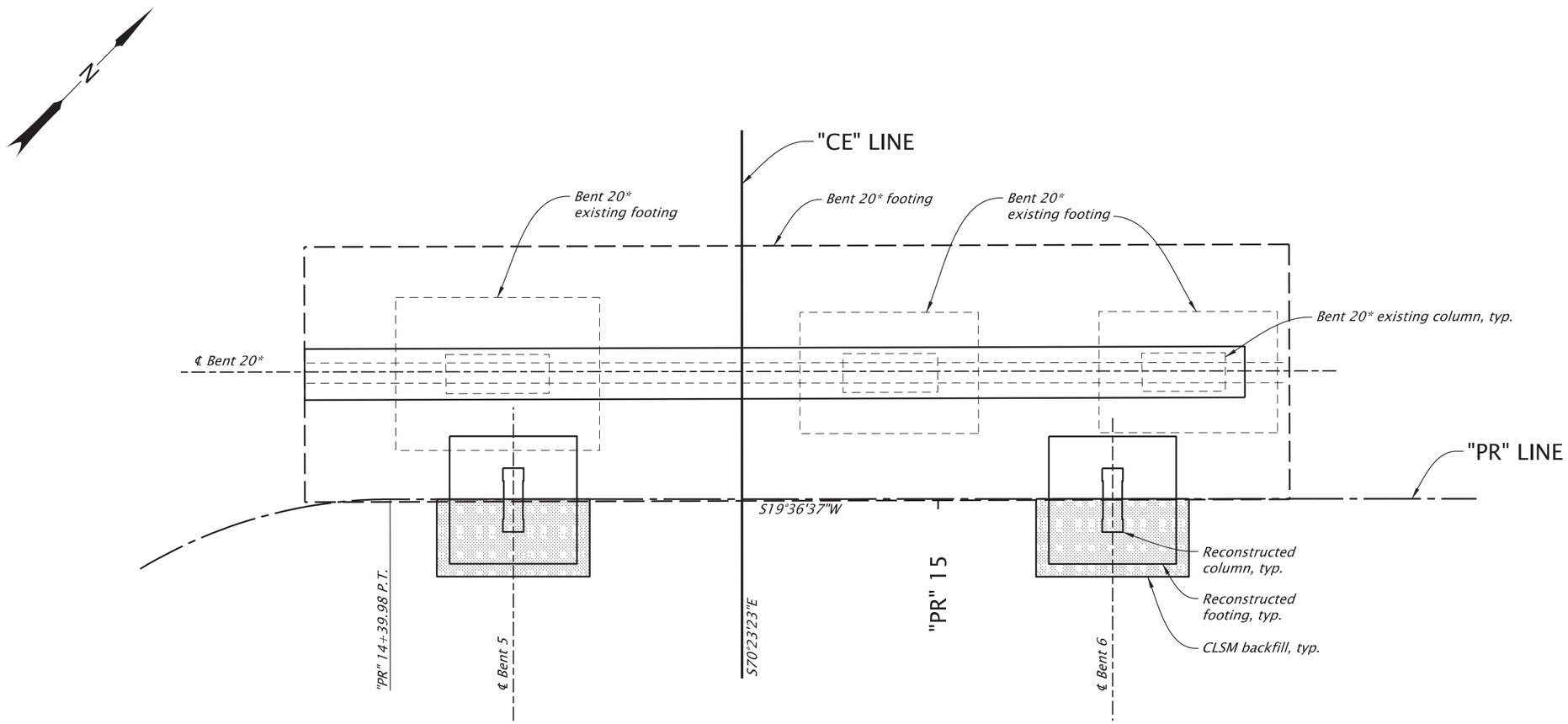

FOOTING PLAN - SPAN 5

Scale: 1"=10'

NOTES:

**1. Bridge 00123K*

2. Field verify all dimensions and elevations before submitting Working Drawings and prior to ordering or fabricating any materials. See sht. J02 for more detials.

3. Utilities to be maintained and protected unless otherwise shown.

For accompanied by drawings, see sht. JD01

STRUCTURE NO.	22524
BDS DWG NO.	113921
CALC. BOOK	7997
HWY: 030	M.P.: 25.69
COUNTY	Marion/Polk
DATE	2/26

REGISTERED PROFESSIONAL ENGINEER
79997PE
Digitally Signed 2026.02.12 16:02:24-08'00'
OREGON
JULY 14, 2015
FRED M. GOMEZ
EXPIRES: 06-30-2027

FINAL ELECTRONIC DOCUMENT AVAILABLE UPON REQUEST

DOWL
3500 Chad Drive, Suite 200
Eugene, Oregon 97408
541-683-6090
WWW.DOWL.COM

WILLAMETTE RIVER, HWY 30 SPIRAL BIKE RAMP

OR22: CENTER ST BRIDGE (PHASE 1) PROJECT
WILLAMINA - SALEM HIGHWAY
MARION & POLK COUNTIES

Designer: Fred M. Gomez, PE
Reviewer: Bob Goodrich, PE
Drafter: Jake Williams
Checker: Nasario Lopez-Francisco, PE

FOUNDATION PLAN

SHEET NO. JD04

SCALE WARNING
IF THIS SCALE LINE DOES NOT MEASURE ONE INCH, THEN DRAWING IS NOT TO SCALE

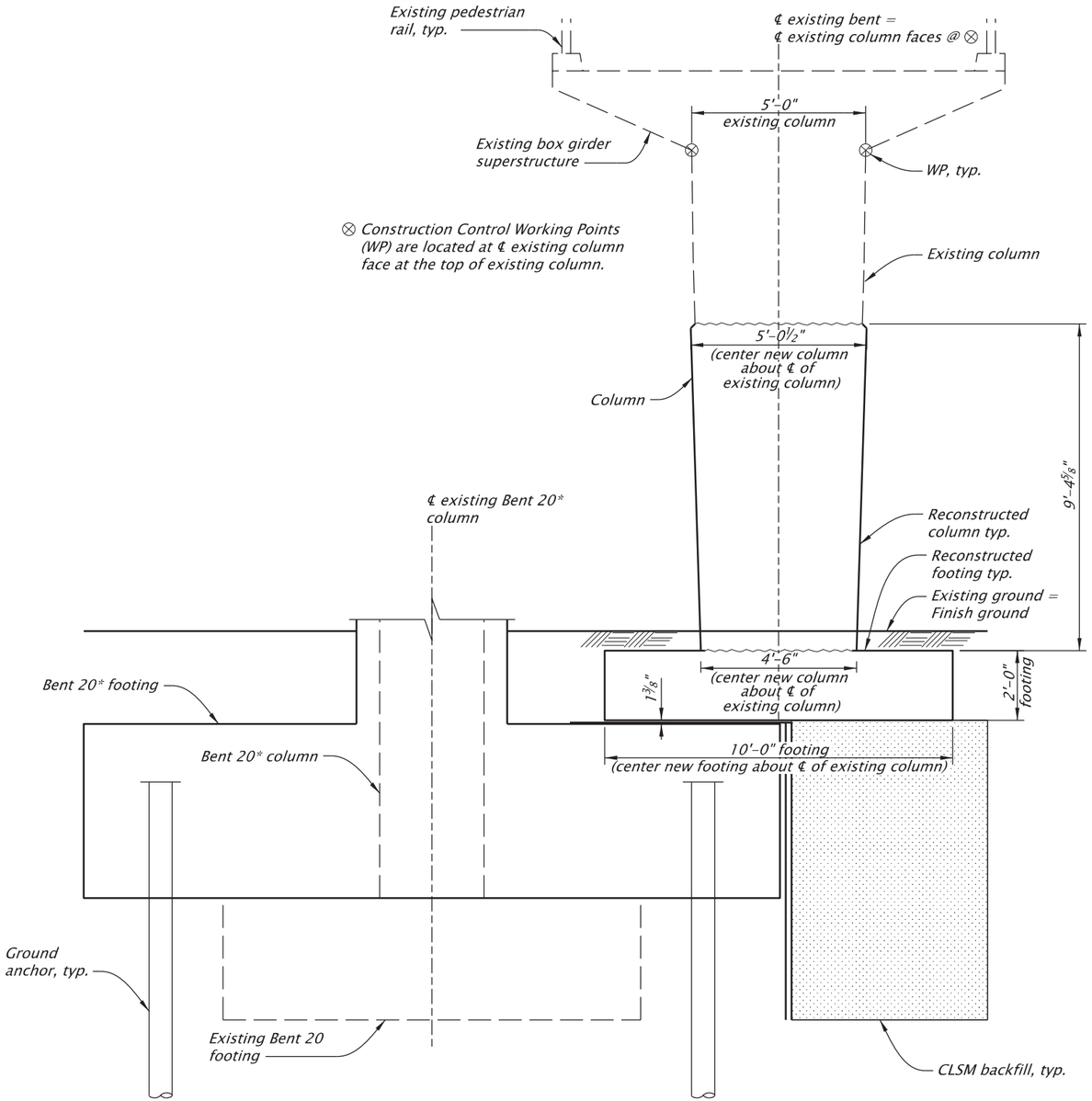

NOTE:
* Bridge 00123k

ELEVATION - BENT 5 (BENT 6 SIMILAR)

Scale: 1/4"=1'-0"

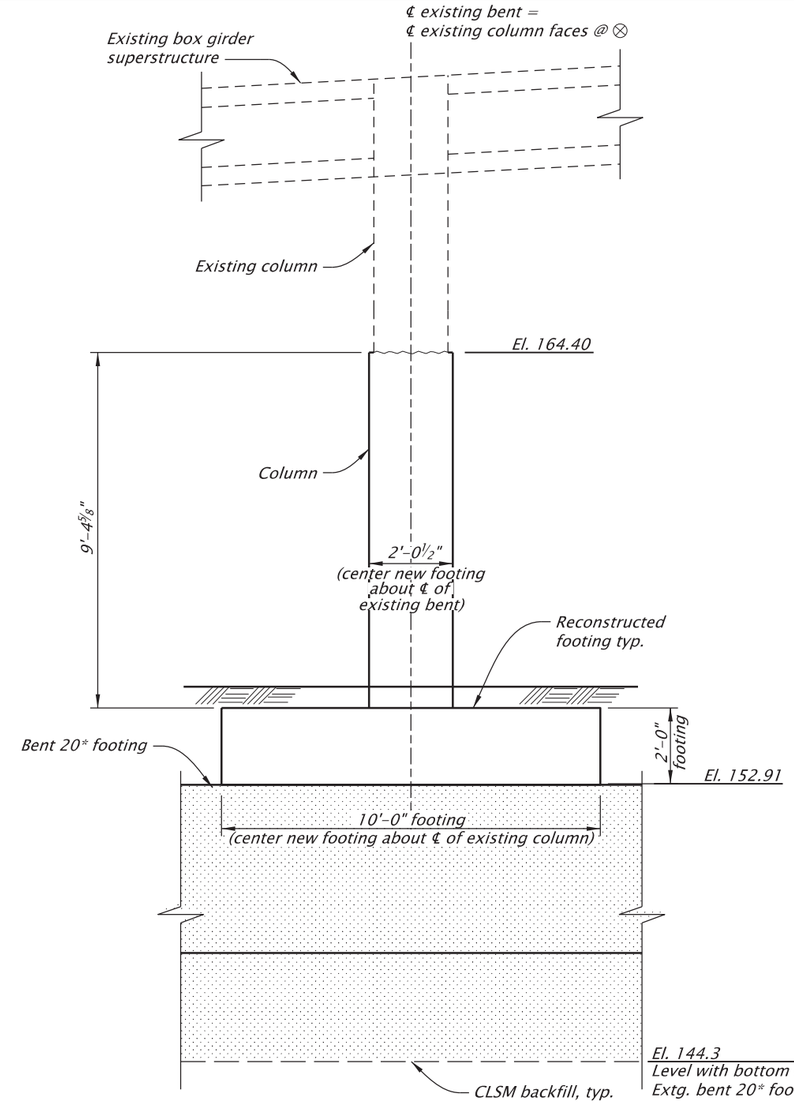

TYPICAL SECTION - BENT 5 (BENT 6 SIMILAR)

Scale: 1/4"=1'-0"

For accompanied by drawings, see sht. JD01

NOTE:
Field verify all dimensions and elevations before submitting Working Drawings and prior to ordering or fabricating any materials. See sht. J02 for more details.

SCALE WARNING
IF THIS SCALE LINE DOES NOT MEASURE ONE INCH, THEN DRAWING IS NOT TO SCALE

STRUCTURE NO.	22524
BDS DWG NO.	113922
CALC. BOOK	7997
HWY: 030	M.P.: 25.69
COUNTY	Marion/Polk
DATE	2/26

REGISTERED PROFESSIONAL ENGINEER
79997PE
Digitally Signed 2026.02.12 16:03:24-08'00'
OREGON
JULY 14, 2015
FRED M. GOMEZ
EXPIRES: 06-30-2027

FINAL ELECTRONIC DOCUMENT AVAILABLE UPON REQUEST

DOWL
3500 Chad Drive, Suite 200
Eugene, Oregon 97408
541-683-6090
WWW.DOWL.COM

WILLAMETTE RIVER, HWY 30 SPIRAL BIKE RAMP

OR22: CENTER ST BRIDGE (PHASE 1) PROJECT
WILLAMINA - SALEM HIGHWAY
MARION & POLK COUNTIES

Designer: Fred M. Gomez, PE
Reviewer: Bob Goodrich, PE
Drafter: Jake Williams
Checker: Nasario Lopez-Francisco, PE

BENT 5 ELEVATION (BENT 6 SIMILAR)

SHEET NO. JD05

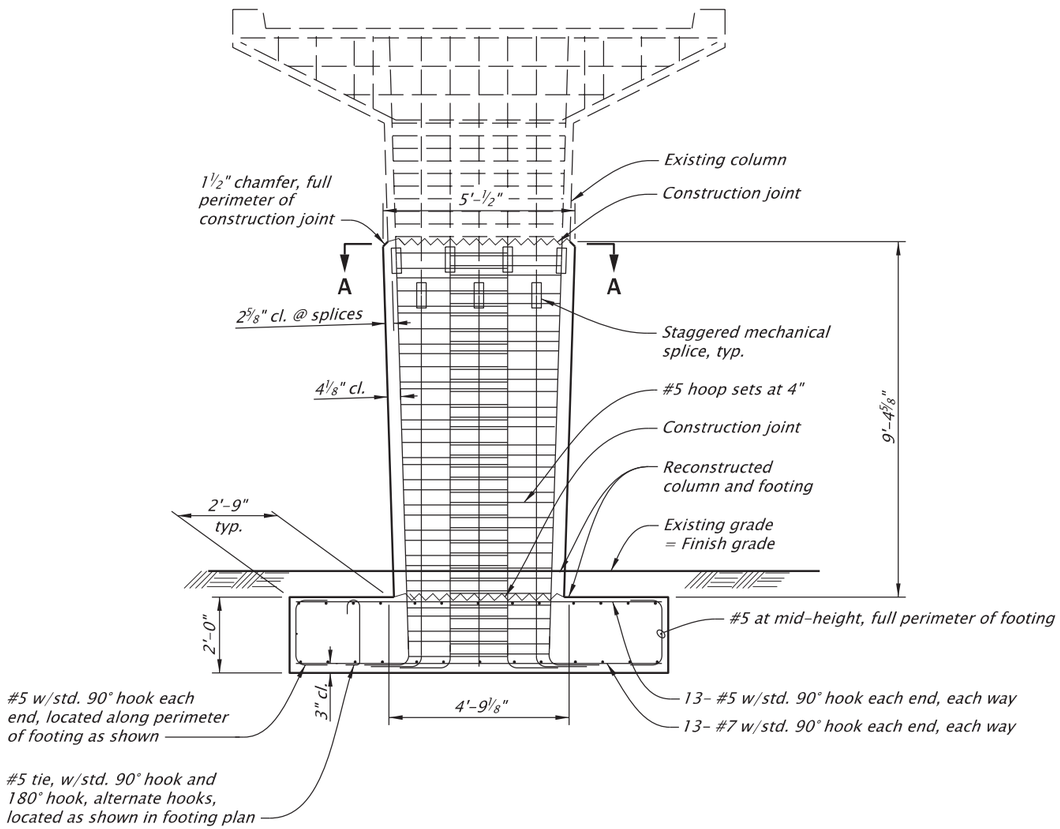

NOTE:
Bent 5 shown, Bent 6 similar.

COLUMN/FOOTING ELEVATION

Scale: 1/4"=1'-0"

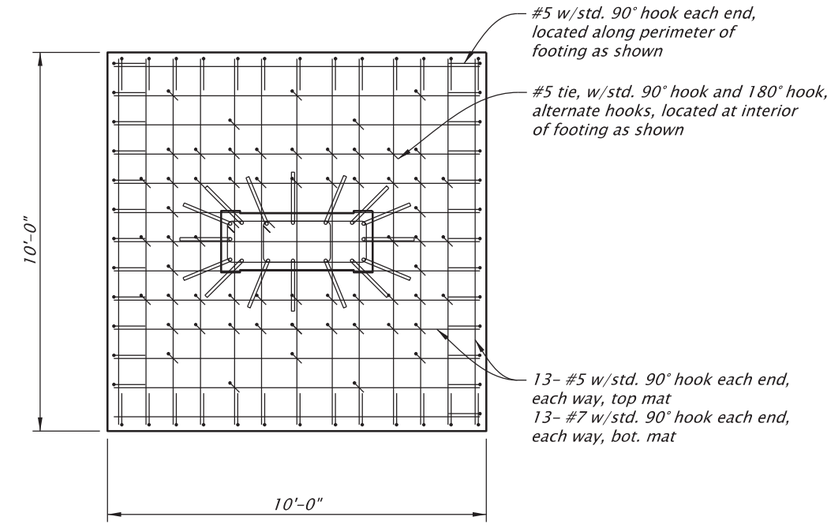

FOOTING PLAN

Scale: 1/4"=1'-0"

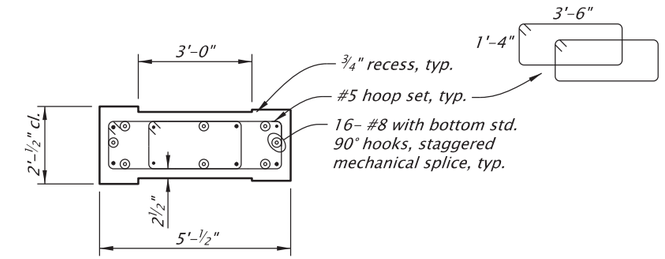

SECTION A-A

Scale: 1/4"=1'-0"

NOTES:
1. Provide ASTM A706 Grade 60 reinforcement, unless otherwise noted.
2. Provide Class 4000 concrete in column and footings.
3. Place bars 2" clear of nearest face of concrete, unless shown otherwise.
4. Top mat and bottom mat reinforcement spacing approximate. Space to avoid column reinforcement and maintain even spacing.
5. Staggered mechanical splices are shown at a 8" minimum length to preserve head room for footing reconstruction. Contractor may elect to use longer staggered mechanical splices, but must adjust hoop dimensions as necessary to prevent fit-up issues.
6. Field verify all dimensions and elevations before submitting Working Drawings and prior to ordering or fabricating any materials. See sht. J02 for more details.

SCALE WARNING
IF THIS SCALE LINE DOES NOT MEASURE ONE INCH, THEN DRAWING IS NOT TO SCALE

For accompanied by drawings, see sht. JD01

STRUCTURE NO.	22524
BDS DWG NO.	113923
CALC. BOOK	7997
HWY: 030	M.P.: 25.69
COUNTY	Marion/Polk
DATE	2/26

REGISTERED PROFESSIONAL ENGINEER
79997PE
Digitally Signed 2026.02.12 16:04:23-08'00'
OREGON
JULY 14, 2015
FRED M. GOMEZ
EXPIRES: 06-30-2027

DOWL
3500 Chad Drive, Suite 200
Eugene, Oregon 97408
541-683-6090
WWW.DOWL.COM

OREGON DEPARTMENT OF TRANSPORTATION

WILLAMETTE RIVER, HWY 30 SPIRAL BIKE RAMP

OR22: CENTER ST BRIDGE (PHASE 1) PROJECT
WILLAMINA - SALEM HIGHWAY
MARION & POLK COUNTIES

Designer: Fred M. Gomez, PE
Reviewer: Bob Goodrich, PE
Drafter: Jake Williams
Checker: Nasario Lopez-Francisco, PE

COLUMN AND FOOTING DETAILS

SHEET NO. JD06

FINAL ELECTRONIC DOCUMENT AVAILABLE UPON REQUEST

Bidding Plans

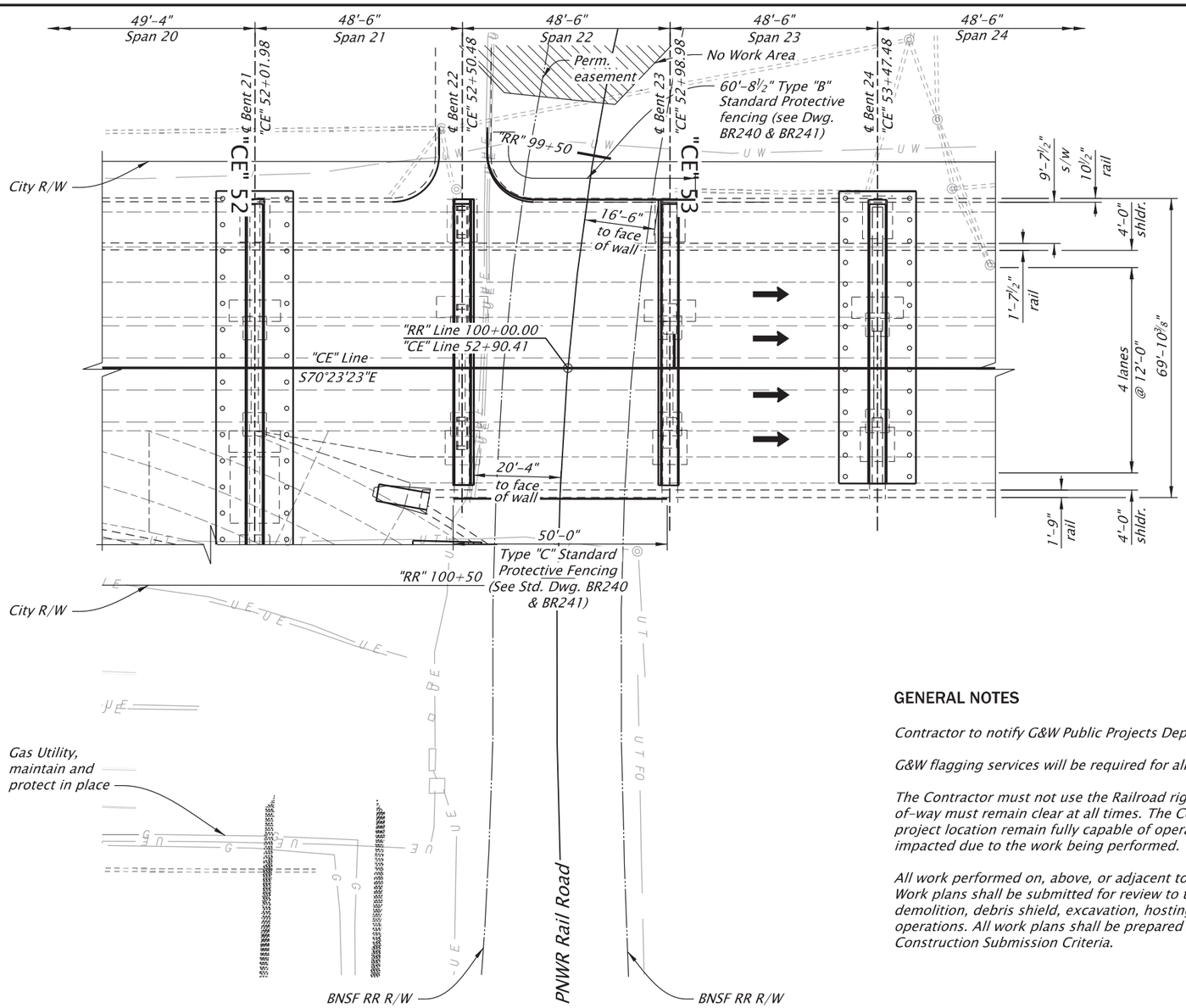

PLAN

Scale: 1"=60'

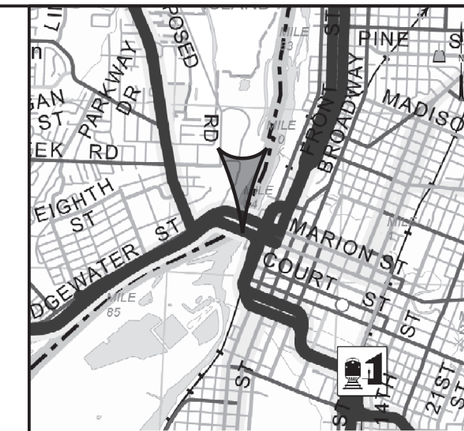

LOCATION MAP

S.W.¼ & S.E.¼ SEC. 22, T. 07 S., R. 03 W, W.M.
LAT. 44.9449, LONG. -123.0433

GENERAL NOTES

Contractor to notify G&W Public Projects Department 30 days prior to starting construction.

G&W flagging services will be required for all work within G&W right-of-way or any work that has "potential to foul".

The Contractor must not use the Railroad right-of-way for storage of materials or equipment during construction. The Railroad's right-of-way must remain clear at all times. The Contractor must plan and perform the work in a manner such that the Railroad tracks at the project location remain fully capable of operating rail traffic throughout the work period and rail traffic is not delayed or otherwise impacted due to the work being performed.

All work performed on, above, or adjacent to Railroad property shall be in accordance with the Public Project Manual, current edition. Work plans shall be submitted for review to the Railroad for tasks related to site access, soil and water management, ballast protection, demolition, debris shield, excavation, hosting, erection, and all other work that presents potentially affects Railroad property or operations. All work plans shall be prepared and submitted to the Railroad in adherence with the Public Project Manual, Section 1.11 Construction Submission Criteria.

CITY/COUNTY/STATE ----------SALEM/MARION/OREGON
RAILROAD MILEPOST ---------- 071.14
NEXT STATION ---------- SALEM
SUBDIVISION ---------- O.E.
LATITUDE ---------- 44.9443261
LONGITUDE ---------- -123.0411531
DOT CROSSING NUMBER -------- 067037C

NOTE:
Bridge, structures, and foundations will be designed and detailed in accordance with AASHTO load and resistance factor design specifications, 9th edition, supplemented and/or modified by the Oregon Department of Transportation Bridge Design Manual, 2023 Publication, and the Geotechnical Design Manual, 2023 Publication.

NOTE:
Elevations shown are based on North American Vertical Datum 1988 (NAVD88).

SCALE WARNING
IF THIS SCALE LINE DOES NOT MEASURE ONE INCH, THEN DRAWING IS NOT TO SCALE

STRUCTURE NO.	00123K
BDS DWG NO.	113880
CALC. BOOK	7997
HWY: 030 M.P.: 25.88	
COUNTY	Marion
DATE	6/26

REGISTERED PROFESSIONAL ENGINEER
099941PE
Digitally Signed 2026.06.10 13:37:14-07'00'
OREGON
JULY 21, 2022
BERNARD ANTHONY FRANKL
EXPIRES: 12/31/2027

FINAL ELECTRONIC DOCUMENT AVAILABLE UPON REQUEST

DOWL
3500 Chad Drive, Suite 200
Eugene, Oregon 97408
541-683-6090
WWW.DOWL.COM

VARIOUS STRUCTURES

OR22: CENTER ST BRIDGE (PHASE 1) PROJECT
WILLAMINA - SALEM HIGHWAY
MARION & POLK COUNTIES

Designer: Bernard A. Frankl, PhD, PE
Reviewer: Bob Goodrich, PE
Drafter: Jake Williams
Checker: Andy Howe, PE

RAILROAD DATA - 1

SHEET NO. JZ01

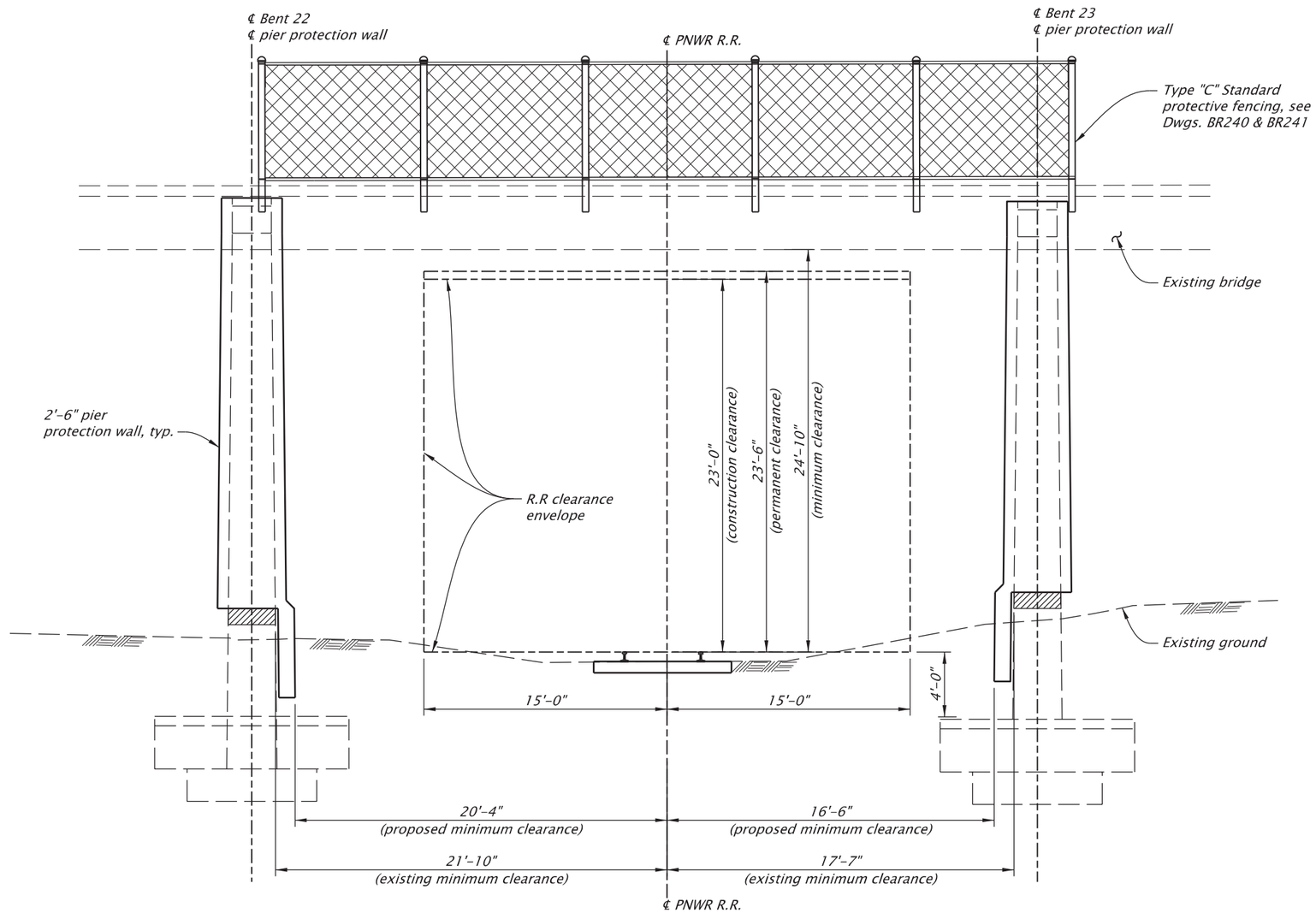

ELEVATION

Scale: 1/8"=1'-0"

CITY/COUNTY/STATE ----------SALEM/MARION/OREGON
RAILROAD MILEPOST ---------- 071.14
NEXT STATION ---------- SALEM
SUBDIVISION ---------- O.E.
LATITUDE ---------- 44.9443261
LONGITUDE ---------- -123.0411531
DOT CROSSING NUMBER -------- 067037C

SCALE WARNING

IF THIS SCALE LINE DOES NOT MEASURE ONE INCH, THEN DRAWING IS NOT TO SCALE

STRUCTURE NO.	00123K
BDS DWG NO.	113881
CALC. BOOK	7997
HWY: 030 M.P.: 25.88	
COUNTY	Marion
DATE	2/26

REGISTERED PROFESSIONAL ENGINEER 099941PE
Digitally Signed 2026.02.12 11:53:48-08'00'
OREGON JULY 21, 2022
BERNARD ANTHONY FRANKL
EXPIRES: 12/31/2027

FINAL ELECTRONIC DOCUMENT AVAILABLE UPON REQUEST

DOWL
3500 Chad Drive, Suite 200
Eugene, Oregon 97408
541-683-6090
WWW.DOWL.COM

OREGON DEPARTMENT OF TRANSPORTATION

VARIOUS STRUCTURES

OR22: CENTER ST BRIDGE (PHASE 1) PROJECT
WILLAMINA - SALEM HIGHWAY
MARION & POLK COUNTIES

Designer: Bernard A. Frankl, PhD, PE
Reviewer: Bob Goodrich, PE
Drafter: Jake Williams
Checker: Andy Howe, PE

RAILROAD DATA - 2

SHEET NO. JZ02

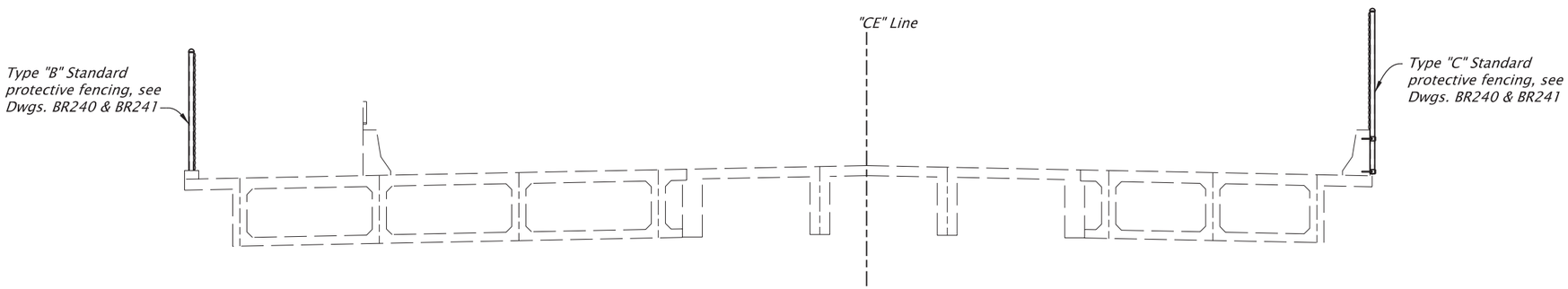

TYPICAL SECTION

Scale: 1/8"=1'-0"

CITY/COUNTY/STATE ----------SALEM/MARION/OREGON
RAILROAD MILEPOST ---------- 071.14
NEXT STATION ---------- SALEM
SUBDIVISION ---------- O.E.
LATITUDE ---------- 44.9443261
LONGITUDE ---------- -123.0411531
DOT CROSSING NUMBER -------- 067037C

SCALE WARNING

IF THIS SCALE LINE DOES NOT MEASURE ONE INCH, THEN DRAWING IS NOT TO SCALE

STRUCTURE NO.	00123K
BDS DWG NO.	113882
CALC. BOOK	7997
HWY: 030	M.P.: 25.88
COUNTY	Marion
DATE	06/24

REGISTERED PROFESSIONAL ENGINEER
099941PE
Digitally Signed 2026.02.12 11:54:02-08'00'
OREGON
JULY 21, 2022
BERNARD ANTHONY FRANKL
EXPIRES: 12/31/2027

FINAL ELECTRONIC DOCUMENT AVAILABLE UPON REQUEST

DOWL
3500 Chad Drive, Suite 200
Eugene, Oregon 97408
541-683-6090
WWW.DOWL.COM

OREGON DEPARTMENT OF TRANSPORTATION

VARIOUS STRUCTURES

OR22: CENTER ST BRIDGE (PHASE 1) PROJECT
WILLAMINA - SALEM HIGHWAY
MARION & POLK COUNTIES

Designer: Bernard A. Frankl, PhD, PE
Reviewer: Bob Goodrich, PE
Drafter: Jake Williams
Checker: Andy Howe, PE

RAILROAD DATA - 3

SHEET NO. JZ03

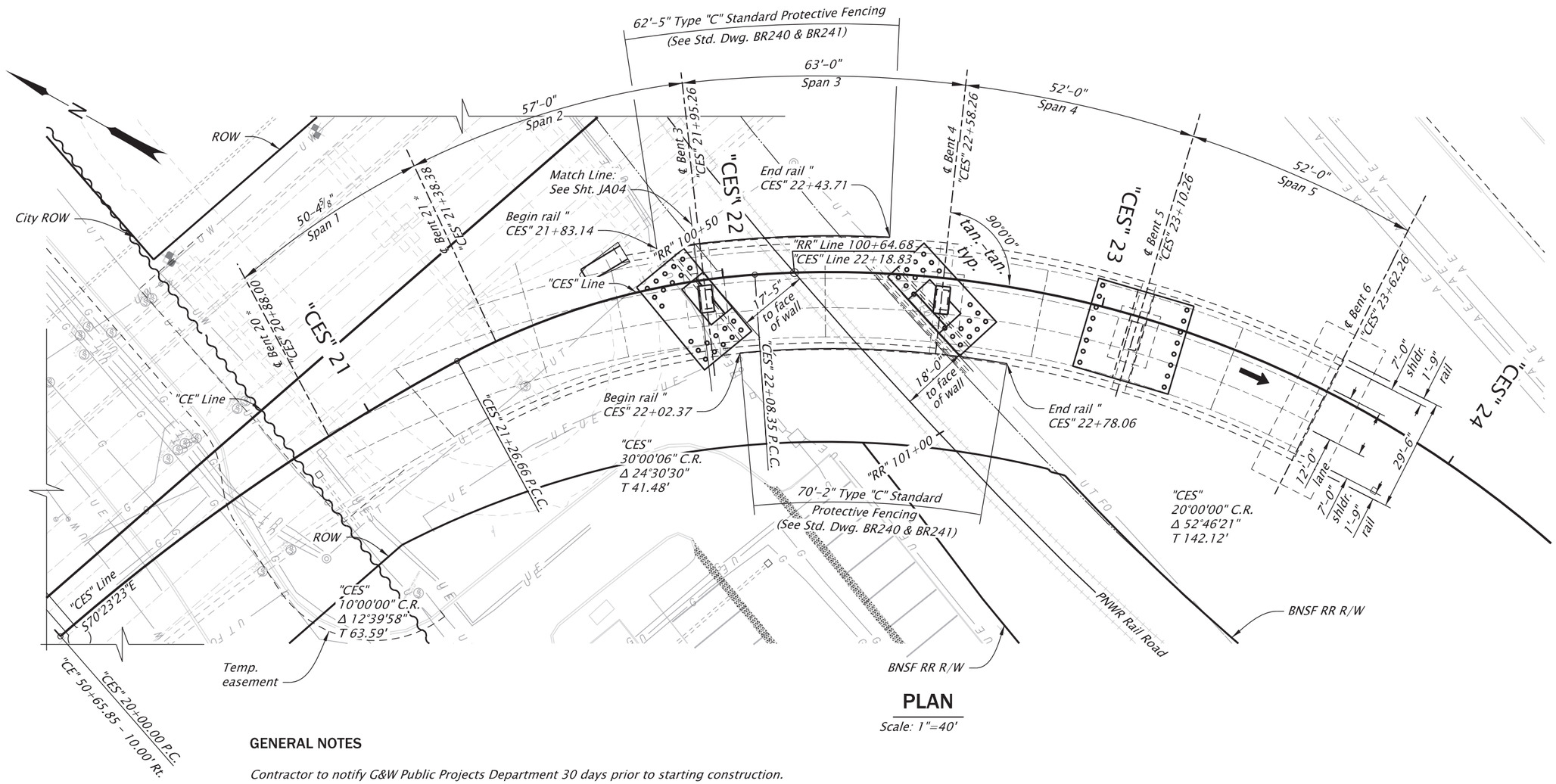

PLAN

Scale: 1"=40'

GENERAL NOTES

Contractor to notify G&W Public Projects Department 30 days prior to starting construction.

G&W flagging services will be required for all work within G&W right-of-way or any work that has "potential to foul".

The Contractor must not use the Railroad right-of-way for storage of materials or equipment during construction. The Railroad's right-of-way must remain clear at all times. The Contractor must plan and perform the work in a manner such that the Railroad tracks at the project location remain fully capable of operating rail traffic throughout the work period and rail traffic is not delayed or otherwise impacted due to the work being performed.

All work performed on, above, or adjacent to Railroad property shall be in accordance with the Public Project Manual, current edition. Work plans shall be submitted for review to the Railroad for tasks related to site access, soil and water management, ballast protection, demolition, debris shield, excavation, hosting, erection, and all other work that presents potentially affects Railroad property or operations. All work plans shall be prepared and submitted to the Railroad in adherence with the Public Project Manual, Section 1.11 Construction Submission Criteria.

CITY/COUNTY/STATE ----------SALEM/MARION/OREGON
RAILROAD MILEPOST ---------- 071.16
NEXT STATION ---------- SALEM
SUBDIVISION ---------- O.E.
LATITUDE ---------- 44.9443261
LONGITUDE ---------- -123.0411531
DOT CROSSING NUMBER -------- 938926M

NOTE:
Bridge, structures, and foundations will be designed and detailed in accordance with AASHTO load and resistance factor design specifications, 9th edition, supplemented and/or modified by the Oregon Department of Transportation Bridge Design Manual, 2023 Publication, and the Geotechnical Design Manual, 2023 Publication.

NOTE:
Elevations shown are based on North American Vertical Datum 1988 (NAVD88).

SCALE WARNING
IF THIS SCALE LINE DOES NOT MEASURE ONE INCH, THEN DRAWING IS NOT TO SCALE

STRUCTURE NO.	00123G
BDS DWG NO.	113883
CALC. BOOK	7997
HWY: 030	M.P.: 26.00
COUNTY	Marion
DATE	06/24

REGISTERED PROFESSIONAL ENGINEER
099941PE
Digitally Signed 2026.06.10 13:38:02-07'00'
OREGON
JULY 21, 2022
BERNARD ANTHONY FRANKL
EXPIRES: 12/31/2027
FINAL ELECTRONIC DOCUMENT AVAILABLE UPON REQUEST

DOWL
3500 Chad Drive, Suite 200
Eugene, Oregon 97408
541-683-6090
WWW.DOWL.COM

VARIOUS STRUCTURES

OR22: CENTER ST BRIDGE (PHASE 1) PROJECT
WILLAMINA - SALEM HIGHWAY
MARION & POLK COUNTIES

Designer: Bernard A. Frankl, PhD, PE
Reviewer: Bob Goodrich, PE
Drafter: Jake Williams
Checker: Andy Howe, PE

RAILROAD DATA - 4

SHEET NO. JZ04

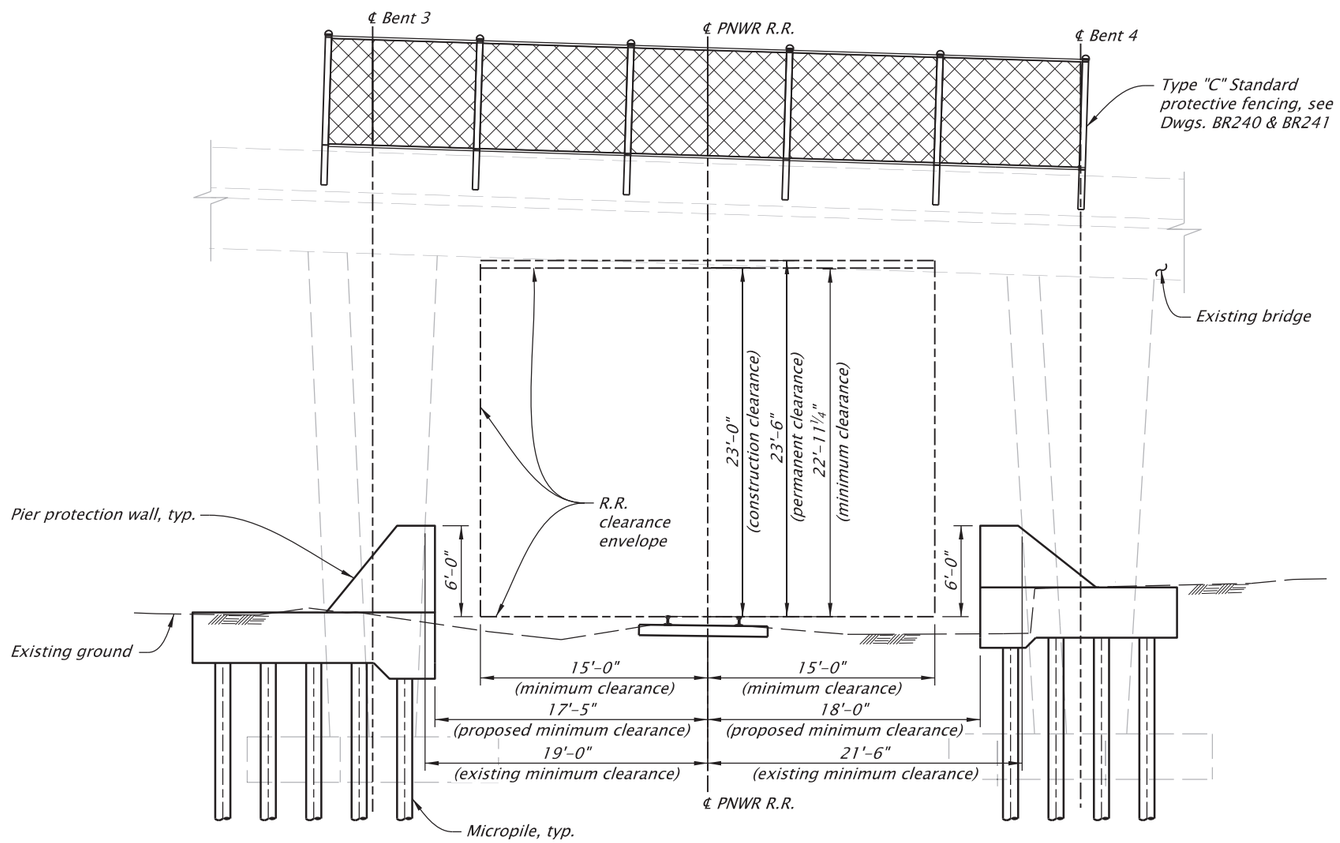

ELEVATION

Scale: 1"=10'

CITY/COUNTY/STATE	SALEM/MARION/OREGON
RAILROAD MILEPOST	071.16
NEXT STATION	SALEM
SUBDIVISION	O.E.
LATITUDE	44.9443261
LONGITUDE	-123.0411531
DOT CROSSING NUMBER	938926M

SCALE WARNING

IF THIS SCALE LINE DOES NOT MEASURE ONE INCH, THEN DRAWING IS NOT TO SCALE

STRUCTURE NO.	00123G
BDS DWG NO.	113884
CALC. BOOK	7997
HWY: 030 M.P.: 26.00	
COUNTY	Marion
DATE	06/24

REGISTERED PROFESSIONAL ENGINEER 099941PE OREGON JULY 21, 2022 BERNARD ANTHONY FRANKL

Digitally Signed 2026.02.12 11:54:40-08'00'

EXPIRES: 12/31/2027

FINAL ELECTRONIC DOCUMENT AVAILABLE UPON REQUEST

DOWL
3500 Chad Drive, Suite 200
Eugene, Oregon 97408
541-683-6090
WWW.DOWL.COM

OREGON DEPARTMENT OF TRANSPORTATION

VARIOUS STRUCTURES

OR22: CENTER ST BRIDGE (PHASE 1) PROJECT
WILLAMINA - SALEM HIGHWAY
MARION & POLK COUNTIES

Designer: Bernard A. Frankl, PhD, PE
Reviewer: Bob Goodrich, PE
Drafter: Jake Williams
Checker: Andy Howe, PE

RAILROAD DATA - 5

SHEET NO. JZ05

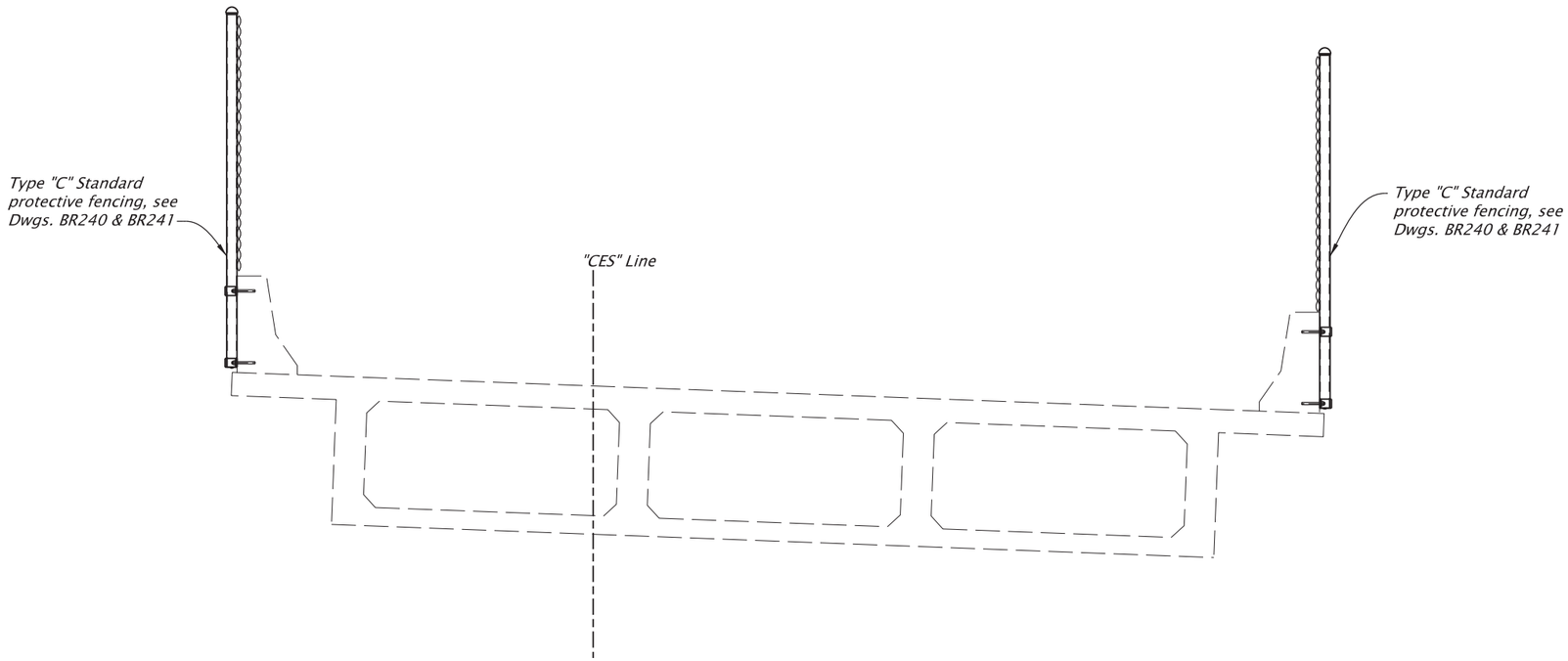

TYPICAL SECTION
Scale: 1/4"=1'-0"

CITY/COUNTY/STATE ----------SALEM/MARION/OREGON
RAILROAD MILEPOST ---------- 071.16
NEXT STATION ---------- SALEM
SUBDIVISION ---------- O.E.
LATITUDE ---------- 44.9443261
LONGITUDE ---------- -123.0411531
DOT CROSSING NUMBER -------- 938926M

SCALE WARNING
IF THIS SCALE LINE DOES NOT MEASURE ONE INCH, THEN DRAWING IS NOT TO SCALE

STRUCTURE NO.	00123G
BDS DWG NO.	113885
CALC. BOOK	7997
HWY: 030	M.P.: 26.00
COUNTY	Marion
DATE	06/24

REGISTERED PROFESSIONAL ENGINEER
099941PE
Digitally Signed 2026.02.12 11:54:55-08'00'
OREGON
JULY 21, 2022
BERNARD ANTHONY FRANKL
EXPIRES: 12/31/2027

FINAL ELECTRONIC DOCUMENT AVAILABLE UPON REQUEST

DOWL
3500 Chad Drive, Suite 200
Eugene, Oregon 97408
541-683-6090
WWW.DOWL.COM

OREGON DEPARTMENT OF TRANSPORTATION

VARIOUS STRUCTURES

OR22: CENTER ST BRIDGE (PHASE 1) PROJECT
WILLAMINA - SALEM HIGHWAY
MARION & POLK COUNTIES

Designer: Bernard A. Frankl, PhD, PE
Reviewer: Bob Goodrich, PE
Drafter: Jake Williams
Checker: Andy Howe, PE

RAILROAD DATA - 6

SHEET NO. JZ06

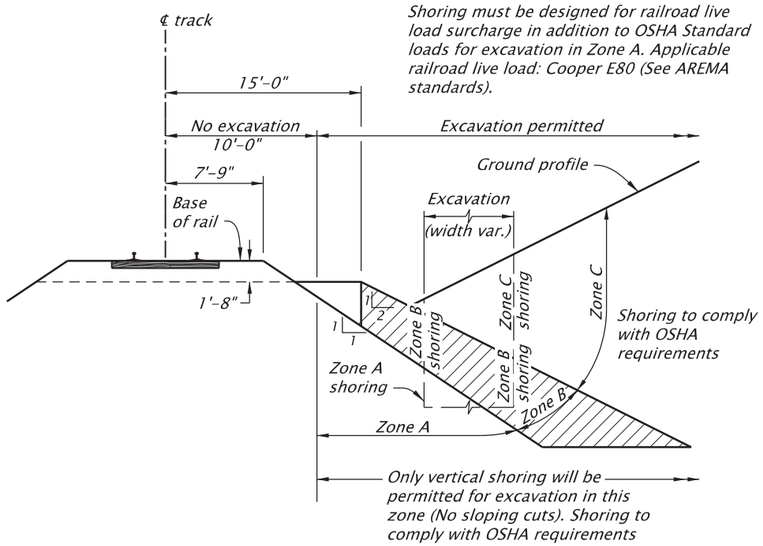

GENERAL EXCAVATION ZONES

Not To Scale

NOTE:
Railroad milepost is based on distance from adjacent FRA listed crossings and is approximate.

CITY/COUNTY/STATE ----------SALEM/MARION/OREGON
RAILROAD MILEPOST ---------- 071.14
NEXT STATION ---------- SALEM
SUBDIVISION ---------- O.E.
LATITUDE ---------- 44.9443261
LONGITUDE ---------- -123.0411531
DOT CROSSING NUMBER -------- 067037C

CITY/COUNTY/STATE ----------SALEM/MARION/OREGON
RAILROAD MILEPOST ---------- 071.16
NEXT STATION ---------- SALEM
SUBDIVISION ---------- O.E.
LATITUDE ---------- 44.9443261
LONGITUDE ---------- -123.0411531
DOT CROSSING NUMBER -------- 938926M

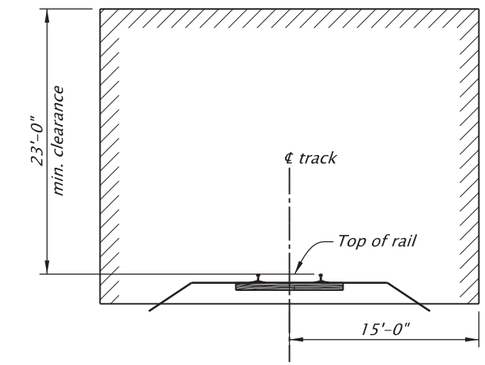

MINIMUM RAILROAD CONSTRUCTION CLEARANCE ENVELOPE

Not To Scale

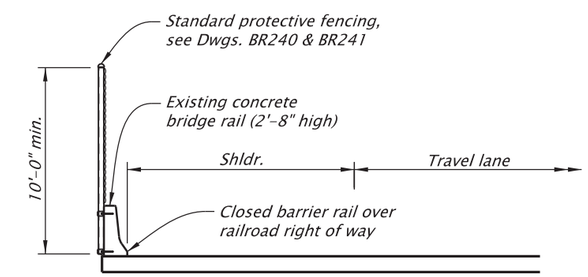

TYPICAL FENCE ON BARRIER DETAIL

Not To Scale

RAILROAD GENERAL NOTES:

1. Railroad review and approval of shoring, erection, demolition, and falsework is required. Allow up to 65 calendar days for each submittal to include a minimum of four weeks for Railroad review and approval.
2. The proposed grade separation project shall not increase the quantity and/or characteristics of the flow in the Railroad's ditches and/or drainage structures.
3. The elevation of the existing top-of-rail profile shall be verified before beginning construction. All discrepancies shall be brought to the attention of the Railroad prior to construction.
4. The contractor must submit a proposed method of erosion and sediment control and have the method approved by the Railroad.
5. All shoring systems that impact the Railroad's operations and/or supports the Railroads's embankment shall be designed and constructed per current Railroad Guidelines for Temporary Shoring.
6. All demolitions within the Railroad's right-of-way and/or demolition that may impact the Railroad's tracks or operations shall be in compliance with the Railroad's demolition guidelines.
7. Erection over the Railroad's right-of-way shall be designed to cause no interruption to the railroad's operation, enabling the track(s) to remain open to traffic per the Railroad's requirements.
8. All construction phasing that may impact the Railroad operations shall be designed to cause no interruptions to the Railroad's operation, enabling the track(s) to remain open to traffic per the Railroad's requirement.
9. Falsework clearances shall comply with minimum construction clearances.
10. All permanent clearances shall be verified by the agency before project closing.
11. For Railroad coordination refer to the Railroad coordination requirement as part of the Special Provisions.

RAILROAD SHORING NOTES:

1. All dimensions are measured perpendicular to the ℄ track.
2. Prior to commencing any work, submit to the Railroad for approval, detailed plans indicating the nature and extent of the track protection shoring proposed. Install the temporary shoring system per the approved plans. Design the temporary shoring system to comply with the Railroad's "Guidelines for Temporary Shoring".
3. For excavations which encroach into Zone A or B, submit calculations with shoring plans.

NOTES:

Existing drainage and drainage system remain unchanged and no drainage will be discharged on Railroad right of way.

No shoring will be required within Zones A, B, or C to construct this bridge and walls, see shts. JZ02 & JZ05 for details.

Minimal excavation may occur within Zone C to construct this bridge and walls, see shts. JZ02 & JZ05 for details.

No work is allowed within 50 feet of track centerline when trains pass the work site. Secure all equipment and clear all personnel within 25 feet of the track centerline when trains pass the work site.

Erection over the Railroad's track shall be planned such that it enables the track(s) to remain open to traffic per Railroad requirements.

SCALE WARNING
IF THIS SCALE LINE DOES NOT MEASURE ONE INCH, THEN DRAWING IS NOT TO SCALE

STRUCTURE NO.	Various
BDS DWG NO.	113886
CALC. BOOK	7997
HWY: Various	M.P.: Various
COUNTY	Marion
DATE	2/26

REGISTERED PROFESSIONAL ENGINEER
099941PE
Digitally Signed 2026.02.12 11:55:13-08'00'
OREGON
JULY 21, 2022
BERNARD ANTHONY FRANKL
EXPIRES: 12/31/2027

FINAL ELECTRONIC DOCUMENT AVAILABLE UPON REQUEST

DOWL
3500 Chad Drive, Suite 200
Eugene, Oregon 97408
541-683-6090
WWW.DOWL.COM

VARIOUS STRUCTURES

OR22: CENTER ST BRIDGE (PHASE 1) PROJECT
WILLAMINA - SALEM HIGHWAY
MARION & POLK COUNTIES

Designer: Bernard A. Frankl, PhD, PE
Reviewer: Bob Goodrich, PE
Drafter: Jake Williams
Checker: Andy Howe, PE

RAILROAD DATA - 7

SHEET NO. JZ07

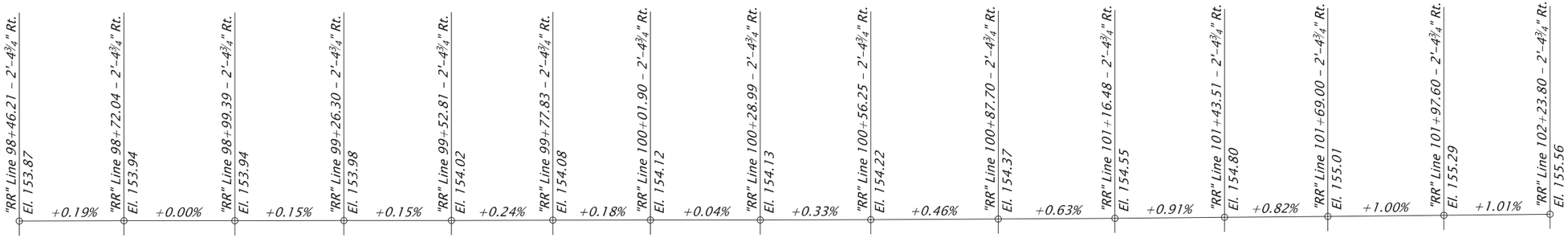

"RR" LINE GRADELINE DIAGRAM
TOP OF RIGHT RAIL

No Scale

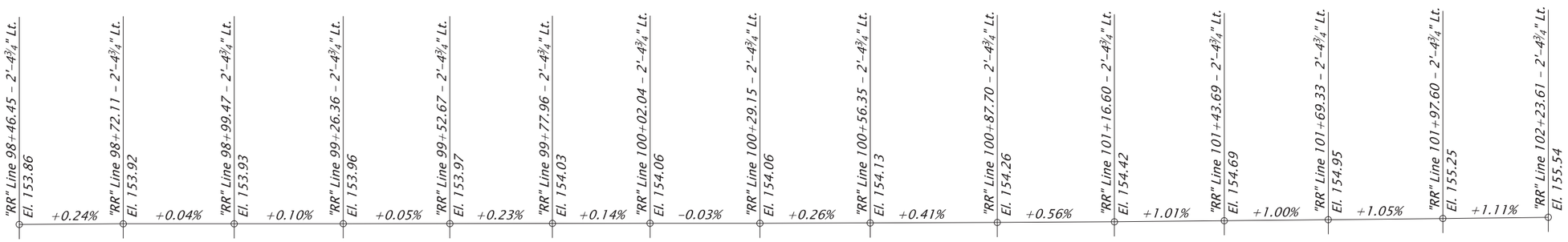

"RR" LINE GRADELINE DIAGRAM
TOP OF LEFT RAIL

No Scale

NOTE:
Elevations shown are based on North American Vertical Datum 1988 (NAVD88).

SCALE WARNING

IF THIS SCALE LINE DOES NOT MEASURE ONE INCH, THEN DRAWING IS NOT TO SCALE

STRUCTURE NO.	Various
BDS DWG NO.	113887
CALC. BOOK	7997
HWY: Various	
M.P.: Various	
COUNTY	Marion
DATE	06/24

REGISTERED PROFESSIONAL ENGINEER
099941PE
Digitally Signed 2026.02.12 11:55:28-08'00'
OREGON
JULY 21, 2022
BERNARD ANTHONY FRANKL
EXPIRES: 12/31/2027

FINAL ELECTRONIC DOCUMENT AVAILABLE UPON REQUEST

DOWL
3500 Chad Drive, Suite 200
Eugene, Oregon 97408
541-683-6090
WWW.DOWL.COM

OREGON DEPARTMENT OF TRANSPORTATION

VARIOUS STRUCTURES

OR22: CENTER ST BRIDGE (PHASE 1) PROJECT
WILLAMINA - SALEM HIGHWAY
MARION & POLK COUNTIES

Designer: Bernard A. Frankl, PhD, PE
Reviewer: Bob Goodrich, PE
Drafter: Jake Williams
Checker: Andy Howe, PE

RAILROAD DATA - 8

SHEET NO. JZ08

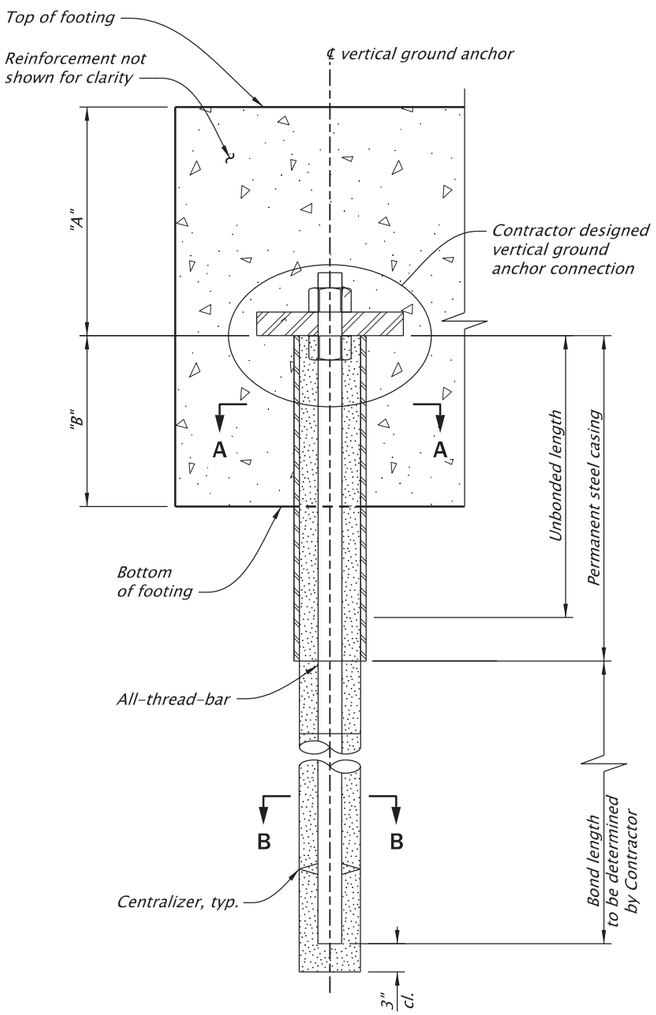

VERTICAL GROUND ANCHOR DETAIL TYPICAL

No Scale

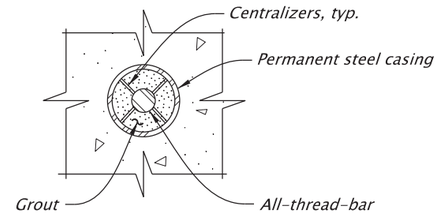

SECTION A-A

No Scale

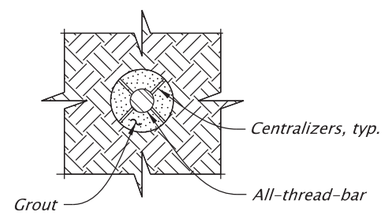

SECTION B-B

No Scale

NOTES:

1. Determine required bonded length and size of all-thread-bar required to resist FDL design load and develop the minimum anchor system stiffness, k.
2. See Ground Anchor Design Criteria table for more information.
3. FDL = factored design load.
4. Field verify all dimensions and elevations prior to submitting Working Drawings and prior to ordering or fabricating any materials. See sht. J02 for more details.

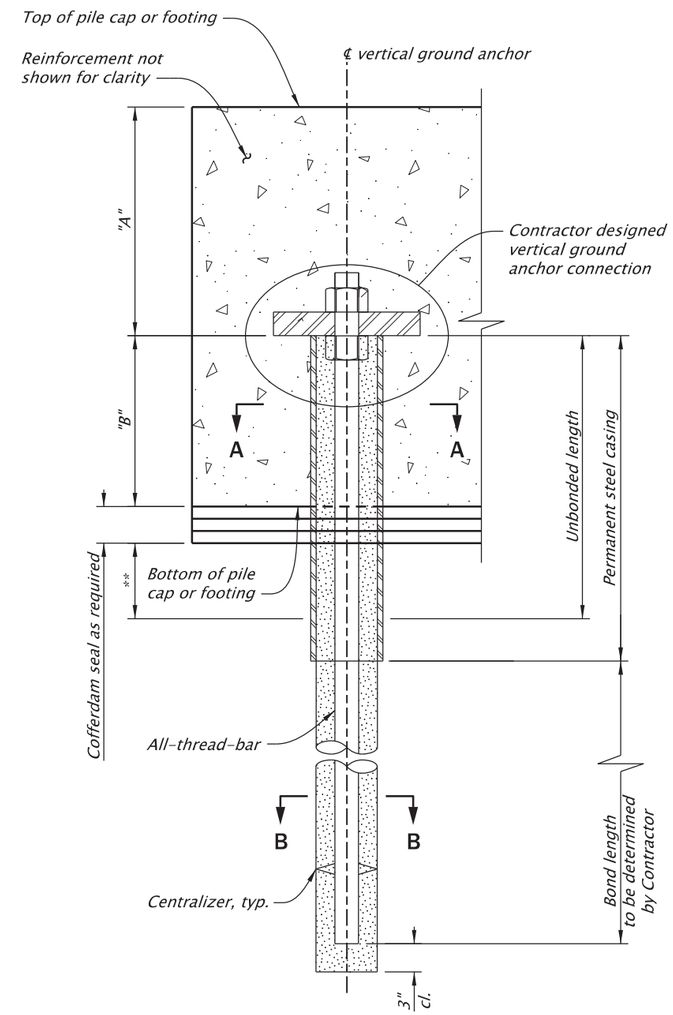

VERTICAL GROUND ANCHOR DETAIL (BENTS 16-19)

No Scale

Ground Anchor Design Criteria

Bridge No.	Bent No.	Dim. "A"	Dim. "B"	FDL (kip)	Min. k (kip/in)	Min. Lock-Off (kip)
00123K	16	2'-0"	9'-0"	120	150	*
	17	2'-0"	9'-0"	75	150	*
	18	2'-0"	9'-0"	75	150	*
	19	4'-0"	4'-0"	90	150	*
	20	2'-0"	3'-0"	135	200	*
	21	2'-0"	3'-0"	120	600	*
	24	2'-0"	3'-0"	110	600	*
	25	2'-0"	3'-0"	105	600	*
	28	1'-0"	3'-0"	25	600	*
00123G	5	2'-0"	3'-0"	155	600	*

*Install anchor nut snug tight and rotate nut a half turn past snug tight.
**Extend unbonded length 5 feet below bottom of pile cap, footing, or cofferdam seal as applicable.

For accompanied by drawings, see sht. JZ01

SCALE WARNING
IF THIS SCALE LINE DOES NOT MEASURE ONE INCH, THEN DRAWING IS NOT TO SCALE

STRUCTURE NO. Various
BDS DWG NO. 113888
CALC. BOOK 7997
HWY: Various
M.P.: Various
COUNTY Various
DATE 2/26

REGISTERED PROFESSIONAL ENGINEER 099941PE
Digitally Signed 2026.02.12 11:55:43-08'00'
OREGON
JULY 21, 2022
BERNARD ANTHONY FRANKL
EXPIRES: 12/31/2027

FINAL ELECTRONIC DOCUMENT AVAILABLE UPON REQUEST

DOWL
3500 Chad Drive, Suite 200
Eugene, Oregon 97408
541-683-6090
WWW.DOWL.COM

VARIOUS STRUCTURES

OR22: CENTER ST BRIDGE (PHASE 1) PROJECT
WILLAMINA - SALEM HIGHWAY
MARION & POLK COUNTIES

Designer: Bernard A. Frankl, PhD, PE
Reviewer: Bob Goodrich, PE
Drafter: Jake Williams
Checker: Nasario Lopez-Francisco, PE

VERTICAL GROUND ANCHOR DETAILS

SHEET NO. JZ09

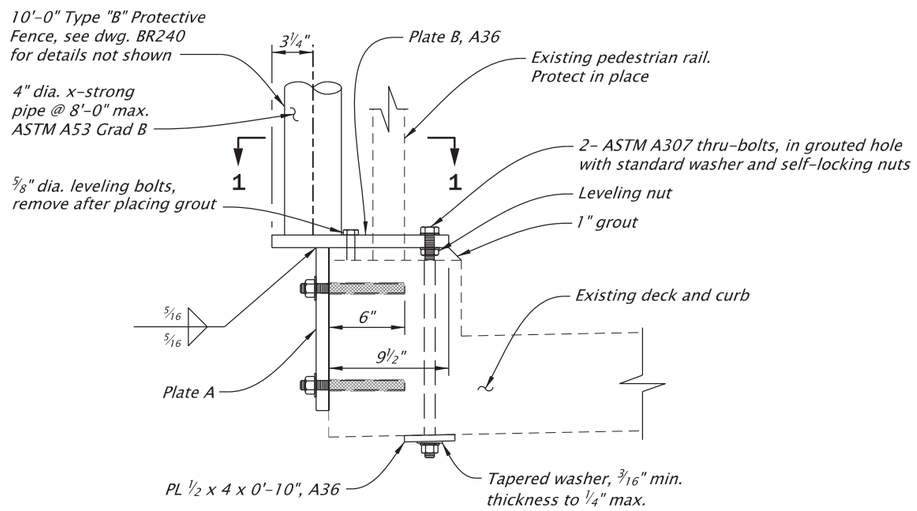

PROTECTIVE FENCE BASE PLATE DETAIL SECTION

Scale: 1"=1'-0"

NOTE:
Provide and install ⅝" diameter F1554 Grade 36 resin bonded anchors with epoxy resin from the QPL. The characteristic bond stress used in the design is 1200 psi. The minimum pullout strength is 2130 lbs. with a minimum embedment (h_{ef}) of 6 in. Install anchors according to the manufacturer's recommendations.

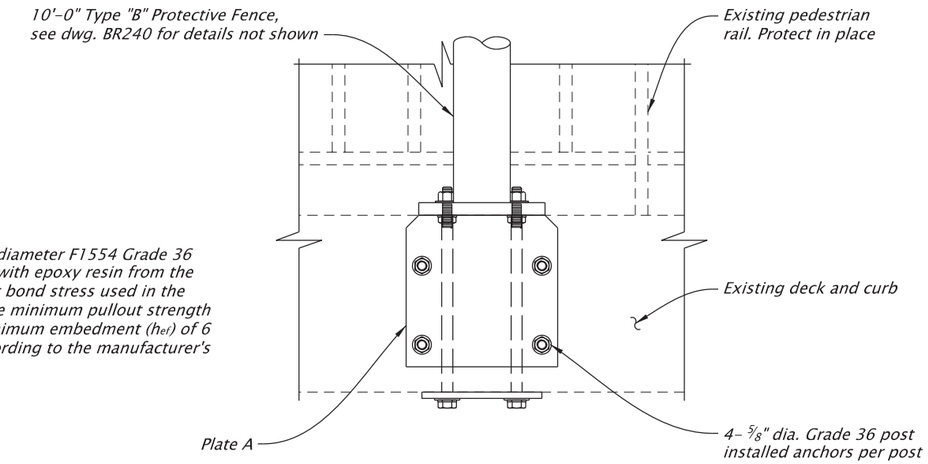

PROTECTIVE FENCE BASE PLATE DETAIL ELEVATION

Scale: 1"=1'-0"

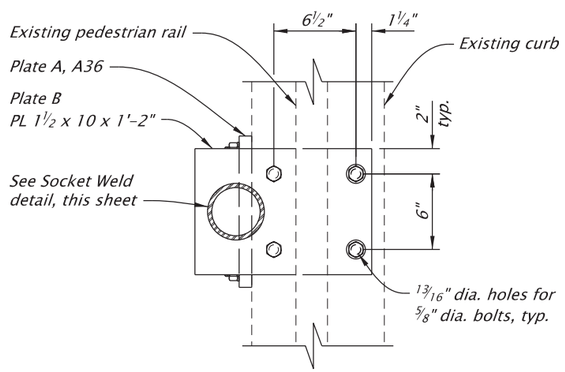

VIEW 1-1

Scale: 1"=1'-0"

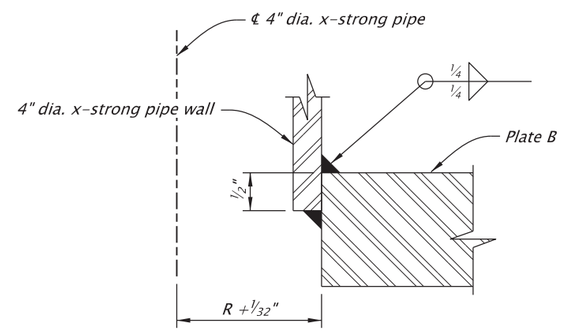

SOCKET WELD

Scale: 6"=1'-0"

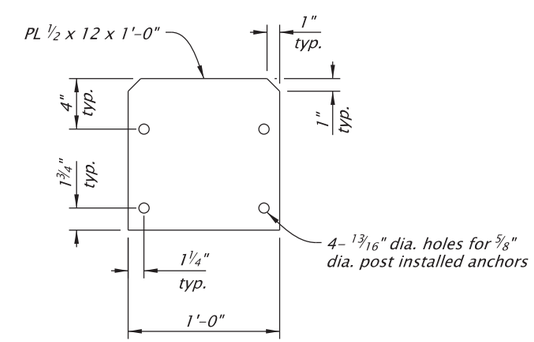

PLATE A

Scale: 1"=1'-0"

NOTE:
Field verify all dimensions and elevations prior to submitting Working Drawings and prior to ordering or fabricating any materials. See J02 for more details.

SCALE WARNING
IF THIS SCALE LINE DOES NOT MEASURE ONE INCH, THEN DRAWING IS NOT TO SCALE

STRUCTURE NO.	Various
BDS DWG NO.	113889
CALC. BOOK	7997
HWY: Various	M.P.: Various
COUNTY	Marion
DATE	6/26

REGISTERED PROFESSIONAL ENGINEER
92505PE
Digitally Signed 2026.06.11 08:58:02-07'00'
OREGON
JANUARY 14, 2025
TANNER TORKELSON
EXPIRES: 06/30/2028

FINAL ELECTRONIC DOCUMENT AVAILABLE UPON REQUEST

DOWL
3500 Chad Drive, Suite 200
Eugene, Oregon 97408
541-683-6090
WWW.DOWL.COM

OREGON DEPARTMENT OF TRANSPORTATION

VARIOUS STRUCTURES

OR22: CENTER ST BRIDGE (PHASE 1) PROJECT
WILLAMINA - SALEM HIGHWAY
MARION & POLK COUNTIES

Designer: Tanner Torkelson, PE
Reviewer: Bob Goodrich, PE
Drafter: Jake Williams
Checker: Nasario Lopez-Francisco, PE

PROTECTIVE FENCE DETAILS

SHEET NO. JZ10

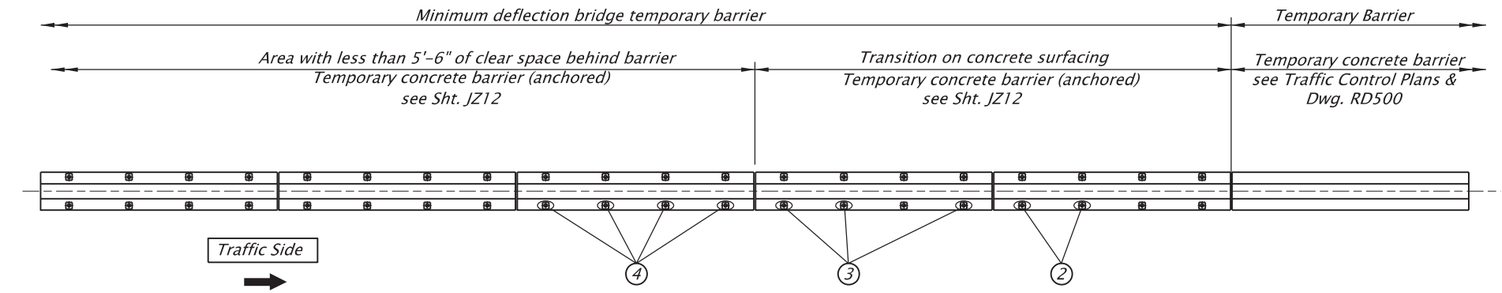

RAIL PLAN

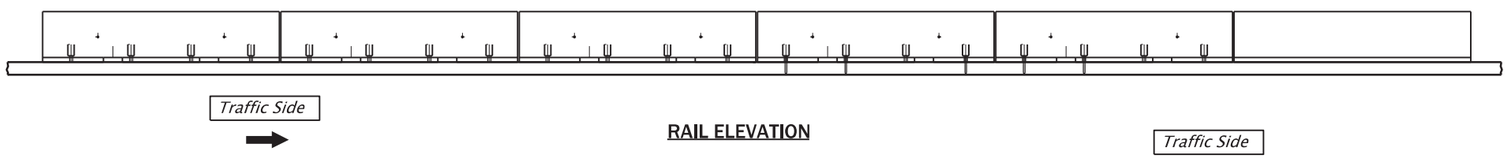

RAIL ELEVATION

TEMPORARY BARRIER ON CONCRETE SURFACE

Not To Scale

GENERAL NOTES:

Provide all materials and perform all work according to the Oregon Standard Specifications for Construction 2024.

Temporary barrier is designed for NCHRP350 TL-3 loads in accordance with the AASHTO LRFD Bridge Design Specifications 4th Edition 2007 with 2009 Interim Revisions, Section 13.

All barrier is precast pin and loop type. See sht. JZ12 for details.

Provide all reinforcing steel according to ASTM A706, or AASHTO M31 (ASTM A615) Grade 60.

Provide Class 5000 - 1½, 1, or ¾ concrete in precast barrier segments.

Provide 1" diameter Grade 105 anchor bolts, nuts and washers according to Oregon Standard Specification 02560.30.

Provide plate washers according to AASHTO M270 (ASTM A709) Grade 36.

Provide and install 1" diameter Grade 105 resin bonded anchors according to Specification 00535.

Provide the following minimum design resistances for 1" diameter resin bonded anchors: Tension 25,200 lb., Shear14,000 lb.

Bolt-down barrier should not be installed on AC wearing surface, due to excessive bolt bending in an impact.

Removal of Anchor Bolts: Upon removal or relocation of barrier units, remove all anchor bolts and completely fill the remaining holes in bridge decks and approach slabs with an approved patching material from the QPL. If ACWS overlay is present and is to remain, completely fill the remaining holes with hot or cold patch asphalt material.

Anchor Requirements:
Anchored barrier: 4 anchors per barrier segment on traffic side, through bolted or resin bonded.

Transitions:
Two barrier segments, resin bonded anchors, numbers and locations as shown.

(N) "N" = Number of anchors or pins per barrier segment, at locations shown.

NOTE:
Field verify all dimensions and elevations prior to submitting Working Drawings and prior to ordering or fabricating any materials. See sht. J02 for more details.

SCALE WARNING
IF THIS SCALE LINE DOES NOT MEASURE ONE INCH, THEN DRAWING IS NOT TO SCALE

STRUCTURE NO.	00123K
BDS DWG NO.	113890
CALC. BOOK	7997
HWY: 030	M.P.: 25.88
COUNTY	Marion/Polk
DATE	2/26

REGISTERED PROFESSIONAL ENGINEER
85555PE
Digitally Signed 2026.02.12 13:02:57-08'00'
OREGON
DEC. 21, 2011
MICHAEL G. McNULTY
EXPIRES: 12/31/2026

FINAL ELECTRONIC DOCUMENT AVAILABLE UPON REQUEST

DOWL
3500 Chad Drive, Suite 200
Eugene, Oregon 97408
541-683-6090
WWW.DOWL.COM

OREGON DEPARTMENT OF TRANSPORTATION

VARIOUS STRUCTURES

OR22: CENTER ST BRIDGE (PHASE 1) PROJECT
WILLAMINA - SALEM HIGHWAY
MARION & POLK COUNTIES

Designer: Mike McNulty, PE
Reviewer: Bob Goodrich, PE
Drafter: Jake Williams
Checker: Eric Bonn, PE

TEMPORARY BARRIER DETAILS - 1

SHEET NO. JZ11

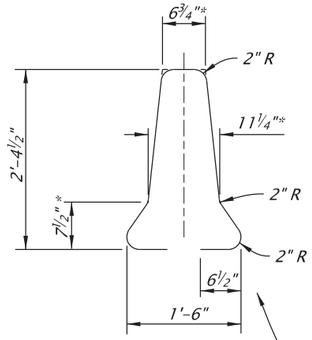

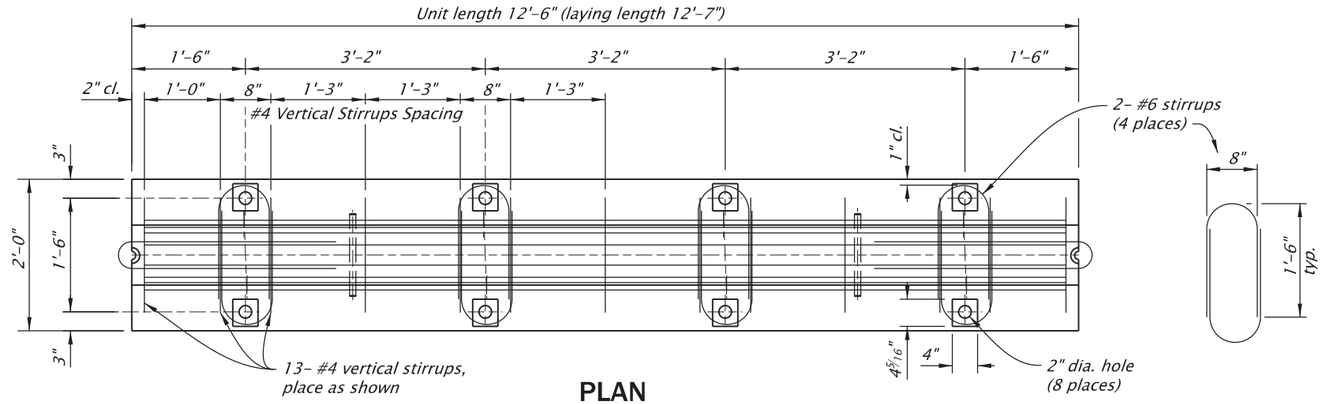

PLAN

Scale: 1/2"=1'-0"

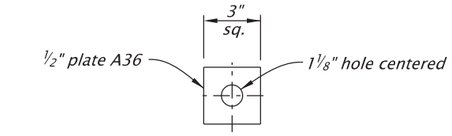

TOP PLATE WASHER DETAIL

No Scale

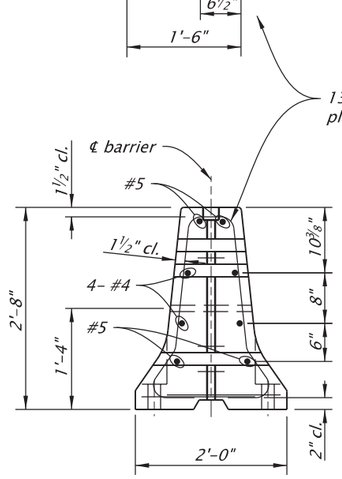

END VIEW 2-2

Scale: 1/2"=1'-0"

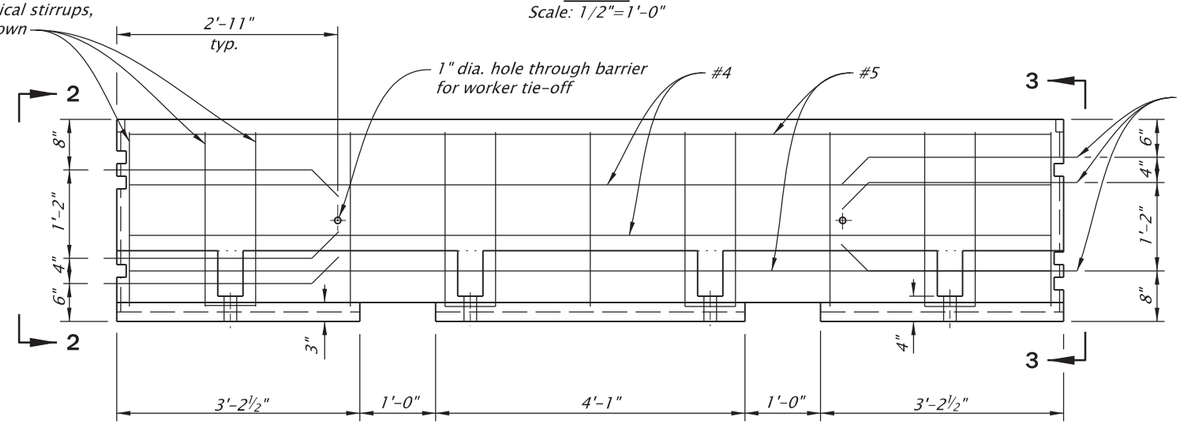

ELEVATION

Scale: 1/2"=1'-0"

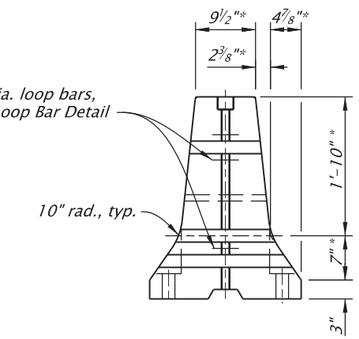

END VIEW 3-3

Scale: 1/2"=1'-0"

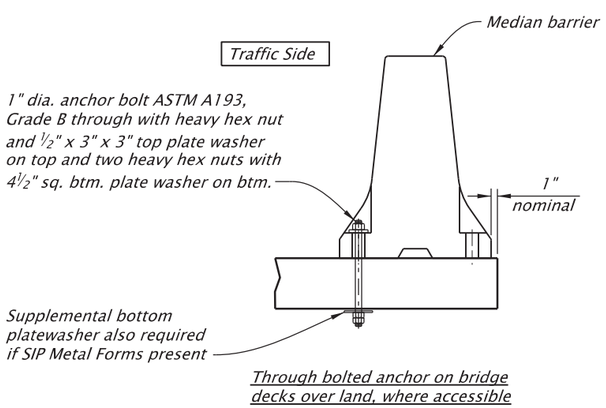

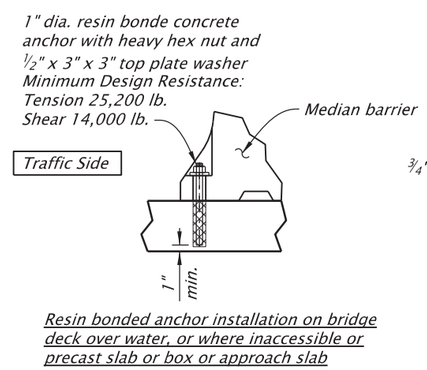

TYPICAL SECTION

No Scale

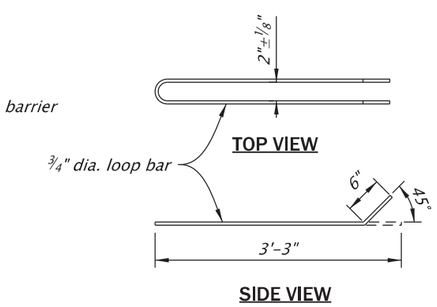

LOOP BAR DETAIL

(6 places)
No Scale

NOTES:
1. See dwgs. RD500 and RD515 for forming details not shown.
2. * Dimension to the intersection point of the barrier slopes. Construct the 10" radius to provide a smooth transition between the slopes.
3. Field verify all dimensions and elevations prior to submitting Working Drawings and prior to ordering or fabricating any materials. See sht. J02 for more details.

SCALE WARNING
IF THIS SCALE LINE DOES NOT MEASURE ONE INCH, THEN DRAWING IS NOT TO SCALE

STRUCTURE NO.	00123K
BDS DWG NO.	113891
CALC. BOOK	7997
HWY: 030	M.P.: 25.88
COUNTY	Marion/Polk
DATE	2/26

REGISTERED PROFESSIONAL ENGINEER
85555PE
Digitally Signed 2026.02.12 13:02:49-08'00'
OREGON
DEC. 21, 2011
MICHAEL G. McNULTY
EXPIRES: 12/31/2026

FINAL ELECTRONIC DOCUMENT
AVAILABLE UPON REQUEST

DOWL
3500 Chad Drive, Suite 200
Eugene, Oregon 97408
541-683-6090
WWW.DOWL.COM

VARIOUS STRUCTURES

OR22: CENTER ST BRIDGE (PHASE 1) PROJECT
WILLAMINA - SALEM HIGHWAY
MARION & POLK COUNTIES

Designer: Mike McNulty, PE
Reviewer: Bob Goodrich, PE
Drafter: Jake Williams
Checker: Eric Bonn, PE

TEMPORARY BARRIER DETAILS - 2

SHEET NO. JZ12

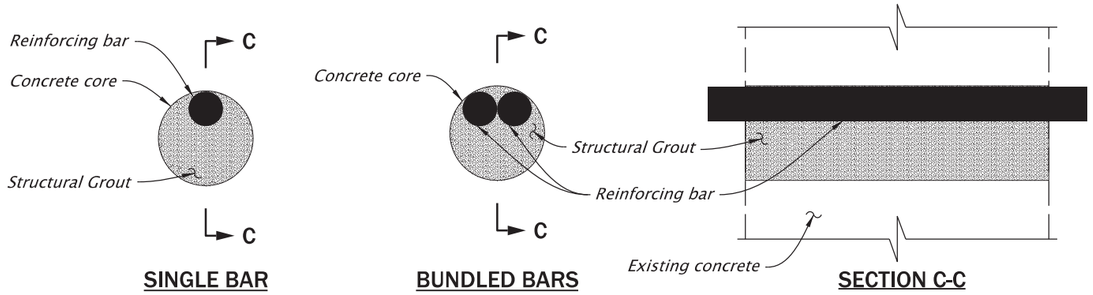

HORIZONTAL CORING DETAIL

No Scale

NOTES:
1. *Core concrete 1" larger than bar(s) diameter or as specified by reinforcing bar head specifications.*
2. *Single bars or two-bar bundles allowed per horizontal coring hole.*
3. *Roughen concrete core surface to a minimum of ¼" amplitude.*
4. *Horizontal coring detail applies to Bents 20 through 28 on Str. No. 00123K and Bent 5 on Str. No. 00123G*

HORIZONTAL CORING AT EXISTING COLUMNS CONSTRUCTION SEQUENCE

1. *Locate and mark existing column reinforcing steel.*
2. *Core holes to install footing reinforcing. Limit number of core holes such to maintain 85% gross column section area remains intact. Ensure the existing column vertical reinforcing steel will not be damaged. Place footing reinforcing steel and grout the concrete core void with Structural Grout.*
3. *After a minimum of 3 days of the completion of the footing steel installation and the grout has reached 70 % of design strength, continue with the installation as directed in Step 2. Ensure the existing column vertical steel will not be damaged. Place footing reinforcing steel and grout the concrete core void. Repeating steps 2 and 3 until all of the footing reinforcing steel is installed with structural grout through the existing columns.*

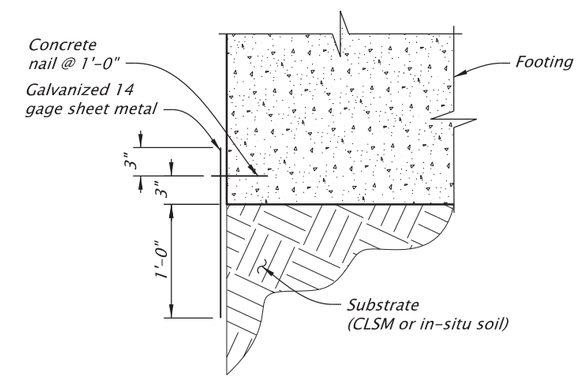

SOIL CURTAIN DETAIL

Scale: 3/4"=1'-0"

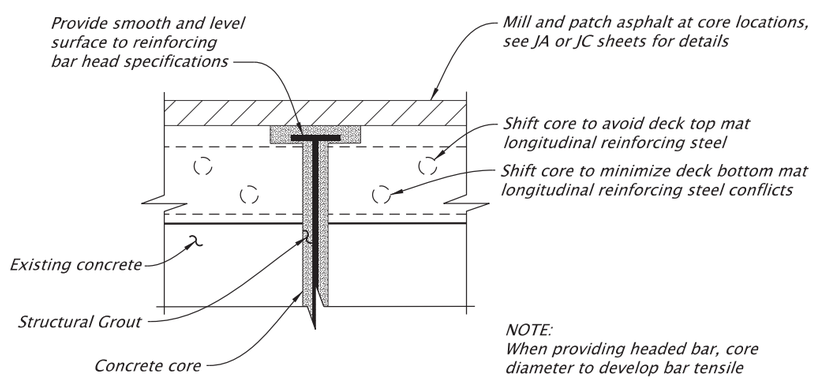

NOTE:
When providing headed bar, core diameter to develop bar tensile resistance in head bearing.

VERTICAL CORING DETAIL

No Scale

NOTES:
1. *Roughen concrete core surface to a minimum of ¼" amplitude.*
2. *Field verify all dimensions and elevations prior to submitting Working Drawings and prior to ordering or fabricating any materials. See sht. J02 for more details.*
3. *Horizontal coring detail applies to Bent 20 through 28 on Str. No. 00123K and Bent 5 on Str. No. 0123G.*

For accompanied by drawings, see sht. JZ01

SCALE WARNING
IF THIS SCALE LINE DOES NOT MEASURE ONE INCH, THEN DRAWING IS NOT TO SCALE

STRUCTURE NO.	Various
BDS DWG NO.	113892
CALC. BOOK	7997
HWY: Various	M.P.: Various
COUNTY	Marion/Polk
DATE	2/26

REGISTERED PROFESSIONAL ENGINEER
099941PE
Digitally Signed 2026.02.12 11:55:58-08'00'
OREGON
JULY 21, 2022
BERNARD ANTHONY FRANKL
EXPIRES: 12/31/2027

FINAL ELECTRONIC DOCUMENT AVAILABLE UPON REQUEST

DOWL
3500 Chad Drive, Suite 200
Eugene, Oregon 97408
541-683-6090
WWW.DOWL.COM

VARIOUS STRUCTURES

OR22: CENTER ST BRIDGE (PHASE 1) PROJECT
WILLAMINA - SALEM HIGHWAY
MARION & POLK COUNTIES

Designer: Bernard A. Frankl, PhD, PE
Reviewer: Bob Goodrich, PE
Drafter: Jake Williams
Checker: Fred M. Gomez, PE

MISCELLANEOUS DETAILS - 1

SHEET NO. JZ13

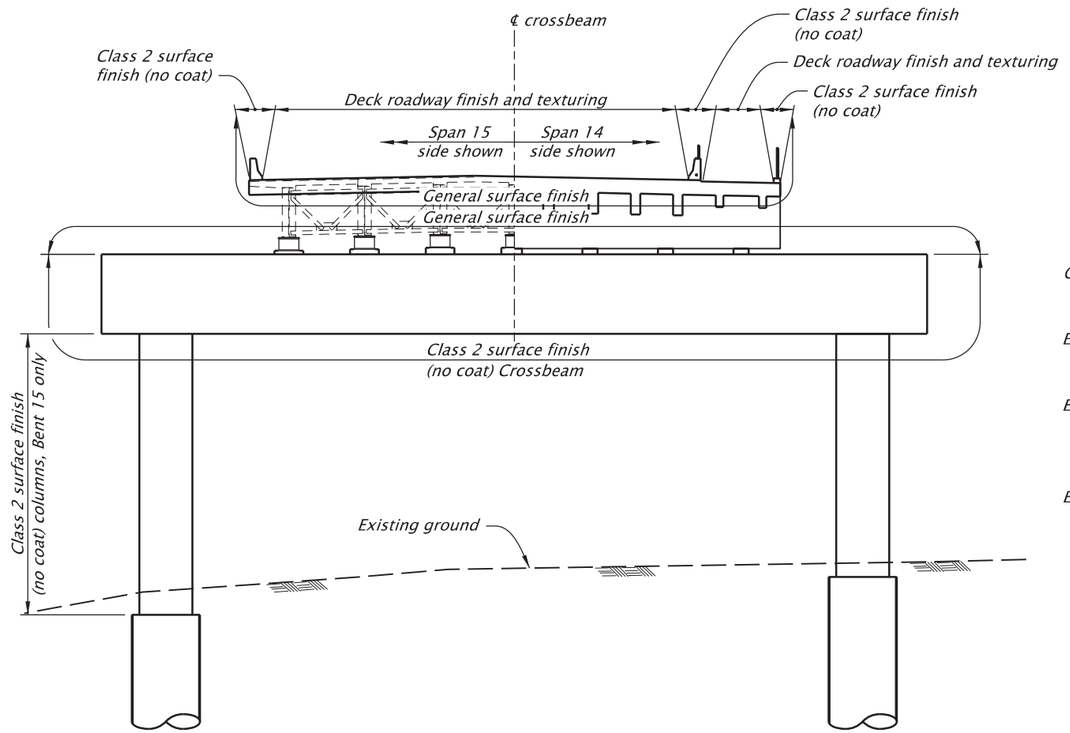

BENT 15 (BENT 19 SIMILAR)

Scale: 1"=20'

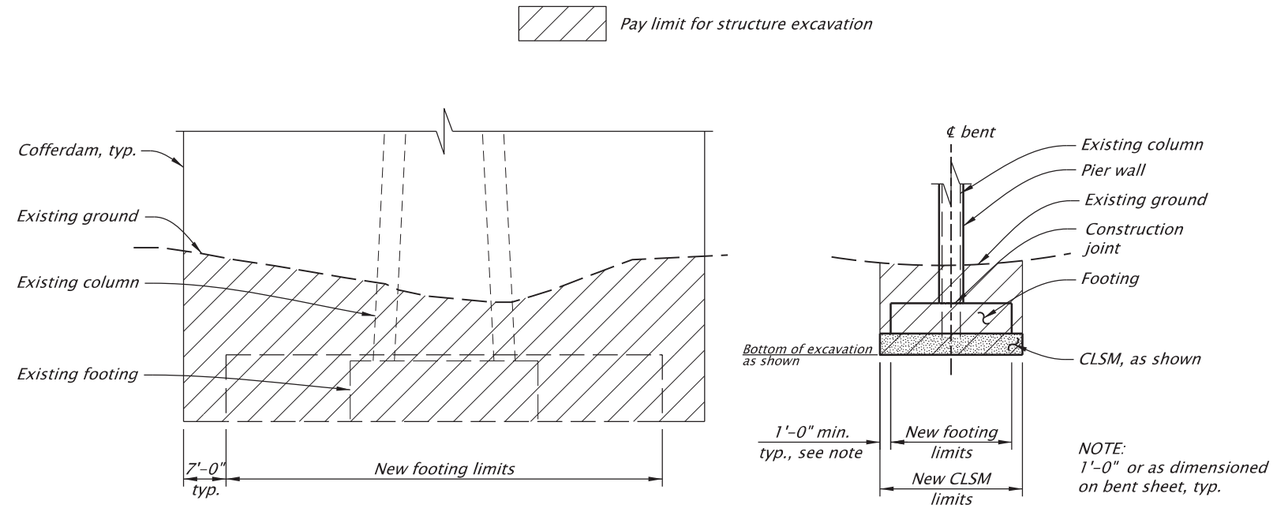

BENT 16 (BENTS 17, 18 & 19 SIMILAR)

TYPICAL

NOTE:
Exclude existing footing and column volume from excavation pay limits.

STRUCTURE EXCAVATION PAY LIMITS

No Scale

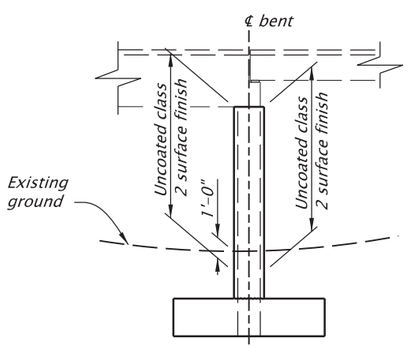

TYPICAL

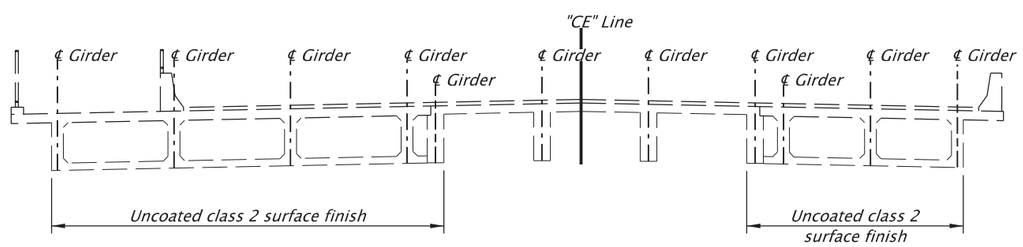

GIRDER SOFFIT AT NSM REINFORCEMENT INSTALLATION

CONCRETE FINISH DIAGRAMS

No Scale

NOTE:
Field verify all dimensions and elevations prior to submitting Working Drawings and prior to ordering or fabricating any materials. See sht. J02 for more details.

For accompanied by drawings, see sht. JZ01

STRUCTURE NO.	Various
BDS DWG NO.	113893
CALC. BOOK	7997
HWY: Various	M.P.: Various
COUNTY	Marion/Polk
DATE	2/26

SCALE WARNING
IF THIS SCALE LINE DOES NOT MEASURE ONE INCH, THEN DRAWING IS NOT TO SCALE

REGISTERED PROFESSIONAL ENGINEER
85555PE
Digitally Signed 2026.02.12 13:02:40-08'00'
OREGON
DEC. 21, 2011
MICHAEL G. McNULTY
EXPIRES: 12/31/2026

FINAL ELECTRONIC DOCUMENT AVAILABLE UPON REQUEST

DOWL
3500 Chad Drive, Suite 200
Eugene, Oregon 97408
541-683-6090
WWW.DOWL.COM

VARIOUS STRUCTURES

OR22: CENTER ST BRIDGE (PHASE 1) PROJECT
WILLAMINA - SALEM HIGHWAY
MARION & POLK COUNTIES

Designer: Mike McNulty, PE
Reviewer: Bob Goodrich, PE
Drafter: Jake Williams
Checker: Eric Bonn, PE

MISCELLANEOUS DETAILS - 2

SHEET NO. JZ14

LEGEND

CONTROLLERS

EX/C — Retain and protect existing Model ATC controller and model 332 cabinet

CABINETS

EX/SC — Retain and protect existing service cabinet

TC — Install terminal cabinet

EX/TC — Retain and protect existing terminal cabinet

SIGNALS

V/Ph — Install phase (Ph=phase) vehicle signal with 2" fluorescent yellow reflective sheeting on backboard

A/Ph — Install phase (Ph=phase) audible pedestrian pushbutton with mount & instruction sign R10-3

P/A/Ph — Install phase (Ph=phase) pedestrian signal with pedestrian signal mount and audible pushbutton with mount & instruction sign R10-3

EX/VPh — Retain and protect existing phase (Ph=phase) vehicle signal

EX/P/B — Retain and protect existing pedestrian signal, pushbutton & instruction sign

SIGNS

EX/AL — Retain and protect existing aluminum sign and mount

EX/PR — Retain and protect existing part time restriction sign

AL/3 — Install aluminum (30"x36") "NO TURN ON RED" sign (R10-11a) ASTM type IX sheeting

POLES

WPX — Install special (X=non-standard) treated wood pole (see pole entrance chart)

EX/PP — Retain and protect existing pedestrian signal pedestal

EX/VP — Retain and protect existing vehicle signal pedestal

EX/SB — Retain and protect existing traffic sign bridge

DETECTION

EX/CAM — Retain and protect existing video detector camera

NOTE:

See Plan Sheet No. EG03 Thru EG08 for Temporary Traffic Control Plans.

LEGEND CONTINUED

CONDUITS

S — Install (S=size) inch conduit

EX/S — Retain and protect existing (S=size) inch conduit

WIRES & CABLES

N-C — Install (N=number) no. 8 AWG THWN wire(s) for signal system common

N/G — Install (N=number) no. (G= wire size) AWG THWN wire(s)

VDF/T — Install video detection coaxial and power cable for camera (T=Camera)

EX/W — Retain and protect existing wiring

39 — Install 3/8" galv. steel messenger cable

X-N/G — Install (X=number of cables) control cable(s) with (N=number) no. (G= wire size) AWG conductors

Ph — Includes 3 spare wires for phase (Ph=phase) as per table

JUNCTION BOXES

JB/2 — Install 22"x12"x12" (min. dimension) precast concrete or hybrid junction box

RX/JB — Remove existing junction box

EX/JB — Retain and protect existing junction box

FIRE PREEMPTION

EX/FD — Retain and protect existing fire preemption detector unit

FF/Ch — Install channel (Ch=channel) fire preemption detector feeder cable

FN/Ch — Install channel (Ch=channel), (N=number) barrel fire preemption detector unit

HEADS & BRACKETS

3R = RA:YA:GA

LEGEND

WILLAMINA-SALEM HWY CONN. AT DIVISION ST
COMMERCIAL ST @ MP 4.73
STAGE 2, PHASE 6

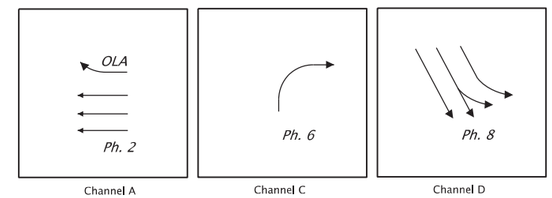

FIRE PREEMPTION

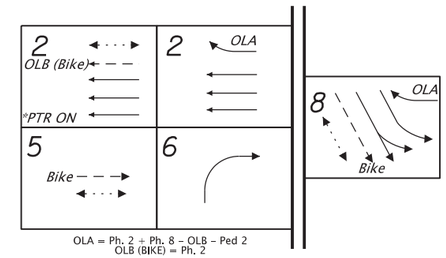

NORMAL PHASE ROTATION

Scott B. Cramer 2026.01.27 12:59:38 -08'00'
Traffic Section Approval

REGISTERED PROFESSIONAL ENGINEER
87,105
Digitally Signed Date: 2026.01.27 11:56:26-08'00'
OREGON
NOV. 13, 2012
CHRISTINA L. LAFLEUR
RENEWS: 12-31-2026
FINAL ELECTRONIC DOCUMENT AVAILABLE UPON REQUEST

OREGON DEPARTMENT OF TRANSPORTATION

OR22: CENTER ST BRIDGE (PHASE 1) PROJECT
WILLAMINA-SALEM HIGHWAY
MARION & POLK COUNTIES

Designer: Christina LaFleur, P.E.	Reviewer: Derek Moore, P.E.
Drafter: Christina LaFleur, P.E.	Checker: NA

LEGEND

SHEET NO. MA01

HWY: 072
M.P.: 4.73, 4.79
UNIT FILE CODE 24268
DFI/TSSU NO. 3CS309

ACCOMPANIED BY DWGS.:
TM452, TM453, TM454, TM457, TM460, TM462, TM467, TM470, TM700, TM701, TM702

SIGNAL PLAN
WILLAMINA-SALEM HWY CONN. AT DIVISION ST
COMMERCIAL ST @ MP 4.73
STAGE 6, PHASE 2

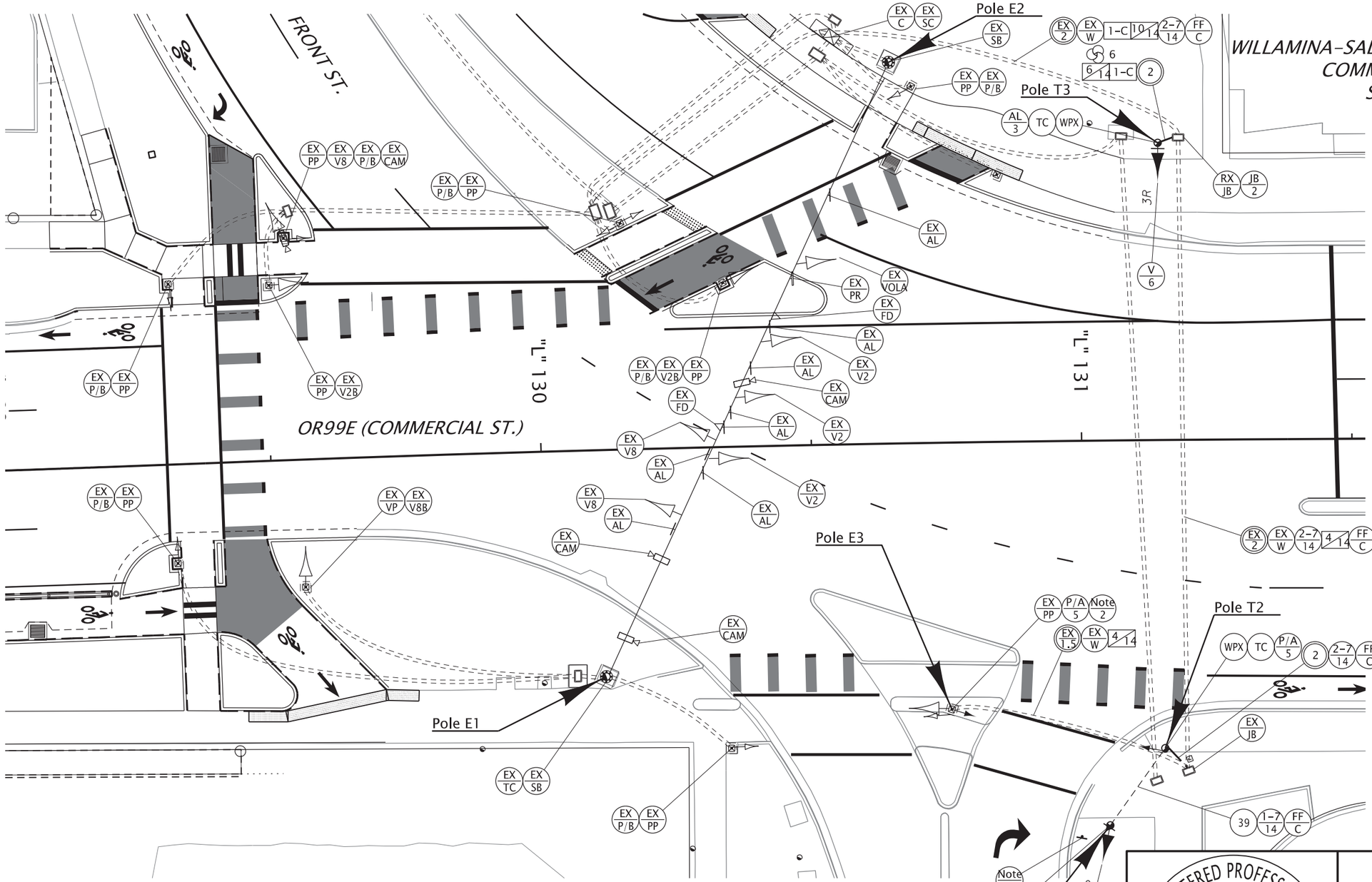

Note:
Temporary Signal Modifications to be Decomissioned and Removed at the Completion of the Temporary Traffic Control Stage and Phase.

Note:
Contact Region 2 Signal Operation Engineer and City of Salem Signal Engineer at least 2 weeks prior to impacting signal operations.

Note:
Contact Region 2 Signal Operation Engineer and City of Salem Signal Engineer at least 2 weeks prior to impacting and opening any pedestrian crossings.

Note:
Contact Region 2 Signal Operation Engineer and City of Salem Signal Engineer at least 2 weeks prior to activation of the signal.

Note 1 — *Remove and Save Existing sign assembly during Temporary Signal Operations. Reinstall sign assembly when Temporary Signal is Decomissioned.*

Note 2 — *Disconnect and cover existing pushbutton and sign during Temporary Signal Operations. Reinstall pushbutton sign when Temporary Signal is Decomissioned.*

NOTE:
See Plan Sheet No. EG03 Thru EG08 for Temporary Traffic Control Plans.

Scott B. Cramer 2026.01.27 12:59:45 -08'00'
Traffic Section Approval

REGISTERED PROFESSIONAL ENGINEER
87,105
Digitally Signed Date: 2026.01.27 11:57:07-08'00'
OREGON
NOV. 13, 2012
CHRISTINA L. LAFLEUR
RENEWS: 12-31-2026

OREGON DEPARTMENT OF TRANSPORTATION

OR22: CENTER ST BRIDGE (PHASE 1) PROJECT
WILLAMINA-SALEM HIGHWAY
MARION & POLK COUNTIES

Designer: Christina LaFleur, P.E.	Reviewer: Derek Moore, P.E.
Drafter: Christina LaFleur, P.E.	Checker: NA

SIGNAL PLAN — SHEET NO. MA02

HWY: 072	
M.P.: 4.73	
UNIT FILE CODE	24269
DFI/TSSU NO.	3CS309

FINAL ELECTRONIC DOCUMENT AVAILABLE UPON REQUEST

EXISTING UTILIES PLAN
WILLAMINA-SALEM HWY CONN. AT DIVISION ST
COMMERCIAL ST @ MP 4.73
STAGE 6, PHASE 2

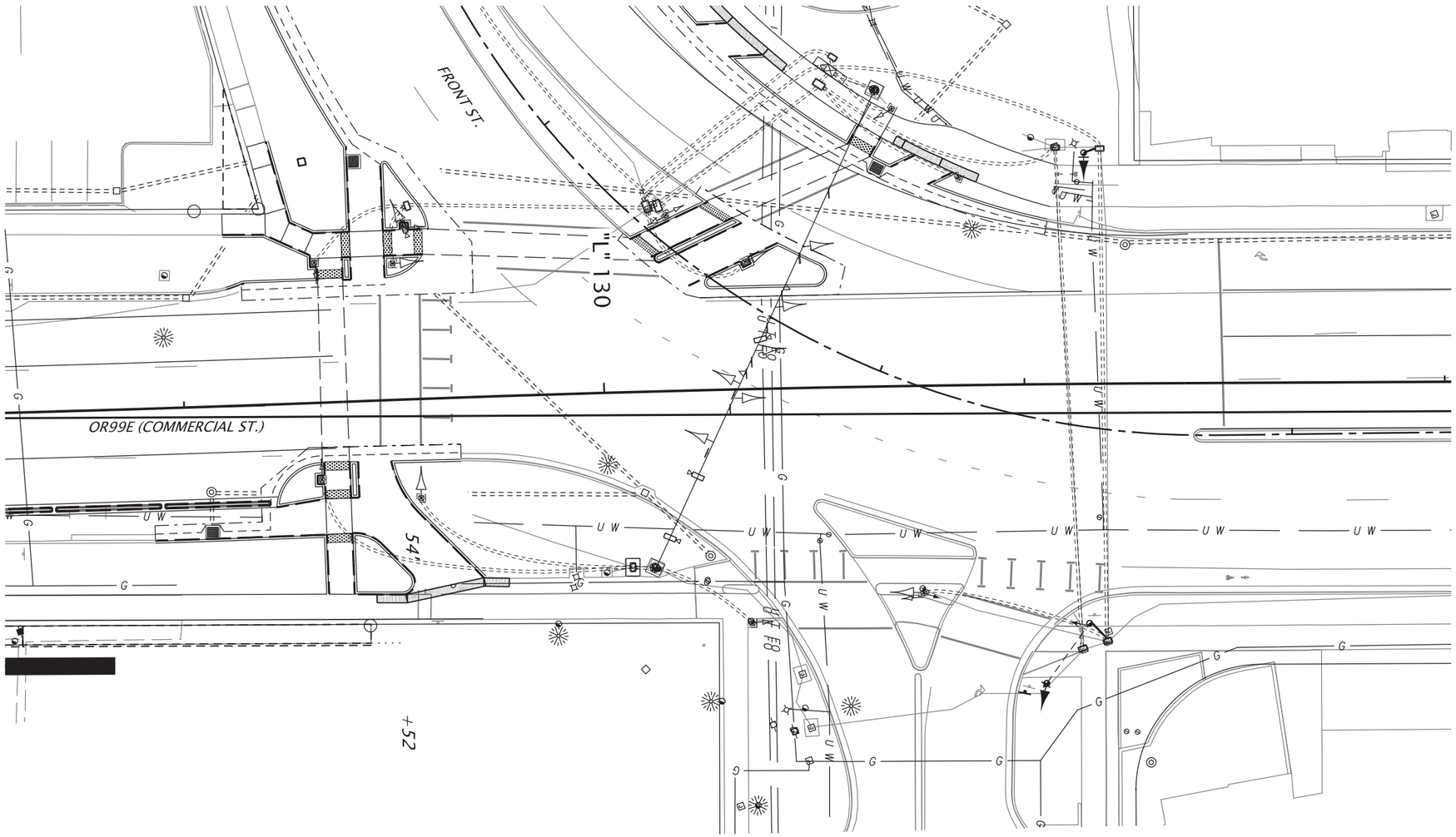

Scott B. Cramer 2026.01.27 12:59:59 -08'00'
Traffic Section Approval

REGISTERED PROFESSIONAL ENGINEER
87,105
Digitally Signed Date: 2026.01.27 11:57:51-08'00'
OREGON
NOV. 13, 2012
CHRISTINA L. LAFLEUR
RENEWS: 12-31-2026
FINAL ELECTRONIC DOCUMENT AVAILABLE UPON REQUEST

OREGON DEPARTMENT OF TRANSPORTATION

OR22: CENTER ST BRIDGE (PHASE 1) PROJECT
WILLAMINA-SALEM HIGHWAY
MARION & POLK COUNTIES

Designer: Christina LaFleur, P.E.	Reviewer: Derek Moore, P.E.
Drafter: Christina LaFleur, P.E.	Checker: NA

EXISTING UTILITIES

SHEET NO. MA03

HWY: 072
M.P.: 4.73
UNIT FILE CODE 24270
DFI/TSSU NO. 3CS309

NOTE:
See Plan Sheet No. EG03 Thru EG08 for Temporary Traffic Control Plans.

DETAILS

WILLAMINA-SALEM HWY CONN. AT DIVISION ST
COMMERCIAL ST @ MP 4.73
STAGE 2, PHASE 6

POLE ENTRANCE CHART

						EQUIPMENT ON POLE						EQUIPMENT ON SPAN WIRE (Length in Feet and Equipment Type)						
SHEET. NO.	TYPE (FROM)	POLE NO. (FROM)	POLE NO. (TO)	CABLE "AH" (FROM) POLE	CABLE "AH" (TO) POLE	PED. SIGNAL DEG.	PED. PUSHBUTTON DEG.	TERM. CABINET DEG.	SIGN DEG.	TRAFFIC SIGNAL DEG.	FIRE PRE-EMPTION	D 1	D 2	D 3	D 4	D 5	D 6	D 7
MA01	WPX	T1	T2	23	23			325	145	122	145	17.5 / T2						
MA01	WPX	T2				120	107	326										
MA01	WPX	T3						290	110	110								
MA01	EXPP	E3				EX/ 126	125			EX								

MISC. ITEMS

EXPP = Existing Pedestrian signal pedestal
WPX = Temporary Wood Strain Pole

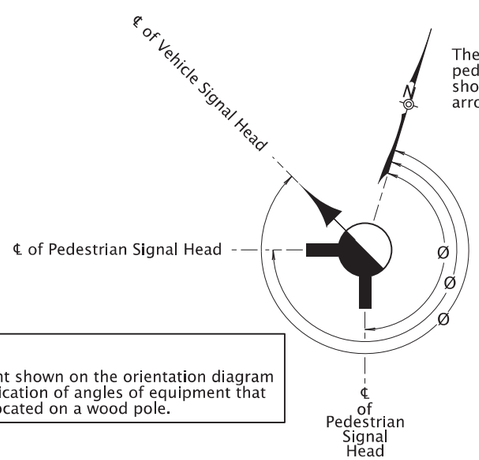

The north arrow shown relates to zero degrees on pedestals. Degrees shown in the pole entrance chart show the degrees clockwise from plan sheet north arrow (zero) to equipment located on the pole.

NOTE:

Equipment shown on the orientation diagram is a clarification of angles of equipment that may be located on a wood pole.

WOOD POLE ORIENTATION DIAGRAM

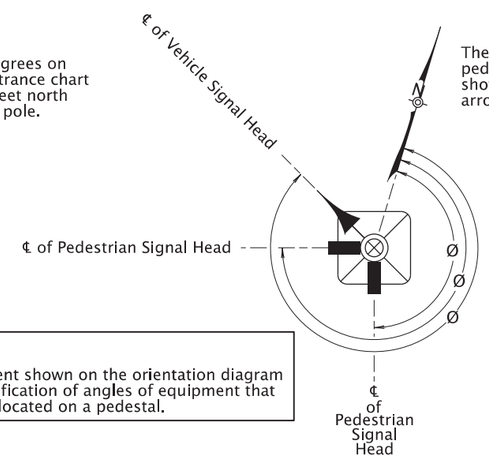

The north arrow shown relates to zero degrees on pedestals. Degrees shown in the pole entrance chart show the degrees clockwise from plan sheet north arrow (zero) to equipment located on the pedestal.

NOTE:

Equipment shown on the orientation diagram is a clarification of angles of equipment that may be located on a pedestal.

PEDESTAL ORIENTATION DIAGRAM

NOTE:

See Plan Sheet No. EG09 Thru EG12 for Temporary Traffic Control Plans.

Scott B. Cramer 2026.01.27 12:59:52 -08'00'
Traffic Section Approval

REGISTERED PROFESSIONAL ENGINEER
87,105
Digitally Signed Date: 2026.01.27 11:58:29-08'00'
OREGON
NOV. 13, 2012
CHRISTINA L. LAFLEUR
RENEWS: 12-31-2026
FINAL ELECTRONIC DOCUMENT AVAILABLE UPON REQUEST

OREGON DEPARTMENT OF TRANSPORTATION

OR22: CENTER ST BRIDGE (PHASE 1) PROJECT
WILLAMINA-SALEM HIGHWAY
MARION & POLK COUNTIES

Designer: Christina LaFleur, P.E.	Reviewer: Derek Moore, P.E.
Drafter: Christina LaFleur, P.E.	Checker: NA

DETAILS

SHEET NO. MA04

HWY: 072	
M.P.: 4.73, 4.79	
UNIT FILE CODE	24271
DFI/TSSU NO.	3CS309

INTERCONNECT LEGEND

L E G E N D

F I B E R O P T I C

HH/FOA — *Install City of Salem standard fiber optic handhole with apron. See Interconnect details on sheet MB03 and City of Salem Standard Plans 705A and 705B on this sheet for additional installation details.*

J U N C T I O N B O X E S

EX/SV — *Retain and protect existing fiber optic splice vault.*

EX/HH — *Retain and protect existing fiber optic handhole.*

W I R E S & C A B L E S

EX/W — *Retain and protect existing wiring.*

PL — *Install poly pull line.*

C O N D U I T S

EX/IC S — *Retain and protect existing (S=size) inch interconnect conduit*

AX/IC S — *Abandon existing (S=size) inch interconnect conduit.*

HDD — *Install new conduit by horizontal directional drilling only. Open trench not allowed.*

S — *Install (S=size) inch conduit*

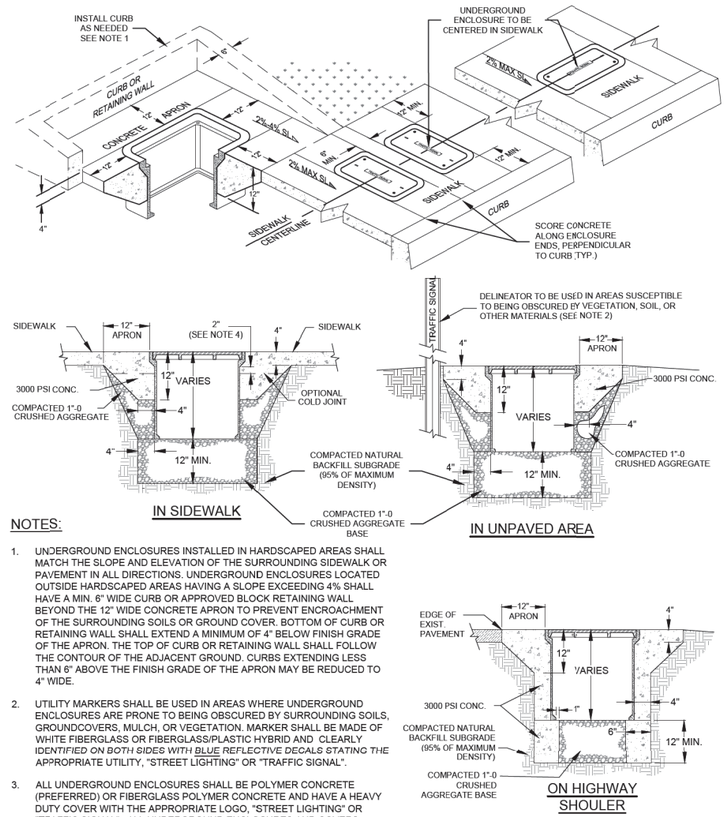

NOTES:

1. UNDERGROUND ENCLOSURES INSTALLED IN HARDSCAPED AREAS SHALL MATCH THE SLOPE AND ELEVATION OF THE SURROUNDING SIDEWALK OR PAVEMENT IN ALL DIRECTIONS. UNDERGROUND ENCLOSURES LOCATED OUTSIDE HARDSCAPED AREAS HAVING A SLOPE EXCEEDING 4% SHALL HAVE A MIN. 6" WIDE CURB OR APPROVED BLOCK RETAINING WALL BEYOND THE 12" WIDE CONCRETE APRON TO PREVENT ENCROACHMENT OF THE SURROUNDING SOILS OR GROUND COVER. BOTTOM OF CURB OR RETAINING WALL SHALL EXTEND A MINIMUM OF 4" BELOW FINISH GRADE OF THE APRON. THE TOP OF CURB OR RETAINING WALL SHALL FOLLOW THE CONTOUR OF THE ADJACENT GROUND. CURBS EXTENDING LESS THAN 6" ABOVE THE FINISH GRADE OF THE APRON MAY BE REDUCED TO 4" WIDE.
2. UTILITY MARKERS SHALL BE USED IN AREAS WHERE UNDERGROUND ENCLOSURES ARE PRONE TO BEING OBSCURED BY SURROUNDING SOILS, GROUNDCOVERS, MULCH, OR VEGETATION. MARKER SHALL BE MADE OF WHITE FIBERGLASS OR FIBERGLASS/PLASTIC HYBRID AND CLEARLY IDENTIFIED ON *BOTH SIDES WITH BLUE REFLECTIVE DECALS STATING THE* APPROPRIATE UTILITY, "STREET LIGHTING" OR "TRAFFIC SIGNAL".
3. ALL UNDERGROUND ENCLOSURES SHALL BE POLYMER CONCRETE (PREFERRED) OR FIBERGLASS POLYMER CONCRETE AND HAVE A HEAVY DUTY COVER WITH THE APPROPRIATE LOGO, "STREET LIGHTING" OR "TRAFFIC SIGNAL". ALL UNDERGROUND ENCLOSURES AND COVERS SHALL BE RATED TIER 22.
4. SIDEWALK MAY BE POURED EITHER MONOLITHICALLY WITH APRON, OR SEPARATELY, AS LONG AS COLD JOINT IS LOW ENOUGH TO PROVIDE A MINIMUM OF 2" OF CONCRETE BELOW TAPERED PORTION OF UNDERGROUND ENCLOSURE IN A CONTINUOUS POUR WITH THE SIDEWALK AS INDICATED BY DASHED LINE.

City of Salem Standard Plan 705A: Underground Enclosure Layout

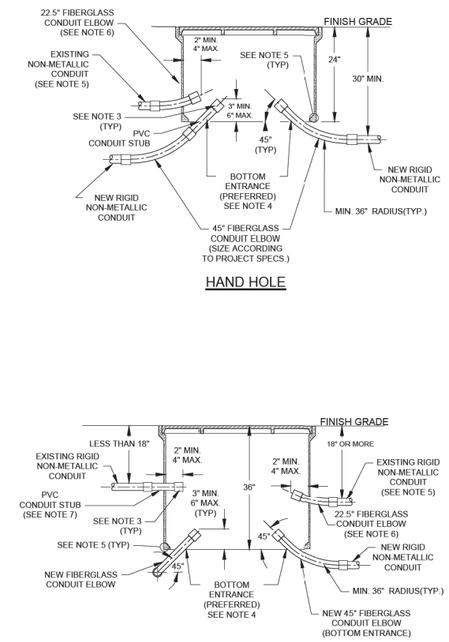

NOTES:

ALL CONSTRUCTION

1. CONDUITS SHOWN ARE FOR EXAMPLE ONLY. ADDITIONAL CONDUITS MAY BE REQUIRED AS SHOWN ON THE PLANS.
2. ALL FIBER OPTIC CONDUIT ELBOWS SHALL BE FACTORY MADE OF FIBERGLASS, HAVE A MINIMUM RADIUS OF 36", AND INCLUDE FACTORY BELL ENDS.
3. INSTALL FIBERGLASS END BELLS ON ALL CONDUIT TERMINATIONS.

NEW CONSTRUCTION

4. CONDUIT ENTRANCE FOR NEW CONSTRUCTION SHALL BE THROUGH THE OPEN BOTTOM OF UNDERGROUND ENCLOSURES AND NEAR THE END WALLS TO LEAVE THE MAJOR PORTION OF THE BOX CLEAR. INTERCONNECT CONDUITS SHALL ENTER THE ENCLOSURE AT A 45° ANGLE.

RETROFIT (EXISTING CONDUITS)

5. IN RETROFIT SITUATIONS OF EXISTING FACILITIES WHERE THE DEPTH OF EXISTING CONDUIT(S) WOULD MAKE IT IMPRACTICAL FOR THE CONDUIT TO ENTER THE BOTTOM OF A NEW UNDERGROUND ENCLOSURE, THE END OF THE ENCLOSURE MAY BE CORE DRILLED TO PROVIDE ENTRANCE. THE BOTTOM FLANGE OF THE ENCLOSURE IS DESIGNED FOR STRUCTURAL STABILITY AND SHALL NOT BE CUT OR WEAKENED IN ANY MANNER, FACTORY MOUSEHOLES OR KNOCKOUTS EXCEPTED. ENTRANCE THROUGH SIDES OF THE ENCLOSURE SHOULD BE AVOIDED. PROVIDE NECESSARY ELBOWS TO ALIGN CONDUIT WITH END OF ENCLOSURE OR ORIENT ENCLOSURE IN A DIRECTION TO ACCOMMODATE EXISTING CONDITIONS.
6. EXISTING CONDUITS ENTERING THE END OF THE ENCLOSURE AT A POINT GREATER THAN 18-INCHES FROM THE TOP OF THE ENCLOSURE SHALL HAVE A 22.5° FIBERGLASS ELBOW AS SHOWN.
7. EXISTING CONDUITS ENTERING THE END OF THE ENCLOSURE AT A POINT LESS THAN 18-INCHES FROM THE TOP OF THE ENCLOSURE SHALL HAVE A STRAIGHT PVC STUB.
8. WHEN ENTERING THE END OF THE UNDERGROUND ENCLOSURE, CONDUITS SHALL EXTEND INTO THE HAND HOLE OR SPLICE VAULT A MINIMUM OF 2" FROM THE INSIDE WALL.

City of Salem Standard Plan 705B: Fiber Optic Conduit Entrance Options

ACCOMPANIED BY DWGS.: *TM700-701, TM702*

Scott B. Cramer 2026.02.17 15:43:49 -08'00'
Traffic Section Approval

REGISTERED PROFESSIONAL ENGINEER 56,267 OREGON JULY 9, 2002 SCOTT M. MANSUR
Digitally Signed: 2026.02.05 16:36:01-08'00'
EXPIRES: DEC. 31, 2026

FINAL ELECTRONIC DOCUMENT AVAILABLE UPON REQUEST

DKS
117 Commercial St. NE, Suite 310
Salem, Oregon 97301
(503) 391-8773
www.dksassociates.com

OREGON DEPARTMENT OF TRANSPORTATION

OR22: CENTER ST BRIDGE (PHASE 1) PROJECT
WILLAMINA-SALEM HIGHWAY
MARION & POLK COUNTIES

HWY: 072	
M.P.: 4.93-5.18	
UNIT FILE CODE 24338	
DFI/TSSU NO. N/A	

Designer: N. Koenig — Reviewer: B. Lindell
Drafter: C. Tower — Checker: S. Mansur

DETAILS

SHEET NO. MB01

INTERCONNECT MODIFICATION PLAN

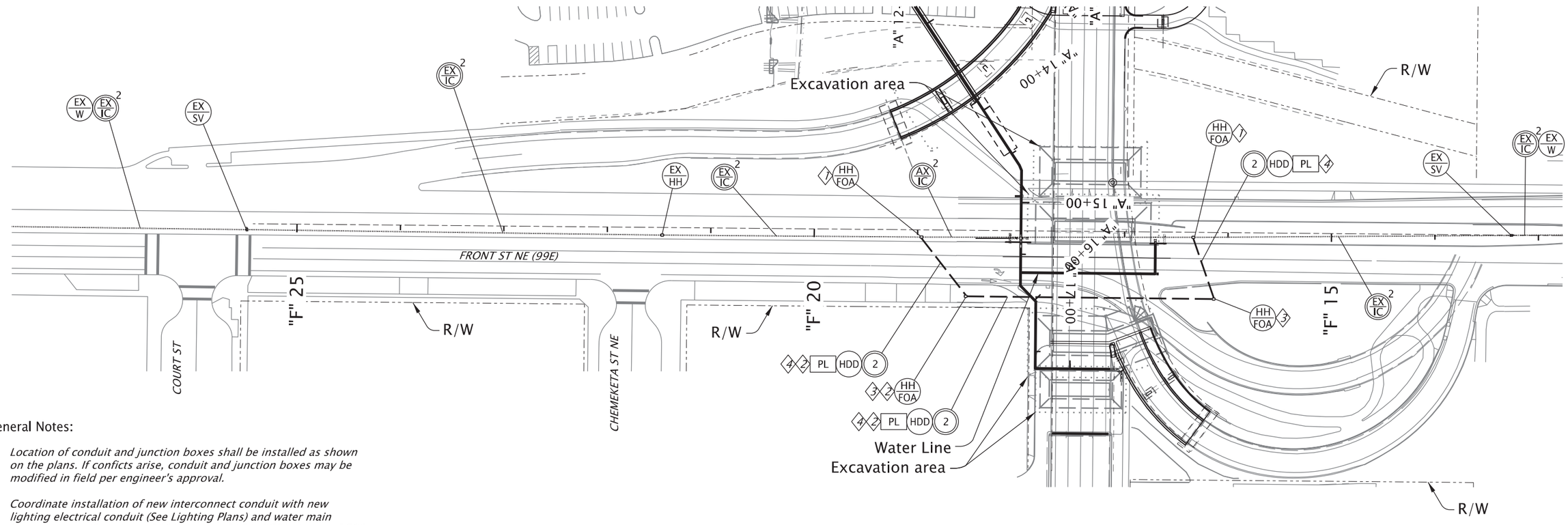

General Notes:

1. *Location of conduit and junction boxes shall be installed as shown on the plans. If conficts arise, conduit and junction boxes may be modified in field per engineer's approval.*

2. *Coordinate installation of new interconnect conduit with new lighting electrical conduit (See Lighting Plans) and water main improvements (See sheets RA01 through RA04, RC01 through RC08, and RD01 through RD07).*

3. *Coordinate with City of Salem Traffic Signal Department prior to work commencing. All interconnect fiber optic cable removal and re-installation shall be performed by the City and will be completed prior to (fiber removal) and after (fiber reinstallation) the conduit work is completed as shown on this sheet.*

Construction Notes:

1. *Interrupt existing 2-inch interconnect conduit run with new hand hole. Remove enough existing conduit to enable installation of necessary conduit sweeps to conform with City of Salem standards illustrated on fiber optic detail sheet MB03.*

2. *Coordinate installation of conduit and hand hole with waterline trench and installation. Place conduit at elevation that will not conflict with waterline installation.*

3. *Coordinate installation of hand hole with temporary paving work to install hand hole outside of temporary paving work. Final location shall be approved by engineer in field prior to installation.*

4. *Coordinate trenching and installation of new interconnect conduit in same trench as new electrical conduit.*

N

100 50 0 100
FEET

Scott B. Cramer 2026.02.17 15:43:33 -08'00'
Traffic Section Approval

REGISTERED PROFESSIONAL ENGINEER 56,267 OREGON JULY 9, 2002 SCOTT M. MANSUR
Digitally Signed: 2026.02.05 16:36:13-08'00'
EXPIRES: DEC. 31, 2026

FINAL ELECTRONIC DOCUMENT AVAILABLE UPON REQUEST

HWY: 072
M.P.: 4.93-5.18
UNIT FILE CODE 24339
DFI/TSSU NO. N/A

DKS
117 Commercial St. NE, Suite 310
Salem, Oregon 97301
(503) 391-8773
www.dksassociates.com

OR22: CENTER ST BRIDGE (PHASE 1) PROJECT
WILLAMINA-SALEM HIGHWAY
MARION & POLK COUNTIES

Designer: N. Koenig
Reviewer: B. Lindell
Drafter: C. Tower
Checker: S. Mansur

INTERCONNECT MODIFICATION PLAN

SHEET NO. MB02

CITY OF SALEM INTERCONNECT DETAILS

NOTES:

NEW CONSTRUCTION:

1. *Conduits shown are for example only. Additional conduits may be required as shown on the plans.*
2. *All conduit bends containing fiber optic cable shall be factory bends with a minimum bend radius that meets or exceeds the cable manufacturer's guidelines.*
3. *Conduit entrance for new construction shall be through the open bottom of underground enclosures, close to the end of the box. Interconnect conduits shall enter the enclosure at a 45 degree angle.*
4. *Install fiberglass end bells on all conduit terminations. Use epoxy to adhere fiberglass end bell to conduit.*

RETROFIT (EXISTING CONDUITS)

5. *In retrofit situations of existing facilities where the depth of existing conduits(s) would make it impractical for the conduit to enter the bottom of a new underground enclosure, the end of the enclosure may be core drilled to provide entrance. The bottom flange of the enclosure is designed for structural stability and shall not be cut or weakened in any manner. Factory mouseholes or knockouts excepted. Entrance through sides of the enclosure should be avoided. Provide necessary sweeps to align conduit with end of enclosure or orient enclosure in a direction to accommodate existing conditions.*
6. *Existing conduits entering the end of the enclosure at a point lower than 18" shall have a 22.5" fiberglass sweep as shown.*

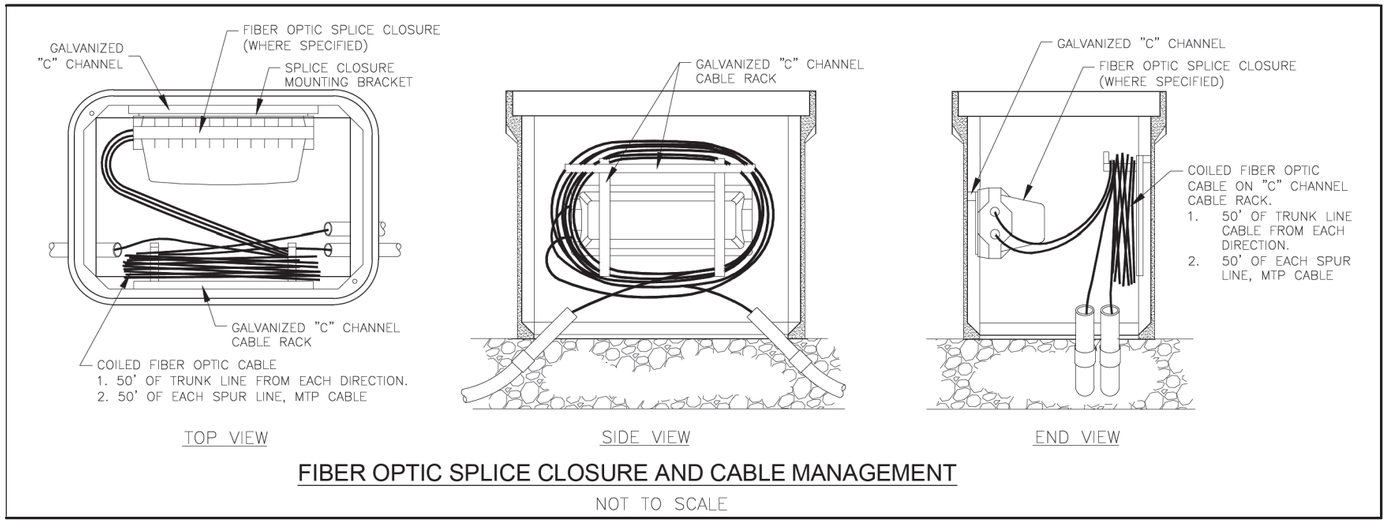

FIBER OPTIC SPLICE CLOSURE AND CABLE MANAGEMENT

NOT TO SCALE

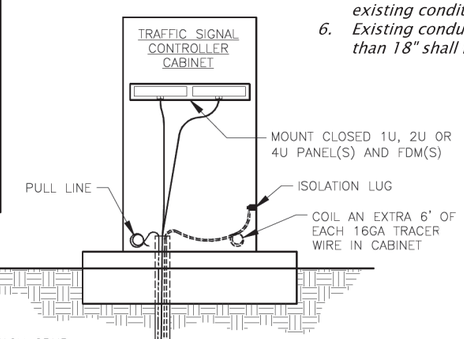

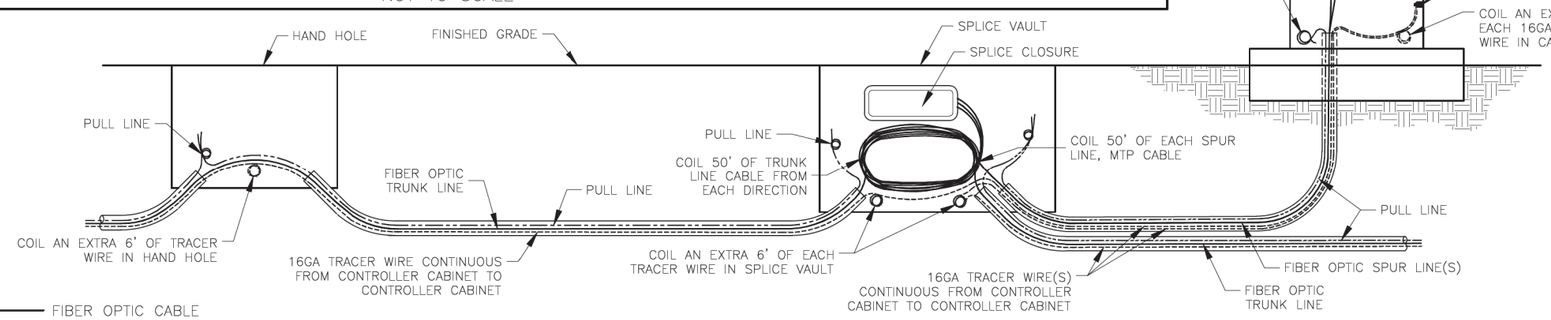

CABLE LEGEND:

- FIBER OPTIC CABLE
- TRACER WIRE
- PULL LINE

FIBER OPTIC CONDUIT CONNECTIONS (SIDE VIEW)

NOT TO SCALE

Scott B. Cramer 2026.02.06 08:07:23 -08'00'
Traffic Section Approval

REGISTERED PROFESSIONAL ENGINEER 56,267
Digitally Signed 2026.02.17 14:42:46-08'00'
OREGON
JULY 9, 2002
SCOTT M. MANSUR
EXPIRES: DEC. 31, 2026

FINAL ELECTRONIC DOCUMENT AVAILABLE UPON REQUEST

DKS
117 Commercial St. NE, Suite 310
Salem, Oregon 97301
(503) 391-8773
www.dksassociates.com

OREGON DEPARTMENT OF TRANSPORTATION

OR22: CENTER ST BRIDGE (PHASE 1) PROJECT
WILLAMINA-SALEM HIGHWAY
MARION & POLK COUNTIES

HWY: 072	
M.P.: 4.93-5.18	
UNIT FILE CODE	24340
DFI/TSSU NO.	N/A

Designer: N. Koenig
Reviewer: B. Lindell
Drafter: C. Tower
Checker: S. Mansur

DETAILS

SHEET NO. MB03

ILLUMINATION AND HEAT TRACE LEGEND

LEGEND

POLES

- EX/LP (X) — *Retain and protect existing illumination pole and appurtenances (X=pole identification letter). See illumination details on Sheet PA13 for circuit information.*
- EX/LP — *Retain and protect existing illumination pole and appurtenances*
- EX/SB — *Retain and protect existing sign bridge structure*
- EX/CS — *Retain and protect existing cantilever sign structure*
- RX/LP — *Remove existing illumination pole and appurtenances. See Special Provisions for details.*
- RR/LP (N) — *Remove and save existing illumination pole (N=number) for relocation. See metal light pole reinstallation table for additional details.*
- RI/LP (N) — *Reinstall existing illumination pole (N=number) and appurtenances. See metal light pole reinstallation table for additional details.*

JUNCTION BOXES

- EX/JB — *Retain and protect existing junction box*
- RX/JB — *Remove existing junction box*
- AX/JB — *Abandon existing junction box*
- JB/1 — *Install 17"x10"x12" (min. dimension) precast concrete junction box*
- JB/1A — *Install 17"x10"x12" (min. dimension) precast concrete junction box with concrete apron*
- JB/2A — *Install 22"x12"x12" (min. dimension) precast concrete junction box with concrete apron*
- JB/3 — *Install 30"x17"x12" (min. dimension) precast concrete junction box*
- JB/3A — *Install 30"x17"x12" (min. dimension) precast concrete junction box with concrete apron*
- JB/X — *Install 8"x8"x4" weatherproof, watertight NEMA 4X junction box. See Special Provisions for details.*
- L#X — *Streetlight circuit (X=number)*
- S#X — *Sign lighting circuit (X=number)*
- N#X — *Navigation lighting circuit (X=number)*

WIRES & CABLES

- EX/W — *Retain and protect existing electrical wiring*
- RX/W — *Remove existing wiring*
- PL — *Install poly pull line*
- N/G — *Install (N=number) no. (G=AWG wire size) THWN wire(s)*
- ILFH — *Install in-line fuse holder with fuse. See Special Provisions for details.*
- G/N — *Install one No. (N=AWG wire size) copper ground wire (GREEN in color)*

CONDUITS

- EX/EC (S) — *Retain and protect existing electrical conduit (S=size)*
- RX/EC (S) — *Remove existing electrical conduit (S=size)*
- AX/C (S) — *Abandon existing conduit (S=size)*
- S — *Install (S=size) inch rigid non-metallic conduit*

CONDUITS CON'T

- S — *Install (S=size) inch rigid metallic conduit*
- W — *Install 3" conduit to Salem Electric transformer. Coordinate connection with Adam Deshon with Salem Electric at (503) 316-2423.*
- HDD — *Install conduit by horizontal directional drilling, open trench not allowed*
- CJ — *Splice new electrical conduit to existing electrical conduit*

CABINETS

- EX/SC — *Retain and protect existing service cabinet*
- EX/C — *Retain and protect existing cabinet*
- RX/SC — *Remove existing service cabinet*
- SCL/2G — *Install City of Salem approved service cabinet,120/240 volt. for both signal and multiple illumination circuits, with contractor, test switch and generator disconnect. Approved cabinets include Tesco 24-200 or Fouch 0600-0155-AS Rev 05 assembly. See detail on sheet PA10.*
- PS/2 — *Salem Electric transformer. Coordinate power connection with Adam Deshon with Salem Electric at (503) 316-2423. Reference WO# 25-091.*

FOUNDATIONS

- RX/FND — *Remove existing foundation*
- RX/WM — *Remove existing wall mount type luminaire*
- RR/FND — *Remove and save existing pre-cast concrete foundation and hardware*
- RI/FND — *Reinstall existing pre-cast concrete foundation. Compact soil consistent with manufacturer's requirements, see special provisions.*
- WM/N — *Install wall mount type luminaire with wire surround cage (N=number) (wall mount type luminaire table)*

LUMINAIRES

- RX/Lum — *Remove existing luminaire. See Special Provisions for details.*
- RR/Lum — *Remove and save existing luminaire*
- RI/Lum — *Reinstall existing illumination pole and appurtenances*
- PE — *Install photo electronic control relay*

HEAT TRACE

- HT/C — *Install Chromalox 316 Stainless Steel ITC1 digital heat trace controller with ambient controller sensor compatible with 240V system*
- HT/PC — *Install Chromalox UPC power connection box for heat trace*
- HT/MC — *Install Chromalox UMC multiple power connection box for heat trace*
- SRL — *Install Chromalox self-regulating heat trace cable*
- CL — *Install heat trace caution labels*
- X — *Bridge waterline support hanger (X=number). See Waterline Sheets for details.*

WALL MOUNT TYPE LUMINAIRE TABLE

LUMINAIRE NO.	PAGE NO.	JURISDICTION	LUMINAIRE							CIRCUIT NO.	NOTES
			MANUFACTURER	PART NUMBER	WATTAGE	VOLTAGE	COLOR TEMP	FIXTURE FINISH	MOUNTING HEIGHT		
9	PA07	ODOT	ATLAS AMERICAN LIGHTING	WLMS3-9L LP	22-76	120-277V	4000K	BRONZE	25 FT	EX	Install wire cage surround for light fixture
10	PA07										
11	PA07										
12	PA09										
13	PA09										
14	PA09										

LEGEND

*	=	Minimum allowed wattage
EX	=	Existing
ODOT	=	Oregon Department of Transportation

METAL LIGHT POLE REINSTALLATION TABLE

POLE NO.	PAGE NO.	JURISDICTION	LUMINAIRE	WATTAGE	VOLTAGE	COLOR TEMP	CIRCUIT NO.	FOUNDATION TYPE	BASE PLATE CONFIG.	NOTES
1	PA02, PA05	CITY OF SALEM	EX**	EX**	EX**	EX**	EX**	EX P	EX P	Remove streetlight and precast base for duration of construction. Reinstall existirg streetlight and precast base back in original location after construction.
2	PA02, PA05									
3	PA02, PA05									
4	PA02, PA05									
5	PA03, PA06									
6	PA03, PA06									
7	PA03, PA06									
8	PA03, PA06									

LEGEND

*	=	Minimum allowed wattage
**	=	Existing ornamental luminaire to be reinstalled
EX	=	Existing
EX P	=	Existing precast concrete foundation

REGISTERED PROFESSIONAL ENGINEER 56,267 OREGON JULY 9, 2002 SCOTT M. MANSUR

Digitally Signed: 2026.03.04 09:51:50-08'00'

EXPIRES: DEC. 31, 2026

FINAL ELECTRONIC DOCUMENT AVAILABLE UPON REQUEST

DKS
117 Commercial St. NE, Suite 310
Salem, Oregon 97301
(503) 391-8773
www.dksassociates.com

OR22: CENTER ST BRIDGE (PHASE 1) PROJECT
WILLAMINA-SALEM HIGHWAY
MARION & POLK COUNTIES

Designer: A. Meeks-Buckland	Reviewer: B. Lindell
Drafter: C. Tower	Checker: S. Mansur

LEGEND

SHEET NO. PA01

HWY:
M.P.:
UNIT FILE CODE I-03776
DFI/TSSU NO. N/A

ACCOMPANIED BY DWGS.:
City of Salem - 702, 705A, 705C

TEMPORARY ILLUMINATION PLAN

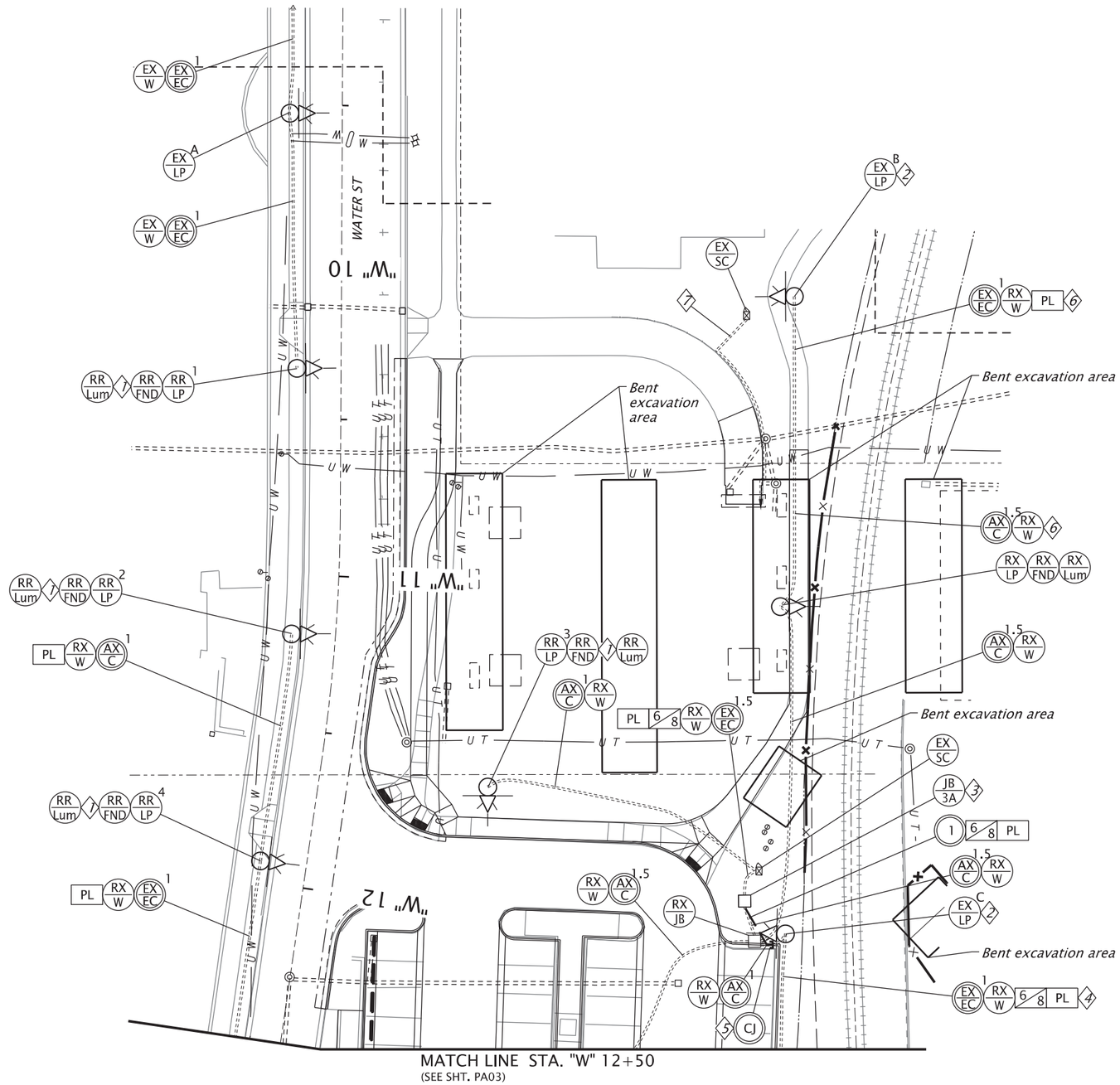

Construction Notes:

1. *Remove and save existing pre-cast concrete foundation. See Sheets PA05 and PA06 for reinstallation.*
2. *Streetlight to be off for duration of construction.*
3. *Install new junction box on top of existing conduit between existing junction box and the existing service cabinet. Adjust conduits as necessary to meet minimum clearance requirements. Confirm final junction box location with Engineer.*
4. *Blow out the existing conduits after existing wiring is removed. See ODOT Specification 00960.42(b) for details.*
5. *Splice existing 1" conduit to join to new 1" conduit.*
6. *See Illumination Plan on Sheet PA05 for where conduit abandonment ends and existing conduit is maintained.*
7. *Existing conduit for ODOT wall mount lighting and pedestrian ramp lighting circuit. See Sheet PA07 for details.*

General Notes:

1. *Location of conduit and junction boxes shall be installed as shown on the plans. If conflicts arise, conduit and junction boxes may be modified in field per engineer's approval.*
2. *See Sheet PA07 for ODOT wall mount lighting and pedestrian ramp lighting circuit removal and installation details.*

N

40 20 0 40
FEET

HWY:	
M.P.:	
UNIT FILE CODE	I-03777
DFI/TSSU NO.	N/A

REGISTERED PROFESSIONAL ENGINEER 56,267 OREGON JULY 9, 2002 SCOTT M. MANSUR
Digitally Signed 2026.03.04 10:05:12-08'00'
EXPIRES: DEC. 31, 2026

FINAL ELECTRONIC DOCUMENT AVAILABLE UPON REQUEST

DKS
117 Commercial St. NE, Suite 310
Salem, Oregon 97301
(503) 391-8773
www.dksassociates.com

OREGON DEPARTMENT OF TRANSPORTATION

OR22: CENTER ST BRIDGE (PHASE 1) PROJECT
WILLAMINA-SALEM HIGHWAY
MARION & POLK COUNTIES

Designer: A. Meeks-Buckland
Reviewer: B. Lindell
Drafter: C. Tower
Checker: S. Mansur

TEMPORARY ILLUMINATION PLAN

SHEET NO. PA02

TEMPORARY ILLUMINATION PLAN

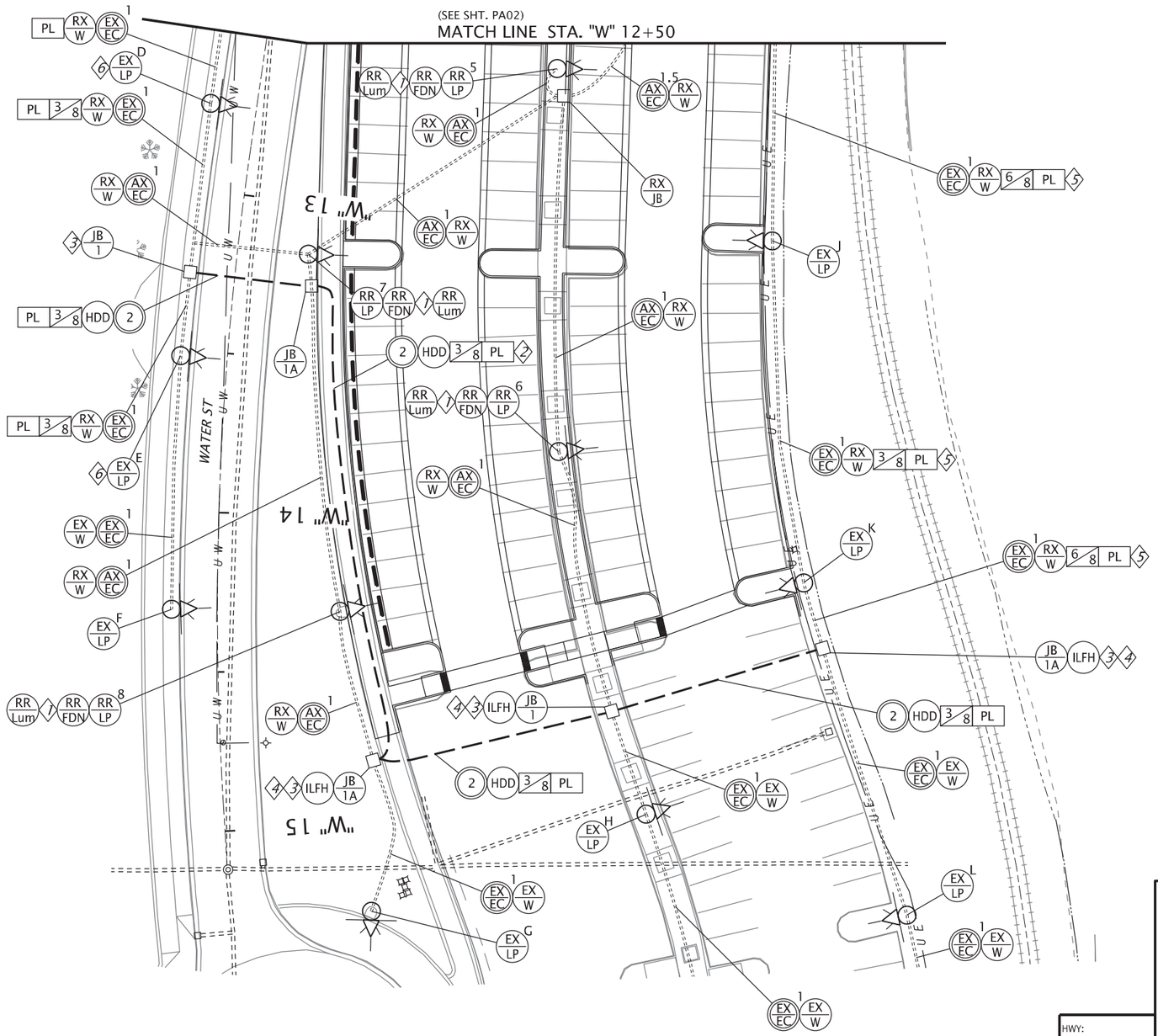

Construction Notes:

1. *Remove and save existing pre-cast concrete foundation. See Sheets PA05 and PA06 for reinstallation.*
2. *Install conduit a minimum of 30 inches below grade.*
3. *Install new junction box on top of existing conduit. Sweep existing conduits into new junction box. Adjust conduit to meet minimum clearance requirements.*
4. *Splice new lighting wires to existing lighting wires in junction box.*
5. *Blow out the existing conduits after existing wiring is removed. See ODOT Specification 00960.42(b) for details.*
6. *Splice new lighting wires to existing lighting wires in light pole.*

General Note:

1. *Location of conduit and junction boxes shall be installed as shown on the plans. If conflicts arise, conduit and junction boxes may be modified in field per engineer's approval.*

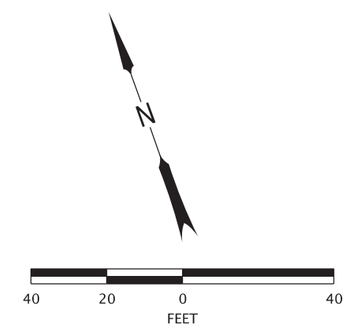

HWY:	
M.P.:	
UNIT FILE CODE	I-03778
DFI/TSSU NO.	N/A

REGISTERED PROFESSIONAL ENGINEER 56,267
Digitally Signed: 2026.02.10 15:21:34-08'00'
OREGON
JULY 9, 2002
SCOTT M. MANSUR
EXPIRES: DEC. 31, 2026

FINAL ELECTRONIC DOCUMENT AVAILABLE UPON REQUEST

DKS
117 Commercial St. NE, Suite 310
Salem, Oregon 97301
(503) 391-8773
www.dksassociates.com

OR22: CENTER ST BRIDGE (PHASE 1) PROJECT
WILLAMINA-SALEM HIGHWAY
MARION & POLK COUNTIES

Designer: A. Meeks-Buckland
Reviewer: B. Lindell
Drafter: C. Tower
Checker: S. Mansur

TEMPORARY ILLUMINATION PLAN

SHEET NO. PA03

TEMPORARY ILLUMINATION PLAN

Construction Notes:

1. *Install temporary conduit line between junction boxes to maintain the existing navigational lighting, street lighting circuits, and ground wiring per NEC and ODOT requirements.*
2. *Disconnect existing streetlight and navigation wiring circuits (when present) in existing junction box. Splice temporary wiring as shown to provide electrical connection to existing street lighting and navigational lighting.*
3. *Install temporary wiring in temporary conduit line to maintain the existing navigational lighting, street lighting circuits, and ground wiring per NEC and ODOT requirements.*
4. *Abandon conduit in section(s) that are to be removed with the expansion joint installation as seen on Sheets JA28, JA29, and JA120.*
5. *Streetlight pole can remain offline for duration of Bent 19 expansion joint construction.*
6. *Disconnect existing streetlight circuit to streetlight noted with Construction Note 5.*
7. *Split existing conduit where required for expansion joint installation as seen on Sheet JA120.*

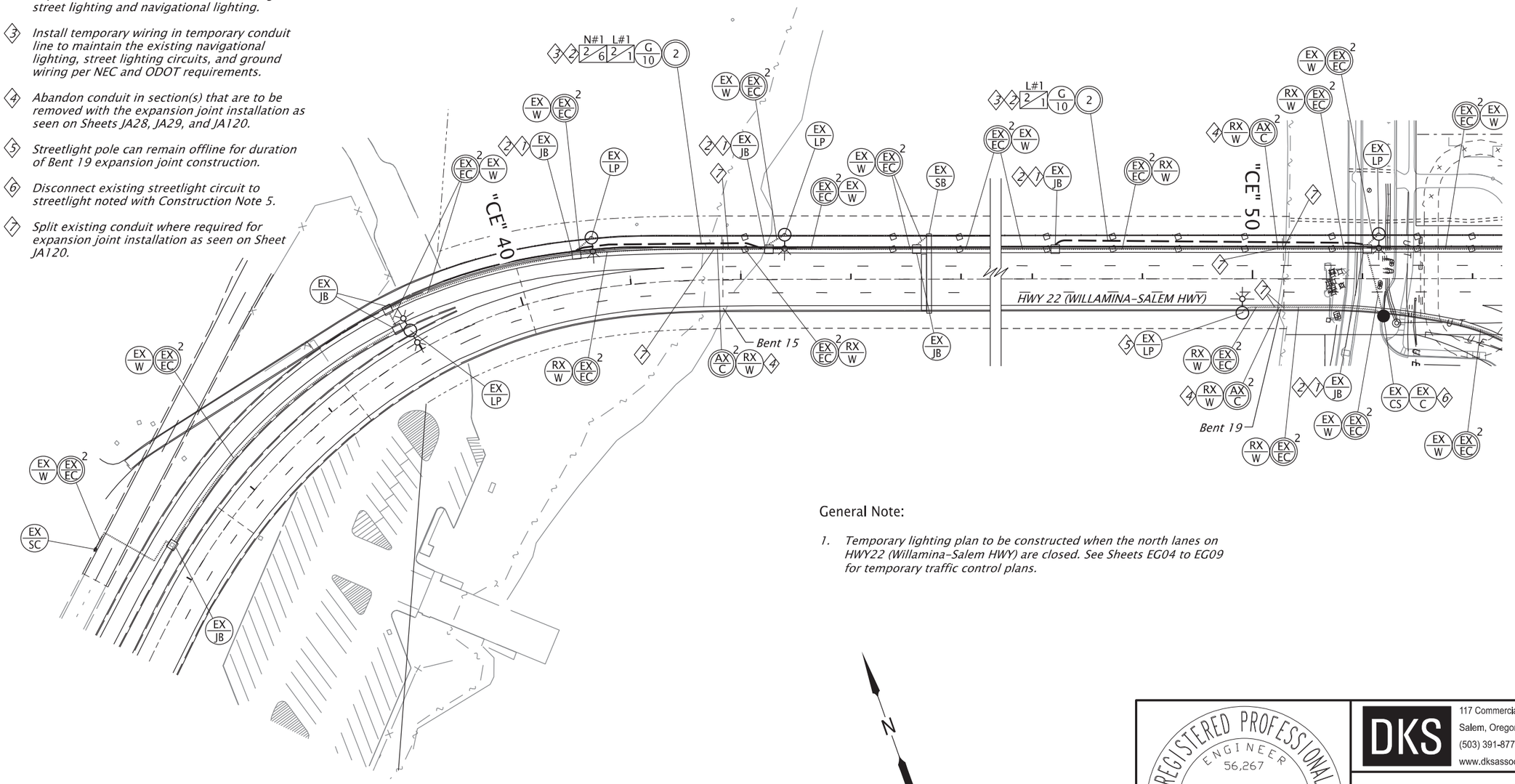

General Note:

1. *Temporary lighting plan to be constructed when the north lanes on HWY22 (Willamina-Salem HWY) are closed. See Sheets EG04 to EG09 for temporary traffic control plans.*

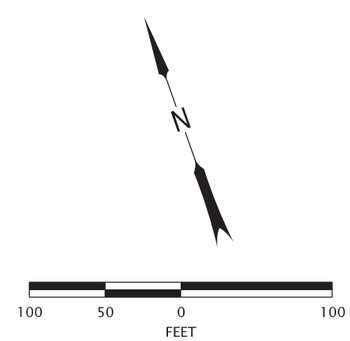

HWY:
M.P.:
UNIT FILE CODE I-03779
DFI/TSSU NO. N/A

REGISTERED PROFESSIONAL ENGINEER 56,267
Digitally Signed 2026.03.04 10:05:22-08'00'
OREGON
JULY 9, 2002
SCOTT M. MANSUR
EXPIRES: DEC. 31, 2026

FINAL ELECTRONIC DOCUMENT AVAILABLE UPON REQUEST

DKS
117 Commercial St. NE, Suite 310
Salem, Oregon 97301
(503) 391-8773
www.dksassociates.com

OREGON DEPARTMENT OF TRANSPORTATION

OR22: CENTER ST BRIDGE (PHASE 1) PROJECT
WILLAMINA-SALEM HIGHWAY
MARION & POLK COUNTIES

Designer: A. Meeks-Buckland
Reviewer: B. Lindell
Drafter: C. Tower
Checker: S. Mansur

TEMPORARY ILLUMINATION PLAN

SHEET NO. PA04

ILLUMINATION PLAN

General Notes:

1. *Reinstallation of precast concrete foundation to occur in undisturbed or compacted material.*
2. *Location of conduit and junction boxes shall be installed as shown on the plans. If conflicts arise, conduit and junction boxes may be modified in field per engineer's approval.*
3. *See Sheet PA07 for ODOT wall mount lighting and pedestrian route circuit removal and installation details.*

Construction Notes:

1. *Locate existing conduit leading into the existing ornamental light pole and install a new junction box adjacent to the existing light pole. Break the existing conduit and install new conduit sweeps into the new junction box. Install wiring into pole as shown.*
2. *Splice new lighting wires to existing lighting wires in light pole.*
3. *Existing service cabinet to remain in operation until all lighting circuits are transferred to new service cabinet.*
4. *See Sheets PA14 to PA17 for heat trace electrical system installation plans and details.*
5. *Sweep new conduits into existing junction box.*
6. *Remove three (3) no. 8 AWG wiring used for powering temporary illumination circuit. Maintain three (3) No. 8 AWG wiring to use for existing lighting.*
7. *Existing conduit for ODOT wall mount lighting and pedestrian ramp lighting circuit. See Sheet PA07 for details.*

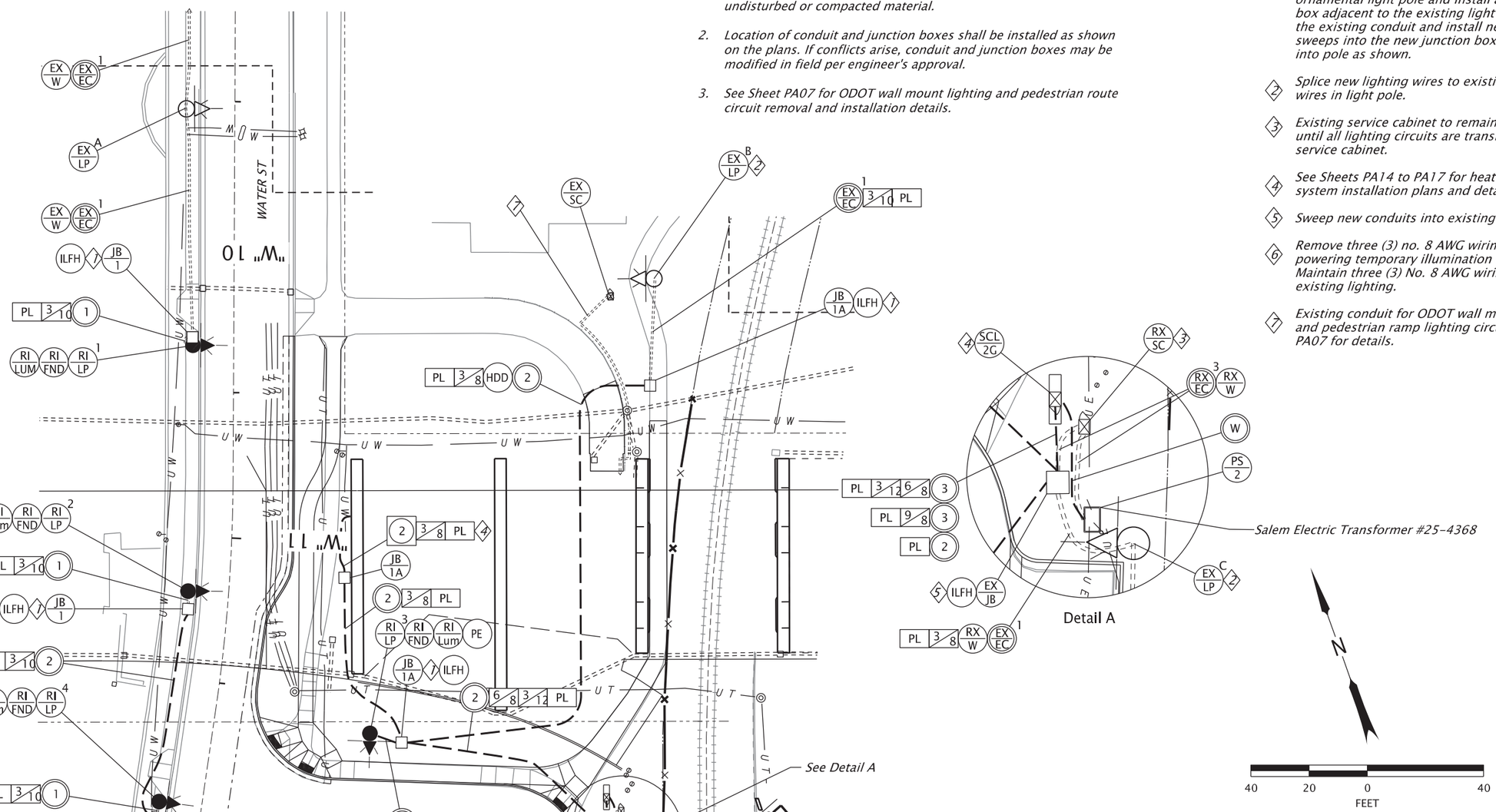

REGISTERED PROFESSIONAL ENGINEER 56,267 OREGON JULY 9, 2002 SCOTT M. MANSUR

Digitally Signed 2026.02.10 15:21:55-08'00'

EXPIRES: DEC. 31, 2026

FINAL ELECTRONIC DOCUMENT AVAILABLE UPON REQUEST

DKS
117 Commercial St. NE, Suite 310
Salem, Oregon 97301
(503) 391-8773
www.dksassociates.com

OR22: CENTER ST BRIDGE (PHASE 1) PROJECT
WILLAMINA-SALEM HIGHWAY
MARION & POLK COUNTIES

HWY:	
M.P.:	
UNIT FILE CODE	I-03780
DFI/TSSU NO.	N/A

Designer: A. Meeks-Buckland
Reviewer: B. Lindell
Drafter: C. Tower
Checker: S. Mansur

ILLUMINATION PLAN

SHEET NO. PA05

ILLUMINATION PLAN

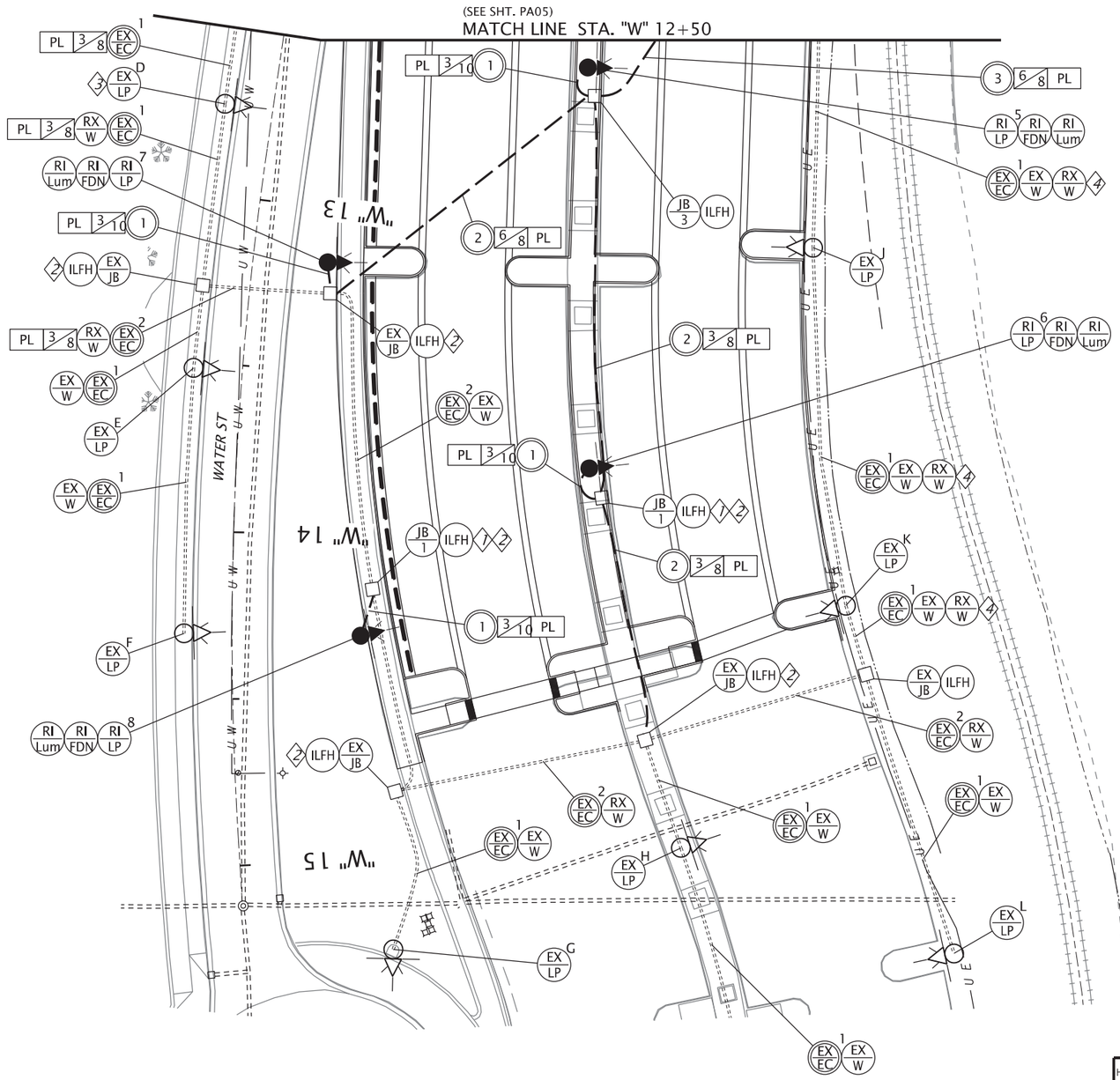

Construction Notes:

1. *Locate existing conduit and route into new junction box.*
2. *Splice new lighting wires to existing lighting wires in junction box.*
3. *Splice new lighting wires to existing lighting wires in light pole.*
4. *Remove three (3) no. 8 AWG wiring used for powering temporary illumination circuit. Maintain three (3) No. 8 AWG wiring to use for existing lighting circuit.*

General Notes:

1. *Reinstallation of precast concrete foundation to occur in undisturbed or compacted material.*
2. *Location of conduit and junction boxes shall be installed as shown on the plans. If conflicts arise, conduit and junction boxes may be modified in field per engineer's approval.*

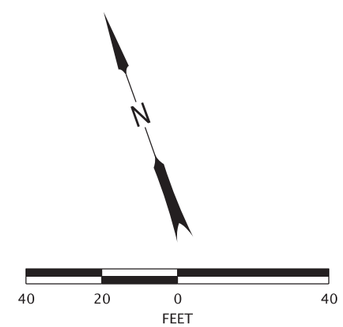

REGISTERED PROFESSIONAL ENGINEER 56,267
Digitally Signed 2026.02.10 15:22:12-08'00'
OREGON
JULY 9, 2002
SCOTT M. MANSUR
EXPIRES: DEC. 31, 2026
FINAL ELECTRONIC DOCUMENT AVAILABLE UPON REQUEST

DKS
117 Commercial St. NE, Suite 310
Salem, Oregon 97301
(503) 391-8773
www.dksassociates.com

OREGON DEPARTMENT OF TRANSPORTATION

OR22: CENTER ST BRIDGE (PHASE 1) PROJECT
WILLAMINA-SALEM HIGHWAY
MARION & POLK COUNTIES

HWY:	
M.P.:	
UNIT FILE CODE	I-03781
DFI/TSSU NO.	N/A

Designer: A. Meeks-Buckland
Reviewer: B. Lindell
Drafter: C. Tower
Checker: S. Mansur

ILLUMINATION PLAN

SHEET NO. PA06

ILLUMINATION PLAN

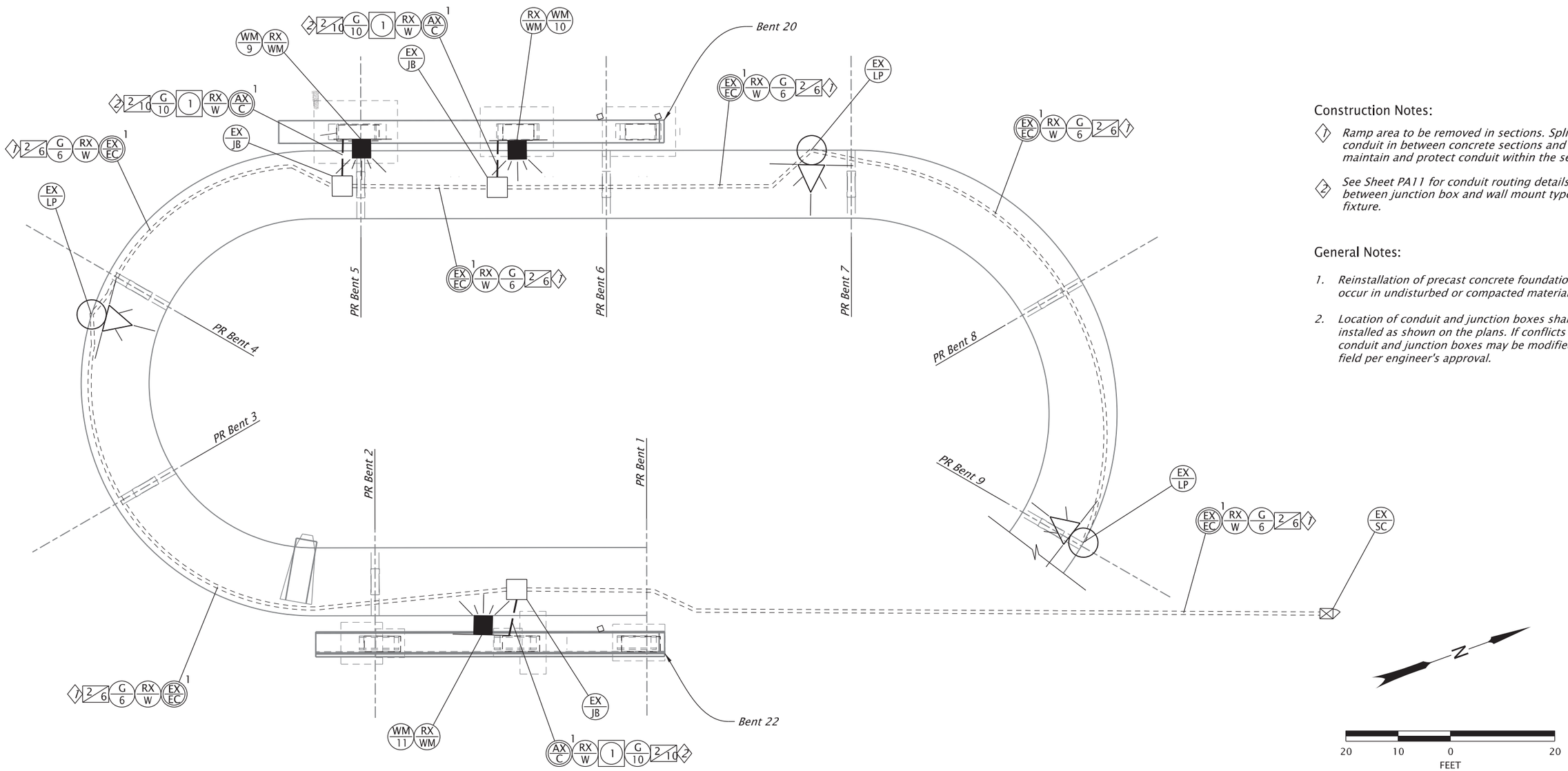

Construction Notes:

1. *Ramp area to be removed in sections. Split conduit in between concrete sections and maintain and protect conduit within the section.*
2. *See Sheet PA11 for conduit routing details between junction box and wall mount type light fixture.*

General Notes:

1. *Reinstallation of precast concrete foundation to occur in undisturbed or compacted material.*
2. *Location of conduit and junction boxes shall be installed as shown on the plans. If conflicts arise, conduit and junction boxes may be modified in field per engineer's approval.*

REGISTERED PROFESSIONAL ENGINEER 56,267
Digitally Signed 2026.02.10 15:22:21-08'00'
OREGON
JULY 9, 2002
SCOTT M. MANSUR
EXPIRES: DEC. 31, 2026

DKS
117 Commercial St. NE, Suite 310
Salem, Oregon 97301
(503) 391-8773
www.dksassociates.com

OREGON DEPARTMENT OF TRANSPORTATION

OR22: CENTER ST BRIDGE (PHASE 1) PROJECT
WILLAMINA-SALEM HIGHWAY
MARION & POLK COUNTIES

HWY:	
M.P.:	
UNIT FILE CODE	I-03782
DFI/TSSU NO.	N/A

Designer: A. Meeks-Buckland
Reviewer: B. Lindell
Drafter: C. Tower
Checker: S. Mansur

ILLUMINATION PLAN

SHEET NO. PA07

FINAL ELECTRONIC DOCUMENT AVAILABLE UPON REQUEST

ILLUMINATION PLAN

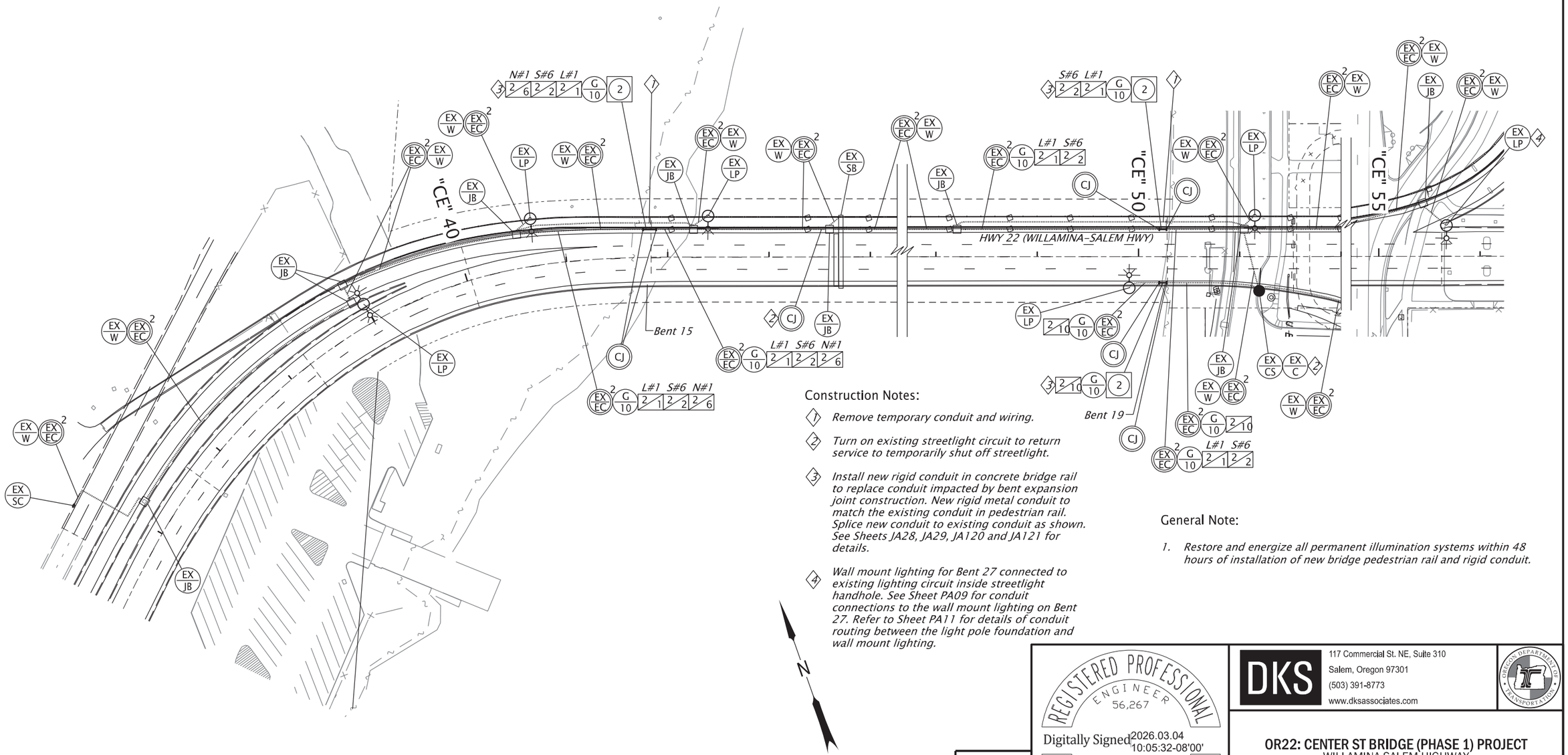

Construction Notes:

1. *Remove temporary conduit and wiring.*
2. *Turn on existing streetlight circuit to return service to temporarily shut off streetlight.*
3. *Install new rigid conduit in concrete bridge rail to replace conduit impacted by bent expansion joint construction. New rigid metal conduit to match the existing conduit in pedestrian rail. Splice new conduit to existing conduit as shown. See Sheets JA28, JA29, JA120 and JA121 for details.*
4. *Wall mount lighting for Bent 27 connected to existing lighting circuit inside streetlight handhole. See Sheet PA09 for conduit connections to the wall mount lighting on Bent 27. Refer to Sheet PA11 for details of conduit routing between the light pole foundation and wall mount lighting.*

General Note:

1. *Restore and energize all permanent illumination systems within 48 hours of installation of new bridge pedestrian rail and rigid conduit.*

REGISTERED PROFESSIONAL ENGINEER 56,267
Digitally Signed 2026.03.04 10:05:32-08'00'
OREGON
JULY 9, 2002
SCOTT M. MANSUR
EXPIRES: DEC. 31, 2026

FINAL ELECTRONIC DOCUMENT AVAILABLE UPON REQUEST

DKS
117 Commercial St. NE, Suite 310
Salem, Oregon 97301
(503) 391-8773
www.dksassociates.com

OREGON DEPARTMENT OF TRANSPORTATION

OR22: CENTER ST BRIDGE (PHASE 1) PROJECT
WILLAMINA-SALEM HIGHWAY
MARION & POLK COUNTIES

HWY:	
M.P.:	
UNIT FILE CODE	I-03783
DFI/TSSU NO.	N/A

Designer: A. Meeks-Buckland
Reviewer: B. Lindell
Drafter: C. Tower
Checker: S. Mansur

ILLUMINATION PLAN

SHEET NO. PA08

ILLUMINATION PLAN

General Notes:

1. *Location of conduit and junction boxes shall be installed as shown on the plans. If conflicts arise, conduit and junction boxes may be modified in field per engineer's approval.*

2. *Coordinate installation of new electrical conduit with relocated interconnect conduit (See Interconnect Plans) and water main improvements (See Sheets RA01 through RA04, RC01 through RC08, and RD01 through RD07).*

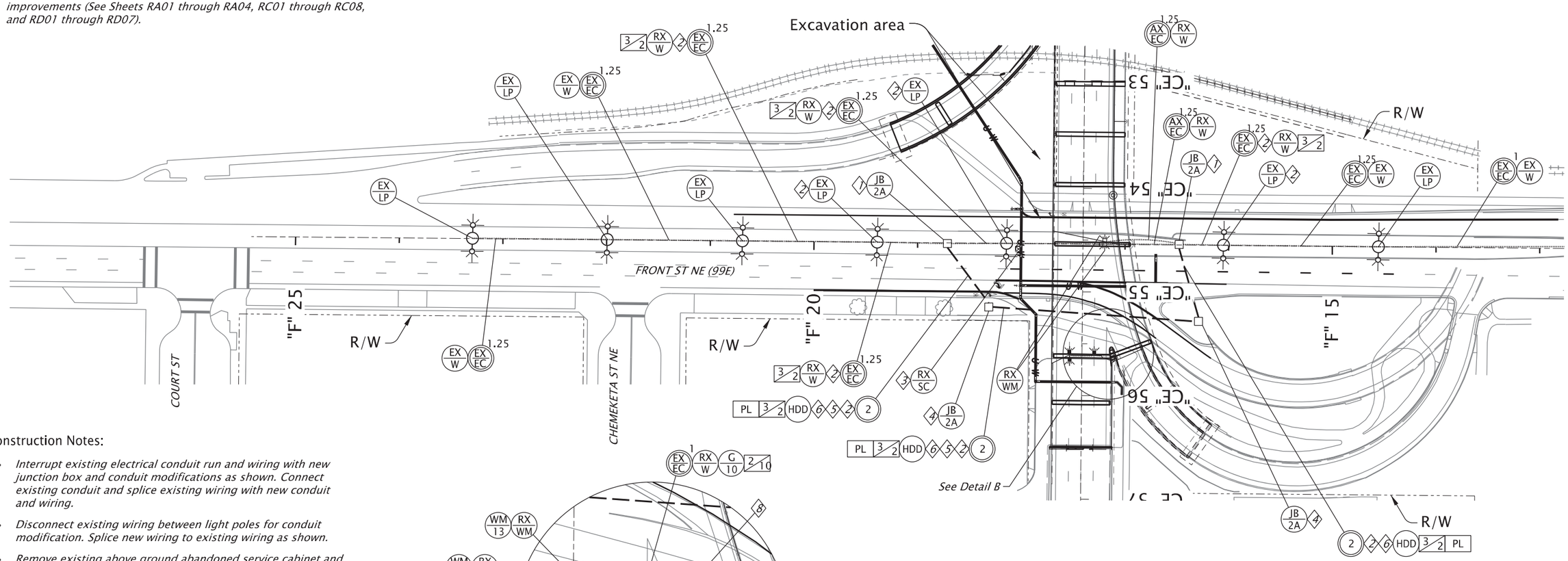

Construction Notes:

1. *Interrupt existing electrical conduit run and wiring with new junction box and conduit modifications as shown. Connect existing conduit and splice existing wiring with new conduit and wiring.*
2. *Disconnect existing wiring between light poles for conduit modification. Splice new wiring to existing wiring as shown.*
3. *Remove existing above ground abandoned service cabinet and foundation as shown.*
4. *Coordinate installation of junction box with temporary paving work. Final location shall be approved by engineer in field prior to installation.*
5. *Coordinate installation of conduit and junction box with waterline trench and installation. Place conduit at elevation that will not conflict with waterline installation.*
6. *Coordinate trenching and installation of new electrical conduit in same trench as relocated interconnect conduit.*
7. *See Sheet PA11 for conduit routing details between wall mount lighting and the existing streetlight connection on bridge deck.*
8. *New conduit line to join with existing conduit line going into streetlight foundation. See Sheet PA08 for circuit routing to service cabinet near Bent 15.*

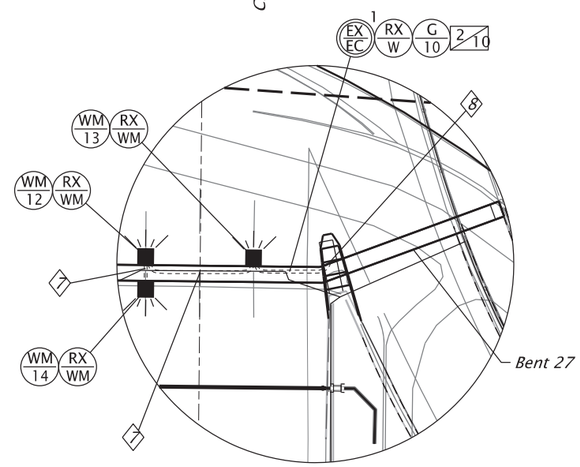

Detail B

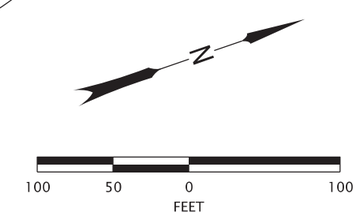

HWY: 072	
M.P.: 4.93-5.18	
UNIT FILE CODE	I-03784
DFI/TSSU NO.	N/A

REGISTERED PROFESSIONAL ENGINEER 56,267 OREGON JULY 9, 2002 SCOTT M. MANSUR

Digitally Signed 2026.02.10 15:22:41-08'00'

EXPIRES: DEC. 31, 2026

FINAL ELECTRONIC DOCUMENT AVAILABLE UPON REQUEST

DKS
117 Commercial St. NE, Suite 310
Salem, Oregon 97301
(503) 391-8773
www.dksassociates.com

OR22: CENTER ST BRIDGE (PHASE 1) PROJECT
WILLAMINA-SALEM HIGHWAY
MARION & POLK COUNTIES

Designer: A. Meeks-Buckland | Reviewer: B. Lindell
Drafter: C. Tower | Checker: S. Mansur

ILLUMINATION PLAN

SHEET NO. PA09

ILLUMINATION DETAILS

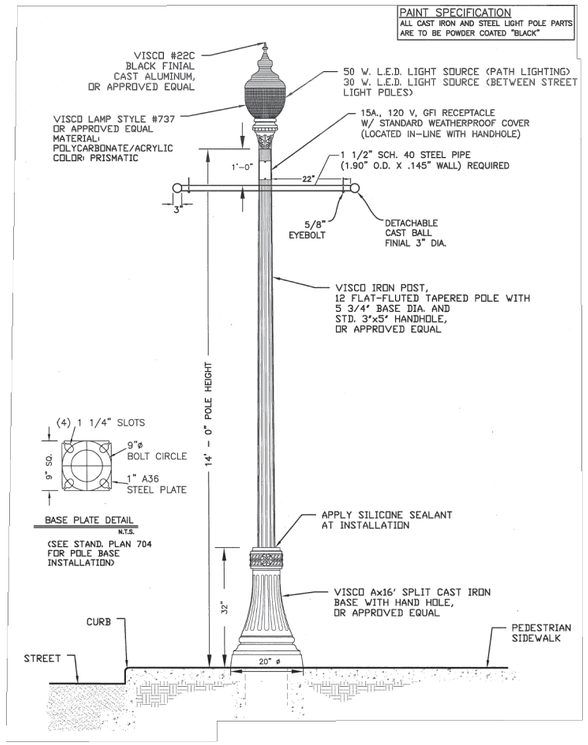

City of Salem Standard Plan 702:
Streetscape Lamp Post Detail
Acorn Lamp Style

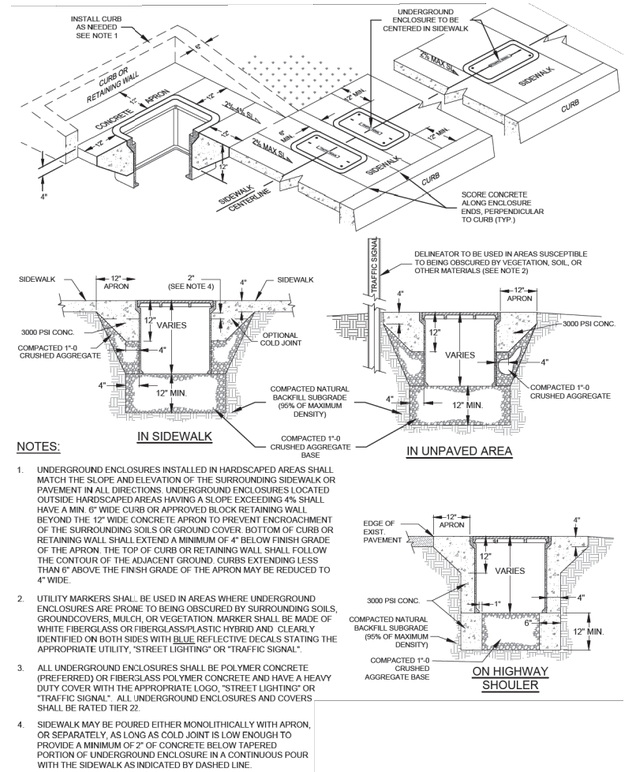

NOTES:

1. UNDERGROUND ENCLOSURES INSTALLED IN HARDSCAPED AREAS SHALL MATCH THE SLOPE AND ELEVATION OF THE SURROUNDING SIDEWALK OR PAVEMENT IN ALL DIRECTIONS. UNDERGROUND ENCLOSURES LOCATED OUTSIDE HARDSCAPED AREAS HAVING A SLOPE EXCEEDING 4% SHALL HAVE A MIN. 6" WIDE CURB OR APPROVED BLOCK RETAINING WALL BEYOND THE 12" WIDE CONCRETE APRON TO PREVENT ENCROACHMENT OF THE SURROUNDING SOILS OR GROUND COVER. BOTTOM OF CURB OR RETAINING WALL SHALL EXTEND A MINIMUM OF 4" BELOW FINISH GRADE OF THE APRON. THE TOP OF CURB OR RETAINING WALL SHALL FOLLOW THE CONTOUR OF THE ADJACENT GROUND. CURBS EXTENDING LESS THAN 6" ABOVE THE FINISH GRADE OF THE APRON MAY BE REDUCED TO 4" WIDE.
2. UTILITY MARKERS SHALL BE USED IN AREAS WHERE UNDERGROUND ENCLOSURES ARE PRONE TO BEING OBSCURED BY SURROUNDING SOILS, GROUNDCOVERS, MULCH, OR VEGETATION. MARKER SHALL BE MADE OF WHITE FIBERGLASS OR FIBERGLASS/PLASTIC HYBRID AND CLEARLY IDENTIFIED ON BOTH SIDES WITH BLUE REFLECTIVE DECALS STATING THE APPROPRIATE UTILITY, "STREET LIGHTING" OR "TRAFFIC SIGNAL".
3. ALL UNDERGROUND ENCLOSURES SHALL BE POLYMER CONCRETE (PREFERRED) OR FIBERGLASS POLYMER CONCRETE AND HAVE A HEAVY DUTY COVER WITH THE APPROPRIATE LOGO, "STREET LIGHTING" OR "TRAFFIC SIGNAL". ALL UNDERGROUND ENCLOSURES AND COVERS SHALL BE RATED TIER 22.
4. SIDEWALK MAY BE POURED EITHER MONOLITHICALLY WITH APRON, OR SEPARATELY, AS LONG AS COLD JOINT IS LOW ENOUGH TO PROVIDE A MINIMUM OF 2" OF CONCRETE BELOW TAPERED PORTION OF UNDERGROUND ENCLOSURE IN A CONTINUOUS POUR WITH THE SIDEWALK AS INDICATED BY DASHED LINE.

City of Salem Standard Plan 705A:
Underground Enclosure Layout

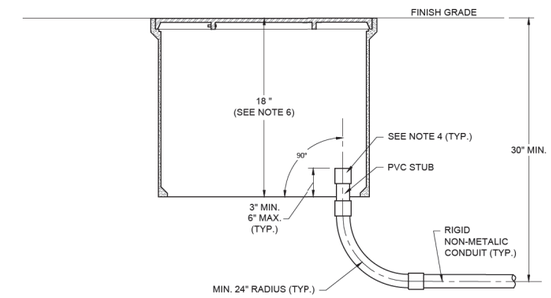

NOTES:

1. CONDUITS SHOWN ARE FOR EXAMPLE ONLY. ADDITIONAL CONDUITS MAY BE REQUIRED AS SHOWN ON THE PLANS.
2. ALL SIGNAL AND ILLUMINATION CONDUIT ELBOWS SHALL BE FACTORY MADE OF FIBERGLASS, HAVE A MINIMUM RADIUS OF 24" AND INCLUDE FACTORY BELL ENDS.
3. CONDUIT ENTRANCE FOR NEW CONSTRUCTION SHALL BE THROUGH THE OPEN BOTTOM OF UNDERGROUND ENCLOSURES AND NEAR THE END WALLS TO LEAVE THE MAJOR PORTION OF THE BOX CLEAR.
4. INSTALL FIBERGLASS END BELLS ON ALL CONDUIT TERMINATIONS.
5. UNDERGROUND ENCLOSURES USED TO SERVICE FRANCHISE UTILITIES MAY HAVE DIFFERENT OR ADDITIONAL REQUIREMENTS.
6. 12" DEEP ENCLOSURE MAY BE ALLOWED IN RETROFIT SITUATIONS.

City of Salem Standard Plan 705C:
Signal and Illumination
Conduit Entrance Detail

HWY:
M.P.:
UNIT FILE CODE I-03785
DFI/TSSU NO. N/A

REGISTERED PROFESSIONAL ENGINEER 56,267 OREGON JULY 9, 2002 SCOTT M. MANSUR
Digitally Signed 2026.02.10 15:19:47-08'00'
EXPIRES: DEC. 31, 2026

FINAL ELECTRONIC DOCUMENT AVAILABLE UPON REQUEST

DKS
117 Commercial St. NE, Suite 310
Salem, Oregon 97301
(503) 391-8773
www.dksassociates.com

OREGON DEPARTMENT OF TRANSPORTATION

OR22: CENTER ST BRIDGE (PHASE 1) PROJECT
WILLAMINA-SALEM HIGHWAY
MARION & POLK COUNTIES

Designer: A. Meeks-Buckland
Reviewer: B. Lindell
Drafter: C. Tower
Checker: S. Mansur

ILLUMINATION DETAILS

SHEET NO. PA10

ILLUMINATION DETAILS

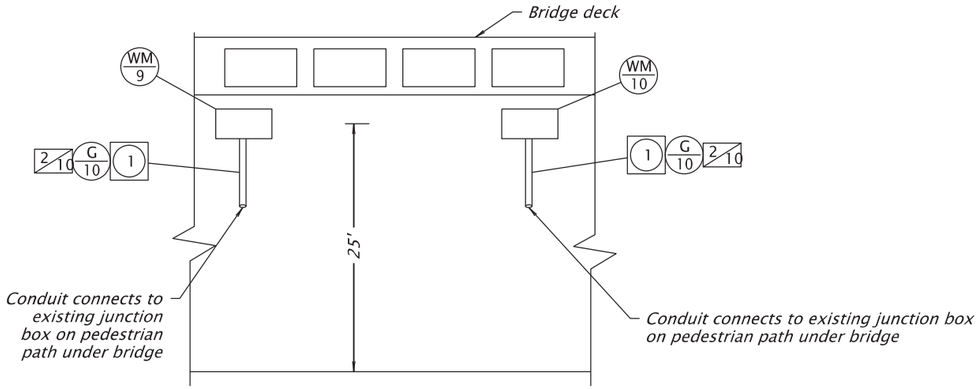

BENT 20 WALL MOUNT TYPE LUMINAIRE CONDUIT ROUTE
(NTS, LOOKING WEST)

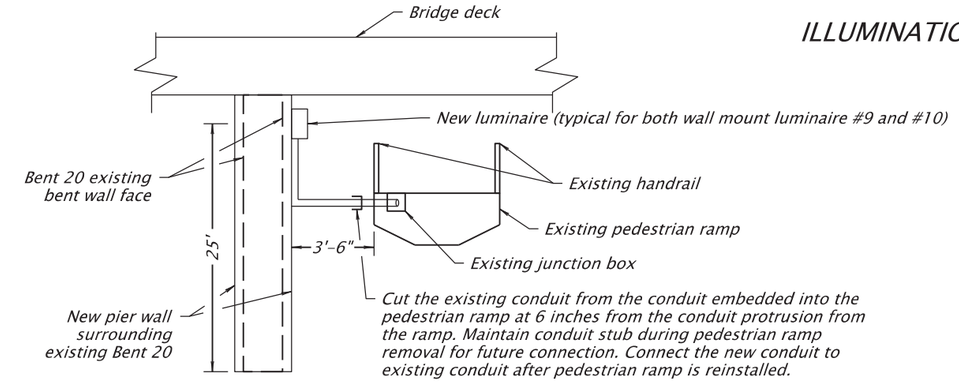

BENT 20 WALL MOUNT TYPE LUMINAIRE CONDUIT ROUTE
(NTS, LOOKING NORTH)

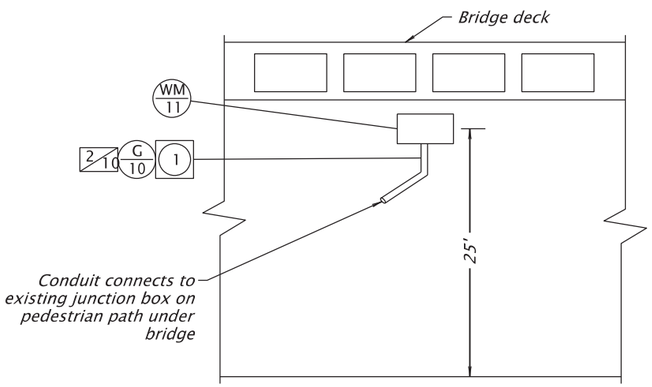

BENT 22 WALL MOUNT TYPE LUMINAIRE CONDUIT ROUTE
(NTS, LOOKING EAST)

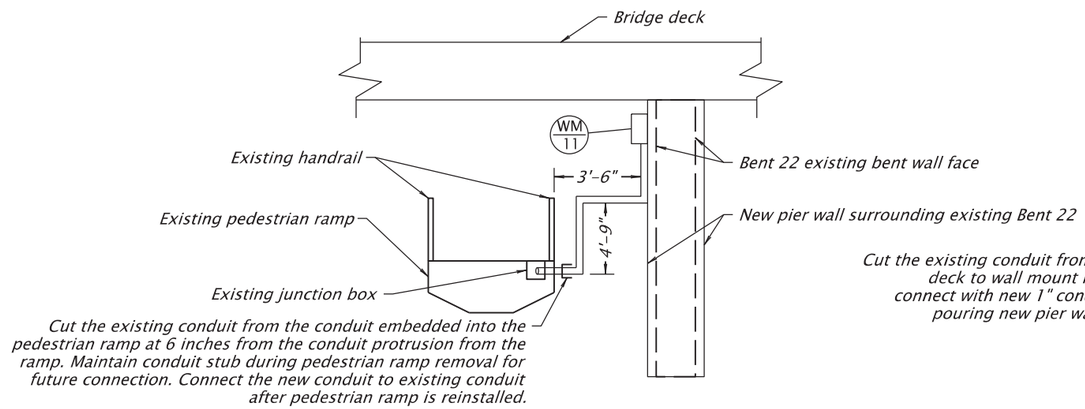

BENT 22 WALL MOUNT TYPE LUMINAIRE CONDUIT ROUTE
(NTS, LOOKING NORTH)

General Notes:

1. *Mount conduit to bridge structure with steel two hole clamps spaced per NEC recommendations.*
2. *Coordinate with Engineer before placing new wall mounted streetlights on Bent structure.*

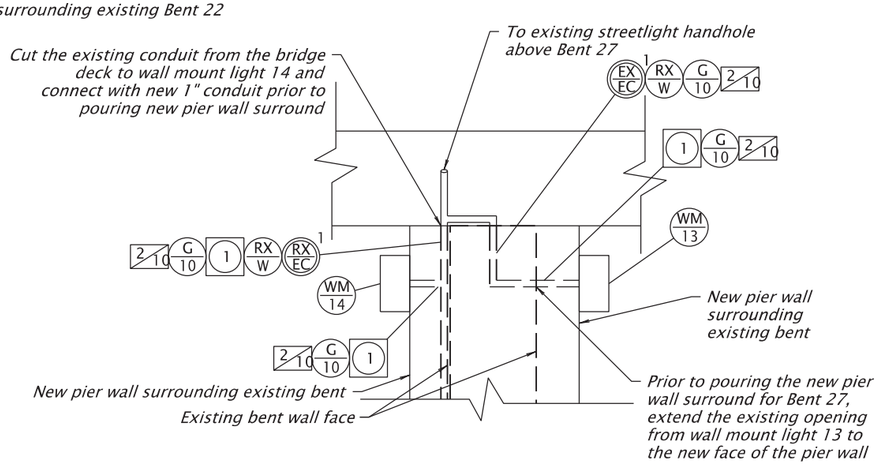

BENT 27 WALL MOUNT TYPE LUMINAIRE CONDUIT ROUTE
(NTS, LOOKING NORTH)

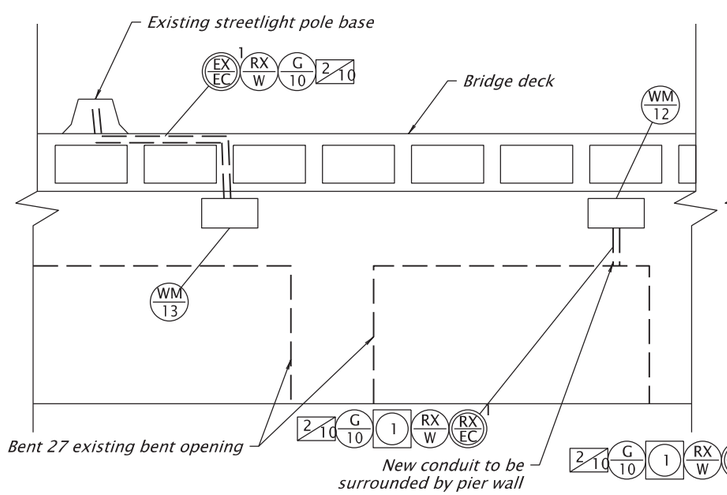

BENT 27 WALL MOUNT TYPE LUMINAIRE CONDUIT ROUTE
(NTS, LOOKING EAST)

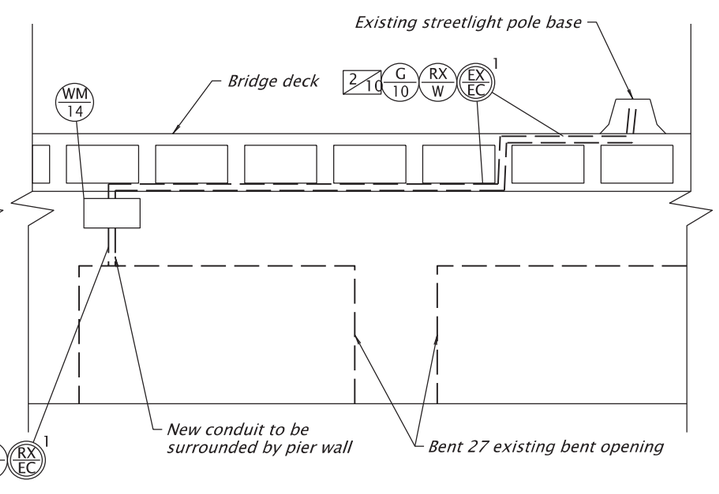

BENT 27 WALL MOUNT TYPE LUMINAIRE CONDUIT ROUTE
(NTS, LOOKING WEST)

REGISTERED PROFESSIONAL ENGINEER 56,267 OREGON JULY 9, 2002 SCOTT M. MANSUR
Digitally Signed: 2026.02.10 15:24:12-08'00'
EXPIRES: DEC. 31, 2026

FINAL ELECTRONIC DOCUMENT AVAILABLE UPON REQUEST

DKS
117 Commercial St. NE, Suite 310
Salem, Oregon 97301
(503) 391-8773
www.dksassociates.com

OR22: CENTER ST BRIDGE (PHASE 1) PROJECT
WILLAMINA-SALEM HIGHWAY
MARION & POLK COUNTIES

HWY:	
M.P.:	
UNIT FILE CODE	I-03786
DFI/TSSU NO.	N/A

Designer: A. Meeks-Buckland
Reviewer: B. Lindell
Drafter: C. Tower
Checker: S. Mansur

ILLUMINATION DETAILS

SHEET NO. PA11

ILLUMINATION DETAILS

SERVICE CABINET - W/MULTI-CIRCUIT ILLUMINATION (REV 4-19-2024)

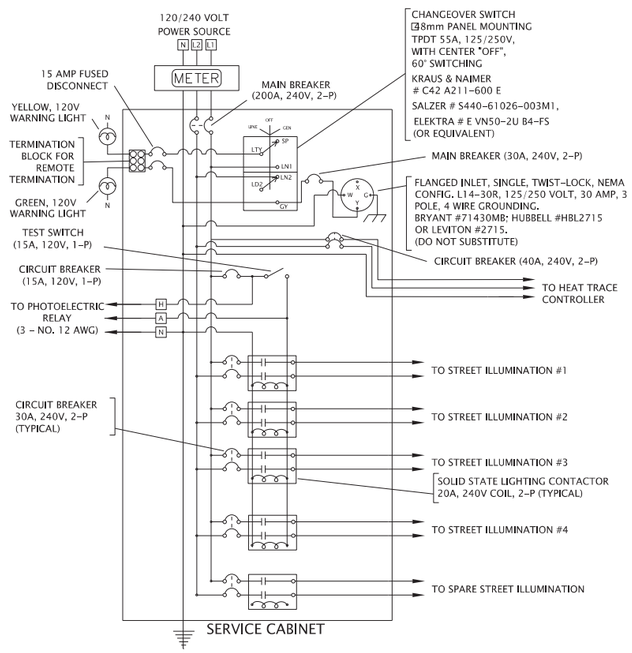

METERED TRAFFIC SIGNAL AND STREET LIGHTING SERVICE CABINET WIRING
WITH 240 VOLT ILLUMINATION

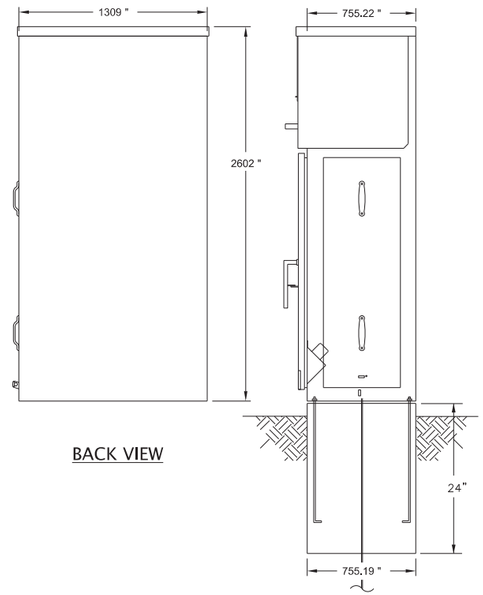

BACK VIEW

RIGHT SIDE
COVERS IN PLACE - MOUNTED ON PAD

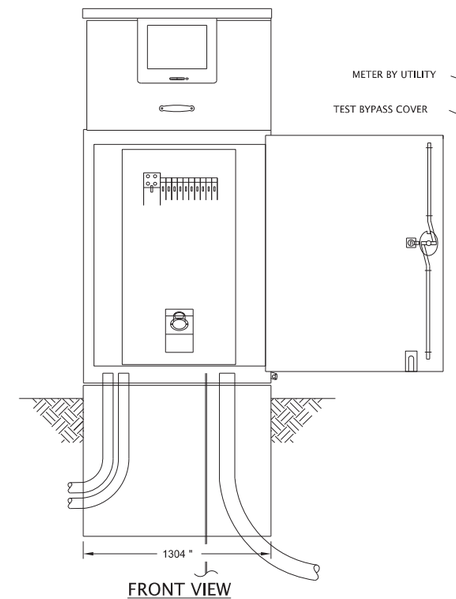

FRONT VIEW

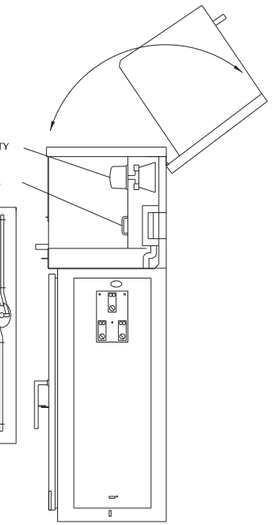

RIGHT SIDE
HOOD OPEN, COVER REMOVED

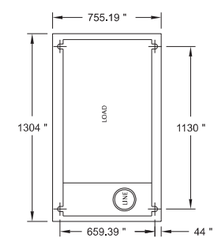

TOP VIEW
FOUNDATION AND
ANCHOR BOLT
LAYOUT

SCL 2G — BASE MOUNTED SERVICE CABINET WITH METER, TRANSFER SWITCH, MULTIPLE ILLUMINATION CIRCUIT CAPABILITY

NO SCALE

SERVICE CABINET CONSTRUCTION NOTES

1. POWER SERVICE CABINET SHALL BE A TAMPER RESISTANT, SLIMLINE, WEATHERPROOF, PAD MOUNTED PEDESTAL WITH MAIN AND SUBFEED CIRCUIT BREAKERS AND CONTROLS AS SHOWN.
2. CONSTRUCTION WILL BE NEMA 3R AND 12, RAINTIGHT AND DUST TIGHT.
3. METAL WORK SHALL BE FABRICATED FROM: EXTERNAL-1/8" ALUMINUM SHEET STOCK AND INTERNAL-14 Ga. COLD ROLLED STEEL, ELECTRICALLY WELDED AND REINFORCED WHERE REQUIRED.
4. EXTERNAL CORNERS AND SEAMS SHALL BE GROUND SMOOTH.
5. ANODIZE AFTER FABRICATION.
6. ALL NUTS, BOLTS, AND SCREWS WILL BE STAINLESS STEEL.
7. NUTS, BOLTS & SCREWS WILL NOT BE VISIBLE FROM OUTSIDE OF ENCLOSURE.
8. HINGES SHALL BE CONTINUOUS ALUMINUM PIANO TYPE.
9. WHEN USING AUXILIARY POWER, SLIDING COVER FOR CORD PORTAL MUST SLIDE UPWARD HIGH ENOUGH TO ALLOW UNOBSTRUCTED PASSAGE THROUGH THE CORD PORTAL WHEN ENCLOSURE DOOR IS CLOSED. WHEN ENCLOSURE DOOR IS CLOSED AND CORD PORTAL IS NOT IN USE, SLIDING COVER MUST EXTEND UNDER CABINET FACE ASSURING THAT PORTAL COVER CANNOT BE LIFTED.
10. ENCLOSURE WILL BE FACTORY WIRED AND CONFORM TO REQUIRED NEMA AND UL STANDARDS.
11. CONTROL WIRING SHALL BE SEVEN STRAND NO. 14 TW EXCEPT FOR HINGE WIRING, WHICH SHALL BE 19 STRAND NO. 14 THHN.
12. WIRING SHALL BE ARRANGED SO THAT ANY PIECE OF APPARATUS MAY BE REMOVED WITHOUT DISCONNECTING ANY WIRING EXCEPT THE LEADS TO PERMANENT CLIP SLEEVE WIRE MARKERS.
13. ALL WIRING WILL BE MARKED AT BOTH ENDS BY PERMANENT WIRE MARKERS.
14. A PLASTIC COVERED WIRING DIAGRAM WILL BE ATTACHED TO THE INSIDE OF THE FRONT DOOR.
15. NAMEPLATES SHALL BE PROVIDED FOR EACH CONTROL COMPONENT.
16. CABINET SHALL HAVE A 508 UL LABEL "INDUSTRIAL CONTROL PANEL" UL 508.
17. THE SERVICE CABINET SHALL CONFORM TO THE SPECIAL PROVISIONS AND BE SIMILAR IN DESIGN TO THE TESCO MODEL 24-200H OR FOUCH 200 AMP SERVICE MODEL NUMBER 0600-0155 SERVICE PEDESTAL. IT SHALL MEET EUSERC 308 AND HAVE A HINGED LID WITH A MAXIMUM 25 LB LIFTING FORCE.
18. TEST BYPASS (FROM EUSERC 308):
    a. TEST-BYPASS COMPARTMENT COVERS SHALL BE SEALABLE AND PROVIDED WITH A LIFTING HANDLE. COVERS EXCEEDING 16 INCHES IN WIDTH SHALL REQUIRE TWO LIFTING HANDLES.
    b. TEST-BYPASS BLOCKS WITH RIGID BARRIERS SHALL BE FURNISHED, INSTALLED AND WIRED OR BUSSED TO THE METER SOCKET BY THE MANUFACTURER. CONNECTION SEQUENCES SHALL BE LINE-LOAD FROM LEFT TO RIGHT AND CLEARLY IDENTIFIED BY ¾ INCH MINIMUM BLACK LETTER LABELING. SEE DRAWINGS 311 AND 312 FOR TEST-BYPASS BLOCK DETAILS.
    c. TEST-BYPASS SECTION SHALL BE INSTALLED WITH THE FOLLOWING CLEARANCES:
        a. 3-INCHES OF VERTICAL CLEARANCE FROM THE UPPER TEST CONNECTOR STUD TO THE UPPER COMPARTMENT ACCESS OPENING AND 3-INCHES FROM THE CENTER OF THE CABLE TERMINAL SCREW TO THE LOWER COMPARTMENT ACCESS OPENING.
        b. 1-1/2 INCHES OF SIDE CLEARANCE FROM THE RIGID INSULATING BARRIERS TO THE COMPARTMENT SIDES AND 1 INCH TO THE COMPARTMENT ACCESS OPENING.
19. SERVICE CABINET MUST BE SUITABLE FOR USE ON A CIRCUIT CAPABLE OF DELIVERING UP TO 10,000 RMS SYMMETRICAL AMPERES AND 240 VOLTS.

HWY:	
M.P.:	
UNIT FILE CODE	I-03787
DFI/TSSU NO.	N/A

REGISTERED PROFESSIONAL ENGINEER 56,267
Digitally Signed 2026.02.10 15:20:07-08'00'
OREGON
JULY 9, 2002
SCOTT M. MANSUR
EXPIRES: DEC. 31, 2026

FINAL ELECTRONIC DOCUMENT
AVAILABLE UPON REQUEST

DKS
117 Commercial St. NE, Suite 310
Salem, Oregon 97301
(503) 391-8773
www.dksassociates.com

OREGON DEPARTMENT OF TRANSPORTATION

OR22: CENTER ST BRIDGE (PHASE 1) PROJECT
WILLAMINA-SALEM HIGHWAY
MARION & POLK COUNTIES

Designer: A. Meeks-Buckland | Reviewer: B. Lindell
Drafter: C. Tower | Checker: S. Mansur

ILLUMINATION DETAILS

SHEET NO. PA12

ILLUMINATION DETAILS

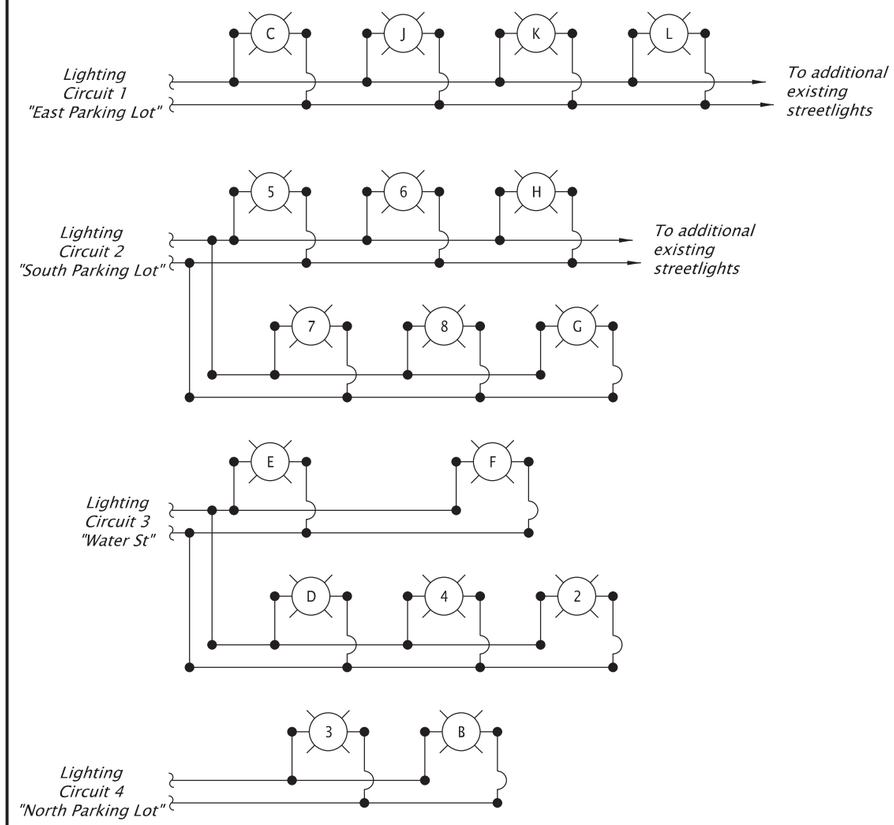

LEGEND

- (X) Luminaire Pole (X=pole number or identification letter)
- UPC — Chromalox UPC Power Connection Kit
- UMC — Chromalox UMC Power Connection Kit

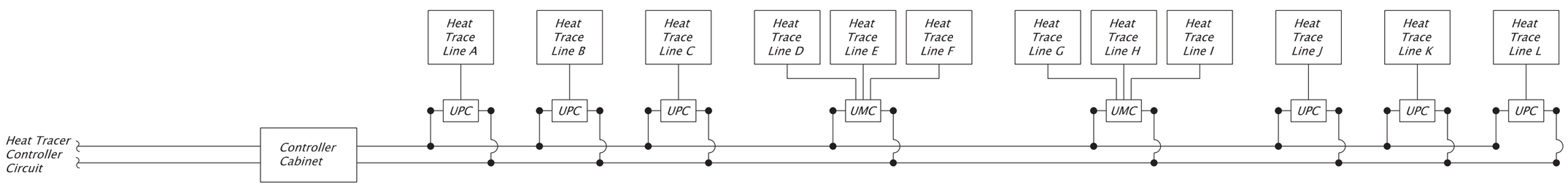

HWY:	
M.P.:	
UNIT FILE CODE	I-03788
DFI/TSSU NO.	N/A

REGISTERED PROFESSIONAL ENGINEER 56,267 OREGON JULY 9, 2002 SCOTT M. MANSUR

Digitally Signed 2026.03.04 10:05:40-08'00'

EXPIRES: DEC. 31, 2026

FINAL ELECTRONIC DOCUMENT AVAILABLE UPON REQUEST

DKS
117 Commercial St. NE, Suite 310
Salem, Oregon 97301
(503) 391-8773
www.dksassociates.com

OREGON DEPARTMENT OF TRANSPORTATION

OR22: CENTER ST BRIDGE (PHASE 1) PROJECT
WILLAMINA-SALEM HIGHWAY
MARION & POLK COUNTIES

Designer: A. Meeks-Buckland
Reviewer: B. Lindell
Drafter: C. Tower
Checker: S. Mansur

ILLUMINATION DETAILS

SHEET NO. PA13

HEAT TRACE DETAILS

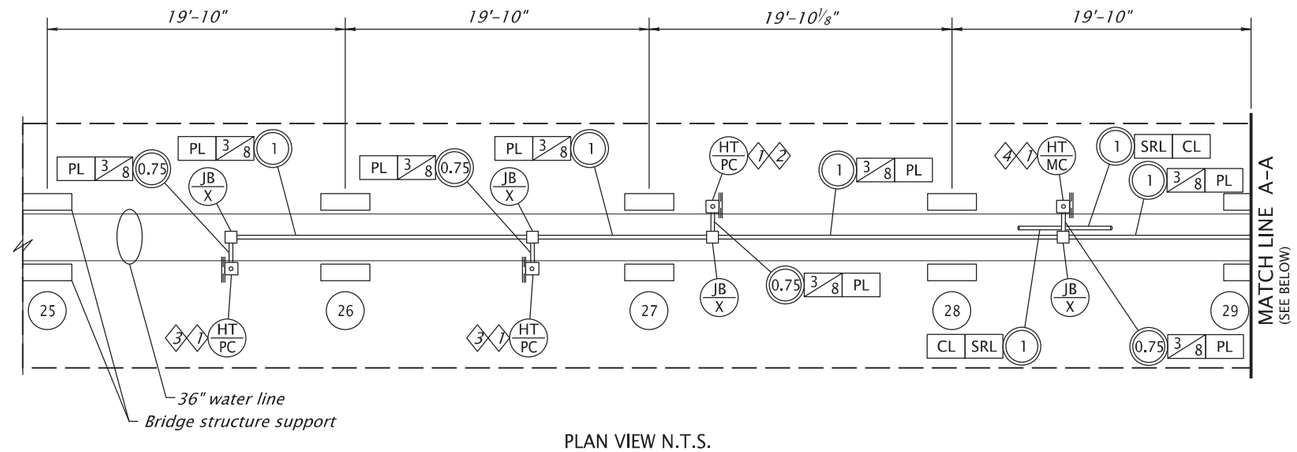

PLAN VIEW N.T.S.

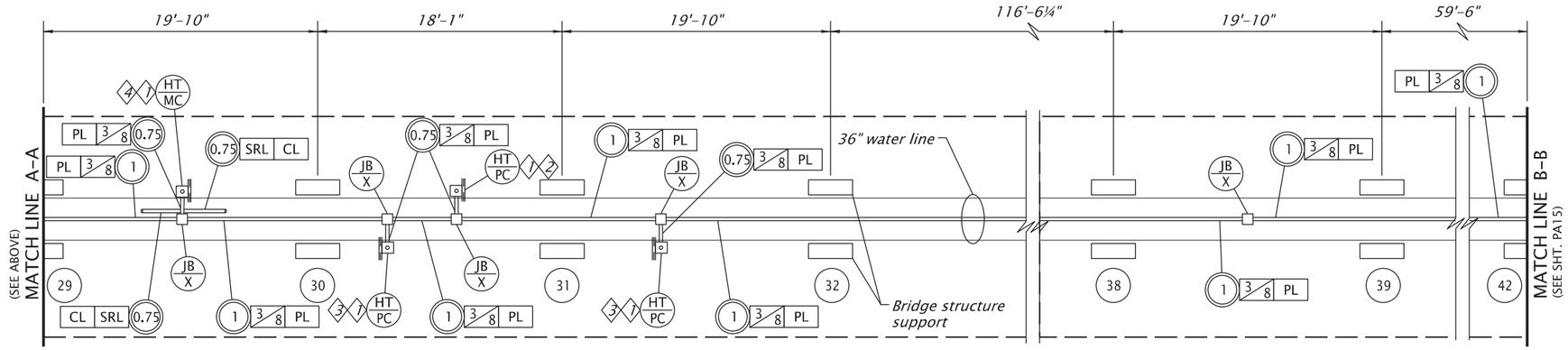

PLAN VIEW N.T.S.

Construction Notes:

1. *See manufacturer's mount installation detail and Sheet PA17 for mount connection details of power connection kit.*
2. *See Sheet PA16 for 1" valve heat trace assembly detail.*
3. *See Sheet PA16 for 4" valve heat trace assembly detail.*
4. *See Sheet PA16 for 1" valve heat trace assembly and multiple heat trace circuit connection details.*

General Notes:

1. *See Sheets RB03-RB05 for elevation views of waterline.*
2. *Mount conduit to bridge structure with steel two hole clamps spaced per NEC recommendations.*

HWY:	
M.P.:	
UNIT FILE CODE	I-03789
DFI/TSSU NO.	N/A

REGISTERED PROFESSIONAL ENGINEER 56,267 OREGON JULY 9, 2002 SCOTT M. MANSUR

Digitally Signed 2026.02.10 15:20:28-08'00'

EXPIRES: DEC. 31, 2026

FINAL ELECTRONIC DOCUMENT AVAILABLE UPON REQUEST

DKS
117 Commercial St. NE, Suite 310
Salem, Oregon 97301
(503) 391-8773
www.dksassociates.com

OREGON DEPARTMENT OF TRANSPORTATION

OR22: CENTER ST BRIDGE (PHASE 1) PROJECT
WILLAMINA-SALEM HIGHWAY
MARION & POLK COUNTIES

Designer: A. Meeks-Buckland
Reviewer: B. Lindell
Drafter: C. Tower
Checker: S. Mansur

HEAT TRACE DETAILS

SHEET NO. PA14

HEAT TRACE DETAILS

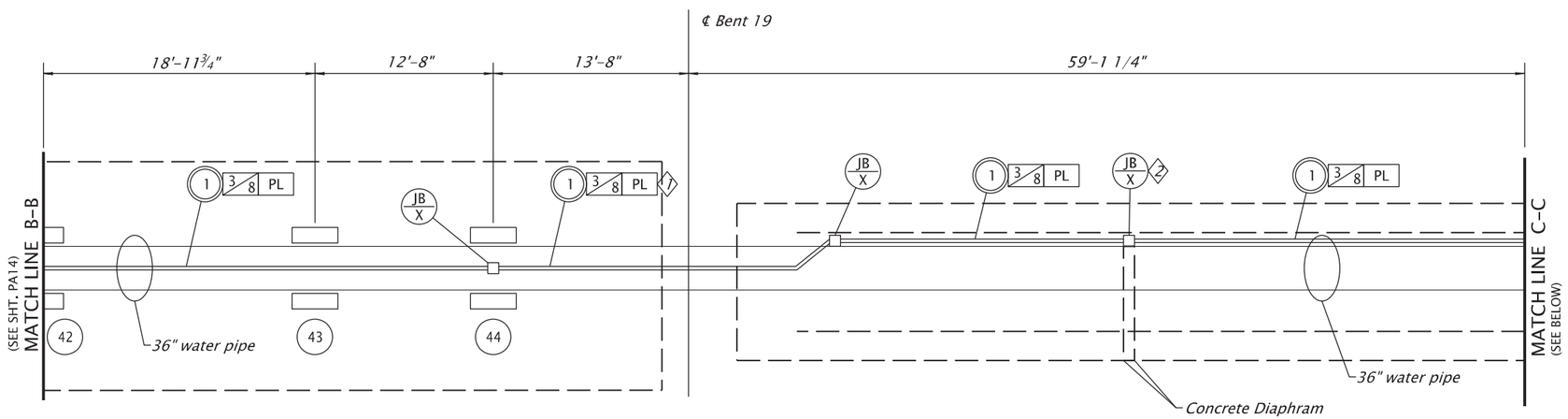

PLAN VIEW N.T.S.

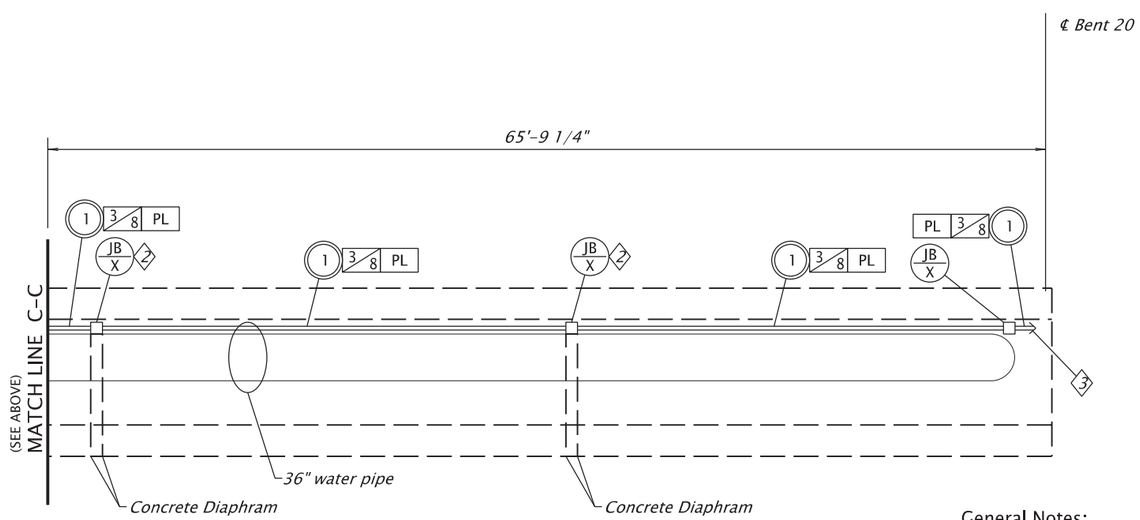

PLAN VIEW N.T.S.

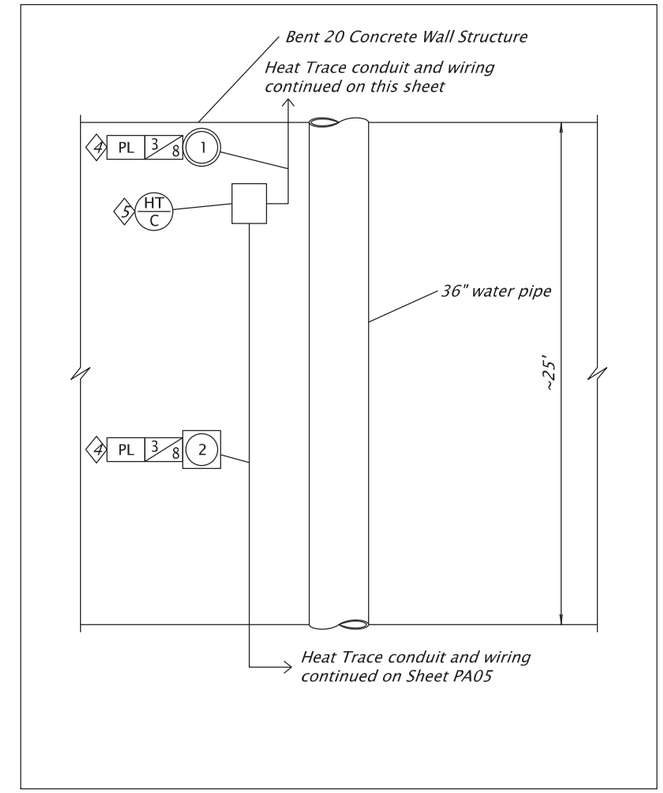

ELEVATION VIEW - BENT 20
FACING SOUTHEAST
N.T.S.

Construction Notes:

1. *See detail on Sheet PA17 for conduit routing through bridge expansion joint.*
2. *See Junction Box Girder Attachment detail on Sheet PA17 for connection details.*
3. *Conduit elbows down 90 degrees to head along Bent 20. See Elevation View – Bent 20 on this sheet for continuation of heat trace electrical system routing.*
4. *Mount conduit to Bent 20 wall face.*
5. *Install controller cabinet to Bent 20 wall face following manufacturer's recommendation. Mount as shown on Stainless Steel ITC Controller Cabinet Mount Detail, see Sheet PA16.*

General Notes:

1. *See Sheets RB03-RB05 for elevation views of waterline.*
2. *Mount conduit to bridge structure with steel two hole clamps spaced per NEC recommendations.*

REGISTERED PROFESSIONAL ENGINEER 56,267
Digitally Signed 2026.02.10 15:20:39-08'00'
OREGON
JULY 9, 2002
SCOTT M. MANSUR
EXPIRES: DEC. 31, 2026

FINAL ELECTRONIC DOCUMENT AVAILABLE UPON REQUEST

DKS
117 Commercial St. NE, Suite 310
Salem, Oregon 97301
(503) 391-8773
www.dksassociates.com

OREGON DEPARTMENT OF TRANSPORTATION

OR22: CENTER ST BRIDGE (PHASE 1) PROJECT
WILLAMINA-SALEM HIGHWAY
MARION & POLK COUNTIES

HWY:	
M.P.:	
UNIT FILE CODE	I-03790
DFI/TSSU NO.	N/A

Designer: A. Meeks-Buckland — Reviewer: B. Lindell
Drafter: C. Tower — Checker: S. Mansur

HEAT TRACE DETAILS

SHEET NO. PA15

HEAT TRACE DETAILS

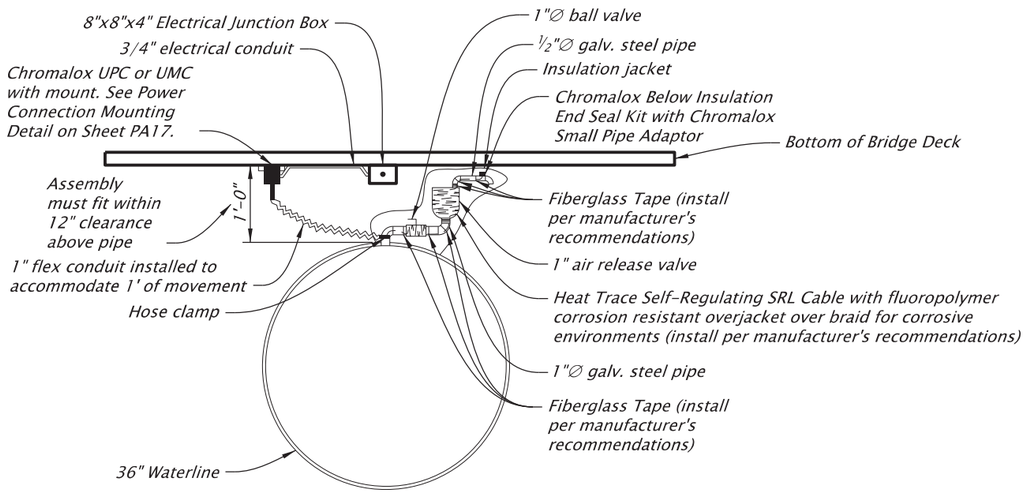

1" VALVE HEAT TRACE ASSEMBLY DETAIL (TYPICAL)

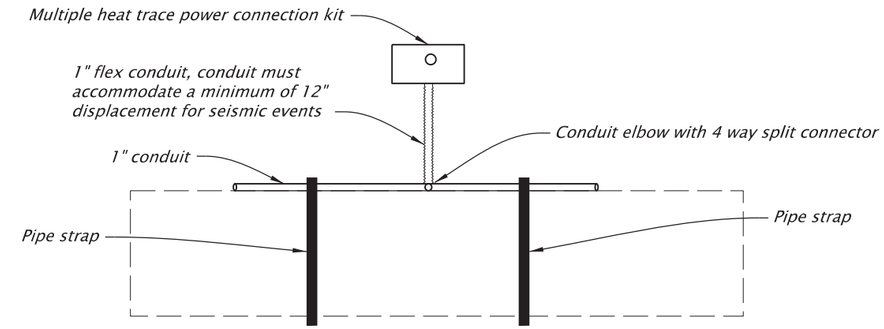

MULTIPLE HEAT TRACE CIRCUIT CONNECTION DETAIL (N.T.S.)

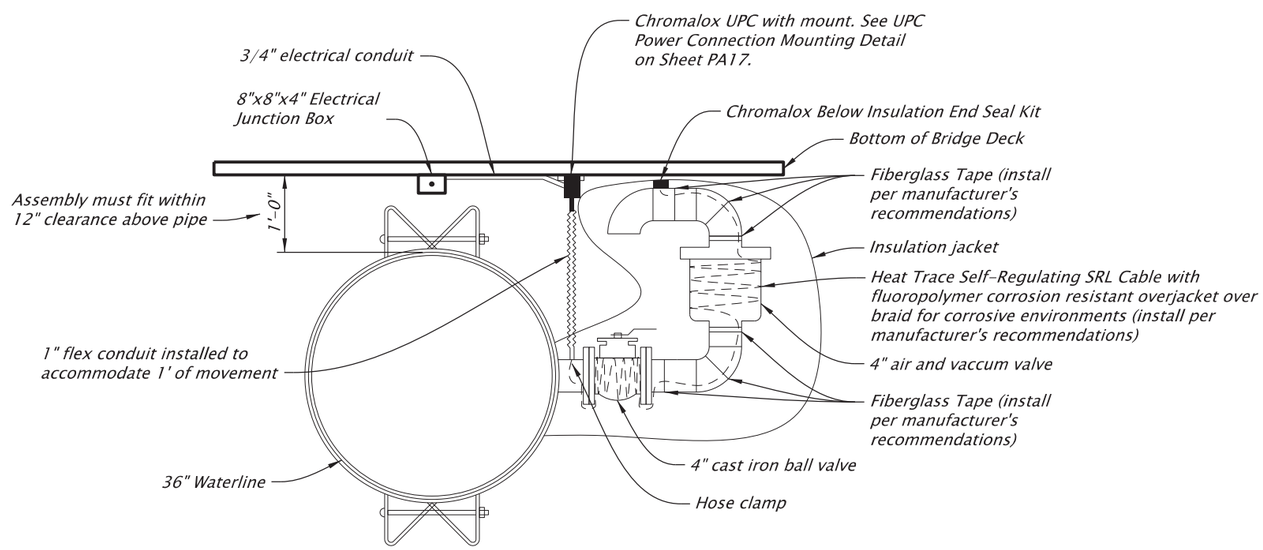

4" VALVE HEAT TRACE ASSEMBLY DETAIL (TYPICAL)

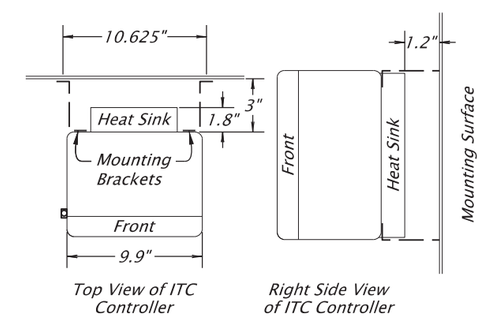

STAINLESS STEEL ITC CONTROLLER CABINET MOUNT DETAIL (N.T.S.)

REGISTERED PROFESSIONAL ENGINEER 56,267
Digitally Signed 2026.02.10 15:20:51-08'00'
OREGON
JULY 9, 2002
SCOTT M. MANSUR
EXPIRES: DEC. 31, 2026

DKS
117 Commercial St. NE, Suite 310
Salem, Oregon 97301
(503) 391-8773
www.dksassociates.com

OREGON DEPARTMENT OF TRANSPORTATION

OR22: CENTER ST BRIDGE (PHASE 1) PROJECT
WILLAMINA-SALEM HIGHWAY
MARION & POLK COUNTIES

HWY:	
M.P.:	
UNIT FILE CODE	I-03791
DFI/TSSU NO.	N/A

Designer: A. Meeks-Buckland
Reviewer: B. Lindell
Drafter: C. Tower
Checker: S. Mansur

HEAT TRACE DETAILS

SHEET NO. PA16

FINAL ELECTRONIC DOCUMENT AVAILABLE UPON REQUEST

HEAT TRACE DETAILS

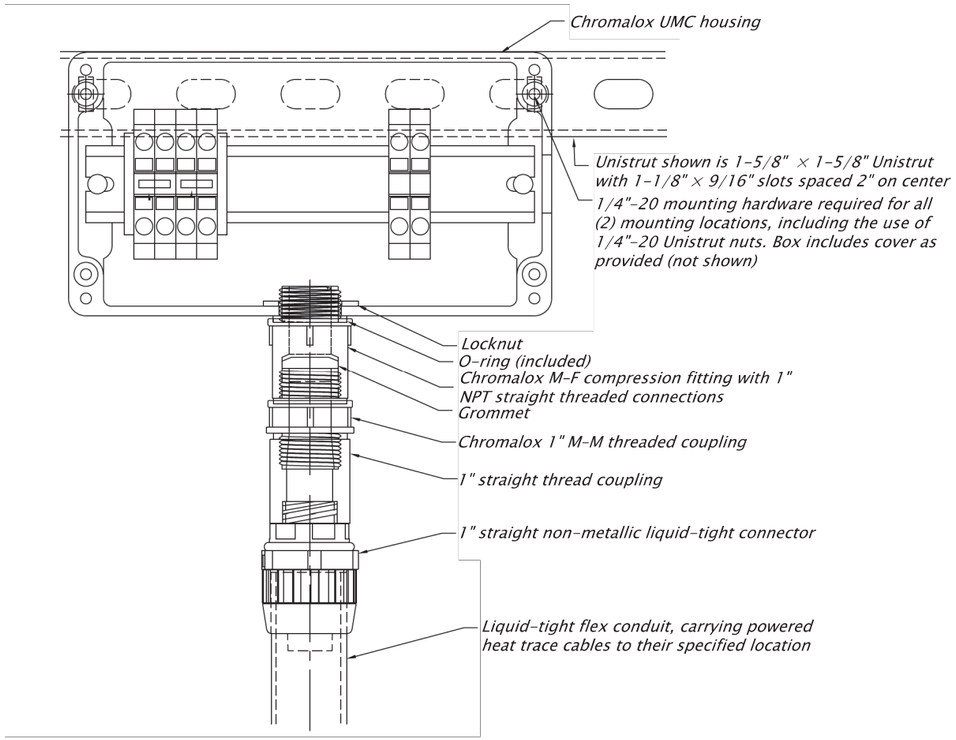

UMC POWER CONNECTION MOUNTING DETAIL (N.T.S.)

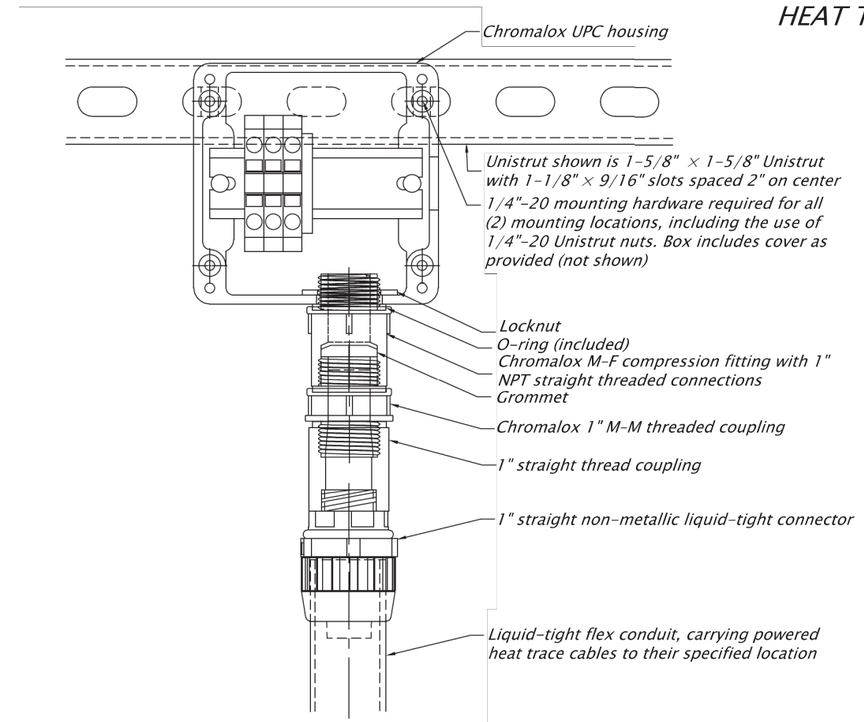

UPC POWER CONNECTION MOUNTING DETAIL (N.T.S.)

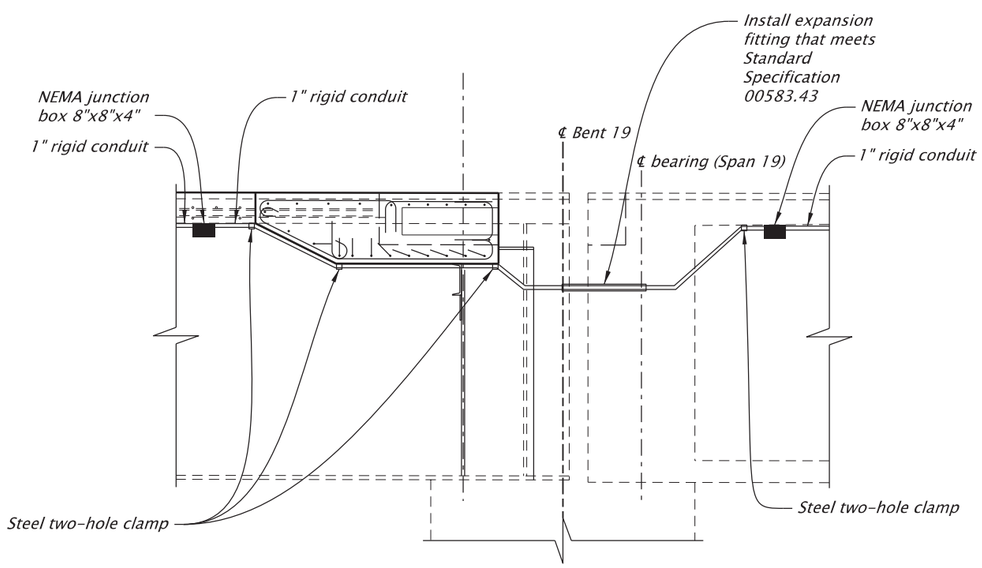

BRIDGE EXPANSION JOINT CONDUIT ROUTE DETAIL (N.T.S)

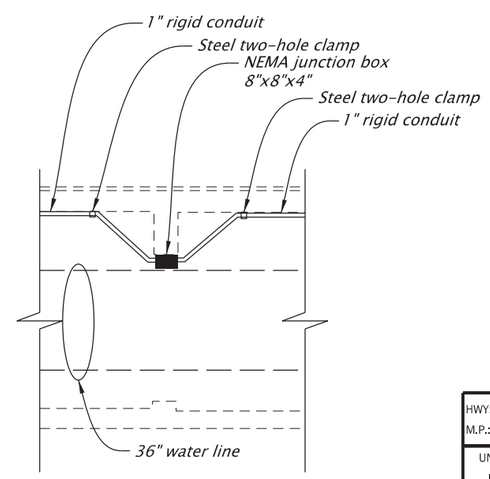

JUNCTION BOX GIRDER ATTACHMENT DETAIL (N.T.S)

HWY:	
M.P.:	
UNIT FILE CODE	I-03792
DFI/TSSU NO.	N/A

REGISTERED PROFESSIONAL ENGINEER 56,267 OREGON JULY 9, 2002 SCOTT M. MANSUR

Digitally Signed 2026.02.10 15:21:02-08'00'

EXPIRES: DEC. 31, 2026

FINAL ELECTRONIC DOCUMENT AVAILABLE UPON REQUEST

DKS
117 Commercial St. NE, Suite 310
Salem, Oregon 97301
(503) 391-8773
www.dksassociates.com

OREGON DEPARTMENT OF TRANSPORTATION

OR22: CENTER ST BRIDGE (PHASE 1) PROJECT
WILLAMINA-SALEM HIGHWAY
MARION & POLK COUNTIES

Designer: A. Meeks-Buckland
Reviewer: B. Lindell
Drafter: C. Tower
Checker: S. Mansur

HEAT TRACE DETAILS

SHEET NO. PA17

SIGNING & STRIPING PLAN
59V-051

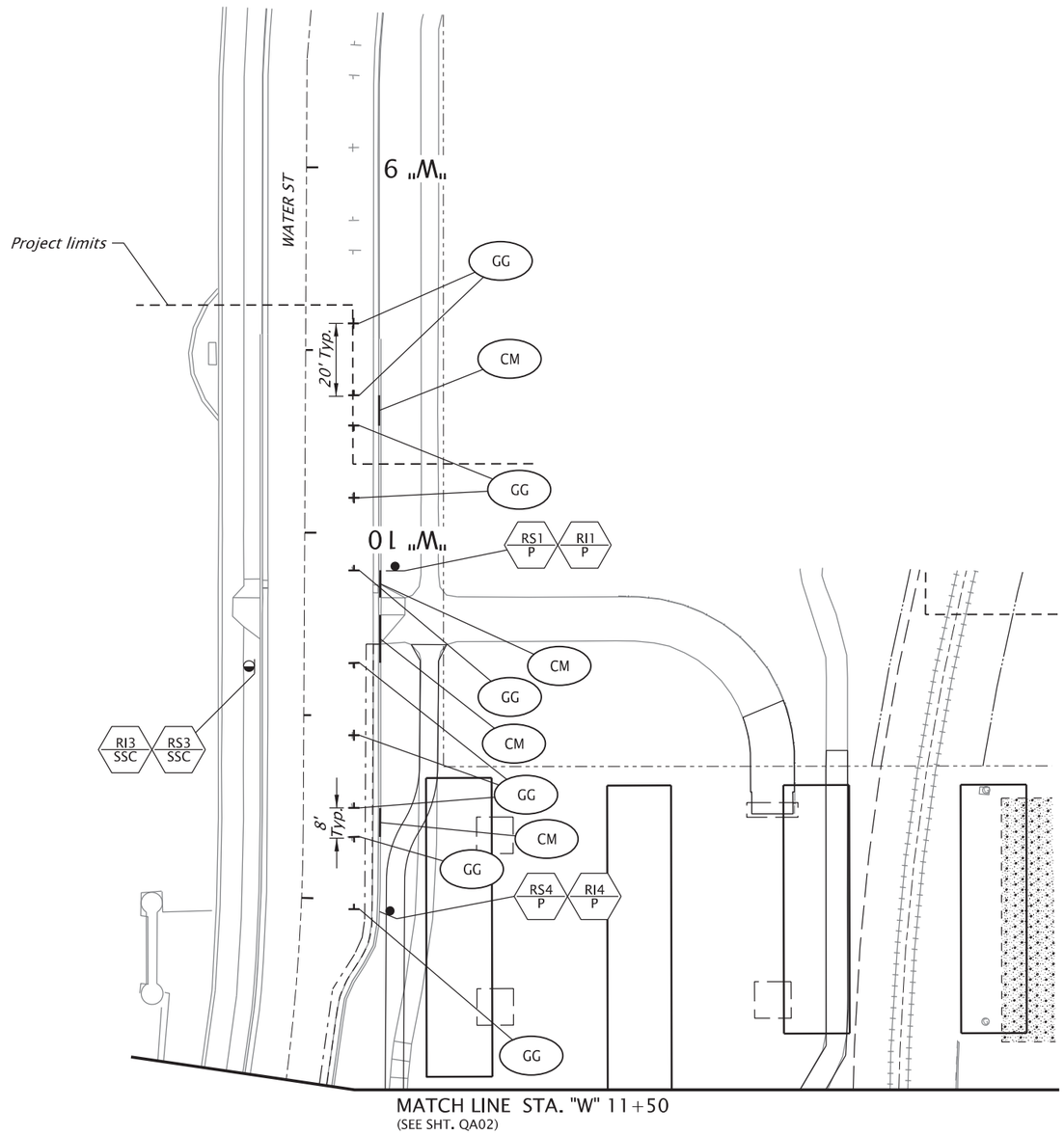

LEGEND

RSN / M — *Remove and save existing sign (N) and remove (M) sign support*

RIN / M — *Reinstall existing sign (N) on new (M) sign support*

N = Sign Number

M = Material

Material options:

P = Round Pipe Support (See detail on QB02)

SSC = Stainless Steel Clamp

GG — *Inst. City of Salem standard parallel parking tees. See detail on this sheet.*

CM — *Inst. painted yellow curb marking. See special provision section 00869 and detail GG for details.*

General Notes:

1. *All pavement legend details shall be installed as Type B-HS material.*
2. *Contractor to replace any on-street parking details that are impacted during construction.*

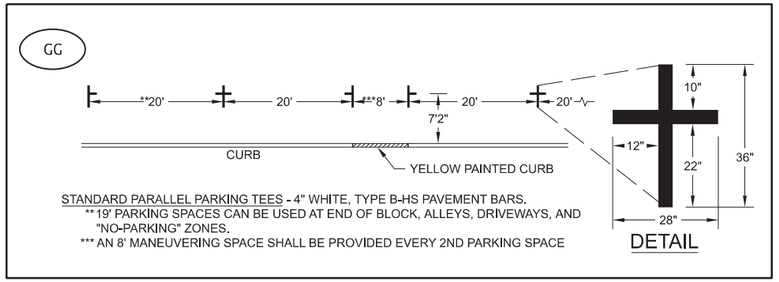

N

40 20 0 40
FEET

ACCOMPANIED BY DWGS.:
TM500-501, TM503, TM521, TM671, TM676-677, TM681, TM687, TM688, & TM689

HWY:
M.P.:
UNIT FILE CODE S-23440
DFI/TSSU NO.

REGISTERED PROFESSIONAL ENGINEER 56,267 OREGON JULY 9, 2002 SCOTT M. MANSUR
Digitally Signed 2026.03.04 10:06:24-08'00'
EXPIRES: DEC. 31, 2026

FINAL ELECTRONIC DOCUMENT AVAILABLE UPON REQUEST

DKS
117 Commercial St. NE, Suite 310
Salem, Oregon 97301
(503) 391-8773
www.dksassociates.com

OREGON DEPARTMENT OF TRANSPORTATION

OR22: CENTER ST BRIDGE (PHASE 1) PROJECT
WILLAMINA-SALEM HIGHWAY
MARION & POLK COUNTIES

Designer: N. Koenig
Reviewer: B. Lindell
Drafter: C. Tower
Checker: S. Mansur

SIGNING & STRIPING PLAN

SHEET NO. QA01

SIGNING & STRIPING PLAN
59V-051

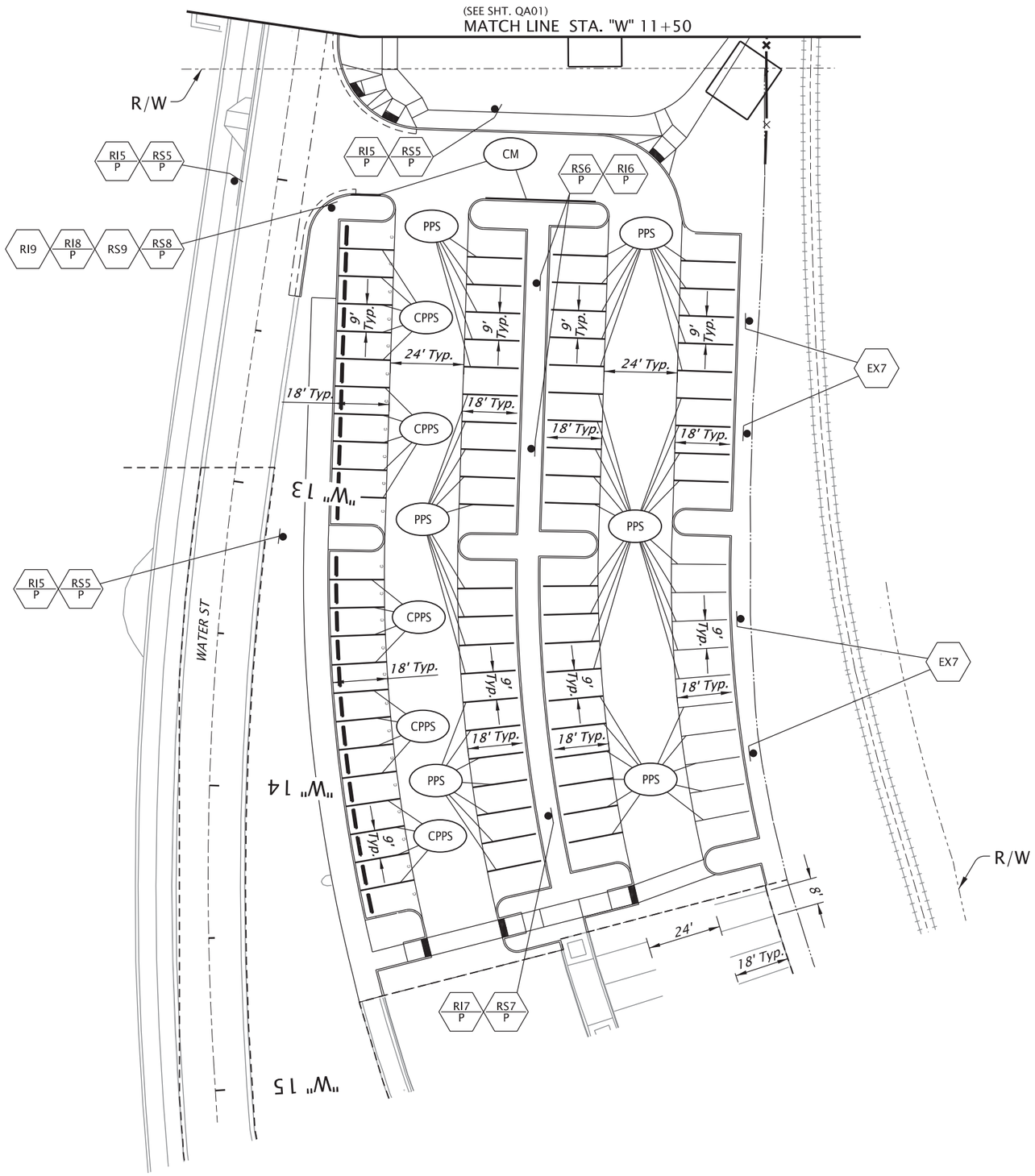

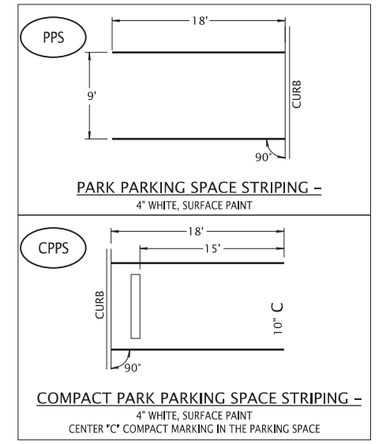

LEGEND

- RSN/M — *Remove and save existing sign (N) and remove (M) sign support*
- RSN — *Remove and save existing sign (N)*
- RIN — *Reinstall existing sign (N)*
- RIN/M — *Reinstall existing sign (N) on new (M) sign support*
- EXN — *Maintain and protect existing sign (N) and support*

N = Sign Number
M = Material
Material options:
P = Round Pipe Support (See detail on QB02)

- CM — *Inst. painted yellow curb marking*
- PPS — *Inst. park parking space striping. See detail on this sheet*
- CPPS — *Inst. compact park parking space striping. See detail on this sheet*

General Note:

1. *All parking stall striping shall be installed as surface applied paint.*

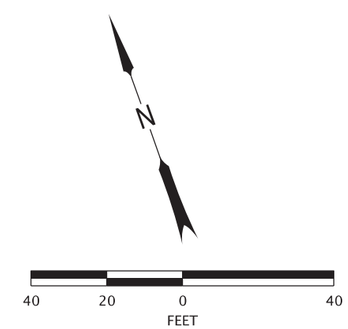

REGISTERED PROFESSIONAL ENGINEER 56,267 OREGON JULY 9, 2002 SCOTT M. MANSUR

Digitally Signed: 2026.03.04 10:06:33-08'00'

EXPIRES: DEC. 31, 2026

FINAL ELECTRONIC DOCUMENT AVAILABLE UPON REQUEST

DKS
117 Commercial St. NE, Suite 310
Salem, Oregon 97301
(503) 391-8773
www.dksassociates.com

OREGON DEPARTMENT OF TRANSPORTATION

OR22: CENTER ST BRIDGE (PHASE 1) PROJECT
WILLAMINA-SALEM HIGHWAY
MARION & POLK COUNTIES

HWY:	
M.P.:	
UNIT FILE CODE	S-23441
DFI/TSSU NO.	

Designer: N. Koenig — Reviewer: B. Lindell
Drafter: C. Tower — Checker: S. Mansur

SIGNING & STRIPING PLAN

SHEET NO. QA02

SIGNING & STRIPING PLAN
59V-051

General Notes:

1. All pavement legend details shall be installed as Type B-HS material.
2. All longitudinal striping on Center St Bridge shall be installed as thermoplastic extruded surface non-profiled. See ODOT TM521 for additional details.
3. All longitudinal striping on Front St shall be installed as thermoplastic extruded surface non-profiled. See ODOT TM521 for additional details.

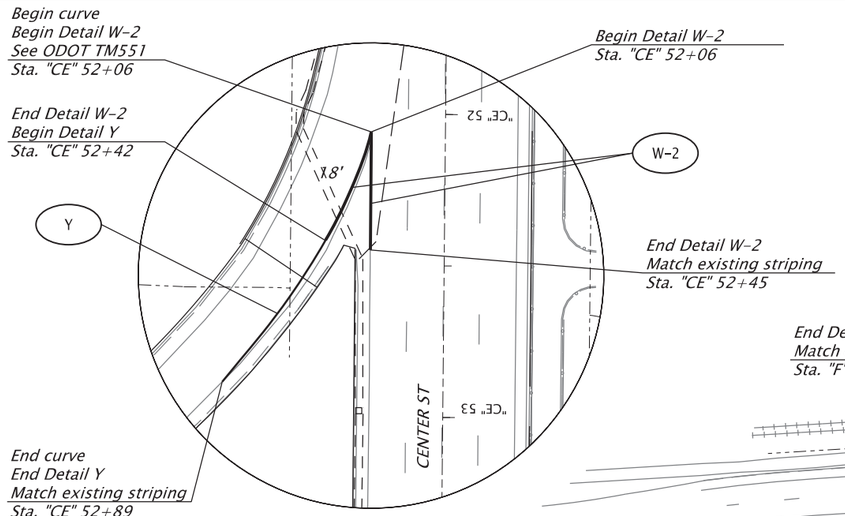

Detail B - SB Ramp Attenuator

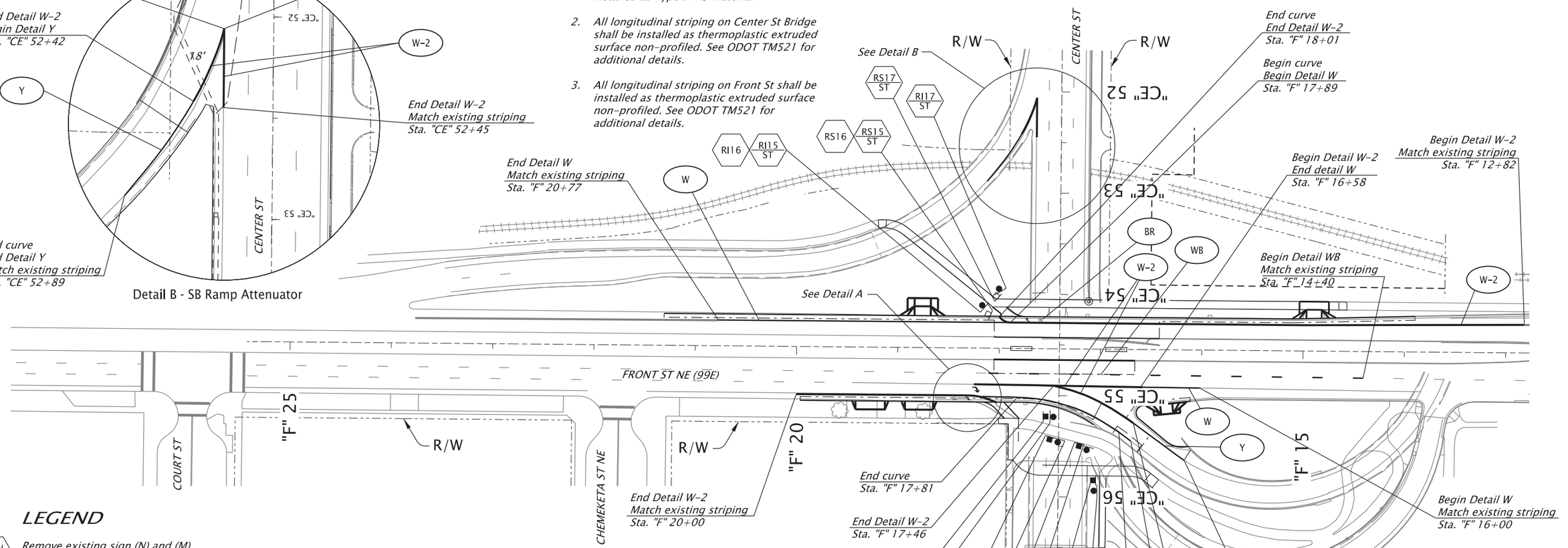

LEGEND

RXN/M	Remove existing sign (N) and (M) sign support
RXN	Remove existing sign (N)
RSN	Remove and save existing sign (N)
RSN/M	Remove and save existing sign (N) and remove (M) sign support
RIN	Reinstall existing sign (N)
RIN/M	Reinstall existing sign (N) on new (M) sign support
N/M	Install new sign (N) on new (M) sign support
N	Install new sign (N)

W	Inst. 4" white line
W-2	Inst. 8" white line
BR	Inst. bike right turn stencil (white)
Y	Inst. 4" yellow line
WB	Inst. 4" white broken line
RA	Inst. right turn arrow (white)

N = Sign Number

M = Material

Material options:

ST = Perforated Steel Square Tube Sign Support

W = Wood Sign Post

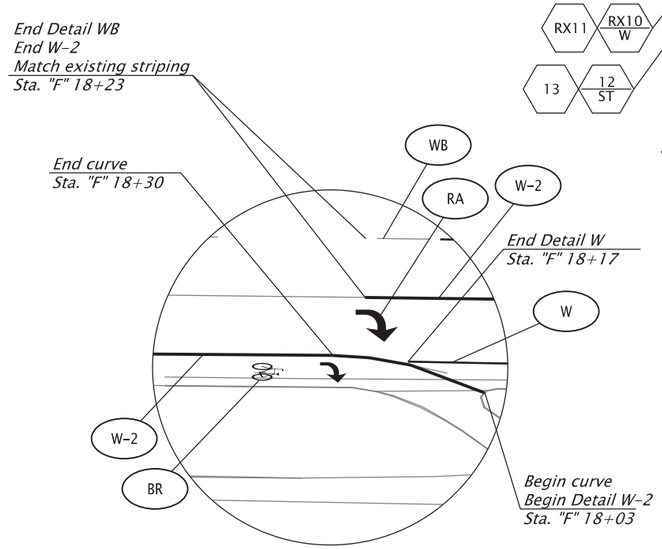

Detail A

HWY: 072
M.P.: 4.93-5.18
UNIT FILE CODE
S-23442
DFI/TSSU NO.

REGISTERED PROFESSIONAL ENGINEER 56,267
Digitally Signed 2026.03.04 10:06:46-08'00'
OREGON
JULY 9, 2002
SCOTT M. MANSUR
EXPIRES: DEC. 31, 2026

DKS
117 Commercial St. NE, Suite 310
Salem, Oregon 97301
(503) 391-8773
www.dksassociates.com

OREGON DEPARTMENT OF TRANSPORTATION

OR22: CENTER ST BRIDGE (PHASE 1) PROJECT
WILLAMINA-SALEM HIGHWAY
MARION & POLK COUNTIES

Designer: N. Koenig
Reviewer: B. Lindell
Drafter: C. Tower
Checker: S. Mansur

SIGNING & STRIPING PLAN

SHEET NO. QA03

FINAL ELECTRONIC DOCUMENT AVAILABLE UPON REQUEST

SIGN DETAILS & SIGN AND POST DATA TABLE

59V-051

SIGN NO.	SIGN LOCATION 4/	SIGN DIMENSIONS		SUB-STRATE				COLOR 1/ BACK-GROUND		COLOR 1/ LEGEND			LEGEND TYPE		SIGN NO. 2/																				POST		FOOTING		REMARKS 6/
		WIDTH	HEIGHT	PLYWOOD	SHEET ALUMINUM	EXTRUDED ALUMINUM (ODOT TM675)	DOUBLE-SIDED	ASTM TYPE III OR TYPE IV	ASTM TYPE IX	ASTM TYPE III OR TYPE IV	ASTM TYPE IX	NON-REFLECTIVE	PERMANENT	DEMOUNTABLE		STEEL PIPE (SEE DETAIL ON SHEET QB02)	WOOD POST (ODOT TM670-671, TM676)	PERF. STEEL SQUARE TUBE (ODOT TM671, TM676, TM681, TM687-689)	TRIANGULAR BASE BREAKAWAY (ODOT TM602)	MULTI-POST BREAKAWAY (ODOT TM220, TM600-601)	STAINLESS STEEL CLAMP (SSC) (TM677)	SIGNAL POLE MOUNT (ODOT TM680)	BRIDGE RAIL MOUNT	STRUCTURE MOUNT	CANTILEVER	CROSSWALK CLOSURE BARRICADE (ODOT TM240)	VERTICAL SIGN MOUNT ON EXISTING STRUCTURE	ADJUSTABLE SIGN MOUNT	MAST ARM SNS MOUNT	SECONDARY SIGN (TM676 & TM678) C 4 X 5.4	C 4 X 7.25	ROUTE MARKER FRAME (ODOT TM676 & TM678)	LENGTH (FT.)	SIZE (BASED ON ESTIMATED LENGTH)	LENGTH 5/ (MUST BE FIELD VERIFIED)	LOCATION 3/	MIN. DEPTH	
1	STA. "W" 10+10	EX	EX		✓			G		W			✓			✓																				14'	5'	V-LOCK	REMOVE AND REINSTALL EXISTING SIGN ON NEW PIPE SUPPORT
2	NOT USED																																						
3	STA. "W" 10+40	EX	EX		✓			G		W			✓		C						✓															-	3'	-	REMOVE AND REINSTALL EXISTING SIGN ON NEW SSC
4	STA. "W" 11+05	EX	EX		✓			W		R			✓		C	✓																				12'	3'	V-LOCK	REMOVE AND REINSTALL EXISTING SIGN ON NEW PIPE SUPPORT
5	STA. "W" 11+75	EX	EX		✓			W		R			✓		C	✓																				12'	8'	V-LOCK	REMOVE AND REINSTALL EXISTING SIGN ON NEW PIPE SUPPORT
	STA. "W" 12+00																																				3'		
	STA. "W" 13+15																																				3'		
6	STA. "W" 12+25	EX	EX		✓			W		G			✓		C	✓																				12'	4'	V-LOCK	REMOVE AND REINSTALL EXISTING SIGN ON NEW PIPE SUPPORT
	STA. "W" 12+75																																				12'	4'	
7	STA. "W" 14+10	EX	EX		✓			W		G			✓		C	✓																				12'	4'	V-LOCK	REMOVE AND REINSTALL EXISTING SIGN ON NEW PIPE SUPPORT
8	STA. "W" 12+10	EX	EX		✓			W		R			✓		C	✓																				12'	3'	V-LOCK	REMOVE AND REINSTALL EXISTING SIGN ON NEW PIPE SUPPORT
9	STA. "W" 12+10	EX	EX		✓			W		R			✓		C																					-	-	-	REMOVE AND REINSTALL EXISTING SIGN UNDER SIGN NO. 8
12	STA. "F" 17+55	36"	36"		✓			Y		B			✓		C			✓																		14'	10'	1.5'	INSTALL NEW SIGN AND SLIP BASE PSST SUPPORT
13	STA. "F" 17+55	24"	24"		✓			Y		B			✓		C																					-	-	-	INSTALL NEW SIGN UNDER SIGN NO. 12
14	STA. "F" 17+00	(24")	(30")		✓			W		B			✓		C		✓																			14'	5'	4'	REMOVE AND SAVE EXISTING SIGN AND REMOVE EXISTING WOOD SUPPORT. REINSTALL SIGN ON NEW WOOD SUPPORT AT NEW LOCATION AS SHOWN ON SHEET QA03
	STA. "F" 17+15																																				5'		
	STA. "F" 17+40																																				5'		
15	STA. "F" 18+10	EX	EX		✓			W		B			✓		C			✓																		11'	3'	1.5'	REMOVE AND SAVE EXISTING SIGN AND REMOVE EXISTING PSST SUPPORT. REINSTALL SIGN ON SLIP BASE NEW PSST SUPPORT AT NEW LOCATION AS SHOWN ON SHEET QA03
16	STA. "F" 18+10	EX	EX		✓			W		B			✓		C																					-	-	-	REMOVE AND REINSTALL EXISTING SIGN UNDER SIGN NO. 15 AS SHOWN ON SHEET QA03
17	STA. "F" 17+95	EX	EX		✓			W		B			✓		C			✓																		10'	5'	1.5'	REMOVE AND SAVE EXISTING SIGN AND REMOVE EXISTING PSST SUPPORT. REINSTALL SIGN ON SLIP BASE NEW PSST SUPPORT AT NEW LOCATION AS SHOWN ON SHEET QA03

1/
BK=BLACK
BL=BLUE
BR=BROWN
FY=FLUORESCENT YELLOW
G=GREEN
O=ORANGE
P=PURPLE
R=RED
RB=RED-BLUE
SW=SILVER-WHITE
W=WHITE
Y=YELLOW
YG=FLOURESCENT YELLOW-GREEN

2/
L,C,R ARE LOCATIONS OF POSTS FACING THE SIGN.
L = LEFT POST
C = CENTER POST
R = RIGHT POST

3/
DISTANCE FROM EDGE OF TRAVEL LANE, FACE OF CURB, GUARDRAIL, OR FROM THE CENTERLINE. FOR ADDITIONAL INFORMATION SEE STANDARD DRAWINGS TM200 AND TM635

4/
THE LOCATIONS SHOWN ARE APPROXIMATE EXCEPT FOR SPEED ZONES, SCHOOL ZONES, OBJECT MARKERS AND MILEPOST MARKERS. EXACT LOCATIONS ARE TO BE DETERMINED BY THE ENGINEER

5/
POST LENGHTS SHOWN ARE FOR REFERENCE ONLY CONTRACTOR SHALL COMPLETE APPROPRIATE FIELD VERIFICATION OF POST LENGTHS FROMS FOR EACH SIGN SUPPORT. FORMS ARE AVAILABLE FROM THE ENGINEER.

6/
FOR PSST SLIP BASE INSTALLATIONS, REFER TO THE STANDARD DRAWINGS TM688.

(##) = EXISTING SIGN DIMENSIONS
EX = EXISTING

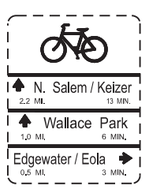

Sign No. 1

NOT USED

Sign No. 2

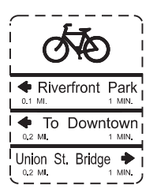

Sign No. 3

Sign No. 4

Sign No. 5

Sign No. 6

Sign No. 7

Sign No. 8

Sign No. 9

Sign No. 10

Sign No. 11

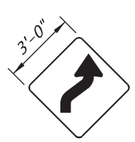

W1-4R
Sign No. 12
36"x36"

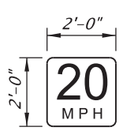

W13-1P
Sign No. 13
24"x24"

Sign No. 14

Sign No. 15

Sign No. 16

Sign No. 17

NOTE:
Signs shown with broken borders are existing signs.

HWY:
M.P.:
UNIT FILE CODE
S-23443
DFI/TSSU NO.

REGISTERED PROFESSIONAL ENGINEER 56,267
Digitally Signed 2026.03.04 10:05:54-08'00'
OREGON
JULY 9, 2002
SCOTT M. MANSUR
EXPIRES: DEC. 31, 2026

FINAL ELECTRONIC DOCUMENT AVAILABLE UPON REQUEST

DKS
117 Commercial St. NE, Suite 310
Salem, Oregon 97301
(503) 391-8773
www.dksassociates.com

OREGON DEPARTMENT OF TRANSPORTATION

OR22: CENTER ST BRIDGE (PHASE 1) PROJECT
WILLAMINA-SALEM HIGHWAY
MARION & POLK COUNTIES

Designer: N. Koenig
Reviewer: B. Lindell
Drafter: C. Tower
Checker: S. Mansur

SIGN DETAILS & SIGN AND POST DATA TABLE

SHEET NO. QB01

SIGN DETAILS
59V-051

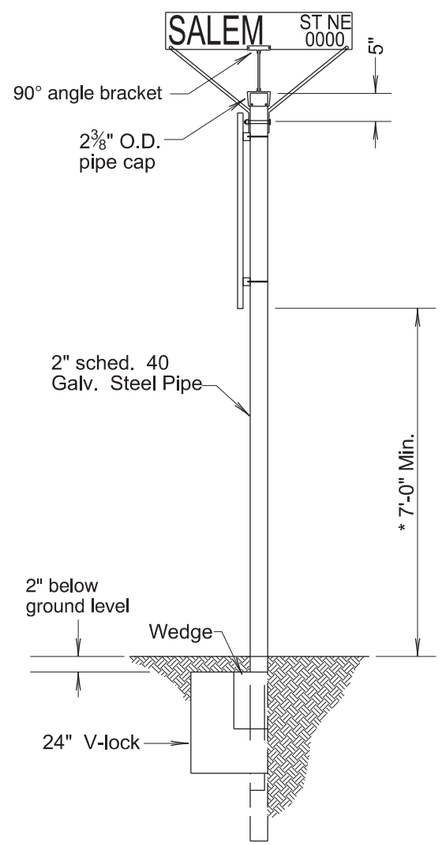

PIPE SIGN SUPPORT DETAIL
WITH POST MOUNTING SOCKET

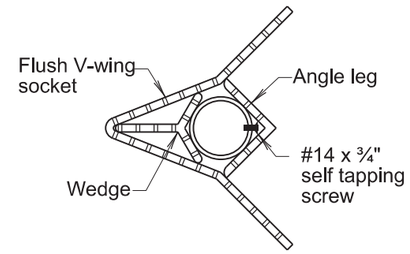

POST MOUNTING
SOCKET

GENERAL NOTES

1. Hot dip galvanize after fabrication Standard 2" welded steel pipe conform to the ASTM 'Specifications for Welded Steel Pipe' A120 and A123 for galvanizing.
2. All pipe shall be capped as approved by engineer when street name signs are not required.
3. These pipe supports are not breakaway and are to be used only in urban areas behind a vertical curb.
4. Mount pipe in V-Loc anchor (V-Loc is a metal sleeve anchor system to support the post).
5. Install V-Loc with top 2" below ground level.
6. V-Loc shall be tamped in firmly for support.
7. Breakaway devices required in raised island areas.

* 7'-0" is minimum height to bottom of lower sign in urban areas. 8'-0" is minimum height when signs are placed above a bike path

REGISTERED PROFESSIONAL ENGINEER 56,267
Digitally Signed 2026.03.04 10:06:03-08'00'
OREGON
JULY 9, 2002
SCOTT M. MANSUR
EXPIRES: DEC. 31, 2026

DKS
117 Commercial St. NE, Suite 310
Salem, Oregon 97301
(503) 391-8773
www.dksassociates.com

OREGON DEPARTMENT OF TRANSPORTATION

OR22: CENTER ST BRIDGE (PHASE 1) PROJECT
WILLAMINA-SALEM HIGHWAY
MARION & POLK COUNTIES

HWY:	
M.P.:	
UNIT FILE CODE	S-23444
DFI/TSSU NO.	

Designer: N. Koenig
Reviewer: B. Lindell
Drafter: C. Tower
Checker: S. Mansur

SIGN DETAILS

SHEET NO. QB02

FINAL ELECTRONIC DOCUMENT
AVAILABLE UPON REQUEST

59V-051

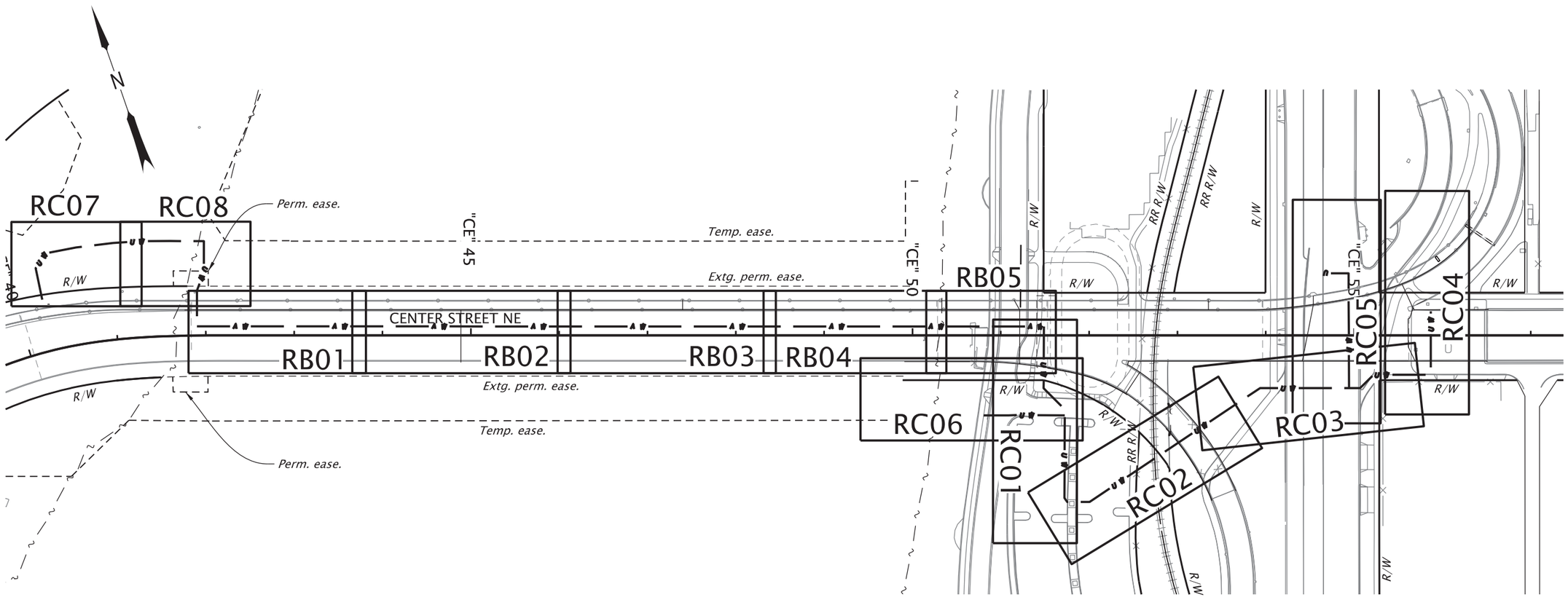

REGISTERED PROFESSIONAL ENGINEER
97292PE
Digitally Signed 2026.06.04 13:12:46-06'00'
OREGON
MAY 11, 2021
KEVIN R. JOHNSON

EXPIRES: JUNE 30, 2027

DOWL WWW.DOWL.COM

OREGON DEPARTMENT OF TRANSPORTATION

OR22: CENTER ST BRIDGE (PHASE 1) PROJECT
WILLAMINA-SALEM HIGHWAY
MARION & POLK COUNTIES

Designer: Kevin Johnson
Reviewer:
Drafter: Steve Wolfer
Checker:

WATERLINE KEY MAP

SHEET NO.
RA01

FINAL ELECTRONIC DOCUMENT
AVAILABLE UPON REQUEST

59V-051

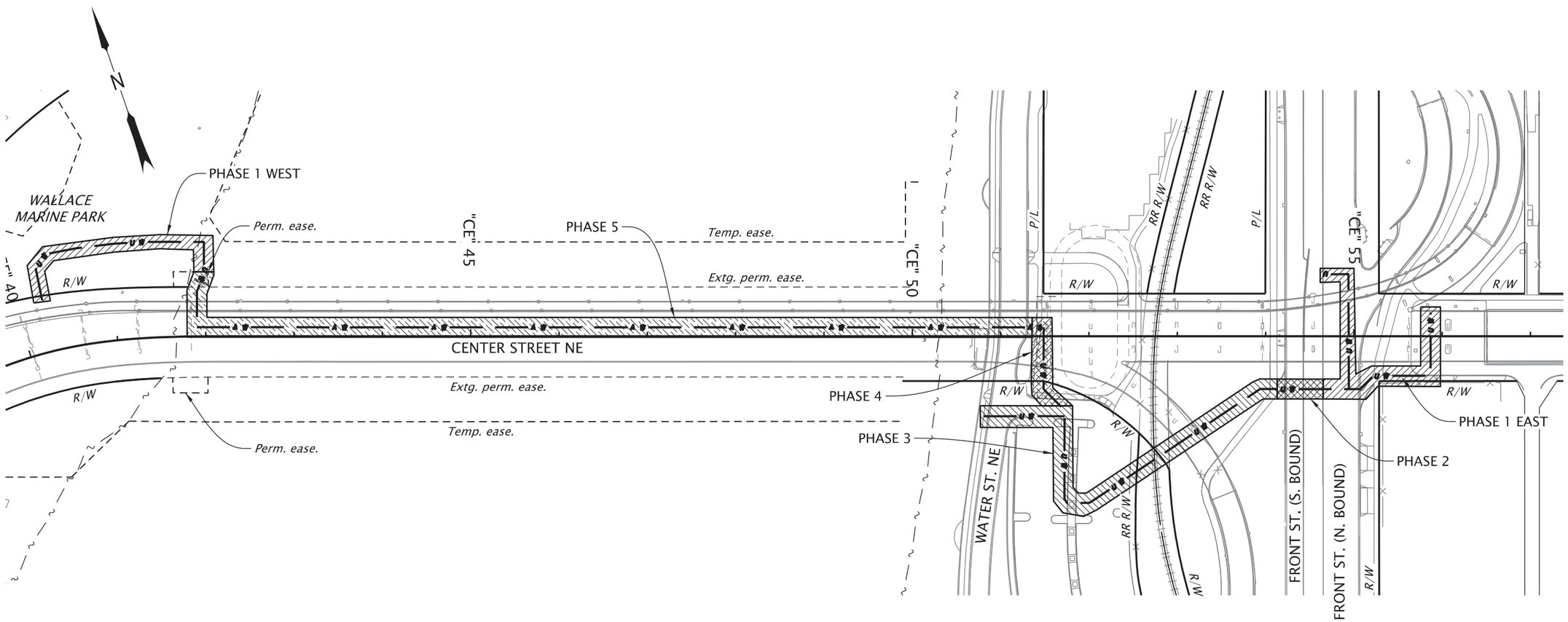

CONTRUCTION SEQUENCE:
Work Year 1:
Phase 1 – East: 36"/24" across Northbound Front Street; 24" within Front Street and 12"/10" East of Front St.
Phase 1 – West: Relocation of 12" main around work bridge embankment and installation of temporary 24" connection to existing main.
Phase 2: 36" across Southbound Front Street
Phase 3: 36" from Front Street to Water St. (temporary termination)

Work Year 2:
Phase 4: Temporary connection to 24" waterline across bridge

Work Year 3:
Phase 5: Remove existing 24" waterline from bridge and install new 36" waterline to terminus on West side.

LEGEND

- *Phase 1*
- *Phase 2*
- *Phase 3*
- *Phase 4*
- *Phase 5*

REGISTERED PROFESSIONAL ENGINEER
97292PE
Digitally Signed 2026.06.04 13:14:38-06'00'
OREGON
MAY 11, 2021
KEVIN R. JOHNSON
EXPIRES: JUNE 30, 2027

FINAL ELECTRONIC DOCUMENT AVAILABLE UPON REQUEST

DOWL WWW.DOWL.COM

OREGON DEPARTMENT OF TRANSPORTATION

OR22: CENTER ST BRIDGE (PHASE 1) PROJECT
WILLAMINA-SALEM HIGHWAY
MARION & POLK COUNTIES

Designer: Kevin Johnson
Reviewer:
Drafter: Steve Wolfer
Checker:

CONSTRUCTION SEQUENCE

SHEET NO. RA02

WORK SEQUENCE:

Phase1 - East: 36"/24" across northbound Front Street, 24" within Front Street and 12"/10" east of Front St.

A. Pre-work by City
1. Install straddle block on existing 24" WL north of approx. Sta 21+64
2. Shut down existing 24" WL to isolate main at this location.
3. Cut existing 24" WL
4. Install 24" tee, couplings north & south, valve and blind flange (E)

B. Advance Work By City
1. Install straddle block on existing 24" WL south of approx. Sta. 15+35 in Front Street.
2. Shut down existing 24" WL to isolate main at this location.
3. Cut existing 24" main in Front Street median.
4. Install 36" x 24" cross, valves to east, south and west, D.I. spools and couplings north and south. Install blind flanges east and west.
5. Isolate cut and cap existing 10" main crossing Front Street at approx. Sta 20+97.

C. Work by contractor
1. Traffic Shift Stage 1
   a. Shift northbound traffic to west lane of Front Street
   b. Install 36"x 24" cross and valve assembly at approx. Sta 15+68 and extend 36" D.I. to edge of active (west) travel lane.
   c. Install 12" and 10" mains to east termination at blow off (Sta. 15+68 to 17+38).
   d. Install 24" main in Front Street to north approx. Sta 21+30 and west to edge of active (west) travel lane.
2. Traffic Shift Stage 2
   a. Shift northbound traffic to east lane of Front Street
   b. Install 36" D.I. across west lane of Front Street and connect to 36" BFV (Sta. 15+68 to 15+37).
   c. Install 24" D.I. across west lane of Front Street and connect to 24" BFV (Sta. 21+62).
   d. Flush and test 24", 12" and 10" mains.
   e. Chlorinate, flush, sample. Chlorination and sampling by City.

D. Post work by City
1. 10-inch Main east of Front St.
   a. Remove temporary blow off on 10" pipe at approx. Sta. 17+38.
   b. Extend 10" D.I. pipe
   c. Install 10" 45-deg bends and coupling connection to the east to 10" main.
2. 24" Main on Front St. (After Phase 4; see Phase 4, note B)
   a. North of Center St.; Approx. Sta. 21+50
      1. Remove FCA, pipe spool and coupling (S)
      2. Install 24" blind flange (S)
   b. South of Center St.; Approx. Sta. 15+35
      1. Remove FCA, pipe spool and coupling (N)
      2. Install 24" blind flange (N)

Phase 1 - West: Relocation of 12" main around work bridge embankment and installation of temporary 24" connection to existing system.

A. Pre-work by City.
1. Install straddle block on existing 24" WL north of approx Sta. 3+25.
2. Shut down existing 24" WL to isolate this main.
3. At Sta. 3+25 cut existing 24" WL and install 36"x24" cross, valves, temporary blind flanges east and west D.I. spools and couplings north and south.
4. Install 12" tee and valve assembly at Sta. 1+00.
5. Abandon existing 12" main between new 12" tee and extg. 24" main to east.

B. Work by Contractor
1. Install 12" main from new tee at Sta. 1+00 to valve, reducers and tee assembly at Sta. 2+96.
2. Install 36" main from tee at Sta. 2+96 to 36" BFV at Sta. 3+25.
3. Install 36" main from 36" BFV at Sta 3+25 to temporary 36"x24" reducer at 3+72 and 12" blow off.
4. Flush and test new 12" and 36" mains.
5. Chlorinate, flush and sample. Chlorination and sampling by City.
6. Prepare excavation for City to install temporary connection to existing 24" main.

C. Post work by City
1. Remove 24" Spool and FCA (S)
2. Install Blind flange (S)
3. Abandon 24" DI

Phase 2: 36" Across South Bound Front Street

A. Work by Contractor
1. Connect to 36" MJ BFV on west side of cross at Sta. 15+35.
2. Install 36" pipeline west across S. Bound Front St.
   a. Nighttime closures of S. Bound Front St. lane.

Phase 3: 36" From Front Street to Water St (temporary termination)

A. Work By Contractor
1. Continue installing 36" pipeline west toward railroad crossing.
2. Install steel casing under railroad.
3. Install 36" carrier pipe through steel casing.
   a. Connect to 36" D.I. on east side of casing.
   b. Extend/pull RJ pipe joints inside the casing all the way out to the west.
4. Continue installing 36" pipeline west and north from casing.
   a. Install 36"x12" tee and 12" pipeline across Water Street.
   b. Excavate and shore around extg. 12" CI water main west of Water St. for City crews to perform hot tap and install 12" GV.
   c. Connect 12" water line to City-installed GV.
5. Install pipeline to 36" BFV and 12" blow off terminus of this phase.
6. Flush and test 36" and 12" mains.
7. Chlorinate, flush and sample. Chlorination and sampling by City.

Phase 4: Temporary Connection to 24" Waterline Across Bridge

A. Work by Contractor
1. East side of river
   a. City to isolate existing 24" main.
   b. Drain pipeline through 12" blow off on west side of river, approx. Sta. 2+96.
   c. Remove 24" vertical pipe and thrust block under bridge, Sta. 10+00.
   d. Remove 24" 90-degree bend inside box girder.
   e. Connect to 36" BFV at approx. Sta. 11+18.
   f. Extend 36" pipe up into box girder.
   h. Bolt up upper 90-deg bend (FL) and 36" x24" Eccentric Red (FL).
   g. Install temporary blind flange on 24" reducer for pressure testing.
   i. Tap reducer for air release as needed.
   j. After pressure test remove temporary blind flange.
   k. Connect to existing 24" expansion joint with D.I. spool and two, 24" FCA's.
2. Flush and disinfect pipeline across bridge.
   a. Flush pipeline across bridge to blow off at approx. Sta. 2+96.
   b. Chlorinate, flush and sample. Chlorination and sampling by City.

B. Post work by City
1. City to grout existing 24" water main between Water St. and Front St.

Phase 5: Remove existing 24" waterline from bridge and install new 36" waterline to terminus on west side

A. East Side Installation (Bent 20 to Bent 19)
1. Isolate and drain existing pipeline across bridge toward the blow off at approx. Sta. 2+96.
2. Disconnect 36" x 24" reducer from east end of bridge inside the box girder.
3. Disassemble the 24" pipeline at Bent 15 and pull pipeline toward bent 15. (Note, the 24" DI pipe is lined with a 22" HDPE pipeline between Bent 15 and Bent 20. also requiring removal.)
4. Pull existing 24" pipeline and fittings out of the west end of the box girder at Bent 19.
5. Install 36" pipeline inside box girder from Bent 20 to Bent 19.
6. Extend joints and anchor.

B. Bent 15 to Bent 19
1. Install pipe hangers and roller supports
2. Sequentially lift pipe sections to supports near Bent 15 and pull pipeline east toward Bent 19. Pipe spigot ends pointing east, bells to west.
3. Install to last pipe hanger before Bent 19 before expansion joint location.
4. Temporarily cap pipeline at both Bent 19 and Bent 15.
5. Pressurize pipeline to fully extend the restrained joints.
6. Remove temporary caps/plugs.
7. Connect to expansion joint at Bent 19 with joint set at 50% of joint travel.
8. Install 36" pipe across Bent 15 from vertical 90-degree bend at top of shaft through the expansion joint and the first 36" pipe section to the east on bridge.
9. With expansion joint set at 50% of joint travel, measure and fabricate final connecting pipe section on bridge.
10. With custom pipe section, complete pipeline connection to pipeline on the bridge.
11. Continue 36" D.I. pipe install down Bent 15 shaft.
12. Remove temporary 24" D.I. pipe and 36"x24" reducer and connect to 36" main at Sta. 3+72. Construct straddle block on new 36" pipe.
13. Flush pipeline from east side BFV at Sta 11+18 to blow off at Sta. 2+96.
14. Test pipeline between BFV at Sta. 11+18 to BFV at Sta. 3+25.
15. Chlorinate, flush and sample. Chlorination and sampling by City.

REGISTERED PROFESSIONAL ENGINEER
97292PE
Digitally Signed 2026.01.27 16:02:41-07'00'
OREGON
MAY 11, 2021
KEVIN R. JOHNSON
EXPIRES: JUNE 30, 2027

DOWL WWW.DOWL.COM

OREGON DEPARTMENT OF TRANSPORTATION

OR22: CENTER ST BRIDGE (PHASE 1) PROJECT
WILLAMINA-SALEM HIGHWAY
MARION & POLK COUNTIES

Designer: Kevin Johnson Reviewer:
Drafter: Steve Wolfer Checker:

WORK SEQUENCE

SHEET NO. RA03

FINAL ELECTRONIC DOCUMENT AVAILABLE UPON REQUEST

WATER GENERAL NOTES (ON STRUCTURE):

All joint in pipes and fittings shall provide positive joint separation by means of interference fit weld beads, bolted flanges, or equal. Exceptions include where otherwise indicated in the drawings to utilize a restrained mechanical joint.

See Special Provisions for requirements of the expansion joints.

Pipe roller materials shall conform to the Anvil figure numbers shown on the plans or approved equal. All hanger material shall be hot dip galvanized after fabrication.

All bolts and nuts shall conform to ASTM Specification A307 unless noted otherwise. All threaded rod shall conform to ASTM F1554 Grade 55. All nuts for threaded rod shall conform to ASTM A563. Structural steel in supports shall conform to ASTM Specification A36 or A500 Gr. B. All washers shall conform to ASTM Specification F436 except where low-friction polymer washers are required. All bolts, rods, nuts, structural steel, rollers and miscellaneous attachments shall be hot dip galvanized per ASTM Specifications A123 and A153 as applicable. Structural concrete inserts shall meet the requirements of specification 530.14. Place inserts such that the hanger rods are plumb without bending the hanger rods.

Contractor shall provide a material list and a detailed pipeline layout shop drawing including fittings, spool sections, end treatments, and specialty items for review and approval by the Engineer.

Prior to connection of pipeline at both ends of the bridge and the expansion joints, the following procedure shall be followed to extend the pipeline installation across the bridge. This procedure minimizes longitudinal distortion at the expansion joint caused by lengthening of the pipeline under pressure if not pre-extended:

(a) Manually extend each ductile iron joint during pipe installation to minimize pullout expansion following manufacturer's recommended procedures.
(b) Place temporary restrained cap or plug before expansion joints at Bent 15 and Bend 19.
(c) Slowly pressurize the line to the testing pressure checking to makes sure that as the line extends it slides longitudinal at the pipe supports so the supports are not restraining the longitudinal deflection, typical.
(d) Release pressure and remove blind flanges.
(e) Connect the line to the expansion joints set at the mid-range of expansion/contraction length.
(f) Note this process will be required between the fixed end at Bent 20 and the expansion joint at Bent 19 and again between Bent 15 and bent 19 before final measurement, fabrication of custom pipe section(s) and connections to the expansion joints.

Hydro-statically test all pipelines to a specified pressure in the Special Provisions and in accordance with the AWWA C-600. Contractor shall be responsible for repairing all leaks to comply with pressure testing requirements.

Pipeline shall be clearly labeled in accordance with the following APWA color code: "Blue Background with White Lettering". Place self-adhesive, vinyl labels at each end of the bridge and oriented to be seen from normal eye height from the ground. Labels shall be a minimum of 3'-0" long, or a minimum of one letter height beyond the text "Legend, Owner, Emergency Phone Number", whichever is larger.

The Contractor shall be solely responsible for detailing, fabricating installing and testing the pipelines. Submit pipeline placement method and layout shop drawings and details for review by the Engineer prior to construction.

After testing, remove all water from the water pipeline if not placed in service immediately.

WATER GENERAL NOTES:

1. *Use restrained joint pipe for all pipelines on the project. Fully extend the restrained joint pipe sections after assembly of the joint and prior to making connections to bends, fittings or valves.*
2. *Only City staff can cut and connect to existing mains and operate city-owned valves. Only City staff can open valves for filling and flushing pipelines.*
3. *Contractor responsible for all flushing provisions required to attain adequate flushing and protection of facilities and environment from discharged water. Provide any required equipment and chemicals for dechlorination during initial blow off and flushing of new water mains.*
4. *Install chlorination taps as indicated in the drawings, and excavate to the taps for removal by the City after successful testing.*
5. *City to provide equipment and chemicals for dechlorination for final flushing after disinfection and will conduct sampling for bacteriological testing. Provide piping for discharge of the chlorinated water. Provide 14 days notice in advance of disinfection needs. City will only begin chlorination Monday - Wednesday to provide for water sampling analysis for the 48-hour sample.*
6. *Salvage temporary plugs, caps or blind flanges to the City at the end of the project or upon request.*
7. *Refer to ODOT standard drawings RD300 and RD302 for trench bedding, and backfill requirements and standard street cut requirements.*

REGISTERED PROFESSIONAL ENGINEER
97292PE
Digitally Signed 2026.01.27 16:03:20-07'00'
OREGON
MAY 11, 2021
KEVIN R. JOHNSON

EXPIRES: JUNE 30, 2027

DOWL WWW.DOWL.COM

OREGON DEPARTMENT OF TRANSPORTATION

OR22: CENTER ST BRIDGE (PHASE 1) PROJECT
WILLAMINA-SALEM HIGHWAY
MARION & POLK COUNTIES

Designer: Kevin Johnson
Reviewer:
Drafter: Steve Wolfer
Checker:

GENERAL NOTES

SHEET NO. RA04

FINAL ELECTRONIC DOCUMENT
AVAILABLE UPON REQUEST

*Dimension cannot be adjusted.

NOTES:
1. All dimensions horizontal and to centerline of pipe roller unless noted otherwise.
2. Hanger spacing dimensions may be adjusted to accommodate different pipe lengths provided minimum clearances to cross-frames are maintained unless noted otherwise.
3. See RA and RC sheets for additional notes and details for pipeline installation.
4. See Sht. RB07 for construction work sequence on bridge.

(X) Hanger Number

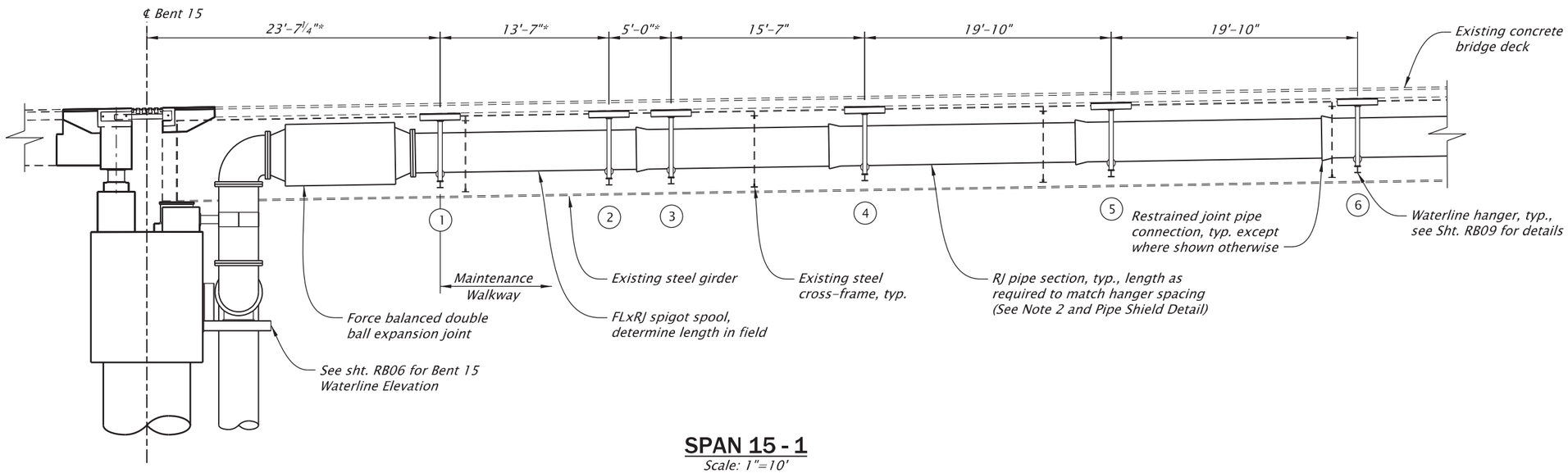

SPAN 15 - 1

Scale: 1"=10'

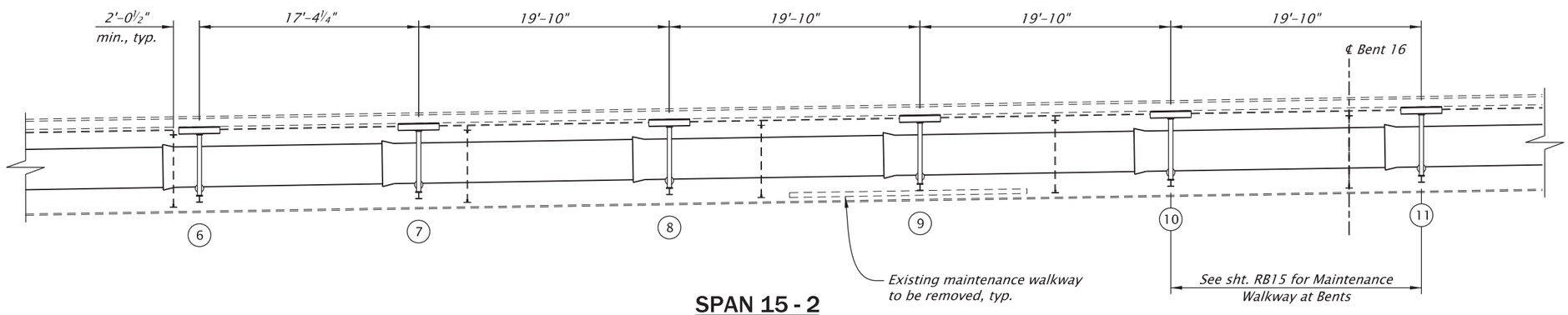

SPAN 15 - 2

Scale: 1"=10'

**Dimension from centerline of roller to beginning of flare for pipe bell, measured along pipe.

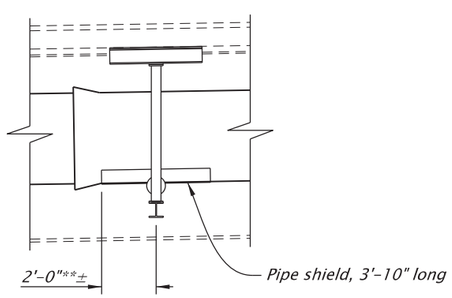

PIPE SHIELD DETAIL

Scale: 3/16"=1'-0"

Bridge #00123K
See shts. J02 and JA01 for list of bridge drawings.

REGISTERED PROFESSIONAL ENGINEER
60181
Digitally Signed 2026.01.27 15:58:17-08'00'
OREGON
JULY 13, 2004
ANDREW DEAN HOWE
EXPIRES: 6/30/2027

FINAL ELECTRONIC DOCUMENT AVAILABLE UPON REQUEST

DOWL WWW.DOWL.COM

OREGON DEPARTMENT OF TRANSPORTATION

OR22: CENTER ST BRIDGE (PHASE 1) PROJECT
WILLAMINA-SALEM HIGHWAY
MARION & POLK COUNTIES

Designer: Andy Howe, PE
Reviewer: Bob Goodrich, PE
Drafter: Brian Sevits
Checker: Ben Wardell, PE

BRIDGE WATERLINE LAYOUT - 1

SHEET NO. RB01

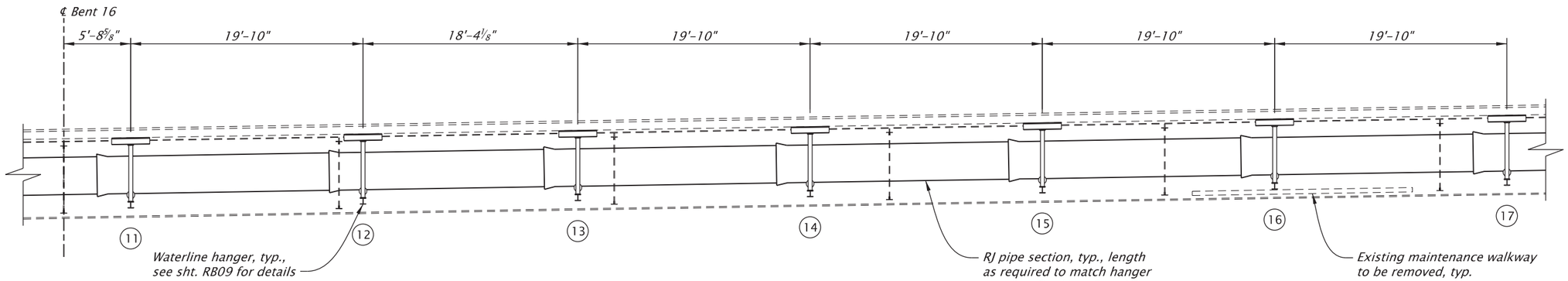

SPAN 16 - 1

Scale: 1"=10'

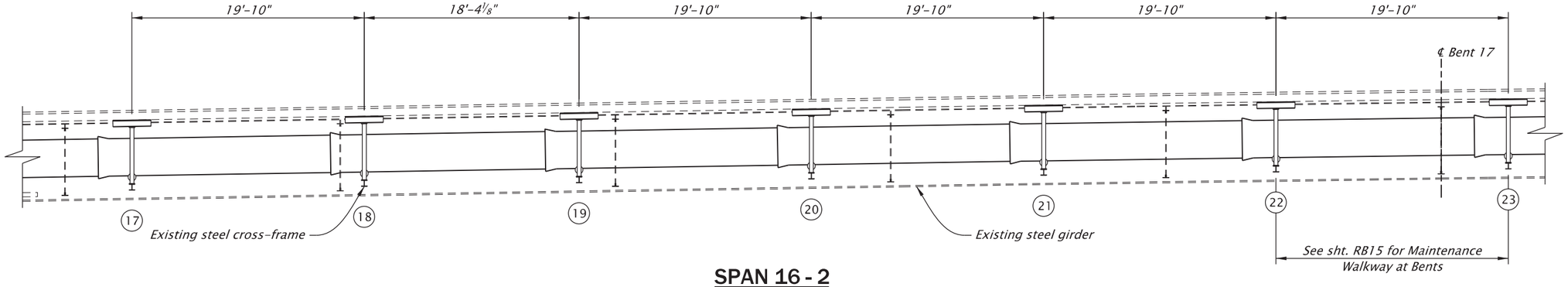

SPAN 16 - 2

Scale: 1"=10'

Bridge #00123K
See shts. J02 and JA01 for list of bridge drawings.

NOTES:
1. All dimensions horizontal and to centerline of pipe roller unless noted otherwise.
2. Hanger spacing dimensions may be adjusted to accommodate different pipe lengths provided minimum clearances to cross-frames are maintained unless noted otherwise.
3. See RA and RC sheets for additional notes and details for pipeline installation.
4. See Sht. RB07 for construction work sequence on bridge.

REGISTERED PROFESSIONAL ENGINEER
60181
Digitally Signed 2026.01.27 16:00:48-08'00'
OREGON
JULY 13, 2004
ANDREW DEAN HOWE
EXPIRES: 6/30/2027

FINAL ELECTRONIC DOCUMENT AVAILABLE UPON REQUEST

DOWL WWW.DOWL.COM

OREGON DEPARTMENT OF TRANSPORTATION

OR22: CENTER ST BRIDGE (PHASE 1) PROJECT
WILLAMINA-SALEM HIGHWAY
MARION & POLK COUNTIES

Designer: Andy Howe, PE
Reviewer: Bob Goodrich, PE
Drafter: Brian Sevits
Checker: Ben Wardell, PE

BRIDGE WATERLINE LAYOUT - 2

SHEET NO. RB02

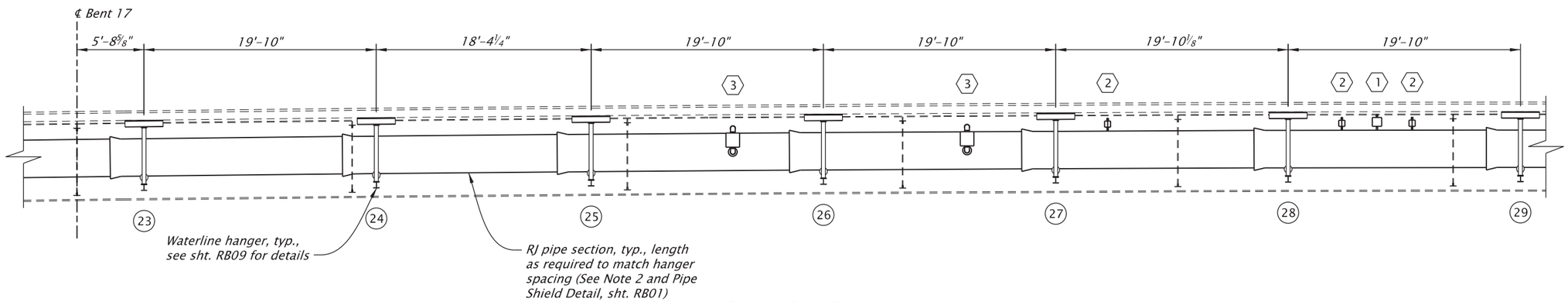

SPAN 17 - 1

Scale: 1"=10'

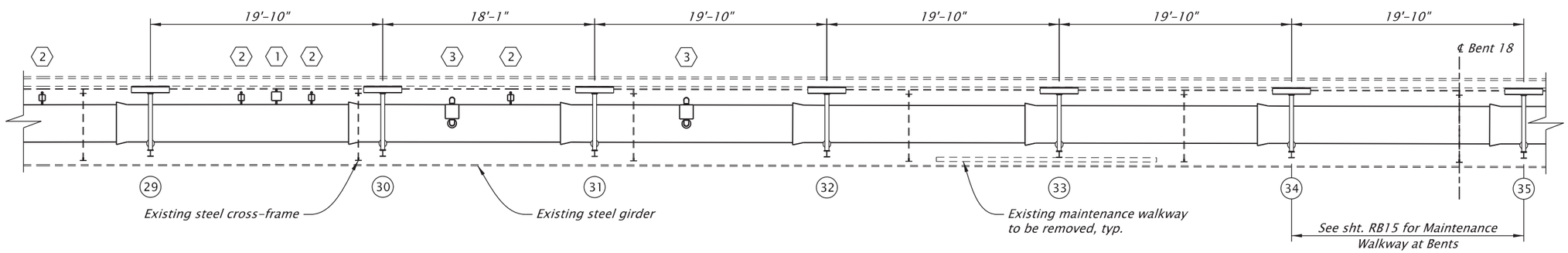

SPAN 17 - 2

Scale: 1"=10'

Bridge #00123K
See shts. J02 and JA01 for list of bridge drawings.

NOTES:
1. *All dimensions horizontal and to centerline of pipe roller unless noted otherwise.*
2. *Hanger spacing dimensions may be adjusted to accommodate different pipe lengths provided minimum clearances to cross-frames are maintained unless noted otherwise.*
3. *See RA and RC sheets for additional notes and details for pipeline installation.*
4. *See Sht. RB07 for construction work sequence on bridge.*

AIR RELEASE VALVE NOTES:

1. *1" Air Release Valve (Flomatic Miniair #6503C)*
2. *1" Air and Vacuum Valve (Flomatic Maxiair #6521)*
3. *4" Air and Vacuum Valve (Flomatic Maxiair #6524)*

See sht. RB08 for details.

REGISTERED PROFESSIONAL ENGINEER
60181
Digitally Signed 2026.01.27 16:04:40-08'00'
OREGON
JULY 13, 2004
ANDREW DEAN HOWE
EXPIRES: 6/30/2027

FINAL ELECTRONIC DOCUMENT AVAILABLE UPON REQUEST

DOWL WWW.DOWL.COM

OREGON DEPARTMENT OF TRANSPORTATION

OR22: CENTER ST BRIDGE (PHASE 1) PROJECT
WILLAMINA-SALEM HIGHWAY
MARION & POLK COUNTIES

Designer: Andy Howe, PE
Reviewer: Bob Goodrich, PE
Drafter: Brian Sevits
Checker: Ben Wardell, PE

BRIDGE WATERLINE LAYOUT - 3

SHEET NO. RB03

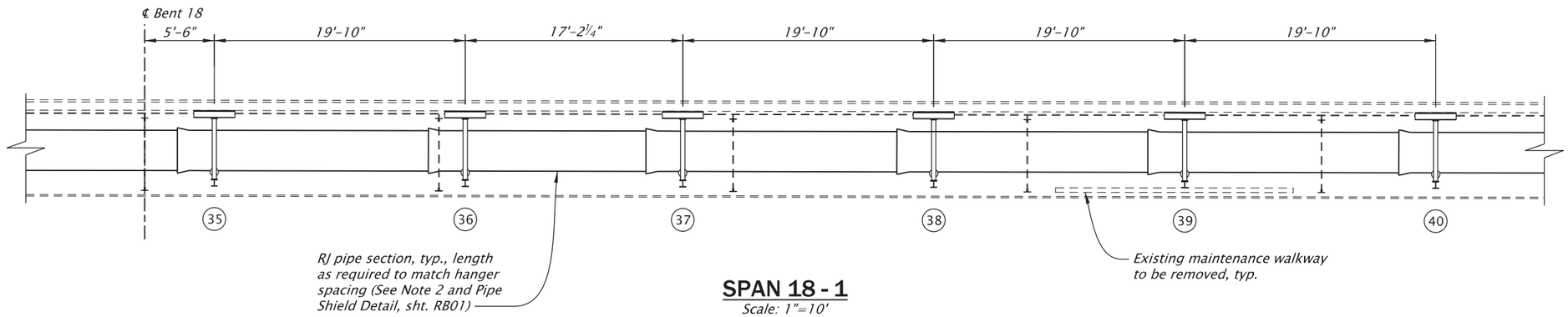

SPAN 18 - 1

Scale: 1"=10'

* Dimension cannot be adjusted.

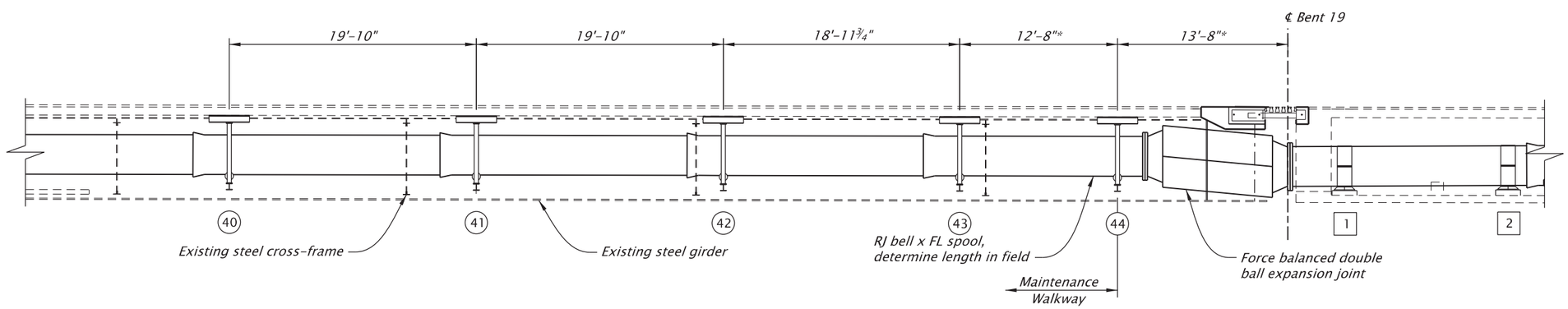

SPAN 18 - 2

Scale: 1"=10'

Bridge #00123K
See shts. J02 and JA01 for list of bridge drawings.

NOTES:
1. All dimensions horizontal and to centerline of pipe roller unless noted otherwise.
2. Hanger spacing dimensions may be adjusted to accommodate different pipe lengths provided minimum clearances to cross-frames are maintained unless noted otherwise.
3. See RA and RC sheets for additional notes and details for pipeline installation.
4. See Sht. RB07 for construction work sequence on bridge.

REGISTERED PROFESSIONAL ENGINEER
60181
Digitally Signed 2026.01.27 16:04:20-08'00'
OREGON
JULY 13, 2004
ANDREW DEAN HOWE
EXPIRES: 6/30/2027

FINAL ELECTRONIC DOCUMENT AVAILABLE UPON REQUEST

DOWL WWW.DOWL.COM

OREGON DEPARTMENT OF TRANSPORTATION

OR22: CENTER ST BRIDGE (PHASE 1) PROJECT
WILLAMINA-SALEM HIGHWAY
MARION & POLK COUNTIES

Designer: Andy Howe, PE
Reviewer: Bob Goodrich, PE
Drafter: Brian Sevits
Checker: Ben Wardell, PE

BRIDGE WATERLINE LAYOUT – 4

SHEET NO. RB04

*Dimension cannot be adjusted.

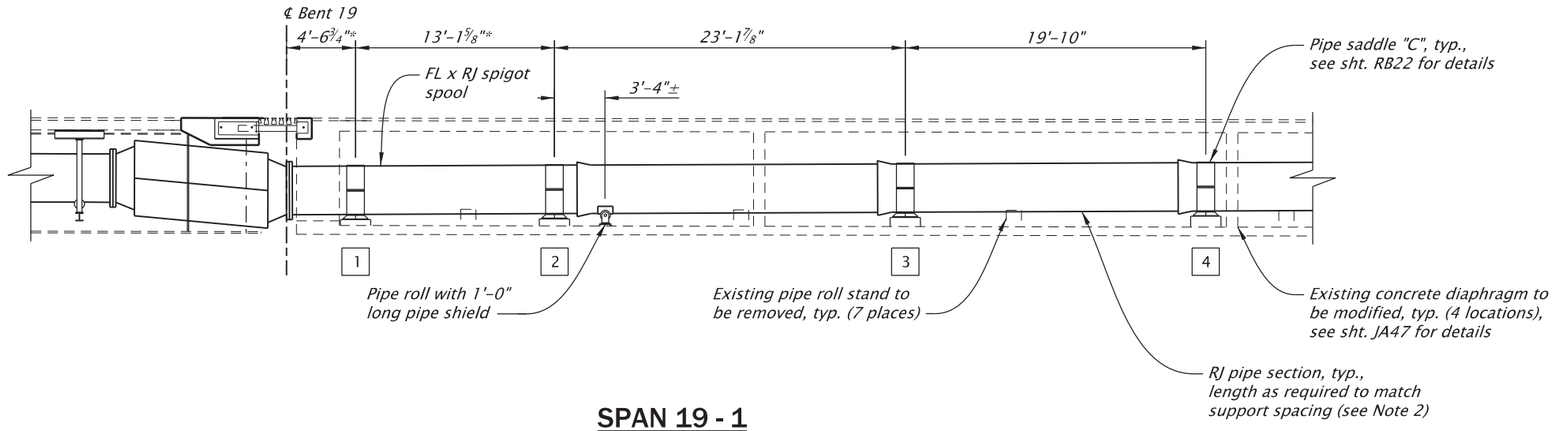

SPAN 19 - 1

Scale: 1"=10'

Support Number	Height (Bottom Slab to ℄ Pipe)
1	2'-3⅞"
2	2'-4¾"
3	2'-6⅜"
4	2'-7¾"
5	2'-9⅛"
6	2'-10½" **
7	2'-10¾" **

**Field verify dimension after making temporary pipe connection.

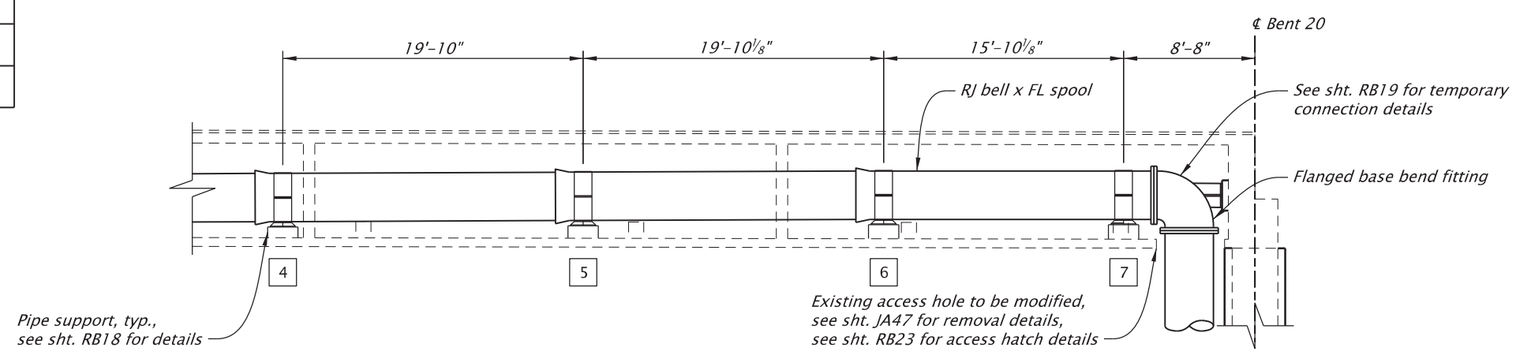

SPAN 19 - 2

Scale: 1"=10'

Bridge #00123K
See shts. J02 and JA01 for list of bridge drawings.

NOTES:
1. All dimensions horizontal and to centerline of pipe saddle unless noted otherwise.
2. Hanger spacing dimensions may be adjusted to accommodate different pipe lengths provided minimum clearances to cross-frames are maintained unless noted otherwise.
3. See RA and RC sheets for additional notes and details for pipeline installation.
4. See Sht. RB07 for construction work sequence on bridge.

REGISTERED PROFESSIONAL ENGINEER
60181
Digitally Signed 2026.01.27 16:03:55-08'00'
OREGON
JULY 13, 2004
ANDREW DEAN HOWE
EXPIRES: 6/30/2027
FINAL ELECTRONIC DOCUMENT AVAILABLE UPON REQUEST

DOWL WWW.DOWL.COM

OR22: CENTER ST BRIDGE (PHASE 1) PROJECT
WILLAMINA-SALEM HIGHWAY
MARION & POLK COUNTIES

Designer: Andy Howe, PE
Reviewer: Bob Goodrich, PE
Drafter: Brian Sevits
Checker: Ben Wardell, PE

BRIDGE WATERLINE LAYOUT - 5

SHEET NO. RB05

59V-051

NOTES:
1. See RA and RC sheets for additional notes and details for pipeline installation.
2. See Sht. RA03 for water line construction work sequence.
3. Assemble vertical sections of restrained joint pipe and fully extend all RJ joints prior to determining lengths of final pipe segment(s).

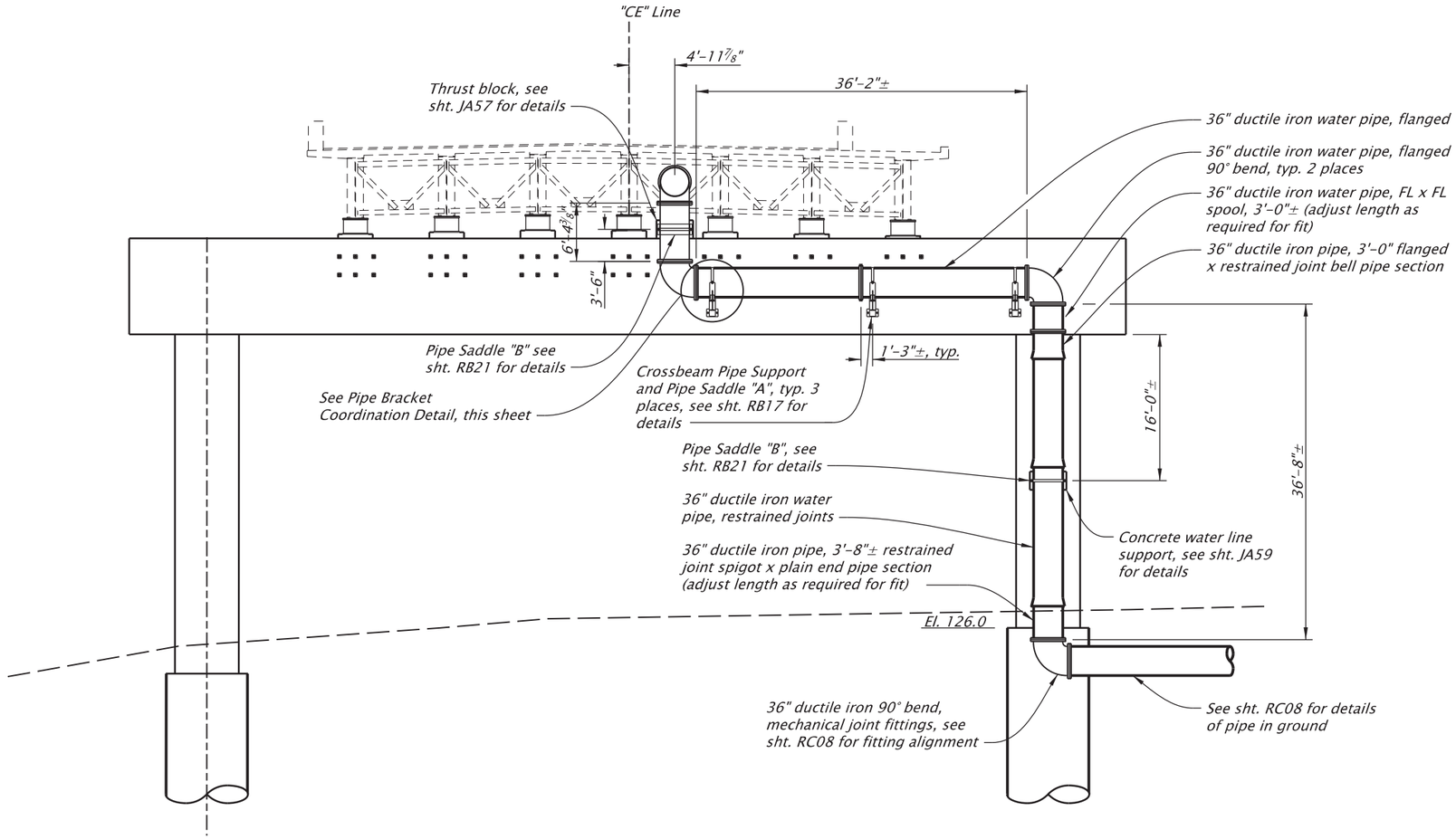

BENT 15 ELEVATION

Scale: 1"=15'
Looking back on station

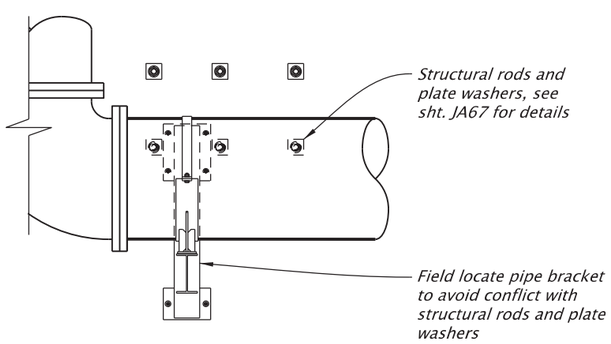

PIPE BRACKET COORDINATION DETAIL

Scale: 1/4"=1'-0"

REGISTERED PROFESSIONAL ENGINEER
60181
Digitally Signed 2026.01.27 16:03:27-08'00'
OREGON
JULY 13, 2004
ANDREW DEAN HOWE
EXPIRES: 6/30/2027

FINAL ELECTRONIC DOCUMENT AVAILABLE UPON REQUEST

DOWL WWW.DOWL.COM

OREGON DEPARTMENT OF TRANSPORTATION

OR22: CENTER ST BRIDGE (PHASE 1) PROJECT
WILLAMINA-SALEM HIGHWAY
MARION & POLK COUNTIES

Designer: Andy Howe, PE
Reviewer: Bob Goodrich, PE
Drafter: Brian Sevits
Checker: Ben Wardell, PE

BENT 15 WATERLINE ELEVATION

SHEET NO. RB06

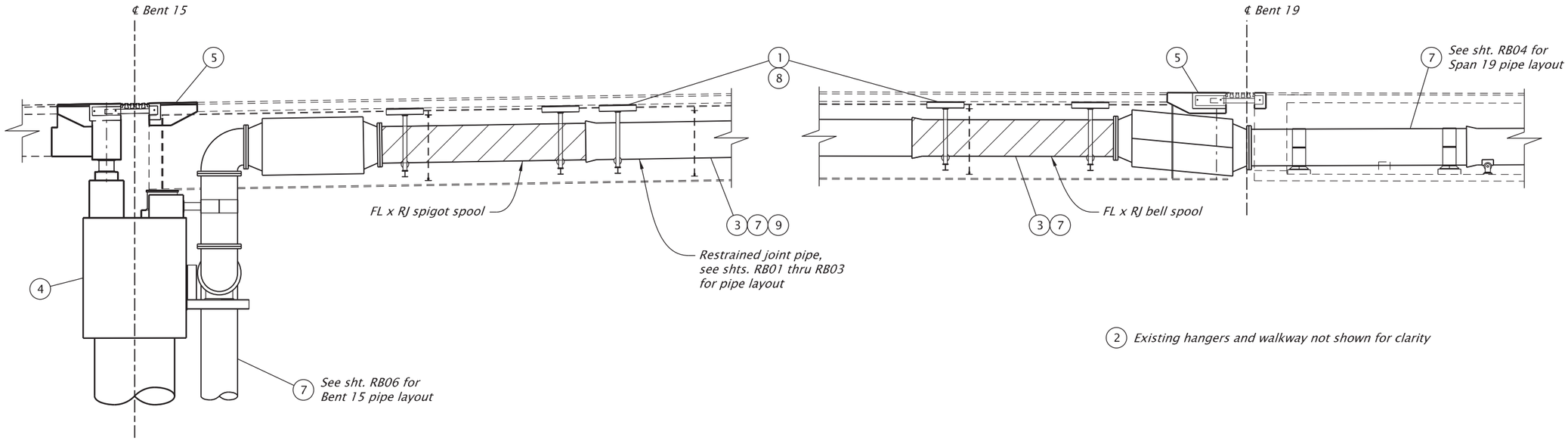

CONSTRUCTION WORK SEQUENCE

1. *Install hangers in Spans 15-18. Do not install upper struts or lateral restraints.**
2. *Remove existing maintenance walkway and install new walkway stringers and and grating.**
3. *Remove existing pipe and hangers in Spans 15-18.*
4. *Remove existing Bent 15. Construct new Bent 15 crossbeam.*
5. *Construct Bent 15 and 19 bridge deck and joint work.*
6. *Remove existing pipe and pipe supports in Spans 15-19, leaving elbow at Bent 20. See sht. RA03 for details.*
7. *Install 36 inch DI pipe in Spans 15-19. Extend bells.*
8. *Install upper struts and lateral restraints.*
9. *Install air release valves.*

**Install hangers and maintenance walkway prior to Waterline Phase 5.*

NOTES:
1. See RA and RC sheets for additional notes and details for pipe installation.
2. See Sheet RA03 for construction work sequence.

REGISTERED PROFESSIONAL ENGINEER
60181
Digitally Signed 2026.01.27 16:02:52-08'00'
OREGON
JULY 13, 2004
ANDREW DEAN HOWE
EXPIRES: 6/30/2027

FINAL ELECTRONIC DOCUMENT
AVAILABLE UPON REQUEST

DOWL WWW.DOWL.COM

OREGON DEPARTMENT OF TRANSPORTATION

OR22: CENTER ST BRIDGE (PHASE 1) PROJECT
WILLAMINA-SALEM HIGHWAY
MARION & POLK COUNTIES

Designer: Andy Howe, PE
Reviewer: Bob Goodrich, PE
Drafter: Brian Sevits
Checker: Ben Wardell, PE

BRIDGE WATERLINE CONSTRUCTION SEQUENCE

SHEET NO. RB07

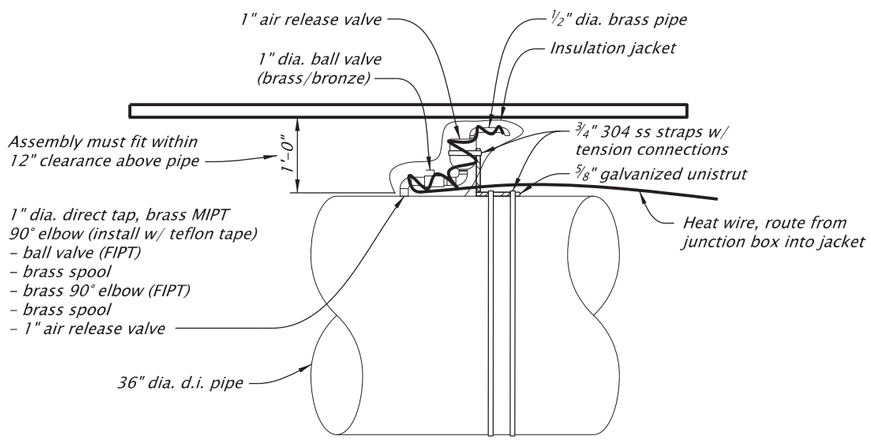

AIR RELEASE VALVE

Scale: No Scale

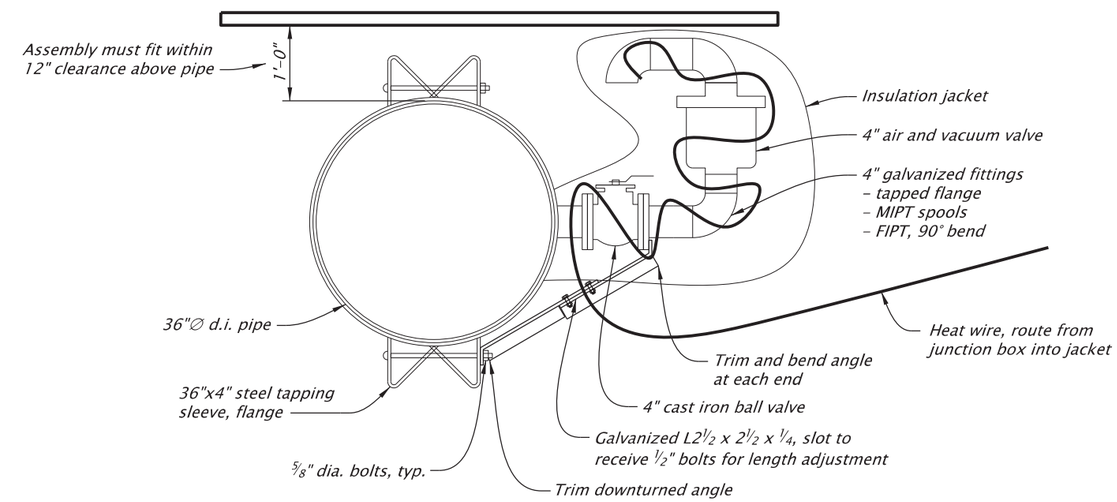

AIR RELEASE/AIR VACUUM VALVE

Scale: No Scale

REGISTERED PROFESSIONAL ENGINEER
97292PE
Digitally Signed 2026.01.27 15:54:08-07'00'
OREGON
MAY 11, 2021
KEVIN R. JOHNSON

EXPIRES: JUNE 30, 2027

FINAL ELECTRONIC DOCUMENT
AVAILABLE UPON REQUEST

DOWL WWW.DOWL.COM

OREGON DEPARTMENT OF TRANSPORTATION

OR22: CENTER ST BRIDGE (PHASE 1) PROJECT
WILLAMINA-SALEM HIGHWAY
MARION & POLK COUNTIES

Designer: Kevin Johnson
Reviewer: Bob Goodrich, PE
Drafter: Brian Sevits
Checker: Andy Howe, PE

WATERLINE DETAILS

SHEET NO.
RB08

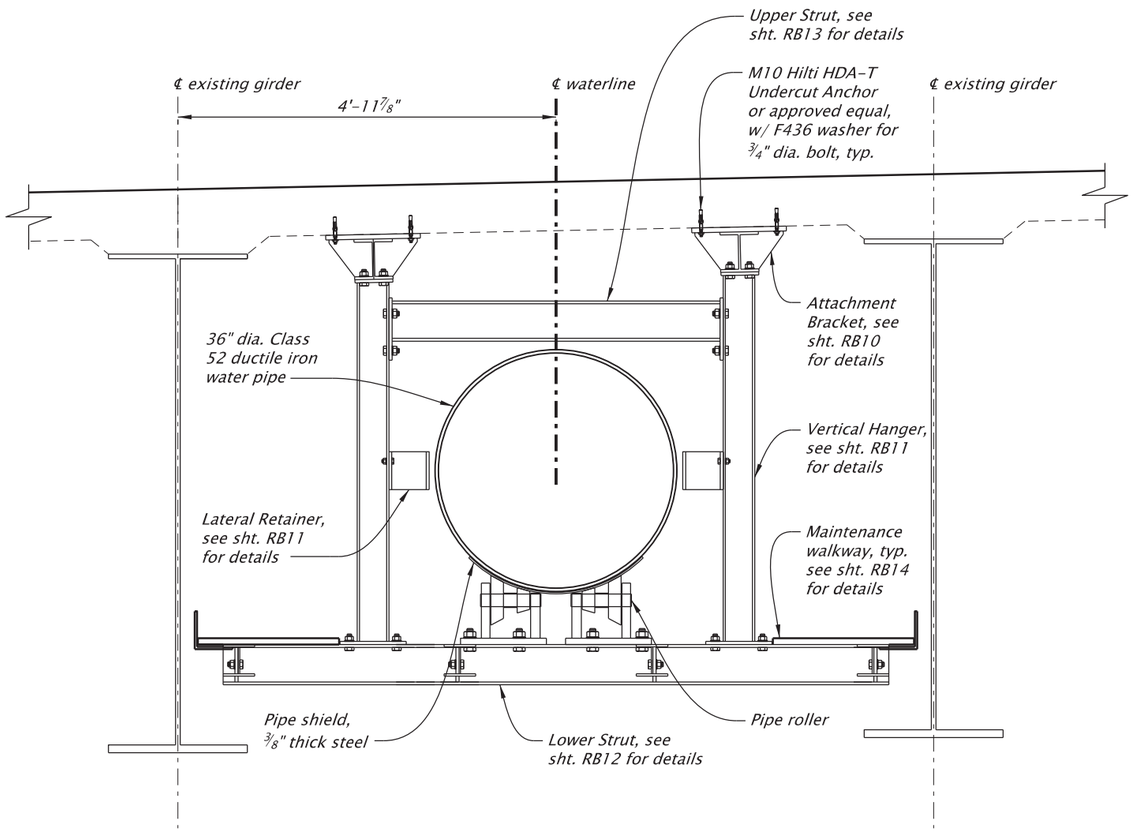

TYPICAL WATERLINE HANGER ELEVATION

Scale: 1/2"=1'-0"

WATERLINE HANGER GENERAL NOTES

DESIGN NOTES

Hanger designed according to 2022 Oregon Structural Specialty Code with SDS = 0.91.

Walkway design live loads:
40 psf distributed load or 300 pound concentrated load.

CONSTRUCTION NOTES

Provide all materials and perform all work according to the "Oregon Standard Specifications for Construction 2024".

Provide reinforcement according to ASTM A615 Grade 60 or ASTM A706 Grade 60.

Provide Class 4000 - 3/4 concrete in concrete pipe supports.

Provide steel shapes according to ASTM A992. Provide steel plates according to ASTM A572 Grade 50. Hot-dip galvanize steel after fabrication.

Provide galvanized high-strength bolts according to ASTM F3125, Grade A325 unless shown otherwise. Exclude bolt threads from shear planes.

Tighten high-strength bolts using the Turn of Nut method unless shown otherwise.

Provide fiberglass walkway grating and fasteners according to the specifications.

POST-INSTALLED ANCHOR TABLE

SYSTEM	TYPE	SIZE	GRADE	MINIMUM PULLOUT FORCE (lb)	EFFECTIVE DEPTH
Resin	Rebar	#4	60	7,200	4"
Resin	Bolt	3/4"	55	21,700	7.5"
Mechanical	Undercut	M10	HDA-T*	10,000	3.9"
Mechanical	Undercut	M16	HDA-T*	26,600	7.5"
Mechanical	Expansion	1/2"	36	2,800	3.25"

*Seismic Anchor

REGISTERED PROFESSIONAL ENGINEER
60181
Digitally Signed 2026.01.27 16:34:45-08'00'
OREGON
JULY 13, 2004
ANDREW DEAN HOWE
EXPIRES: 6/30/2027

FINAL ELECTRONIC DOCUMENT AVAILABLE UPON REQUEST

DOWL WWW.DOWL.COM

OREGON DEPARTMENT OF TRANSPORTATION

OR22: CENTER ST BRIDGE (PHASE 1) PROJECT
WILLAMINA-SALEM HIGHWAY
MARION & POLK COUNTIES

Designer: Andy Howe, PE
Reviewer: Bob Goodrich, PE
Drafter: Brian Sevits
Checker: Ben Wardell, PE

WATERLINE HANGER ELEVATION

SHEET NO. RB09

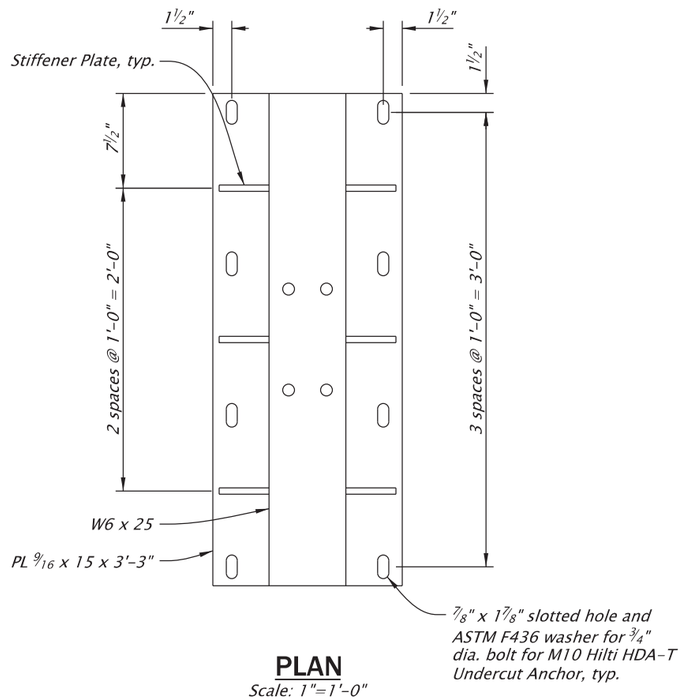

PLAN
Scale: 1"=1'-0"

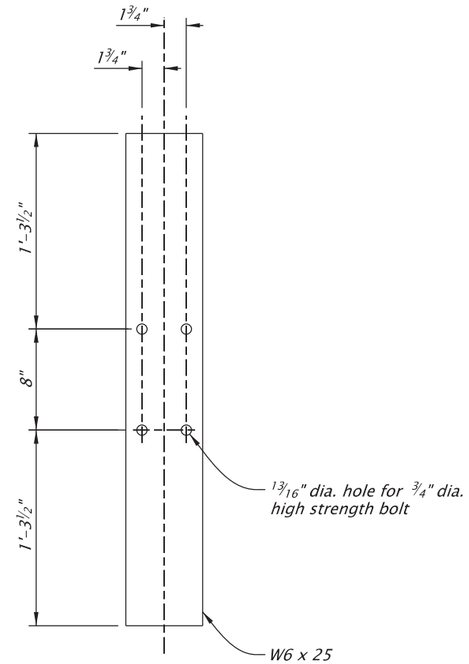

W6 DETAIL
Scale: 1"=1'-0"

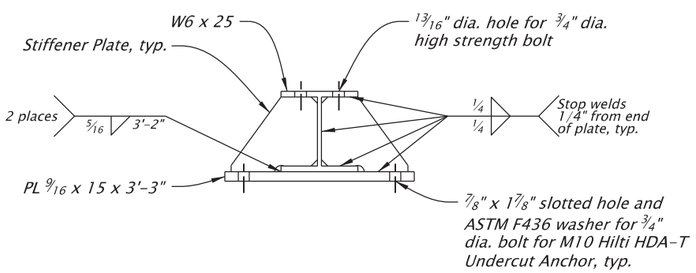

ELEVATION
Scale: 1"=1'-0"

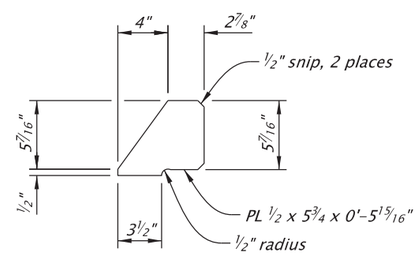

STIFFENER PLATE DETAIL
Scale: 1"=1'-0"

REGISTERED PROFESSIONAL ENGINEER
60181
Digitally Signed 2026.01.27 16:34:25-08'00'
OREGON
JULY 13, 2004
ANDREW DEAN HOWE
EXPIRES: 6/30/2027

FINAL ELECTRONIC DOCUMENT AVAILABLE UPON REQUEST

DOWL WWW.DOWL.COM

OREGON DEPARTMENT OF TRANSPORTATION

OR22: CENTER ST BRIDGE (PHASE 1) PROJECT
WILLAMINA-SALEM HIGHWAY
MARION & POLK COUNTIES

Designer: Andy Howe, PE
Reviewer: Bob Goodrich, PE
Drafter: Brian Sevits
Checker: Ben Wardell, PE

WATERLINE HANGER DETAILS - 1

SHEET NO. RB10

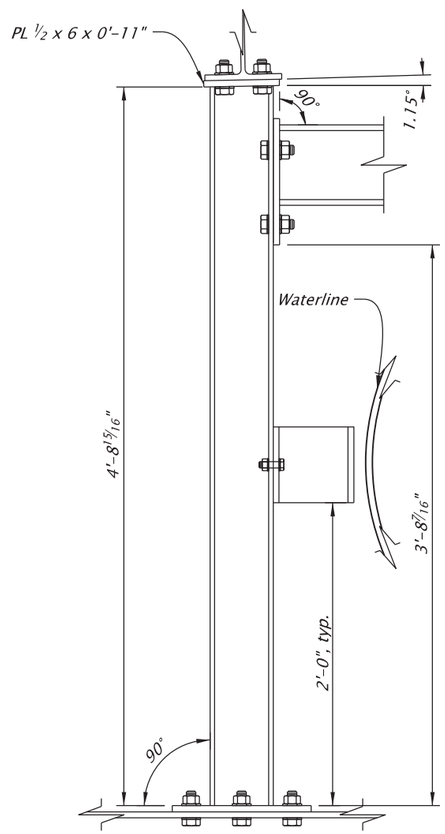

LEFT HANGER

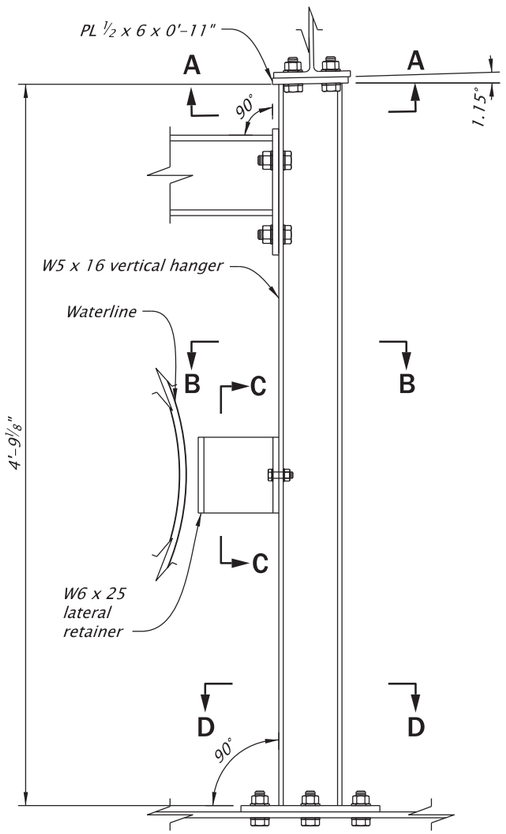

RIGHT HANGER

VERTICAL HANGER ELEVATION

Scale: 1"=1'-0"

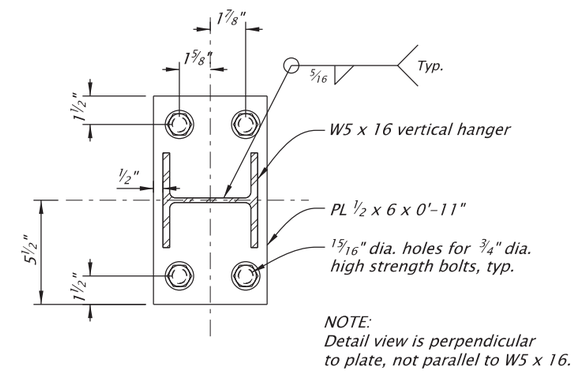

TOP VERTICAL HANGER (SECTION A-A)

Scale: 1 1/2"=1'-0"

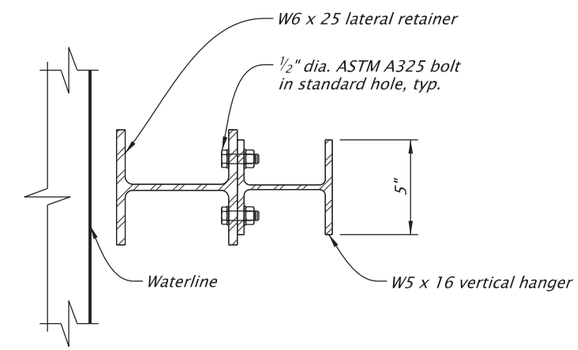

LATERAL RETAINER PLAN (SECTION B-B)

Scale: 1 1/2"=1'-0"

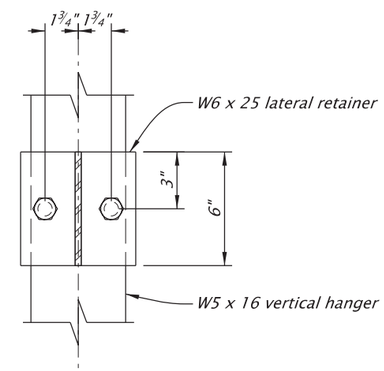

LATERAL RETAINER ELEVATION (SECTION C-C)

Scale: 1 1/2"=1'-0"

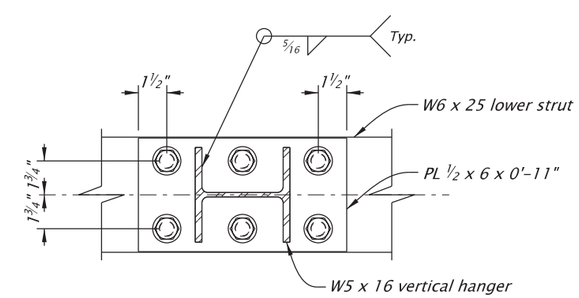

BOTTOM VERTICAL HANGER (SECTION D-D)

Scale: 1 1/2"=1'-0"

REGISTERED PROFESSIONAL ENGINEER
60181
Digitally Signed 2026.01.27 16:33:55-08'00'
OREGON
JULY 13, 2004
ANDREW DEAN HOWE
EXPIRES: 6/30/2027

FINAL ELECTRONIC DOCUMENT
AVAILABLE UPON REQUEST

DOWL WWW.DOWL.COM

OREGON DEPARTMENT OF TRANSPORTATION

OR22: CENTER ST BRIDGE (PHASE 1) PROJECT
WILLAMINA-SALEM HIGHWAY
MARION & POLK COUNTIES

Designer: Andy Howe, PE
Reviewer: Bob Goodrich, PE
Drafter: Brian Sevits
Checker: Ben Wardell, PE

WATERLINE HANGER DETAILS - 2

SHEET NO. RB11

59V-051

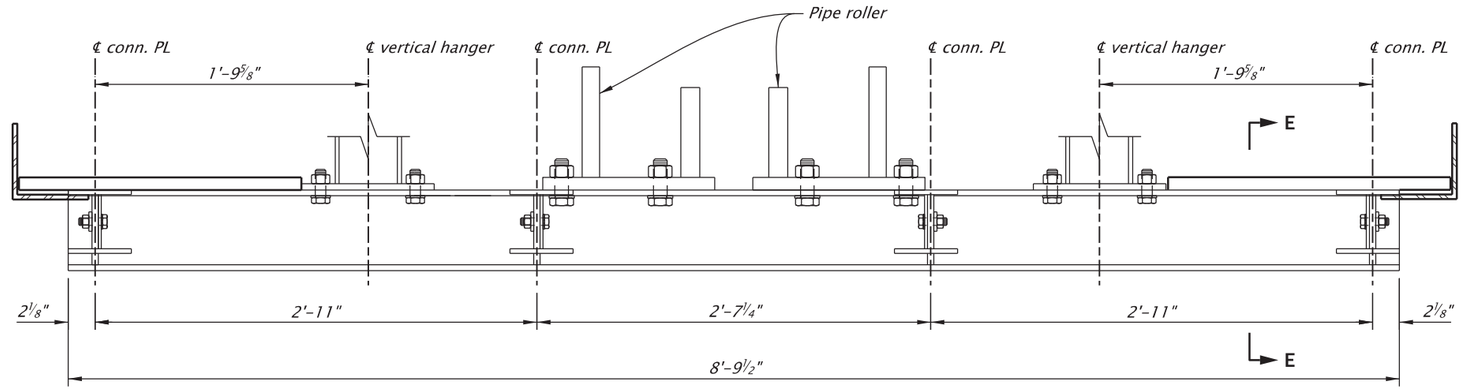

BOTTOM STRUT ELEVATION

Scale: 1"=1'-0"

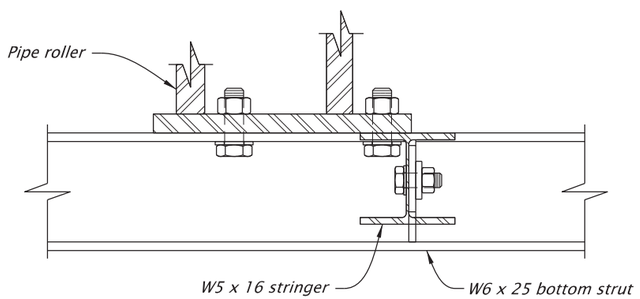

BOTTOM STRUT INSIDE CONNECTION

Scale: 1 1/2"=1'-0"

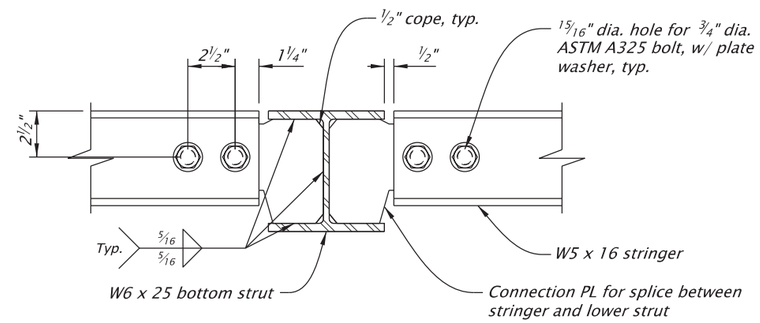

BOTTOM STRUT STRINGER CONNECTION (SECTION E-E)

Scale: 1 1/2"=1'-0"

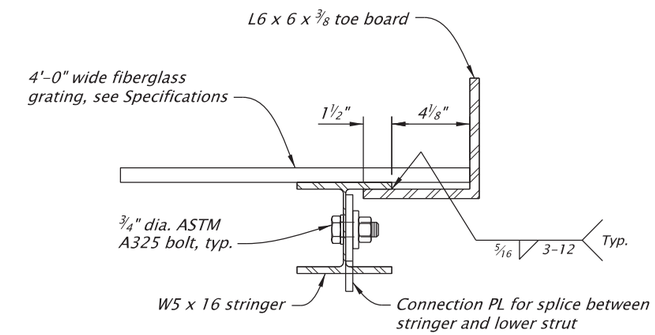

BOTTOM STRUT OUTSIDE CONNECTION

Scale: 1 1/2"=1'-0"

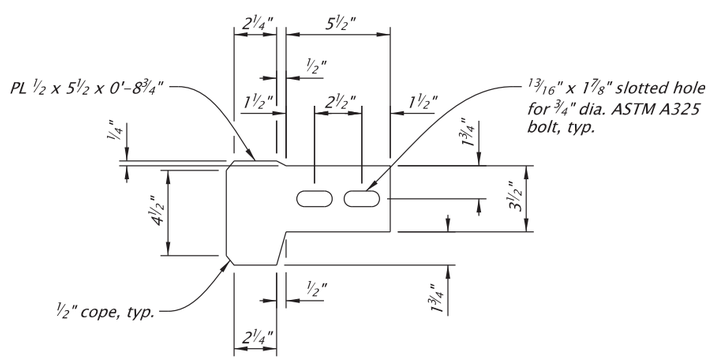

CONNECTION PLATE DETAIL

Scale: 1 1/2"=1'-0"

REGISTERED PROFESSIONAL ENGINEER
60181
Digitally Signed 2026.01.27 16:33:31-08'00'
OREGON
JULY 13, 2004
ANDREW DEAN HOWE
EXPIRES: 6/30/2027

FINAL ELECTRONIC DOCUMENT AVAILABLE UPON REQUEST

DOWL WWW.DOWL.COM

OREGON DEPARTMENT OF TRANSPORTATION

OR22: CENTER ST BRIDGE (PHASE 1) PROJECT
WILLAMINA-SALEM HIGHWAY
MARION & POLK COUNTIES

Designer: Andy Howe, PE
Reviewer: Bob Goodrich, PE
Drafter: Brian Sevits
Checker: Ben Wardell, PE

WATERLINE HANGER DETAILS - 3

SHEET NO. RB12

59V-051

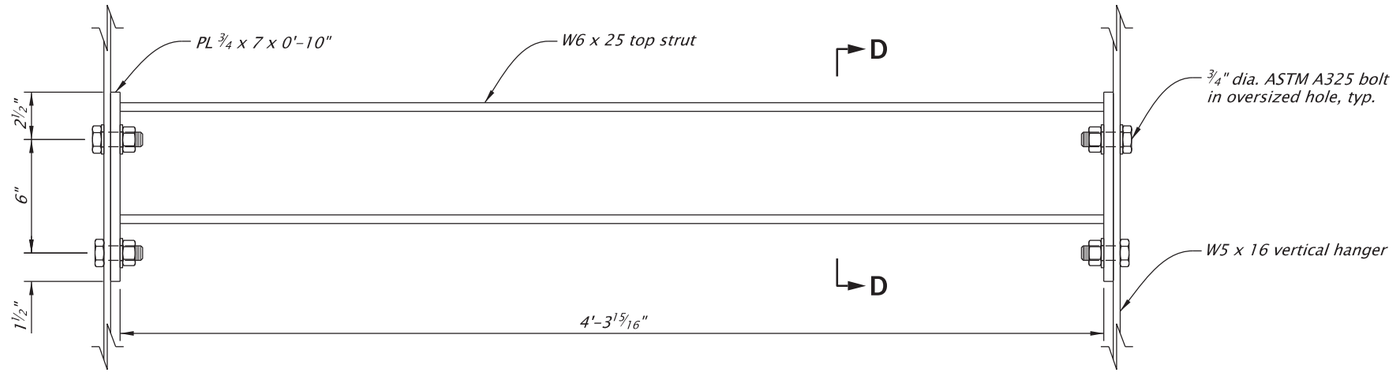

TOP STRUT ELEVATION

Scale: 1 1/2"=1'-0"

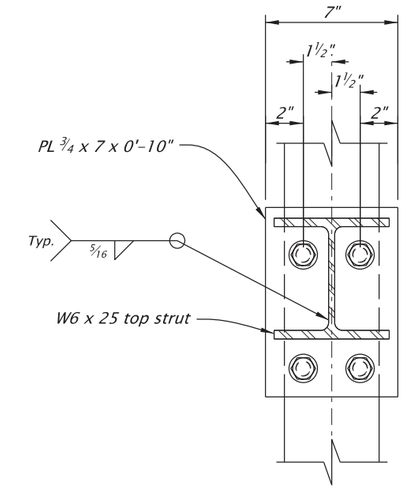

SECTION D-D

Scale: 1 1/2"=1'-0"

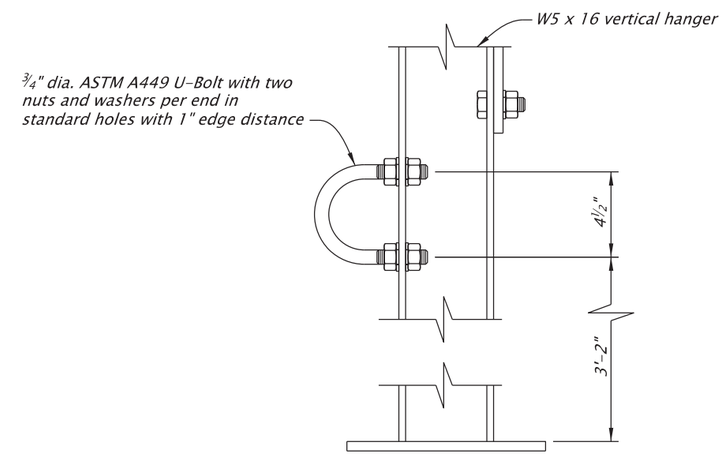

FALL ARREST ANCHOR DETAIL

(Hanger #1, left side)
Scale: 1 1/2"=1'-0"

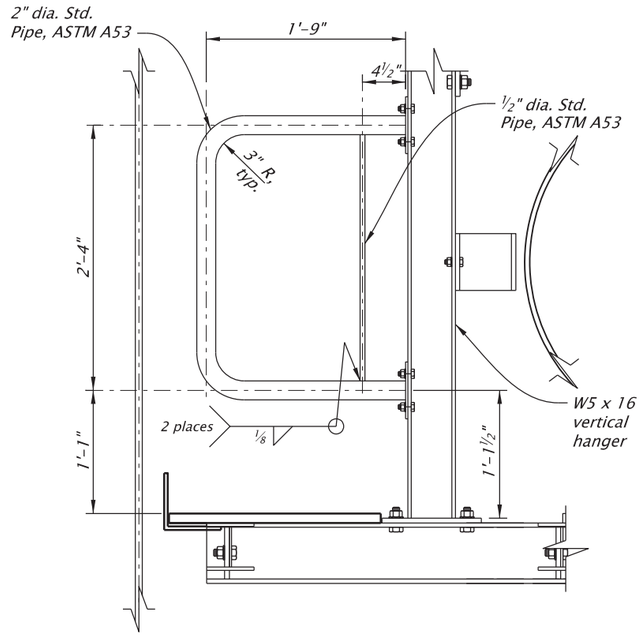

SAFETY RAIL (HANGERS #1 AND #44)

Scale: 3/4"=1'-0"

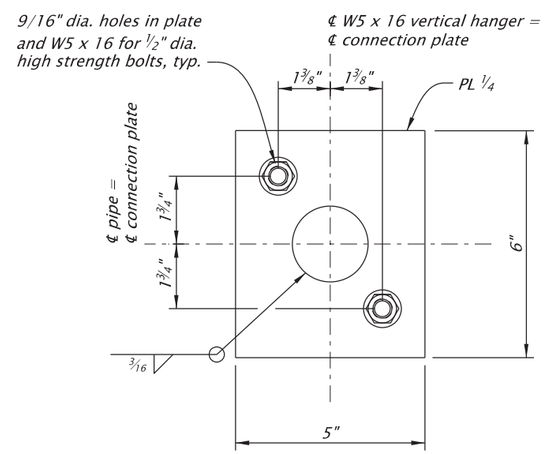

SAFETY RAIL CONNECTION DETAIL

Scale: 3"=1'-0"

REGISTERED PROFESSIONAL ENGINEER
60181
Digitally Signed 2026.02.10 13:14:19-08'00'
OREGON
JULY 13, 2004
ANDREW DEAN HOWE
EXPIRES: 6/30/2027

FINAL ELECTRONIC DOCUMENT AVAILABLE UPON REQUEST

DOWL WWW.DOWL.COM

OREGON DEPARTMENT OF TRANSPORTATION

OR22: CENTER ST BRIDGE (PHASE 1) PROJECT
WILLAMINA-SALEM HIGHWAY
MARION & POLK COUNTIES

Designer: Andy Howe, PE
Reviewer: Bob Goodrich, PE
Drafter: Brian Sevits
Checker: Ben Wardell, PE

WATERLINE HANGER DETAILS - 4

SHEET NO. RB13

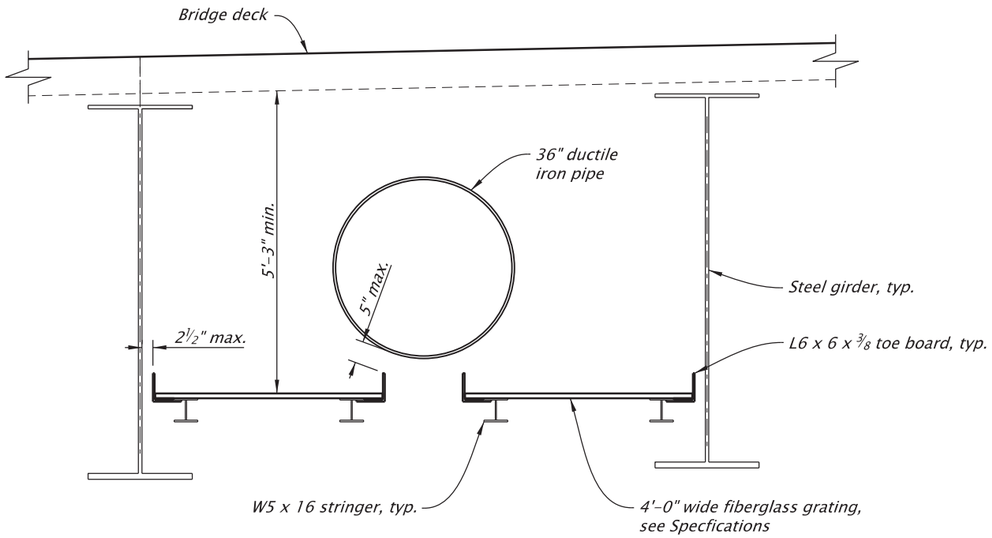

WALKWAY ELEVATION

Scale: 3/8"=1'-0"

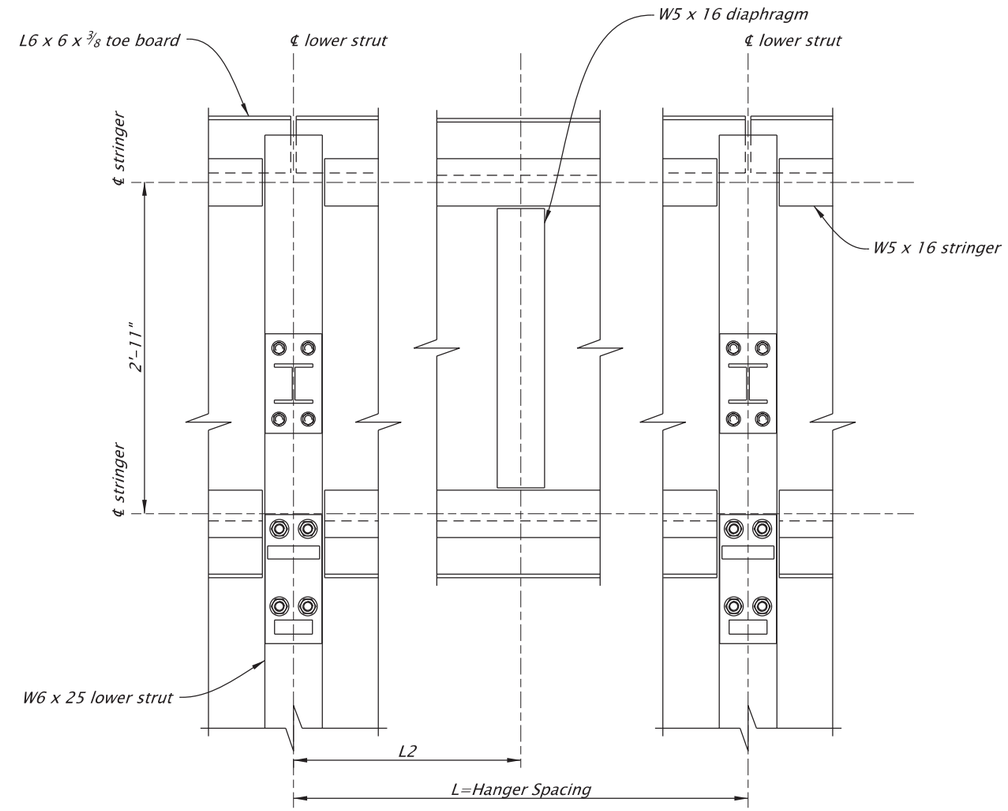

WALKWAY STRINGER FRAMING PLAN (ONE SIDE SHOWN)

Scale: 3/4"=1'-0"

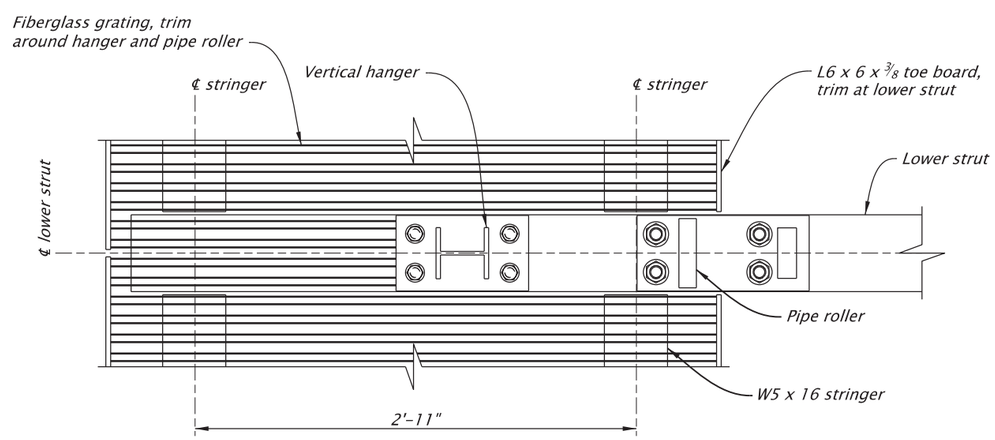

WALKWAY PLAN AT HANGERS

Scale: 1"=1'-0"

REGISTERED PROFESSIONAL ENGINEER
60181
Digitally Signed 2026.01.27 16:32:37-08'00'
OREGON
JULY 13, 2004
ANDREW DEAN HOWE
EXPIRES: 6/30/2027

FINAL ELECTRONIC DOCUMENT AVAILABLE UPON REQUEST

DOWL WWW.DOWL.COM

OREGON DEPARTMENT OF TRANSPORTATION

OR22: CENTER ST BRIDGE (PHASE 1) PROJECT
WILLAMINA-SALEM HIGHWAY
MARION & POLK COUNTIES

Designer: Andy Howe, PE
Reviewer: Bob Goodrich, PE
Drafter: Brian Sevits
Checker: Ben Wardell, PE

WATERLINE WALKWAY DETAILS - 1

SHEET NO. RB14

NOTE:
Water pipe and girders not shown for clarity.

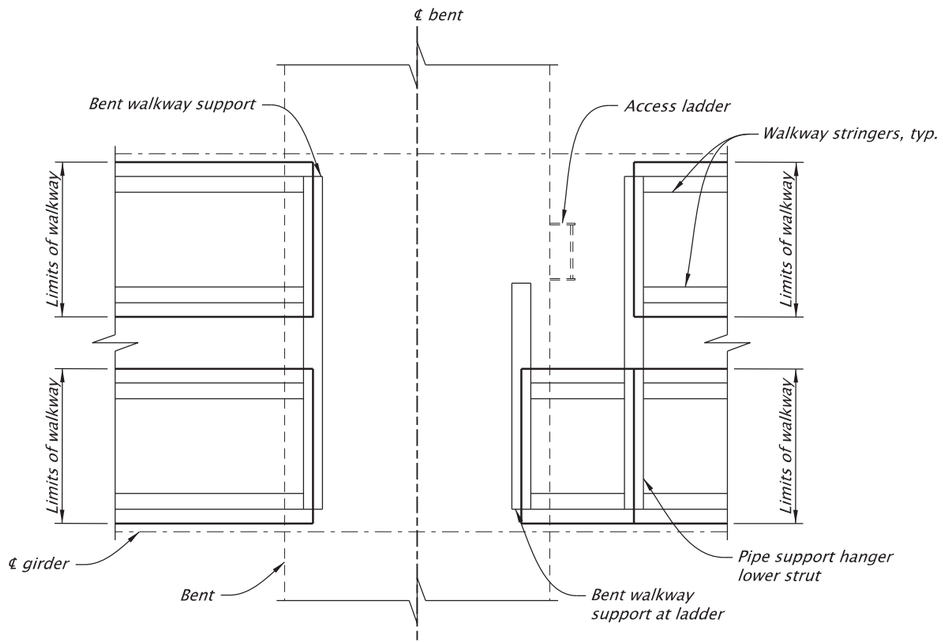

PLAN

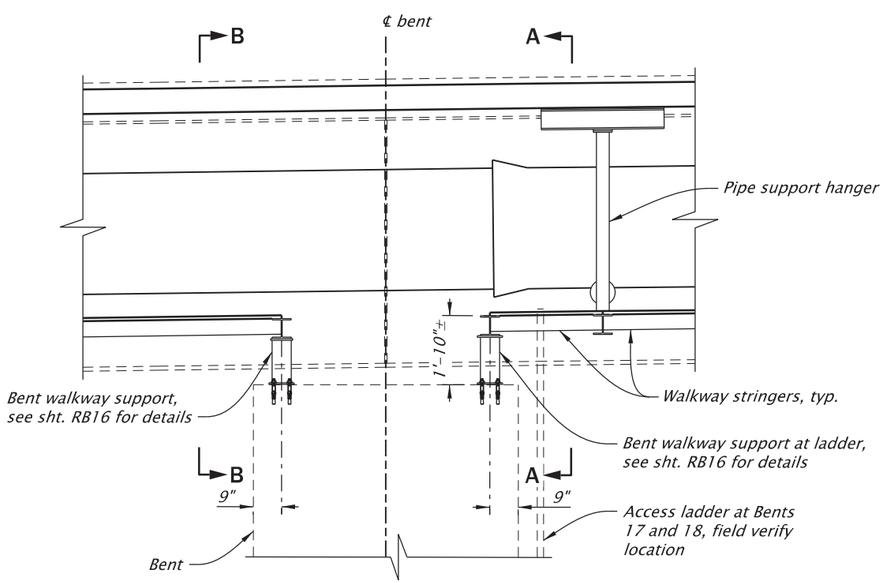

ELEVATION

BENT WALKWAY DETAILS
(BENT 17 SHOWN, BENTS 16 & 18 SIMILAR)

Scale: 1/4"=1'-0"

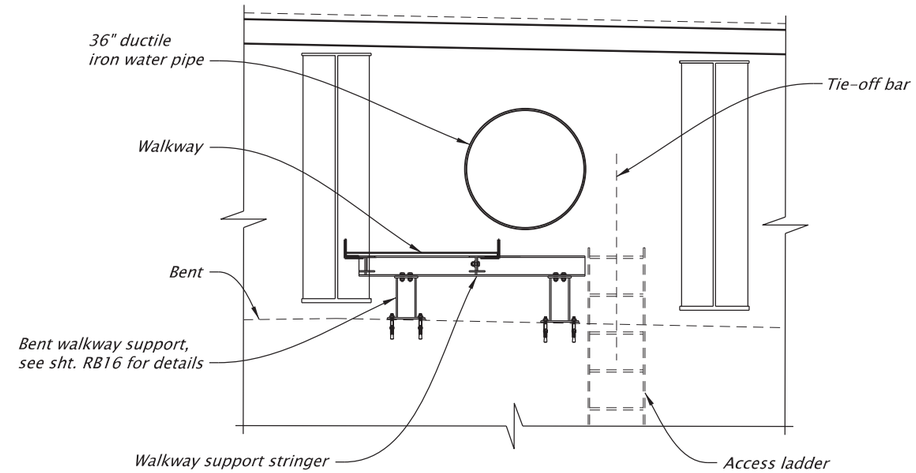

SECTION A-A

Scale: 1/4"=1'-0"

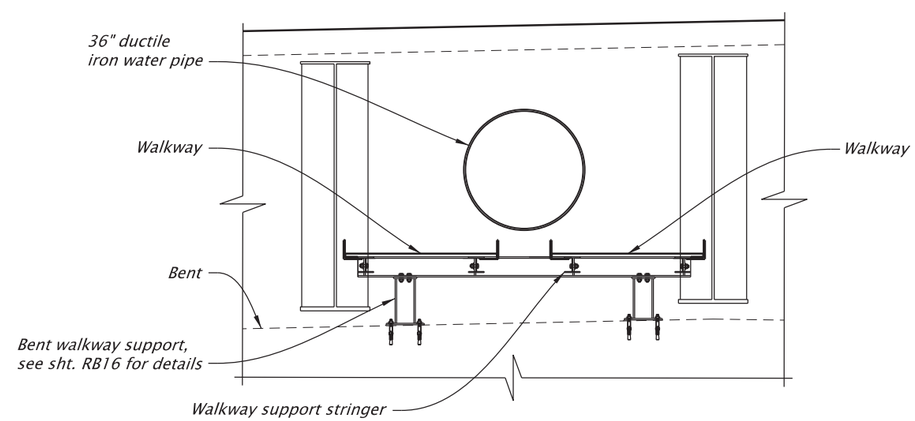

SECTION B-B

Scale: 1/4"=1'-0"

REGISTERED PROFESSIONAL ENGINEER
60181
Digitally Signed 2026.01.27 16:32:13-08'00'
OREGON
JULY 13, 2004
ANDREW DEAN HOWE
EXPIRES: 6/30/2027

FINAL ELECTRONIC DOCUMENT AVAILABLE UPON REQUEST

DOWL WWW.DOWL.COM

OREGON DEPARTMENT OF TRANSPORTATION

OR22: CENTER ST BRIDGE (PHASE 1) PROJECT
WILLAMINA-SALEM HIGHWAY
MARION & POLK COUNTIES

Designer: Andy Howe, PE
Reviewer: Bob Goodrich, PE
Drafter: Brian Sevits
Checker: Ben Wardell, PE

WATERLINE WALKWAY DETAILS - 2

SHEET NO. RB15

NOTE:
See sht. RB12 for stringer connection plate spacing

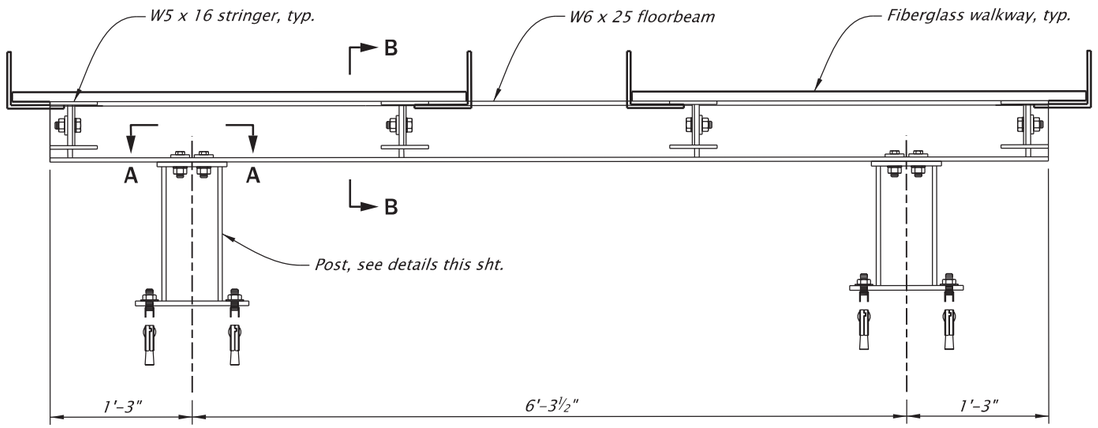

BENT WALKWAY SUPPORT

Scale: 3/4"=1'-0"

NOTE:
See Bent Walkway Support for details not shown.

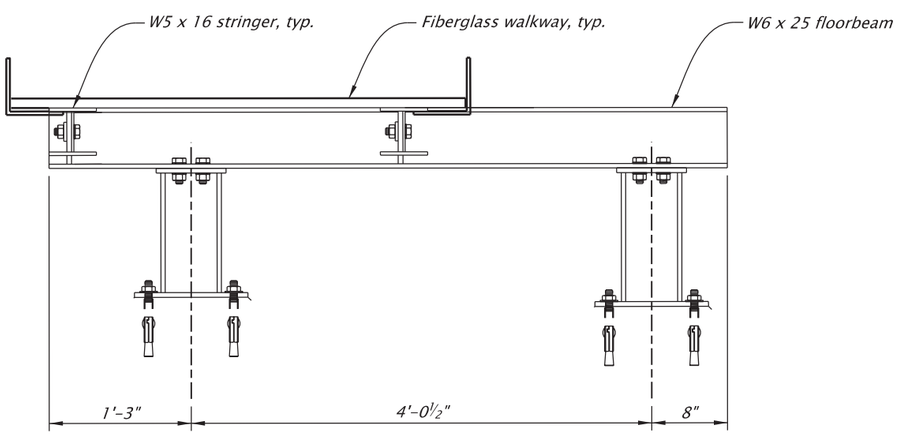

BENT WALKWAY SUPPORT AT ACCESS LADDER

Scale: 3/4"=1'-0"

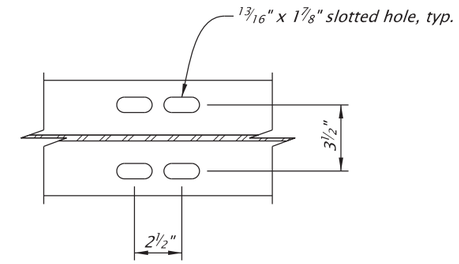

SECTION A-A (ONLY W6X25 SHOWN)

Scale: 1 1/2"=1'-0"

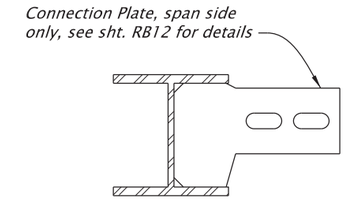

SECTION B-B (ONLY W6X25 SHOWN)

Scale: 1 1/2"=1'-0"

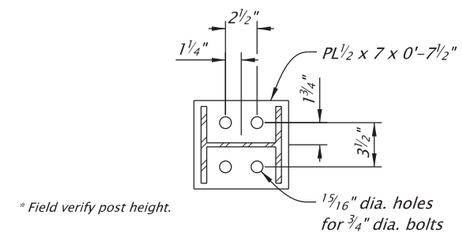

POST DETAILS

Scale: 1"=1'-0"

REGISTERED PROFESSIONAL ENGINEER
60181
Digitally Signed 2026.02.10 08:21:16-08'00'
OREGON
JULY 13, 2004
ANDREW DEAN HOWE
EXPIRES: 6/30/2027

FINAL ELECTRONIC DOCUMENT AVAILABLE UPON REQUEST

DOWL WWW.DOWL.COM

OREGON DEPARTMENT OF TRANSPORTATION

OR22: CENTER ST BRIDGE (PHASE 1) PROJECT
WILLAMINA-SALEM HIGHWAY
MARION & POLK COUNTIES

Designer: Andy Howe, PE
Reviewer: Bob Goodrich, PE
Drafter: Brian Sevits
Checker: Ben Wardell, PE

BENT WALKWAY SUPPORT DETAILS

SHEET NO. RB16

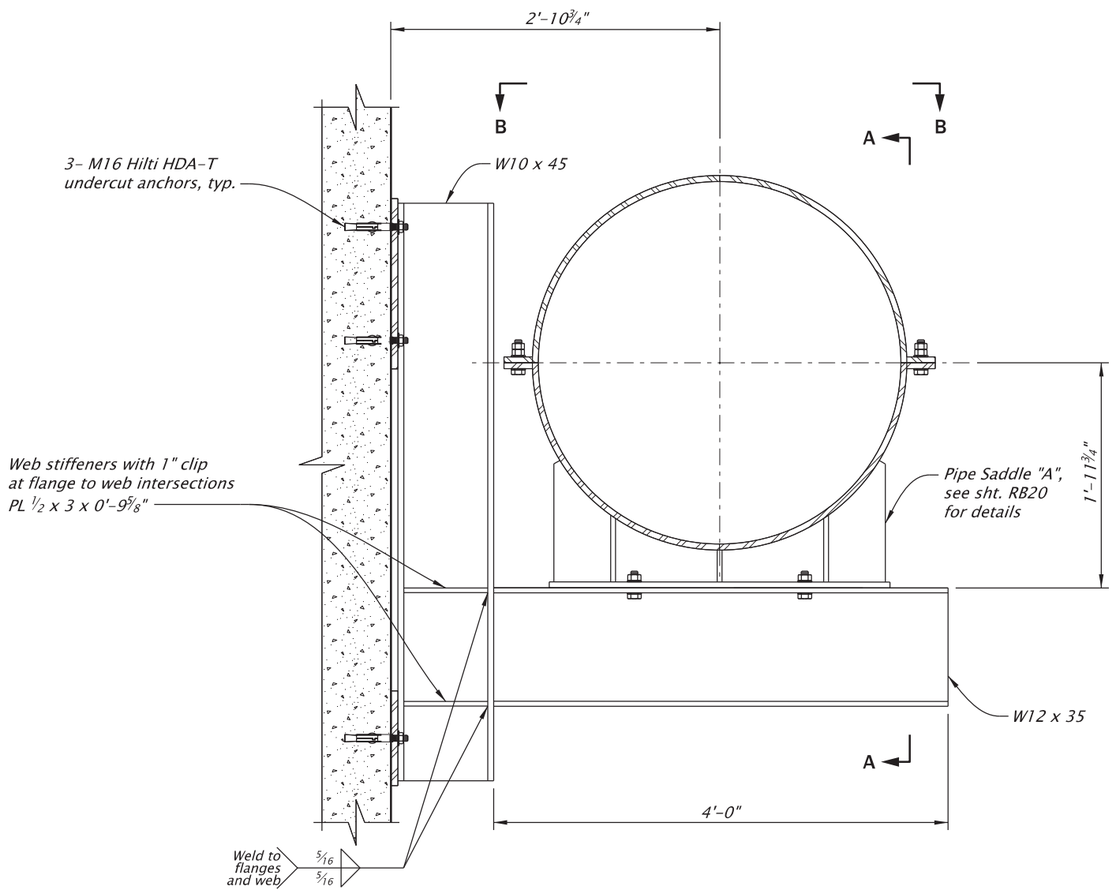

CROSSBEAM PIPE SUPPORT

Scale: 3/4"=1'-0"

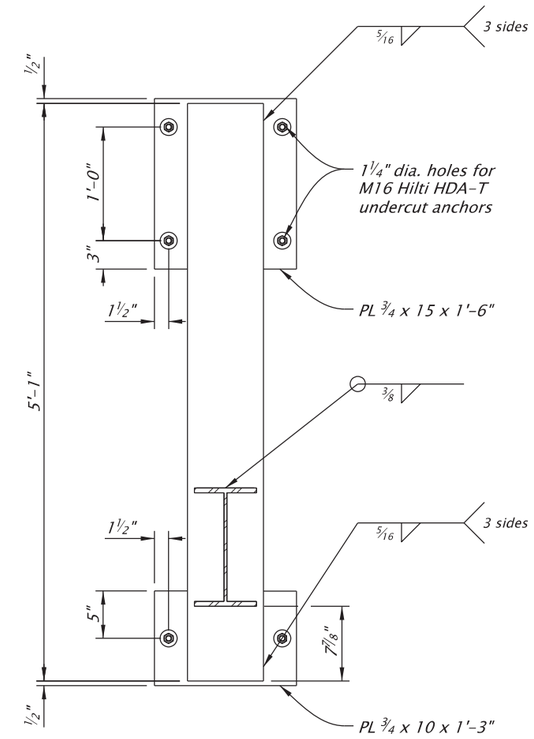

NOTE:
Waterline and pipe saddle
not shown for clarity.

SECTION A-A

Scale: 3/4"=1'-0"

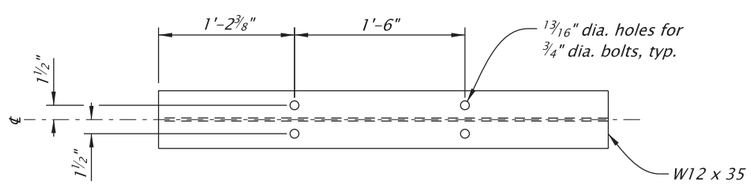

VIEW B-B

Scale: 3/4"=1'-0"

NOTE:
Waterline and pipe saddle
not shown for clarity.

REGISTERED PROFESSIONAL ENGINEER
60181
Digitally Signed 2026.02.10 08:15:10-08'00'
OREGON
JULY 13, 2004
ANDREW DEAN HOWE
EXPIRES: 6/30/2027

FINAL ELECTRONIC DOCUMENT
AVAILABLE UPON REQUEST

DOWL WWW.DOWL.COM

OREGON DEPARTMENT OF TRANSPORTATION

OR22: CENTER ST BRIDGE (PHASE 1) PROJECT
WILLAMINA-SALEM HIGHWAY
MARION & POLK COUNTIES

Designer: Andy Howe, PE
Reviewer: Bob Goodrich, PE
Drafter: Brian Sevits
Checker: Ben Wardell, PE

CROSSBEAM PIPE SUPPORT

SHEET NO. RB17

59V-051

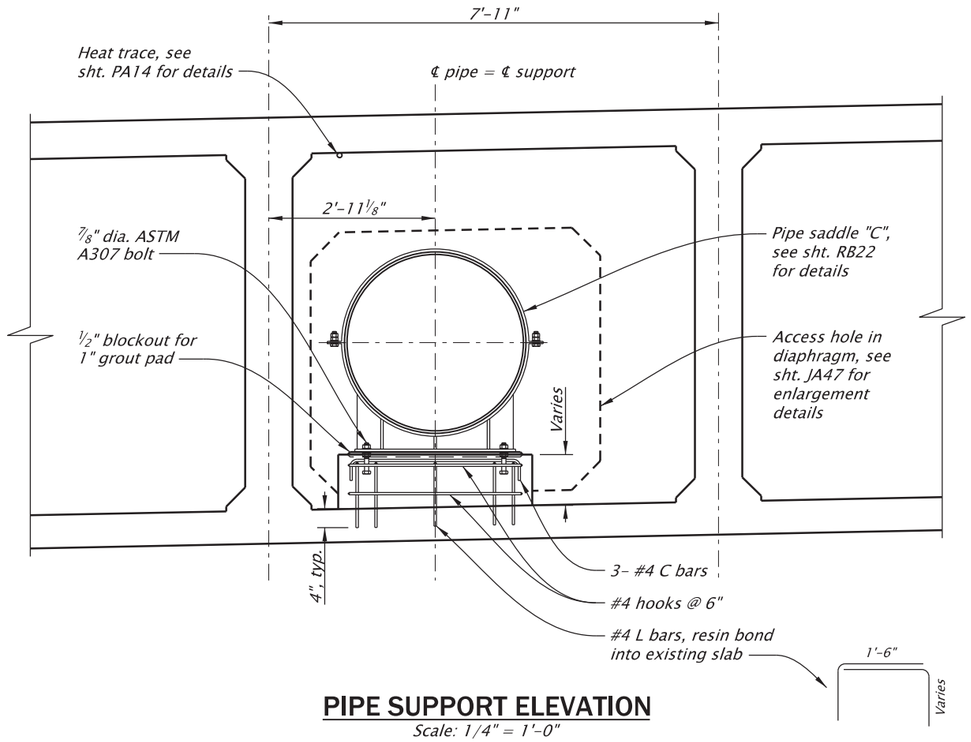

PIPE SUPPORT ELEVATION

Scale: 1/4" = 1'-0"

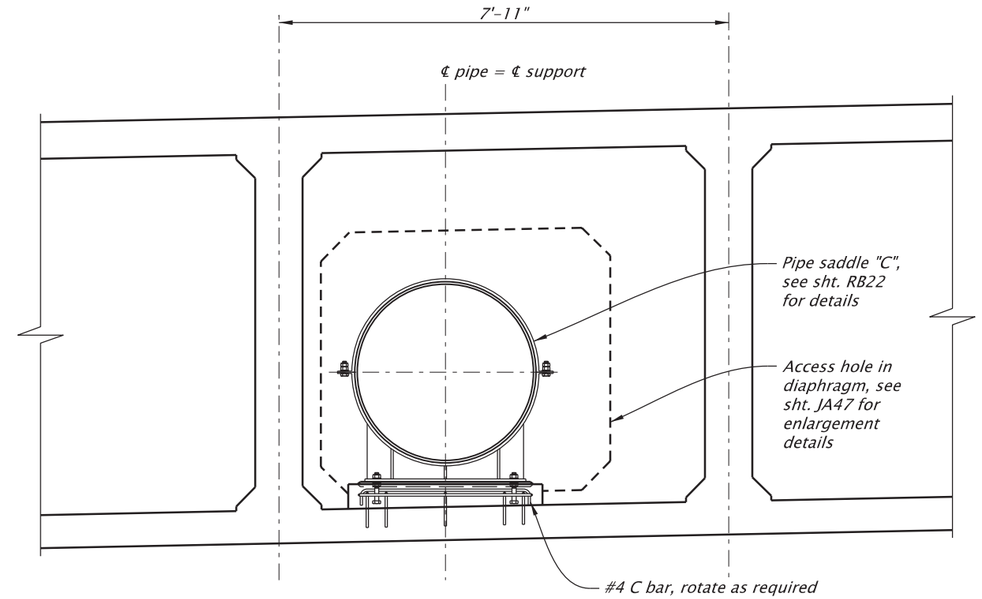

ELEVATION, MINIMUM HEIGHT PIPE SUPPORT

Scale: 1/4" = 1'-0"

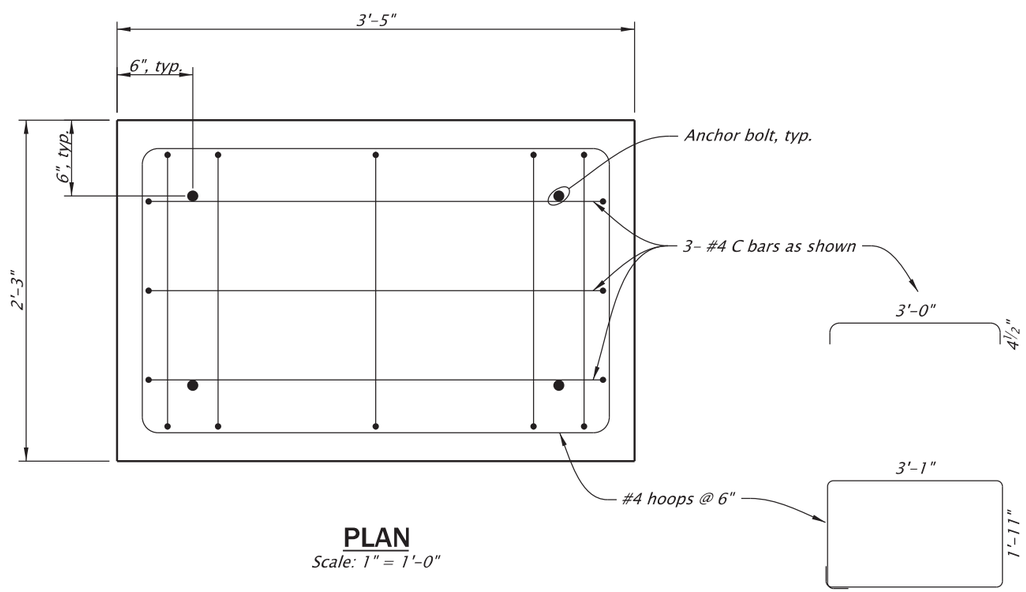

PLAN

Scale: 1" = 1'-0"

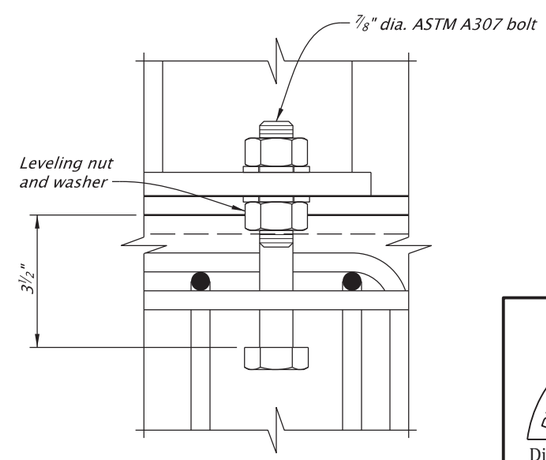

ANCHOR BOLT DETAIL

Scale: 3" = 1'-0"

REGISTERED PROFESSIONAL ENGINEER
60181
Digitally Signed 2026.03.02 10:28:25-08'00'
OREGON
JULY 13, 2004
ANDREW DEAN HOWE
EXPIRES: 6/30/2027

FINAL ELECTRONIC DOCUMENT AVAILABLE UPON REQUEST

DOWL WWW.DOWL.COM

OREGON DEPARTMENT OF TRANSPORTATION

OR22: CENTER ST BRIDGE (PHASE 1) PROJECT
WILLAMINA-SALEM HIGHWAY
MARION & POLK COUNTIES

Designer: Andy Howe, PE
Reviewer: Bob Goodrich, PE
Drafter: Brian Sevits
Checker: Ben Wardell, PE

BOX GIRDER PIPE SUPPORT

SHEET NO. RB18

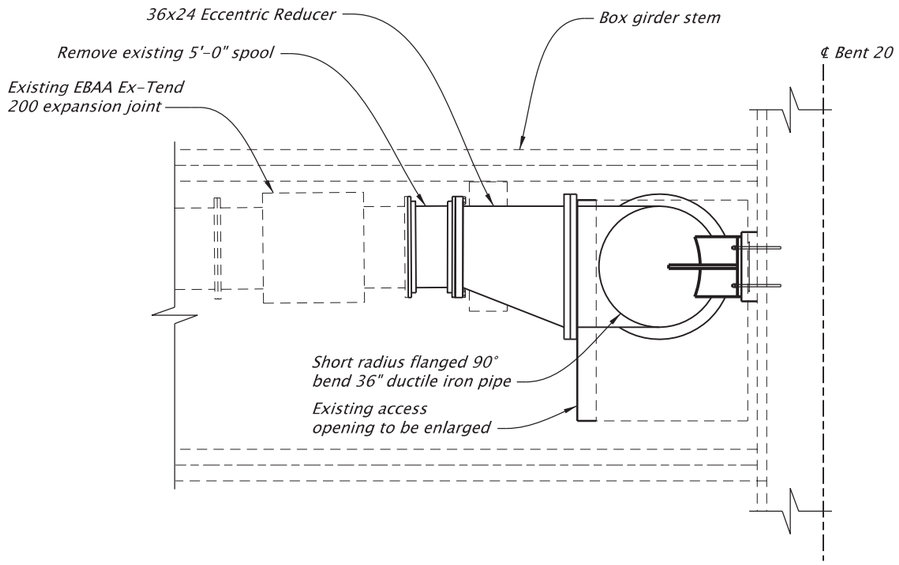

PLAN

Scale: 1/4"=1'-0"

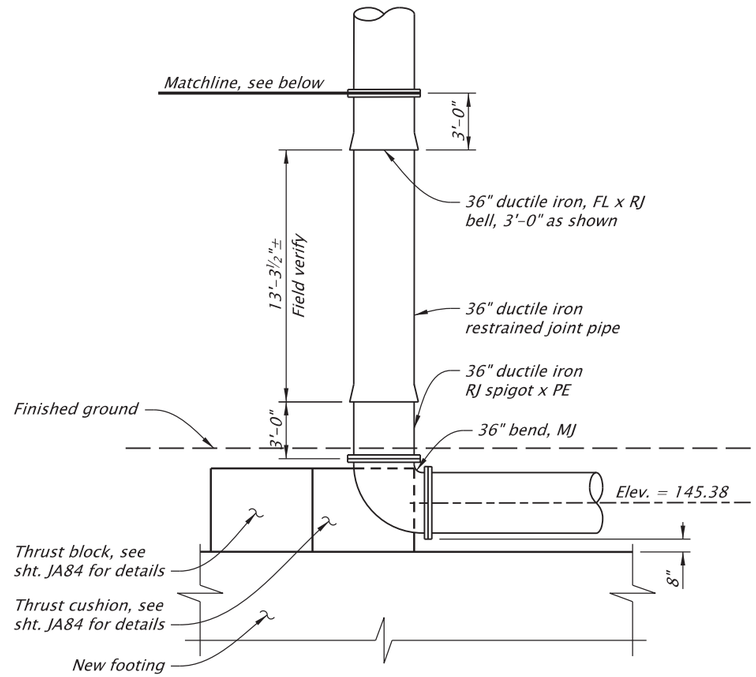

VERTICAL PIPE AT BENT 20 DETAIL

Scale: 1/8"=1'-0"

CONSTRUCTION SEQUENCE (Phase 4)

1. Remove existing box girder access cage and enlarge existing access hole.
2. Remove existing ductile iron pipe from Bent 20, including existing 90° elbow and 24" D.I. spool and cap pipe at existing expansion joint. Field verify requried length of new 24" D.I. spool.
3. Construct Bent 20 retrofit, see sht. JA80 for details.
4. Install 24" D.I. spool with flange coupling adapters, 36x24 eccentric reducer, and 36" 90° base bend. Adjust pipe supports and temporarily support pipe as required.
5. Install and temporarily support vertical 36" D.I. pipe. Fully extend restrained joints.
6. Trim vertical ductile iron pipe to length and insert into lower 90° MJ bend.
7. Temporarily support the lower MJ bend. Form and pour thrust block and thrust cushion, see sht. JA84 for details.
8. Install 24" blind flange on upper 36x24 reducer along with temporary air release provisions.
9. Pressure test to the 24" blind flange.
10. Remove blind flange, insert ductile iron spool and two FCA's and connect to existing expansion joint.
11. Install new access hatch.

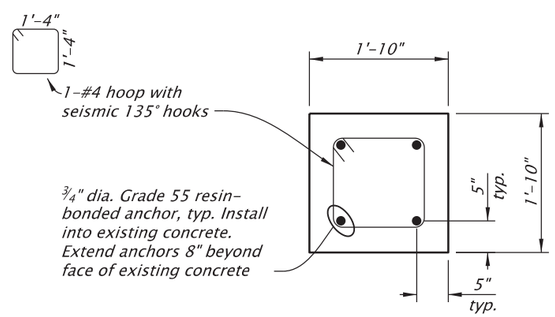

FLANGE SUPPORT BLOCK

Scale: 1/2"=1'-0"

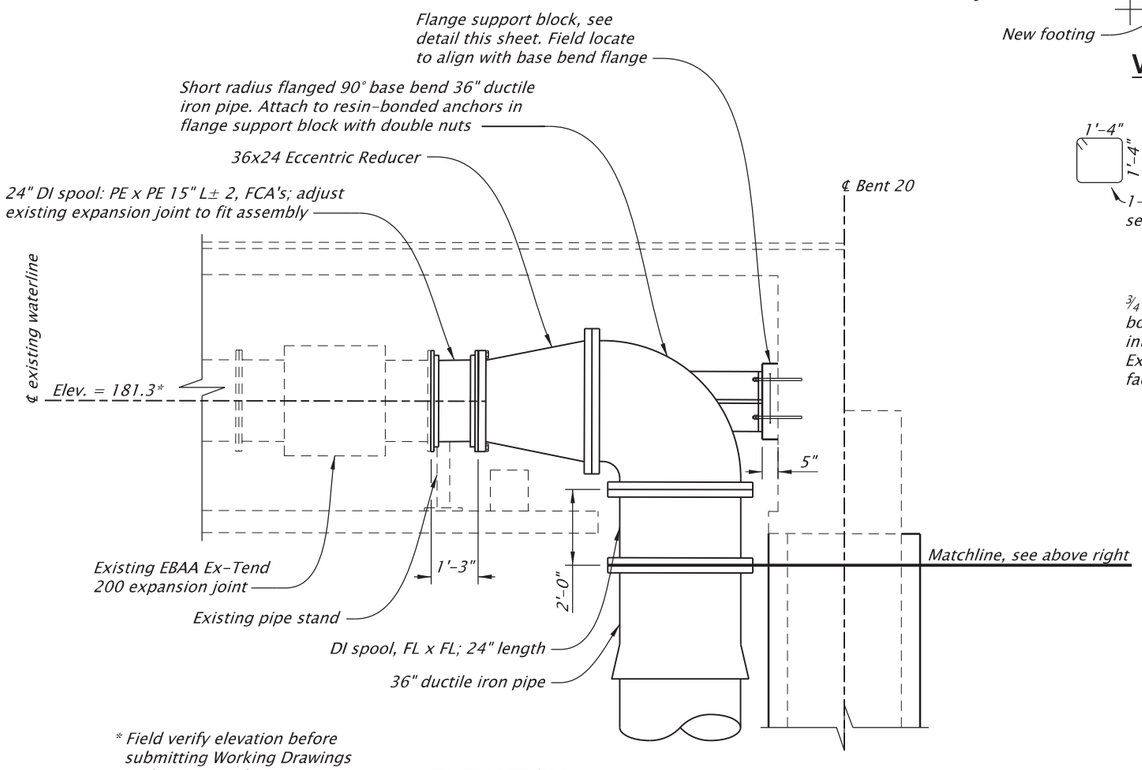

* Field verify elevation before submitting Working Drawings and prior to ordering or fabricating any materials.

ELEVATION

Scale: 1/4"=1'-0"

REGISTERED PROFESSIONAL ENGINEER
60181
Digitally Signed 2026.01.27 16:30:18-08'00'
OREGON
JULY 13, 2004
ANDREW DEAN HOWE
EXPIRES: 6/30/2027

FINAL ELECTRONIC DOCUMENT AVAILABLE UPON REQUEST

DOWL WWW.DOWL.COM

OR22: CENTER ST BRIDGE (PHASE 1) PROJECT
WILLAMINA-SALEM HIGHWAY
MARION & POLK COUNTIES

Designer: Andy Howe, PE
Reviewer: Bob Goodrich, PE
Drafter: Brian Sevits
Checker: Ben Wardell, PE

BENT 20 TEMPORARY CONNECTION

SHEET NO. RB19

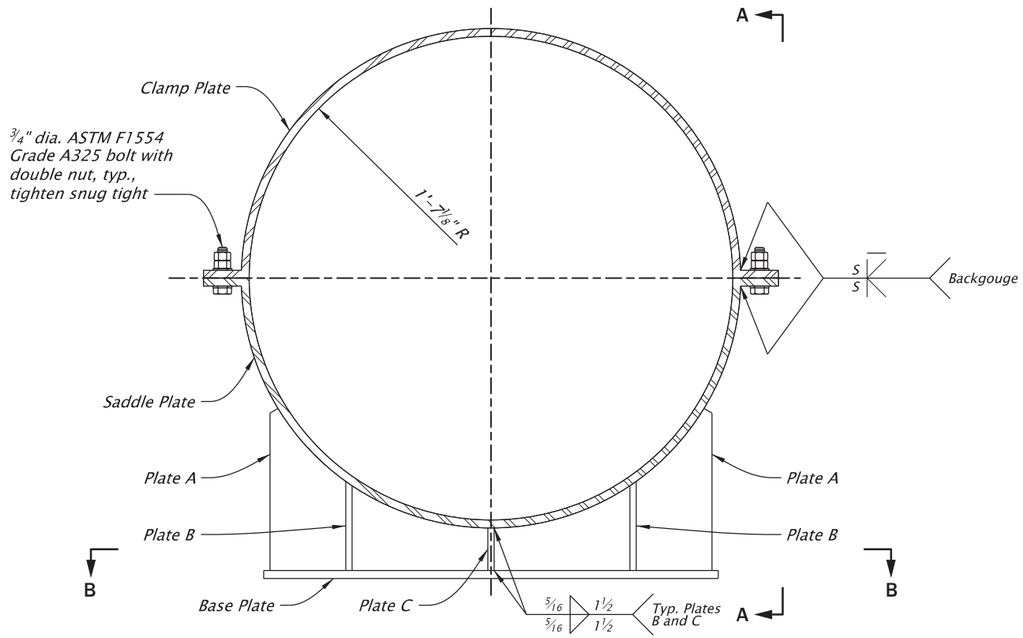

PIPE SADDLE "A" ELEVATION
Scale: 1"=1'-0"

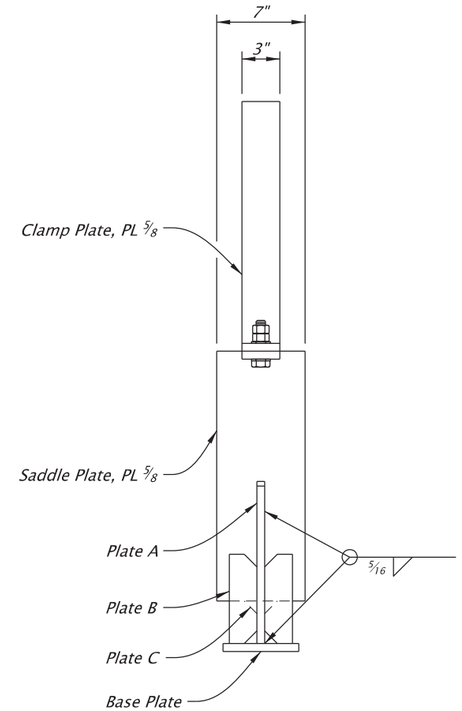

VIEW A-A
Scale: 1"=1'-0"

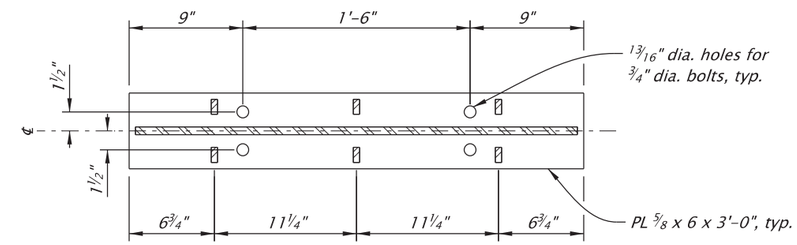

SECTION B-B (BASE PLATE)
Scale: 1"=1'-0"

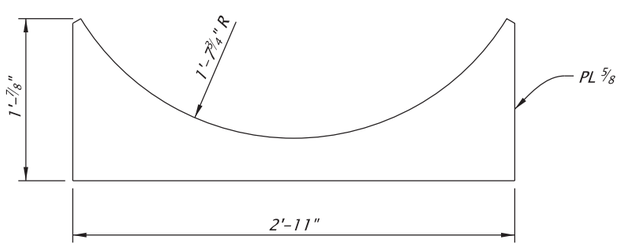

PLATE "A"
Scale: 1"=1'-0"

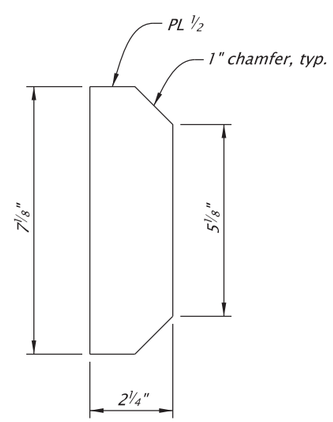

PLATE "B"
Scale: 3"=1'-0"

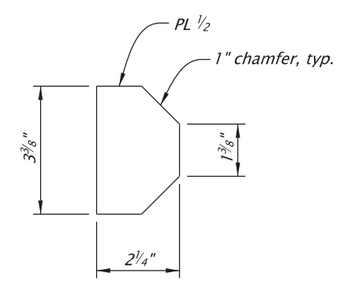

PLATE "C"
Scale: 3"=1'-0"

REGISTERED PROFESSIONAL ENGINEER
60181
Digitally Signed 2026.01.27 16:14:33-08'00'
OREGON
JULY 13, 2004
ANDREW DEAN HOWE
EXPIRES: 6/30/2027

FINAL ELECTRONIC DOCUMENT AVAILABLE UPON REQUEST

DOWL WWW.DOWL.COM

OREGON DEPARTMENT OF TRANSPORTATION

OR22: CENTER ST BRIDGE (PHASE 1) PROJECT
WILLAMINA-SALEM HIGHWAY
MARION & POLK COUNTIES

Designer: Andy Howe, PE
Reviewer: Bob Goodrich, PE
Drafter: Brian Sevits
Checker: Ben Wardell, PE

PIPE SADDLE "A"

SHEET NO. RB20

59V-051

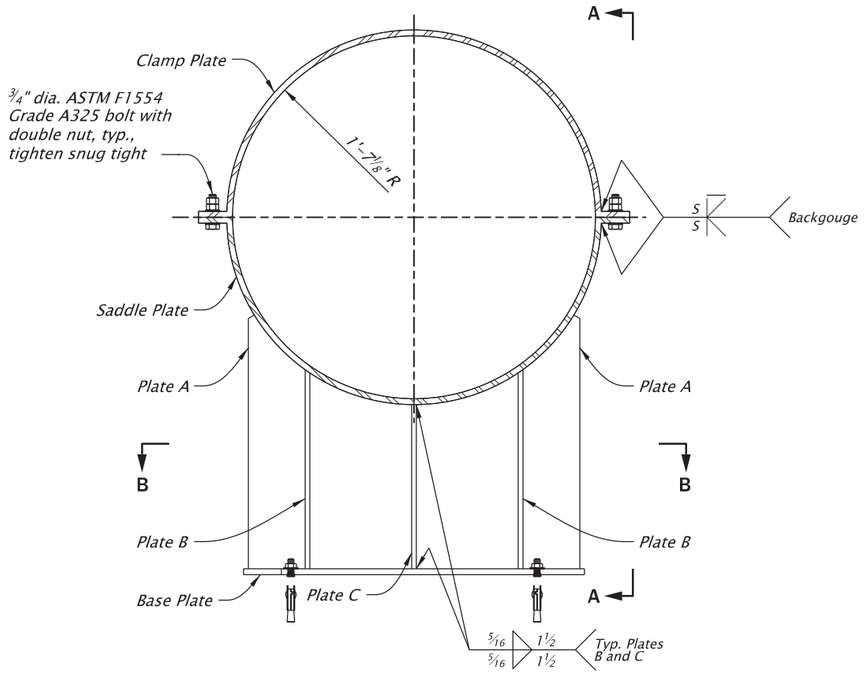

PIPE SADDLE "B" ELEVATION

Scale: 3/4"=1'-0"

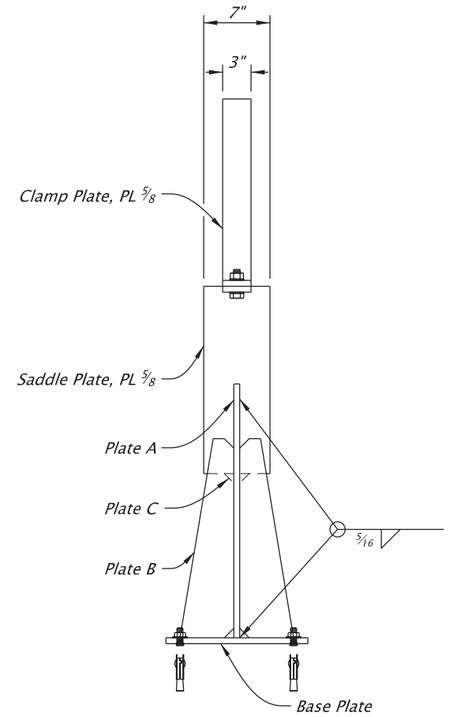

VIEW A-A

Scale: 3/4"=1'-0"

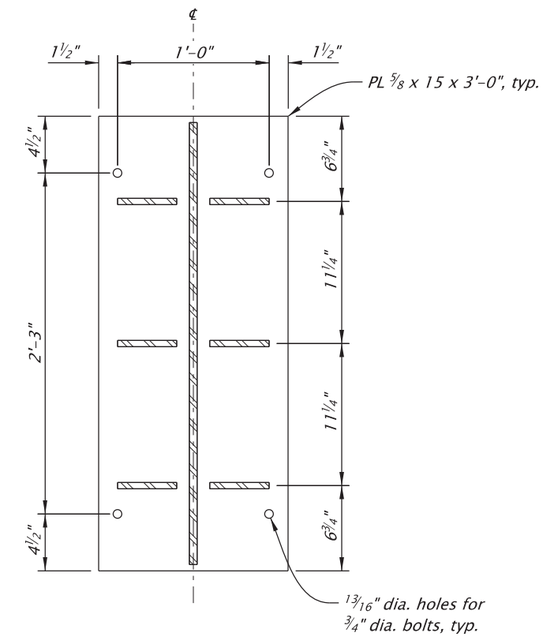

SECTION B-B (BASE PLATE)

Scale: 1"=1'-0"

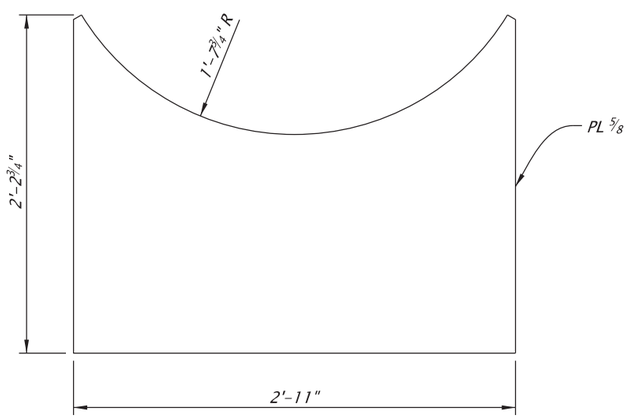

PLATE "A"

Scale: 1"=1'-0"

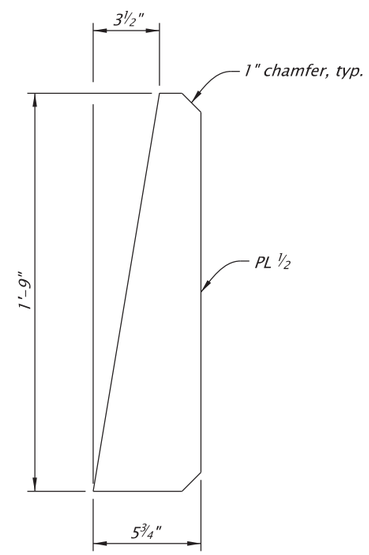

PLATE "B"

Scale: 1 1/2"=1'-0"

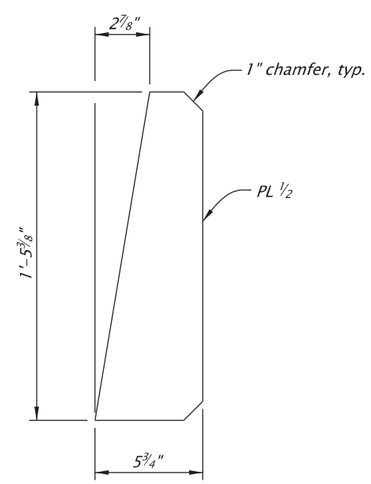

PLATE "C"

Scale: 1 1/2"=1'-0"

REGISTERED PROFESSIONAL ENGINEER
60181
Digitally Signed 2026.01.27 16:11:22-08'00'
OREGON
JULY 13, 2004
ANDREW DEAN HOWE
EXPIRES: 6/30/2027

FINAL ELECTRONIC DOCUMENT AVAILABLE UPON REQUEST

DOWL WWW.DOWL.COM

OREGON DEPARTMENT OF TRANSPORTATION

OR22: CENTER ST BRIDGE (PHASE 1) PROJECT
WILLAMINA-SALEM HIGHWAY
MARION & POLK COUNTIES

Designer: Andy Howe, PE
Reviewer: Bob Goodrich, PE
Drafter: Brian Sevlts
Checker: Ben Wardell, PE

PIPE SADDLE "B"

SHEET NO. RB21

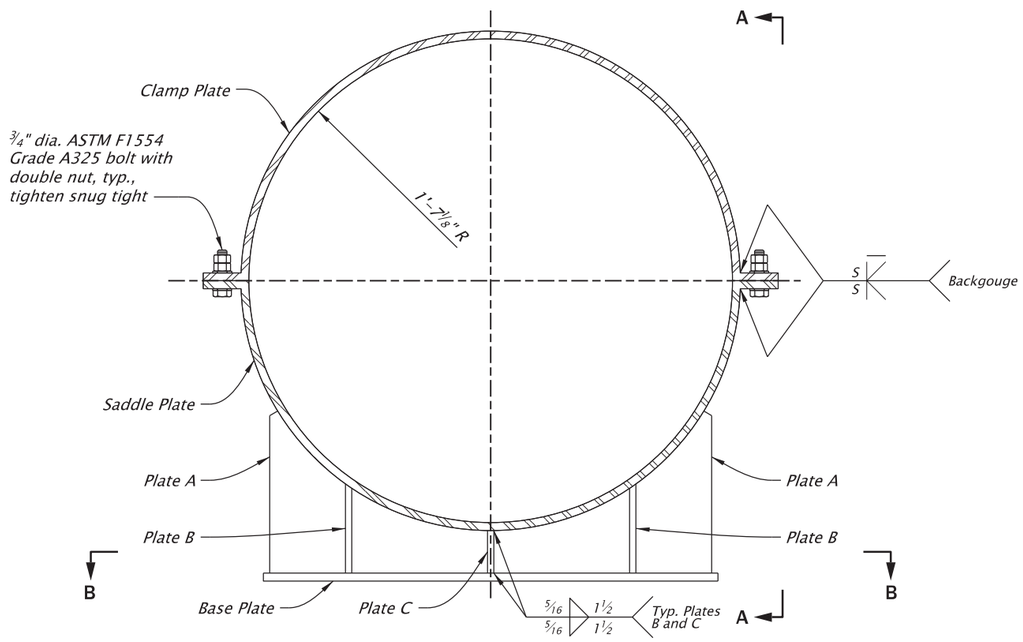

PIPE SADDLE "C" ELEVATION
Scale: 1"=1'-0"

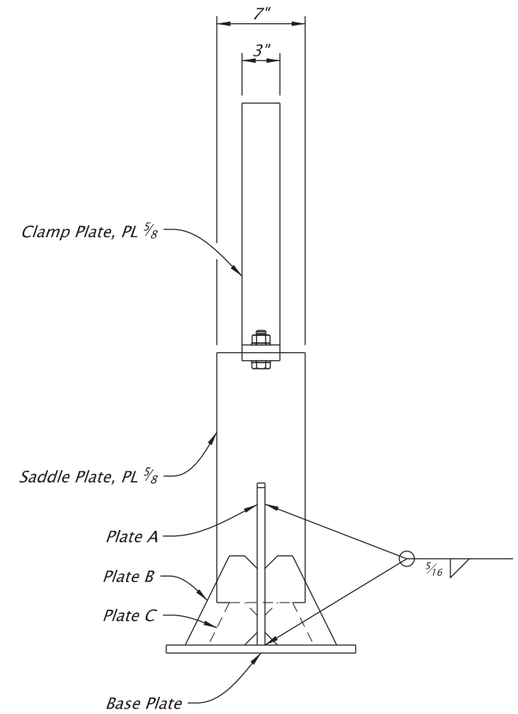

VIEW A-A
Scale: 1"=1'-0"

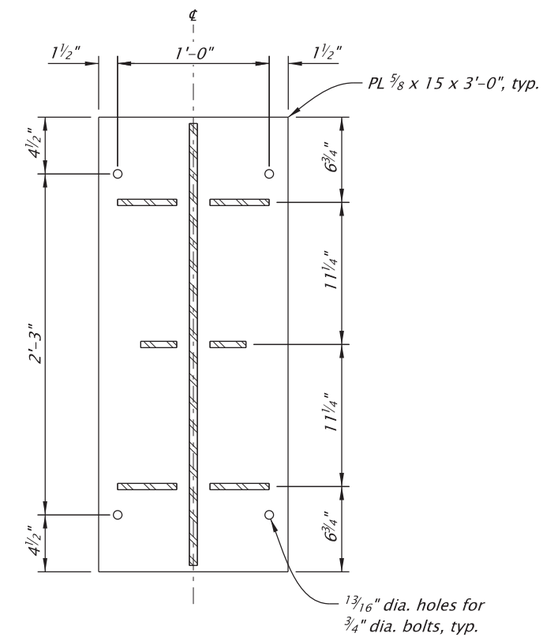

SECTION B-B (BASE PLATE)
Scale: 1"=1'-0"

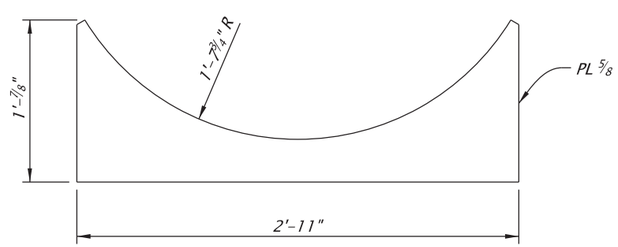

PLATE "A"
Scale: 1"=1'-0"

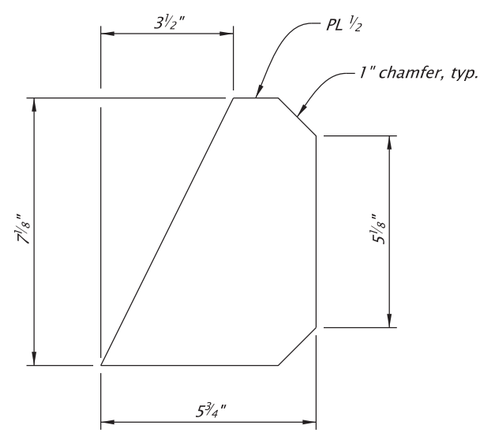

PLATE "B"
Scale: 3"=1'-0"

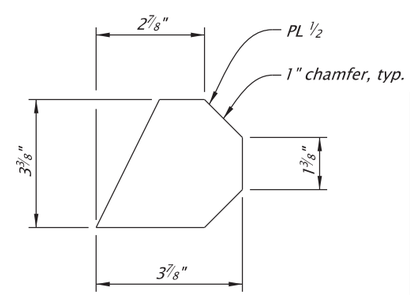

PLATE "C"
Scale: 3"=1'-0"

REGISTERED PROFESSIONAL ENGINEER
60181
Digitally Signed 2026.01.27 16:10:55-08'00'
OREGON
JULY 13, 2004
ANDREW DEAN HOWE
EXPIRES: 6/30/2027

FINAL ELECTRONIC DOCUMENT AVAILABLE UPON REQUEST

DOWL WWW.DOWL.COM

OREGON DEPARTMENT OF TRANSPORTATION

OR22: CENTER ST BRIDGE (PHASE 1) PROJECT
WILLAMINA-SALEM HIGHWAY
MARION & POLK COUNTIES

Designer: Andy Howe, PE
Reviewer: Bob Goodrich, PE
Drafter: Brian Sevits
Checker: Ben Wardell, PE

PIPE SADDLE "C"

SHEET NO. RB22

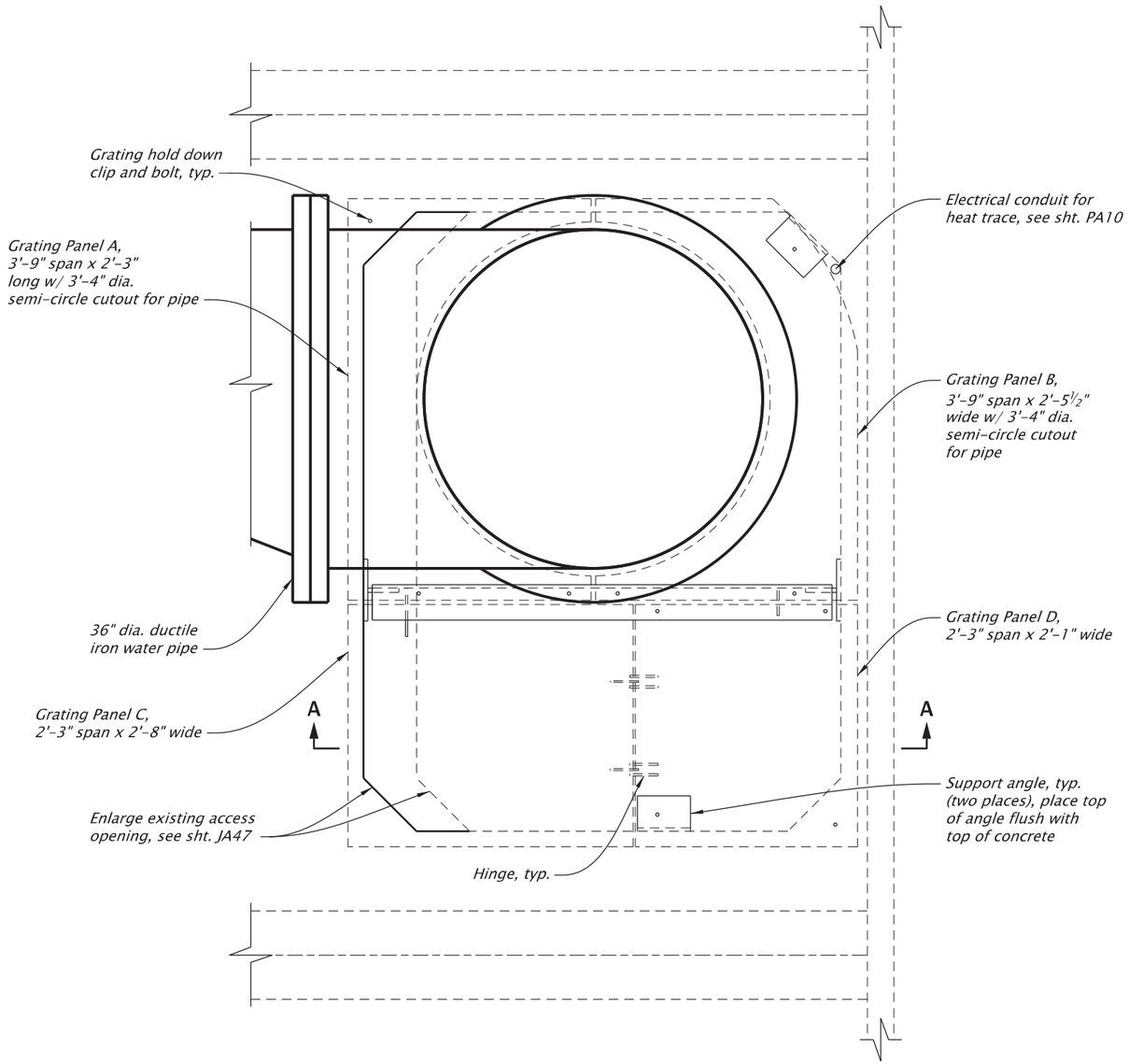

PLAN

Scale: 3/4"=1'-0"

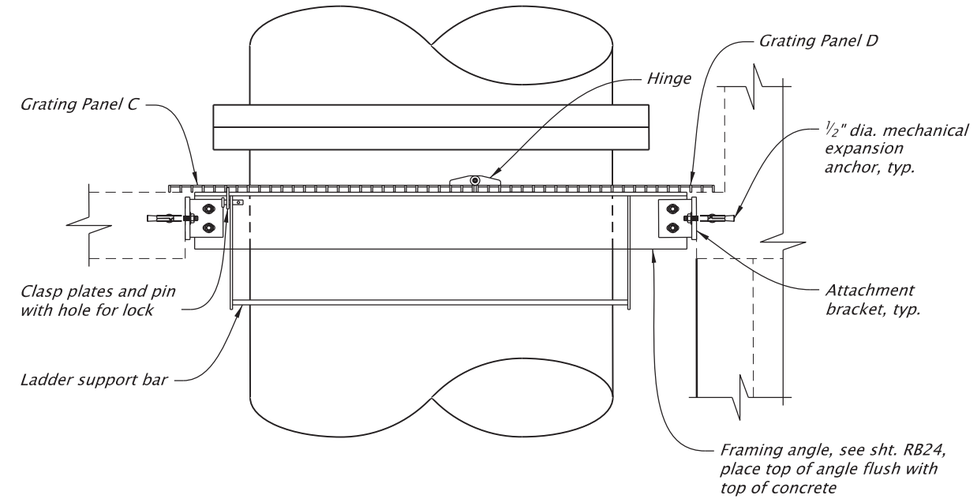

SECTION A-A

Scale: 3/4"=1'-0"

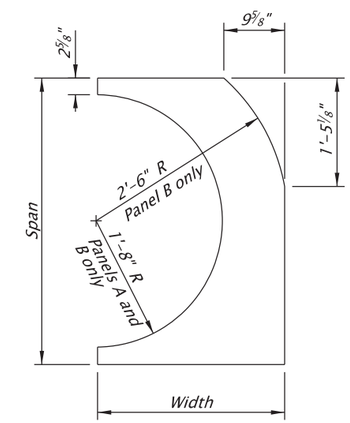

GRATING PANEL DETAIL

Scale: 1/2"=1'-0"

REGISTERED PROFESSIONAL ENGINEER
60181
Digitally Signed 2026.01.27 16:10:28-08'00'
OREGON
JULY 13, 2004
ANDREW DEAN HOWE
EXPIRES: 6/30/2027

FINAL ELECTRONIC DOCUMENT AVAILABLE UPON REQUEST

DOWL WWW.DOWL.COM

OREGON DEPARTMENT OF TRANSPORTATION

OR22: CENTER ST BRIDGE (PHASE 1) PROJECT
WILLAMINA-SALEM HIGHWAY
MARION & POLK COUNTIES

Designer: Andy Howe, PE
Reviewer: Bob Goodrich, PE
Drafter: Brian Sevits
Checker: Ben Wardell, PE

BENT 20 ACCESS DETAILS - 1

SHEET NO. RB23

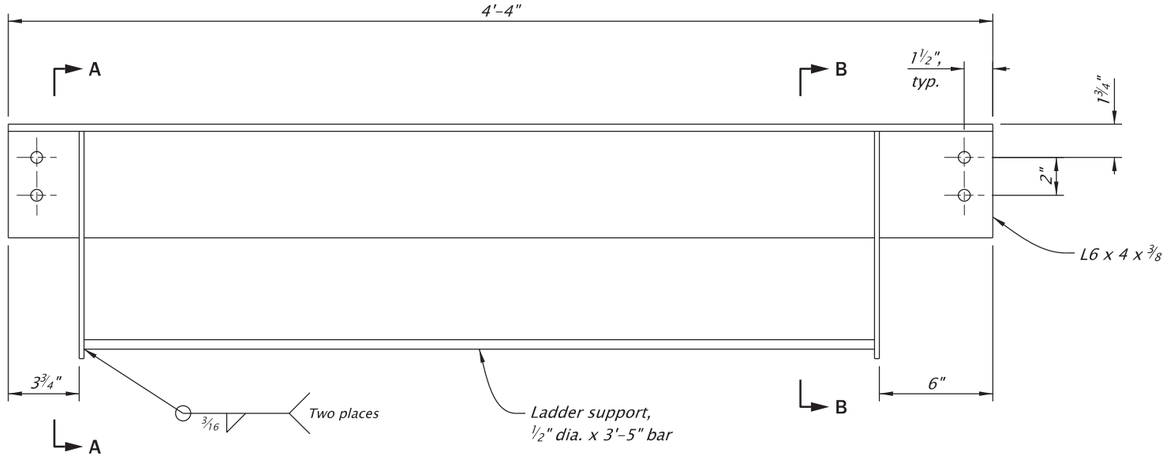

FRAMING ANGLE

Scale: 1 1/2"=1'-0"

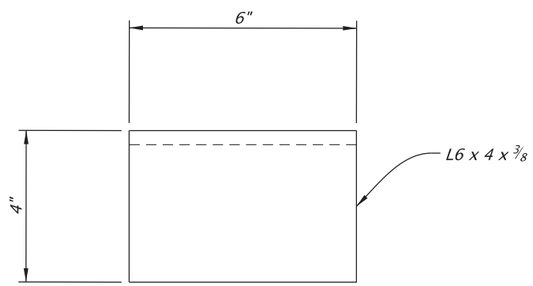

NOTE:
Field drill holes for grating hold down clip bolts. Repair galvanizing according to 02530.71.

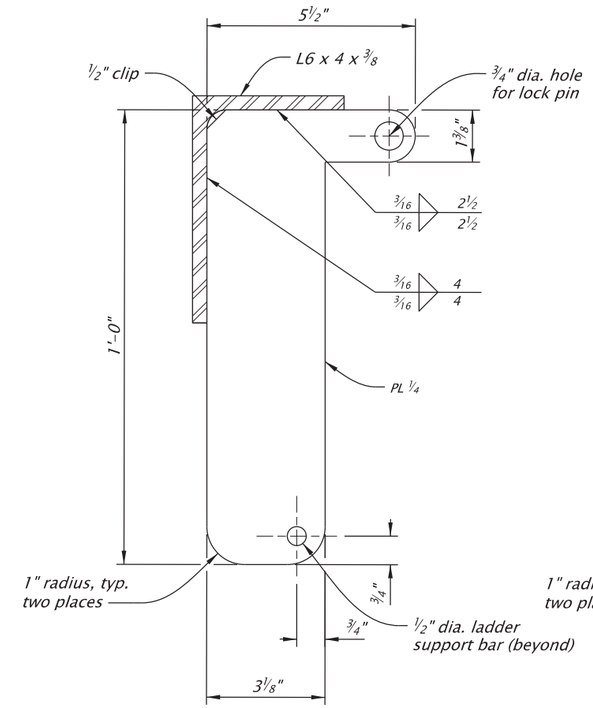

SECTION A-A

Scale: 3"=1'-0"

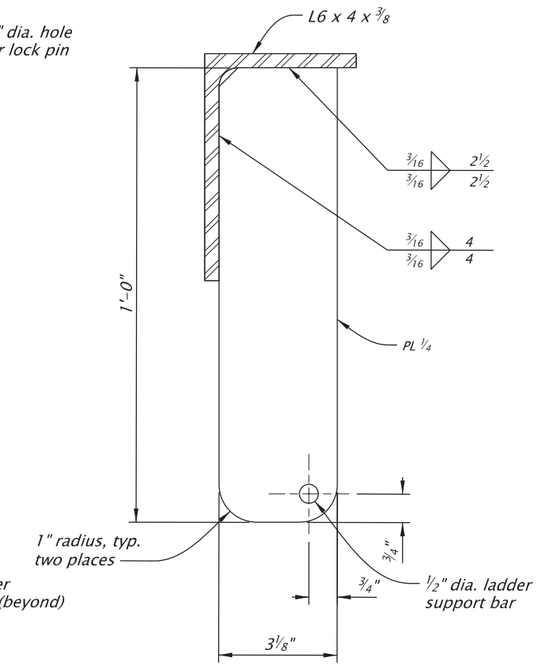

SECTION B-B

Scale: 3"=1'-0"

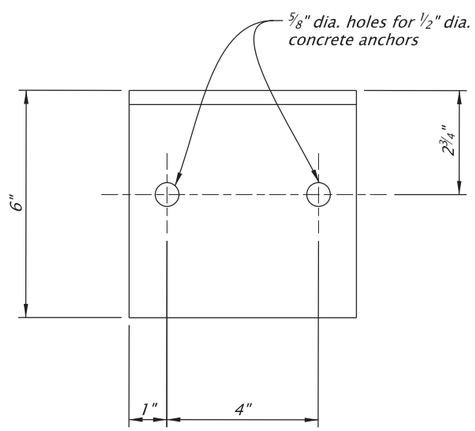

SUPPORT ANGLE

Scale: 3"=1'-0"

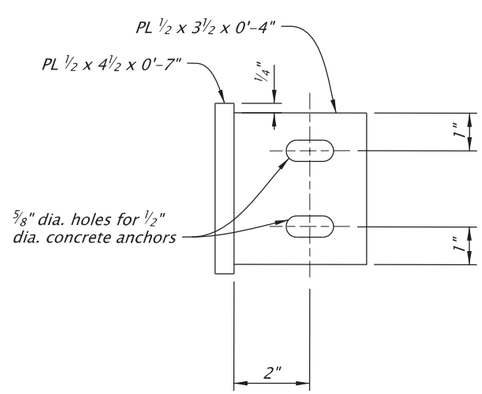

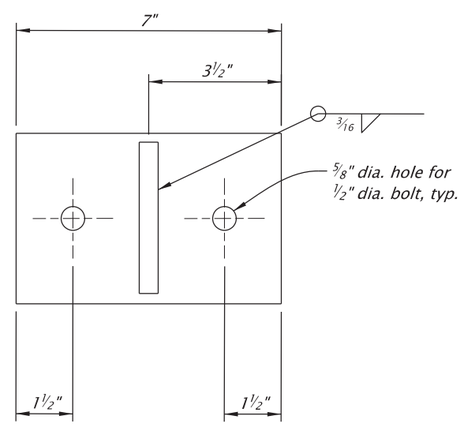

ATTACHMENT BRACKET

Scale: 3"=1'-0"

REGISTERED PROFESSIONAL ENGINEER
60181
Digitally Signed 2026.01.27 16:10:02-08'00'
OREGON
JULY 13, 2004
ANDREW DEAN HOWE
EXPIRES: 6/30/2027

FINAL ELECTRONIC DOCUMENT AVAILABLE UPON REQUEST

DOWL WWW.DOWL.COM

OREGON DEPARTMENT OF TRANSPORTATION

OR22: CENTER ST BRIDGE (PHASE 1) PROJECT
WILLAMINA-SALEM HIGHWAY
MARION & POLK COUNTIES

Designer: Andy Howe, PE
Reviewer: Bob Goodrich, PE
Drafter: Brian Sevits
Checker: Ben Wardell, PE

BENT 20 ACCESS DETAILS - 2

SHEET NO. RB24

59V-051

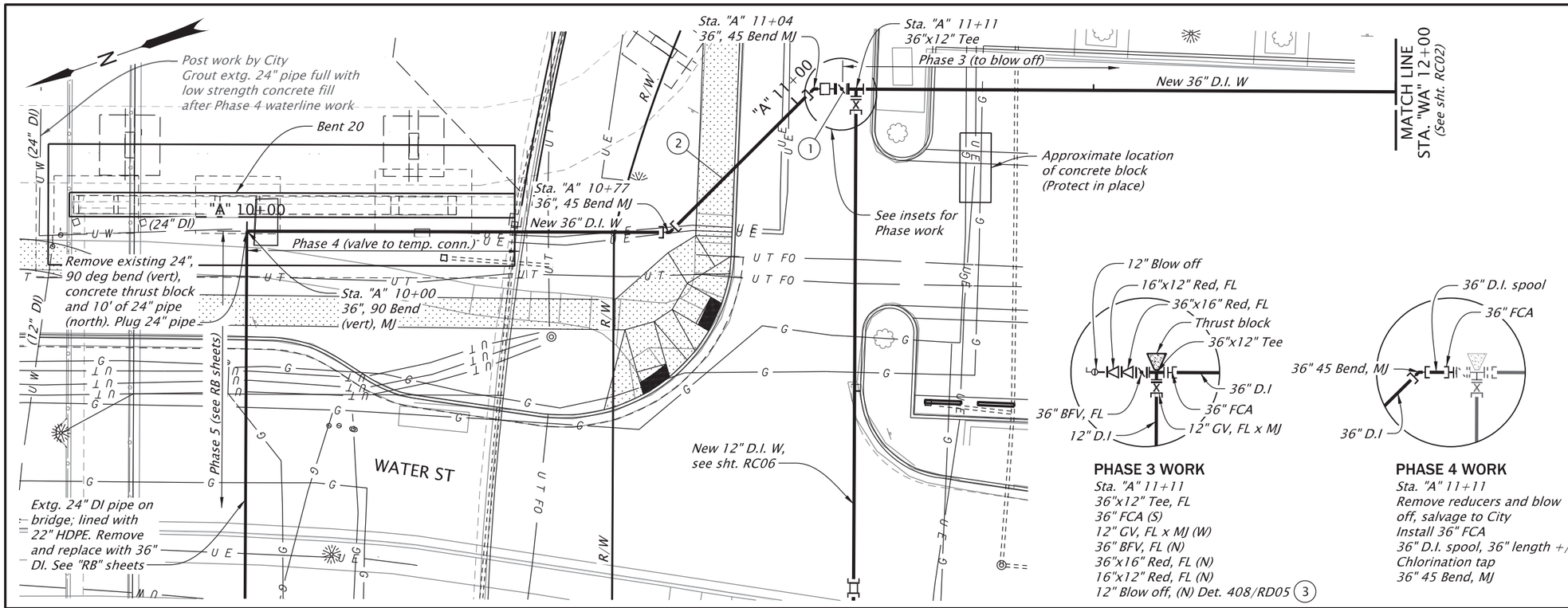

PHASE 3 WORK

Sta. "A" 11+11
36"x12" Tee, FL
36" FCA (S)
12" GV, FL x MJ (W)
36" BFV, FL (N)
36"x16" Red, FL (N)
16"x12" Red, FL (N)
12" Blow off, (N) Det. 408/RD05 (3)

PHASE 4 WORK

Sta. "A" 11+11
Remove reducers and blow
off, salvage to City
Install 36" FCA
36" D.I. spool, 36" length +/-
Chlorination tap
36" 45 Bend, MJ

GENERAL SHEET NOTES

1. Fittings are mechanical joint (MJ) unless otherwise indicated.
2. Use restrained joint D.I. pipe, see specifications.
3. Pothole and verify locations, elevations, types and sizes of all existing utilities prior to constructing pipelines and notify engineer of need to adjust piping installation accordingly. Complete potholing and trench excavation sufficiently in advance of laying pipe to allow required elevation or alignment adjustments to proceed without rework.
4. Provide a minimum of 24 hours notice prior to potholing. Coordinate with engineer to review utility investigation and to make appropriate adjustments or any alignment or grade conflicts.
5. See sheet D01B for existing utility information.

CONSTRUCTION NOTES

(1) Install chlorination tap. Excavate for removal of taps by City after successful disinfection. (Detail 412/RD06)

(2) Waterline "Phase 3": Install to blow off. Flush and test watermain and place in service. Waterline "Phase 4": Install bends and 36" water main up to bridge box girder and connect to existing 24" ductile iron pipe inside box girder. See sequencing, sht. RA03.

(3) After initial flushing, reduce 12" blow off to a capped, 4" threaded galvanized steel pipe. Detail 406/RD04 w/ 4" pipe in place of 2".

20 10 0 20
FEET

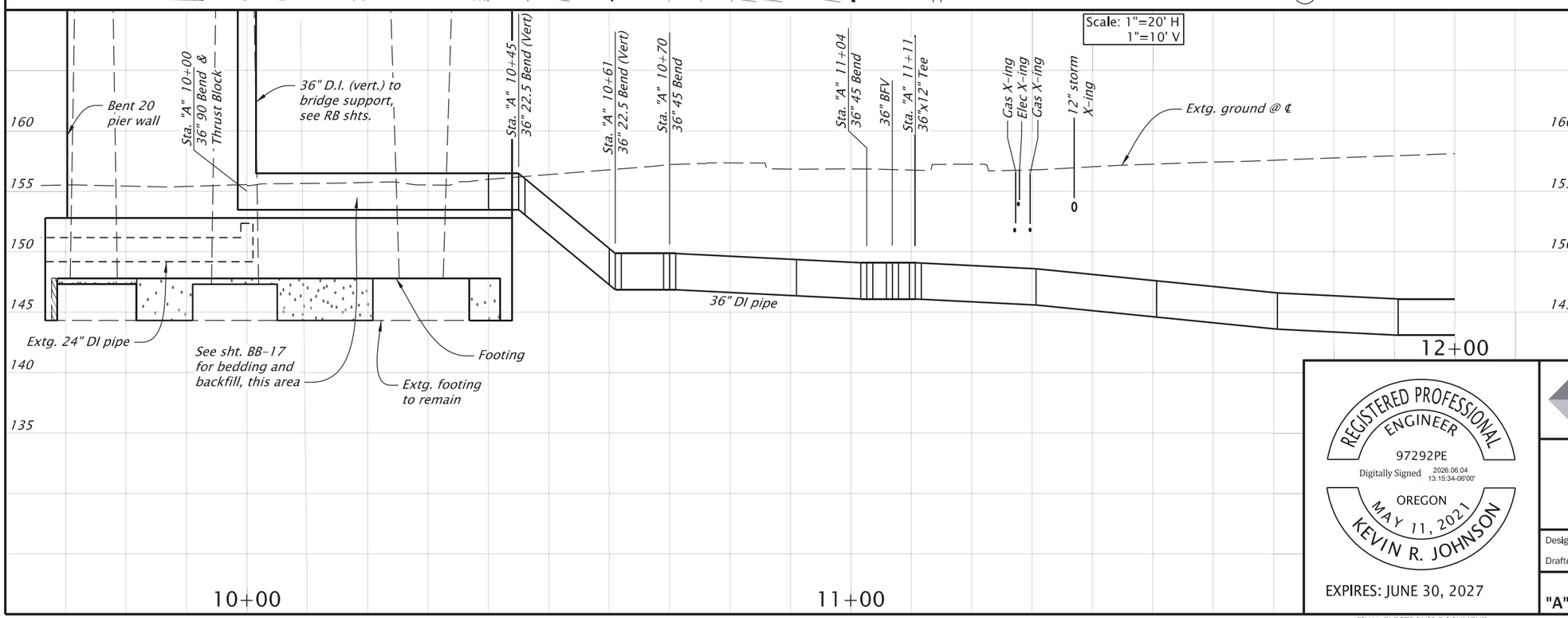

REGISTERED PROFESSIONAL ENGINEER
97292PE
Digitally Signed 2026.06.04 13:15:34-06'00'
OREGON
MAY 11, 2021
KEVIN R. JOHNSON
EXPIRES: JUNE 30, 2027

DOWL WWW.DOWL.COM

OREGON DEPARTMENT OF TRANSPORTATION

OR22: CENTER ST BRIDGE (PHASE 1) PROJECT
WILLAMINA-SALEM HIGHWAY
MARION & POLK COUNTIES

Designer: Kevin Johnson
Reviewer:
Drafter: Steve Wolfer
Checker:

WATERLINE - PLAN & PROFILE
"A" 10+00 TO "A" 12+00 (PHASES 3 & 4)

SHEET NO. RC01

FINAL ELECTRONIC DOCUMENT
AVAILABLE UPON REQUEST

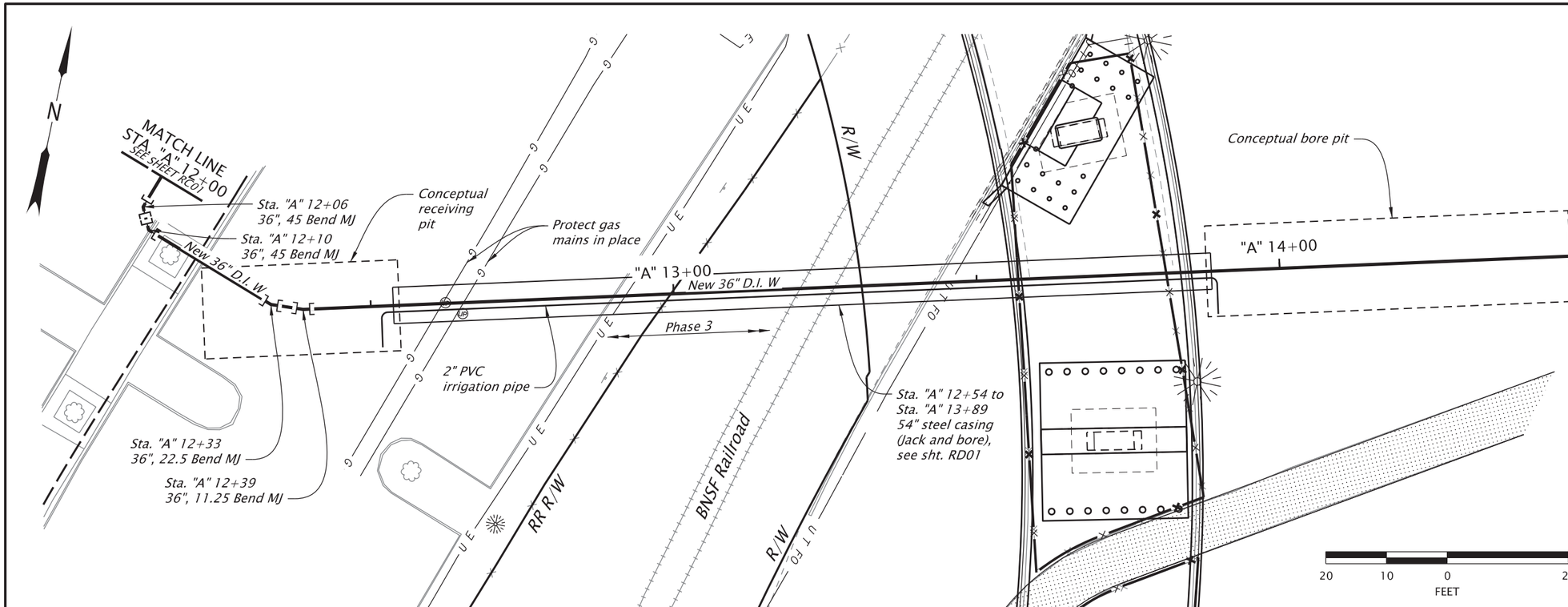

GENERAL SHEET NOTES

1. *Fittings are mechanical joint (MJ) unless otherwise indicated.*
2. *Use restrained joint D.I. pipe, see specifications.*
3. *Pothole and verify locations, elevations, types and sizes of all existing utilities prior to constructing pipelines and notify engineer of need to adjust piping installation accordingly. Complete potholing and trench excavation sufficiently in advance of laying pipe to allow required elevation or alignment adjustments to proceed without rework.*
4. *Provide a minimum of 24 hours notice prior to potholing. Coordinate with engineer to review utility investigation and to make appropriate adjustments or any alignment or grade conflicts.*

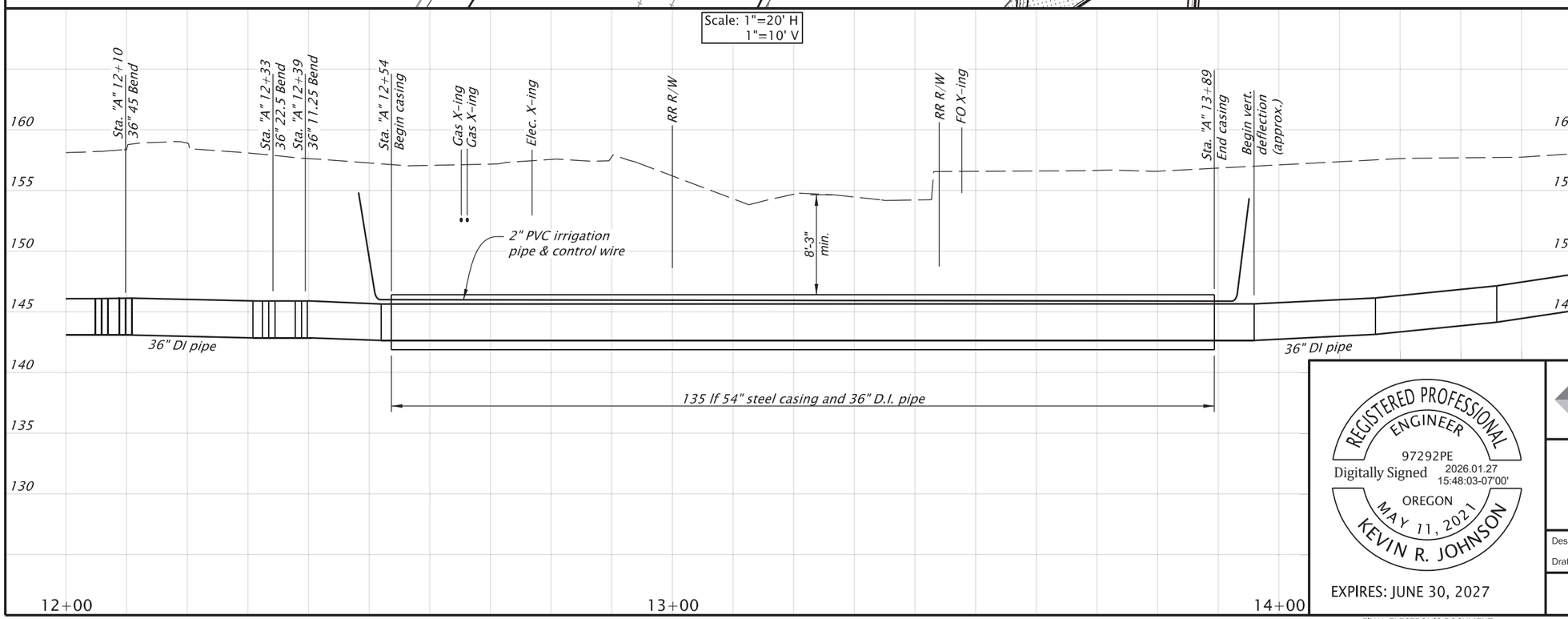

REGISTERED PROFESSIONAL ENGINEER
97292PE
Digitally Signed 2026.01.27 15:48:03-07'00'
OREGON
MAY 11, 2021
KEVIN R. JOHNSON
EXPIRES: JUNE 30, 2027

DOWL WWW.DOWL.COM

OR22: CENTER ST BRIDGE (PHASE 1) PROJECT
WILLAMINA-SALEM HIGHWAY
MARION & POLK COUNTIES

Designer: Kevin Johnson
Reviewer:
Drafter: Steve Wolfer
Checker:

WATERLINE - PLAN & PROFILE
"A" 12+00 TO "A" 14+50 (PHASE 3)

SHEET NO. RC02

FINAL ELECTRONIC DOCUMENT
AVAILABLE UPON REQUEST

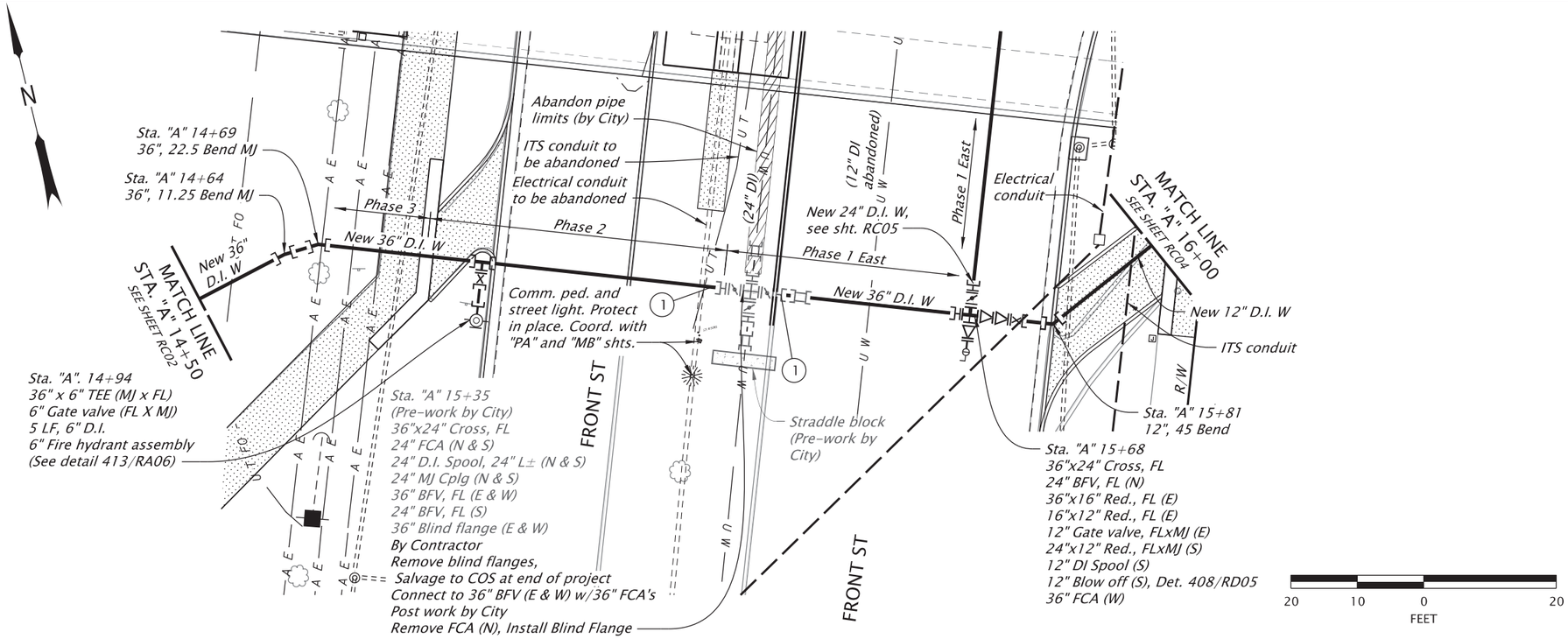

GENERAL SHEET NOTES

1. *Fittings are mechanical joint (MJ) unless otherwise indicated.*
2. *Use restrained joint D.I. pipe, see specifications.*
3. *Pothole and verify locations, elevations, types and sizes of all existing utilities prior to constructing pipelines and notify engineer of need to adjust piping installation accordingly. Complete potholing and trench excavation sufficiently in advance of laying pipe to allow required elevation or alignment adjustments to proceed without rework.*
4. *Provide a minimum of 24 hours notice prior to potholing. Coordinate with engineer to review utility investigation and to make appropriate adjustments or any alignment or grade conflicts.*
5. *See sht. CO2C for existing utility information.*

CONSTRUCTION NOTES

(1) *Install chlorination tap. Excavate for removal of taps by City after successful disinfection. (Detail 412/RD06)*

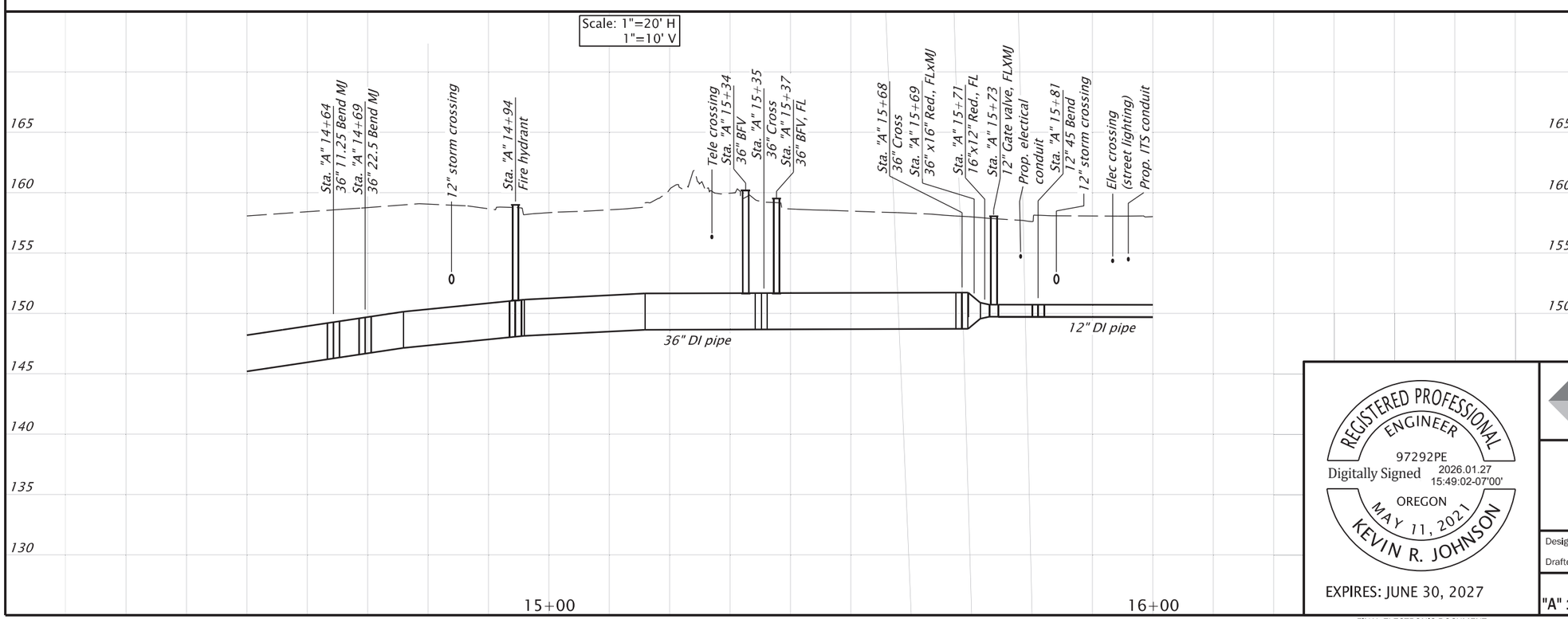

REGISTERED PROFESSIONAL ENGINEER
97292PE
Digitally Signed 2026.01.27 15:49:02-07'00'
OREGON
MAY 11, 2021
KEVIN R. JOHNSON
EXPIRES: JUNE 30, 2027

DOWL WWW.DOWL.COM

OREGON DEPARTMENT OF TRANSPORTATION

OR22: CENTER ST BRIDGE (PHASE 1) PROJECT
WILLAMINA-SALEM HIGHWAY
MARION & POLK COUNTIES

Designer: Kevin Johnson | Reviewer:
Drafter: Steve Wolfer | Checker:

WATERLINE - PLAN & PROFILE
"A" 14+50 TO "A" 16+00 (PHASES 1 EAST, 2, & 3)

SHEET NO. RC03

FINAL ELECTRONIC DOCUMENT AVAILABLE UPON REQUEST

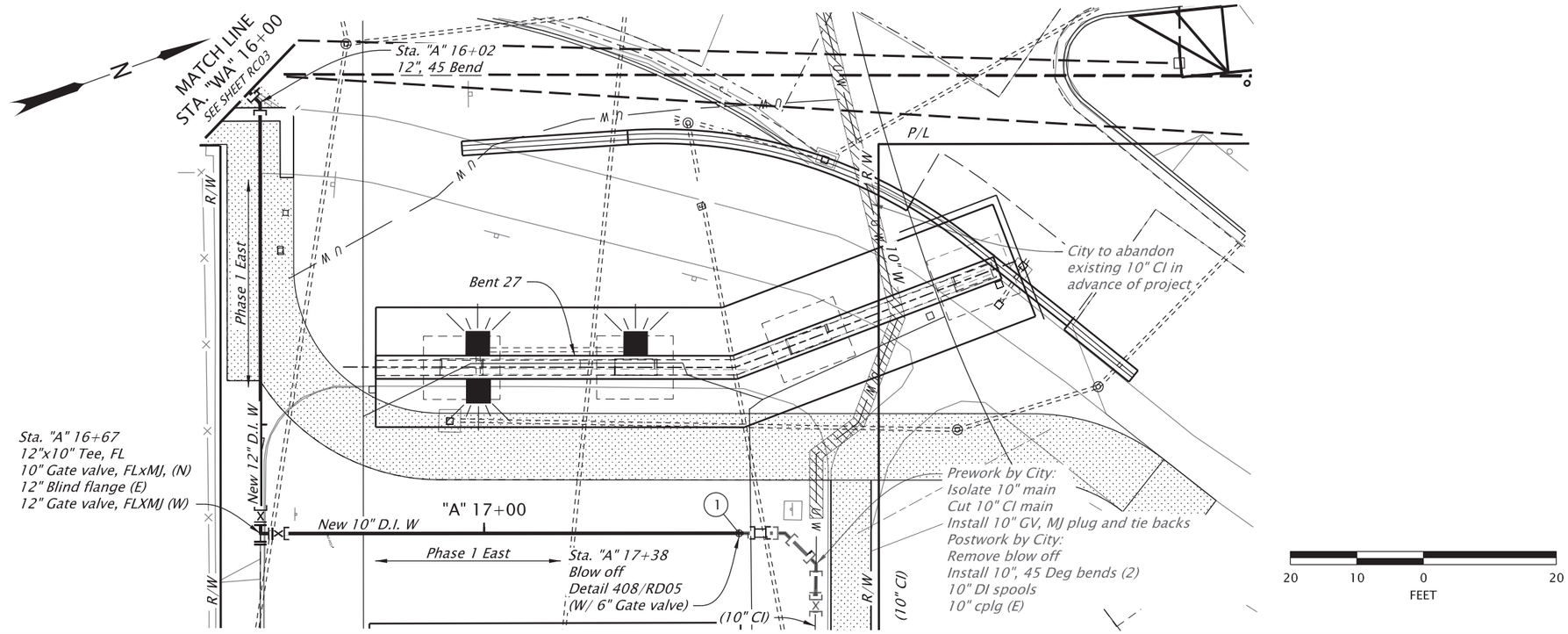

GENERAL SHEET NOTES

1. *Fittings are mechanical joint (MJ) unless otherwise indicated.*
2. *Use restrained joint D.I. pipe, see specifications.*
3. *Pothole and verify locations, elevations, types and sizes of all existing utilities prior to constructing pipelines and notify engineer of need to adjust piping installation accordingly. Complete potholing and trench excavation sufficiently in advance of laying pipe to allow required elevation or alignment adjustments to proceed without rework.*
4. *Provide a minimum of 24 hours notice prior to potholing. Coordinate with engineer to review utility investigation and to make appropriate adjustments or any alignment or grade conflicts.*

CONSTRUCTION NOTES

(1) *Install temporary blowoff.*
City to complete connection to 10" main, east and abandon 10" waterline west after testing and disinfection.

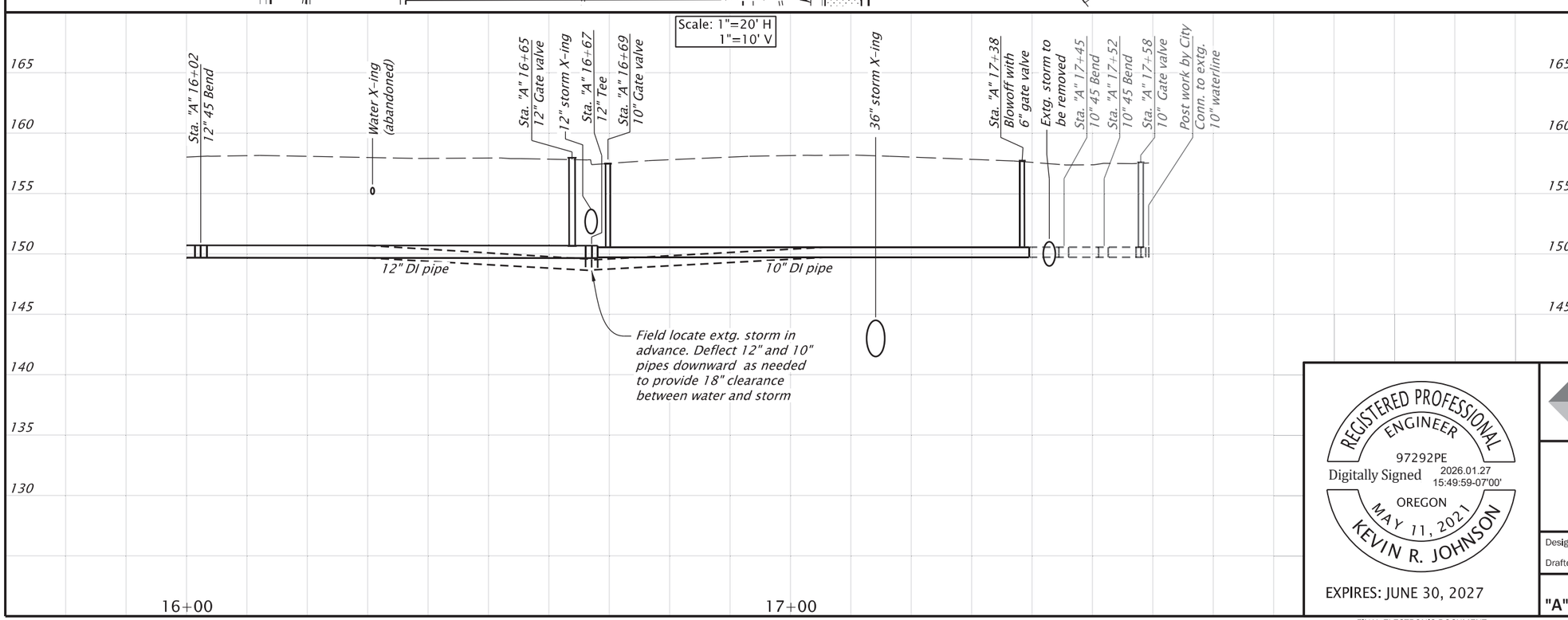

REGISTERED PROFESSIONAL ENGINEER
97292PE
Digitally Signed 2026.01.27 15:49:59-07'00'
OREGON
MAY 11, 2021
KEVIN R. JOHNSON
EXPIRES: JUNE 30, 2027

DOWL WWW.DOWL.COM

OR22: CENTER ST BRIDGE (PHASE 1) PROJECT
WILLAMINA-SALEM HIGHWAY
MARION & POLK COUNTIES

Designer: Kevin Johnson
Reviewer:
Drafter: Steve Wolfer
Checker:

WATERLINE - PLAN & PROFILE
"A" 16+00 TO "A" 17+58 (PHASE 1 EAST)

SHEET NO. RC04

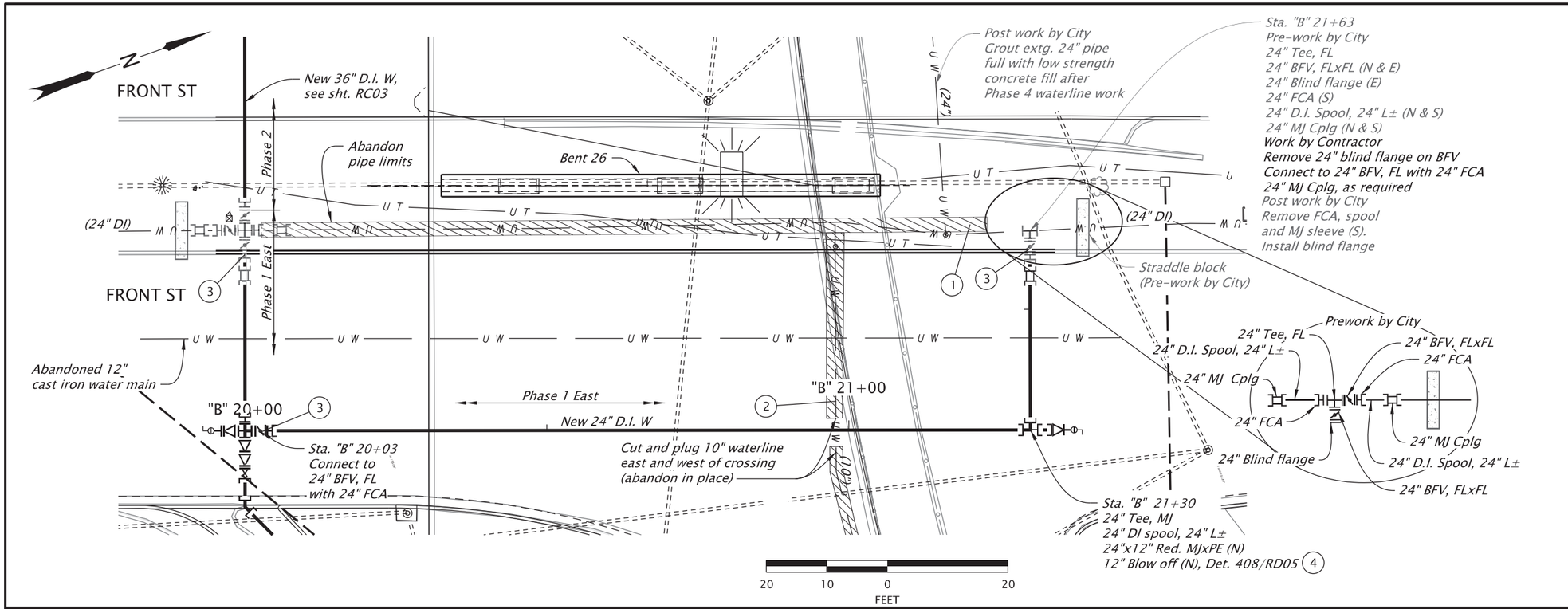

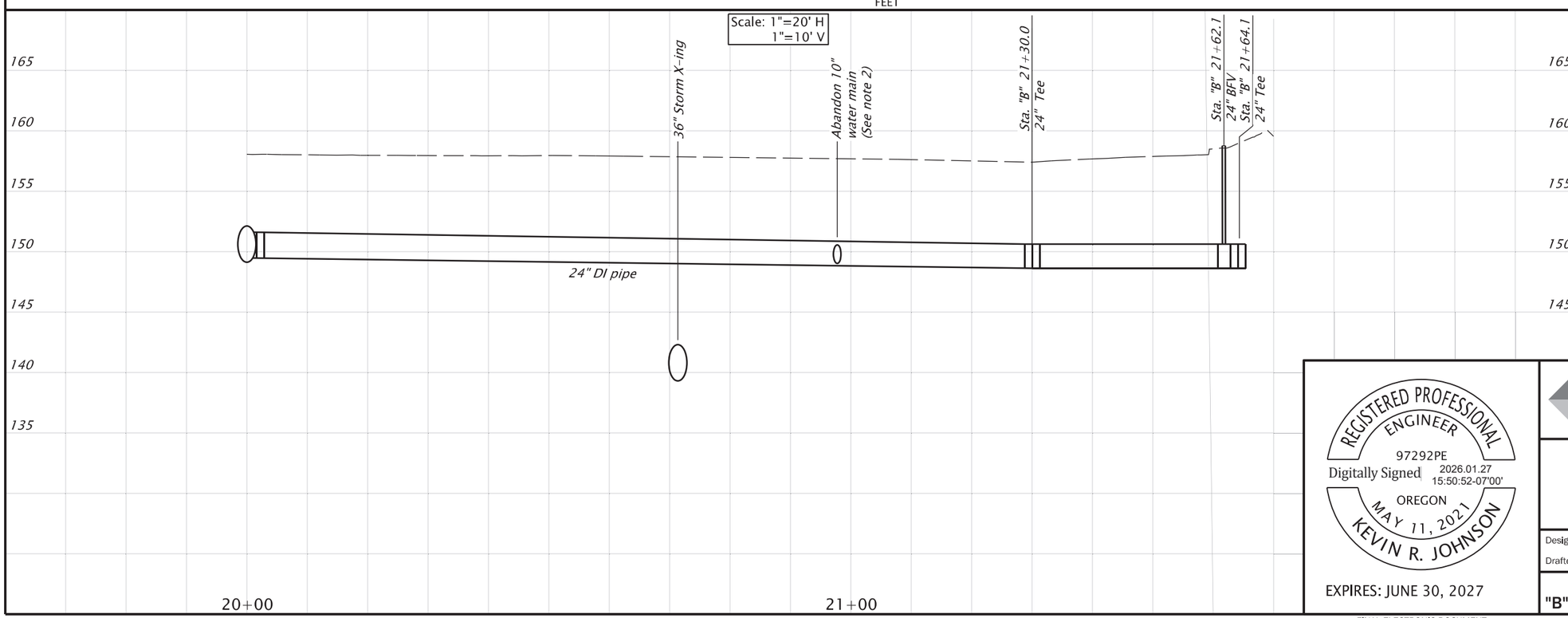

GENERAL SHEET NOTES

1. Fittings are mechanical joint (MJ) unless otherwise indicated.
2. Use restrained joint D.I. pipe, see specifications.
3. Pothole and verify locations, elevations, types and sizes of all existing utilities prior to constructing pipelines and notify engineer of need to adjust piping installation accordingly. Complete potholing and trench excavation sufficiently in advance of laying pipe to allow required elevation or alignment adjustments to proceed without rework.
4. Provide a minimum of 24 hours notice prior to potholing. Coordinate with engineer to review utility investigation and to make appropriate adjustments or any alignment or grade conflicts.

CONSTRUCTION NOTES

(1) City to abandon 24" south after testing and disinfection

(2) City to abandon existing waterline in advance of Phase 4 of the project

(3) Install chlorination tap. Excavate for removal of taps by City after successful disinfection. (See detail 412/RD06) (Optional tap location, subject to installation sequence.)

(4) After initial flushing, reduce 12" blow off to a capped, 4" threaded galvanized steel pipe. Detail 406/RD04 w/ 4" pipe in place of 2"

REGISTERED PROFESSIONAL ENGINEER
97292PE
Digitally Signed 2026.01.27 15:50:52-07'00'
OREGON
MAY 11, 2021
KEVIN R. JOHNSON
EXPIRES: JUNE 30, 2027

DOWL WWW.DOWL.COM

OREGON DEPARTMENT OF TRANSPORTATION

OR22: CENTER ST BRIDGE (PHASE 1) PROJECT
WILLAMINA-SALEM HIGHWAY
MARION & POLK COUNTIES

Designer: Kevin Johnson | Reviewer:
Drafter: Steve Wolfer | Checker:

WATERLINE - PLAN & PROFILE
"B" 20+00 TO "B" 21+64 (PHASE 1 EAST)

SHEET NO. RC05

FINAL ELECTRONIC DOCUMENT AVAILABLE UPON REQUEST

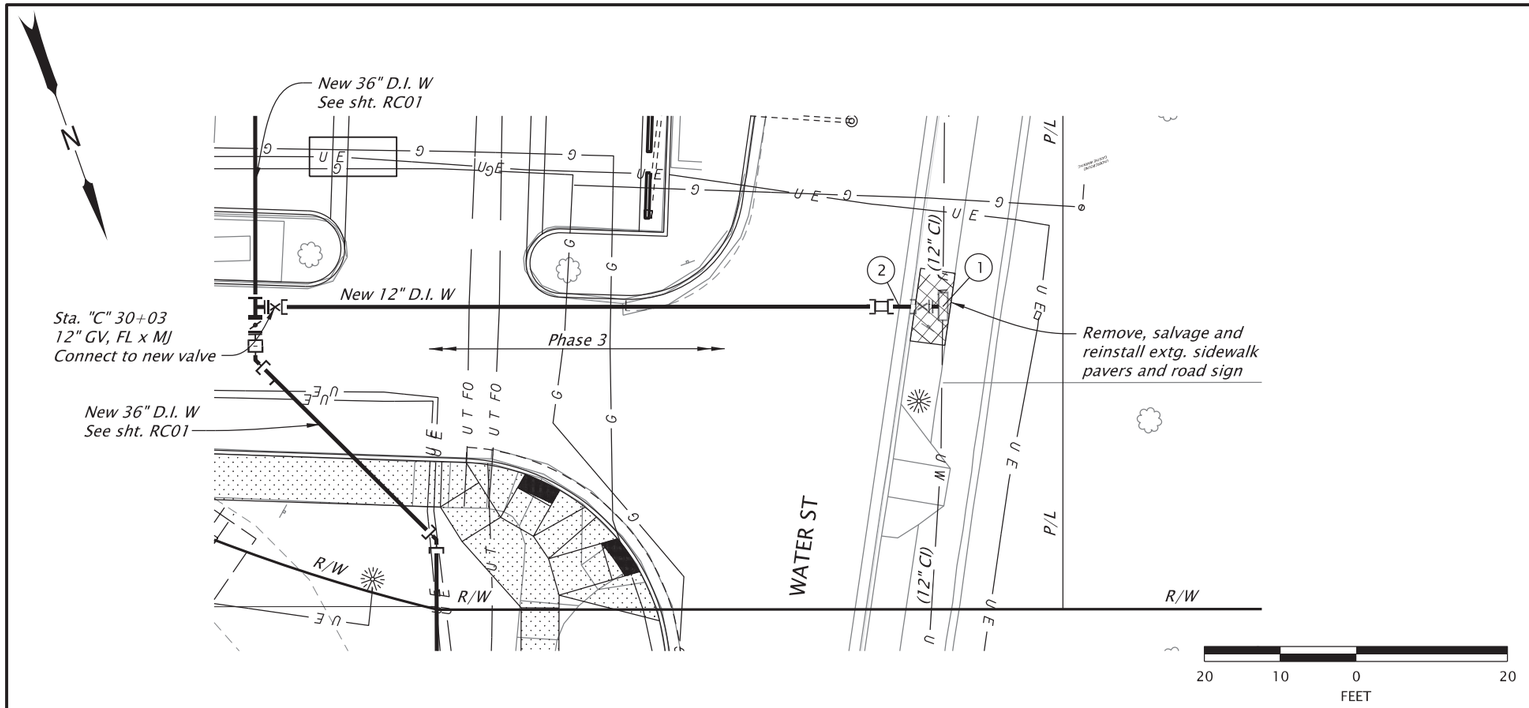

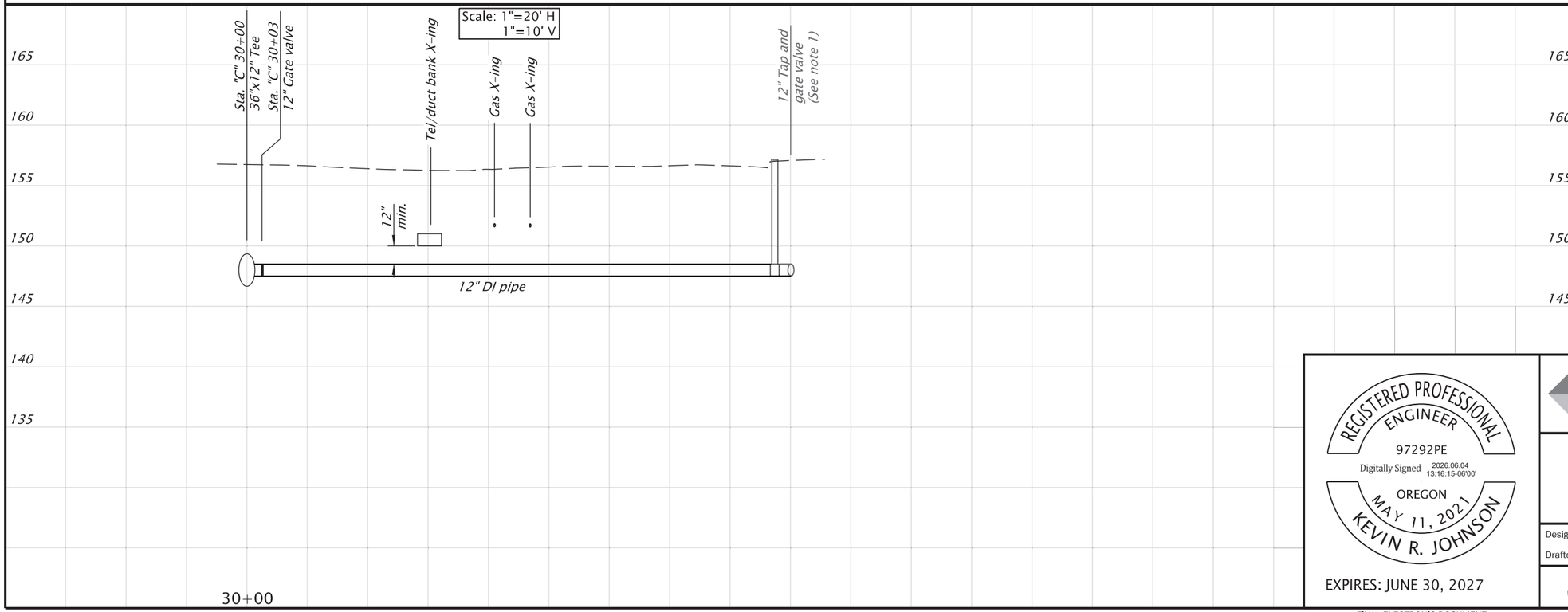

GENERAL SHEET NOTES

1. *Fittings are mechanical joint (MJ) unless otherwise indicated.*
2. *Use restrained joint D.I. pipe, see specifications.*
3. *Pothole and verify locations, elevations, types and sizes of all existing utilities prior to constructing pipelines and notify engineer of need to adjust piping installation accordingly. Complete potholing and trench excavation sufficiently in advance of laying pipe to allow required elevation or alignment adjustments to proceed without rework.*
4. *Provide a minimum of 24 hours notice prior to potholing. Coordinate with engineer to review utility investigation and to make appropriate adjustments or any alignment or grade conflicts.*

CONSTRUCTION NOTES

(1) *Work Sequence & Division:*
- *A. Contractor to provide 14 days notice to the City and two working days for the City to complete connection to the existing main.*
- *B. Contractor to excavate and shore around the existing 12" CI water main.*
- *C. City to complete a hot tap on existing 12" CI water main and install 12" GV, MJ.*
- *D. Connect to the new 12" GV and install chlorination tap. Install MJ cplg., as required.*

(2) *Install chlorination tap. Excavate for removal of taps by City after successful disinfection. (Detail 412/RD06)*

REGISTERED PROFESSIONAL ENGINEER
97292PE
Digitally Signed 2026.06.04 13:16:15-06'00'
OREGON
MAY 11, 2021
KEVIN R. JOHNSON
EXPIRES: JUNE 30, 2027

DOWL WWW.DOWL.COM

OREGON DEPARTMENT OF TRANSPORTATION

OR22: CENTER ST BRIDGE (PHASE 1) PROJECT
WILLAMINA-SALEM HIGHWAY
MARION & POLK COUNTIES

Designer: Kevin Johnson
Reviewer:
Drafter: Steve Wolfer
Checker:

WATERLINE - PLAN & PROFILE
"C" 30+00 TO "C" 30+93 (PHASE 3)

SHEET NO. RC06

FINAL ELECTRONIC DOCUMENT
AVAILABLE UPON REQUEST

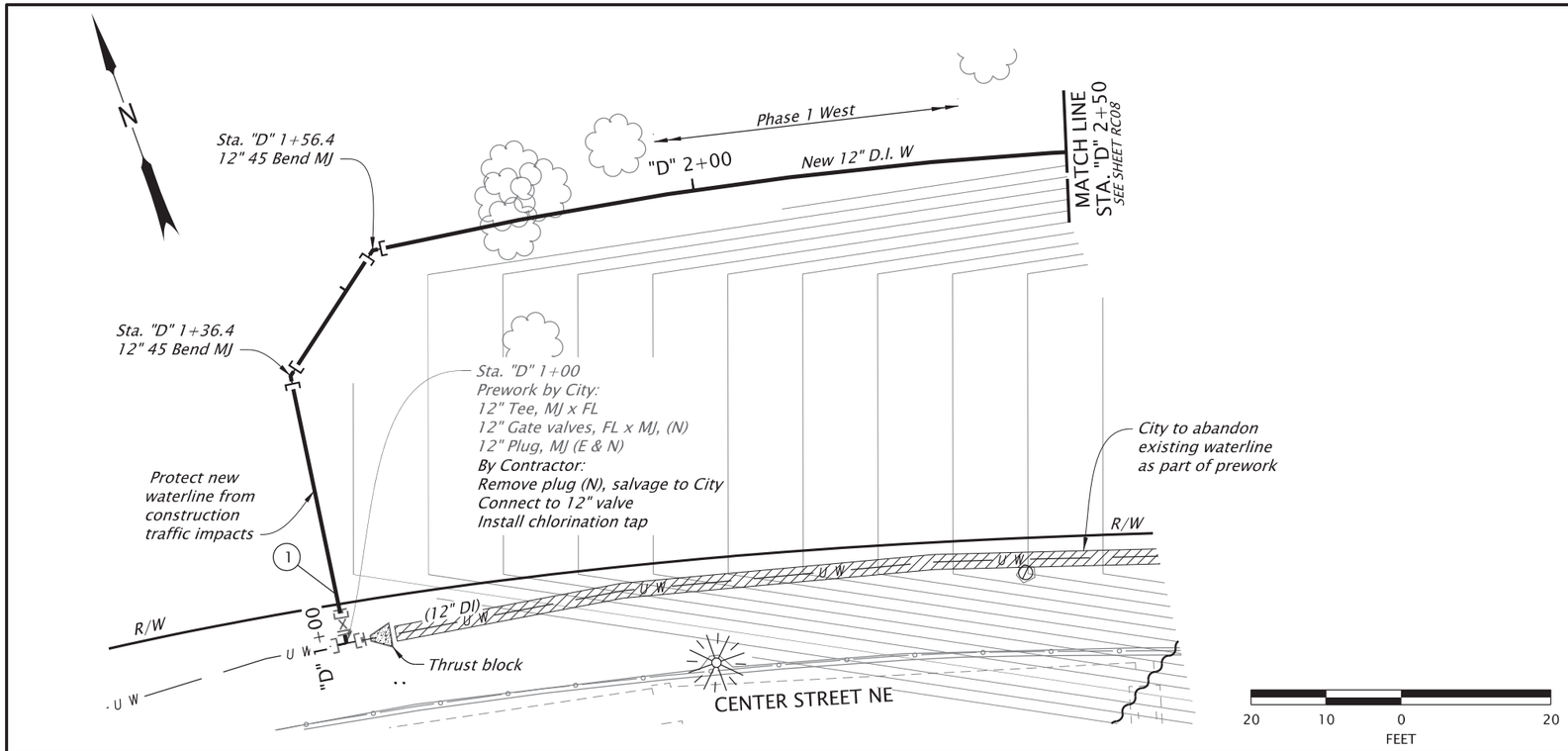

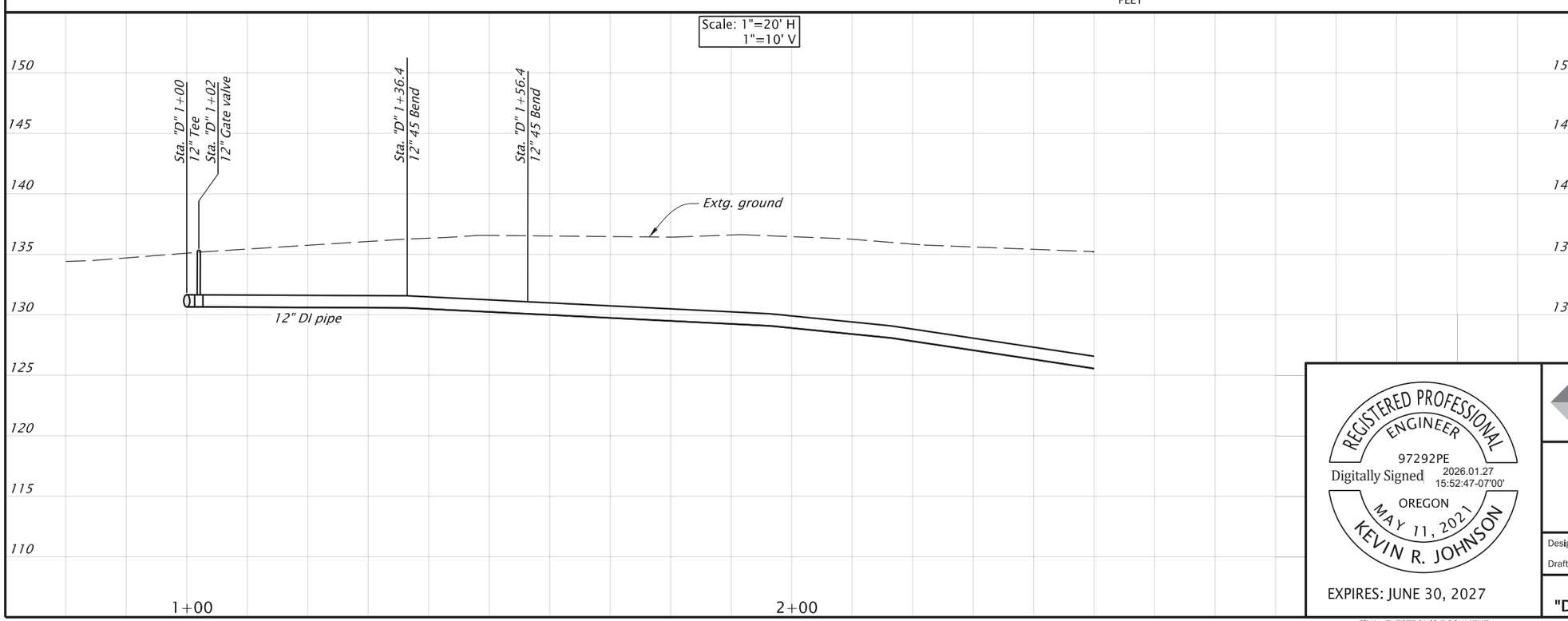

GENERAL SHEET NOTES

1. *Fittings are mechanical joint (MJ) unless otherwise indicated.*
2. *Use restrained joint D.I. pipe, see specifications.*
3. *Pothole and verify locations, elevations, types and sizes of all existing utilities prior to constructing pipelines and notify engineer of need to adjust piping installation accordingly. Complete potholing and trench excavation sufficiently in advance of laying pipe to allow required elevation or alignment adjustments to proceed without rework.*
4. *Provide a minimum of 24 hours notice prior to potholing. Coordinate with engineer to review utility investigation and to make appropriate adjustments or any alignment or grade conflicts.*

CONSTRUCTION NOTES

1. *Install chlorination tap. Contractor to excavate for removal of taps by City after successful disinfection. (See detail 412/RD06)*

REGISTERED PROFESSIONAL ENGINEER
97292PE
Digitally Signed 2026.01.27 15:52:47-07'00'
OREGON
MAY 11, 2021
KEVIN R. JOHNSON
EXPIRES: JUNE 30, 2027

DOWL WWW.DOWL.COM

OREGON DEPARTMENT OF TRANSPORTATION

OR22: CENTER ST BRIDGE (PHASE 1) PROJECT
WILLAMINA-SALEM HIGHWAY
MARION & POLK COUNTIES

Designer: Kevin Johnson
Reviewer:
Drafter: Steve Wolfer
Checker:

WATERLINE - PLAN & PROFILE
"D" 1+00 TO "D" 2+50 (PHASE 1 WEST)

SHEET NO. RC07

FINAL ELECTRONIC DOCUMENT
AVAILABLE UPON REQUEST

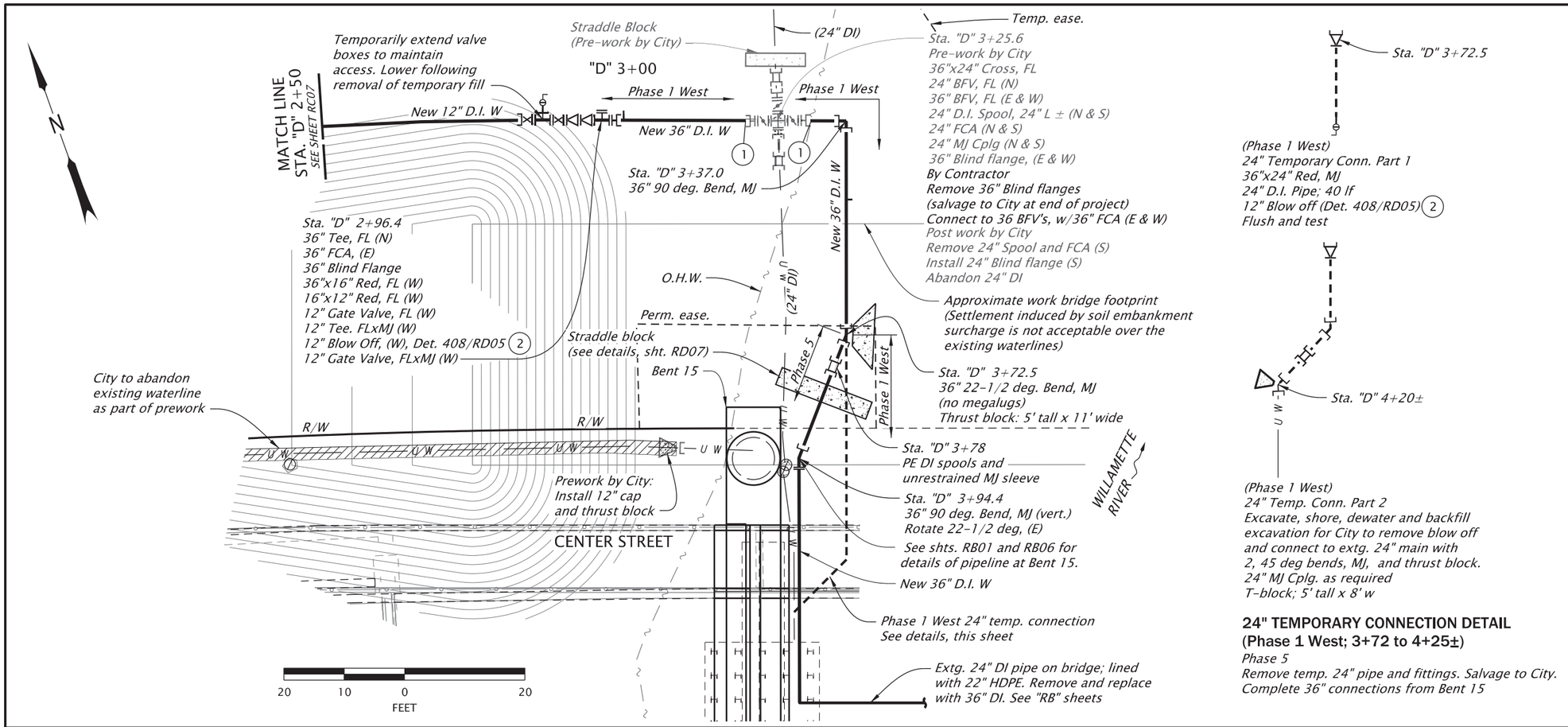

24" TEMPORARY CONNECTION DETAIL
(Phase 1 West; 3+72 to 4+25±)
Phase 5
Remove temp. 24" pipe and fittings. Salvage to City.
Complete 36" connections from Bent 15

GENERAL SHEET NOTES

1. *Fittings are mechanical joint (MJ) unless otherwise indicated.*
2. *Use restrained joint D.I. pipe, see specifications.*
3. *Pothole and verify locations, elevations, types and sizes of all existing utilities prior to constructing pipelines and notify engineer of need to adjust piping installation accordingly. Complete potholing and trench excavation sufficiently in advance of laying pipe to allow required elevation or alignment adjustments to proceed without rework.*
4. *Provide a minimum of 24 hours notice prior to potholing. Coordinate with engineer to review utility investigation and to make appropriate adjustments or any alignment or grade conflicts.*

CONSTRUCTION NOTES

1. *Install chlorination tap. Contractor to excavate for removal of taps by City after successful disinfection. (See detail 412/RD06)*
2. *After initial flushing, reduce 12" blow off to a capped, 4" threaded galvanized steel pipe. Detail 406/RD04 w/ 4" pipe in place of 2"*

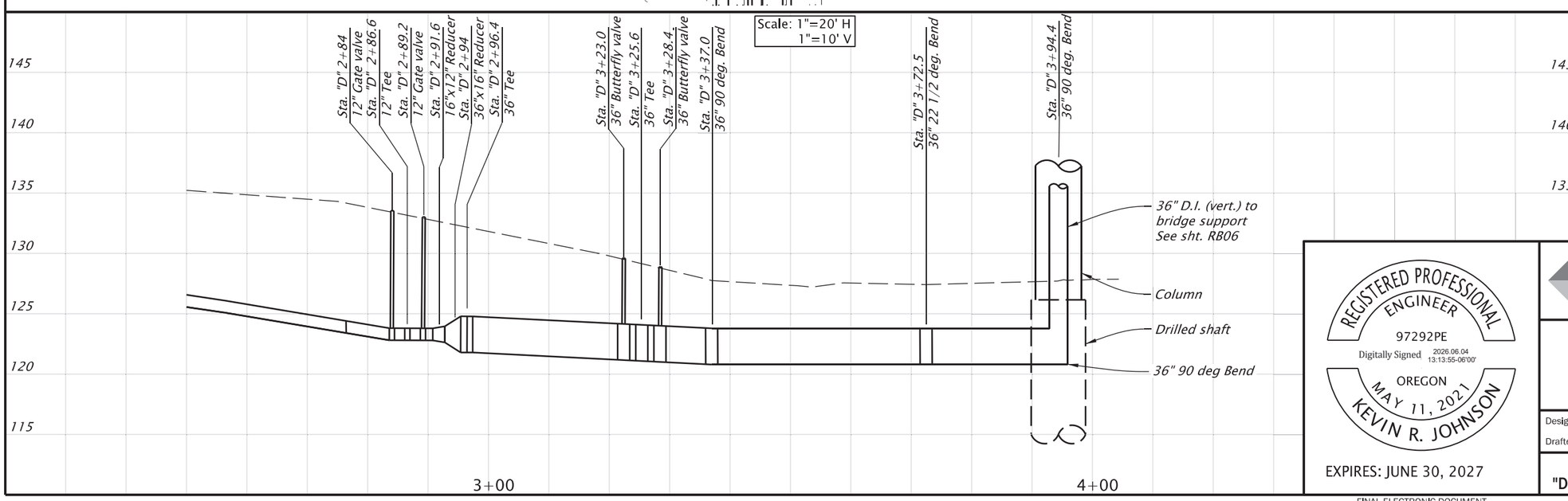

REGISTERED PROFESSIONAL ENGINEER
97292PE
Digitally Signed 2026.06.04 13:13:55-06'00'
OREGON
MAY 11, 2021
KEVIN R. JOHNSON
EXPIRES: JUNE 30, 2027

DOWL WWW.DOWL.COM

OR22: CENTER ST BRIDGE (PHASE 1) PROJECT
WILLAMINA-SALEM HIGHWAY
MARION & POLK COUNTIES

Designer: Kevin Johnson Reviewer:
Drafter: Steve Wolfer Checker:

WATERLINE - PLAN & PROFILE
"D" 2+50 TO "D" 3+94 (PHASES 1 WEST & 5)

SHEET NO. RC08

FINAL ELECTRONIC DOCUMENT AVAILABLE UPON REQUEST

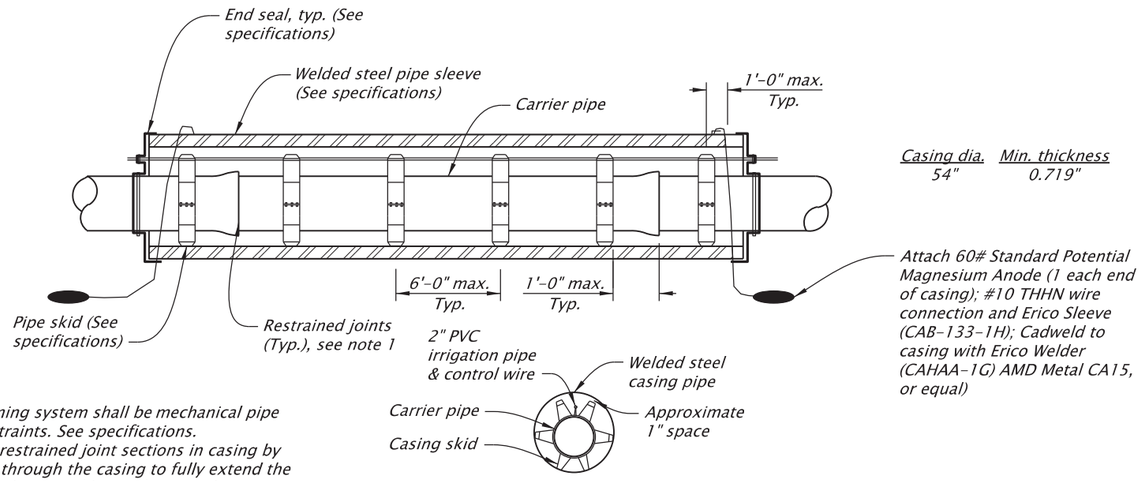

NOTES:
1. Restraining system shall be mechanical pipe bell restraints. See specifications.
2. Insert restrained joint sections in casing by pulling through the casing to fully extend the joints prior to making end connections.
3. Clamp control wire along with irrigation pipe or tape separately to the irrigation pipe.

CASING DETAIL

Not To Scale

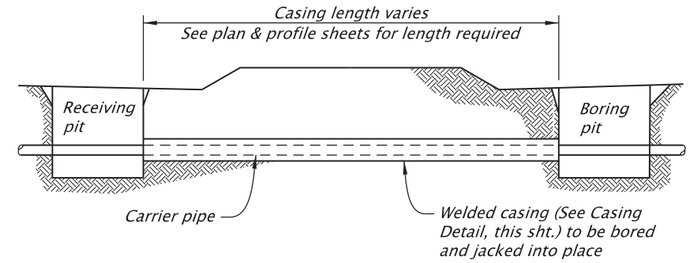

NOTES:
1. See O.S.H.A. Safety and Health Regulations for Construction, section 1926.652. Trench walls shall be in compliance with the current O.S.H.A. regulations.
2. Vertical trench walls with shoring to conform to O.S.H.A. regulations. Backslope as specified to conform to O.S.H.A. regulations.

BORING AND CASING DETAIL

Not To Scale

REGISTERED PROFESSIONAL ENGINEER
97292PE
Digitally Signed 2026.01.27 15:56:03-07'00'
OREGON
MAY 11, 2021
KEVIN R. JOHNSON

EXPIRES: JUNE 30, 2027

DOWL WWW.DOWL.COM

OREGON DEPARTMENT OF TRANSPORTATION

OR22: CENTER ST BRIDGE (PHASE 1) PROJECT
WILLAMINA-SALEM HIGHWAY
MARION & POLK COUNTIES

Designer: Kevin Johnson
Reviewer:
Drafter: Steve Wolfer
Checker:

WATERLINE DETAILS

SHEET NO. RD01

FINAL ELECTRONIC DOCUMENT AVAILABLE UPON REQUEST

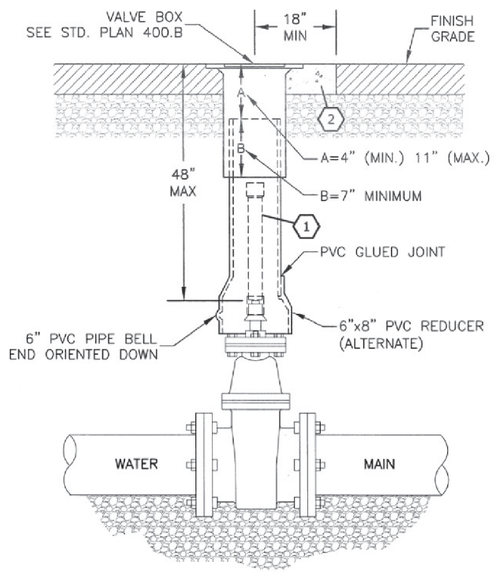

GENERAL NOTES

- CENTER VALVE BOX ASSEMBLY AND ALIGN VERTICALLY OVER VALVE OPERATING NUT.
- ADJUST VALVE BOX TO FINISH PAVING GRADE.
- PVC PIPE SHALL BE ONE CONTINUOUS PIECE WITH BELL END ORIENTED DOWNWARD, OR ALTERNATIVELY, GLUE PVC REDUCER ON PLAIN END OF PIPE.

KEYNOTES

1. PROVIDE VALVE OPERATOR EXTENSION WHEN OPERATING NUT DEPTH EXCEEDS 48-INCHES. SEE STD. PLAN 400.C
2. CONSTRUCT 6-INCH THICK P.C.C. COLLAR IF VALVE IS IN UNPAVED AREA SUBJECT TO VEHICULAR TRAFFIC.

CITY OF SALEM
DEPARTMENT OF PUBLIC WORKS

STANDARD PLAN
WATER VALVE BOX ASSEMBLY

CHANGES: ADDED PIPE BELL/REDUCER OPTION; REMOVED DETAIL ON VALVE BOX; ADDED WARRANT FOR OPERATOR EXTENSION

APPROVED — CITY ENGINEER — 3-11-16

DRAWN BY	JAK	2016
CHECKED BY	DEW	2016

NO.400.A

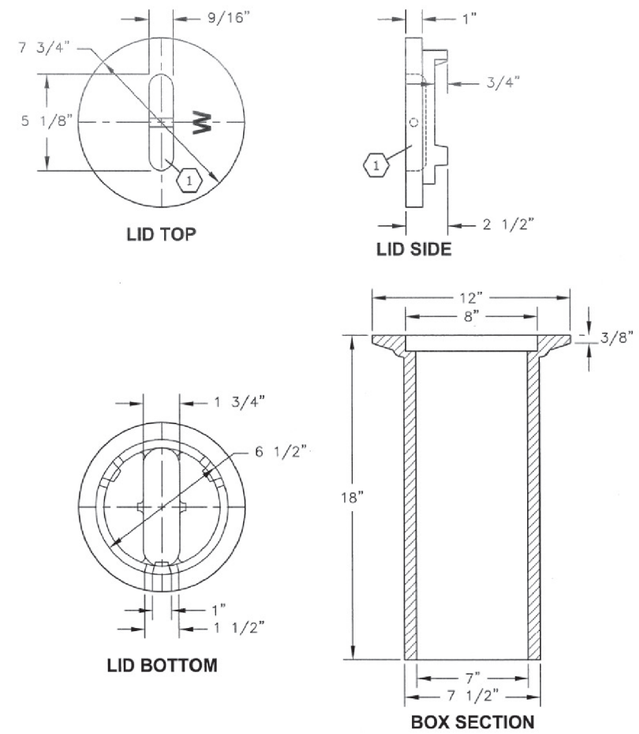

SPECIFICATION:
WATER VALVE BOX MATERIAL SHALL BE CAST IRON ASTM A48, CL35.

1. LIFT POCKET 1" WIDE x 1 1/4" DEEP.

CITY OF SALEM
DEPARTMENT OF PUBLIC WORKS

STANDARD PLAN
WATER VALVE BOX

CHANGES: NEW DRAWING; CHANGED TO CLASS 35 CAST IRON

APPROVED — CITY ENGINEER — 3-11-16

DRAWN BY	JAK	2016
CHECKED BY	DEW	2016

NO.400.B

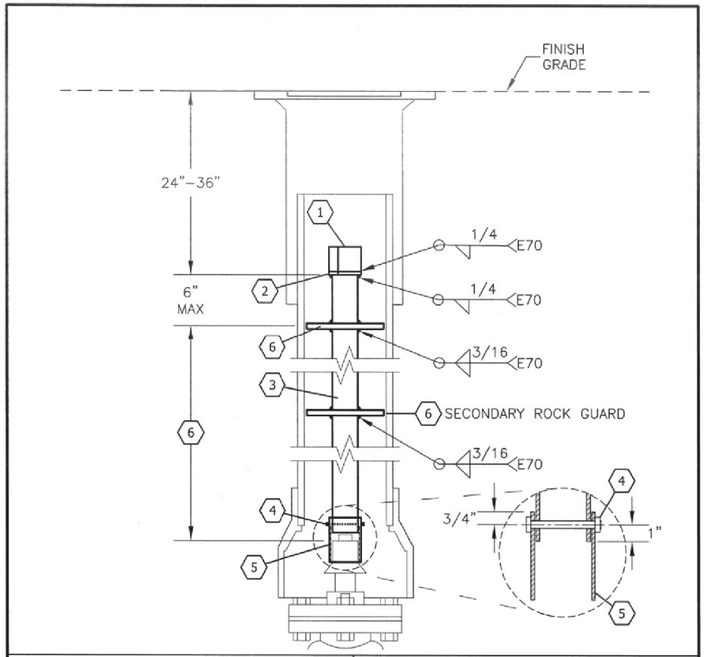

KEYNOTES

1. 2"x2"x1/8"x2" LONG STEEL TUBE. EXTEND TO 24"-36" FROM FINISH GRADE.
2. 2"x2"x3/8" STEEL FLAT BAR.
3. 1 1/2" SCHEDULE 40 STEEL PIPE (1.90 OD x .145 WALL).
4. 3/8" BOLT WITH LOCK NUT.
5. 2 1/2"x2 1/2"x3/16"x3 1/2"" LONG STEEL TUBE.
6. ROCK GUARD. 1/8" STEEL PLATE WELDED TO STEEL PIPE. INSTALL 6" MAX BELOW OPERATOR NUT. ROCK GUARD DIAMETER SHALL BE 5 1/2". SECONDARY ROCK GUARD IS REQUIRED IF DISTANCE FROM UPPER ROCK GUARD TO VALVE NUT EXCEEDS 72". INSTALL SECONDARY ROCK GUARD HALFWAY BETWEEN UPPER GUARD AND VALVE NUT.

CITY OF SALEM
DEPARTMENT OF PUBLIC WORKS

STANDARD PLAN
WATER VALVE OPERATOR EXTENSION

CHANGES: NEW DRAWING

APPROVED — CITY ENGINEER — 3-11-16

DRAWN BY	JAK	2016
CHECKED BY	DEW	2016

NO.400.C

REGISTERED PROFESSIONAL ENGINEER
97292PE
Digitally Signed 2026.01.27 15:56:45-07'00'
OREGON
MAY 11, 2021
KEVIN R. JOHNSON
EXPIRES: JUNE 30, 2027

DOWL WWW.DOWL.COM

OR22: CENTER ST BRIDGE (PHASE 1) PROJECT
WILLAMINA-SALEM HIGHWAY
MARION & POLK COUNTIES

Designer: Kevin Johnson
Reviewer:
Drafter: Steve Wolfer
Checker:

WATERLINE DETAILS

SHEET NO. RD02

FINAL ELECTRONIC DOCUMENT AVAILABLE UPON REQUEST

Jump to TOC

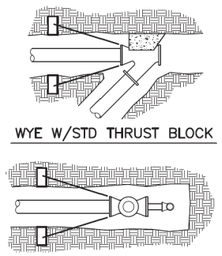

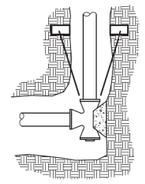

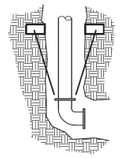

TABLE 1

BEARING AREA OF THRUST BLOCK

FITTING SIZE	1/2 BEARING AREA (SQ. FT.)(EACH SIDE)				
	DEAD END WYE OR TEE W/STD THRUST BLOCK	90° BEND	45° BEND	22 1/2° BEND	11 1/4° BEND
4	1.4	1.9	1.0	0.5	0.3
6	2.8	3.9	2.1	1.1	0.5
8	4.8	6.8	3.7	1.9	0.9
10	7.3	10.3	5.6	2.8	1.4
12	10.3	14.5	7.9	4.0	2.0
14	13.8	19.5	10.6	5.4	2.7
16	17.8	25.2	13.6	7.0	3.5

TABLE 2

NUMBER & SIZE OF STEEL TIE RODS REQ'D

	NO. OF FULL DIA. RODS WELDED TO PLATES			NO. OF THREADED RODS		
SIZE	5/8"	3/4"	1"	5/8"	3/4"	1"
4	2	WARNING-DUC-LUGS WILL NOT HOLD		2	WARNING-NO DUC-LUGS	
6	2			3	2	2
8	3	2	2	5	3	2
10	5	3	2	7	5	3
12	7	5	3	10	7	4
14	10	7	4	13	9	5
16	12	9	5	17	11	6

NOTES:

1. THE AREAS SHOWN IN TABLE 1 ARE BASED ON TEST PRESSURES OF 150 PSI AND AN ALLOWABLE SOIL BEARING STRESS OF 2,000 POUNDS PER SQUARE FOOT. TO COMPUTE BEARING AREAS FOR DIFFERENT TEST PRESSURES AND SOIL BEARING STRESSES, USE THE FOLLOWING EQUATION. BEARING AREA=(TEST PRESSURE/150) x (2,000/SOIL BEARING STRESS).
2. THE NUMBER AND SIZE OF TIE RODS REQUIRED SHOWN IN TABLE 2 ARE BASED UPON ASTM A307 STEEL BOLT STOCK WITH A TENSIL STRENGTH OF 20,000 PSI AND A FS=1.5, BASED ON TEST PRESSURE OF 150 P.S.I.
3. MAKE CONNECTIONS AS FOLLOWS:
   5/8" RODS – THRU BOLT HOLES, DUCTILE IRON LUGS, STARR TIE BOLTS, STEEL PLATES.
   3/4" RODS – THRU BOLT HOLES, STARR TIE BOLTS, STEEL PLATES.
   1" RODS – CONNECT TO STEEL PLATE, STRAPS OR "EARS".
4. CONSTRUCT TIED BACK THRUST BLOCK AS PER STANDARD PLAN NO. 404.
5. MULTIPLY THE AREAS LISTED IN TABLE 1 BY 2 IN ORDER TO DETERMINE THE TOTAL BEARING AREA REQUIRED.

Approved Karl D. Houston City Engineer 9-15-99 Date

CITY OF SALEM
DEPARTMENT OF PUBLIC WORKS

STANDARD PLAN

4" TO 16" TIED BACK THRUST BLOCK SCHEMATIC AND DIMENSIONS

SIGNIFICANT REVISIONS

No.	Description	Date	By	Appr

REVISION

DRAWN BY IDF
CHECKED BY KDG

NO.403

Jump to TOC

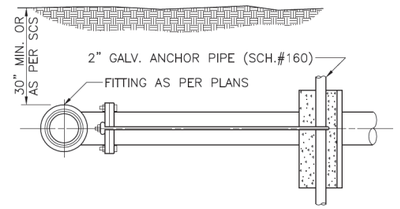

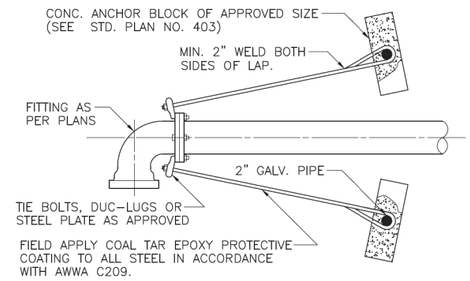

NOTES:

1. CONCRETE THRUST BLOCK TO BE POURED AGAINST UNDISTURBED EARTH.
2. KEEP CONCRETE CLEAR OF JOINT AND ACCESSORIES.
3. THE REQUIRED THRUST BLOCK BEARING AREAS FOR SPECIAL CONNECTIONS ARE SHOWN ENCIRCLED ON THE PLANS: E.G. 15 INDICATES 15 SQUARE FEET BEARING AREA REQUIRED.
4. IF NOT SHOWN ON PLANS REQUIRED BEARING AREAS AT FITTING SHALL BE AS INDICATED HEREIN OR ON SUPPLEMENTAL STD PLAN NO. 403, ADJUSTED IF NECESSARY, TO CONFORM TO THE TEST PRESSURE(S) AND ALLOWABLE SOIL BEARING STRESS(ES) STATED IN THE SPECIAL PROVISIONS.
5. BEARING AREAS AND SPECIAL BLOCKING DETAILS SHOWN ON PLANS TAKE PRECEDENCE OVER BEARING AREAS AND BLOCKING DETAILS SHOWN ON THIS PLAN AND STANDARD PLAN NO. 403.
6. CONSTRUCT STANDARD (STD) THRUST BLOCKS AS PER SCS PLAN NO. 403.
7. TIE RODS, NUTS & WASHERS USED FOR THRUST RESTRAINT SHALL BE MANUFACTURED IN ACCORDANCE WITH ASTM A307.

Approved Karl D. Houston City Engineer 9-15-99 Date

CITY OF SALEM
DEPARTMENT OF PUBLIC WORKS

STANDARD PLAN

4" TO 16" TIED BACK THRUST BLOCK CONSTRUCTION DETAILS

SIGNIFICANT REVISIONS

No.	Description	Date	By	Appr

REVISION

DRAWN BY IDF
CHECKED BY KDG

NO.404

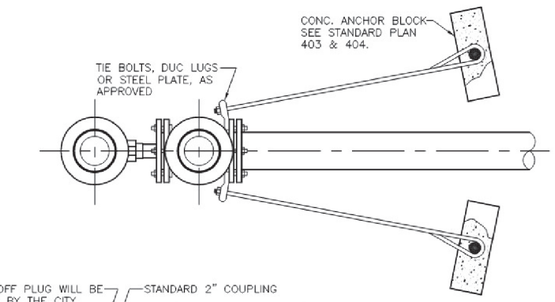

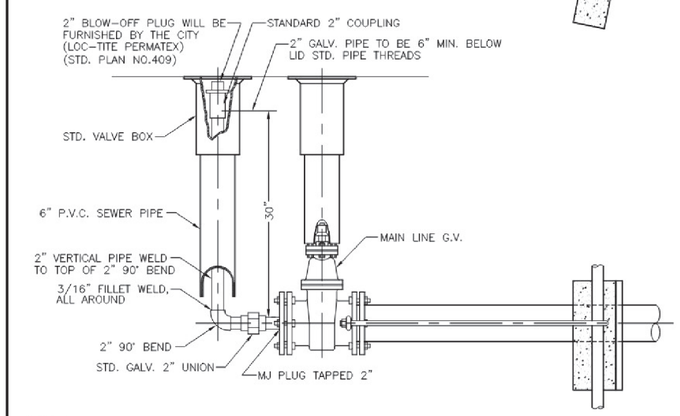

NOTES:

1. 8" MAXIMUM PIPE SIZE ALLOWED FOR 2" BLOW-OFF.

Approved Karl D. Houston City Engineer 9-15-99 Date

CITY OF SALEM
DEPARTMENT OF PUBLIC WORKS

STANDARD PLAN

BLOWOFF WITH IN-LINE VALVE

SIGNIFICANT REVISIONS

No.	Description	Date	By	Appr
	CONVERT TO CAD DWG.	1/98		

REVISION

DRAWN BY GS
CHECKED BY D.W.

NO.405

REGISTERED PROFESSIONAL ENGINEER
97292PE
Digitally Signed 2026.01.27 15:57:26-07'00'
OREGON
MAY 11, 2021
KEVIN R. JOHNSON

EXPIRES: JUNE 30, 2027

DOWL WWW.DOWL.COM

OREGON DEPARTMENT OF TRANSPORTATION

OR22: CENTER ST BRIDGE (PHASE 1) PROJECT
WILLAMINA-SALEM HIGHWAY
MARION & POLK COUNTIES

Designer: Kevin Johnson
Reviewer:
Drafter: Steve Wolfer
Checker:

WATERLINE DETAILS

SHEET NO. RD03

FINAL ELECTRONIC DOCUMENT AVAILABLE UPON REQUEST

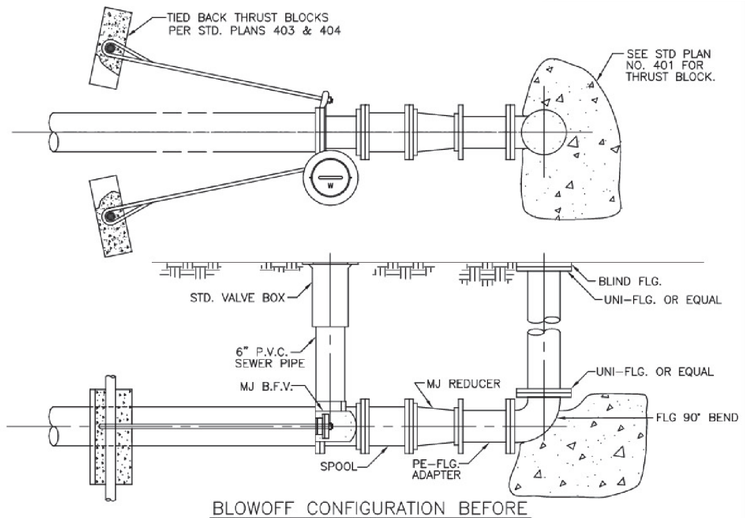

BLOWOFF CONFIGURATION BEFORE FIRST FLUSHING OF MAIN LINE

MINIMUM SIZES OF BLOWOFFS (SEE NOTE 1)

B.F.V.	RED.	B.O. FTG. & PIPE SIZE
10"	10" x 4"	4"
12" & 14"	x 6"	6"
16" & 18"	x 8"	8"
20"	20" x 10"	10"
24"	24" x 12"	12"

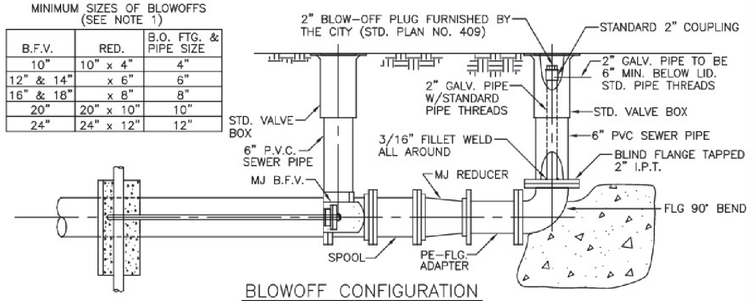

BLOWOFF CONFIGURATION BEFORE CHLORINATION

NOTES:
1. SIZE OF B.O. & VALVE SHALL BE USED IN ABSENCE OF MORE SPECIFIC INFORMATION SHOWN ON PLANS.
2. FITTINGS MAY BE SUBSTITUTED AS APPROVED BY ENGINEER.

Approved Karl O. Shetter, City Engineer — 3-1-02 Date

No.	Description	Date	By	Appr
1	SUGGEST ENGINEER DESIGN REDUCER, VALVE & B.O. SIZES TO ACHIEVE REQUIRED FLUSHING VELOCITY.	5/99	SP	DW
2	ADDED BLOW-OFF ASSEMBLY BEFORE AND AFTER FIRST FLUSHING OF MAIN LINE.	4/01	IDF	

REVISION

CITY OF SALEM
DEPARTMENT OF PUBLIC WORKS
STANDARD PLAN
BLOWOFF WITH IN LINE VALVE FOR 10" DIA. PIPE & LARGER

DRAWN BY GS, SP
CHECKED BY D.W.
NO.406

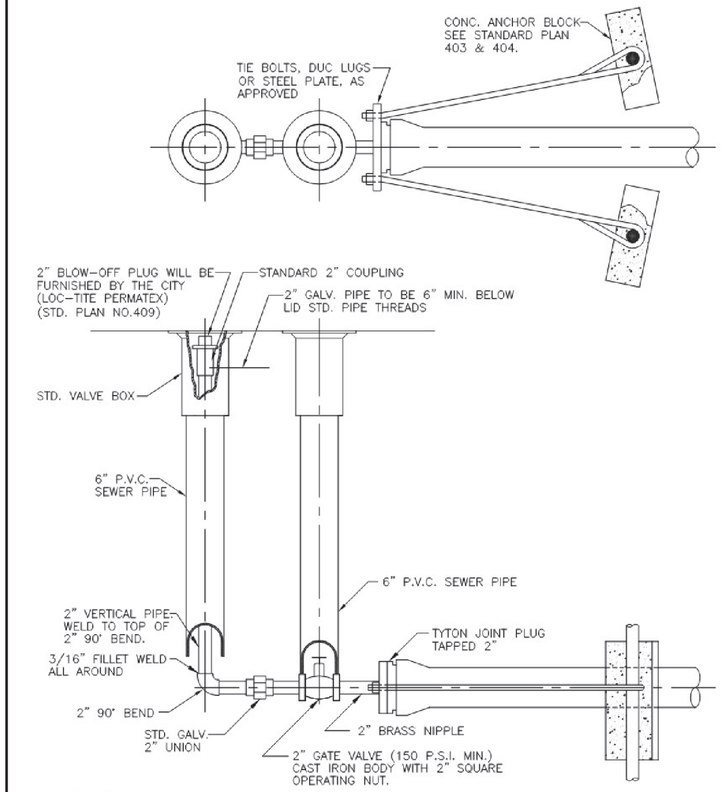

NOTES:
1. 8" MAXIMUM PIPE SIZE FOR 2" BLOW-OFF.

Approved Karl O. Shetter, City Engineer — 9-15-99 Date

No.	Description	Date	By	Appr
1	CONVERT TO CAD DWG.	12/98	IDF	KDG

REVISION

CITY OF SALEM
DEPARTMENT OF PUBLIC WORKS
STANDARD PLAN
BLOWOFF WITH PLUGGED END

DRAWN BY S.G.P.
CHECKED BY D.W.
NO.407

REGISTERED PROFESSIONAL ENGINEER
97292PE
Digitally Signed 2026.01.27 15:58:04-07'00'
OREGON
MAY 11, 2021
KEVIN R. JOHNSON
EXPIRES: JUNE 30, 2027

DOWL WWW.DOWL.COM

OR22: CENTER ST BRIDGE (PHASE 1) PROJECT
WILLAMINA-SALEM HIGHWAY
MARION & POLK COUNTIES

Designer: Kevin Johnson
Reviewer:
Drafter: Steve Wolfer
Checker:

WATERLINE DETAILS

SHEET NO. RD04

FINAL ELECTRONIC DOCUMENT AVAILABLE UPON REQUEST

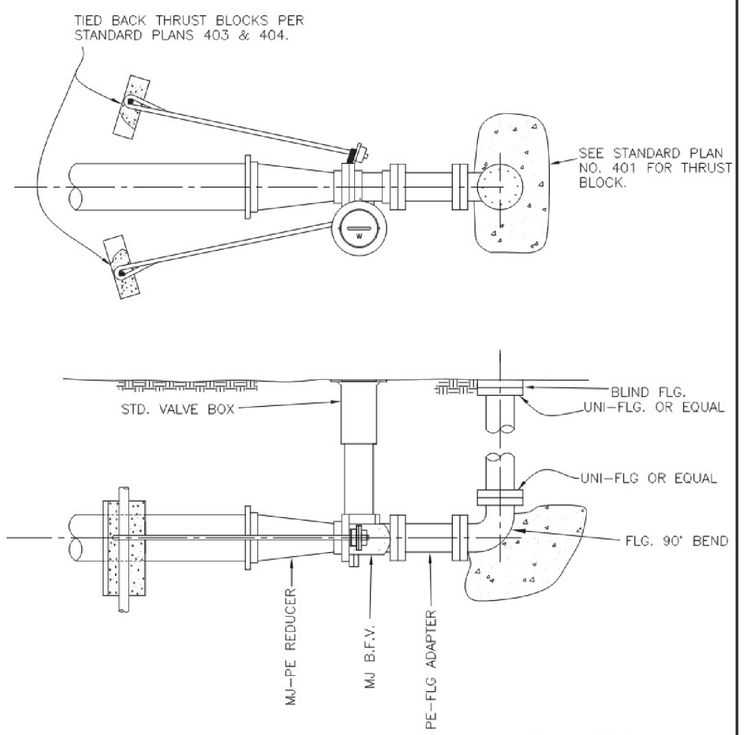

MINIMUM SIZES OF BLOWOFFS
SEE NOTE 1

MAIN SIZE	RED.	B.O. FTG. & PIPE SIZE & VALVE, TYPE
10"	10"x4"	4" G.V.
12" & 14"	x6"	6" G.V.
16" & 18"	x8"	8" B.F.V.
20"	20"x10"	10" B.F.V.
24"	24"x12"	12" B.F.V.

NOTES:

1. SIZE OF B.O. & VALVE SHALL BE USED IN ABSENCE OF MORE SPECIFIC INFORMATION ON PLANS.
2. FITTINGS MAY BE SUBSTITUTED AS APPROVED BY THE ENGINEER.

Approved Karl O. Houston City Engineer 9-15-99 Date

No.	Description	Date	By	Appr
1	SUGGEST ENGINEER DESIGN REDUCER, VALVE & B.O. SIZES TO ACHIEVE REQUIRED FLUSHING VELOCITY.	5/99	SP	DW

REVISION

CITY OF SALEM
DEPARTMENT OF PUBLIC WORKS

STANDARD PLAN
BLOWOFF WITH REDUCED SIZE VALVE FOR 10" DIA. PIPE & LARGER

DRAWN BY GS, SP
CHECKED BY D.W.
NO.408

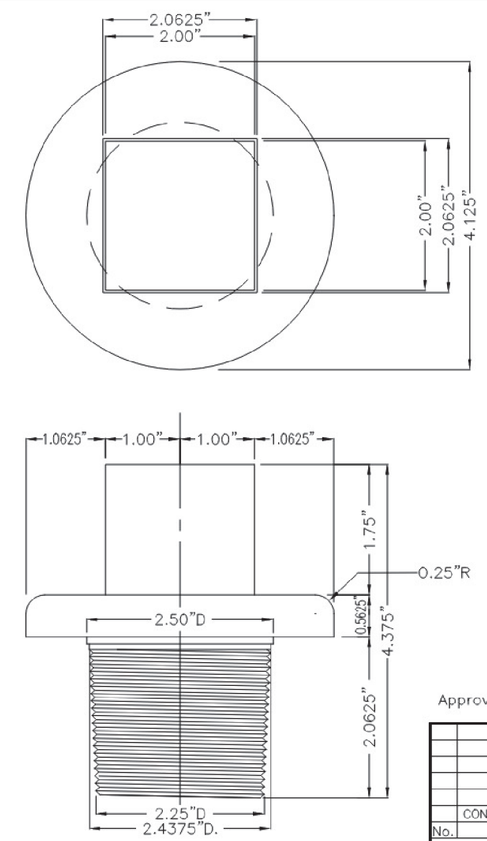

NOTES:

1. MATERIAL SHALL BE A.S.T.M. A-48 GRAY CAST IRON, CLASS 30.
2. APPROX. WEIGHT 5 LBS 15 OZ.
3. THREADS SHALL BE STANDARD PIPE THREAD TO MATCH 2" I.D. COUPLING.
4. REFER TO STD. DRAWING NOS. 405 AND 407 FOR LOCATION OF PLUG IN BLOW-OFF.

Approved Karl O. Houston City Engineer 9-15-99 Date

No.	Description	Date	By	Appr
	CONVERT TO CAD DWG.	1/98		

REVISION

CITY OF SALEM
DEPARTMENT OF PUBLIC WORKS

STANDARD PLAN
2" BLOW-OFF PLUG

DRAWN BY GS
CHECKED BY D.W.
NO.409

REGISTERED PROFESSIONAL ENGINEER
97292PE
Digitally Signed 2026.01.27 15:58:48-07'00'
OREGON
MAY 11, 2021
KEVIN R. JOHNSON
EXPIRES: JUNE 30, 2027

DOWL WWW.DOWL.COM

OR22: CENTER ST BRIDGE (PHASE 1) PROJECT
WILLAMINA-SALEM HIGHWAY
MARION & POLK COUNTIES

Designer: Kevin Johnson
Reviewer:
Drafter: Steve Wolfer
Checker:

WATERLINE DETAILS

SHEET NO. RD05

FINAL ELECTRONIC DOCUMENT AVAILABLE UPON REQUEST

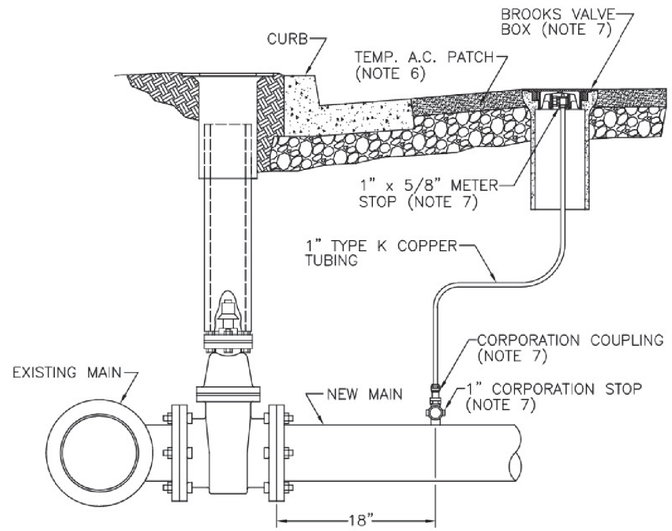

NOTES:

1. VALVE BOX OVER 1" CHLORINE LINE DOES NOT NEED TO BE INSTALLED IF CHLORINE LINE IS BEHIND THE CURB. VALVEBOX IS TO BE INSTALLED ONLY WHEN CHLORINE LINE IS IN AREA COVERED BY TRAFFIC.
2. CHLORINE LINE PLACED IN AN AREA NOT COVERED BY TRAFFIC WILL BE 6" ABOVE NATURAL GROUND LEVEL.
3. DISTANCE FROM GATE VALVE TO CHLORINE TAP WILL BE 18".
4. CHLORINATION PROCESS WILL BE CONDUCTED BY CITY FORCES ONLY, IN ACCORDANCE WITH APPROVED SPECIFICATIONS.
5. CITY WILL REMOVE CHLORINATION ASSEMBLY AFTER RECEIVING NOTICE OF NEGATIVE BACTERIOLOGICAL TEST. CONTRACTOR TO PROVIDE EXCAVATION, BACKFILL, AND FINAL SURFACE RESTORATION.
6. TEMPORARY ASPHALT SURFACE REQUIRED IN AREAS COVERED BY TRAFFIC.
7. SEE SCS DIVISION 5 FOR SPECIFICATIONS.

Approved Karl O. Shultz 3-1-02
City Engineer Date

No.	Description	Date	By	Appr
6	TEMPORARY A.C. REQUIRED	12-14-01	I.D.F.	
5	CHANGED TO BROOKS BOX IN PAVED AREA	4-18-01	I.D.F.	
4	REVISED NOTES AND ADDED LABELS	2-23-01	I.D.F.	
3	REMOVED "MIN." FROM 18-INCH DIMENSION	2-23-01	I.D.F.	
	CHLORINE LINE CHANGED TO 1-INCH FROM 3/4"			
	DIST. FROM TAP TO VALVE CHANGED TO 18-INCHES			

REVISION

CITY OF SALEM
DEPARTMENT OF PUBLIC WORKS

STANDARD PLAN
MAIN LINE CHLORINATION ASSEMBLY

DRAWN BY I.D.F.
CHECKED BY D.W.

NO. 412

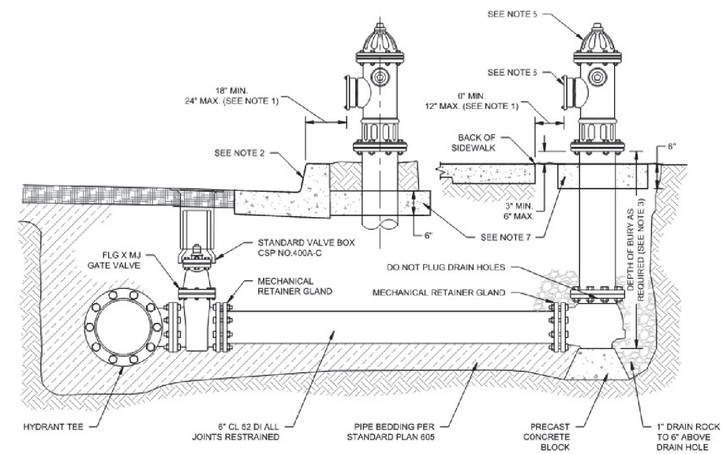

NOTES:

1. SET PUMPER PORT 18"-24" FROM FACE OF CURB WHEN SIDEWALK IS AT PROPERTY LINE OR 0"-12" FROM BACK OF WALK WHEN SIDEWALK IS AT CURBLINE.
2. PAINT CURB YELLOW 10 FEET IN EACH DIRECTION OR TO THE NEAREST CURB RETURN, WHICHEVER IS CLOSER.
3. PROVIDE HYDRANT EXTENSIONS AS REQUIRED TO SET BREAKAWAY FLANGE 3"-6" ABOVE FINISHED GRADE. INSTALL PER MANUFACTURER'S SPECIFICATIONS.
4. PLACE HYDRANTS 5' MIN. CLEARANCE FROM DRIVEWAYS, POLES, GUYWIRES AND OTHER OBSTRUCTIONS.
5. HYDRANTS SHALL BE PAINTED BY MANUFACTURER. PUBLIC HYDRANTS SHALL BE YELLOW. PRIVATE SHALL BE RED.
6. CONTRACTOR PROVIDE 5-INCH STORZ ADAPTER, HYDR-SHIELD HYST-5045-ST CAP. CITY TO INSTALL.
7. CONSTRUCT 30" x 30" CONCRETE PAD WHEN NEXT TO DRIVEWAYS OR OTHERWISE AT RISK OF VEHICLE KNOCK DOWN. OMIT IF SURROUNDED BY SIDEWALK.

CITY OF SALEM
DEPARTMENT OF PUBLIC WORKS

CHANGES	DESCRIPTION
	REQUIRES PAINTED CURB, THRUST RESTRAINT, PVT HYDRANTS PAINTED RED
	STORTZ ADAPTER, REVISED DIMENSIONS, ADDED CONCRETE PAD

STANDARD PLAN
FIRE HYDRANT ASSEMBLY

APPROVED — CITY ENGINEER — 09/06/2024 DATE

DRAWN BY RRT 02/2024
CHECKED BY DW 02/2024

NO.413

REGISTERED PROFESSIONAL ENGINEER
97292PE
Digitally Signed 2026.01.27 15:59:37-07'00'
OREGON
MAY 11, 2021
KEVIN R. JOHNSON
EXPIRES: JUNE 30, 2027

DOWL WWW.DOWL.COM

OR22: CENTER ST BRIDGE (PHASE 1) PROJECT
WILLAMINA-SALEM HIGHWAY
MARION & POLK COUNTIES

Designer: Kevin Johnson
Reviewer:
Drafter: Steve Wolfer
Checker:

WATERLINE DETAILS

SHEET NO. RD06

FINAL ELECTRONIC DOCUMENT AVAILABLE UPON REQUEST

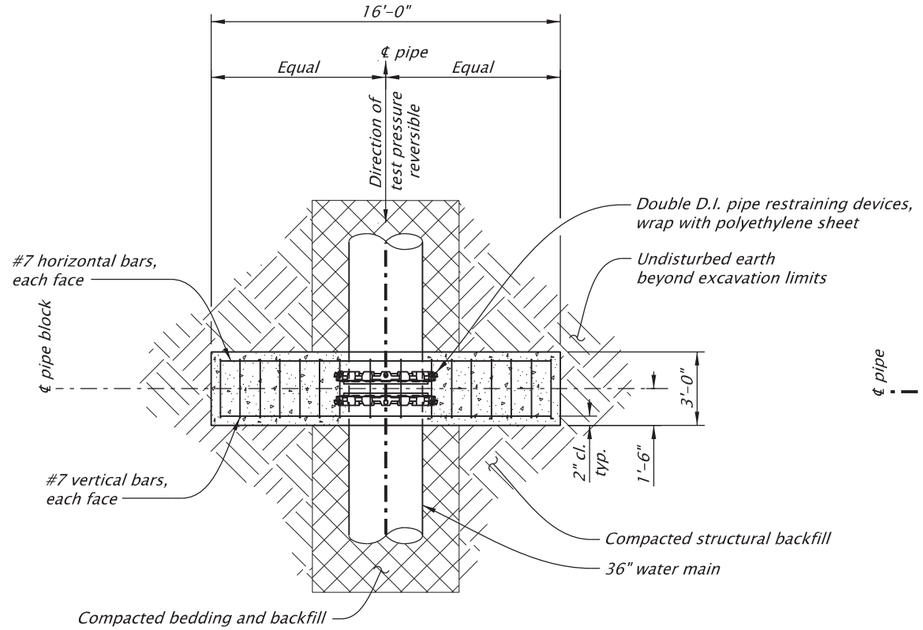

STRADDLE BLOCK DETAIL - PLAN VIEW

SCALE: No Scale

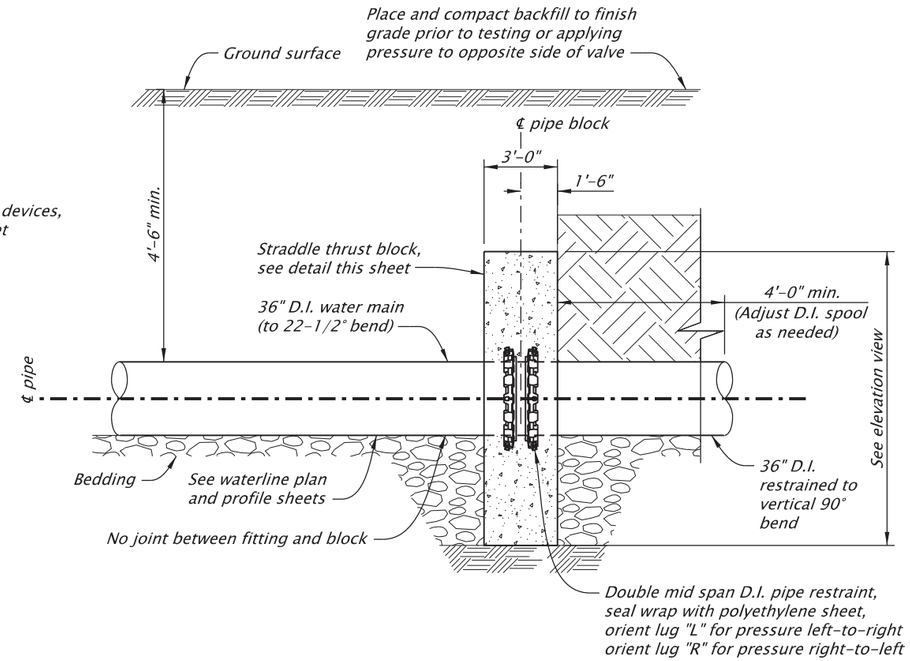

STRADDLE BLOCK DETAIL - PROFILE VIEW

SCALE: No Scale

NOTES:

1. *Straddle blocks are designed to restrain 150 PSI pressure in the 36" D.I. waterline at a lateral allowable soil bearing pressure of 1,500 PSF. The thrust block size is based on compacted backfill to finish grade before running the pressurized test.*
2. *The bottom of straddle blocks may be placed against undisturbed soil if firm. If native subgrade is not firm, over excavate and place on structural fill. Straddle block concrete to be formed, backfill between cured block and native soils with compacted granular structural backfill or low strength CLSM.*
3. *Provide reinforcing steel according to ASTM specifications A706 or A615 grade 60.*
4. *Provide structural concrete with 28-day compressive strength of 4,000 PSI. Air entrainment is not required.*
5. *Place concrete in at least 4 (four) horizontal lifts, consolidating each lift with internal mechanical vibration. Apply liquid curing compound to exposed concrete surfaces within six hours of stripping forms.*
6. *Straddle blocks shall be anchored to the ductile iron pipe with 2 (two) split anchor rings with opposite facing grippers, series 1100 SDB, as manufactured by EBAA Iron Inc. or approved equal. Wrap restraints with 1 (one) layer of polyethylene encasement prior to placing concrete. Extend PE wrap a minimum of 6" beyond restraints. Secure to pipe with 10 mil PVC pipe wrap tape.*
7. *Do not pressurize the waterline until straddle block concrete has achieved the 28-day design compressive strength as confirmed by laboratory testing.*

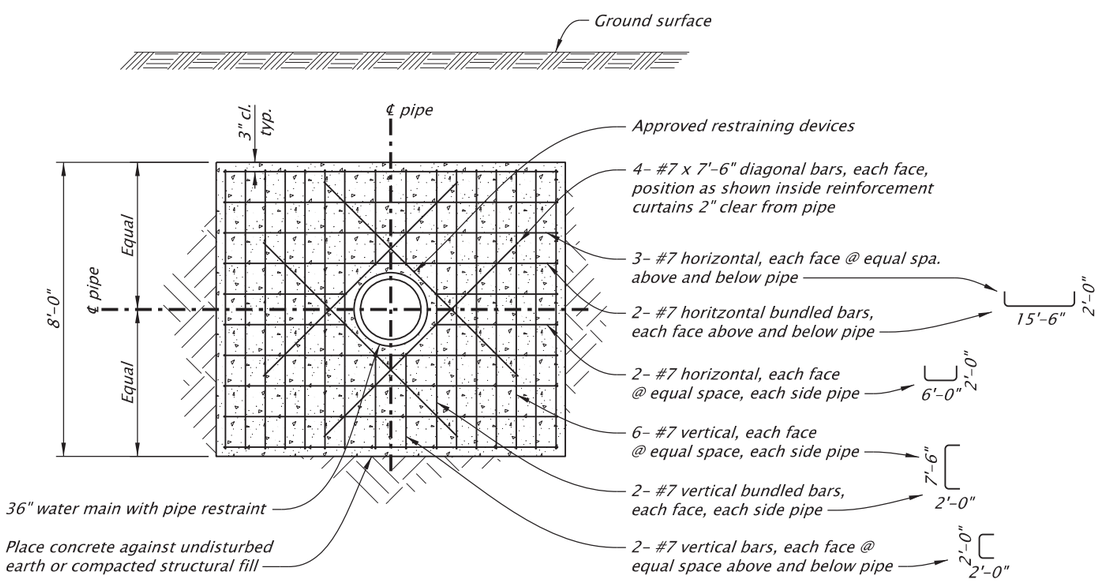

STRADDLE BLOCK DETAIL - ELEVATION VIEW

SCALE: No Scale

REGISTERED PROFESSIONAL ENGINEER
97292PE
Digitally Signed 2026.01.27 16:00:20-07'00'
OREGON
MAY 11, 2021
KEVIN R. JOHNSON

EXPIRES: JUNE 30, 2027

DOWL WWW.DOWL.COM

OREGON DEPARTMENT OF TRANSPORTATION

OR22: CENTER ST BRIDGE (PHASE 1) PROJECT
WILLAMINA-SALEM HIGHWAY
MARION & POLK COUNTIES

Designer: Kevin Johnson
Reviewer:
Drafter: Steve Wolfer
Checker:

WATERLINE DETAILS

SHEET NO. RD07

FINAL ELECTRONIC DOCUMENT AVAILABLE UPON REQUEST