WATER QUALITY SYSTEMS BUILDING

AUGUST 2026

BID SET

SFWB WATER QUALITY SYSTEMS BUILDING

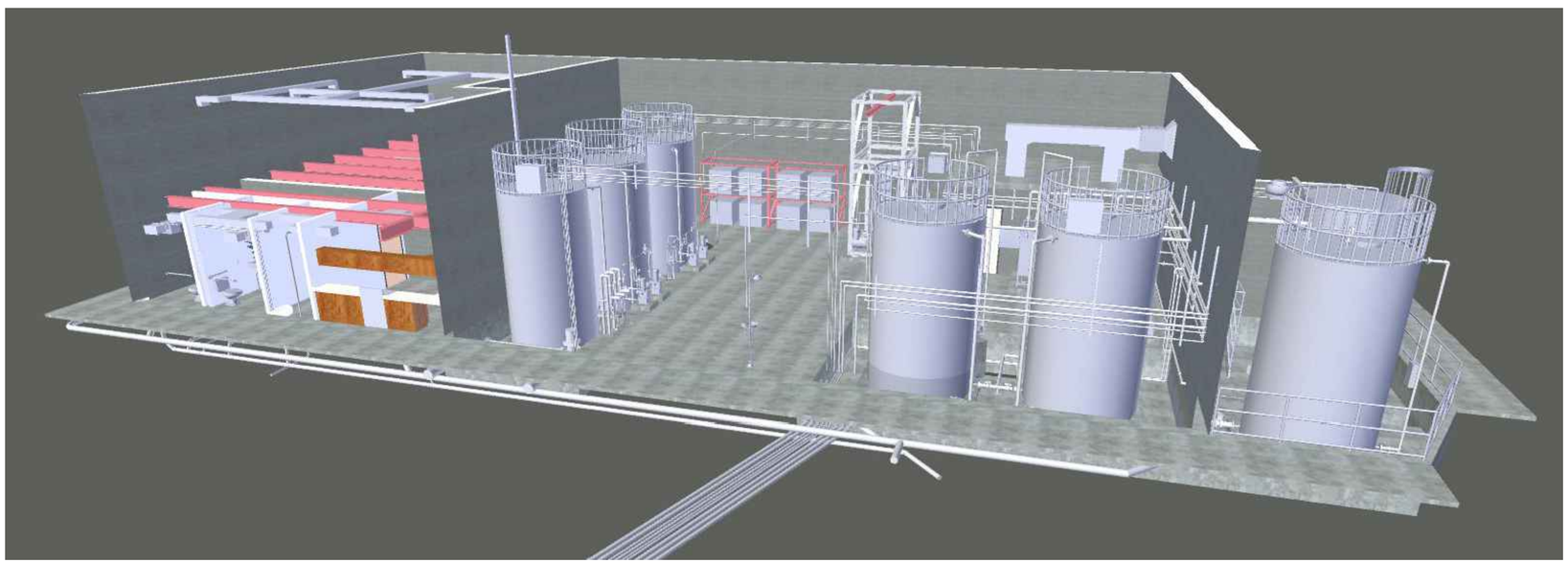

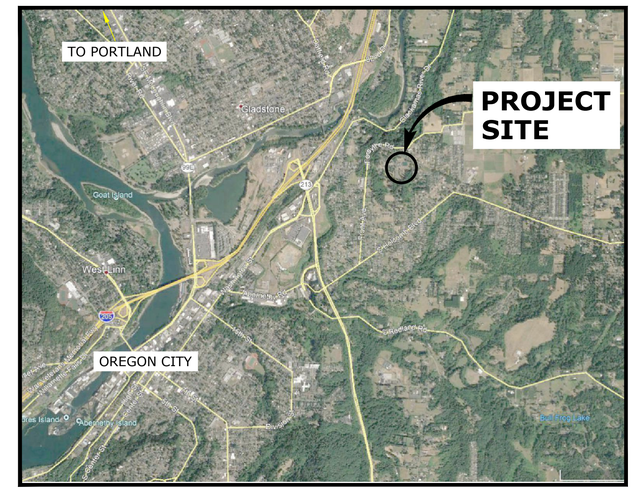

VICINITY MAP

SCALE: NTS

ONE SW COLUMBIA STREET, SUITE 1700
PORTLAND, OREGON 97204
P 503.225.9010

100273.00
W253326OR

\\EgnyteDrive\Consor Files_V-W\Projects\OR\South Fork Water\2025\W253326OR.00\12 CADD\12-5 Sheets\COVER.dwg G-000 7/23/2026 4:01 PM NICK.MCFADDIN 24.3s (LMS Tech)

SHEET INDEX

SHT NO.	DWG NO.	SHEET TITLE
GENERAL		
1	G-000	COVER SHEET
2	G-001	SHEET INDEX
3	G-002	ABBREVIATIONS
4	G-003	SYMBOLS AND LEGENDS
5	G-004	GENERAL NOTES - 1
6	G-005	GENERAL NOTES - 2
7	G-006	PROCESS FLOW DIAGRAM
8	G-007	PIPING SCHEDULE
EROSION & SEDIMENT CONTROL		
9	ESC-101	ESC PLAN COVER SHEET
10	ESC-102	ESC PLAN OVERVIEW & NOTES
11	ESC-103	ESC PLAN PHASE 1 - CLEARNING, GRUBBING, AND DEMOLITION
12	ESC-104	ESC PLAN PHASE 2 - EXCAVATION AND CONSTRUCTION
13	ESC-105	ESC PLAN PHASE 3 - FINAL GRADING, RUNOFF CONTROL, AND STABILIZATION
14	ESC-106	EROSION AND SEDIMENT CONTROL DETAILS
TREE PRESERVATION, REMOVAL, & MITIGATION		
15	TR-101	TREE PRESERVATION, REMOVAL, AND MITIGATION PLAN - 1
16	TR-102	TREE PRESERVATION, REMOVAL, AND MITIGATION PLAN - 2
CIVIL		
17	C-101	EXISTING CONDITIONS
18	C-102	DEMOLITION PLAN
19	C-103	SITE DIMENSIONAL PLAN
20	C-103A	SITE PLAN - 1
21	C-103B	SITE PLAN -2
22	C-104	GRADING PLAN - 1
23	C-104A	GRADING PLAN - 2
24	C-104B	WQSB GRADING ENLARGEMENT PLAN
25	C-105	COMPOSITE UTILITY PLAN - 1
26	C-106	COMPOSITE UTILITY PLAN - 2
27	C-106A	WATER PIPING PLAN
28	C-107	PRIVATE STORM PLAN - 1
29	C-108	STORM PLAN - 2
30	C-108A	SOUTH STORMWATER PLANTERS PLAN AND PROFILE
31	C-108B	ONSITE PRIVATE 'SD' ALIGNMENT C PROFILE
32	C-109	STORM DRAINAGE PROFILE AND DETAILS
33	C-109A	STORM DRAIN PLAN AND PROFILES
34	C-110	ACCESS ROAD - PROFILE
35	C-111	ACCESS ROAD - LINE AND CURVE TABLES
36	C-112	SWAN AVENUE RESTORATION - SITE LAYOUT 1
37	C-112A	SWAN AVENUE RESTORATION - SITE LAYOUT 2
38	C-113	SWAN AVENUE RESTORATION - PROFILE
39	C-114	FENCING AND GATE DETAILS
40	C-115	OREGON CITY STANDARD DRAWINGS
41	C-116	OREGON CITY STANDARD DRAWINGS
42	C-117	OREGON CITY STANDARD DRAWINGS
43	C-118	OREGON CITY STANDARD DRAWINGS
44	C-119	OREGON CITY STANDARD DRAWINGS
45	C-120	OREGON CITY STANDARD DRAWINGS
46	C-121	OREGON CITY STANDARD DRAWINGS
47	C-122	OREGON CITY STANDARD DRAWINGS
48	C-123	OREGON CITY STANDARD DRAWINGS
49	C-124	OREGON CITY STANDARD DRAWINGS
50	C-125	ODOT STANDARD DETAILS
51	L-101	LANDSCAPE PLAN
52	L-102	LANDSCAPE PLAN
53	L-103	LANDSCAPE DETAILS
54	L-104	LANDSCAPE DETAILS
STRUCTURAL		
55	GS-1	GENERAL NOTES - I
56	GS-2	GENERAL NOTES - II
57	GS-3	GENERAL NOTES - III
58	GS-4	GENERAL NOTES - IV
59	GS-5	STANDARD DETAILS - I
60	GS-6	STANDARD DETAILS - II
61	GS-7	STANDARD DETAILS - III
62	GS-8	STANDARD DETAILS - IV
63	GS-9	STANDARD DETAILS - V
64	GS-10	STANDARD DETAILS - VI
65	GS-11	STANDARD DETAILS - VII
66	GS-12	STANDARD DETAILS - VIII
67	S-101	FOUNDATION PLAN
68	S-102	INTERMEDIATE PLAN
69	S-103	ROOF FRAMING PLAN
70	S-301	SECTIONS - I
71	S-302	SECTIONS - II
72	S-303	SECTIONS - III
73	S-304	SECTIONS - IV
74	S-305	SECTIONS - V
75	S-501	DETAILS
76	S-601	TRUSS JOIST SCHEDULE
ARCHITECTURAL		
77	A-001	NOTES AND SYMBOLS
78	A-002	SCHEDULES
79	A-003	STANDARD DETAILS - I
80	A-004	STANDARD DETAILS - II
81	A-005	STANDARD DETAILS - III
82	A-006	STANDARD DETAILS - IV
83	A-007	STANDARD DETAILS - V
84	A-008	STANDARD DETAILS - VI
85	A-009	STANDARD DETAILS - VII
86	A-010	STANDARD DETAILS - VIII
87	A-101	BUILDING CODE AND THERMAL SUMMARY AND LIFE SAFETY PLANS
88	A-102	FIRST FLOOR PLAN
89	A-103	SECOND FLOOR PLAN
90	A-104	ROOF PLAN
91	A-105	REFLECTED CEILING AND ENLARGED MEETING ROOM PLANS AND INTERIOR ELEVATION
92	A-106	ENLARGED RESTROOM AND JANITOR PLANS AND INTERIOR ELEVATIONS
93	A-107	ENLARGED KITCHEN PLAN AND INTERIOR ELEVATIONS
94	A-301	EXTERIOR ELEVATIONS - I
95	A-302	EXTERIOR ELEVATIONS - II
96	A-303	BUILDING SECTIONS
PLUMBING		
97	P-001	GENERAL PLUMBING NOTES, SYMBOL ABBREVIATION, AND SCHEDULE
98	P-002	PLUMBING DETAILS - I
99	P-003	PLUMBING DETAILS - II
100	P-004	PLUMBING DETAILS - III
101	P-101	WATER SUPPLY PLAN
102	P-102	DRAINAGE PLAN
103	P-103	NATURAL GAS PIPING
104	P-301	SECTIONS
105	P-401	ENLARGED PLAN
106	P-402	ENLARGED PLAN
107	P-901	WATER SUPPLY ISOMETRIC
108	P-902	DRAINAGE ISOMETRIC
109	P-903	NATURAL GAS ISOMETRIC
MECHANICAL		
110	M-001	PROCESS LEGEND AND SYMBOLS
111	M-101	WATER QUALITY SYSTEMS BUILDING LOWER LEVEL PLAN
112	M-102	SODIUM HYPOCHLORITE PLAN ALTERNATIVES
113	M-103	SODIUM HYPOCHLORITE PLAN 1 OF 3
114	M-104	SODIUM HYPOCHLORITE PLAN 2 OF 3
115	M-105	SODIUM HYPOCHLORITE PLAN 3 OF 3
116	M-106	ALUM SYSTEM PLAN
117	M-107	POLYMER SYSTEM PLAN
118	M-108	SODA ASH FEED SYSTEM PLAN
119	M-109	MECHANICAL ROOM PLAN
120	M-110	UTILITY WATER AND COMPRESSED AIR PLAN
121	M-111	EXISTING PUMP ROOM MODIFICATIONS PLAN
122	M-112	EXISTING FACILITY INJECTION LOCATIONS - 1
123	M-113	EXISTING FACILITY INJECTION LOCATIONS - 2
124	M-114	EXISTING FACILITY INJECTION LOCATIONS - 3
125	M-115	EXISTING FACILITY INJECTION LOCATIONS - 4
126	M-116	EXISTING FACILITY INJECTION LOCATIONS - 5
127	M-301	SODIUM HYPOCHLORITE SECTIONS - 1
128	M-302	SODIUM HYPOCHLORITE SECTIONS - 2
129	M-303	SODIUM HYPOCHLORITE SECTIONS - 3
130	M-304	ALUM SYSTEM SECTIONS
131	M-305	POLYMER SYSTEM SECTIONS
132	M-306	SODA ASH FEED SYSTEM SECTIONS
133	M-307	MECHANICAL ROOM SECTIONS
134	M-501	MECHANICAL DETAILS
135	M-502	MECHANICAL DETAILS
136	M-503	MECHANICAL DETAILS
137	M-504	BRINE TANK DETAILS
138	M-505	SODIUM HYPOCHLORITE TANK DETAILS
139	M-506	ALUM TANK DETAILS
140	M-507	POLYMER TANK DETAILS
141	M-901	MECHANICAL ROOM ISOMETRIC
142	M-902	UTILITY WATER AND COMPRESSED AIR ISOMETRIC
143	M-903	SODIUM HYPO ISOMETRIC
144	M-904	ALUM ISOMETRIC
145	M-905	POLYMER ISOMETRIC
146	M-906	SODA ASH ISOMETRIC
HVAC		
147	H-001	ABBREVIATIONS, NOTES, AND LEGEND
148	H-002	DESIGN SUMMARY
149	H-003	STANDARD DETAILS - I
150	H-004	STANDARD DETAILS - II
151	H-005	STANDARD DETAILS - III
152	H-006	SEQUENCE OF OPERATIONS I
153	H-007	SEQUENCE OF OPERATIONS II
154	H-008	SEQUENCE OF OPERATIONS III
155	H-009	SEQUENCE OF OPERATIONS IV
156	H-601	SCHEDULES - I
157	H-602	SCHEDULES - II
158	H-101	FLOOR PLAN
159	H-102	UPPER LEVEL FLOOR PLAN
160	H-301	SECTIONS
161	H-302	SECTIONS
162	H-303	SECTION
163	H-401	ENLARGED PLAN
164	H-901	ISOMETRIC
ELECTRICAL		
165	GE-1	SYMBOLS AND ABBREVIATIONS
166	GE-2	STANDARD DETAILS, NOTES AND SCHEDULES
167	GE-3	PANELBOARD SCHEDULES - 1
168	E-1	ONE-LINE DIAGRAM - 1
169	E-2	ONE-LINE DIAGRAM - 2
170	E-3	FIRST FLOOR PLAN - GROUNDING
171	E-4	FIRST FLOOR PLAN - LIGHTING
172	E-5	SECOND FLOOR PLAN
INSTRUMENTATION & CONTROLS		
173	I-001	P&ID LEGEND AND SYMBOLS
174	I-002	P&ID ABBREVIATIONS
175	I-601	P&ID HYPOCHLORITE SYSTEM 1
176	I-602	P&ID HYPOCHLORITE SYSTEM 2
177	I-603	P&ID ALUM SYSTEM
178	I-604	P&ID POLYMER SYSTEM
179	I-605	P&ID SODA ASH

SHEET IDENTIFICATION

DISCIPLINE

G	GENERAL
C	CIVIL
ESC	EROSION & SEDIMENT CONTROL
TR	TREE PRESERVATION, REMOVAL, & MITIGATION
L	LANDSCAPE
S	STRUCTURAL
A	ARCHITECTURAL
P	PLUMBING
M	MECHANICAL
H	HVAC
E	ELECTRICAL
I	INSTRUMENTATION & CONTROLS
GE	GENERAL ELECTRICAL
GS	GENERAL STRUCTURAL

SHEET TYPE

0	GENERAL (symbols, legend, notes, etc.)
1	PLANS (horizontal views)
2	ELEVATIONS (vertical views)
3	SECTIONS (sectional views, wall sections)
4	LARGE-SCALE VIEWS (plans, elevations, stair sections, or sections that are not details)
5	DETAILS
6	SCHEDULES AND DIAGRAMS
7	USER DEFINED (for types that do not fit into any categories, including typical detail sheets)
8	USER DEFINED (for types that do not fit into any categories)
9	3D REPRESENTATIONS (isometrics, perspectives, photographs)

\\EgnyteDrive\Consor Files_V-W\Projects\OR\South Fork Water\2025\W253326OR.00\12 CADD\12-5 Sheets\SHEET INDEX.dwg G-001 7/29/2026 11:49 AM JUSTIN.DEUEL 24.3s (LMS Tech)

NO.	DATE	BY	REVISION

NOTICE
0 ½ 1
IF THIS BAR DOES NOT MEASURE 1" THEN DRAWING IS NOT TO SCALE

KKS DESIGNED
JLC DRAWN
ANB CHECKED

REGISTERED PROFESSIONAL ENGINEER 86406PE OREGON SEPTEMBER 12, 2017 ADAM N. BLAIR
RENEWS 12-31-27

BID SET

consor
Stantec

South Fork WATER
PURE WATER SINCE 1915

WATER QUALITY SYSTEMS BUILDING

GENERAL

SHEET INDEX

PROJECT NO.: W253326OR | SCALE: AS SHOWN | DATE: AUGUST 2026

SHEET
G-001

@	AT
AABC	ASSOCIATED AIR BALANCE COUNCIL
AASHTO	AMERICAN ASSOCIATION OF STATE HIGHWAY & TRANSPORTATION OFFICIALS
AB	ANCHOR BOLT
ABE	AERATION BASIN EFFLUENT
ABI	AERATION BASIN INFLUENT
ABAN(D)	ABANDON(ED)
ABS	ACRYLONITRILE BUTADIENE STYRENE
ABV	ABOVE / ALCOHOL BY VOLUME
AC	ASPHALTIC CONCRETE
ACP	ASPHALTIC CONCRETE PAVING
ADJ	ADJUSTABLE
ADJC	ADJACENT
AFF	ABOVE FINISHED FLOOR
AFG	ABOVE FINISHED GRADE
AHR	ANCHOR
AL	ALUMINUM
ALT	ALTERNATE
AMP	AMPERE
ANSI	AMERICAN NATIONAL STANDARDS INSTITUTE
APPROX	APPROXIMATE
APPVD	APPROVED
APWA	AMERICAN PUBLIC WORKS ASSOCIATION
ARCH	ARCHITECTURAL
ARV	AIR RELEASE VALVE
ASCE	AMERICAN SOCIETY OF CIVIL ENGINEERS
ASSN	ASSOCIATION
ASSY	ASSEMBLY
ASTM	AMERICAN SOCIETY FOR TESTING & MATERIALS
ATM	ATMOSPHERE
AUTO	AUTOMATIC
AUX	AUXILIARY
AVE	AVENUE
AVG	AVERAGE
AWWA	AMERICAN WATER WORKS ASSOCIATION
B&S	BELL & SPIGOT
BC	BOLT CIRCLE
BF	BOTH FACE
BFD	BACKFLOW PREVENTION DEVICE
BFILL	BACKFILL
BFV	BUTTERFLY VALVE
BHP	BRAKE HORSEPOWER
BKGD	BACKGROUND
BLDG	BUILDING
BLVD	BOULEVARD
BM	BENCHMARK / BEAM
BMP	BEST MANAGEMENT PRACTICES
BO	BLOW-OFF
BOC	BACK OF CURB
BS	BOTH SIDES / BRINE SOLUTION
BSMT	BASEMENT
BTF	BOTTOM FACE
BTU	BRITISH THERMAL UNIT
BV	BALL VALVE
BW	BOTH WAYS
C	CELSIUS
C TO C	CENTER TO CENTER
CA	COMPRESSED AIR
CAK	BIOSOLIDS CAKE
CARV	COMBINATION AIR RELEASE VALVE
CAS	CAUSTIC SODA
CATV	CABLE TELEVISION
CB	CATCH BASIN
CCP	CONCRETE CYLINDER PIPE
CCW	COUNTER CLOCKWISE
CFM	CUBIC FEET PER MINUTE
CFS	CUBIC FEET PER SECOND
CHAN	CHANNEL
CHEM	CHEMICAL
CHFR	CHAMFER
CHKV	CHECK VALVE
CI	CAST IRON
CIP	CAST IRON PIPE
CIPC	CAST IN PLACE CONCRETE
CISP	CAST IRON SOIL PIPE
CJ	CONSTRUCTION JOINT
CL OR C/L	CENTER LINE
CL2	CHLORINE
CLG	CEILING
CLJ	CONTROL JOINT
CLR	CLEAR
CLSM	CONTROLLED LOW STRENGTH MATERIAL
CMP	CORRUGATED METAL PIPE
CMU	CONCRETE MASONRY UNIT
CND	CONDUIT
CO	CLEANOUT
COAG	COAGULANT
COL	COLUMN
COMB	COMBINATION
CONC	CONCRETE
CONN	CONNECTION
CONST	CONSTRUCTION
CONT	CONTINUOUS / CONTINUATION
CONTR	CONTRACT(OR)
COOC	CITY OF OREGON CITY
COORD	COORDINATE
COP	COPPER
CORP	CORPORATION
CORR	CORRUGATED
CP	CONTROL POINT
CPLG	COUPLING
CPVC	CHLORINATED POLYVINYL CHLORIDE
CR	CRUSHED ROCK
CRZ	CRITICAL ROOT ZONE
CS	COMBINED SLUDGE
CSP	CONCRETE SEWER PIPE
CT	COURT
CTR	CENTER
CU	CUBIC
CULV	CULVERT
CV	CONTROL VALVE
CW	CLOCKWISE / COLD WATER
CY	CUBIC YARDS
CYL	CYLINDER LOCK
DC	DIRECT CURRENT
DEFL	DEFLECTION
DET	DETAIL
DI	DUCTILE IRON
DIA	DIAMETER
DIM	DIMENSION
DIR	DIRECTION
DIST	DISTANCE
DN	DOWN
DR	DRAIN
DS	DIGESTER SLUDGE
DWG	DRAWING
DWL	DOWEL
DWV	DRAIN WASTE AND VENT
DWY	DRIVEWAY
E OR ELEC	ELECTRICAL
EA	EACH
ECC	ECCENTRIC
EF	EACH FACE
EL	ELEVATION
ELB	ELBOW
ENCL	ENCLOSURE
EOP	EDGE OF PAVEMENT
EQ	EQUAL
EQL SP	EQUALLY SPACED
EQUIP	EQUIPMENT
ESMT	EASEMENT
EW	EACH WAY
EXC	EXCAVATE
EXIST	EXISTING
EXP	EXPANSION
EXP BT	EXPANSION BOLT
EXP JT	EXPANSION JOINT
EXT	EXTERIOR
F	FAHRENHEIT
F TO F	FACE TO FACE
FAB	FABRICATE
FB	FLAT BAR
FCA	FLANGED COUPLING ADAPTER
FCO	FLOOR CLEANOUT
FD	FLOOR DRAIN
FDN	FOUNDATION
FE	FINAL EFFLUENT
FEXT	FIRE EXTINGUISHER
FF	FAR FACE/FINISHED FLOOR
FGL	FIBERGLASS
FH	FIRE HYDRANT
FIN	FINISH(ED)
FIPT	FEMALE IRON PIPE THREAD
FITG	FITTING
FL	FLOOR LINE
FLEX	FLEXIBLE
FLG	FLANGE
FLL	FLOW LINE
FLR	FLOOR
FM	FORCE MAIN
FO	FIBER OPTIC
FOC	FACE OF CONCRETE
FOF	FACE OF FINISH
FOM	FACE OF MASONRY
FOS	FACE OF STUDS
FPM	FEET PER MINUTE
FPS	FEET PER SECOND
FRP	FIBERGLASS REINFORCED PLASTIC
FT	FEET / FOOT
FTG	FOOTING
FUT	FUTURE
FXTR	FIXTURE
G	GAS
GA	GAUGE
GAL	GALLON
GALV	GALVANIZED
GC	GROOVED COUPLING
GFA	GROOVED FLANGE ADAPTER
GI	GALVANIZED IRON
GIP	GALVANIZED IRON PIPE
GJ	GRIP JOINT
GL	GLASS
GLV	GLOBE VALVE
GND	GROUND
GPD	GALLONS PER DAY
GPH	GALLONS PER HOUR
GPM	GALLONS PER MINUTE
GPS	GALLONS PER SECOND
GR	GRIT
GR LN	GRADE LINE
GRTG	GRATING
GV	GATE VALVE
GRVL	GRAVEL
GYP	GYPSUM
HB	HOSE BIBB
HC	HOLLOW CORE
HDPE	HIGH DENSITY POLYETHYLENE
HDR	HEADER
HDWE	HARDWARE
HGR	HANGER
HGT	HEIGHT
HH	HANDHOLD
HM	HOLLOW METAL
HMAC	HOT MIX ASPHALT CONCRETE
HNDRL	HANDRAIL
HOA	HAND-OFF-AUTO
HOR	HAND-OFF-REMOTE
HORIZ	HORIZONTAL
HP	HIGH PRESSURE / HORSEPOWER
HPG	HIGH PRESSURE GAS
HPT	HIGH POINT
HR	HOUR
HSB	HIGH STRENGTH BOLT
HV	HOSE VALVE
HVAC	HEATING, VENTILATION, AIR CONDITIONING
HW	HOT WATER
HWL	HIGH WATER LINE
HWY	HIGHWAY
HYD	HYDRANT
HYDR	HYDRAULIC
I&C	INSTRUMENTATION & CONTROL
ID	INSIDE DIAMETER
IE	INVERT ELEVATION
IF	INSIDE FACE
IMPVT	IMPROVEMENT
IN	INCH
INCC	INCLUDE(D)(ING)
INFL	INFLUENT
INJ	INJECTION
INSTL	INSTALLATION / INSTALL
INSUL	INSULATION
INTER	INTERCEPTOR
INTR	INTERIOR
INV	INVERT
IP	IRON PIPE
IPT	IRON PIPE THREAD
IR	IRON ROD
IRRIG	IRRIGATION
JT	JOINT
JUNC	JUNCTION
KPL	KICK PLATE
KVA	KILOVOLT AMPERE
KW	KILOWATT
KWY	KEYWAY
L	LENGTH
LAB	LABORATORY
LAV	LAVATORY
LB	POUND
LF	LINEAR FOOT
LIN	LINEAL
LOC	LOCATION
LONG	LONGITUDINAL
LP	LOW PRESSURE
LPT	LOW POINT
LRG	LARGE
LS	LONG SLEEVE / LUMP SUM
LT	LEFT
LVL	LEVEL
LWL	LOW WATER LINE
MAN	MANUAL
MAT	MATERIAL
MAU	MAKEUP AIR UNIT
MAX	MAXIMUM
MCC	MOTOR CONTROL CENTER
MCP	MASTER CONTROL PANEL
MECH	MECHANICAL
MET	METAL
MFR	MANUFACTURER
MGD	MILLION GALLONS PER DAY
MH	MANHOLE
MIN	MINIMUM
MIPT	MALE IRON PIPE THREAD
MISC	MISCELLANEOUS
MJ	MECHANICAL JOINT
MON	MONUMENT / MONOLITHIC
MOT	MOTOR
MP	MILEPOST
MSL	MEAN SEAL LEVEL
MTD	MOUNTED
NA	NOT APPLICABLE
NC	NORMALLY CLOSED
NEBB	NATIONAL ENVIRONMENTAL BALANCING BUREAU
NF	NEAR FACE
NIC	NOT IN CONTRACT
NO / NO.	NORMALLY OPEN / NUMBER
NOM	NOMINAL
NORM	NORMAL
NRS	NON-RISING STEM
NTS	NOT TO SCALE
O TO O	OUT TO OUT
OC	ON CENTER / OREGON CITY
OD	OUTSIDE DIAMETER
OF	OVERFLOW / OUTSIDE FACE
OPNG	OPENING
OPP	OPPOSITE
ORIG	ORIGINAL
OSHG	ONSITE SODIUM HYPOCHLORITE GENERATION
OVHD	OVERHEAD
P&ID	PROCESS & INSTRUMENTATION DIAGRAM
PA	PROCESS AIR
PC	POINT OF CURVE
PCC	POINT OF COMPOUND CURVE
PCVC	POINT OF CURVATURE ON VERTICAL CURVE
PERF	PERFORATED
PERM	PERMANENT
PERP	PERPENDICULAR
PG	PRESSURE GAUGE
PH	PIPE HANGER
PI	PRIMARY INFLUENT
PIVC	POINT OF INTERSECTION ON VERTICAL CURVE
PL OR P/L	PROPERTY LINE / PLATE / PLASTIC
PLBG	PLUMBING
PLE	PLANE END
PNL	PANEL
POC	POINT OF CURVATURE
POL	POLYMER
POLY	POLYETHYLENE
PP	POWER POLE
PRC	POINT OF REVERSE CURVATURE
PRCST	PRECAST
PREP	PREPARATION
PRESS	PRESSURE
PRKG	PARKING
PROP	PROPERTY
PRV	PRESSURE REDUCING VALVE
PS	PUMP STATION/PRIMARY SLUDGE
PSIG	POUNDS PER SQUARE INCH GAUGE
PSL	PIPE SLEEVE
PSPT	PIPE SUPPORT
PV	PLUG VALVE
PVC	POLYVINYL CHLORIDE
PVMT	PAVEMENT
PWR	POWER
QTY	QUANTITY
RAD	RADIUS
RC	REINFORCED CONCRETE
RCP	REINFORCED CONCRETE PIPE
RD	ROAD / ROOF DRAIN
RDCR	REDUCER
REF	REFERENCE
REINF	REINFORCE(D)(ING)(MENT)
REQ'D	REQUIRED
RESTR	RESTRAINED
RFCA	RESTRAINED FLANGE COUPLING ADAPTER
RM	ROOM
RND	ROUND
RO	ROUGH OPENING
R/W	RIGHT-OF-WAY
RPBPD	REDUCED PRESSURE BACKFLOW PREVENTION DEVICE
RPM	REVOLUTIONS PER MINUTE
RR	RAILROAD
RST	REINFORCED STEEL
RT	RIGHT
SALV	SALVAGE
SAN	SANITARY
SC	SOLID CORE
SCE	SECONDARY CLARIFIER EFFLUENT
SCHED	SCHEDULE
SCM	SCUM
SCRN	SCREENINGS
SD	STORM DRAIN
SDL	SADDLE
SDR	STANDARD DIMENSION RATIO
SECT	SECTION
SHLDR	SHOULDER
SHT	SHEET
SIM	SIMILAR
SLP	SLOPE
SLV	SLEEVE
SOLN	SOLUTION
SP	SOIL PIPE / SEWER PIPE
SPCL	SPECIAL
SPEC(S)	SPECIFICATION(S)
SPG	SPACING
SPL	SPOOL
SPRT	SUPPORT
SQ	SQUARE
SQ FT	SQUARE FOOT
SQ IN	SQUARE INCH
SQ YD	SQUARE YARD
SS	SANITARY SEWER
SST	STAINLESS STEEL
ST	STREET
STA	STATION
STD	STANDARD
STL	STEEL
STOR	STORAGE
STR	STRAIGHT
STRUCT	STRUCTURE / STRUCTURAL
SUBMG	SUBMERGED
SUCT	SUCTION
SV	SOLENOID VALVE
S/W	SIDEWALK
SWD	SIDEWATER DEPTH
SWGR	SWITCH GEAR
SYMM	SYMMETRICAL
SYS	SYSTEM
T OR TEL	TELEPHONE
T&B	TOP & BOTTOM
TAN	TANGENCY
TB	THRUST BLOCK
TBM	TEMPORARY BENCHMARK
TC	TOP OF CONCRETE / TOP OF CURB
TCE	TEMPORARY CONSTRUCTION EASEMENT
TDH	TOTAL DYNAMIC HEAD
TEMP	TEMPERATURE / TEMPORARY
T&G	TONGUE & GROOVE
THK	THICK / THICKNESS
THRD	THREAD (ED)
THRU	THROUGH
TOC	TOP OF CONCRETE
TOG	TOP OF GRATING
TOW	TOP OF WALL
TP	TEST PIT / TOP OF PAVEMENT / TURNING POINT
TRANS	TRANSITION
TST	TOP OF STEEL
TW	TOP OF WALL
TYP	TYPICAL
UG	UNDERGROUND
UH	UNIT HEATER
UN	UNION
UON	UNLESS OTHERWISE NOTED
USGS	UNITED STATES GEOLOGIC SURVEY
UW	UTILITY WATER
V	VENT / VOLT
VAC	VACUUM
VB	VACUUM BREAKER
VBOX	VALVE BOX
VC	VERTICAL CURVE
VERT	VERTICAL
VFD	VARIABLE FREQUENCY DRIVE
VOL	VOLUME
VCP	VITRIFIED CLAY PIPE
VTR	VENT THROUGH ROOF
W1	POTABLE WATER
W2	NON-POTABLE WATER
W/	WITH
W/IN	WITHIN
W/O	WITHOUT
W/W	WALL TO WALL
WD	WOOD
WF	WIDE FLANGE
WH	WATER HEATER
WI	WROUGHT IRON
WM	WATER METER
WP	WORKING POINT / WATERPROOFING
WS	WATER SERVICE
WT	WEIGHT
WTP	WATER TREATMENT PLANT
WTRT	WATERTIGHT
WWF	WELDED WIRE FABRIC
WQS/ WQSB	WATER QUALITY SYSTEMS BUILDING
X SECT	CROSS SECTION
XFMR	TRANSFORMER
YD	YARD DRAIN / YARD
YH	YARD HYDRANT
YR	YEAR
ZN	ZINC

\\EgnyteDrive\Consor Files_V-W\Projects\OR\South Fork Water\2025\W253326OR.00\12 CADD\12-5 Sheets\ABBREVIATIONS.dwg G-002 7/29/2026 10:45 AM JUSTIN.DEUEL 24.3s (LMS Tech)

NO.	DATE	BY	REVISION

NOTICE

0 ½ 1

IF THIS BAR DOES NOT MEASURE 1" THEN DRAWING IS NOT TO SCALE

KKS DESIGNED
JLC DRAWN
ANB CHECKED

REGISTERED PROFESSIONAL ENGINEER 86406PE OREGON SEPTEMBER 12, 2017 ADAM N. BLAIR
RENEWS 12-31-27

BID SET

consor
Stantec

South Fork WATER PURE WATER SINCE 1915

WATER QUALITY SYSTEMS BUILDING

GENERAL

ABBREVIATIONS

PROJECT NO.: W253326OR | SCALE: AS SHOWN | DATE: AUGUST 2026

SHEET G-002

PIPE & FITTING SYMBOLS

PLANT	SCHEMATIC	
		WELDED JOINT
		FLANGED JOINT
		GROOVED END JOINT
		MECHANICAL JOINT
		PUSH-ON JOINT (RUBBER GASKET)
		FLANGED COUPLING ADAPTER
		DOUBLE BALL FLEXIBLE EXTENSION COUPLING
		FLEXIBLE COUPLING W/ THRUST RING
		90° BEND UP
		90° BEND DOWN
		TEE UP
		TEE DOWN
		LATERAL UP
		LATERAL DOWN
		CONCENTRIC REDUCER
		ECCENTRIC REDUCER
		UNION
		BLIND FLANGE
		CAP
		LONG SLEEVE
		FLEXIBLE COUPLING
		FITTING (45°)

VALVE SYMBOLS

PLANT	SCHEMATIC		
		BUTTERFLY VALVE	V-100+
		BALL VALVE	V-200+
		PLUG VALVE (TOP)	V-300+
		3-WAY PLUG VALVE	V-300+
		CHECK VALVE	V-400+
		DOUBLE CHECK ASSEMBLY	V-400+
		BALL SWING CHECK	V-400+
		REDUCED PRESSURE BACKFLOW PREVENTER W/ GATE VALVES	V-400+
		GATE VALVE	V-500+
		NEEDLE VALVE	V-600+
		GLOBE VALVE	V-700+
		HOSE VALVE	V-700+
		RELIEF VALVE	V-800+
		PRESSURE REDUCING VALVE	V-800+
		SOLENOID VALVE	V-900+
		HOSE BIBB	

PIPING DESIGNATION

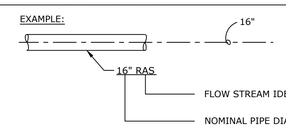

VALVE DESIGNATIONS

MANUAL VALVES AND CHECK VALVES

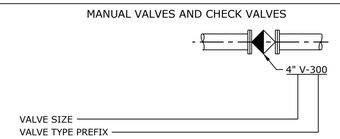

TOPOGRAPHIC LEGEND

	EXISTING	PROPOSED
WATERLINE	10"W	12"DI W
ELECTRICITY	E	E
GAS	4"G	4"G
TELEPHONE/TELEMETRY	T	T
CABLE TELEVISION	CATV	CATV
SANITARY SEWER LINE	8"SS	8"SS
SANITARY SEWER FORCE MAIN	6"FM	6"FM
STORM DRAIN	8"SD	8"SD
CULVERT	8"SD	18"D
ABANDON PIPE		
DRAINAGE DITCH		
CHAIN LINK FENCE		
TEMPORARY SILT FENCE		
GUARDRAIL		
ROCK WALL		
TREE/BUSH LINE		
CENTERLINE		
EASEMENT/PROPERTY LINE		
RIGHT-OF-WAY		
EDGE OF PAVEMENT/AC		
EDGE OF GRAVEL		
CURB		
SIDEWALK	S/W	
STRUCTURE OR FACILITY		
CONTOUR MINOR		
CONTOUR MAJOR	200	200
MANHOLE		
CLEAN-OUT		
CATCH BASIN/FIELD INLET		
THRUST BLOCK		
VALVE		
AIR RELEASE ASSEMBLY		
FIRE HYDRANT ASSEMBLY		
WATER METER		
PULL BOX/JUNCTION BOX		
UTILITY POLE		
GUY WIRE		
LIGHT POST		
MAILBOX		
SIGN		
BENCHMARK		
TREE DECIDUOUS		
TREE CONIFEROUS		
TREE TO BE REMOVED		
SURFACE ELEVATION	+ 176.63	+ 176.63

SECTION AND DETAIL DESIGNATIONS

SECTION DESIGNATIONS

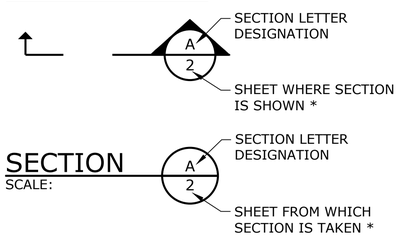

DETAIL DESIGNATIONS

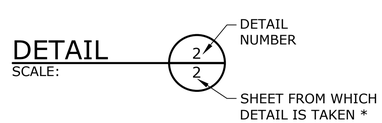

* NOTE: IF PLAN AND SECTION FOR DETAIL CALL-OUT AND DETAIL ARE SHOWN ON THE SAME DRAWING, DRAWING NUMBER IS REPLACED WITH A DASH.

NO.	DATE	BY	REVISION

NOTICE

0 ½ 1

IF THIS BAR DOES NOT MEASURE 1" THEN DRAWING IS NOT TO SCALE

KKS DESIGNED
JLC DRAWN
ANB CHECKED

REGISTERED PROFESSIONAL ENGINEER 86406PE OREGON SEPTEMBER 12, 2017 ADAM N. BLAIR
RENEWS 12-31-27

BID SET

consor
Stantec

South Fork WATER
PURE WATER SINCE 1915

WATER QUALITY SYSTEMS BUILDING

GENERAL

SYMBOLS AND LEGEND

PROJECT NO.: W253326OR | SCALE: AS SHOWN | DATE: AUGUST 2026

SHEET G-003

\\EgnyteDrive\Consor Files_V-W\Projects\OR\South Fork Water\2025\W253326OR.00\12 CADD\12-5 Sheets\G-003 SYMBOLS AND LEGEND.dwg G-003 7/29/2026 10:45 AM JUSTIN.DEUEL 24.3s (LMS Tech)

GENERAL NOTES:

1. ALL WORK AND MATERIALS SHALL CONFORM TO MOST RECENT EDITION OF THE ODOT/APWA OREGON STANDARD SPECIFICATIONS FOR PUBLIC WORKS CONSTRUCTION AS ADOPTED AND MODIFIED BY THE CITY OF OREGON CITY.

2. CONTRACTOR SHALL OBTAIN ALL REQUIRED PERMITS AND LICENSES BEFORE STARTING CONSTRUCTION. A CITY BUSINESS LICENSE IS REQUIRED.

3. IT SHALL BE THE RESPONSIBILITY OF THE CONTRACTOR TO VERIFY ALL UTILITY LOCATIONS PRIOR TO CONSTRUCTION AND ARRANGE FOR THE RELOCATION OF ANY UTILITIES IN CONFLICT WITH THE PROPOSED CONSTRUCTION. THE LOCATIONS, DEPTH AND DESCRIPTION OF EXISTING UTILITIES SHOWN WERE COMPILED FROM AVAILABLE RECORDS AND/OR FIELD SURVEYS. THE ENGINEER OR UTILITY COMPANIES DO NOT GUARANTEE THE ACCURACY OR THE COMPLETENESS OF SUCH RECORDS. ADDITIONAL UTILITIES MAY EXIST WITHIN THE WORK AREA.

4. OREGON LAW REQUIRES THAT THE RULES ADOPTED BY OREGON UTILITY NOTIFICATION CENTER BE FOLLOWED. THOSE RULES ARE SET FORTH IN OAR 952-001-0090. YOU MAY OBTAIN COPIES OF THE RULES BY CALLING THE CENTER OR ACCESSING VIA INTERNET AT WWW.CALLBEFOREYOUDIG.ORG OR CALL BEFORE YOU DIG (800) 332-2344.

5. THE CONTRACTOR SHALL MAKE PROVISIONS TO KEEP ALL EXISTING UTILITIES IN SERVICE AND PROTECT THEM DURING CONSTRUCTION. CONTRACTOR SHALL IMMEDIATELY REPAIR OR REPLACE ANY DAMAGED UTILITIES USING MATERIALS AND METHODS APPROVED BY THE UTILITY OWNER. NO SERVICE INTERRUPTIONS SHALL BE PERMITTED WITHOUT PRIOR WRITTEN AGREEMENT WITH THE UTILITY PROVIDER.

6. ALL WATER LINE CROSSINGS SHALL BE IN CONFORMANCE WITH OAR CHAPTER 333. THE CITY MAY REQUIRE MORE STRINGENT STANDARDS.

7. CONTRACTOR SHALL NOTIFY PROJECT ENGINEER AND CITY OF OREGON CITY PUBLIC WORKS CONSTRUCTION INSPECTOR STAFF 48 HOURS IN ADVANCE OF STARTING CONSTRUCTION AND 24 HOURS BEFORE RESUMING WORK AFTER SHUTDOWNS, EXCEPT FOR NORMAL RESUMPTION OF WORK FOLLOWING SATURDAYS, SUNDAYS, OR HOLIDAYS.

8. CONTRACTOR SHALL REMOVE AND DEPOSE OF TREES, STUMPS, BRUSH, ROOTS, TOPSOIL, AND OTHER MATERIAL IN THE ROADWAY AND WHERE INDICATED ON THE PLANS. MATERIAL SHALL BE DISPOSED OF IN SUCH A MANNER AS TO MEET ALL APPLICABLE REGULATIONS. CONTRACTOR SHALL ENSURE RECIPIENTS OF FILL MATERIALS REMOVED OFFSITE ARE PERMITTED TO RECEIVE SAID MATERIALS REGARDLESS OF THE RECEIVING JURISDICTION. CITY REQUIRES A GRADING PERMIT PER OREGON CITY MUNICIPAL CODE CHAPTER 15.48 FOR A SINGLE SITE TO RECEIVE OVER 10 CUBIC YARDS OF MATERIAL UNLESS THE GRADING WORK IS ALREADY COVERED IN ANOTHER CONSTRUCTION PERMIT. CONTRACTOR IS RESPONSIBLE FOR MEETING OTHER JURISDICTIONS' GRADING/FILL REQUIREMENTS WHEN APPROPRIATE.

9. CONSTRUCTION VEHICLES INCLUDING TRAILERS SHALL PARK ON THE CONSTRUCTION SITE OR AT A LOCATION(S) INDICATED ON THE APPROVED PLAN. THIS INCLUDES ALL SUBCONTRACTORS' VEHICLES AND TRAILERS. HOURS OF CONSTRUCTION SHALL BE 7 AM TO 6 PM, MONDAY THROUGH FRIDAY; 9 AM TO 6 PM SATURDAY. CONSTRUCTION IS PROHIBITED ON SUNDAY. CONSTRUCTION ACTIVITIES INCLUDE ALL FIELD MAINTENANCE OF EQUIPMENT, REFUELING, AND PICK-UP AND DELIVERY OF EQUIPMENT AS WELL AS THE ACTUAL CONSTRUCTION ACTIVITY.

10. THE CONTRACTOR SHALL SUBMIT A 15% MAINTENANCE BOND/GUARANTEE AS REQUIRED BY THE CITY OF OREGON CITY. THE AMOUNT OF THE GUARANTEE IS 15% OF THE PUBLIC IMPROVEMENTS COST.

11. THE CONTRACTOR SHALL KEEP AN APPROVED SET OF PLANS ON THE PROJECT SITE AT ALL TIMES.

12. UPON COMPLETION OF CONSTRUCTION, THE CONTRACTOR SHALL SUBMIT "REDLINE DRAWINGS" TO PROJECT ENGINEER FOR PREPARATION OF RECORD DRAWINGS. "REDLINE DRAWINGS" DOCUMENT ALL DEVIATIONS AND REVISIONS TO THE APPROVED PLANS; THEY ALSO RECORD A DESCRIPTION OF CONSTRUCTION MATERIALS ACTUALLY USED (PIPE MATERIAL, ETC.). FROM THE INFORMATION CONTAINED ON THESE REDLINE DRAWINGS, AS WELL AS ANY NOTES RECORDED BY THE PROJECT ENGINEER, THE PROJECT ENGINEER SHALL PREPARE AND SUBMIT RECORD DRAWINGS TO PUBLIC WORKS ENGINEERING DEVELOPMENT SERVICES (PAPER COPY FIRST FOR CITY APPROVAL AND THEN HIGH-RESOLUTION ELECTRONIC PDF FILE AS DIRECTED BY CITY STAFF). RECORD DRAWINGS ARE REQUIRED FOR ANY PUBLIC IMPROVEMENTS, AS WELL AS FOR ANY (PUBLIC OR PRIVATE) STORMWATER MANAGEMENT QUANTITY OR QUALITY CONTROL FACILITY. CITY ACCEPTANCE OF ANY PUBLIC IMPROVEMENTS ARE TIED TO THE SUBMITTAL OF THESE RECORD DRAWINGS. CAD-GENERATED PLANS SHALL ALSO HAVE ELECTRONIC RECORD DRAWINGS SUBMITTED TO THE CITY IN COMPLIANCE WITH THE DIGITALMAPPING REQUIREMENTS. COMPLY WITH LATEST CITY STANDARD FOR AS-BUILT RECORD DRAWINGS AND SURVEY.

13. CONTRACTOR SHALL ERECT AND MAINTAIN TEMPORARY TRAFFIC CONTROL PER THE "MANUAL ON UNIFORM TRAFFIC CONTROL DEVICES" (MUTCD), PART 6, AND DEVIATIONS TO THE MUTCD AS ADOPTED AND MODIFIED BY ODOT. SHOULD WORK BE IN AN EXISTING PUBLIC RIGHT OF WAY THAT IS OPEN TO TRAFFIC, THE CONTRACTOR SHALL SUBMIT A TRAFFIC CONTROL PLAN TO APPROPRIATE CITY, COUNTY, AND STATE PERSONNEL FOR APPROVAL. APPROVALS SHALL BE OBTAINED PRIOR TO START OF WORK.

14. THE CONTRACTOR SHALL PERFORM ALL WORK NECESSARY TO COMPLETE THIS PROJECT IN ACCORDANCE WITH THE PLANS AND SPECIFICATIONS INCLUDING SUCH INCIDENTALS AS MAY BE NECESSARY TO MEET THE INTENT OF THE PROJECT CONTRACT DOCUMENTS, APPLICABLE AGENCY REQUIREMENTS AND OTHER WORK AS NECESSARY TO PROVIDE A COMPLETE PROJECT.

15. THERE SHALL BE NO ALTERATION OR VARIANCE FROM THE APPROVED PLANS. THE MINIMUM SUBMITTAL REQUIREMENTS FOR PLAN REVISIONS ARE AS FOLLOWS:
- PLAN REVISIONS SHALL BE SUBMITTED ON AN 8½" X 11" SHEET (MINIMUM) WITH A 2" BY 2" BLOCK SPACE FOR CITY APPROVAL; AND
- PLAN REVISION SHALL BE WET STAMPED AND SIGNED BY PROJECT ENGINEER, AND
- ANY REQUIRED ENGINEERING CALCULATIONS, OR OTHER AGENCY APPROVALS, SHALL BE INCLUDED WITH THE SUBMITTED REVISION.
- UPON APPROVAL OF THE SUBMITTED REVISIONS, THE CITY ENGINEER SHALL AFFIX AN APPROVAL STAMP TO THE REVISED PLAN SKETCH AND THE PLAN SHALL BE RETURNED TO THE PROJECT ENGINEER. IT IS THE RESPONSIBILITY OF THE PROJECT ENGINEER TO DISTRIBUTE THE APPROVED PLAN REVISION TO ALL PARTIES TO WHOM THE ORIGINAL APPROVED PLANS WERE ISSUED. ALL APPROVED REVISIONS SHALL BE AFFIXED TO THE CONSTRUCTION FIELD PRINTS (ALSO KNOWN AS THE CONTRACTOR'S "REDLINE DRAWINGS").

16. CONTRACTOR SHALL PROVIDE EFFECTIVE EROSION PROTECTION TO INCLUDE, BUT NOT LIMITED TO, GRADING, DITCHING, HAY BALES, SILT FENCING, AND SEDIMENT BARRIERS TO MINIMIZE EROSION AND IMPACT TO ADJACENT PROPERTY. SEE SEPARATE EROSION AND SEDIMENT CONTROL NOTES AND APPROVED PLANS.

17. OPEN TRENCHES SHALL BE STRICTLY LIMITED TO A MAXIMUM OF 100 LINEAR FEET WITHIN ACTIVE STREET RIGHTS-OF-WAY UNLESS LIMITED TO A LESSER AMOUNT BY PERMIT. NO TRENCHES WILL BE ALLOWED TO REMAIN OPEN OVERNIGHT. USE OF STEEL PLATES OVERNIGHT SHALL BE KEPT TO A MINIMUM AND IF USED SHALL BE FIRMLY SECURED WITH PINS AND COLD OR HOT A/C MIX.

18. CONTRACTOR SHALL MAINTAIN AND COORDINATE ACCESS TO ALL AFFECTED PROPERTIES.

19. ANY PAVEMENT DISTORTION CAUSED BY THE CONSTRUCTION OPERATIONS SHALL BE TEMPORARILY REPAIRED SAME DAY OF OCCURRENCE (OR IN A TIME PERIOD AGREED TO WITH THE CITY INSPECTOR), USING COLD OR HOT A/C MIX. OWNER/CONTRACTOR SHALL BE REQUIRED TO MAINTAIN REPAIRED AREAS UNTIL CITY FINAL ACCEPTANCE IS GRANTED.

20. IF GROUND WATER SPRINGS ARE ENCOUNTERED DURING CONSTRUCTION, THE CONTRACTOR SHALL IMMEDIATELY CONTACT THE PROJECT ENGINEER. THE PROJECT ENGINEER SHALL DIRECT THE CONTRACTOR TO TAKE MEASURES TO ENSURE THAT WATER IS NOT CONVEYED THROUGH UTILITY TRENCHES AND THE NATURAL FLOW PATH OF THE SPRING IS ALTERED AS LITTLE AS PRACTICABLE. THE PROJECT ENGINEER SHALL SUBMIT A REPORT SUMMARIZING THE FINDING TO THE CITY. IMPACTS AND MITIGATION SHALL BE ADDRESSED FOR CITY APPROVAL.

21. IT IS THE CONTRACTOR'S RESPONSIBILITY TO VISIT THE SITE AND VERIFY ALL EXISTING CONDITIONS BEFORE THE START OF WORK. THE CONTRACTOR SHALL TAKE ALL NECESSARY FIELD MEASUREMENTS AND OTHERWISE VERIFY ALL DIMENSIONS AND EXISTING CONSTRUCTION CONDITIONS INDICATED AND/OR SHOWN ON THE PLANS. SHOULD ANY ERROR OR INCONSISTENCY EXIST, THE CONTRACTOR SHALL NOT PROCEED WITH THE WORK AFFECTED UNTIL REPORTED TO THE PROJECT ENGINEER FOR CLARIFICATION OR CORRECTION.

22. ANY INSPECTION BY THE CITY, COUNTY, STATE, FEDERAL AGENCY OR PROJECT ENGINEER SHALL NOT, IN ANY WAY, RELIEVE THE CONTRACTOR FROM ANY OBLIGATION TO PERFORM THE WORK IN COMPLIANCE WITH THE APPLICABLE CODES, REGULATIONS, CITY STANDARDS AND PROJECT CONTRACT DOCUMENTS.

23. PROJECT PLANS SHALL ALWAYS HAVE AN ENGINEER-OF-RECORD PERFORMING THE FUNCTION OF PROJECT ENGINEER. IF THE PROJECT ENGINEER IS CHANGED DURING THE COURSE OF THE WORK, THE CITY SHALL BE NOTIFIED IN WRITING AND THE WORK SHALL BE STOPPED UNTIL THE REPLACEMENT ENGINEER HAS AGREED TO ACCEPT THE RESPONSIBILITIES OF THE PROJECT ENGINEER. THE NEW PROJECT ENGINEER SHALL PROVIDE WRITTEN NOTICE OF ACCEPTING PROJECT RESPONSIBILITY TO THE CITY WITHIN 72 HOURS OF ACCEPTING THE POSITION AS PROJECT ENGINEER.

24. FOR UTILITY TRENCHES 12-FEET IN DEPTH AND UNDER; COMPLETE A MINIMUM OF ONE COMPACTION DENSITY TEST AT APPROXIMATELY ONE HALF OF THE TRENCH DEPTH AND AN ADDITIONAL TEST AT OR NEAR THE SURFACE. FOR TRENCHES OVER 12-FEET IN DEPTH; COMPLETE ONE COMPACTION DENSITY TEST AT APPROXIMATELY 4-FEET ABOVE THE PIPE, ONE TEST AT OR NEAR THE SURFACE AND ONE ADDITIONAL TEST APPROXIMATELY HALF WAY IN BETWEEN. COMPACTION DENSITY TESTS SHALL BE PERFORMED AT A MINIMUM EVERY 100 FEET.

25. ALL EXISTING PIPE 6 INCHES IN DIAMETER AND GREATER THAT ARE REQUIRED TO BE ABANDONED IN PLACE SHALL BE FILLED WITH CLSM, CDF OR OTHER MATERIAL AS APPROVED BY THE CITY ENGINEER.

SANITARY SEWER NOTES:

1. ALL TRENCH EXCAVATION SHALL BE IN CONFORMANCE WITH OREGON CITY STANDARD DRAWING FOR PIPE BEDDING AND BACKFILL, AND SHALL BE CLASSIFIED AS EITHER ROCK OR COMMON EXCAVATION. ALL EXCESS MATERIAL FROM THE TRENCH EXCAVATION SHALL BE DISPOSED OF TO AN APPROVED SITE.

2. PIPE BEDDING AND TRENCH BACKFILL MAY BE CLASS A ON ALL SEWER LINES OUTSIDE PUBLIC STREETS OR OUTSIDE OF PAVED AREAS. TRENCH BACKFILL SHALL BE CLASS B IN ALL PUBLIC STREETS OR PAVED AREAS IN THE PROJECT AS OUTLINED IN OREGON CITY STANDARD DRAWING FOR PIPE BEDDING AND BACKFILL. THE CLASS B BACKFILL SHALL EXTEND A MINIMUM OF THREE FEET (3') BEYOND THE EDGE OF STREET OR HARD SURFACED AREAS. CDF BACKFILL MAY BE REQUIRED INSTEAD OF CLASS B AS APPLICABLE PER OREGON CITY PAVEMENT CUT STANDARD.

3. TRENCH BACKFILL COMPACTION SHALL BE 95% OF AASHTO T-180 MODIFIED PROCTOR FROM TOP OF PIPE ZONE UP TO ROAD BASE. CONTRACTOR TO DETERMINE TYPE OF EQUIPMENT AND METHOD TO USE TO ACHIEVE THE REQUIRED COMPACTION. 95% COMPACTION, AASHTO T-180, IS REQUIRED IN PUBLIC STREETS AND PAVED AREAS, 85% COMPACTION OF AASHTO T-99 IN NON-PAVED OR UNIMPROVED AREAS.

4. SUBSEQUENT SETTLEMENT OF THE FINISHED SURFACE WITHIN THE WARRANTY PERIOD SHALL BE CONSIDERED TO BE A RESULT OF IMPROPER COMPACTION AND SHALL BE PROMPTLY REPAIRED BY THE CONTRACTOR AT NO EXPENSE TO THE CITY OF OREGON CITY.

5. ALL SEWER LINES SHALL BE TESTED AND VIDEO INSPECTED BY THE CONTRACTOR PER LATEST EDITION OF APWA/ODOT OREGON STANDARD SPECIFICATIONS FOR CONSTRUCTION WITH THE FOLLOWING EXCEPTIONS:
- ALL LINES SHALL BE VIDEO INSPECTED DOWNSTREAM, WITH THE FLOW.
- WATER SHALL BE INTRODUCED TO THE LINES PRIOR TO VIDEO INSPECTION TO ASSIST IN LOCATING BELLIES AND DEFORMATIONS OF THE PIPE.
- A 1" REFERENCE BALL SHALL BE MOUNTED IN FRONT OF THE CAMERA, IN FULL VIEW, IN THE INVERT OF THE PIPE TO FACILITATE DETERMINING COMPLIANCE WITH THE STANDARDS. FOR PIPE SIZES 4" THRU 15", DEVIATIONS SHALL NOT EXCEED 1/32 INCH PER INCH OF PIPE DIAMETER. FOR PIPE SIZES 16" THRU 72", DEVIATIONS SHALL NOT EXCEED 1/2 INCH.
- CONTROL THE FLOW INTO THE SEGMENT TO BE TESTED. IF REQUIRED, PERFORM BYPASS PUMPING.
- SERVICE LATERALS SHALL BE VIDEO INSPECTED FROM THE CLEANOUT TO THE MAINLINE.
- PIPE VIDEO SHALL BE SUBMITTED TO THE CITY ON A FLASH DRIVE OR DVD ONLY.

6. ALL MANHOLES SHALL BE VACUUM TESTED PER APWA/ODOT OREGON STANDARD SPECIFICATIONS FOR CONSTRUCTION.

7. PAVEMENT RESURFACING, WHERE REQUIRED SHALL CONFORM TO OREGON CITY PAVEMENT CUT STANDARDS OR THE CONTRACT DOCUMENTS, WHICHEVER IS GREATER.

8. PROJECT ENGINEER OF RECORD RESERVES THE RIGHT TO ADJUST GRADES OR ALIGNMENT TO ACCOMMODATE OTHER UTILITIES AS REQUIRED; SUCH ADJUSTMENTS SHALL BE REVIEWED BY THE CITY OF OREGON CITY ENGINEERING STAFF, AND APPROVED BY THE CITY PRIOR TO COMMENCING WORK.

9. ALL PVC SEWER PIPE SHALL CONFORM TO ASTM D3034, SDR35 SPECIFICATIONS AND SHALL BE CLEARLY MARKED AS SUCH AND SHALL PROVIDE A MINIMUM OF 4' OF COVER (MEASURED FROM TOP OF PIPE TO FINISHED GRADE); UNLESS THE COVER REQUIREMENT CANNOT BE MET, IN WHICH CASE THE PIPE MATERIAL SHALL BE CHANGED TO PVC C-900 SDR 25 OR APPROVED EQUAL.

10. ALL MANHOLES LOCATED IN UNIMPROVED EASEMENTS AND RIGHT OF WAYS SHALL BE PROVIDED WITH TAMPER PROOF LIDS, BE INSTALLED TWO FEET (2') ABOVE EXISTING GRADE AND MARKED WITH A MARKER POST PER OREGON CITY STANDARDS UNLESS OTHERWISE NOTED.

11. SANITARY SEWER LINES CROSSING LESS THAN 12 INCHES ABOVE OR BELOW ANOTHER PUBLIC UTILITY SHALL BE CONSTRUCTED WITH PVC C-900 OR APPROVED EQUAL, WITH A COMPLETE STICK OF PIPE, CENTERED AT THE CROSSING.

12. MANHOLE WORKMANSHIP: ALL MANHOLES SHALL BE CONSTRUCTED IN ACCORDANCE WITH APWA/ODOT OREGON STANDARD SPECIFICATIONS FOR CONSTRUCTION AND ALL APPLICABLE OREGON CITY STANDARD DRAWINGS.

13. ALL SANITARY SEWER SERVICE LATERALS SHALL HAVE A 2-WAY CLEANOUT PER OREGON CITY STANDARD DRAWINGS.

14. SANITARY SEWERS CROSSING A WATER MAIN SHALL BE MADE AT APPROXIMATELY 90 DEGREES TO THE WATERLINE ALIGNMENT, HAVE EIGHTEEN (18) INCHES MINIMUM VERTICAL CLEARANCE CROSSING UNDER WATERLINE, AND ONE FULL PIPE LENGTH CENTERED AT WATERLINE CROSSING.

STORM DRAIN NOTES:

1. PIPE RULES:
   A. TEN-INCH DIAMETER PIPE OR SMALLER SHALL BE PVC STORM DRAINPIPE CONFORMING TO EITHER ASTM D-3034, OR SEAMLESS PVC PIPE CONFORMING TO ASTM F794 UNLESS OTHERWISE NOTED ON THE APPROVED PLANS. CONCRETE PIPE CONFORMING TO ASTM C-14, CLASS 3 IS ALSO ACCEPTABLE. WATERTIGHT GASKETS ARE REQUIRED ON ALL PIPE SIZES.
   B. TWELVE-INCH THROUGH 48-INCH DIAMETER PIPE (FOR STORM DRAIN PIPE – BUT NOT FOR CULVERTS) MAY BE ONE OF THE FOLLOWING, UNLESS OTHERWISE NOTED ON THE APPROVED PLANS:
      - CLASS V REINFORCED CONCRETE PIPE CONFORMING TO ASTM C-76. WATER TIGHT JOINTS REQUIRED. WHEN USED IN PUBLIC RIGHT-OF-WAY THERE MUST BE ONE-FOOT MINIMUM COVER FROM ROADWAY SUBGRADE.
      - DUCTILE IRON; CLASS 50 WALL THICKNESS FOR PIPE SIZES UP TO 12 INCHES; CLASS 51 WALL THICKNESS FOR 14 INCH AND LARGER; WATER TIGHT GASKETS REQUIRED. WHEN USED IN PUBLIC RIGHT-OF-WAY THERE MUST BE TWO-FOOT MINIMUM COVER FROM ROADWAY SUBGRADE UNLESS CLASS 52 IS USED ALLOWING A ONE-FOOT MINIMUM COVER.
      - CORRUGATED HIGH-DENSITY POLYETHYLENE PIPE (HDPE) – SMOOTH INTERIOR (ADS N- 12 OR EQUIVALENT, MAXIMUM 30-INCH DIAMETER CONFORMING TO AASHTO M-294) (WITH WATERTIGHT GASKETS). WHEN USED IN PUBLIC RIGHT-OF-WAY THERE MUST BE TWO- FOOT MINIMUM COVER FROM ROADWAY SUBGRADE. CONCRETE HEADWALLS/TREATMENTS ARE REQUIRED FOR ANY EXPOSED ENDS.
      - POLYVINYL CHLORIDE (PVC), SEAMLESS, SEWER PIPE: (SDR 35, MEETING REQUIREMENTS OF ASTM D3034 FOR PIPES UP TO 15-INCH), (ASTM F-679 FOR PIPES 18 TO 27 INCHES), (ASTM F- 794 FOR PIPES UP TO 30 INCHES), (AWWA C-900 DR 18 FOR UP TO 12-INCH), (AWWA C-900 DR 21 FOR PIPES 14 TO 30-INCHES). WHEN USED IN PUBLIC RIGHT-OF-WAY, THE MINIMUM COVER SHALL BE TWO-FOOT MINIMUM COVER FROM ROADWAY SUBGRADE, EXCEPT FOR C-900, WHICH REQUIRES ONE-FOOT MINIMUM COVER FROM ROADWAY SUBGRADE. WATER TIGHT GASKETS REQUIRED. CONCRETE HEADWALLS/TREATMENTS ARE REQUIRED FOR ANY EXPOSED ENDS.
   C. PERFORATED PIPE SHALL BE HDPE PIPE CONFORMING TO AASHTO M-294 OR PVC PIPE CONFORMING TO EITHER ASTM D3034 OR ASTM 2729, UNLESS OTHERWISE NOTED ON THE APPROVED PLANS OR STANDARD DRAWINGS.
   D. CULVERT PIPE SHALL BE CLASS V REINFORCED CONCRETE PIPE CONFORMING TO ASTM C-76, UNLESS OTHERWISE NOTED ON THE APPROVED PLANS. WHEN USED IN PUBLIC RIGHT-OF-WAY THERE MUST BE ONEFOOT MINIMUM COVER FROM ROADWAY SURFACE.

2. ALL TRENCH EXCAVATION SHALL BE IN CONFORMANCE WITH OREGON CITY STANDARD DRAWING FOR PIPE BEDDING AND BACKFILL, AND SHALL BE CLASSIFIED AS EITHER ROCK OR COMMON EXCAVATION. ALL EXCESS MATERIAL FROM THE TRENCH EXCAVATION SHALL BE DISPOSED OF TO AN APPROVED SITE.

3. PIPE BEDDING AND TRENCH BACKFILL MAY BE CLASS A ON ALL SEWER LINES OUTSIDE PUBLIC STREETS OR OUTSIDE OF PAVED AREAS. TRENCH BACKFILL SHALL BE CLASS B IN ALL PUBLIC STREETS OR PAVED AREAS IN THE PROJECT AS OUTLINED IN OREGON CITY STANDARD DRAWING FOR PIPE BEDDING AND BACKFILL. THE CLASS B BACKFILL SHALL EXTEND A MINIMUM OF THREE FEET (3') BEYOND THE EDGE OF STREET OR HARD SURFACED AREAS. CDF BACKFILL MAY BE REQUIRED INSTEAD OF CLASS B AS APPLICABLE PER OREGON CITY PAVEMENT CUT STANDARD.

4. TRENCH BACKFILL COMPACTION SHALL BE 95% OF AASHTO T-180 MODIFIED PROCTOR FROM TOP OF PIPE ZONE UP TO ROAD BASE. CONTRACTOR TO DETERMINE TYPE OF EQUIPMENT AND METHOD TO USE TO ACHIEVE THE REQUIRED COMPACTION. 95% COMPACTION, AASHTO T-180, IS REQUIRED IN PUBLIC STREETS AND PAVED AREAS, 85% COMPACTION OF AASHTO T-99 IN NON- PAVED OR UNIMPROVED AREAS.

5. MANHOLE WALLS SHALL BE PRECAST REINFORCED CONCRETE MANHOLES OF THE SIZE REQUIRED PER MANUFACTURER'S RECOMMENDATIONS FOR THE PIPE SIZES AND NUMBER OF OPENINGS.

6. BOX CULVERT SHALL BE PRECAST REINFORCED BOX CULVERT SECTIONS MEETING THE REQUIREMENTS OF ASTM C-850, UNLESS OTHERWISE NOTED ON THE APPROVED PLANS.

7. IF DRAINAGE FIELD TILE IS ENCOUNTERED DURING CONSTRUCTION, THE CONTRACTOR SHALL NOTIFY THE PROJECT ENGINEER AND THE CITY'S INSPECTOR. THE INTENT WILL BE TO CONNECT ANY FUNCTIONING DRAIN TILE SYSTEM TO THE STORM DRAIN SYSTEM IN AN APPROPRIATE MANNER. SUCH CONNECTION MUST BE NOTED ON THE AS-BUILT DRAWINGS AND MUST BE APPROVED BY THE PROJECT ENGINEER AS WELL AS THE CITY'S INSPECTOR.

8. ALL HOUSE SERVICE STUBOUTS SHALL BE A MINIMUM OF THREE FEET (3') BEYOND EASEMENT OR RIGHT- OFWAY LINE AND SHALL BE MARKED WITH A PRESSURE TREATED 2" X 4" (PAINTED WHITE WITH THE LABEL OF "STM") FOR FUTURE LOCATION. SERVICE STUBOUTS SHALL BE A MINIMUM OF 6-INCH DIAMETER PIPE AT MINIMUM SLOPE OF 1%. CURB SHALL BE STAMPED ABOVE STORM SERVICE WITH THE LABEL "ST". TRACER WIRE SHALL BE INSTALLED WITH SERVICE STUBOUTS.

9. ALL MANHOLES LOCATED IN UNIMPROVED EASEMENTS AND RIGHT OF WAYS SHALL BE PROVIDED WITH TAMPER PROOF LIDS, BE INSTALLED TWO FEET (2') ABOVE EXISTING GRADE AND MARKED WITH A MARKER POST PER OREGON CITY STANDARDS UNLESS OTHERWISE NOTED.

10. ALL MATERIALS INSPECTIONS AND TESTS ARE TO BE IN ACCORDANCE WITH CITY OF OREGON CITY AND/OR ODOT/APWA STANDARD SPECIFICATIONS. ALL SECTIONS FAILING TO PASS THE REQUIRED TESTS AND INSPECTIONS SHALL BE LOCATED AND REPAIRED. AFTER REPAIR, THESE SECTIONS SHALL BE RETESTED AND INSPECTED UNTIL FOUND ACCEPTABLE BY THE CITY.

11. ALL STORM PIPING SHALL BE VIDEO INSPECTED BY THE CONTRACTOR PER LATEST EDITION OF ODOT/APWA STANDARD SPECIFICATIONS FOR CONSTRUCTION, AND SUBMITTED TO THE CITY INSPECTOR WITH A WRITTEN REPORT. BEFORE ACCEPTANCE BY THE CITY, STORMWATER PIPE SHALL BE SHOWN CLEAR OF ANY DEBRIS, ROCKS, GRAVEL, SAND, SILT, OTHER FOREIGN MATERIAL, AND GRADE/ALIGNMENT DEVIATIONS IN EXCESS OF THE STANDARD SPECIFICATIONS. ALL STORM PIPING SHALL BE VIDEO INSPECTED PER NOTE 5 OF THE SANITARY SEWER NOTES.

12. CONTRACTOR REQUIRED TO INSTALL "PROTECTING YOUR NEIGHBORHOOD STREAM" SIGNAGE AT ALL PUBLIC WATER QUALITY FACILITIES. SIGNS CAN BE PURCHASED FROM CITY OF OREGON CITY PUBLIC WORKS, CONTACT THE WASTEWATER/STORMWATER MANAGER AT 971-204-4600. MOUNT THE SIGN TO AN 8' LONG BY 6-INCH X 4-INCH TREATED LUMBER POST WHICH IS SET IN CONCRETE AND BURIED A MINIMUM 30" IN THE GROUND. SIGN SHALL FACE PUBLIC STREET, SIDEWALK, ETC.

COOC STD NOTES VERSION (12/31/2025)

NO.	DATE	BY	REVISION

NOTICE
0 ½ 1
IF THIS BAR DOES NOT MEASURE 1" THEN DRAWING IS NOT TO SCALE

KKS DESIGNED
JLC DRAWN
ANB CHECKED

REGISTERED PROFESSIONAL ENGINEER 86406PE OREGON SEPTEMBER 12, 2017 ADAM N. BLAIR
RENEWS 12-31-27

BID SET

consor
Stantec

South Fork WATER PURE WATER SINCE 1915

WATER QUALITY SYSTEMS BUILDING

GENERAL

GENERAL NOTES - 1

PROJECT NO.: W253326OR | SCALE: AS SHOWN | DATE: AUGUST 2026

SHEET G-004

\\EgnyteDrive\Consor Files_V-W\Projects\OR\South Fork Water\2025\W253326OR.00\12 CADD\12-5 Sheets\G-004 GENERAL NOTES - 1.dwg G-004 7/29/2026 10:46 AM JUSTIN.DEUEL 24.3s (LMS Tech)

WATER SYSTEM NOTES:

1. ALL WORK AND MATERIALS SHALL COMPLY WITH THE APPLICABLE SECTIONS OF CITY OF OREGON CITY PUBLIC WORKS STANDARDS, OREGON STATE HEALTH DIVISION ADMINISTRATIVE RULES, CHAPTER 333, RECENT EDITION OF AWWA STANDARD SPECIFICATIONS AND ODOT/APWA STANDARD SPECIFICATIONS FOR CONSTRUCTION.

2. WATERLINE SHALL BE DUCTILE IRON PIPE, FACTORY CEMENT-MORTAR LINED AND SEAL- COATED, CONFORM WITH LATEST REVISION OF ANSI/AWWA C151/A21.5, ANSI/AWWA C104/A21.4, ANSI/AWWA C111/A21.11, AND ASTM A536, AND BE STANDARD THICKNESS CLASS 52 UNLESS SPECIFIED OTHERWISE. FULL PIPE SECTIONS SHALL BE 18 FEET IN LENGTH. ALL TEES, BENDS, VALVES AND BLOW-OFF LOCATIONS SHALL BE RESTRAINED WITH MEGA-LUG FOLLOWER, OR APPROVED EQUAL. PUSH-ON TYPE JOINTS SHALL BE RESTRAINED WITH FIELD-LOK GASKET, OR APPROVED EQUAL.

3. ALL PIPE SHALL HAVE A MINIMUM COVER OF 36 INCHES BELOW THE FUTURE FINISHED GRADES IN EASEMENTS AND STREET RIGHTS-OF-WAY UNLESS SPECIFIED OTHERWISE OR OTHER MEASURES ARE APPROVED BY THE CITY ENGINEER. PIPES TWELVE (12) INCHES AND LARGER SHALL HAVE A DEPTH OF FORTY EIGHT (48) INCHES OR GREATER AS DETERMINED AND APPROVED BY THE SFWB STAFF.

4. GATE VALVES SHALL BE DUCTILE IRON BODY, CONFORM TO LATEST REVISION OF AWWA C509, AND SHALL BE UL LISTED AND FM APPROVED. BUTTERFLY VALVES SHALL BE DUCTILE IRON BODY AND CONFORM TO AWWA C-504.

5. COPPER TUBING SHALL BE TYPE “K” SOFT FOR 1" SERVICE LINES WITH A 5/8X3/4” OR 3/4" OR 1” WATER COPPER SHALL BE TYPE “L” RIGID FOR 2" SERVICE LINES WITH EITHER A 1-1/2” OR 2” WATER METER. SERVICE TAPS SHALL BE A MINIMUM 18-INCHES FROM WATER MAIN JOINTS AND FITTINGS, AND MINIMUM 18-INCHES FROM ANOTHER TAP.

6. FIRE HYDRANT ASSEMBLIES SHALL BE INSTALLED PER CITY STANDARD DRAWINGS. FIRE HYDRANTS SHALL BE CENTURION FIRE HYDRANT AS PRODUCED BY MUELLER CO., WITH A FIVE AND 1/4-INCH VALVE OPENING, THREE PORT NOZZLES, TWO 2-INCH HOSE NOZZLES, AND 4-INCH THREADED PUMPER NOZZLE. ALTERNATIVE FIRE HYDRANT MANUFACTURERS AND MODELS ARE: CLOW VALVE COMPANY, MEDALLION MODEL NO. F 2545 AND KENNEDY GUARDIAN K81-D. ALL FIRE HYDRANTS INSTALLED FOR A PARTICULAR PROJECT SHALL BE THE SAME MANUFACTURER AND MODEL.

7. FITTINGS SHALL BE DUCTILE IRON CONFORMING TO ASTM A536, ANSI/AWWA C110/A21.10, ANSI/AWWA C104/A21.4, AND ANSI/AWWA C153/A21.53. FITTINGS SHALL HAVE CAST UPON THEM THE MANUFACTURER’S IDENTIFICATION, PRESSURE RATING, NOMINAL DIAMETERS OF OPENINGS, AND THE NUMBER OF DEGREES OR FRACTIONS OF A CIRCLE FOR ALL BENDS. FITTINGS SHALL BE COATED INSIDE WITH CEMENT MORTAR WITH AN ASPHALTIC SEAL-COAT. WHEN SPECIFIED, FITTINGS SHALL BE DUCTILE IRON MECHANICAL JOINT (MJ) OR FLANGE JOINT (FLG) CONFORMING TO AWWA C153 AND C110.

8. ALL TEES, BENDS, VALVES AND BLOW-OFF LOCATIONS SHALL, UNLESS OTHERWISE NOTED, HAVE POURED IN PLACE CONCRETE THRUST BLOCKS CONFORMING TO THE CITY STANDARD DRAWINGS. ALL FITTINGS SHALL BE RESTRAINED WITH A MEGA-LUG FOLLOWER, OR APPROVED EQUAL.

9. ALL TRENCH EXCAVATION SHALL BE IN CONFORMANCE WITH OREGON CITY STANDARD DRAWING FOR PIPE BEDDING AND BACKFILL, AND SHALL BE CLASSIFIED AS EITHER ROCK OR COMMON EXCAVATION. ALL EXCESS MATERIAL FROM THE TRENCH EXCAVATION SHALL BE DISPOSED OF TO AN APPROVED SITE.

10. PIPE BEDDING AND TRENCH BACKFILL MAY BE CLASS A ON ALL WATER LINES OUTSIDE PUBLIC STREETS OR OUTSIDE OF PAVED AREAS. TRENCH BACKFILL SHALL BE CLASS B IN ALL PUBLIC STREETS OR PAVED AREAS IN THE PROJECT AS OUTLINED IN OREGON CITY STANDARD DRAWING FOR PIPE BEDDING AND BACKFILL. THE CLASS B BACKFILL SHALL EXTEND A MINIMUM OF THREE (3) FEET BEYOND THE EDGE OF STREET OR HARD SURFACED AREAS. CDF BACKFILL MAY BE REQUIRED INSTEAD OF CLASS B AS APPLICABLE PER OREGON CITY PAVEMENT CUT STANDARD.

11. TRENCH BACKFILL COMPACTION SHALL BE 95% OF AASHTO T-180 MODIFIED PROCTOR FROM TOP OF PIPE ZONE UP TO ROAD BASE. CONTRACTOR TO DETERMINE TYPE OF EQUIPMENT AND METHOD TO USE TO ACHIEVE THE REQUIRED COMPACTION. 95% COMPACTION, AASHTO T-180, IS REQUIRED IN PUBLIC STREETS AND PAVED AREAS, 85% COMPACTION OF AASHTO T-99 IN NON-PAVED OR UNIMPROVED AREA.

12. ALL SANITARY SEWER LINES WITHIN TEN (10) FEET LATERALLY OR EIGHTEEN (18) INCHES VERTICALLY OF A WATER MAIN SHALL BE ENCASED IN CONCRETE OR CONSTRUCTED OF DUCTILE IRON WATER PIPE WITH WATERTIGHT JOINTS.

13. SANITARY SEWERS CROSSING A WATER MAIN SHALL BE MADE AT APPROXIMATELY 90 DEGREES AND HAVE EIGHTEEN (18) INCHES OF VERTICAL CLEARANCE. OTHERWISE, THE SANITARY SEWER SHALL BE CONSTRUCTED OF DUCTILE IRON WATER PIPE WITH WATERTIGHT JOINTS FOR A DISTANCE OF NINE (9) FEET FROM BOTH SIDES OF THE WATER LINE.

14. THE MAXIMUM ALLOWABLE JOINT DEFLECTION SHALL NOT EXCEED TWELVE (12) INCHES PER EIGHTEEN (18) FEET OF LAYING LENGTH.

15. THE VALVE STEM FOR BUTTERFLY VALVE SHALL BE LOCATED ON THE STREET CENTERLINE SIDE OF THE WATERLINE UNLESS OTHERWISE NOTED ON THE PLANS OR DIRECTED IN THE FIELD. BUTTERFLY VALVES SHALL ONLY BE USED AS REPLACEMENTS OF EXISTING BUTTERFLY VALVES OR WHERE COVER IS LESS THAN FORTY EIGHT (48) INCHES AS DETERMINED AND APPROVED BY THE SFWB STAFF.

16. HYDROSTATIC TESTS: THE TEST SHALL CONFORM WITH AWWA C600, WITH THE EXCEPTION THAT THE TEST DURATION SHALL BE 60 MINUTES WITH ZERO LOSS IN PRESSURE ALLOWED. THE TEST PRESSURE SHALL BE 150 PSI AT THE HIGHEST POINT OF ELEVATION IN ANY SECTION OR ONE AND A HALF TIMES THE WORKING PRESSURE, AS DETERMINED BY THE ENGINEER. THE DURATION AND PRESSURE SHALL BE MONITORED BY SFWB STAFF. TEST GAUGE SHALL BE BOURDON TUBE PRESSURE GAUGE MODEL 332.54 LIQUID FILLED IN 1 PSI INCREMENTS OR EQUAL, AS APPROVED BY THE CITY ENGINEER.

17. DISINFECTION: PIPELINES SHALL BE FLUSHED AND DISINFECTED BEFORE PLACING INTO SERVICE. DISINFECTION SHALL CONFORM WITH AWWA C651. DISINFECTION OF THE WATER SYSTEM SHALL BE COMPLETED WITHIN 15 DAYS OF PASSING THE HYDROSTATIC TEST AND SHALL BEGIN ON A MONDAY OR A TUESDAY. SUPER-CHLORINATE THE NEW PIPELINE FOR A MINIMUM OF 24 HOURS, NO MORE THAN 36 HOURS. AFTER 24 HOURS THE CHLORINE CONCENTRATION MUST BE A MINIMUM OF 10 PPM, AT WHICH TIME THE PIPELINE IS FLUSHED UNTIL RESIDUAL CHLORINE LEVEL IS MET (NOMINAL 1 PPM). PIPELINE SHALL REMAIN IN STATIC CONDITION WITH DISTRIBUTION WATER (NOMINAL 1 PPM CHLORINE RESIDUAL) A MINIMUM OF 16 HOURS, THEN TAKE TWO (2) BACTERIOLOGICAL SAMPLES 15 MINUTES APART WHILE LEAVING THE WATER RUNNING AT THE SAMPLE LOCATIONS. HIGHLY CHLORINATED WATER USED FOR DISINFECTION SHALL NOT BE DISCHARGED INTO THE CITY’S MUNICIPAL SEPARATE STORM SEWER SYSTEM OR SURFACE WATERS. COMPLIANCE WITH ALL APPLICABLE FEDERAL, STATE AND LOCAL REGULATIONS CONCERNING DISCHARGE OF CHLORINATED WATER SHALL BE FOLLOWED. FINAL CONNECTIONS TO THE CITY WATER MAIN SHALL BE MADE WITHIN 2 WEEKS OF PASSING BACTERIOLOGICAL TESTING.

18. WATER LINE VALVE ABANDONMENT REQUIRES REMOVAL OF THE VALVE FROM THE TEE OR MAINLINE PIPING, IN ITS ENTIRETY. A FLANGE CAP, MJ PLUG OR MJ CAP SHALL BE INSTALLED AT THE REMOVAL POINT. COORDINATION WITH WATER OPERATIONS REQUIRED FOR WATER MAIN SHUTDOWN.

19. POTABLE WATER (BLUE) OMNI MARKER BALLS SHALL BE INSTALLED AT ALL HORIZONTAL BENDS AND OVER CENTER LINE OF PIPE AT NO GREATER THAN 100 LF INTERVALS.

STREET SYSTEM NOTES:

1. ENGINEERED FILL SHALL BE PLACED ON AREAS STRIPPED OF ALL ORGANIC MATERIALS IN LIFTS NOT TO EXCEED 8-INCHES IN DEPTH AND EACH LAYER SHALL BE SEPARATELY AND THOROUGHLY COMPACTED. FILL MATERIALS SHALL BE PLACED WITHIN 2% OF THE OPTIMUM MOISTURE AND NO LESS THAN 95% COMPACTION PER AASHTO T 180. CONTRACTOR SHALL SUBMIT TEST RESULTS TO THE ENGINEER OF RECORD AND CITY PUBLIC WORKS INSPECTOR.

2. MATERIAL IN SOFT SPOTS WITHIN THE ROADWAY SHALL BE REMOVED TO THE DEPTH REQUIRED TO PROVIDE A FIRM FOUNDATION AND SHALL BE REPLACED WITH 1-1/2"-0" CRUSHED ROCK. THE ENTIRE SUBGRADE SHALL BE THOROUGHLY COMPACTED AT THE LOWEST MOISTURE CONTENT AT WHICH A HANDFUL OF SOIL CAN BE MOLDED BY A FIRM CLOSING OF THE HAND. MINIMUM OF 95% COMPACTION AASHTO T 180 REQUIRED.

3. THE SUB GRADE SHALL BE COMPACTED PER ODOT/APWA PART 3, SECTION 00330. CONTRACTOR SHALL SUBMIT TEST RESULTS TO THE ENGINEER OF RECORD AND CITY PUBLIC WORKS INSPECTOR. THE REQUIRED DENSITY OF TREATED AND UNTREATED SUBGRADE MATERIALS SHALL NOT BE LESS THAN 95% OF MAXIMUM DENSITY AS DETERMINED BY AASHTO T 180.

4. CONTRACTOR SHALL NOTIFY THE ENGINEER AND CITY WHEN SUBGRADE IS COMPLETE, 24 HOURS PRIOR TO PLACEMENT OF ROCK BASE MATERIAL, AND 24 HOURS PRIOR TO FINAL PAVING FOR AN INSPECTION OF THE FAILURE TO DO SO WILL MAKE ANY SUBGRADE FAILURE OR DRAINAGE PROBLEMS THE RESPONSIBILITY OF THE CONTRACTOR.

5. THE AGGREGATE ROAD BASE SHALL BE COMPACTED PER ODOT/APWA PART 6, SECTION 00640 AND WITH MATERIALS MAINTAINED WITHIN 2% OF THE OPTIMUM MOISTURE CONTENT. CONTRACTOR SHALL BEGIN COMPACTION OF EACH LAYER IMMEDIATELY AFTER THE MATERIAL IS SPREAD AND CONTINUE UNTIL A DENSITY OF NOT LESS THAN 95% OF THE MAXIMUM DENSITY HAS BEEN ACHIEVED USING AASHTO T 180. CONTRACTOR SHALL SUBMIT TEST RESULTS TO THE ENGINEER OF RECORD AND CITY PUBLIC WORKS INSPECTOR. TESTING FREQUENCY SHALL BE ONE TEST PER EVERY 100 LINEAR FEET MINIMUM AND MORE FREQUENTLY AT THE DISCRETION OF THE CITY PUBLIC WORKS INSPECTOR IF TESTS ARE NOT MEETING A MINIMUM OF 95% COMPACTION PER AASHTO T-180.

6. ASPHALT CONCRETE PAVEMENT MIX SHALL BE DESIGNED FROM A MIX FORMULA APPROVED BY ODOT FOR MATERIAL USED OR AS NOTED ON THESE PLANS. CONTRACTOR TO PROVIDE ENGINEER OF RECORD AND CITY WITH CERTIFICATE OF COMPLIANCE FROM ASPHALT PAVEMENT PLANT UNLESS OTHERWISE INDICATED.

7. THE ASPHALT CONCRETE PAVEMENT MIX SHALL BE COMPACTED PER ODOT/APWA PART 7, SECTION 00744 WITH TESTING BY NUCLEAR GAUGE TO AT LEAST 92% OF THEORETICAL MAXIMUM DENSITY (RICE DENSITY) PER AASHTO T 209 ON ALL LIFTS. CONTRACTOR SHALL SUBMIT TEST RESULTS TO THE ENGINEER AND CITY. TESTING FREQUENCY SHALL BE ONE TEST PER EVERY 100 LINEAR FEET MINIMUM AND MORE FREQUENTLY AT THE DISCRETION OF THE CITY PUBLIC WORKS INSPECTOR IF TESTS ARE NOT MEETING A MINIMUM OF 92% COMPACTION PER AASHTO T-209COMPACTED ¾”--0”- CRUSHED ROCK BASE COURSE.

8. EXCESS EXCAVATION MAY BE SPREAD AND COMPACTED EVENLY ON THE SITE IN DEPTHS OF LESS THAN ONE FOOT PER THE SITE GRADING PLAN. VEGETATION AND TOPSOIL TO BE STRIPPED ON FILL AREAS PRIOR TO FILLING. COMPACTION OF 95% OF AASHTO T 180 IS REQUIRED IN BUILDABLE AREAS. CONTRACTOR SHALL ACHIEVE 85% COMPACTION IN NON-BUILDABLE AREAS. PROPER CITY OR COUNTY FILL PERMIT SHALL BE OBTAINED IF EXCESS EXCAVATION IS HAULED OFF SITE.

9. MONUMENT BOX LOCATIONS SHALL BE PLACED AT THE BEGINNING, END, CENTERLINE INTERSECTION, POINT OF CURVATURE AND POINT OF TANGENCY FOR ALL STREETS, AND IN ACCORDANCE WITH CLACKAMAS COUNTY SURVEYOR STANDARDS. CONTACT PROJECT SURVEYOR FOR REQUIRED LOCATIONS. THE CONTRACTOR SHALL INSTALL THE MONUMENT BOXES IN STREET AREAS WHERE MARKED BY THE SURVEYOR AND IN ACCORDANCE WITH CLACKAMAS COUNTY MONUMENT STANDARDS AND CITY STREET STANDARDS.

10. ALL MATERIALS, INSPECTIONS, AND TESTS SHALL BE IN ACCORDANCE WITH CITY OF OREGON CITY STANDARD SPECIFICATIONS AND THE MOST RECENT EDITION OF THE OREGON ODOT/APWA STANDARD SPECIFICATIONS FOR CONSTRUCTION.

11. MONOLITHIC CURB AND GUTTER IS REQUIRED UNLESS OTHERWISE NOTED.

12. PROOF ROLL WITH A LOADED WATER TRUCK OR 10-11 CUBIC YARDS LOADED GRAVEL TRUCK IS REQUIRED PRIOR TO CURB PLACEMENT AND PRIOR TO PAVING.

13. CONTRACTOR SHALL INSTALL ADA RAMPS AND SIDEWALKS AS SHOWN IN ACCORDANCE WITH CITY STANDARD DRAWINGS.

14. ADA RAMPS AND SIDEWALKS SHALL BE A MINIMUM OF 4-INCH THICK CONCRETE WITH 2-INCHES OF COMPACTED ¾”—0”- CRUSHED ROCK BASE COURSE.

15. DRIVEWAY APPROACHES SHALL BE A MINIMUM OF 6-INCH THICK CONCRETE WITH 6-INCH BY 6- INCH 10 GAUGE STEEL MESH ON TOP OF BLOCKS OVER 2-INCHES OF COMPACTED ¾”—0”- CRUSHED ROCK BASE COURSE.

16. ALL CONCRETE SHALL BE AIR ENTRAINED, MINIMUM 4.5%, WITH A MINIMUM COMPRESSIVE BREAKING STRENGTH OF 4,000 PSI AFTER 28 DAYS.

17. PRIOR TO INSTALLATION OF CURB AND GUTTER, ADA RAMPS OR SIDEWALK, THE PROJECT ENGINEER OF RECORD AND CITY PUBLIC WORKS INSPECTOR SHALL BE CONTACTED TO INSPECT STRING LINE, FORMWORK, BASE COMPACTION, AND RELATED ITEMS.

18. EXISTING PRIVATE UTILITIES SHALL BE RELOCATED IF NECESSARY. CONTRACTOR SHALL COORDINATE THIS WORK.

19. ALL UTILITY CROSSINGS SHALL BE PLACED PRIOR TO PROOF ROLL TEST FOR CURB INSTALLATION. THE NUMBER OF CROSSINGS, EXACT LOCATION, DEPTH, CONDUIT TYPE, ETC. SHALL BE SPECIFIED BY THE PRIVATE UTILITY CARRIERS. CONTRACTOR SHALL COORDINATE.

20. CONTRACTOR SHALL CONTACT CITY PUBLIC WORKS INSPECTOR TO SCHEDULE PRE-PAVING CONFERENCE PRIOR TO COMMENCING PAVING OPERATIONS.

21. FURNISH A TWELVE-FOOT (12-FOOT) STRAIGHTEDGE. TEST WITH A TWELVE-FOOT (12-FOOT) STRAIGHTEDGE PARALLEL TO AND PERPENDICULAR TO THE CENTERLINE, AS DIRECTED. THE PAVEMENT SURFACE SHALL NOT VARY BY MORE THAN ONE-QUARTER-INCH (1/4 INCH). MARK AREAS NOT MEETING THE SURFACE TOLERANCE. THESE TOLERANCES SHALL APPLY WHEN WATER VALVE BOXES, MANHOLE CASTINGS AND OTHER UTILITY APPURTENANCES CAN BE ADJUSTED BEFORE OR DURING THE PAVING OPERATIONS.

22. ALL NEW CURB, SIDEWALK, ADA RAMPS AND DRIVEWAYS SHALL BE FREE OF CRACKS, CHIPS, SPALLS AND OTHER DEFECTS. ALL REPAIRS TO THESE FACILITIES REQUIRE REMOVAL AND REINSTALLATION, SUCH REMOVAL SHALL BE TO THE NEAREST CONTRACTION OR EXPANSION JOINT.

23. STOP BARS REQUIRED AT ALL STOP SIGNS.

24. PLACEMENT OF ASPHALT CONCRETE PAVEMENT PER ODOT STANDARD CONSTRUCTION SPECIFICATION 00744.40 WITH THE FOLLOWING EXCEPTIONS:
- ACP PLACEMENT IS PROHIBITED DURING PERIODS OF PRECIPITATION. PRECIPITATION IS DEFINED AS (BUT NOT LIMITED TO) MIST, DRIZZLE, SHOWERS, RAIN, HAIL, SNOW, ETC.
- 2 INCHES – 2 1/2 INCHES THICKNESS ACP PLACEMENT ALL YEAR: SURFACE TEMPERATURE SHALL BE A MINIMUM 40 DEGREES, AIR TEMPERATURE SHALL BE MINIMUM 40 DEGREES AND RISING TO A MINIMUM 43 DEGREES.

ENGINEERED GRADING NOTES

1. PROJECT GRADING LIMITS SHALL BE WITHIN THE PROJECT’S PROPERTY BOUNDARY AND/OR STREET RIGHT-OF WAY, UNLESS OTHERWISE SHOWN ON PLANS. NO GRADING SHALL BE CONDUCTED IN WETLANDS OR OTHER ENVIRONMENTALLY SENSITIVE AREAS UNLESS SPECIFICALLY SHOWN ON THE APPROVED PLANS.

2. THE IDENTIFICATION OR REMOVAL OF UNSUITABLE MATERIAL SHALL BE DONE WITH CONSULTATION WITH THE PROJECT ENGINEER OR PROJECT’S GEOTECHNICAL ENGINEER.

3. REMOVE AND DISPOSE OF ALL ORGANIC AND/OR UNSUITABLE MATERIALS, INCLUDING TREES, STUMPS, ROOTS, BRUSH, AND GRASS IN SUCH A MANNER TO MEET ALL APPLICABLE REGULATIONS. ON-SITE DISPOSAL SHALL BE AS DETERMINED BY THE PROJECT ENGINEER OR PROJECT’S GEOTECHNICAL ENGINEER.

4. STOCKPILE EXCESS SOIL MATERIAL ON-SITE AS DIRECTED BY THE PROJECT ENGINEER, PROJECT’S GEOTECHNICAL ENGINEER, OR APPROVED PLANS (UNLESS APPROVED PLANS IDENTIFY EXCESS EXCAVATION IS TO BE REMOVED FROM THE SITE).

5. THE CONTRACTOR SHALL PROTECT ALL TREES NOT SPECIFICALLY SHOWN TO BE REMOVED ON APPROVED PLANS.

6. GRADE THE SITE TO THE ELEVATIONS SHOWN ON THE DRAWING WITH THE NECESSARY ADJUSTMENTS TO ACCOMMODATE THE FINISH GRADES AS SPECIFIED. SHAPE FUTURE PAVED AREAS PER THE PLANS TO A SUBGRADE ELEVATION THAT WILL ACCOMMODATE FUTURE BASE ROCK AND PAVING.

7. STRAIGHT GRADES SHALL BE RUN BETWEEN FINISH GRADE AND/OR FINISH CONTOUR LINES SHOWN, UNLESS OTHERWISE NOTED. FINISH GRADES ARE TO DRAIN AS INDICATED ON THE PLANS. ROUGH GRADING SHALL BE FINISHED BY BLADING AND RAKING TO REASONABLE SMOOTH CONTOURS WITH GENTLE TRANSITIONS.

8. ALL CUT OR FILL SLOPES SHALL BE CONSTRUCTED AT NO STEEPER THAN FOUR (4) HORIZONTAL TO ONE (1) VERTICAL UNLESS OTHERWISE SHOWN ON APPROVED PLANS.

9. AREAS TO RECEIVE FILL MATERIALS SHALL BE PREPARED BY REMOVING ALL ORGANIC AND UNSUITABLE MATERIALS AND “PROOF ROLLED”. BENCHING MAY BE REQUIRED. MATERIAL IN SOFT SPOTS WITHIN A PROPOSED BUILDING ENVELOPE, PAVED AREA, OR SIDEWALK AREA SHALL BE REMOVED TO THE DEPTH REQUIRED (AS DIRECTED BY THE PROJECT ENGINEER OR THE PROJECT’S GEOTECHNICAL ENGINEER) AND SHALL BE REPLACED WITH SUITABLE BACKFILL.

10. THE CONSTRUCTION OF STRUCTURAL FILLS AND/OR EXCAVATIONS CONNECTED WITH ANY PUBLIC IMPROVEMENTS SHALL BE IN ACCORDANCE WITH THE WRITTEN RECOMMENDATIONS MADE BY THE PROJECT’S GEOTECHNICAL ENGINEER IN AN APPROVED REPORT.

11. COMPACTION TESTS AND REPORTS FOR EACH LOT SHALL BE CONDUCTED BY AN APPROVED TESTING LABORATORY, TEST FREQUENCY SHALL BE PER THE PROJECT ENGINEER, OR PROJECT’S GEOTECHNICAL ENGINEER. TESTING TO COMMENCE WITH FILL ACTIVITIES AND AS A MINIMUM, ONE TEST WILL BE TAKEN FOR EVERY 500 CUBIC YARDS PLACED.

12. IF DUSTY CONDITIONS EXIST, THE PERMITTEE SHALL APPLY A FINE SPRAY OF WATER ON THE SURFACE TO CONTROL THE DUST.

13. ENGINEERED FILL IN THE BUILDING ENVELOPE SHALL BE CERTIFIED BY THE PROJECT ENGINEER. THIS CERTIFICATION SHALL BE SENT TO THE CITY BUILDING OFFICIAL UPON SUBMISSION OF THE BUILDING PERMIT IF IT HAS NOT ALREADY BEEN RECEIVED BY THE CITY BUILDING OFFICIAL.

COOC STD NOTES VERSION (12/31/2025)

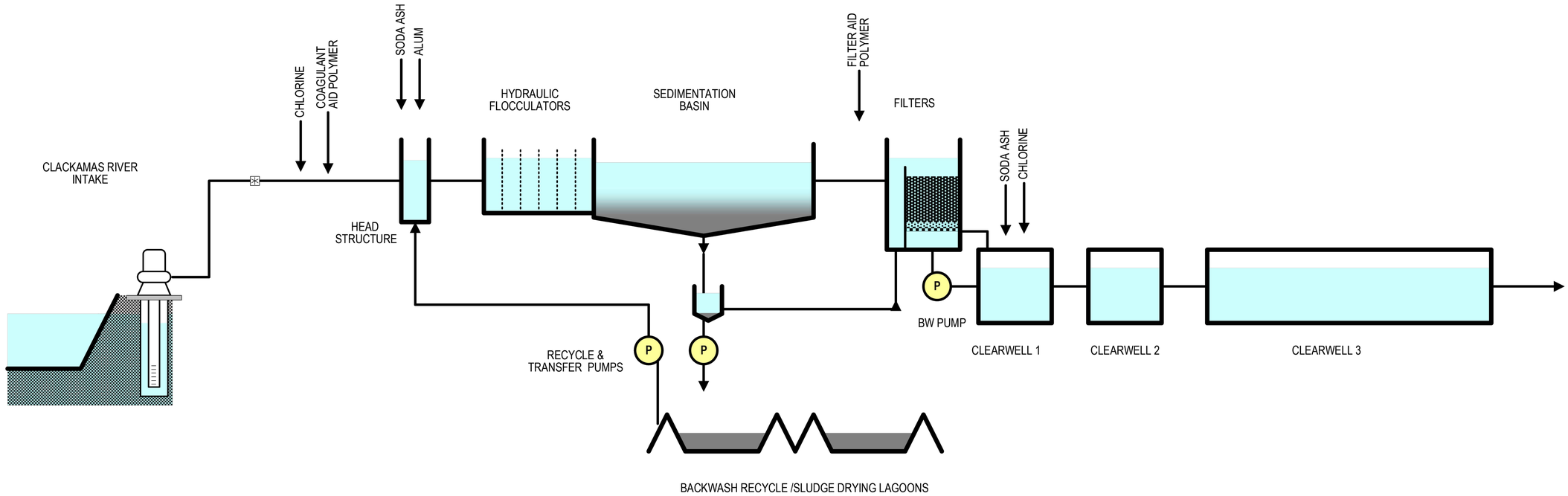

BASIS OF DESIGN

PLANT FLOW (SEE NOTE 1)

MIN FLOW	6	MGD
AVG FLOW	9	MGD
MAX FLOW	30	MGD
BUILDOUT FLOW	52	MGD

ON-SITE HYPOCHLORITE SYSTEM

CHLORINE DOSE

MIN DOSE	2	MG/L
AVG DOSE	3	MG/L
MAX DOSE	5	MG/L

ON-SITE HYPOCHLORITE GENERATION

NO. GENERATORS	2	EA
GENERATOR CAPACITY (EA)	900	PPD
CHLORINE SOLUTION STRENGTH	0.8	%

BRINE STORAGE

NO. BRINE TANKS	1	
BRINE TANK CAPACITY	7,100	GAL
DIAMETER	9	FT
HEIGHT	15	FT

SODIUM HYPOCHLORITE STORAGE

NO. STORAGE TANKS	2	
TANK CAPACITY, EA	10,000	GAL
DIAMETER	10.5	FT
HEIGHT	15	FT

DOSING PUMPS

TYPE	DIAPHRAGM (DOUBLE SIMPLEX)	
NO. OF PUMPS	3	EA
PUMP CAPACITY, EA	660	GPH

LIQUID ALUM (ALUMINUM SULFATE HYDRATE, 14) FEED SYSTEM

ALUM DOSE

MIN DOSE	4	MG/L
AVG DOSE, TYPICAL	5	MG/L (SEE NOTE 2)
AVG DOSE, RAIN ON SNOW	85	MG/L (SEE NOTE 2)
WEIGHTED AVG DOSE	10	MG/L (SEE NOTE 2)

ALUM STORAGE

SOLUTION STRENGTH	50	%
NO. OF BULK TANKS	2	EA
TANK CAPACITY, EA	6,000	GAL
DIAMETER	8.5	FT
HEIGHT	16	FT

DOSING PUMPS

TYPE	DIAPHRAGM (SIMPLEX)	
NO. OF PUMPS	2	EA
PUMP CAPACITY, EA	77	GPH

COAGULANT AID POLYMER (MAGNAFLOC LT-7990) FEED SYSTEM

POLYMER DOSE

MIN DOSE	0.5	MG/L
AVG DOSE	0.5	MG/L
MAX DOSE	1.8	MG/L

POLYMER STORAGE

SOLUTION STRENGTH	97	%
NO. OF BULK TANKS	1	EA
TANK CAPACITY, EA	6,000	GAL
DIAMETER	8.5	FT
HEIGHT	16	FT

DOSING PUMPS

TYPE	DIAPHRAGM (SIMPLEX)	
NO. OF PUMPS	2	EA
PUMP CAPACITY, EA	26	GPH (SEE NOTE 3)

SODA ASH FEED SYSTEM

SODA ASH FEED SYSTEM

MIN DOSE	4	MG/L
AVG DOSE	12	MG/L
MAX DOSE	41	MG/L (SEE NOTE 4)

SODA ASH STORAGE AND FEED SYSTEM

NO. VOLUMETRIC DRY FEEDERS	1 + 1 (FUTURE)	
CAPACITY (WEIGHT)	116	LB/HR
NO. BULK BAGS ON HOIST	1	EA
NO. BULK BAGS IN STORAGE	4	EA

SODA ASH MIXING TANK

NO. TANKS	1	EA
VOLUME	200	GAL

NOTES:

1. BASIS OF DESIGN CRITERIA FOR SELECTION OF CHEMICAL STORAGE SIZING IS MINIMUM 30 DAYS OF STORAGE AT BUILDOUT PLANT FLOW FOR AVERAGE DOSE CONDITIONS AND AVERAGE PLANT OPERATING HOURS (10 HOURS PER DAY). THIS CRITERIA DOES NOT APPLY TO STORAGE OF SODIUM HYPOCHLORITE.

2. DESIGN DOSE FOR LIQUID ALUM HAS BEEN SELECTED BASED ON A WEIGHTED AVERAGE DOSE FOR ASSUMED ANNUAL DURATIONS FOR TYPICAL PLANT WATER QUALITY AND PLANT WATER QUALITY DURING RAIN ON SNOW EVENTS. RAIN ON SNOW EVENTS THAT REQUIRE HIGHER ALUM DOSING ARE ASSUMED TO OCCUR 21 DAYS EACH YEAR DURING WINTER PLANT FLOWS AT MAX 10 MGD.

3. COAGULANT AID POLYMER WILL BE TRANSPORTED TO DOSING POINT WITH CARRIER WATER.

4. SODA ASH MAXIMUM DOSE CONDITIONS OCCUR DURING WINTER PLANT FLOWS CONCURRENT WITH MAXIMUM DOSE CONDITIONS FOR ALUM. PLANT FLOWS AT MAX DOSE (WINTER) CONDITIONS ARE ASSUMED 10 MGD.

NO.	DATE	BY	REVISION

NOTICE
0 ½ 1
IF THIS BAR DOES NOT MEASURE 1" THEN DRAWING IS NOT TO SCALE

NDH DESIGNED
JLC DRAWN
HLB CHECKED

REGISTERED PROFESSIONAL ENGINEER 105439PE OREGON MARCH 11, 2025 HEATHER LEIGH BURNS
Digitally signed by Heather Leigh Burns Date: 2026.07.27 13:09:50 PDT
RENEWS 12-31-27

BID SET

consor
Stantec

South Fork WATER PURE WATER SINCE 1915
WATER QUALITY SYSTEMS BUILDING

GENERAL
PROCESS FLOW DIAGRAM

PROJECT NO.: W253326OR | SCALE: AS SHOWN | DATE: AUGUST 2026

SHEET G-006

\\EgnyteDrive\Consor Files_V-W\Projects\OR\South Fork Water\2025\W253326OR.00\12 CADD\12-5 Sheets\PROCESS FLOW DIAGRAM.dwg G-006 - NEW CRITERIA 7/29/2026 10:46 AM JUSTIN.DEUEL 24.3s (LMS Tech)

PIPE SCHEDULE

SERVICE	IDENTIFICATION	INSTALLATION	PIPE SIZE	PIPE MATERIAL	JOINT TYPE	PIPE WORKING PRESSURE	PIPE TEST PRESSURE	PIPE SPECIFICATION	COATING SPECIFICATION AND SYSTEM	PIPE COLOR	REMARKS
PROCESS PIPING											
ALUM	AL	I	1/2"	PVC	SW, FL, THD	130 PSI	200 PSI	40 05 13	09 90 00 - SYSTEM 104	ORANGE	
		I	3/8"	PBT	BARBED	130 PSI	200 PSI	40 05 13	09 90 00 - SYSTEM 104	ORANGE	ROUTE IN SCH 80 PVC CONDUIT
		BI	3/8"	PBT	BARBED	130 PSI	200 PSI	40 05 13	-	-	ROUTE IN SCH 80 PVC CONDUIT THROUGH UTILITY TRENCH
BRINE SOLUTION	BS	I	1/2-2"	PVC	SW, FL, THD	25 PSI	50 PSI	40 05 13	09 90 00 - SYSTEM 104	GREEN	
		O	2-4"	PVC	SW, FL, THD	25 PSI	50 PSI	40 05 13	09 90 00 - SYSTEM 104	WHITE	2"-BS TO SODIUM HYPOCHLORITE GENERATORS TO BE INSULATED AND HEAT TRACED. DO NOT COAT INSULATION.
COMPRESSED AIR	CA	I	1"	SST	THD	150 PSI	175 PSI	43 05 10	-	-	
STORM DRAIN	SD	S	8"	CLDI	FL, RMJ	25 PSI	50 PSI	33 11 10	09 90 00 - SYSTEM 102	DARK GREY	VERIFY IF SHOP PRIMED BEFORE SURFACE PREP PER SECTION 09 90 00
FLOC AID POLYMER	FAP	I	1/2"-3"	PVC	SW, FL, THD	175 PSI	200 PSI	40 05 13	09 90 00 - SYSTEM 104	ORANGE WITH GREEN BAND	
		I	1/4"	PBT	BARBED	175 PSI	200 PSI	40 05 13	09 90 00 - SYSTEM 104	ORANGE WITH GREEN BAND	ROUTE IN SCH 80 PVC CONDUIT
		BI	1/4"	PBT	BARBED	175 PSI	200 PSI	40 05 13	-	-	ROUTE IN SCH 80 PVC CONDUIT THROUGH UTILITY TRENCH
SODA ASH	SA	I	1-1/2"	PVC	SW, FL, THD	25 PSI	50 PSI	40 05 13	09 90 00 - SYSTEM 104	LIGHT GREEN WITH ORANGE BAND	
		BI	1-1/2"	PBT	BARBED	25 PSI	50 PSI	40 05 13	-	-	
		BI	2-1/2"	PVC	SW, FL, THD	25 PSI	50 PSI	40 05 13	-	-	
SODIUM HYPOCHLORITE	SHC	I	1"-3"	PVC	SW, FL, THD	25 PSI	50 PSI	40 05 13	09 90 00 - SYSTEM 104	YELLOW	
		I	1"	PBT	BARBED	25 PSI	50 PSI	40 05 13	09 90 00 - SYSTEM 104	YELLOW	ROUTE IN SCH 80 PVC CONDUIT
		BI	1"	PBT	BARBED	25 PSI	50 PSI	40 05 13	-	-	ROUTE IN SCH 80 PVC CONDUIT THROUGH UTILITY TRENCH
SOFTENED WATER	SW	I	1"-2"	PVC	SW, FL, THD	75 PSI	150 PSI	40 05 13	09 90 00 - SYSTEM 104	GREEN	
	SW	O	2"	PVC	SW, FL, THD	75 PSI	150 PSI	40 05 13	09 90 00 - SYSTEM 104	GREEN	2"-UW TO BRINE TANK TO BE INSULATED AND HEAT TRACED - DO NOT COAT INSULATION
UTILITY WATER	UW	I	1"-3"	PVC	SW, FL, THD	75 PSI	150 PSI	40 05 13	09 90 00 - SYSTEM 104	GREEN	
		I	1/2"	PBT	BARBED	75 PSI	150 PSI	40 05 13	-	-	
		B	3"	PVC	SW, FL, THD	75 PSI	150 PSI	40 05 13	-	-	
		B	6"	CLDI	FL, RMJ	75 PSI	150 PSI	33 11 10	-	-	SEE 33 11 10
VENT	VENT	I	6"-8"	PVC	SW, FL, THD	25 PSI	50 PSI	40 05 13	09 90 00 - SYSTEM 104	WHITE	DO NOT COAT PIPE WHERE NOTED TO BE CLEAR
		O	8"	PVC	SW, FL, THD	25 PSI	50 PSI	40 05 13	09 90 00 - SYSTEM 104	WHITE	
PLUMBING PIPING											
HOT WATER	HW	SEE PLUMBING SHEETS									
POTABLE WATER	PW										

INSTALLATION ABBREVIATIONS:

B	BURIED
BI	BURIED IN PVC CONDUIT
E	ENCASE
I	INSIDE EXPOSED
O	OUTSIDE EXPOSED
S	SUBMERGED

PIPE MATERIAL ABBREVIATIONS:

CLDI	CEMENT LINED DUCTILE IRON PIPE
CU	COPPER PIPE
PVC	POLYVINYL CHLORIDE
PBT	POLY BRAIDED TUBING
SST	STAINLESS STEEL

JOINT TYPE ABBREVIATIONS:

BARBED	BARBED
FL	FLANGED
RMJ	RESTRAINED MECHANICAL JOINT
SW	SOLVENT WELDED
THD	THREADED

NOTES:

1. PLUMBING PIPING SHOWN FOR COORDINATION PURPOSES FOR PIPING ROUTING BETWEEN PLUMBING AND PROCESS SHEETS. DEFER TO PLUMBING SCHEDULES FOR FULL SPECIFICATIONS.
2. SEE CIVIL SHEETS FOR CIVIL PIPING.

VALVE SCHEDULE

VALVE NAME	VALVE ID	SERVICE ID(S)	INSTALLATION	SIZE	SPECIFIED VALVE NAME	WORKING PRESSURE	TEST PRESSURE	VALVE SPECIFICATION	ACTUATOR	REMARKS
PROCESS PIPING										
BUTTERFLY VALVE	BFV	BS	O	2"	PLASTIC BUTTERFLY VALVE	25 PSI	50 PSI	40 05 51	ELECTRIC	
BALL VALVE	BV	AL, FAP, SA, SHC, SW,	I	1/2"-3"	PLASTIC BALL VALVE	25 PSI	50 PSI	40 05 51	MANUAL	
		UW	I	1"-2"	PLASTIC BALL VALVE	75 PSI	150 PSI	40 05 51	MANUAL	
SOLENOID VALVE	SV	UW	I	2"	SOLENOID VALVE	75 PSI	150 PSI	40 05 51	ELECTRIC	
3-WAY VALVE	-	D	S	8"	3-WAY PLUG VALVE	25 PSI	150 PSI	40 05 51	MANUAL	

INSTALLATION ABBREVIATIONS:

I	INSIDE EXPOSED
O	OUTSIDE EXPOSED
S	SUBMERGED

NO.	DATE	BY	REVISION

NOTICE
0 ½ 1
IF THIS BAR DOES NOT MEASURE 1" THEN DRAWING IS NOT TO SCALE

WK DESIGNED
JLC DRAWN
HLB CHECKED

REGISTERED PROFESSIONAL ENGINEER 105439PE OREGON MARCH 11, 2025 HEATHER LEIGH BURNS
Digitally signed by Heather Leigh Burns
Date: 2026.07.27 13:59:50 PDT
RENEWS 12-31-27

BID SET

consor
Stantec

South Fork WATER PURE WATER SINCE 1915
WATER QUALITY SYSTEMS BUILDING

GENERAL
PIPING SCHEDULE

PROJECT NO.: W253326OR | SCALE: AS SHOWN | DATE: AUGUST 2026

SHEET G-007

\\EgnyteDrive\Consor Files_V-W\Projects\OR\South Fork Water\2025\W253326OR.00\12 CADD\12-5 Sheets\PIPING SCHEDULE.dwg G-007 7/29/2026 10:46 AM JUSTIN.DEUEL 24.3s (LMS Tech)

ESC PLAN FOR 1200-C SITES

SITE MAP

SCALE: NTS

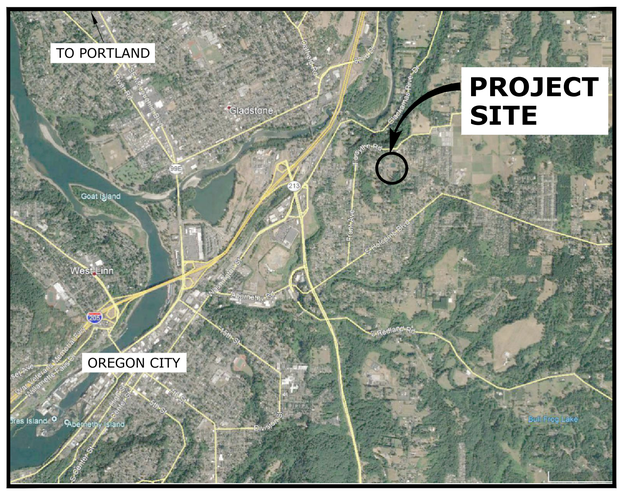

VICINITY MAP

SCALE: NTS

PROJECT LOCATIONS:

THE AREA WITHIN HUNTER AVE, THURMAN ST, AND SWAN AVE

PROPERTY DESCRIPTIONS:

TAXLOT 02500 WITHIN CITY OF OREGON CITY ROADWAYS AND EASMENTS IN SECTION 21 TOWNSHIP 2 SOUTH, RANGE 2 EAST.

TAXLOT 00100 WITHIN CITY OF OREGON CITY ROADWAYS AND EASMENTS IN SECTION 28 TOWNSHIP 2 SOUTH, RANGE 2 EAST.

SHEET INDEX

EROSION AND SEDIMENT CONTROL PLANS

ESC-101 ESC PLAN COVER SHEET
ESC-102 ESC PLAN OVERVIEW & NOTES
ESC-103 ESC PLAN PHASE 1 – CLEARING, GRUBBING, AND DEMOLITION
ESC-104 ESC PLAN PHASE 2 – EXCAVATION AND CONSTRUCTION
ESC-105 ESC PLAN PHASE 3 – FINAL GRADING, RUNOFF CONTROL, AND STABILIZATION
ESC-106 EROSION AND SEDIMENT CONTROL DETAILS

DESIGN ENGINEER:

POLLUTANT-GENERATING ACTIVITIES:

1. EARTHWORK AND TRENCHING (ENTIRE PROJECT SITE)
2. SAND BLASTING (RESERVOIR SITE)
3. PAVING (PROJECT SITE SWAN AVE IMPROVEMENTS)

RAIN GAUGE:

AURORA STATE AIRPORT (KUAO), NOAA RAIN GAGE

NARRATIVE DESCRIPTIONS:

EXISTING SITE CONDITIONS

* SOUTH FORK WATER BOARD WATER FILTER FACILITIES, CLACKAMAS COUNTY ROADWAYS AND RIGHT-OF-WAY

DEVELOPED CONDITIONS

* CHEM FEED BUILDING, ASSOCIATED ACCESS AND UTILITIES, AND SWAN AVE IMPROVEMENTS

NATURE OF CONSTRUCTION ACTIVITY AND ESTIMATED TIME TABLE

* CLEARING (XXX)
* MASS GRADING (XXX)
* UTILITY INSTILLATION (XXX)
* STREET CONSTRUCTION (XXX)
* FINAL STABILIZATION (XXX)

TOTAL SITE AREA:
445,007 SF

TOTAL DISTURBED AREA:
66,400 SF

SITE SOIL CLASSIFICATION:
CASCADE SILT LOAM, 8 TO 15 PERCENT SLOPES; CLACKAMAS SILT LOAM; SALEM SILT LOAM, 0 TO 7 PERCENT SLOPES

RECEIVING WATER BODIES:
CLACKAMAS RIVER DRAINAGE BASIN

ATTENTION EXCAVATORS:

OREGON LAW REQUIRES YOU TO FOLLOW RULES ADOPTED BY THE OREGON UTILITY NOTIFICATION CENTER. THOSE RULES ARE SET FORTH IN OAR 952-001-0010 THROUGH OAR 952-001-0090. YOU MAY OBTAIN COPIES OF THESE RULES FROM THE CENTER BY CALLING 503-232-1987. IF YOU HAVE ANY QUESTIONS ABOUT THE RULES, YOU MAY CONTACT THE CENTER. YOU MUST NOTIFY THE CENTER AT LEAST TWO BUSINESS DAYS, BEFORE COMMENCING AN EXCAVATION. CALL 503-246-6699.

INSPECTION FREQUENCY:

SITE CONDITION	MINIMUM FREQUENCY
1. ACTIVE PERIOD	DAILY WHEN STORMWATER RUNOFF, INCLUDING RUNOFF FROM SNOWMELT, IS OCCURRING. AT LEAST ONCE EVERY MONTH, REGARDLESS OF WHETHER OR NOT RUNOFF IS OCCURRING.
2. PRIOR TO THE SITE BECOMING INACTIVE OR IN ANTICIPATION OF SITE INACCESSIBILITY.	ONCE TO ENSURE THAT EROSION AND SEDIMENT CONTROL MEASURES ARE IN WORKING ORDER. ANY NECESSARY MAINTENANCE AND REPAIR MUST BE MADE PRIOR TO LEAVING THE SITE.
3. INACTIVE PERIODS GREATER THAN FOURTEEN (14) CALENDAR DAYS.	ONCE EVERY MONTH.
4. PERIODS DURING WHICH THE SITE IS INACCESSIBLE DUE TO INCLEMENT WEATHER.	IF PRACTICAL, INSPECTIONS MUST OCCUR DAILY AT A RELEVANT AND ACCESSIBLE DISCHARGE POINT OR DOWNSTREAM LOCATION.
5. PERIODS DURING WHICH DISCHARGE IS UNLIKELY DUE TO FROZEN CONDITIONS.	MONTHLY. RESUME MONITORING IMMEDIATELY UPON MELT, OR WHEN WEATHER CONDITIONS MAKE DISCHARGES LIKELY.

* HOLD A PRE-CONSTRUCTION MEETING OF PROJECT CONSTRUCTION PERSONNEL THAT INCLUDES THE INSPECTOR TO DISCUSS EROSION AND SEDIMENT CONTROL MEASURES AND CONSTRUCTION LIMITS. (SCHEDULE A.8.C.I.(3))
* ALL INSPECTIONS MUST BE MADE IN ACCORDANCE WITH DEQ 1200-C PERMIT REQUIREMENTS.
* INSPECTION LOGS MUST BE KEPT IN ACCORDANCE WITH DEQ'S 1200-C PERMIT REQUIREMENTS.
* RETAIN A COPY OF THE ESCP AND ALL REVISIONS ON SITE AND MAKE IT AVAILABLE ON REQUEST TO DEQ, AGENT, OR THE LOCAL MUNICIPALITY. DURING INACTIVE PERIODS OF GREATER THAN SEVEN (7) CONSECUTIVE CALENDAR DAYS, RETAIN THE ESCP AT THE CONSTRUCTION SITE OR AT ANOTHER LOCATION. (SCHEDULE B.2.A)

STANDARD EROSION AND SEDIMENT CONTROL PLAN DRAWING NOTES:

1. ALL PERMIT REGISTRANTS MUST IMPLEMENT THE ESCP. FAILURE TO IMPLEMENT ANY OF THE CONTROL MEASURES OR PRACTICES DESCRIBED IN THE ESCP IS A VIOLATION OF THE PERMIT.
2. THE ESCP MEASURES SHOWN ON THIS PLAN ARE MINIMUM REQUIREMENTS FOR ANTICIPATED SITE CONDITIONS. DURING THE CONSTRUCTION PERIOD, UPGRADE THESE MEASURES AS NEEDED TO COMPLY WITH ALL APPLICABLE LOCAL STATE, AND FEDERAL EROSION AND SEDIMENT CONTROL REGULATIONS.
3. SUBMISSION OF ALL ESCP REVISIONS IS NOT REQUIRED. SUBMITTAL OF THE ESCP REVISIONS IS ONLY UNDER SPECIFIC CONDITIONS. SUBMIT ALL NECESSARY REVISION TO DEQ OR AGENT.
4. PHASE CLEARING AND GRADING TO THE MAXIMUM EXTENT PRACTICAL TO PREVENT EXPOSED INACTIVE AREAS FROM BECOMING A SOURCE OF EROSION.
5. IDENTIFY, MARK, AND PROTECT (BY FENCING OFF OR OTHER MEANS) CRITICAL RIPARIAN AREAS AND VEGETATION INCLUDING IMPORTANT TREES AND ASSOCIATED ROOTING ZONES, AND VEGETATION AREAS TO BE PRESERVED. IDENTIFY VEGETATIVE BUFFER ZONES BETWEEN THE SITE AND SENSITIVE AREAS (E.G., WETLANDS), AND OTHER AREAS TO BE PRESEVED, ESPECIALLY IN PERIMETER AREAS.
6. PRESERVE EXISTING VEGETATION WHEN PRACTICAL AND RE-VEGETATE OPEN AREAS. RE-VEGETATE OPEN AREAS WHEN PRACTICABLE BEFORE AND AFTER GRADING OR CONSTRUCTION. IDENTIFY THE TYPE OF VEGETATIVE SEED MIX USED.
7. EROSION AND SEDIMENT CONTROL MEASURES INCLUDING PERIMETER SEDIMENT CONTROL MUST BE IN PLACE BEFORE VEGETATION IS DISTRURBED AND MUST REMAIN IN PLACE AND BE MAINTAINED, REPAIRED, AND PROMPTLY IMPLEMENTED FOLLOWING PROCEDURES ESTABLISHED FOR THE DURATION OF CONSTRUCTION, INCLUDING PROTECTION FOR ACTIVE STORM DRAIN INLETS AND CATCH BASINS AND APPROPRIATE NON-STORMWATER POLLUTION CONTROLS.
8. ESTABLISH CONCRETE TRUCK AND OTHER CONCRETE EQUIPMENT WASHOUT AREAS BEFORE BEGINNING CONCRETE WORK. DIRECT ALL WASH WATER INTO A PIT OR LEAK-PROOF CONTAINER. HANDLE WASH WATER AS WASTE, CONCRETE DISCHARGE TO WATERS OF THE STATE IS PROHIBITED.
9. APPLY TEMPORARY AND/OR PERMANENT SOIL STABILIZATION MEASURES IMMEDIATELY ON ALL DISTURBED AREAS AS GRADING PROGRESSES AND FOR ALL ROADWAYS INCLUDING GRAVEL ROADWAYS.
10. ESTABLISH MATERIAL AND WASTE STORAGE AREAS, AND OTHER NON-STORMWATER CONTROLS.
11. PREVENT TRACKING OF SEDIMENT ONTO PUBLIC OR PRIVATE ROADS USING BMPs SUCH AS: GRAVELED (OR PAVED) EXITS AND PARKING AREAS, GRAVEL ALL UNPAVED ROADS LOCATED ONSITE, OR USE AN EXIT TIRE WASH. THESE BMPs MUST BE IN PLACE PRIOR TO LAND-DISTURBING ACTIVITIES.
12. WHEN TRUCKING SATURATED SOILS FROM THE SITE, EITHER USE WATER-TIGHT TRUCKS OR DRAIN LOADS ON SITE.
13. USE BMPs TO PREVENT OR MINIMIZE STORMWATER EXPOSURE TO POLLUTANTS FROM SPILLS; VEHICLE AND EQUIPMENT FUELING, MAINTENANCE, AND STORAGE; OTHER CLEANING AND MAINTENANCE ACTIVITIES; AND WASTE HANDLING ACTIVITIES. THESE POLLUTANTS INCLUDE FUEL, HYDRAULIC FLUID, AND OTHER OILS FROM VEHICLES AND MACHINERY, AS WELL AS DEBRIS, LEFTOVER PAINTS, SOLVENTS, AND GLUES FROM CONSTRUCTION OPERATIONS.
14. IMPLEMENT THE FOLLOWING BMPS WHEN APPLICABLE: WRITTEN SPILL PREVENTION AND RESPONSE PROCEDURES, EMPLOYEE TRAINING ON SPILL PREVENTION AND PROPER DISPOSAL PROCEDURES, SPILL KITS IN ALL VEHICLES, REGULAR MAINTENANCE SCHEDULE FOR VEHICLES AND MACHINERY, MATERIAL DELIVERY AND STORAGE CONTROLS, TRAINING AND SIGNAGE, AND COVERED STORAGE AREAS FOR WASTE AND SUPPLIES.
15. USE WATER, SOIL-BINDING AGENT OR OTHER DUST CONTROL TECHNIQUE AS NEEDED TO AVOID WIND-BLOWN SOIL.
16. THE APPLICATION RATE OF FERTILIZERS USED TO REESTABLISH VEGETATION MUST FOLLOW MANUFACTURER'S RECOMMENDATIONS TO MINIMIZE NUTRIENT RELEASES TO SURFACE WATERS. EXERCISE CAUTION WHEN USING TIME-RELEASE FERTILIZERS WITHIN ANY WATERWAY RIPARIAN ZONE.
17. IF A STORMWATER TREATMENT SYSTEM (FOR EXAMPLE, ELECTRO-COAGULATION, FLOCCULATION, FILTRATION, ETC.) FOR SEDIMENT OR OTHER POLLUTANT REMOVAL IS EMPLOYED, SUBMIT AN OPERATION AND MAINTENANCE PLAN (INCLUDING SYSTEM SCHEMATIC, LOCATION OF SYSTEM, LOCATION OF INLET, LOCATION OF DISCHARGE, DISCHARGE DISPERSION DEVICE DESIGN, AND A SAMPLING PLAN AND FREQUENCY) BEFORE OPERATING THE TREATMENT SYSTEM. OBTAIN PLAN APPROVAL BEFORE OPERATING THE TREATMENT SYSTEM. OPERATE AND MAINTAIN THE TREATMENT SYSTEM ACCORDING TO MANUFACTURER'S SPECIFICATIONS.
18. AT THE END OF EACH WORKDAY SOIL STOCKPILES MUST BE STABILIZED OR COVERED, OR OTHER BMPs MUST BE IMPLEMENTED TO PREVENT DISCHARGES TO SURFACE WATERS OR CONVEYANCE SYSTEMS LEADING TO SURFACE WATERS.
19. CONSTRUCTION ACTIVITIES MUST AVOID OR MINIMIZE EXCAVATION AND CREATION OF BARE GROUND DURING WET WEATHER, OCTOBER 01 – MAY 31.
20. SEDIMENT FENCE: REMOVE TRAPPED SEDIMENT BEFORE IT REACHES ONE THIRD OF THE ABOVE GROUND FENCE HEIGHT AND BEFORE BMP REMOVAL.
21. OTHER SEDIMENT BARRIERS (SUCH AS BIOBAGS): REMOVE SEDIMENT BEFORE IT REACHES TWO INCHES DEPTH ABOVE GROUND HEIGHT. AND BEFORE BMP REMOVAL.
22. CATCH BASINS: CLEAN BEFORE RETENTION CAPACITY HAS BEEN REDUCED BY FIFTY PERCENT. SEDIMENT BASINS AND SEDIMENT TRAPS: REMOVE TRAPPED SEDIMENTS BEFORE DESIGN CAPACITY HAS BEEN REDUCED BY FIFTY PERCENT AND AT COMPLETION OF PROJECT.
23. WITHIN 24 HOURS, SIGNIFICANT SEDIMENT THAT HAS LEFT THE CONSTRUCTION SITE, MUST BE REMEDIATED. INVESTIGATE THE CAUSE OF THE SEDIMENT RELEASE AND IMPLEMENT STEPS TO PREVENT A RECURRENCE OF THE DISCHARGE WITHIN THE SAME 24 HOURS. ANY IN-STREAM CLEAN UP OF SEDIMENT SHALL BE PERFORMED ACCORDING TO THE OREGON DIVISION OF STATE LANDS REQUIRED TIMEFRAME.
24. THE INTENTIONAL WASHING OF SEDIMENT INTO STORM SEWERS OR DRAINAGE WAYS MUST NOT OCCUR. VACUUMING OR DRY SWEEPING AND MATERIAL PICKUP MUST BE USED TO CLEANUP RELEASED SEDIMENTS.
25. PROVIDE PERMANENT EROSION CONTROL MEASURES ON ALL EXPOSED AREAS. DO NOT REMOVE TEMPORARY SEDIMENT CONTROL PRACTICES UNTIL PERMANENT VEGETATION OR OTHER COVER OF EXPOSED AREAS IS ESTABLISHED. HOWEVER, DO REMOVE ALL TEMPORARY EROSION CONTROL CONSTRUCTION MATERIALS AND WAST, INCLUDING SEDIMENT RETAINED BY TEMPORARY BMPs.
26. IF VEGETATIVE SEED MIXES ARE SPECIFIED, SEEDING MUST TAKE PLACE NO LATER THAN SEPTEMBER 1; THE TYPE AND PERCENTAGGES OF SEED IN THE MIX MUST BE IDENTIFIED ON THE PLANS.
27. ALL PUMPING OF SEDIMENT LADEN WATER SHALL BE DISCHARGED OVER AN UDISTURBED, PREFERABLY VEGETATED AREA, AND THROUGH A SEDIMENT CONTROL BMP I.E. (FILTER BAG).
28. ALL EPOSED SOILS MUST BE COVERED DURING THE WET WEATHER PERIOD, OCTOBER 01 – MAY 31.
29. IF WATER OF THE STATE IS WITHIN THE PROJECT SITE OR WITHIN 50 FEET OF THE PROJECT BOUNDARY, MAINTAIN THE EXISTING NATURAL BUFFER WITHIN THE 50-FOOT ZONE FOR THE DURATION OF THE PERMIT COVERAGE, OR MAINTAIN LESS THAN THE ENTIRE EXISTING NATURAL BUFFER AND PROVIDE ADDITIONAL EROSION AND SEDIMENT CONTROL BMPs.

THE PERMITTEE IS REQUIRED TO MEET ALL THE CONDITIONS OF THE 1200C PERMIT. THIS ESCP AND GENERAL CONDITIONS HAVE BEEN DEVELOPED TO FACILITATE COMPLIANCE WITH THE 1200C PERMIT REQUIREMENTS. IN CASES OF DISCREPANCIES OR OMISSIONS, THE 1200C PERMIT REQUIREMENTS SUPERCEDE REQUIREMENTS OF THIS PLAN.

BMP MATRIX FOR CONSTRUCTION PHASES:

REFER TO DEQ GUIDANCE MANUAL FOR A LIST OF AVAILABLE BMP'S.

	CLEARING	MASS GRADING	UTILITY INSTALLATION	STREET CONSTRUCTION	FINAL STABILIZATION	WET WEATHER (OCT. 1– MAY 31ST)
EROSION PREVENTION						
PRESERVE NATURAL VEGETATION	**X	X	X	X	X	X
GROUND COVER					X	X
PLASTIC SHEETING		X				X
DUST CONTROL	X	X	X	X		X
TEMPORARY/ PERMANENT SEEDING			X		X	
MATTING					X	X
SEDIMENT CONTROL						
SEDIMENT FENCE (PERIMETER)	**X	X	X	X		X
SEDIMENT FENCE (INTERIOR)			X	X		X
BIO BAGS		X	X	X		X
INLET PROTECTION	**X	X	X	X		X
DEWATERING (GENERAL)		X	X	X		X
STRAW WATTLES			X	X	X	X
FILTER BERM	X	X	X	X		
RUN-OFF CONTROL						
CONSTRUCTION ENTRANCE	**X	X	X	X		X
CHECK DAMS	**X	X	X	X	X	
OUTLET PROTECTION	X	X	X	X		X
SURFACE ROUGHENING					X	
POLLUTION PREVENTION						
PROPER SIGNAGE	X	X	X	X	X	X
HAZ WASTE MGMT	X	X	X	X	X	X
SPILL KIT ON-SITE	X	X	X	X	X	X
CONCRETE WASH OUT AREA	X	X	X	X		X

** SIGNIFIES BMP THAT WILL BE INSTALLED PRIOR TO ANY GROUND DISTURBING ACTIVITY.

RATIONALE STATEMENT

A COMPREHENSIVE LIST OF AVAILABLE BEST MANAGEMENT PRACTICES (BMP) OPTIONS BASED ON DEQ's GUIDANCE MANUAL HAS BEEN REVIEWED TO COMPLETE THIS EROSION AND SEDIMENT CONTROL PLAN. SOME OF THE ABOVE LISTED BMP's WERE NOT CHOSEN BECAUSE THEY WERE DETERMINED TO NOT EFFECTIVELY MANAGE EROSION PREVENTION AND SEDIMENT CONTROL FOR THIS PROJECT BASED ON SPECIFIC SITE CONDITIONS, INCLUDING SOIL CONDITIONS TOPOGRAPHIC CONSTRAINTS, ACCESSIBILITY TO THE SITE, AND OTHER RELATED CONDITIONS, AS THE PROJECT PROGRESSES AND THERE IS A NEED TO REVISE THE ESC PLAN, AN ACTION PLAN WILL BE SUBMITTED.

PERMITTEE'S SITE INSPECTOR:

NAME: _____ INITIAL
COMPANY/AGENCY: _____
PHONE: _____
FAX: _____
E-MAIL: _____
DESCRIPTION OF EXPERIENCE: _____

OWNER/SURVEYOR:

SOUTH FORK WATER BOARD
15962 HUNTER AVE
OREGON CITY, OR 97045
CONTACT: WYATT PARNO
PHONE: (503) 657-5030

CONSOR
CONTACT: ADAM BLAIR, P.E.
1 SW COLUMBIA ST (SUITE 1700)
PORTLAND, OR 97204
PHONE: (503) 225-9010
FAX: (503) 225-9022

SITE CONTRACTOR:

UNKNOWN

NO.	DATE	BY	REVISION

NOTICE
0 ½ 1
IF THIS BAR DOES NOT MEASURE 1" THEN DRAWING IS NOT TO SCALE

MDP DESIGNED
NEM DRAWN
ANB CHECKED

REGISTERED PROFESSIONAL ENGINEER 86406PE OREGON SEPTEMBER 12, 2014 ADAM N. BLAIR
RENEWS 12-31-27

BID SET

consor
Stantec

South Fork WATER PURE WATER SINCE 1915
WATER QUALITY SYSTEMS BUILDING

ESC PLAN COVER SHEET

PROJECT NO.: W253326OR | SCALE: AS SHOWN | DATE: AUGUST 2026

SHEET
ESC-101

\\EgnyteDrive\Consor Files_V-W\Projects\OR\South Fork Water\2025\W253326OR.00\12 CADD\12-5 Sheets\EROSION AND SEDIMENT CONTROL DETAILS.dwg ESC-101 7/29/2026 10:46 AM JUSTIN.DEUEL 24.3s (LMS Tech)

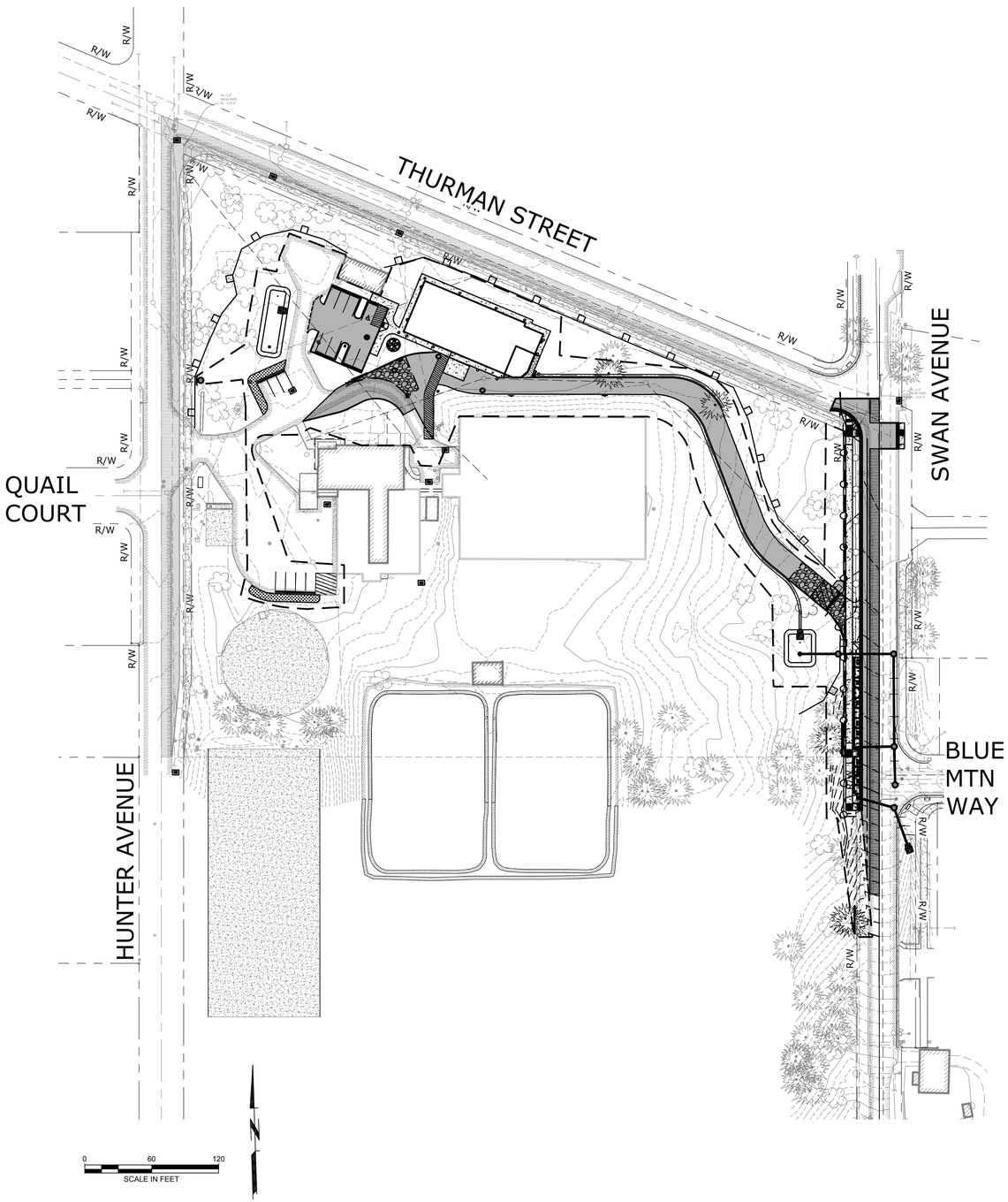

LEGEND

- LIMITS OF ONSITE DISTURBANCE
- COMMERCIAL CONST ENTRANCE SEE CWS DET DWG 4-13, SHT ESC-106
- CONSTRUCTION STAGING

EROSION AND SEDIMENT CONTROL BMP IMPLEMENTATION:

1. ALL BASE ESC MEASURES (INLET PROTECTION, PERIMETER SEDIMENT CONTROL, GRAVEL CONSTRUCTION ENTRANCES, ETC). MUST BE IN PLACE, FUNCTIONAL, AND APPROVED IN AN INITIAL INSPECTION, PRIOR TO COMMENCEMENT OF CONSTRUCTION ACTIVITIES.

2. "STOCK PILE AREA" SHALL BE DESIGNATED PRIOR TO EXCAVATION CUT ACTIVITIES. ALL EXCAVATED MATERIALS SHALL BE HAULED OFFSITE.

3. ALL "SEDIMENT BARRIERS (TO BE INSTALLED AFTER GRADING)" SHALL BE INSTALLED IMMEDIATELY FOLLOWING ESTABLISHMENT OF FINISHED GRADE AS SHOWN ON THESE PLANS.

4. LONG TERM SLOPE STABILIZATION MEASURES "INCLUDING SEEDING, JUTE MATTING, WATTLES, AND ROCK CHECK DAMS" SHALL BE IN-PLACE OVER ALL EXPOSED SOILS BY OCTOBER 1.

5. THE STORM WATER FACILITIES SHALL BE CONSTRUCTED AND LANDSCAPED PRIOR TO THE STORM WATER SYSTEM FUNCTIONING AND SITE PAVING.

6. INLET PROTECTION SHALL BE IN-PLACE IMMEDIATELY FOLLOWING PAVING ACTIVITIES.

EROSION CONTROL NOTES

1. EMERGENCY EROSION CONTROL MATERIALS MUST BE KEPT ON SITE AT ALL TIMES.
2. INSTALL, INSPECT, CLEAN, AND MAINTAIN TEMPORARY SEDIMENT FENCE TO PREVENT SEDIMENT LADEN WATER FROM LEAVING THE SITE THROUGHOUT CONSTRUCTION. TEMPORARY SEDIMENT FENCE SHALL BE INSTALLED PARALLEL TO SLOPE CONTOURS OR AS SHOWN. ADDITIONAL TEMPORARY SEDIMENT FENCE MAY BE REQUIRED BASED ON SITE CONDITIONS AND MEANS AND METHODS DEVELOPED BY CONTRACTOR. OVERLAY TEMPORARY SEDIMENT FENCE 6" MINIMUM AND TURN LAST 6 FEET OF FENCE UPSLOPE (TYPICAL).
3. INSPECT, CLEAN, AND MAINTAIN GRAVEL CONSTRUCTION ENTRANCE TO PREVENT SEDIMENT AND SEDIMENT LADEN WATER FROM LEAVING THE SITE THROUGHOUT CONSTRUCTION.
4. ADDITIONAL TRACKING CONTROL MEASURES SUCH AS A WHEEL WASH MAY BE NECESSARY IF CONSTRUCTION ENTRANCE IS NOT SUFFICIENT. SEE ODOT STANDARD DRAWING RD1060, SHEET ESC-5B.
5. INSTALL TEMPORARY SLOPE MATTING AND PLASTIC SHEETING ON ALL SLOPES 2:1 OR GREATER.
6. ON-SITE RUNOFF ACCUMULATION INTO LOW POINTS SHALL BE PUMPED BY THE CONTRACTOR TO A SUITABLE LOCATION, IF REQUIRED.

STANDARD EROSION AND SEDIMENT CONTROL PLAN DRAWING NOTES:

1. WHEN RAINFALL AND RUNOFF OCCURS DAILY INSPECTIONS OF THE EROSION AND SEDIMENT CONTROLS AND DISCHARGE OUTFALLS MUST BE PROVIDED BY SOME ONE KNOWLEDGEABLE AND EXPERIENCED IN THE PRINCIPLES, PRACTICES, INSTALLATION, AND MAINTENANCE OF EROSION AND SEDIMENT CONTROLS WHO WORKS FOR THE PERMITTEE.

2. CONSTRUCTION ACTIVITIES MUST AVOID OR MINIMIZE EXCAVATION AND CREATION OF BARE GROUND FROM OCTOBER 1 THROUGH MAY 31 EACH YEAR.

3. DURING WET WEATHER PERIOD, TEMPORARY STABILIZATION OF THE SITE MUST OCCUR AT THE END OF EACH WORK DAY.

4. SEDIMENT CONTROLS MUST BE INSTALLED AND MAINTAINED ON ALL DOWN GRADIENT SIDES OF THE CONSTRUCTION SITE AT ALL TIMES DURING CONSTRUCTION. THEY MUST REMAIN IN PLACE UNTIL PERMANENT VEGETATION OR OTHER PERMANENT COVERING OF EXPOSED SOIL IS ESTABLISHED.

5. ALL ACTIVE INLETS MUST HAVE SEDIMENT CONTROLS INSTALLED AND MAINTAINED AT ALL TIMES DURING CONSTRUCTION. UNLESS OTHERWISE APPROVED, A SURFACE MOUNTED AND ATTACHABLE, U-SHAPED FILTER BAG IS REQUIRED FOR ALL CURB INLET CATCH BASINS.

6. SIGNIFICANT AMOUNTS OF SEDIMENT WHICH LEAVES THE SITE MUST BE CLEANED UP WITHIN 24 HOURS AND PLACED BACK ON THE SITE AND STABILIZED OR PROPERLY DISPOSED. THE CAUSE OF THE SEDIMENT RELEASE MUST BE FOUND AND PREVENTED FROM CAUSING A RECURRENCE OF THE DISCHARGE WITHIN THE SAME 24 HOURS. ANY IN-STREAM CLEAN UP OF SEDIMENT SHALL BE PREFORMED ACCORDING TO THE OREGON DEPARTMENT OF STATE LANDS REQUIRED TIME FRAME.

7. SEDIMENT MUST NOT BE INTENTIONALLY WASHED INTO STORM SEWERS, DRAINAGE WAYS, OR WATER BODIES.

8. SEDIMENT MUST BE REMOVED FROM BEHIND ALL SEDIMENT CONTROL MEASURES WHEN IT HAS REACHED A HEIGHT OF 1/3RD THE BARRIER HEIGHT, AND PRIOR TO THE CONTROL MEASURES REMOVAL.

9. CLEANING OF ALL STRUCTURES WITH SUMPS MUST OCCUR WHEN THE SEDIMENT RETENTION CAPACITY HAS BEEN REDUCED BY 50% AND AT COMPLETION OF PROJECT.

10. ANY USE OF TOXIC OR OTHER HAZARDOUS MATERIALS MUST INCLUDE PROPER STORAGE, APPLICATION, AND DISPOSAL.

11. THE PERMITTEE MUST PROPERLY MANAGE HAZARDOUS WASTES, USED OILS, CONTAMINATED SOILS, CONCRETE WASTE, SANITARY WASTE, LIQUID WASTE, OR OTHER TOXIC SUBSTANCES DISCOVERED OR GENERATED DURING CONSTRUCTION.

12. THE APPLICATION RATE OF FERTILIZERS USED TO REESTABLISH VEGETATION MUST FOLLOW MANUFACTURER'S RECOMMENDATIONS. NUTRIENT RELEASES FROM FERTILIZERS TO SURFACE WATERS MUST BE MINIMIZED. TIME RELEASE FERTILIZERS SHOULD BE USED AND CARE SHOULD BE MADE IN APPLICATION OF FERTILIZERS WITHIN ANY WATER WAY RIPARIAN ZONE.

13. OWNER OR DESIGNATED PERSON SHALL BE RESPONSIBLE FOR PROPER INSTALLATION AND MAINTENANCE OF ALL EROSION AND SEDIMENT CONTROL MEASURES, IN ACCORDANCE WITH CURRENT CLEAN WATER SERVICES STANDARDS AND STATE, AND FEDERAL REGULATIONS.

14. PRIOR TO ANY LAND DISTURBING ACTIVITIES, THE BOUNDARIES OF THE CLEARING LIMITS, VEGETATED BUFFERS, AND ANY SENSITIVE AREAS SHOWN ON THIS PLAN SHALL BE CLEARLY DELINEATED IN THE FIELD. UNLESS OTHERWISE APPROVED, NO DISTURBANCE IS PERMITTED BEYOND THE CLEARING LIMITS. THE OWNER/PERMITTEE MUST MAINTAIN THE DELINEATION FOR THE DURATION OF THE PROJECT.
NOTE: VEGETATED CORRIDORS TO BE DELINEATED WITH ORANGE CONSTRUCTION FENCE OR APPROVED EQUAL.

15. PRIOR TO ANY LAND DISTURBING ACTIVITIES, THE BMPS THAT MUST BE INSTALLED ARE GRAVEL CONSTRUCTION ENTRANCE, PERIMETER SEDIMENT CONTROL, AND INLET PROTECTION. THESE BMPS MUST BE MAINTAINED FOR THE DURATION OF THE PROJECT.

16. IF VEGETATIVE SEED MIXES ARE SPECIFIED, SEEDING MUST TAKE PLACE NO LATER THAN SEPTEMBER 1ST; THE TYPE AND PERCENTAGES OF SEED IN THE MIX ARE AS IDENTIFIED ON THE PLANS OR AS SPECIFIED BY THE DESIGN ENGINEER.

17. WATER-TIGHT TRUCKS MUST BE USED TO TRANSPORT SATURATED SOILS FROM THE CONSTRUCTION SITE. AN APPROVED EQUIVALENT IS TO DRAIN THE SOIL ON SITE AT A DESIGNATED LOCATION USING APPROPRIATE BMPS; SOIL MUST BE DRAINED SUFFICIENTLY FOR MINIMAL SPILLAGE.

18. ALL PUMPING OF SEDIMENT LADEN WATER MUST BE DISCHARGED OVER AN UNDISTURBED, PREFERABLY VEGETATED AREA, AND THROUGH A SEDIMENT CONTROL BMP (I.E. FILTER BAG).

19. THE ESC PLAN MUST BE KEPT ONSITE. ALL MEASURES SHOWN ON THE PLAN MUST BE INSTALLED PROPERLY TO ENSURE THAT SEDIMENT LADEN WATER DOES NOT ENTER A SURFACE WATER SYSTEM, ROADWAY, OR OTHER PROPERTIES.

20. THE ESC MEASURES SHOWN ON THIS PLAN ARE THE MINIMUM REQUIREMENTS FOR ANTICIPATED SITE CONDITIONS. DURING THE CONSTRUCTION PERIOD, THESE MEASURES SHALL BE UPGRADED AS NEEDED TO MAINTAIN COMPLIANCE WITH ALL REGULATIONS.

21. WRITTEN ESC LOGS ARE SUGGESTED TO BE MAINTAINED ONSITE AND AVAILABLE TO DISTRICT INSPECTORS UPON REQUEST.

22. IN AREAS SUBJECT TO WIND EROSION, APPROPRIATE BMPS MUST BE USED WHICH MAY INCLUDE THE APPLICATION OF FINE WATER SPRAYING, PLASTIC SHEETING, MULCHING, OR OTHER APPROVED MEASURES.

23. ALL EXPOSED SOILS MUST BE COVERED DURING WET WEATHER PERIOD.

NO.	DATE	BY	REVISION

NOTICE
0 ½ 1
IF THIS BAR DOES NOT MEASURE 1" THEN DRAWING IS NOT TO SCALE

MDP DESIGNED
NEM DRAWN
ANB CHECKED

REGISTERED PROFESSIONAL ENGINEER 86406PE OREGON SEPTEMBER 12, 2017 ADAM N. BLAIR
RENEWS 12-31-27

BID SET

consor
Stantec

South Fork WATER PURE WATER SINCE 1915

WATER QUALITY SYSTEMS BUILDING

ESC PLAN OVERVIEW & NOTES

PROJECT NO.: W253326OR | SCALE: AS SHOWN | DATE: AUGUST 2026

SHEET
ESC-102

\\EgnyteDrive\Consor Files_V-W\Projects\OR\South Fork Water\2025\W253326OR.00\12 CADD\12-5 Sheets\EROSION AND SEDIMENT CONTROL DETAILS.dwg ESC-102 7/29/2026 10:46 AM JUSTIN.DEUEL 24.3s (LMS Tech)

\\EgnyteDrive\Consor Files_V-W\Projects\OR\South Fork Water\2025\W253326OR.00\12 CADD\12-5 Sheets\ESC PLAN PHASE 1 - CLEARING, GRUBBING, AND DEMOLITION.dwg ESC-103 7/29/2026 10:47 AM JUSTIN.DEUEL 24.3s (LMS Tech)

LEGEND

- DRAINAGE FLOW DIRECTION
- CONSTRUCTION FENCE AND SEDIMENT FENCE
- INLET PROTECTION, TYPE 5
- CHECK DAM
- OUTLET PROTECTION RIPRAP
- LIMITS OF ONSITE DISTURBANCE
- COMMERCIAL CONST ENTRANCE SEE CWS DET DWG 4-13, SHT ESC-106
- CRITICAL TREE ZONE
- TREE PROTECTION FENCE (SEE NOTE 7)

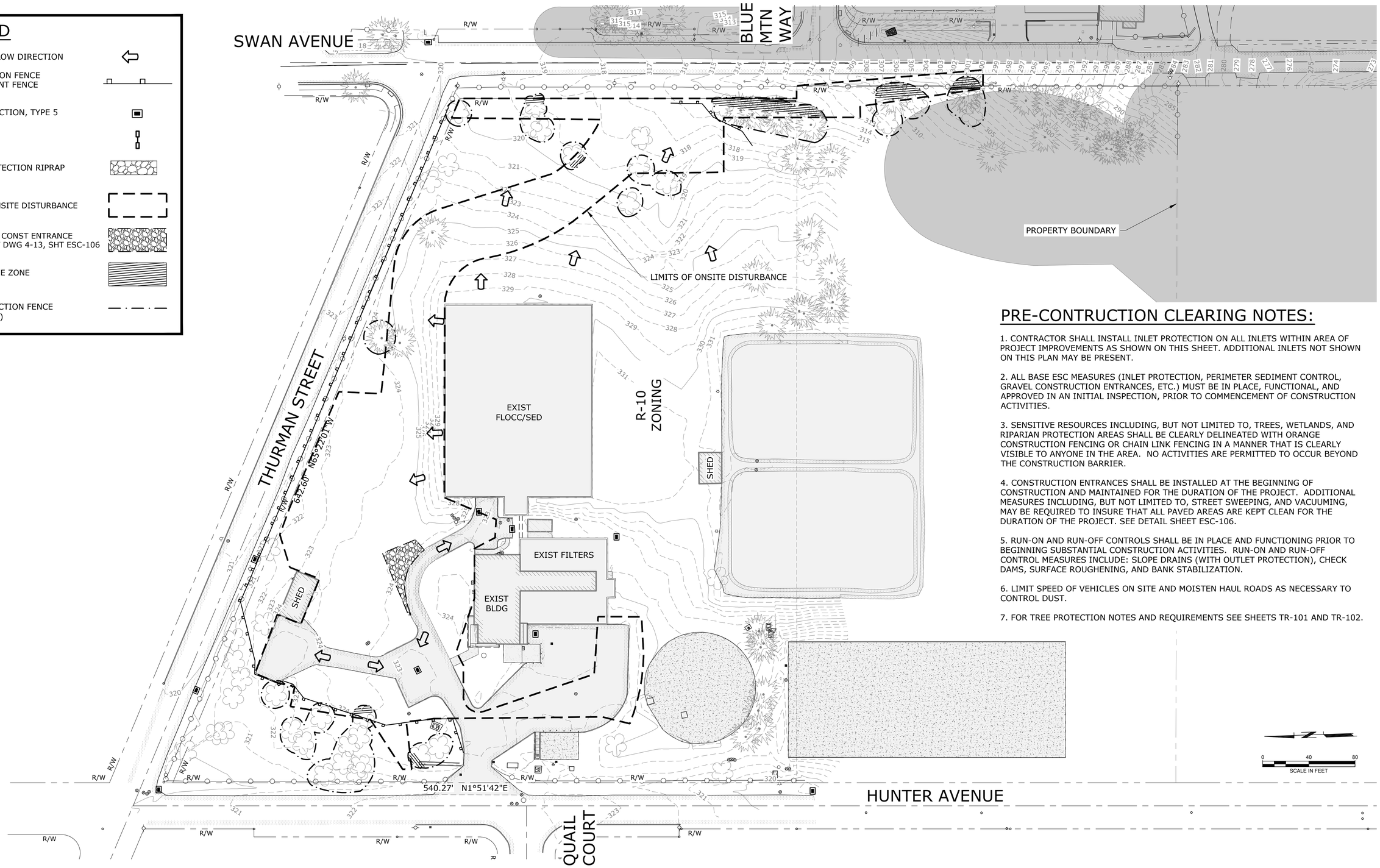

PRE-CONTRUCTION CLEARING NOTES:

1. CONTRACTOR SHALL INSTALL INLET PROTECTION ON ALL INLETS WITHIN AREA OF PROJECT IMPROVEMENTS AS SHOWN ON THIS SHEET. ADDITIONAL INLETS NOT SHOWN ON THIS PLAN MAY BE PRESENT.

2. ALL BASE ESC MEASURES (INLET PROTECTION, PERIMETER SEDIMENT CONTROL, GRAVEL CONSTRUCTION ENTRANCES, ETC.) MUST BE IN PLACE, FUNCTIONAL, AND APPROVED IN AN INITIAL INSPECTION, PRIOR TO COMMENCEMENT OF CONSTRUCTION ACTIVITIES.

3. SENSITIVE RESOURCES INCLUDING, BUT NOT LIMITED TO, TREES, WETLANDS, AND RIPARIAN PROTECTION AREAS SHALL BE CLEARLY DELINEATED WITH ORANGE CONSTRUCTION FENCING OR CHAIN LINK FENCING IN A MANNER THAT IS CLEARLY VISIBLE TO ANYONE IN THE AREA. NO ACTIVITIES ARE PERMITTED TO OCCUR BEYOND THE CONSTRUCTION BARRIER.

4. CONSTRUCTION ENTRANCES SHALL BE INSTALLED AT THE BEGINNING OF CONSTRUCTION AND MAINTAINED FOR THE DURATION OF THE PROJECT. ADDITIONAL MEASURES INCLUDING, BUT NOT LIMITED TO, STREET SWEEPING, AND VACUUMING, MAY BE REQUIRED TO INSURE THAT ALL PAVED AREAS ARE KEPT CLEAN FOR THE DURATION OF THE PROJECT. SEE DETAIL SHEET ESC-106.

5. RUN-ON AND RUN-OFF CONTROLS SHALL BE IN PLACE AND FUNCTIONING PRIOR TO BEGINNING SUBSTANTIAL CONSTRUCTION ACTIVITIES. RUN-ON AND RUN-OFF CONTROL MEASURES INCLUDE: SLOPE DRAINS (WITH OUTLET PROTECTION), CHECK DAMS, SURFACE ROUGHENING, AND BANK STABILIZATION.

6. LIMIT SPEED OF VEHICLES ON SITE AND MOISTEN HAUL ROADS AS NECESSARY TO CONTROL DUST.

7. FOR TREE PROTECTION NOTES AND REQUIREMENTS SEE SHEETS TR-101 AND TR-102.

NO.	DATE	BY	REVISION

NOTICE
0 ½ 1
IF THIS BAR DOES NOT MEASURE 1" THEN DRAWING IS NOT TO SCALE

MDP DESIGNED
NEM DRAWN
ANB CHECKED

REGISTERED PROFESSIONAL ENGINEER 86406PE OREGON SEPTEMBER 12, 2017 ADAM N. BLAIR
RENEWS 12-31-27

BID SET

consor
Stantec

South Fork WATER
PURE WATER SINCE 1915

WATER QUALITY SYSTEMS BUILDING

ESC PLAN PHASE 1 - CLEARING, GRUBBING, AND DEMOLITION

PROJECT NO.: W253326OR | SCALE: AS SHOWN | DATE: AUGUST 2026

SHEET
ESC-103

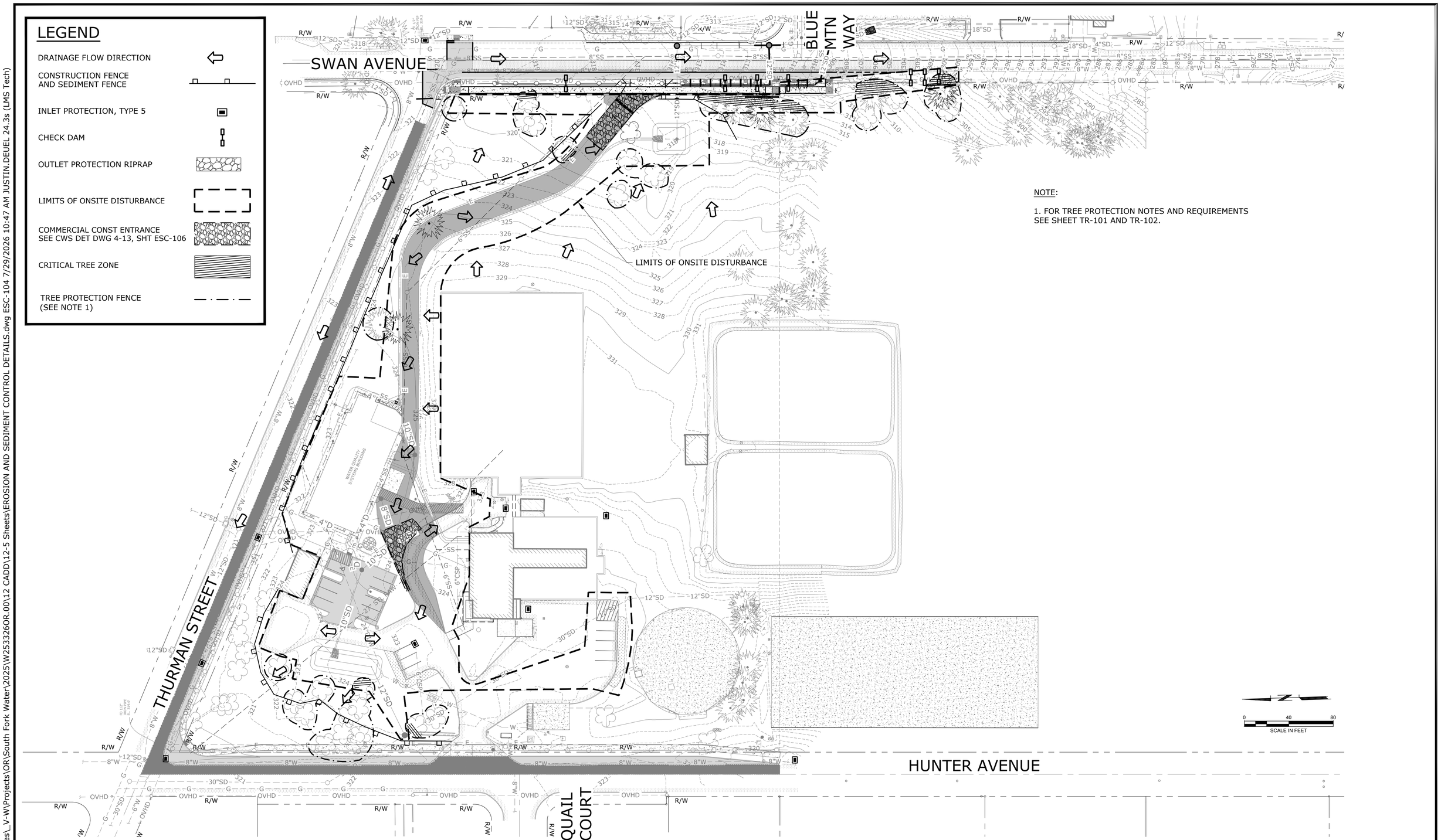

NOTE:

1. FOR TREE PROTECTION NOTES AND REQUIREMENTS SEE SHEET TR-101 AND TR-102.

NO.	DATE	BY	REVISION

NOTICE

0 ½ 1

IF THIS BAR DOES NOT MEASURE 1" THEN DRAWING IS NOT TO SCALE

MDP
DESIGNED

NEM
DRAWN

ANB
CHECKED

REGISTERED PROFESSIONAL ENGINEER
86406PE
OREGON
SEPTEMBER 12, 2017
ADAM N. BLAIR
RENEWS 12-31-27

BID SET

consor

Stantec

South Fork WATER
PURE WATER SINCE 1915

WATER QUALITY SYSTEMS BUILDING

ESC PLAN PHASE 2 - EXCAVATION AND CONSTRUCTION

PROJECT NO.: W253326OR | SCALE: AS SHOWN | DATE: AUGUST 2026

SHEET

ESC-104

\\EgnyteDrive\Consor Files_V-W\Projects\OR\South Fork Water\2025\W253326OR.00\12 CADD\12-5 Sheets\EROSION AND SEDIMENT CONTROL DETAILS.dwg ESC-104 7/29/2026 10:47 AM JUSTIN.DEUEL 24.3s (LMS Tech)

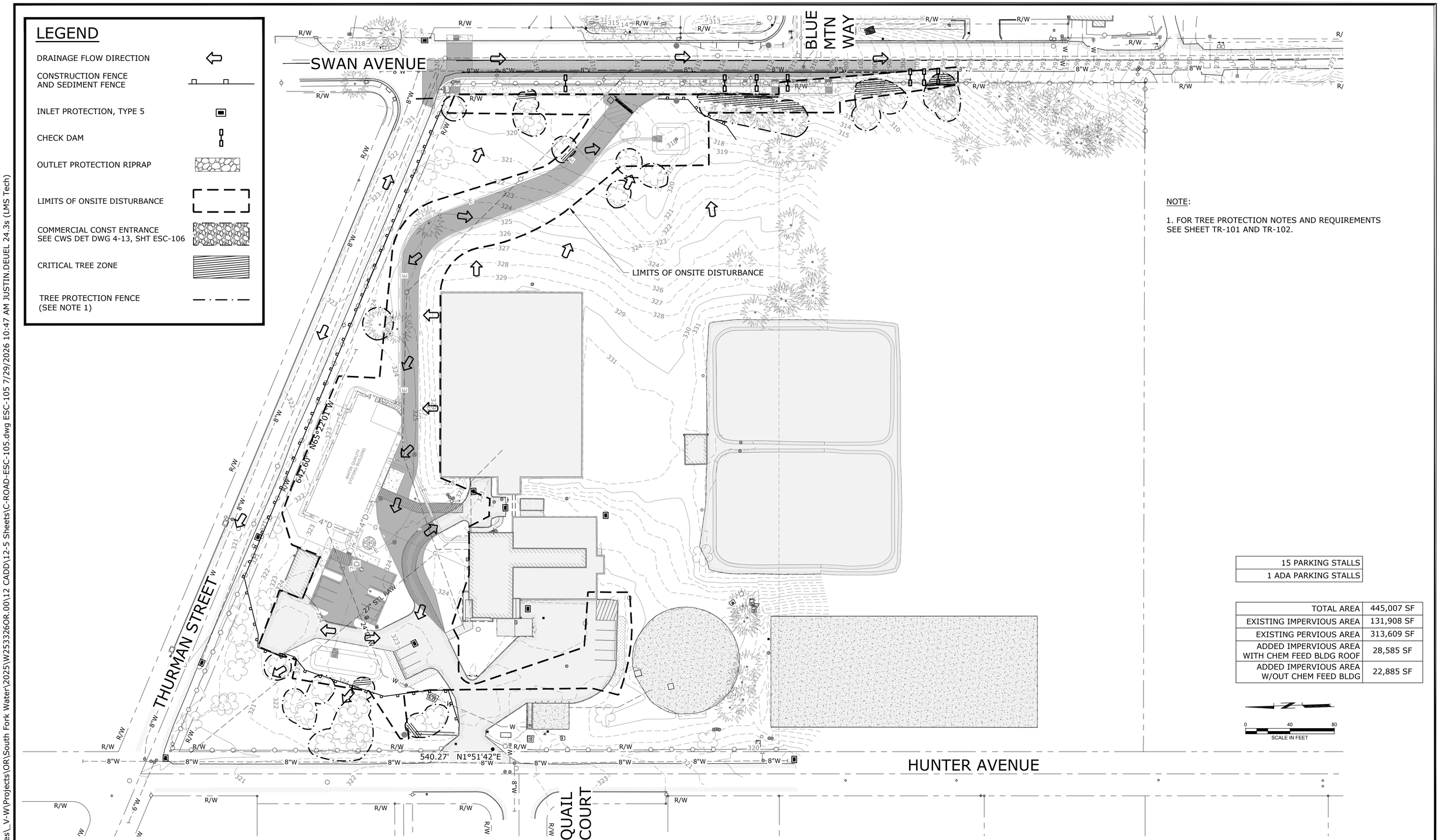

NOTE:

1. FOR TREE PROTECTION NOTES AND REQUIREMENTS SEE SHEET TR-101 AND TR-102.

15 PARKING STALLS
1 ADA PARKING STALLS

TOTAL AREA	445,007 SF
EXISTING IMPERVIOUS AREA	131,908 SF
EXISTING PERVIOUS AREA	313,609 SF
ADDED IMPERVIOUS AREA WITH CHEM FEED BLDG ROOF	28,585 SF
ADDED IMPERVIOUS AREA W/OUT CHEM FEED BLDG	22,885 SF

0 40 80
SCALE IN FEET

NO.	DATE	BY	REVISION

NOTICE
0 ½ 1
IF THIS BAR DOES NOT MEASURE 1" THEN DRAWING IS NOT TO SCALE

MDP DESIGNED
NEM DRAWN
ANB CHECKED

REGISTERED PROFESSIONAL ENGINEER 86406PE OREGON SEPTEMBER 12, 2014 ADAM N. BLAIR
RENEWS 12-31-27

BID SET

consor
Stantec

South Fork WATER
PURE WATER SINCE 1915

WATER QUALITY SYSTEMS BUILDING

ESC PLAN PHASE 3 - FINAL GRADING, RUNOFF CONTROL, AND STABILIZATION

PROJECT NO.: W253326OR | SCALE: AS SHOWN | DATE: AUGUST 2026

SHEET
ESC-105

\\EgnyteDrive\Consor Files_V-W\Projects\OR\South Fork Water\2025\W253326OR.00\12 CADD\12-5 Sheets\C-ROAD-ESC-105.dwg ESC-105 7/29/2026 10:47 AM JUSTIN.DEUEL 24.3s (LMS Tech)

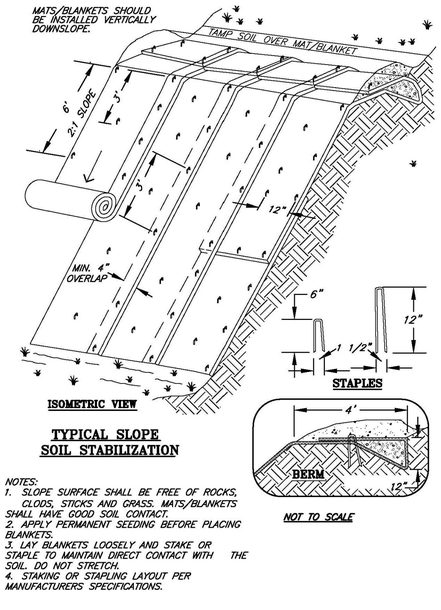

TYPICAL SLOPE SOIL STABILIZATION

NOTES:
1. SLOPE SURFACE SHALL BE FREE OF ROCKS, CLODS, STICKS AND GRASS. MATS/BLANKETS SHALL HAVE GOOD SOIL CONTACT.
2. APPLY PERMANENT SEEDING BEFORE PLACING BLANKETS.
3. LAY BLANKETS LOOSELY AND STAKE OR STAPLE TO MAINTAIN DIRECT CONTACT WITH THE SOIL. DO NOT STRETCH.
4. STAKING OR STAPLING LAYOUT PER MANUFACTURERS SPECIFICATIONS.

© 1994 JOHN MCCULLOUGH

FILE: BLNKTSLP

MATTING - SLOPE INSTALLATION

DETAIL DRAWING 4–1 REVISED 01–09

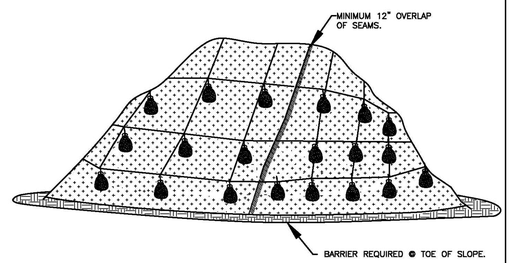

PLASTIC SHEETING

NOTES:
1. MINIMUM 12" OVERLAP OF ALL SEAMS REQUIRED.
2. BARRIER REQUIRED @ TOE OF STOCK PILE.
3. COVERING MAINTAINED TIGHTLY IN PLACE BY USING SANDBAGS OR TIRES ON ROPES WITH A MAXIMUM 10' GRID SPACING IN ALL DIRECTIONS.

PLASTIC SHEETING

DETAIL DRAWING 4–3 REVISED 01–09

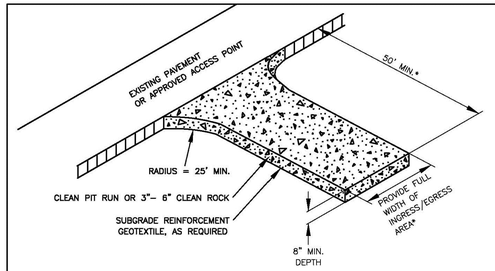

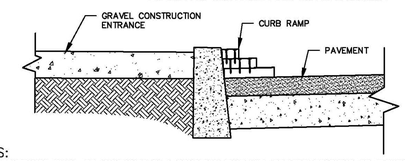

NOTES:
1. THE ENTRANCE SHALL BE MAINTAINED IN A CONDITION THAT WILL PREVENT TRACKING OR FLOWING OF SEDIMENT ONTO PUBLIC RIGHT–OF–WAYS. THIS MAY REQUIRE TOP DRESSING, REPAIR AND/OR CLEAN OUT OF ANY MEASURES USED TO TRAP SEDIMENT.
2. WHEN NECESSARY, WHEELS SHALL BE CLEANED PRIOR TO ENTRANCE ONTO PUBLIC RIGHT–OF– WAY.
3. WHEN WASHING IS REQUIRED, IT SHALL BE DONE ON AN AREA STABILIZED WITH CRUSHED STONE THAT DRAINS INTO AN APPROVED SEDIMENT TRAP OR SEDIMENT BASIN.
4. WHERE RUNOFF CONTAINING SEDIMENT LADEN WATER IS LEAVING THE SITE VIA THE CONSTRUCTION ENTRANCE, OTHER MEASURES SHALL BE IMPLEMENTED TO DIVERT RUNOFF THROUGH AN APPROVED FILTERING SYSTEM.
5. DIMENSIONS
   SINGLE FAMILY
   20' LONG BY 20' WIDE 8" DEEP OF ¾" MINUS CLEAN ROCK.
   COMMERCIAL
   50' LONG BY 20' WIDE 3–6" CLEAN ROCK, GOVERNING AUTHORITY MAY REQUIRE GEOTEXTILE FABRIC TO PREVENT SUB–SOIL PUMPING.

CONSTRUCTION ENTRANCE

DETAIL DRAWING 4–13 REVISED 01–09

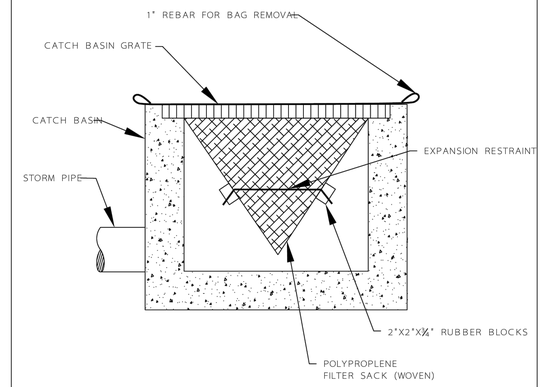

WOVEN POLYPROPLENE SACK

NOTE:
1. RECESSED CURB INLET CATCH BASINS MUST BE BLOCKED WHEN USING FILTER FABRIC INLET SACKS. SIZE OF FILTER FABRIC INLET SACKS TO BE DETERMINED BY MANUFACTURER.

INLET PROTECTION TYPE 5

DETAIL DRAWING 4 - 19 REVISED 01 - 09

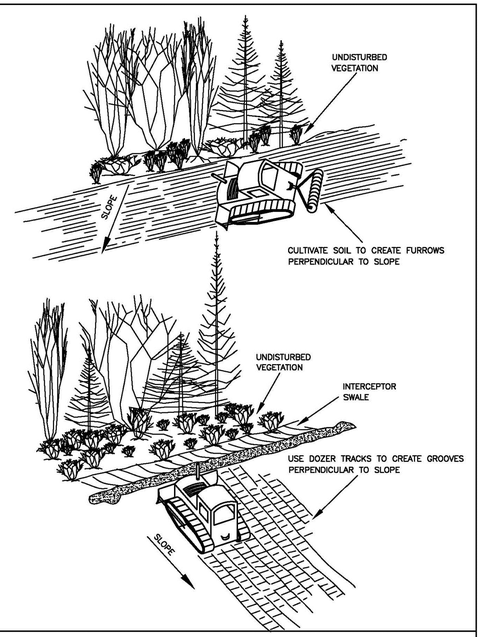

SURFACE ROUGHENING - CAT TRACKING

DETAIL DRAWING 4–10 REVISED 01–09

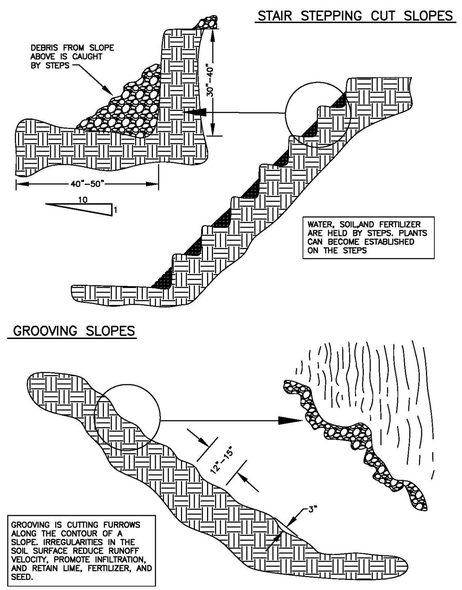

SURFACE ROUGHENING - STAIR STEPPING/GROOVING

DETAIL DRAWING 4–11 REVISED 01–09

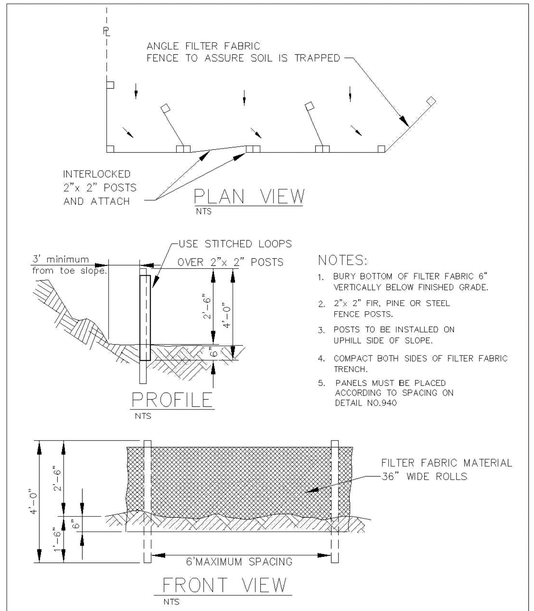

NOTES:
1. BURY BOTTOM OF FILTER FABRIC 6" VERTICALLY BELOW FINISHED GRADE.
2. 2"x 2" FIR, PINE OR STEEL FENCE POSTS.
3. POSTS TO BE INSTALLED ON UPHILL SIDE OF SLOPE.
4. COMPACT BOTH SIDES OF FILTER FABRIC TRENCH.
5. PANELS MUST BE PLACED ACCORDING TO SPACING ON DETAIL NO.940

SEDIMENT FENCE

DETAIL DRAWING 4–23 REVISED 01–09

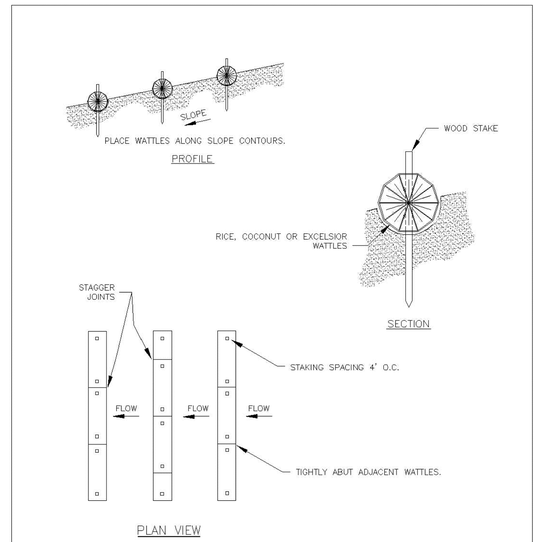

NOTES:
1. STAKING SPECIFICATIONS:
   a. 1"x2" WOODEN STAKES
   b. ADDITIONAL STAKES MAY BE INSTALLED ON DOWNHILL SIDE OF WATTLES, ON STEEP SLOPE OR HIGHLY EROSIVE SOILS.
2. SPACING IN ACCORDANCE WITH DETAIL 940.

WATTLES

DETAIL DRAWING 4–27 REVISED 01–09

NO.	DATE	BY	REVISION

NOTICE
0 ½ 1
IF THIS BAR DOES NOT MEASURE 1" THEN DRAWING IS NOT TO SCALE

MDP DESIGNED
NEM DRAWN
ANB CHECKED

REGISTERED PROFESSIONAL ENGINEER 86406PE OREGON SEPTEMBER 12, 2017 ADAM N. BLAIR
RENEWS 12-31-27

BID SET

consor
Stantec

South Fork WATER
PURE WATER SINCE 1915

WATER QUALITY SYSTEMS BUILDING

EROSION AND SEDIMENT CONTROL DETAILS

PROJECT NO.: W253326OR | SCALE: AS SHOWN | DATE: AUGUST 2026

SHEET
ESC-106

\\EgnyteDrive\Consor Files_V-W\Projects\OR\South Fork Water\2025\W253326OR.00\12 CADD\12-5 Sheets\EROSION AND SEDIMENT CONTROL DETAILS.dwg ESC-106 7/29/2026 10:48 AM JUSTIN.DEUEL 24.3s (LMS Tech)

\\EgnyteDrive\Consor Files_V-W\Projects\OR\South Fork Water\2025\W253326OR.00\12 CADD\12-5 Sheets\C-ROAD-LDSCP-MITIGATION-RESTR - TR-102.dwg TR-101 7/29/2026 10:48 AM JUSTIN.DEUEL 24.3s (LMS Tech)

TREE PROTECTION NOTES

TREE REMOVAL NOTES

1. ONLY THOSE TREES IDENTIFIED IN DRAWINGS FOR REMOVAL MAY BE REMOVED.

2. TREE LOCATIONS ARE APPROXIMATE.

3. CONTRACTOR SHALL COMPLY WITH ALL CITY OF OREGON CITY TREE REMOVAL REQUIREMENTS.

BEFORE CONSTRUCTION BEGINS

1. TREE PROTECTION FENCING:
   a. FURNISH AND INSTALL APPROVED TREE PROTECTION FENCING AROUND EACH TREE OR GROVE OF TREES TO BE RETAINED. SEE DETAIL 1 TREE PROTECTION FENCING ON SHEET TR-102.

   b. THE FENCING SHALL BE INSTALLED PRIOR TO THE GROUND BEING CLEARED IN ORDER TO PROTECT THE TREES AND SOIL AROUND THE TREES FROM ANY DISTURBANCE.

   c. FENCING SHALL BE PLACED AT THE EDGE OF THE ROOT PROTECTION ZONE. ROOT PROTECTION ZONES WILL BE APPROXIMATELY 15' FROM THE CENTER OF THE TREE IN ALL DIRECTIONS OR BELOW THE DRIPLINE OF EXISTING BRANCHES, WHICHEVER DISTANCE IS GREATER.

   d. FENCING SHALL REMAIN IN THE LOCATION AS ESTABLISHED AND APPROVED BY THE OWNER AND NOT MOVED WITHOUT WRITTEN PERMISSION FROM THE OWNER UNTIL THE END OF THE PROJECT.

DURING CONSTRUCTION

1. PROTECTION GUIDELINES WITHIN THE PROTECTION ZONE:
   a. ENTRY INTO THE TREE PROTECTION AREAS IS PROHIBITED UNLESS THROUGH WRITTEN PERMISSION OF THE OWNER.

   b. NO TRAFFIC SHALL BE ALLOWED WITHIN THE TREE PROTECTION ZONE. NO VEHICLE, HEAVY EQUIPMENT, OR REPEATED FOOT TRAFFIC SHALL BE ALLOWED WITHIN THE TREE PROTECTION ZONE.

   c. STORAGE OF MATERIALS INCLUDING, BUT NOT LIMITED TO, SOIL, CONSTRUCTION MATERIAL, OR WASTE FROM THE SITE WILL NOT BE ALLOWED WITHIN THE TREE PROTECTION ZONE. WASTE INCLUDES, BUT IS NOT LIMITED TO, CONCRETE WASH OUT, GASOLINE, DIESEL, PAINT, CLEANER, THINNERS, ETC.

   d. CONSTRUCTION TRAILERS SHALL BE NOT PARKED/PLACED WITHIN THE TREE PROTECTION ZONE WITHOUT WRITTEN APPROVAL FROM THE OWNER.

   e. VEHICLES SHALL NOT BE PARKED WITHIN THE TREE PROTECTION AREAS.

   f. NO ACTIVITY SHALL BE ALLOWED THAT WILL CAUSE SOIL COMPACTION WITHIN THE TREE PROTECTION ZONE.

3. PRIOR TO CUTTING ROOTS FROM EXISTING TREES THAT ARE TO BE RETAINED, THE OWNER SHALL BE NOTIFIED TO EVALUATE AND OVERSEE THE PROPER CUTTING OF ROOTS WITH SHARP CUTTING TOOLS. CUT ROOTS SHALL BE IMMEDIATELY COVERED WITH SOIL OR MULCH TO PREVENT DRYING OF THE ROOT.

4. NO GRADE CHANGES SHALL OCCUR WITHIN THE TREE PROTECTION ZONE.

5. ANY NECESSARY DEVIATION OF THE TREE PROTECTION ZONE SHALL BE APPROVED BY THE OWNER PRIOR TO IMPLEMENTING CHANGES.

6. PROVIDE WATER TO TREES DURING THE SUMMER MONTHS. TREE(S) THAT WILL HAVE HAD ROOT SYSTEM(S) CUT BACK WILL NEED SUPPLEMENTAL WATER TO OVERCOME THE LOSS OF ABILITY TO ABSORB NECESSARY MOISTURE DURING THE SUMMER MONTHS.

WORK WITHIN CRITICAL TREE ZONE:

1. NO EQUIPMENT SHALL OPERATE INSIDE THE TREE PROTECTION FENCING INCLUDING DURING FENCE INSTALLATION AND REMOVAL, UNLESS OTHERWISE APPROVED BY THE OWNER.

2. CONSTRUCTION ACTIVITIES MAY ENCROACH ON NO MORE THAN 25% OF THE ROOT PROTECTION ZONE AREA. THE ENCROACHMENT MAY NOT BE CLOSER THAN ONE HALF OF THE ROOT PROTECTION ZONE RADIUS.

AFTER CONSTRUCTION

1. CAREFULLY LANDSCAPE IN THE AREA OF THE TREE. DO NOT ALLOW TRENCHING WITHIN THE TREE PROTECTION ZONE. CAREFULLY PLANT NEW PLANTS WITHIN THE TREE PROTECTION ZONE. AVOID CUTTING THE ROOTS OF THE EXISTING TREES.

2. DO NOT PLACE IRRIGATION MATERIALS WITHIN THE ROOT PROTECTION ZONE OF EXISTING TREES WITHOUT APPROVAL BY THE OWNER.

3. PROVIDE FOR ADEQUATE DRAINAGE OF THE AREA AROUND THE RETAINED TREES.

4. PRUNING OF THE TREES SHALL BE COMPLETED AS ONE OF THE LAST STEPS OF THE LANDSCAPING PROCESS BEFORE THE FINAL PLACEMENT OF TREES, SHRUBS, GROUND COVERS, MULCH OR SEEDING.

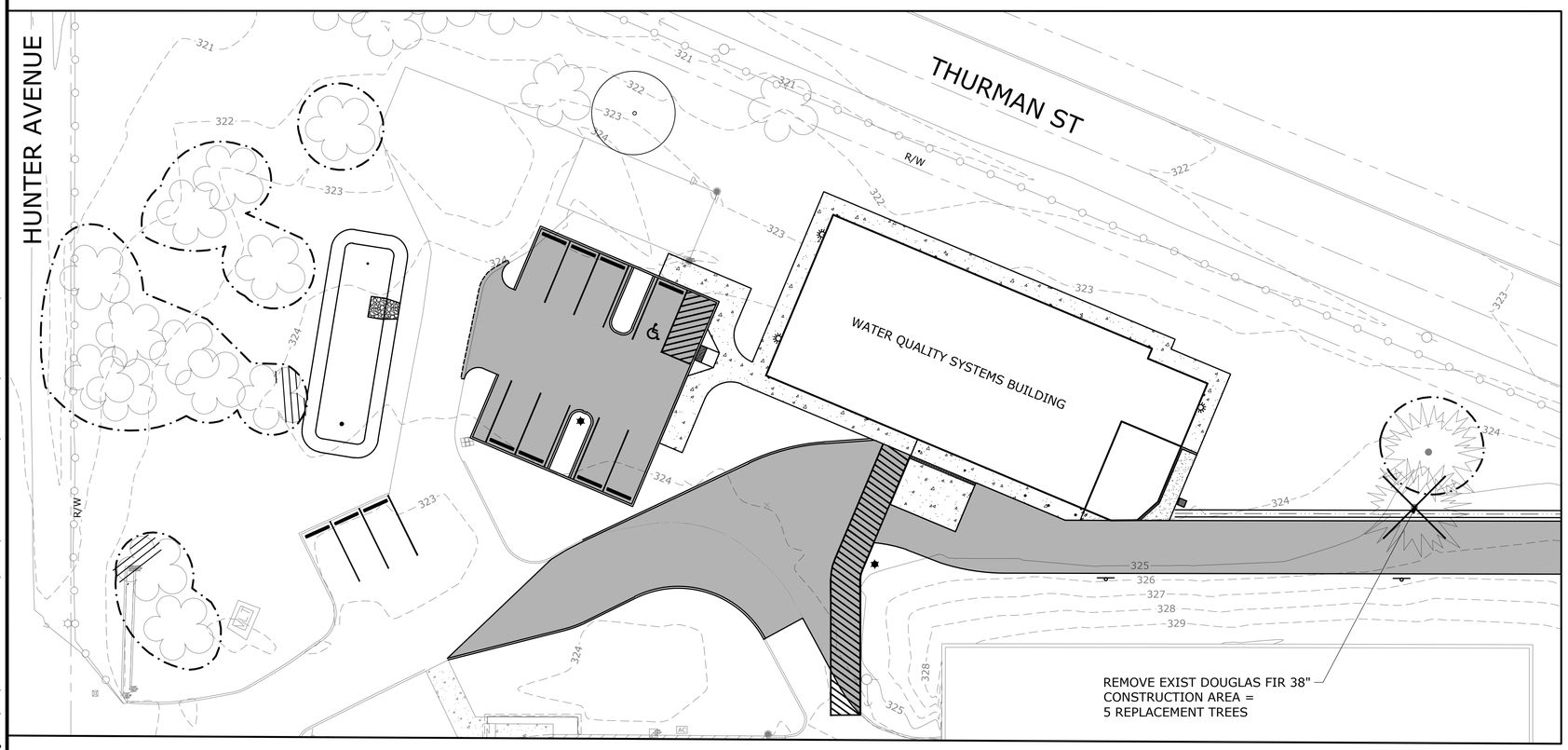

WATER QUALITY SYSTEMS BUILDING AREA

SCALE: 1"=20'

20 10 0 20 40

SCALE IN FEET

PLANTS LIST

COMMON NAME "SCIENTIFIC NAME"	SIZE	SPACING	QUANTITY
TREES			
OREGON WHITE OAK "QUERCUS GARRYANA"	2.5" CAL 10' B&B	AS SHOWN	1

TOTAL TREES - THIS SHEET*

*ONLY TREES PLANTED FOR MITIGATION PURPOSES SHOWN ON THIS SHEET

SEE LANDSCAPING SHEETS FOR TOTAL TREE PLANTED.

LEGEND

EXISTING TREES TO BE REMOVED

EXISTING TREES TO REMAIN

WORK AREA WITHIN CTZ, SEE WORK IN CRITICAL TREE AREA NOTES, THIS SHT

TREE PROTECTION FENCING

NO.	DATE	BY	REVISION

NOTICE

0 ½ 1

IF THIS BAR DOES NOT MEASURE 1" THEN DRAWING IS NOT TO SCALE

RWP DESIGNED

RWP DRAWN

RWP CHECKED

REGISTERED PROFESSIONAL ENGINEER 86406PE OREGON SEPTEMBER 12, 2017 ADAM N. BLAIR

RENEWS 12-31-27

BID SET

consor

Stantec

South Fork WATER PURE WATER SINCE 1915

WATER QUALITY SYSTEMS BUILDING

TREE PRESERVATION, REMOVAL, AND MITIGATION PLAN - 1

PROJECT NO.: W253326OR | SCALE: AS SHOWN | DATE: AUGUST 2026

SHEET

TR-101

PLANTS LIST

COMMON NAME "SCIENTIFIC NAME"	SIZE	SPACING	QUANTITY
TREES			
OREGON WHITE OAK "QUERCUS GARRYANA"	2.5" CAL 10' B&B	AS SHOWN	3
TRICOLOR BEECH FAGUS SYLVATICA 'ROSEO-MARGINATA'	8' B&B	AS SHOWN	5
	TOTAL TREES THIS SHEET*		17

*ONLY TREES PLANTED FOR MITIGATION PURPOSES SHOWN ON THIS SHEET. SEE LANDSCAPING SHEETS FOR TOTAL TREE PLANTED

TREES MITIGATION SCHEDULE

REMOVED TREE	SIZE	REPLACEMENT REQUIREMENT
DOUGLAS FIR (DAMAGED)	48"	0
OREGON WHITE OAK	23"	3
DOUGLAS FIR	40"	5
TOTAL MITIGATION REQUIREMENT (SHEETS TR-101 & TR-102)		8

LEGEND

EXISTING TREES TO BE REMOVED

EXISTING TREES TO REMAIN

WORK AREA WITHIN CRZ, SEE WORK IN CRITICAL ROOT ZONE NOTES, THIS SHT

TREE PROTECTION FENCING

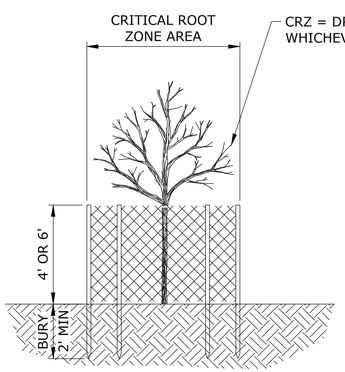

NOTES:

1. ORANGE FENCING SHALL BE 4' IN HEIGHT, MESH CHAIN LINK FENCE SHALL BE 6' IN HEIGHT. FENCE SHALL BE SET AS SHOWN ON THE PLANS.

2. FENCE MATERIALS SHALL CONSIST OF ORANGE CONSTRUCTION FENCING OR MESH CHAIN LINK AS SHOWN ON THE PLANS, SECURED TO A MINIMUM 1 ½" DIAMETER STEEL OR ALUMINUM LINE POSTS.

3. POSTS SHALL BE SET TO A DEPTH OF NO LESS THAN 2 FEET IN NATIVE SOIL.

4. MOVEMENT OR REMOVAL OF FENCE REQUIRES APPROVAL BY OWNER'S AUTHORIZED REPRESENTATIVE.

5. SEE SPECIFICATION 01 56 39 TEMPORARY TREE AND PLANT PROTECTION FOR ADDITIONAL REQUIREMENTS FOR WORK WITHIN THE CRZ

TREE PROTECTION FENCING (1 / -)
SCALE: NTS

SEE BOTTOM RIGHT
CONTINUATION

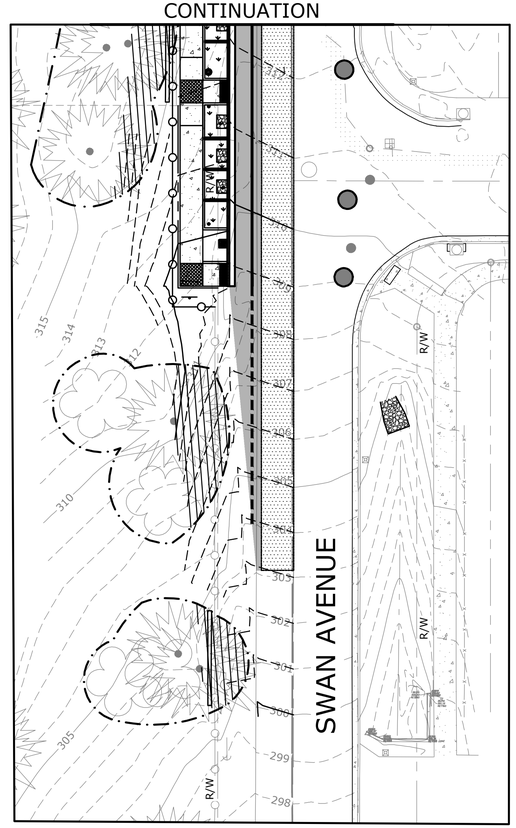

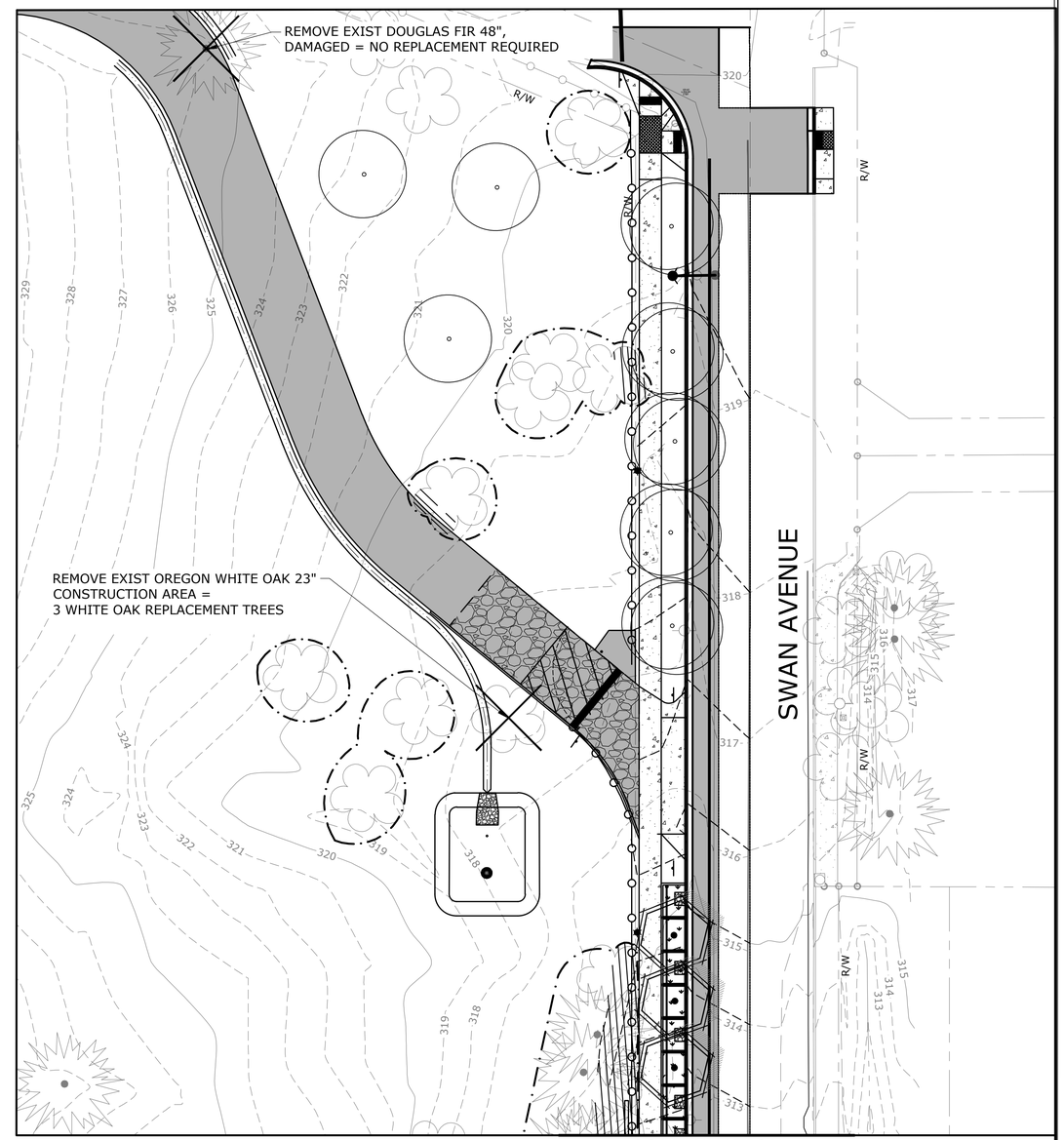

CONTINUATION
SEE TOP LEFT

NORTH EAST AREA
SCALE: 1"=20'

N

20 10 0 20 40
SCALE IN FEET

NO.	DATE	BY	REVISION

NOTICE
0 ½ 1
IF THIS BAR DOES NOT MEASURE 1" THEN DRAWING IS NOT TO SCALE

RWP DESIGNED
RWP DRAWN
RWP CHECKED

REGISTERED PROFESSIONAL ENGINEER 86406PE OREGON SEPTEMBER 12, 2017 ADAM N. BLAIR
RENEWS 12-31-27

BID SET

consor
Stantec

South Fork WATER
PURE WATER SINCE 1915

WATER QUALITY SYSTEMS BUILDING

TREE PRESERVATION, REMOVAL, AND MITIGATION PLAN - 2

PROJECT NO.: W253326OR | SCALE: AS SHOWN | DATE: AUGUST 2026

SHEET
TR-102

\\EgnyteDrive\Consor Files_V-W\Projects\OR\South Fork Water\2025\W253326OR.00\12 CADD\12-5 Sheets\C-ROAD-LDSCP-MITIGATION-RESTR - TR-102.dwg TR-102 7/29/2026 10:48 AM JUSTIN.DEUEL 24.3s (LMS Tech)

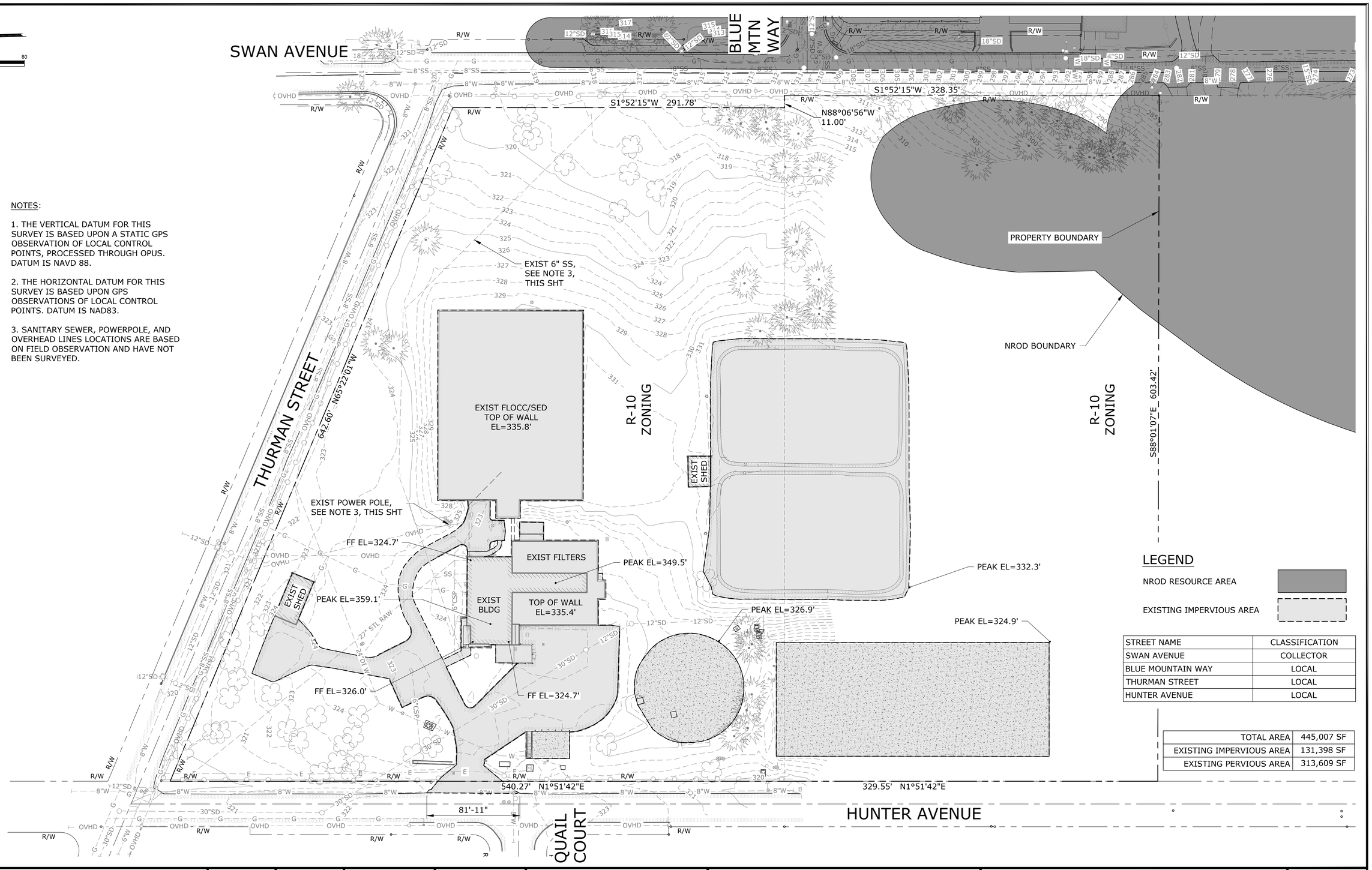

NOTES:

1. THE VERTICAL DATUM FOR THIS SURVEY IS BASED UPON A STATIC GPS OBSERVATION OF LOCAL CONTROL POINTS, PROCESSED THROUGH OPUS. DATUM IS NAVD 88.

2. THE HORIZONTAL DATUM FOR THIS SURVEY IS BASED UPON GPS OBSERVATIONS OF LOCAL CONTROL POINTS. DATUM IS NAD83.

3. SANITARY SEWER, POWERPOLE, AND OVERHEAD LINES LOCATIONS ARE BASED ON FIELD OBSERVATION AND HAVE NOT BEEN SURVEYED.

LEGEND

NROD RESOURCE AREA

EXISTING IMPERVIOUS AREA

STREET NAME	CLASSIFICATION
SWAN AVENUE	COLLECTOR
BLUE MOUNTAIN WAY	LOCAL
THURMAN STREET	LOCAL
HUNTER AVENUE	LOCAL

TOTAL AREA	445,007 SF
EXISTING IMPERVIOUS AREA	131,398 SF
EXISTING PERVIOUS AREA	313,609 SF

NO.	DATE	BY	REVISION

NOTICE
0 ½ 1
IF THIS BAR DOES NOT MEASURE 1" THEN DRAWING IS NOT TO SCALE

KKS DESIGNED
AJR DRAWN
ANB CHECKED

REGISTERED PROFESSIONAL ENGINEER 86406PE OREGON SEPTEMBER 12, 2017 ADAM N. BLAIR
RENEWS 12-31-27

BID SET

consor
Stantec

South Fork WATER
PURE WATER SINCE 1915

WATER QUALITY SYSTEMS BUILDING

CIVIL SITE

EXISTING CONDITIONS

PROJECT NO.: W253326OR | SCALE: AS SHOWN | DATE: AUGUST 2026

SHEET C-101

\\EgnyteDrive\Consor Files_V-W\Projects\OR\South Fork Water\2025\W253326OR.00\12 CADD\12-5 Sheets\C-ROAD-EXST-COND.dwg C-101 7/29/2026 10:48 AM JUSTIN.DEUEL 24.3s (LMS Tech)

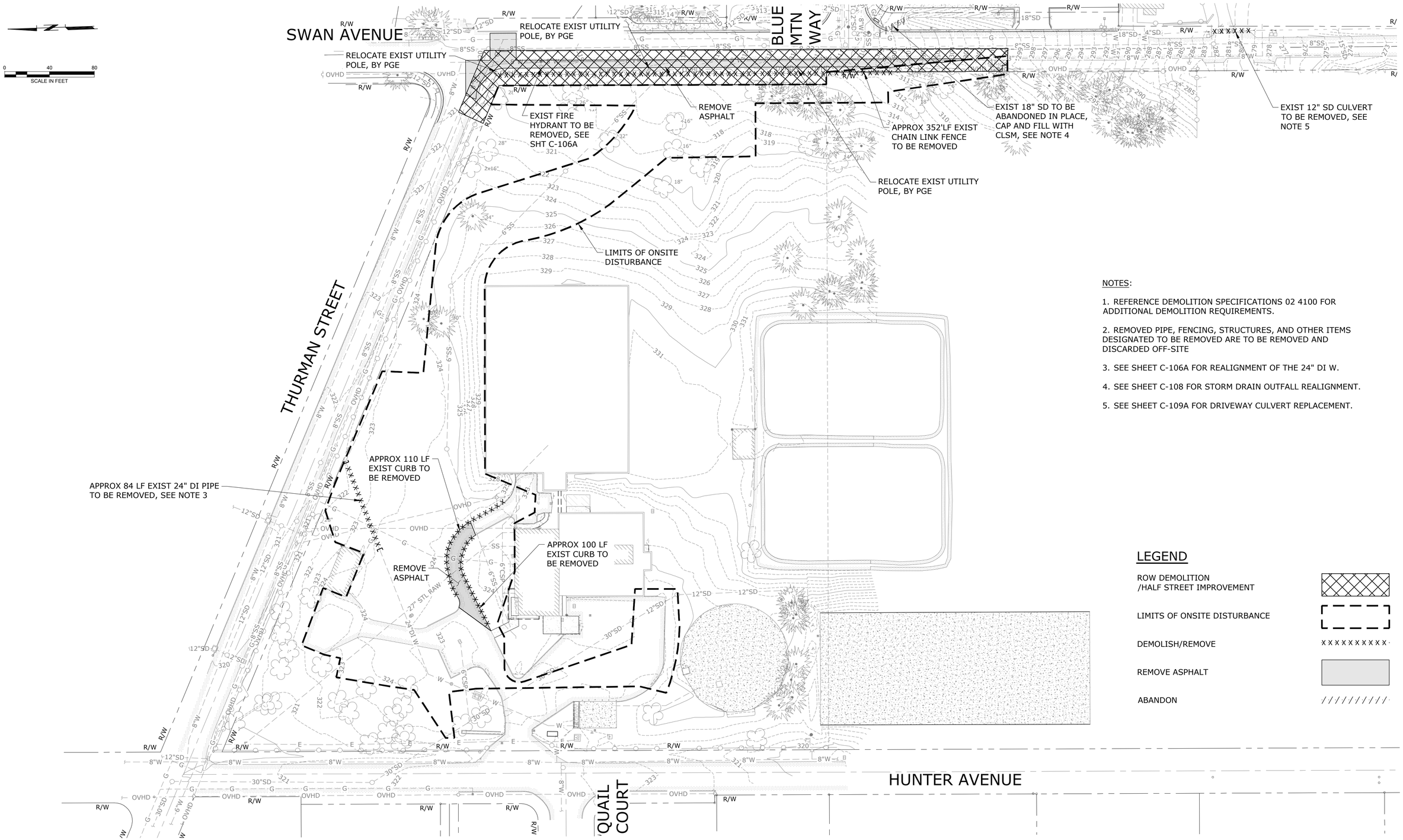

NOTES:

1. REFERENCE DEMOLITION SPECIFICATIONS 02 4100 FOR ADDITIONAL DEMOLITION REQUIREMENTS.

2. REMOVED PIPE, FENCING, STRUCTURES, AND OTHER ITEMS DESIGNATED TO BE REMOVED ARE TO BE REMOVED AND DISCARDED OFF-SITE

3. SEE SHEET C-106A FOR REALIGNMENT OF THE 24" DI W.

4. SEE SHEET C-108 FOR STORM DRAIN OUTFALL REALIGNMENT.

5. SEE SHEET C-109A FOR DRIVEWAY CULVERT REPLACEMENT.

LEGEND

ROW DEMOLITION /HALF STREET IMPROVEMENT

LIMITS OF ONSITE DISTURBANCE

DEMOLISH/REMOVE

REMOVE ASPHALT

ABANDON

NO.	DATE	BY	REVISION

NOTICE
0 ½ 1
IF THIS BAR DOES NOT MEASURE 1" THEN DRAWING IS NOT TO SCALE

KKS DESIGNED
JLC DRAWN
ANB CHECKED

REGISTERED PROFESSIONAL ENGINEER 86406PE OREGON SEPTEMBER 12, 2017 ADAM N. BLAIR
RENEWS 12-31-27

BID SET

consor
Stantec

South Fork WATER
PURE WATER SINCE 1915

WATER QUALITY SYSTEMS BUILDING

CIVIL SITE

DEMOLITION PLAN

PROJECT NO.: W253326OR | SCALE: AS SHOWN | DATE: AUGUST 2026

SHEET C-102

\\EgnyteDrive\Consor Files_V-W\Projects\OR\South Fork Water\2025\W253326OR.00\12 CADD\12-5 Sheets\DEMOLITION PLAN.dwg C-102 7/29/2026 10:49 AM JUSTIN.DEUEL 24.3s (LMS Tech)

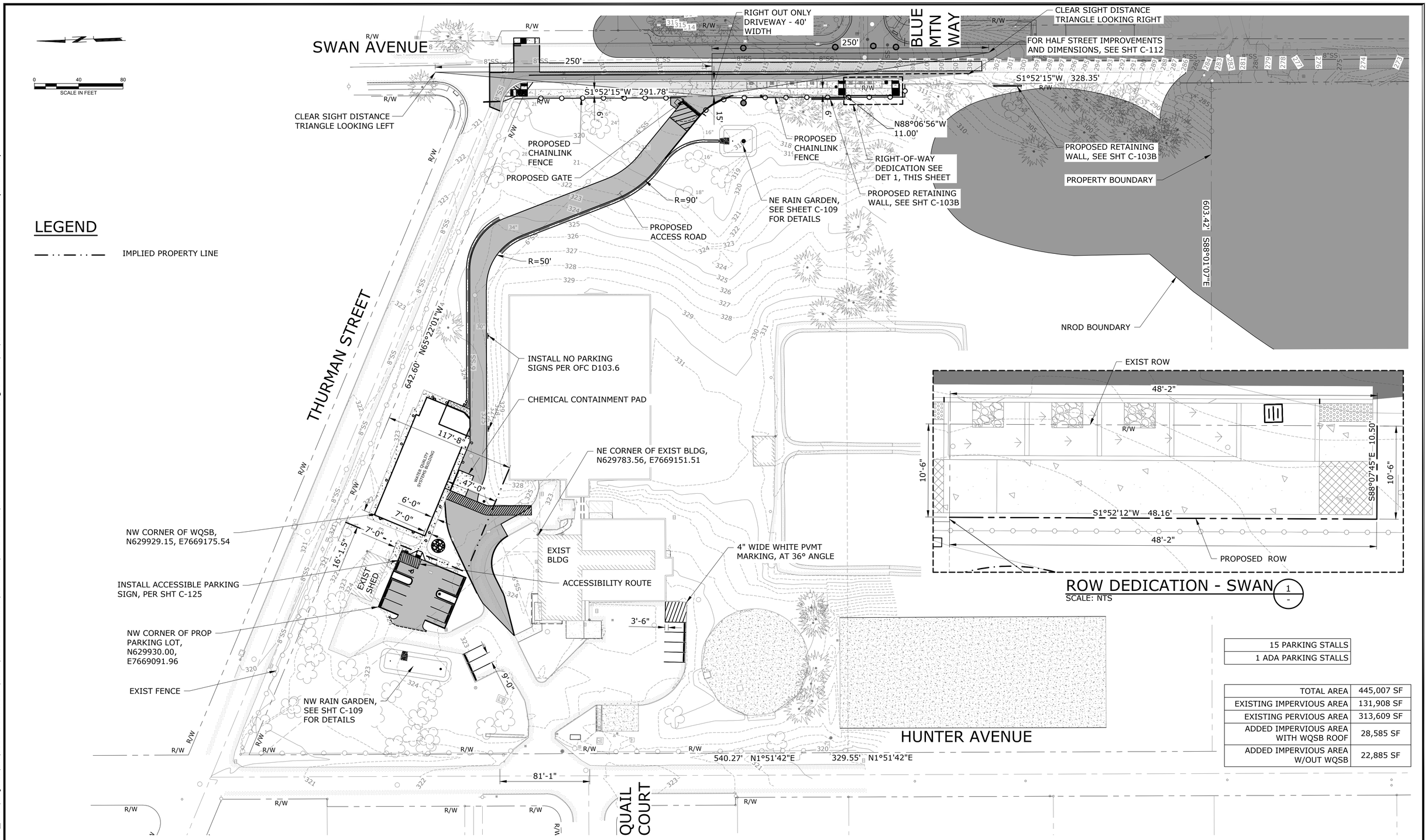

LEGEND

IMPLIED PROPERTY LINE

15 PARKING STALLS	
1 ADA PARKING STALLS	

TOTAL AREA	445,007 SF
EXISTING IMPERVIOUS AREA	131,908 SF
EXISTING PERVIOUS AREA	313,609 SF
ADDED IMPERVIOUS AREA WITH WQSB ROOF	28,585 SF
ADDED IMPERVIOUS AREA W/OUT WQSB	22,885 SF

NO.	DATE	BY	REVISION

NOTICE
0 ½ 1
IF THIS BAR DOES NOT MEASURE 1" THEN DRAWING IS NOT TO SCALE

KKS DESIGNED
MDP DRAWN
ANB CHECKED

REGISTERED PROFESSIONAL ENGINEER 86406PE OREGON SEPTEMBER 12, 2017 ADAM N. BLAIR
RENEWS 12-31-27

BID SET

consor
Stantec

South Fork WATER PURE WATER SINCE 1915

WATER QUALITY SYSTEMS BUILDING

CIVIL SITE

SITE DIMENSIONAL PLAN

PROJECT NO.: W253326OR | SCALE: AS SHOWN | DATE: AUGUST 2026

SHEET C-103

\\EgnyteDrive\Consor Files_V-W\Projects\OR\South Fork Water\2025\W253326OR.00\12 CADD\12-5 Sheets\SITE DIMENSIONAL PLAN.dwg C-103 7/29/2026 10:49 AM JUSTIN.DEUEL 24.3s (LMS Tech)

SITE LAYOUT TABLE

PT NO.	DESCRIPTION	NORTHING	EASTING
1	NW CORNER OF EXIST WATER TREATMENT BUILDING	N629783.57	E7669151.51
2	NE CORNER OF EXIST WATER TREATMENT BUILDING	N629789.50	E7669074.64
3	NE CORNER OF EXIST SHED	N629937.70	E7669142.38
4	SE CORNER OF EXIST SHED	N629919.16	E7669133.90
5	SW CORNER OF EXIST SHED	N629935.99	E7669096.75
6	NW CORNER OF EXIST SEDIMENTATION BASIN	N629808.09	E7669201.88

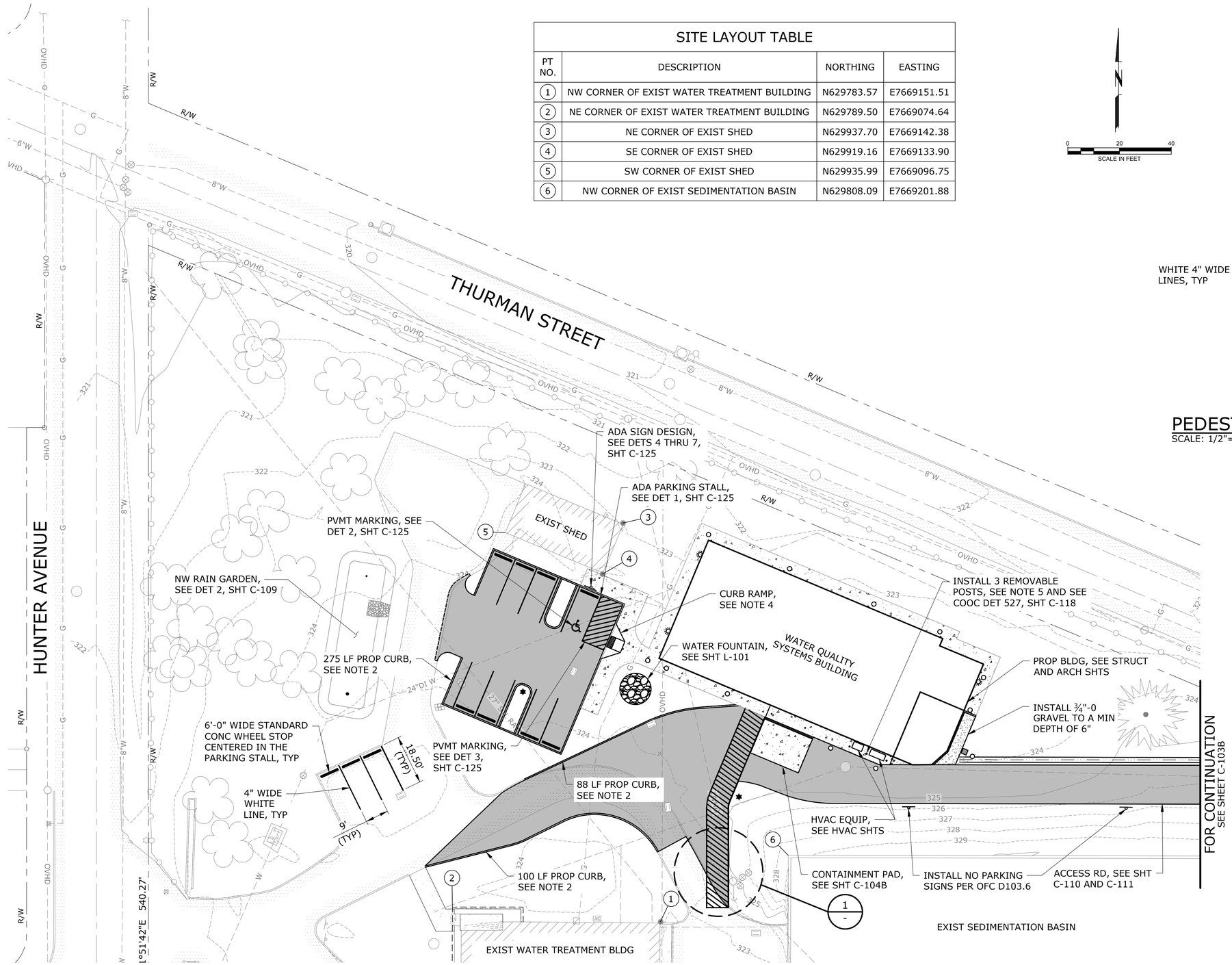

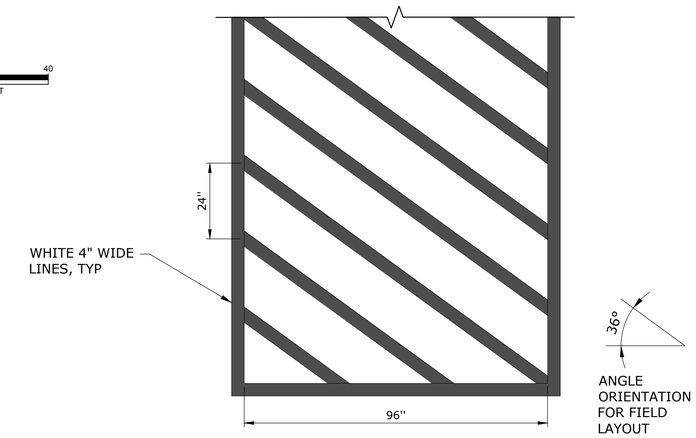

PEDESTRIAN CROSSING PAVEMENT MARKINGS

SCALE: 1/2"=1'-0"

1
-

LEGEND

- PROPOSED HMAC PAVEMENT, SEE COOC DET 500
- EXIST HMAC PAVEMENT
- PROPOSED CONCRETE
- EXIST CONCRETE
- PROPOSED GRAVEL

NOTES:

1. REFER TO GRADING PLANS FOR ASPHALT PAVEMENT EXTENTS.
2. INSTALL CURB PER COOC STD DET 511, SHT C-117.
3. INSTALL SIDEWALK PER COOC STD DET 508, SHT C-117.
4. INSTALL PERPENDICULAR CURB RAMP PER ODOT STD DWG RD910, SHT C-125.
5. LOCATE REMOVABLE POSTS 1FT OFF OF THE CORNER OF HVAC EQUIPMENT AND 3 FT OFF OF THE BUILDING WALL.

NO.	DATE	BY	REVISION

NOTICE
0 ½ 1
IF THIS BAR DOES NOT MEASURE 1" THEN DRAWING IS NOT TO SCALE

KKS DESIGNED
MDP DRAWN
ANB CHECKED

REGISTERED PROFESSIONAL ENGINEER 86406PE OREGON SEPTEMBER 12, 2014 ADAM N. BLAIR
RENEWS 12-31-27

BID SET

consor
Stantec

South Fork WATER
PURE WATER SINCE 1915

WATER QUALITY SYSTEMS BUILDING

CIVIL SITE

SITE PLAN - 1

PROJECT NO.: W253326OR | SCALE: AS SHOWN | DATE: AUGUST 2026

SHEET
C-103A

\\EgnyteDrive\Consor Files_V-W\Projects\OR\South Fork Water\2025\W253326OR.00\12 CADD\12-5 Sheets\SITE PLAN - 2.dwg C-103A 7/29/2026 10:49 AM JUSTIN.DEUEL 24.3s (LMS Tech)

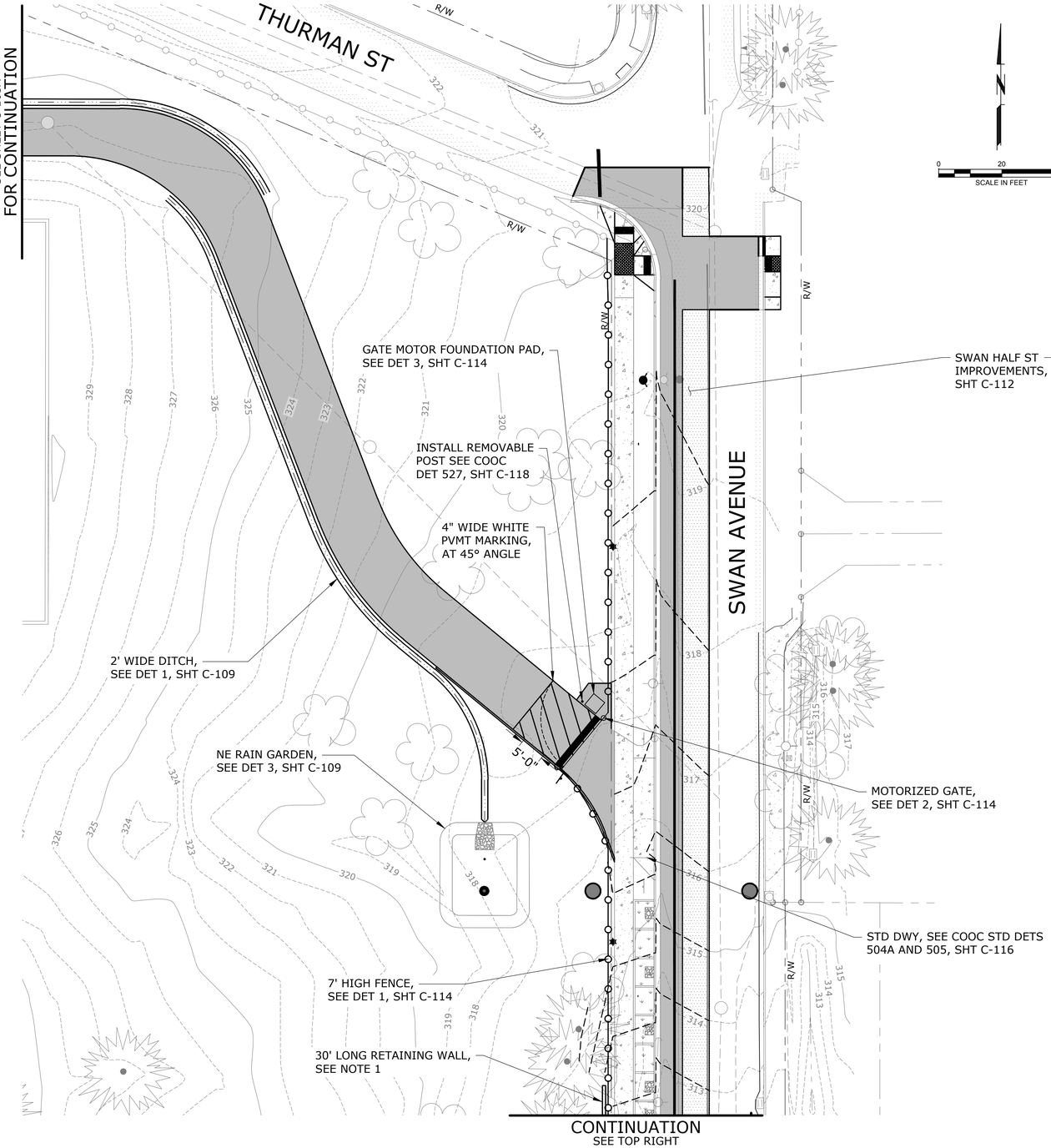

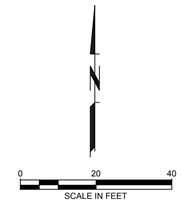

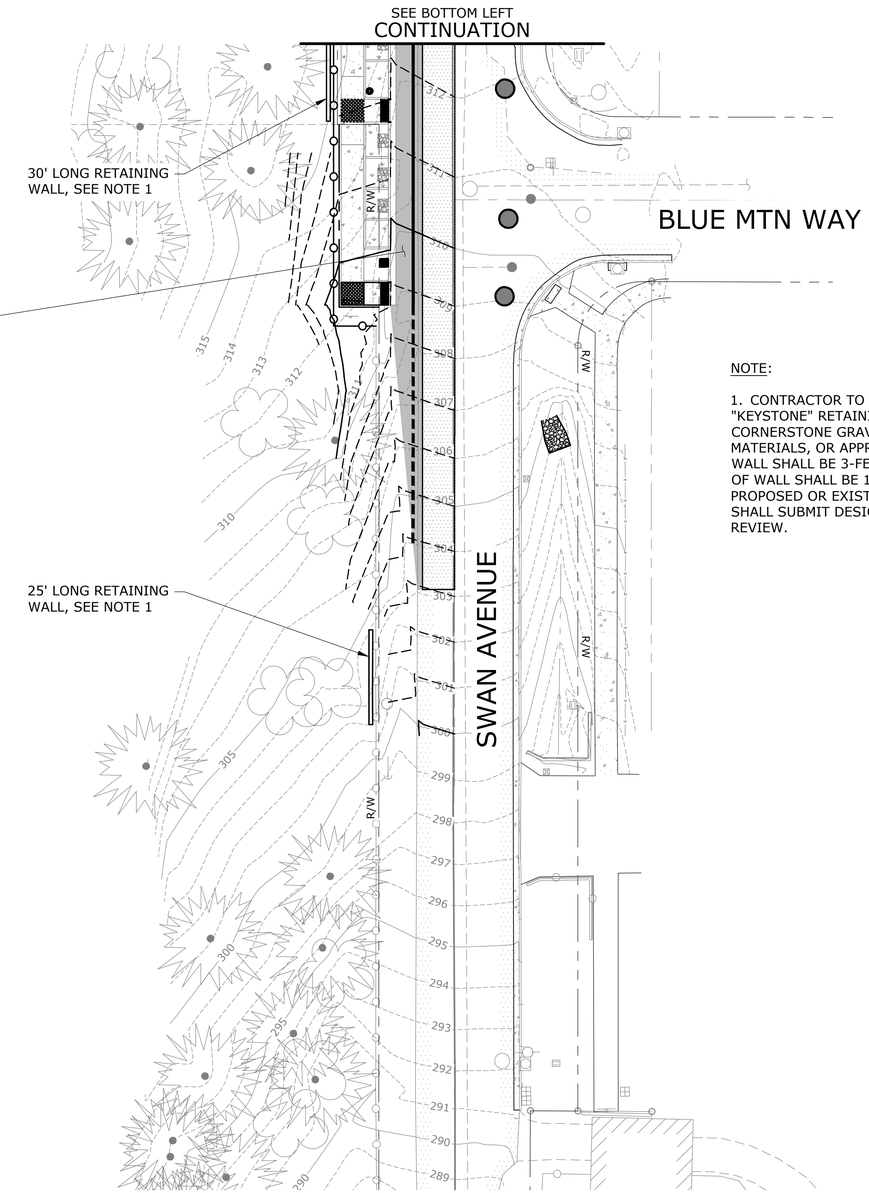

NOTE:

1. CONTRACTOR TO DESIGN AND INSTALL "KEYSTONE" RETAINING WALL WITH CORNERSTONE GRAVITY BLOCKS BY MUTUAL MATERIALS, OR APPROVED EQUAL. RETAINING WALL SHALL BE 3-FEET IN HEIGHT. EAST FACE OF WALL SHALL BE 1-FOOT AWAY FROM THE PROPOSED OR EXISTING FENCE. CONTRACTOR SHALL SUBMIT DESIGN TO ENGINEER FOR REVIEW.

NO.	DATE	BY	REVISION

NOTICE
0 ½ 1
IF THIS BAR DOES NOT MEASURE 1" THEN DRAWING IS NOT TO SCALE

KKS DESIGNED
MDP DRAWN
ANB CHECKED

REGISTERED PROFESSIONAL ENGINEER 86406PE OREGON SEPTEMBER 12, 2017 ADAM N. BLAIR
RENEWS 12-31-27

BID SET

consor
Stantec

South Fork WATER
PURE WATER SINCE 1915

WATER QUALITY SYSTEMS BUILDING

CIVIL SITE

SITE PLAN - 2

PROJECT NO.: W253326OR | SCALE: AS SHOWN | DATE: AUGUST 2026

SHEET
C-103B

\\EgnyteDrive\Consor Files_V-W\Projects\OR\South Fork Water\2025\W253326OR.00\12 CADD\12-5 Sheets\SITE PLAN - 2.dwg C-103B 7/29/2026 10:50 AM JUSTIN.DEUEL 24.3s (LMS Tech)

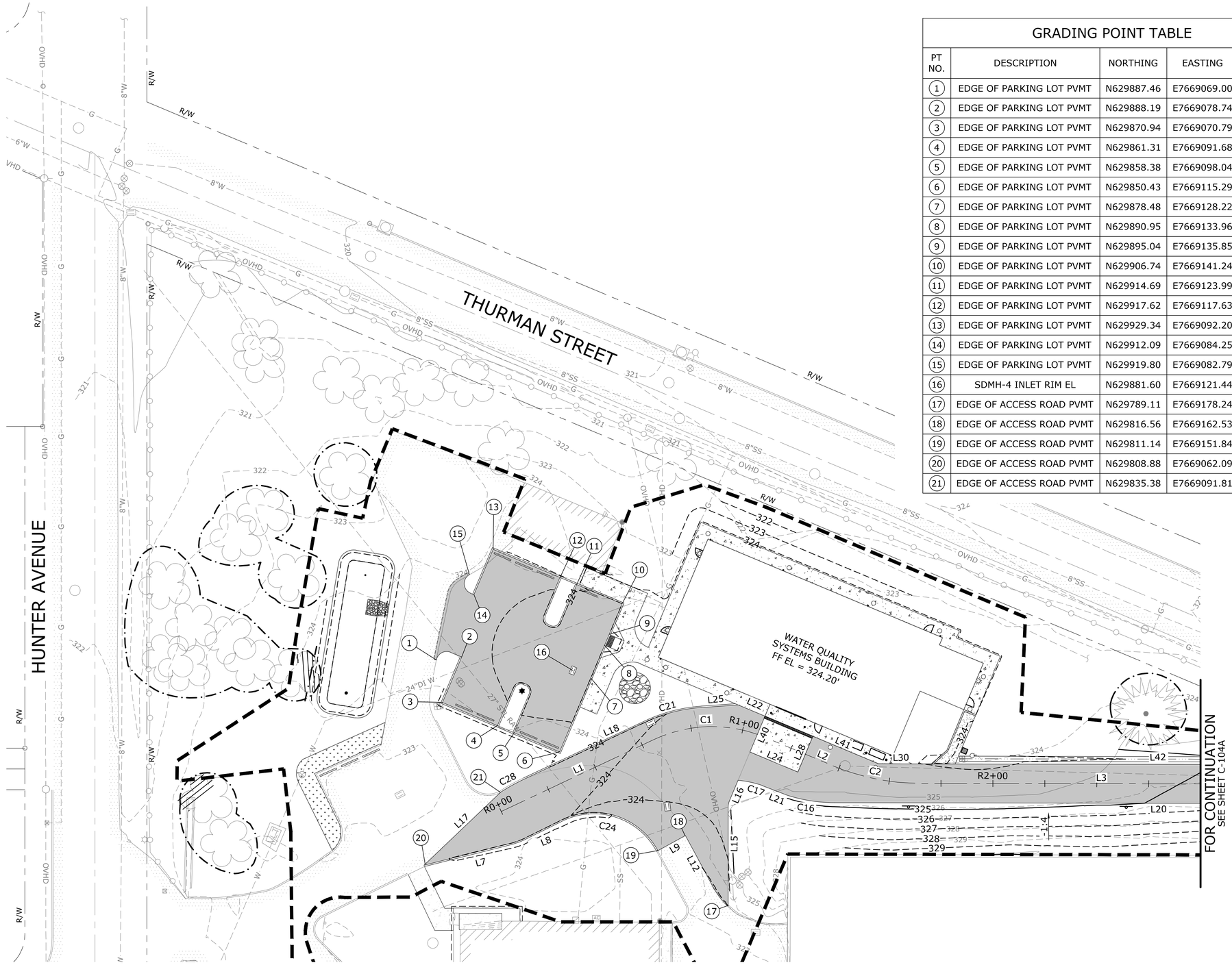

0 20 40
SCALE IN FEET

NOTES:

1. SEE SHEET C-110 FOR ACCESS ROAD PROFILE.
2. SEE SHEET C-111 FOR LINE AND CURVE TABLES.
3. SEE SHEET G-005 FOR COOC STANDARD GRADING NOTES.
4. SEE SHEET TR-101 AND TR-102 FOR TREE PROTECTION NOTES AND REQUIREMENTS.

TOTAL LIMITS OF DISTURBANCE	AREA = 1.252 ACRES

LEGEND

- LIMITS OF ONSITE DISTURBANCE
- TREE PROTECTION FENCE
- CRITICAL TREE ZONE

GRADING POINT TABLE

PT NO.	DESCRIPTION	NORTHING	EASTING	ELEVATION
1	EDGE OF PARKING LOT PVMT	N629887.46	E7669069.00	324.32
2	EDGE OF PARKING LOT PVMT	N629888.19	E7669078.74	324.13
3	EDGE OF PARKING LOT PVMT	N629870.94	E7669070.79	324.23
4	EDGE OF PARKING LOT PVMT	N629861.31	E7669091.68	324.11
5	EDGE OF PARKING LOT PVMT	N629858.38	E7669098.04	324.13
6	EDGE OF PARKING LOT PVMT	N629850.43	E7669115.29	324.23
7	EDGE OF PARKING LOT PVMT	N629878.48	E7669128.22	323.62
8	EDGE OF PARKING LOT PVMT	N629890.95	E7669133.96	323.75
9	EDGE OF PARKING LOT PVMT	N629895.04	E7669135.85	323.80
10	EDGE OF PARKING LOT PVMT	N629906.74	E7669141.24	323.92
11	EDGE OF PARKING LOT PVMT	N629914.69	E7669123.99	324.02
12	EDGE OF PARKING LOT PVMT	N629917.62	E7669117.63	324.05
13	EDGE OF PARKING LOT PVMT	N629929.34	E7669092.20	324.19
14	EDGE OF PARKING LOT PVMT	N629912.09	E7669084.25	324.10
15	EDGE OF PARKING LOT PVMT	N629919.80	E7669082.79	324.26
16	SDMH-4 INLET RIM EL	N629881.60	E7669121.44	323.59
17	EDGE OF ACCESS ROAD PVMT	N629789.11	E7669178.24	322.82
18	EDGE OF ACCESS ROAD PVMT	N629816.56	E7669162.53	323.14
19	EDGE OF ACCESS ROAD PVMT	N629811.14	E7669151.84	323.00
20	EDGE OF ACCESS ROAD PVMT	N629808.88	E7669062.09	323.41
21	EDGE OF ACCESS ROAD PVMT	N629835.38	E7669091.81	323.27

\\EgnyteDrive\Consor Files_V-W\Projects\OR\South Fork Water\2025\W253326OR.00\12 CADD\12-5 Sheets\C-ROAD-GRADING PLAN.dwg C-104 7/29/2026 10:50 AM JUSTIN.DEUEL 24.3s (LMS Tech)

NO.	DATE	BY	REVISION

NOTICE
0 ½ 1
IF THIS BAR DOES NOT MEASURE 1" THEN DRAWING IS NOT TO SCALE

KKS DESIGNED
MDP DRAWN
ANB CHECKED

REGISTERED PROFESSIONAL ENGINEER 86406PE OREGON SEPTEMBER 12, 2014 ADAM N. BLAIR
RENEWS 12-31-27

BID SET

consor
Stantec

South Fork WATER
PURE WATER SINCE 1915

WATER QUALITY SYSTEMS BUILDING

CIVIL SITE

GRADING PLAN - 1

PROJECT NO.: W253326OR | SCALE: AS SHOWN | DATE: AUGUST 2026

SHEET
C-104

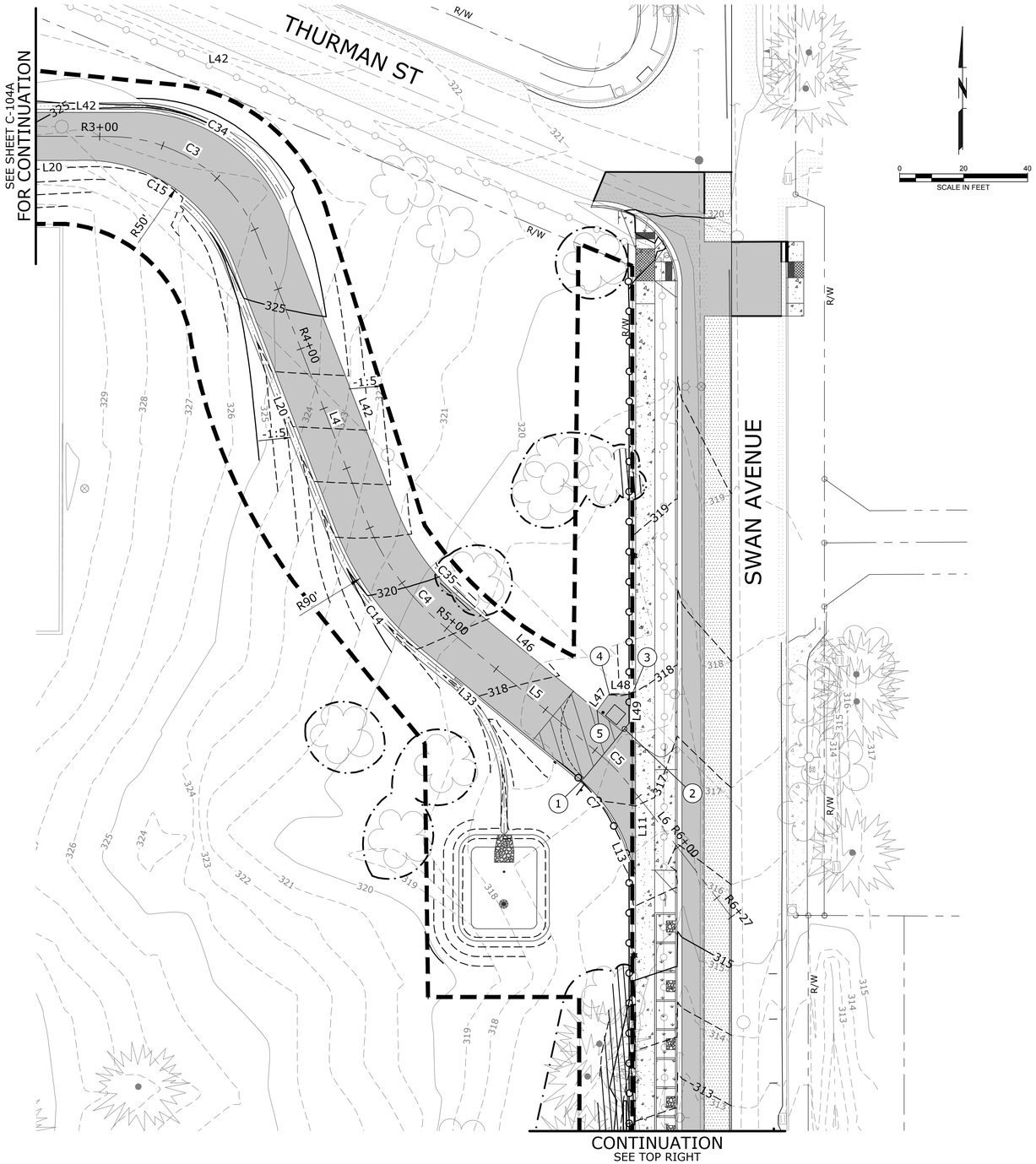

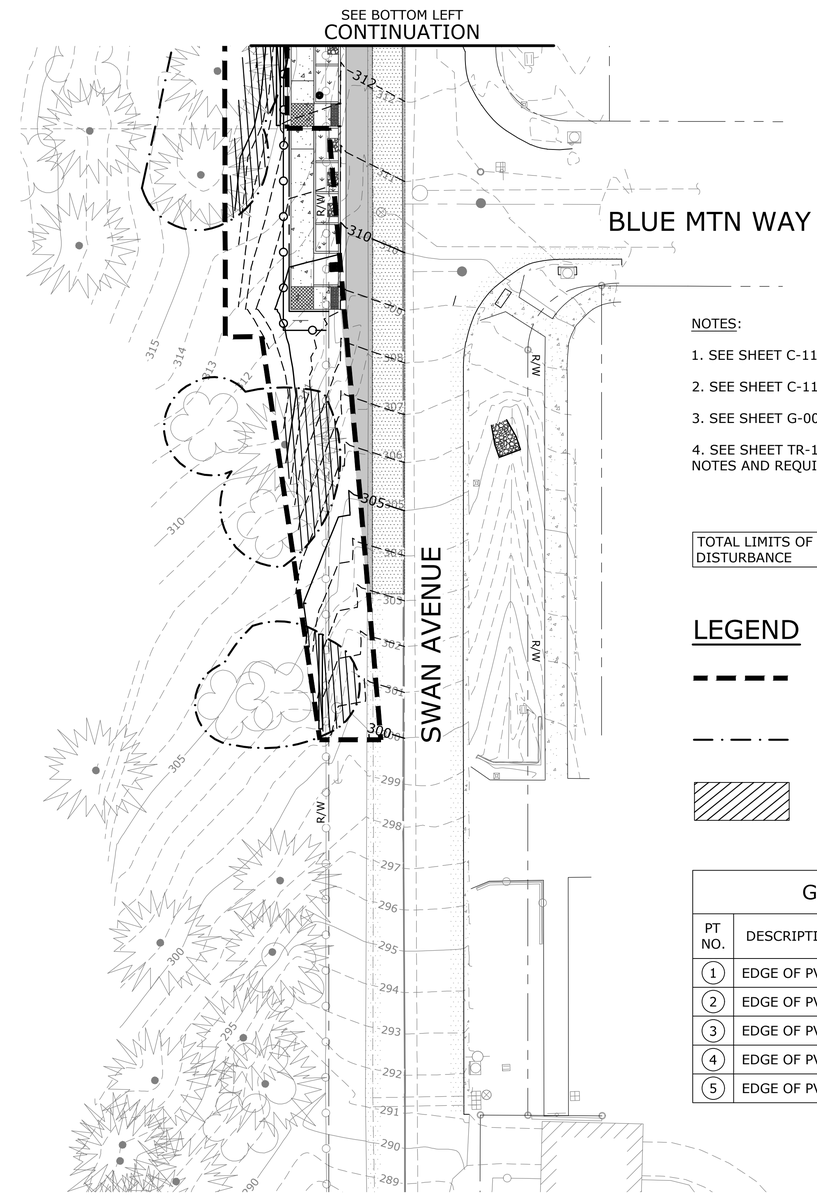

NOTES:

1. SEE SHEET C-110 FOR ACCESS ROAD PROFILE.
2. SEE SHEET C-111 FOR LINE AND CURVE TABLES.
3. SEE SHEET G-005 FOR COOC STANDARD GRADING NOTES.
4. SEE SHEET TR-101 AND TR-102 FOR TREE PROTECTION NOTES AND REQUIREMENTS.

TOTAL LIMITS OF DISTURBANCE	AREA = 1.252 ACRES

LEGEND

- LIMITS OF ONSITE DISTURBANCE
- TREE PROTECTION FENCE
- CRITICAL TREE ZONE

GRADING POINT TABLE

PT NO.	DESCRIPTION	NORTHING	EASTING	ELEVATION
1	EDGE OF PVMT	N629623.14	E7669525.72	317.24
2	EDGE OF PVMT	N629638.91	E7669539.63	317.59
3	EDGE OF PVMT	N629649.78	E7669542.47	317.99
4	EDGE OF PVMT	N629650.02	E7669535.22	318.03
5	EDGE OF PVMT	N629644.89	E7669531.30	317.51

NO.	DATE	BY	REVISION

NOTICE
0 ½ 1
IF THIS BAR DOES NOT MEASURE 1" THEN DRAWING IS NOT TO SCALE

KKS DESIGNED
MDP DRAWN
ANB CHECKED

REGISTERED PROFESSIONAL ENGINEER 86406PE OREGON SEPTEMBER 12, 2014 ADAM N. BLAIR
RENEWS 12-31-27

BID SET

consor
Stantec

South Fork WATER
PURE WATER SINCE 1915

WATER QUALITY SYSTEMS BUILDING

CIVIL SITE

GRADING PLAN - 2

PROJECT NO.: W253326OR | SCALE: AS SHOWN | DATE: AUGUST 2026

SHEET
C-104A

\\EgnyteDrive\Consor Files_V-W\Projects\OR\South Fork Water\2025\W253326OR.00\12 CADD\12-5 Sheets\C-ROAD-GRADING PLAN.dwg C-104A 7/29/2026 10:50 AM JUSTIN.DEUEL 24.3s (LMS Tech)

NOTES:

1. SEE SHEET C-110 FOR ACCESS ROAD PROFILE.

2. SEE SHEET C-111 FOR LINE AND CURVE TABLES.

3. SEE SHEET G-005 FOR COOC STANDARD GRADING NOTES.

4. SEE SHEET TR-101 AND TR-102 FOR TREE PROTECTION NOTES AND REQUIREMENTS.

5. CONCRETE SIDEWALK SURFACE ADJACENT TO THE EQUIPMENT PAD SHALL BE GRADED TO MATCH GRADING POINTS 13, 14, AND THE EDGE OF ROAD.

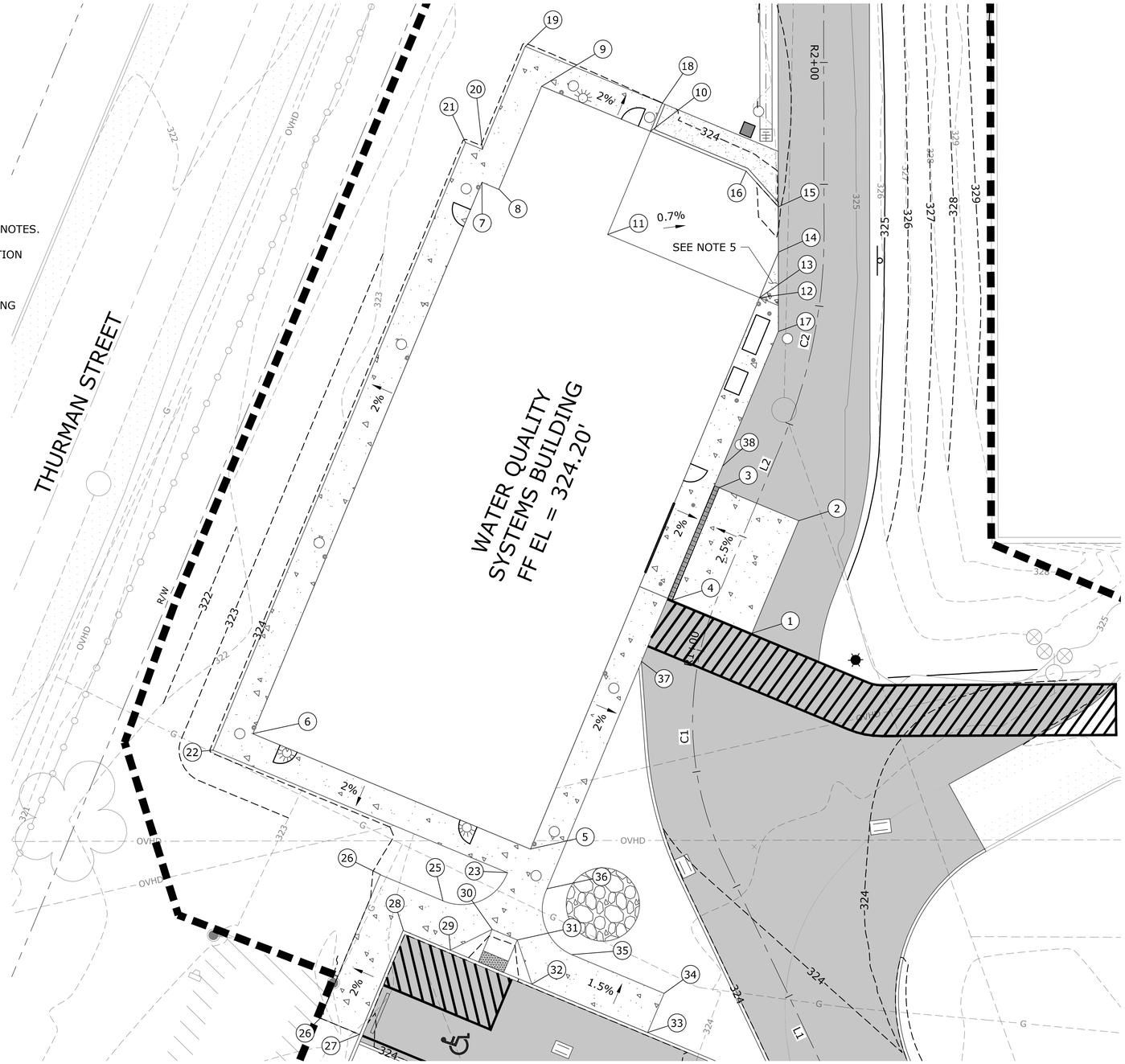

GRADING POINT TABLE

PT NO.	DESCRIPTION	NORTHING	EASTING	ELEVATION
1	EDGE OF CONTAINMENT PAD	N629848.00	E7669188.57	324.48
2	EDGE OF CONTAINMENT PAD	N629839.67	E7669206.75	324.48
3	EDGE OF CONTAINMENT PAD	N629852.54	E7669212.65	324.12
4	EDGE OF CONTAINMENT PAD	N629860.88	E7669194.47	324.12
5	EDGE OF WQSB	N629885.63	E7669154.48	324.20
6	EDGE OF WQSB	N629930.48	E7669175.05	324.20
7	EDGE OF WQSB	N629889.63	E7669264.13	324.20
8	EDGE OF WQSB	N629886.90	E7669262.88	324.20
9	EDGE OF WQSB	N629879.26	E7669279.54	324.20
10	EDGE OF WQSB	N629861.69	E7669271.48	324.11
11	EDGE OF WQSB	N629869.33	E7669254.83	324.20
12	EDGE OF WQSB AT EDGE OF S/W	N629844.79	E7669243.56	324.13
13	EDGE OF EQUIP PAD	N629844.79	E7669243.56	324.05
14	EDGE OF EQUIP PAD	N629841.42	E7669250.90	324.01
15	EDGE OF EQUIP PAD	N629841.17	E7669258.34	323.99
16	EDGE OF EQUIP PAD	N629846.23	E7669264.40	324.02
17	EDGE OF S/W	N629841.87	E7669237.93	324.04
18	EDGE OF S/W	N629859.60	E7669276.03	324.01
19	EDGE OF S/W	N629881.72	E7669286.17	324.10
20	EDGE OF S/W	N629889.36	E7669269.51	324.10
21	EDGE OF S/W	N629892.09	E7669270.76	324.10
22	EDGE OF S/W	N629937.10	E7669172.58	324.10
23	EDGE OF S/W	N629889.53	E7669150.77	324.10
24	EDGE OF S/W	N629900.30	E7669146.53	324.25
25	EDGE OF S/W	N629910.41	E7669151.19	324.26
26	EDGE OF S/W	N629921.08	E7669128.03	324.37
27	EDGE OF S/W	N629914.73	E7669125.10	324.51
28	EDGE OF S/W	N629906.98	E7669141.91	324.42
29	EDGE OF S/W	N629899.37	E7669138.40	324.35
30	EDGE OF S/W	N629892.41	E7669141.54	324.05
31	EDGE OF S/W	N629888.32	E7669139.66	324.05
32	EDGE OF S/W	N629886.20	E7669132.33	324.20
33	EDGE OF S/W	N629867.48	E7669123.70	324.36
34	EDGE OF S/W	N629864.55	E7669130.06	324.46
35	EDGE OF S/W	N629879.41	E7669136.90	324.06
36	EDGE OF S/W	N629883.17	E7669147.85	324.10
37	EDGE OF S/W	N629866.31	E7669184.62	324.10
38	EDGE OF S/W	N629851.86	E7669216.15	324.10

NO.	DATE	BY	REVISION

NOTICE
0 ½ 1
IF THIS BAR DOES NOT MEASURE 1" THEN DRAWING IS NOT TO SCALE

KKS DESIGNED
MDP DRAWN
ANB CHECKED

REGISTERED PROFESSIONAL ENGINEER 86406PE OREGON SEPTEMBER 12, 2017 ADAM N. BLAIR
RENEWS 12-31-27

BID SET

consor
Stantec

South Fork WATER
PURE WATER SINCE 1915

WATER QUALITY SYSTEMS BUILDING

CIVIL SITE

WQSB GRADING ENLARGEMENT PLAN

PROJECT NO.: W253326OR | SCALE: AS SHOWN | DATE: AUGUST 2026

SHEET
C-104B

\\EgnyteDrive\Consor Files_V-W\Projects\OR\South Fork Water\2025\W253326OR.00\12 CADD\12-5 Sheets\C-ROAD-GRADING PLAN.dwg C-104B 7/29/2026 10:50 AM JUSTIN.DEUEL 24.3s (LMS Tech)

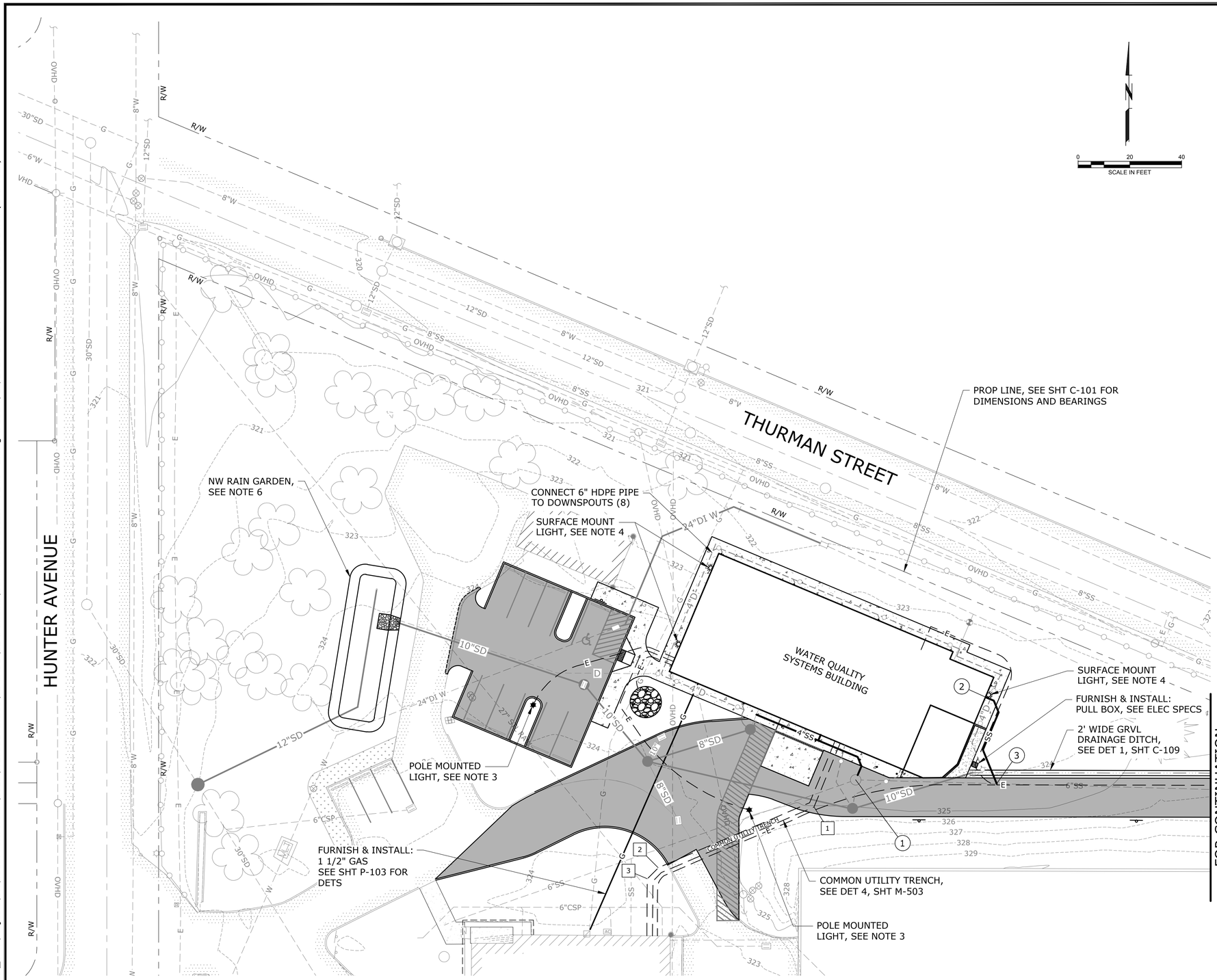

SEWER SCHEDULE

(1) N629841.46
E7669225.00
EXIST 24" SS MH
RIM=324.7
EXIST 6" SS IE IN (W)=319.5
EXIST 6" SS IE OUT (E)=319.4
PROP 4" SS IE IN (N)=319.51
SEE SHT P-102 FOR CONN DETS AT BLDG
INSTALL MH RIM ADJUSTMENT RING AS NEEDED TO MATCH FG

(2) SEE SHT P-102 FOR CONN DETS AT BLDG

(3) FURNISH & INSTALL:
1-3" PVC WYE
CONN TO EXIST 6" SS
SEE NOTE 9

COMMON UTILITY TRENCH SCHEDULE

[1] 45° BEND IN COMMON UTILITY TRENCH, SEE NOTE 1

[2] 22.5° BEND IN COMMON UTILITY TRENCH, SEE NOTE 1

[3] 45° BEND IN COMMON UTILITY TRENCH, SEE NOTE 1

COMMON UTILITY TRENCH NOTES:

1. CONTRACTOR TO PROVIDE HORIZONTAL AND VERTICAL FITTINGS FOR ALL UTILITIES WITHIN THE COMMON TRENCH AS REQ'D TO CONNECT EXISTING BLDG WITH PENETRATIONS AS SHOWN IN WQSB. TOTAL BENDS SHALL NOT EXCEED 180 DEGREES.

2. MAINTAIN 6" VERTICAL SEPARATION FROM EXISTING/PROPOSED UTILITIES. SEE SHEET C-109A FOR THE 10" SD PROFILE.

3. COMMON UTILITY TRENCH SPACERS SHALL BE INSTALLED EVERY 8'.

NOTES:

1. CONTRACTOR SHALL POTHOLE AND VERIFY LOCATIONS, SIZES, AND DEPTHS OF EXISTING UTILITIES, NOTIFY ENGINEERS OF POTENTIAL CONFLICTS 72 HOURS PRIOR TO ANY WORK.

2. CONTRACTOR SHALL CONDUCT INITIAL EXCAVATION ON EXISTING STORM AND SANITARY SEWER TO VERIFY DEPTH AND LOCATION. PROVIDE INFORMATION TO ENGINEER FOR USE IN DETERMINING MANHOLE CONFIGURATION.

3. POLE MOUNTED LED LUMINAIRE, LITHONIA KAD LED SERIES, 9268 LUMENS, 4000K TEMPERATURE, MULTI-VOLT DRIVER. MOUNTED ON 20' TALL SQUARE NON TAPERED ALUMINUM POLE.

4. SURFACE MOUNTED LED LUMINAIRE, LITHONIA FEM4-3L, 120VAC, 3000 LUMENS 2700K TEMPERATURE, UL LISTED FOR WET LOCATIONS. FIBERGLASS HOUSING W/ CLOSED CELL GASKET, STAINLESS STEEL LATCHES, AND POLYCARBONATE LENS.

5. ALL TRENCH BACKFILL SHALL BE CLASS B UNLESS OTHERWISE NOTED. SEE COOC STD DWG OC 313.

6. SEE SHEET C-107-108B FOR STORMWATER PLANS.

7. RELOCATE IRRIGATION CONTROL VALVE AND METERS IN THE FIELD PER OWNER DIRECTION. RELOCATION TO INCLUDE REQUIRED IRRIGATION PIPING.

8. CONTRACTOR TO PROTECT OVERHEAD LINES DURING CONTSRUTCTION.

9. CONTRACTOR TO PROVIDE HORIZONTAL AND VERTICAL FITTINGS AS REQ'D TO CONNECT SANITARY SEWER SERVICE TO THE EXISTING 6-INCH SEWER.

NO.	DATE	BY	REVISION

NOTICE
0 ½ 1
IF THIS BAR DOES NOT MEASURE 1" THEN DRAWING IS NOT TO SCALE

KKS DESIGNED
JLC DRAWN
ANB CHECKED

REGISTERED PROFESSIONAL ENGINEER 86406PE OREGON SEPTEMBER 22, 2017 ADAM N. BLAIR
RENEWS 12-31-27

BID SET

consor
Stantec

South Fork WATER
PURE WATER SINCE 1915

WATER QUALITY SYSTEMS BUILDING

CIVIL SITE

COMPOSITE UTILITY PLAN - 1

PROJECT NO.: W253326OR | SCALE: AS SHOWN | DATE: AUGUST 2026

SHEET
C-105

\\EgnyteDrive\Consor Files_V-W\Projects\OR\South Fork Water\2025\W253326OR.00\12 CADD\12-5 Sheets\COMPOSITE UTILITY PLAN - 2.dwg C-105 7/29/2026 10:51 AM JUSTIN.DEUEL 24.3s (LMS Tech)

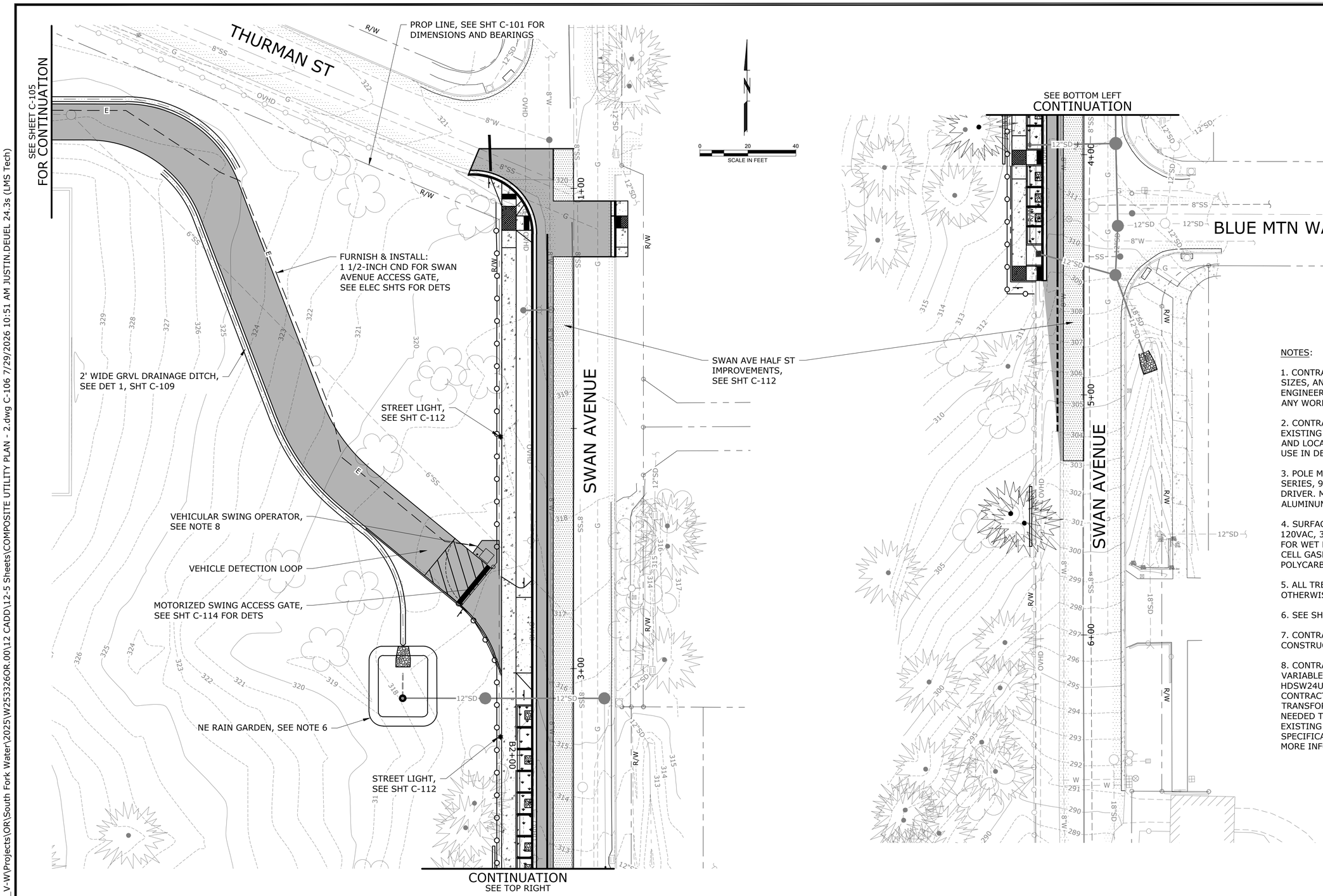

NOTES:

1. CONTRACTOR SHALL POTHOLE AND VERIFY LOCATIONS, SIZES, AND DEPTHS OF EXISTING UTILITIES, NOTIFY ENGINEERS OF POTENTIAL CONFLICTS 72 HOURS PRIOR TO ANY WORK.

2. CONTRACTOR SHALL CONDUCT INITIAL EXCAVATION ON EXISTING STORM AND SANITARY SEWER TO VERIFY DEPTH AND LOCATION. PROVIDE INFORMATION TO ENGINEER FOR USE IN DETERMINING MANHOLE CONFIGURATION.

3. POLE MOUNTED LED LUMINAIRE, LITHONIA KAD LED SERIES, 9268 LUMENS, 4000K TEMPERATURE, MULTI-VOLT DRIVER. MOUNTED ON 20' TALL SQUARE NON TAPERED ALUMINUM POLE.

4. SURFACE MOUNTED LED LUMINAIRE, LITHONIA FEM4-3L, 120VAC, 3000 LUMENS 2700K TEMPERATURE, UL LISTED FOR WET LOCATIONS. FIBERGLASS HOUSING W/ CLOSED CELL GASKET, STAINLESS STEEL LATCHES, AND POLYCARBONATE LENS.

5. ALL TRENCH BACKFILL SHALL BE CLASS B UNLESS OTHERWISE NOTED. SEE COOC STD DWG 313.

6. SEE SHEET C-107-108B FOR STORMWATER PLANS.

7. CONTRACTOR TO PROTECT OVERHEAD LINES DURING CONSTRUCTION.

8. CONTRACTOR SHALL INSTALL 24VDC HEAVY-DUTY VARIABLE SPEED SWING GATE OPERATOR MODEL HDSW24UL FROM LIFTMASTER, OR APPROVED EQUAL. CONTRACTOR TO INSTALL ACCESSORIES, LIFTMASTER TRANSFORMER KIT MODEL 3PHCONV, OR APPROVED EQUAL, NEEDED TO MATCH THE POWER AVAILABLE AT THE EXISTING WATER TREATMENT BUILDING. REFERENCE SPECIFICATION 32 31 14 ELECTRIC GATE OPERATORS FOR MORE INFORMATION.

NO.	DATE	BY	REVISION

NOTICE
0 ½ 1
IF THIS BAR DOES NOT MEASURE 1" THEN DRAWING IS NOT TO SCALE

KKS DESIGNED
JLC DRAWN
ANB CHECKED

REGISTERED PROFESSIONAL ENGINEER 86406PE OREGON SEPTEMBER 22, 2016 ADAM N. BLAIR
RENEWS 12-31-27

BID SET

consor
Stantec

South Fork WATER
PURE WATER SINCE 1915

WATER QUALITY SYSTEMS BUILDING

CIVIL SITE

COMPOSITE UTILITY PLAN - 2

PROJECT NO.: W2533260R | SCALE: AS SHOWN | DATE: AUGUST 2026

SHEET
C-106

\\EgnyteDrive\Consor Files_V-W\Projects\OR\South Fork Water\2025\W2533260R.00\12 CADD\12-5 Sheets\COMPOSITE UTILITY PLAN - 2.dwg C-106 7/29/2026 10:51 AM JUSTIN.DEUEL 24.3s (LMS Tech)

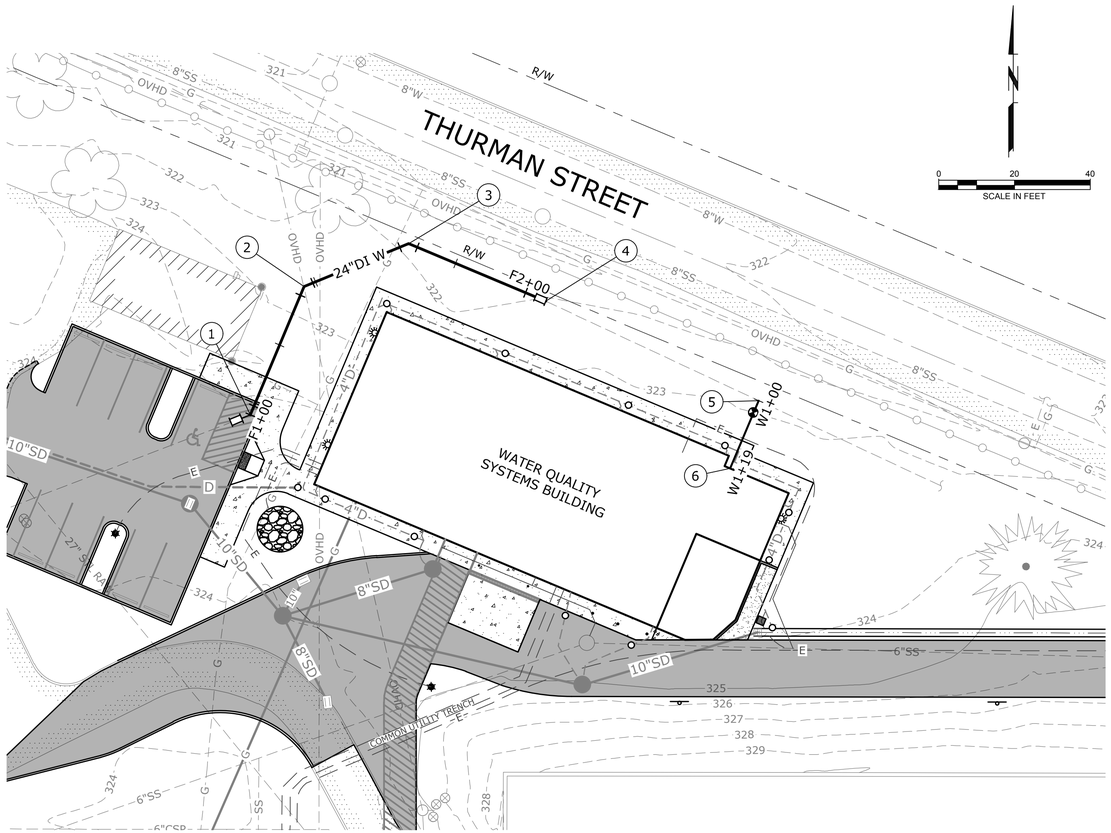

ALIGNMENT 'F' PLAN

SCALE: 1"=20'

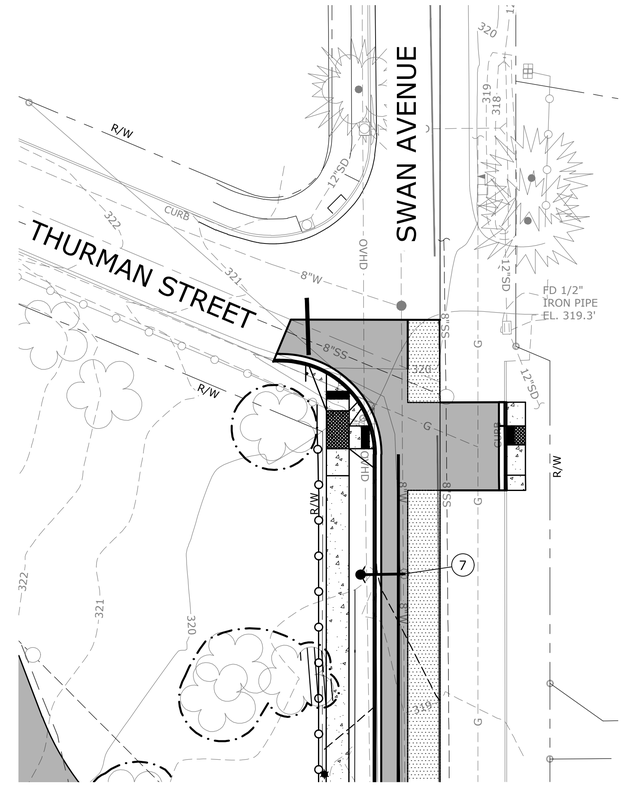

FH ASSY PLAN

SCALE: 1"=20'

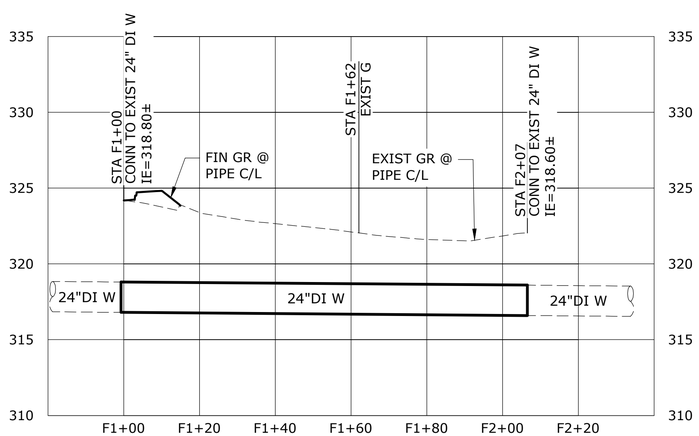

ALIGNMENT 'F' PROFILE

SCALE: 1"=20' HORIZ, 1"=5' VERT

NOTES:

1. CONTRACTOR SHALL POTHOLE AND VERIFY LOCATIONS, SIZES, AND DEPTHS OF EXISTING UTILITIES, NOTIFY ENGINEERS OF POTENTIAL CONFLICTS A MINIMUM OF 72 HOURS IN ADVANCE OF WATER MAIN INSTALLATION TO ALLOW OR CHANGES IN ALIGNMENT.

2. CONTRACTOR SHALL CONDUCT INITIAL EXCAVATION ON EXISTING WATERLINE TO VERIFY DEPTH AND LOCATION. PROVIDE INFORMATION TO ENGINEER FOR USE IN DETERMINING PROPOSED WATERLINE CONFIGURATION.

3. ALL TRENCH BACKFILL SHALL BE CLASS B UNLESS OTHERWISE NOTED. SEE COOC STD DWG OC 313.

4. LOCATION OF EXISTING UTILITIES ARE BASED ON INFORMATION SUPPLIED BY OTHERS AND ARE CONSIDERED APPROXIMATE.

5. ALL PIPE SHALL BE DUCTILE IRON CLASS 52. ALL JOINTS ON PIPE, FITTINGS AND VALVES SHOWN SHALL BE RESTRAINED JOINT.

6. ALL PIPE MATERIALS SHALL BE STAGED SUCH TO MINIMIZE DURATION OF SHUT DOWN OF 24-INCH WATER MAIN. CONTRACTOR TO NOTIFY OWNER PRIOR TO PLANNED SHUT DOWN.

ALIGNMENT 'F' WATER PIPING SCHEDULE

(1) STA F1+00
N629931.95
E7669217.13
FURNISH & INSTALL:
1-24" DI LS, MJ
1-24" DI 45° HORIZ BEND, MJ

(2) STA F1+39
N629948.29
E7669181.41
FURNISH & INSTALL:
1-24" DI 45° HORIZ BEND, MJ

(3) STA F1+69
N629937.89
E7669153.47
FURNISH & INSTALL:
1-24" DI 45° HORIZ BEND, MJ

(4) STA F2+06
N629904.50
E7669138.20
FURNISH & INSTALL:
1-24" DI LS, MJ

MISC WATER PIPING SCHEDULE

(5) N629944.74
E7669177.63
FURNISH & INSTALL:
1-6" TAPPING SLV, FLG
1-6" GV, FLGxMJ
20 LF - 6" DI PIPE, SEE NOTE 5

(6) CONNECT TO MECHANICAL ROOM
PUMP PIPING, SEE DET 1, SHT M-109

(7) N629745.19
E7669567.15
REMOVE EXIST FH
FURNISH & INSTALL:
FH ASSY, LOCATE FH IN
PLANTER STRIP
SEE COOC STD DWG NO. 401, SHT C-115

NO.	DATE	BY	REVISION

NOTICE
0 ½ 1
IF THIS BAR DOES NOT MEASURE 1" THEN DRAWING IS NOT TO SCALE

KKS DESIGNED
JLC DRAWN
ANB CHECKED

REGISTERED PROFESSIONAL ENGINEER 86406PE OREGON SEPTEMBER 12, 2017 ADAM N. BLAIR
RENEWS 12-31-27

BID SET

consor
Stantec

South Fork WATER PURE WATER SINCE 1915

WATER QUALITY SYSTEMS BUILDING

CIVIL SITE

WATER PIPING PLAN

PROJECT NO.: W253326OR | SCALE: AS SHOWN | DATE: AUGUST 2026

SHEET C-106A

\\EgnyteDrive\Consor Files_V-W\Projects\OR\South Fork Water\2025\W253326OR.00\12 CADD\12-5 Sheets\WATER PIPING PLAN.dwg C-106A 7/29/2026 10:51 AM JUSTIN.DEUEL 24.3s (LMS Tech)

NOTES:

1. CONTRACTOR SHALL POTHOLE AND VERIFY LOCATIONS, SIZES, AND DEPTHS OF EXISTING UTILITIES, NOTIFY ENGINEERS OF POTENTIAL CONFLICTS A MINIMUM OF 72 HOURS PRIOR TO ANY WORK.

2. CONTRACTOR SHALL CONDUCT INITIAL EXCAVATION ON EXISTING STORM TO VERIFY DEPTH AND LOCATION. PROVIDE INFORMATION TO ENGINEER FOR USE IN DETERMINING MANHOLE CONFIGURATION.

3. ALL TRENCH BACKFILL SHALL BE CLASS B UNLESS OTHERWISE NOTED. SEE COOC STD DWG OC 313.

4. ALL STORM PIPING SHALL HAVE A MINIMUM SLOPE OF 0.5%.

5. CONTRACTOR SHALL VERIFY EXISTING STRUCTURES PRIOR TO CONSTRUCTION AND NOTIFY ENGINEER OF ANY DISCREPANCIES.

6. STORM LINE TO REMAIN IN SERVICE DURING MH INSTALLATION.

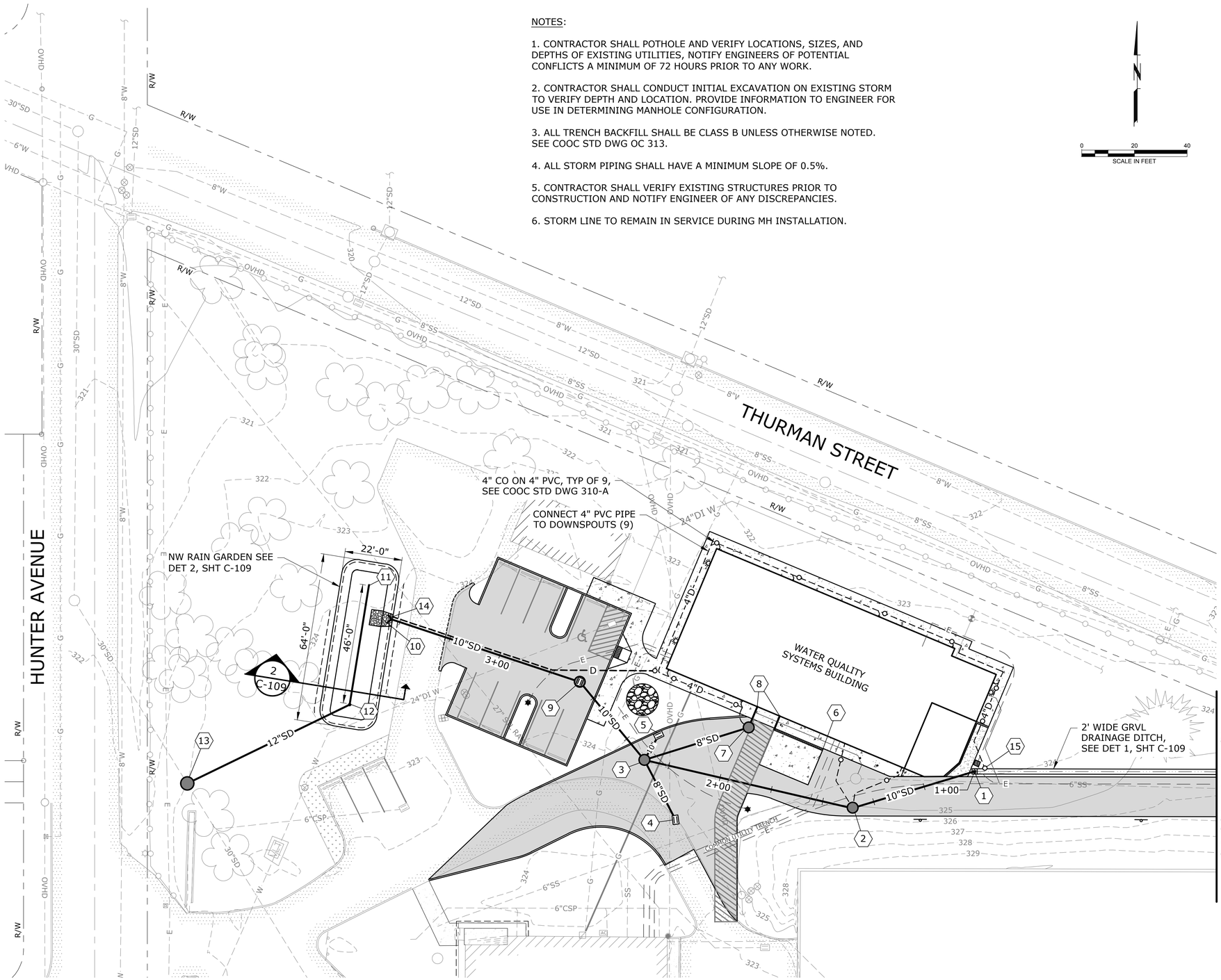

DRAIN/STORMWATER SCHEDULE

(1) STA SD1+00
N629842.75
E7669270.18
FURNISH & INSTALL:
1-DITCH INLET
RIM=324.10'
10" IE OUT (W)=323.10
SEE SD ALIGNMENT SHT C-109A
AND COOC, STD DWG 611-2

(2) STA SD1+48
N629830.41
E7669223.44
FURNISH & INSTALL:
1-48" DIA SDMH 1
RIM=324.67'
10" IE IN(E)=322.86
4" IE IN(NE)=322.97
4" IE IN(N)=322.97
10" IE OUT(NW)=322.86
SEE SD ALIGNMENT SHT C-109A

(3) STA SD2+29
N629851.09
E7669144.97
FURNISH & INSTALL:
1-72" DIA SDMH 2
RIM=323.74'
10" IE IN (N)=322.55
8" IE IN(NE)=322.55
8" IE IN(SE)=322.55
10" IE IN(E)=322.45
10" IE OUT(NW)=322.45
SEE SD ALIGNMENT SHT C-109A

(4) N629828.08
E7669156.14
FURNISH & INSTALL:
1-TYPE 3 CB
RIM=323.54'
10" IE OUT(NW)=322.67
SEE COOC STD DWG 610

(5) N629860.53
E7669144.97
FURNISH & INSTALL:
1-TYPE 3 CB
RIM=323.69'
10" IE OUT(E)=322.61
SEE COOC STD DWG 610

(6) N626861.26
E7669194.65
FURNISH & INSTALL:
20 LF 12" POLYDRAIN PDX H-20 W/ #502 HIGH INTAKE SLOTTED GRATE
RIM=323.95'
10" IE OUT(N)=322.91
POLYDRAIN BOTTOM TO BE SET AT 0.5% SLOPE TO HIGH POINT.

(7) N629862.24
E7669185.04
FURNISH & INSTALL:
1-48" DIA SDMH 3
RIM=323.95'
8" IE IN(NE)=322.86
4" IE IN(NW)=322.78
8" IE OUT(SW)=322.76
8" IE OUT(N)=322.76

(8) CONNECT TO BLDG CHEMICAL CONTAINMENT SUMP W/ 8" PVC, SEE MECH SHTS

(9) STA SD2+68
N629881.48
E7669121.40
1-48" DIA SDMH 4
RIM=323.95'
10" IE IN(SE)=322.76
10" IE OUT(NW)=322.76
MH LID TO BE B&H FOUNDRY, MODEL 300-24 OR APPVD EQ
SEE SD ALIGNMENT SHT C-109A

(10) STA SD3+40
N629887.97
E7669024
FURNISH & INSTALL:
1-RIP RAP OUTFALL
10" IE OUT=322.00
CLASS 50 RIP RAP,
SEE SD ALIGNMENT SHT C-109A
AND COOC STD DET 632, C-124

(11) N629920.95
E7669042.67
FURNISH & INSTALL:
1-6" DIA CO
IE=317.75
SEE COOC STD DWG 627

(12) N629875.81
E7669033.85
1-24" BEEHIVE FLOW CONTROL STRUCTURE
RIM = 323.00'
IE (IN) 6" (N) = 317.25 W/ REMOVABLE CAP AND 0.60" ORIFICE
IE (OUT) 12" (E) = 317.15
SUMP IE = 315.7
SEE COOC STD DWG 626, SHT C-123

(13) N629847.78
E7668971.16
FURNISH & INSTALL:
1-60" DIA DOGHOUSE SDMH 5 OVER EXIST 30" CONC SD W/ CAST IN PLACE BASE
RIM=323.40'
30" IE IN(SE)=309.20 (EXIST)
12" IE IN(NE)=311.00
30" IE OUT(NW)=309.20 (EXIST)
SEE COOC STD DWGS 608 & 308, SEE NOTE 6

(14) FURNISH & INSTALL:
POP-UP EMITTER W/ TURFGUARD ON END OF DOWNSPOUT DRAIN PIPE IN RIP RAP PAD. INSTALL EMITTER PARALLEL TO SLOPE AND W/ DISCHARGE ORIENTED TOWARD POND
IE=323.00

(15) FURNISH & INSTALL:
POP-UP EMITTER W/ TURFGUARD ON END OF DOWNSPOUT DRAIN PIPE AT EDGE OF DITCH. IE TO MATCH FG SURFACE AT TOP OF DITCH. ORIENT DISCHARGE TOWARD DITCH FLOWLINE

NO.	DATE	BY	REVISION

NOTICE
0 ½ 1
IF THIS BAR DOES NOT MEASURE 1" THEN DRAWING IS NOT TO SCALE

KKS DESIGNED
JO DRAWN
ANB CHECKED

REGISTERED PROFESSIONAL ENGINEER 86406PE OREGON SEPTEMBER 12, 2017 ADAM N. BLAIR
RENEWS 12-31-27

BID SET

consor
Stantec

South Fork WATER
PURE WATER SINCE 1915

WATER QUALITY SYSTEMS BUILDING

CIVIL SITE

PRIVATE STORM PLAN - 1

PROJECT NO.: W253326OR | SCALE: AS SHOWN | DATE: AUGUST 2026

SHEET C-107

\\EgnyteDrive\Consor Files_V-W\Projects\OR\South Fork Water\2025\W253326OR.00\12 CADD\12-5 Sheets\WATER PIPING PLAN.dwg C-107 7/29/2026 10:51 AM JUSTIN.DEUEL 24.3s (LMS Tech)

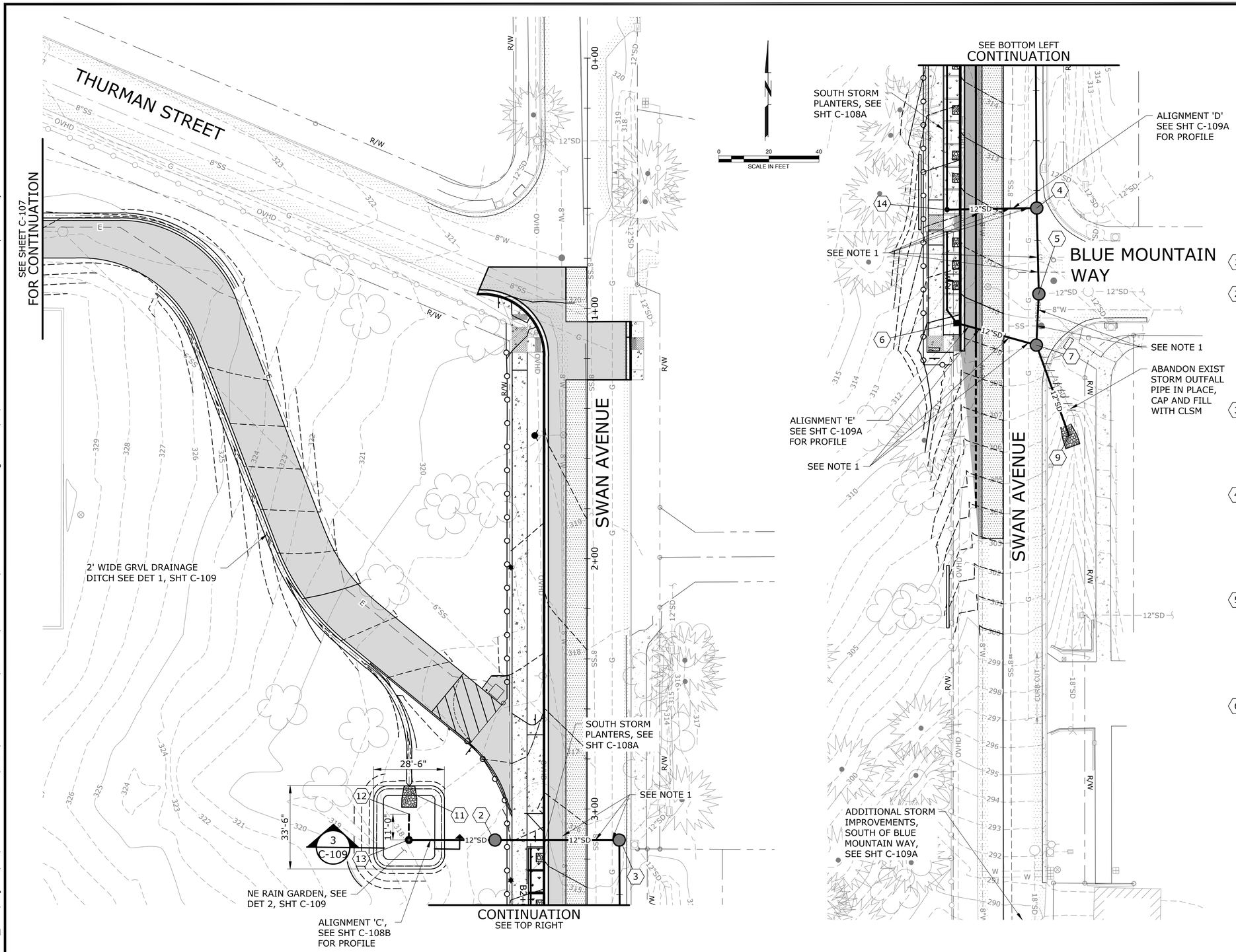

NOTES:

1. CONTRACTOR SHALL POTHOLE AND VERIFY LOCATIONS, SIZES, AND DEPTHS OF EXISTING UTILITIES, NOTIFY ENGINEERS OF POTENTIAL CONFLICTS A MINIMUM OF 72 HOURS PRIOR TO ANY WORK.

2. CONTRACTOR SHALL CONDUCT INITIAL EXCAVATION ON EXISTING STORM TO VERIFY DEPTH AND LOCATION. PROVIDE INFORMATION TO ENGINEER FOR USE IN DETERMINING MANHOLE CONFIGURATION.

3. ALL TRENCH BACKFILL SHALL BE CLASS B UNLESS OTHERWISE NOTED. SEE COOC STD DWG OC 313.

4. ALL STORM PIPING SHALL HAVE A MINIMUM SLOPE OF 0.5%.

5. CONTRACTOR SHALL VERIFY EXISTING STRUCTURES PRIOR TO CONSTRUCTION AND NOTIFY ENGINEER OF ANY DISCREPANCIES.

STORM SCHEDULE:

1. NOT USED

2. STA C1+56
N629584.32
E7669534.53
FURNISH & INSTALL PRIVATE MH:
1-48" PRIVATE SDMH 6
SEE C-108B
RIM=315.56
IE(IN)12"(W)=309.10
IE(OUT)12"(E)=309.00

3. STA C2+06
N629582.69
E7669584.11
FURNISH & INSTALL:
1-48" DIA SDMH 7
RIM=315.14
IE(IN)12"(W)=308.50
IE(OUT)12"(S)=308.30

4. STA C2+89=STA D1+36
N629499.82
E7669581.96
FURNISH & INSTALL:
1-48" DIA SDMH 8
RIM=311.96
IE(IN)12"(N)=307.70
IE(IN)12"(W)=306.59
IE(OUT)12"(S)=306.49

5. STA C3+23
N629465.30
E7669581.48
REMOVE EXIST MH
48" DIA SDMH 11
RIM=310.63
IE(IN)12"(N)=305.00
EX IE(IN)12"(E)=307.00
IE(OUT)12"(S)=304.70

6. STA B0+94=STA E1+00
N629454.94
E7669548.46
FURNISH & INSTALL:
PRECAST CURB INLET
GUTTER EL=309.30
REMOVABLE CAP AND 0.20"
ORIFICE
IE(IN)6"(NW)=305.50
IE(OUT)12"(E)=305.40

7. STA C3+44=STA E1+33
N629445.01
E7669580.03
REMOVE EXISTING MH
FURNISH & INSTALL:
1-48" DIA SDMH 9
RIM=309.15
IE(IN)12"(N)=304.50
IE(OUT)12"(SE)=303.90
IE(IN)12"(W)=304.00

8. NOT USED

9. STA C3+85
CONNECT TO EXISTING DITCH
FURNISH & INSTALL:
RIP RAP OUTFALL
IE=303.50
CLASS 50 RIP RAP SEE SHT C-124
COOC STD DET 632, SEE C-124

10. NOT USED

11. N629601.55
E7669500.89
FURNISH & INSTALL:
1-RIP RAP OUTFALL
IE(OUT)12"(S)=316.46
CLASS 50 RIP RAP,
SEE COOC STD DET 632, C-124

12. N629595.71
E7669500.51
FURNISH & INSTALL:
1-6" DIA CO
RIM=315.70
IE(OUT)12"(E)=312.25

13. N629585.46
E7669500.12
1-24" BEEHIVE FLOW CONTROL
STRUCTURE
RIM = 316.00
IE (IN) 6" (N) = 312.13 W/
REMOVABLE CAP AND 0.50" ORIFICE
IE (OUT) 12" (E) = 312.03
SUMP IE = 310.53
SEE COOC STD DET 626, SHT C-123

14. 1-18" BEEHIVE FLOW CONTROL
STRUCTURE OF SOUTH PLANTER,
SEE CALLOUT 10 SHT C-108A

NO.	DATE	BY	REVISION

NOTICE
0 ½ 1
IF THIS BAR DOES NOT MEASURE 1" THEN DRAWING IS NOT TO SCALE

KKS DESIGNED
JO DRAWN
ANB CHECKED

REGISTERED PROFESSIONAL ENGINEER 86406PE OREGON SEPTEMBER 12, 2017 ADAM N. BLAIR
RENEWS 12-31-27

BID SET

consor
Stantec

South Fork WATER
PURE WATER SINCE 1915

WATER QUALITY SYSTEMS BUILDING

CIVIL SITE

STORM PLAN - 2

PROJECT NO.: W253326OR | SCALE: AS SHOWN | DATE: AUGUST 2026

SHEET
C-108

\\EgnyteDrive\Consor Files_V-W\Projects\OR\South Fork Water\2025\W253326OR.00\12 CADD\12-5 Sheets\WATER PIPING PLAN.dwg C-108 7/29/2026 10:51 AM JUSTIN.DEUEL 24.3s (LMS Tech)

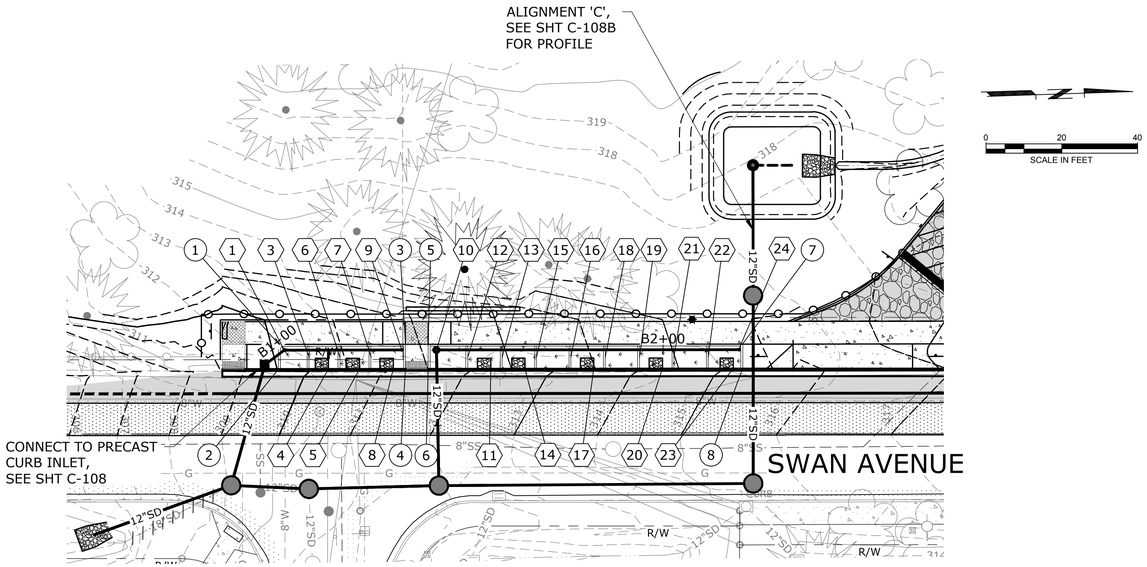

STORMWATER PLANTER PLAN

SCALE: 1"=20'

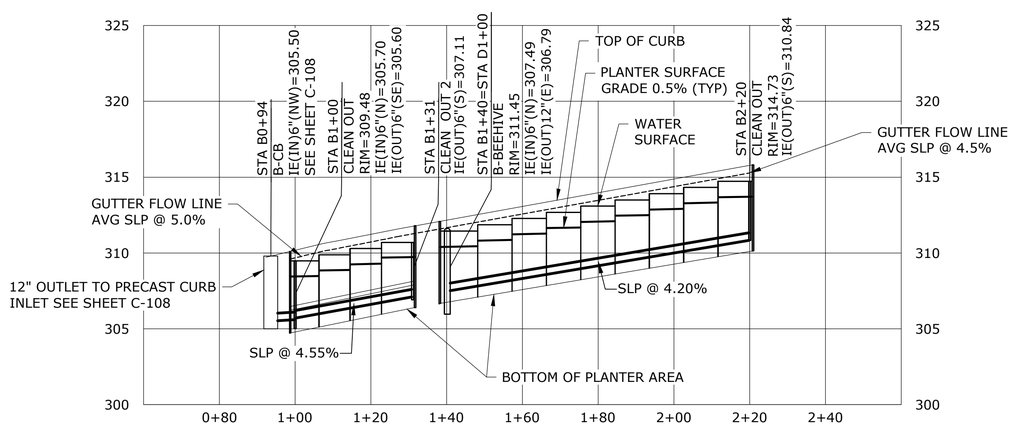

STORMWATER PLANTER PROFILE, ALIGN B

SCALE: 1"=20' HORIZ, 1"=5' VERT

STORMWATER PLANTER SCHEDULE

1. STA B1+00
N629459.71
E7669544.77
FURNISH & INSTALL:
STORM 2-WAY CLEANOUT
STRUCTURE CONNECT TO PRECAST
CURB INLET
SEE SHT C-108

2. NOT USED

3. STA B1+06
FURNISH & INSTALL:
CHECK DAM
RIM=309.88
GUTTER EL=310.33
UP STREAM SOIL EL=308.84
DN STREAM SOIL EL=308.48

4. STA B1+12, 3.5' R
FURNISH & INSTALL:
SCUPPER AND SEDIMENT BASIN
GUTTER EL=310.31

5. STA B1+20, 3.5' R
FURNISH & INSTALL:
SCUPPER AND SEDIMENT BASIN
GUTTER EL=310.72

6. STA B1+14
FURNISH & INSTALL:
CHECK DAM
RIM=310.29
UP STREAM SOIL EL=309.25
DN STREAM SOIL EL=308.88

7. STA B1+23
FURNISH & INSTALL:
CHECK DAM
RIM=310.70
UP STREAM SOIL EL=309.70
DN STREAM SOIL EL=309.29

8. STA B1+29, 3.5' R
FURNISH & INSTALL:
SCUPPER AND SEDIMENT BASIN
GUTTER EL=311.16

9. STA B1+31
N629491.16
E7669545.79
FURNISH & INSTALL:
STORM 1-WAY CLEANOUT

10. STA B1+40=STA D1+00
N629499.64
E7669546.07
FURNISH & INSTALL:
18" BEEHIVE OVERFLOW
STRUCTURE
REMOVABLE CAP AND 0.40"
ORIFICE
CONNECT TO 48" DIA SDMH 8 SEE
SHT C-108

11. STA B1+54, 3.5' R
FURNISH & INSTALL:
SCUPPER AND SEDIMENT BASIN
GUTTER EL=312.32

12. STA B1+48
FURNISH & INSTALL:
CHECK DAM
RIM=311.82
UP STREAM SOIL EL=310.82
DN STREAM SOIL EL=310.45

13. STA B1+57
FURNISH & INSTALL:
CHECK DAM
RIM=312.23
UP STREAM SOIL EL=311.23
DN STREAM SOIL EL=310.86

14. STA B1+63, 3.5' R
FURNISH & INSTALL:
SCUPPER AND SEDIMENT BASIN
GUTTER EL=312.72

15. STA B1+66
FURNISH & INSTALL:
CHECK DAM
RIM=312.64
UP STREAM SOIL EL=311.64
DN STREAM SOIL EL=311.27

16. STA B1+75
FURNISH & INSTALL:
CHECK DAM
RIM=313.04
UP STREAM SOIL EL=312.05
DN STREAM SOIL EL=311.68

17. STA B1+82, 3.5' R
FURNISH & INSTALL:
SCUPPER AND SEDIMENT BASIN
GUTTER EL=313.55

18. STA B1+84
FURNISH & INSTALL:
CHECK DAM
RIM=313.45
UP STREAM SOIL EL=312.46
DN STREAM SOIL EL=312.09

19. STA B1+93
FURNISH & INSTALL:
CHECK DAM
RIM=313.86
UP STREAM SOIL EL=312.87
DN STREAM SOIL EL=312.50

20. STA B1+99, 3.5' R
FURNISH & INSTALL:
SCUPPER AND SEDIMENT BASIN
GUTTER EL=314.35

21. STA B2+02
FURNISH & INSTALL:
CHECK DAM
RIM=314.27
UP STREAM SOIL EL=313.28
DN STREAM SOIL EL=312.92

22. STA B2+11
FURNISH & INSTALL:
CHECK DAM
RIM=314.67
UP STREAM SOIL EL=313.67
DN STREAM SOIL EL=313.32

23. STA B2+18, 3.5' R
FURNISH & INSTALL:
SCUPPER AND SEDIMENT BASIN
GUTTER EL=315.11

24. STA B2+26
N629579.65
E7669548.65
FURNISH & INSTALL:
STORM 1-WAY CLEANOUT

CORNERS OF STORM PLANTER

1. N629458.73
E7669543.23
FURNISH & INSTALL:
SW CORNER OF PLANTER
TOP OF PLANTER WALL=310.42

2. N629458.52
E7669549.71
FURNISH & INSTALL:
SE CORNER OF PLANTER
TOP OF PLANTER WALL=310.09

3. N629492.21
E7669544.32
FURNISH & INSTALL:
NW CORNER OF PLANTER
TOP OF PLANTER WALL=312.42

4. N629492.00
E7669550.82
FURNISH & INSTALL:
NE CORNER OF PLANTER
TOP OF PLANTER=311.82

5. N629498.21
E7669544.52
FURNISH & INSTALL:
SW CORNER OF PLANTER
TOP OF PLANTER WALL=312.51

6. N629498.00
E7669551.02
FURNISH & INSTALL:
SE CORNER OF PLANTER
TOP OF PLANTER WALL=312.07

7. N629581.16
E7669547.23
FURNISH & INSTALL:
NW CORNER OF PLANTER
TOP OF PLANTER WALL=316.16

8. N629580.95
E7669553.72
FURNISH & INSTALL:
NE CORNER OF PLANTER
TOP OF PLANTER WALL=315.83

NOTES:

1. CONTRACTOR SHALL POTHOLE AND VERIFY LOCATIONS, SIZES, AND DEPTHS OF EXISTING UTILITIES, NOTIFY ENGINEERS OF POTENTIAL CONFLICTS A MINIMUM OF 72 HOURS PRIOR TO ANY WORK.

2. CONTRACTOR SHALL CONDUCT INITIAL EXCAVATION ON EXISTING STORM TO VERIFY DEPTH AND LOCATION. PROVIDE INFORMATION TO ENGINEER FOR USE IN DETERMINING MANHOLE CONFIGURATION.

3. ALL TRENCH BACKFILL SHALL BE CLASS B UNLESS OTHERWISE NOTED. SEE COOC STD DWG OC 313.

4. ALL STORM PIPING SHALL HAVE A MINIMUM SLOPE OF 0.5%.

5. CONTRACTOR SHALL VERIFY EXISTING STRUCTURES PRIOR TO CONSTRUCTION AND NOTIFY ENGINEER OF ANY DISCREPANCIES.

NO.	DATE	BY	REVISION

NOTICE
0 ½ 1
IF THIS BAR DOES NOT MEASURE 1" THEN DRAWING IS NOT TO SCALE

KKS DESIGNED
JO DRAWN
ANB CHECKED

REGISTERED PROFESSIONAL ENGINEER 86406PE OREGON SEPTEMBER 12, 2017 ADAM N. BLAIR
RENEWS 12-31-27

BID SET

consor
Stantec

South Fork WATER
PURE WATER SINCE 1915

WATER QUALITY SYSTEMS BUILDING

CIVIL SITE

SOUTH STORMWATER PLANTERS
PLAN AND PROFILE

PROJECT NO.: W253326OR | SCALE: AS SHOWN | DATE: AUGUST 2026

SHEET
C-108A

\\EgnyteDrive\Consor Files_V-W\Projects\OR\South Fork Water\2025\W253326OR.00\12 CADD\12-5 Sheets\WATER PIPING PLAN.dwg C-108A 7/29/2026 10:51 AM JUSTIN.DEUEL 24.3s (LMS Tech)

NOTES:

1. CONTRACTOR SHALL POTHOLE AND VERIFY LOCATIONS, SIZES, AND DEPTHS OF EXISTING UTILITIES, NOTIFY ENGINEERS OF POTENTIAL CONFLICTS A MINIMUM OF 72 HOURS PRIOR TO ANY WORK.

2. CONTRACTOR SHALL CONDUCT INITIAL EXCAVATION ON EXISTING STORM TO VERIFY DEPTH AND LOCATION. PROVIDE INFORMATION TO ENGINEER FOR USE IN DETERMINING MANHOLE CONFIGURATION.

3. ALL TRENCH BACKFILL SHALL BE CLASS B UNLESS OTHERWISE NOTED. SEE COOC STD DWG OC 313.

4. ALL STORM PIPING SHALL HAVE A MINIMUM SLOPE OF 0.5%.

5. CONTRACTOR SHALL VERIFY EXISTING STRUCTURES PRIOR TO CONSTRUCTION AND NOTIFY ENGINEER OF ANY DISCREPANCIES.

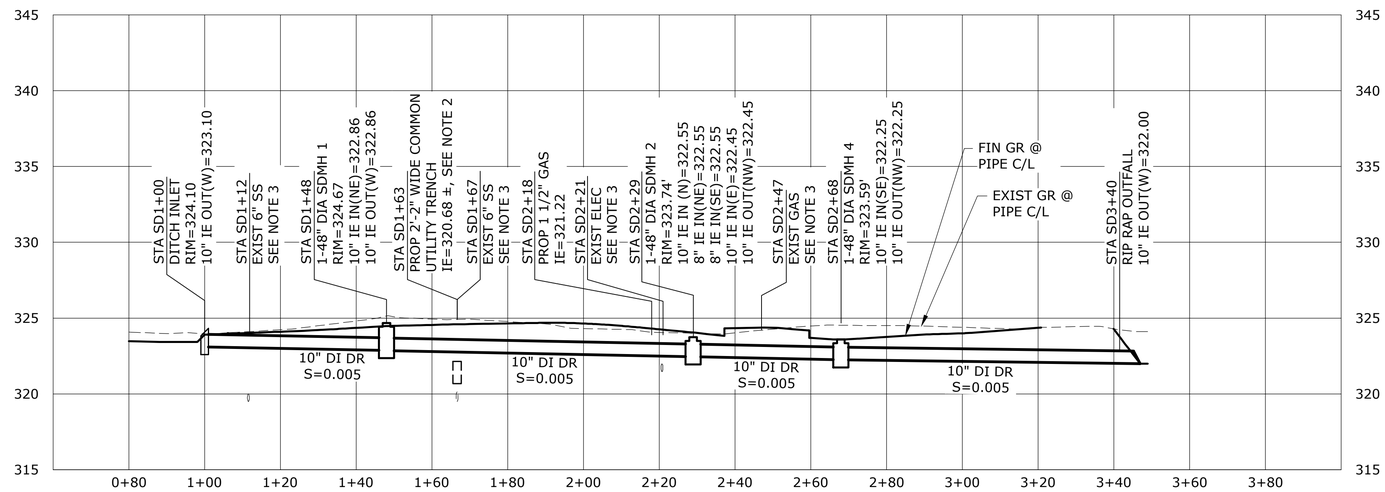

ON-SITE PRIVATE SD ALIGNMENT 'SD' PROFILE (C-107)

SCALE: 1"=20' HORIZ, 1"=5' VERT

NO.	DATE	BY	REVISION

NOTICE
0 ½ 1
IF THIS BAR DOES NOT MEASURE 1" THEN DRAWING IS NOT TO SCALE

KKS
DESIGNED
JO
DRAWN
ANB
CHECKED

REGISTERED PROFESSIONAL ENGINEER
86406PE
OREGON
SEPTEMBER 12, 2017
ADAM N. BLAIR
RENEWS 12-31-27

BID SET

consor
Stantec

South Fork WATER
PURE WATER SINCE 1915

WATER QUALITY SYSTEMS BUILDING

CIVIL SITE

ONSITE PRIVATE 'SD' ALIGNMENT C PROFILE

PROJECT NO.: W253326OR | SCALE: AS SHOWN | DATE: AUGUST 2026

SHEET
C-108B

\\EgnyteDrive\Consor Files_V-W\Projects\OR\South Fork Water\2025\W253326OR.00\12 CADD\12-5 Sheets\WATER PIPING PLAN.dwg C-108B 7/29/2026 10:52 AM JUSTIN.DEUEL 24.3s (LMS Tech)

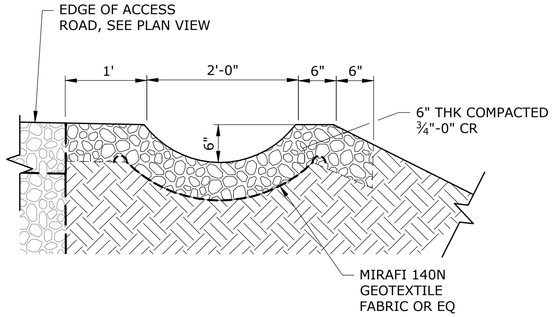

NOTES:

1. MINIMUM SLOPE OF DRAINAGE DITCH TO BE 1%.

2. GEOTEXTILE FABRIC TO BE INSTALLED ACCORDING TO MANUFACTURER'S RECOMMENDATIONS USING U-SHAPED WIRE STAPLES.

3. ALL TRENCH BACKFILL CLASS B SEE DRAWING OC 313 UNLESS OTHERWISE NOTED.

2' WIDE ROADWAY DRAINAGE DITCH (1 / C-107)

SCALE: NTS

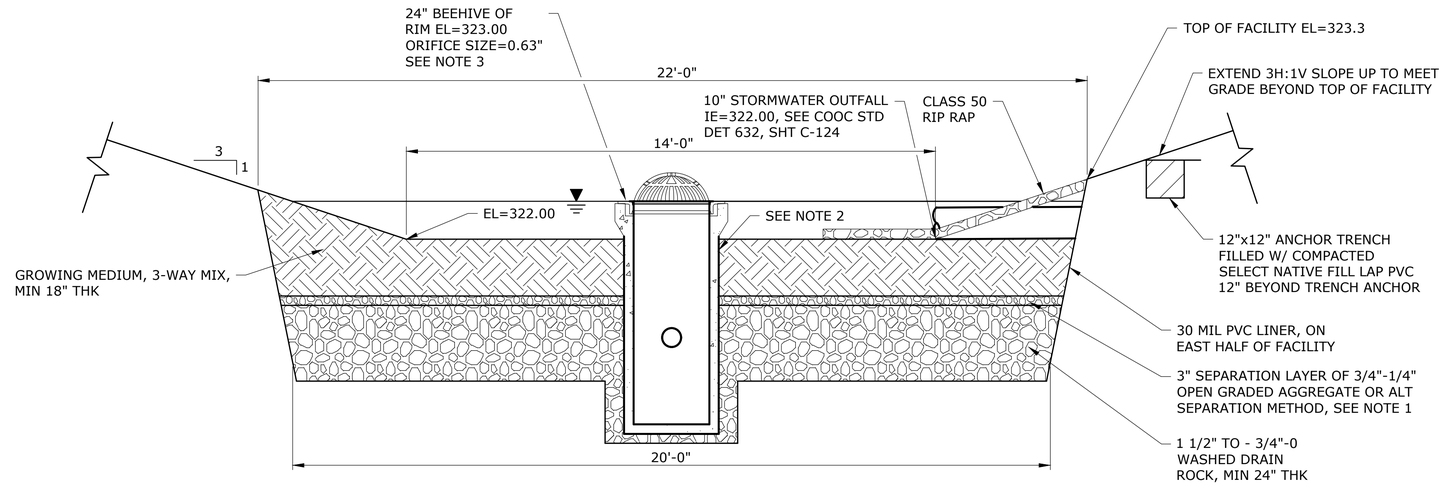

NW RAIN GARDEN ELEVATION (2 / C-107)

SCALE: 1"=2'

NOTES:

1. SEE COOC STD FIGURES C-4 ON SHEET C-123 FOR ADDITIONAL DETAILS.

2. SEE COOC STD DWG 626 ON SHEET C-123 FOR BEEHIVE OVERFLOW STRUCTURE INFORMATION.

3. INSTALL OLYMPIC FOUNDRY INC. MH25 BEEHIVE GRATE WITH MH30 24x4 REVERSIBLE RING, OR APPROVED EQUAL.

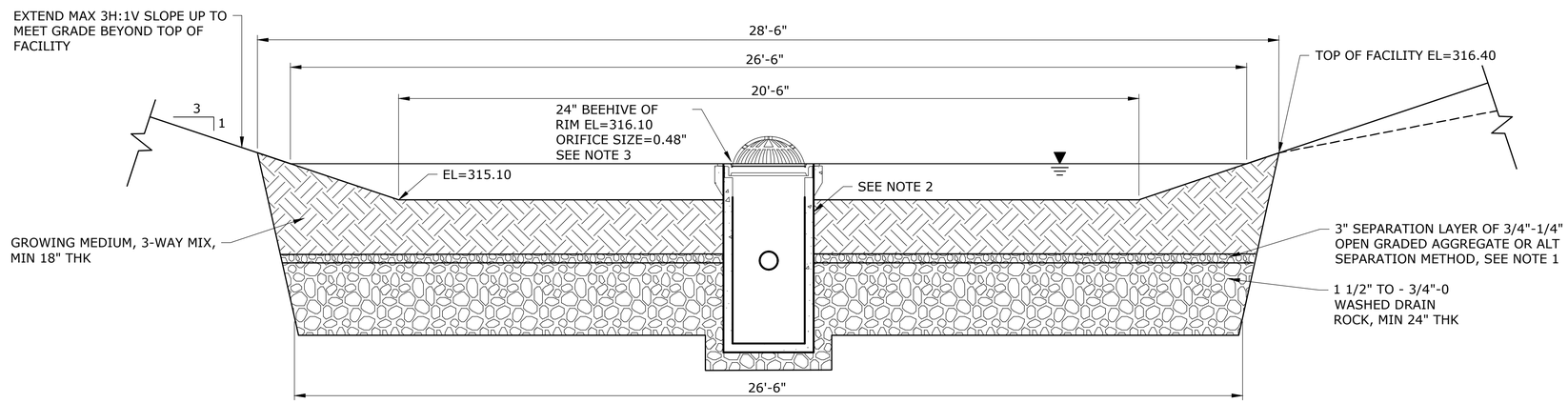

NE RAIN GARDEN ELEVATION (3 / C-108)

SCALE: 1"=2'

NO.	DATE	BY	REVISION

NOTICE
0 ½ 1
IF THIS BAR DOES NOT MEASURE 1" THEN DRAWING IS NOT TO SCALE

KKS DESIGNED
AJR DRAWN
ANB CHECKED

REGISTERED PROFESSIONAL ENGINEER 86408PE OREGON SEPTEMBER 12, 2017 ADAM N. BLAIR
RENEWS 12-31-27

BID SET

consor
Stantec

South Fork WATER
PURE WATER SINCE 1915
WATER QUALITY SYSTEMS BUILDING

CIVIL SITE

STORM DRAINAGE PROFILE AND DETAILS

PROJECT NO.: W253326OR | SCALE: AS SHOWN | DATE: AUGUST 2026

SHEET C-109

\\EgnyteDrive\Consor Files_V-W\Projects\OR\South Fork Water\2025\W253326OR.00\12 CADD\12-5 Sheets\WATER PIPING PLAN.dwg C-109 7/29/2026 10:52 AM JUSTIN.DEUEL 24.3s (LMS Tech)

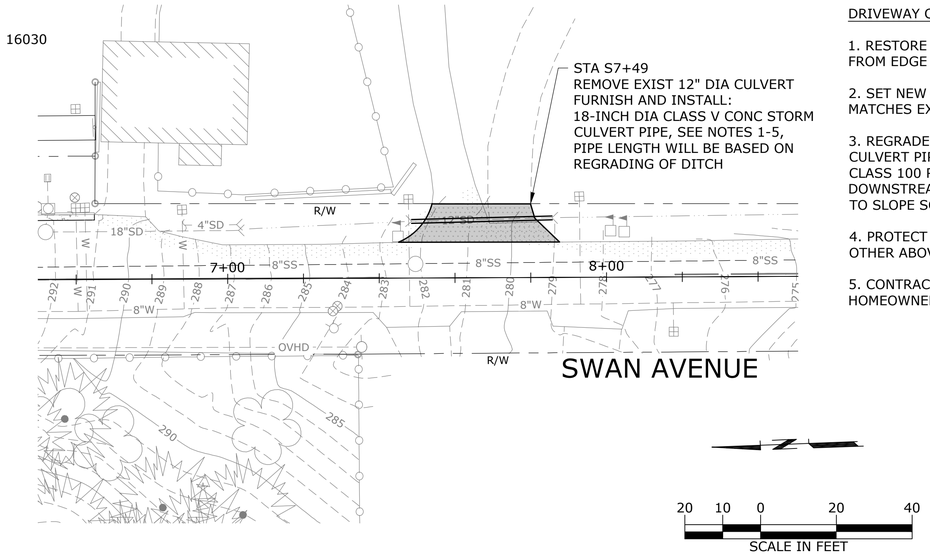

SWAN AVENUE CULVERT REPLACEMENT PLAN

SCALE: 1"=20'

DRIVEWAY CULVERT NOTES:

1. RESTORE SURFACINGS IN PRIVATE DRIVE FROM EDGE OF ROW TO EDGE OF ROAD.

2. SET NEW CULVERT PIPE SO THAT TOP OF PIPE MATCHES EXISTING CULVERT.

3. REGRADE DITCH AS REQUIRED TO MATCH NEW CULVERT PIPE INVERT ELEVATION. INSTALL CLASS 100 RIP RAP AROUND CULVERT ENDS. DOWNSTREAM END OF PIPE SHALL BE GRADED TO SLOPE SOUTHWARD.

4. PROTECT EXISTING METERS, MAILBOXES, AND OTHER ABOVE GROUND FEATURES IN PLACE.

5. CONTRACTOR TO COORDINATE WORK WITH HOMEOWNERS TO ENSURE ACCESS.

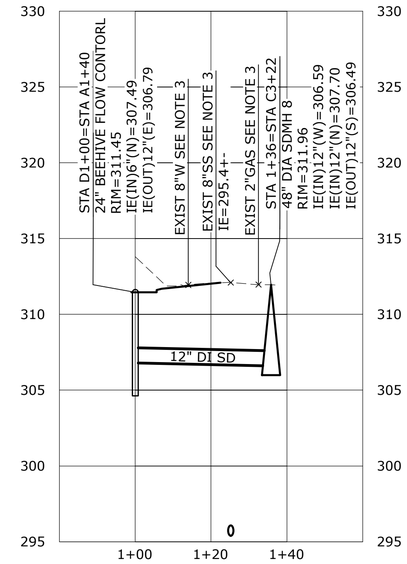

ALIGNMENT 'D' PROFILE (C-108)

SCALE: 1"=20' HORIZ, 1"=5' VERT

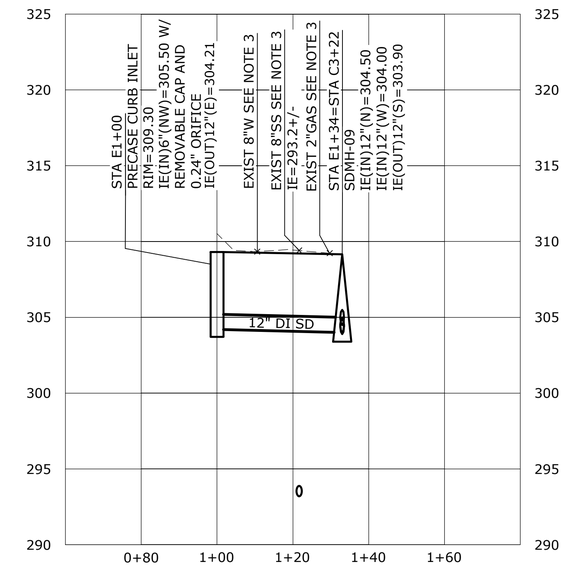

ALIGNMENT 'E' PROFILE (C-108)

SCALE: 1"=20' HORIZ, 1"=5' VERT

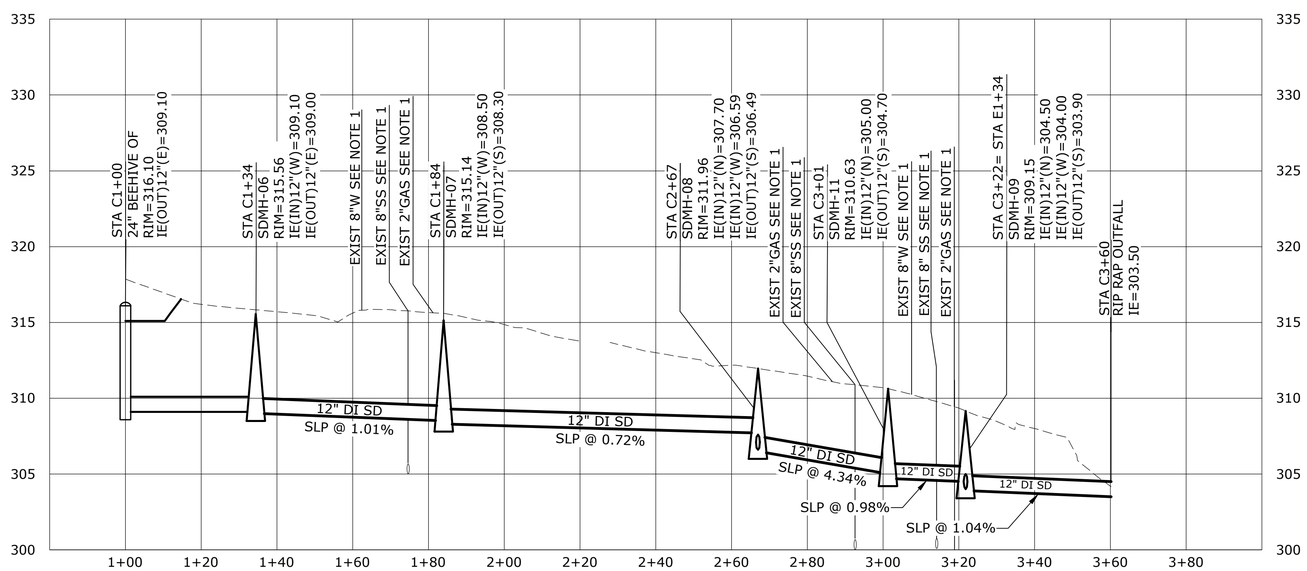

OFF-SITE SD ALIGNMENT 'C' PROFILE (C-108)

SCALE: 1"=20' HORIZ, 1"=5' VERT

STORM PROFILE NOTES:

1. SEE SHEET C-107 FOR PLAN VIEW.

2. PROVIDE CDF BACKFILL BETWEEN TOP OF COMBINED UTILITY CORRIDOR AND BOTTOM OF STORM AT CROSSING

3. CONTRACTOR SHALL POTHOLE AND VERIFY LOCATIONS, SIZES, AND DEPTHS OF EXISTING UTILITIES, NOTIFY ENGINEERS OF POTENTIAL CONFLICTS A MINIMUM OF 72 HOURS PRIOR TO ANY WORK.

NO.	DATE	BY	REVISION

NOTICE
0 ½ 1
IF THIS BAR DOES NOT MEASURE 1" THEN DRAWING IS NOT TO SCALE

KKS DESIGNED
DKH DRAWN
ANB CHECKED

REGISTERED PROFESSIONAL ENGINEER 86406PE OREGON SEPTEMBER 12, 2016 ADAM N. BLAIR
RENEWS 12-31-27

BID SET

consor
Stantec

South Fork WATER
PURE WATER SINCE 1915

WATER QUALITY SYSTEMS BUILDING

STORM DRAIN PLAN AND PROFILES

PROJECT NO.: W253326OR | SCALE: AS SHOWN | DATE: AUGUST 2026

SHEET
C-109A

\\EgnyteDrive\Consor Files_V-W\Projects\OR\South Fork Water\2025\W253326OR.00\12 CADD\12-5 Sheets\WATER PIPING PLAN.dwg C-109A 7/29/2026 10:52 AM JUSTIN.DEUEL 24.3s (LMS Tech)

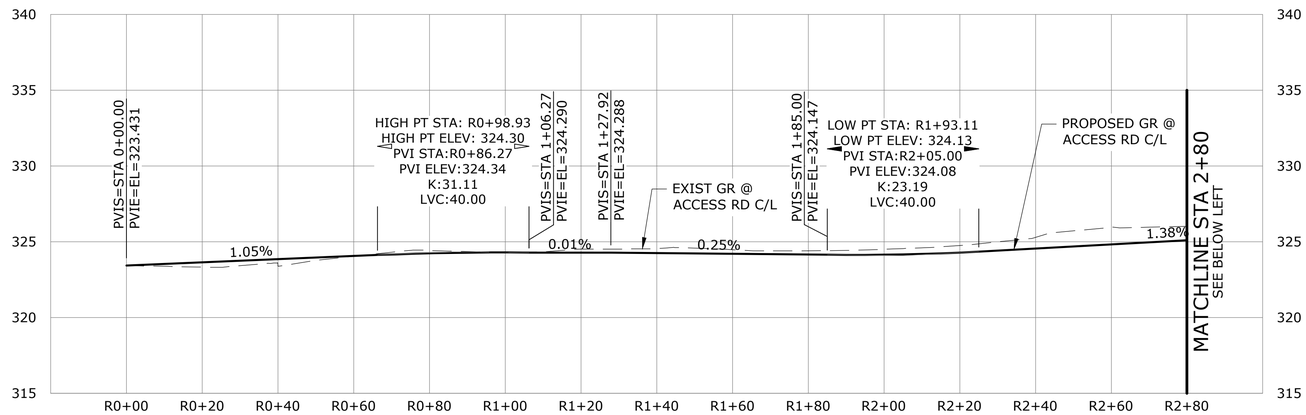

ACCESS ROAD - 'R' PROFILE - 1 (C-104)

SCALE: 1"=20' HORIZ; 1"=5' VERT

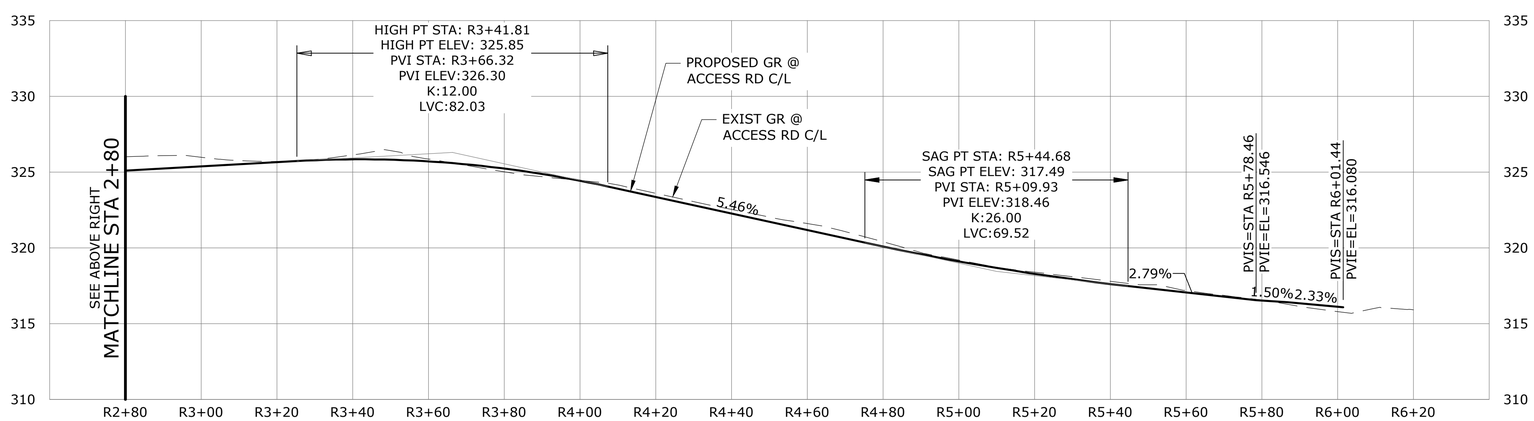

ACCESS ROAD - 'R' PROFILE - 2 (C-104A)

SCALE: 1"=20' HORIZ; 1"=5' VERT

NO.	DATE	BY	REVISION

NOTICE

0 ½ 1

IF THIS BAR DOES NOT MEASURE 1" THEN DRAWING IS NOT TO SCALE

KKS
DESIGNED

MDP
DRAWN

ANB
CHECKED

REGISTERED PROFESSIONAL ENGINEER
86406PE
OREGON
SEPTEMBER 12, 2017
ADAM N. BLAIR
RENEWS 12-31-27

BID SET

consor

Stantec

South Fork WATER
PURE WATER SINCE 1915

WATER QUALITY SYSTEMS BUILDING

CIVIL SITE

ACCESS ROAD - PROFILE

PROJECT NO.: W253326OR | SCALE: AS SHOWN | DATE: AUGUST 2026

SHEET

C-110

\\EgnyteDrive\Consor Files_V-W\Projects\OR\South Fork Water\2025\W253326OR.00\12 CADD\12-5 Sheets\ACCESS ROAD - LINE AND CURVE TABLES.dwg C-110 7/29/2026 10:52 AM JUSTIN.DEUEL 24.3s (LMS Tech)

LINE TABLE: ACCESS ROAD ALIGNMENT

PT NO.	LENGTH	DIRECTION	START POINT	END POINT
L1	65.00'	N66°37'59"E	N629828.23, E7669092.10	N629854.01, E7669151.77
L2	28.33'	S65°22'01"E	N629853.54, E7669194.48	N629841.73, E7669220.23
L3	131.19'	S88°02'04"E	N629833.82, E7669253.70	N629829.32, E7669384.81
L4	93.69'	S19°07'02"E	N629795.73, E7669430.34	N629707.20, E7669461.02
L5	63.25'	S48°42'04"E	N629673.30, E7669483.81	N629631.56, E7669531.33
L6	52.59'	S35°55'58"E	N629621.69, E7669540.31	N629579.11, E7669571.17

LINE TABLE: ACCESS ROAD EDGE OF PAVEMENT - NORTH

LINE	LENGTH	DIRECTION	START POINT	END POINT
L17	40.67'	N48° 12' 23.63"E	629808.47, 7669061.63	629835.58, 7669091.96
L18	51.76'	S66° 37' 59.32"W	629860.90, 7669148.80	629840.37, 7669101.29
L22	51.67'	S65° 22' 01.21"E	629883.17, 7669147.85	629861.64, 7669194.82
L24	20.00'	S65° 22' 01.21"E	629848.00, 7669188.57	629839.67, 7669206.75
L25	14.29'	S87° 50' 45.00"W	629866.31, 7669184.62	629865.78, 7669170.34
L28	15.00'	N24° 37' 58.79"E	629839.67, 7669206.75	629853.30, 7669213.00
L30	16.03'	S88° 02' 03.80"E	629841.87, 7669237.93	629841.32, 7669253.95
L40	15.00'	S24° 37' 58.79"W	629861.64, 7669194.82	629848.00, 7669188.57
L41	27.43'	S65° 22' 01.21"E	629853.30, 7669213.00	629841.87, 7669237.93
L42	139.02'	S88° 02' 03.80"E	629841.32, 7669253.95	629836.55, 7669392.89
L44	97.88'	S19° 07' 02.10"E	629802.96, 7669438.42	629710.48, 7669470.47
L46	54.42'	S48° 42' 04.37"E	629680.81, 7669490.41	629644.89, 7669531.30
L47	6.45'	S37° 24' 30.43"W	629650.02, 7669535.22	629644.89, 7669531.30
L48	48.59'	S1° 48' 02.35"W	629690.85, 7669540.28	629642.29, 7669538.75
L49	14.29'	N1° 52' 14.79"E	629635.49, 7669542.00	629649.78, 7669542.47

LINE TABLE: ACCESS ROAD EDGE OF PAVEMENT - SOUTH

LINE	LENGTH	DIRECTION	START POINT	END POINT
L11	40.00'	S1° 52' 14.79"W	629634.64, 7669542.97	629594.66, 7669541.67
L13	8.55'	N18° 46' 01.60"W	629594.66, 7669541.67	629602.76, 7669538.92
L19	89.51'	N19° 07' 02.10"W	629703.93, 7669451.57	629788.50, 7669422.26
L20	154.21'	N88° 02' 03.80"W	629822.17, 7669374.62	629827.46, 7669220.50
L21	10.21'	N67° 04' 33.39"W	629830.98, 7669202.21	629834.95, 7669192.80
L33	63.07'	N48° 42' 04.37"W	629624.16, 7669524.60	629665.79, 7669477.21

CURVE TABLE: ACCESS ROAD ALIGNMENT

PT NO.	RADIUS	LENGTH	CHORD	START POINT	END POINT
C1	52.50'	43.98'	S89°22'01"E	N629854.01, E7669151.77	N629853.54, E7669194.48
C2	87.50'	34.62'	S76°42'03"E	N629841.73, E7669220.23	N629833.82, E7669253.70
C3	50.00'	60.14'	S53°34'33"E	N629829.32, E7669384.81	N629795.73, E7669430.34
C4	80.00'	41.31'	S33°54'33"E	N629707.20, E7669461.02	N629673.30, E7669483.81
C5	60.00'	13.37'	S42°19'01"E	N629631.56, E7669531.33	N629621.69, E7669540.31

CURVE TABLE: ACCESS ROAD EDGE OF PAVEMENT - NORTH

#	RADIUS	LENGTH	CHORD	START POINT	END POINT
C21	60.00'	22.21'	22.09, S77° 14' 22.16"W	629865.78, 7669170.34	629860.90, 7669148.80
C28	73.47'	10.50'	10.49, N62° 49' 28.62"E	629835.58, 7669091.96	629840.37, 7669101.29
C34	50.00'	60.14'	56.58, S53° 34' 32.95"E	629836.55, 7669392.89	629802.96, 7669438.42
C35	70.00'	36.14'	35.74, S33° 54' 33.24"E	629710.48, 7669470.47	629680.81, 7669490.41

CURVE TABLE: ACCESS ROAD EDGE OF PAVEMENT - SOUTH

#	RADIUS	LENGTH	CHORD	START POINT	END POINT
C7	50.00'	26.04'	25.75, N33° 46' 49.23"W	629602.76, 7669538.92	629624.16, 7669524.60
C14	90.00'	46.47'	45.96, N33° 54' 33.24"W	629665.79, 7669477.21	629703.93, 7669451.57
C15	50.12'	62.27'	58.34, N54° 45' 09.31"W	629788.50, 7669422.26	629822.17, 7669374.62
C16	60.00'	18.70'	18.62, N79° 06' 22.19"W	629827.46, 7669220.50	629830.98, 7669202.21
C17	40.00'	9.48'	9.45, N76° 03' 47.76"W	629834.95, 7669192.80	629837.23, 7669183.63

NO.	DATE	BY	REVISION

NOTICE
0 ½ 1
IF THIS BAR DOES NOT MEASURE 1" THEN DRAWING IS NOT TO SCALE

KKS DESIGNED
MDP DRAWN
ANB CHECKED

REGISTERED PROFESSIONAL ENGINEER 86406PE OREGON SEPTEMBER 12, 2017 ADAM N. BLAIR
RENEWS 12-31-27

BID SET

consor
Stantec

South Fork WATER PURE WATER SINCE 1915
WATER QUALITY SYSTEMS BUILDING

CIVIL SITE
ACCESS ROAD - LINE AND CURVE TABLES

PROJECT NO.: W253326OR | SCALE: AS SHOWN | DATE: AUGUST 2026

SHEET C-111

\\EgnyteDrive\Consor Files_V-W\Projects\OR\South Fork Water\2025\W253326OR.00\12 CADD\12-5 Sheets\ACCESS ROAD - LINE AND CURVE TABLES.dwg C-111 7/29/2026 10:52 AM JUSTIN.DEUEL 24.3s (LMS Tech)

STREET NAME	CLASSIFICATION
SWAN AVENUE	COLLECTOR
BLUE MOUNTAIN WAY	LOCAL
THURMAN STREET	LOCAL

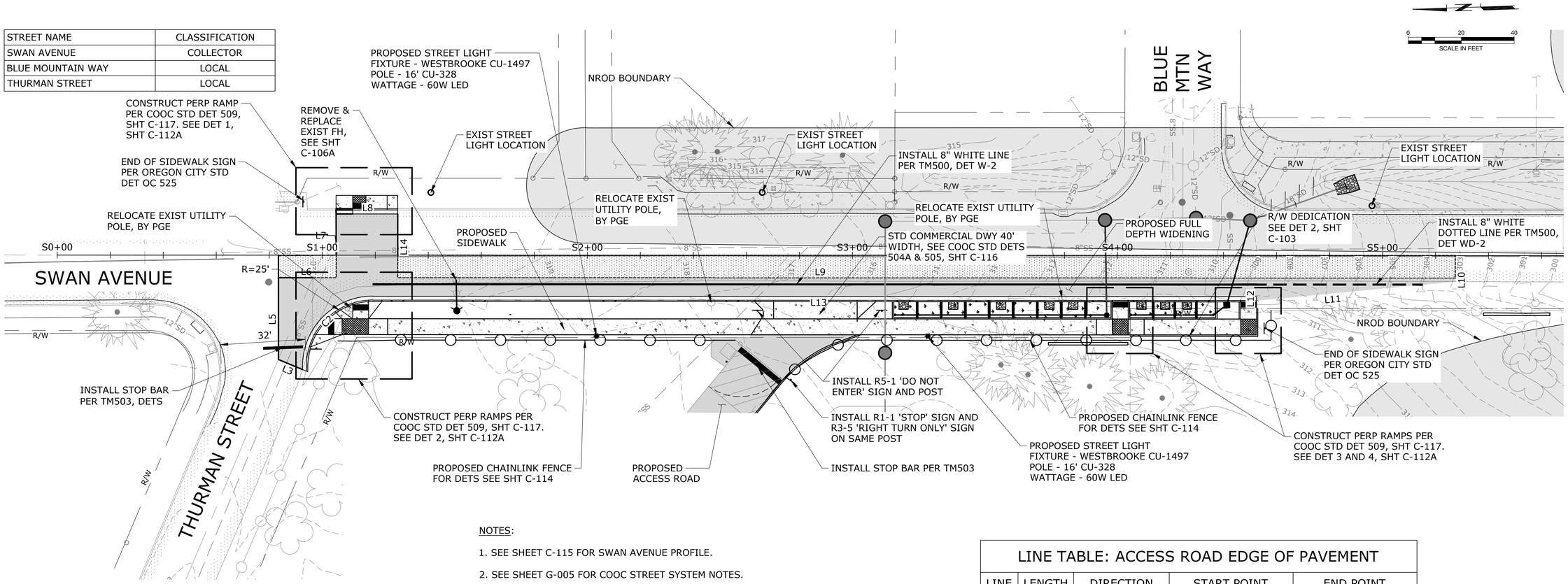

NOTES:

1. SEE SHEET C-115 FOR SWAN AVENUE PROFILE.
2. SEE SHEET G-005 FOR COOC STREET SYSTEM NOTES.
3. SEE SHEET C-112A FOR CURVE AND LINE TABLES.

LINE TABLE: ACCESS ROAD EDGE OF PAVEMENT

LINE	LENGTH	DIRECTION	START POINT	END POINT
L3	9.83'	N24° 37' 58.79"E	629804.23, 7669535.34	629813.17, 7669539.44
L5	30.86'	S88° 07' 45.21"E	629813.17, 7669539.44	629812.16, 7669570.28
L6	21.82'	S1° 52' 15.79"W	629812.16, 7669570.28	629790.35, 7669569.57
L7	15.53'	S88° 15' 25.37"E	629790.09, 7669578.07	629789.62, 7669593.58
L8	23.25'	S1° 44' 34.50"W	629789.62, 7669593.58	629766.38, 7669592.88
L9	398.95'	S1° 52' 13.91"W	629767.16, 7669568.81	629368.42, 7669555.79
L10	1.32'	N88° 07' 46.09"W	629368.42, 7669555.79	629368.47, 7669554.47
L12	1.50'	S88° 07' 44.54"E	629443.67, 7669549.74	629443.62, 7669551.24
L13	333.43'	N1° 52' 15.07"E	629443.62, 7669551.24	629776.87, 7669562.13
L14	24.08'	N88° 07' 44.21"W	629766.38, 7669592.88	629767.16, 7669568.81

CURVE TABLE: ACCESS ROAD EDGE OF PAVEMENT

#	RADIUS	LENGTH	CHORD	START POINT	END POINT
C2	26.50'	42.79'	38.29, N44° 23' 39.82"W	629776.87, 7669562.13	629804.23, 7669535.34

NO.	DATE	BY	REVISION

NOTICE
0 ½ 1
IF THIS BAR DOES NOT MEASURE 1" THEN DRAWING IS NOT TO SCALE

KKS DESIGNED
AJR DRAWN
ANB CHECKED

REGISTERED PROFESSIONAL ENGINEER 86406PE OREGON SEPTEMBER 12, 2025 ADAM N. BLAIR
RENEWS 12-31-27

BID SET

consor
Stantec

South Fork WATER PURE WATER SINCE 1915

WATER QUALITY SYSTEMS BUILDING

CIVIL SITE

SWAN AVENUE RESTORATION - SITE LAYOUT 1

PROJECT NO.: W253326OR | SCALE: AS SHOWN | DATE: AUGUST 2026

SHEET C-112

\\EgnyteDrive\Consor Files_V-W\Projects\OR\South Fork Water\2025\W253326OR.00\12 CADD\12-5 Sheets\C-ROAD-SWAN-RESTORATION.dwg C-112 7/29/2026 10:53 AM JUSTIN.DEUEL 24.3s (LMS Tech)

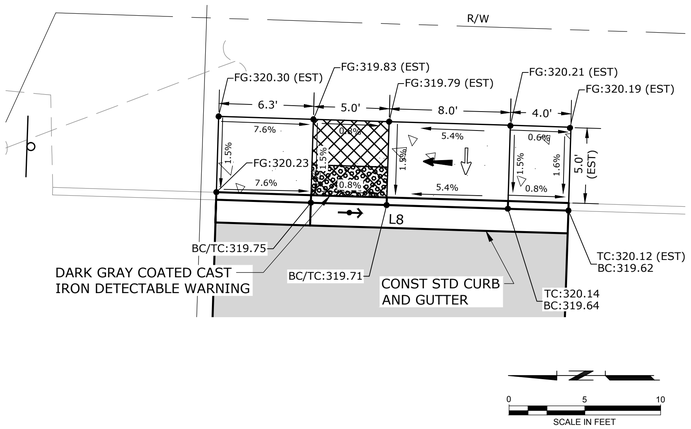

SWAN AVE AT THURMAN ST - SE CURB RAMP (1 / C-112)

SCALE: 1"=5'

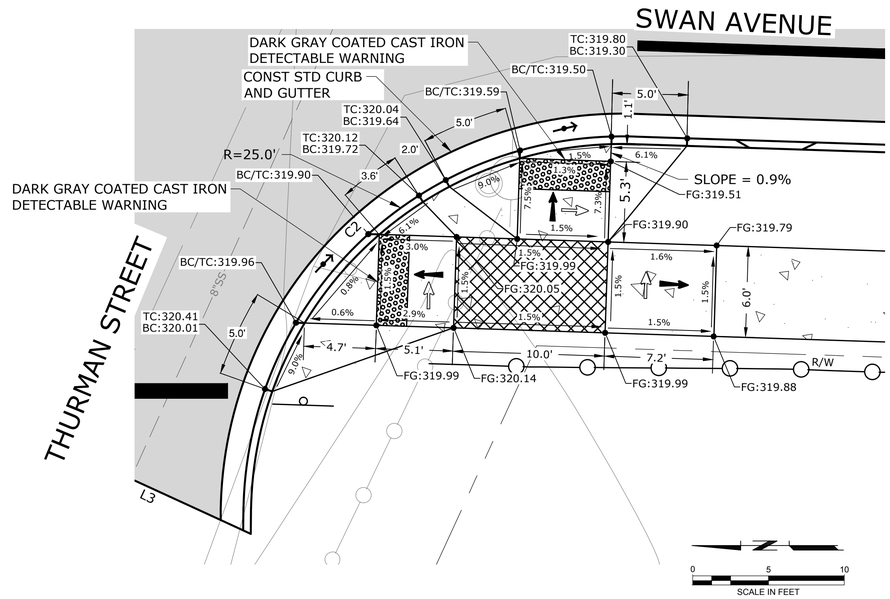

SWAN AVE AT THURMAN ST - SW CURB RAMP (2 / C-112)

SCALE: 1"=5'

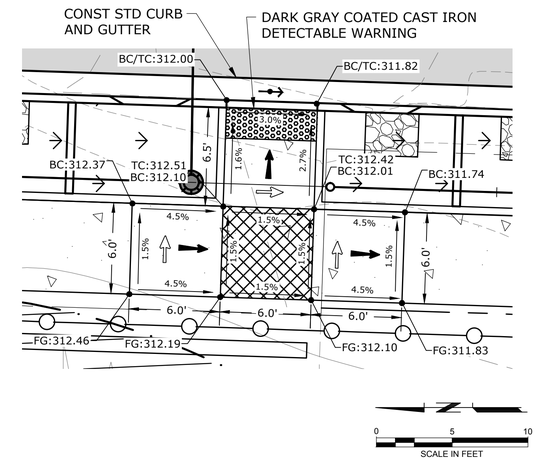

SWAN AVE AT BLUE MTN WAY - NW CURB RAMP (3 / C-112)

SCALE: 1"=5'

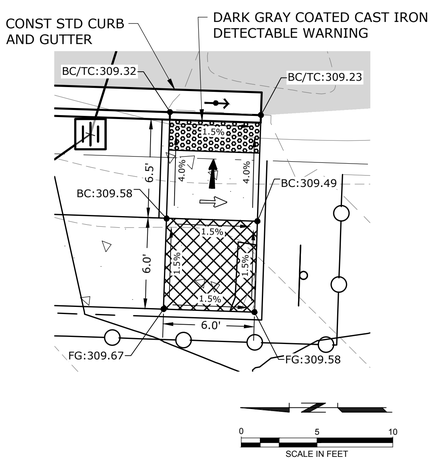

SWAN AVE AT BLUE MTN WAY - SW CURB RAMP (4 / C-112)

SCALE: 1"=5'

NOTES:

1. SEE SHEET C-115 FOR SWAN AVENUE PROFILE.
2. SEE SHEET G-005 FOR COOC STREET SYSTEM NOTES.

CURB RAMP LEGEND

- 1.5% SLOPE, 2% MAX.
- 7.5% SLOPE, 8.33% (1":12") MAX. (RAMP LENGTH 15' MAX. OR TO NEXT S/W JOINT IF <18")
- TRUNCATED DOME DETECTABLE WARNING SURFACE
- 1.5% SLOPE, 2% MAX SLOPE LANDING
- ROTATE FINISHED GR ON RAMP ℄ TO PROVIDE 1.5% SLOPE (2% MAX) ACROSS BOTTOM OF RAMP
- SAWCUT AND PAVEMENT PATCH LIMITS 2' MIN. FROM FACE OF CURB OR GUTTER PAN TO MEET CROSS SLOPE REQUIREMENTS (SEE TYPICAL SIDEWALK RAMP REPLACEMENT SECTION DETAIL, SHT. D-6)
- PROPOSED 2" GRIND AND INLAY

LINE TABLE: ACCESS ROAD EDGE OF PAVEMENT

LINE	LENGTH	DIRECTION	START POINT	END POINT
L3	9.83'	N24° 37' 58.79"E	629804.23, 7669535.34	629813.17, 7669539.44
L5	30.86'	S88° 07' 45.21"E	629813.17, 7669539.44	629812.16, 7669570.28
L6	21.82'	S1° 52' 15.79"W	629812.16, 7669570.28	629790.35, 7669569.57
L7	15.53'	S88° 15' 25.37"E	629790.09, 7669578.07	629789.62, 7669593.58
L8	23.25'	S1° 44' 34.50"W	629789.62, 7669593.58	629766.38, 7669592.88
L9	398.95'	S1° 52' 13.91"W	629767.16, 7669568.81	629368.42, 7669555.79
L10	1.32'	N88° 07' 46.09"W	629368.42, 7669555.79	629368.47, 7669554.47
L12	1.50'	S88° 07' 44.54"E	629443.67, 7669549.74	629443.62, 7669551.24
L13	333.43'	N1° 52' 15.07"E	629443.62, 7669551.24	629776.87, 7669562.13
L14	24.08'	N88° 07' 44.21"W	629766.38, 7669592.88	629767.16, 7669568.81

CURVE TABLE: ACCESS ROAD EDGE OF PAVEMENT

#	RADIUS	LENGTH	CHORD	START POINT	END POINT
C2	26.50'	42.79'	38.29, N44° 23' 39.82"W	629776.87, 7669562.13	629804.23, 7669535.34

NO.	DATE	BY	REVISION

NOTICE
0 ½ 1
IF THIS BAR DOES NOT MEASURE 1" THEN DRAWING IS NOT TO SCALE

KKS DESIGNED
AJR DRAWN
ANB CHECKED

REGISTERED PROFESSIONAL ENGINEER 86406PE OREGON SEPTEMBER 12, 2017 ADAM N. BLAIR
RENEWS 12-31-27

BID SET

consor
Stantec

South Fork WATER
PURE WATER SINCE 1915
WATER QUALITY SYSTEMS BUILDING

CIVIL SITE

SWAN AVENUE RESTORATION - SITE LAYOUT 2

PROJECT NO.: W253326OR | SCALE: AS SHOWN | DATE: AUGUST 2026

SHEET C-112A

\\EgnyteDrive\Consor Files_V-W\Projects\OR\South Fork Water\2025\W253326OR.00\12 CADD\12-5 Sheets\C-ROAD-SWAN-RESTORATION.dwg C-112A 7/29/2026 10:53 AM JUSTIN.DEUEL 24.3s (LMS Tech)

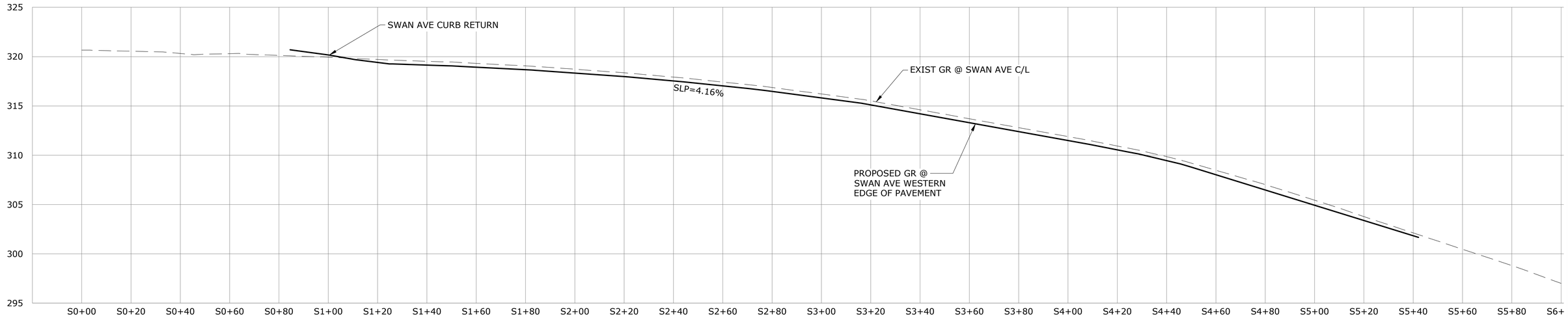

SWAN AVENUE - 'S' PROFILE - 1 (C-112)

SCALE: 1"=20' HORIZ; 1"=5' VERT

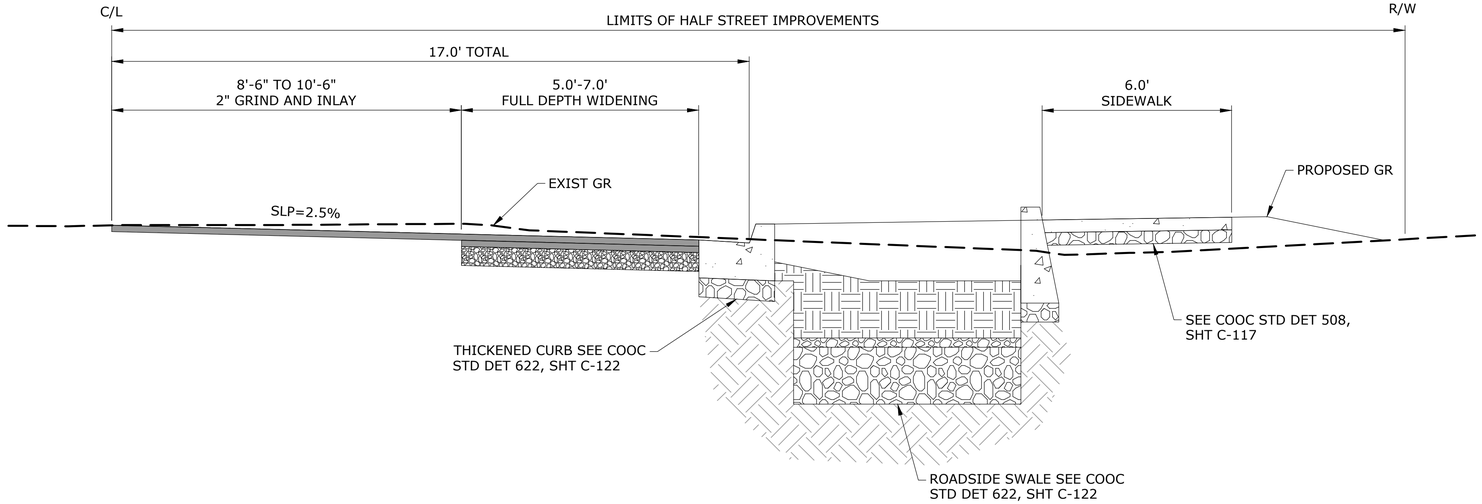

TYPICAL SECTION - SWAN AVENUE

SCALE: NOT TO SCALE

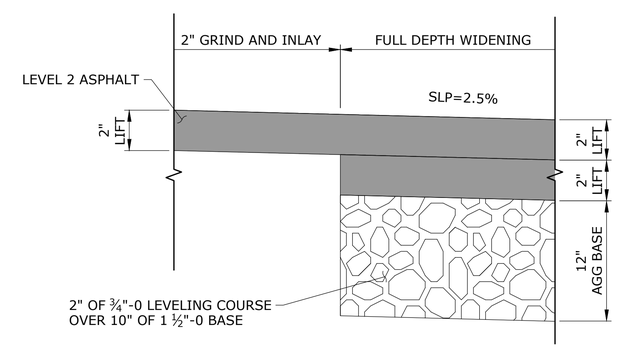

PAVEMENT SECTION - SWAN AVENUE

SCALE: NOT TO SCALE

NO.	DATE	BY	REVISION

NOTICE

0 ½ 1

IF THIS BAR DOES NOT MEASURE 1" THEN DRAWING IS NOT TO SCALE

KKS
DESIGNED

AJR
DRAWN

ANB
CHECKED

REGISTERED PROFESSIONAL ENGINEER
86406PE
OREGON
SEPTEMBER 12, 2017
ADAM N. BLAIR
RENEWS 12-31-27

BID SET

consor

Stantec

South Fork WATER
PURE WATER SINCE 1915

WATER QUALITY SYSTEMS BUILDING

CIVIL SITE

SWAN AVENUE RESTORATION - PROFILE

PROJECT NO.: W253326OR | SCALE: AS SHOWN | DATE: AUGUST 2026

SHEET

C-113

\\EgnyteDrive\Consor Files_V-W\Projects\OR\South Fork Water\2025\W253326OR.00\12 CADD\12-5 Sheets\C-ROAD-SWAN-RESTORATION.dwg C-113 7/29/2026 10:53 AM JUSTIN.DEUEL 24.3s (LMS Tech)

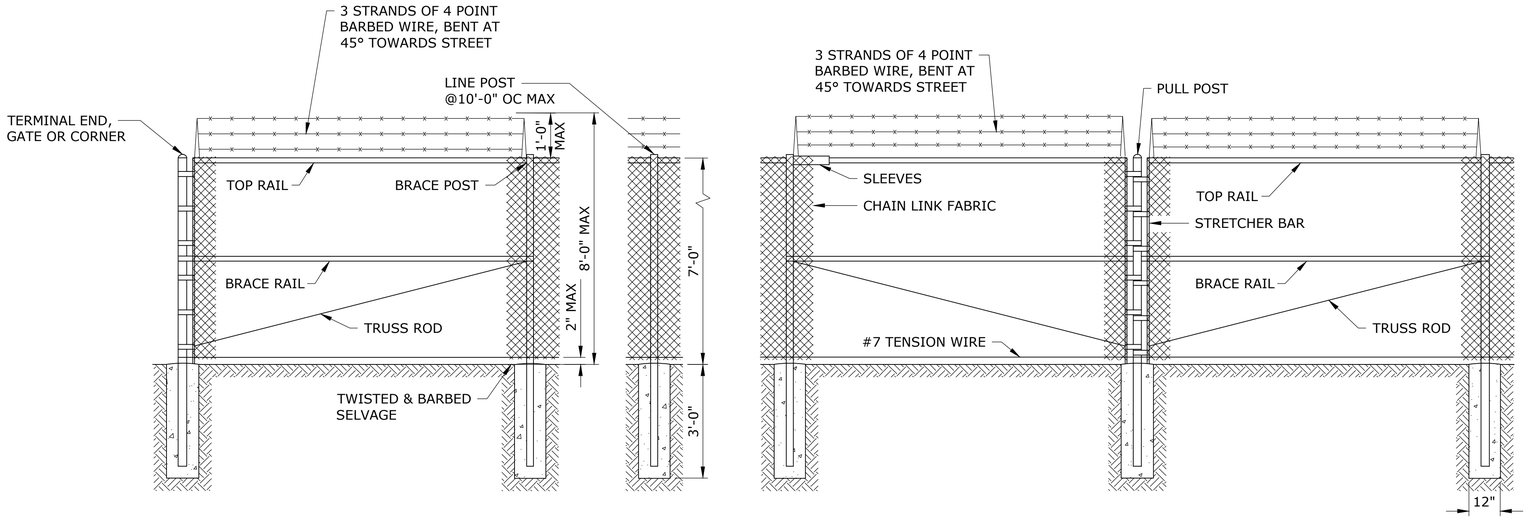

NOTES:

1. CHAIN LINK FABRIC, RAILS, AND POSTS SHALL BE BLACK PVC COATED, SEE SPECIFICATION 32 31 13 CHAIN LINK FENCING AND GATES.

2. CONCRETE SHALL BE MINIMUM 3,000 PSI.

CHAIN LINK FENCE WITH BARBED WIRE

SCALE: NTS

1 / C-103B

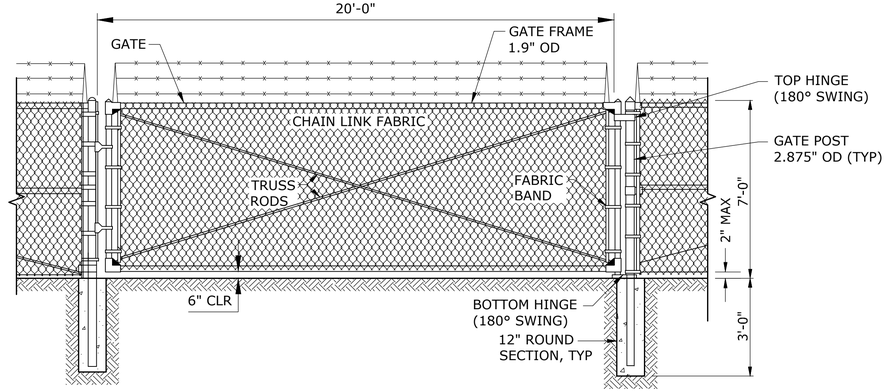

NOTES:

1. PROVIDE GATE STOP AND DROP RECEIVERS SET IN CONCRETE FOR EACH GATE, SEE SPECIFICATION 32 31 13 CHAIN LINK FENCING AND GATES.

2. OD FOR GATE POSTS SHALL BE SIZED BY GATE MFR FOR THE SPECIFIED GATE OPENING WIDTH.

3. SEE DETAIL 3, THIS SHEET, FOR FOUNDATION PAD FOR GATE MOTOR FOUNDATION PAD. SEE C-103B FOR LOCATIONS OF EQUIPMENT. COORDINATE LOCATIONS WITH ELECTRICAL DRAWINGS.

MOTORIZED SWING GATE

SCALE: NTS

2 / C-103B

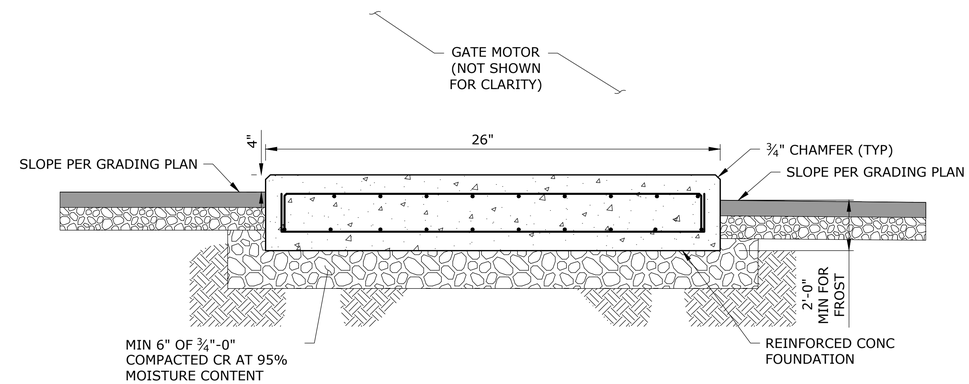

NOTES:

1. CONCRETE SHALL ATTAIN A MINIMUM COMPRESSIVE STRENGTH OF 3,000 PSI IN 28 DAYS. ALL CONCRETE SHALL CONTAIN 5% (±1%) AIR ENTRAINMENT. SLUMP SHALL BE 1" TO 3".

2. REINFORCING STEEL SHALL CONFORM TO ASTM A615, GRADE 60. GRADE 40 MAY BE USED FOR #3 AND SMALLER TIES AND STIRRUPS. DETAIL AND PLACE ACCORDING TO ACI MANUAL SP-66. UNLESS OTHERWISE NOTED, MINIMUM COVER SHALL BE 1½" FOR #5 AND SMALLER BARS, 2" FOR #6 AND LARGER BAR, AND 3" WHEN PLACED AGAINST EARTH. UNLESS OTHERWISE NOTED, BEND ALL HORIZONTAL REINFORCING A MINIMUM OF 2'-0" AT CORNERS AND WALL INTERSECTIONS.

GATE MOTOR FOUNDATION PAD

SCALE: NTS

3 / C-103B

NO.	DATE	BY	REVISION

NOTICE

0 ½ 1

IF THIS BAR DOES NOT MEASURE 1" THEN DRAWING IS NOT TO SCALE

KKS DESIGNED
TMS DRAWN
ANB CHECKED

REGISTERED PROFESSIONAL ENGINEER 86406PE OREGON SEPTEMBER 12, 2017 ADAM N. BLAIR
RENEWS 12-31-27

BID SET

consor
Stantec

South Fork WATER
PURE WATER SINCE 1915

WATER QUALITY SYSTEMS BUILDING

CIVIL SITE

FENCING AND GATE DETAILS

PROJECT NO.: W253326OR | SCALE: AS SHOWN | DATE: AUGUST 2026

SHEET C-114

\\EgnyteDrive\Consor Files_V-W\Projects\OR\South Fork Water\2025\W253326OR.00\12 CADD\12-5 Sheets\ODOT STANDARD DETAILS.dwg C-114 7/29/2026 10:54 AM JUSTIN.DEUEL 24.3s (LMS Tech)

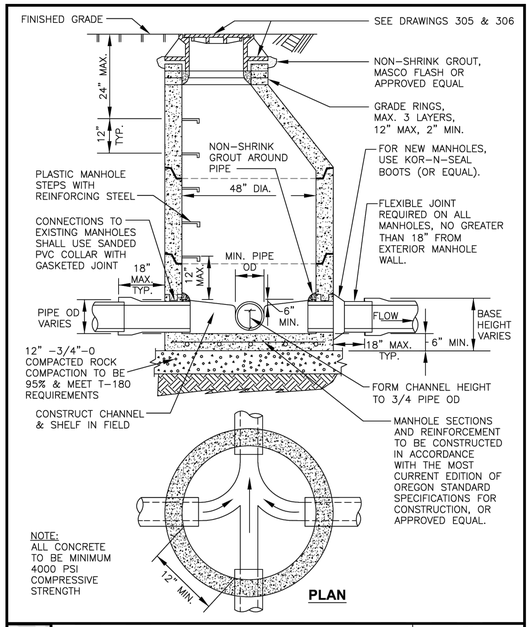

Public Works Standard Drawings	SCALE NTS	
MANHOLE - STORM & SANITARY SEWER	DATE JAN '24	REV. 1
	ENGR. DW	DRAWN KAE
	DRAWING NO. 301	

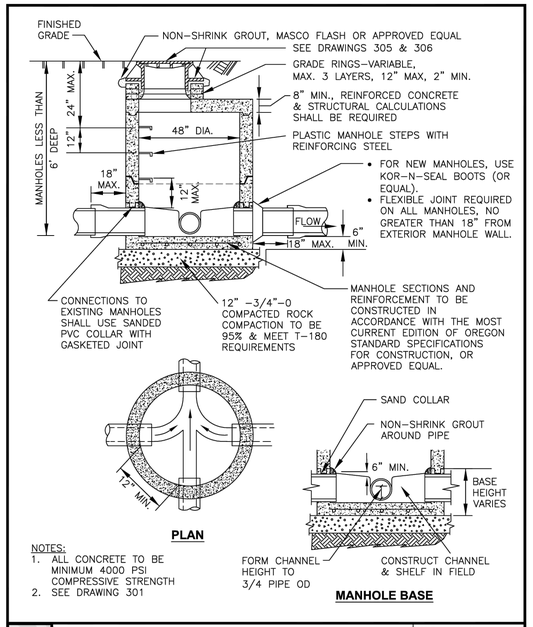

NOTES:
1. ALL CONCRETE TO BE MINIMUM 4000 PSI COMPRESSIVE STRENGTH
2. SEE DRAWING 301

Public Works Standard Drawings	SCALE NTS	
SHALLOW MANHOLE - STORM & SANITARY SEWER	DATE JAN '24	REV. 1
	ENGR. DW	DRAWN KAE
	DRAWING NO. 302	

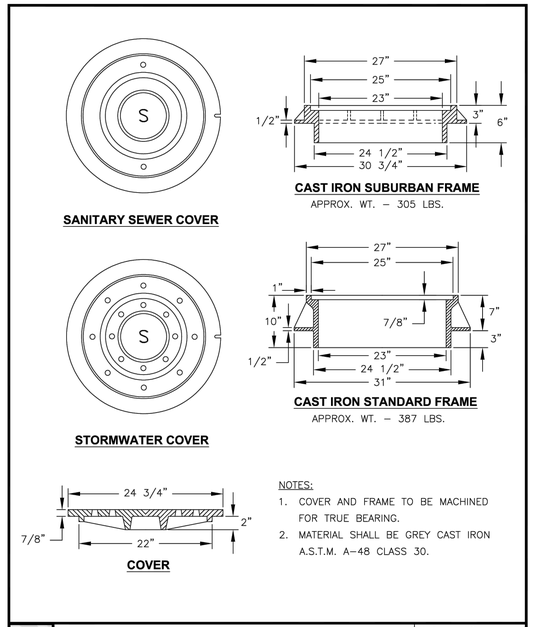

NOTES:
1. COVER AND FRAME TO BE MACHINED FOR TRUE BEARING.
2. MATERIAL SHALL BE GREY CAST IRON A.S.T.M. A-48 CLASS 30.

Public Works Standard Drawings	SCALE NTS	
MANHOLE FRAMES & COVERS - STORM & SANITARY SEWER	DATE JAN '23	REV.
	ENGR. DW	DRAWN KAE
	DRAWING NO. 305	

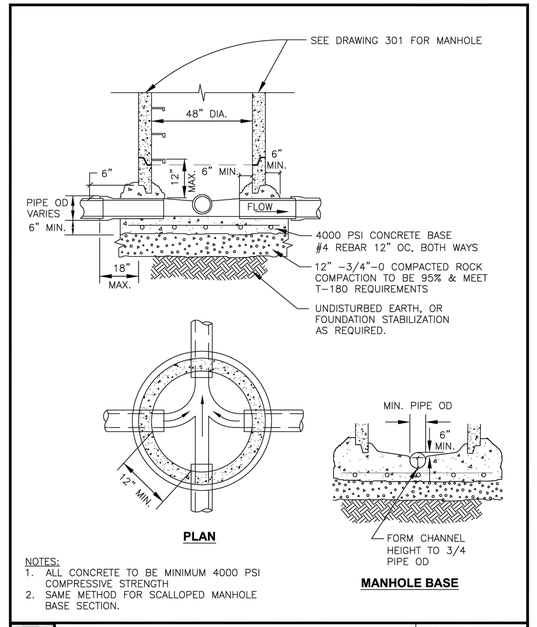

NOTES:
1. ALL CONCRETE TO BE MINIMUM 4000 PSI COMPRESSIVE STRENGTH
2. SAME METHOD FOR SCALLOPED MANHOLE BASE SECTION.

Public Works Standard Drawings	SCALE NTS	
POURED IN-PLACE MANHOLE BASE - STORM & SANITARY SEWER	DATE JAN '23	REV.
	ENGR. DW	DRAWN KAE
	DRAWING NO. 308	

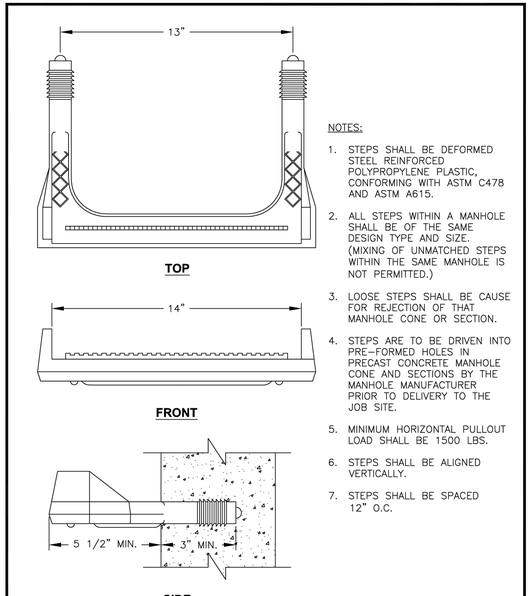

NOTES:
1. STEPS SHALL BE DEFORMED STEEL REINFORCED POLYPROPYLENE PLASTIC, CONFORMING WITH ASTM C478 AND ASTM A615.
2. ALL STEPS WITHIN A MANHOLE SHALL BE OF THE SAME DESIGN TYPE AND SIZE. (MIXING OF UNMATCHED STEPS WITHIN THE SAME MANHOLE IS NOT PERMITTED.)
3. LOOSE STEPS SHALL BE CAUSE FOR REJECTION OF THAT MANHOLE CONE OR SECTION.
4. STEPS ARE TO BE DRIVEN INTO PRE-FORMED HOLES IN PRECAST CONCRETE MANHOLE CONE AND SECTIONS BY THE MANHOLE MANUFACTURER PRIOR TO DELIVERY TO THE JOB SITE.
5. MINIMUM HORIZONTAL PULLOUT LOAD SHALL BE 1500 LBS.
6. STEPS SHALL BE ALIGNED VERTICALLY.
7. STEPS SHALL BE SPACED 12" O.C.

Public Works Standard Drawings	SCALE NTS	
MANHOLE STEP - STORM & SANITARY SEWER	DATE JAN '23	REV.
	ENGR. DW	DRAWN KAE
	DRAWING NO. 307	

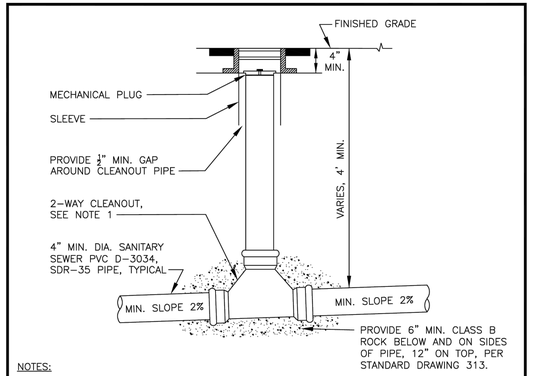

NOTES:
1. SERVICE CLEANOUT TO BE SAME DIAMETER AND MATERIAL AS SERVICE LATERAL.
   A. 2-WAY CLEANOUT TO BE USED FOR SEWER DEPTHS UP TO 3 FEET DEEP.
   B. 1-WAY DIRECTIONAL CLEANOUT SWEEPING TOWARD MAINLINE TO BE USED FOR SEWER DEPTHS GREATER THAN 3 FEET UNLESS DIRECTED OTHERWISE BY ENGINEER.
2. USE OLYMPIC FOUNDRY 8"X4" CLEANOUT RING & COVER PART #M1007 OR APPROVED EQUAL.
3. LOCATION:
   A. WHERE NEW CURB IS BEING INSTALLED OR EXISTING CURB IS PRESENT AND A PLANTER AREA IS OR WILL EXIST BETWEEN CURB AND SIDEWALK, CLEANOUT SHALL BE PLACED 2 FEET BEHIND CURB.
   B. WHEN A PLANTER AREA DOES NOT EXIST (i.e. CURB TIGHT SIDEWALK), THE CLEANOUT SHALL BE 12 INCHES FROM BACK OF SIDEWALK TO CENTER OF CLEANOUT.
   C. WHEN NO CURB OR SIDEWALK EXISTS, LOCATE CLEANOUT 1 FOOT INSIDE RIGHT OF WAY LINE OR AS DIRECTED BY THE ENGINEER.
   D. WHERE CURB EXISTS BUT NO SIDEWALK, CLEANOUT SHALL BE PLACED 2 FEET BEHIND CURB.
4. VIDEO INSPECT ALL LATERALS FROM MAINLINE TO CLEANOUT/ROW LINE, OR FROM CLEANOUT/ROW LINE TO MAINLINE, PER APPLICABLE APWA/ODOT STANDARDS.

Public Works Standard Drawings	SCALE NTS	
2-WAY CLEANOUT FOR SANITARY SEWER SERVICE	DATE JAN '26	REV. 2
	ENGR. DW	DRAWN KAE
	DRAWING NO. 310-A	

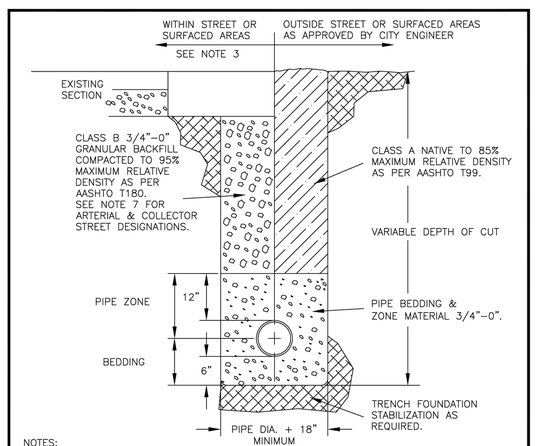

NOTES:
1. ALL CUTS IN PAVEMENT SHALL BE SAW CUT.
2. ALL PAVEMENT PATCH JOINTS AND ALL CUT EDGES SHALL BE SAND SEALED PER ODOT SPECS AND OREGON CITY SPECIAL PROVISIONS SEC-00744.51.
3. REFER TO OREGON CITY PAVEMENT CUT STANDARDS AND STANDARD DETAIL DRAWINGS 532, 533 & 534.
4. THIS TRENCH BACKFILL REQUIREMENT APPLIES TO ALL UNDERGROUND CONDUITS.
5. CLASS "B" BACKFILL SHALL EXTEND 3 FEET BEYOND EDGE OF STREET OR SURFACED AREA.
6. BACKFILL SHALL BE PLACED AND COMPACTED IN A MAX. OF 24-INCH LIFTS. COMPACTION TESTING REQUIRED AT A FREQUENCY OF 1 TEST EVERY 100 FEET OF TRENCH MINIMUM.
7. EXISTING ARTERIAL & COLLECTOR STREET DESIGNATIONS REQUIRE CLSM (aka CDF) PER ODOT STANDARDS, SEC-00442 FOR ALL TRENCH TRANSVERSE OR PERPENDICULAR CROSSINGS OF VEHICLE TRAVEL LANES.

Public Works Standard Drawings	SCALE NTS	
PIPE BEDDING AND TRENCH BACKFILL - STORM & SANITARY SEWER & WATER PIPE	DATE JAN '23	REV.
	ENGR. DW	DRAWN KAE
	DRAWING NO. 313	

NOTES:
1. SEE WATER CONSTRUCTION NOTES FOR ACCEPTABLE FIRE HYDRANT MAKES AND MODELS.
2. TWO 3/4" GALVANIZED TIE RODS OR A HYDRANT HOLDING SPOOL MAP BE USED IN PLACE OF THE MECHANICAL JOINT RETAINING GLANDS FOR INSTALLATIONS LESS THAN 18" LONG.
3. ALL FITTINGS IN CONTACT WITH CONCRETE SHALL BE WRAPPED IN 10 MIL. PLASTIC. HYDRANT DRAIN HOLES TO REMAIN OPEN TO DRAIN ROCK AND OPERATIONAL.
4. 1 1/2"-3/4" CLEAN DRAIN ROCK SHALL BE PLACED A MINIMUM OF 6" ABOVE DRAIN OUTLET. COVER TOP DRAIN ROCK WITH PLASTIC.
5. WHERE PLANTER STRIP EXISTS, HYDRANT SHALL BE PLACED SO FRONT PORT IS A MINIMUM OF 24" BEHIND FACE OF CURB.
6. WHERE INTEGRAL SIDEWALK AND CURB EXISTS, HYDRANT SHALL BE PLACED AT BACK OF SIDEWALK OR AS DIRECTED BY ENGINEER.
7. THRUST BLOCK AT FIRE HYDRANT TEE SHALL HAVE A 3.7 SQ. FT. BEARING AREA.
8. HYDRANT VALVE SHALL BE RESILIENT SEAT GATE VALVE ONLY.
9. PAINT FIRE HYDRANT WITH RODDA ALL PURPOSE EQUIPMENT ENAMEL (1625 SAFETY ORANGE), MILLER PAINT SAFETY ORANGE (#D18756), OR CITY APPROVED EQUAL, AND REMOVE CHAINS. PAINT MUST BE BRUSH APPLIED.
10. HYDRANT EXTENSIONS PERMITTED ON EXISTING HYDRANTS ONLY.

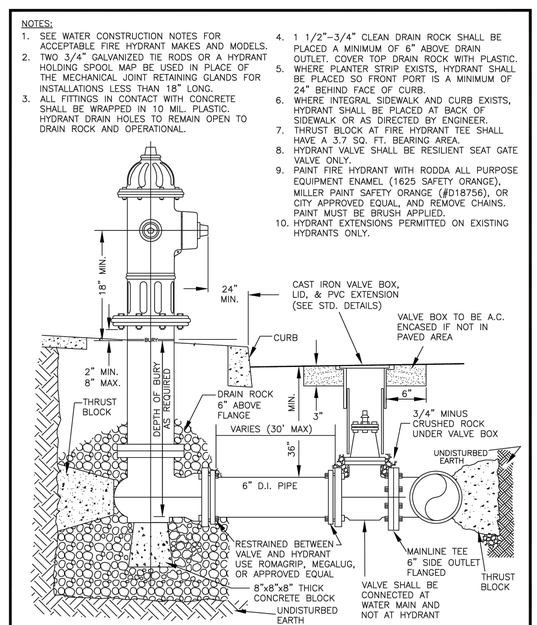

Public Works Standard Drawings	SCALE NTS	
STANDARD FIRE HYDRANT INSTALLATION	DATE JAN '23	REV.
	ENGR. DW	DRAWN KAE
	DRAWING NO. 401	

NO.	DATE	BY	REVISION

NOTICE
0 ½ 1
IF THIS BAR DOES NOT MEASURE 1" THEN DRAWING IS NOT TO SCALE

KKS DESIGNED
MDP DRAWN
ANB CHECKED

REGISTERED PROFESSIONAL ENGINEER 86406PE OREGON SEPTEMBER 12, 2017 ADAM N. BLAIR
RENEWS 12-31-27

BID SET

consor
Stantec

South Fork WATER
PURE WATER SINCE 1915

WATER QUALITY SYSTEMS BUILDING

DETAILS

OREGON CITY STANDARD DRAWINGS

PROJECT NO.: W253326OR | SCALE: AS SHOWN | DATE: AUGUST 2026

SHEET C-115

\\EgnyteDrive\Consor Files_V-W\Projects\OR\South Fork Water\2025\W253326OR.00\12 CADD\12-5 Sheets\ODOT STANDARD DETAILS.dwg C-115 7/29/2026 10:54 AM JUSTIN.DEUEL 24.3s (LMS Tech)

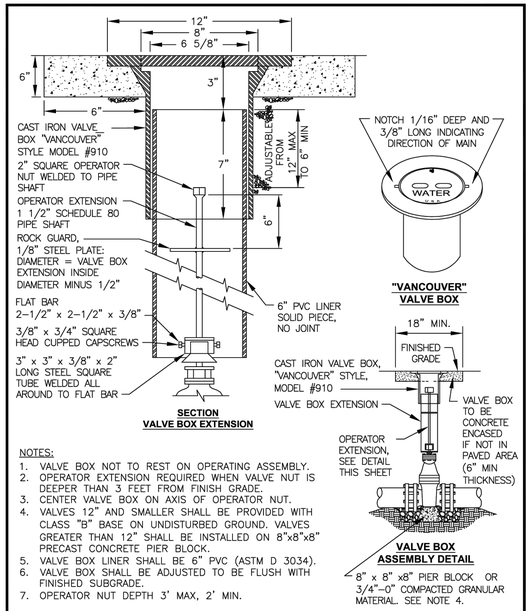

NOTES:

1. VALVE BOX NOT TO REST ON OPERATING ASSEMBLY.
2. OPERATOR EXTENSION REQUIRED WHEN VALVE NUT IS DEEPER THAN 3 FEET FROM FINISH GRADE.
3. CENTER VALVE BOX ON AXIS OF OPERATOR NUT.
4. VALVES 12" AND SMALLER SHALL BE PROVIDED WITH CLASS "B" BASE ON UNDISTURBED GROUND. VALVES GREATER THAN 12" SHALL BE INSTALLED ON 8"x8"x8" PRECAST CONCRETE PIER BLOCK.
5. VALVE BOX LINER SHALL BE 6" PVC (ASTM D 3034).
6. VALVE BOX SHALL BE ADJUSTED TO BE FLUSH WITH FINISHED SUBGRADE.
7. OPERATOR NUT DEPTH 3' MAX, 2' MIN.

Public Works Standard Drawings	SCALE NTS		
STANDARD VALVE BOX DETAIL	DATE JUL '23	REV. 1	
	ENGR. DW	DRAWN KAE	
	DRAWING NO. 410		

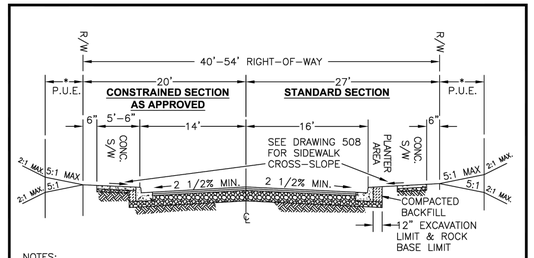

NOTES:

1. ASPHALT CONCRETE PAVEMENT (ACP) FOR ALL LOCAL STREET SECTIONS SHALL BE LEVEL 2 1/2" DENSE, PG 64-22, ESAL 3 TO 30 MIX DESIGN.
2. AASHTO SOIL TYPES:
   2.1. FOR SOIL TYPES A-1 TO A-6, PLACE ASPHALT CONCRETE IN TWO LIFTS. EACH LIFT THICKNESS SHALL BE 2 INCHES FOR A TOTAL ASPHALT THICKNESS OF 4 INCHES. SECOND FINAL LIFT SHALL BE PLACED WITH A CONTINUOUS PAVING OPERATION FOLLOWING THE PLACEMENT OF THE FIRST BASE LIFT, UNLESS OTHERWISE APPROVED BY CITY. COMPACT PER OREGON CITY STREET SYSTEM NOTES.
   2.2. FOR SOIL TYPE A-7 (CLAY SOILS), A PAVEMENT DESIGN REPORT SHALL BE REQUIRED TO ACCOMMODATE ANTICIPATED TRAFFIC LOADINGS AND EXISTING SOIL CONDITIONS. THE REPORT SHALL BE SUBMITTED TO THE CITY ENGINEER FOR APPROVAL.
3. DEFAULT AGGREGATE BASE ROCK THICKNESS SHALL BE 10 INCHES, PER THE STREET DESIGN STANDARDS.
4. SUBGRADE AND BASE ROCK SHALL BE COMPACTED TO 95% RELATIVE DENSITY, PER AASHTO T-180.
5. STANDARD AND CONSTRAINED SECTIONS SHALL BE SYMMETRICAL ABOUT THE CENTER LINE.
6. USE MONOLITHIC CURB AND GUTTER, UNLESS OTHERWISE NOTED (SEE DRAWING 511)
7. DESIGN SPEED EQUALS 25 MILES PER HOUR.

* 10' P.U.E. FOR R-10, R-8, R-6, R3.5, R-2, G1, C1. ALL OTHER ZONES 5' P.U.E.

Public Works Standard Drawings	SCALE NTS		
LOCAL STREET SECTION	DATE JAN '24	REV. 1	
	ENGR. DW	DRAWN KAE	
	DRAWING NO. 500		

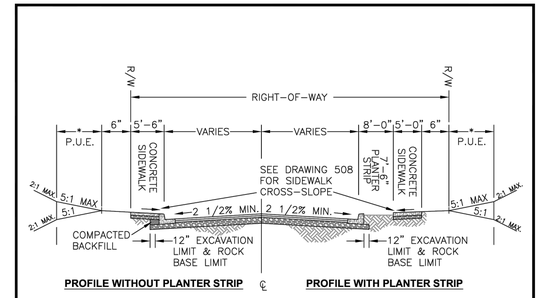

NOTES:

1. A PAVEMENT DESIGN, PER OREGON CITY STREET DESIGN STANDARDS, TO ACCOMMODATE ANTICIPATED TRAFFIC LOADINGS AND EXISTING SOIL CONDITIONS SHALL BE SUBMITTED TO THE CITY ENGINEER FOR APPROVAL. PAVEMENT SHALL BE LEVEL-2, HALF-INCH DENSE ACP COMPACTED TO 92% MAX DENSITY (RICE DENSITY) PER AASHTO T-209.
2. SUBGRADE AND BASE ROCK SHALL BE COMPACTED TO 95% RELATIVE DENSITY PER AASHTO T-180.
3. ALL COLLECTORS SHALL INCLUDE TWO SIX-FOOT BIKE LANES, UNLESS PROVIDED OTHERWISE. MAY BE FIVE-FOOT BIKE LANES IF PARKING LANE PROVIDED.
4. WHEN REQUIRED, CENTER TURN LANES SHALL BE 12 FEET WIDE.
5. TRAVEL LANES SHALL BE 11 FEET WIDE, OR AS APPROVED BY CITY ENGINEER.
6. THE NUMBER OF LANES SHALL BE DETERMINED BY THE CITY'S TRANSPORTATION SYSTEM PLAN OR PROJECT TRAFFIC ANALYSIS.
7. BIKE SYMBOLS SHALL BE THERMOPLASTIC.

* 10' P.U.E. FOR R-10, R-8, R-6, R3.5, R-2, G1, C1. ALL OTHER ZONES 5' P.U.E.

Public Works Standard Drawings	SCALE NTS		
COLLECTOR STREET SECTION	DATE JAN '23	REV.	
	ENGR. DW	DRAWN KAE	
	DRAWING NO. 501		

NOTES FOR STANDARD DETAIL DRAWINGS 504 & 505 (STANDARD DRIVEWAYS):

1. SECTION A-A MAY BE USED FOR CURB-TIGHT SIDEWALK DRIVEWAY APRONS IF SIDEWALK WIDTH IS 10' OR MORE.
2. CONCRETE SHALL BE AIR-ENTRAINED 4.0% MINIMUM AND HAVE A MINIMUM BREAKING STRENGTH OF 4,000 PSI AFTER 28 DAYS.
3. FINISH WITH BROOM AND EDGE ALL JOINTS WITH 3" SHINE.
4. IF CURBING IS BEING REMOVED TO INSTALL A DRIVEWAY AND THE GUTTER SHOULD BECOME SEPARATED FROM THE DRIVING SURFACE IN EXCESS OF 1/16 INCH, THEN THE GUTTER SHALL ALSO BE REMOVED AND REPLACED.
5. CURB JOINT SHALL BE A TROWELED JOINT WITH A MINIMUM 1/2 INCH RADIUS ALONG BACK OF CURB.
6. WEEPHOLES SHALL NOT BE PLACED IN WING.
7. SLOPE OF THE DRIVEWAY MAY BE AWAY FROM THE CURB WHEN PREAPPROVED BY CITY ENGINEER.
8. DRIVEWAY THROAT SCORING PATTERN SHALL MATCH SIDEWALK SCORING PATTERN.
9. EXPANSION JOINT MATERIAL SHALL BE "REFLEX RUBBER JOINT EXPANSION" MANUFACTURED BY THE JD RUSSELL COMPANY, OR CITY APPROVED EQUAL, WITH A THICKNESS OF 1/2-INCH.
10. MAX 7.5% DESIGN SLOPE DRIVEWAY RAMP (MAX 8.33% FINISH SLOPE).
11. SEE DRAWING 508 FOR SIDEWALK SLOPE.
12. WINGS OF A DRIVEWAY WHICH ARE A PORTION OF THE CURB-TIGHT SIDEWALK SHALL HAVE MAXIMUM 7.5% DESIGN SLOPE (MAXIMUM 8.33% FINISHED SLOPE).

DRIVEWAY THROAT MEASURED AT THE R.O.W. SHALL CONFORM TO:

- SINGLE FAMILY — 10' MIN., 24' MAX.
- DUPLEXES — 12' MIN., 24' MAX.
- 3-4 PLEXES — 12' MIN., 36' MAX.
- MULTI-FAMILY — 18' MIN., 30' MAX.
- COMMERCIAL ONE-WAY — 12' MIN.
- COMMERCIAL TWO-WAY — 20' MIN., 40' MAX.

Public Works Standard Drawings	SCALE NTS		
STANDARD DRIVEWAY NOTES	DATE JUL '25	REV. 1	
	ENGR. DW	DRAWN KAE	
	DRAWING NO. 504A		

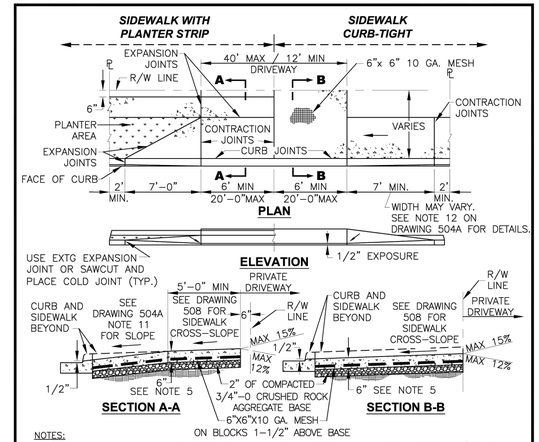

NOTES:

1. SECTION A-A MAY BE USED FOR CURB-TIGHT SIDEWALK DRIVEWAY APRONS IF SIDEWALK'S WIDTH IS 10' OR MORE.
2. CONCRETE SHALL BE AIR ENTRAINED 4.5% MINIMUM AND HAVE A MINIMUM BREAKING STRENGTH OF 4,000 PSI AFTER 28 DAYS.
3. CURB JOINT SHALL BE A TROWELED JOINT WITH A MINIMUM 1/2 INCH RADIUS ALONG BACK OF CURB.
4. EXPANSION JOINTS SHALL BE 1/2 INCH "REFLEX RUBBER JOINT EXPANSION," OR APPROVED EQUAL, EXTENDING FROM TOP OF BASE TO FINISHED GRADE.
5. FOR DRIVEWAYS 24 FEET WIDE OR GREATER, CONCRETE TO BE INCREASED TO A 7-INCH DEPTH.
6. FINISH WITH BROOM AND EDGE ALL JOINTS WITH 3" SHINE.
7. WEEPHOLES SHALL NOT BE PLACED IN WING.
8. IF CURBING IS BEING REMOVED TO INSTALL A DRIVEWAY AND THE GUTTER SHOULD BECOME SEPARATED FROM THE DRIVING SURFACE IN EXCESS OF 1/16 INCH, THEN THE GUTTER SHALL ALSO BE REMOVED AND REPLACED.
9. WINGS OF THE COMMERCIAL DRIVEWAY WHICH ARE A PORTION OF THE CURB-TIGHT SIDEWALK SHALL NOT EXCEED 8.33% (1:12) FINISHED SLOPE.
10. SLOPE OF THE DRIVEWAY MAY BE AWAY FROM THE CURB WHEN PREAPPROVED BY CITY ENGINEER.

Public Works Standard Drawings	SCALE NTS		
STANDARD COMMERCIAL DRIVEWAY	DATE JAN '23	REV.	
	ENGR. DW	DRAWN KAE	
	DRAWING NO. 505		

NO.	DATE	BY	REVISION

NOTICE

0 ½ 1

IF THIS BAR DOES NOT MEASURE 1" THEN DRAWING IS NOT TO SCALE

KKS
DESIGNED
MDP
DRAWN
ANB
CHECKED

REGISTERED PROFESSIONAL ENGINEER 86406PE OREGON SEPTEMBER 12, 2017 ADAM N. BLAIR
RENEWS 12-31-27

BID SET

consor
Stantec

South Fork WATER
PURE WATER SINCE 1915

WATER QUALITY SYSTEMS BUILDING

DETAILS

OREGON CITY STANDARD DRAWINGS

PROJECT NO.: W253326OR | SCALE: AS SHOWN | DATE: AUGUST 2026

SHEET
C-116

\\EgnyteDrive\Consor Files_V-W\Projects\OR\South Fork Water\2025\W253326OR.00\12 CADD\12-5 Sheets\ODOT STANDARD DETAILS.dwg C-116 7/29/2026 10:54 AM JUSTIN.DEUEL 24.3s (LMS Tech)

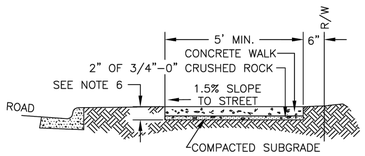

SIDEWALK AWAY FROM CURB

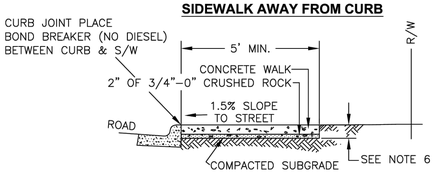

SIDEWALK ADJACENT TO CURB

NOTES:
1. CONCRETE SHALL BE AIR ENTRAINED MINIMUM 4.0% AND HAVE A MINIMUM BREAKING STRENGTH OF 4000 PSI AT 28 DAYS.
2. PANELS TO BE 5 FEET LONG, ALL SURFACES SHALL BE TROWELED AND BROOMED IN A WORKMAN LIKE MANNER. WORKMANSHIP DESCRIBED AS: LIGHT BROOM FINISH WITH NO RIDGES AT TROWELED BORDERS. ALL EDGES SHALL BE TOOL ROUNDED AND SHINED 3" AFTER BROOMING. NO HUMPS OR SAGS, AND FINISH TO BE PROTECTED FROM WEATHER DAMAGE AND GRAFFITI.
3. EXPANSION JOINTS SHALL BE PLACED AT SIDES OF DRIVEWAY APPROACHES, UTILITY VAULTS, RAMPS, & AT SPACING NOT TO EXCEED 45 FT. EXPANSION MATERIAL SHALL BE 1/2" REFLEX RUBBER JOINT EXPANSION.
4. CONTRACTION JOINTS SHALL BE PLACED AT ALL CHANGES IN DIRECTION, POINTS OF CURVATURE AND AT 15' MAXIMUM INTERVALS WITH A MAXIMUM 1/2-INCH RADIUS TROWEL JOINT.
5. SIDEWALK SHALL HAVE A MINIMUM THICKNESS OF 4 INCHES, SEE DRAWINGS 504 & 505 FOR DRIVEWAY CROSSINGS.
6. DRAIN WEEPHOLES IN CURBS SHALL BE EXTENDED TO BACK OF SIDEWALK WITH 3-INCH DIAMETER PVC SCHEDULE 40 ASTM 1785 PIPE AT 2% SLOPE. CONTRACTION JOINT TO BE PLACED OVER PIPE.
7. LOCATION & WIDTH OF SIDEWALK WILL VARY DEPENDING OF STREET CLASSIFICATION. SEE STREET SECTIONS.
8. MAX. 1.5% DESIGN SLOPE (MAX. 2.0% FINISHED SLOPE)

Public Works Standard Drawings	SCALE NTS		
SIDEWALK DETAIL	DATE JUL '25	REV. 1	
	ENGR. DW	DRAWN KAE	
	DRAWING NO. 508		

NOTES:

1. FOR SIDEWALK RAMP DETAILS USE OREGON DEPARTMENT OF TRANSPORTATION'S (ODOT) STANDARD RD900 SERIES DRAWINGS. SEE INDEX BELOW:

CURB RAMP INDEX	
STD. DWG. NO.	STD. DWG. TITLE
RD900	Curb Ramp Components And Legend
RD901	Curb Ramp Legend And Corner Identification
RD902	Detectable Warning Surface Details
RD904	Detectable Warning Surface Placement For Curb Ramps
RD905	Detectable Warning Surface Placement For Directional Curbs
RD906	Detectable Warning Surface Placement For Accessible Route Island
RD908	Detectable Warning Surface Placement
RD910, RD912	Perpendicular Curb Ramp
RD913	Perpendicular Curb Ramp With Closure
RD916	Perpendicular Curb Ramp Single Ramp
RD920	Parallel Curb Ramp
RD922	Parallel Curb Ramp Single Ramp
RD930, RD932	Combination Curb Ramp
RD938	Combination Curb Ramp Single Ramp
RD940	Blended Transition Curb Ramp Single Ramp
RD950 & RD952	End Of Walk Curb Ramp
RD960	Unique Curb Ramp

2. THESE DRAWINGS CAN BE BE FOUND ON ODOT'S WEBSITE: https://www.oregon.gov/ODOT/Engineering/Pages/Drawings-Roadway.aspx
3. CONCRETE FOR SIDEWALK RAMPS SHALL BE AIR ENTRAINED (4.5% MINIMUM) AND HAVE A MINIMUM BREAKING STRENGTH OF 4000 PSI AT 28 DAYS.
4. TRUNCATED DOME DETECTABLE WARNING SURFACE PANELS SHALL BE: CITY APPROVED CONCRETE OR CAST IRON PANEL IN COATED BLACK OR CHARCOAL COLOR. PLASTIC OR FIBERGLASS PANELS OR SURFACE APPLIED SYSTEMS WILL NOT BE ACCEPTED.

   QUALIFYING PRODUCT LIST:

   ADA SOLUTIONS- CAST IRON TACTILE SYSTEM OR CITY APPROVED EQUAL
   https://adatile.com/cast-iron-tactile-systems/

   TUFTILE - CAST IRON WET SET TILES
   https://www.tuftile.com

   OR APPROVED EQUAL CAST IRON TRUNCATED DOME FROM THE ODOT QPL.
5. MAX. 1.5% DESIGN LANDING SLOPE (MAX. 2.0% FINISHED SLOPE).
6. MAX. 7.5% DESIGN RAMP SLOPE (MAX. 8.33% FINISHED SLOPE).
7. TRUNCATED DOME PANELS SHALL BE NO SMALLER THAN 2'x1'

Public Works Standard Drawings	SCALE NTS		
SIDEWALK RAMP DETAILS AND PLACEMENT OPTIONS	DATE JAN '24	REV. 1	
	ENGR. DW	DRAWN KAE	
	DRAWING NO. 509		

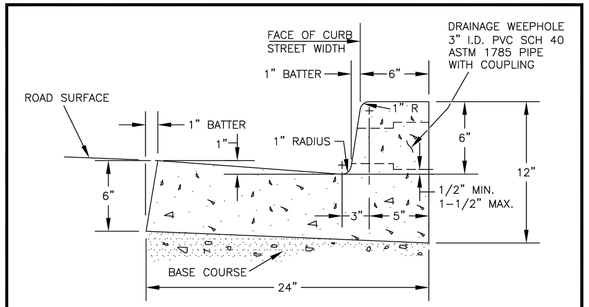

NOTES:
1. CONCRETE SHALL BE AIR-ENTRAINED MINIMUM 4.0% AND HAVE A MINIMUM BREAKING STRENGTH OF 4000 PSI AFTER 28 DAYS.
2. EXPANSION JOINTS
   A. TO BE PROVIDED:
      1) AT EACH COLD JOINT.
      2) AT EACH END OF DRIVEWAYS.
      3) AT EACH SIDE OF INLET STRUCTURES.
      4) AT EACH POINT OF TANGENCY OF THE CURB.
      5) AT LOCATIONS NECESSARY TO LIMIT SPACING TO 45 FEET.
   B. MATERIAL TO BE USED IS "REFLEX RUBBER JOINT EXPANSION" JOINT MATERIAL, OR CITY APPROVED EQUAL, WITH A THICKNESS OF 1/2-INCH.
3. CONTRACTION JOINTS
   A. SPACING TO BE NOT MORE THAN 15 FEET.
   B. THE DEPTH OF THE JOINT SHALL BE AT LEAST 1-1/2 INCHES WITH 1/2-INCH MAXIMUM RADIUS TROWEL JOINT.
   C. PLACE JOINT OVER DRAINAGE BLOCKOUT.
4. BASE ROCK TO BE 3/4"-0", 95% COMPACTION OF T-180. BASE ROCK SHALL MATCH ROAD BASE SECTION OR BE 6" IN DEPTH, WHICHEVER IS GREATER.
5. DRAINAGE WEEPHOLE
   A. 3-INCH I.D. PVC SCH 40 ASTM 1785 PIPE WITH COUPLING.
   B. DRAINAGE ACCESS THRU EXISTING CURBS SHALL BE CORE DRILLED OR CURB SAW CUT VERTICALLY AT NEAREST JOINT EACH SIDE OF DRAIN AND REPOURED TO FULL DEPTH OF CURB.
6. CURB EXPOSURE SHALL BE 7.5 INCHES AT CATCH INLETS/BASINS.

Public Works Standard Drawings	SCALE NTS		
MONOLITHIC CURB AND GUTTER	DATE JUL '25	REV. 2	
	ENGR. DW	DRAWN KAE	
	DRAWING NO. 511		

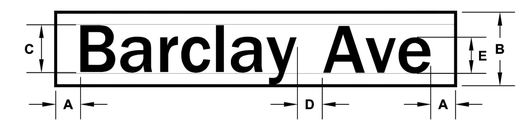

SIGN PROFILE

MINIMUM DIMENSIONS				
A	B	C	D	E
2"	6"	4"	2"	3"

NOTES:
1. ON ALL STREETS WITH DESIGNATED OR POSTED SPEEDS OF 25 MPH OR LESS, INITIAL UPPER-CASE LETTERS SHALL BE 4 INCHES IN HEIGHT AND LOWER-CASE LETTERS 3 INCHES IN HEIGHT.
2. LETTER STYLES FOR STREET NAME AND SUFFIX SHALL BE 4-INCH SERIES 'B' FROM THE *STANDARD ALPHABETS FOR HIGHWAY SIGNS MANUAL.*
3. BLANKS FOR 6-INCH EXTRUDED SHALL BE A MINIMUM 0.125 INCH GAUGE WITH 6063 T5 OR 6063 T6 ALODINE COATED ALUMINUM SUBSTRATE.
4. THE MINIMUM LENGTH SHALL BE 24 INCHES.
5. BOTH SIDES OF STREET NAME SIGNS SHALL BE GREEN (PUBLIC) OR BLUE (PRIVATE) *3M HIGH INTENSITY PRISMATIC (HIP)* REFLECTIVE SHEETING.
6. ALL LETTERS AND NUMBERS SHALL BE WHITE *3M HIGH INTENSITY PRISMATIC (HIP)* REFLECTIVE SHEETING.
7. MOUNTING HARDWARE: SEE DRAWING 523.

Public Works Standard Drawings	SCALE NTS		
STREET NAME SIGN WITH 4-INCH LETTERING FOR 25 MPH OR LESS SPEED LIMITS	DATE JUL '25	REV. 1	
	ENGR. DW	DRAWN KAE	
	DRAWING NO. 521		

NO.	DATE	BY	REVISION

NOTICE
0 ½ 1
IF THIS BAR DOES NOT MEASURE 1" THEN DRAWING IS NOT TO SCALE

KKS DESIGNED
MDP DRAWN
ANB CHECKED

REGISTERED PROFESSIONAL ENGINEER 86406PE OREGON SEPTEMBER 12, 2017 ADAM N. BLAIR
RENEWS 12-31-27

BID SET

consor
Stantec

South Fork WATER PURE WATER SINCE 1915
WATER QUALITY SYSTEMS BUILDING

DETAILS
OREGON CITY STANDARD DRAWINGS

PROJECT NO.: W253326OR | SCALE: AS SHOWN | DATE: AUGUST 2026

SHEET C-117

\\EgnyteDrive\Consor Files_V-W\Projects\OR\South Fork Water\2025\W253326OR.00\12 CADD\12-5 Sheets\ODOT STANDARD DETAILS.dwg C-117 7/29/2026 10:54 AM JUSTIN.DEUEL 24.3s (LMS Tech)

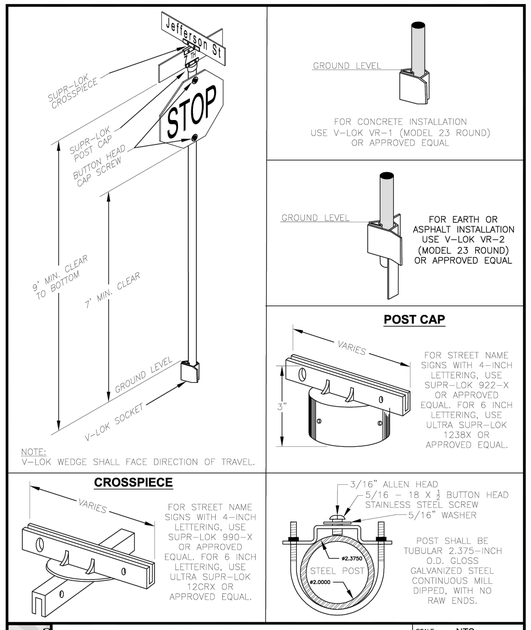

Public Works Standard Drawings	SCALE NTS	
TYPICAL SIGN ASSEMBLY AND MOUNTING HARDWARE	DATE JAN '23	REV.
	ENGR. DW	DRAWN KAE
	DRAWING NO. 523	

GENERAL SIGNING NOTES:

1) STREET NAMES SHALL BE APPROVED BY BUILDING DIVISION PER APPROVED PLAT AS APPROPRIATE

2) CONTRACTOR SHALL SUPPLY ALL STREET NAME SIGNS, SIGN MATERIALS, BRACKETS, HARDWARE, POSTS, AND ANCHORS IN ACCORDANCE WITH THE CITY OF OREGON CITY STANDARDS (SEE OREGON CITY STANDARD DETAILS 521, 522, 523, AND 524)

3) ALL SIGNING SHALL CONFORM TO CURRENT OREGON DEPARTMENT OF TRANSPORTATION SPECIFICATIONS AND THE MANUAL ON UNIFORM TRAFFIC CONTROL DEVICES

4) CONTRACTOR SHALL BE RESPONSIBLE FOR STAKING SIGN LOCATIONS AND OBTAINING UTILITY LOCATES FOR STAKED SIGN LOCATIONS. SIGNS SHALL BE LOCATED PER THE TYPICAL SIGN LOCATION AND AS SHOWN ON THE PLANS

5) SIGNS SHALL BE INSTALLED PER THE TYPICAL SIGN INSTALLATION DETAIL UTILIZING THE SPECIFIED BRACKETS AND HARDWARE (SEE STANDARD INSTALLATION DETAIL #523)

COMMON ABBREVIATIONS

AVE= AVENUE	PKWY = PARKWAY
PL = PLACE	BLVD = BOULEVARD
CT = COURT	ST = STREET
DR = DRIVE	TER = TERRACE
LN = LANE	WAY = WAY
LP = LOOP	CIR = CIRCLE
RD = ROAD	

Public Works Standard Drawings	SCALE NTS	
STREET SIGN GENERAL NOTES	DATE JAN '23	REV.
	ENGR. DW	DRAWN KAE
	DRAWING NO. 524	

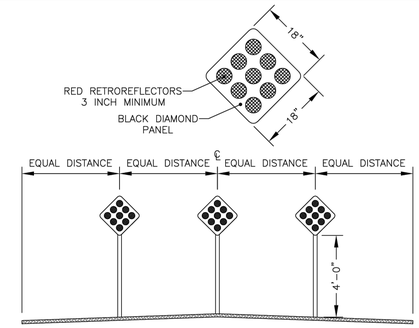

NOTES:

1. END-OF-ROADWAY MARKER PLACEMENT SHALL BE AS FOLLOWS:
   A. END OF SIDEWALK SHALL HAVE ONE MARKER PLACED ON THE CENTERLINE JUST BEYOND THE EDGE OF SIDEWALK.
   B. END OF ROADWAY SHALL HAVE ONE MARKER PER 10 FEET OF ROAD WIDTH WITH A MINIMUM OF 3 MARKERS (I.E. 20 TO 29 FOOT ROADWAY HAS 3 MARKERS; 30 TO 39 FOOT ROADWAY HAS 3 MARKERS; 40 TO 49 FOOT ROADWAY HAS 4 MARKERS). ALL MARKERS SHALL BE EQUALLY SPACED BETWEEN WIDTH OF ROADWAY.
2. THE MARKER SHALL CONSIST OF NINE RED RETROREFLECTORS, EACH WITH A MINIMUM DIAMETER OF THREE INCHES, MOUNTED SYMMETRICALLY ON A BLACK DIAMOND PANEL MEASURING 18 INCHES PER SIDE.
3. CONTRACTOR SHALL SUPPLY ALL MARKERS, POSTS, AND MOUNTING HARDWARE.
4. MARKERS SHALL BE MOUNTED ON 2.375 INCH OUTSIDE DIAMETER STEEL POSTS. SEE OREGON CITY STANDARD DETAIL 523 FOR INSTALLATION HARDWARE AND DETAILS.
5. MOUNTING HEIGHT OF A MARKER SHALL BE 4 FEET.
6. ADDITIONAL BARRICADING MAY BE REQUIRED BY THE CITY.

Public Works Standard Drawings	SCALE NTS	
END-OF-ROADWAY/SIDEWALK MARKER	DATE JAN '23	REV.
	ENGR. DW	DRAWN KAE
	DRAWING NO. 525	

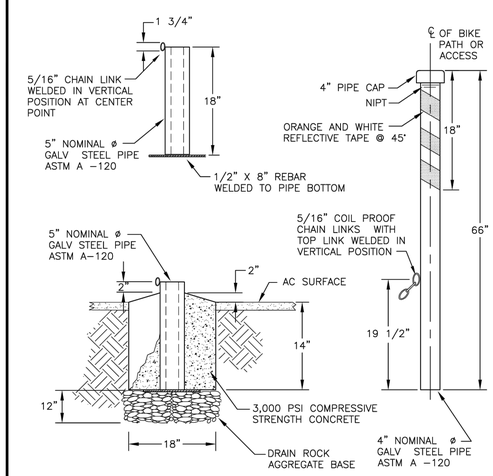

NOTES:

1. BARRIER IS TO BE USED ONLY WHEN SPECIFICALLY APPROVED BY CITY ENGINEER.
2. BARRIER IS NOT TO BE USED ON FIRE ACCESSES.
3. PADLOCK TO BE PROVIDED BY THE CITY.

Public Works Standard Drawings	SCALE NTS	
REMOVABLE VEHICLE BARRIER POST	DATE JAN '23	REV.
	ENGR. DW	DRAWN KAE
	DRAWING NO. 527	

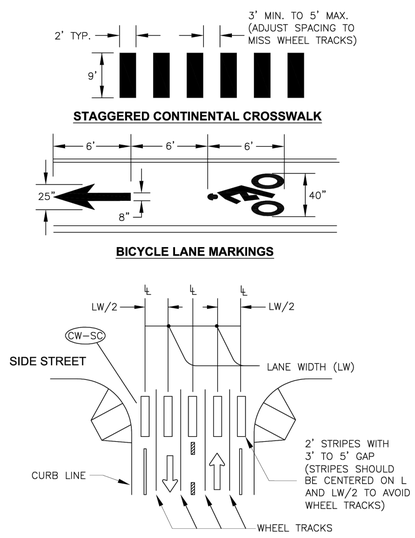

Public Works Standard Drawings	SCALE NTS	
PAVEMENT MARKINGS PLACEMENT	DATE JAN '23	REV.
	ENGR. DW	DRAWN KAE
	DRAWING NO. 529	

GENERAL NOTES:

1. INSTALL CROSSWALK BARS SUCH THAT THE THROAT OF THE ADA RAMP IS ENTIRELY WITHIN CROSSWALK MARKINGS, OR 5 FEET BACK OF EXTENDED FOG LINE, EDGE OF PAVEMENT, OR CURB FACE.

PREFORMED THERMOPLASTIC INSTALLATION NOTES

1. THE AREA OF APPLICATION SHALL BE DRY AND FREE OF DIRT, DUST, CHEMICALS, OR SIGNIFICANT OILY SUBSTANCES. THE PAVEMENT MARKINGS SHALL NOT BE APPLIED ON TOP OF EXISTING PAINT OR THERMOPLASTIC.
2. THE PREFORMED MARKINGS SHALL BE INSTALLED ACCORDING TO THE MANUFACTURER'S RECOMMENDATIONS IN A MANNER WHICH PROVIDES A UNIFORM SURFACE FREE OF DEFECTS. SPLICES SHALL BE INSTALLED WITHOUT OVERLAP OR GAPS.
3. ALL STANDARD CONTINENTAL CROSSWALK KEYS SHALL BE INSTALLED PARALLEL TO THE LONG LINE STRIPING AND ROADWAY. ALL THERMOPLASTIC LAYOUTS SHALL BE INSPECTED BY A CITY OF OREGON CITY REPRESENTATIVE PRIOR TO ANY PLACEMENT OF THERMOPLASTIC. UNDER NO CIRCUMSTANCE WILL INDIVIDUAL CROSSWALK KEYS BE ALLOWED TO CROSS A ROADWAY ON A SKEWED ANGLE OR BE PLACED IN A WHEEL PATH.
4. APPLICATION GENERALLY CONSISTS OF CLEANING AND PREHEATING THE INSTALLATION AREA; PLACEMENT OF THE PREFORMED MARKING; AND HEATING OF THE MARKING TO THE MELTING POINT.

STRIPE AND MARKER REMOVAL

1. REMOVE PAINTED AND THERMOPLASTIC STRIPE, AND MARKER EPOXY OR BUTYL RUBBER ADHESIVE, BY ABRASION, SANDBLASTING, HYDROBLASTING, OR SURFACE GRINDING, SO THAT THE PAVEMENT SURFACE IS NOT DAMAGED AND HAS A SURFACE TEXTURE SIMILAR TO THE SURROUNDING AREA. OBLITERATION WITH PAINT OR OTHER SUBSTANCE SHALL NOT BE PERMITTED.
2. ALL DEBRIS COLLECTED BY STRIPE AND MARKER REMOVAL SHALL BE REMOVED FROM THE SITE AND DISPOSED OF AT THE CONTRACTOR'S EXPENSE.

Public Works Standard Drawings	SCALE NTS	
BIKE LANE AND CROSSWALK NOTES	DATE JAN '23	REV.
	ENGR. DW	DRAWN KAE
	DRAWING NO. 529A	

NO.	DATE	BY	REVISION

NOTICE
0 ½ 1
IF THIS BAR DOES NOT MEASURE 1" THEN DRAWING IS NOT TO SCALE

KKS DESIGNED
MDP DRAWN
ANB CHECKED

REGISTERED PROFESSIONAL ENGINEER 86406PE OREGON SEPTEMBER 12, 2017 ADAM N. BLAIR
RENEWS 12-31-27

BID SET

consor
Stantec

South Fork WATER PURE WATER SINCE 1915
WATER QUALITY SYSTEMS BUILDING

DETAILS
OREGON CITY STANDARD DRAWINGS

PROJECT NO.: W253326OR | SCALE: AS SHOWN | DATE: AUGUST 2026

SHEET C-118

\\EgnyteDrive\Consor Files_V-W\Projects\OR\South Fork Water\2025\W253326OR.00\12 CADD\12-5 Sheets\ODOT STANDARD DETAILS.dwg C-118 7/29/2026 10:54 AM JUSTIN.DEUEL 24.3s (LMS Tech)

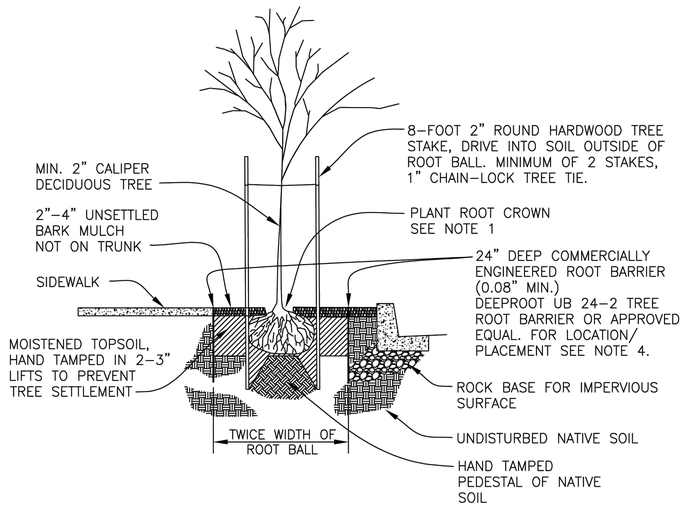

NOTES:

1. SET ROOT TRUNK COLLAR FLUSH TO 1" ABOVE FINISHED GRADE FOR LANDSCAPE AREAS AND PLANTER AREAS. FINISHED GRADE SHALL BE FLUSH WITH TOP OF CURB, FINISHED SIDEWALK, OR AT GRADE IN LANDSCAPE AREAS.
2. CUT AND REMOVE WIRE BASKETS FROM SIDES OF ROOT BALL WITHOUT DEFORMING BALL. CUT OFF AND REMOVE BURLAP AND ROPE FROM TOP HALF OF ROOT BALL. COMPLETELY REMOVE SYNTHETIC ROPE AND NON–BIODEGRADABLE BURLAP.
3. TREES SHALL BE INSTALLED:
   A. 15' FROM STREET LIGHTS
   B. 5' FROM FIRE HYDRANTS
   C. 20' FROM INTERSECTIONS
   D. 5' FROM ALL PUBLIC UTILITIES (i.e. STORM, SEWER, AND WATERLINES, UTILITY METERS, ETC.)
4. ROOT BARRIER SHALL BE PLACED ABUTTING ALL SIDEWALK EDGES, 12" FROM BACK OF CURB, OR 12" FROM IMPERVIOUS SURFACE AND SHALL EXTEND 20 FEET CENTERED WITH THE TREE BASE.

OREGON CITY	Public Works Standard Drawings	SCALE NTS	
	STREET TREE PLANTING IN PLANTER STRIP	DATE JAN '23	REV.
		ENGR. DW	DRAWN KAE
		DRAWING NO. 530	

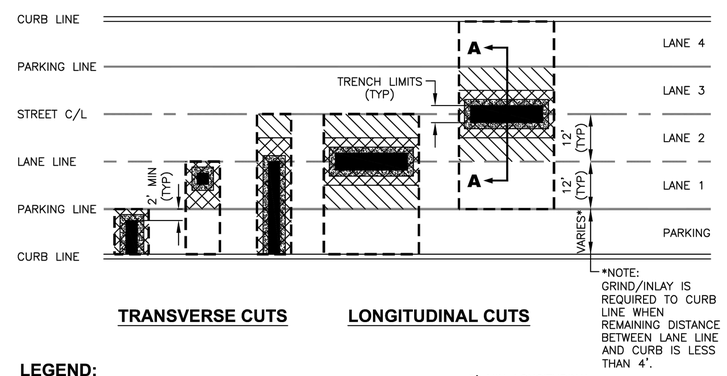

TRANSVERSE CUTS **LONGITUDINAL CUTS**

LEGEND:

- MORATORIUM STANDARD: PAVEMENT PATCH IS REQUIRED TO THESE LIMITS.
- FULL STANDARD: PAVEMENT PATCH IS REQUIRED TO THE NEAREST LANE LINE.
- MODIFIED STANDARD: PAVEMENT PATCH IS REQUIRED TO THE NEAREST CENTER OF LANE OR LANE LINE.
- T–CUT STANDARD: PAVEMENT PATCH IS REQUIRED 1' BEYOND TRENCH LIMITS.
- TRENCH LIMITS AT TOP OF PAVEMENT.

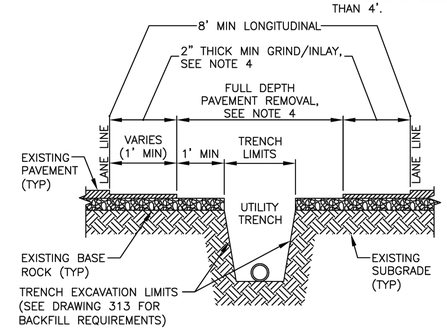

SECTION A-A

NOTES:

1. ALL CUTS TO BE PERPENDICULAR/PARALLEL TO DIRECTION OF TRAVEL.
2. ALL PAVEMENT PATCH JOINTS AND ALL CUT EDGES SHALL BE SAND SEALED PER ODOT SPECS AND OREGON CITY SPECIAL PROVISIONS SEC–00744.51.
3. PAVEMENT REPLACEMENT IS REQUIRED TO THE NEXT ADJACENT CURB, PARKING, OR LANE LINE WHENEVER A TRENCH OR DISTURBANCE OF ASPHALT OR SUPPORT MATERIAL EXTENDS BEYOND SUCH LINE.
4. FOR STREETS WITH EXISTING AC THICKNESS OF LESS THAN 4 INCHES, COMPLETE FULL DEPTH AC REMOVAL TO PAVING LIMITS AND REPLACE WITH MINIMUM 4 INCHES OF AC.
5. RESURFACING TO BE A MINIMUM 4 INCHES, LEVEL 2, 1/2–INCH PG 64–22 ACP (IF ARTERIAL, LEVEL 3) OR MATCHING EXISTING, WHICHEVER IS GREATER.

OREGON CITY	Public Works Standard Drawings	SCALE NTS	
	PAVEMENT CUT STANDARD, TYPICAL LAYOUT	DATE JAN '23	REV.
		ENGR. DW	DRAWN KAE
		DRAWING NO. 532	

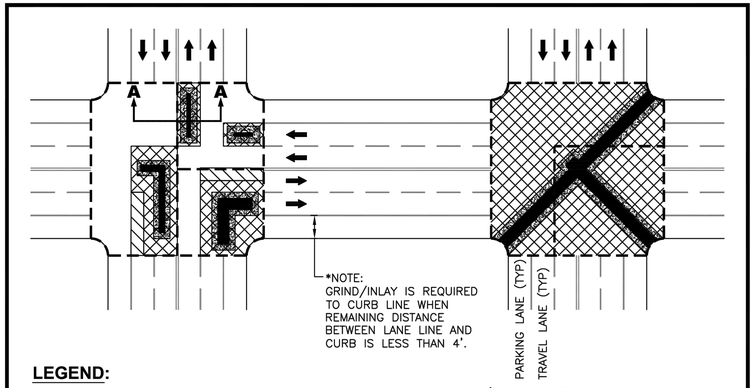

LEGEND:

- MORATORIUM STANDARD: PAVEMENT PATCH IS REQUIRED TO THESE LIMITS (MINIMUM ONE QUARTER OF INTERSECTION)
- FULL STANDARD: PAVEMENT PATCH IS REQUIRED TO THE NEAREST LANE LINE
- MODIFIED STANDARD: PAVEMENT PATCH IS REQUIRED TO THE NEAREST CENTER OF LANE OR LANE LINE
- T–CUT STANDARD: PAVEMENT PATCH IS REQUIRED 1' BEYOND TRENCH LIMITS
- TRENCH LIMITS AT TOP OF PAVEMENT

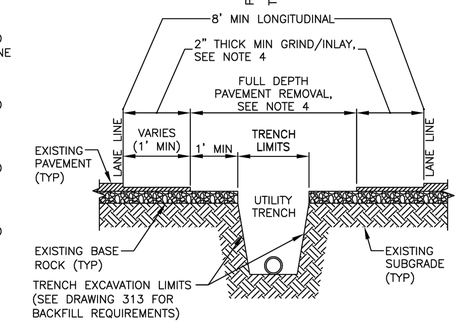

SECTION A-A

NOTES:

1. ALL CUTS TO BE PERPENDICULAR/PARALLEL TO DIRECTION OF TRAVEL.
2. ALL PAVEMENT PATCH JOINTS AND ALL CUT EDGES SHALL BE SAND SEALED PER ODOT SPECS AND OREGON CITY SPECIAL PROVISIONS SEC–00744.51.
3. PAVEMENT REPLACEMENT IS REQUIRED TO THE NEXT ADJACENT CURB, PARKING, OR LANE LINE WHENEVER A TRENCH OR DISTURBANCE OF ASPHALT OR SUPPORT MATERIAL EXTENDS BEYOND SUCH LINE.
4. FOR STREETS WITH EXISTING AC THICKNESS OF LESS THAN 4 INCHES, COMPLETE FULL DEPTH AC REMOVAL TO PAVING LIMITS AND REPLACE WITH MINIMUM 4 INCHES OF AC.
5. RESURFACING TO BE A MINIMUM 4 INCHES, LEVEL 2, 1/2–INCH PG 64–22 ACP (IF ARTERIAL, LEVEL 3) OR MATCHING EXISTING, WHICHEVER IS GREATER.

OREGON CITY	Public Works Standard Drawings	SCALE NTS	
	PAVEMENT CUT STANDARD, INTERSECTIONS	DATE JAN '23	REV.
		ENGR. DW	DRAWN KAE
		DRAWING NO. 533	

NO.	DATE	BY	REVISION

NOTICE
0 ½ 1
IF THIS BAR DOES NOT MEASURE 1" THEN DRAWING IS NOT TO SCALE

KKS DESIGNED
MDP DRAWN
ANB CHECKED

REGISTERED PROFESSIONAL ENGINEER 86406PE OREGON SEPTEMBER 12, 2017 ADAM N. BLAIR
RENEWS 12-31-27

BID SET

consor
Stantec

South Fork WATER PURE WATER SINCE 1915

WATER QUALITY SYSTEMS BUILDING

DETAILS

OREGON CITY STANDARD DRAWINGS

PROJECT NO.: W253326OR | SCALE: AS SHOWN | DATE: AUGUST 2026

SHEET C-119

\\EgnyteDrive\Consor Files_V-W\Projects\OR\South Fork Water\2025\W253326OR.00\12 CADD\12-5 Sheets\ODOT STANDARD DETAILS.dwg C-119 7/29/2026 10:54 AM JUSTIN.DEUEL 24.3s (LMS Tech)

ALTERNATES ARE ACCEPTABLE PROVIDED MATERIAL SPECIFICATIONS ARE MET AND FLANGE BOLT PATTERN MATCHES.

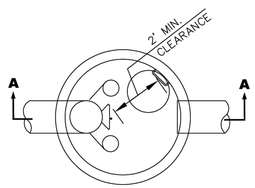

PLAN VIEW

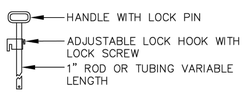

LIFT HANDLE

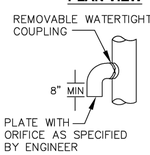

ELBOW DETAIL

SIX EVENLY SPACED HOLES ON 10 3/8" BOLT CIRCLE FOR BOLTING TO FLANGE CONNECTION

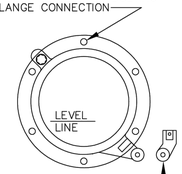

FRONT

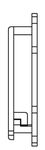

SIDE

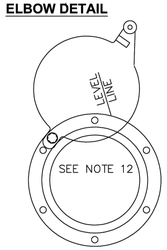

MAXIMUM OPENING OF GATE

LIFT HANDLE SHALL BE ATTACHED PER MANUFACTURER'S RECOMMENDATIONS

CLEANOUT/SHEAR GATE

OREGON CITY	Public Works Standard Drawings	SCALE NTS
	FLOW CONTROL MANHOLE - STORMWATER DETENTION TEE RISER TYPE	DATE JAN '23 REV.
		ENGR. DW DRAWN KAE
		DRAWING NO. 601-2

NOTES:
1. MANHOLE FRAME AND COVER AS SPECIFIED. SEE DRAWINGS 305 AND 306.
2. ALL PIPES ENTERING OR EXITING SHALL BE WATER TIGHT
3. CHANNELS TO BE 3/4 VERTICAL HEIGHT OF PIPE–SMOOTH FINISH
4. INSIDE DROP MAXIMUM 2' VERTICAL DISTANCE INVERT TO INVERT
5. ALL CONCRETE TO BE MINIMUM 4000 PSI COMPRESSIVE STRENGTH

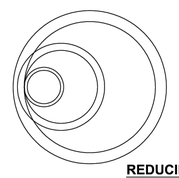

REDUCING TOP SLAB

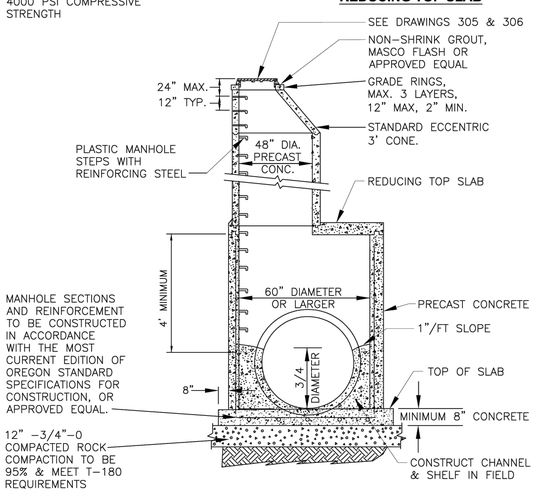

MANHOLE SECTIONS AND REINFORCEMENT TO BE CONSTRUCTED IN ACCORDANCE WITH THE MOST CURRENT EDITION OF OREGON STANDARD SPECIFICATIONS FOR CONSTRUCTION, OR APPROVED EQUAL.

12" –3/4"–0 COMPACTED ROCK COMPACTION TO BE 95% & MEET T–180 REQUIREMENTS

OREGON CITY	Public Works Standard Drawings	SCALE NTS
	MANHOLE FOR LARGE DIAMETER PIPE (PIPE 27" AND LARGER)	DATE JAN '23 REV.
		ENGR. DW DRAWN KAE
		DRAWING NO. 608

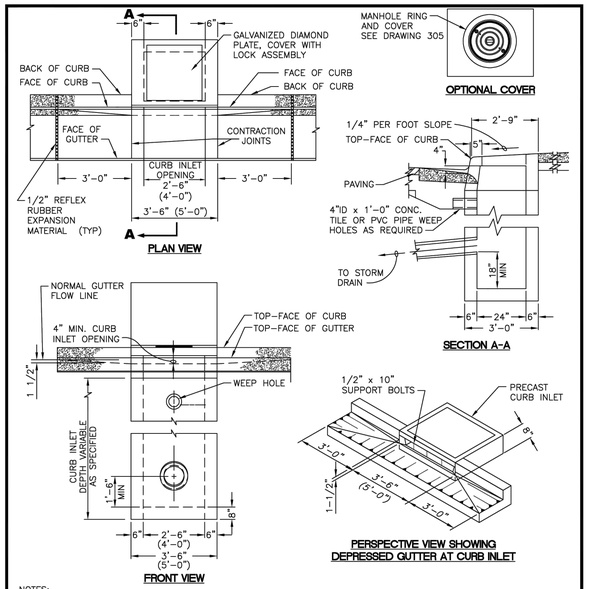

NOTES:
1. CURB INLET TOP AND BASE SHALL MEET H–20 LOADING
2. CONCRETE STRENGTH SHALL BE 3000 PSI.
3. ALL FABRICATED METAL PARTS SHALL BE HOT–DIPPED GALVANIZED AFTER FABRICATION.
4. FOR STEEP GRADES USE STD. PRECAST INLET WITH 4'–0" OPENING OR TWO 2'–6" OPENING INLETS.
5. CURB INLET BASE MAY BE PRECAST OR CAST–IN–PLACE.
6. DIMENSIONS SHOWN ABOVE IN PARENTHESIES ARE FOR 4A INLETS. A 1 1/2 A INLET SHALL HAVE A CURB INLET OPENING WIDTH OF 1'–6" AND AN OUTSIDE WIDTH OF 2'–6"; ALL OTHER DIMENSIONS AND DETAILS SHALL BE AS SHOWN.

OREGON CITY	Public Works Standard Drawings	SCALE NTS
	PRECAST CURB INLET 1 1/2 A, 2 21/2 A, 4 A	DATE JAN '23 REV.
		ENGR. DW DRAWN KAE
		DRAWING NO. 609

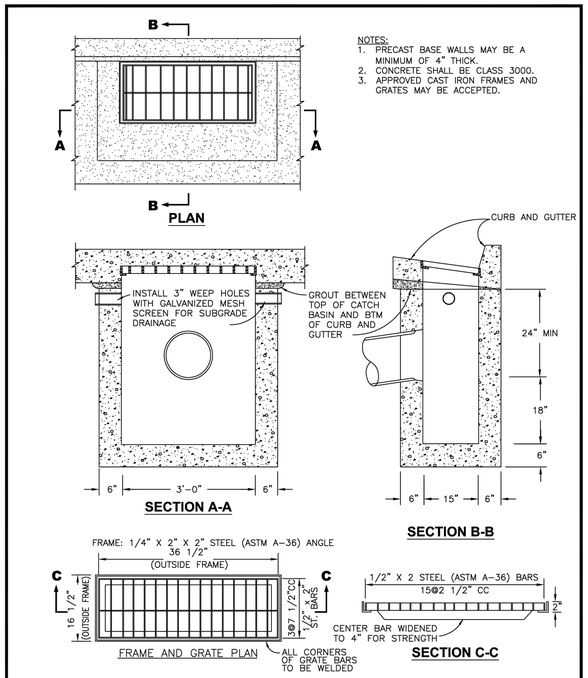

OREGON CITY	Public Works Standard Drawings	SCALE NTS
	CATCH BASIN	DATE JAN '23 REV.
		ENGR. DW DRAWN KAE
		DRAWING NO. 610-1

NO.	DATE	BY	REVISION

NOTICE
0 ½ 1
IF THIS BAR DOES NOT MEASURE 1" THEN DRAWING IS NOT TO SCALE

KKS DESIGNED
MDP DRAWN
ANB CHECKED

REGISTERED PROFESSIONAL ENGINEER 86406PE OREGON SEPTEMBER 12, 2017 ADAM N. BLAIR
RENEWS 12-31-27

BID SET

consor
Stantec

South Fork WATER
PURE WATER SINCE 1915

WATER QUALITY SYSTEMS BUILDING

DETAILS

OREGON CITY STANDARD DRAWINGS

PROJECT NO.: W253326OR | SCALE: AS SHOWN | DATE: AUGUST 2026

SHEET C-120

\\EgnyteDrive\Consor Files_V-W\Projects\OR\South Fork Water\2025\W253326OR.00\12 CADD\12-5 Sheets\ODOT STANDARD DETAILS.dwg C-120 7/29/2026 10:54 AM JUSTIN.DEUEL 24.3s (LMS Tech)

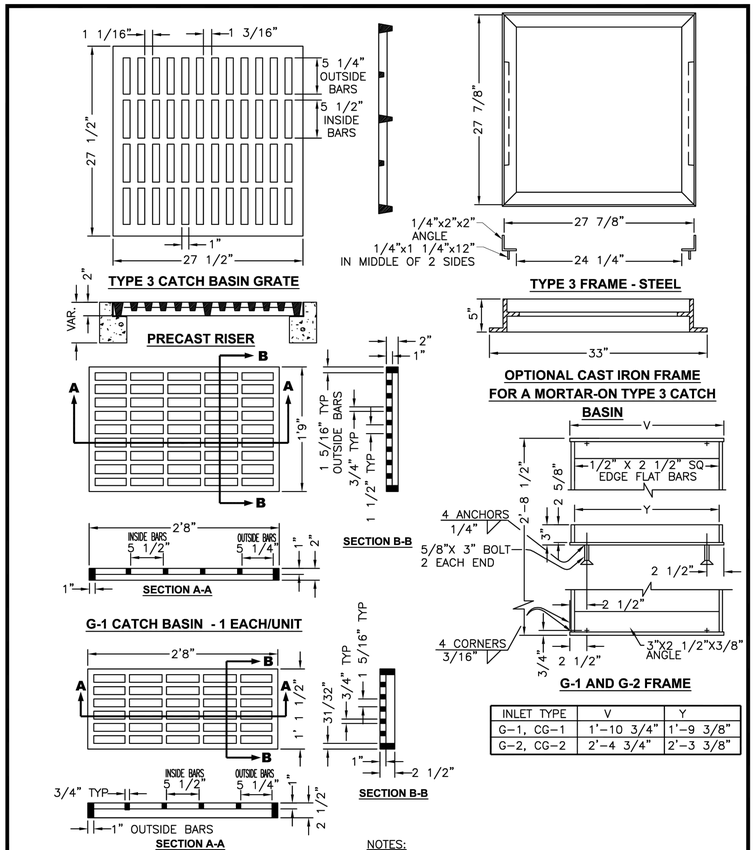

INLET TYPE	V	Y
G-1, CG-1	1'-10 3/4"	1'-9 3/8"
G-2, CG-2	2'-4 3/4"	2'-3 3/8"

NOTES:
CATCH BASIN, FRAME AND GRATES SHALL MEET H20 LOADING

Public Works Standard Drawings

FRAMES AND GRATES
G-1, G-2, TYPE 3

SCALE NTS | DATE JAN '23 | REV. | ENGR. DW | DRAWN KAE | DRAWING NO. 610-3

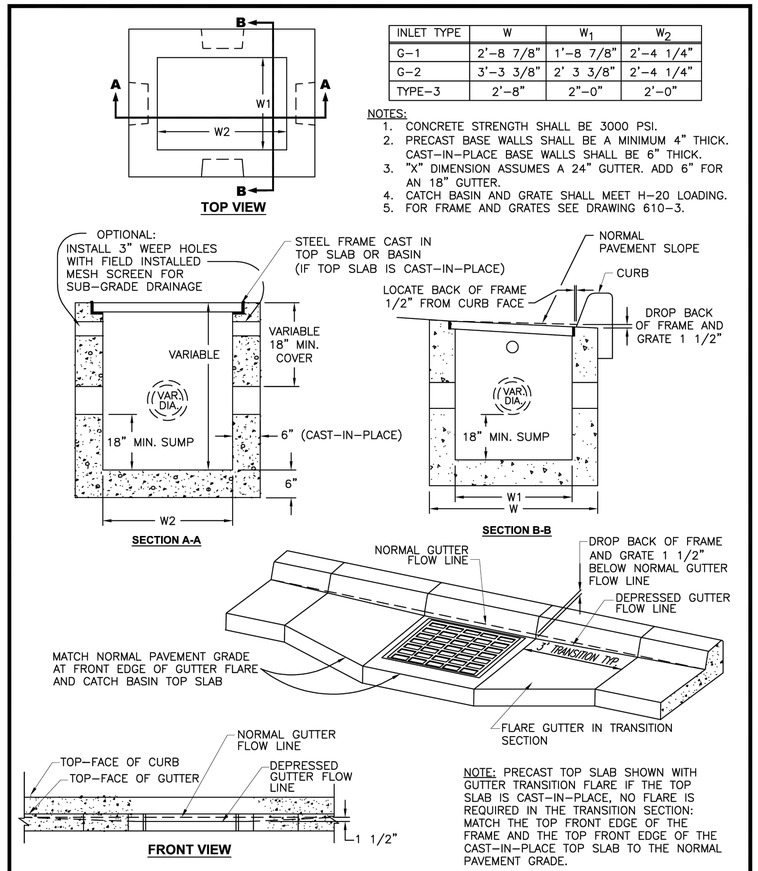

INLET TYPE	W	W_1	W_2
G-1	2'-8 7/8"	1'-8 7/8"	2'-4 1/4"
G-2	3'-3 3/8"	2' 3 3/8"	2'-4 1/4"
TYPE-3	2'-8"	2"-0"	2'-0"

NOTES:
1. CONCRETE STRENGTH SHALL BE 3000 PSI.
2. PRECAST BASE WALLS SHALL BE A MINIMUM 4" THICK. CAST-IN-PLACE BASE WALLS SHALL BE 6" THICK.
3. "X" DIMENSION ASSUMES A 24" GUTTER. ADD 6" FOR AN 18" GUTTER.
4. CATCH BASIN AND GRATE SHALL MEET H-20 LOADING.
5. FOR FRAME AND GRATES SEE DRAWING 610-3.

NOTE: PRECAST TOP SLAB SHOWN WITH GUTTER TRANSITION FLARE IF THE TOP SLAB IS CAST-IN-PLACE, NO FLARE IS REQUIRED IN THE TRANSITION SECTION: MATCH THE TOP FRONT EDGE OF THE FRAME AND THE TOP FRONT EDGE OF THE CAST-IN-PLACE TOP SLAB TO THE NORMAL PAVEMENT GRADE.

Public Works Standard Drawings

TYPE G-1, G-2, TYPE 3 CATCH BASIN WITH SUMP

SCALE NTS | DATE JAN '23 | REV. | ENGR. DW | DRAWN KAE | DRAWING NO. 610-4

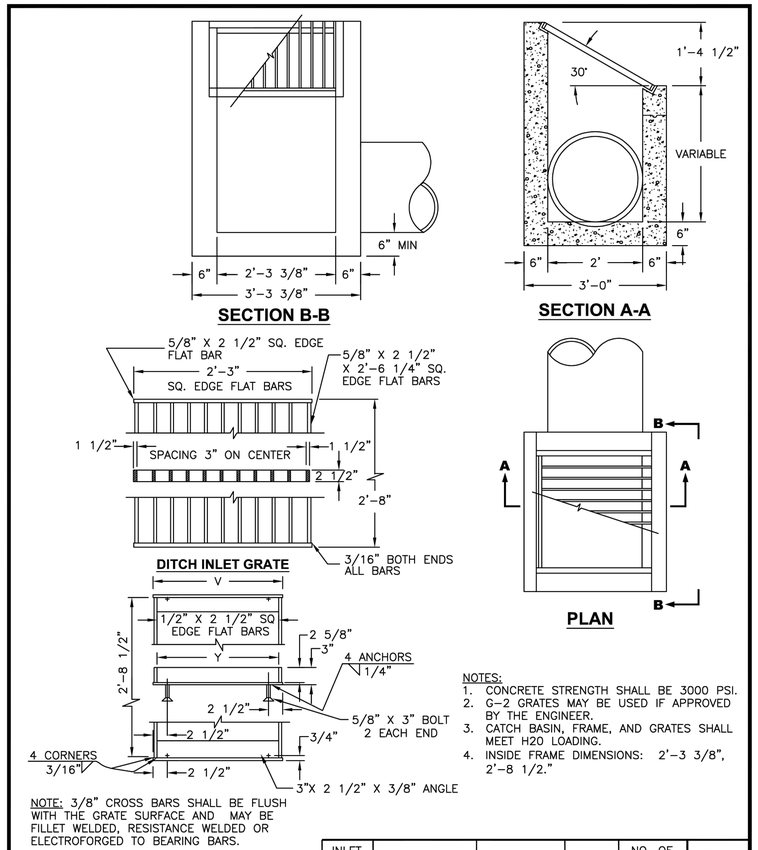

NOTES:
1. CONCRETE STRENGTH SHALL BE 3000 PSI.
2. G-2 GRATES MAY BE USED IF APPROVED BY THE ENGINEER.
3. CATCH BASIN, FRAME, AND GRATES SHALL MEET H20 LOADING.
4. INSIDE FRAME DIMENSIONS: 2'-3 3/8", 2'-8 1/2."

NOTE: 3/8" CROSS BARS SHALL BE FLUSH WITH THE GRATE SURFACE AND MAY BE FILLET WELDED, RESISTANCE WELDED OR ELECTROFORGED TO BEARING BARS.

DITCH INLET FRAME

INLET TYPE	V	Y	Y_1	NO. OF BARS	TYPE
D	2'-4 3/4"	2'-3 3/8"	2'-3"	9	1

Public Works Standard Drawings

DITCH INLET

SCALE NTS | DATE JAN '23 | REV. | ENGR. DW | DRAWN KAE | DRAWING NO. 611-2

NO.	DATE	BY	REVISION

NOTICE
0 ½ 1
IF THIS BAR DOES NOT MEASURE 1" THEN DRAWING IS NOT TO SCALE

KKS DESIGNED
MDP DRAWN
ANB CHECKED

REGISTERED PROFESSIONAL ENGINEER 86406PE OREGON SEPTEMBER 12, 2017 ADAM N. BLAIR
RENEWS 12-31-27

BID SET

consor
Stantec

South Fork WATER
PURE WATER SINCE 1915
WATER QUALITY SYSTEMS BUILDING

DETAILS
OREGON CITY STANDARD DRAWINGS

PROJECT NO.: W253326OR | SCALE: AS SHOWN | DATE: AUGUST 2026

SHEET C-121

\\EgnyteDrive\Consor Files_V-W\Projects\OR\South Fork Water\2025\W253326OR.00\12 CADD\12-5 Sheets\ODOT STANDARD DETAILS.dwg C-121 7/29/2026 10:54 AM JUSTIN.DEUEL 24.3s (LMS Tech)

\\EgnyteDrive\Consor Files_V-W\Projects\OR\South Fork Water\2025\W253326OR.00\12 CADD\12-5 Sheets\ODOT STANDARD DETAILS.dwg C-122 7/29/2026 10:54 AM JUSTIN.DEUEL 24.3s (LMS Tech)

PLAN VIEW

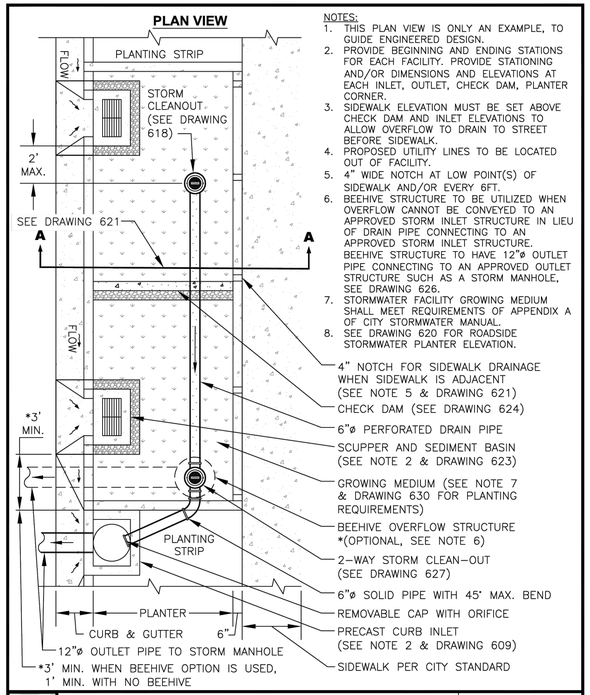

NOTES:

1. THIS PLAN VIEW IS ONLY AN EXAMPLE, TO GUIDE ENGINEERED DESIGN.
2. PROVIDE BEGINNING AND ENDING STATIONS FOR EACH FACILITY. PROVIDE STATIONING AND/OR DIMENSIONS AND ELEVATIONS AT EACH INLET, OUTLET, CHECK DAM, PLANTER CORNER.
3. SIDEWALK ELEVATION MUST BE SET ABOVE CHECK DAM AND INLET ELEVATIONS TO ALLOW OVERFLOW TO DRAIN TO STREET BEFORE SIDEWALK.
4. PROPOSED UTILITY LINES TO BE LOCATED OUT OF FACILITY.
5. 4" WIDE NOTCH AT LOW POINT(S) OF SIDEWALK AND/OR EVERY 6FT.
6. BEEHIVE STRUCTURE TO BE UTILIZED WHEN OVERFLOW CANNOT BE CONVEYED TO AN APPROVED STORM INLET STRUCTURE IN LIEU OF DRAIN PIPE CONNECTING TO AN APPROVED STORM INLET STRUCTURE. BEEHIVE STRUCTURE TO HAVE 12"ø OUTLET PIPE CONNECTING TO AN APPROVED OUTLET STRUCTURE SUCH AS A STORM MANHOLE, SEE DRAWING 626.
7. STORMWATER FACILITY GROWING MEDIUM SHALL MEET REQUIREMENTS OF APPENDIX A OF CITY STORMWATER MANUAL.
8. SEE DRAWING 620 FOR ROADSIDE STORMWATER PLANTER ELEVATION.

Public Works Standard Drawings	SCALE NTS
ROADSIDE STORMWATER PLANTER PLAN VIEW	DATE JAN '23 REV.
	ENGR. DW DRAWN KAE
	DRAWING NO. 619

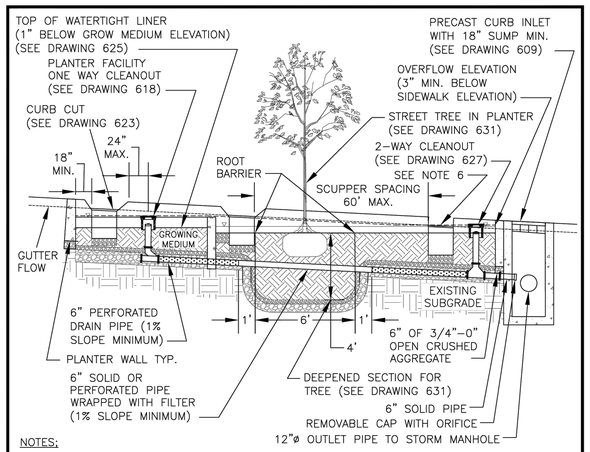

NOTES:

1. PROVIDE PROTECTION FROM ALL VEHICLE TRAFFIC, EQUIPMENT STAGING, AND FOOT TRAFFIC PRIOR TO, DURING AND AFTER CONSTRUCTION.
2. SCUPPERS SHALL BE SPACED NO MORE THAN 60 FEET APART AND ONE AT EACH END OF A PLANTER.
3. SLOPE OF PLANTER TO NOT EXCEED 0.5%.
4. PIPE SHALL BE PVC D3034 SDR 35, 6" MINIMUM DIAMETER. PIPING MUST HAVE 1% SLOPE MINIMUM, BOTTOM OF PIPE SHALL BE SET AT 9" ABOVE EXISTING SUBGRADE.
5. ALL PIPE TO HAVE GASKET JOINTS AND GASKETED JOINT FITTINGS.
6. OVERFLOW
   - MUST FLOW TO APPROVED OUTLET STRUCTURE PER OREGON CITY STORMWATER MANUAL.
   - BEEHIVE STRUCTURE TO BE UTILIZED WHEN OVERFLOW CANNOT BE CONVEYED TO CURB INLET OR AN APPROVED STORM INLET STRUCTURE. SEE DRAWING 619 AND 626.
7. THIS ELEVATION VIEW IS ONLY AN EXAMPLE, TO GUIDE ENGINEERED DESIGN.

Public Works Standard Drawings	SCALE NTS
ROADSIDE STORMWATER PLANTER ELEVATION	DATE JAN '23 REV.
	ENGR. DW DRAWN KAE
	DRAWING NO. 620

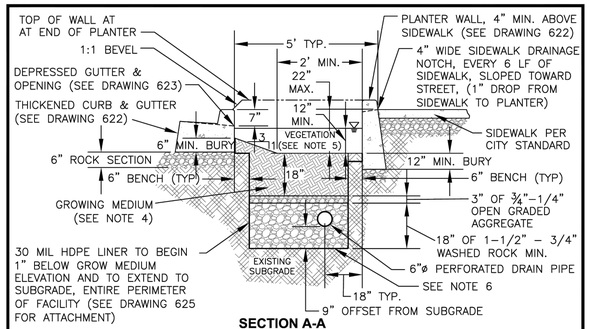

SECTION A-A
PLANTER

NOTES:

1. PROVIDE PROTECTION FROM ALL VEHICLE TRAFFIC, EQUIPMENT STAGING, AND FOOT TRAFFIC PRIOR TO, DURING AND AFTER CONSTRUCTION.
2. DIMENSIONS:
   - TOP OF GROWING MEDIUM TO OVERFLOW ELEVATION SHALL BE A MINIMUM OF 12".
   - TOP OF SIDEWALK ELEVATION ADJACENT TO PLANTER SHALL BE NO LESS THAN 3" ABOVE GUTTER ELEVATION.
   - TOP OF SIDEWALK ELEVATION ADJACENT TO PLANTER SHALL BE NO GREATER THAN 22" FROM TOP OF PLANTER GROWTH MEDIUM.
3. PIPING:
   - PIPE SHALL BE PVC D3034 SDR 35, 6" MINIMUM DIAMETER WITHIN PLANTER. PIPING MUST HAVE 1% SLOPE, BOTTOM OF PIPE SHALL BE SET AT 9" ABOVE EXISTING SUBGRADE.
   - OVERFLOW SHALL BE PIPED TO A STANDARD CURB INLET/CATCH BASIN STRUCTURE OR STORM MANHOLE, SEE DRAWING 619.
4. GROWING MEDIUM: SEE APPENDIX A OF STORMWATER MANUAL FOR SPECIFICATION.
5. VEGETATION: REFER TO PLANTING REQUIREMENTS IN APPENDIX A OF STORMWATER MANUAL, SEE DRAWING 630 FOR PLANT SPACING REQUIREMENTS.
6. WATERTIGHT LINER (SEE DRAWING 625 FOR LINER ATTACHMENT REQUIREMENTS):
   - WHEN WITHIN CONTAMINATED SOIL OR 10' OF STRUCTURE FOUNDATION OR PAVED STRUCTURAL SECTION OR UNDERGROUND STRUCTURES, BOTTOM OF FACILITY MUST BE LINED WITH A WATERTIGHT LINER.
   - LINER SHALL BE 30 MIL HDPE OR APPROVED EQUAL.
   - LINER SHALL BE PLACED AROUND ENTIRE PERIMETER OF FACILITY.
   - LINER REQUIRED UNLESS FACILITY'S BOTTOM AND SIDES ARE MONOLITHIC CONCRETE.
7. CHECK DAMS:
   - REINFORCED CONCRETE CHECK DAMS SHALL BE PLACED AT LEAST EVERY 30 FEET.
8. MINIMUM PLANTER WALL HEIGHT OF 34".

Public Works Standard Drawings	SCALE NTS
ROADSIDE STORMWATER PLANTER SECTION	DATE JUL '25 REV. 1
	ENGR. DW DRAWN KAE
	DRAWING NO. 621

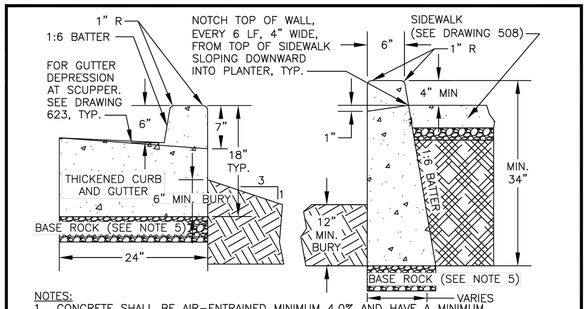

NOTES:

1. CONCRETE SHALL BE AIR-ENTRAINED MINIMUM 4.0% AND HAVE A MINIMUM COMPRESSIVE STRENGTH OF 4000 PSI AFTER 28 DAYS.
2. ALL CONCRETE SURFACES SHALL BE SMOOTH AND FREE FROM DEFECTS AND SHALL HAVE A LIGHT BROOM TEXTURED FINISH.
3. EXPANSION JOINTS (CURB AND SIDEWALK ONLY):
   A. TO BE PROVIDED:
      1) AT EACH COLD JOINT.
      2) AT EACH END OF DRIVEWAYS.
      3) AT EACH POINT OF TANGENCY OF THE CURB.
      4) AT LOCATIONS NECESSARY TO LIMIT SPACING TO 45 FEET.
   B. MATERIAL TO BE USED IS "REFLEX RUBBER JOINT EXPANSION" JOINT MATERIAL, OR CITY APPROVED EQUAL, WITH A THICKNESS OF 1/2 INCH.
4. CONTRACTION JOINTS (CURB AND SIDEWALK ONLY):
   A. SPACING TO BE NOT MORE THAN 10 FEET REGARDLESS OF LOCATION OF DRAINAGE NOTCH
   B. THE DEPTH OF THE JOINT SHALL BE AT LEAST 1-1/2 INCHES WITH 1/2-INCH MAXIMUM RADIUS TROWEL JOINT.
   C. PLACE JOINT ON EACH SIDE OF SCUPPER INLET (SEE DRAWING 623)
5. BASE ROCK TO BE 3/4"-0", 95% COMPACTION PER AASHTO T 180. BASE ROCK SHALL BE 6" MINIMUM IN DEPTH.
6. SIDEWALK CONTRACTION JOINTS SHALL BE PLACED IN LINE WITH ONE OF THE DRAINAGE NOTCH CORNERS.
7. SIDEWALK ELEVATION MUST BE SET ABOVE STREET INLET/OULET ELEVATIONS TO ALLOW OVERFLOW TO DRAIN TO STREET OR PIPED OVERFLOW SYSTEM AS APPLICABLE.
8. CHECK DAMS:
   - REINFORCED CONCRETE CHECK DAMS SHALL BE PLACED EVERY 30 FEET STARTING FROM UPPER END WALL
   - CHECK DAMS SPACING MAY BE DECREASED TO KEEP LONGITUDINAL SLOPE OF PLANTER FROM EXCEEDING .05%
9. THICKENED CURB AND GUTTER SHALL BE POURED MONOLITHICALLY.

Public Works Standard Drawings	SCALE NTS
ROADSIDE STORMWATER PLANTER WALL DETAIL	DATE JUL '25 REV. 2
	ENGR. DW DRAWN KAE
	DRAWING NO. 622

NO.	DATE	BY	REVISION

NOTICE
0 ½ 1
IF THIS BAR DOES NOT MEASURE 1" THEN DRAWING IS NOT TO SCALE

KKS DESIGNED
MDP DRAWN
ANB CHECKED

REGISTERED PROFESSIONAL ENGINEER 86406PE OREGON SEPTEMBER 12, 2017 ADAM N. BLAIR
RENEWS 12-31-27

BID SET

consor
Stantec

South Fork WATER
PURE WATER SINCE 1915

WATER QUALITY SYSTEMS BUILDING

DETAILS

OREGON CITY STANDARD DRAWINGS

PROJECT NO.: W253326OR | SCALE: AS SHOWN | DATE: AUGUST 2026

SHEET
C-122

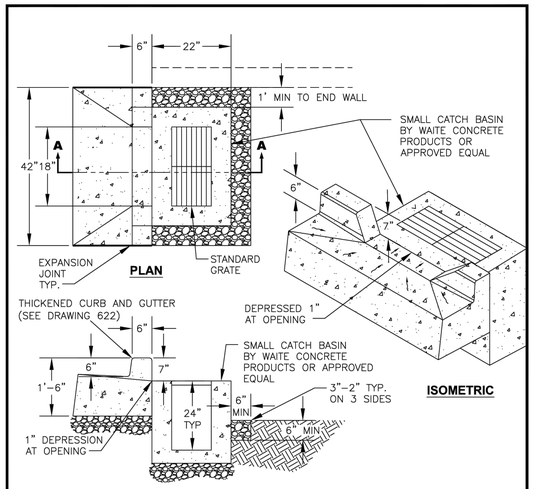

NOTES:

1. MATCH GUTTER PAN OF ADJACENT CURB AND GUTTER.
2. CATCH BASIN RIM SHALL BE LEVEL WITH DEPRESSED GUTTER ELEVATION.
3. CATCH BASIN SHALL BE PRECAST CONCRETE, INCLUDING BOTTOM.

Public Works Standard Drawings	SCALE NTS
CURB CUT SCUPPER AND SEDIMENT CATCH BASIN	DATE JAN '23 REV.
	ENGR. DW DRAWN KAE
	DRAWING NO. 623

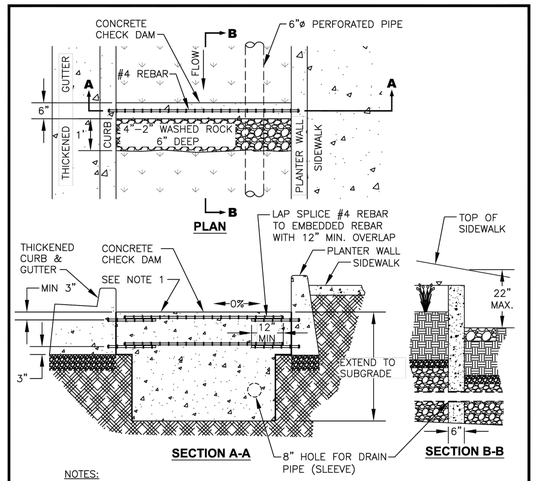

NOTES:

1. TOP OF CHECKDAM (TCD) ELEVATION TO BE AT LEAST 3" BELOW ADJACENT TOP OF CURB AND 1" BELOW UPSTREAM SCUPPER.
2. ENSURE THAT CHECK DAM ELEVATIONS DO NOT CAUSE STORMWATER TO OVERFLOW FROM UPSTREAM SCUPPER OR ONTO SIDEWALK.
3. ELEVATION DROP FROM TOP OF SIDEWALK TO DOWN STREAM SIDE OF CHECK DAM MUST NOT EXCEED 22".
4. CONCRETE TO BE 4,000 PSI WITH #4 REBAR EMBED 3" INTO CURB AND PLANTER WALL.

Public Works Standard Drawings	SCALE NTS
ROADSIDE STORMWATER PLANTER CONCRETE CHECK DAM	DATE JUL '23 REV. 1
	ENGR. DW DRAWN KAE
	DRAWING NO. 624

CONSTRUCTION NOTES

1. ADHERE LINER TO CONCRETE W/SEALANT IF RECOMMENDED BY LINER MANUFACTURE.
2. SECURE LINER TO CONCRETE WITH 2" ALUMINUM FLAT BAR, PLACED AS DIRECTED.
3. ATTACH FLAT BAR WITH CONCRETE HIT ANCHORS, 24" O.C.
4. TRIM EXCESS LINER TO THE TOP OF THE FLAT BAR.
5. ATTACHING LINER TO MINIMIZE WRINKLES, CORNERS SHOULD BE CUT TO FIT WITHOUT WRINKLES.
6. LINER TO BEGIN 1" BELOW GRADE AND EXTEND DOWN TO SUBGRADE AND MINIMUM 1' INTO BOTTOM OF PLANTER.

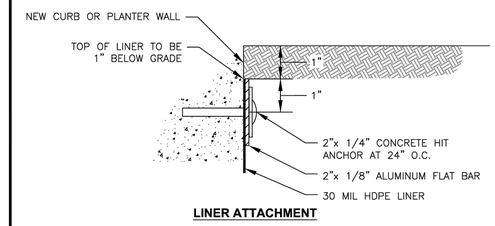

NOTES:

1. LINER MATERIALS TO BE HDPE LINER TO EXTEND FROM TOP OF 2" FLAT BAR TO SUBGRADE.
2. IN AREAS WITH CONTAMINATED SOILS THE FACILITY MUST BE COMPLETELY LINED WITH A 30 MIL LINER UNLESS FACILITY'S BOTTOM AND SIDES ARE MONOLITHIC CONCRETE.
3. PIPE BOOT: USE SEALANT OR STAINLESS STEEL BANDS TO ADHERE LINER TO PIPING, OR OTHER METHOD AS APPROVED BY THE CITY ENGINEER.

Public Works Standard Drawings	SCALE NTS
WATERPROOF LINER ATTACHMENT AND PIPE BOOT	DATE JUL '23 REV. 1
	ENGR. DW DRAWN KAE
	DRAWING NO. 625

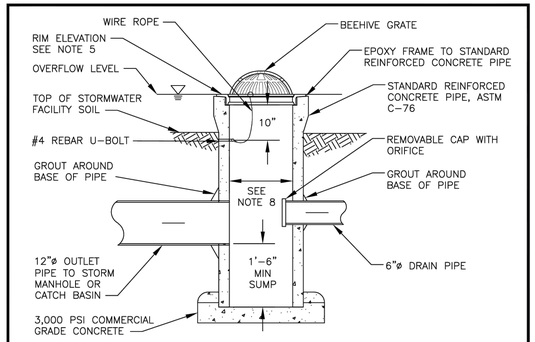

NOTES

1. THIS CROSS-SECTIONAL VIEW IS ONLY AN EXAMPLE, ORIENTATION OF INLET AND OUTLET PIPES DEPENDS ON ENGINEERED DESIGN.
2. SECURE GRATE IN PLACE WITH 54" OF WIRE ROPE. LOOP ENDS OF WIRE ROPE AROUND U-BOLT AND GRATE. CRIMP EACH END OF WIRE ROPE WITH 3" OVERLAP.
3. DRILL 2" DEEP HOLES INTO PIPE AND EPOXY #4 REBAR U-BOLT (2"X 4") IN HOLES.
4. GRATE TO BE CAST IRON, ASTM A48 CL30.
5. BEEHIVE RIM ELEVATION MUST BE MINIMUM 1" BELOW NEAREST SCUPPER, MINIMUM 4" BELOW ADJACENT TOP OF CURB, AND 12" ABOVE GROW MEDIUM.
6. WIRE ROPE BETWEEN 1/8"-3/16" DIAMETER, STAINLESS STEEL, 7 STRANDS OF 19 WIRES.
7. INVERT ELEVATION OF INLET PIPE MUST BE NO LOWER THAN INVERT ELEVATION OF OUTLET PIPE.
8. MINIMUM 18" I.D., MAXIMUM 24" I.D.

Public Works Standard Drawings	SCALE NTS
BEEHIVE OVERFLOW STRUCTURE	DATE JUL '23 REV. 1
	ENGR. DW DRAWN KAE
	DRAWING NO. 626

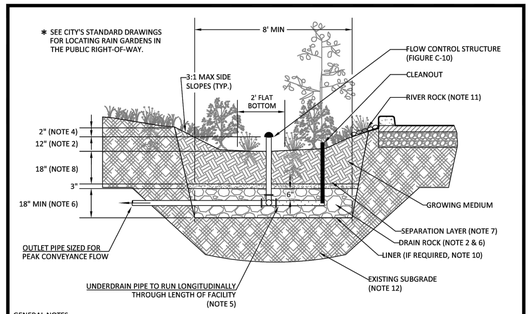

GENERAL NOTES:

1. **PROVIDE PROTECTION** FROM ALL VEHICLE TRAFFIC, EQUIPMENT STAGING, AND FOOT TRAFFIC IN PROPOSED INFILTRATION AREAS PRIOR TO, DURING AND AFTER CONSTRUCTION. UNLESS REQUIRED BY SITE CONDITIONS, UNLINED RAIN GARDENS ARE PREFERRED TO MAXIMIZE ONSITE INFILTRATION.
2. **DIMENSIONS:**
   -DEPTH OF BASIN (FROM TOP OF GROWING MEDIUM TO OVERFLOW ELEVATION): 12"
   -FLAT BOTTOM WIDTH: 2' MINIMUM
   -SIDE SLOPES OF BASIN: 3:1 MAXIMUM
   -SLOPE OF RAIN GARDEN: 0.5% OR LESS
   -FACILITY AREA SHALL BE MEASURED AT THE DEEPEST SECTION (DRAIN ROCK) OF FACILITY
3. **SETBACKS:**
   -FILTRATION RAIN GARDEN MUST BE 10' FROM FOUNDATIONS AND 5' FROM PROPERTY LINES UNLESS APPROVED BY BUILDING OFFICIAL.
4. **OVERFLOW:**
   -INLET ELEVATION MUST ALLOW FOR 2" OF FREEBOARD, MINIMUM. PROTECT FROM DEBRIS AND SEDIMENT WITH STRAINER OR GRATE.
   -IDENTIFY EMERGENCY OVERFLOW ROUTE ON THE STORMWATER MANAGEMENT PLAN.
5. **PIPING:**
   -PERFORATED UNDERDRAIN PIPING: SHALL BE ABS SCH. 40, DUCTILE IRON, OR PVC SCH.40. MINIMUM DIAMETER IS 6". PIPING MUST HAVE 1% GRADE AND FOLLOW THE UNIFORM PLUMBING CODE. PVC NOT ALLOWED ABOVE GROUND.
   -OVERFLOW PIPING: SHALL BE ABS SCH. 40, DUCTILE IRON, OR PVC SCH. 40 AND SHALL NOT BE PERFORATED. MINIMUM DIAMETER IS 6". PIPING MUST HAVE 1% GRADE AND FOLLOW THE UNIFORM PLUMBING CODE. PVC NOT ALLOWED ABOVE GROUND.
6. **DRAIN ROCK:**
   -SIZE: 1 1/2" to 3/4"-0 WASHED
   -DEPTH: 18" MINIMUM
7. **SEPARATION** BETWEEN DRAIN ROCK AND GROWING MEDIUM: SHALL BE A 3" LAYER OF 3/4" - 1/4" OPEN GRADED AGGREGATE OR FILTER FABRIC WITH 3" OF ADDITIONAL DRAIN ROCK MAY BE UTILIZED IN LIEU OF OPEN GRATED AGGREGATE IF APPROVED BY CITY ENGINEER.
8. **GROWING MEDIUM:**
   -DEPTH: 18" MINIMUM
   -SEE APPENDIX A FOR SPECIFICATION OR USE SAND/LOAM/COMPOST 3-WAY MIX.
   -FACILITY SURFACE AREA MAY BE REDUCED BY 20% WHEN GROWING MEDIA DEPTH IS INCREASED TO 30" OR MORE.
9. **VEGETATION:** FOLLOW LANDSCAPE PLANS OR REFER TO PLANTING REQUIREMENTS IN APPENDIX A.
10. **WATERPROOF LINER (IF REQUIRED):** SHALL BE 30 MIL PVC OR EQUIVALENT.
11. **INSTALL RIVER ROCK** OR SPLASH PAD TO TRANSITION FROM INLETS TO GROWING MEDIUM. SIZE OF ROCK SHALL BE 1" - 3".
12. **SEASONAL HIGH GROUNDWATER SEPARATION:**
   -SEPARATION DISTANCE AS REQUIRED BY CITY.

Rain Garden - Filtration
Figure C-4

OREGON CITY
STORMWATER AND GRADING DESIGN STANDARDS

NO.	DATE	BY	REVISION

NOTICE
0 ½ 1
IF THIS BAR DOES NOT MEASURE 1" THEN DRAWING IS NOT TO SCALE

KKS DESIGNED
MDP DRAWN
ANB CHECKED

REGISTERED PROFESSIONAL ENGINEER 86406PE OREGON SEPTEMBER 12, 2017 ADAM N. BLAIR
RENEWS 12-31-27

BID SET

consor
Stantec

South Fork WATER
PURE WATER SINCE 1915
WATER QUALITY SYSTEMS BUILDING

DETAILS
OREGON CITY STANDARD DRAWINGS

PROJECT NO.: W253326OR | SCALE: AS SHOWN | DATE: AUGUST 2026

SHEET
C-123

\\EgnyteDrive\Consor Files_V-W\Projects\OR\South Fork Water\2025\W253326OR.00\12 CADD\12-5 Sheets\ODOT STANDARD DETAILS.dwg C-123 7/29/2026 10:54 AM JUSTIN.DEUEL 24.3s (LMS Tech)

\\EgnyteDrive\Consor Files_V-W\Projects\OR\South Fork Water\2025\W253326OR.00\12 CADD\12-5 Sheets\ODOT STANDARD DETAILS.dwg C-124 7/29/2026 10:55 AM JUSTIN.DEUEL 24.3s (LMS Tech)

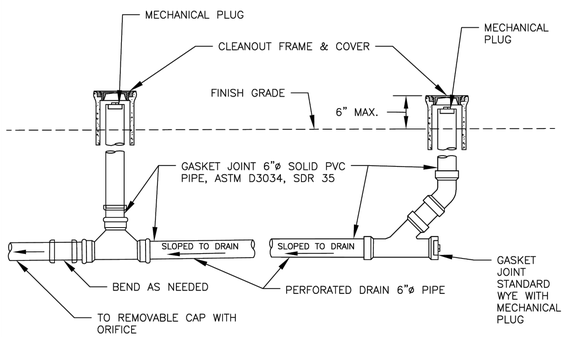

SECTION VIEW

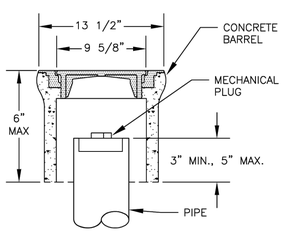

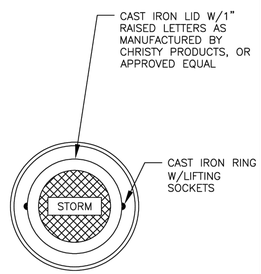

Public Works Standard Drawings	SCALE NTS		
STORMWATER PLANTER FACILITY CLEANOUTS	DATE JUL '23	REV. 1	
	ENGR. DW	DRAWN SP	
	DRAWING NO. 627		

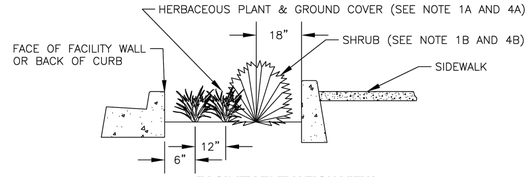

FACILITY ELEVATION VIEW

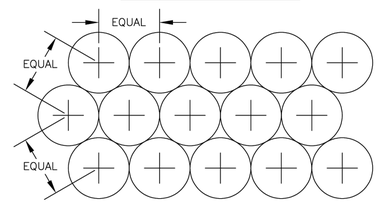

PLAN VIEW
SPACING

NOTES:

1. REFER TO PLANTING REQUIREMENTS IN APPENDIX A OF STORMWATER MANUAL.
   A. HERBACEOUS PLANTS AND GROUNDCOVERS THAT REQUIRE MORE THAN 12" ON CENTER (O.C.) SPACING ARE PROHIBITED.
   B. ONLY SMALL SHRUBS (NO MORE THAN 3' POTENTIAL HEIGHT) THAT REQUIRE NO MORE THAN 24" O.C. SPACING SHALL BE ALLOWED.
2. ALL PLANTS SHALL BE PLANTED AT EQUAL TRIANGULAR SPACING ON CENTER. INTERIOR PLANT SPACING MAY BE SLIGHTLY ADJUSTED TO ACHIEVE DESIRED EDGE SETBACKS.
3. PLANTING DENSITY SHALL AVERAGE NO LESS THAN 90 TO 115 PLANTS FOR EVERY 100 SQUARE FEET, DEPENDING ON PLANTING DIVERSITY.
4. PLANTS SHALL BE LOCATED SET BACK FROM FACILITY EDGES AS FOLLOWS:
   A. HERBACEOUS PLANTS AND GROUNDCOVERS: 6" FROM CENTER OF PLANT TO FACE OF FACILITY WALL, BACK OF CURB OR SIDEWALK EDGE.
   B. SHRUBS: 18" FROM CENTER OF PLANT TO FACE OF FACILITY WALL, BACK OF CURB OR SIDEWALK EDGE AND 24" O.C. FROM SHRUB TO SHRUB.

Public Works Standard Drawings	SCALE NTS		
ROADSIDE STORMWATER PLANTER PLANT SPACING	DATE JAN '23	REV.	
	ENGR. DW	DRAWN KAE	
	DRAWING NO. 630		

NOTES:

1. DISTANCE BETWEEN TREES VARIES, TYPICALLY ONE STREET TREE SHALL BE PLANTED FOR EVERY THIRTY–FIVE FEET OF PROPERTY FRONTAGE. THE TREE SPACING SHALL BE EVENLY DISTRIBUTED THROUGHOUT THE TOTAL DEVELOPMENT FRONTAGE.
2. STORMWATER FACILITY GROWING MEDIUM SHALL MEET REQUIREMENTS OF APPENDIX A OF CITY STORMWATER MANUAL.
3. ALL PROPOSED TREE SPECIES MUST MEET REQUIREMENTS IN APPENDIX A OF STORMWATER MANUAL.
4. TREES SHALL BE CENTERED IN THE PLANTING ZONE/TREE WELL.
5. SET TRUNK FLARE TWO INCHES ABOVE SOIL SURFACE.
6. REMOVE ALL TWINE, WIRE, ROOT BAGS, BURLAP, AND ALL OTHER NURSERY MATERIALS FROM TREE PRIOR TO BACKFILLING.
7. DRIVE TREE STAKE INTO SOIL OUTSIDE OF ROOT BALL.
8. DEEPROOT UB 24–2 TREE ROOT BARRIER OR APPROVED EQUAL.

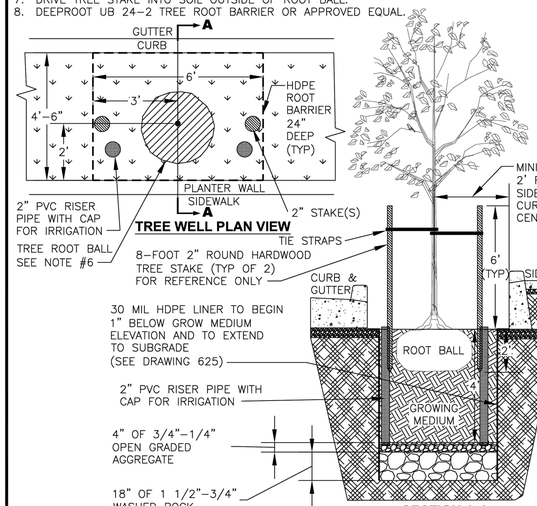

TREE WELL PLAN VIEW

SECTION A-A

Public Works Standard Drawings	SCALE NTS		
TREE WELL IN STORMWATER PLANTER	DATE JAN '23	REV.	
	ENGR. DW	DRAWN KAE	
	DRAWING NO. 631		

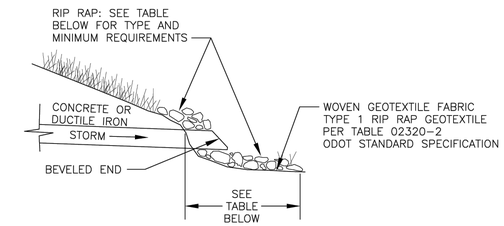

STORM OUTFALL DETAIL
N.T.S.

DISCHARGE VELOCITY AT DESIGN FLOW (fps)		MINIMUM REQUIRED PROTECTION DIMENSIONS				
GREATER THAN	LESS THAN OR EQUAL	TYPE	THICKNESS (ft)	WIDTH	LENGTH (USE GREATER OF)	HEIGHT OVER CROWN
0	5	ODOT CLASS 50 RIP RAP*	1.5	PIPE DIAMETER + 6 FT	8 FT OR 4 X PIPE DIAMETER	1 FT
5	10	ODOT CLASS 200 RIP RAP	2.5	GREATER OF: PIPE DIAMETER + 6 FT	12 FT OR 4 X PIPE DIAMETER	1 FT
10		ENGINEERED ENERGY DISSIPATER REQUIRED				

* THE CITY MAY REQUIRE ODOT CLASS 100 RIP RAP IN AREAS WITH A LIKELIHOOD OF VANDALISM.

NOTE:

1. PIPE HEADWALLS SHALL BE REQUIRED WHERE PIPE MATERIAL OTHER THAN CONCRETE OR DUCTILE IRON IS EXPOSED IN THE DESIGN OF AN OUTLET OR INLET PIPE OR WHERE REQUIRED TO STABILIZE SLOPE. DETAILS OF ALL HEADWALLS AND END PROTECTION SHALL BE INCLUDED IN THE CONSTRUCTION DRAWINGS.

Public Works Standard Drawings	SCALE NTS		
STORM OUTFALL	DATE JAN '23	REV.	
	ENGR. DW	DRAWN KAE	
	DRAWING NO. 632		

NO.	DATE	BY	REVISION

NOTICE
0 ½ 1
IF THIS BAR DOES NOT MEASURE 1" THEN DRAWING IS NOT TO SCALE

KKS DESIGNED
MDP DRAWN
ANB CHECKED

REGISTERED PROFESSIONAL ENGINEER 86406PE OREGON SEPTEMBER 12, 2017 ADAM N. BLAIR
RENEWS 12-31-27

BID SET

consor
Stantec

South Fork WATER
PURE WATER SINCE 1915

WATER QUALITY SYSTEMS BUILDING

DETAILS

OREGON CITY STANDARD DRAWINGS

PROJECT NO.: W253326OR | SCALE: AS SHOWN | DATE: AUGUST 2026

SHEET
C-124

\\EgnyteDrive\Consor Files_V-W\Projects\OR\South Fork Water\2025\W253326OR.00\12 CADD\12-5 Sheets\ODOT STANDARD DETAILS.dwg C-125 7/29/2026 10:55 AM JUSTIN.DEUEL 24.3s (LMS Tech)

10-JAN-2025

RD910.dgn

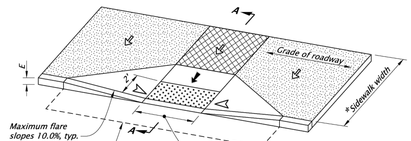

PERPENDICULAR CURB RAMP DETAIL

(Use "Parallel Curb Ramp Detail" or "Combination Curb Ramp Detail" when required turning space cannot be obtained)

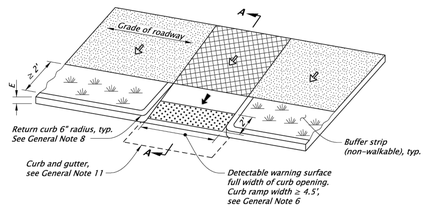

PERPENDICULAR CURB RAMP THROUGH BUFFER STRIP

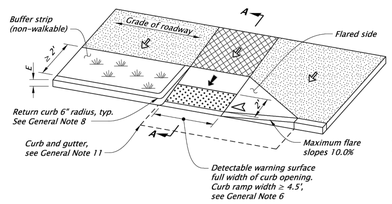

PERPENDICULAR CURB RAMP WITH SINGLE FLARE

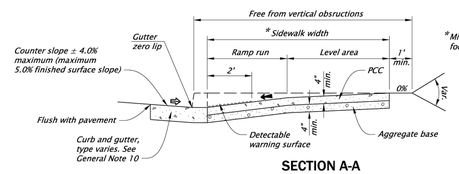

*Minimum width of 14.25 foot sidewalk for E=7".

SECTION A-A

LEGEND:

- Sidewalk
- Detectable warning surface (DWS)
- Level area (Turning space/landing) Unobstructed 4.5' x 4.5'

  With obstruction 4.5' x 5.5' (longer dimension in direction of pedestrian street crossing).

  For the purposes of this application, a maximum 2.0% finished surface slope (for drainage) measured perpendicular in two directions is considered level.
- Cross slope 1.5% maximum (Maximum 2.0% finished surface slope) (Normal sidewalk cross slope)
- Running slope 7.5% maximum (Maximum 8.3% finished surface slope)
- Counter slope 4.0% maximum ascending or descending (Maximum 5.0% finished surface slope) Slope as required for drainage
- Flare slope (Maximum 10.0% finished surface slope)

GENERAL NOTES FOR ALL DETAILS ON THIS SHEET:

1. *Curb ramp details are based on applicable ODOT standards.*
2. *See project plans for details not shown. See drawings RD700 and RD701 for curbs. See drawings RD720 and RD721 for sidewalks. See drawings RD902 through RD908 for detectable warning surface installation details. See drawings RD912 through RD916 for curb ramp placement options.*
3. *Site conditions normally require a project specific design. See project plans for details not shown.*
4. *Tooled dummy joints are required at all curb ramp slope break lines. See drawing RD722.*
5. *Curb ramp slopes shown are relative to the true level horizon (zero bubble).*
6. *Place detectable warning surface at the back of curb for a minimum depth of 2 feet in the direction of pedestrian travel full width of curb ramp opening that is adjacent to traffic.*
7. *Grade breaks at the top and bottom of curb ramp runs shall be perpendicular to the direction of the ramp run. Grade breaks shall not be permitted on the surface of ramp runs and turning spaces. Surface slopes that meet at grade breaks shall be flush.*
8. *Return curb may be provided in lieu of flared slope only if protected from traverse travel by softscape, see drawing RD721. Return curb shall not reduce width of approaching sidewalk.*
9. *Curb ramps for shared use paths intersecting a roadway shall be full width of path, excluding flares. When a curb ramp is used to provide bicycle access from a roadway to a sidewalk, the curb ramp opening will be greater than or equal to 8 feet wide. See drawings RD904 and RD909 for additional details.*
10. *Place an inlet at upstream side of curb ramp or perform other approved design mitigation. Check the gutter flow depth at curb ramp locations to assure that the design flood does not overtop the back of sidewalk.*
11. *On or along state highways, curb and gutter is required at curb ramps. Curb and gutter shall be flush with the adjacent pavement.*

The selection and use of this Standard Drawing, while designed in accordance with generally accepted engineering principles and practices, is the sole responsibility of the user and should not be used without first consulting a Registered Professional Engineer.

All materials shall be in accordance with the current Oregon Standard Specifications.

OREGON STANDARD DRAWINGS

PERPENDICULAR CURB RAMP

2024

DATE	REVISION DESCRIPTION
01-2025	UPDATED CAD STANDARDS

CALC BOOK NO. N/A SDR DATE 10-JAN-2025 **RD910**

Effective Date: June 1, 2026 - November 30, 2026

MINIMUM STANDARD SINGLE-ACCESSIBLE PARKING SPACE (VAN-ACCESSIBLE DESIGNATION REQUIRED)

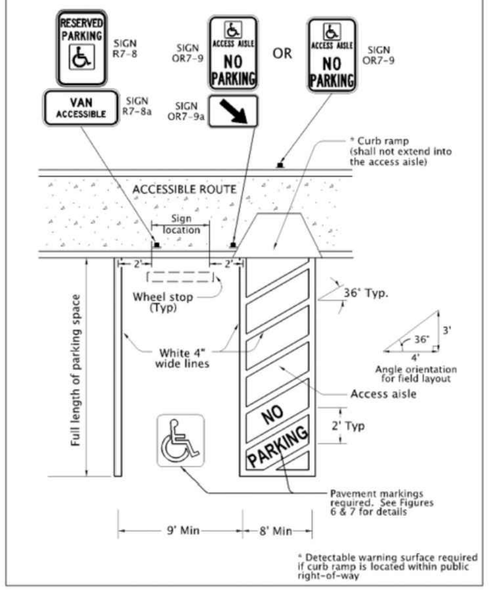

1 C-103A STANDARD SINGLE-ACCESSIBLE PARKING SPACE
SCALE: NTS

PAVEMENT MARKING STENCIL

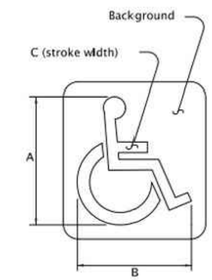

Pavement Marking Background: Optional: Blue, Retroreflective

Pavement Marking Stencil: White, Retroreflective

LEGEND	DIMENSIONS (INCHES)					
	A	B	C	D	E	F	G
MINIMUM	28	24	3				
STANDARD	41	36	4				

The pavement marking stencil shall be used to designate an accessible parking area reserved for vehicles with DMV permits.

2 C-103A PAVEMENT MARKING STENCIL
SCALE: NTS

PAVEMENT MARKING LEGEND

Pavement Marking Legend: White or Yellow, Retroreflective

The "No Parking" pavement marking is used to designate an access aisle reserved for persons use parking with a DMV permit. This marking shall be required for all access aisles next to accessible parking spaces. Engineering Judgement should be used for placement location to give best visual location to prevent illegal use of access aisle. Yellow may be used instead of white to increase contrast between access aisle white lines and the "No Parking" legend.

3 C-103A PAVEMENT MARKING LEGEND
SCALE: NTS

SIGN DESIGN

SIGN NO. R7-8

Sign Background: White, Retroreflective sheeting

Sign Legend: Green, Retroreflective sheeting

Sign Symbol: White on Blue, Retroreflective sheeting

Refer to Standard Highway Signs book for details.

The Disabled Person parking sign is used to designate a parking area reserved for vehicles with DMV permit as stated.

4 C-103A SIGN DESIGN NO. R7-8
SCALE: NTS

SIGN DESIGN

SIGN NO. R7-8P

Sign Background: White, Retroreflective sheeting

Sign Legend: Green, Retroreflective sheeting

Refer to Standard Highway Signs book for details and dimensions.

The VAN-ACCESSIBLE sign shall only be used with sign R7-8 to designate the parking spaces that have an access aisle 8 ft or wider

5 C-103A SIGN DESIGN NO. R7-8P
SCALE: NTS

SIGN DESIGN

SIGN NO. OR7-8c

Sign Background: White, Retroreflective sheeting

Sign Legend: Green, Retroreflective sheeting

Refer to ODOT Sign Policy & Guidelines for details and dimensions.

The WHEELCHAIR USER ONLY sign shall only be used with the Disabled Person Parking Sign (R7-8) and the VAN ACCESSIBLE sign (R7-8P) to designate the wheelchair user only spaces as defined in ORS 447.233.

6 C-103A SIGN DESIGN NO. OR7-8C
SCALE: NTS

SIGN DESIGN

SIGN NO. OR7-9

SIGN NO. OR7-9a

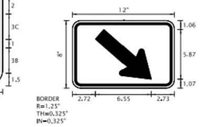

Sign Background: White, Retroreflective sheeting

Sign Legend: Red, Retroreflective sheeting

Sign Symbol: White on Blue, Retroreflective sheeting

Sign OR7-9a: Use when back of walk directly behind access aisle is not available for sign placement and sign must be placed to one side of pedestrian access ramp.

The No Parking in Access Aisle sign is used to designate an access aisle reserved for persons use parking with DMV permit. Install sign in locations where "No Parking" pavement marking may not be visible regularly from snow or sand. Place sign to have direct view from end of access aisle when possible outside of accessible route.

6 C-103A SIGN DESIGN NO. OR7-9
SCALE: NTS

NO.	DATE	BY	REVISION

NOTICE

0 ½ 1

IF THIS BAR DOES NOT MEASURE 1" THEN DRAWING IS NOT TO SCALE

KKS DESIGNED
MDP DRAWN
ANB CHECKED

REGISTERED PROFESSIONAL ENGINEER 86408PE OREGON SEPTEMBER 12, 2017 ADAM N. BLAIR
RENEWS 12-31-27

BID SET

consor
Stantec

South Fork WATER PURE WATER SINCE 1915

WATER QUALITY SYSTEMS BUILDING

DETAILS

ODOT STANDARD DETAILS

PROJECT NO.: W253326OR SCALE: AS SHOWN DATE: AUGUST 2026

SHEET C-125

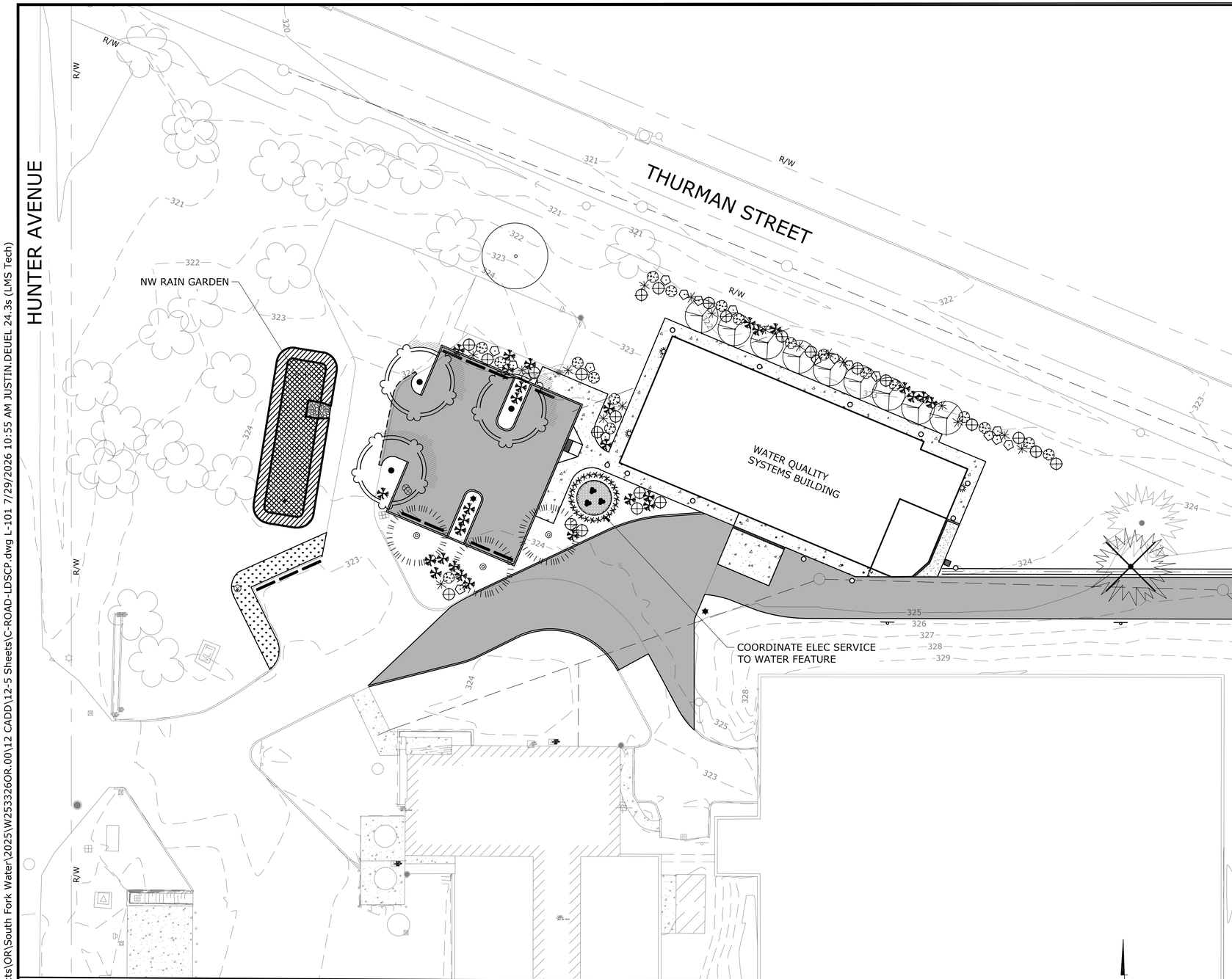

CHEMICAL FEED BUILDING AREA

SCALE: 1"=20'

20 10 0 20 40

SCALE IN FEET

PLANTS LIST

COMMON NAME "SCIENTIFIC NAME"	SIZE	SPACING	QUANTITY
OREGON WHITE OAK "QUERCUS GARRYANA"	2.5" CAL 10' B&B	AS SHOWN	1
LAVELLE HAWTHORN "CRATAGUS X LAVALLEII"	8' B&B 1.5" CAL.	AS SHOWN	3
PYRAMIDAL EUROPEAN HORNBEAM "CARPINUS BETULUS 'FASTIGIATA'	8' B&B 1.5" CAL.	AS SHOWN	3
VINE MAPLE "ACER CIRCINATUM"	5 GC	AS SHOWN	9
EVERGREEN HUCKLEBERRY "VACCINIUM OVATUM"	1 GC	AS SHOWN	28
INDIAN PLUM "OEMLERIA CERASIFORMIS"	1 GC	AS SHOWN	19
TALL OREGON GRAPE "BERBERIS AQUIFOLIUM"	1 GC	AS SHOWN	18
NOOTKA ROSE "ROSA NOOTKANA VAR. NUTKANA"	1 GC	AS SHOWN	17
RED CURRANT "RIBES SANGUINEUM"	1 GC	AS SHOWN	24
ORNAMENTAL GRASSES VARIEGATED LIRIOPE "LIRIOPE MUSCARI 'VARIEGATA"	1 GC	AS SHOWN	24
WATER FOUNTAIN - 12' DIAMETER THE POND GUY - RUSTIC TRIPLE BASALT KIT, 18-INCH 24-INCH & 30-INCH, WITH MIXED POLISHED PEBBLES (3 KITS)			1

NW RAIN GARDEN PLANTS LIST

SCIENTIFIC NAME (COMMON NAME)	CONTAINER SIZE	SPACING	QUANTITY	
ZONE A TOTAL AREA = 752 SF				
ELYMUS GLAUCUS (BLUE WILD RYE)	#SP4	1' OC	150	HERB - E
SCIRPUS MICROCARPUSSMALL (FRUITED BULRUSH)	#SP4	1' OC	150	HERB - E
CAREX OBNUPTA (SLOUGH SEDGE)	#SP4	1' OC	150	HERB - E
ELEOCHARIS PALUSTRIS (CREEPING SPIKE RUSH)	#SP4	1' OC	150	HERB - D
JUNCUS PATENS (SPREADING RUSH)	#SP4	1' OC	150	HERB - E
ZONE B TOTAL AREA = 563 SF				
PHILADELPHU LEWISII (WILD MOCK ORANGE)	#1	4' OC	5	SHRUB - D
ROSA NUTKANA (NOOTKA ROSE)	#1	4' OC	5	SHRUB - D
RIBES SANGUIMEUM (RED FLOWERING CURRANT)	#1	4' OC	5	SHRUB - D
MAHONIA AQUIFOLIUM (OREGON GRAPE)	#1	4' OC	5	SHRUB - E
CEANOTHUS VELUTINUS (SNOWBRUSH)	#1	4' OC	5	SHRUB - E
HOLODISCUS DISCOLORWESTERN (SERVICEBERRY)	#1	4' OC	5	SHRUB - D
CORNUS SERICEA (RED-TWIG DOGWOOD)	#1	4' OC	5	SHRUB - D

EXISTING TREES TO REMAIN

EXISTING TREES TO BE REMOVED

NO.	DATE	BY	REVISION

NOTICE

0 ½ 1

IF THIS BAR DOES NOT MEASURE 1" THEN DRAWING IS NOT TO SCALE

RWP DESIGNED

RWP DRAWN

RWP CHECKED

REGISTERED LANDSCAPE ARCHITECT LA0690 ROBERT W. PHIPPS OREGON 9/08/2009

RENEWS 5-31-28

BID SET

consor

Stantec

South Fork WATER PURE WATER SINCE 1915

WATER QUALITY SYSTEMS BUILDING

LANDSCAPE PLAN

PROJECT NO.: W2533260R | SCALE: AS SHOWN | DATE: AUGUST 2026

SHEET L-101

\\EgnyteDrive\Consor Files_V-W\Projects\OR\South Fork Water\2025\W2533260R.00\12 CADD\12-5 Sheets\C-ROAD-LDSCP.dwg L-101 7/29/2026 10:55 AM JUSTIN.DEUEL 24.3s (LMS Tech)

PLANTS LIST

COMMON NAME "SCIENTIFIC NAME"	SIZE	SPACING	QUANTITY
TRICOLOR BEECH "FAGUS SYLVATICA 'ROSEO-MARGINATA'"			5
TUPELO "NYSSA SYLVATICA" 'JFS-PN LEGACY1'	8' B&B 1.5" CAL.	AS SHOWN	3
THIMBLEBERRY "RUBUS PARVIFLORUS"	1 GC	AS SHOWN	3
SALAL "GAULETHERIA SHALLON"	1 GC	AS SHOWN	3

NE RAIN GARDEN FACILITY #2 PLANTS LIST

SCIENTIFIC NAME (COMMON NAME)	CONTAINER SIZE	SPACING	QUANTITY	
ZONE A TOTAL AREA = 491 SF				
ELYMUS GLAUCUS (BLUE WILD RYE)	#SP4	1' OC	98	HERB - E
SCIRPUS MICROCARPUSSMALL (FRUITED BULRUSH)	#SP4	1' OC	98	HERB - E
CAREX OBNUPTA (SLOUGH SEDGE)	#SP4	1' OC	98	HERB - E
CAMASSIA QUAMASH (CAMAS LILY)	#SP4	1' OC	98	HERB - D
JUNCUS PATENS (SPREADING RUSH)	#SP4	1' OC	98	HERB - E
ZONE B TOTAL AREA = 373 SF				
PHYSOCARPUS CAPITATUS (PACIFIC NINEBARK)	#1	4' OC	3	SHRUB - D
ROSA NUTKANA (NOOTKA ROSE)	#1	4' OC	4	SHRUB - D
RIBES SANGUIMEUM (RED FLOWERING CURRANT)	#1	4' OC	3	SHRUB - D
MAHONIA AQUIFOLIUM (OREGON GRAPE)	#1	4' OC	4	SHRUB - E
CEANOTHUS VELUTINUS (SNOWBRUSH)	#1	4' OC	3	SHRUB - E
HOLODISCUS DISCOLORWESTERN (SERVICEBERRY)	#1	4' OC	4	SHRUB - D
CORNUS SERICEA (RED-TWIG DOGWOOD)	#1	4' OC	3	SHRUB - D

EXISTING TREES TO REMAIN

EXISTING TREES TO BE REMOVED

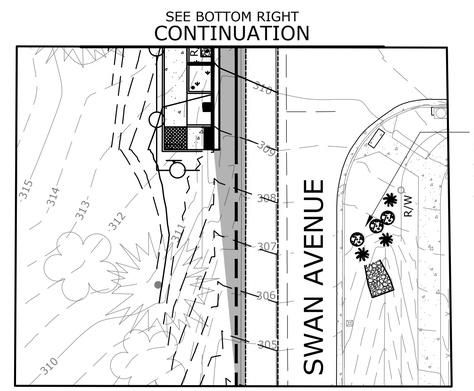

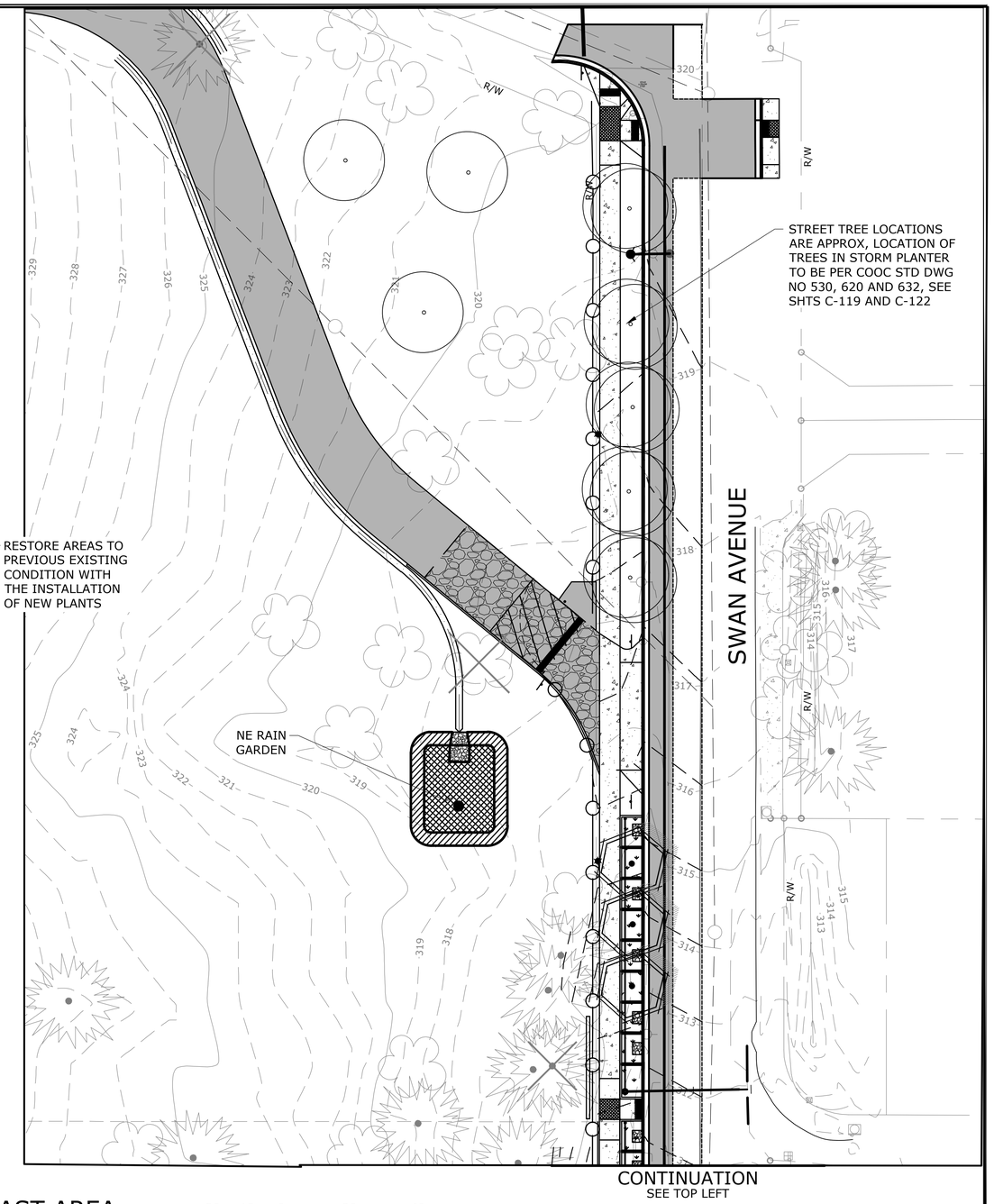

NORTH EAST AREA

SCALE: 1"=20'

20 10 0 20 40

SCALE IN FEET

NO.	DATE	BY	REVISION

NOTICE

0 ½ 1

IF THIS BAR DOES NOT MEASURE 1" THEN DRAWING IS NOT TO SCALE

RWP DESIGNED

RWP DRAWN

RWP CHECKED

REGISTERED LA0690 ROBERT W. PHYSS OREGON 5/06/2009 LANDSCAPE ARCHITECT

RENEWS 5-31-28

BID SET

consor

Stantec

South Fork WATER PURE WATER SINCE 1915

WATER QUALITY SYSTEMS BUILDING

LANDSCAPE PLAN

PROJECT NO.: W253326OR | SCALE: AS SHOWN | DATE: AUGUST 2026

SHEET L-102

\\EgnyteDrive\Consor Files_V-W\Projects\OR\South Fork Water\2025\W253326OR.00\12 CADD\12-5 Sheets\C-ROAD-LDSCP.dwg L-102 7/29/2026 10:55 AM JUSTIN.DEUEL 24.3s (LMS Tech)

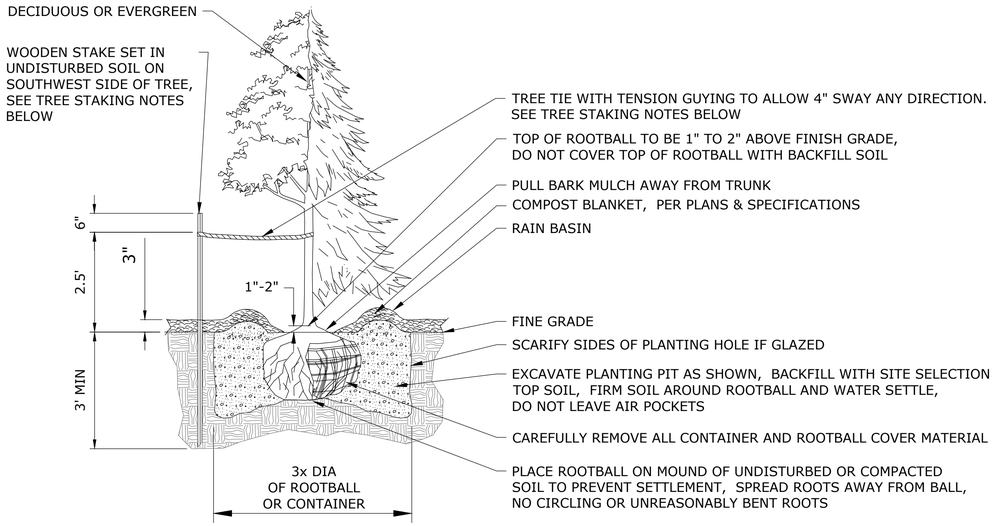

NOTES:

1. TREE TIES TO BE EITHER:

   RIGID GUY SYSTEM WITH GALVANIZED WIRE TO BE APPROXIMATELY 1/8" THICKNESS AND 24" LENGTH. THERE IS A PLASTIC SLEEVE OVER PORTION THAT GOES AROUND TREE. THE WIRE TIE IS TO GO THRU THE WOOD STAKE AND BE SECURELY FASTENED.

   PLASTIC CHAIN TYPE, APPROXIMATELY 1" WIDTH BY 1/8" DEPTH WHERE TWO STAKES ARE REQUIRED. CROSS TIES BETWEEN STAKES AND WRAP TIE AROUND TREE. FASTEN SECURELY TO STAKE.

2. EXCAVATE ALL PLANT WELLS PER DETAIL AT 3X DIAMETER OF ROOTBALL OR CONTAINER AND BACKFILL WITH SITE SELECT TOPSOIL FREE OF NOXIOUS WEEDS PLANT MATERIAL INCLUDING ROOTS AND SPRIGS.

3. FURNISH TREE STAKES ON ALL TREE PLANTINGS. STAKES TO BE CONSTRUCTION GRADE, ROUGH SAWN OR FINISHED DOUGLAS FIR OR PINE. STAIN WITH APPROVED GREEN PENETRATING OIL. STAKE SIZE IS TO BE 1 1/2"x1-1/2" BY FOLLOWING LENGTHS:

   TREES 36" AND SHORTER - USE ONE - 6' (APPROXIMATELY) STAKE

   TREES TALLER THAN 36" - USE ONE - 8' (APPROXIMATELY) STAKE

   DRIVE STAKES VERTICALLY AND AT LEAST 24" INTO UNDISTURBED SOIL. DO NOT DRIVE STAKES THRU ROOT BALL. LOCATE STAKES TO BEST RESIST PREVAILING WINDS.

TREE PLANTING DETAIL (1 / -)
SCALE: NTS

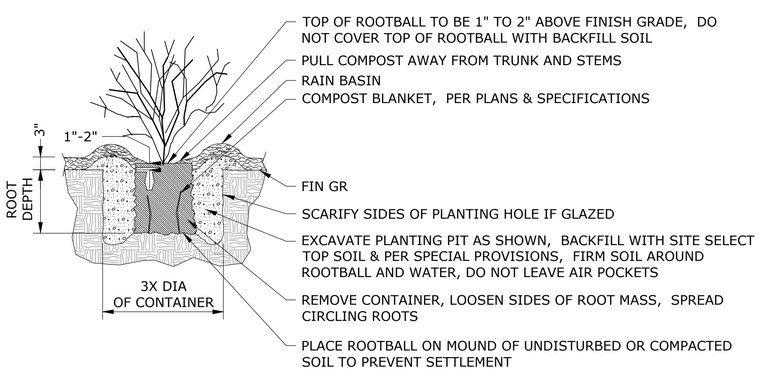

SHRUB PLANTING DETAIL (2 / -)
SCALE: NTS

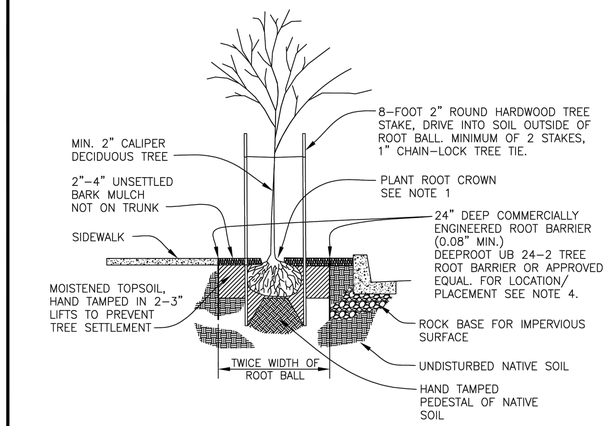

NOTES:

1. SET ROOT TRUNK COLLAR FLUSH TO 1" ABOVE FINISHED GRADE FOR LANDSCAPE AREAS AND PLANTER AREAS. FINISHED GRADE SHALL BE FLUSH WITH TOP OF CURB, FINISHED SIDEWALK, OR AT GRADE IN LANDSCAPE AREAS.
2. CUT AND REMOVE WIRE BASKETS FROM SIDES OF ROOT BALL WITHOUT DEFORMING BALL. CUT OFF AND REMOVE BURLAP AND ROPE FROM TOP HALF OF ROOT BALL. COMPLETELY REMOVE SYNTHETIC ROPE AND NON-BIODEGRADABLE BURLAP.
3. TREES SHALL BE INSTALLED:
   A. 15' FROM STREET LIGHTS
   B. 5' FROM FIRE HYDRANTS
   C. 20' FROM INTERSECTIONS
   D. 5' FROM ALL PUBLIC UTILITIES (i.e. STORM, SEWER, AND WATERLINES, UTILITY METERS, ETC.)
4. ROOT BARRIER SHALL BE PLACED ABUTTING ALL SIDEWALK EDGES, 12" FROM BACK OF CURB, OR 12" FROM IMPERVIOUS SURFACE AND SHALL EXTEND 20 FEET CENTERED WITH THE TREE BASE.

OREGON CITY	Public Works Standard Drawings	SCALE NTS
		DATE JAN '23 REV.
	STREET TREE PLANTING IN PLANTER STRIP	ENGR. DW DRAWN KAE
		DRAWING NO. 530

SEED MIX

SEED MIX A: FOR DISTURBED AREA

BOTANICAL NAME	COMMON NAME	PLS LBS. PER ACRE
ELYMUS GLAUCUS	BLUE WILDRYE	21.74
FESTUCA RUBRA RUBRA	NATIVE RED FESCUE	6.52
HORDEUM BRACHYANTHERUM	MEADOW BARLEY	4.35
GLYCERIA OCCIDENTALLIS	WESTERN MANNAGRASS	4.35
BECKMANIA SYZIGACHNE	AMERICAN SLOUGHGRASS	4.35
DESCHAMPSIA CAESPITOSA	TUFTED HAIRGRASS	2.17
	TOTAL	**43.38**

SEED MIX B: FOR STORMWATER FACILITIES

BOTANICAL NAME	COMMON NAME	PLS LBS. PER ACRE
ELYMUS GLAUCUS	BLUE WILDRYE	20
FESTUCA RUBRA RUBRA	NATIVE RED FESCUE	16.5
DESCHAMPSIA CAESPITOSA	TUFTED HAIRGRASS	5.2
GLYCERIA OCCIDENTALLIS	WESTERN MANNAGRASS	0.9
BECKMANIA SYZIGACHNE	AMERICAN SLOUGHGRASS	0.9
	TOTAL	**43.38**

NO.	DATE	BY	REVISION

NOTICE
0 ½ 1
IF THIS BAR DOES NOT MEASURE 1" THEN DRAWING IS NOT TO SCALE

RWP DESIGNED
RWP DRAWN
RWP CHECKED

REGISTERED LA0690 ROBERT W. PIERCE OREGON 9/08/2009 LANDSCAPE ARCHITECT
RENEWS 5-31-28

BID SET

consor
Stantec

South Fork WATER PURE WATER SINCE 1915
WATER QUALITY SYSTEMS BUILDING

LANDSCAPE DETAILS

PROJECT NO.: W253326OR | SCALE: AS SHOWN | DATE: AUGUST 2026

SHEET L-103

\\EgnyteDrive\Consor Files_V-W\Projects\OR\South Fork Water\2025\W253326OR.00\12 CADD\12-5 Sheets\C-ROAD-LDSCP.dwg L-103 7/29/2026 10:55 AM JUSTIN.DEUEL 24.3s (LMS Tech)

PLANTING METHODS:

1. SOIL PREPARATION: TILL THE SUB-GRADE IN ALL PLANTING AREAS TO A DEPTH OF AT LEAST FOUR INCHES AND ADD AT LEAST 12 INCHES OF CLEAN COMPOST-AMENDED TOPSOIL. THE COMPOST-AMENDED TOPSOIL SHALL HAVE A GOOD GROWING MEDIUM WITH TEXTURE MATERIAL THAT PASSES THROUGH ONE-INCH AND 35% ORGANIC MATTER FERTILITY.

2. PLANTING TIME: CONTAINERIZED STOCK SHALL BE INSTALLED ONLY FROM FEBRUARY 1 THROUGH MAY 1 AND OCTOBER 1 THROUGH NOVEMBER 15. PLANTINGS OUTSIDE THESE TIMES MAY REQUIRE ADDITIONAL MEASURES TO ENSURE SURVIVAL WHICH SHALL BE SPECIFIED ON THE PLANS.

3. All PLANTS SHALL BE INSTALLED IN ACCORDANCE WITH AMERICAN NURSERYMAN STANDARDS. INSTALLED PLANTS SHALL TAGGED FOR DORMANT SEASON IDENTIFICATION AND SHALL REMAIN ON PLANT MATERIALS AFTER PLANTING FOR MONITORING PURPOSES.

4. EROSION CONTROL: GRADING AND SOIL PREPARATION SHALL BE PERFORMED DURING OPTIMAL WEATHER CONDITIONS AND AT LOW FLOW LEVELS TO MINIMIZE SEDIMENT IMPACTS. SEEDING SHALL OCCUR BETWEEN SEPTEMBER 1 TO OCTOBER 31, OR MARCH 1 TO APRIL 15.

5. MULCHING: TREES, SHRUBS, AND GROUNDCOVER AREAS SHALL BE MULCHED A MINIMUM OF THREE INCHES IN DEPTH AND 18 INCHES IN DIAMETER, TO RETAIN MOISTURE AND DISCOURAGE WEED GROWTH AROUND NEWLY INSTALLED PLANT MATERIAL. APPROPRIATE MULCHES ARE MADE FROM COMPOSTED BARK OR LEAVES THAT HAVE NOT BEEN CHEMICALLY TREATED.

6. WEED CONTROL: THE REMOVAL OF NUISANCE AND INVASIVE WEEDS SHALL BE NECESSARY THROUGHOUT THE MAINTENANCE PERIOD, AND UNTIL A HEALTHY STAND OF DESIRABLE VEGETATION IS ESTABLISHED.

8. PLANT REPLACEMENT AND PRESERVATION: INSTALLED PLANTS THAT ARE UNHEALTHY OR DAMAGED SHALL BE REPLACED DURING THE MAINTENANCE PERIOD. PRIOR TO REPLACEMENT, THE CAUSE OF LOSS (WILDLIFE DAMAGE, POOR PLANT STOCK, ETC.) SHALL BE DOCUMENTED WITH A DESCRIPTION OF THE CORRECTIVE ACTIONS TAKEN.

9. IF PLANTING OCCURRED OUT OF PLANTING PERIODS INDICATED AT NOTE 2 ABOVE, THE FOLLOWING MEASURES SHOULD BE APPLIED:

A. HAVE PLANTS INSPECTED FOR EARLY SYMPTOMS OF POOR HEALTH. TREES AFFECTED BY EARLY STAGES OF STRESS COULD DISPLAY PREMATURE FALL COLOR IN LATE SUMMER, PARTIAL DEFOLIATION AND SYMPTOMS OF MOISTURE STRESS.
B. PROVIDE SUPPLEMENTAL IRRIGATION EACH WEEK OR MORE OFTEN ON NEWLY PLANTED TREES, SHRUBS AND OLDER PLANTS STRESSED WITH INSECT OR DISEASE PROBLEMS WHEN RAINFALL IS LACKING IN SUMMER.
C. PRUNE FLOWERING TREES AND SHRUBS ONCE FLOWER BUDS BEGIN TO FORM IN LATE SUMMER, JUDICIOUS PRUNING REDUCES THE BLOOM SOMEWHAT BUT SHOULD NOT IMPACT THE DISPLAY SIGNIFICANTLY.
D. INSPECT FOR PESTS THAT COMMONLY ARRIVE DURING HOT, DRY WEATHER AND APPLY TREATMENTS AS NEEDED.
E. ASSESS CANOPIES FOR DEAD BRANCHES AND STRUCTURAL WEAKNESSES THAT CAN BE PRUNED LATER IN WINTER.

PLANTS MAINTENANCE NOTES:

1. WATER-EFFICIENT IRRIGATION SHOULD BE APPLIED AFTER CONSTRUCTION OF THE FACILITY, PARTICULARLY DURING THE DRY SUMMER MONTHS, WHILE PLANTINGS BECOME ESTABLISHED.

2. CONTRACTOR SHALL PROVIDE 3 YEARS PLANT ESTABLISHMENT PERIOD TO MAINTAIN PLANTS IN A VIGOROUS GROWING CONDITION THROUGH PERIODIC INSPECTIONS. DURING PLANT ESTABLISHMENT PERIOD, THE CONTRACTOR SHALL ENSURE PLANTING AREAS ARE FREE OF INVASIVE WEEDS AND PLANTS SHALL BE FREE OF INSECTS AND DISEASES WHILE SHOWING SIGNS OF CONTINUING HEALTH. THE CONTRACTOR SHALL REPLACE ALL PLANTS THAT SHOW UNHEALTHY SIGNS OR ARE DEAD.

3. THE MAINTENANCE PERIOD BEGINS IMMEDIATELY AFTER THE COMPLETION OF ALL PLANTING OPERATION AND WRITTEN NOTIFICATION TO THE ENGINEER.

4. OTHER MAINTENANCE OPERATIONS DURING THE THREE-YEAR GUARANTEE PERIOD:

- RESET PLANTS TO FINISH GRADE AND RESTORATION OF PLANT SAUCERS, AS NECESSARY
- REPAIR DAMAGED OR WASHED OUT EROSION CONTROL SEEDING.
- PRUNING, INCLUDING REMOVAL OF DEAD OR BROKEN BRANCHES.
- DISEASE CONTROL.
- MAINTAINING WRAPPING, GUYS, [TURNBUCKLES,] AND STAKES. [ADJUST TURNBUCKLES TO KEEP GUY WIRES TIGHT.] REPAIR OR REPLACE ACCESSORIES WHEN REQUIRED.
- REPORT ANY PROBLEMS THAT MAY BE A HINDRANCE TO COMPLETING AND FULFILLING THE CONDITIONS OF THE PLANT GUARANTEE WITHIN 7 DAYS TO THE OWNER.

5. THE EXISTING IRRIGATION SYSTEM TO BE MODIFIED TO PROVIDE DRIP IRRIGATION ACCORDING TO PLANTS REQUIREMENTS. THE IRRIGATION SYSTEM SHALL DESIGNED AND CONSTRUCTED BY CERTIFIED IRRIGATION CONTRACTOR.

GENERAL NOTES

GENERAL

THESE NOTES ARE GENERAL AND APPLY TO THE ENTIRE PROJECT EXCEPT WHERE SPECIFICALLY INDICATED OTHERWISE.

STRUCTURAL DIMENSIONS CONTROLLED BY OR RELATED TO MECHANICAL OR ELECTRICAL EQUIPMENT SHALL BE COORDINATED BY THE CONTRACTOR PRIOR TO CONSTRUCTION. BOLT SIZES, TYPES, AND PATTERNS SHALL BE VERIFIED WITH THE MANUFACTURER. ALL BOLT PATTERNS SHALL BE TEMPLATED TO ENSURE ACCURACY OF PLACEMENT.

MECHANICAL AND ELECTRICAL EQUIPMENT SUPPORTS, ANCHORAGES, OPENINGS, RECESSES AND REVEALS NOT SHOWN ON THE STRUCTURAL DRAWINGS BUT REQUIRED BY OTHER CONTRACT DRAWINGS, SHALL BE PROVIDED FOR PRIOR TO PLACING CONCRETE.

STRUCTURAL DRAWINGS SHALL BE USED IN COORDINATION WITH MECHANICAL, ELECTRICAL, ARCHITECTURAL, CIVIL DRAWINGS AND SHOP DRAWINGS PROVIDED BY MANUFACTURERS OF EQUIPMENT.

STRUCTURES HAVE BEEN DESIGNED FOR OPERATIONAL, HYDROSTATIC, AND BACKFILL LOADS ON THE COMPLETED STRUCTURES. THE STRUCTURES HAVE NOT BEEN DESIGNED TO RESIST THESE LOADS WHILE ONLY PARTIALLY CONSTRUCTED. DURING CONSTRUCTION, THE STRUCTURES SHALL BE PROTECTED FROM ALL CONSTRUCTION LOADS BY BRACING AND BALANCING UNTIL ALL STRUCTURAL ELEMENTS ARE IN PLACE, AND ALL CONCRETE HAS REACHED THE SPECIFIED 28 DAY COMPRESSIVE STRENGTH. OVERLOADING OF ANY STRUCTURAL ELEMENT IS PROHIBITED.

UNLESS OTHERWISE SHOWN, ON ALL STRUCTURAL DRAWINGS THE FINISHED GRADE AROUND STRUCTURES IS SHOWN THUS, INDICATING EITHER GROUND SURFACE, TOP OF CONCRETE SLAB, OR AC PAVEMENT. FOR DETAILS OF FINISH SURFACES, SEE CIVIL AND ARCHITECTURAL DRAWINGS.

STRUCTURAL STEEL

STEEL CONSTRUCTION SHALL CONFORM TO THE SPECIFICATIONS AND STANDARDS AS CONTAINED IN THE FOURTEENTH EDITION OF THE AISC STEEL CONSTRUCTION MANUAL.

STRUCTURAL WIDE FLANGE SHAPES SHALL BE STEEL MEETING ASTM A-992 SPECIFICATIONS.

OTHER SHAPES, BARS, PLATES AND SHEETS SHALL BE OF STEEL MEETING ASTM A-36 SPECIFICATIONS.

PIPE, PIPE COLUMNS, AND BOLLARDS SHALL BE OF STEEL MEETING ASTM A-53, TYPE E OR S, GRADE B STANDARD WEIGHT, UNO

HSS SHALL BE OF STEEL MEETING ASTM A-500 GRADE B.

STEEL JOISTS, BEAMS, AND GIRDERS SHALL NOT BE RELOCATED WITHOUT APPROVAL BY THE ENGINEER.

ALL WELDING SHALL BE BY THE SHIELDED ARC METHOD AND SHALL CONFORM TO AWS CODE FOR ARC AND GAS WELDING IN BUILDING CONSTRUCTION. QUALIFICATIONS OF WELDERS SHALL BE IN ACCORDANCE WITH THE SPECIFICATIONS FOR STANDARD QUALIFICATION PROCEDURE OF THE AWS.

CONCRETE (EXCEPT PRECAST CONCRETE)

UNLESS OTHERWISE NOTED OR SPECIFIED, ALL STRUCTURAL CONCRETE SHALL DEVELOP A MINIMUM COMPRESSIVE STRENGTH OF 4500 PSI IN 28 DAYS.

REINFORCEMENT STEEL SHALL BE DEFORMED BARS CONFORMING IN QUALITY TO THE REQUIREMENTS OF ASTM A-615, "SPECIFICATIONS FOR DEFORMED BILLET-STEEL BARS FOR CONCRETE REINFORCEMENT", GRADE 60

COLUMN SPIRALS SHALL CONFORM TO ASTM A-615, "DEFORMED AND PLAIN BILLET-STEEL BARS FOR CONCRETE REINFORCEMENT, GRADE 60 OR ASTM A-82 "STEEL WIRE, PLAIN, FOR CONCRETE REINFORCEMENT".

ALL DETAILING, FABRICATION AND PLACING OF REINFORCING BARS, UNLESS OTHERWISE INDICATED, SHALL BE IN ACCORDANCE WITH ACI-315, "MANUAL OF STANDARD PRACTICE FOR DETAILING REINFORCED CONCRETE STRUCTURES", LATEST EDITION.

TOLERANCES IN PLACING REINFORCEMENT SHALL BE:
+/- 3/8 INCH FOR MEMBERS WITH DEPTH D <= 8 INCHES
+/- 1/2 INCH FOR MEMBERS WITH DEPTH D > 8 INCHES

ALL CONSTRUCTION JOINTS, SHALL BE ROUGH AND THOROUGHLY CLEANED FOR BOND.

LOCATION OF ALL CONSTRUCTION JOINTS SHALL BE AS SHOWN ON THE DRAWINGS OR APPROVED BY THE ENGINEER. ALL CONSTRUCTION JOINTS LOCATED ON THE DRAWINGS, OR REQUIRED FOR CONSTRUCTION BUT NOT SHOWN ON THE DRAWINGS, SHALL HAVE A 6" FLATSTRIP WATERSTOP IF IN CONTACT WITH WATER. IN ADDITION, JOINTS IN ALL SLABS COVERED WITH WATER SHALL HAVE BOTH A 6" FLATSTRIP WATERSTOP AND A SEALANT GROOVE.

DOWELS, PIPE, WATERSTOPS AND OTHER INSTALLED MATERIALS AND ACCESSORIES SHALL BE HELD SECURELY IN POSITION WHILE CONCRETE IS BEING PLACED.

UNLESS OTHERWISE INDICATED, ASIDE FROM NORMAL ACCESSORIES USED TO HOLD REINFORCING BARS FIRMLY IN POSITION, THE FOLLOWING SHALL BE ADDED:

A) IN SLABS #5 RISER BARS AT 36 INCHES OC MAXIMUM TO SUPPORT TOP REINFORCING BARS.

B) IN WALLS WITH 2 CURTAINS #3 U OR Z SHAPE SPACERS AT 6 FEET OC EACH WAY.

VERTICAL REINFORCEMENT FOR CONCRETE OR MASONRY SHALL BE SPLICED WITH DOWEL BARS OF THE SAME SIZE AND SPACING FROM THE FOUNDATION USING A STANDARD SPLICE LENGTH UNLESS INDICATED OTHERWISE.

SEALANT SHALL BE PLACED AT THE TOP OF ALL JOINTS RECEIVING EXPANSION JOINT FILLER. SEALANT DEPTH SHALL BE THE JOINT FILL THICKNESS OR 1/2", WHICHEVER IS LESS.

ALL GROUT SHALL BE NON-SHRINK GROUT, UNLESS INDICATED OTHERWISE.

UNLESS OTHERWISE SHOWN CONCRETE WALLS AND SLABS SHALL BE REINFORCED AS FOLLOWS: #4@12" EW , CENTER OF 6" SECTIONS; #5@12" EW, CENTER OF 8" SECTIONS; #4 @ 12" EW EF OF 10" SECTIONS; #5@12" EW EF OF 12" AND THICKER SECTIONS.

METAL CLIPS OR SUPPORTS SHALL NOT BE PLACED IN CONTACT WITH THE FORMS OR THE SUBGRADE. CONCRETE BLOCKS (OR DOBIES) SUPPORTING BARS ON SUBGRADE SHALL BE IN SUFFICIENT NUMBERS TO SUPPORT THE BARS WITHOUT SETTLEMENT, BUT IN NO CASE SHALL SUCH SUPPORT BE CONTINUOUS.

DOWELS SHALL BE WIRED OR OTHERWISE HELD IN POSITION. THEY SHALL NOT BE SHOVED INTO FRESHLY PLACED CONCRETE.

UNLESS OTHERWISE INDICATED ON THE DRAWINGS, LAPS OF REINFORCEMENT SHALL BE AS SHOWN ON DETAIL S-143.

LOCATE TWO 3/4 INCH GALVANIZED RICHMOND ROCKET INSERTS, HOHMANN & BARNARD OR EQUAL, STRADDLING CENTERLINE OF EQUIPMENT OVER ALL PUMPS, METERS OR OTHER MECHANICAL UNITS OF MORE THAN 100 LBS, FOR INSERTING LIFTING EYES IF NOT OTHERWISE INDICATED.

REINFORCING BARS AND ACCESSORIES SHALL NOT BE IN CONTACT WITH ANY PIPE, PIPE FLANGE OR METAL PARTS EMBEDDED IN CONCRETE, A MINIMUM OF 2 INCHES CLEARANCE SHALL BE PROVIDED AT ALL TIMES.

ALL ITEMS EMBEDDED IN CONCRETE SHALL BE SPACED ON CENTER AT LEAST 3 TIMES THEIR OUTSIDE DIMENSION. THE OUTSIDE DIMENSION SHALL NOT EXCEED ONE THIRD OF THE MEMBER THICKNESS

UNLESS OTHERWISE SHOWN ON THE DRAWINGS CONCRETE COVER FOR REINFORCING BARS SHALL BE AS FOLLOWS:

FOR CONCRETE PLACED AGAINST EARTH (SEE CONSTRUCTION JOINT DETAILS FOR THIN SLABS-ON-GRADE, BOTTOM COVER MAY BE LESS THAN 3" IF SO INDICATED)	3"
FOR SURFACES IN CONTACT WITH WATER OR WEATHER AND FORMED SURFACES IN CONTACT WITH EARTH	2"
FOR CONCRETE NOT EXPOSED TO WEATHER, OR IN CONTACT WITH WATER OR EARTH	1 1/2"

UNLESS OTHERWISE NOTED, WALLS AND SLABS SHOWN WITH A SINGLE LAYER OF REINFORCEMENT SHALL HAVE THAT REINFORCEMENT CENTERED

SLABS WITH SLOPING SURFACES SHALL HAVE THE INDICATED SLAB THICKNESS MAINTAINED AS THE MINIMUM. SLAB-ON-GRADE BOTTOMS MAY EITHER SLOPE WITH THE TOP SURFACE OR BE LEVEL. REINFORCING IN SLABS WITH SLOPING SURFACES SHALL BE PLACED AT THE REQUIRED CLEARANCE FROM THE SLAB SURFACES.

CONDUIT COORDINATION NOTES

REFER TO THE NOTES BELOW, AND ELECTRICAL AND STRUCTURAL DRAWINGS AND SPECIFICATIONS, FOR CONDUIT PLACEMENT REQUIREMENTS. CONDUIT NOT IN CONFORMANCE WITH THESE REQUIREMENTS SHALL NOT BE INSTALLED WITHOUT WRITTEN APPROVAL FROM THE STRUCTURAL ENGINEER OF RECORD.

FOR CONDUIT RUNNING IN THE PLANE OF CONCRETE SLABS OR WALLS:

THE OUTSIDE DIAMETER OF THE CONDUIT SHALL NOT EXCEED ONE-THIRD OF MEMBER THICKNESS;

CONDUIT SHALL NOT BE SPACED CLOSER THAN 3 OUTSIDE DIAMETERS ON CENTER;

CONDUIT SHALL BE LOCATED ONLY WITHIN THE MIDDLE THIRD OF THE MEMBER ;

CONDUIT SHALL NOT BE SUPPORTED DIRECTLY ON REBAR.

FOR CONDUIT RUNNING THROUGH THE PLANE OF CONCRETE SLABS OR WALLS:

COORDINATE CONDUIT PLACEMENT TO AVOID OR MINIMIZE IMPACT TO REBAR PLACEMENT.

CONDUIT SHALL BE 2 INCHES MINIMUM CLEAR OF REBAR.

REBAR MAY BE SHIFTED 2 INCHES MAXIMUM TO AVOID CONDUIT.

WHERE REBAR MUST BE CUT TO ACCOMMODATE CONDUIT PLACEMENT, PROVIDE ADDITIONAL REINFORCEMENT PER DETAIL S-144 OR S-148, CONSIDERING THE CONDUIT PENETRATION(S) AS AN EQUIVALENT CIRCULAR OR RECTANGULAR OPENING, RESPECTIVELY.

CONDUIT SHALL NOT BE RUN IN OR THROUGH GRADE BEAMS.

STRUCTURAL STANDARD DETAILS

DETAILS ON GS SHEETS ARE PART OF STANTEC'S STRUCTURAL STANDARD DETAILS.

THESE DETAILS ARE TO BE USED WHEN REFERRED TO OR WHEN NO OTHER MORE RESTRICTIVE OR DIFFERENT DETAILS ARE INDICATED ON THE DRAWINGS.

DETAILS NOT PERTAINING TO THE PROJECT ARE MARKED THUS

MASONRY

CONCRETE BLOCK MASONRY SHALL BE NORMAL WEIGHT, HOLLOW UNITS CONFORMING TO ASTM C 90. SIZE OF UNITS, COLOR AND TEXTURE SHALL BE PER THE SPECIFICATIONS.

GROUT ALL CELLS CONTAINING REINFORCING OF CONCRETE BLOCK MASONRY UNLESS OTHERWISE NOTED ON DRAWINGS.

UNLESS OTHERWISE INDICATED, LAPS OF REINFORCEMENT IN CMU SHALL BE AS SHOWN ON DETAIL S-415.

MORTAR SHALL BE IN ACCORDANCE WITH ASTM C 270, TYPE M OR S.

GROUT SHALL BE IN ACCORDANCE WITH ASTM C 476 , AND SHALL HAVE A MINIMUM COMPRESSIVE STRENGTH OF 2000 PSI.

SPECIAL INSPECTION SHALL BE PROVIDED PER THE STATEMENT OF SPECIAL INSPECTIONS FOR ALL MASONRY WORK

THE COMBINED MASONRY ASSEMBLAGE COMPRESSIVE STRENGTH AT 28 DAYS SHALL BE A MINIMUM OF f'm = 2000 PSI.

REINFORCEMENT SHALL BE TIED OR OTHERWISE SECURED IN POSITION PRIOR TO GROUTING.

ALL HORIZONTAL AND VERTICAL REINFORCEMENT SHALL BE CONTINUOUS OVER THE FULL EXTENT OF THE WALL WITH STANDARD SPLICES LOCATED AS NEEDED. WHERE IT IS NECESSARY TO INTERRUPT AN INDIVIDUAL BAR, AN EQUAL SIZED BAR SHALL BE LOCATED AS CLOSE AS POSSIBLE AND SHALL EXTEND A MINIMUM OF ONE SPLICE LENGTH BEYOND EACH SIDE OF THE INTERRUPTION.

ALUMINUM

ALUMINUM CONSTRUCTION SHALL BE IN ACCORDANCE WITH ALUMINUM ASSOCIATION ADM-1, ALUMINUM DESIGN MANUAL. ALUMINUM SURFACES SHALL BE PREVENTED FROM COMING IN DIRECT CONTACT WITH CONCRETE OR WITH METALS NOT COMPATIBLE WITH ALUMINUM, USING METHODS DESCRIBED IN THE SPECIFICATIONS.

STAINLESS STEEL

REFER TO SPECIFICATIONS FOR STAINLESS STEEL GRADES REQUIRED.

METAL DECK AND ROOFS

THE CONTRACTOR SHALL COORDINATE THE LOCATION AND SIZES OF ROOF OPENINGS WITH THE MECHANICAL, HVAC AND ARCHITECTURAL DRAWINGS. STANDARD DETAIL S-551 SHALL BE USED AT ALL OPENINGS.

OPEN WEB STEEL JOISTS

THE CONTRACTOR SHALL SUPPLY REQUIRED EQUIPMENT WEIGHTS TO THE STEEL JOIST MANUFACTURER.

STEEL JOISTS SHALL BE DESIGNED FOR REQUIRED LOADING DEPICTED ON DRAWING S-601, AT A MINIMUM.

JOIST LOADING ON S-601 DOES NOT ACCOUNT FOR CONCENTRATED EQUIPMENT LOADS. THE JOIST MANUFACTURER SHALL COORDINATE WITH THE CONTRACTOR FOR REQUIRED EQUIPMENT LOADS. THE JOIST MANUFACTURER IS RESPONSIBLE FOR VERIFYING THE JOISTS ARE ADEQUATE FOR THE CONCENTRATED EQUIPMENT LOADS.

REV 070119

GENERAL DESIGN CRITERIA

DESIGN IN ACCORDANCE WITH THE 2022 EDITION OF THE OREGON STRUCTURAL SPECIALTY CODE (OSSC), EXCEPT WHERE OTHER APPLICABLE CODES OR THE FOLLOWING NOTES ARE MORE RESTRICTIVE.

LOADINGS:

SOIL LOADS:

ALLOWABLE BEARING PRESSURE	
DEAD PLUS LIVE (PSF):	2000
ALL LOADS (W/WIND & SEISMIC) (PSF)	2666
FROST DEPTH (INCHES):	18

FLOOR LIVE LOADS:

PROCESS AREA LIVE LOAD (PSF):	250
PROCESS CONCENTRATED LIVE LOAD (LBS):	2000
STORAGE (PSF):	125
STAIRS/WALKWAY AREA LIVE LOAD (PSF):	100
STAIRS/WALKWAY CONCENTRATED LIVE LOAD (LBS):	1000

ROOF LIVE LOADS (INCLUDING ELECTRICAL ROOM ROOF):

ROOF LIVE LOAD (PSF):	20

WIND LOADS:

BASIC WIND SPEED (3 SEC - MPH):	105
RISK CATEGORY:	III
INTERNAL PRESSURE COEFFICIENT:	0.55
COMPONENTS AND CLADDING (PSF):	PER ASCE 7-16

SEISMIC LOADS:

RISK CATEGORY:	III
SEISMIC IMPORTANCE FACTOR (Ie)	1.25
SPECTRAL RESPONSE COEFFICIENT (Sds):	0.647
SPECTRAL RESPONSE COEFFICIENT (Sd1):	0.478
SITE CLASS:	D
SEISMIC DESIGN CATEGORY:	D
BASIC SEISMIC-FORCE-RESISTING SYSTEM:	SPECIAL REINFORCED MASONRY SHEAR WALLS
DESIGN BASE SHEAR:	132 KIPS
SEISMIC RESPONSE COEFFICIENT (Cs):	0.162
RESPONSE MODIFICATION COEFFICIENT (R):	5
ANALYSIS PROCEDURE:	EQUIVALENT LATERAL FORCE PROCEDURE

SNOW LOADS:

GROUND SNOW LOAD (Pg) (PSF):	10
FLAT ROOF SNOW LOAD (Pf) (PSF):	22
SNOW EXPOSURE FACTOR(Ce):	B
SNOW IMPORTANCE FACTOR (Is):	1.10
THERMAL FACTOR (Ct):	1.0

FLOOD LOADS:

ELEVATION OF LOWEST FLOOR;	N/A
ELEVATION OF DRY FLOOD PROOFING:	N/A
ELEVATION OF LOWEST HORIZONTAL STRUCTURAL ELEMENT	N/A

NO.	DATE	BY	REVISION

NOTICE
0 ½ 1
IF THIS BAR DOES NOT MEASURE 1" THEN DRAWING IS NOT TO SCALE

SW DESIGNED
TN DRAWN
MP CHECKED

STRUCTURAL REGISTERED PROFESSIONAL ENGINEER 82642PE DIGITALLY SIGNED OREGON JAN. 08, 2026 MATTHEW ERICH PERKINS
EXPIRES: 12/31/2026

BID SET

consor
Stantec

South Fork WATER PURE WATER SINCE 1915
WATER QUALITY SYSTEMS BUILDING

STRUCTURAL
GENERAL NOTES - I

PROJECT NO.: 21-3045 | SCALE: AS SHOWN | DATE: AUGUST 2026

SHEET GS-1

C:\pwworkdir\d0513056\0609600S-001.dwg MS 7/27/2026 11:17 AM RDHOKARE 24.2s (LMS Tech)

STATEMENT OF SPECIAL INSPECTIONS

1. SPECIAL INSPECTIONS ARE REQUIRED IN ACCORDANCE WITH THE 2022 OSSC CHAPTER 17. THE OWNER WILL ENGAGE THE SERVICES OF A QUALIFIED SPECIAL INSPECTOR, WHO WILL PROVIDE ALL SERVICES NECESSARY TO MEET THE OSSC SPECIAL INSPECTION REQUIREMENTS.
2. SPECIAL INSPECTIONS WILL BE PROVIDED DURING ALL FABRICATION AND CONSTRUCTION ACTIVITIES IN ACCORDANCE WITH THE NOTES AND SCHEDULES ON THIS DRAWING.
3. SPECIAL INSPECTION FOR THE MAIN WIND-FORCE-RESISTING SYSTEM AND EXTERIOR CLADDING WILL BE PROVIDED AS INDICATED BELOW:
   A. WIND FORCE RESISTING SYSTEM:
      1. STEEL FRAME: SPECIAL INSPECTION IS REQUIRED IN ACCORDANCE WITH TABLE 1704.3.
      2. STEEL ROOF DIAPHRAGM: PERIODIC SPECIAL INSPECTION IS REQUIRED DURING WELDING, SCREW ATTACHMENT, BOLTING, ANCHORING AND OTHER FASTENING OF COMPONENTS.
      3. EXTERIOR WALLS: PERIODIC SPECIAL INSPECTION IS REQUIRED FOR NAILING, SCREW ATTACHMENT, BOLTING, ANCHORING AND OTHER FASTENING OF COMPONENTS.
      4. WALL CONNECTIONS TO STEEL FRAMES: PERIODIC SPECIAL INSPECTION IS REQUIRED FOR BOLTING, WELDING, ANCHORING AND OTHER FASTENING OF WALLS TO STEEL FRAMES.
      5. WALL CONNECTIONS TO THE FOUNDATION: SPECIAL INSPECTION FOR ALL CONCRETE ANCHOR INSTALLATION IS REQUIRED IN ACCORDANCE WITH THE APPLICABLE ICC OR IAPMO EVALUATION REPORT. PERIODIC SPECIAL INSPECTION IS REQUIRED FOR SCREW ATTACHMENT, BOLTING, ANCHORING AND OTHER FASTENING OF THE HOLD-DOWNS TO THE ANCHOR BOLTS AND TO THE WALL STUDS.
   B. ROOF, WALL, AND SOFFIT CLADDING:
      1. PERIODIC SPECIAL INSPECTION IS REQUIRED DURING WELDING, NAILING, SCREW ATTACHMENT, BOLTING, ANCHORING AND OTHER FASTENING OF COMPONENTS.
4. SPECIAL INSPECTION FOR THE SEISMIC FORCE RESISTING SYSTEM AND MECHANICAL AND ELECTRICAL EQUIPMENT WILL BE PROVIDED AS INDICATED BELOW:
   A. SEISMIC FORCE RESISTING SYSTEM:
      1. WALL CONNECTIONS TO THE FOUNDATION: SPECIAL INSPECTION OF WALL DOWELS INTO THE FOUNDATION. SPECIAL INSPECTION FOR ALL CONCRETE ANCHOR INSTALLATION WHERE REQUIRED IN ACCORDANCE WITH IBC TABLE 1705.3.
      2. WALL: SPECIAL INSPECTION OF REINFORCED MASONRY WALLS IS REQUIRED IN ACCORDANCE WITH TMS 602 LEVEL 2.
      3. WALL CONNECTION TO ROOF TRUSS & RAFTERS: SPECIAL INSPECTION AS REQUIRED FOR BOLTING, WELDING, ANCHORING AND OTHER FASTENING OF WALLS TO STEEL FRAMES. SPECIAL INSPECTION REQUIRED FOR WELDING, AND ANCHORAGE AT COLLECTOR PER AISC 360.
      4. STEEL ROOF DIAPHRAGM: PERIODIC SPECIAL INSPECTION IS REQUIRED FOR SCREW ATTACHMENT, BOLTING, ANCHORING, WELDING AND OTHER FASTENING OF COMPONENTS.
   B. MECHANICAL AND ELECTRICAL COMPONENTS AS NOTED BELOW:
      1. PERIODIC SPECIAL INSPECTION IS REQUIRED DURING THE ANCHORAGE OF ELECTRICAL EQUIPMENT FOR EMERGENCY OR STANDBY POWER SYSTEMS
      2. PERIODIC SPECIAL INSPECTION IS REQUIRED DURING THE INSTALLATION OF ANCHORAGE OF OTHER ELECTRICAL EQUIPMENT.
      3. PERIODIC SPECIAL INSPECTION IS REQUIRED DURING THE INSTALLATION OF VIBRATION ISOLATION SYSTEMS.
5. ADDITIONAL SPECIAL INSPECTIONS WILL BE PROVIDED WHERE REQUIRED BY OSSC CHAPTER 17.

DEFINITIONS

1. REFER TO SECTION 1702 AND CHAPTER 2 OF THE 2022 OSSC FOR DEFINITION OF TERMS APPLICABLE TO SPECIAL INSPECTIONS AND STRUCTURAL OBSERVATIONS.
   A. SPECIFIC DEFINITIONS
      HIGH STRENGTH BOLT: AN ASTM A325 OR A490 BOLT, AN ASTM F1852 TWIST-OFF-TYPE TENSION-CONTROL BOLT OF AN ALTERNATIVE-DESIGN FASTENER THAT MEETS THE REQUIREMENTS IN AISC 360 SECTION 2.8.

CONTRACTOR RESPONSIBILITY

1. EACH CONTRACTOR RESPONSIBLE FOR THE FABRICATION OR CONSTRUCTION OF A MAIN WIND-FORCE-RESISTING SYSTEM OR MAIN SEISMIC-FORCE RESISTING SYSTEM OR COMPONENT LISTED ABOVE SHALL SUBMIT A WRITTEN STATEMENT OF RESPONSIBILITY TO THE BUILDING OFFICIAL AND OWNER PRIOR TO THE COMMENCEMENT OF WORK ON THE SYSTEM OR COMPONENT. THE CONTRACTOR'S STATEMENT OF RESPONSIBILITY SHALL CONTAIN ACKNOWLEDGEMENT OF AWARENESS OF THE SPECIAL REQUIREMENTS CONTAINED IN THE STATEMENT OF SPECIAL INSPECTIONS.

STRUCTURAL OBSERVATIONS:

1. STRUCTURAL OBSERVATIONS SHALL BE PROVIDED IN ACCORDANCE WITH THE 2022 OSSC. THE OWNER SHALL EMPLOY THE ENGINEER OF RECORD, HIS/HER DESIGNEE, OR A OREGON REGISTERED DESIGN PROFESSIONAL TO PERFORM STRUCTURAL OBSERVATIONS, AND WHO SHALL PROVIDE ALL SERVICES NECESSARY TO MEET THE IBC STRUCTURAL OBSERVATIONS REQUIREMENTS.
2. STRUCTURAL OBSERVATIONS SHALL BE PROVIDED DURING ALL FABRICATION AND CONSTRUCTION ACTIVITIES IN ACCORDANCE WITH THE NOTES AND SCHEDULES ON THIS DRAWING.
3. THE CONTRACTOR SHALL NOTIFY THE OWNER AND THE STRUCTURAL OBSERVER AT LEAST 3 BUSINESS DAYS PRIOR TO EACH REQUIRED STRUCTURAL OBSERVATION.

SCHEDULE OF STRUCTURAL OBSERVATIONS

CONCRETE CONSTRUCTION	WHAT TO OBSERVE
FOUNDATIONS - PRIOR TO THE FIRST CONCRETE POUR, BUT AFTER SUBSTANTIAL PLACEMENT OF REINFORCING STEEL, WATERSTOPS, ANCHORS, AND OTHER EMBEDDED ITEMS	REVIEW FOUNDATION REINFORCEMENT, INCLUDING ADDITIONAL REINFORCEMENT AT PENETRATIONS REVIEW WALL DOWELS; ENSURE ADDITIONAL DOWELS ASSOCIATED WITH OPENINGS IN WALL AND JAMB STEEL ARE IN PLACE REVIEW WATERSTOP INSTALLATION, TIE-OFFS, AND JOINTS REVIEW ANCHOR BOLT PLACEMENT, HOLD-DOWN ANCHORS, AND OTHER STEEL EMBEDS. REVIEW PIPING AND CONDUIT PLACEMENT
WALLS - PRIOR TO THE FIRST CONCRETE POUR, BUT AFTER SUBSTANTIAL PLACEMENT OF REINFORCING STEEL, WATERSTOPS, ANCHORS, AND OTHER EMBEDDED ITEMS	REVIEW WALL REINFORCEMENT, INCLUDING ADDITIONAL REINFORCEMENT AT PENETRATIONS REVIEW JAMB STEEL, CHORD STEEL, AND WALL-TO-DIAPHRAGM CONNECTION DETAILS REVIEW WATERSTOP INSTALLATION, TIE-OFFS, AND JOINTS REVIEW ANCHOR BOLT PLACEMENT, HOLD-DOWN ANCHORS, AND OTHER STEEL EMBEDS. REVIEW PIPING AND CONDUIT PLACEMENT
ELEVATED SLABS - PRIOR TO THE FIRST CONCRETE POUR, BUT AFTER SUBSTANTIAL PLACEMENT OF REINFORCING STEEL, WATERSTOPS, ANCHORS, AND OTHER EMBEDDED ITEMS	REVIEW SLAB REINFORCEMENT, INCLUDING ADDITIONAL REINFORCEMENT AT PENETRATIONS REVIEW WALL DOWELS; ENSURE ADDITIONAL DOWELS ASSOCIATED WITH OPENINGS IN WALL AND JAMB STEEL ARE IN PLACE REVIEW CHORD STEEL AND WALL-TO-DIAPHRAGM CONNECTION DETAILS REVIEW WATERSTOP INSTALLATION, TIE-OFFS, AND JOINTS REVIEW ANCHOR BOLT PLACEMENT, HOLD-DOWN ANCHORS, AND OTHER STEEL EMBEDS. REVIEW PIPING AND CONDUIT PLACEMENT

MASONRY CONSTRUCTION	WHAT TO OBSERVE
FOUNDATIONS - PRIOR TO THE FIRST CONCRETE POUR, BUT AFTER SUBSTANTIAL PLACEMENT OF REINFORCING STEEL, ANCHORS, AND OTHER EMBEDDED ITEMS	REVIEW FOUNDATION REINFORCEMENT, INCLUDING ADDITIONAL REINFORCEMENT AT PENETRATIONS REVIEW WALL DOWELS; ENSURE ADDITIONAL DOWELS ASSOCIATED WITH OPENINGS IN WALL AND JAMB STEEL ARE IN PLACE REVIEW ANCHOR BOLT PLACEMENT, HOLD-DOWN ANCHORS, AND OTHER STEEL EMBEDS. REVIEW PIPING AND CONDUIT PLACEMENT
WALLS - PRIOR TO THE FIRST WALL POUR, BUT AFTER SUBSTANTIAL PLACEMENT OF REINFORCING STEEL, ANCHORS, AND OTHER EMBEDDED ITEMS	REVIEW WALL REINFORCEMENT, INCLUDING ADDITIONAL REINFORCEMENT AT PENETRATIONS REVIEW JAMB STEEL, CHORD STEEL, AND WALL-TO-DIAPHRAGM CONNECTION DETAILS REVIEW ANCHOR BOLT PLACEMENT, HOLD-DOWN ANCHORS, AND OTHER STEEL EMBEDS. REVIEW PIPING AND CONDUIT PLACEMENT
ROOFS - PRIOR TO APPLICATION OF NON-STRUCTURAL COVERINGS, BUT AFTER PLACEMENT OF STRUCTURAL FRAMING AND SHEATHING/DECKING	REVIEW ROOF FRAMING REVIEW DIAPHRAGM-TO-WALL CONNECTIONS REVIEW DIAPHRAGM NAILING/WELDING REVIEW FRAMING AROUND OPENINGS

DEFERRED SUBMITTALS:

DEFERRED SUBMITTALS ARE THOSE PORTIONS OF THE DESIGN WHICH ARE PROVIDED BY THE CONTRACTOR AND THEREFORE WERE NOT SUBMITTED AT THE TIME OF THE PERMIT APPLICATION, AND WHICH ARE TO BE SUBMITTED TO THE PERMITTING AGENCY PRIOR TO FABRICATION OR INSTALLATION OF THAT PORTION OF THE WORK.

NO WORK SHALL BE PERFORMED FOR DEFERRED SUBMITTAL ITEMS UNTIL THE PLANS FOR SUCH WORK HAVE BEEN REVIEWED AND FOUND ACCEPTABLE BY THE STRUCTURAL ENGINEER OF RECORD AND APPROVED BY THE BUILDING OFFICIAL.

DRAWINGS AND CALCULATIONS FOR THESE ITEMS SHALL BE SIGNED AND SEALED BY A LICENSED OREGON PROFESSIONAL ENGINEER. NO FABRICATION SHALL COMMENCE UNTIL THE FINAL APPROVAL HAS BEEN ISSUED BY THE BUILDING OFFICIAL AND THE STRUCTURAL ENGINEER OF RECORD.

THE DEFERRED SUBMITTALS SHALL INCLUDE AS A MINIMUM, BUT NOT BE LIMITED TO, THE FOLLOWING ITEMS:

SPECIFICATION SECTION	ITEM
013317	EQUIPMENT AND TANK ANCHORAGE
013317	PIPE AND DUCT SUPPORTS AND BRACING
052119	STEEL OPEN WEB JOISTS
055000	METAL STAIR SYSTEM
055000	METAL GRATINGS
055000	HANDRAILING AND GUARDRAILING SYSTEMS
068000	RAISED FLOOR GRATING SYSTEM
068000	FRP GRATING
434002	FRP & OTHER PREFABRICATED STORAGE TANKS
434117	HYDROPNEUMATIC TANKS
434143	POLYETHYLENE TANKS
463633	SODA ASH BULK BAG UNLOADER SYSTEM

NO.	DATE	BY	REVISION

NOTICE
0 ½ 1
IF THIS BAR DOES NOT MEASURE 1" THEN DRAWING IS NOT TO SCALE

SW DESIGNED
TN DRAWN
MP CHECKED

STRUCTURAL REGISTERED PROFESSIONAL ENGINEER 82642PE DIGITALLY SIGNED OREGON JULY 09, 2026 MATTHEW ERICH PERVAIS
EXPIRES: 12/31/2026

BID SET

consor
Stantec

South Fork WATER PURE WATER SINCE 1915
WATER QUALITY SYSTEMS BUILDING

STRUCTURAL
GENERAL NOTES - II

PROJECT NO.: 21-3045 | SCALE: AS SHOWN | DATE: AUGUST 2026

SHEET GS-2

C:\pwworkdir\d0513056\06096005-002.dwg MS 7/27/2026 11:20 AM RDHOKARE 24.2s (LMS Tech)

INSPECTION OF STRUCTURAL STEEL CONSTRUCTION

1. SPECIAL INSPECTION FOR STRUCTURAL STEEL SHALL BE IN ACCORDANCE WITH THE QUALITY ASSURANCE AND QUALITY CONTROL INSPECTION REQUIREMENTS OF AISC 360 AND AISC 341.
2. THE CONTRACTOR IS RESPONSIBLE FOR QUALITY CONTROL PROCEDURES IN ACCORDANCE WITH THE REQUIREMENTS OF AISC 360 CHAPTER N AND AISC 341 CHAPTER J.
3. THE OWNER IS RESPONSIBLE FOR QUALITY ASSURANCE PROCEDURES IN ACCORDANCE WITH THE REQUIREMENTS OF AISC 360 CHAPTER N AND AISC 341 CHAPTER J.
4. THE INSPECTION TABLES AND NOTES PROVIDED ON THIS SHEET ARE INTENDED ONLY TO ASSIST THE CONSTRUCTION PERSONNEL IN IDENTIFYING QUALITY CONTROL AND QUALITY ASSURANCE INSPECTION REQUIREMENTS. THE REQUIREMENTS OF AISC 360 CHAPTER N AND AISC 341 CHAPTER J ARE MINIMUM REQUIREMENTS, AND THE QUALITY CONTROL INSPECTOR(S) AND QUALITY ASSURANCE INSPECTOR(S) ARE RESPONSIBLE FOR MEETING ALL REQUIREMENTS OF AISC 360 CHAPTER N AND AISC 341 CHAPTER J, WHETHER INDICATED ON THIS SHEET OR NOT. IF ANY INSPECTIONS ARE REQUIRED IN ADDITION TO THE AISC 360 CHAPTER N AND AISC 341 CHAPTER J INSPECTIONS, SUCH INSPECTIONS ARE INDICATED ON THIS SHEET. IF A DISCREPANCY EXISTS BETWEEN THE REQUIREMENTS OF AISC 360 CHAPTER N AND AISC 341 CHAPTER J AND THE REQUIREMENTS OF THIS DRAWING, THE MORE STRINGENT REQUIREMENT SHALL APPLY, UNLESS OTHERWISE APPROVED BY THE STRUCTURAL ENGINEER OF RECORD.

INSPECTION OF WELDING PER AISC 360

AS A MINIMUM WELDING INSPECTION TASKS SHALL BE IN ACCORDANCE WITH TABLES N5.4-1, N5.4-2 AND N5.4-3. INSPECTION TASKS ARE AS FOLLOWS:

O- OBSERVE THESE ITEMS ON A RANDOM BASIS. OPERATIONS NEED NOT BE DELAYED PENDING THESE INSPECTIONS.

P- PERFORM THESE TASKS FOR EACH WELDED JOINT OR MEMBER.

INSPECTION TASKS PRIOR TO WELDING (AISC 360 TABLE N5.4-1)

INSPECTION TASK PRIOR TO WELDING	INSPECTION		AWS D1.1/D1.1M REFERENCES
	QUALITY CONTROL	QUALITY ASSURANCE	
WELDING PROCEDURE SPECIFICATIONS (WPSs) AVAILABLE	P	P	6.3
MANUFACTURER CERTIFICATIONS FOR WELDING CONSUMABLES AVAILABLE	P	P	6.2
MATERIAL IDENTIFICATION (TYPE/GRADE)	O	O	6.2
WELDER IDENTIFICATION SYSTEM (1)	O	O	6.4
FIT-UP GROOVE WELDS (INCLUDING JOINT GEOMETRY) -JOINT PREPARATION -DIMENSIONS (ALIGNMENT, ROOT OPENING, ROOT FACE, BEVEL) -CLEANLINESS (CONDITION OF SURFACES) -TACKING (QUALITY AND LOCATION) -BACKING TYPE AND FIT (IF APPLICABLE)	O	O	6.5.2 5.22 5.15 5.18 5.10, 5.22.1.1
CONFIGURATION AND FINISH OF ACCESS HOLES	O	O	6.5.2, 5.17, AISC J1.6
FIT-UP OF FILLET WELDS -DIMENSIONS (ALIGNMENT, GAPS AT ROOT) -CLEANLINESS (CONDITION OF SURFACES) -TACKING (QUALITY AND LOCATION)	O	O	5.22.1 5.15 5.18
CHECK WELDING EQUIPMENT	O	-	6.2, 5.11
THE FABRICATOR OR ERECTOR, AS APPLICABLE, SHALL MAINTAIN A SYSTEM BY WHICH A WELDER WHO HAS WELDED A JOINT OR MEMBER CAN BE IDENTIFIED. STAMPS, IF USED, SHALL BE THE LOW-STRESS TYPE.			

INSPECTION TASKS DURING WELDING (AISC 360 TABLE N5.4-2)

INSPECTION TASK DURING WELDING	INSPECTION		AWS D1.1/D1.1M REFERENCES
	QUALITY CONTROL	QUALITY ASSURANCE	
USE OF QUALIFIED WELDERS	O	O	6.4
CONTROL AND HANDLING OF WELDING CONSUMABLES -PACKAGING -EXPOSURE CONTROL	O	O	6.2 5.3.1 5.3.2 (FOR SMAW), 5.3.3 (FOR SAW)
NO WELDING OVER CRACKED TACK WELDS	O	O	5.18
ENVIRONMENTAL CONDITIONS -WIND SPEED WITHIN LIMITS -PRECIPITATION AND TEMP	O	O	5.12.1 5.12.2
WPS FOLLOWED: -SETTINGS ON WELDING EQUIP. -TRAVEL SPEED -SELECTED WELDING MATERIALS -SHIELDED GAS TYPE/FLOW RATE -PREHEAT APPLIED -INTERPASS TEMPERATURE (MIN/MAX) -PROPER POSITION (F, V, H, OH)	O	O	6.3.3, 6.5.2, 5.5, 5.21 5.6, 5.7
WELDING TECHNIQUES -INTERPASS AND FINAL CLEANING -EACH PASS WITHIN PROFILE LIMITATIONS -EACH PASS MEETS QUALITY REQUIREMENTS	O	O	6.5.2, 6.5.3, 5.24 5.30.1

INSPECTION TASKS AFTER WELDING (AISC 360 TABLE N5.4-3)

INSPECTION TASKS AFTER WELDING	INSPECTION		AWS D1.1/D1.1M REFERENCES
	QUALITY CONTROL	QUALITY ASSURANCE	
WELDS CLEANED	O	O	5.30.1
SIZE, LENGTH AND LOCATION OF WELDS	P	P	6.5.1
WELDS MEET VISUAL ACCEPTANCE CRITERIA -CRACK PROHIBITION -WELD/BASE METAL FUSION -CRATER CROSS SECTION -WELD PROFILES -WELD SIZE -UNDERCUT -POROSITY	P	P	6.5.3 TABLE 6.1(1) TABLE 6.1(2) TABLE 6.1(3) TABLE 6.1(4), 5.24 TABLE 6.1(6) TABLE 6.1(7) TABLE 6.1(8)
ARC STRIKES	P	P	5.29
K-AREA (1)	P	P	-
BACKING REMOVED AND WELD TABS REMOVED (IF REQUIRED)	P	P	5.10, 5.31
REPAIR ACTIVITIES	P	P	6.5.3, 5.26
DOCUMENT ACCEPTANCE OR REJECTION OF WELDED JOINT OR MEMBER	P	P	6.5.4, 6.5.5
WHEN WELDING OF DOUBLER PLATES, CONTINUITY PLATES OR STIFFENERS HAS BEEN PREFORMED IN THE K-AREA, VISUALLY INPSECT THE WED K-AREA FOR CRACKS WITHIN 3 INCHES OF THE WELD.			

INSPECTION OF WELDING PER AISC 341

AS A MINIMUM WELDING INSPECTION TASKS SHALL BE IN ACCORDANCE WITH TABLES J6-1, J6-2 AND J6-3. INSPECTION TASKS ARE AS FOLLOWS:

OBSERVE (O) - THE INSPECTOR SHALL OBSERVE THESE FUNCTIONS ON A RANDOM, DAILY BASIS. OPERATIONS NEED NOT BE DELAYED PENDING OBSERVATIONS.

PERFORM (P) - THESE INSPECTIONS SHALL BE PERFORMED PRIOR TO THE FINAL ACCEPTANCE OF THE ITEM.

DOCUMENT (D) - THE INSPECTOR SHALL PREPARE REPORTS INDICATING THAT THE WORK HAS BEEN PERFORMED IN ACCORDANCE WITH THE CONTRACT DOCUMENTS. THE REPORT NEED NOT PROVIDE DETAILED MEASUREMENT FOR JOINT FIT-UP, WPS SETTINGS, COMPLETED WELDS, OR INDIVIDUAL ITEMS LISTED IN THE TABLES. FOR SHOP FABRICATION, THE REPORT SHALL INDICATE THE PIECE MARK OF THE PIECE INSPECTED. FOR FIELD WORK, THE REPORT SHALL INDICATE THE REFERENCE GRID LINES AND FLOOR OR ELEVATION INSPECTED. WORK NOT IN COMPLIANCE WITH THE CONTRACT DOCUMENTS AND WHETHER THE NON-COMPLIANCE HAS BEEN SATISFACTORILY REPAIRED SHALL BE NOTED IN THE INSPECTION REPORT.

VISUAL INSPECTION TASKS PRIOR TO WELDING (AISC 341 TABLE J6-1)

VISUAL INSPECTION TASK PRIOR TO WELDING	QUALITY CONTROL		QUALITY ASSURANCE	
	TASK	DOC.	TASK	DOC.
MATERIAL IDENTIFICATION (TYPE/GRADE)	O	-	O	-
WELDER IDENTIFICATION SYSTEM	O	-	O	-
FIT-UP GROOVE WELDS (INCLUDING JOINT GEOMETRY) -JOINT PREPARATION -DIMENSIONS (ALIGNMENT, ROOT OPENING, ROOT FACE, BEVEL) -CLEANLINESS (CONDITION OF SURFACES) -TACKING (QUALITY AND LOCATION) -BACKING TYPE AND FIT (IF APPLICABLE)	P/O**	-	O	-
CONFIGURATION AND FINISH OF ACCESS HOLES	O	-	O	-
FIT-UP OF FILLET WELDS -DIMENSIONS (ALIGNMENT, GAPS AT ROOT) -CLEANLINESS (CONDITION OF SURFACES) -TACKING (QUALITY AND LOCATION)	P/O**	-	O	-
**FOLLOWING PERFORMANCE OF THIS INSPECTION TASK FOR TEN WELDS TO BE MADE BY A GIVEN WELDER, WITH THE WELDER DEMONSTRATING UNDERSTANDING OF REQUIREMENTS AND POSSESSION OF SKILLS AND TOOLS TO VERIFY THESE ITEMS, THE "PERFORM" DESIGNATION OF THIS TASK SHALL BE REDUCED TO "OBSERVE", AND THE WELDER SHALL PERFORM THIS TASK. SHOULD THE INSPECTOR DETERMINE THAT THE WELDER HAS DISCONTINUED PERFORMANCE OF THIS TASK, THE TASK SHALL BE RETURNED TO "PERFORM" UNTIL SUCH TIME AS THE INSPECTOR HAS RE-ESTABLISHED ADEQUATELY ASSURANCE THAT THE WELDER WILL PERFORM THE INSPECTION TASKS LISTED.				

VISUAL INSPECTION TASKS DURING WELDING (AISC 341 TABLE J6-2)

VISUAL INSPECTION TASK DURING WELDING	QUALITY CONTROL		QUALITY ASSURANCE	
	TASK	DOC.	TASK	DOC.
WPS FOLLOWED: -SETTINGS ON WELDING EQUIP. -TRAVEL SPEED -SELECTED WELDING MATERIALS -SHIELDED GAS TYPE/FLOW RATE -PREHEAT APPLIED -INTERPASS TEMPERATURE (MIN/MAX) -PROPER POSITION (F, V, H, OH) -INTERMIX OF FILLER METALS AVOIDED UNLESS APPROVED	O	-	O	-
USE OF QUALIFIED WELDERS	O	-	O	-
CONTROL AND HANDLING OF WELDING CONSUMABLES -PACKAGING -EXPOSURE CONTROL	O	-	O	-
ENVIRONMENTAL CONDITIONS -WIND SPEED WITHIN LIMITS -PRECIPITATION AND TEMP	O	-	O	-
WELDING TECHNIQUES -INTERPASS AND FINAL CLEANING -EACH PASS WITHIN PROFILE LIMITATIONS -EACH PASS MEETS QUALITY REQUIREMENTS	O	-	O	-
NO WELDING OVER CRACKED TACK WELDS	O	-	O	-

VISUAL INSPECTION TASKS AFTER WELDING (AISC 341 TABLE J6-3)

VISUAL INSPECTION TASKS AFTER WELDING	QUALITY CONTROL		QUALITY ASSURANCE	
	TASK	DOC.	TASK	DOC.
WELDS CLEANED	O	-	O	-
SIZE, LENGTH AND LOCATION OF WELDS	P	-	P	-
WELDS MEET VISUAL ACCEPTANCE CRITERIA -CRACK PROHIBITION -WELD/BASE METAL FUSION -CRATER CROSS SECTION -WELD PROFILES -WELD SIZE -UNDERCUT -POROSITY	P	D	P	D
PLACEMENT OF REINFORCING OR CONTOURING FILLET WELDS (IF REQUIRED)	P	D	P	D
BACKING REMOVED, WELD TABS REMOVED AND FINISHED, AND FILLET WELDS ADDED (IF REQUIRED)	P	D	P	D
REPAIR ACTIVITIES	P	-	P	D

INSPECTION OF HIGH STRENGTH BOLTS PER AISC 360

AS A MINIMUM BOLTING INSPECTION TASKS SHALL BE IN ACCORDANCE WITH TABLES N5.6-1, N5.6-2 AND N5.6-3. INSPECTION TASKS ARE AS FOLLOWS:

O- OBSERVE THESE ITEMS ON A RANDOM BASIS. OPERATIONS NEED NOT BE DELAYED PENDING THESE INSPECTIONS.

P- PERFORM THESE TASKS FOR EACH BOLTED CONNECTION.

INSPECTION TASKS PRIOR TO BOLTING (AISC 360 TABLE N5.6-1)

INSPECTING TASKS PRIOR TO BOLTING	INSPECTION	
	QUALITY CONTROL	QUALITY ASSURANCE
MANUFACTURER'S CERTIFICATIONS AVAILABLE FOR FASTENER MATERIALS	O	P
FASTENERS MARKED IN ACCORDANCE WITH ASTM REQUIREMENTS	O	O
PROPER FASTENERS SELECTED FOR THE JOINT DETAIL (GRADE, TYPE, BOLT LENGTH IF THREADS ARE TO BE EXCLUDED FROM SHEAR PLANE)	O	O
PROPER BOLTING PROCEDURE SELECTED FOR JOINT DETAIL	O	O
CONNECTED ELEMENTS, INCLUDING THE APPROPRIATE FAYING SURFACE CONDITION AND HOLE PREPARATION, IF SPECIFIED, MEET APPLICABLE REQUIREMENTS	O	O
PRE-INSTALLATION VERIFICATION TESTING BY INSTALLATION PERSONNEL OBSERVED AND DOCUMENTED FOR FASTENER ASSEMBLIES AND METHODS USED	P	O
PROPER STORAGE PROVIDED FOR BOLTS, NUTS, WASHERS AND OTHER FASTENER COMPONENTS	O	O

INSPECTION TASKS DURING BOLTING (AISC 360 TABLE N5.6-2)

INSPECTION TASKS DURING BOLTING	INSPECTION	
	QUALITY CONTROL	QUALITY ASSURANCE
FASTENER ASSEMBLIES, OF SUITABLE CONDITION, PLACED IN ALL HOLES AND WASHERS (IF REQUIRED) ARE POSITIONED AS REQUIRED	O	O
JOINT BROUGHT TO THE SNUG-TIGHT CONDITION PRIOR TO THE PRETENSIONING OPERATION	O	O
FASTENER COMPONENT NOT TURNED BY THE WRENCH PREVENTED FROM ROTATING	O	O
FASTENERS ARE PRETENSIONED IN ACCORDANCE WITH THE RCSC SPECIFICATION, PROGRESSING SYSTEMATICALLY FROM THE MOST RIGID POINT TOWARD THE FREE EDGES	O	O

INSPECTION TASKS AFTER BOLTING (AISC 360 TABLE N5.6-3)

VERIFICATION AND INSPECTION	INSPECTION	
	QUALITY CONTROL	QUALITY ASSURANCE
DOCUMENT ACCEPTANCE OR REJECTION OF BOLTED CONNECTIONS	P	P

INSPECTION OF HIGH STRENGTH BOLTS AISC 341

AS A MINIMUM BOLTING INSPECTION TASKS SHALL BE IN ACCORDANCE WITH TABLES J7-1, J7-2 AND J7-3. INSPECTION TASKS ARE AS FOLLOWS:

OBSERVE (O) - THE INSPECTOR SHALL OBSERVE THESE FUNCTIONS ON A RANDOM, DAILY BASIS. OPERATIONS NEED NOT BE DELAYED PENDING OBSERVATIONS.

PERFORM (P) - THESE INSPECTIONS SHALL BE PERFORMED PRIOR TO THE FINAL ACCEPTANCE OF THE ITEM.

DOCUMENT (D) - THE INSPECTOR SHALL PREPARE REPORTS INDICATING THAT THE WORK HAS BEEN PERFORMED IN ACCORDANCE WITH THE CONTRACT DOCUMENTS.

INSPECTION TASKS PRIOR TO BOLTING (AISC 341 TABLE J7-1)

INSPECTION TASKS PRIOR TO BOLTING	QUALITY CONTROL		QUALITY ASSURANCE	
	TASK	DOC.	TASK	DOC.
PROPER FASTENERS SELECTED FOR THE JOINT DETAIL	O	-	O	-
PROPER BOLTING PROCEDURE SELECTED FOR JOINT DETAIL	O	-	O	-
CONNECTED ELEMENTS, INCLUDING THE APPROPRIATE FAYING SURFACE CONDITION AND HOLE PREPARATION, IF SPECIFIED, MEET APPLICABLE REQUIREMENTS	O	-	O	-
PRE-INSTALLATION VERIFICATION TESTING BY INSTALLATION PERSONNEL OBSERVED AND DOCUMENTED FOR FASTENER ASSEMBLIES AND METHODS USED	P	D	O	D
PROPER STORAGE PROVIDED FOR BOLTS, NUTS, WASHERS AND OTHER FASTENER COMPONENTS	O	-	O	-

INSPECTION TASKS DURING BOLTING (AISC 341 TABLE J7-2)

INSPECTION TASKS DURING BOLTING	QUALITY CONTROL		QUALITY ASSURANCE	
	TASK	DOC.	TASK	DOC.
FASTENER ASSEMBLIES, OF SUITABLE CONDITION, PLACED IN ALL HOLES AND WASHERS (IF REQUIRED) ARE POSITIONED AS REQUIRED	O	-	O	-
JOINT BROUGHT TO THE SNUG-TIGHT CONDITION PRIOR TO THE PRETENSIONING OPERATION	O	-	O	-
FASTENER COMPONENT NOT TURNED BY THE WRENCH PREVENTED FROM ROTATING	O	-	O	-
BOLTS ARE PRETENSIONED PROGRESSING SYSTEMATICALLY FROM THE MOST RIGID POINT TOWARD THE FREE EDGES.	O	-	O	-

INSPECTION TASKS AFTER BOLTING (AISC 341 TABLE J7-3)

INSPECTION TASKS AFTER BOLTING	QUALITY CONTROL		QUALITY ASSURANCE	
	TASK	DOC.	TASK	DOC.
DOCUMENT ACCEPTED OR REJECTED CONNECTIONS	P	D	P	D

OTHER STRUCTURAL STEEL INSPECTION TASKS (AISC 360)

ADDITIONAL INSPECTION REQUIREMENTS OF THE QUALITY ASSURANCE PROCEDURES ARE AS FOLLOWS:

A) INSPECTION SHALL BE PERFORMED DURING THE PLACEMENT OF THE ANCHOR RODS AND OTHER EMBEDMENTS SUPPORTING STRUCTURAL STEEL FOR COMPLIANCE WITH THE CONSTRUCTION DOCUMENTS. AS A MINIMUM, THE DIAMETER, GRADE, TYPE AND LENGTH OF THE ANCHOR ROD OR EMBEDDED ITEM, AND THE EXTENT OF THE EMBEDMENT INTO THE CONCRETE, SHALL BE VERIFIED PRIOR TO THE PLACEMENT OF CONCRETE.

B) INSPECT THE FABRICATED STEEL OR ERECTED STEEL FRAME, AS APPROPRIATE, TO VERIFY COMPLIANCE WITH THE DETAILS SHOWN ON THE CONSTRUCTION DOCUMENTS, SUCH AS BRACES, STIFFENERS, MEMBER LOCATIONS AND PROPER APPLICATION OF JOINT DETAILS AT EACH CONNECTION.

C) MATERIAL VERIFICATION OF STRUCTURAL STEEL:

I) IDENTIFICATION MARKINGS TO CONFORM TO ASTM STANDARDS SPECIFIED IN THE APPROVED CONSTRUCTION DOCUMENTS.

II) MANUFACTURERS' VERTIFIED MILL TEST REPORTS.

D) INSPECTION OF STEEL FRAME JOINT DETAILS FOR COMPLIANCE WITH APPROVED CONSTRUCTION DOCUMENTS:

I) DETAILS SUCH AS BRACING AND STIFFENING.

II) MEMBERS LOCATIONS

III) APPLICATION OF JOINT DETAILS AT EACH CONNECTION.

OTHER INSPECTION TASKS (AISC 341 TABLE J8-1)

OTHER INSPECTION TASKS	QUALITY CONTROL		QUALITY ASSURANCE	
	TASK	DOC.	TASK	DOC.
RBS REQUIREMENTS, IF APPLICABLE -CONTOUR AND FINISH -DIMENSIONAL TOLERANCES	P	D	P	D
PROTECTED ZONE - NO HOLES AND UNAPPROVED ATTACHMENTS MADE BY FABRICATOR OR ERECTOR, AS APPLICABLE.	P	D	P	D

C:\pwworkdir\d0513056\06096005-003.dwg MS 7/27/2026 11:22 AM RDHOKARE 24.2s (LMS Tech)

NO.	DATE	BY	REVISION

NOTICE

0 ½ 1

IF THIS BAR DOES NOT MEASURE 1" THEN DRAWING IS NOT TO SCALE

SW DESIGNED
TN DRAWN
MP CHECKED

STRUCTURAL REGISTERED PROFESSIONAL ENGINEER 82642PE DIGITALLY SIGNED OREGON JULY 09, 2026 MATTHEW ERICH PERVINS

EXPIRES: 12/31/2026

BID SET

consor

Stantec

South Fork WATER PURE WATER SINCE 1915

WATER QUALITY SYSTEMS BUILDING

STRUCTURAL

GENERAL NOTES - III

PROJECT NO.: 21-3045 | SCALE: AS SHOWN | DATE: AUGUST 2026

SHEET GS-3

INSPECTION OF CONCRETE CONSTRUCTION

1. SPECIAL INSPECTION FOR CONCRETE CONSTRUCTION SHALL BE IN ACCORDANCE WITH 2022 OSSC SECTION 1705.3 AND THE FOLLOWING TABLE.

VERIFICATION AND INSPECTION	INSPECTION		REFERENCED STANDARD (A)	IBC REFERENCE
	CONTINUOUS	PERIODIC		
INSPECTION OF REINFORCING STEEL, INCLUDING PRESTRESSING STEEL, AND PLACEMENT.	-	X	ACI 318: 3.5, 7.1 - 7.7	1910.4
INSPECTION OF REINFORCING STEEL WELDING IN ACCORDANCE WITH TABLE 1705.2.2 ITEM 2b.	-	-	AWS D1.4 ACI 318: 3.5.2	-
INSPECTION OF ANCHORS CAST IN CONCRETE WHERE ALLOWABLE LOADS HAVE BEEN INCREASED OR WHERE STRENGTH DESIGN IS USED.	-	X	ACI 318 - 8.1.3, 21.2.8	1908.5, 1909.1
INSPECTION OF ANCHORS POST-INSTALLED IN HARDENED CONCRETE MEMBERS (B).	-	X	ACI 318- 3.8.6, 8.1.3, 21.2.8	1909.1
VERIFYING USE OF REQUIRED DESIGN MIX.	-	X	ACI 318: CH. 4, 5.2 - 5.4	1904.2, 1910.2, 1910.3
AT THE TIME FRESH CONCRETE IS SAMPLED TO FABRICATE SPECIMENS FOR STRENGTH TESTS, PERFORM SLUMP AND AIR CONTENT TESTS, AND DETERMINE THE TEMPERATURE OF THE CONCRETE.	X	-	ASTM C 172 ASTM C 31 ACI 318: 5.6, 5.8	1910.10
INSPECTION OF CONCRETE AND SHOTCRETE PLACEMENT FOR PROPER APPLICATION TECHNIQUES.	X	-	ACI 318: 5.9, 5.10	1910.6, 1910.7, 1910.8
INSPECTION FOR MAINTENANCE OF SPECIFIED CURING TEMPERATURE AND TECHNIQUES.	-	X	ACI 318: 5.11 - 5.13	1910.9
ERECTION OF PRECAST CONCRETE MEMBERS	-	X	ACI 318: CH. 16	-
INSPECTION OF PRESTRESSED CONCRETE:				
A. APPLICATION OF PRESTRESSING FORCES.	X		ACI 318: 18.20	-
B. GROUTING OF BONDED PRESTRESSING TENDONS IN THE SEISMIC FORECE-RESISTING SYSTEM.	X	-	ACI 318: 18.18.4	
VERIFICATION OF IN-SITU CONCRETE STRENGTH PRIOR TO REMOVAL OF SHORES AND FORMS FROM BEAMS AND STRUCTURAL SLABS.	-	X	ACI 318: 6.2	-
INSPECT FORMWORK FOR SHAPE, LOCATION AND DIMENSIONS OF THE CONCRETE MEMBER BEING FORMED.	-	X	ACI 318: 6.1.1	-

(A) WHERE APPLICABLE, SEE ALSO IBC SECTION 1705.11, SPECIAL INSPECTIONS FOR SEISMIC RESISTANCE.

(B) SPECIFIC REQUIREMENTS FOR SPECIAL INSPECTION SHALL BE INCLUDED IN THE RESEARCH REPORT FOR THE ANCHOR ISSUED BY AN APPROVED SOURCE IN ACCORDANCE WITH ACI 355.2 OR OTHER QUALIFICATION PROCEDURES. WHERE SPECIFIC REQUIREMENTS ARE NOT PROVIDED, SPECIAL INSPECTION REQUIREMENTS SHALL BE SPECIFIED BY THE REGISTERED DESIGN PROFESSIONAL AND SHALL BE APPROVED BY THE BUILDING OFFICIAL PRIOR TO COMMENCEMENT OF THE WORK.

INSPECTION OF SOILS

1. SPECIAL INSPECTION FOR SOIL SHALL BE IN ACCORDANCE WITH IBC SECTION 1705.6 AND THE FOLLOWING TABLE.

VERIFICATION AND INSPECTION	INSPECTION	
	CONTINUOUS	PERIODIC
VERIFY MATERIALS BELOW FOOTINGS AND SHALLOW FOUNDATIONS ARE ADEQUATE TO ACHIEVE THE DESIGN BEARING CAPACITY.	-	X
VERIFY EXCAVATIONS ARE EXTENDED TO PROPER DEPTH AND HAVE REACHED PROPER MATERIAL.	-	X
PERFORM CLASSIFICATION AND TESTING OF CONTROLLED FILL MATERIALS.	-	X
VERIFY USE OF PROPER MATERIALS, DENSITIES AND LIFT THICKNESSES DURING PLACEMENT AND COMPACTION OF CONTROLLED FILL.	X	-
PRIOR TO PLACEMENT OF CONTROLLED FILL, OBSERVE SUBGRADE AND VERIFY THAT SITE HAS BEEN PREPARED PROPERLY.	-	X

INSPECTION OF MASONRY CONSTRUCTION

SPECIAL INSPECTION FOR MASONRY CONSTRUCTION WILL BE PERFORMED AND VERIFIED IN ACCORDANCE WITH TMS 402 AND TMS 602 (LEVEL 2) QUALITY ASSURANCE PROGRAM REQUIREMENTS AND THE FOLLOWING TABLE.

INSPECTION TASK	FREQUENCY (A)		REFERENCE FOR CRITERIA	
	CONTINUOUS	PERIODIC	TMS 402	TMS 602
PRIOR TO CONSTRUCTION:				
VERIFY COMPLIANCE WITH THE APPROVED SUBMITTALS	REQUIRED			ART. 1.5
VERIFY f'm AND f'_{AAC}, EXCEPT WHERE SPECIFICALLY EXEMPTED BY THE CODE	REQUIRED			ART. 1.4 B
AS MASONRY CONSTRUCTION BEGINS, VERIFY THAT THE FOLLOWING ARE IN COMPLIANCE:				
PROPORTIONS OF SITE-PREPARED MORTAR	-	X		ART. 2.1, 2.6 A, 2.6 C
GRADE, TYPE AND SIZE OF REINFORCEMENT, CONNECTORS, AND ANCHOR BOLTS	-	X	Sect 6.1	ART. 3.4, 3.6 A
PROPERTIES OF THIN-BED MORTAR FOR AAC MASONRY	X	-		ART. 2.1C
PRIOR TO GROUTING THE FOLLOWING SHALL BE VERIFIED TO ENSURE COMPLIANCE:				
GROUT SPACE	-	X		ART. 3.2 D, 3.2 F
PLACEMENT OF REINFORCEMENT, CONNECTIONS, AND ANCHORAGES	-	X	Sect 6.1, 6.3.1, 6.3.6, 6.3.7	ART. 3.2 E, 3.4
PROPORTIONS OF SITE-PREPARED GROUT	-	X		ART. 2.6 B
CONSTRUCTION OF MORTAR JOINTS	-	X		ART. 3.3 B
VERIFY DURING CONSTRUCTION:				
VERIFY f'_m AND f'_{AAC} FOR EVERY 5000 SQ FT (465 SQ M)	REQUIRED			ART. 1.4 B
VERIFY PROPORTIONS OF MATERIALS AS DELIVERED TO THE PROJECT SITE FOR PREMIXED OR PREBLENDED MORTAR, PRESTRESSING GROUT, AND GROUT OTHER THAN SELF-CONSOLIDATING GROUT	REQUIRED			ART. 1.4 B
MATERIALS AND PROCEDURES WITH THE APPROVED SUBMITTALS	-	X		ART. 1.5
PLACEMENT OF MASONRY UNITS AND MORTAR JOINT CONSTRUCTION	-	X		ART. 3.3 B
SIZE AND LOCATION OF STRUCTURAL ELEMENTS	-	X		ART. 3.3 F
TYPE, SIZE AND LOCATION OF ANCHORS, INCLUDING OTHER DETAILS OF ANCHORAGE OF MASONRY TO STRUCTURAL MEMBERS, FRAMES OR OTHER CONSTRUCTION	-	X	Sect 1.2.1(e), 6.2.1, 6.3.1	
WELDING OF REINFORCEMENT	X	-	Sect 6.1.6.1.2	
PREPARATION, CONSTRUCTION, AND PROTECTION OF MASONRY DURING COLD WEATHER (TEMP BELOW 40° F) OR HOT WEATHER (TEMP ABOVE 90 ° F)	-	X		ART. 1.8C, 1.8D
PLACEMENT OF AAC MASONRY UNITS AND CONSTRUCTION OF THIN-BED MORTAR JOINTS	X	-		ART. 3.3 B.9, 3.3 F.1.b
OBSERVE PREPARATION OF GROUT SPECIMENS, MORTAR SPECIMENS, AND/OR PRISMS	-	X		ART. 1.4 B.2.a.3, 1.4 B.2.b.3, 1.4 B.2.c.3, 1.4 B.3, 1.4 B.4

(A) FREQUENCY REFERS TO THE FREQUENCY OF INSPECTION, WHICH MAY BE CONTINUOUS DURING THE TASK LISTED OR PERIODICALLY DURING THE LISTED TASK, AS DEFINED IN THE TABLE.

(B) FOR PRESTRESSED MASONRY CONSTRUCTION, COMPLY WITH TMS 602 SPECIAL INSPECTION REQUIREMENTS.

C:\pwworkdir\d0513056\06096005-004.dwg MS 7/27/2026 11:24 AM RDHOKARE 24.2s (LMS Tech)

NO.	DATE	BY	REVISION

NOTICE
0 ½ 1
IF THIS BAR DOES NOT MEASURE 1" THEN DRAWING IS NOT TO SCALE

SW DESIGNED
TN DRAWN
MP CHECKED

STRUCTURAL REGISTERED PROFESSIONAL ENGINEER 82642PE DIGITALLY SIGNED OREGON JULY 09, 2026 MATTHEW ERICH PERNAS
EXPIRES: 12/31/2026

BID SET

consor
Stantec

South Fork WATER PURE WATER SINCE 1915
WATER QUALITY SYSTEMS BUILDING

STRUCTURAL
GENERAL NOTES - IV

PROJECT NO.: 21-3045 | SCALE: AS SHOWN | DATE: AUGUST 2026

SHEET
GS-4

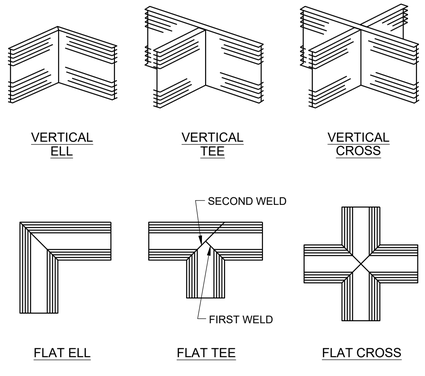

S-108 PREFABRICATED WATERSTOP JOINTS
REV 010119

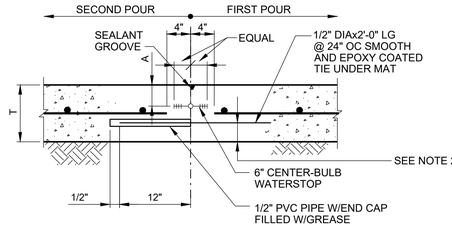

SINGLE MAT REINF - SLEEVE - TYPE JOINT
(TYP CONSTRUCTION JOINT UNLESS OTHERWISE NOTED)

S-110 WITH WATERSTOP AND SEALANT GROOVE
REV 010119

S-111 NO WATERSTOP OR SEALANT GROOVE
REV 010119

T	A
6"	2"
7"	2 1/2"
8"	2 1/2"

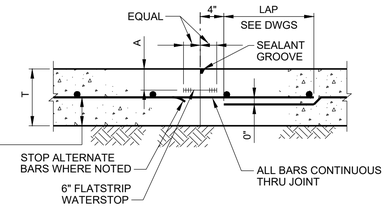

SINGLE MAT REINF - CONTINUOUS THRU JOINT
(ONLY WHEN SPECIFIED ON DRAWINGS)

S-112 WITH WATERSTOP AND SEALANT GROOVE
REV 010119

S-113 NO WATERSTOP OR SEALANT GROOVE
REV 010119

NOTES:

1. WATERSTOPS AND SEALANT GROOVES TO BE PROVIDED IN ALL WATER RETAINING SLABS, SEE DRAWINGS, FOR OTHER LOCATIONS WHERE THEY MAY BE REQUIRED.
2. DIMENSIONS INDICATED ON DETAIL CONTROL MINIMUM COVER. FOR THIN SLABS, THE BOTTOM COVER MAY BE LESS THAN 3".
3. STAGGER SPLICES UNLESS NOTED OTHERWISE.

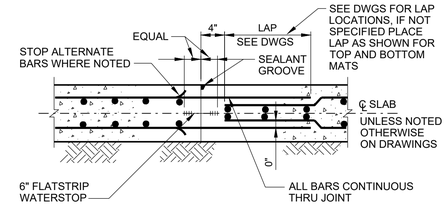

DOUBLE MAT REINF

S-114 WITH WATERSTOP AND SEALANT GROOVE
REV 010119

S-115 NO WATERSTOP OR SEALANT GROOVE
REV 010119

SLAB-ON-GRADE CONSTRUCTION JOINTS

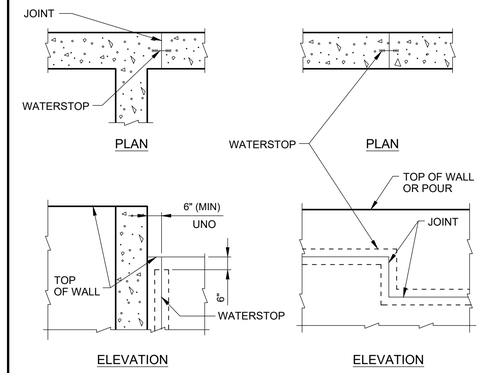

S-120 WATERSTOP DETAILS FOR WALL JOINTS
REV 010119

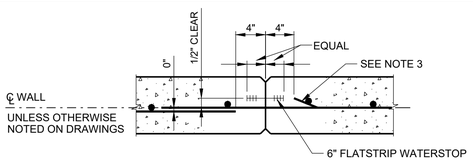

SINGLE CURTAIN REINF

S-121 WITH WATERSTOP
REV 010119

S-122 NO WATERSTOP
REV 010119

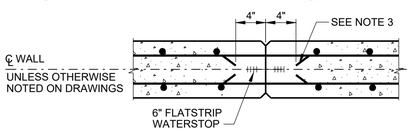

DOUBLE CURTAIN REINF

S-123 WITH WATERSTOP
REV 010119

S-124 NO WATERSTOP
REV 010119

NOTES:

1. WHERE WATERSTOP IS REQUIRED IN SINGLE CURTAIN WALL REINFORCEMENT, PLACE WATERSTOP ON WATER SIDE OF WALL.
2. UNLESS OTHERWISE NOTED 3/4" CHAMFERS SHALL BE OMITTED IN SURFACES TO RECEIVE ARCHITECTURAL TREATMENT.
3. UNLESS SPECIFICALLY NOTED OTHERWISE #5 AND LARGER BARS SHALL BE CONTINUOUS THRU JOINT. #4 AND SMALLER BARS SHALL STOP ALTERNATE BARS AT JOINT.
4. STAGGER SPLICES UNLESS NOTED OTHERWISE.

VERTICAL WALL CONSTRUCTION JOINT

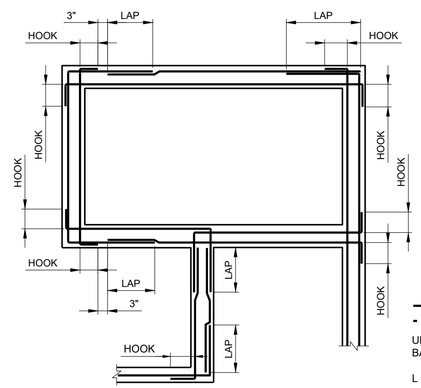

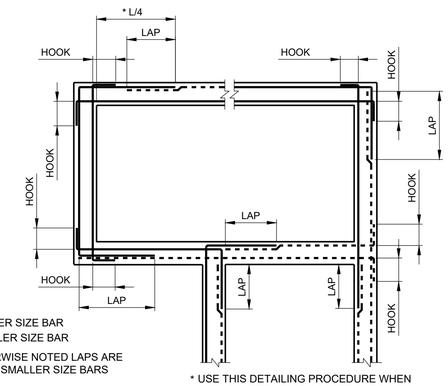

LARGER SIZE BAR
SMALLER SIZE BAR

UNLESS OTHERWISE NOTED LAPS ARE BASED ON THE SMALLER SIZE BARS

L = CLEAR SPAN

* USE THIS DETAILING PROCEDURE WHEN LARGER OR CLOSER SPACED BARS ARE CALLED OUT FOR CORNERS

S-141 HORIZONTAL REINFORCEMENT AT WALL INTERSECTIONS
REV 010119

NO.	DATE	BY	REVISION

NOTICE
0 ½ 1
IF THIS BAR DOES NOT MEASURE 1" THEN DRAWING IS NOT TO SCALE

SW DESIGNED
TN DRAWN
MP CHECKED

STRUCTURAL REGISTERED PROFESSIONAL ENGINEER 82642PE DIGITALLY SIGNED OREGON JUL 08, 2024 MATTHEW ERICH PERKINS
EXPIRES: 12/31/2026

BID SET

consor
Stantec

South Fork WATER PURE WATER SINCE 1915
WATER QUALITY SYSTEMS BUILDING

STRUCTURAL
STANDARD DETAILS - I

PROJECT NO.: 21-3045 | SCALE: AS SHOWN | DATE: AUGUST 2026

SHEET GS-5

C:\pwworkdir\d0513056\0609600S-005.dwg MS 7/27/2026 11:29 AM RDHOKARE 24.2s (LMS Tech)

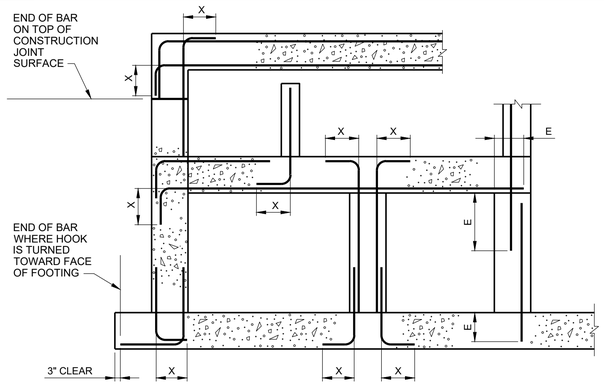

SECTION

LENGTH (*)			
BAR SIZE	HOOK X	LAP	EMBEDMENT E
#3	6"	16" (21")	12" (16")
#4	8"	16" (21")	12" (16")
#5	10"	20" (26")	15" (20")
#6	12"	28" (37")	22" (28")
#7	14"	48" (62")	37" (48")
#8	16"	62" (81")	48" (62")
#9	19"	79" (102")	61" (79")
#10	22"	100" (130")	77" (100")
#11	24"	123" (160")	95" (123")

* USE LENGTH IN PARENTHESIS FOR WALL HORIZONTAL REBARS AND SLAB BARS WITH 12" OR MORE OF FRESH CONCRETE UNDERNEATH

NOTES:

1. USE LAP LENGTHS AS DETERMINED FROM THESE TABLES UNLESS SHOWN OTHERWISE.
2. THE TABLES SHOWN ARE FOR f'c=4000psi, fy=60,000psi, 1.5" MIN CONCRETE COVER AND 3" MIN BAR SPACING.
3. MULTIPLY THE LAP AND E SHOWN IN THESE TABLES BY 1.5 FOR EPOXY COATED REINFORCING.
4. WHEN BARS OF DIFFERENT SIZES ARE LAP SPLICED, LAP LENGTH SHALL BE THE LARGER OF: EMBEDMENT LENGTH OF LARGER BAR OR LAP LENGTH OF SMALLER BAR
5. USE REINFORCING BAR COUPLERS FOR SPLICES OF #11 AND LARGER BARS UNLESS DRAWINGS INDICATE LAP SPLICES SHOWN IN TABLE ARE ACCEPTABLE.
6. ALL DOWEL BARS SHALL EXTEND AN EMBEDMENT LENGTH E INTO ANOTHER MEMBER OR ACROSS A CONSTRUCTION JOINT UNLESS SHOWN TO SPLICE WITH OTHER BARS OR TO EXTEND TO THE FAR FACE OF THE MEMBER AND END WITH A STANDARD HOOK.

S-143 STANDARD 90° BAR HOOKS, EMBEDMENT LENGTHS AND LAP LENGTHS

REV 010119

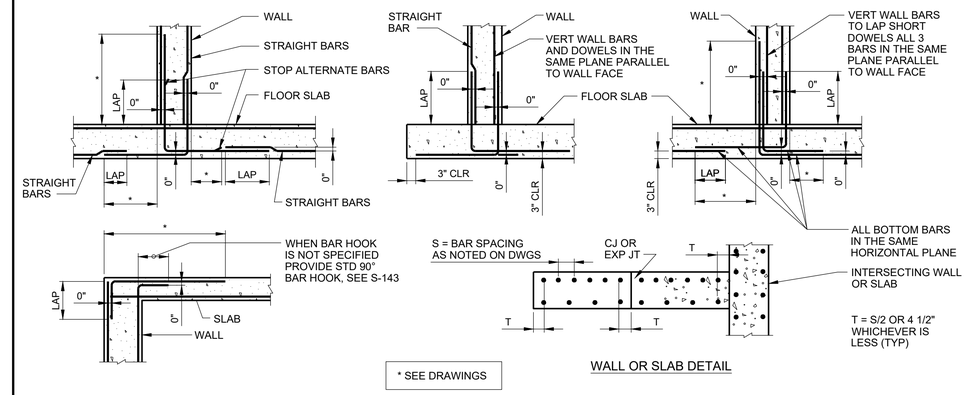

S-149 STANDARD FOR REINFORCING BAR DETAILING

REV 010119

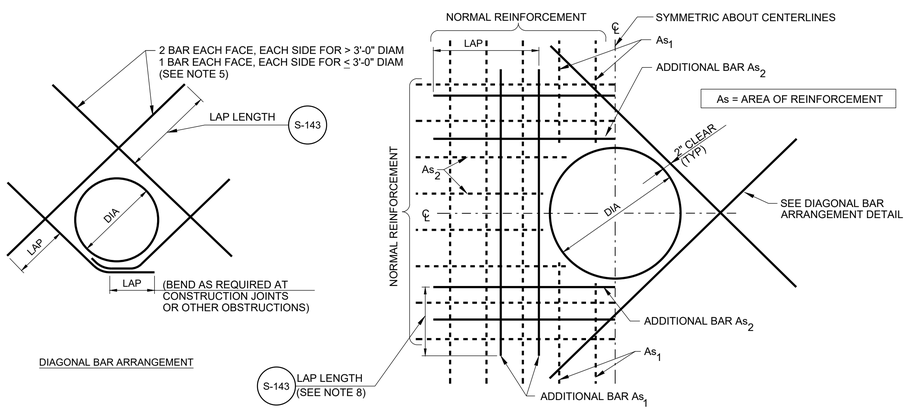

NOTES:

1. THIS DETAIL TO BE USED AT ALL CIRCULAR OPENINGS EXCEPT WHEN OTHER DETAILING IS INDICATED ON THE DRAWINGS.
2. CUT NORMAL REINFORCEMENT 2" CLEAR OF OPENING.
3. CUT NORMAL REINFORCEMENT AT OPENINGS:
   A. AS_1 AND AS_2= 1/2 AREA OF TOTAL CUT BARS TO BE ADDED ON EACH SIDE OF OPENING.
4. DIAGONAL AND ADDITIONAL BARS AS_1 AND AS_2 TO BE PLACED.
   A. AT CENTERLINE OF WALLS OR SLABS WHERE ONE LAYER OF REINFORCEMENT IS PROVIDED.
   B. AT EACH FACE OF WALLS OR SLABS WHERE TWO LAYERS OF REINFORCEMENT ARE PROVIDED.
5. UNLESS OTHERWISE NOTED, SIZE OF DIAGONAL BARS SHALL BE THE SIZE OF THE LARGEST NORMAL REINFORCING BAR CUT.
6. INCREASE SIZE OF ADDITIONAL BARS AS NEEDED TO FIT WITHIN A DISTANCE OF 2X WALL/ SLAB THICKNESS FROM OPENING, PROVIDE 2" MIN CLEAR BETWEEN BARS.
7. WHERE A SLAB OR INTERSECTING WALL CONNECTS WITHIN ONE WALL THICKNESS OF THE OPENING, ADDITIONAL BARS ON THAT SIDE OF THE OPENING MAY BE OMITTED.
8. WHEN THE LAP LENGTH OF THE ADDITIONAL BARS CANNOT BE ACHIEVED DUE TO AN ADJACENT WALL OR SLAB, ADDITIONAL CORNER BARS OR SLAB DOWELS, REPECTIVELY, MATCHING THE CUT BARS, ARE TO BE INCLUDED IN THE ADJACENT WALL OR SLAB TO LAP WITH THE ADDITIONAL BARS.

S-144 ADDITIONAL REINFORCEMENT AT CIRCULAR OPENINGS

REV 010119

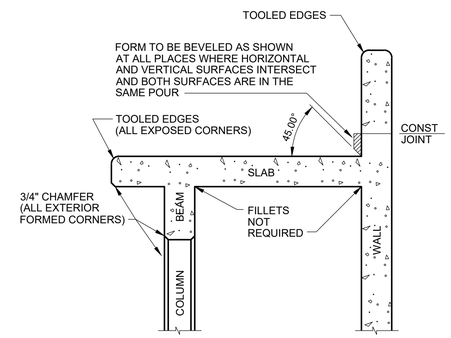

S-152 FORMING DETAILS

REV 010119

NO.	DATE	BY	REVISION

NOTICE
0 ½ 1
IF THIS BAR DOES NOT MEASURE 1" THEN DRAWING IS NOT TO SCALE

SW DESIGNED
TN DRAWN
MP CHECKED

STRUCTURAL REGISTERED PROFESSIONAL ENGINEER 82642PE DIGITALLY SIGNED OREGON JULY 09, 2021 MATTHEW ERICH PERKINS
EXPIRES: 12/31/2026

BID SET

consor
Stantec

South Fork WATER PURE WATER SINCE 1915
WATER QUALITY SYSTEMS BUILDING

STRUCTURAL
STANDARD DETAILS - II

PROJECT NO.: 21-3045 | SCALE: AS SHOWN | DATE: AUGUST 2026

SHEET GS-6

C:\pwworkdir\d0513056\0609600S-006.dwg MS 7/27/2026 11:31 AM RDHOKARE 24.2s (LMS Tech)

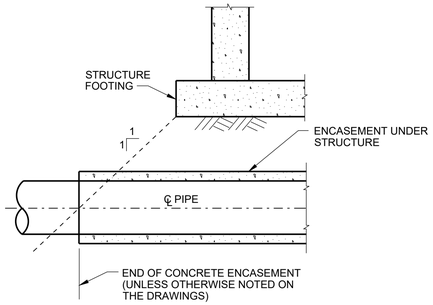

END OF ENCASEMENT BEYOND STRUCTURE

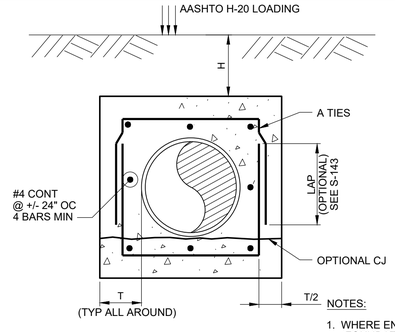

T= 6" OR 8" ENCASEMENT

COVER H	PIPE OUTSIDE DIAMETER									
	≤24"		30"-32"		36"		42"-54"		60"-72"	
	A	T	A	T	A	T	A	T	A	T
2' MIN	#4@12"	6"	#4@12"	6"	#4@9"	6"	#5@12"	8"	#4@9"	12"
3'					#4@12"		#4@9"		#5@12"	8"
4'							#4@12"		#5@10"	
5'							#4@12"		#5@10"	
6'							#4@9"		#5@10"	
7'					#4@12"		#4@9"		#6@12"	
8'			#4@12"		#4@9"		#5@12"		#6@10"	8"
9'			#4@9"	6"	#4@9"	6"	#5@10"		#4@9"	12"
10'		6"	#4@12"	8"	#4@9"	8"	#5@10"	8"	#5@12"	
12'		8"		12"	#4@12"	12"	#4@9"	12"	#5@10"	
14'		12"			#4@12"		#4@9"		#6@12"	
16'					#4@12"		#5@12"		#6@10"	12"
18'			#4@12"		#4@9"	12"	#5@10"	12"	#6@10"	14"
20'	#4@12"	12"	#4@9"	12"	#4@9"	14"	#6@12"	14"	#6@10"	16"

NOTES:

1. WHERE ENCASEMENT PASSES UNDER SPREAD FOOTING OR MAT FOUNDATION, USE H=20' UNO
2. ALL ENCASEMENTS UNDER STRUCTURES SHALL BE SEPARATED FROM THE STRUCTURE FOUNDATIONS BY BACKFILL OR 2 LAYERS OF 40# FELT UNO
3. WHEN ENCASEMENTS TERMINATE @ STRUCTURE, ENCASEMENT REINFORCING SHALL BE DOWELED INTO THE STRUCTURE
4. CONTINUE ENCASEMENT ALONG VERTICAL RUNS OF PIPE,UNO FOR T = 12" TO 16" ENCASEMENTS, PROVIDE 2 MATS OF REINF ON ALL FOUR SIDES OF ENCASEMENT. EXTEND VERT REINF FULL DEPTH INTO HORIZ ENCASEMENT AND TERMINATE BARS WITH STD HOOKS.

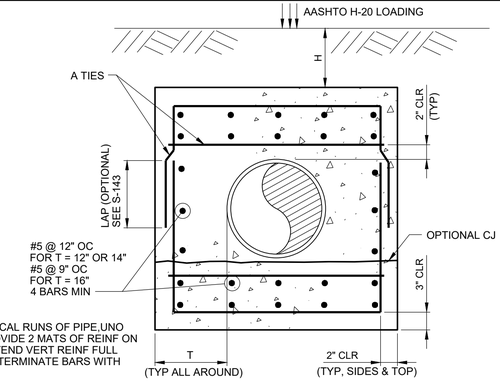

T= 12" - 16" ENCASEMENT

S-171 PIPE ENCASEMENT

REV 010119

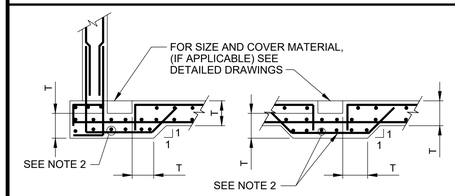

TYPE A

(USE WHERE TYP BOTTOM REINF CAN CONTINUE BELOW SUMP/TRENCH W/ REQUIRED CONC COVER)

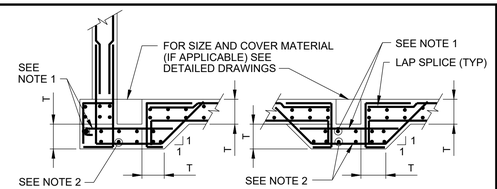

TYPE B

(USE WHERE SUMP/TRENCH IS LESS THAN T AND TYP BOTTOM REINF CANNOT CONTINUE BELOW SUMP/TRENCH W/ REQUIRED CONC COVER)

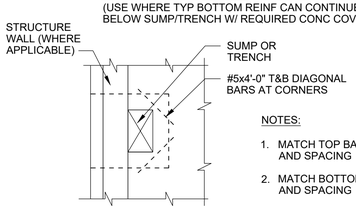

NOTES:

1. MATCH TOP BAR SIZE AND SPACING
2. MATCH BOTTOM BAR SIZE AND SPACING

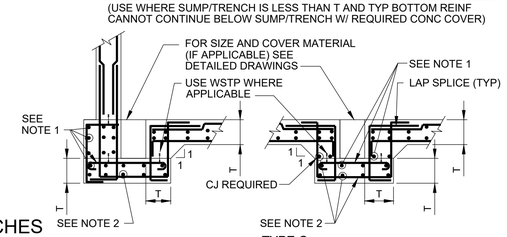

TYPE C

(USE WHERE SUMP/TRENCH DEPTH IS GREATER THAN OR EQUAL TO T)

S-177 REINFORCING AT SUMPS AND TRENCHES

REV 101719

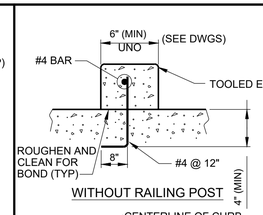

WITHOUT RAILING POST

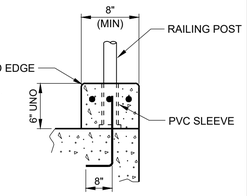

WITH RAILING POST

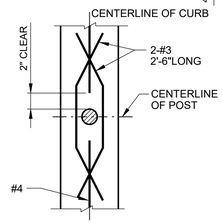

NOTES:

1. CURBS SHALL BE OF EQUAL WIDTH IN THEIR ENTIRE LENGTH.
2. DETAIL ALSO APPLIES TO TOPS OF WALLS REINFORCED WITH ONE CURTAIN OF STEEL.
3. POST INSERTS NOT ALLOWED IN APPLICATIONS SUBJECT TO FREEZING.
4. IN EXISTING SLABS USE #4@12" W/ 4" EMBED, DRILL AND GROUT INTO SLAB.

S-180 CONCRETE CURB

REV 010119

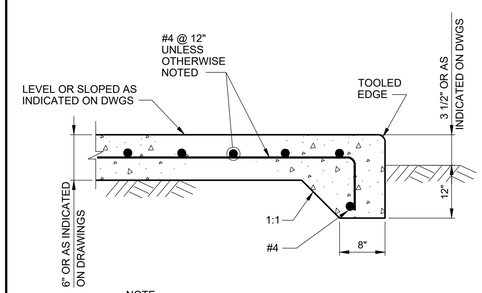

NOTE:

USE 2 MATS OF #5 @ 12" EW EF FOR SLABS 10" AND THICKER

S-190 SLAB-ON-GRADE

REV 010119

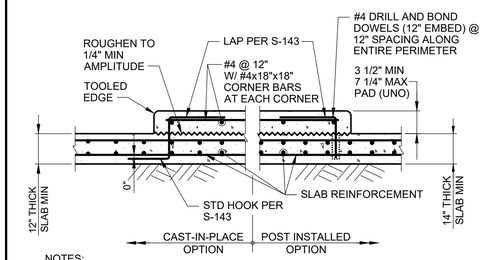

NOTES:

1. WHERE SLAB THICKNESS IS LESS THAN REQUIRED FOR POST-INSTALLED ANCHOR EMBEDMENT, USE CAST-IN-PLACE OPTION.
2. LOCATE AND AVOID ALL REINFORCEMENT PRIOR TO DRILLING INTO CONCRETE.
3. THIS DETAIL APPLIES TO REINFORCEMENT WITH fy = 60KSI AND CONCRETE WITH A COMPRESSIVE STRENGTH f'c = 4000 PSI AT 28 DAYS.
4. THE DETAIL APPLIES WHERE EQUIPMENT PADS OR HOUSEKEEPING PADS ARE CALLED OUT ON THE CONSTRUCTION DOCUMENTS.

S-191 EQUIPMENT PAD

REV 021219

NO.	DATE	BY	REVISION

NOTICE

0 ½ 1

IF THIS BAR DOES NOT MEASURE 1" THEN DRAWING IS NOT TO SCALE

SW DESIGNED

TN DRAWN

MP CHECKED

STRUCTURAL REGISTERED PROFESSIONAL ENGINEER 82642PE DIGITALLY SIGNED OREGON JUL 08, 2024 MATTHEW ERICH PERKINS

EXPIRES: 12/31/2026

BID SET

consor

Stantec

South Fork WATER PURE WATER SINCE 1915

WATER QUALITY SYSTEMS BUILDING

STRUCTURAL

STANDARD DETAILS - III

PROJECT NO.: 21-3045 | SCALE: AS SHOWN | DATE: AUGUST 2026

SHEET GS-7

C:\pwworkdir\d0513056\0609600S-007.dwg MS 7/27/2026 11:34 AM RDHOKARE 24.2s (LMS Tech)

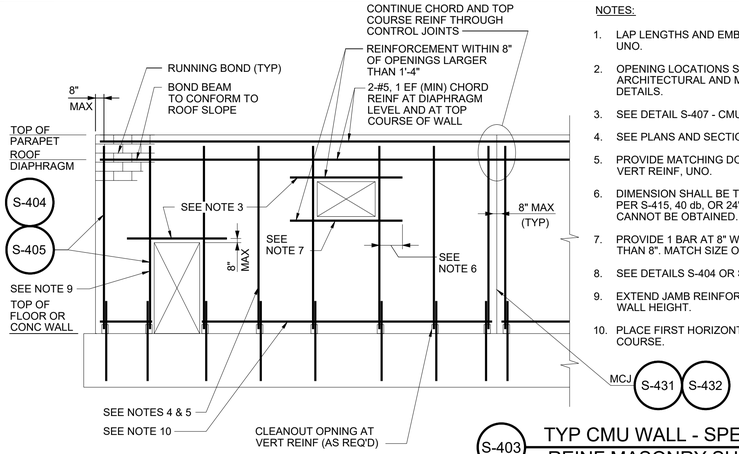

NOTES:

1. LAP LENGTHS AND EMBEDMENTS SHALL COMPLY WITH S-415 UNO.
2. OPENING LOCATIONS SHALL BE COORDINATED WITH ARCHITECTURAL AND MECHANICAL PLANS, ELEVATIONS & DETAILS.
3. SEE DETAIL S-407 - CMU LINTELS FOR REINF OVER OPENINGS.
4. SEE PLANS AND SECTIONS FOR TYPICAL VERT REINF.
5. PROVIDE MATCHING DOWELS INTO FOUNDATION FOR ALL VERT REINF, UNO.
6. DIMENSION SHALL BE THE LARGER OF THE EMBED LENGTH PER S-415, 40 db, OR 24". HOOK BARS WHERE FULL EXTENSION CANNOT BE OBTAINED.
7. PROVIDE 1 BAR AT 8" WALL AND 2 BARS FOR WALLS THICKER THAN 8". MATCH SIZE OF TYPICAL VERTICAL BAR.
8. SEE DETAILS S-404 OR S-405 FOR TYPICAL HORIZONTAL REINF.
9. EXTEND JAMB REINFORCEMENT AT OPENINGS OVER FULL WALL HEIGHT.
10. PLACE FIRST HORIZONTAL REINFORCEMENT IN THE BOTTOM COURSE.

S-403 TYP CMU WALL - SPECIAL REINF MASONRY SHEAR WALL

REV xxxxxx

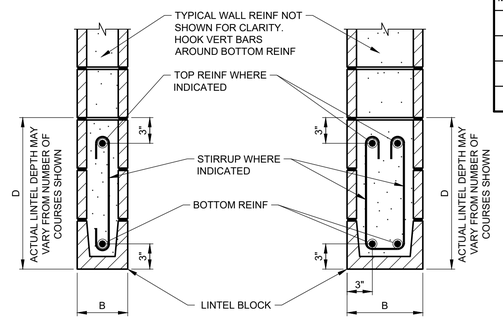

TYPICAL LINTEL DETAILS FOR 8" WALL

TYPICAL LINTEL DETAILS FOR 12" WALL

MARK	SPAN	B	D	BOTTOM REINF	TOP REINF	STIRRUPS	REMARKS
L1	0' TO 4'-0"	8"	8"	1 - #5	-	-	-
		12"	8"	2 - #4	-	-	-
L2	4'-1" TO 8'-0"	8"	16"	1 - #5	1 - #5	#3 @ 8"	-
		12"	16"	2 - #4	2 - #4	#3 @ 8"	-
L3	8'-1" TO 12'-0"	8"	24"	1 - #6	1 - #6	#3 @ 8"	-
		12"	24"	2 - #5	2 - #5	#3 @ 8"	-

MASONRY LINTEL NOTES

1. PROVIDE 8" MIN BEARING AT EACH SIDE OF CLEAR SPAN, UNO.
2. BEARING CELLS SHALL BE FULLY GROUTED FROM FOUNDATION TO LINTEL.
3. ALL REINFORCING SHALL BE CONTINUOUS AND EXTEND A FULL LAP LENGTH PAST THE OPENING. WHERE WALLS STOP SHORT OF THE FULL LAP LENGTH OR AT AN MCJ, THE REINFORCING BARS SHALL BE TERMINATED IN THE LAST CELL WITH A STANDARD HOOK.
4. MCJ LOCATION SHALL BE A MINIMUM OF 1'-4" FROM EACH SIDE OF OPENING.
5. USE MARKS L1, L2 AND L3 FOR INDICATED SPANS, UNO.

S-407 CMU LINTEL REINFORCING

REV 022423

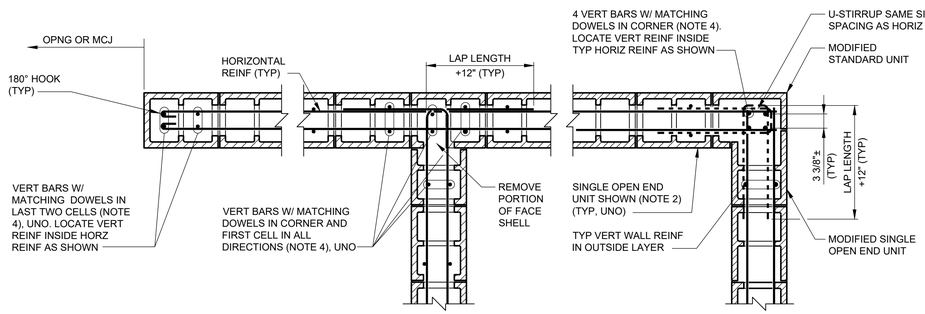

ENDS, MCJ'S, AND OPENINGS

INTERSECTIONS

CORNERS

NOTES:

1. BOND BEAM UNITS SHALL BE USED WHERE HORIZONTAL REINFORCING STEEL IS EMBEDDED, AND ABOVE ALL OPENINGS.
2. SINGLE OPEN END, DOUBLE OPEN END, OR H-BLOCK UNITS MAY BE USED AT LOCATIONS OTHER THAN OPENINGS.
3. HOOK HORIZONTAL BARS AROUND VERTICAL BARS AT WALL ENDS, INTERSECTIONS, AND CORNERS.
4. BAR SIZE TO MATCH WALL VERTICAL REINFORCEMENT SIZE, #5 MIN.
5. PROVIDE MINIMUM 2" MASONRY COVER FOR VERTICAL AND HORIZONTAL REINFORCEMENT.
6. CORNER BLOCKS SHALL BE CONSTRUCTED AS SHOWN, UNLESS ALTERNATE DETAILING IS APPROVED BY THE STRUCTURAL ENGINEER OF RECORD.

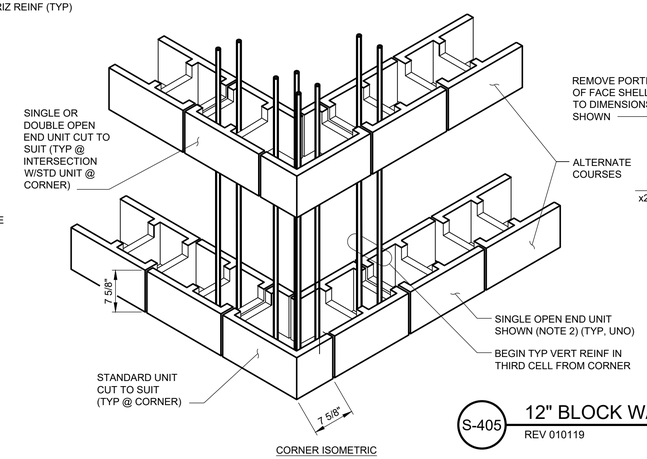

CORNER ISOMETRIC

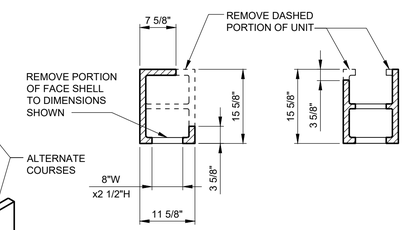

STANDARD 12" UNIT MODIFICATIONS @ WALL CORNER

SINGLE OPEN END UNIT MODIFICATIONS @ WALL CORNER

S-405 12" BLOCK WALL SECTIONS

REV 010119

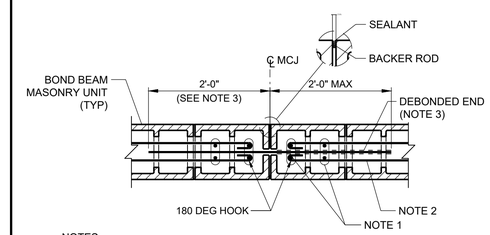

NOTES:

1. VERTICAL BARS W/ DOWELS IN LAST TWO CELLS. LOCATE VERT REINF INSIDE HORIZ REINF AS SHOWN. SEE S-145 FOR LAP LENGTH.
2. TERMINATE HORIZ REINFORCING W/ 180° HOOK TWO INCHES FROM CONTROL JOINTS. UNO.
3. PROVIDE 5/8" DIA SMOOTH DOWELS @24" OC ACROSS THE JOINT. PREVENT BOND BETWEEN BAR AND GROUT ON ONE SIDE OF JOINT WITH GREASE OR A PLASTIC SLEEVE. CAP ALL DOWELS TO ALLOW ONE INCH OF MOVEMENT. PROVIDE 180° HOOK ON SIDE WITH BOND IF 2'-0" LENGTH IS NOT POSSIBLE.
4. CONTINUE CHORD, LINTEL, AND SILL REINF THROUGH MCJ.

S-432 SPECIAL REINFORCED MASONRY SHEAR WALL CONTROL JOINTS - 12" BLOCK

REV xxxxxx

NO.	DATE	BY	REVISION

NOTICE

0 ½ 1

IF THIS BAR DOES NOT MEASURE 1" THEN DRAWING IS NOT TO SCALE

SW DESIGNED

TN DRAWN

MP CHECKED

STRUCTURAL REGISTERED PROFESSIONAL ENGINEER 82642PE DIGITALLY SIGNED OREGON JUL 08, 2024 MATTHEW ERICH PERRIN

EXPIRES: 12/31/2026

BID SET

consor

Stantec

South Fork WATER PURE WATER SINCE 1915

WATER QUALITY SYSTEMS BUILDING

STRUCTURAL

STANDARD DETAILS - IV

PROJECT NO.: 21-3045 | SCALE: AS SHOWN | DATE: AUGUST 2026

SHEET GS-8

C:\pwworkdir\d0513056\0609600S-008.dwg MS 7/27/2026 11:36 AM RDHOKARE 24.2s (LMS Tech)

	8" CMU	12" CMU	8" OR 12" CMU	8" OR 12" CMU		
BAR SIZE	LAP AND EMBEDMENT LENGTHS (CENTERED)	LAP AND EMBEDMENT LENGTHS (CENTERED)	LAP AND EMBEDMENT LENGTHS (OFF-CENTER) (NOTE 4)	LAP AND EMBEDMENT LENGTHS FOR DWLS IN CONCRETE (OFF-CENTER) (NOTE 4)	90° HOOK LENGTH (SEE BELOW)	ALLOWABLE HOOK EMBEDMENT LENGTH REDUCTION
#3	12"	12"	13"	17"	6"	4"
#4	13"	12"	22"	30"	8"	6"
#5	20"	13"	35"	46"	10"	8"
#6	38"	25"	64"	72"	12"	9"
#7	52"	33"	84"	84"	14"	11"
#8	80"	50"	96"	96"	16"	13"

NOTES:

1. THE TABLES SHOWN ARE PER IBC 2015 AND TMS 402-16 WITH f'm=2000 PSI AND fy=60,000 PSI.
2. USE HOOK, EMBEDMENT AND LAP SPLICE LENGTHS AS DETERMINED FROM THESE TABLES UNLESS INDICATED OTHERWISE.
3. WHEN BARS OF DIFFERENT SIZES ARE LAP SPLICED, LAP LENGTHS SHALL BE THE LARGER OF THE EMBEDMENT LENGTH OF THE LARGER BAR, OR THE LAP LENGTH OF THE SMALLER BAR.
4. LAP AND EMBEDMENT LENGTHS FOR OFF-CENTER HORIZONTAL AND VERTICAL BARS ARE BASED ON A MINIMUM OF 2" CLEAR COVER AND 2" CLEAR SPACING BETWEEN BARS.UNO. THE LENGTHS REQUIRED FOR BARS EMBEDDED IN CONCRETE HAVE BEEN INCREASED TO ACCOUNT FOR THE POTENTIAL OF SUCH DOWELS BEING MISPLACED DURING THE CONCRETE WORK.
5. MINIMUM REQUIRED HOOK EMBEDMENT LENGTH EQUALS STRAIGHT BAR EMBEDMENT LENGTH MINUS ALLOWABLE HOOK EMBEDMENT LENGTH REDUCTION.
6. MECHANICAL COUPLERS MAY BE SUBSTITUTED FOR LAP SPLICES FOR ANY BAR SIZE. SUBMIT TO ENGINEER FOR APPROVAL.

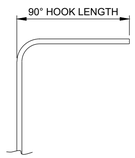

S-415 LAPS, HOOKS AND EMBEDMENTS
FOR 8", 12" CMU
REV 010119

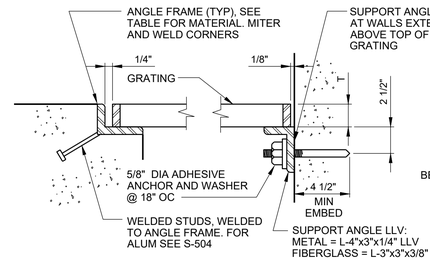

GRATING FRAME TABLE SIZED TO MATCH GRATING (FOR FIBERGLASS USE CONTINUOUS PULTRUDED FIBERGLASS SEAT AND ANCHOR)			
GRATING DEPTH T	ANGLE FRAME	GRATING DEPTH T	ANGLE FRAME
1"	1 3/4"x1 1/4"x1/4" (1 1/4"x1 1/4"x1/4")	2"	*2 1/2"x2 1/2"x1/2"
1 1/4"	2"x1 1/2"x1/4" (1 1/2"x1 1/2"x1/4")	2 1/4"	2 1/2"x2 1/2"x1/4"
1 1/2"	1 3/4"x1 3/4"x1/4"	2 1/2"	3"x3"x1/2"
1 3/4"	2"x2"x1/4"		

* OR USE 2 1/2"x2 1/2"x1/4" W/ 1/4" SHIM PLATE WELDED TO BOTTOM

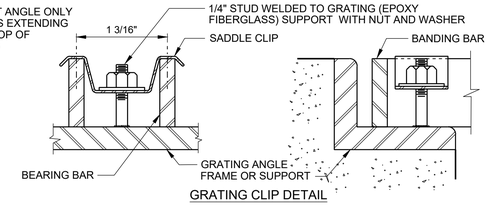

GRATING CLIP DETAIL

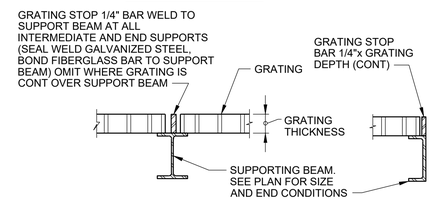

GRATING STOP DETAIL

S-501 GRATING
REV 010119

NOTES:

1. UNLESS INDICATED OTHERWISE, ALL GRATING SHALL BE ALUMINUM.
2. GRATING DEPTH TO BE DETERMINED BY MANUFACTURER AND APPROVED BY ENGINEER (UNO).
3. ALL ENDS AND OPENINGS SHALL BE BANDED.
4. WEIGHT OF GRATING SECTION SHALL NOT EXCEED 80 LBS.
5. METAL BEARING BARS SHALL BE DEPTH Tx3/16" @1 3/16" OC CROSS BARS SHALL BE @ 4" OC.
6. PROVIDE A MINIMUM OF 4 CLIPS PER GRATING PANEL, APPROX 4" FROM PANEL CORNERS. MAXIMUM CLIP SPACING AT 36" OC.
7. MATERIALS:

GRATING MATERIAL	SUPPORT ANGLE	ANGLE FRAME	WELDED STUDS	GRATING CLIPS AND STUDS	ADHESIVE ANCHORS
ALUMINUM	ALUMINUM	ALUMINUM	ALUMINUM PER S-504	ALUMINUM	TYPE 316 SS
GALV STEEL	GALV STEEL	GALV STEEL	GALV STEEL, 1/2" DIAx4" @12" OC MAX	GALV STEEL	ASTM F1554 GR 36, GALV
STAINLESS STEEL	TYPE 316L SS	TYPE 316L SS	TYPE 316L SS, 1/2" DIAx4" @12" OC MAX	TYPE 316 SS	TYPE 316 SS
FIBERGLASS	FIBERGLASS	FIBERGLASS	FIBERGLASS	FIBERGLASS	TYPE 316 SS

8. ALL GALVANIZED MATERIAL TO BE GALVANIZED AFTER FABRICATION.
9. SEE S-504 FOR ALUMINUM WELDED STUD DETAIL.
10. ALUMINUM IN CONTACT WITH CONCRETE SHALL BE COATED PER THE PROTECTIVE COATING SPECIFICATIONS.
11. FIBERGLASS GRATING - ALL CUT EDGES SHALL BE SEALED WITH RESIN. FOR BONDING, USE AN EPOXY ADHESIVE BONDING AGENT.
12. NOT ALL MATERIAL TYPES MAY BE USED ON A SINGLE PROJECT.
13. PROVIDE ANGLE FRAME OR SUPPORT ANGLES AT ALL SIDES OF OPENINGS (UNO).

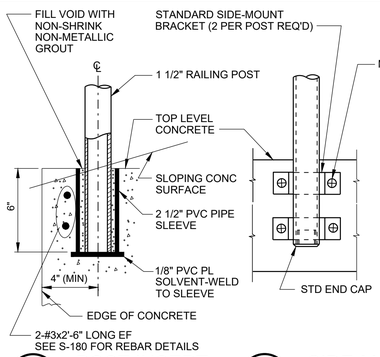

1 POST INSERT IN CONCRETE (SEE NOTE 2)

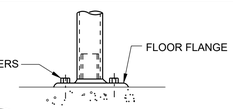

3 FLOOR FLANGE (WHEN REQUIRED)

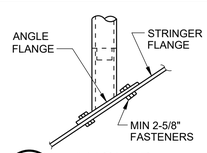

4 ANGLED FLANGE

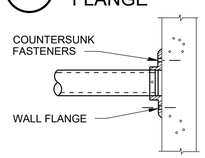

5 WALL FLANGE

NOTES:

1. IF FASTENING INTO CONCRETE, FASTENERS SHALL BE ADHESIVE ANCHORS.
2. POST INSERTS NOT ALLOWED IN APPLICATIONS SUBJECT TO FREQUENT FREEZING.
3. USE POST INSERT UNLESS INDICATED OTHERWISE.
4. USE DETAIL C IN LUE OF POST INSERT WHERE WALL/CURB THICKNESS IS LESS THAN 8"
5. CONTRACTOR REQUIRED TO DESIGN RAILING SYSTEM PER SPECIFICATIONS.

2 SIDE-MOUNTING BRACKET

S-512 RAILING, GUARDRAIL AND HANDRAIL SUPPORT
REV 010119

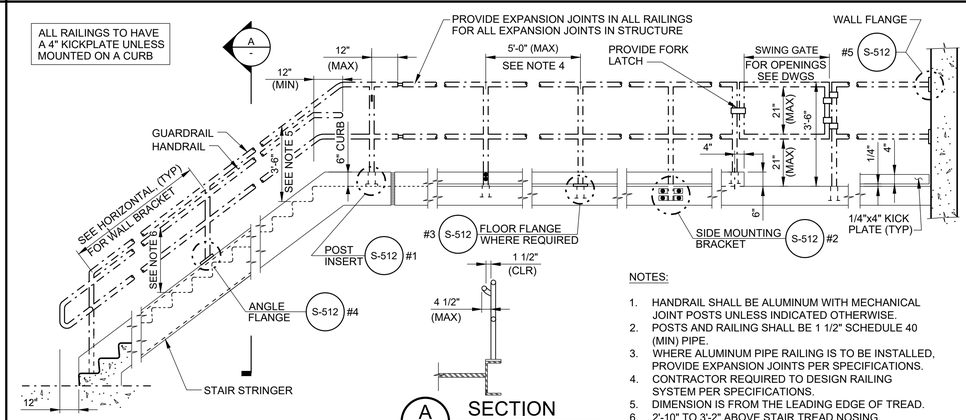

S-515 TWO-RAIL RAILING
REV 010119

A SECTION

NOTES:

1. HANDRAIL SHALL BE ALUMINUM WITH MECHANICAL JOINT POSTS UNLESS INDICATED OTHERWISE.
2. POSTS AND RAILING SHALL BE 1 1/2" SCHEDULE 40 (MIN) PIPE.
3. WHERE ALUMINUM PIPE RAILING IS TO BE INSTALLED, PROVIDE EXPANSION JOINTS PER SPECIFICATIONS.
4. CONTRACTOR REQUIRED TO DESIGN RAILING SYSTEM PER SPECIFICATIONS.
5. DIMENSION IS FROM THE LEADING EDGE OF TREAD.
6. 2'-10" TO 3'-2" ABOVE STAIR TREAD NOSING.

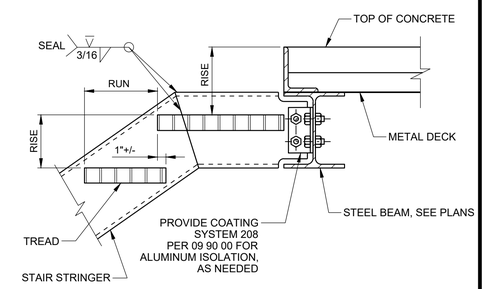

NOTE:

1. HANDRAIL NOT SHOWN
2. STAIRS TO BE DESIGNED, DETAILED, FURNISHED AND INSTALLED BY CONTRACTOR. DETAIL IS CONCEPTUAL.

S-541 STAIR TOP CONNECTION TO CONCRETE OVER METAL DECK

NO.	DATE	BY	REVISION

NOTICE
0 ½ 1
IF THIS BAR DOES NOT MEASURE 1" THEN DRAWING IS NOT TO SCALE

SW DESIGNED
TN DRAWN
MP CHECKED

STRUCTURAL REGISTERED PROFESSIONAL ENGINEER 82642PE DIGITALLY SIGNED OREGON JULY 08, 2024 MATTHEW ERICH PERKINS
EXPIRES: 12/31/2026

BID SET

consor
Stantec

South Fork WATER PURE WATER SINCE 1915
WATER QUALITY SYSTEMS BUILDING

STRUCTURAL
STANDARD DETAILS - V

PROJECT NO.: 21-3045 | SCALE: AS SHOWN | DATE: AUGUST 2026

SHEET GS-9

C:\pwworkdir\d0513056\06096005-009.dwg MS 7/27/2026 11:40 AM RDHOKARE 24.2s (LMS Tech)

NOTES:

1. STAIRS TO BE DESIGNED, DETAILED, FURNISHED AND INSTALLED BY CONTRACTOR. SIZES SHOWN ARE MINIMUM SIZES.
2. UNLESS OTHERWISE INDICATED, STAIRS SHALL CONSIST OF ALUMINUM C10x6.136 STRINGERS (MIN) AND SERRATED ALUM GRATING TREADS.
3. FRP STAIRS SHALL CONSIST OF ALUM C10x6.136 STRINGERS (MIN) WITH FRP GRATING TREADS.
4. ALL BOLTS AND CONCRETE ANCHORS SHALL BE SS.
5. STAIR HANDRAIL NOT SHOWN FOR CLARITY.

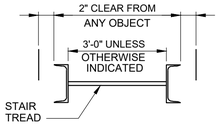

CROSS SECTION

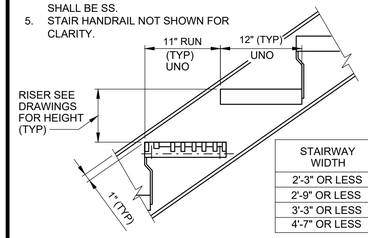

STAIRWAY WIDTH	BEARING BARS ALUMINUM TREAD
2'-3" OR LESS	1 1/4"x3/16"
2'-9" OR LESS	1 1/2"x3/16"
3'-3" OR LESS	1 3/4"x3/16"
4'-7" OR LESS	2"x3/16"

S-544 METAL STAIR OPEN RISER

REV 010119

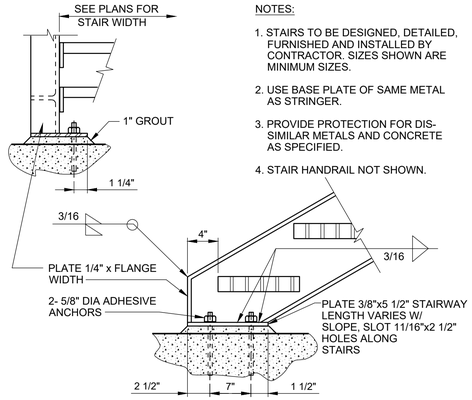

NOTES:

1. STAIRS TO BE DESIGNED, DETAILED, FURNISHED AND INSTALLED BY CONTRACTOR. SIZES SHOWN ARE MINIMUM SIZES.
2. USE BASE PLATE OF SAME METAL AS STRINGER.
3. PROVIDE PROTECTION FOR DIS-SIMILAR METALS AND CONCRETE AS SPECIFIED.
4. STAIR HANDRAIL NOT SHOWN.

S-545 STAIR BOTTOM TO CONCRETE CONNECTION

S-545 REV 010118

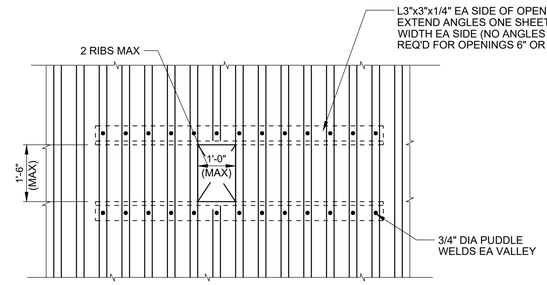

NOTE:

FRAMING TO BE FURNISHED AND INSTALLED BY MISC METALS CONTRACTOR.

FRAMING FOR OPENINGS 6" TO 12"

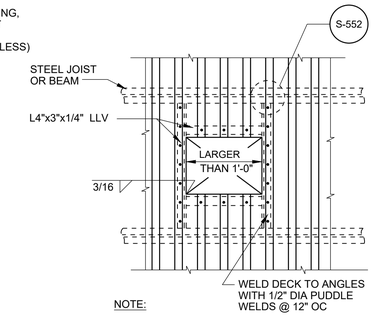

NOTE:

FRAMING TO BE FURNISHED AND INSTALLED BY STRUCTURAL STEEL CONTRACTOR.

FRAMING FOR OPENINGS LARGER THAN 12" AND SMALLER THAN 48"

S-551 FRAMING AT METAL DECK OPENINGS

REV 010119

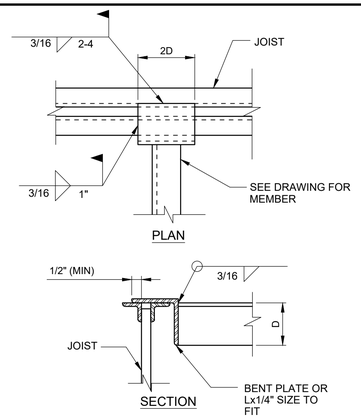

S-552 FRAMING TO JOIST

REV 010119

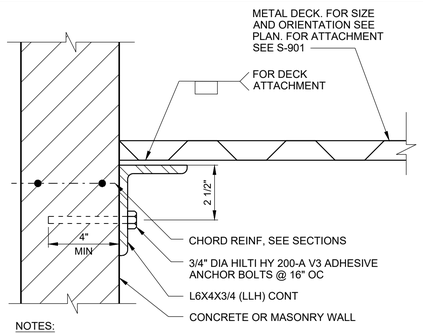

NOTES:

1. ANCHOR BOLTS AT END OF ANGLE SHALL BE 6" OR LESS FROM END OF ANGLE.
2. ANGLE SHALL STOP AT EACH SIDE OF CONTROL AND EXPANSION JOINTS. GAP BETWEEN ANGLES SHALL BE EQUAL TO WIDTH OF JOINT.

S-555 DECK ANGLE TO WALL

REV 010119

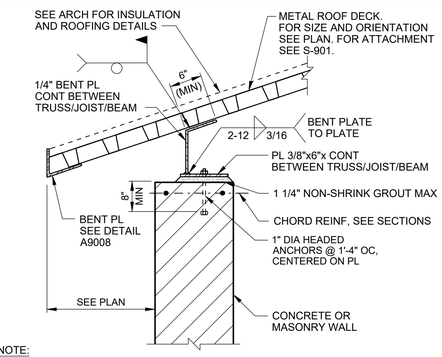

NOTE:

1. ARCHITECTURAL FASCIA NOT SHOW FOR CLARITY.
2. COORDINATE BENT PLATE HEIGHT TO PROVIDE SAME TOP OF STEEL ELEVATION AS JOIST TOP CHORDS. SEE DETAIL S-584.

S-557 DECK CONNECTION BETWEEN TRUSS/JOIST/BEAMS

REV 010119

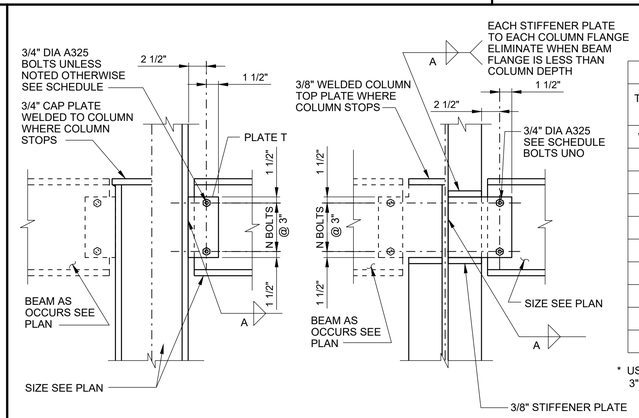

BEAM TO BEAM CONNECTION SCHEDULE				
TYPICAL BEAM	NO OF BOLTS N	PLATE THICKNESS T	WELD SIZE A	COMMENTS
W8/C8	2	3/8	3/16	
W10	2	3/8	3/16	
W12				
W14				
W16				
W18				
W21				
W24				
W27				
W36				

* USE A DOUBLE ROW OF BOLTS - 5 PER ROW 3" BETWEEN ROWS AND 1 1/2" EDGE DISTANCE

S-561 BEAM TO COLUMN CONNECTION

REV 010119

NO.	DATE	BY	REVISION

NOTICE

0 ½ 1

IF THIS BAR DOES NOT MEASURE 1" THEN DRAWING IS NOT TO SCALE

SW DESIGNED

TN DRAWN

MP CHECKED

STRUCTURAL REGISTERED PROFESSIONAL ENGINEER 82642PE DIGITALLY SIGNED OREGON JULY 08, 2024 MATTHEW ERICH PERRINS

EXPIRES: 12/31/2026

BID SET

consor

Stantec

South Fork WATER PURE WATER SINCE 1915

WATER QUALITY SYSTEMS BUILDING

STRUCTURAL

STANDARD DETAILS - VI

PROJECT NO.: 21-3045 | SCALE: AS SHOWN | DATE: AUGUST 2026

SHEET GS-10

C:\pwworkdir\d0513056\0609600S-010.dwg MS 7/27/2026 11:44 AM RDHOKARE 24.2s (LMS Tech)

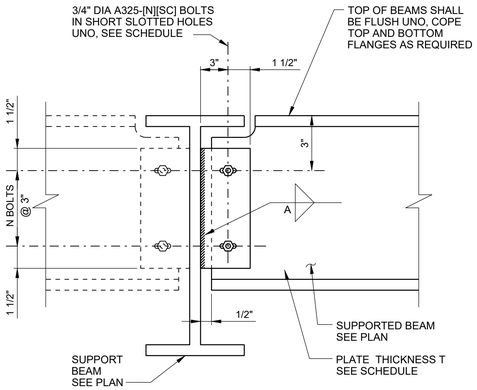

BEAM TO BEAM CONNECTION SCHEDULE				
SUPPORTED BEAM SIZE	NO OF BOLTS N	PLATE THICKNESS T	WELD SIZE A	COMMENTS
W8 OR C8	2	1/4	3/16	-
W10 OR C10	2	1/4	3/16	-
W12 OR C12	3	1/4	3/16	-
W14 OR C15	3	1/4	3/16	-
W16	4	1/4	3/16	-
W18	4	1/4	3/16	-
W21	5	1/4	3/16	-
W24	6	5/16	1/4	-
W27	7	5/16	1/4	-
W30	8	3/8	5/16	-
W36	2	7/16	3/8	-

S-562 BEAM TO BEAM CONNECTION
(PLATE CONNECTION)
REV 010119

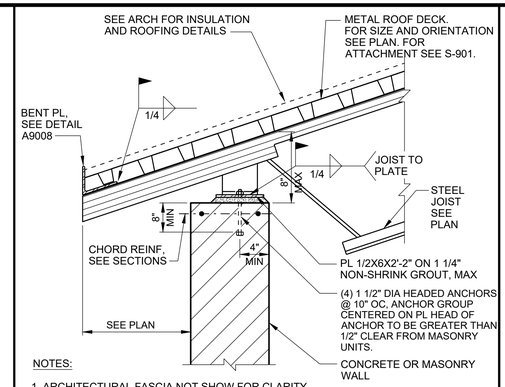

NOTES:

1. ARCHITECTURAL FASCIA NOT SHOW FOR CLARITY.
2. SEE DETAIL S-557 FOR ATTACHMENT BETWEEN JOISTS.

S-584 JOIST CONNECTION
REV 010119

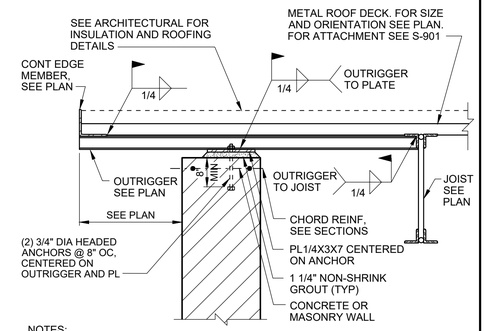

NOTES:

1. ARCHITECTURAL FASCIA NOT SHOW FOR CLARITY.
2. SEE DETAIL S-557 FOR ATTACHMENT BETWEEN OUTRIGGERS.

S-587 OUTRIGGER CONNECTION
REV 010119

NO.	DATE	BY	REVISION

NOTICE
0 ½ 1
IF THIS BAR DOES NOT MEASURE 1" THEN DRAWING IS NOT TO SCALE

SW DESIGNED
TN DRAWN
MP CHECKED

STRUCTURAL REGISTERED PROFESSIONAL ENGINEER 82642PE DIGITALLY SIGNED OREGON JULY 09, 2024 MATTHEW ERICH PERKINS
EXPIRES: 12/31/2026

BID SET

consor
Stantec

South Fork WATER PURE WATER SINCE 1915
WATER QUALITY SYSTEMS BUILDING

STRUCTURAL
STANDARD DETAILS - VII

PROJECT NO.: 21-3045 | SCALE: AS SHOWN | DATE: AUGUST 2026

SHEET GS-11

C:\pwworkdir\d0513056\0609600S-011.dwg MS 7/27/2026 11:46 AM RDHOKARE 24.2s (LMS Tech)

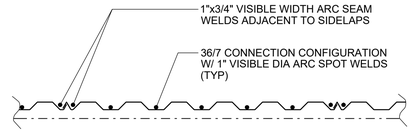

CONNECTION TO SUPPORTS PERPENDICULAR TO DECK SPAN

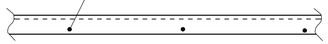

CONNECTION TO SUPPORTS PARALLEL TO DECK SPAN

NOTES:

1. SIDE LAP CONNECTION TO BE 1/2" TOP SEAM WELD, SPACED AT 1'-6" MAX.

S-901 METAL DECK FASTENING

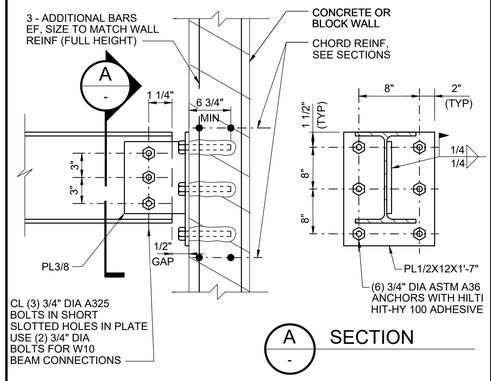

S-902 BEAM TO WALL CONNECTION

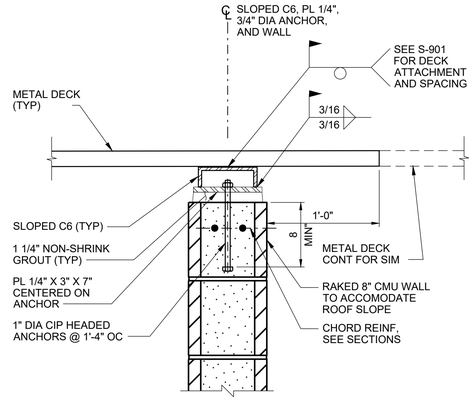

S-903 METAL DECK TO WALL ATTACHMENT

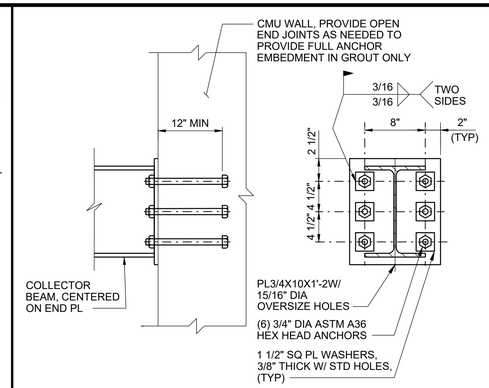

S-904 SEISMIC COLLECTOR BEAM WALL CONNECTION

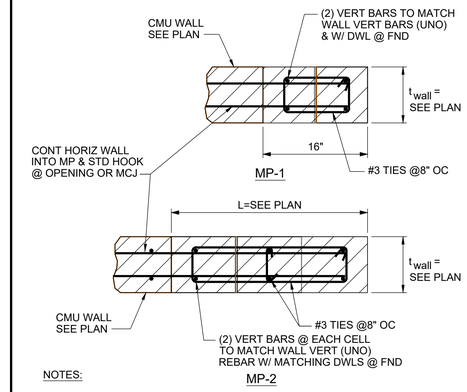

NOTES:

1. EXTEND TIES TO TOP OF ADJACENT WALL OPENING AND 12" INTO FOUNDATION.

S-905 MASONRY PIER

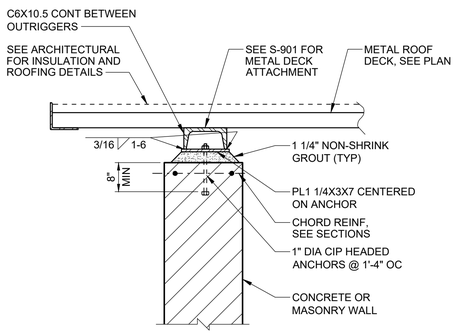

S-906 DECK CONNECTION BETWEEN OUTRIGGERS

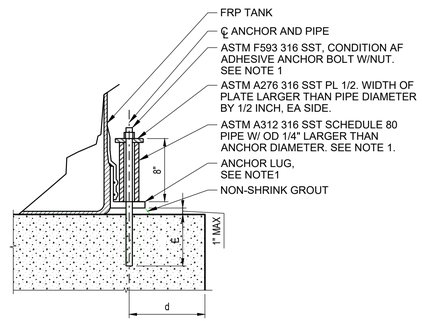

NOTES:

1. TANK ANCHORAGE AND LUG DESIGN IS A DEFERRED SUBMITTAL AND SHALL MEET REQUIREMENTS OF ASCE 7-16, SECTION 15.7.3. THE ANCHORAGE AND PIPE SLEEVE INFORMATION SHOWN IS BASED ON A PRELIMINARY ANALYSIS THAT SHALL BE VERIFIED WITH THE FINALIZED ANCHOR DESIGN.

S-907 FRP TANK ANCHORAGE

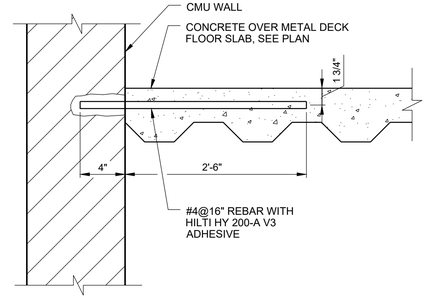

S-908 CONCRETE OVER METAL DECK CONNECTION TO WALL

NO.	DATE	BY	REVISION

NOTICE
0 ½ 1
IF THIS BAR DOES NOT MEASURE 1" THEN DRAWING IS NOT TO SCALE

SW DESIGNED
TN DRAWN
MP CHECKED

STRUCTURAL REGISTERED PROFESSIONAL ENGINEER 82642PE OREGON JULY 08, 2014 MATTHEW ERICH PERKINS
DIGITALLY SIGNED
EXPIRES: 12/31/2026

BID SET

consor
Stantec

South Fork WATER PURE WATER SINCE 1915
WATER QUALITY SYSTEMS BUILDING

STRUCTURAL
STANDARD DETAILS - VIII

PROJECT NO.: 21-3045 | SCALE: AS SHOWN | DATE: AUGUST 2026

SHEET GS-12

C:\pwworkdir\d0513056\0609600S-012.dwg MS 7/27/2026 11:48 AM RDHOKARE 24.2s (LMS Tech)

ELEVATION NOTES

1. ELEVATIONS SHOWN ARE RELATIVE TO FINISH FLOOR ELEVATION.
2. EL 0.00 = FINISHED FLOOR EL 324.20

GENERAL SHEET NOTES

1. PROVIDE #5@32" VERTICAL REINFORCEMENT AT ALL CMU WALLS, UNLESS NOTED OTHERWISE.
2. SEE SECTIONS A/S-301, B/S-302, C/S-303 FOR CMU WALL HORIZONTAL REINFORCEMENT.
3. PROVIDE VAPOR BARRIER UNDERNEATH SLAB AND WALL FOOTINGS OF MEETING ROOM, KITCHEN, BATHROOMS, AND JANITOR ROOM. SEE SPECIFICATION SECTION 03 31 00 AND SHEETS S-301 AND S-303 FOR MORE INFORMATION. DO NOT PROVIDE VAPOR BARRIER AT OTHER AREAS OF THE BUILDING.

SHEET KEYNOTES

A. RAISED FLOOR GRATING SYSTEM. T.O. GRATING TO MATCH FINISHED FLOOR ELEVATION. SEE 06 80 00.

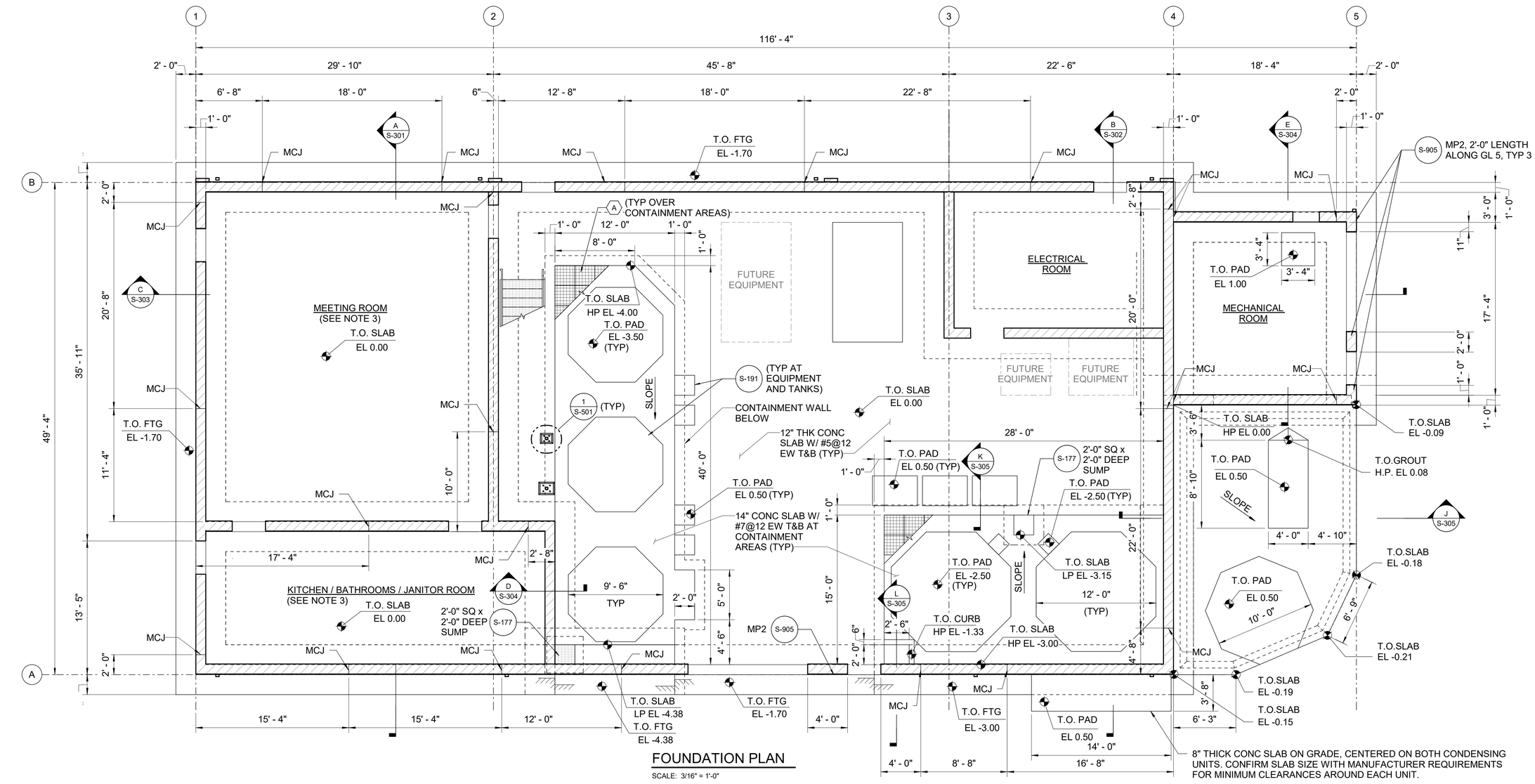

FOUNDATION PLAN

SCALE: 3/16" = 1'-0"

DATE : 7/27/2026 12:50:30 PM

USER : TN

B:\d0513058\06096S-MD.rvt

NO.	DATE	BY	REVISION

NOTICE
0 ½ 1
IF THIS BAR DOES NOT MEASURE 1" THEN DRAWING IS NOT TO SCALE

SW
DESIGNED
TN
DRAWN
MP
CHECKED

STRUCTURAL REGISTERED PROFESSIONAL ENGINEER 82642PE DIGITALLY SIGNED OREGON JULY 08, 2024 MATTHEW ERICH PERKINS
EXPIRES: 12/31/2026

BID SET

consor
Stantec

South Fork WATER
PURE WATER SINCE 1915

WATER QUALITY SYSTEMS BUILDING

STRUCTURAL

FOUNDATION PLAN

PROJECT NO.: 21-3045 | SCALE: 3/16" = 1'-0" | DATE: AUGUST 2026

SHEET
S-101

DATE : 7/27/2026 12:51:27 PM

USER : TN

METAL DECK NOTES

1. MINIMUM THICKNESS OF STEEL BEFORE COATING 0.036 INCHES.
2. DEPTH OF DECK: 1 1/2 INCHES
3. MINIMUM MOMENT OF INERTIA: 0.240 IN^4/FT
4. MINIMUM SECTION MODULUS
   0.228 IN^3/FT (POSITIVE)
   0.236 IN^3/FT (NEGATIVE)
5. PROVIDE DECK CONNECTIONS PER DETAIL S-901.
6. MAXIMUM SHEAR FLEXIBILITY FACTOR FOR THREE-SPAN CONDITION:
   5.3×10^6 INCHES/LB
7. SEE SPECIFICATION SECTION 05 30 00 FOR ADDITIONAL METAL DECK REQUIREMENTS.

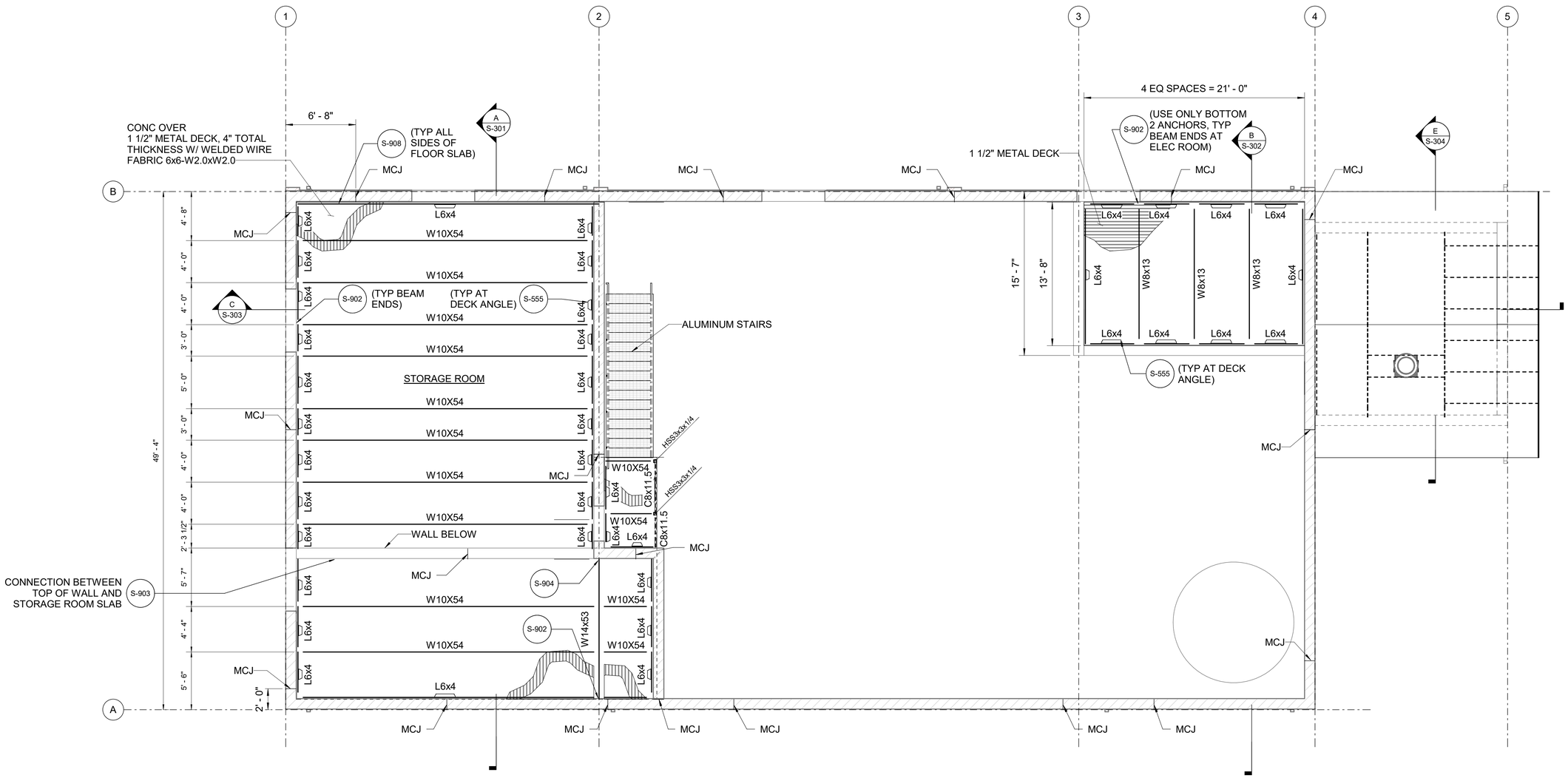

INTERMEDIATE PLAN

SCALE: 3/16" = 1'-0"

NO.	DATE	BY	REVISION

NOTICE
0 ½ 1
IF THIS BAR DOES NOT MEASURE 1" THEN DRAWING IS NOT TO SCALE

SW
DESIGNED
TN
DRAWN
MP
CHECKED

STRUCTURAL REGISTERED PROFESSIONAL ENGINEER 82642PE DIGITALLY SIGNED OREGON JULY 08, 2026 MATTHEW ERICH PERKINS
EXPIRES: 12/31/2026

BID SET

consor
Stantec

South Fork WATER
PURE WATER SINCE 1915

WATER QUALITY SYSTEMS BUILDING

STRUCTURAL

INTERMEDIATE PLAN

PROJECT NO.: 21-3045 | SCALE: 3/16" = 1'-0" | DATE: AUGUST 2026

SHEET
S-102

B:\005130580\06096S-MD.rvt

DATE : 7/27/2026 12:52:02 PM

USER : TN

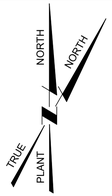

METAL DECK NOTES

1. MINIMUM THICKNESS OF STEEL BEFORE COATING 0.036 INCHES.
2. DEPTH OF DECK: 1 1/2 INCHES
3. MINIMUM MOMENT OF INERTIA: 0.240 IN^4/FT
4. MINIMUM SECTION MODULUS
   0.228 IN^3/FT (POSITIVE)
   0.236 IN^3/FT (NEGATIVE)
5. PROVIDE DECK CONNECTIONS PER DETAIL S-901.
6. MAXIMUM SHEAR FLEXIBILITY FACTOR FOR THREE-SPAN CONDITION:
   5.3×10^6 INCHES/LB
7. AT GRID LINES 1 AND 4, PROVIDE CONTINUOUS DECK FROM THE FASCIA TO THE FOURTH TRUSS T1. PROVIDE 3 SPAN MINIMUM ELSEWHERE.
8. SEE SPECIFICATION SECTION 05 30 00 FOR ADDITIONAL METAL DECK REQUIREMENTS.
9. JOIST BRACING AND BRIDGING TO BE DESIGNED BY JOIST MANUFACTURER.

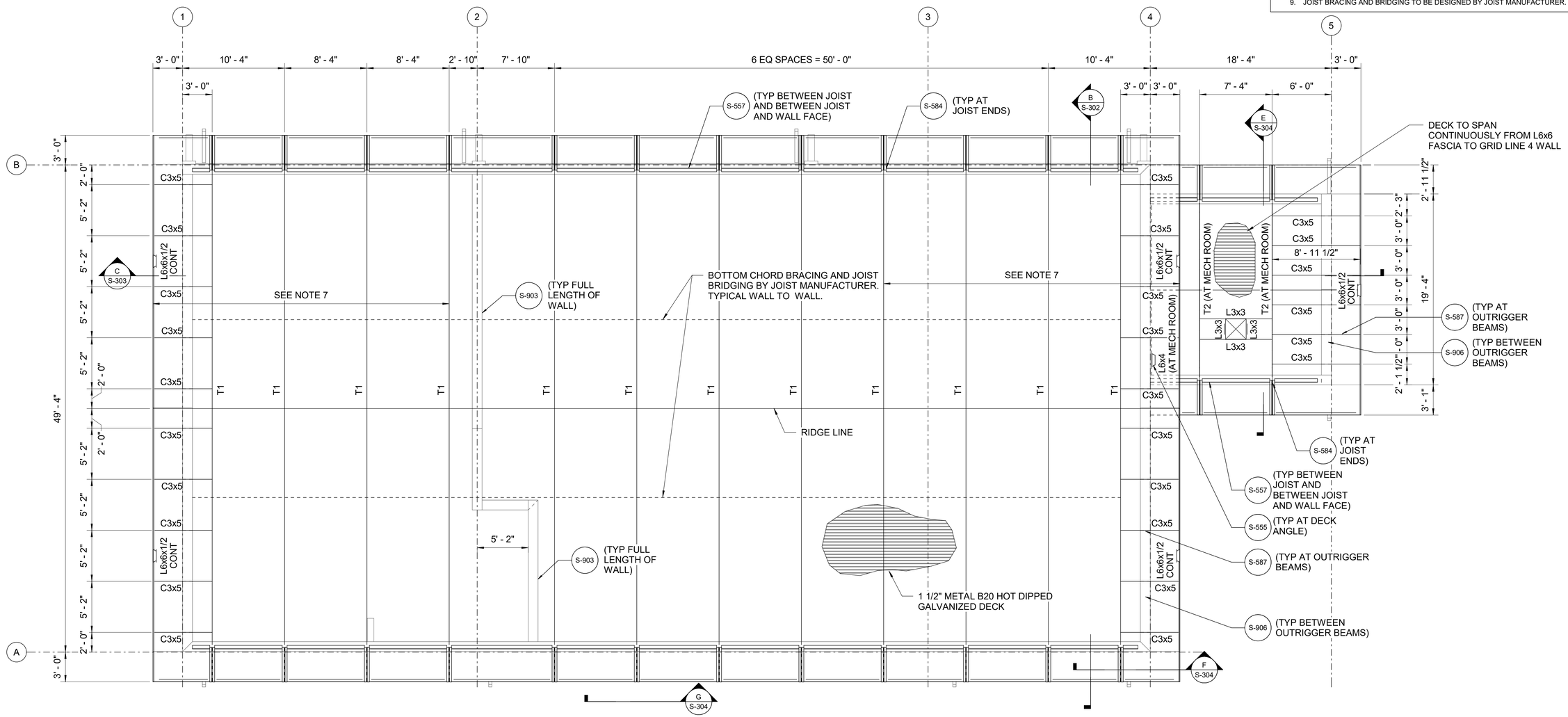

ROOF FRAMING PLAN

SCALE: 3/16" = 1'-0"

B:\d0513058\06096S-MD.rvt

NO.	DATE	BY	REVISION

NOTICE
0 ½ 1
IF THIS BAR DOES NOT MEASURE 1" THEN DRAWING IS NOT TO SCALE

SW
DESIGNED
TN
DRAWN
MP
CHECKED

STRUCTURAL REGISTERED PROFESSIONAL ENGINEER 82642PE DIGITALLY SIGNED OREGON JULY 06, 2026 MATTHEW ERICH PERKINS
EXPIRES: 12/31/2026

BID SET

consor
Stantec

South Fork WATER
PURE WATER SINCE 1915

WATER QUALITY SYSTEMS BUILDING

STRUCTURAL

ROOF FRAMING PLAN

PROJECT NO.: 21-3045 | SCALE: 3/16" = 1'-0" | DATE: AUGUST 2026

SHEET
S-103

ELEVATION NOTES

1. ELEVATIONS SHOWN ARE RELATIVE TO FINISH FLOOR ELEVATION.
2. EL 0.00 = FINISHED FLOOR EL 324.20

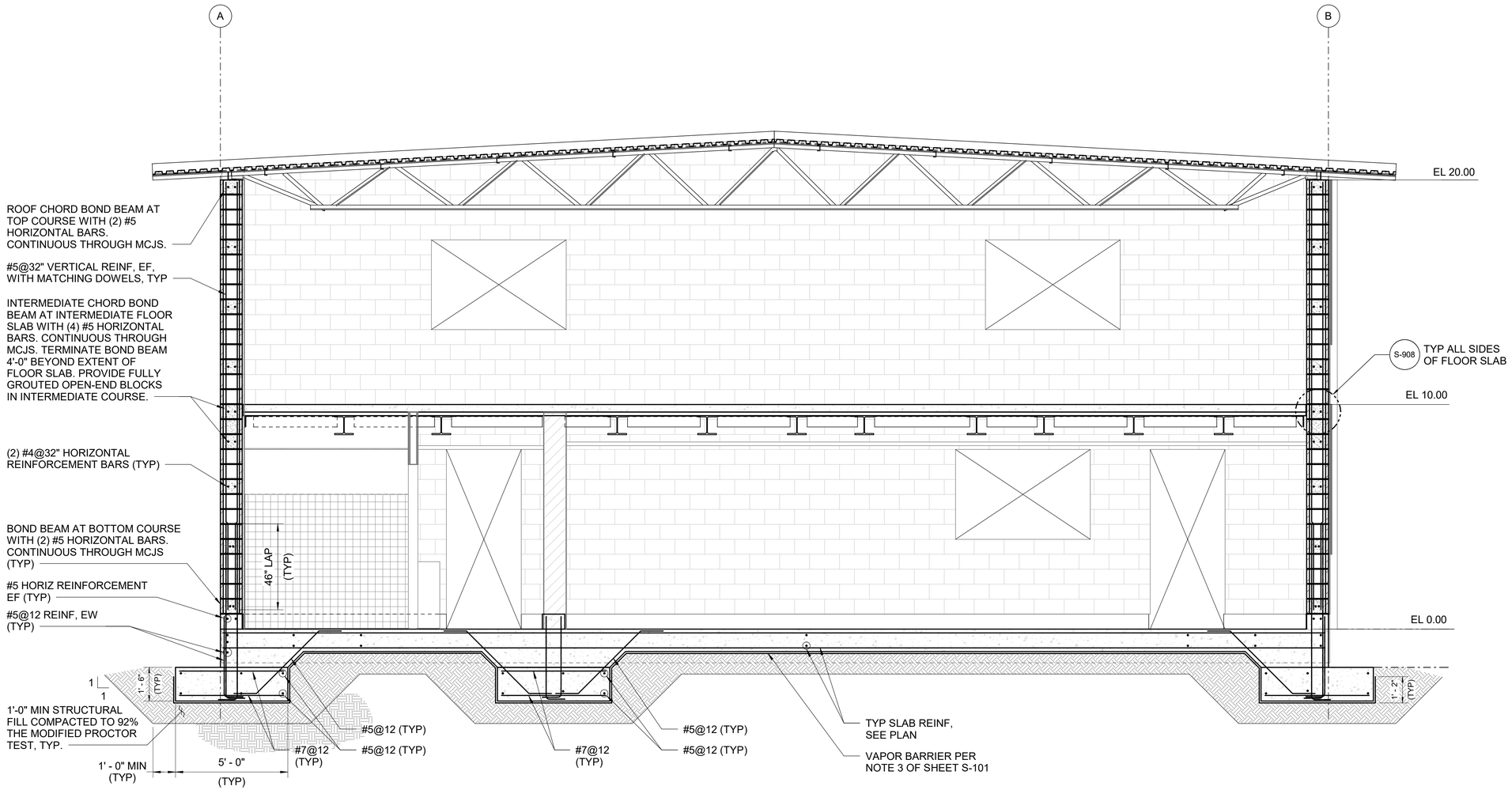

A / S-101 SECTION

SCALE: 3/8" = 1'-0"

DATE : 7/27/2026 12:52:49 PM

USER : TN

B:\05130580\06096S-MD.rvt

NO.	DATE	BY	REVISION

NOTICE

0 ½ 1

IF THIS BAR DOES NOT MEASURE 1" THEN DRAWING IS NOT TO SCALE

SW DESIGNED

TN DRAWN

MP CHECKED

STRUCTURAL REGISTERED PROFESSIONAL ENGINEER 82642PE OREGON DIGITALLY SIGNED JULY 06, 2026 MATTHEW ERICH PERKINS

EXPIRES: 12/31/2026

BID SET

consor

Stantec

South Fork WATER PURE WATER SINCE 1915

WATER QUALITY SYSTEMS BUILDING

STRUCTURAL

SECTIONS - I

PROJECT NO.: 21-3045 | SCALE: 3/8" = 1'-0" | DATE: AUGUST 2026

SHEET

S-301

ELEVATION NOTES

1. ELEVATIONS SHOWN ARE RELATIVE TO FINISH FLOOR ELEVATION.
2. EL 0.00 = FINISHED FLOOR EL 324.20

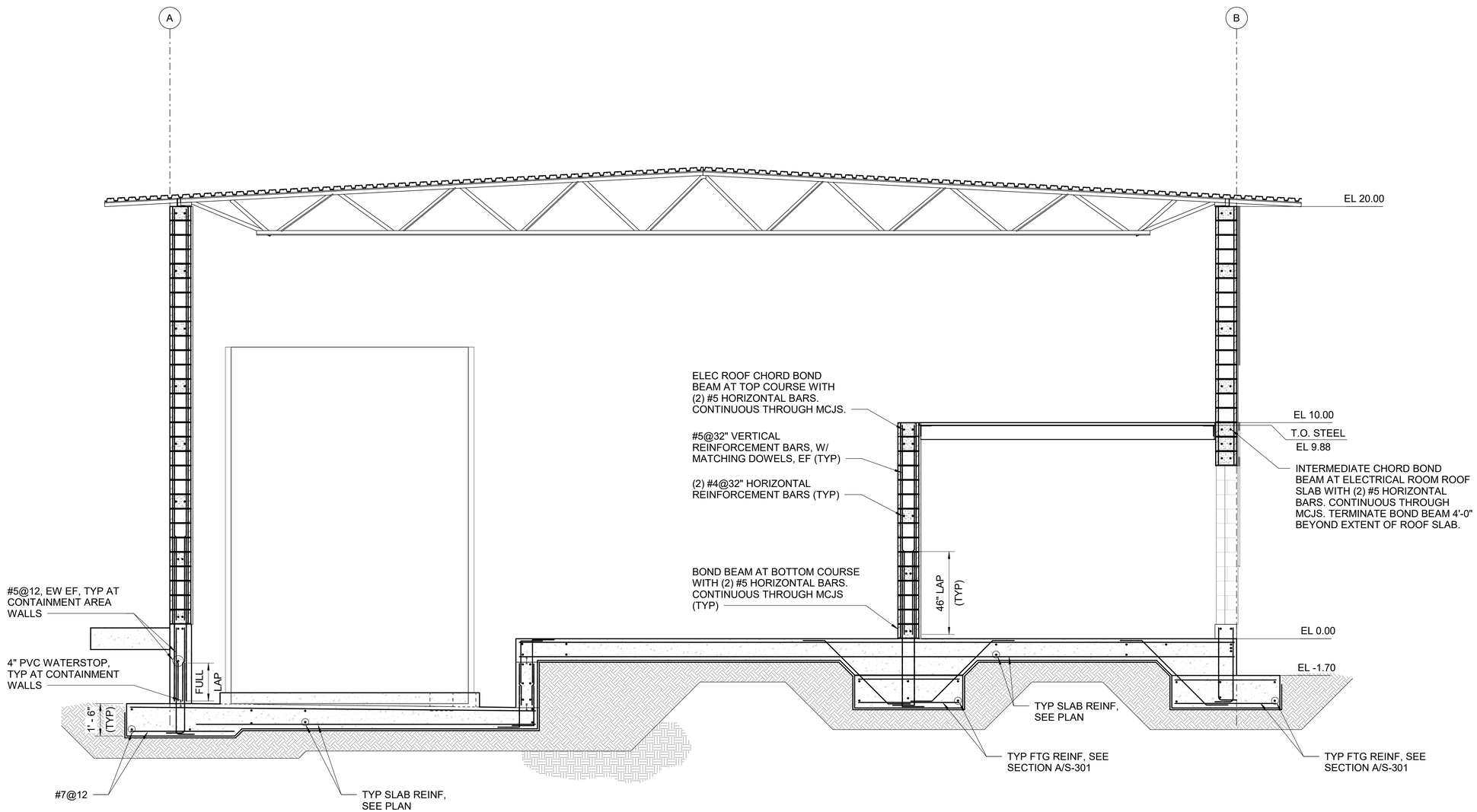

B / S-101 SECTION

SCALE: 3/8" = 1'-0"

DATE : 7/27/2026 12:53:33 PM

USER : TN

B:\d0513058\06096S-MD.rvt

NO.	DATE	BY	REVISION

NOTICE

0 ½ 1

IF THIS BAR DOES NOT MEASURE 1" THEN DRAWING IS NOT TO SCALE

SW DESIGNED

TN DRAWN

MP CHECKED

STRUCTURAL REGISTERED PROFESSIONAL ENGINEER 82642PE DIGITALLY SIGNED OREGON JULY 08, 2026 MATTHEW ERICH PERMUS

EXPIRES: 12/31/2026

BID SET

consor

Stantec

South Fork WATER PURE WATER SINCE 1915

WATER QUALITY SYSTEMS BUILDING

STRUCTURAL

SECTIONS - II

PROJECT NO.: 21-3045 | SCALE: 3/8" = 1'-0" | DATE: AUGUST 2026

SHEET

S-302

ELEVATION NOTES

1. ELEVATIONS SHOWN ARE RELATIVE TO FINISH FLOOR ELEVATION.
2. EL 0.00 = FINISHED FLOOR EL 324.20

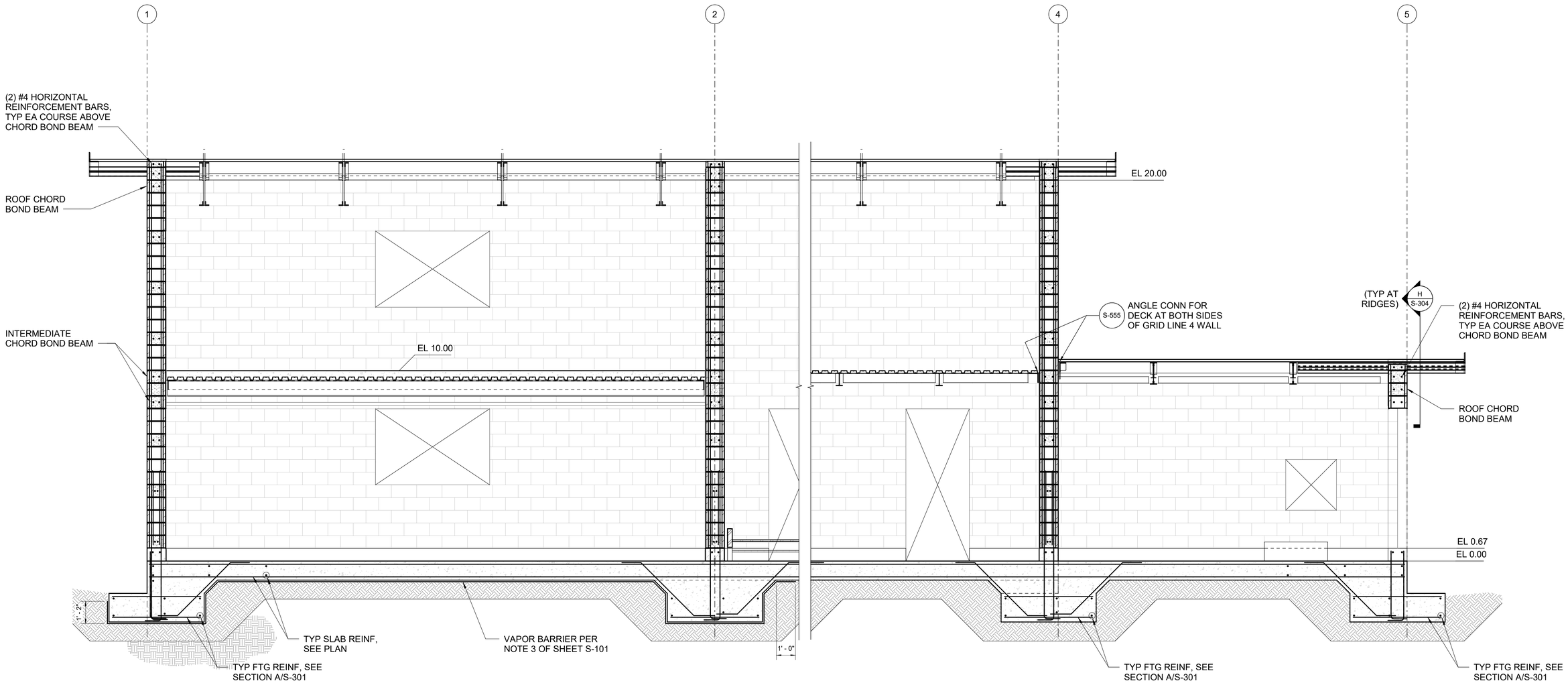

C S-101 SECTION
SCALE: 3/8" = 1'-0"

DATE : 7/27/2026 12:54:00 PM
USER : TN
B:\d0513058\06096S-MD.rvt

NO.	DATE	BY	REVISION

NOTICE
0 ½ 1
IF THIS BAR DOES NOT MEASURE 1" THEN DRAWING IS NOT TO SCALE

SW
DESIGNED
TN
DRAWN
MP
CHECKED

STRUCTURAL REGISTERED PROFESSIONAL ENGINEER 82642PE DIGITALLY SIGNED OREGON JULY 06, 2026 MATTHEW ERICH PERKINS
EXPIRES: 12/31/2026

BID SET

consor
Stantec

South Fork WATER
PURE WATER SINCE 1915

WATER QUALITY SYSTEMS BUILDING

STRUCTURAL

SECTIONS - III

PROJECT NO.: 21-3045 | SCALE: 3/8" = 1'-0" | DATE: AUGUST 2026

SHEET
S-303

ELEVATION NOTES

1. ELEVATIONS SHOWN ARE RELATIVE TO FINISH FLOOR ELEVATION.
2. EL 0.00 = FINISHED FLOOR EL 324.20

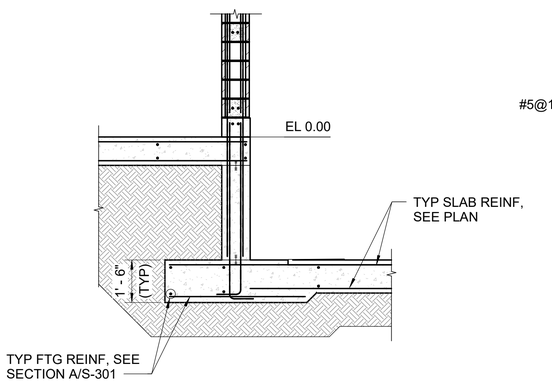

D S-101 SECTION
SCALE: 3/8" = 1'-0"

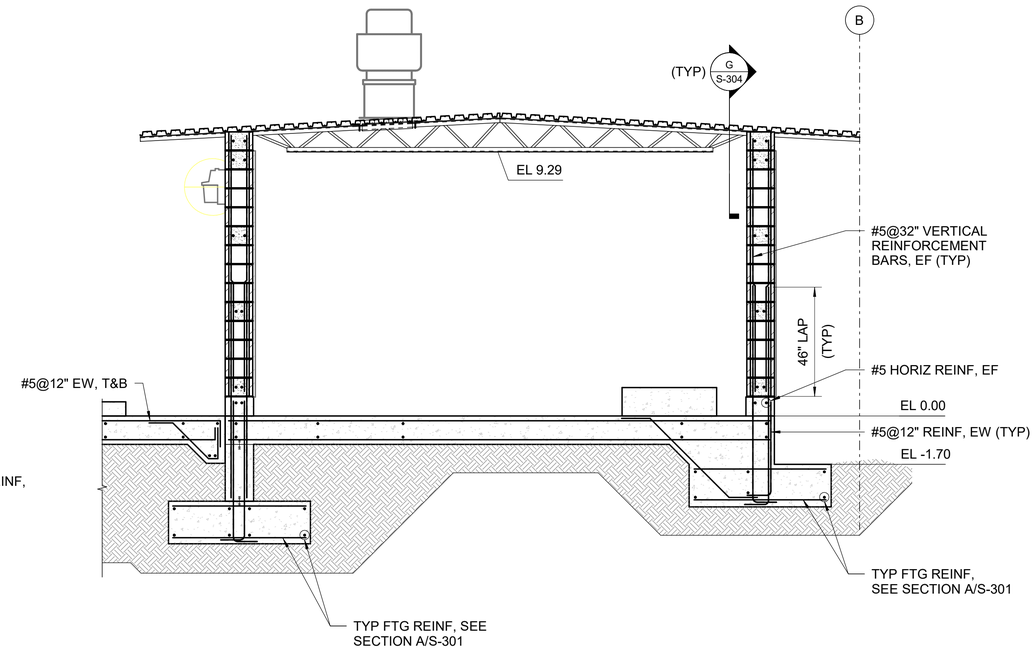

E S-101 SECTION
SCALE: 3/8" = 1'-0"

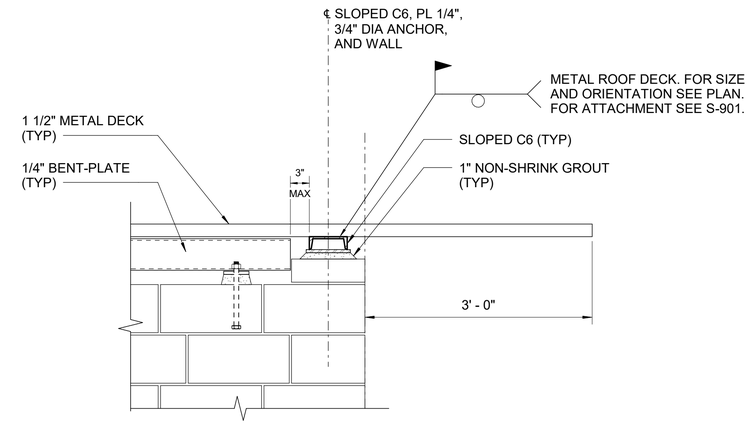

F S-103 SECTION
SCALE: 1" = 1'-0"

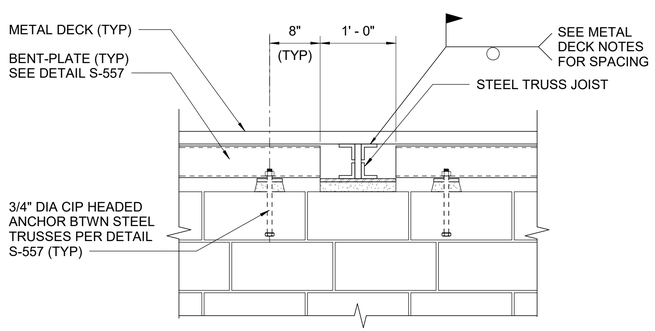

G S-103 SECTION
SCALE: 1" = 1'-0"

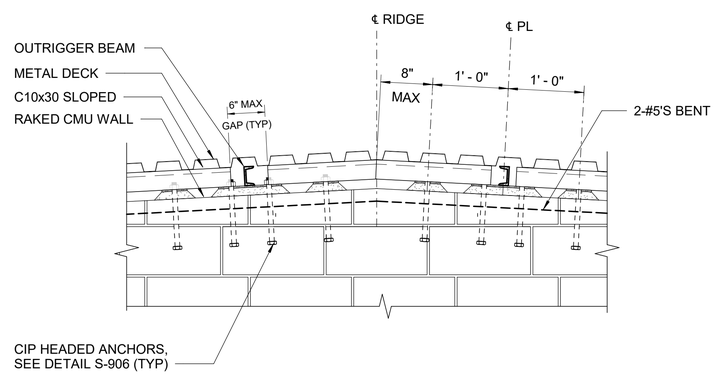

H S-303 SECTION
SCALE: 1" = 1'-0"

NO.	DATE	BY	REVISION

NOTICE
0 ½ 1
IF THIS BAR DOES NOT MEASURE 1" THEN DRAWING IS NOT TO SCALE

SW DESIGNED
TN DRAWN
MP CHECKED

STRUCTURAL REGISTERED PROFESSIONAL ENGINEER 82642PE DIGITALLY SIGNED OREGON JULY 09, 2024 MATTHEW ERICH PERKINS
EXPIRES: 12/31/2026

BID SET

consor
Stantec

South Fork WATER PURE WATER SINCE 1915

WATER QUALITY SYSTEMS BUILDING

STRUCTURAL

SECTIONS - IV

PROJECT NO.: 21-3045 | SCALE: As indicated | DATE: AUGUST 2026

SHEET S-304

DATE : 7/27/2026 12:54:42 PM
USER : TN
B:\d0513058\06096S-MD.rvt

ELEVATION NOTES

1. ELEVATIONS SHOWN ARE RELATIVE TO FINISH FLOOR ELEVATION.
2. EL 0.00 = FINISHED FLOOR EL 324.20

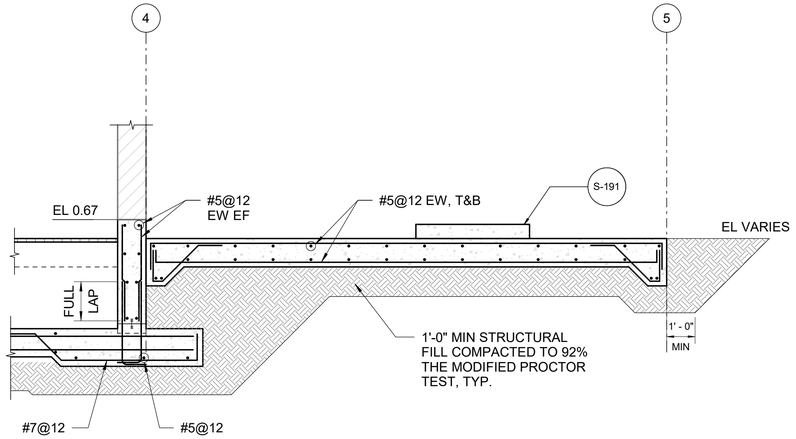

J S-101 SECTION
SCALE: 3/8" = 1'-0"

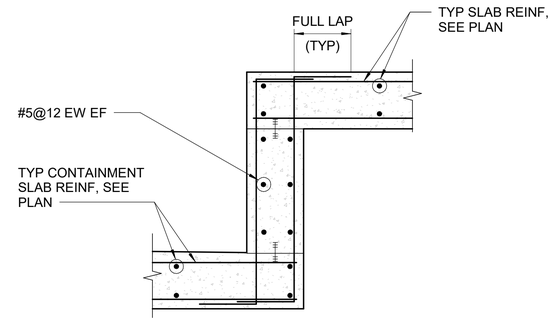

K S-101 SECTION
SCALE: 3/4" = 1'-0"

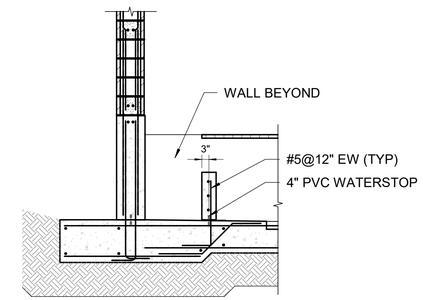

L S-101 SECTION
SCALE: 3/8" = 1'-0"

DATE : 7/27/2026 12:55:09 PM
USER : TN
B:\d0513058\06096S-MD.rvt

NO.	DATE	BY	REVISION

NOTICE
0 ½ 1
IF THIS BAR DOES NOT MEASURE 1" THEN DRAWING IS NOT TO SCALE

SW
DESIGNED
TN
DRAWN
MP
CHECKED

STRUCTURAL REGISTERED PROFESSIONAL ENGINEER 82642PE DIGITALLY SIGNED OREGON JULY 09, 2024 MATTHEW ERICH PERKINS
EXPIRES: 12/31/2026

BID SET

consor
Stantec

South Fork WATER
PURE WATER SINCE 1915

WATER QUALITY SYSTEMS BUILDING

STRUCTURAL

SECTIONS - V

PROJECT NO.: 21-3045 | SCALE: As indicated | DATE: AUGUST 2026

SHEET
S-305

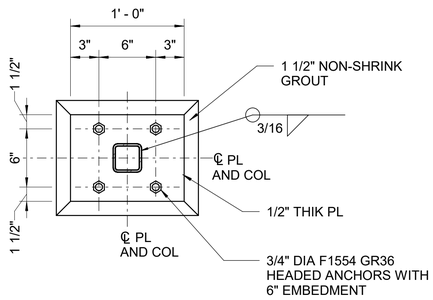

1 S-101 **DETAIL**

SCALE: 1 1/2" = 1'-0"

DATE : 7/27/2026 12:55:56 PM

USER : TN

B:\d0513058\06096S-MD.rvt

NO.	DATE	BY	REVISION

NOTICE

0 ½ 1

IF THIS BAR DOES NOT MEASURE 1" THEN DRAWING IS NOT TO SCALE

SW
DESIGNED
TN
DRAWN
MP
CHECKED

STRUCTURAL REGISTERED PROFESSIONAL ENGINEER 82642PE DIGITALLY SIGNED OREGON JULY 09, 2024 MATTHEW ERICH PERKINS

EXPIRES: 12/31/2026

BID SET

consor

Stantec

South Fork WATER PURE WATER SINCE 1915

WATER QUALITY SYSTEMS BUILDING

STRUCTURAL

DETAILS

PROJECT NO.: 21-3045 | SCALE: 1 1/2" = 1'-0" | DATE: AUGUST 2026

SHEET

S-501

DATE : 7/27/2026 12:56:21 PM

USER : TN

ROOF JOIST NOTES

1. JOIST BRACING AND BRIDGING TO BE DESIGNED AND DETAILED BY JOIST MANUFACTURER.
2. SEE HVAC DRAWINGS FOR ROOF MOUNTED EQUIPMENT. LOADS FROM ROOF MOUNTED EQUIPMENT ARE NOT INCLUDED IN THE LOADS INDICATED ON THE SCHEDULE. JOIST DESIGN SHALL BE COORDINATED BASED ON THE ACTUAL EQUIPMENT WEIGHT AND FIELD LOCATION OF ROOF MOUNTED EQUIPMENT.
3. THE BEND-CHECK AND ADD LOADS INDICATED IN THE JOIST SCHEDULE ARE MINIMUM DESIGN LOADS. THE JOIST DESIGN SHALL INCLUDE LOADS FROM SPRINKLER MAINS AND SWAY BRACES AND ANY OTHER ROOF HUNG LOADS AND THE FINALIZED SEISMIC BRACING DESIGN FOR SUCH LOADS.
4. DEFLECTION CRITERIA:
   i. TOTAL LOAD: L/240
   ii. LIVE LOAD: L/360

JOIST SCHEDULE(2)(4)

JOIST MARK NUMBER	DESIGNATION(1) (TOTAL LOAD/LIVE LOAD)	SEISMIC AXIAL LOAD 1.0E (KIPS)(6)	WIND AXIAL LOAD 1.0W (KIPS)(6)	SNOW LOAD 1.0S (PLF)	DOWNWARD WIND LOAD 1.0W (PLF)	NET WIND UPLIFT LOAD (PLF)(3)	ADD-LOAD (KIPS)	BEND-CHECK LOAD(5)		COMMENTS
								TC (KIPS)	BC (KIPS)	
T1	20-36-20LH 310/200	7	2.3	260	110	SEE FIG	1	0.5	0.5	
T2	12-30-12LH 240/150	1.9	0.9	520	100	SEE FIG	1	0.5	0.5	

(1) 18-60-18LH 250/160 (VALUES NOTED AT LEFT ARE TO DEFINE CALLOUT)
- JOIST LIVE LOAD (PLF)
- JOIST TOTAL LOAD (PLF) (DEAD + LIVE)
- DEPTH AT END
- DEPTH AT RIDGE
- DEPTH AT END

(2) DEFLECTION CRITERIA: LIVE LOAD DEFLECTION ≤ L/240.
(3) NET WIND UPLIFT IS THE RESULT OF THE 0.6D+0.6W LOAD COMBINATION.
(4) SEE FRAMING PLAN FOR ADDITIONAL LOADS TO BE INCLUDED IN JOIST DESIGN, INCLUDING MECHANICAL LOADS.
(5) FOR BEND-CHECK: TC = TOP CHORD, BC = BOTTOM CHORD
(6) TOP CHORD AXIAL LOAD, TENSION OR COMPRESSION LOAD,

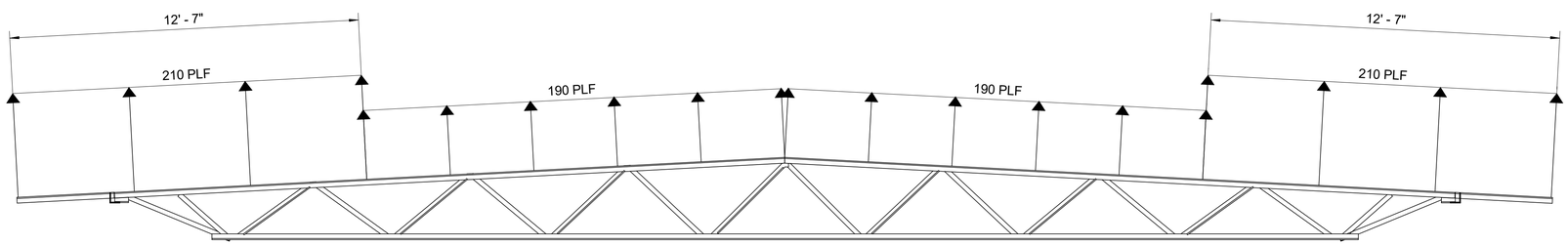

TRUSS JOIST T1 - NET WIND UPLIFT LOAD DIAGRAM
NO SCALE

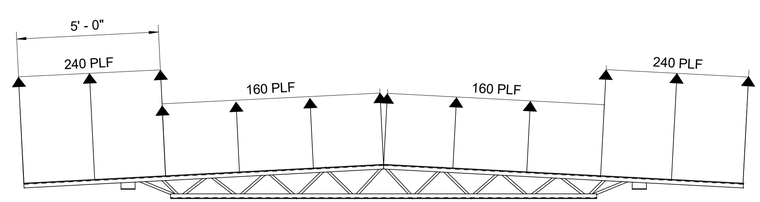

TRUSS JOIST T2 - NET WIND UPLIFT LOAD DIAGRAM
SCALE: 3/8" = 1'-0"

B:\d0513058\06096S-MD.rvt

NO.	DATE	BY	REVISION

NOTICE
0 ½ 1
IF THIS BAR DOES NOT MEASURE 1" THEN DRAWING IS NOT TO SCALE

SW DESIGNED
TN DRAWN
MP CHECKED

STRUCTURAL REGISTERED PROFESSIONAL ENGINEER 82642PE OREGON JULY 08, 2026 DIGITALLY SIGNED MATTHEW ERICH PERKINS
EXPIRES: 12/31/2026

BID SET

consor
Stantec

South Fork WATER PURE WATER SINCE 1915

WATER QUALITY SYSTEMS BUILDING

STRUCTURAL

TRUSS JOIST SCHEDULE

PROJECT NO.: 21-3045 | SCALE: As indicated | DATE: AUGUST 2026

SHEET S-601

DATE : 7/24/2026 4:33:36 PM
USER : EN

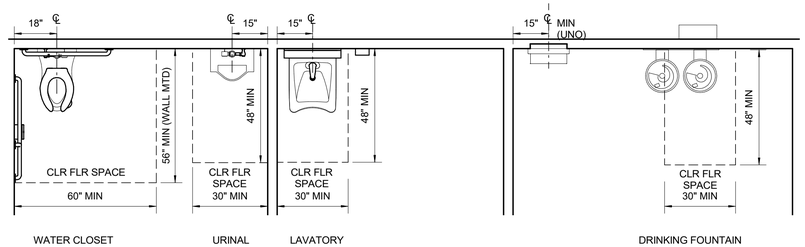

ADA TYPICAL CLEAR FLOOR SPACE - PLAN VIEW

SCALE: 3/8" = 1'-0"

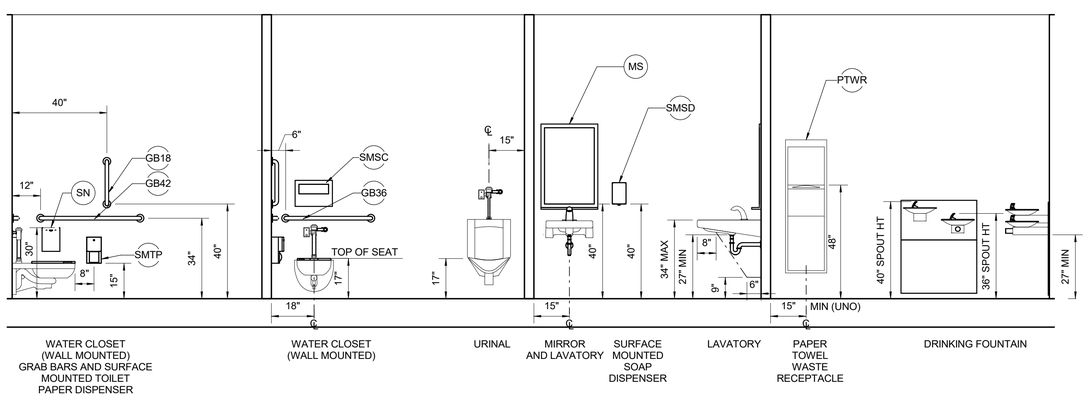

ADA TYPICAL MOUNTING HEIGHTS AND LOCATIONS - ELEVATION VIEW

SCALE: 3/8" = 1'-0"

ARCHITECTURAL SYMBOLS

ROOM NUMBER

AREA DESIGNATION — XX-001 — ROOM NUMBER (01,02,03.....)

0 - LOWER LEVEL / BASEMENT
1 - UPPER LEVEL / 1ST FLOOR
2 - SECOND FLOOR

ACCESSORIES

ACCESSORY ITEM DESIGNATION (REFER TO SPECIFICATIONS FOR ACCESSORIES SCHEDULE — GB36 — LENGTH WHERE APPLICABLE

PARTITION TYPE

PARTITION DESIGNATION — 5A-1

SUFFIX A,B,C, ETC. W/A SEE NOTE ON PARTITION TYPE DESCRIPTION

SUFFIX 0,1,2,3,4 IS FIRE RESISTANCE RATING WHERE INDICATED
NOTE: SEE WALL SECTIONS FOR ADDITIONAL REQUIREMENTS

	MASONRY VENEER (PLAN, SECTION AND DETAIL)		WINDOW (PLAN)
	CONCRETE (PLAN, SECTION AND DETAIL)		LOUVER (PLAN)
	CMU (PLAN, SECTION AND DETAIL)		DOOR (PLAN)
	METAL GRATING (PLAN) RIGID INSULATION (SECTION AND DETAIL)		OVERHEAD COILING DOOR (PLAN)
	EARTH (SECTION AND DETAIL)	● FE	SURFACE MOUNTED FIRE EXTINGUISHER
	ACOUSTICAL CEILING TILES 24 x 24	○ FEC	RECESSED FIRE EXTINGUISHER CABINET
	GYPSUM BOARD CEILING		FAN: EXHAUST/ SUPPLY, SEE HVAC

GENERAL NOTES

1. HEIGHT OF INTERIOR PARTITIONS ARE FROM FLOOR TO UNDERSIDE OF ROOF/FLOOR DECK. (UNLESS OTHERWISE INDICATED)

2. NOT ALL EQUIPMENT IS SHOWN FOR CLARITY. REFER TO APPROPRIATE DISCIPLINE DRAWINGS FOR SPECIFIC EQUIPMENT LAYOUT AND OTHER REQUIREMENTS.

3. DO NOT SCALE FROM THESE ARCHITECTURAL DRAWINGS. DRAWING CONFLICTS SHALL BE BROUGHT TO THE IMMEDIATE ATTENTION OF THE ENGINEER.

4. SEE CIVIL DRAWINGS FOR SIDEWALK AND ROAD PAVING. (UNLESS OTHERWISE INDICATED)

5. SEE STRUCTURAL DRAWINGS FOR SIZE AND LOCATION OF CONCRETE PADS, TRENCHES, VAULTS, SUMPS AND ETC.

6. SEE STRUCTURAL DRAWINGS FOR JOINTS IN CONCRETE FLOOR SLAB.

7. SEE STRUCTURAL DRAWINGS FOR FLOOR AND DECK SLOPES (AS APPLICABLE).

8. SEE STRUCTURAL DRAWINGS FOR CONCRETE AND MASONRY REINFORCEMENT.

9. SEE STRUCTURAL DRAWINGS FOR STAIR MATERIALS, DIMENSIONS, DETAILS, ETC.

10. SEE STRUCTURAL DRAWINGS FOR HANDRAIL AND GUARDRAIL MATERIALS, DIMENSIONS, DETAILS, ETC.

11. MASONRY CONTROL JOINTS SHOWN ON THESE ARCHITECTURAL DRAWINGS REFER TO CONTROL JOINTS IN MASONRY VENEER (UNLESS OTHERWISE INDICATED).

12. STRUCTURAL ITEMS SUCH AS GROUTED / FILLED CELLS, BOND BEAMS, PRECAST LINTELS, AND MASONRY REINFORCEMENT SHOWN ON THESE ARCHITECTURAL DRAWINGS ARE FOR ILLUSTRATIVE PURPOSES ONLY. REFER TO STRUCTURAL DRAWINGS AND MASONRY SPECIFICATIONS FOR SPECIFIC LOCATIONS AND DETAILED REQUIREMENTS.

13. NOT ALL MASONRY JOINT REINFORCEMENT, WALL TIES AND ANCHORS ARE SHOWN ON THESE ARCHITECTURAL DRAWINGS, REFER TO MASONRY SPECIFICATIONS AND STRUCTURAL DRAWINGS FOR ADDITIONAL REQUIREMENTS.

14. PROFILE OF DOOR / WINDOW / LOUVER FRAMES MAY VARY DEPENDING ON MODEL SCHEDULED AND SPECIFIED, GLASS THICKNESS MAY ALSO VARY. SEE SCHEDULES AND SPECIFICATIONS.

15. ALL EXPOSED INTERIOR AND EXTERIOR STRUCTURAL STEEL, JOISTS, STEEL COLUMNS, SECONDARY FRAMING MEMBERS, METAL DECK, STEEL LINTELS, STEEL GUARDRAILS AND HANDRAILS, AND ASSOCIATED CONNECTIONS SHALL BE FIELD PAINTED. (UNLESS OTHERWISE INDICATED).

16. ALL INTERIOR EXPOSED MASONRY SHALL BE FIELD PAINTED (UNLESS OTHERWISE INDICATED).

17. ALL INTERIOR EXPOSED CONCRETE WALLS, COLUMNS, AND BEAMS SHALL BE FIELD PAINTED PER INTERIOR FINISH SCHEDULE (UNLESS OTHERWISE INDICATED).

18. SURFACE APPLIED WATER REPELLANT SHALL BE APPLIED ON MASONRY VENEER.

19. ALL EXPOSED INTERIOR AND EXTERIOR STRUCTURAL STEEL, JOISTS, STEEL COLUMNS, SECONDARY FRAMING MEMBERS, METAL DECK, STEEL LINTELS, STEEL GUARDRAILS AND HANDRAILS, AND ASSOCIATED CONNECTIONS SHALL BE FIELD PAINTED. (UNLESS OTHERWISE INDICATED.

OPENINGS

OPENINGS ARE TYPICALLY LABELED IN PLAN VIEW; OPENINGS NOT SHOWN IN PLAN VIEW ARE LABELED ON ELEVATIONS

OPENING SYMBOLS

DOOR NUMBER

AREA DESIGNATION — D##-###X — ROOM NUMBER

DOOR NUMBER IN SEQUENCE (FOR EACH ADDITIONAL DOOR PER ROOM A,B,C...)

WINDOW NUMBER

AREA DESIGNATION — W##-###X — ROOM NUMBER

WINDOW NUMBER IN SEQUENCE (FOR EACH ADDITIONAL WINDOW PER ROOM A,B,C...)

LOUVER NUMBER

AREA DESIGNATION — L##-###X — ROOM NUMBER

LOUVER NUMBER IN SEQUENCE (FOR EACH ADDITIONAL LOUVER PER ROOM A,B,C...)

MASONRY OPENING DIMENSIONING

PLAN

0" 3'-4" 0"
3/8" + MO + 3/8")

0" MO 0"
(ACTUAL OPENING = 3/8" + MO + 3/8")

ELEVATION

0" MO (ACTUAL OPENING = MO + 3/8") 0"

0" (ACTUAL OPENING = 3/8" + MO + 3/8") MO 0"

STUD WALL OPENING DIMENSIONING

RO

6" TYP OFFSET FROM CL OF STUDWALL (UNO)

NO.	DATE	BY	REVISION

NOTICE
0 ½ 1
IF THIS BAR DOES NOT MEASURE 1" THEN DRAWING IS NOT TO SCALE

EN DESIGNED
EN DRAWN
BR CHECKED

REGISTERED ARCHITECT
PHILIP E. WALZ
DENVER, COLORADO
ARI-15961
STATE OF OREGON
7/29/2026

BID SET

consor
Stantec

South Fork WATER
PURE WATER SINCE 1915

WATER QUALITY SYSTEMS BUILDING

ARCHITECTURAL

NOTES AND SYMBOLS

PROJECT NO.: 21-3045 | SCALE: As indicated | DATE: AUGUST 2026

SHEET
A-001

B:\005130310\0609600A_MOD.rvt

DOOR SCHEDULE

DOOR NO	ROOM NAME	DOOR SIZE		DOOR			FRAME			HARDWARE	DETAILS			FIRE RATING	KEY NOTES
		WIDTH	HEIGHT	TYPE	MATL	FINISH	TYPE	MATL	FINISH		HEAD	JAMB	THRESHOLD		
1ST FLOOR															
101A	MEETING ROOM	3'-0"	7'-10"	HG	HM	PAINT	ST	HM	PAINT	ES	A8101	A8102	A8100		CARD READER
101B	MEETING ROOM	3'-0"	7'-2"	FP	HM	PAINT	ST	HM	PAINT	ISC	A8101	A8102	A9024	-	
101C	MEETING ROOM	3'-0"	7'-2"	FP	HM	PAINT	ST	HM	PAINT	ISC	A8101	A8102	A9024	-	
102A	ENTRY	3'-0"	7'-10"	HG	HM	PAINT	ST	HM	PAINT	ES	A8101	A8102	A8100		CARD READER
103A	UNISEX A	3'-0"	7'-2"	FP	HM	PAINT	ST	HM	PAINT	TR	A8149	A8150	A9023	-	
104A	UNISEX B	3'-0"	7'-2"	FP	HM	PAINT	ST	HM	PAINT	TR	A8149	A8150	A9023	-	
105A	JANITOR	3'-0"	7'-2"	FP	HM	PAINT	ST	HM	PAINT	ISC	A8149	A8150	A9023	-	
106A	KITCHEN	3'-0"	7'-2"	FP	HM	PAINT	ST	HM	PAINT	ISC	A8149	A8150	A9024	-	
107A	CHEMICAL ROOM	3'-0"	7'-10"	FP	HM	PAINT	ST	HM	PAINT	ES	A8105	A8106	A8100	-	CARD READER
107B	CHEMICAL ROOM	12'-0"	14'-0"	OCD	STL	PAINT	-	STL	PAINT	-	A8301	A8301	A8301	-	
107C	CHEMICAL ROOM	3'-0"	7'-10"	NG	HM	PAINT	ST	HM	PAINT	ES	A8101	A8102	A8100		CARD READER
107D	CHEMICAL ROOM	3'-0"	7'-10"	FP	HM	PAINT	ST	HM	PAINT	ISC	A8101	A8102	A8100	-	
108A	ELECTRICAL ROOM	3'-0"	7'-10"	FP	HM	PAINT	ST	HM	PAINT	ES	A8105	A8106	A8100	-	CARD READER
108B	ELECTRICAL ROOM	3'-0"	7'-10"	FP	HM	PAINT	ST	HM	PAINT	ISE	A8101	A8102	A8100	-	
109A	MECHANICAL ROOM	10'-0"	10'-0"	OCD	STL	PAINT	-	STL	PAINT	-	A8301	A8301	A8301	-	
109B	MECHANICAL ROOM	3'-0"	7'-10"	FP	HM	PAINT	ST	HM	PAINT	ES	A8101	A8102	A8100	-	CARD READER
2ND FLOOR															
201A	STORAGE	3'-0"	7'-10"	FP	HM	PAINT	ST	HM	PAINT	ISE	A8101	A8102	A8100	-	CARD READER

WINDOW SCHEDULE

WINDOW NO	ROOM NAME	ROUGH OPENING		TYPE	FRAME		DETAILS			GLASS TYPE
		WIDTH	HEIGHT	(ELEV)	MATL	FINISH	HEAD	JAMB	SILL	
1ST FLOOR										
W1	MEETING ROOM	6'-0"	4'-0"	QPG	ALUM	SPEC	A8501	A8502	A8503	
W2	MEETING ROOM	6'-0"	4'-0"	QPG	ALUM	SPEC	A8507	A8508	A8509	
2ND FLOOR										
W3	STORAGE	6'-0"	4'-0"	QPG	ALUM	SPEC	A8501	A8502	A8503	
W4	STORAGE	6'-0"	4'-0"	QPG	ALUM	SPEC	A8501	A8502	A8503	
W5	STORAGE	6'-0"	4'-0"	QPG	ALUM	SPEC	A8507	A8508	A8509	
W6	CHEMICAL ROOM	6'-0"	4'-0"	QPG	ALUM	SPEC	A8507	A8508	A8509	
W7	CHEMICAL ROOM	6'-0"	4'-0"	QPG	ALUM	SPEC	A8507	A8508	A8509	

WINDOW TYPES

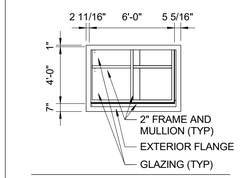

QPG
QUAD PANEL GLASS

DOOR SCHEDULE KEY NOTES

1. SEE SPECIFICATION 09 96 00 FOR FINISH SYSTEM.
2. SEE SPECIFICATION 08 71 00 FOR HARDWARE SYSTEM.

GENERAL DOOR SCHEDULE NOTES

x2 = PAIR OF EQUAL DOORS

EXTERIOR DOORS SHALL BE PROVIDED WITH WEATHER SEALS

LOUVER SCHEDULE

MARK	ROOM NAME	TYPE & SIZE (L X W) INCHES	MATERIAL	HEAD	JAMB	SILL	COMMENTS
1	UNISEX A	FIXED 16" x 16"	ALUM	A8901	A8902	A8903	
2	KITCHEN	FIXED 16" x 16"	ALUM	A8901	A8902	A8903	
3	KITCHEN	FIXED 16" x 16"	ALUM	A8901	A8902	A8903	
4	CHEMICAL	FIXED 24" x 24"	ALUM	A8901	A8908	A8909	
5	CHEMICAL	FIXED 24" x 24"	ALUM	A8901	A8908	A8909	
6	MECHANICAL	ACOUSTICAL 32" x 32"	ALUM	A8904	A8905	A8906	
7	CHEMICAL	FIXED 24" x 24"	ALUM	A8907	A8908	A8909	
8	MEETING ROOM	FIXED 16" x 16"	ALUM	A8901	A8902	A8903	
9	STORAGE	FIXED 16" x 16"	ALUM	A8901	A8902	A8903	

DOOR TYPES

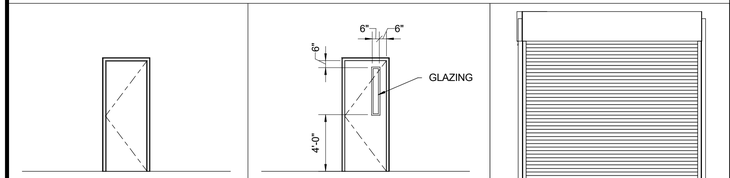

FP
FLUSH PANEL

NG
NARROW GLASS

OCD
OVERHEAD COILING DOOR

FRAME TYPES

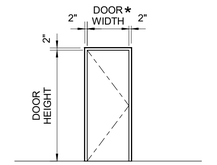

*DOOR TYPE x2 = PAIR OF EQUAL DOORS

ST
STANDARD

INTERIOR FINISH SCHEDULE

ROOM NO	ROOM NAME	FLOOR	BASE		WALLS	CEILING	CEILING HEIGHT	KEY NOTES
			MAT	DETAIL				
1ST FLOOR								
101	MEETING ROOM	CARPET	RESILIENT	C	CMU - PAINT	ACOUSTICAL TILE	8'-0"	
102	ENTRY	VCT	RESILIENT	B	CMU - PAINT	ACOUSTICAL TILE	8'-0"	
103	UNISEX A	CERAMIC TILE	CERAMIC TILE	A	CERAMIC TILE - WAINSCOT 4'-0"	GYPSUM BOARD	8'-0"	
104	UNISEX B	CERAMIC TILE	CERAMIC TILE	A	CERAMIC TILE - WAINSCOT 4'-0"	GYPSUM BOARD	8'-0"	
105	JANITOR	CERAMIC TILE	CERAMIC TILE	A	CERAMIC TILE - WAINSCOT 4'-0"	GYPSUM BOARD	8'-0"	
106	KITCHEN	VCT	RESILIENT	B	GYPSUM BOARD/ CMU - PAINT	ACOUSTICAL TILE	8'-0"	
107	CHEMICAL ROOM	CONCRETE - PAINT	CONCRETE	D	CMU - PAINT	OPEN CONSTRUCTION - PAINT	19'-10 15/32"	*CEILING HEIGHT VARIES
108	ELECTRICAL ROOM	CONCRETE	CONCRETE	D	CMU - PAINT	OPEN CONSTRUCTION - PAINT	9'-0 7/64"	*CEILING HEIGHT VARIES
109	MECHANICAL ROOM	CONCRETE	CONCRETE	D	CMU - PAINT	OPEN CONSTRUCTION - PAINT	9'-4 19/32"	*CEILING HEIGHT VARIES
2ND FLOOR								
201	STORAGE	VCT	RESILIENT	B	CMU - PAINT	OPEN CONSTRUCTION - PAINT	10'-0 55/64"	

INTERIOR FINISH SCHEDULE KEY NOTES

1. SEE SPECIFICATION 09 96 00 FOR FINISH SYSTEM.
2.

GENERAL INTERIOR FINISH SCHEDULE NOTES

1.
2.

BASE AND FLOOR FINISH DETAILS

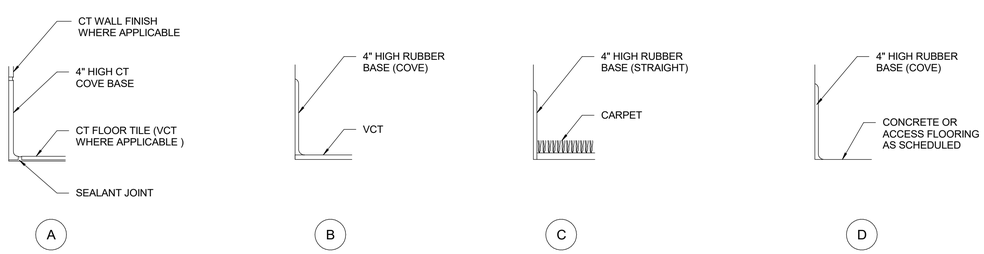

DATE : 7/24/2026 4:33:37 PM

USER : EN

B:\d051303\0609600A_MOD.rvt

NO.	DATE	BY	REVISION

NOTICE
0 ½ 1
IF THIS BAR DOES NOT MEASURE 1" THEN DRAWING IS NOT TO SCALE

EN DESIGNED
EN DRAWN
BR CHECKED

REGISTERED ARCHITECT
PHILIP E. WALZ
DENVER, COLORADO
ARI-15961
STATE OF OREGON
7/29/2026

BID SET

consor
Stantec

South Fork WATER
PURE WATER SINCE 1915

WATER QUALITY SYSTEMS BUILDING

ARCHITECTURAL

SCHEDULES

PROJECT NO.: 21-3045 | SCALE: As indicated | DATE: AUGUST 2026

SHEET
A-002

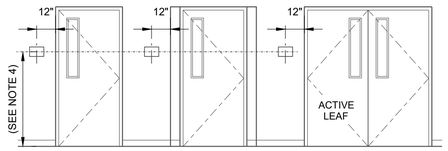

NOTES:

1. ALL PERMANENT SIGNAGE ON THE ACCESSIBLE ROUTE SHALL MEET IBC AND ADA REQUIREMENTS.
2. FOR SIGN QUANTITIES AND TEXT SEE IDENTIFYING DEVICES SPECIFICATION.
3. LOCATE SIGNS AT LATCH SIDE OF DOOR. WHERE NO WALL SPACE EXISTS AT ADJACENT TO THE DOOR, PLACE SIGNS ON NEAREST ADJACENT WALL.
4. 60" (MAX) TO BOTTOM OF HIGHEST TEXT
   48" (MIN) TO BOTTOM OF LOWEST TEXT

A1001 INTERIOR ROOM SIGNAGE LOCATION

REV 010119

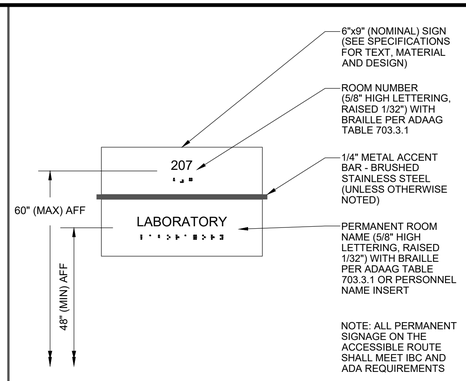

A1002 INTERIOR ROOM SIGNAGE

REV 010119

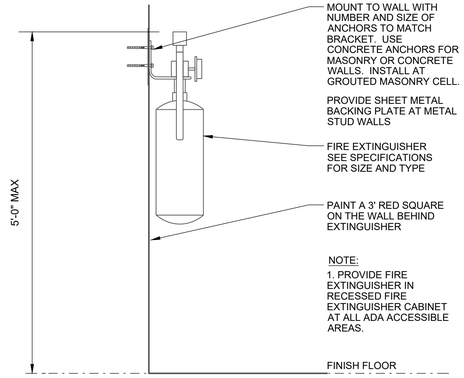

A1041 FIRE EXTINGUISHER

REV 010119

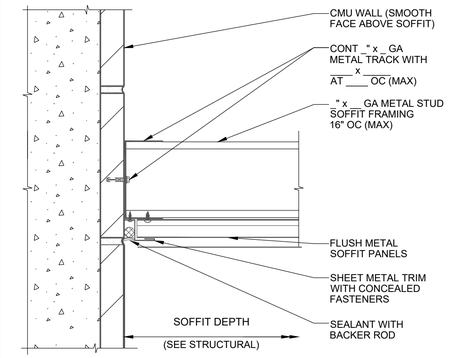

A7021 METAL SOFFIT AT CMU WALL

REV 010119

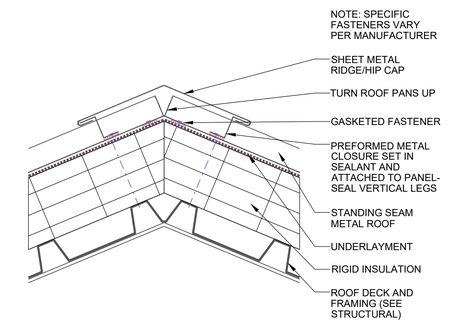

A7620 STANDING SEAM METAL ROOF RIDGE

REV 010119

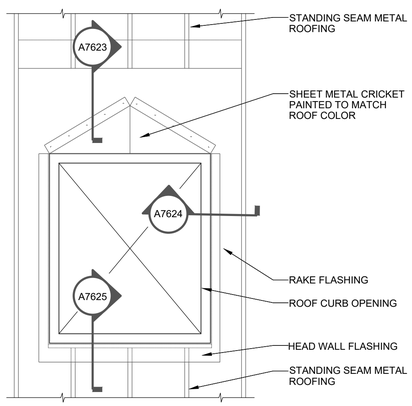

A7622 STANDING SEAM METAL ROOF CURB

REV 010119

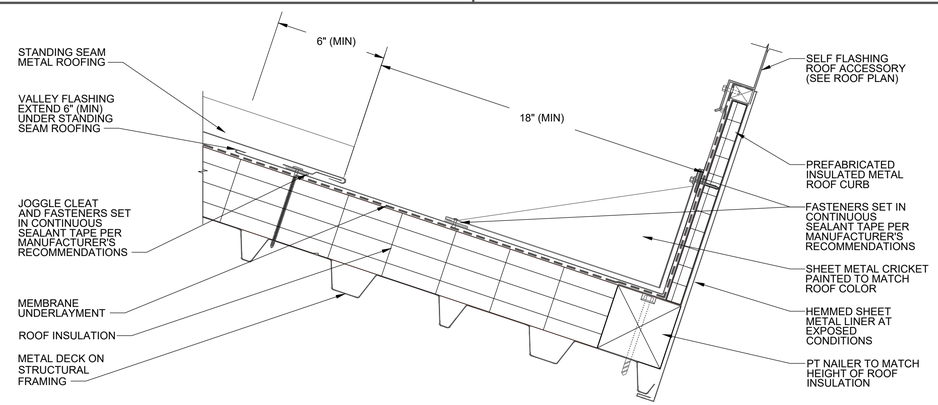

A7623 METAL ROOF CURB CRICKET

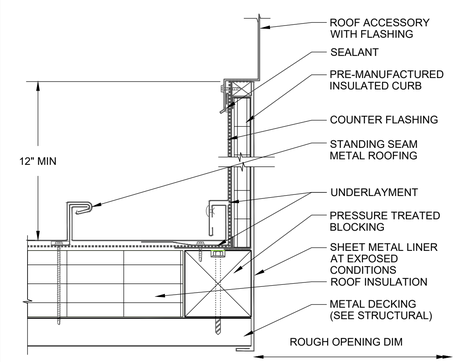

A7624 METAL ROOF CURB RAKE

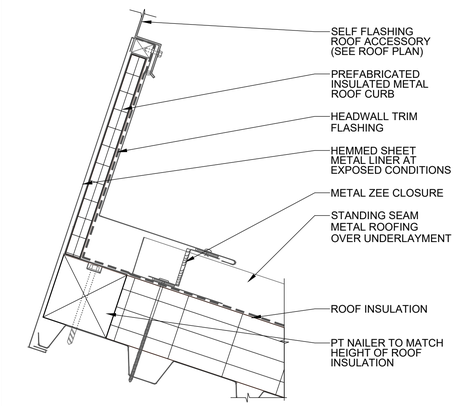

A7625 METAL ROOF CURB HEAD FLASHING

NO.	DATE	BY	REVISION

NOTICE
0 ½ 1
IF THIS BAR DOES NOT MEASURE 1" THEN DRAWING IS NOT TO SCALE

EN DESIGNED
EN DRAWN
BR CHECKED

REGISTERED ARCHITECT
PHILIP E. WALZ
DENVER, COLORADO
ARI-15961
STATE OF OREGON
7/29/2026

BID SET

consor
Stantec

South Fork WATER
PURE WATER SINCE 1915

WATER QUALITY SYSTEMS BUILDING

ARCHITECTURAL

STANDARD DETAILS - I

PROJECT NO.: 21-3035 | SCALE: NONE | DATE: AUGUST 2026

SHEET
A-003

C:\pwworkdir\d0513029\0609600A_503.dwg SHT NO 7/24/2026 4:32 PM ELNAVARRO 25.0s (LMS Tech)

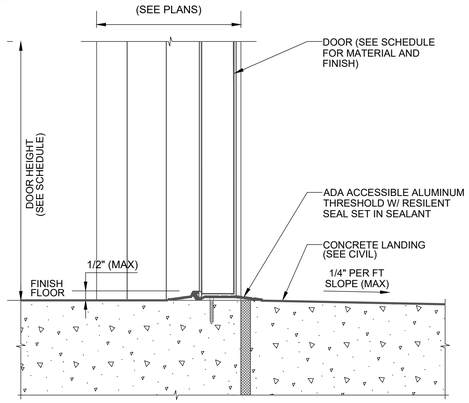

A8100 DOOR THRESHOLD
REV 010119

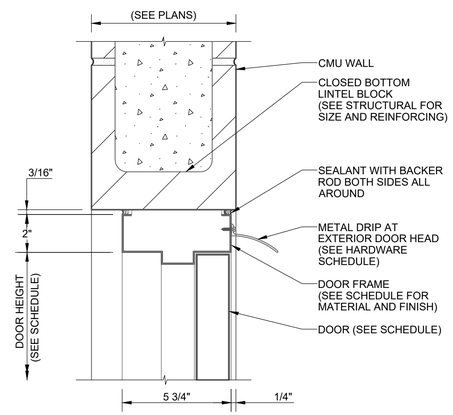

A8101 DOOR HEAD AT CMU WALL
REV 01019

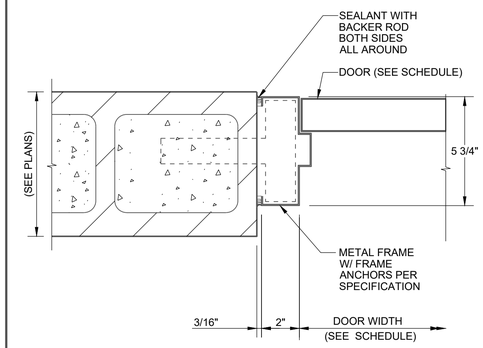

A8102 DOOR JAMB AT CMU WALL
REV 010119

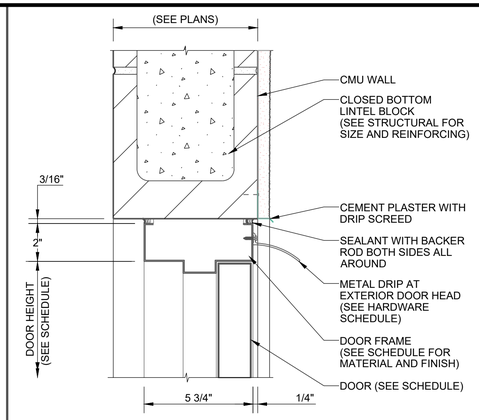

A8105 DOOR HEAD AT CMU WALL W/ PLASTER
REV 010119

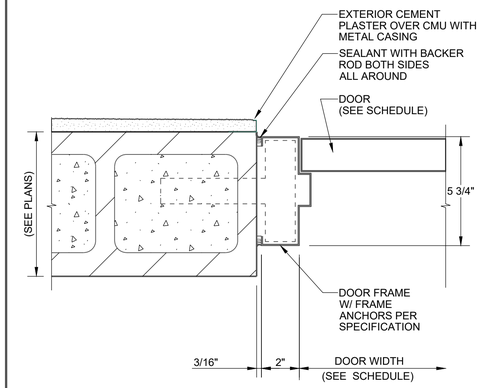

A8106 DOOR JAMB AT CMU WALL W/ PLASTER
REV 010119

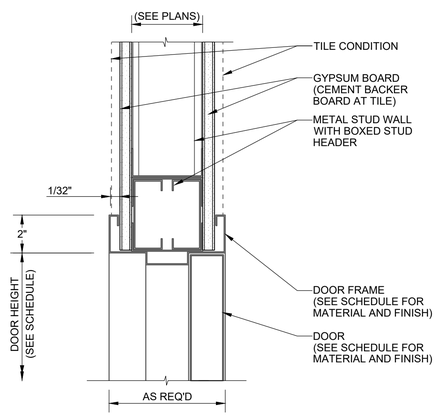

A8149 DOOR HEAD AT GYPSUM BOARD WALL
REV 010119

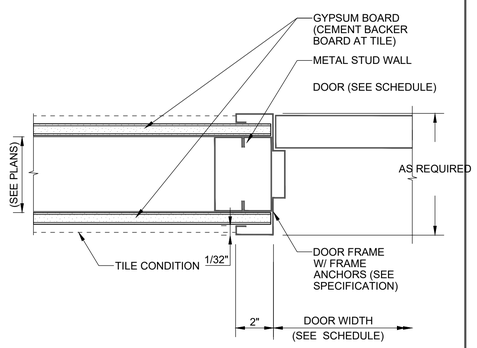

A8150 DOOR JAMB AT GYPSUM BOARD WALL
REV 010119

NO.	DATE	BY	REVISION

NOTICE
0 ½ 1
IF THIS BAR DOES NOT MEASURE 1" THEN DRAWING IS NOT TO SCALE

EN DESIGNED
EN DRAWN
BR CHECKED

REGISTERED ARCHITECT
PHILIP E. WALZ
DENVER, COLORADO
ARI-15961
STATE OF OREGON
7/29/2026

BID SET

consor
Stantec

South Fork WATER
PURE WATER SINCE 1915

WATER QUALITY SYSTEMS BUILDING

ARCHITECTURAL

STANDARD DETAILS - II

PROJECT NO.: 21-3045 | SCALE: NONE | DATE: AUGUST 2026

SHEET
A-004

C:\pwworkdir\d0513029\0609600A_504.dwg SHT NO 7/24/2026 4:39 PM ELNAVARRO 25.0s (LMS Tech)

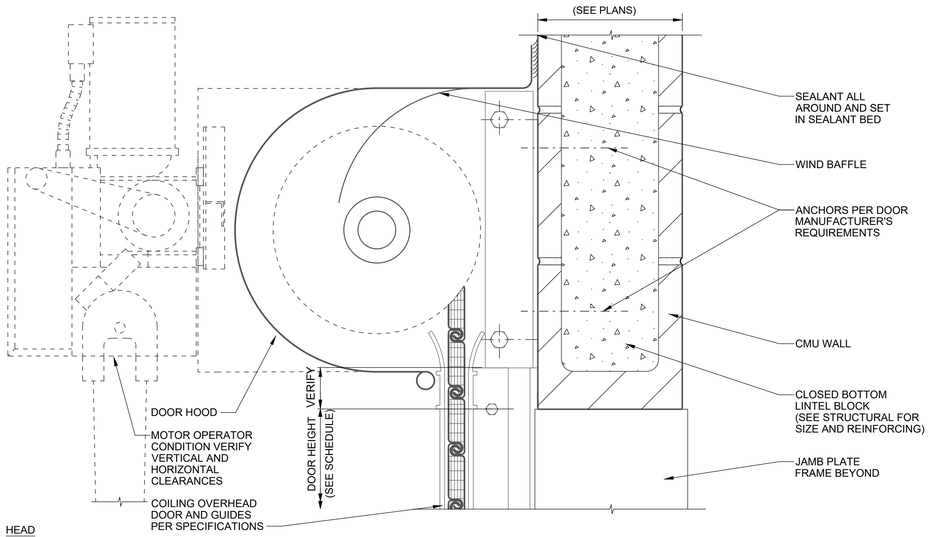

HEAD

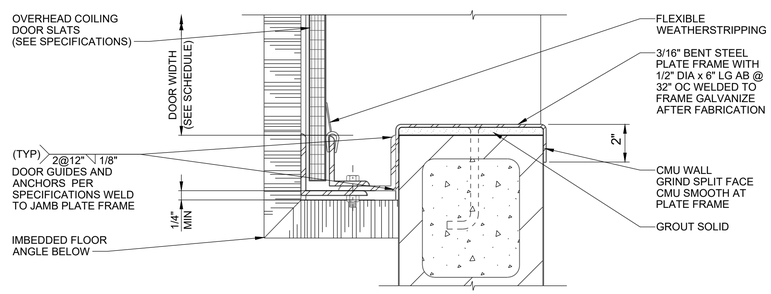

JAMB

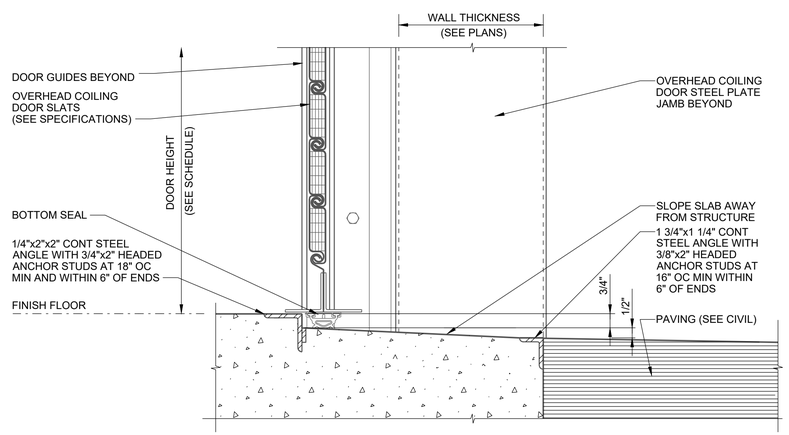

THRESHOLD

A8301 OVERHEAD COILING DOOR AT CMU WALL
REV 010119

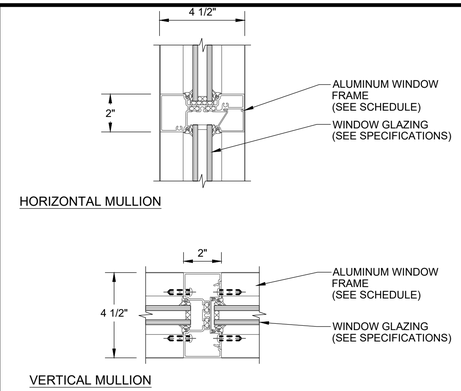

A8500 ALUMINUM WINDOW MULLION
REV 010119

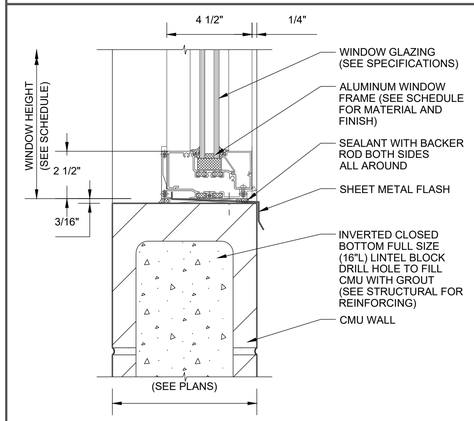

A8503 ALUM WINDOW SILL AT CMU WALL
REV 010119

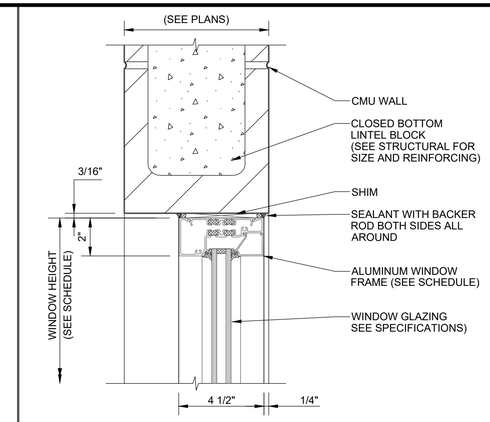

A8501 ALUM WINDOW HEAD AT CMU WALL
REV 010119

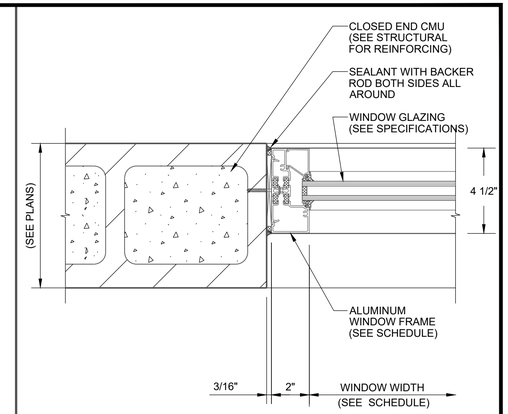

A8502 ALUM WINDOW JAMB AT CMU WALL
REV 010119

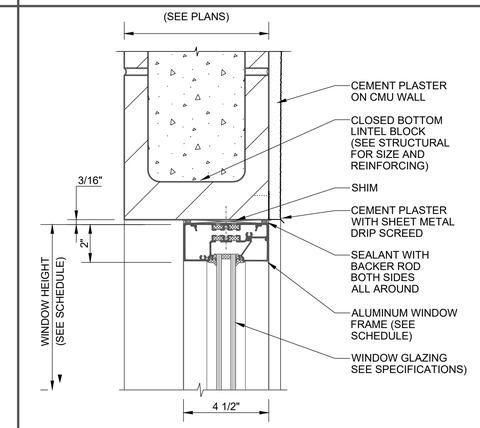

A8507 ALUM WINDOW HEAD AT CMU WALL W/ PLASTER
REV 010119

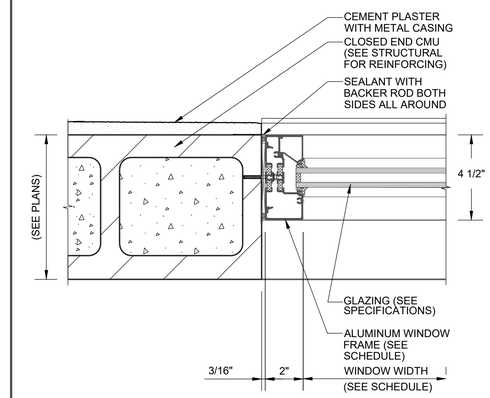

A8508 ALUM WINDOW JAMB AT CMU WALL W/ PLASTER
REV 010119

NO.	DATE	BY	REVISION

NOTICE
0 ½ 1
IF THIS BAR DOES NOT MEASURE 1" THEN DRAWING IS NOT TO SCALE

EN DESIGNED
EN DRAWN
BR CHECKED

REGISTERED ARCHITECT PHILIP E. WALZ DENVER, COLORADO ARI-15961 STATE OF OREGON
7/29/2026

BID SET

consor
Stantec

South Fork WATER PURE WATER SINCE 1915
WATER QUALITY SYSTEMS BUILDING

ARCHITECTURAL
STANDARD DETAILS - III

PROJECT NO.: 21-3045 | SCALE: NONE | DATE: AUGUST 2026

SHEET A-005

C:\pwworkdir\d0513029\0609600A_505.dwg SHT NO 7/24/2026 4:35 PM ELNAVARRO 25.0s (LMS Tech)

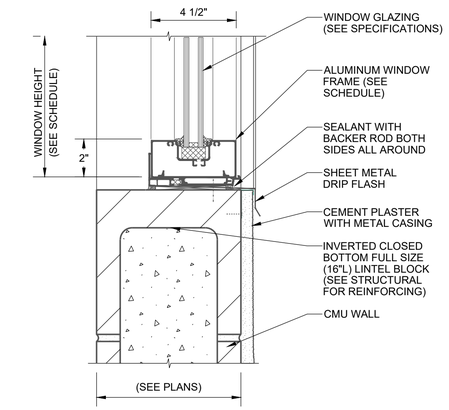

A8509 ALUM WINDOW SILL AT CMU WALL W/ PLASTER
REV 010119

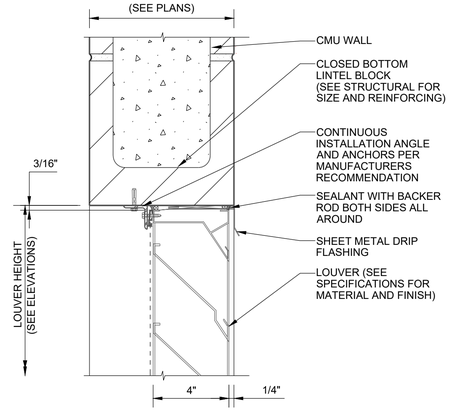

A8901 LOUVER HEAD AT CMU WALL
REV 010119

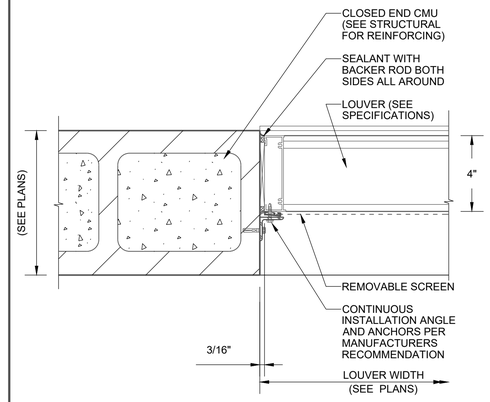

A8902 LOUVER JAMB AT CMU WALL
REV 010119

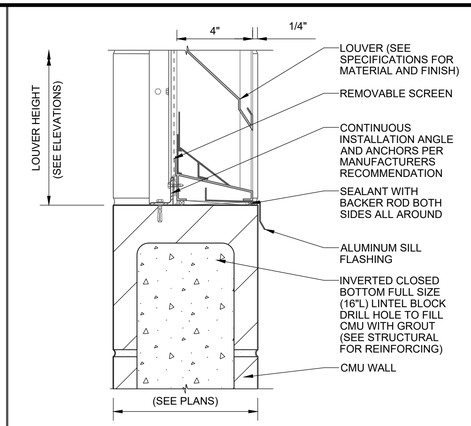

A8903 LOUVER SILL AT CMU WALL
REV 010119

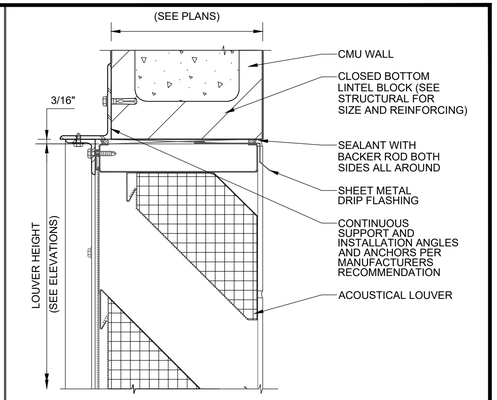

A8904 ACOUSTICAL LOUVER HEAD AT CMU WALL
REV 010119

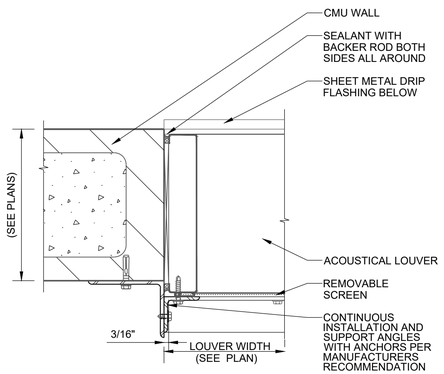

A8905 ACOUSTICAL LOUVER JAMB AT CMU WALL
REV 010119

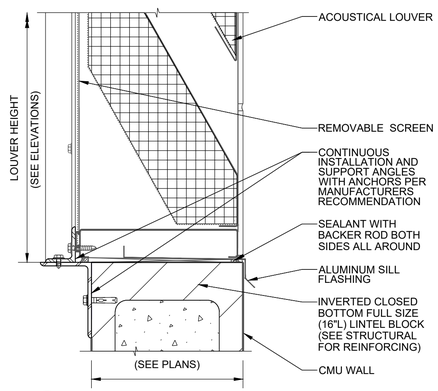

A8906 ACOUSTICAL LOUVER SILL AT CMU WALL
REV 010119

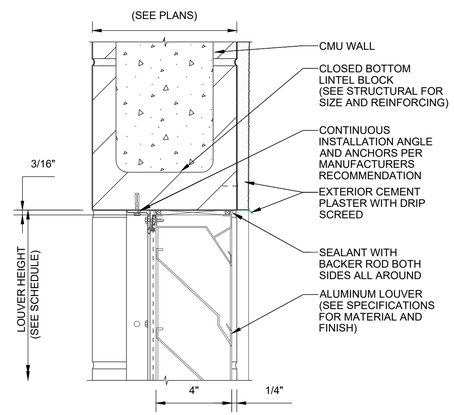

A8907 LOUVER HEAD AT CMU WALL W/ PLASTER
REV 010119

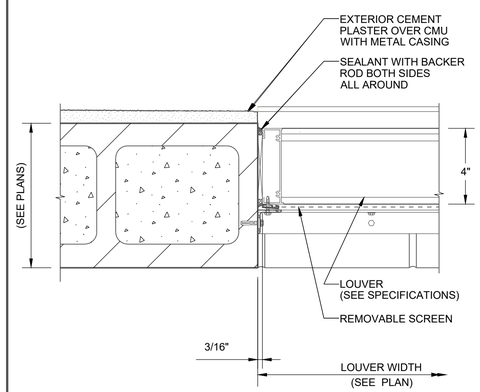

A8908 LOUVER JAMB AT CMU WALL W/ PLASTER
REV 010119

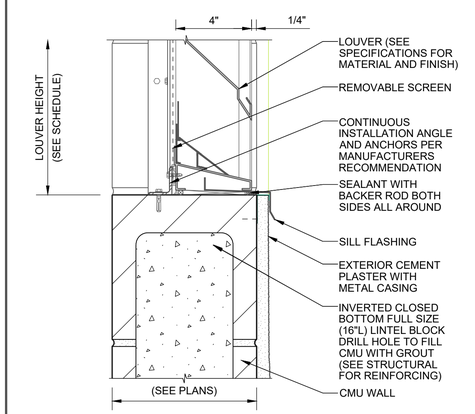

A8909 LOUVER SILL AT CMU W/ PLASTER
REV 010119

NO.	DATE	BY	REVISION

NOTICE
0 ½ 1
IF THIS BAR DOES NOT MEASURE 1" THEN DRAWING IS NOT TO SCALE

EN DESIGNED
EN DRAWN
BR CHECKED

REGISTERED ARCHITECT PHILIP E. WALL DENVER, COLORADO ARI-15961 STATE OF OREGON
7/29/2026

BID SET

consor
Stantec

South Fork WATER PURE WATER SINCE 1915

WATER QUALITY SYSTEMS BUILDING

ARCHITECTURAL

STANDARD DETAILS - IV

PROJECT NO.: 21-3045 | SCALE: NONE | DATE: AUGUST 2026

SHEET A-006

C:\pwworkdir\d0513029\0609600A_506.dwg SHT NO 7/24/2026 4:40 PM ELNAVARRO 25.0s (LMS Tech)

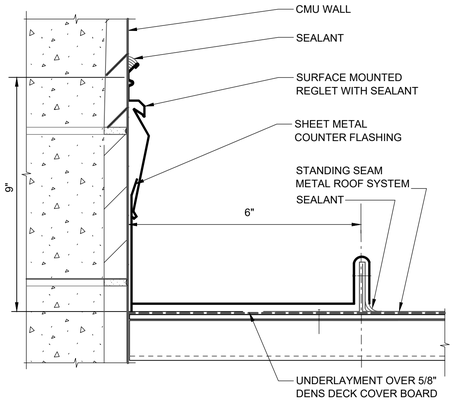

A9001 ROOF FLASHING AT RAKE

COMPRESSION PIPE STRUT SIZE SCHEDULE (BASED ON L/R<200)	
SIZE	MAXIMUM HEIGHT
1/2" X 22 GA	3'-0"
3/4" X 22 GA	4'-0"
1" X 20 GA	6'-0"
1 1/4" X 20 GA	7'-0"
1 1/2" X 20 GA	8'-6"
2" X 20 GA	1 1'-6"
2 1/2" X 18 GA	14'-6"
3" X 16 GA	17'-3"
3 1/2" X 16 GA	23'-3"

A9002 SEISMIC STRUT REQUIREMENTS

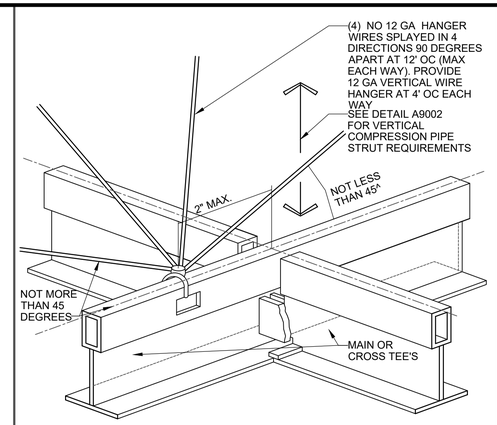

A9003 ACOUSTICAL CEILING BRACING

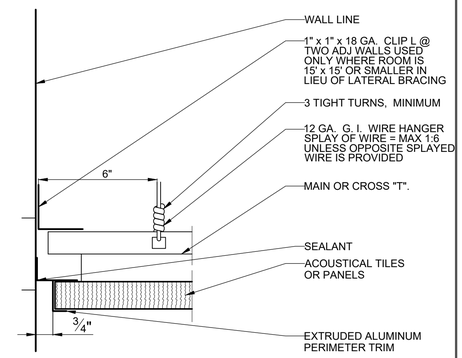

A9004 CEILING DETAIL AT WALL

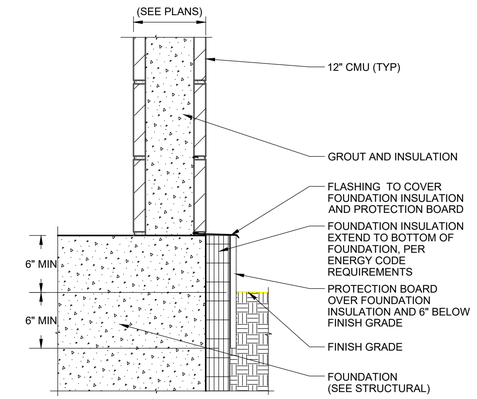

A9005 WALL SECTION AT CMU

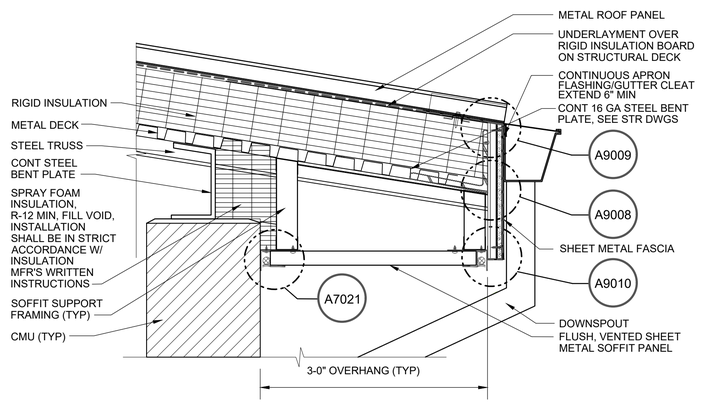

A9006 ROOF EAVE AT CAVITY WALL

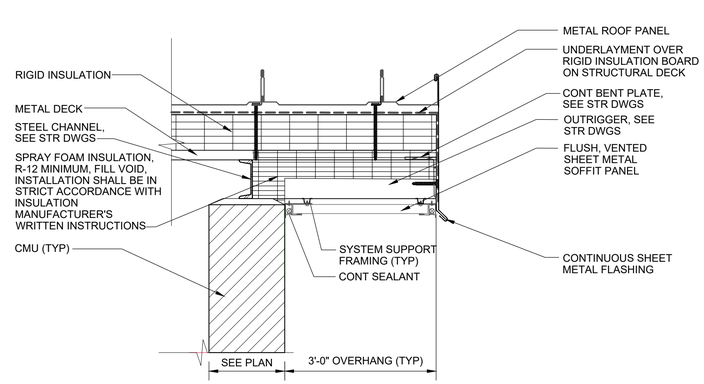

A9007 ROOF GABLE AT CAVITY WALL

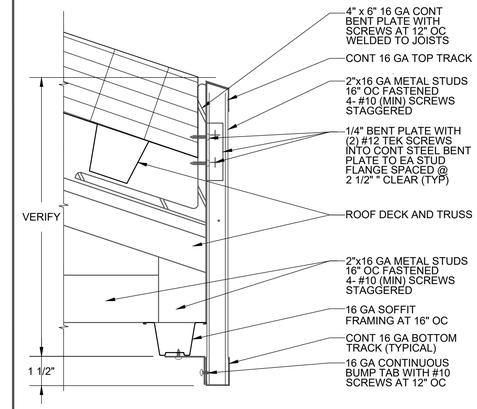

A9008 FASCIA FRAMING

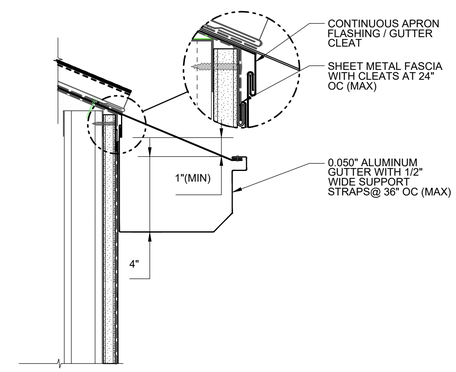

A9009 FASCIA FRAMING @ GUTTER

NO.	DATE	BY	REVISION

NOTICE
0 ½ 1
IF THIS BAR DOES NOT MEASURE 1" THEN DRAWING IS NOT TO SCALE

EN DESIGNED
EN DRAWN
BR CHECKED

REGISTERED ARCHITECT PHILIP E. WALZ DENVER, COLORADO ARI-15961 STATE OF OREGON 7/29/2026

Xref...\OR_DF_Q8.dwg

BID SET

consor
Stantec

South Fork WATER PURE WATER SINCE 1915

WATER QUALITY SYSTEMS BUILDING

ARCHITECTURAL

STANDARD DETAILS - V

PROJECT NO.: 21-3045 | SCALE: NONE | DATE: AUGUST 2026

SHEET A-007

C:\pwworkdir\d0513029\0609600A_507.dwg SHT NO 7/24/2026 4:40 PM ELNAVARRO 25.0s (LMS Tech)

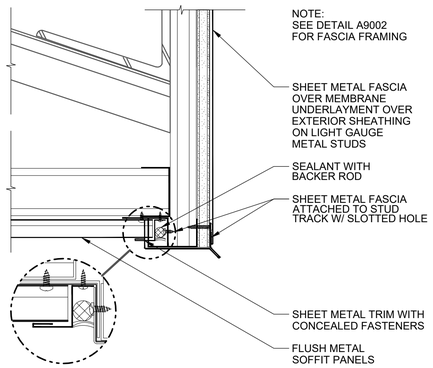

A9010 FASCIA FRAMING @ SOFFIT

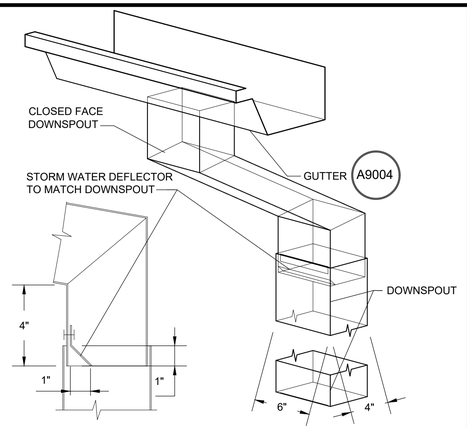

A9011 DOWNSPOUT

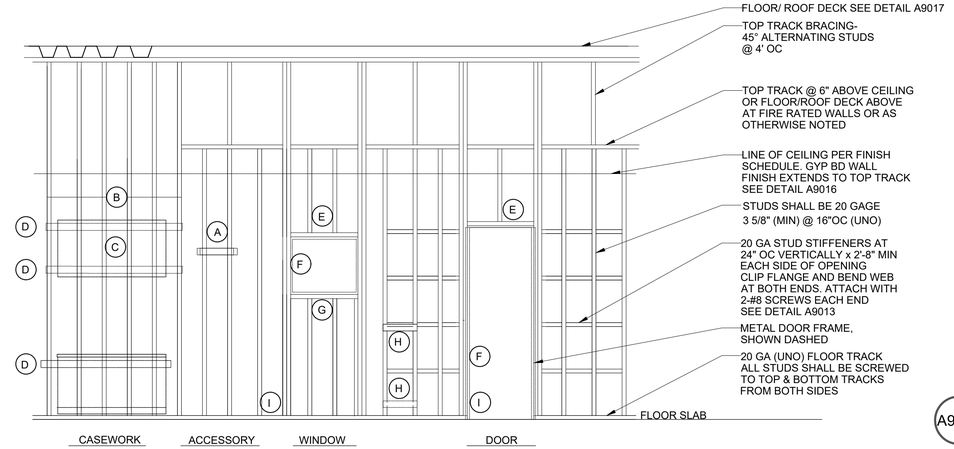

A ACCESSORY BACKING PLATE SEE DETAIL A9014

B 16 GA STUDS TO STRUCTURE BEHIND ALL WALL HUNG CASEWORK AND ONE STUD PAST EACH END FOR BACKING PLATE ATTACHMENT

C WALL CABINETS PER ELEVATIONS SHOWN DASHED

D CABINET BACKING PLATES SHOWN DASHED

E FRAMING @ DOOR & WINDOW HEAD OPENING:
3'-6" OR LESS-16GA x 1 1/4" TRACKS
3'-8" TO 8'-0" MAX-DBL 16 GA x 1 1/4" TRACKS

F FRAMING @ DOOR & WINDOW JAMBS: 2- 16 GA STUDS TO STRUCTURE ABOVE SCREW THROUGH GYPSUM BOARD TO EACH STUD AT 16" OC VERTICALLY EACH SIDE

G 16 GA TRACK @ WINDOW SILL

H BACKING PLATE FOR WALL STOPS WHEN SPECIFIED.

I ANCHOR DOUBLE STUDS TO FLOOR TRACK WITH 2-#8 SHEET METAL SCREWS TO EACH STUD TYPICAL

J EQUIPMENT BRACING SEE DETAIL A9015

A9012 INTERIOR WALL FRAMING

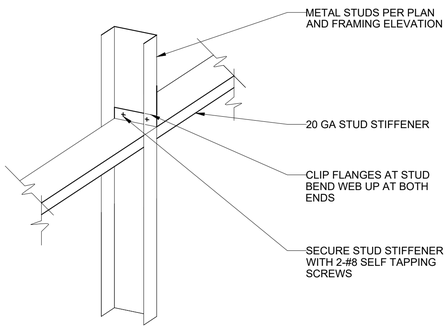

A9013 STUD STIFFENER

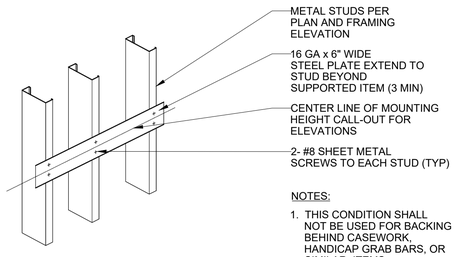

NOTES:

1. THIS CONDITION SHALL NOT BE USED FOR BACKING BEHIND CASEWORK, HANDICAP GRAB BARS, OR SIMILAR ITEMS.
2. TO BE USED FOR ACCESSORIES WEIGHING LESS THAN 25 LBS.
3. MORE THAN ONE BACKER PLATE MAY BE REQUIRED PER ACCESSORY. VERIFY MANUFACTURER'S MOUNTING REQUIREMENTS.

A9014 ACCESSORY BACKER PLATE

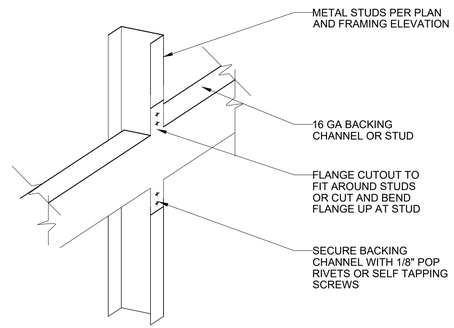

A9015 EQUIPMENT BRACING

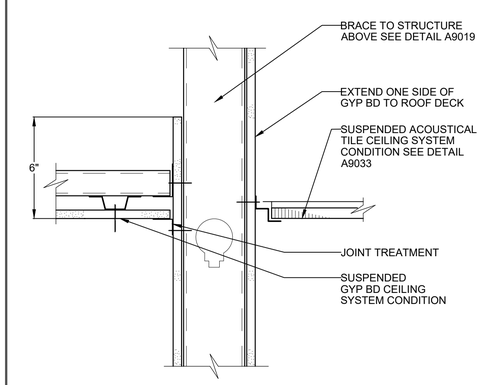

A9016 METAL FRAMING

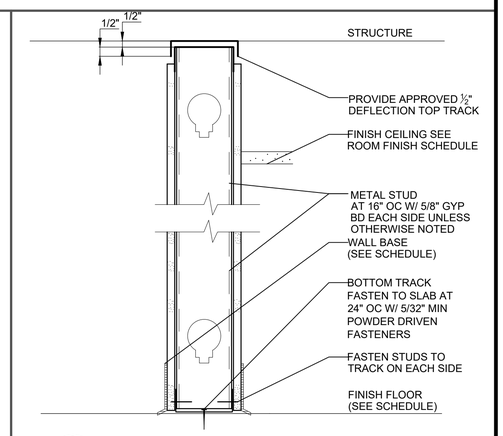

A9017 METAL STUD PARTITION

NO.	DATE	BY	REVISION

NOTICE
0 ½ 1
IF THIS BAR DOES NOT MEASURE 1" THEN DRAWING IS NOT TO SCALE

EN DESIGNED
EN DRAWN
BR CHECKED

REGISTERED ARCHITECT
PHILIP E. WALL
DENVER, COLORADO
ARI-15961
STATE OF OREGON
7/29/2026

BID SET

consor
Stantec

South Fork WATER
PURE WATER SINCE 1915

WATER QUALITY SYSTEMS BUILDING

ARCHITECTURAL

STANDARD DETAILS - VI

PROJECT NO.: 21-3045 | SCALE: NONE | DATE: AUGUST 2026

SHEET
A-008

C:\pwworkdir\d0513029\0609600A_508.dwg SHT NO 7/24/2026 4:43 PM ELNAVARRO 25.0s (LMS Tech)

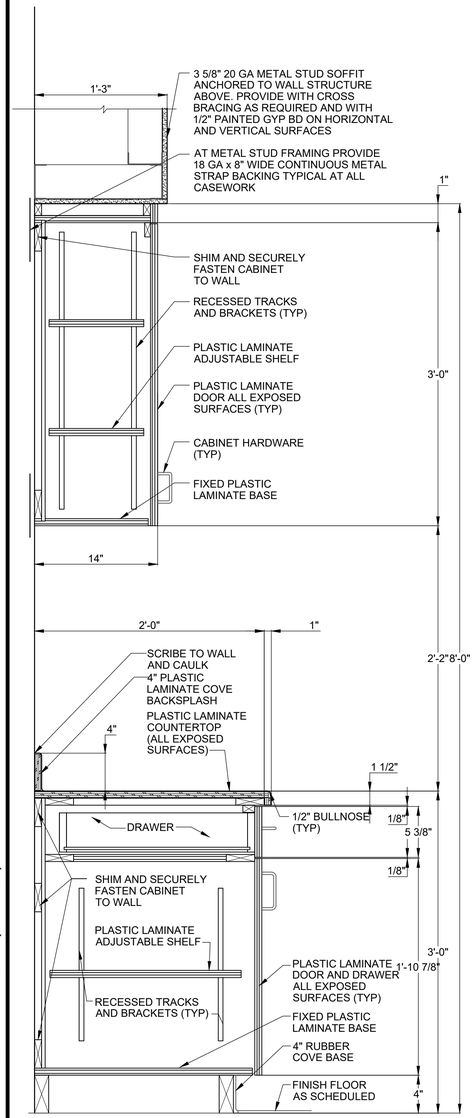

A9018 CABINET SECTION

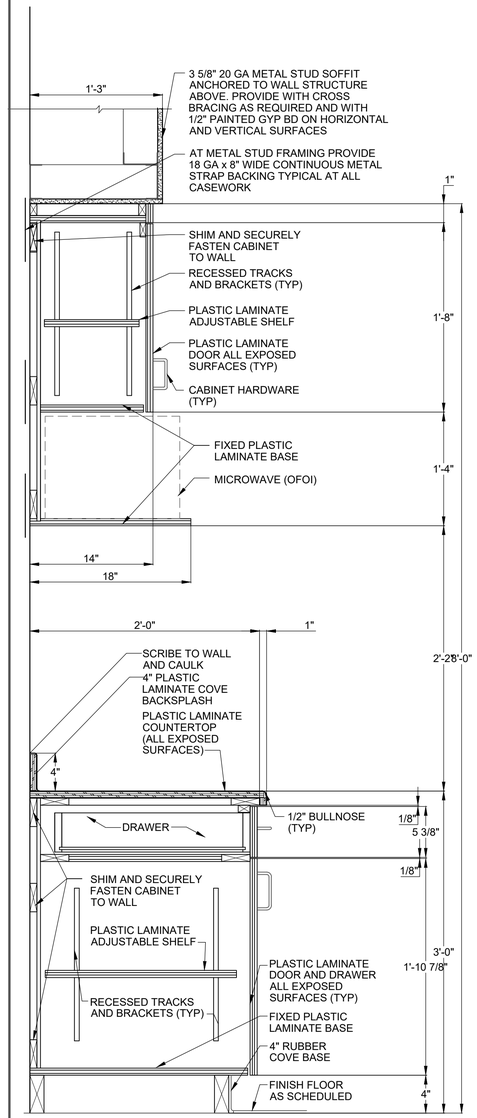

A9019 CABINET WITH MICROWAVE

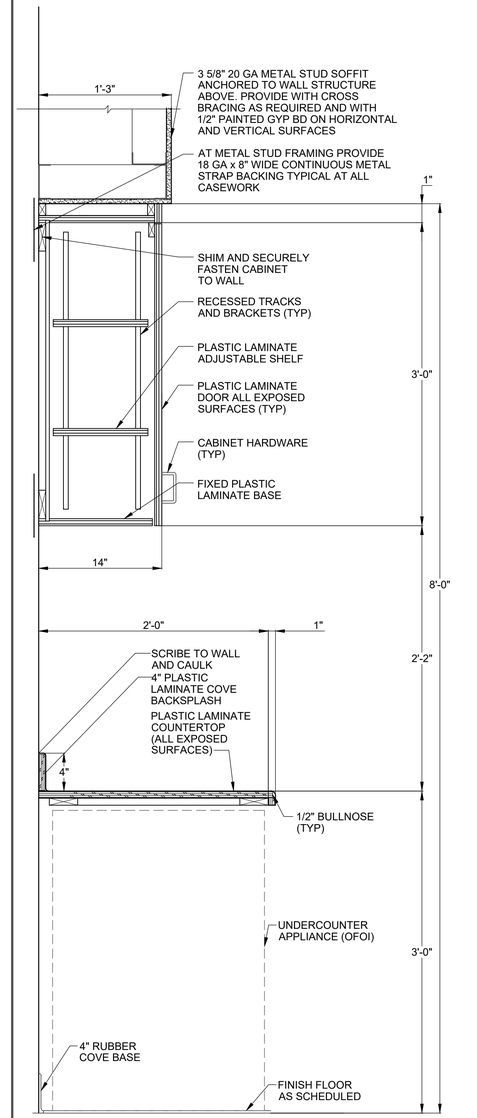

A9020 OPEN DESK

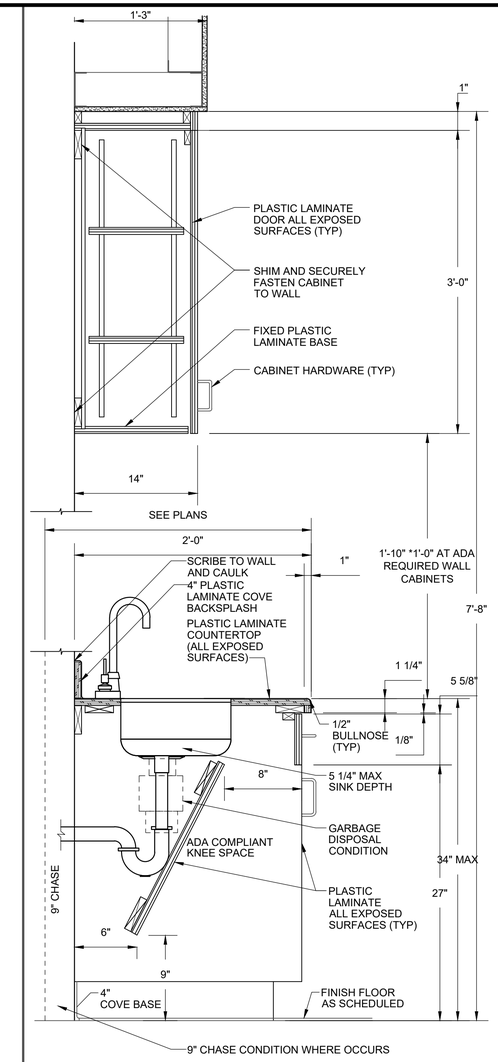

A9021 CABINETS SECTION

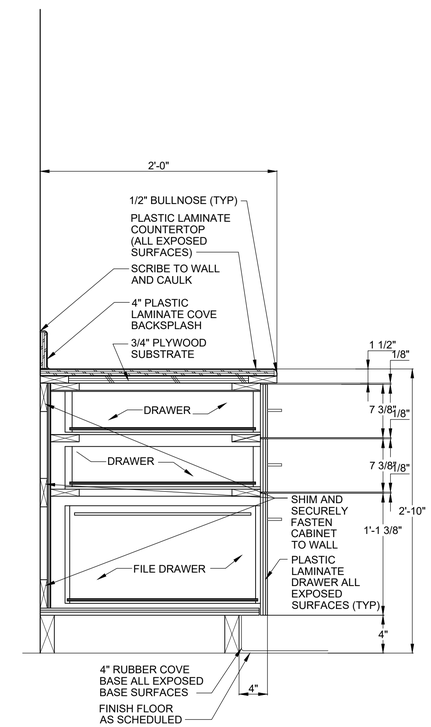

A9022 BASE CABINET

NO.	DATE	BY	REVISION

NOTICE
0 ½ 1
IF THIS BAR DOES NOT MEASURE 1" THEN DRAWING IS NOT TO SCALE

EN DESIGNED
EN DRAWN
BR CHECKED

REGISTERED ARCHITECT PHILIP E. WALZ DENVER, COLORADO ARI-15961 STATE OF OREGON 7/29/2026

Xref...\OR\LDF_QS.dwg

BID SET

consor
Stantec

South Fork WATER PURE WATER SINCE 1915

WATER QUALITY SYSTEMS BUILDING

ARCHITECTURAL

STANDARD DETAILS - VII

PROJECT NO.: 21-3045 | SCALE: NONE | DATE: AUGUST 2026

SHEET A-009

C:\pwworkdir\d0513029\0609600A_509.dwg SHT NO 7/24/2026 4:48 PM ELNAVARRO 25.0s (LMS Tech)

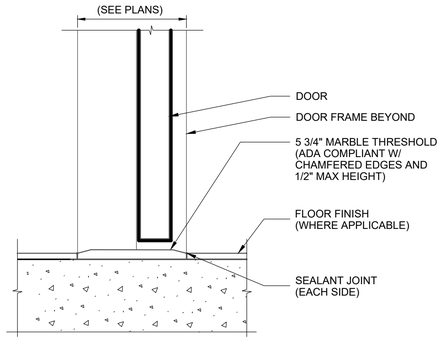

A9023 MARBLE THRESHOLD

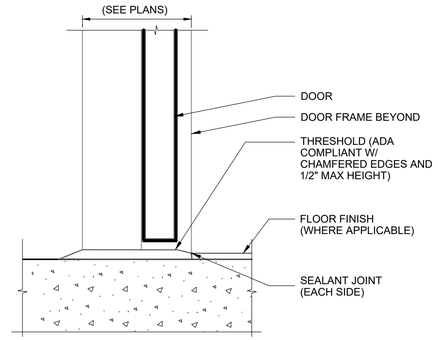

A9024 THRESHOLD

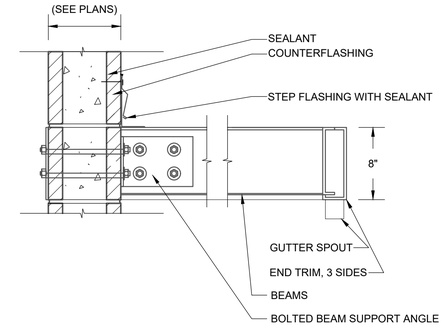

NOTE: AWNING DESIGN PER AWNING MANUFACTURER, SEE SPECIFICATION

A9025 METAL AWNING

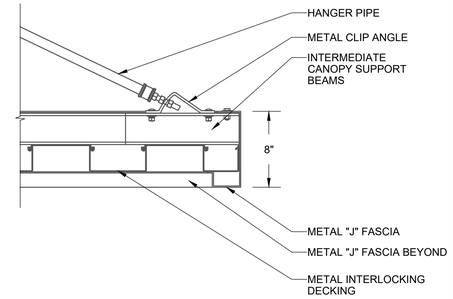

A9026 AWNING FASCIA

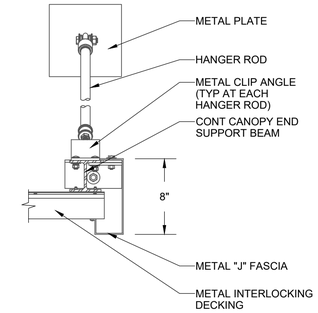

A9027 AWNING HANGER ROD

NO.	DATE	BY	REVISION

NOTICE
0 ½ 1
IF THIS BAR DOES NOT MEASURE 1" THEN DRAWING IS NOT TO SCALE

EN DESIGNED
EN DRAWN
BR CHECKED

REGISTERED ARCHITECT PHILIP E. WALZ DENVER, COLORADO ARI-15961 STATE OF OREGON 7/29/2026

Xref ...\OR\LDF_QS.dwg

BID SET

consor
Stantec

South Fork WATER PURE WATER SINCE 1915

WATER QUALITY SYSTEMS BUILDING

ARCHITECTURAL

STANDARD DETAILS - VIII

PROJECT NO.: 21-3045 | SCALE: NONE | DATE: AUGUST 2026

SHEET A-010

C:\pwworkdir\d0513029\0609600A_510.dwg SHT NO 7/24/2026 4:49 PM ELNAVARRO 25.0s (LMS Tech)

BUILDING CODE SUMMARY

OWNER: SOUTH FORK WATER BOARD	DATE: MARCH 30, 2026
PROJECT LOCATION: OREGON CITY, OREGON	ARCHITECT: BRIAN RENO
AREA/BUILDING: WATER QUALITY SYSTEMS BUILDING	LICENSE NO:
GOVERNING CODES	
BUILDING CODE: 2022 OREGON STRUCTURAL SPECIALTY CODE (UNTIL MARCH 31, 2026)	ENERGY CODE: 2022 ASHRAE 90.1, 2025 OREGON ENERGY EFFICIENCY SPECIALTY CODE (OEESC)
FIRE CODE: 2025 OREGON FIRE CODE (2024 IFC)	OSHA CODE: OREGON OSHA
ACCESSIBILITY CODE: 2017 ANSI 117.1	OTHER: NFPA 101 LIFE SAFETY CODE

HAZARDOUS MATERIALS (1)

CHEMICAL	CAS NO	CONCENTRATION	QUANTITY	NFPA 704 RATING				HAZARD PROPERTIES		MAX ALLOWABLE QUANTITY EXCEEDED (2)	OCCUPANCY
				HEALTH	FLAMMABILITY	REACTIVITY	SPECIAL	PHYSICAL	HEALTH		
INDOOR STORAGE											
ALUMINUM SULFATE	10043-01-3	48%	(2) 6,115 GAL	2	0	0	IRRITANT	0	-	NO	F-1
SODIUM HYPOCHLORITE	7681-52-9	0.8%	(2) 10,000 GAL	2	0	0	IRRITANT	0	-	NO	F-1
SODA ASH	497-19-8	100%	(4) 2,700 LBS	2	0	0	IRRITANT	0	-	NO	F-1
POLYMER	-	100%	-	-	-	-	-	-	-	NO	F-1
OUTDOOR STORAGE											
BRINE (SODIUM CHLORIDE)	7647-14-5	48%	(1) 7,100 GAL	2	0	0	IRRITANT	0	-	NO	-

USE AND OCCUPANCY CLASSIFICATION/ALLOWABLE AREA AND HEIGHT (3)

OCCUPANCY GROUP AND DESCRIPTION	CONSTRUCTION TYPE	ALLOWABLE HEIGHT	ALLOWABLE STORIES	ALLOWABLE AREA	ACTUAL AREA	ACTUAL AREA / ALLOWABLE AREA RATIO
MODERATE- HAZARD FACTORY INDUSTRIAL, GROUP F-1	IIB	55 FT	2	15,500 SF	3,633 SF	3,633/15,500 = .23%
BUSINESS, GROUP B (ASSEMBLY W/OCCUPANT LOAD < 50)	IIB	55 FT	3	23,000 SF	1,556 SF + 1,637 SF	3,193/23,000 = .19%
				15,500 SF	6,826 SF	6,826/15,500 = .44%

OCCUPANCY SEPARATION (4)			FIRE RESISTANCE RATING OF STRUCTURAL ELEMENTS (6)(7)						
OCCUPANCIES	ACCESSORY USE (5)		PRIMARY STRUCTURAL FRAME	BEARING WALLS EXTERIOR	BEARING WALLS INTERIOR	FLOOR CONSTRUCTION	ROOF CONSTRUCTION	EXTERIOR WALLS BASED ON FIRE SEPARATION DISTANCE (7)	
	ROOM OR AREA	SEPARATION PROTECTION						FIRE SEPARATION DISTANCE	FIRE-RESISTANCE RATING
GROUP F-1	MECHANICAL	NONE	0 HOURS	0 HOURS	0 HOURS	0 HOURS	0 HOURS	X < 10, 5	1 HOUR, 2 HOURS
GROUP B	RESTROOM/ KITCHEN	NONE	0 HOURS	0 HOURS	0 HOURS	0 HOURS	0 HOURS	X < 10	1 HOUR

FIRE PROTECTION SYSTEMS (8)

FIRE EXTINGUISHERS: REQUIRED EVERY 75 FEET	AUTOMATIC FIRE PROTECTION SYSTEM: NOT REQUIRED FOR B OR F-1 OCCUPANCIES

MEANS OF EGRESS (9)

OCCUPANCY	FUNCTION OF SPACE	MAX FLOOR AREA PER OCCUPANT	OCCUPANCY TOTAL FLOOR AREA	TOTAL OCCUPANT LOAD	MAX COMMON PATH OF EGRESS TRAVEL DISTANCE	EXITS REQUIRED	EXITS PROVIDED	MAX EXIT ACCESS TRAVEL DISTANCE	ACTUAL EXIT ACCESS TRAVEL DISTANCE	OPEN STAIRWAYS
MEETING ROOM, B OCC	ASSEMBLY	15	1,079 SF	50 MAX	75 FT	1	2	75 FT	56 FT	-
ENTRY, B OCC	BUSINESS	150	112 SF	1	100 FT	1	1	75 FT	10 FT	-
WOMEN'S, B OCC	BUSINESS	150	63 SF	1	100 FT	1	1	75 FT	10 FT	-
MEN'S, B OCC	BUSINESS	150	56 SF	1	100 FT	1	1	75 FT	10 FT	-
BREAK ROOM, B OCC	BUSINESS	150	237 SF	1	100 FT	1	1	75 FT	36 FT	-
CHEMICAL ROOM, F-1 OCC	MECHANICAL	300	3,323 SF	11	75 FT	1	3	75 FT	50 FT	-
ELECTRICAL ROOM, F-1 OCC	MECHANICAL	300	301 SF	1	75 FT	1	1	75 FT	22 FT	-
MECHANICAL ROOM, F-1 OCC	MECHANICAL	300	364 SF	1	75 FT	1	1	75 FT	18 FT	-
STORAGE, B OCC	ACCESSORY STORAGE	300	1,547	5	100 FT	1	1	75 FT	68 FT	YES

(1) HMEX: THE HAZARDOUS MATERIAL EXPERT ASSISTANT, VERSION 6 - FLUER, INC

(2) OSSC TABLE 307.1 - MAXIMUM ALLOWABLE OCCUPANCY PER CONTROL AREA OF HAZARDOUS MATERIALS

(3) OSSC CHAPTER 3 - USE AND OCCUPANCY CLASSIFICATION, OSSC CHAPTER 5 - GENERAL BUILDING HEIGHTS AND AREAS, TABLES 504.3, 504.4 AND 506.2

(4) OSSC CHAPTER 5, TABLE 508.4 - REQUIRED SEPARATION OF OCCUPANCIES

(5) OSSC CHAPTER 5, TABLE 508.2 - ACCESSORY OCCUPANCIES

(6) OSSC CHAPTER 6, - TYPES OF CONSTRUCTION, TABLE 601 - FIRE-RESISTANCE REQUIREMENTS FOR BUILDING ELEMENTS

(7) OSSC CHAPTER 6 - TYPES OF CONSTRUCTION, TABLE 602 - FIRE-RESISTANCE RATING FOR EXTERIOR WALLS BASED ON FIRE SEPARATION DISTANCE

(8) OSSC CHAPTER 9 - FIRE PROTECTION SYSTEMS; OREGON OSHA- FIRE EXTINGUISHERS

(9) IBC CHAPTER 10 - MEANS OF EGRESS

ACCESSIBILITY DISCLAIMER

BUILDING'S F-1 OCCUPANCY INTENDED USE:

EXCEPT FOR REGULAR MONITORING AND MAINTENANCE OF EQUIPMENT, THIS BUILDING IS NOT INTENDED FOR HUMAN OCCUPANCY FOR EXTENDED PERIODS OF TIME. THIS BUILDING'S PRIMARY PURPOSE IS TO HOUSE EQUIPMENT ASSOCIATED WITH PUBLIC WATER UTILITIES.

HANDICAPPED ACCESSIBILITY:

2022 OSSC 1103.2.2 EMPLOYEE WORK AREAS - AS NOTED, ACCESSIBLE ROUTES (BUT ONLY ACCESIBLE ROUTES) ARE REQUIRED INTO AND THROUGH CHEMICAL ROOM 107.

THERMAL RESISTANCE SUMMARY

CLIMATE ZONE: 4C ENTIRE BUILDING IS CONDITIONED SPACE, EXCEPT CHEMICAL/ MECHANICAL ARE SEMI-HEATED

ASSEMBLY	R-VALUE	U-FACTOR
EXTERIOR WALL MASS - 12" CMU		
12" CMU (50% INSULATED CORES)	9.5ci	0.104
AIR BARRIER- INTERIOR PAINTED CMU	-	-
TOTAL	9.5ci	0.104
EXTERIOR DOOR- SWINGING		
STEEL DOOR	-	0.37
EXTERIOR DOOR- NONSWINGING		
OVERHEAD DOOR	-	0.31
WINDOW		
INSULATED ALUMINUM (GLAZING)	-	0.38
SHGC N/W PF<0.4	-	0.58/0.48
FOUNDATION INSULATION		
INSULATION BOARD 24" BELOW GRADE	15.00	F-0.52
ROOF INSULATION		
POLYISOCYANURATE INSULATION BOARD	30.00ci	0.032
AIR FILM (MOVING AIR AND STILL AIR)	0.85*	-
TOTAL	30.85	0.032

AIR BARRIER REQUIREMENT MET

NOTE:
R-VALUE / U-FACTOR ARE OBTAINED FROM MFR DATA SHEET UNLESS OTHERWISE NOTED AND/OR AUTOMATICALLY GENERATED BY COMCHECK SOFTWARE

COMCHECK 4.1.4.3 COMPLIANCE: ENVELOPE PASSES: DESIGN 0.19% BETTER THAN CODE

GENERAL NOTE

PER THE OREGON STRUCTURAL SPECIALTY CODE 2022 VERSION UNDER SECTION 306.2 MODERATE-HAZARD FACTORY INDUSTRIAL OCCUPANCY, F-1, NOW INCLUDES WATER/ SEWER TREATMENT FACILITIES. AS PART OF THE SOUTH FORK WATER BOARD WATER TREATMENT PLANT, THIS NEW WATER QUALITY SYSTEMS BUILDING, INCLUDES A CHEMICAL STORAGE ROOM WITH ENCLOSED TANK STORAGE SYSTEMS WHERE NON-HAZARDOUS CHEMICALS ARE LOCATED. THESE CHEMICALS ARE INJECTED INTO THE WATER TREATMENT PROCESS FOR WATER QUALITY AS REQUIRED. THESE INJECTIONS ARE CONTROLLED BY OPERATORS.

LEGEND

➡	PRIMARY MEANS OF EGRESS
- - - - - -	MAX PATH OF TRAVEL
● FE	SURFACE MOUNTED FIRE EXTINGUISHER
○ FEC	RECESSED FIRE EXTINGUISHER CABINET
Ⓛ	LADDER ACCESS

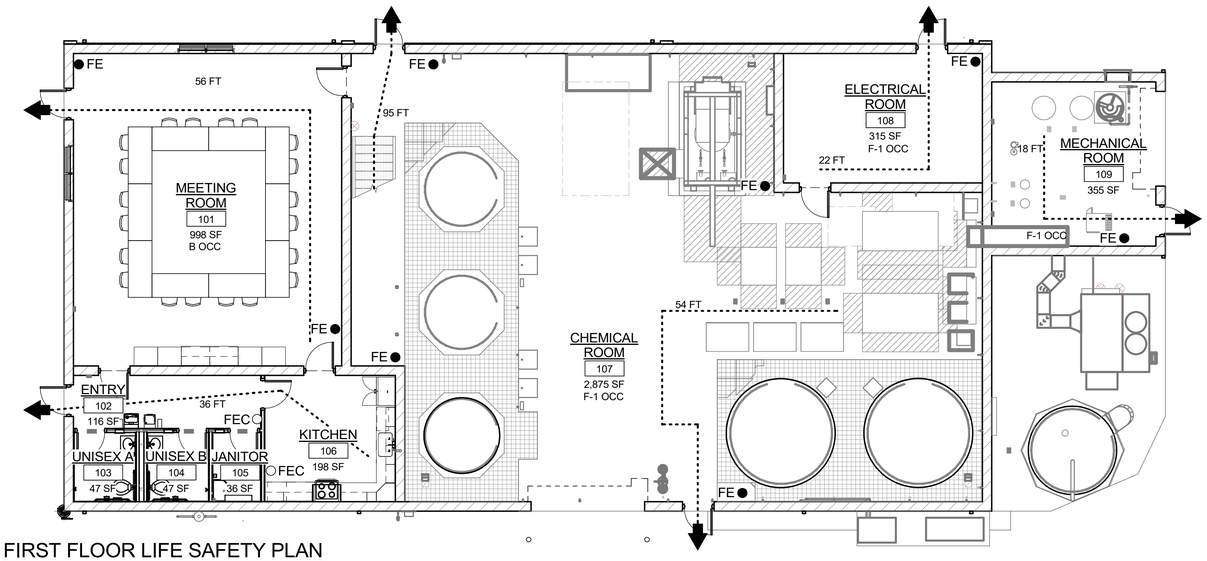

FIRST FLOOR LIFE SAFETY PLAN

SCALE: 1/8" = 1'-0"

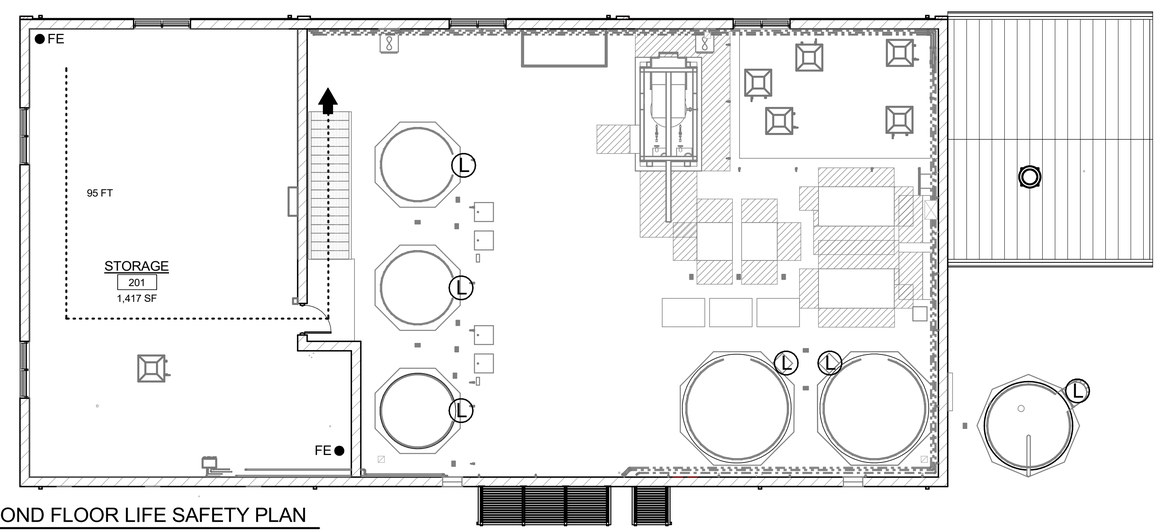

SECOND FLOOR LIFE SAFETY PLAN

SCALE: 1/8" = 1'-0"

NO.	DATE	BY	REVISION

NOTICE
0 ½ 1
IF THIS BAR DOES NOT MEASURE 1" THEN DRAWING IS NOT TO SCALE

EN DESIGNED
EN DRAWN
BR CHECKED

REGISTERED ARCHITECT PHILIP E. WALL DENVER, COLORADO ARI-15961 STATE OF OREGON 7/29/2026

BID SET

consor
Stantec

South Fork WATER PURE WATER SINCE 1915

WATER QUALITY SYSTEMS BUILDING

ARCHITECTURAL

BUILDING CODE AND THERMAL SUMMARY AND LIFE SAFETY PLANS

PROJECT NO.: 21-3045 SCALE: As indicated DATE: AUGUST 2026

SHEET A-101

DATE : 7/24/2026 4:33:39 PM
USER : EN
B:\d0513031\06069600A_MOD.rvt

GENERAL NOTES

1. SEE DETAILS A1001 AND A1002 FOR INTERIOR ROOM SIGNAGE.
2. ELEVATIONS SHOWN ARE RELATIVE TO FINISH FLOOR ELEVATION. EL 0.00 = FINISH FLOOR EL 324.20

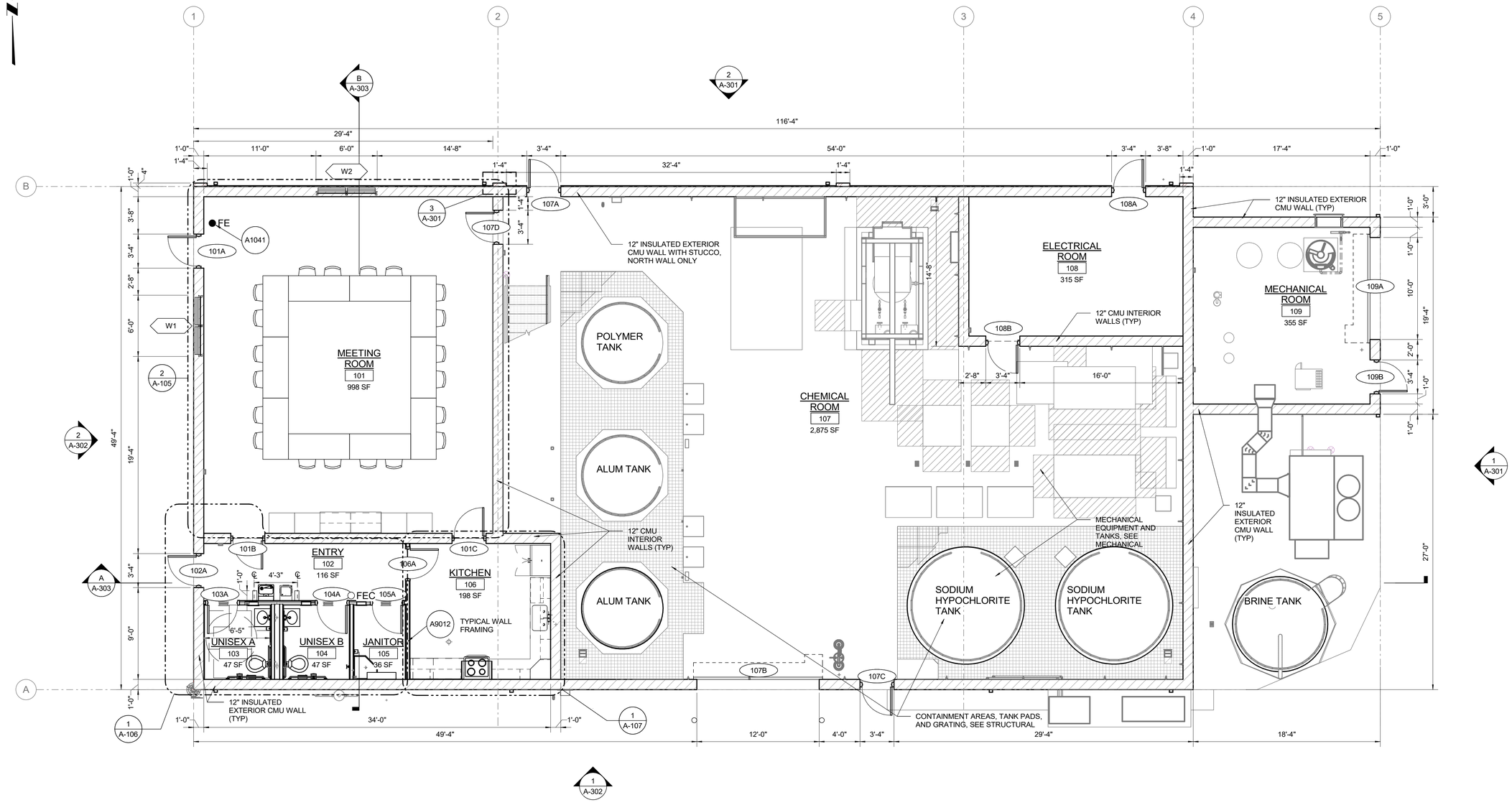

DATE : 7/24/2026 4:33:40 PM

USER : EN

B:\d0513031\0609600A_MOD.rvt

NO.	DATE	BY	REVISION

NOTICE
0 ½ 1
IF THIS BAR DOES NOT MEASURE 1" THEN DRAWING IS NOT TO SCALE

EN
DESIGNED
EN
DRAWN
BR
CHECKED

REGISTERED ARCHITECT
PHILIP E. WALZ
DENVER, COLORADO
ARI-15961
STATE OF OREGON
7/29/2026

BID SET

consor
Stantec

South Fork WATER
PURE WATER SINCE 1915

WATER QUALITY SYSTEMS BUILDING

ARCHITECTURAL

FIRST FLOOR PLAN

PROJECT NO.: 21-3045 | SCALE: 3/16" = 1'-0" | DATE: AUGUST 2026

SHEET
A-102

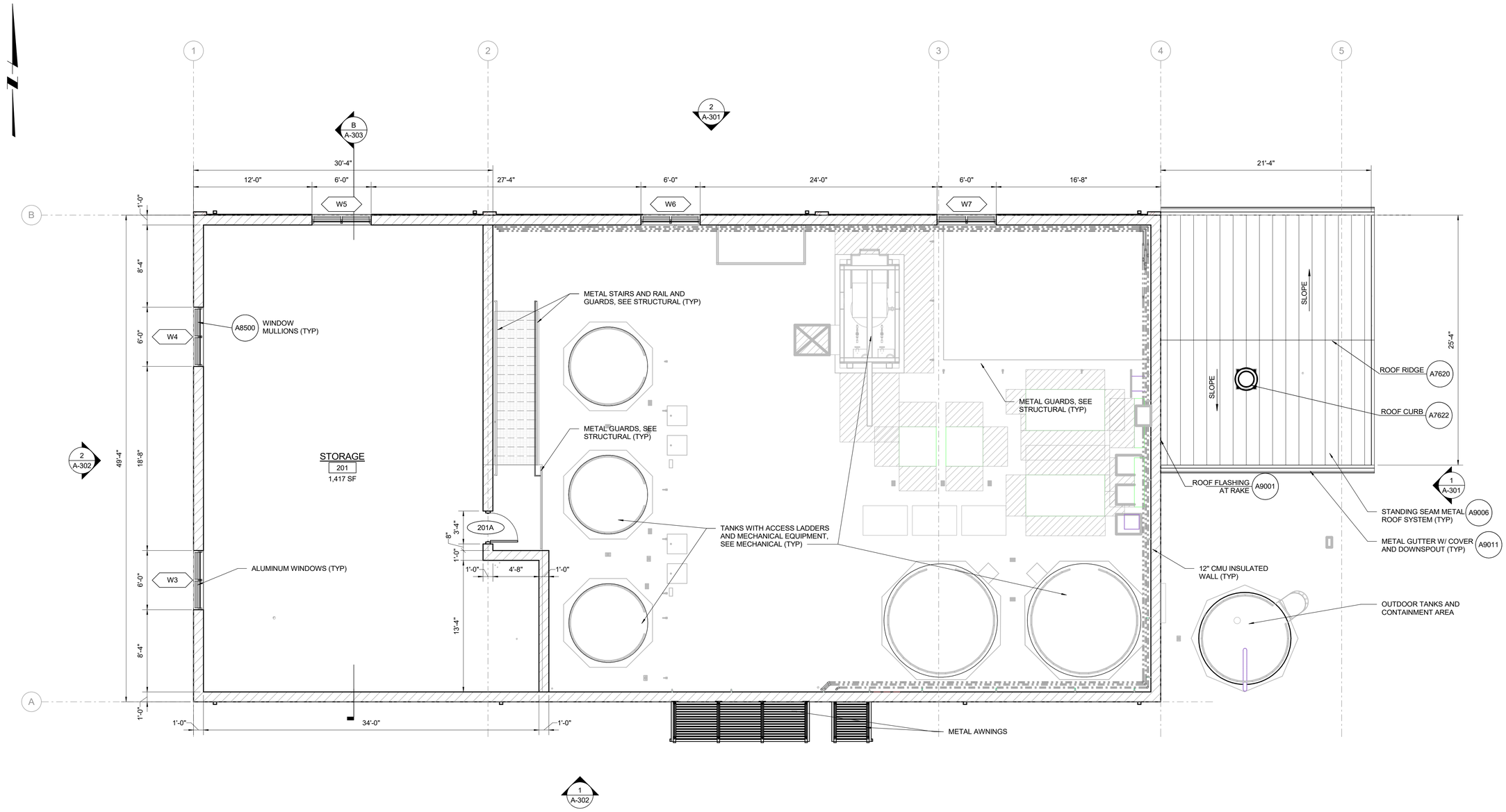

DATE : 7/24/2026 4:33:42 PM

USER : EN

B:\005130310\0609600A_MOD.rvt

NO.	DATE	BY	REVISION

NOTICE

0 ½ 1

IF THIS BAR DOES NOT MEASURE 1" THEN DRAWING IS NOT TO SCALE

EN
DESIGNED
EN
DRAWN
BR
CHECKED

REGISTERED ARCHITECT
PHILIP E. WALZ
DENVER, COLORADO
ARI-15961
STATE OF OREGON
7/29/2026

BID SET

consor

Stantec

South Fork WATER
PURE WATER SINCE 1915

WATER QUALITY SYSTEMS BUILDING

ARCHITECTURAL

SECOND FLOOR PLAN

PROJECT NO.: 21-3045 | SCALE: 3/16" = 1'-0" | DATE: AUGUST 2026

SHEET

A-103

DATE : 7/24/2026 4:33:43 PM

USER : EN

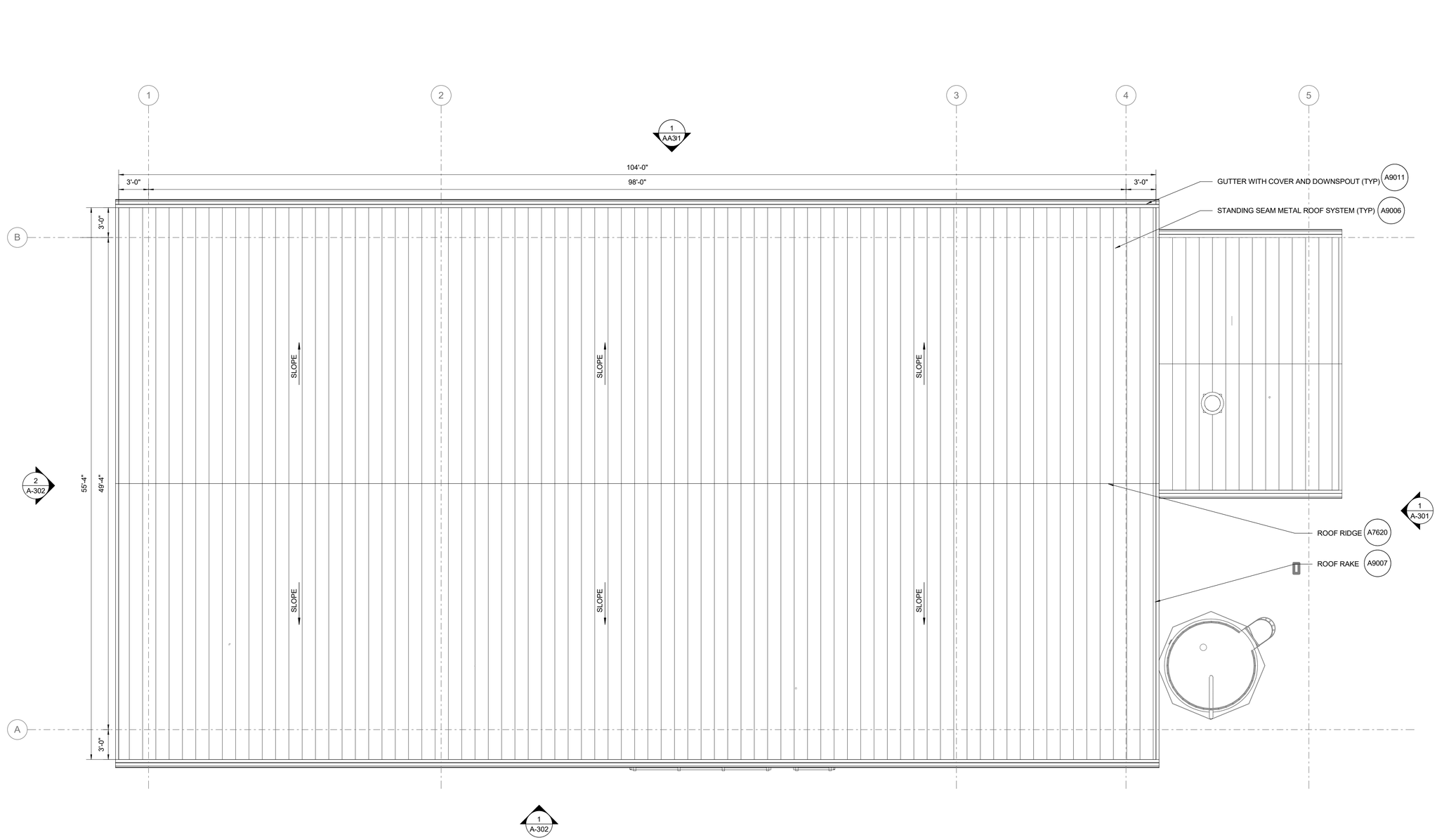

B:\005130310\0609600A_MOD.rvt

NO.	DATE	BY	REVISION

NOTICE

0 ½ 1

IF THIS BAR DOES NOT MEASURE 1" THEN DRAWING IS NOT TO SCALE

EN
DESIGNED
EN
DRAWN
BR
CHECKED

REGISTERED ARCHITECT
PHILIP E. WALZ
DENVER, COLORADO
ARI-15961
STATE OF OREGON
7/29/2026

BID SET

consor

Stantec

South Fork WATER
PURE WATER SINCE 1915

WATER QUALITY SYSTEMS BUILDING

ARCHITECTURAL

ROOF PLAN

PROJECT NO.: 21-3045 | SCALE: 3/16" = 1'-0" | DATE: AUGUST 2026

SHEET

A-104

DATE : 7/24/2026 4:33:45 PM

USER : EN

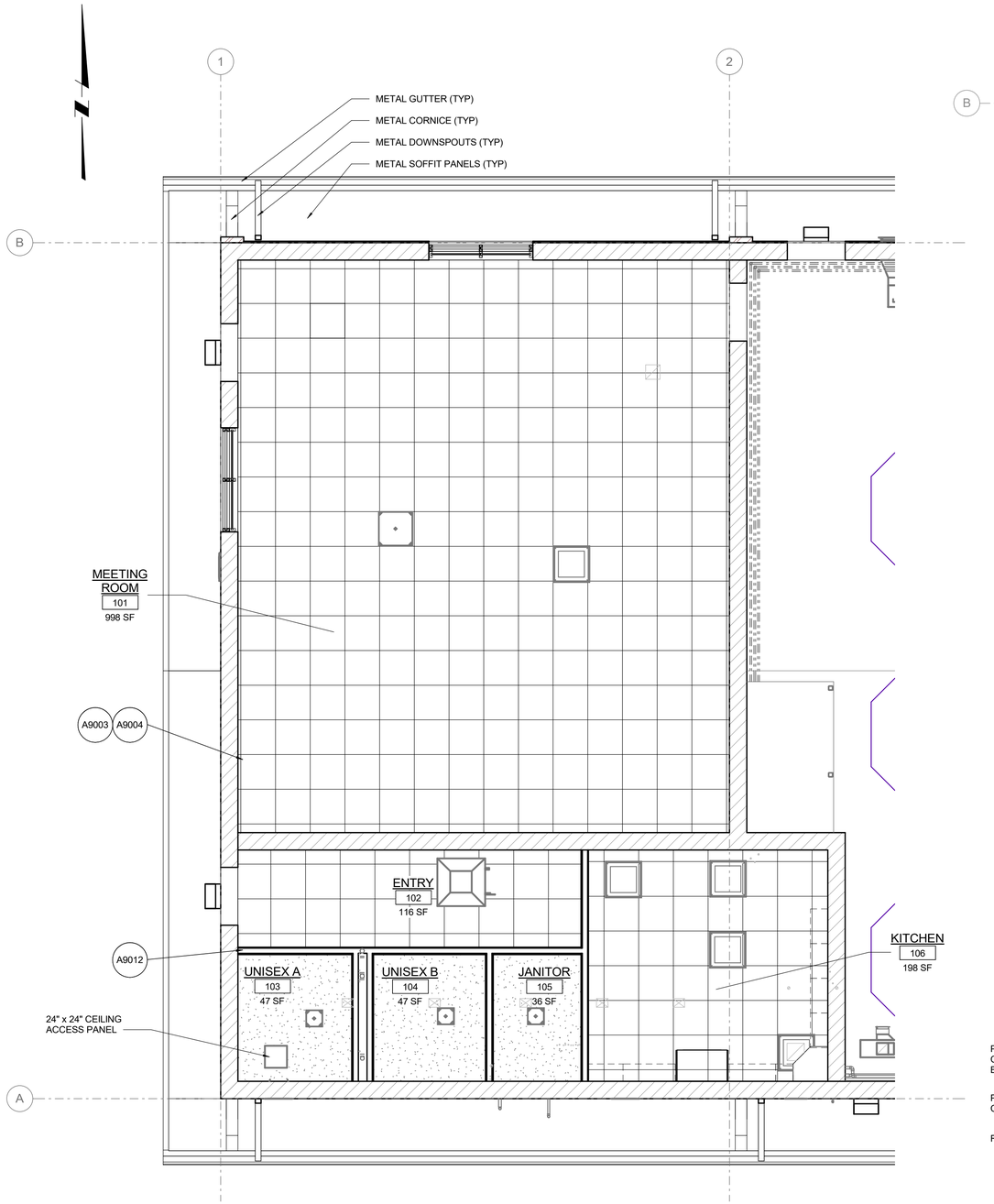

REFLECTED CEILING PLAN

SCALE: 1/4" = 1'-0"

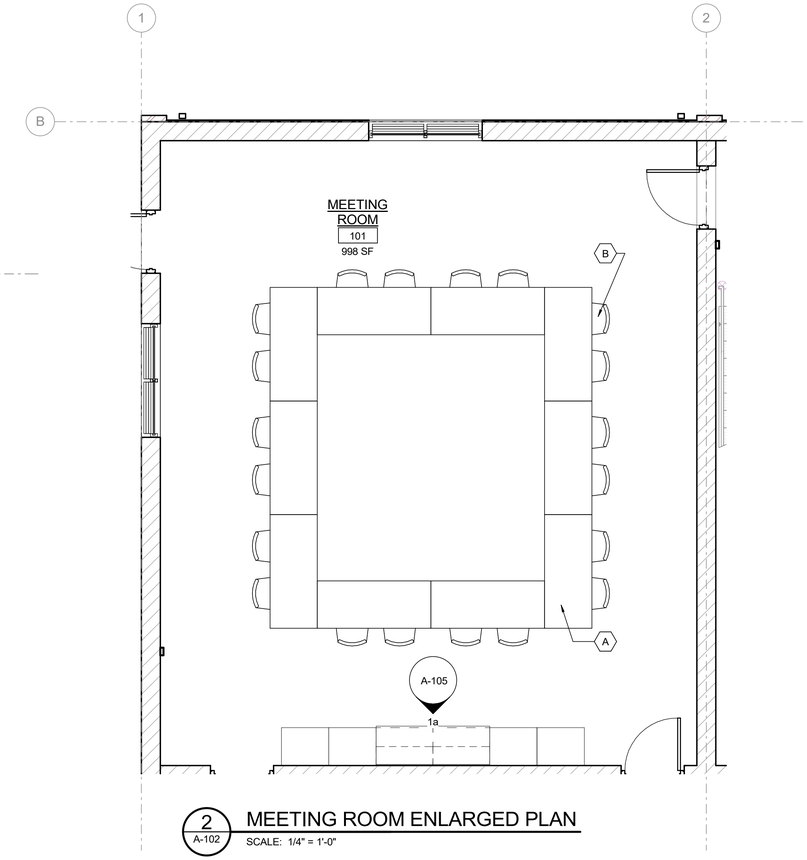

2 A-102 MEETING ROOM ENLARGED PLAN

SCALE: 1/4" = 1'-0"

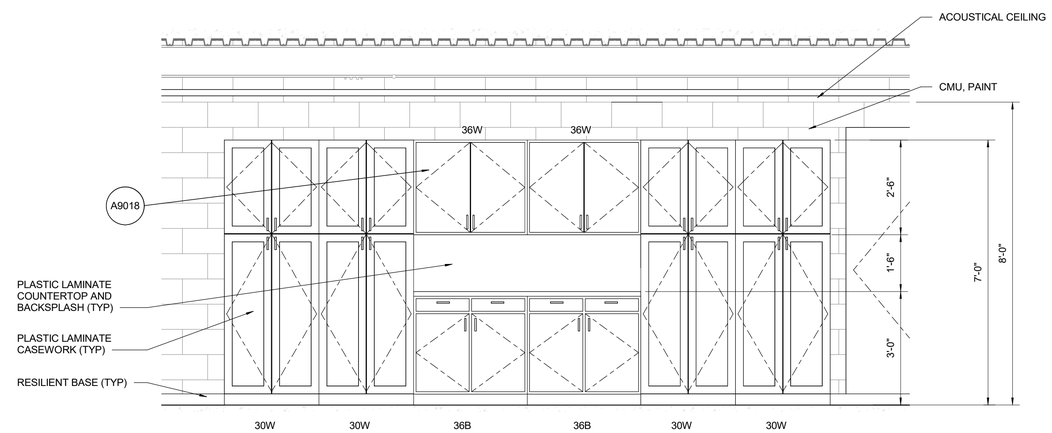

MEETING ROOM 1a

SCALE: 1/2" = 1'-0"

GENERAL NOTES

1. SEE SHEET A-001 FOR ARCHITECTURAL SYMBOLS.
2. SEE SHEET A-001 FOR ADA TYICAL CLEAR FLOOR SPACE REQUIREMENTS FOR RESTROOMS AND DRINKING FOUNTAIN.
3. SEE SHEET A-001 FOR ADA TYPICAL MOUNTING HEIGHTS AND LOCATIONS FOR TOILET ACCESSORIES AND DRINKING FOUNTAIN.
4. SEE DETAILS A1001 AND A1002 FOR WALL AND ROOM SIGNAGE.
5. ELEVATIONS SHOWN ARE RELATIVE TO FINISH FLOOR ELEVATION. EL 0.00 = FINISH FLOOR EL 324.20

SHEET KEYNOTES

A. TABLES: 10, 3 FEET x 6 FEET, METAL WITH WOOD TOPS

B. CHAIRS: 30, METAL WITH CUSHION TOP AND BACKREST

B:\d0513031\06009600A_MOD.rvt

NO.	DATE	BY	REVISION

NOTICE
0 ½ 1
IF THIS BAR DOES NOT MEASURE 1" THEN DRAWING IS NOT TO SCALE

EN DESIGNED
EN DRAWN
BR CHECKED

REGISTERED ARCHITECT
PHILIP E. WALZ
DENVER, COLORADO
ARI-15961
STATE OF OREGON
7/29/2026

BID SET

consor
Stantec

South Fork WATER
PURE WATER SINCE 1915

WATER QUALITY SYSTEMS BUILDING

ARCHITECTURAL

REFLECTED CEILING AND ENLARGED MEETING ROOM PLANS AND INTERIOR ELEVATION

PROJECT NO.: 21-3045 | SCALE: As indicated | DATE: AUGUST 2026

SHEET A-105

DATE : 7/24/2026 4:33:48 PM

USER : EN

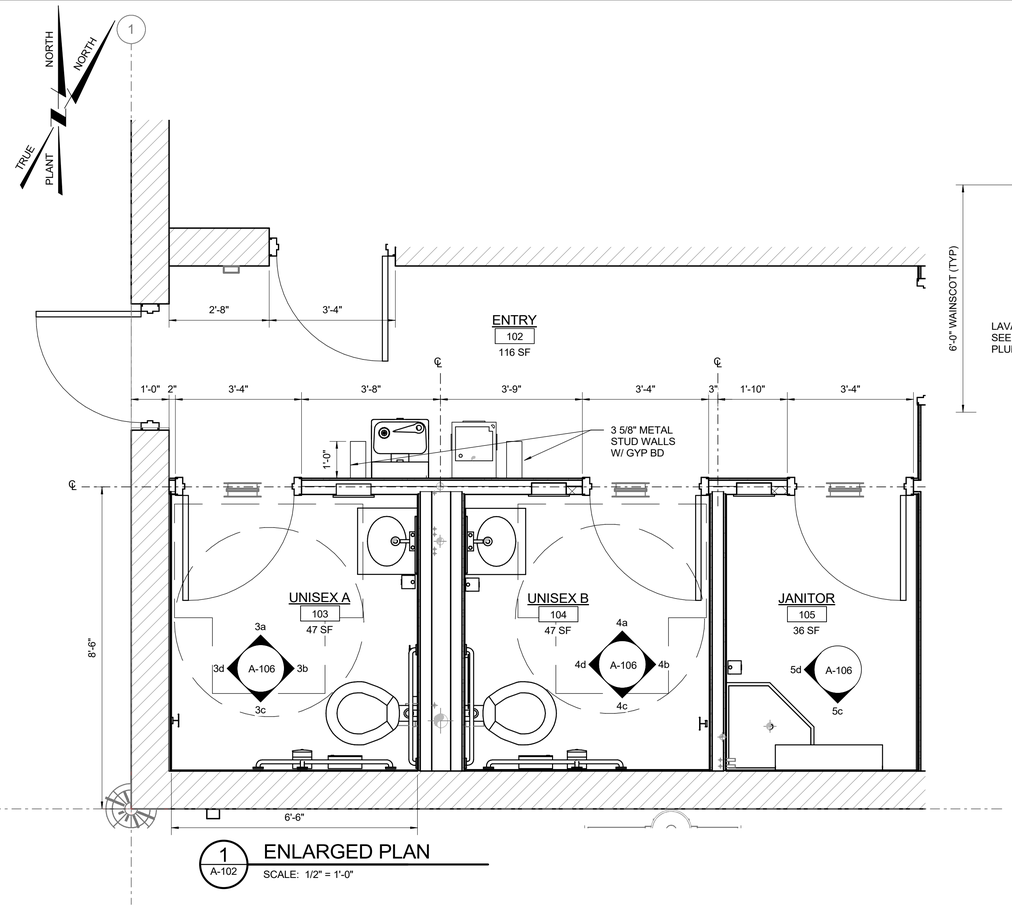

1 A-102 ENLARGED PLAN

SCALE: 1/2" = 1'-0"

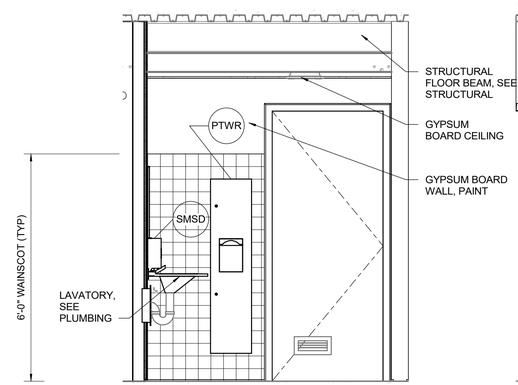

UNISEX B 4a

SCALE: 1/2" = 1'-0"

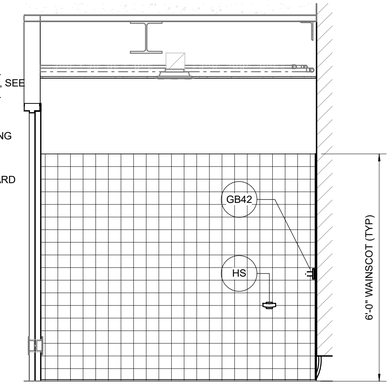

UNISEX B 4b

SCALE: 1/2" = 1'-0"

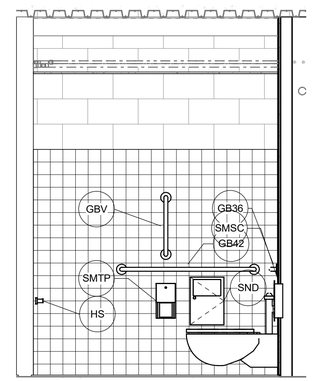

UNISEX B 4c

SCALE: 1/2" = 1'-0"

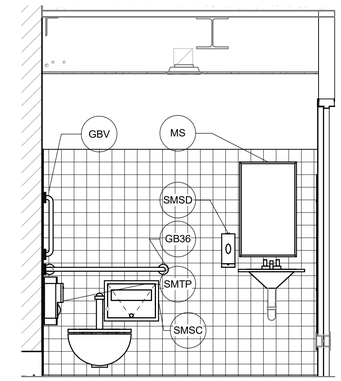

UNISEX B 4d

SCALE: 1/2" = 1'-0"

GENERAL NOTES

1. SEE SHEET A-001 FOR ARCHITECTURAL SYMBOLS.
2. SEE SHEET A-001 FOR ADA TYICAL CLEAR FLOOR SPACE REQUIREMENTS FOR RESTROOMS AND DRINKING FOUNTAIN.
3. SEE SHEET A-001 FOR ADA TYPICAL MOUNTING HEIGHTS AND LOCATIONS FOR TOILET ACCESSORIES AND DRINKING FOUNTAIN.
4. SEE DETAILS A1001 AND A1002 FOR WALL AND ROOM SIGNAGE.
5. ELEVATIONS SHOWN ARE RELATIVE TO FINISH FLOOR ELEVATION. EL 0.00 = FINISH FLOOR EL 324.20

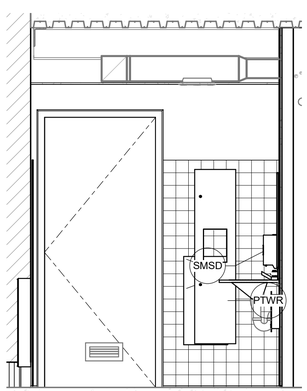

UNISEX A 3a

SCALE: 1/2" = 1'-0"

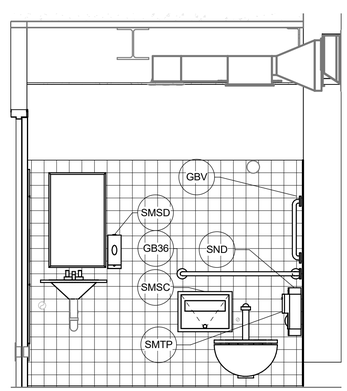

UNISEX A 3b

SCALE: 1/2" = 1'-0"

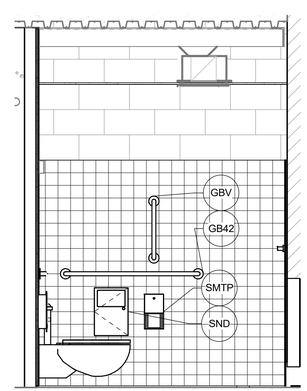

UNISEX A 3c

SCALE: 1/2" = 1'-0"

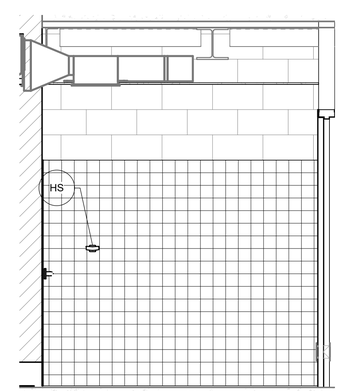

UNISEX 3d

SCALE: 1/2" = 1'-0"

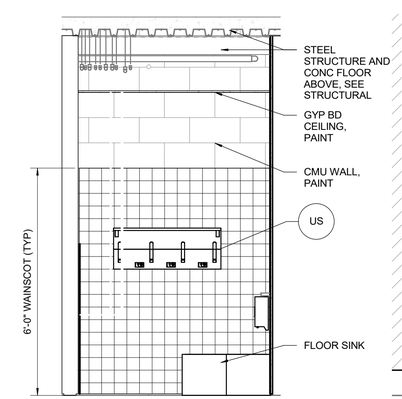

JANITOR 5c

SCALE: 1/2" = 1'-0"

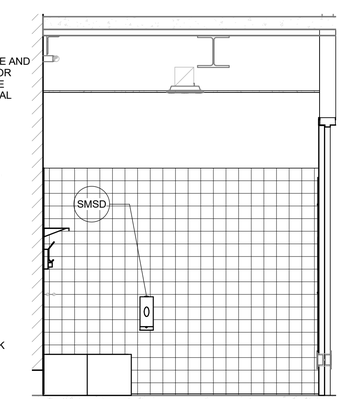

JANITOR 5d

SCALE: 1/2" = 1'-0"

B:\d0513031\0609600A_MOD.rvt

NO.	DATE	BY	REVISION

NOTICE

0 ½ 1

IF THIS BAR DOES NOT MEASURE 1" THEN DRAWING IS NOT TO SCALE

EN DESIGNED

EN DRAWN

BR CHECKED

REGISTERED ARCHITECT PHILIP E. WALZ DENVER, COLORADO ARI-15961 STATE OF OREGON 7/29/2026

BID SET

consor

Stantec

South Fork WATER PURE WATER SINCE 1915

WATER QUALITY SYSTEMS BUILDING

ARCHITECTURAL

ENLARGED RESTROOM AND JANITOR PLANS AND INTERIOR ELEVATIONS

PROJECT NO.: 21-3045 | SCALE: As indicated | DATE: AUGUST 2026

SHEET

A-106

DATE : 7/24/2026 4:33:49 PM

USER : EN

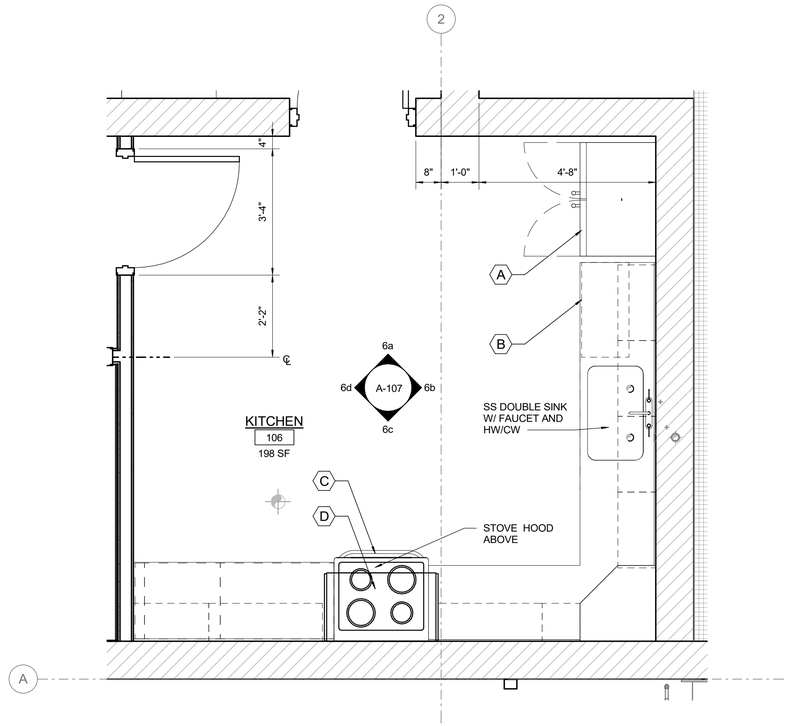

1 A-102 ENLARGED KITCHEN PLAN

SCALE: 1/2" = 1'-0"

GENERAL NOTES

1. SEE DETAILS A1001 AND A1002 FOR INTERIOR ROOM SIGNAGE.
2. ELEVATIONS SHOWN ARE RELATIVE TO FINISH FLOOR ELEVATION.
   EL 0.00 = FINISH FLOOR EL 324.20

SHEET KEYNOTES

A. REFRIGERATOR: COMMERCIAL, KITCHENAID, 20 CU FT, 36-INCH FRENCH DOOR, 115 V, 20 AMPS

B. MICROWAVE: COMMERCIAL, KITCHENAID, SMART COMMERCIAL, 115 V, 20 AMPS

C. RANGE/OVEN: COMMERCIAL, KITCHENAID, SMART COMMERCIAL GAS, 115 V, 20 AMPS

D. VENT OVER RANGE: COMMERCIAL, KITCHENAID, SMART COMMERCIAL, 115 V, 20 AMPS

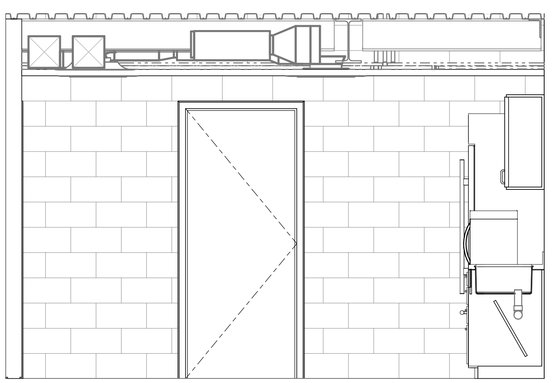

KITCHEN 6a

SCALE: 1/2" = 1'-0"

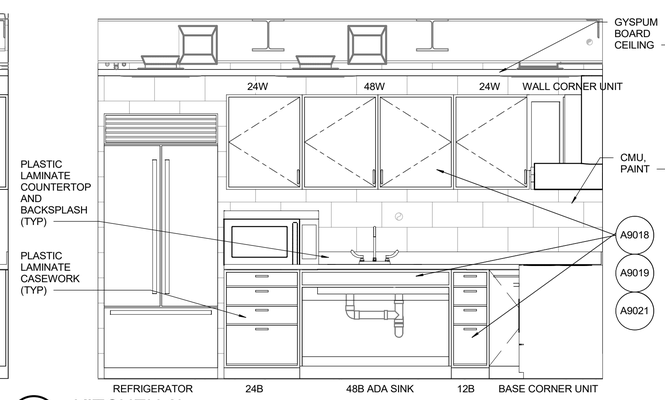

6b A-107 KITCHEN 6b

SCALE: 1/2" = 1'-0"

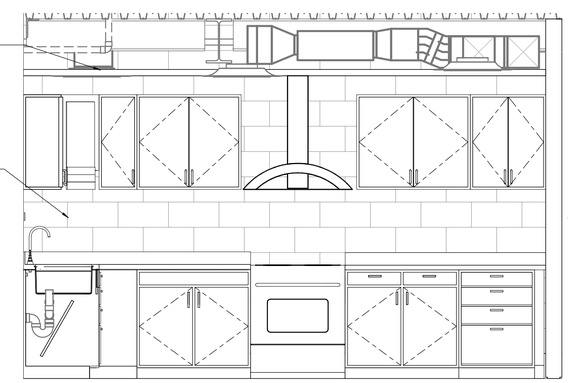

KITCHEN 6c

SCALE: 1/2" = 1'-0"

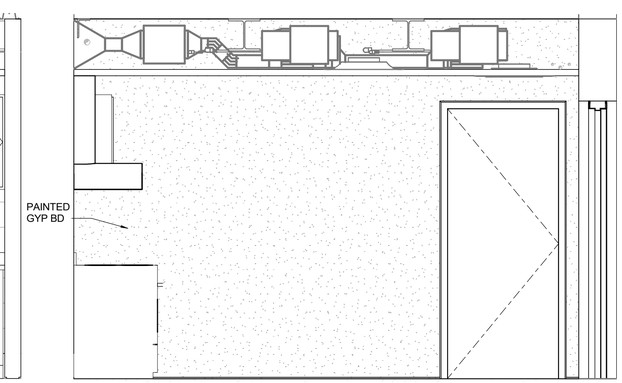

KITCHEN 6d

SCALE: 1/2" = 1'-0"

NO.	DATE	BY	REVISION

NOTICE

0 ½ 1

IF THIS BAR DOES NOT MEASURE 1" THEN DRAWING IS NOT TO SCALE

EN DESIGNED
EN DRAWN
BR CHECKED

REGISTERED ARCHITECT
PHILIP E. WALL
DENVER, COLORADO
ARI-15961
STATE OF OREGON
7/29/2026

BID SET

consor

Stantec

South Fork WATER
PURE WATER SINCE 1915

WATER QUALITY SYSTEMS BUILDING

ARCHITECTURAL

ENLARGED KITCHEN PLAN AND INTERIOR ELEVATIONS

PROJECT NO.: 21-3045 | SCALE: As indicated | DATE: AUGUST 2026

SHEET A-107

B:\051303\10609600A_MOD.rvt

DATE : 7/24/2026 4:33:52 PM

USER : EN

GENERAL NOTES

1. ELEVATIONS SHOWN ARE RELATIVE TO FINISH FLOOR ELEVATION.
   EL 0.00 = FINISH FLOOR EL 324.20

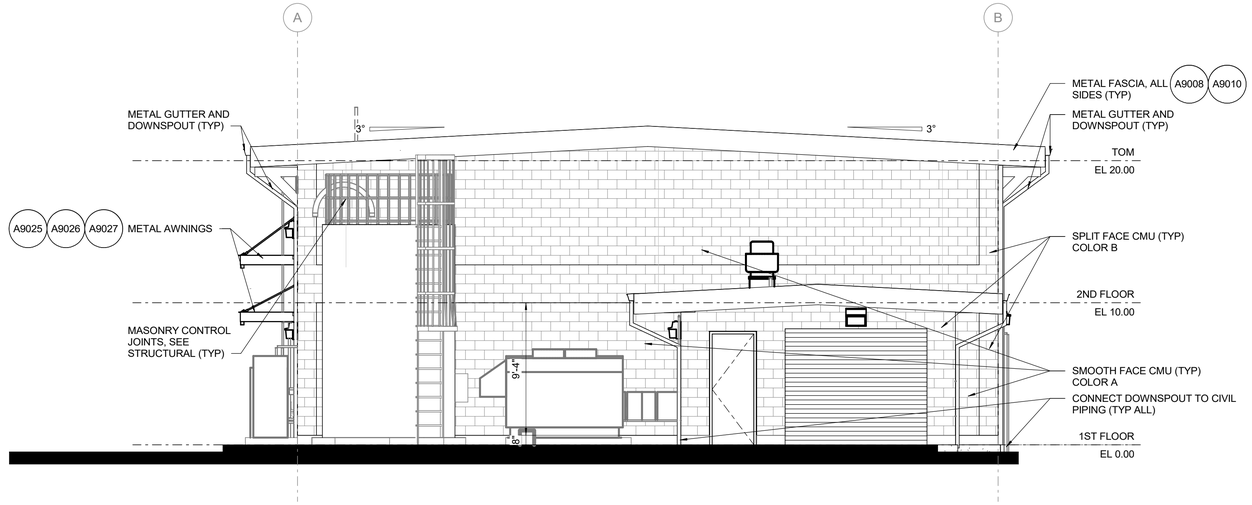

EAST ELEVATION

SCALE: 3/16" = 1'-0"

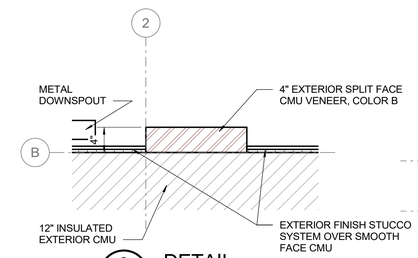

3 A-102 DETAIL

SCALE: 1" = 1'-0"

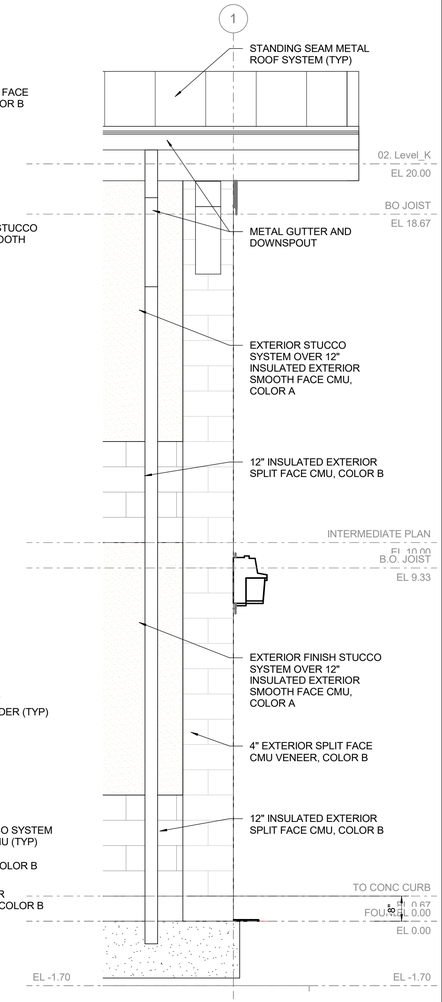

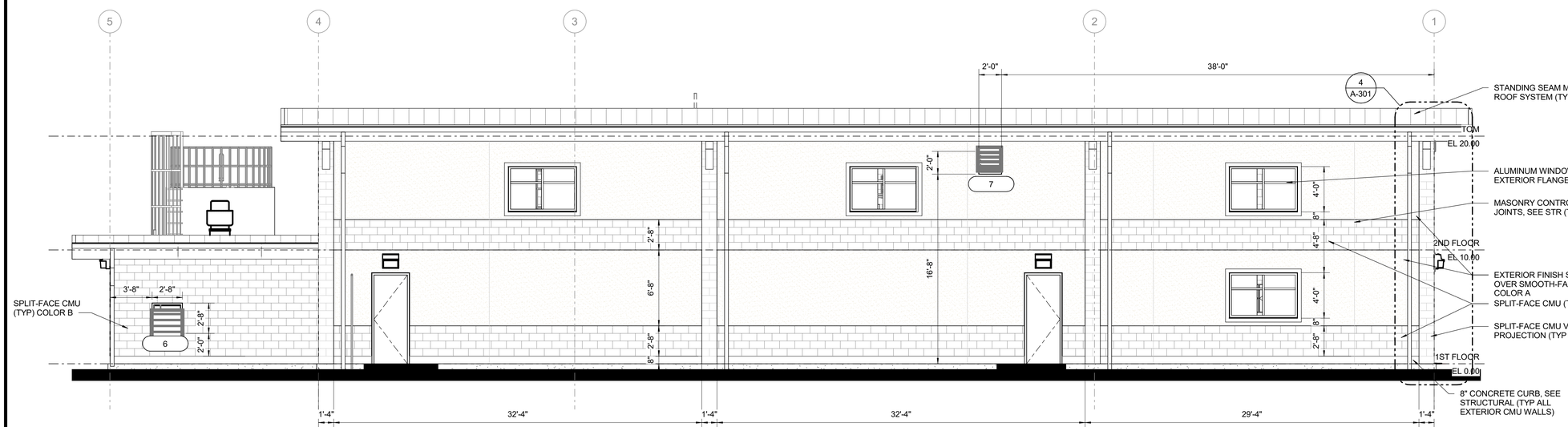

NORTH ELEVATION

SCALE: 3/16" = 1'-0"

4 A-301 WALL ELEVATION

SCALE: 1/2" = 1'-0"

B:\d0513031\0609600A_MOD.rvt

NO.	DATE	BY	REVISION

NOTICE

0 ½ 1

IF THIS BAR DOES NOT MEASURE 1" THEN DRAWING IS NOT TO SCALE

EN DESIGNED
EN DRAWN
BR CHECKED

REGISTERED ARCHITECT
PHILIP E. WALZ
DENVER, COLORADO
ARI-15961
STATE OF OREGON
7/29/2026

BID SET

consor

Stantec

South Fork WATER
PURE WATER SINCE 1915

WATER QUALITY SYSTEMS BUILDING

ARCHITECTURAL

EXTERIOR ELEVATIONS - I

PROJECT NO.: 21-3045 | SCALE: As indicated | DATE: AUGUST 2026

SHEET

A-301

DATE : 7/24/2026 4:33:55 PM

USER : EN

GENERAL NOTES

1. ELEVATIONS SHOWN ARE RELATIVE TO FINISH FLOOR ELEVATION.
   EL 0.00 = FINISH FLOOR EL 324.20

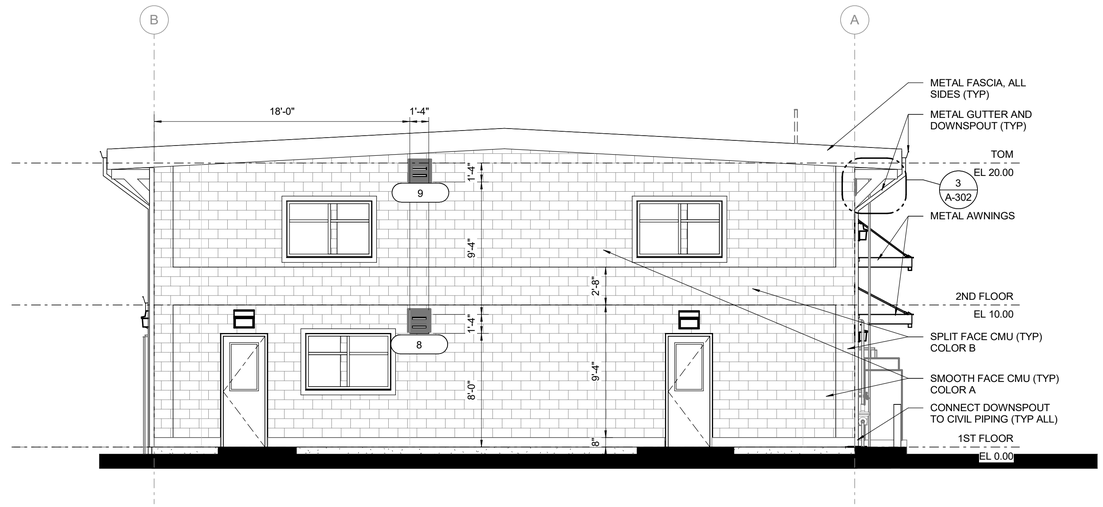

WEST ELEVATION

SCALE: 3/16" = 1'-0"

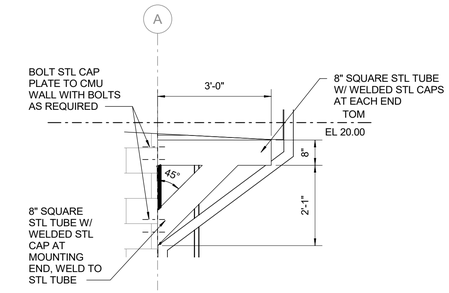

3 A-302 DETAIL

SCALE: 1/2" = 1'-0"

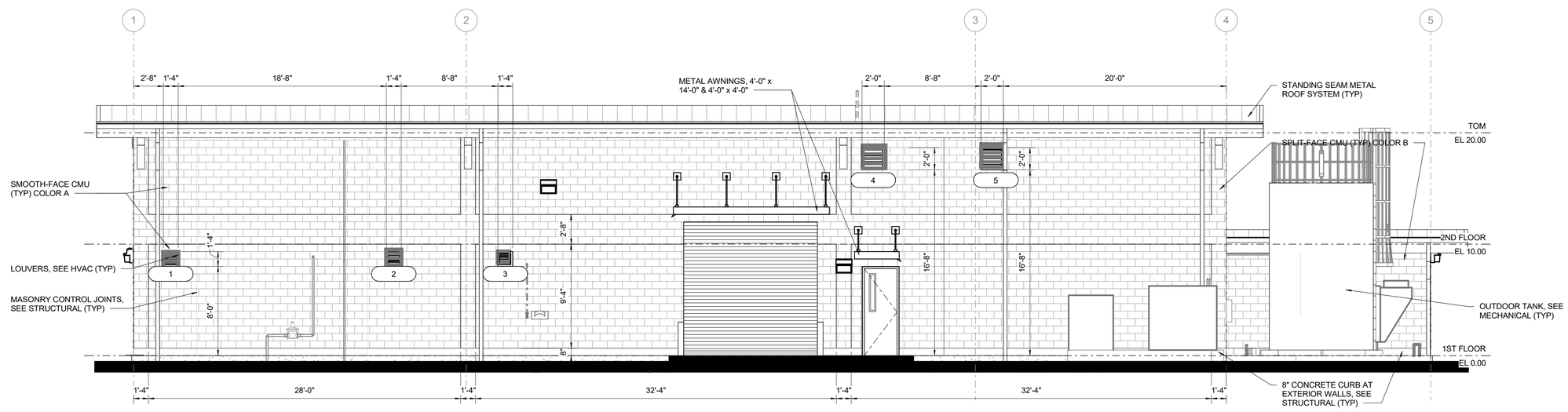

SOUTH ELEVATION

SCALE: 3/16" = 1'-0"

B:\d0513031\06096\00A_MOD.rvt

NO.	DATE	BY	REVISION

NOTICE
0 ½ 1
IF THIS BAR DOES NOT MEASURE 1" THEN DRAWING IS NOT TO SCALE

EN DESIGNED
EN DRAWN
BR CHECKED

REGISTERED ARCHITECT
PHILIP E. WALZ
DENVER, COLORADO
ARI-15961
STATE OF OREGON
7/29/2026

BID SET

consor
Stantec

South Fork WATER
PURE WATER SINCE 1915

WATER QUALITY SYSTEMS BUILDING

ARCHITECTURAL

EXTERIOR ELEVATIONS - II

PROJECT NO.: 21-3045 | SCALE: As indicated | DATE: AUGUST 2026

SHEET
A-302

DATE : 7/24/2026 4:33:57 PM

USER : EN

B / A-102 SECTION B

SCALE: 1/4" = 1'-0"

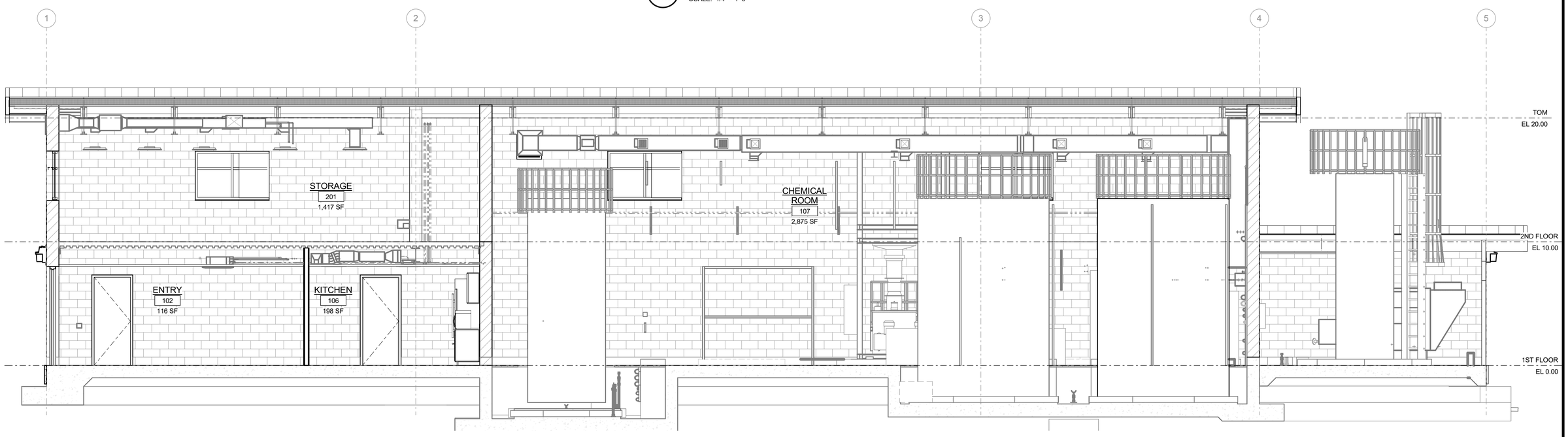

A / A-102 SECTION A

SCALE: 1/4" = 1'-0"

B:\05130310609600A_MOD.rvt

NO.	DATE	BY	REVISION

NOTICE

0 ½ 1

IF THIS BAR DOES NOT MEASURE 1" THEN DRAWING IS NOT TO SCALE

EN DESIGNED
EN DRAWN
BR CHECKED

REGISTERED ARCHITECT
PHILIP E. WALZ
DENVER, COLORADO
ARI-15961
STATE OF OREGON
7/29/2026

BID SET

consor

Stantec

South Fork WATER
PURE WATER SINCE 1915

WATER QUALITY SYSTEMS BUILDING

ARCHITECTURAL

BUILDING SECTIONS

PROJECT NO.: 21-3045 | SCALE: 1/4" = 1'-0" | DATE: AUGUST 2026

SHEET

A-303

ABBREVIATIONS

AFF	ABOVE FINISHED FLOOR
CFH	CUBIC FEET PER HOUR
CO	CLEAN OUT
CP	CIRCULATING PUMP
DS	DRENCH SHOWER
ES/EW	EMERGENCY SHOWER AND EYE WASH
ET	EXPANSION TANK
EWC	ELECTRIC WATER COOLER
FCO	FLOOR CLEAN OUT
FD	FLOOR DRAIN
FPW	FIRE PROTECTION WATER
GPM	GALLONS PER MINUTE
HB	HOSE BIBB
HWR	HOT WATER RETURN
HWS	HOT WATER SUPPLY
LAV	LAVATORY
MSB	MOP SERVICE BASIN
NG	NATURAL GAS
OST	OVERFLOW STORM WATER
PEW	PLANT EFFLUENT WATER
PW	POTABLE WATER
RPBFP	REDUCED PRESSURE BACK FLOW PREVENTER
SD	SANITARY DRAIN
SH	SHOWER
SK	SINK
ST	STORM WATER
TMV	THERMOSTATIC MIXING VALVE
TW	TEMPERED WATER
U	URINAL
V	VENT
VTR	VENT THROUGH ROOF
WC	WATER CLOSET
WCO	WALL CLEAN OUT
WH	WATER HEATER

LEGEND

- POTABLE COLD WATER
- POTABLE HOT WATER
- POTABLE HOT CIRCULATION WATER
- NG — NATURAL GAS
- FLOOR CLEANOUT
- WALL CLEANOUT
- BUTTERFLY VALVE
- GLOBE VALVE
- BALL VALVE
- BACKFLOW PREVENTER
- SD — SANITARY DRAIN
- V — VENT PIPING
- CHECK VALVE
- DOWN PIPE
- VALVE IN RISER
- FLOOR DRAIN

GENERAL PLUMBING NOTES

1. THE ENTIRE PLUMBING SYSTEM SHALL BE IN ACCORDANCE WITH THE 2023 OREGON PLUMBING SPECIALITY CODE REGULATIONS AND LOCAL PLUMBING INSPECTOR.
2. THE PIPING INDICATED ON THESE PLANS ARE DIAGRAMATIC. ALL WORK SHALL BE COORDINATED WITH ALL OTHER TRADES PRIOR TO INSTALLATION. SUBCONTRACTOR SHALL COORDINATE ROUTING OF ALL PIPING WITH EXISTING CONDITIONS AND SHALL PROVIDE ANY NECESSARY OFFSETS, REROUTING, TEES, ELBOWS, ETC. REQUIRED FOR A COMPLETE AND COORDINATED INSTALLATION.
3. SUBCONTRACTOR SHALL COORDINATE ANY PLUMBING OR PIPING SYSTEM SHUTDOWN WITH THE MWHC 48 HOURS IN ADVANCE.
4. ALL POTABLE WATER, PIPING SHOWN IS ABOVE CEILING, EXPOSED OVERHEAD AND WITHIN WALLS UNLESS OTHERWISE NOTED.
5. ALL SANITARY WASTE PIPING SHOWN IS BELOW SLAB, BELOW FLOOR, OR WITHIN WALLS UNLESS OTHERWISE NOTED. ALL SANITARY VENT PIPING SHOWN IS ABOVE CEILING, EXPOSED OVERHEAD, OR WITHIN WALLS UNLESS OTHERWISE NOTED.
6. SUBCONTRACTOR SHALL COORDINATE AND PROVIDE ALL NECESSARY PIPING & PLUMBING FITTINGS, PIPING, MISCELLANEOUS ITEMS REQUIRED FOR A COMPLETE INSTALLATION OF ALL LAB PLUMBING RELATED ITEMS.
7. THE SUBCONTRACTOR SHALL COORDINATE THE INSTALLATION OF ALL UNDER SLAB PIPING WITH EXISTING STRUCTURAL FOUNDATIONS. UNDERGROUND UTILITY LOCATIONS SHALL BE VERIFIED PRIOR TO ANY WORK BEING PERFORMED. SUBCONTRACTOR SHALL REPAIR OR REPLACE ALL PIPING NOT IN PROPER WORKING ORDER OR DAMAGED DURING INSTALLATION OF THE NEW UNDERGROUND PIPING.
8. ALL PLUMBING & PIPING SYSTEMS SHALL BE SUPPORTED AS REQUIRED BY THE LOCAL CODE REQUIREMENTS AND PER MANUFACTURER'S RECOMMENDATIONS.
9. ALL PIPING PENETRATIONS THROUGH NEW, EXISTING WALL, OR FLOOR SHALL BE SEALED TO EQUAL THE RATING OF THE NEW, EXISTING WALL OR FLOOR.
10. THE PLUMBING SYSTEM SHALL BE TESTED AS REQUIRED BY LOCAL CODE OR BY THE REQUIREMENTS OF THE LOCAL PLUMBING INSPECTOR.
11. THE BACKFLOW PREVENTION DEVICE SHALL BE INSTALLED PER LOCAL CODE & PER AUTHORITY HAVING JURISDICTION REQUIREMENTS.
12. ALL (VTR'S) VENT THRU ROOF PENETRATIONS INDICATED ON PLANS ARE PRELIMINARY. FINAL LOCATIONS SHALL BE COORDINATED WITH ALL TRADES. ALL VTR'S SHALL BE A MINIMUM OF 10'-0" FROM ALL FRESH AIR INTAKE OPENINGS.
13. PVC DRAIN & VENT PIPING SHALL NOT BE PERMITTED TO BE INSTALLED IN THE RETURN AIR PLENUMS.

PLUMBING FIXTURE CONNECTION SCHEDULE

ID	DESCRIPTION	WASTE	VENT	CW	HW	TW
WC-1	FLUSH VALVE WATER CLOSET	3"	1-1/2"	1"	-	-
LAV-1	LAVATORY	2"	1-1/2"	3/4"	3/4"	-
FD-1	FLOOR DRAIN	3"	1-1/2"	-	-	-
SK-1	SINK	2"	1-1/2"	3/4"	3/4"	-
SK-2	KITCHEN SINK	2"	1-1/2"	3/4"	3/4"	-
DF-1	DRINKING FOUNTAIN	1 1/2""	1 1/2"	3/4"	-	-
HB-1/HB-2	HOSE BIBB	-	-	3/4"	-	-
ESEW-1	EMERGENCY SHOWER AND EYEWASH STATION	-	-	-	-	1 1/4"

PIPING MATERIAL SCHEDULE

GROUP NO	PIPE	FITTINGS	VALVES, 6" AND SMALLER
CS09	STEEL, ASTM A53, SCH 40, WELDED, BLACK	2 1/2" AND SMALLER, MALLEABLE IRON, ASME B16.3, THREADED, BANDED, BLACK, 150 PSI. 3" AND LARGER, STEEL, ASME B16.9, BUTT-WELDED.	ECCENTRIC PLUG: DEZURIK PEC, CAST IRON, OR MILLIKEN 603E. CHECK: CRANE 336E OR MILWAUKEE #544. BALL: JAMESBURY FIG 351 OR WATTS #B-6080.
CU01	COPPER, ASTM B88, TYPE K, SOFT TEMPERED WHERE BURIED, HARD TEMPERED WHERE EXPOSED.	WROUGHT COPPER OR CAST BRONZE, ASME B16.22, SILVER SOLDER JOINT, 150 PSI, OR COMPRESSION FITTINGS.	BRONZE, SILVER SOLDER JOINT, GLOBE: CRANE #1310 OR STOCKHAM B-14T. CHECK: CRANE #1342 OR 36M, OR STOCKHAM B-309Y OR B-345. GATE: CRANE #426 OR STOCKHAM B-104 OR B-105.
PV08	POLYVINYL CHLORIDE (PVC), GRAVITY DWV PIPE, ASTM D2665/D1785, SCH 40, IPS DIAMETER (1/4" TO 24").	PVC DWV, ASTM D2665.	PVC, BALL DIAPHRAGM, BUTTERFLY, OR LIFT CHECK: NIBCO/CHEMTROL, MCCANNA-MARPAC, OR GEORGE FISCHER SLOANE.

GAS FIRED WATER HEATER

EQUIPMENT TAG	SERVICE	FUEL TYPE	STORED WATER TEMPERATURE	STORAGE CAPACITY (GAL)	INLET GAS PRESSURE (IN WC)		GAS INPUT	THERMAL EFFICIENCY	RECOVERY RATE AT 100 F (GAL/HR)	WEIGHT (LBS)	MANUFACTURER AND MODEL	OPTONS AND ACCESSORIES
					MIN	MAX						
WH-01	RESTROOM FIXTURES AND EMERGENCY SHOWER	NATURAL GAS	140 DEG F	119	4	10.4	251000	97%	289	855	AO SMITH, BTH-251(A)	1 - 8

OPTIONS AND ACCESSORIES:
1. MAXIMUM HYDROSTATIC WORKING PRESSURE OF 160 PSI
2. ADAPTIVE GAS CONTROLLED MODULTING GAS BURNER
3. ASME RATED T&P RELIEF VALVE
4. APPROVED FOR 0" CLEARANCE TO COMBUSTIBLES
5. CONCENTRIC VENT KIT
6. BMS GATEWAY DEVICE
7. CONDENSATE NEUTRALIZATION KIT
8. SUITABLE FOR POWER DIRECT VENTING WITH 4" PVC PIPE

CIRCULATING PUMP SCHEDULE

MARK	DESCRIPTION	MAX FLOW	TDH (FT)	MOTOR			MANUFACTURER AND MODEL	NOTES
		GPM		WATTS	RPM	V/PH/HZ		
CP-01	RECIRCULATING PUMP	5	6	6	0-70	115/1/60	BELL AND GOSSETT ECOCIRC +20-18	1 - 4

NOTES:
1. STAINLESS STEEL, UNION TYPE.
2. 0-10V INPUT
3. BLUETOOTH COMMUNICATION
4. DIGITAL DISPLAY

NO.	DATE	BY	REVISION

NOTICE
0 ½ 1
IF THIS BAR DOES NOT MEASURE 1" THEN DRAWING IS NOT TO SCALE

SAS
DESIGNED
ON
DRAWN
SHS
CHECKED

REGISTERED PROFESSIONAL ENGINEER 99804PE OREGON MAY 10, 2022 SHIVANI AMOL SAPTARISHI
EXPIRES: 06/30/2028

BID SET

consor
Stantec

South Fork WATER
PURE WATER SINCE 1915

WATER QUALITY SYSTEMS BUILDING

PLUMBING

GENERAL PLUMBING NOTES, SYMBOL ABBREVIATION AND SCHEDULE

PROJECT NO.: 21-3045 | SCALE: | DATE: AUGUST 2026

SHEET
P-001

C:\pwworkdir\d0513053\0609600P-001.dwg GA-02 7/27/2026 3:59 PM RYAKIM 25.0s (LMS Tech)

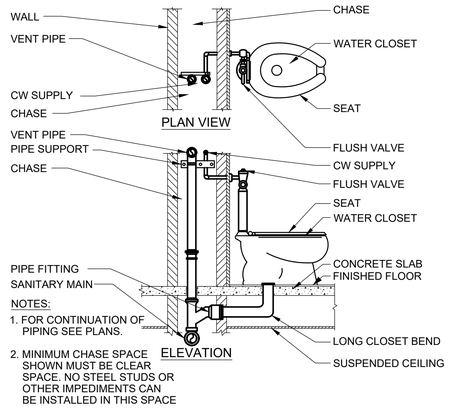

NOTES:

1. FOR CONTINUATION OF PIPING SEE PLANS.
2. MINIMUM CHASE SPACE SHOWN MUST BE CLEAR SPACE. NO STEEL STUDS OR OTHER IMPEDIMENTS CAN BE INSTALLED IN THIS SPACE

P-101 SINGLE WATER CLOSET

(FLOOR MOUNTED)

REV 010119

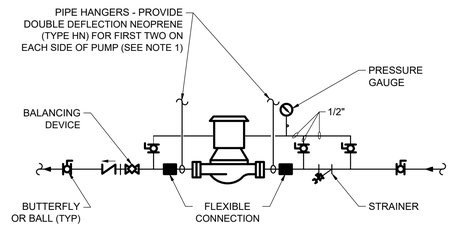

NOTE:

1. SUPPORT PUMP FROM PIPING ONLY. DO NOT SUPPORT PUMP FROM MOTOR.

M-124 IN-LINE PUMPS

(PIPING CONNECTIONS)

REV 030122

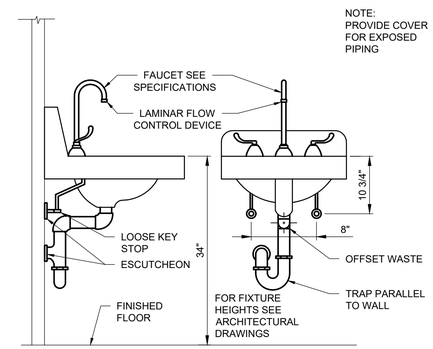

P-152 TYPICAL WHEELCHAIR LAVATORY

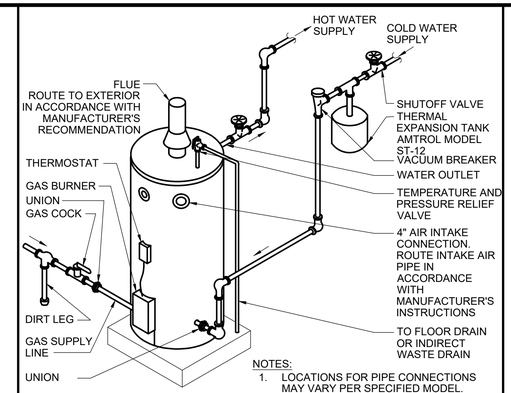

NOTES:

1. LOCATIONS FOR PIPE CONNECTIONS MAY VARY PER SPECIFIED MODEL. REFER TO MANUFACTURER'S DATASHEETS FOR ACCURATE PIPING CONNECTION LOCATIONS

P-202 GAS FIRED WATER HEATER

REV 010119

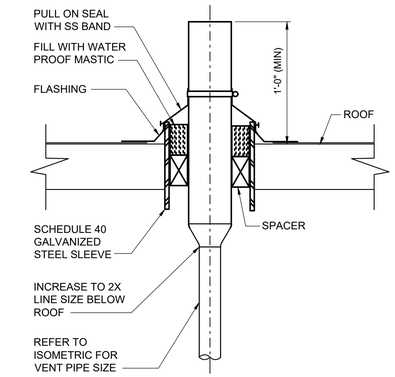

P-206 VENT THRU ROOF

REV 051524

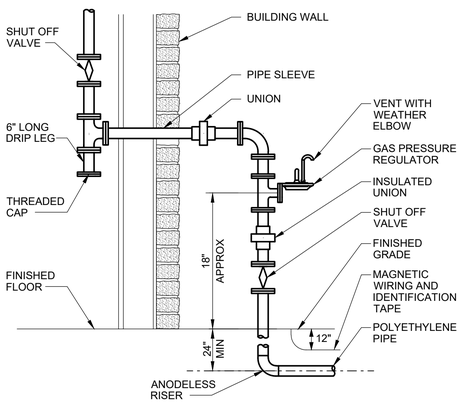

M-207 GAS PRESSURE REGULATOR

REV 010119

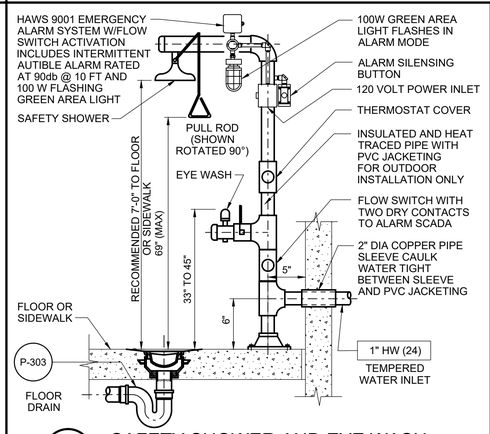

P-241 SAFETY SHOWER AND EYE WASH

REV 010119

NO.	DATE	BY	REVISION

NOTICE

0 ½ 1

IF THIS BAR DOES NOT MEASURE 1" THEN DRAWING IS NOT TO SCALE

SAS
DESIGNED
ON
DRAWN
SHS
CHECKED

REGISTERED PROFESSIONAL ENGINEER 99804PE OREGON MAY 10, 2022 SHIVANI AMOL SAPTARSHI

EXPIRES: 06/30/2028

BID SET

consor

Stantec

South Fork WATER PURE WATER SINCE 1915

WATER QUALITY SYSTEMS BUILDING

PLUMBING

PLUMBING DETAILS - I

PROJECT NO.: 21-3045 | SCALE: | DATE: AUGUST 2026

SHEET

P-002

C:\pwworkdir\d0513053\0609600P-002.dwg GA-02 7/27/2026 4:01 PM RYAKIM 25.0s (LMS Tech)

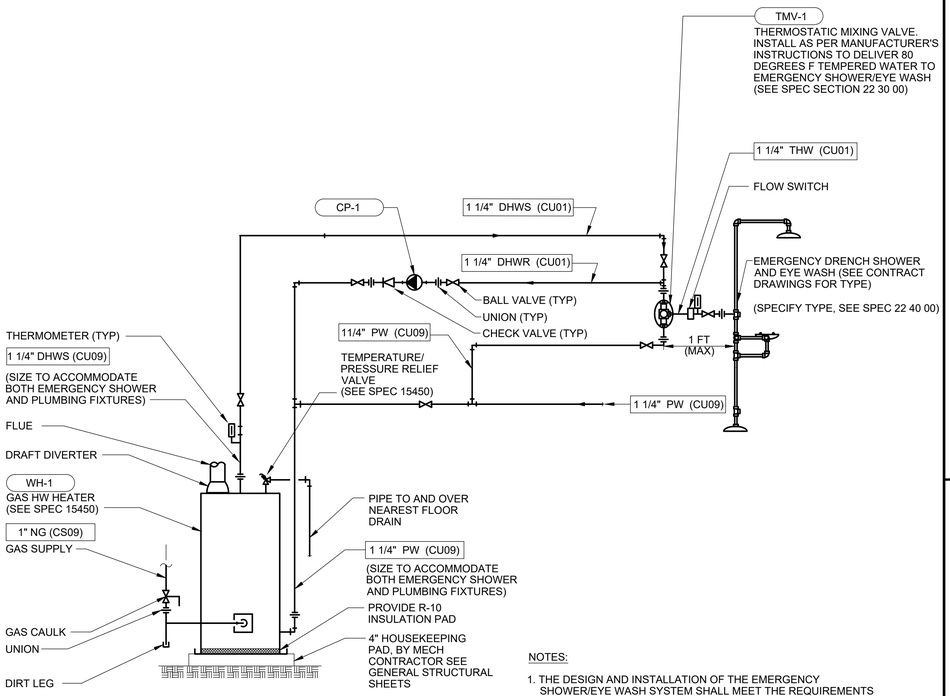

NOTES:

1. THE DESIGN AND INSTALLATION OF THE EMERGENCY SHOWER/EYE WASH SYSTEM SHALL MEET THE REQUIREMENTS OF ANSI Z358.1-2004.
2. THE EMERGENCY SHOWER SHALL DELIVER 20 GPM OF 80 DEGREES F TEMPERED WATER, FOR 15 MINUTES, AT 30 PSI.
3. THE SYSTEM SHALL INCLUDE A FLOW SWITCH WITH AT LIST TWO DRY CONTACTS TO ALARM SCADA.

P-244 WATER TEMPERING SYSTEM
(FOR EMERGENCY SHOWER)

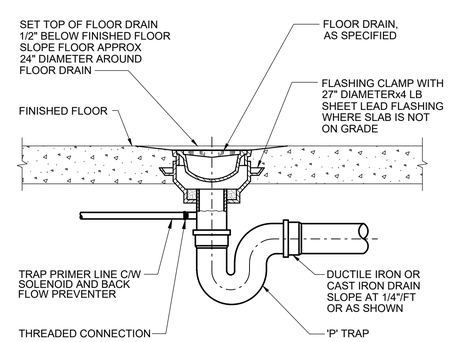

P-303 FLOOR DRAIN
REV 022924

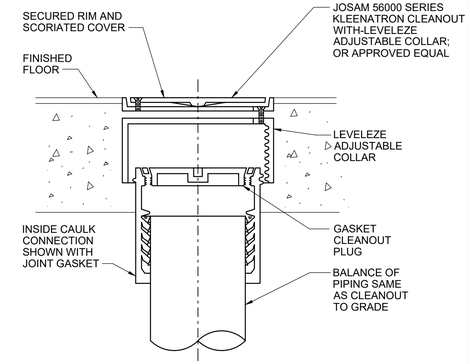

P-310 FLOOR CLEANOUT
(IN FINISHED FLOOR)
REV 010119

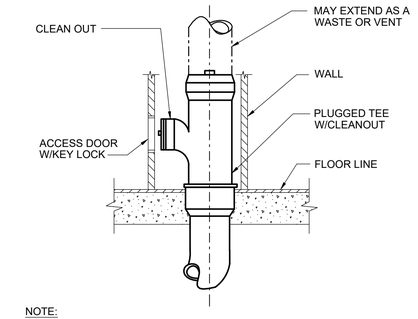

NOTE:
BALANCE OF PIPING SAME AS CLEANOUT TO GRADE.

P-315 WALL CLEANOUT DETAIL
REV 010119

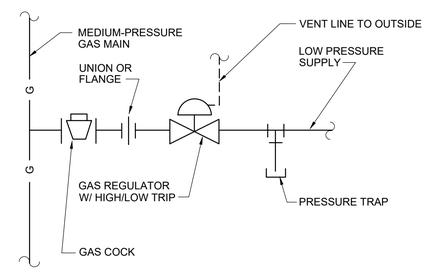

P-410 GAS REGULATOR
(MEDIUM TO LOW PRESSURE)
REV 010119

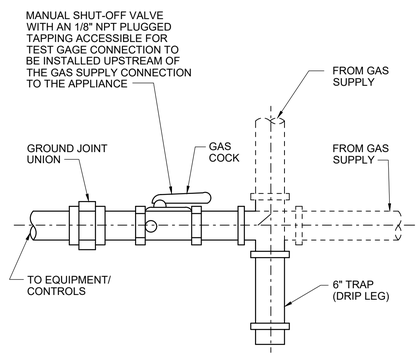

P-411 GAS CONNECTION TO EQUIPMENT DETAIL
REV 010119

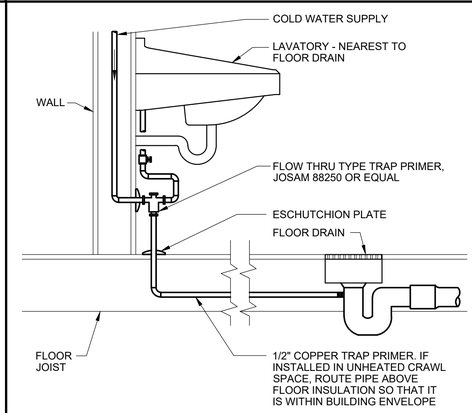

P-510 FLOOR DRAIN TRAP PRIMER
REV 010119

NO.	DATE	BY	REVISION

NOTICE
0 ½ 1
IF THIS BAR DOES NOT MEASURE 1" THEN DRAWING IS NOT TO SCALE

SAS DESIGNED
ON DRAWN
SHS CHECKED

REGISTERED PROFESSIONAL ENGINEER 99804PE OREGON MAY 10, 2022 SHIVANI AMOL SAPTARISHI
EXPIRES: 06/30/2028

BID SET

consor
Stantec

South Fork WATER
PURE WATER SINCE 1915
WATER QUALITY SYSTEMS BUILDING

PLUMBING
PLUMBING DETAILS - II

PROJECT NO.: 21-3045 | SCALE: | DATE: AUGUST 2026

SHEET P-003

C:\pwworkdir\d0513053\0609600P-003.dwg GA-02 7/27/2026 4:02 PM RYAKIM 25.0s (LMS Tech)

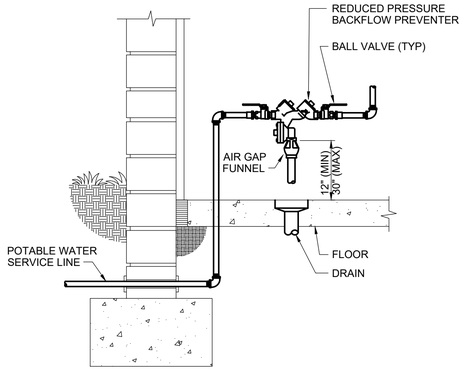

P-551 HORIZONTAL REDUCED PRESSURE (BACKFLOW PREVENTER)

REV 010119

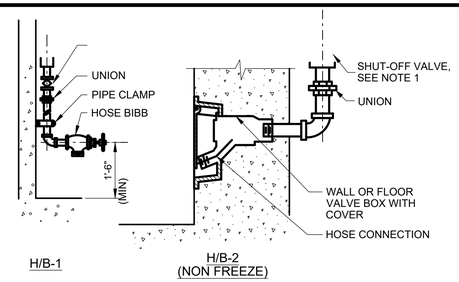

NOTES:

1. ALL HOSE VALVES TO BE CONTROLLED BY INDIVIDUAL SHUT-OFF VALVES (BALL OR PLUG VALVES) EXCEPT WHERE INDIVIDUALLY CONTROLLED BRANCH MAIN SERVES HOSE VALVES ONLY.
2. FOR SIZE AND LOCATION SEE DRAWINGS.
3. PROVIDE WARNING SIGN WHEN USED FOR NON-POTABLE WATER.

P-553 HOSE BIBS

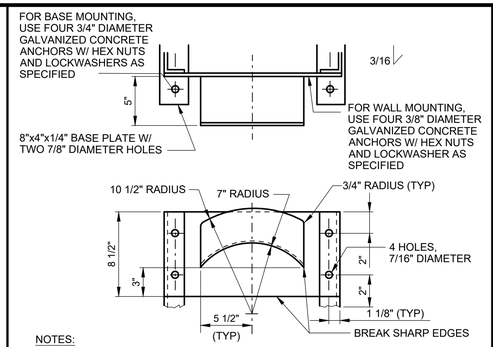

NOTES:

1. WHERE HOSE RACK IS FREE-STANDING, PROVIDE TWO STEEL ANGLES 2x2x1/4 W/BASE PLATES (OMIT BASE PLATES WHERE ANGLES CAN BE SET IN CONCRETE).
2. ALL WELDED CONSTRUCTION. 8 GAUGE STEEL SHEET GALVANIZED AFTER FABRICATION.

P-554 HOSE RACK

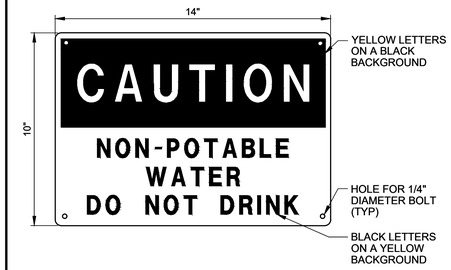

NOTES:

1. PROVIDE SIGN AT ALL HOSE BIBB LOCATIONS WHERE WATER IS NON-POTABLE.
2. SEE SPECIFICATIONS SECTION 'BUILDING SIGNAGE' FOR FURTHER REQUIREMENTS.

P-901 WARNING SIGN FOR NON-POTABLE WATER

NO.	DATE	BY	REVISION

NOTICE
0 ½ 1
IF THIS BAR DOES NOT MEASURE 1" THEN DRAWING IS NOT TO SCALE

SAS DESIGNED
ON DRAWN
SHS CHECKED

REGISTERED PROFESSIONAL ENGINEER 99804PE OREGON MAY 10, 2022 SHIVANI AMOL SAPTARISHI
EXPIRES: 06/30/2028

BID SET

consor
Stantec

South Fork WATER
PURE WATER SINCE 1915

WATER QUALITY SYSTEMS BUILDING

PLUMBING

PLUMBING DETAILS - III

PROJECT NO.: 21-3045 | SCALE: | DATE: AUGUST 2026

SHEET P-004

C:\pwworkdir\d0513053\0609600P-004.dwg GA-02 7/27/2026 4:03 PM RYAKIM 25.0s (LMS Tech)

DATE : 7/27/2026 3:55:28 PM

USER : ON

GENERAL SHEET NOTES

1. ALL PLUMBING SYSTEM, EQUIPMENT, AND COMPONENTS SHALL BE FURNISHED AND INSTALLED IN STRICT COMPLIANCE WITH 2023 OREGON PLUMBING SPECIALTY CODE AND RELATED CODES.
2. PIPING INSULATION SHALL COMPLY WITH 2023 OREGON EFFICIENCY SPECIALTY CODE. COLD WATER PIPING INSULATION THICKNESS SHALL BE 1/2 INCH FOR PIPE SIZES UP TO 1 INCH, AND 1 INCH FOR PIPE SIZES LARGER THAN 1 INCH. HOT WATER PIPING INSULATION THICKNESS SHALL BE 1 INCH FOR PIPE SIZES UP TO 1 INCH AND 1-1/2 INCH FOR PIPE SIZES LARGER THAN 1 INCH.
3. NO PIPE SHALL BE ROUTED ABOVE ANY ELECTRICAL PANEL

SHEET KEYNOTES

A. ROUTE DRAIN TO EXTERIOR IN A DRY WELL.

B. 4" FLUE VENT TO OUTSIDE. INSTALL PER MANUFACTURER'S INSTRUCTIONS.

C. 4" AIR INTAKE CONNECTION. ROUTE INTAKE AIR PIPE THROUGH ADJACENT WALL ACCORDANCE WITH MANUFACTURER'S INSTRUCTIONS. TERMINATE WITH RAIN CAP.

D. WATER HEATER TO BE INSTALLED ON 12" HIGH CONCRETE PAD. REFER TO STRUCTURAL DRAWINGS FOR PAD DETAILS.

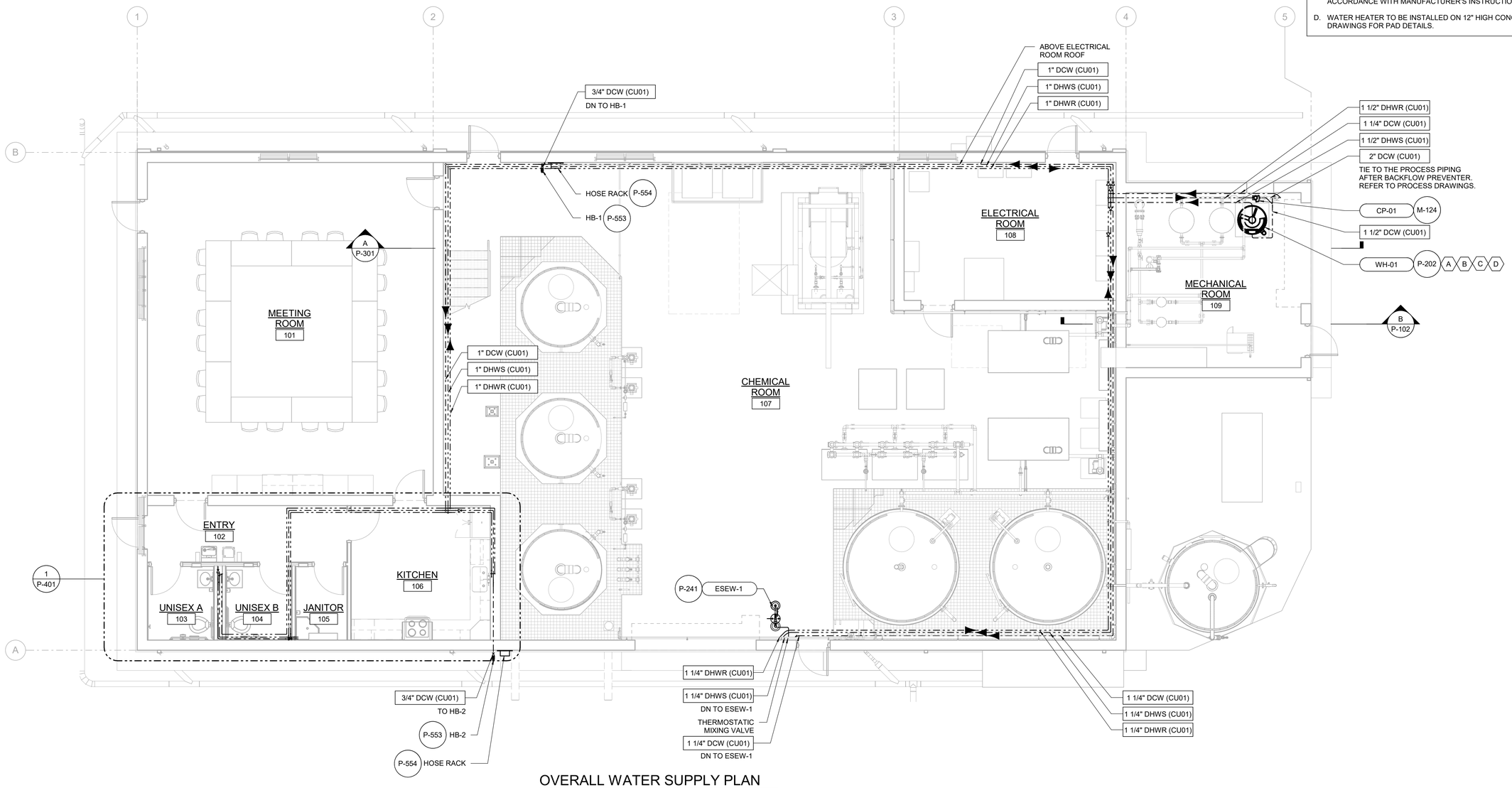

OVERALL WATER SUPPLY PLAN

SCALE: 3/16" = 1'-0"

NO.	DATE	BY	REVISION

NOTICE

0 ½ 1

IF THIS BAR DOES NOT MEASURE 1" THEN DRAWING IS NOT TO SCALE

SAS
DESIGNED
ON
DRAWN
SHS
CHECKED

REGISTERED PROFESSIONAL ENGINEER 99804PE OREGON MAY 10, 2022 SHIVANI AMOL SAPTARSHY

EXPIRES: 06/30/2028

BID SET

consor

Stantec

South Fork WATER
PURE WATER SINCE 1915

WATER QUALITY SYSTEMS BUILDING

PLUMBING

WATER SUPPLY PLAN

PROJECT NO.: 21-3045 | SCALE: 3/16" = 1'-0" | DATE: AUGUST 2026

SHEET

P-101

B:\d0513053\06096\00P_MOD.rvt

SHEET KEYNOTE

A. CONCRETE ENCASE ELBOWS AND PROVIDE VICTAULIC FLEXIBLE COUPLING AT THE PIPES EXITING THE ENCASEMENT.

GENERAL SHEET NOTES

1. DRAIN PIPES WHICH ARE 4" AND GREATER SHALL BE SLOPED AT 1/8" PER FOOT UNLESS OTHERWISE NOTED, AND 3" AND LESS DRAIN PIPES SHALL BE SLOPED AT 1/4" PER FOOT
2. ALL FLOOR DRAINS SHALL BE PROVIDED WITH P-TRAPS WITH TRAP PRIMERS
3. ALL DRAIN PIPING SHALL BE BELOW THE SLAB UNLESS NOTED OTHERWISE

ELEVATION NOTES

1. ELEVATIONS SHOWN ARE RELATIVE TO FINISH FLOOR ELEVATION.

   EL 0.00 = FINISHED FLOOR EL 324.20

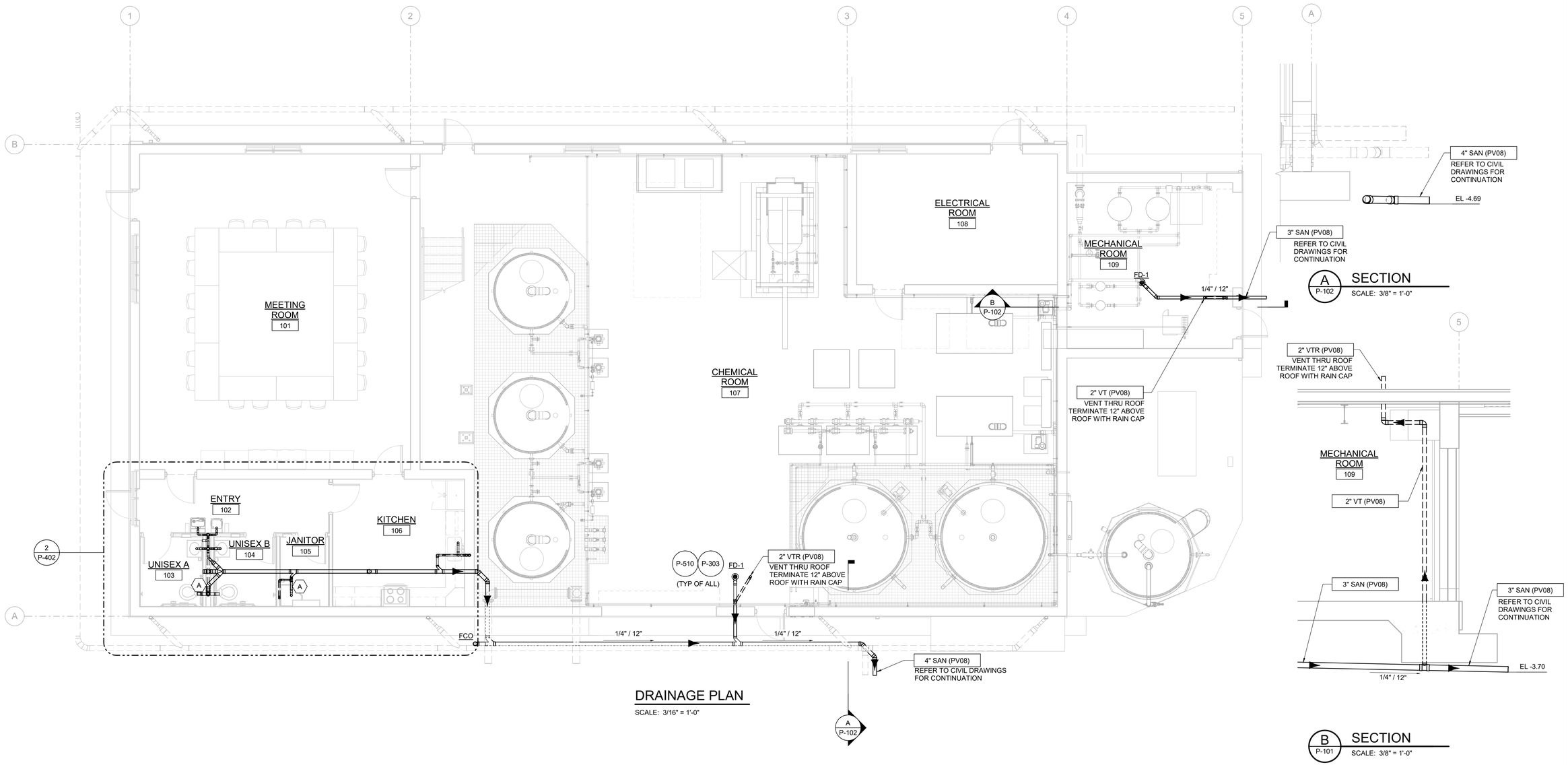

DRAINAGE PLAN

SCALE: 3/16" = 1'-0"

A P-102 SECTION

SCALE: 3/8" = 1'-0"

B P-101 SECTION

SCALE: 3/8" = 1'-0"

DATE : 7/27/2026 3:55:49 PM

USER : ON

B:\d0513053\06096\00P_MOD.rvt

NO.	DATE	BY	REVISION

NOTICE

0 ½ 1

IF THIS BAR DOES NOT MEASURE 1" THEN DRAWING IS NOT TO SCALE

SAS
DESIGNED
ON
DRAWN
SHS
CHECKED

REGISTERED PROFESSIONAL ENGINEER 99804PE OREGON MAY 10, 2022 SHIVANI AMOL SAPTARISHI

EXPIRES: 06/30/2028

BID SET

consor

Stantec

South Fork WATER PURE WATER SINCE 1915

WATER QUALITY SYSTEMS BUILDING

PLUMBING

DRAINAGE PLAN

PROJECT NO.: 21-3045 | SCALE: As indicated | DATE: AUGUST 2026

SHEET

P-102

DATE : 7/27/2026 3:55:52 PM

USER : ON

SHEET KEYNOTES

A. PROVIDE GAS PRESSURE REGULATOR FOR EQUIPMENT LOAD OF 251 CFH AT 7" WC. REGULATOR SHALL BE VENTLESS TYPE.

B. PROVIDE GAS PRESSURE REGULATOR FOR EQUIPMENT LOAD OF 200 CFH AT 7" WC. REGULATOR SHALL BE VENTLESS TYPE.

C. CONTRACTOR SHALL VERIFY THE CAPACITY AND DISCHARGE PRESSURE AT THE EXISTING METER (LOCATED AT THE SIDE OF THE EXISTING BUILDING) AND COORDINATE WITH THE GAS UTILITY TO UPGRADE THE METER IF REQUIRED.

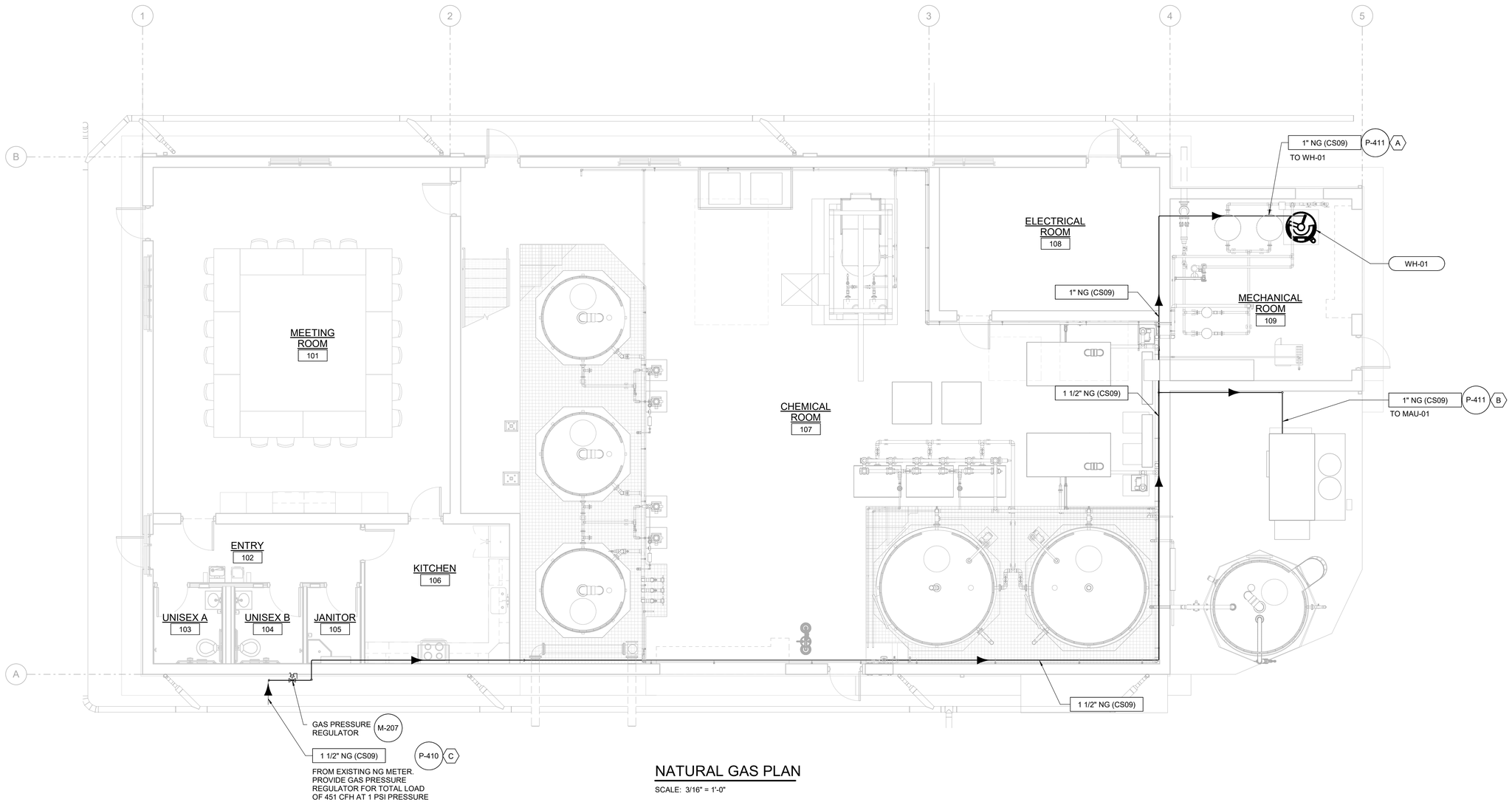

NATURAL GAS PLAN

SCALE: 3/16" = 1'-0"

NO.	DATE	BY	REVISION

NOTICE

0 ½ 1

IF THIS BAR DOES NOT MEASURE 1" THEN DRAWING IS NOT TO SCALE

SAS
DESIGNED
ON
DRAWN
SHS
CHECKED

REGISTERED PROFESSIONAL ENGINEER 99804PE OREGON MAY 10, 2022 SHIVANI AMOL SAPTARSHI

EXPIRES: 06/30/2028

BID SET

consor

Stantec

South Fork WATER
PURE WATER SINCE 1915

WATER QUALITY SYSTEMS BUILDING

PLUMBING

NATURAL GAS PIPING

PROJECT NO.: 21-3045 | SCALE: 3/16" = 1'-0" | DATE: AUGUST 2026

SHEET

P-103

B:\005130530\0609600P_MOD.rvt

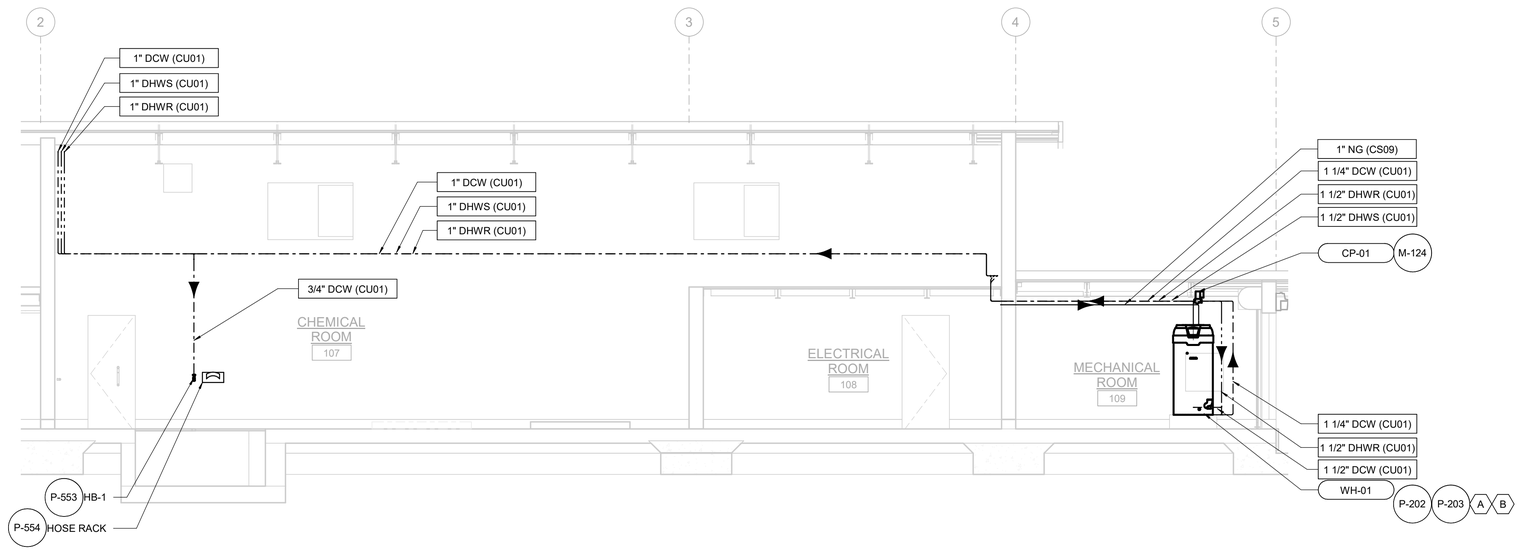

A / P-101 SECTION
SCALE: 3/16" = 1'-0"

DATE : 7/27/2026 3:55:53 PM

USER : ON

B:\d0513053\06096OP_MOD.rvt

NO.	DATE	BY	REVISION

NOTICE
0 ½ 1
IF THIS BAR DOES NOT MEASURE 1" THEN DRAWING IS NOT TO SCALE

SAS
DESIGNED
ON
DRAWN
SHS
CHECKED

REGISTERED PROFESSIONAL ENGINEER 99804PE OREGON MAY 10, 2022 SHIVANI AMOL SAPTARISHI
EXPIRES: 06/30/2028

BID SET

consor
Stantec

South Fork WATER
PURE WATER SINCE 1915

WATER QUALITY SYSTEMS BUILDING

PLUMBING

SECTIONS

PROJECT NO.: 21-3045 | SCALE: 3/16" = 1'-0" | DATE: AUGUST 2026

SHEET
P-301

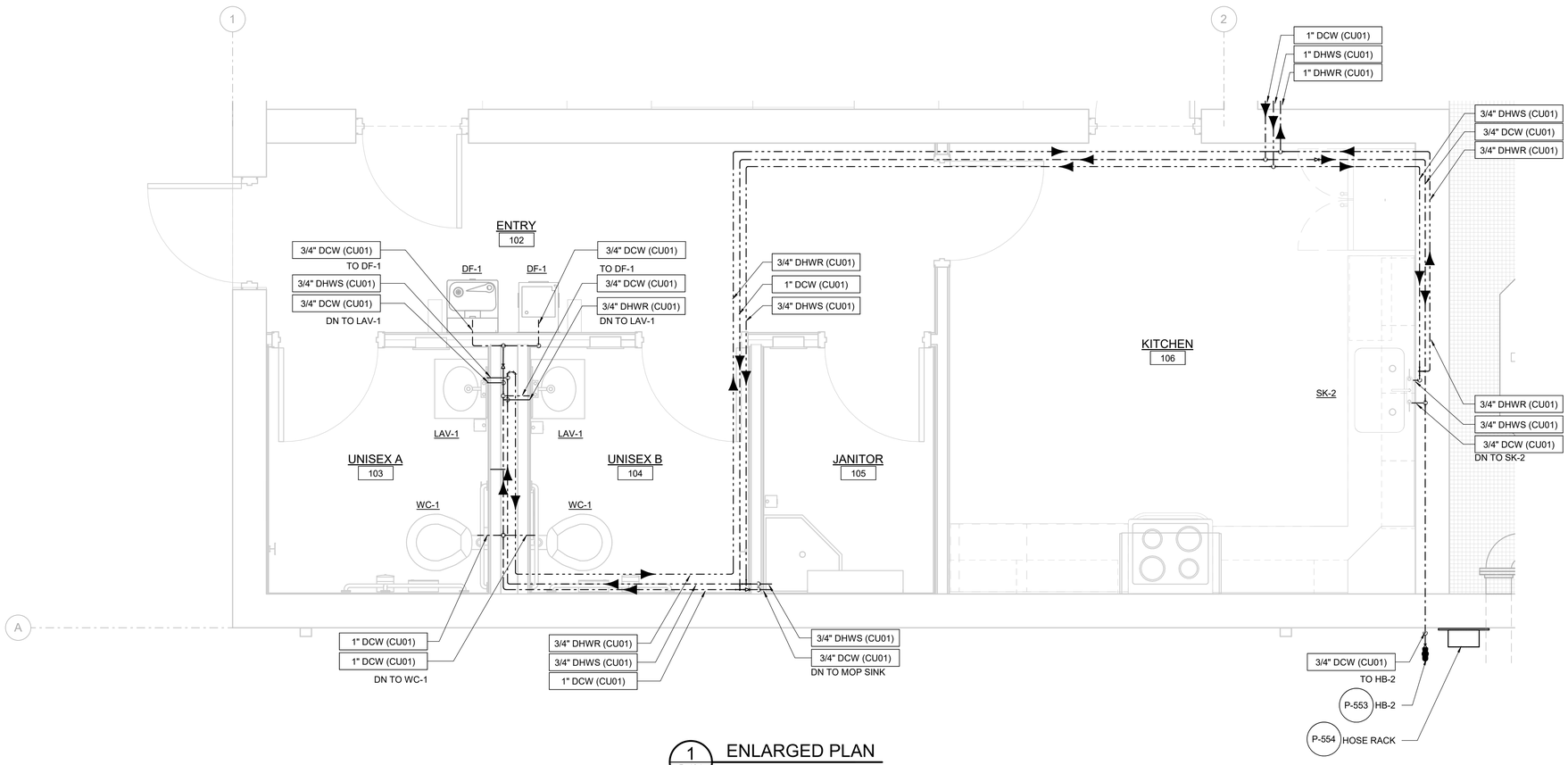

1 P-101 ENLARGED PLAN

SCALE: 1/2" = 1'-0"

DATE : 7/27/2026 3:55:56 PM

USER : ON

B:\005130530\0609600P_MOD.rvt

NO.	DATE	BY	REVISION

NOTICE

0 ½ 1

IF THIS BAR DOES NOT MEASURE 1" THEN DRAWING IS NOT TO SCALE

SAS
DESIGNED
ON
DRAWN
SHS
CHECKED

REGISTERED PROFESSIONAL ENGINEER 99804PE OREGON MAY 10, 2022 SHIVANI AMOL SAPTARISHI

EXPIRES: 06/30/2028

BID SET

consor

Stantec

South Fork WATER PURE WATER SINCE 1915

WATER QUALITY SYSTEMS BUILDING

PLUMBING

ENLARGED PLAN

PROJECT NO.: 21-3045 | SCALE: 1/2" = 1'-0" | DATE: AUGUST 2026

SHEET

P-401

SHEET KEYNOTE

A. CONCRETE ENCASE ELBOWS AND PROVIDE VICTAULIC FLEXIBLE COUPLING AT THE PIPES EXITING THE ENCASEMENT.

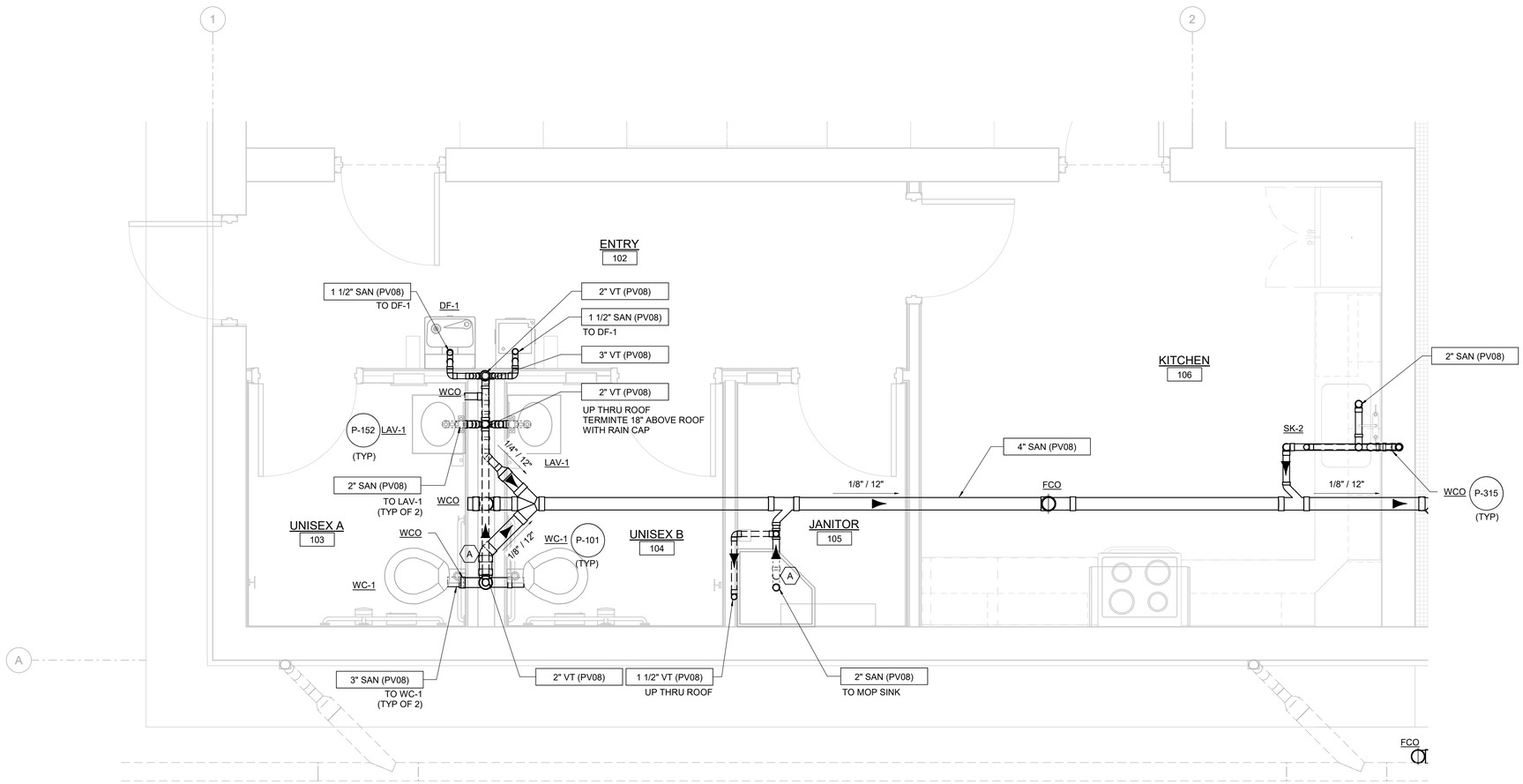

2 P-102 ENLARGED PLAN

SCALE: 1/2" = 1'-0"

DATE : 7/27/2026 3:55:57 PM

USER : ON

B:\005130530609600P_MOD.rvt

NO.	DATE	BY	REVISION

NOTICE

0 ½ 1

IF THIS BAR DOES NOT MEASURE 1" THEN DRAWING IS NOT TO SCALE

SAS DESIGNED ON DRAWN SHS CHECKED

REGISTERED PROFESSIONAL ENGINEER 99804PE OREGON MAY 10, 2022 SHIVANI AMOL SAPTARISHI

EXPIRES: 06/30/2028

BID SET

consor

Stantec

South Fork WATER PURE WATER SINCE 1915

WATER QUALITY SYSTEMS BUILDING

PLUMBING

ENLARGED PLAN

PROJECT NO.: 21-3045 | SCALE: 1/2" = 1'-0" | DATE: AUGUST 2026

SHEET P-402

DATE : 7/27/2026 3:55:58 PM

USER : ON

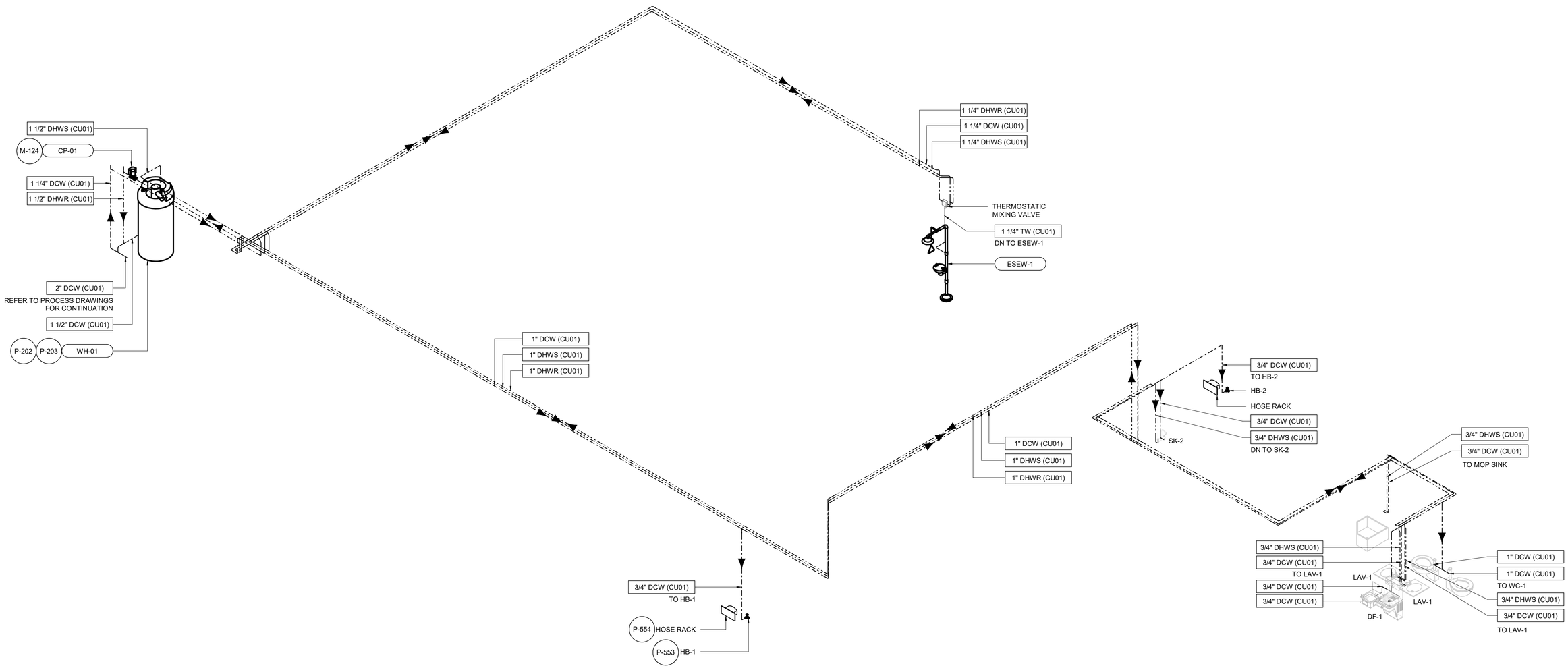

WATER SUPPLY ISOMETRIC

SCALE:

B:\d0513053\06096\00P_MOD.rvt

NO.	DATE	BY	REVISION

NOTICE

0 ½ 1

IF THIS BAR DOES NOT MEASURE 1" THEN DRAWING IS NOT TO SCALE

SAS
DESIGNED
ON
DRAWN
SHS
CHECKED

REGISTERED PROFESSIONAL ENGINEER 99804PE OREGON MAY 10, 2022 SHIVANI AMOL SAPTARISHI

EXPIRES: 06/30/2028

BID SET

consor

Stantec

South Fork WATER
PURE WATER SINCE 1915

WATER QUALITY SYSTEMS BUILDING

PLUMBING

WATER SUPPLY ISOMETRIC

PROJECT NO.: 21-3045 | SCALE: | DATE: AUGUST 2026

SHEET

P-901

DATE : 7/27/2026 3:55:59 PM

USER : ON

ELEVATION NOTES

1. ELEVATIONS SHOWN ARE RELATIVE TO FINISH FLOOR ELEVATION.

   EL 0.00 = FINISHED FLOOR EL 324.20

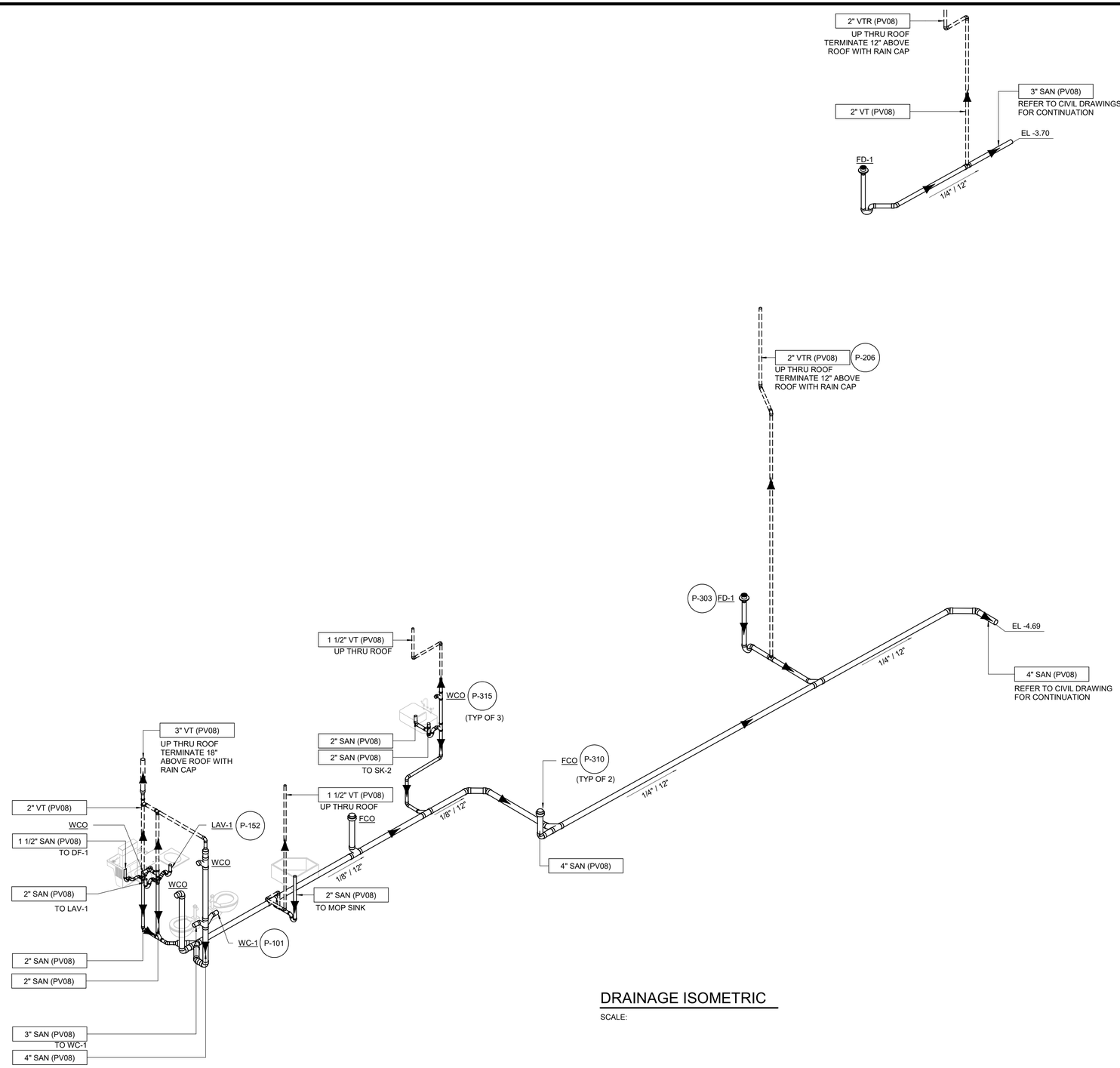

DRAINAGE ISOMETRIC

SCALE:

B:\05130530\0609600P_MOD.rvt

NO.	DATE	BY	REVISION

NOTICE

0 ½ 1

IF THIS BAR DOES NOT MEASURE 1" THEN DRAWING IS NOT TO SCALE

SAS
DESIGNED
ON
DRAWN
SHS
CHECKED

REGISTERED PROFESSIONAL ENGINEER 99804PE OREGON MAY 10, 2022 SHIVANI AMOL SAPTARSHI

EXPIRES: 06/30/2028

BID SET

consor

Stantec

South Fork WATER
PURE WATER SINCE 1915

WATER QUALITY SYSTEMS BUILDING

PLUMBING

DRAINAGE ISOMETRIC

PROJECT NO.: 21-3045 | SCALE: | DATE: AUGUST 2026

SHEET

P-902

DATE : 7/27/2026 3:56:00 PM

USER : ON

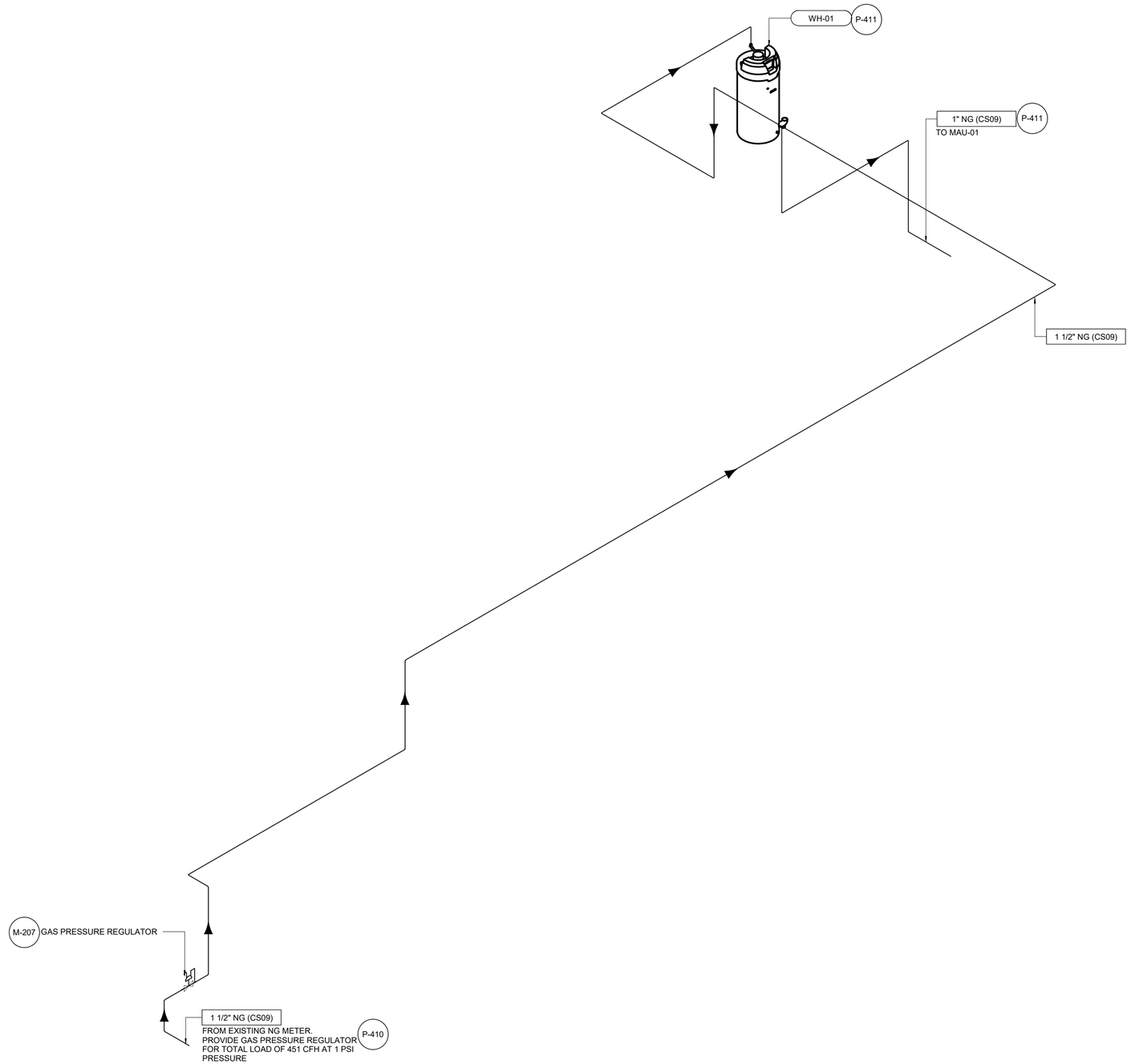

NATURAL GAS ISOMETRIC

SCALE:

B:\005130530\0609600P_MOD.rvt

NO.	DATE	BY	REVISION

NOTICE

0 ½ 1

IF THIS BAR DOES NOT MEASURE 1" THEN DRAWING IS NOT TO SCALE

SAS
DESIGNED
ON
DRAWN
SHS
CHECKED

REGISTERED PROFESSIONAL ENGINEER 99804PE OREGON MAY 10, 2022 SHIVANI AMOL SAPTARSHI

EXPIRES: 06/30/2028

BID SET

consor

Stantec

South Fork WATER PURE WATER SINCE 1915

WATER QUALITY SYSTEMS BUILDING

PLUMBING

NATURAL GAS ISOMETRIC

PROJECT NO.: 21-3045 | SCALE: | DATE: AUGUST 2026

SHEET

P-903

PIPE SYMBOLS

DESCRIPTION	SYMBOL
PROPOSED	
HIDDEN	
BELOW GRADE	
EXISTING	
EXISTING HIDDEN	
DEMOLISH	
FUTURE	
CENTERLINE	
PIPE CUT	
PIPE BREAK	
PIPE BREAK (SINGLE LINE)	

PIPE JOINTS

DESCRIPTION	SYMBOL
FLANGED	
MECHANICAL JOINT	
GROOVED	
PVC	
STEEL	
PUSH-ON	
TAP	
SERVICE SADDLE	

PIPE FITTINGS

DESCRIPTION	SYMBOL
90° ELBOW	
45° ELBOW	
22.5° ELBOW	
11.25° ELBOW	
BASE ELBOW	
TEE	
CROSS	
LATERAL	
REDUCER (CONCENTRIC)	
REDUCER (ECCENTRIC)	
REDUCING 90° ELBOW	
EXPANSION JOINT (RESTRAINED)	
EXPANSION JOINT (UNRESTRAINED)	
DISMANTLING JOINT	
FLANGE COUPLING ADAPTER (FCA)	
RESTRAINED FLANGE COUPLING ADAPTER (RFCA)	
FLANGED x FLARED	

VALVE SYMBOLS

DESCRIPTION	PLAN	SECTION	SINGLE LINE
BALL VALVE			
BUTTERFLY VALVE			
BUTTERFLY VALVE (WAFER / LUGGED)			
CHECK VALVE (SWING)			
CHECK VALVE (BALL)			
DIAPHRAGM VALVE			
GATE VALVE			
GLOBE VALVE			
KNIFE GATE VALVE			
PINCH VALVE			
PLUG VALVE			

VALVE SYMBOLS

DESCRIPTION	PLAN	SECTION	SINGLE LINE
PRESSURE REDUCING VALVE (STRAIGHT)			
PRESSURE REDUCING VALVE (ANGLED)			
BACK PRESSURE REGULATOR VALVE (STRAIGHT)			
PRESSURE GAUGE			
AIR VALVE (COMBINATION)			
AIR VALVE (AIR RELEASE)			
AIR VALVE (AIR/VACUUM)			
FLOW METER			M

GENERIC PIPING NOTES:

1. LAY PIPE TO UNIFORM GRADE BETWEEN INDICATED ELEVATION POINTS.

2. SIZE OF FITTINGS SHOWN ON DRAWINGS SHALL CORRESPOND TO ADJACENT STRAIGHT RUN OF PIPE, UNLESS OTHERWISE INDICATED. TYPE OF JOINT AND FITTING MATERIAL SHALL BE THE SAME AS SHOWN FOR ADJACENT STRAIGHT RUN OF PIPE.

3. LOCATION AND NUMBER OF PIPE HANGERS AND PIPE SUPPORTS SHOWN IS ONLY APPROXIMATE. CONTRACTOR SHALL DESIGN SUPPORTS AS SPECIFIED.

4. ALL JOINTS SHALL BE WATERTIGHT. WALL PIPES SHALL BE USED WHEREVER PIPING PASSES FROM A STRUCTURE TO A BACKFILL.

5. ALL FLEXIBLE CONNECTORS AND COUPLING ADAPTERS SHALL BE PROVIDED WITH THRUST PROTECTION AS SPECIFIED, UNLESS OTHERWISE NOTED. THRUST PROTECTION SHALL BE ADEQUATE FOR TEST PRESSURES SPECIFIED.

6. SYMBOLS, LEGENDS AND PIPE USE IDENTIFICATIONS SHOWN SHALL BE FOLLOWED THROUGHOUT THE DRAWINGS, WHEREVER APPLICABLE. NOT ALL OF THE VARIOUS COMPONENTS ARE NECESSARILY USED IN THE PROJECT.

7. ALL BURIED PIPING SPECIFIED TO BE PRESSURE TESTED, EXCEPT FLANGED, WELDED OR SCREWED PIPING, SHALL BE PROVIDED WITH THRUST PROTECTION AS SPECIFIED, UNLESS OTHERWISE NOTED.

8. NUMBER AND LOCATION OF UNIONS SHOWN ON DRAWINGS IS ONLY APPROXIMATE. PROVIDE ALL UNIONS NECESSARY TO FACILITATE CONVENIENT REMOVAL OF VALVES AND MECHANICAL EQUIPMENT.

9. WHERE A GROOVED END COUPLING IS SHOWN, IT SHALL BE THE RIGID JOINT TYPE, UNLESS OTHERWISE SPECIFIED. WHERE A FLANGED COUPLING ADAPTER IS SHOWN, A STANDARD FLANGE SHALL BE JOINED TO THE COUPLING ADAPTER.

PIPE PENTRATIONS

WALL SPOOL (FLANGED)

WALL SPOOL (FLANGED x MJ)

LINK SEAL

INTERIOR EXTERIOR

GENERAL NOTES:

1. THIS IS A STANDARD PROCESS LEGEND, NOT ALL OF THE INFORMATION MAY BE USED ON THIS PROJECT.

2. ONLY FLANGED END CONNECTIONS ARE SHOWN HERE. OTHER FITTING PATTERNS ARE SHOWN SIMILARLY ON THE CONSTRUCTION DRAWINGS. ALSO SEE PIPING SPECIFICATIONS.

NO.	DATE	BY	REVISION

NOTICE

0 ½ 1

IF THIS BAR DOES NOT MEASURE 1" THEN DRAWING IS NOT TO SCALE

HLB DESIGNED

JLC DRAWN

HLB CHECKED

REGISTERED PROFESSIONAL ENGINEER 105439PE OREGON MARCH 11, 2025 HEATHER LEIGH BURNS

Digitally signed by Heather Leigh Burns
Date: 2026.07.27 13:09:50 PDT

RENEWS 12-31-27

BID SET

consor

Stantec

South Fork WATER PURE WATER SINCE 1915

WATER QUALITY SYSTEMS BUILDING

MECHANICAL

PROCESS LEGEND AND SYMBOLS

PROJECT NO.: W253326OR | SCALE: AS SHOWN | DATE: AUGUST 2026

SHEET M-001

\\EgnyteDrive\Consor Files_V-W\Projects\OR\South Fork Water\2025\W253326OR.00\12 CADD\12-5 Sheets\M-001 PROCESS LEGEND AND SYMBOLS.dwg M-001 7/29/2026 10:55 AM JUSTIN.DEUEL 24.3s (LMS Tech)

NOTE:

1. BASIS OF DESIGN FOR SODIUM HYPOCHLORITE GENERATION AREA IS TWO 900 PPD ONSITE GENERATION UNITS. EXACT EQUIPMENT AND EQUIPMENT DIMENSIONS TO BE DETERMINED AFTER SELECTION OF ONSITE GENERATION UNIT MANUFACTURER AT PROJECT BID. CONTRACTOR SHALL ADJUST PLAN LAYOUT AS NECESSARY TO ACCOMMODATE SPECIFIC EQUIPMENT NEEDS, SEE SPECIFICATIONS AND ALTERNATIVES ON SHEET M-102.

2. REFER TO SHEET G-007 PIPE SCHEDULE FOR PROCESS PIPE.

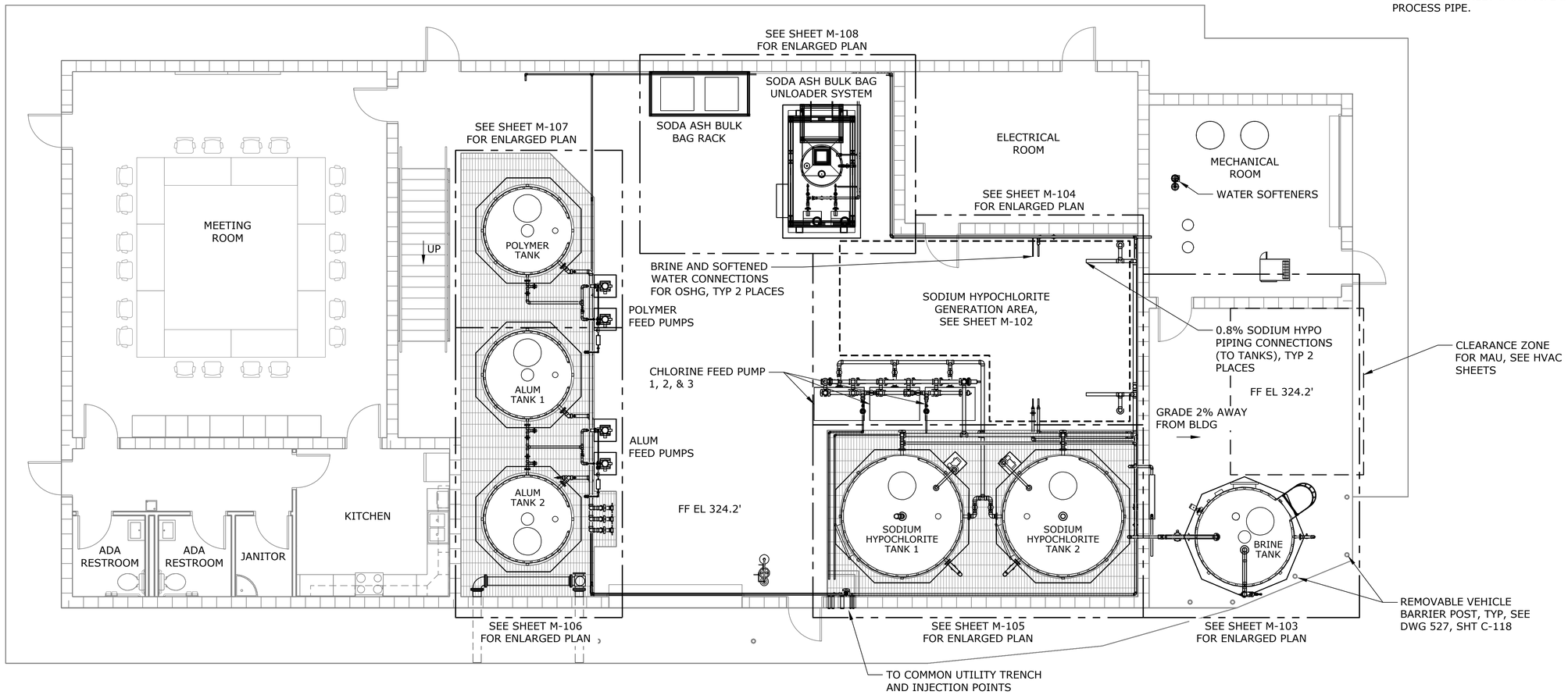

PLAN

SCALE: 3/16" = 1'-0"

NO.	DATE	BY	REVISION

NOTICE

0 ½ 1

IF THIS BAR DOES NOT MEASURE 1" THEN DRAWING IS NOT TO SCALE

HLB DESIGNED

JLC DRAWN

HLB CHECKED

REGISTERED PROFESSIONAL ENGINEER 105439PE OREGON MARCH 11, 2025 HEATHER LEIGH BURNS

Digitally signed by Heather Leigh Burns
Date: 2026.07.27 13:08:50 PDT

RENEWS 12-31-27

BID SET

consor

Stantec

South Fork WATER PURE WATER SINCE 1915

WATER QUALITY SYSTEMS BUILDING

MECHANICAL

WATER QUALITY SYSTEMS BUILDING LOWER LEVEL PLAN

PROJECT NO.: W253326OR | SCALE: AS SHOWN | DATE: AUGUST 2026

SHEET M-101

\\EgnyteDrive\Consor Files_V-W\Projects\OR\South Fork Water\2025\W253326OR.00\12 CADD\12-5 Sheets\M-101 CHEMICAL BUILDING LOWER LEVEL PLAN.dwg M-101 7/29/2026 10:56 AM JUSTIN.DEUEL 24.3s (LMS Tech)

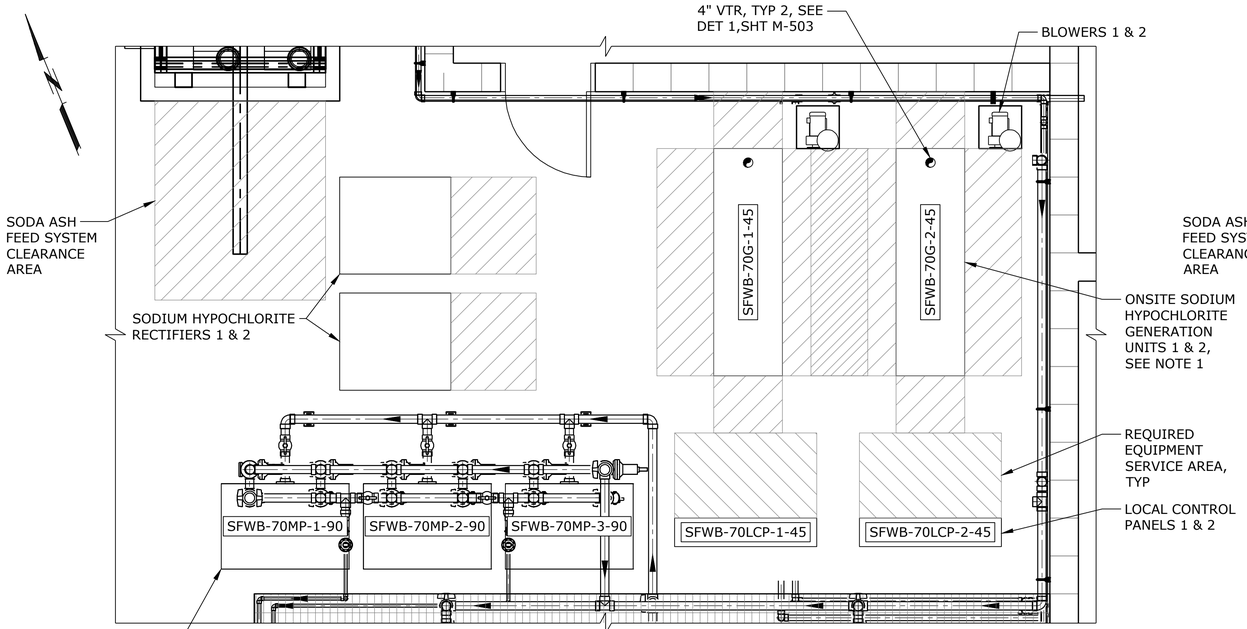

PLAN ALTERNATIVE 1 - CLORTEC

SCALE: 3/8" = 1'-0"

1 M-101

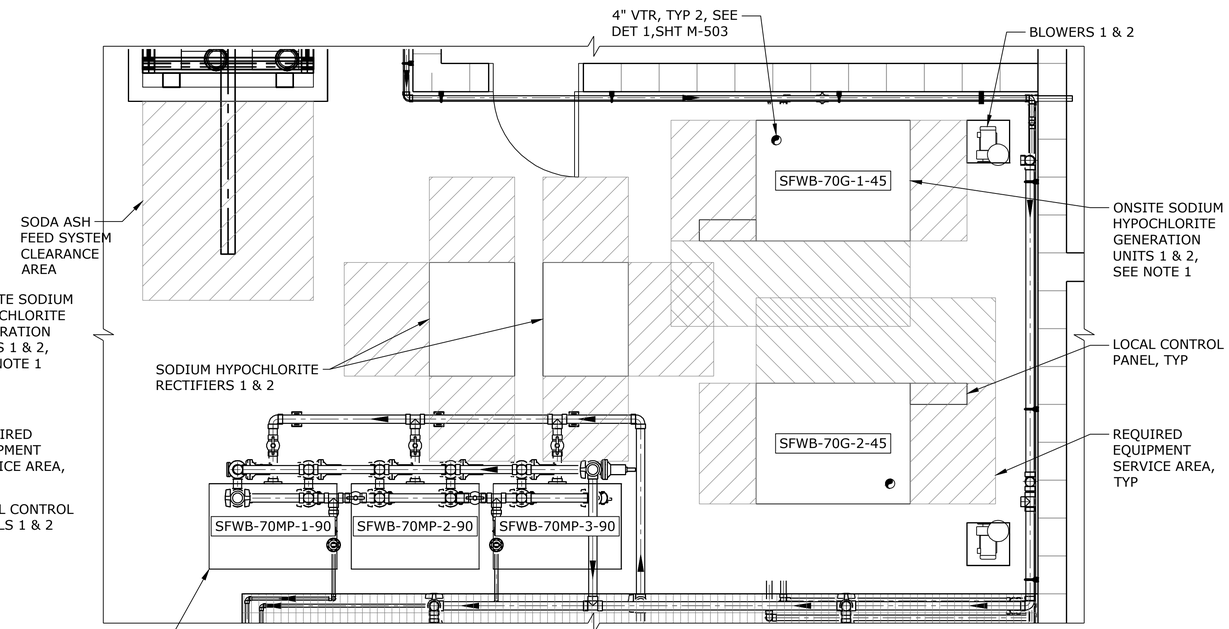

PLAN ALTERNATIVE 2 - MICROCLOR

SCALE: 3/8" = 1'-0"

2 M-101

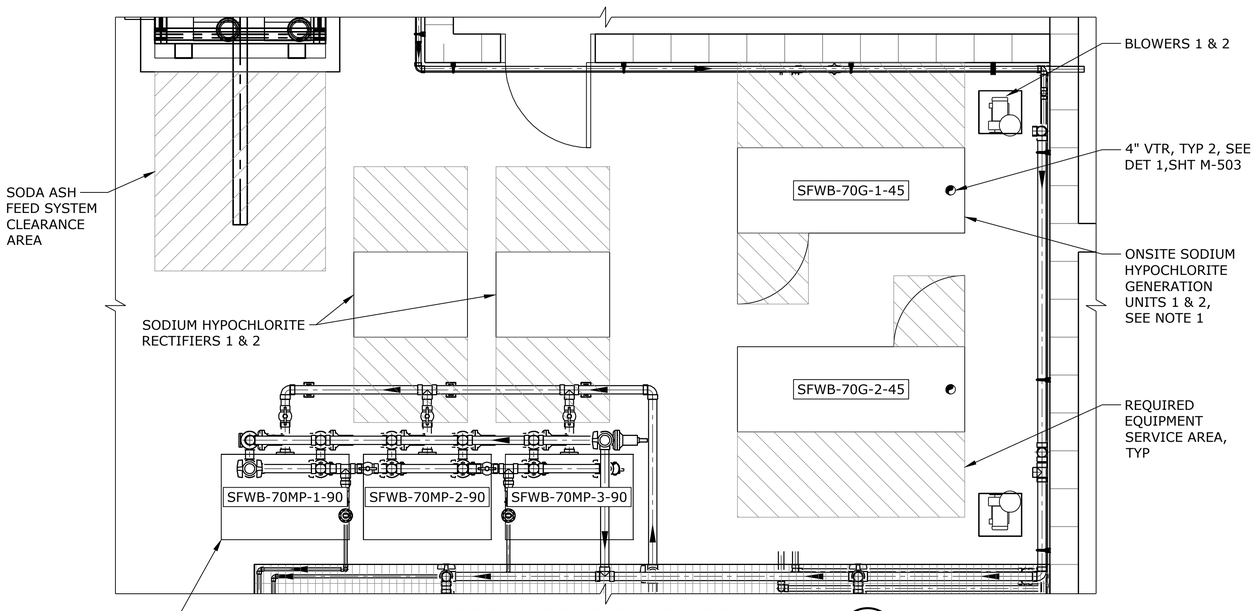

PLAN ALTERNATIVE 3 - OSEC

SCALE: 3/8" = 1'-0"

3 M-101

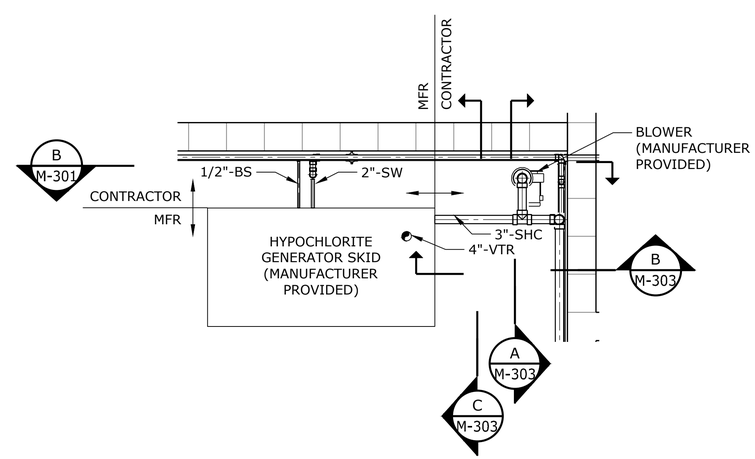

GENERIC PIPING CONNECTIONS DETAIL

SCALE: 3/8" = 1'-0"

4 M-101

NOTES:

1. CONTRACTOR SHALL SUPPLY ALL REQUIRED PROCESS PIPING UP TO CONNECTION POINTS AT MANUFACTURER PROVIDED ONSITE GENERATION SKIDS, INCLUDING BRINE SOLUTION, SOFTENED WATER, SODIUM HYPOCHLORITE SOLUTION, AND BLOWER AND VENT PIPING, AND ALL ELECTRICAL CONNECTIONS. LOCATIONS OF PIPING CONNECTIONS WILL VARY BY ONSITE GENERATION MANUFACTURER.

2. CONTROL PANEL, BLOWER, AND WATER SOFTENER LOCATION WILL VARY BASED ON SELECTED ONSITE GENERATION MANUFACTURER.

3. ONSITE GENERATORS, BLOWERS, AND RECTIFIERS SHALL BE PLACED ON CONCRETE EQUIPMENT PADS. CONCRETE PAD DIMENSIONS WILL VARY BASED ON SELECTED ONSITE MANUFACTURER. SEE STRUCTURAL SHEETS FOR EQUIPMENT PAD DETAILS.

4. HYDROGEN DETECTION SENSORS NOT SHOWN, PROVIDED BY MANUFACTURER. CONTRACTOR SHALL MOUNT IN LOCATION ACCESSIBLE BY FORKLIFT AND ACCORDING TO MANUFACTURER'S INSTRUCTIONS.

NO.	DATE	BY	REVISION

NOTICE
0 ½ 1
IF THIS BAR DOES NOT MEASURE 1" THEN DRAWING IS NOT TO SCALE

HLB DESIGNED
JLC DRAWN
HLB CHECKED

REGISTERED PROFESSIONAL ENGINEER 105439PE OREGON MARCH 11, 2025 HEATHER LEIGH BURNS
Digitally signed by Heather Leigh Burns Date: 2026.07.27 13:56:50 -07'00'
RENEWS 12-31-27

BID SET

consor
Stantec

South Fork WATER PURE WATER SINCE 1915
WATER QUALITY SYSTEMS BUILDING

MECHANICAL

SODIUM HYPOCHLORITE PLAN ALTERNATIVES

PROJECT NO.: W253326OR | SCALE: AS SHOWN | DATE: AUGUST 2026

SHEET M-102

\\EgnyteDrive\Portland\pdx_projects\21\3045 - South Fork Water Board - Chemical Feed Building Design\CAD\Sheets\M-102 CHEMICAL BUILDING UPPER LEVEL PLAN.dwg M-102 7/29/2026 10:57 AM JUSTIN.DEUEL 24.3s (LMS Tech)

\\EgnyteDrive\Consor Files_V-W\Projects\OR\South Fork Water\2025\W253326OR.00\12 CADD\12-5 Sheets\M-103 TREATMENT BUILDING SODIUM HYPOCHLORITE PLAN 1 Of 3.dwg M-103 7/29/2026 10:57 AM JUSTIN.DEUEL 24.3s (LMS Tech)

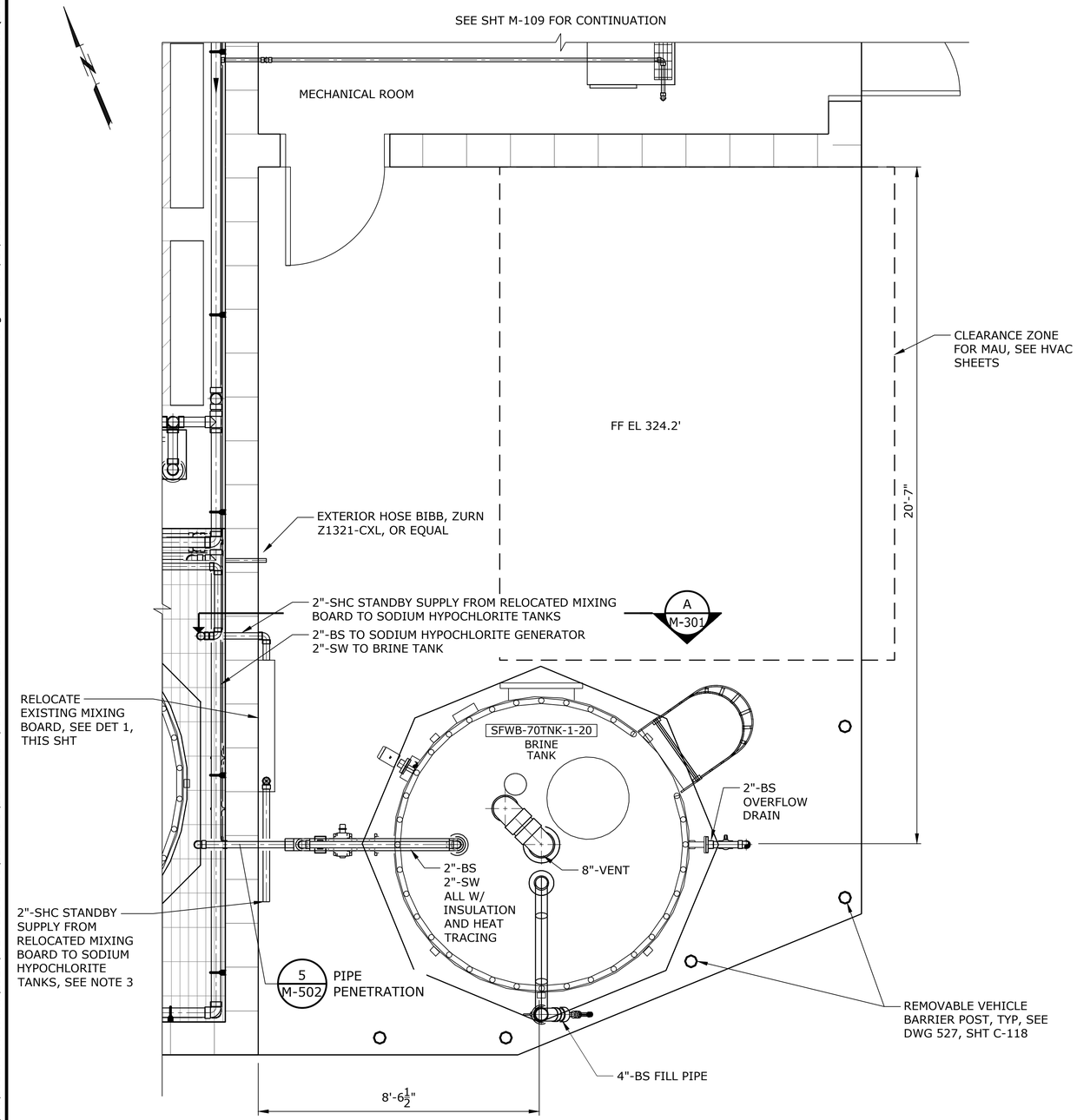

PLAN

SCALE: 1/2" = 1'-0"

BULK HYPO MIXING BOARD

SCALE: NTS

1
-

NOTES:

1. MOUNT MIXING BOARD TO UNISTRUT FRAME (OR EQUAL) ANCHORED TO CMU WALL MOUNT ROTAMETER APPROX. 4'-0" AFF.

2. SEE TANK NOZZLE SCHEDULE SHEET M-504.

3. INSTALL BULK HYPO MIXING BOARD AND PIPE SUPPORTS SUCH THAT SUCTION PIPING IS ACCESSIBLE FROM CONNECTION TO FUTURE CHEMICAL TOTES FOR THE SOUTHEAST SIDE OF THE 2 INCH BRINE SOLUTION TO HYPO GENERATOR LINE.

NO.	DATE	BY	REVISION

NOTICE
0 ½ 1
IF THIS BAR DOES NOT MEASURE 1" THEN DRAWING IS NOT TO SCALE

HLB DESIGNED
JLC DRAWN
HLB CHECKED

REGISTERED PROFESSIONAL ENGINEER 105439PE OREGON MARCH 11, 2025 HEATHER LEIGH BURNS
Digitally signed by Heather Leigh Burns Date: 2026.07.27 13:59:50 -07'00'
RENEWS 12-31-27

BID SET

consor
Stantec

South Fork WATER PURE WATER SINCE 1915

WATER QUALITY SYSTEMS BUILDING

MECHANICAL

SODIUM HYPOCHLORITE PLAN 1 OF 3

PROJECT NO.: W253326OR | SCALE: AS SHOWN | DATE: AUGUST 2026

SHEET M-103

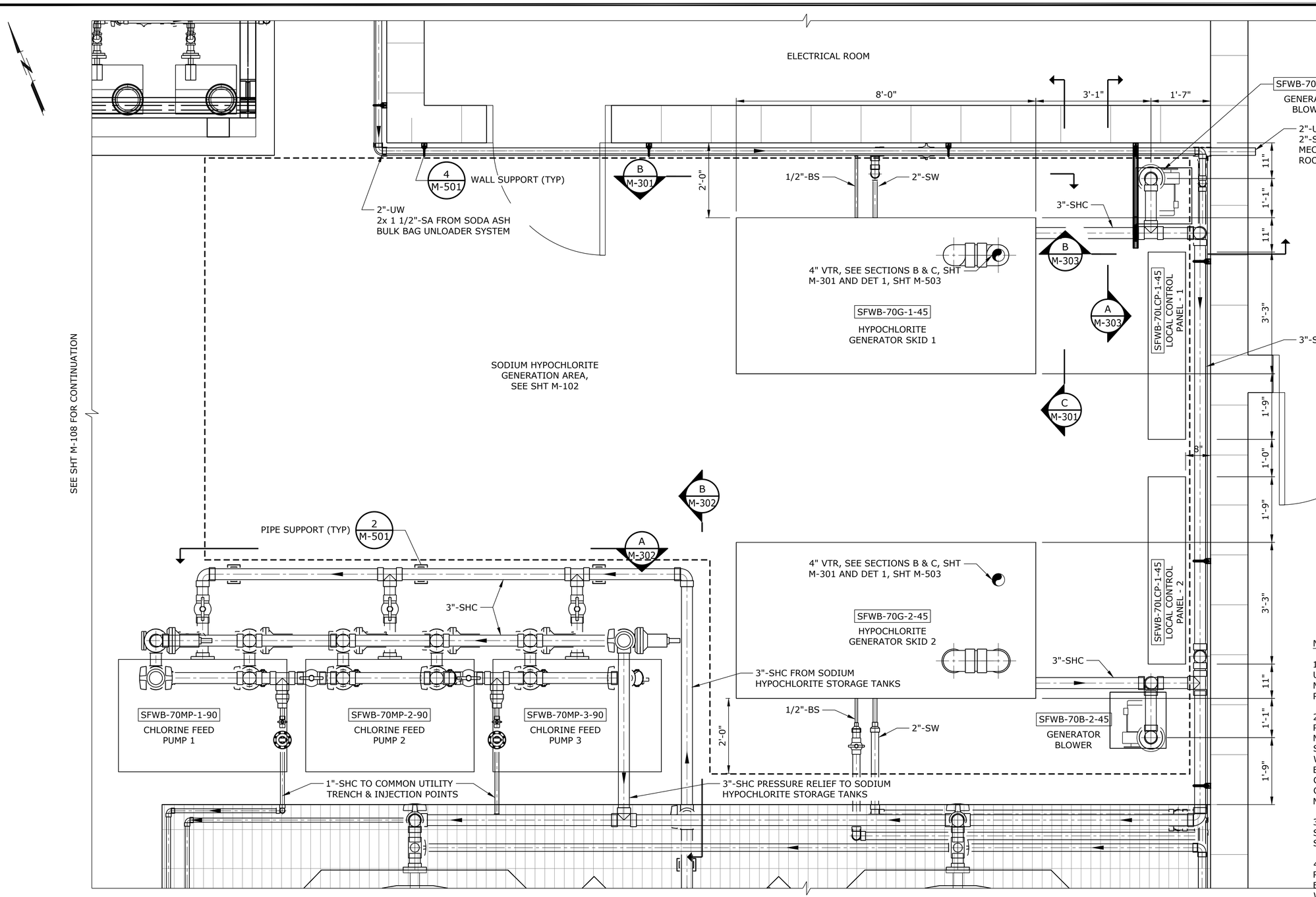

SEE SHT M-105 FOR CONTINUATION

PLAN

SCALE: 3/4" = 1'-0"

NOTES:

1. DIMENSIONS SHOWN FOR ONSITE GENERATION UNITS ARE AVAILABLE SPACE REQUIRED FOR MULTIPLE OSG MANUFACTURERS, NOT REPRESENTATIVE OF ACTUAL SKID DIMENSIONS.

2. CONTRACTOR SHALL SUPPLY ALL REQUIRED PROCESS PIPING UP TO CONNECTION POINTS AT MANUFACTURER PROVIDED ONSITE GENERATION SKIDS, INCLUDING BRINE SOLUTION, SOFTENED WATER, SODIUM HYPOCHLORITE SOLUTION, AND BLOWER AND VENT PIPING, AND ALL ELECTRICAL CONNECTIONS. LOCATIONS OF PIPING CONNECTIONS WILL VARY BY ONSITE GENERATION MANUFACTURER.

3. CONTROL PANEL, BLOWER, AND WATER SOFTENER LOCATION WILL VARY BASED ON SELECTED ONSITE GENERATION MANUFACTURER.

4. ONSITE GENERATORS, BLOWERS, AND RECTIFIERS SHALL BE PLACED ON CONCRETE EQUIPMENT PADS. CONCRETE PAD DIMENSIONS WILL VARY BASED ON SELECTED ONSITE MANUFACTURER. SEE STRUCTURAL SHEETS FOR EQUIPMENT PAD DETAILS.

NO.	DATE	BY	REVISION

NOTICE
0 ½ 1
IF THIS BAR DOES NOT MEASURE 1" THEN DRAWING IS NOT TO SCALE

HLB DESIGNED
JLC DRAWN
HLB CHECKED

REGISTERED PROFESSIONAL ENGINEER 105439PE OREGON MARCH 11, 2025 HEATHER LEIGH BURNS
Digitally signed by Heather Leigh Burns Date: 2026.07.27 13:08:50 PDT
RENEWS 12-31-27

BID SET

consor
Stantec

South Fork WATER
PURE WATER SINCE 1915

WATER QUALITY SYSTEMS BUILDING

MECHANICAL

SODIUM HYPOCHLORITE PLAN 2 OF 3

PROJECT NO.: W253326OR | SCALE: AS SHOWN | DATE: AUGUST 2026

SHEET
M-104

\\EgnyteDrive\Consor Files_V-W\Projects\OR\South Fork Water\2025\W253326OR.00\12 CADD\12-5 Sheets\M-104 TREATMENT BUILDING SODIUM HYPOCHLORITE PLAN 2 Of 3.dwg M-104 7/29/2026 10:57 AM JUSTIN.DEUEL 24.3s (LMS Tech)

\\EgnyteDrive\Consor Files_V-W\Projects\OR\South Fork Water\2025\W2533260R.00\12 CADD\12-5 Sheets\M-105 TREATMENT BUILDING SODIUM HYPOCHLORITE PLAN 3 Of 3.dwg M-105 7/29/2026 10:58 AM JUSTIN.DEUEL 24.3s (LMS Tech)

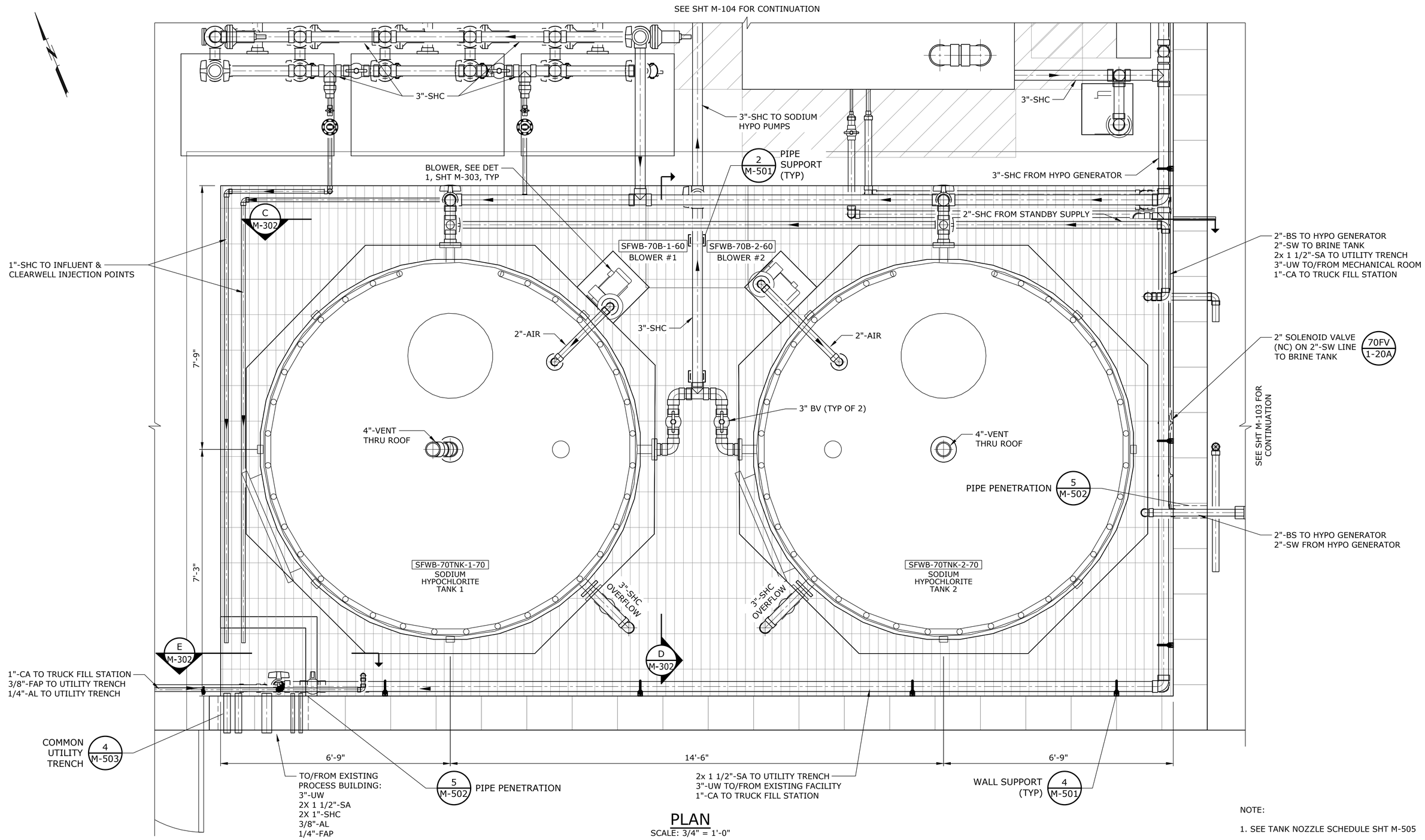

PLAN

SCALE: 3/4" = 1'-0"

NOTE:

1. SEE TANK NOZZLE SCHEDULE SHT M-505

NO.	DATE	BY	REVISION

NOTICE

0 ½ 1

IF THIS BAR DOES NOT MEASURE 1" THEN DRAWING IS NOT TO SCALE

HLB DESIGNED

JLC DRAWN

HLB CHECKED

REGISTERED PROFESSIONAL ENGINEER 105439PE OREGON MARCH 11, 2025 HEATHER LEIGH BURNS

Digitally signed by Heather Leigh Burns
Date: 2026.07.27 13:34:50 -07'00'

RENEWS 12-31-27

BID SET

consor

Stantec

South Fork WATER PURE WATER SINCE 1915

WATER QUALITY SYSTEMS BUILDING

MECHANICAL

SODIUM HYPOCHLORITE PLAN 3 OF 3

PROJECT NO.: W2533260R | SCALE: AS SHOWN | DATE: AUGUST 2026

SHEET

M-105

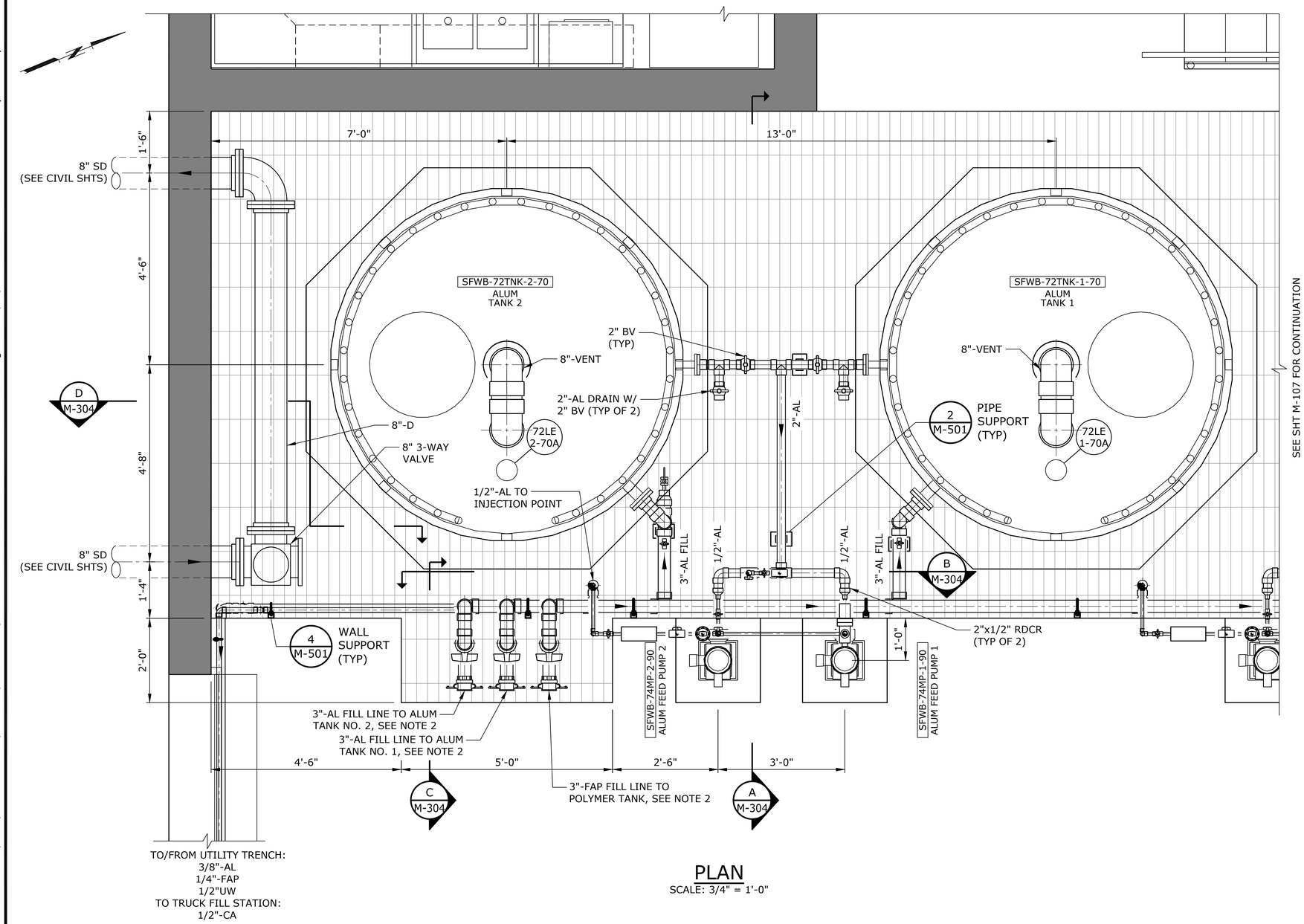

PLAN

SCALE: 3/4" = 1'-0"

NOTES:

1. SEE TANK NOZZLE SCHEDULE SHEET M-506.

2. FILL LINES SHALL TERMINATE WITH CAM-LOC CONNECTIONS. CONSTRUCTED OF STAINLESS STEEL AND INCLUDE PLUG/CAP WITH CHAIN. CONFIRM END TYPE WITH OWNER.

NO.	DATE	BY	REVISION

NOTICE
0 ½ 1
IF THIS BAR DOES NOT MEASURE 1" THEN DRAWING IS NOT TO SCALE

HLB DESIGNED
JLC DRAWN
HLB CHECKED

REGISTERED PROFESSIONAL ENGINEER 105439PE OREGON MARCH 11, 2025 HEATHER LEIGH BURNS
Digitally signed by Heather Leigh Burns
Date: 2026.07.27 13:59:50 PDT
RENEWS 12-31-27

BID SET

consor
Stantec

South Fork WATER
PURE WATER SINCE 1915

WATER QUALITY SYSTEMS BUILDING

MECHANICAL

ALUM SYSTEM PLAN

PROJECT NO.: W253326OR | SCALE: AS SHOWN | DATE: AUGUST 2026

SHEET
M-106

\\EgnyteDrive\Consor Files_V-W\Projects\OR\South Fork Water\2025\W253326OR.00\12 CADD\12-5 Sheets\M-106 TREATMENT BUILDING ALUM SYSTEM PLAN.dwg M-106 7/29/2026 10:58 AM JUSTIN.DEUEL 24.3s (LMS Tech)

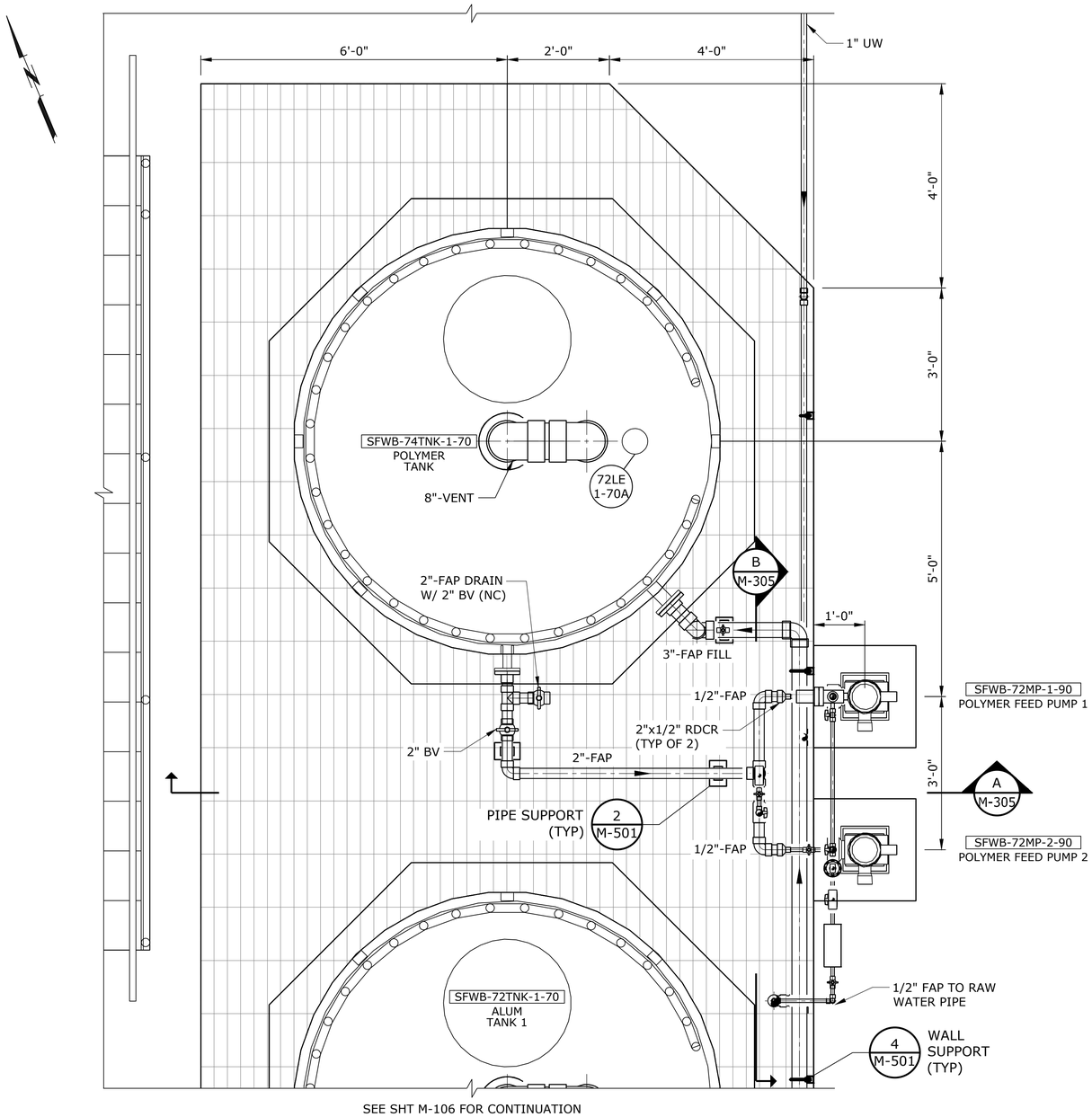

SEE SHT M-106 FOR CONTINUATION

PLAN

SCALE: 3/4" = 1'-0"

NOTE:

1. SEE TANK NOZZLE SCHEDULE SHEET M-507.

NO.	DATE	BY	REVISION

NOTICE

0 ½ 1

IF THIS BAR DOES NOT MEASURE 1" THEN DRAWING IS NOT TO SCALE

HLB
DESIGNED

JLC
DRAWN

HLB
CHECKED

REGISTERED PROFESSIONAL ENGINEER
105439PE
Digitally signed by Heather Leigh Burns
Date: 2026.07.27 13:58:50 -07'00'
OREGON
MARCH 11, 2025
HEATHER LEIGH BURNS
RENEWS 12-31-27

BID SET

consor

Stantec

South Fork WATER
PURE WATER SINCE 1915

WATER QUALITY SYSTEMS BUILDING

MECHANICAL

POLYMER SYSTEM PLAN

PROJECT NO.: W253326OR | SCALE: AS SHOWN | DATE: AUGUST 2026

SHEET
M-107

\\EgnyteDrive\Consor Files_V-W\Projects\OR\South Fork Water\2025\W253326OR.00\12 CADD\12-5 Sheets\M-107 TREATMENT BUILDING POLYMER SYSTEM PLAN.dwg M-107 7/29/2026 10:58 AM JUSTIN.DEUEL 24.3s (LMS Tech)

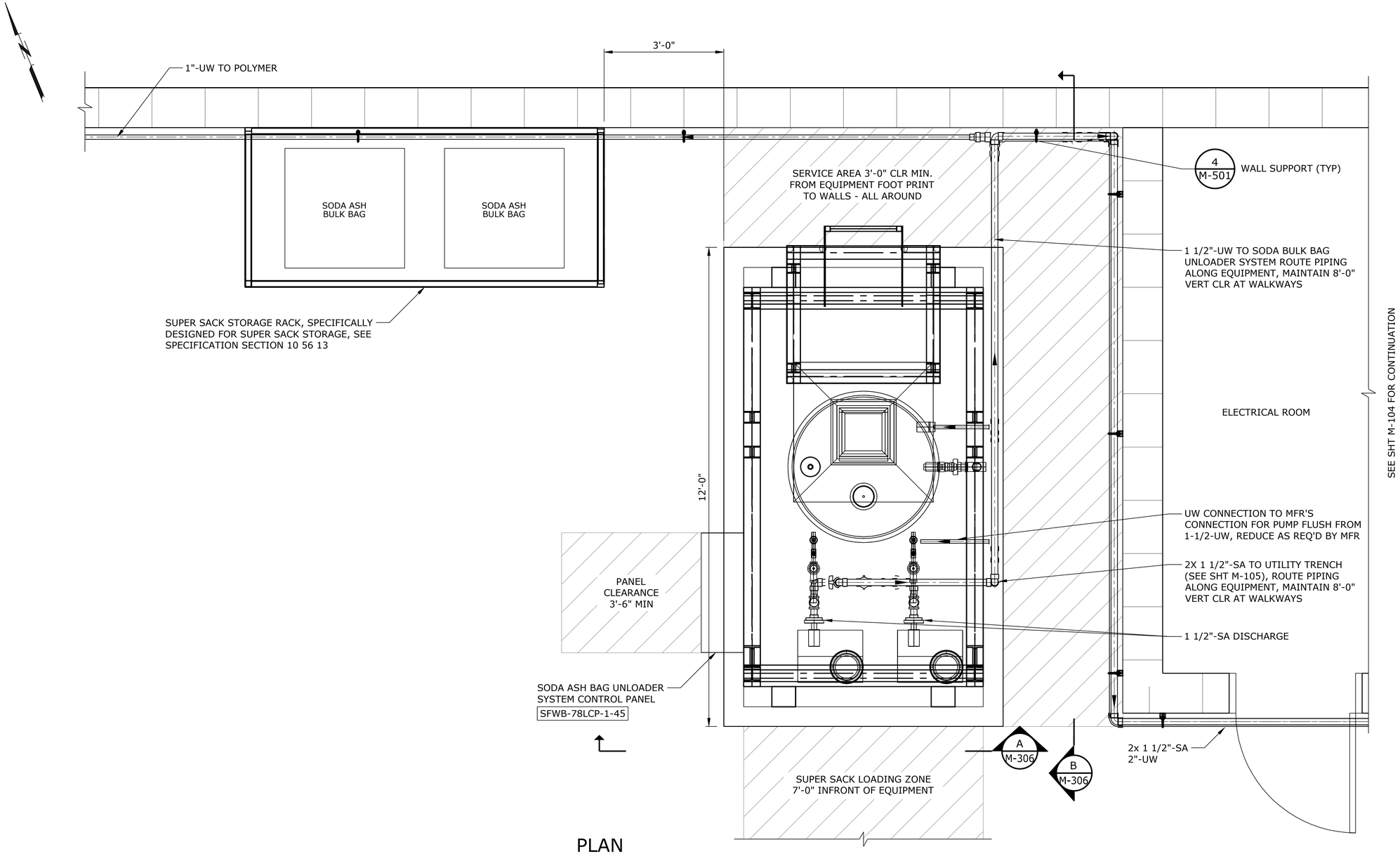

PLAN

SCALE: 3/4" = 1'-0"

NO.	DATE	BY	REVISION

NOTICE

0 ½ 1

IF THIS BAR DOES NOT MEASURE 1" THEN DRAWING IS NOT TO SCALE

HLB
DESIGNED

JLC
DRAWN

HLB
CHECKED

REGISTERED PROFESSIONAL ENGINEER
105439PE
Digitally signed by Heather Leigh Burns
Date: 2026.07.27 13:08:00 PDT
OREGON
MARCH 11, 2025
HEATHER LEIGH BURNS
RENEWS 12-31-27

BID SET

consor

Stantec

South Fork WATER
PURE WATER SINCE 1915

WATER QUALITY SYSTEMS BUILDING

MECHANICAL

SODA ASH FEED SYSTEM PLAN

PROJECT NO.: W2533260R | SCALE: AS SHOWN | DATE: AUGUST 2026

SHEET
M-108

\\EgnyteDrive\Consor Files_V-W\Projects\OR\South Fork Water\2025\W2533260R.00\12 CADD\12-5 Sheets\M-108 TREATMENT BUILDING SODA ASH PLAN.dwg M-108 7/29/2026 10:59 AM JUSTIN.DEUEL 24.3s (LMS Tech)

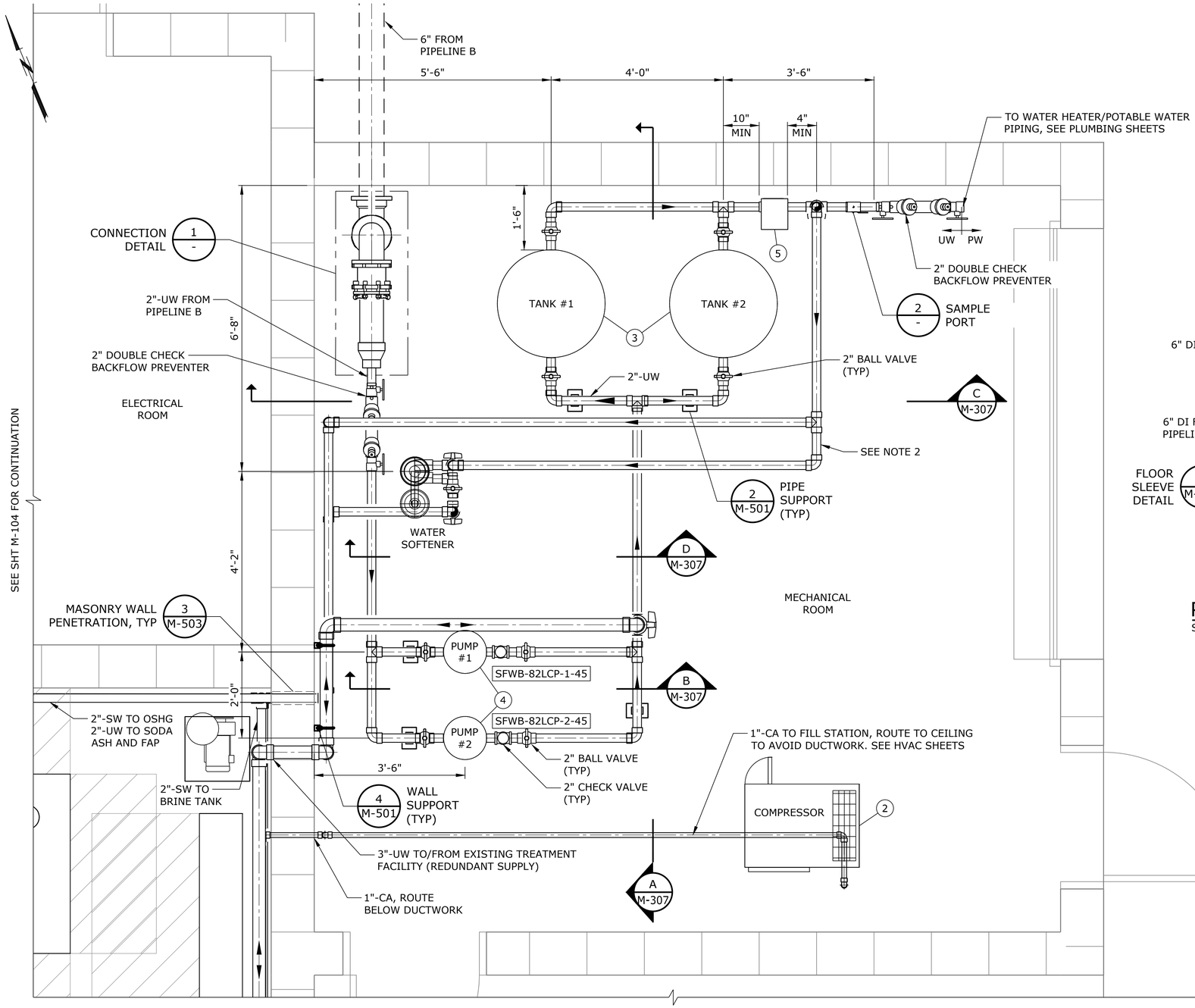

PLAN

SCALE: 3/4" = 1'-0"

KEY NOTES

1. COORDINATE WITH OSHG MANUFACTURER FOR INSTALLATION OF INLINE CARTRIDGE FILTERS AS REQUIRED FOR SOFTENING SYSTEM.
2. FURNISH AND INSTALL AIR COMPRESSOR PER SPEC SECTION 43 05 10
3. FURNISH AND INSTALL HYDROPNEUMATIC TANK SYSTEM PER SPEC SECTION 43 41 17
4. FURNISH AND INSTALL BOOSTER PUMP PER SPEC SECTION 43 23 13.
5. FURNISH AND INSTALL 2" MAG METER, ENRESS-HAUSER PROLINE PROMAG W 300 DN50, OR EQUAL

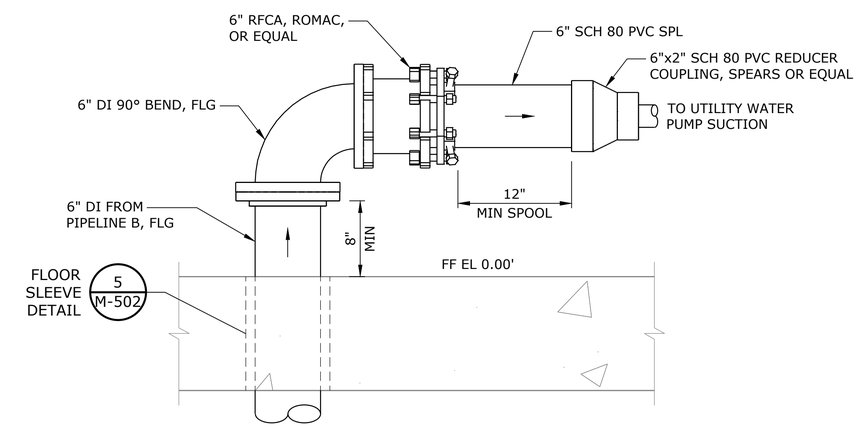

PIPELINE B SUPPLY CONNECTION DETAIL 1 -

SCALE: NTS

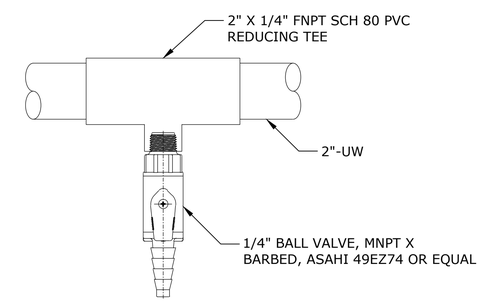

SAMPLE PORT DETAIL 2 -

SCALE: NTS

NOTES:

1. POTABLE WATER SYSTEM NOT SHOWN FOR CLARITY, SEE PLUMBING SHEETS.
2. FIELD ROUTE 2" UTILITY WATER PIPING TO SOFTENER ASSEMBLY ALONG CEILING. PROVIDE PIPE SUPPORTS AT MAX ALLOWABLE SPACING, SEE SPECIFICATIONS.
3. 6" DUCTILE IRON PIPE TAP FROM PIPELINE B, WHICH IS A 24" INTERTIE WITH OTHER NEIGHBORING WATER PROVIDERS.

NO.	DATE	BY	REVISION

NOTICE
0 ½ 1
IF THIS BAR DOES NOT MEASURE 1" THEN DRAWING IS NOT TO SCALE

HLB DESIGNED
JLC DRAWN
HLB CHECKED

REGISTERED PROFESSIONAL ENGINEER 105439PE OREGON MARCH 11, 2025 HEATHER LEIGH BURNS
Digitally signed by Heather Leigh Burns Date: 2026.07.27 13:59:50 PDT
RENEWS 12-31-27

BID SET

consor
Stantec

South Fork WATER PURE WATER SINCE 1915

WATER QUALITY SYSTEMS BUILDING

MECHANICAL

MECHANICAL ROOM PLAN

PROJECT NO.: W253326OR | SCALE: AS SHOWN | DATE: AUGUST 2026

SHEET M-109

\\EgnyteDrive\Consor Files_V-W\Projects\OR\South Fork Water\2025\W253326OR.00\12 CADD\12-5 Sheets\M-109 ENLARGED MECH ROOM PLAN.dwg M-109 7/29/2026 10:59 AM JUSTIN.DEUEL 24.3s (LMS Tech)

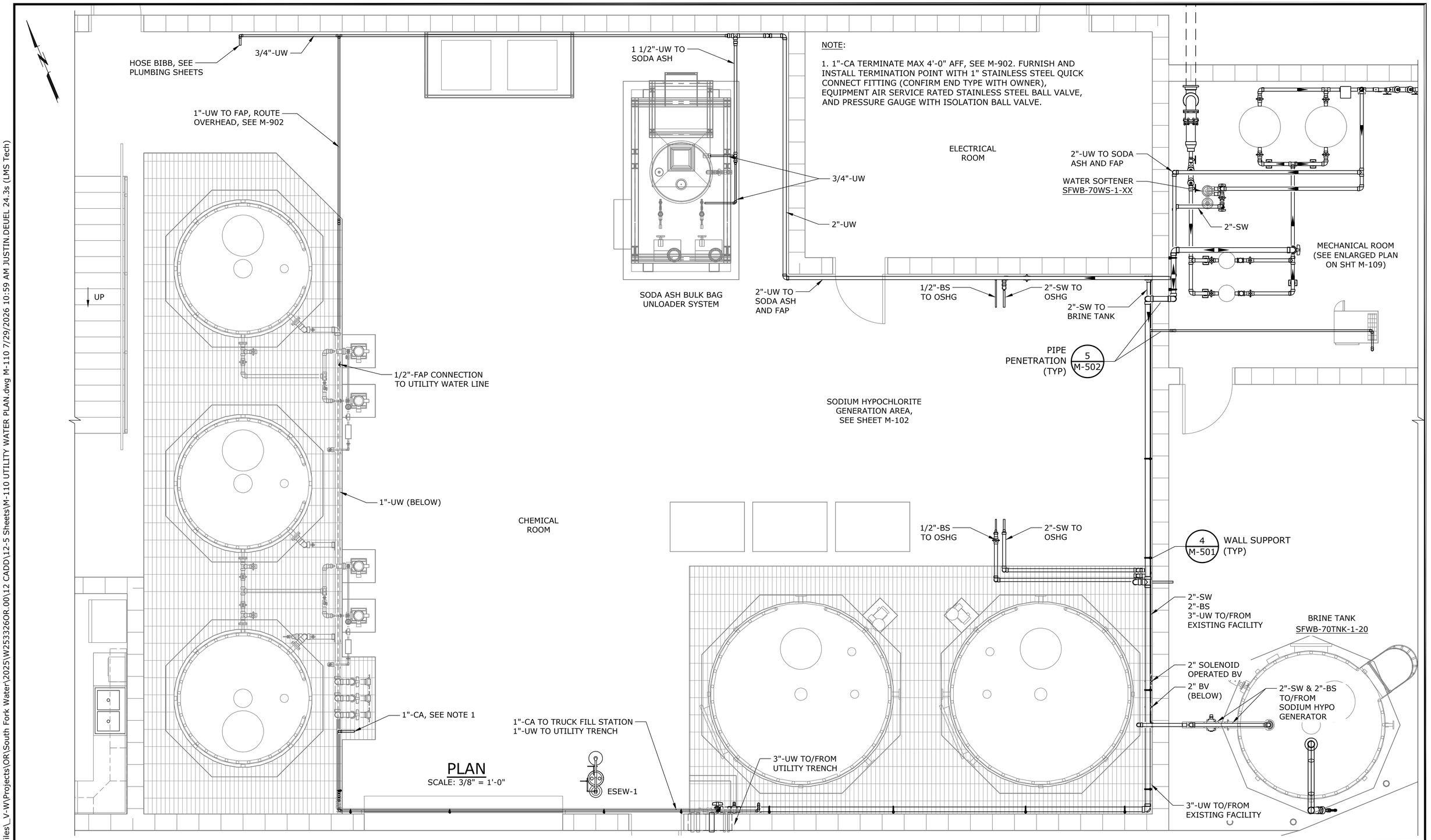

PLAN
SCALE: 3/8" = 1'-0"

NO.	DATE	BY	REVISION

NOTICE
0 ½ 1
IF THIS BAR DOES NOT MEASURE 1" THEN DRAWING IS NOT TO SCALE

HLB DESIGNED
JLC DRAWN
HLB CHECKED

REGISTERED PROFESSIONAL ENGINEER 105439PE
Digitally signed by Heather Leigh Burns
Date: 2026.07.27 13:39:50 PDT
OREGON MARCH 11, 2025 HEATHER LEIGH BURNS
RENEWS 12-31-27

BID SET

consor
Stantec

South Fork WATER
PURE WATER SINCE 1915

WATER QUALITY SYSTEMS BUILDING

MECHANICAL

UTILITY WATER AND COMPRESSED AIR PLAN

PROJECT NO.: W253326OR | SCALE: AS SHOWN | DATE: AUGUST 2026

SHEET
M-110

\\EgnyteDrive\Consor Files_V-W\Projects\OR\South Fork Water\2025\W253326OR.00\12 CADD\12-5 Sheets\M-110 UTILITY WATER PLAN.dwg M-110 7/29/2026 10:59 AM JUSTIN.DEUEL 24.3s (LMS Tech)

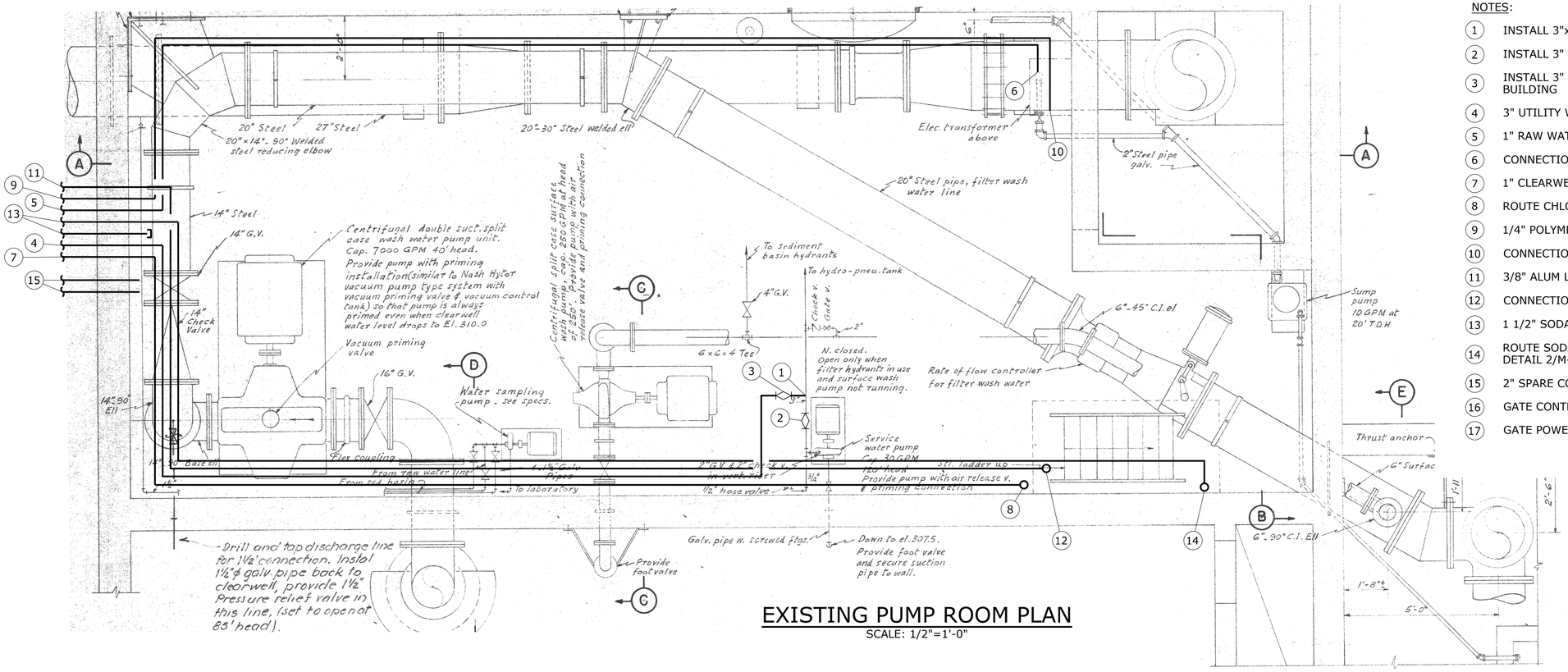

EXISTING PUMP ROOM PLAN

SCALE: 1/2"=1'-0"

NOTES:

1. INSTALL 3"x1" TEE ON EXISTING UTILITY WATER DISCHARGE LINE
2. INSTALL 3" PLUG VALVE ON EXISTING UTILITY WATER DISCHARGE LINE
3. INSTALL 3" PLUG VALVE ON NEW UTILITY WATER CONNECTION LINE TO CHEMICAL BUILDING
4. 3" UTILITY WATER CONNECTION TO COMMON UTILITY TRENCH CONNECTION
5. 1" RAW WATER CHLORINE INJECTION LINE FROM COMMON UTILITY TRENCH
6. CONNECTION TO EXISTING INFLUENT CHLORINE INJECTION POINT
7. 1" CLEARWELL CHLORINE INJECTION LINE FROM COMMON UTILITY TRENCH
8. ROUTE CHLORINE LINE TO CONNECT TO EXISTING CLEARWELL INJECTION POINT
9. 1/4" POLYMER LINE FROM COMMON UTILITY TRENCH
10. CONNECTION TO EXISTING POLYMER INJECTION POINT, SEE DET 2, SHEET M-115
11. 3/8" ALUM LINE FROM COMMON UTILITY TRENCH
12. CONNECTION TO EXISTING ALUM LINE, SEE DETAIL 2/M-114 FOR DETAILS
13. 1 1/2" SODA ASH FROM COMMON UTILITY TRENCH, SEE NOTE 6
14. ROUTE SODA ASH LINE THROUGH CEILING TO CLEARWELL INJECTION POINT, SEE DETAIL 2/M-113 FOR CONNECTION DETAILS
15. 2" SPARE CONDUIT FROM COMMON UTILITY TRENCH
16. GATE CONTROL FROM COMMON UTILITY TRENCH
17. GATE POWER FROM COMMON UTILITY TRENCH

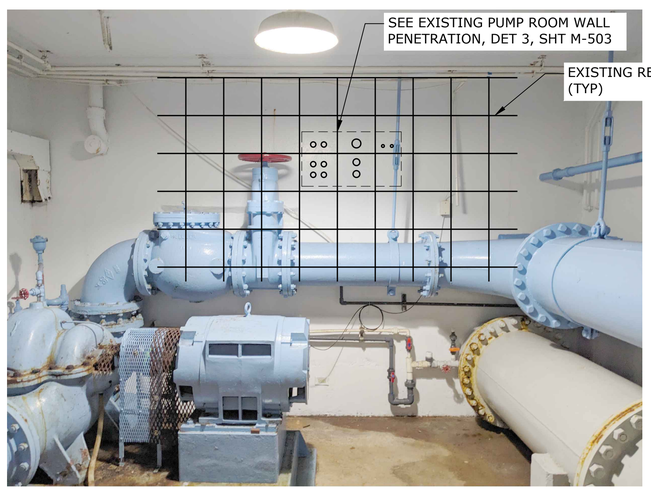

EXISTING PUMP ROOM WALL PENETRATION DETAIL

1 / -

SCALE: NTS

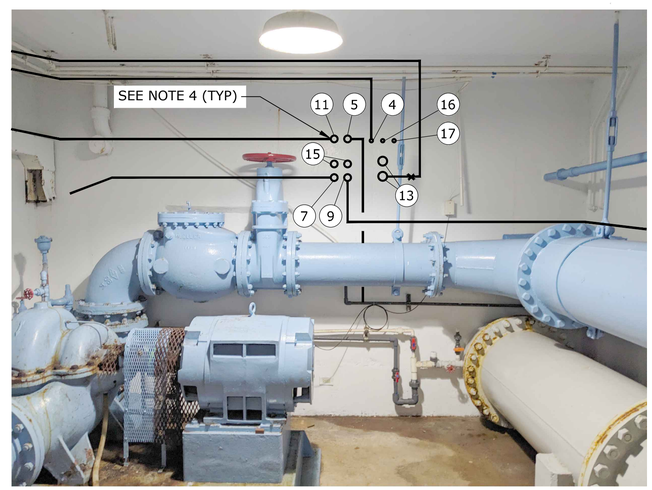

PIPE ROUTING DETAIL

2 / -

SCALE: NTS

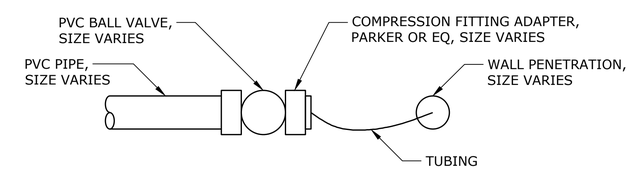

TUBING TO RIGID PIPE TRANSTITION DETAIL

3 / -

SCALE: NTS

NOTES:

1. WALL PENETRATIONS AND EXISTING REBAR ARE SHOWN SCHEMATICALLY.

2. DO NOT DAMAGE EXISTING REBAR WHEN PENETRATING THE WALL. LOCATE WALL EXISTING REBAR USING NONDESTRUCTIVE METHODS PRIOR TO LOCATING WALL PENETRATIONS.

3. REPAIR WALL PENETRATIONS PER SPECIFICATIONS 03 01 30-3.9.

4. SODIUM HYPOCHLORITE, ALUM, AND POLYMER FEED LINES TRANSITION FROM POLY BRAIDED TUBING IN PVC CONDUIT TO WALL/CEILING MOUNTED RIGID PIPE. TERMINATE CONDUIT AT WALL. RIGID PIPE AS SHOWN ON PIPE SCHEDULE.

5. FIELD ROUTE CHEMICAL FEED PIPING ALONG WALL TO AVOID CONFLICTS WITH EXISTING PIPING AND EQUIPMENT AS NECESSARY.

6. TERMINATE SPARE SODA ASH PIPE AFTER WALL PENETRATION AND CAP FOR FUTURE USE.

NO.	DATE	BY	REVISION

NOTICE
0 ½ 1
IF THIS BAR DOES NOT MEASURE 1" THEN DRAWING IS NOT TO SCALE

HLB DESIGNED
JLC DRAWN
HLB CHECKED

REGISTERED PROFESSIONAL ENGINEER 105439PE OREGON MARCH 11, 2025 HEATHER LEIGH BURNS
Digitally signed by Heather Leigh Burns
Date: 2026.07.27 13:08:50 PDT
RENEWS 12-31-27

BID SET

consor
Stantec

South Fork WATER
PURE WATER SINCE 1915
WATER QUALITY SYSTEMS BUILDING

MECHANICAL

EXISTING PUMP ROOM MODIFICATIONS PLAN

PROJECT NO.: W253326OR | SCALE: AS SHOWN | DATE: AUGUST 2026

SHEET M-111

\\EgnyteDrive\Consor Files_V-W\Projects\OR\South Fork Water\2025\W253326OR.00\12 CADD\12-5 Sheets\M-111-116 EXISTING FACILITY INJECTION LOCATIONS.dwg M-111 7/29/2026 10:59 AM JUSTIN.DEUEL 24.3s (LMS Tech)

RAW WATER CHLORINE INJECTION PIPE ROUTING (1 / -)
SCALE: N.T.S.

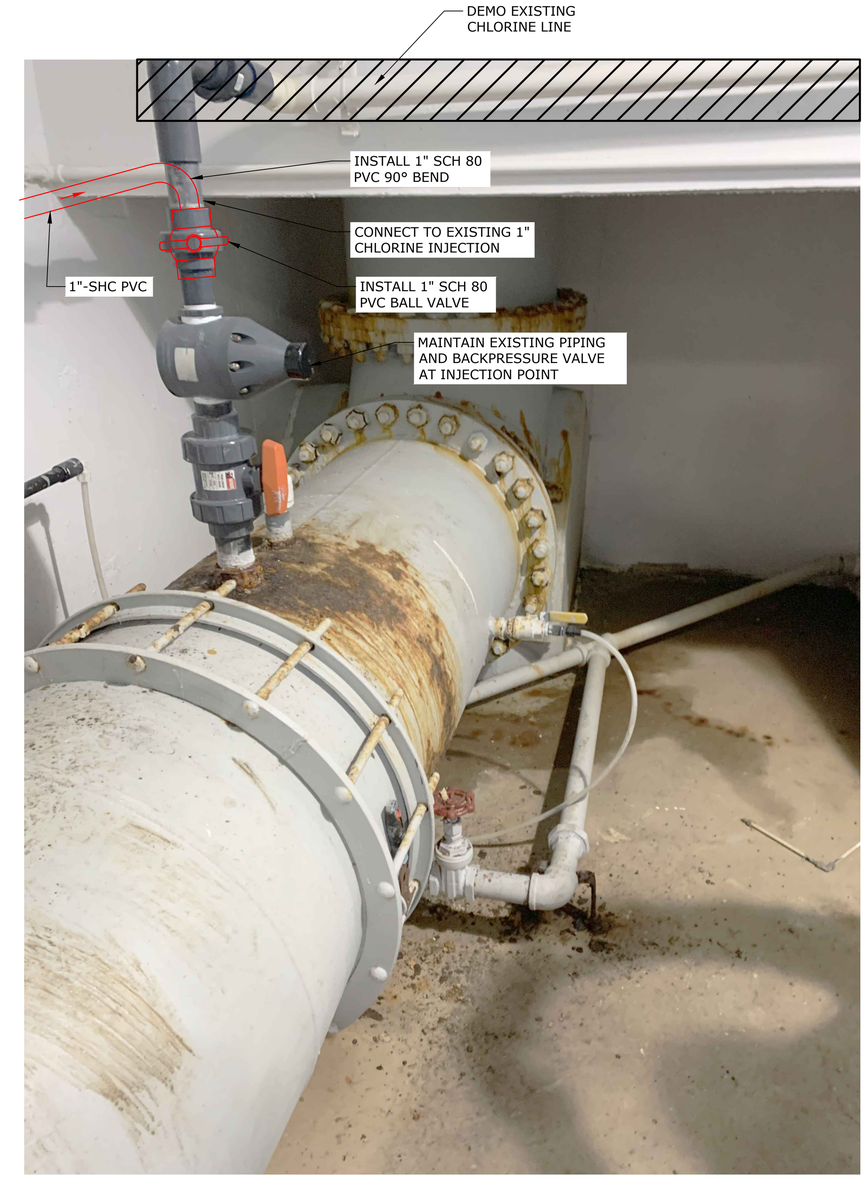

RAW WATER CHLORINE INJECTION POINT (2 / -)
SCALE: N.T.S.

NO.	DATE	BY	REVISION

NOTICE
0 ½ 1
IF THIS BAR DOES NOT MEASURE 1" THEN DRAWING IS NOT TO SCALE

HLB DESIGNED
JLC DRAWN
HLB CHECKED

REGISTERED PROFESSIONAL ENGINEER 105439PE OREGON MARCH 11, 2025 HEATHER LEIGH BURNS
Digitally signed by Heather Leigh Burns
Date: 2026.07.27 13:59:50 PDT
RENEWS 12-31-27

BID SET

consor
Stantec

South Fork WATER
PURE WATER SINCE 1915
WATER QUALITY SYSTEMS BUILDING

MECHANICAL

EXISTING FACILITY
INJECTION LOCATIONS - 1

PROJECT NO.: W253326OR | SCALE: AS SHOWN | DATE: AUGUST 2026

SHEET
M-112

\\EgnyteDrive\Consor Files_V-W\Projects\OR\South Fork Water\2025\W253326OR.00\12 CADD\12-5 Sheets\M-111-116 EXISTING FACILITY INJECTION LOCATIONS.dwg M-112 7/29/2026 11:00 AM JUSTIN.DEUEL 24.3s (LMS Tech)

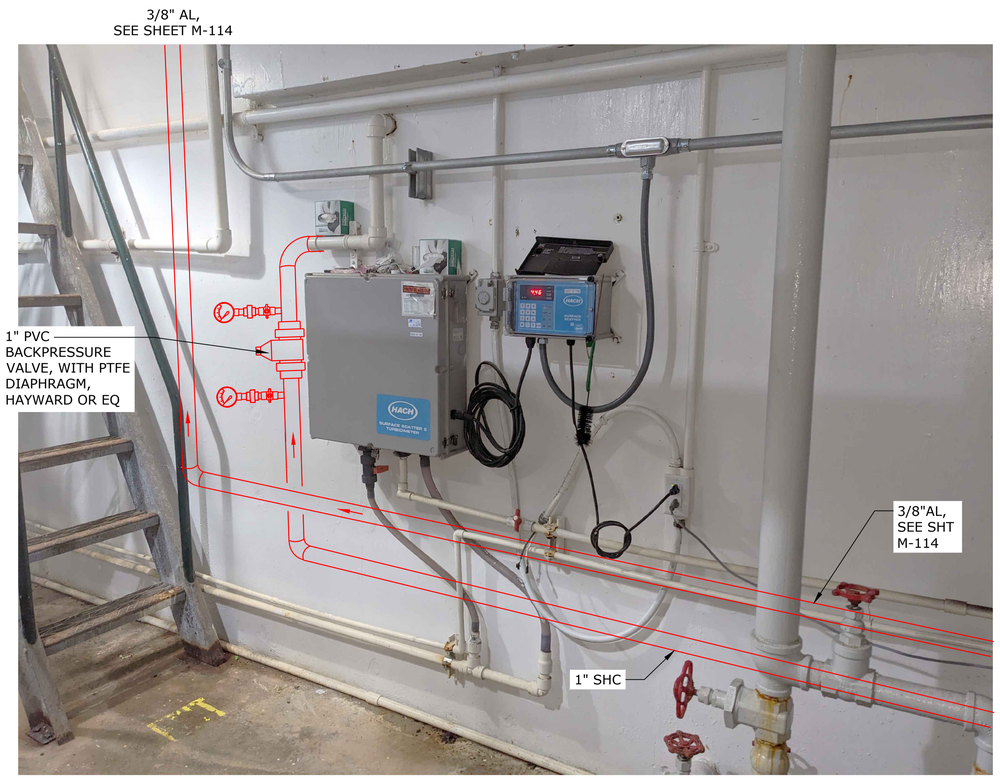

FINISHED WATER CHLORINE INJECTION PIPE ROUTING (1 / -)

SCALE: N.T.S.

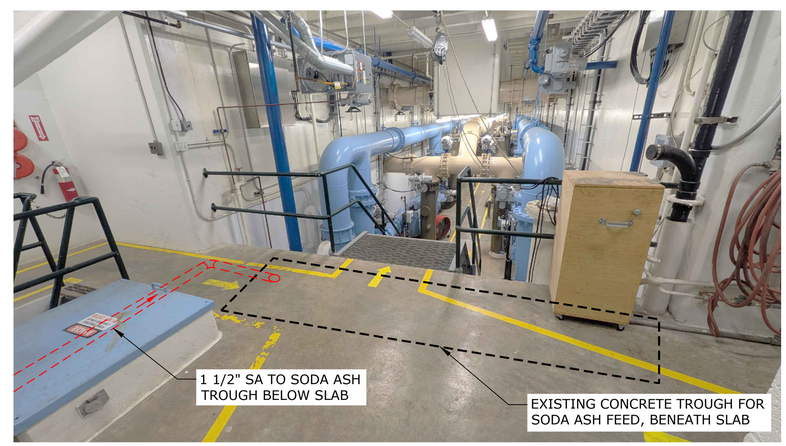

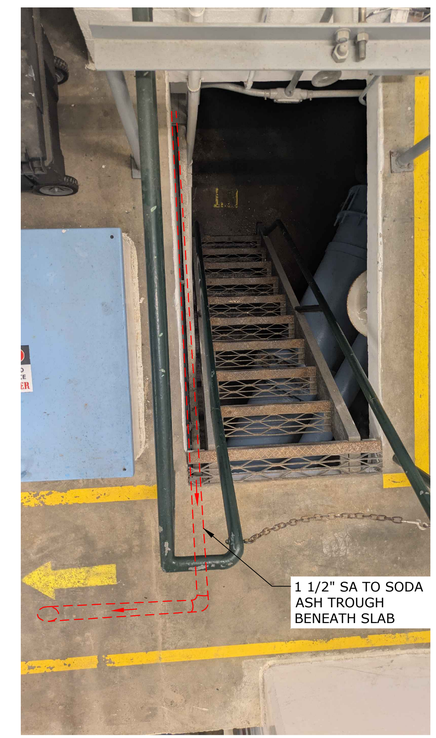

SODA ASH INJECTION PIPE ROUTING (2 / -)

SCALE: N.T.S.

NO.	DATE	BY	REVISION

NOTICE

0 ½ 1

IF THIS BAR DOES NOT MEASURE 1" THEN DRAWING IS NOT TO SCALE

HLB DESIGNED

JLC DRAWN

HLB CHECKED

REGISTERED PROFESSIONAL ENGINEER 105439PE OREGON MARCH 11, 2025 HEATHER LEIGH BURNS

Digitally signed by Heather Leigh Burns
Date: 2026.07.27 13:34:50 -07'00'

RENEWS 12-31-27

BID SET

consor

Stantec

South Fork WATER PURE WATER SINCE 1915

WATER QUALITY SYSTEMS BUILDING

MECHANICAL

EXISTING FACILITY INJECTION LOCATIONS - 2

PROJECT NO.: W253326OR | SCALE: AS SHOWN | DATE: AUGUST 2026

SHEET M-113

\\EgnyteDrive\Consor Files_V-W\Projects\OR\South Fork Water\2025\W253326OR.00\12 CADD\12-5 Sheets\M-111-116 EXISTING FACILITY INJECTION LOCATIONS.dwg M-113 7/29/2026 11:00 AM JUSTIN.DEUEL 24.3s (LMS Tech)

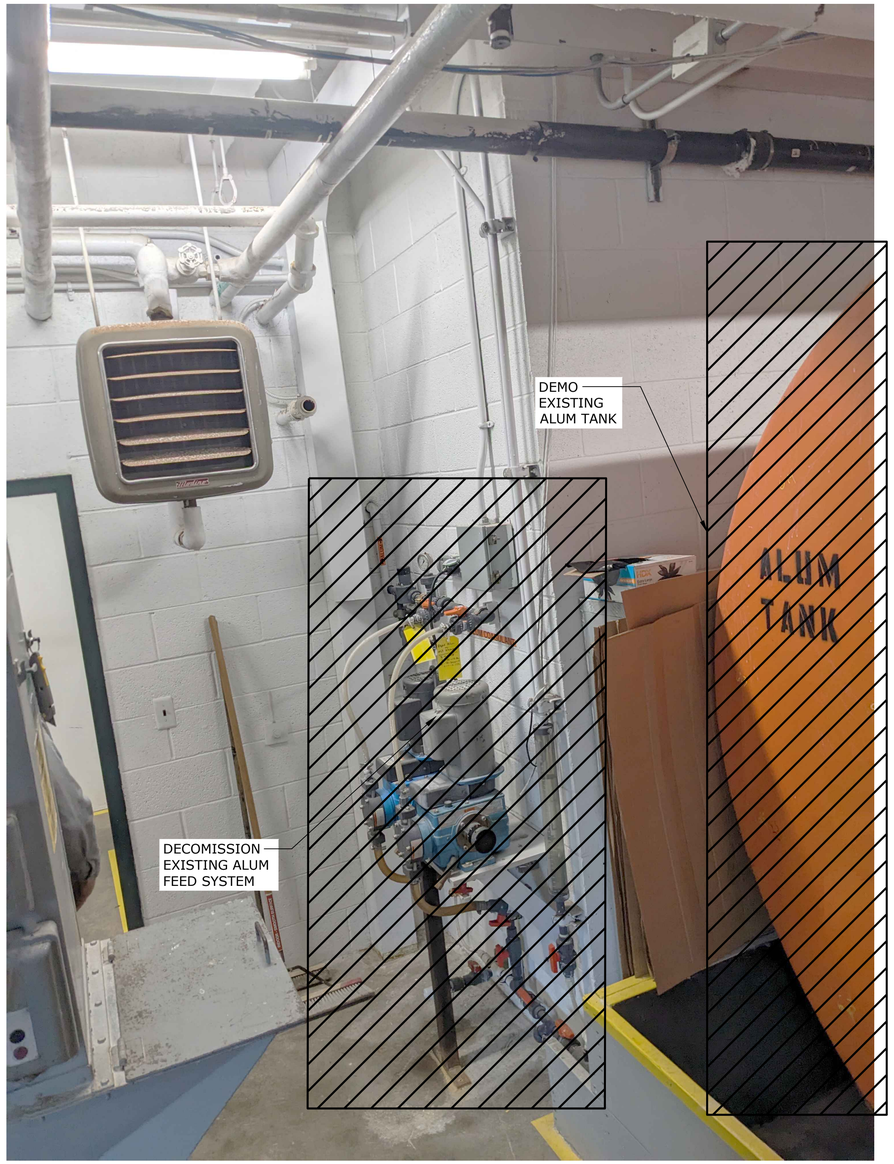

EXISTING ALUM FEED SYSTEM (1 / -)
SCALE: N.T.S.

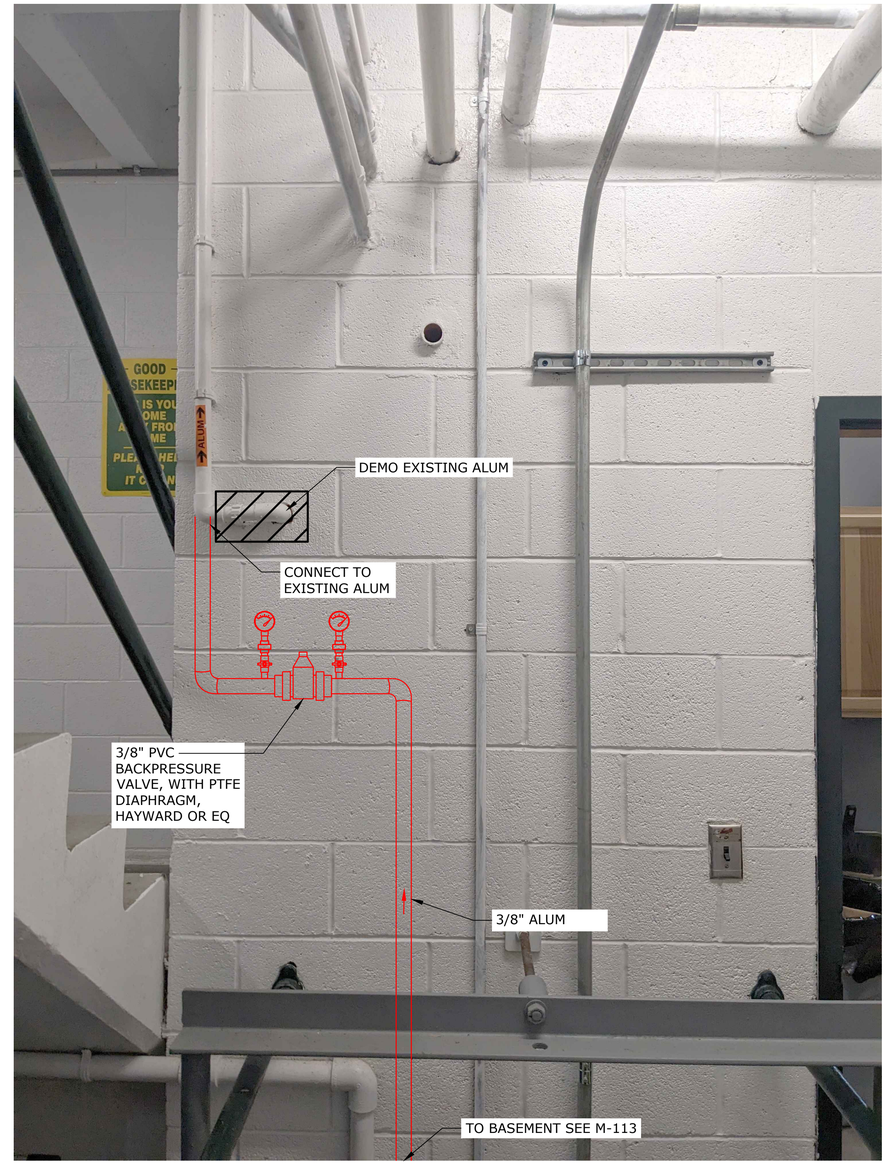

ALUM FEED POINT (2 / -)
SCALE: N.T.S.

NO.	DATE	BY	REVISION

NOTICE
0 ½ 1
IF THIS BAR DOES NOT MEASURE 1" THEN DRAWING IS NOT TO SCALE

HLB DESIGNED
JLC DRAWN
HLB CHECKED

REGISTERED PROFESSIONAL ENGINEER 105439PE OREGON MARCH 11, 2025 HEATHER LEIGH BURNS
Digitally signed by Heather Leigh Burns
Date: 2026.07.27 13:59:50 -07'00'
RENEWS 12-31-27

BID SET

consor
Stantec

South Fork WATER
PURE WATER SINCE 1915
WATER QUALITY SYSTEMS BUILDING

MECHANICAL

EXISTING FACILITY
INJECTION LOCATIONS - 3

PROJECT NO.: W253326OR | SCALE: AS SHOWN | DATE: AUGUST 2026

SHEET
M-114

\\EgnyteDrive\Consor Files_V-W\Projects\OR\South Fork Water\2025\W253326OR.00\12 CADD\12-5 Sheets\M-111-116 EXISTING FACILITY INJECTION LOCATIONS.dwg M-114 7/29/2026 11:00 AM JUSTIN.DEUEL 24.3s (LMS Tech)

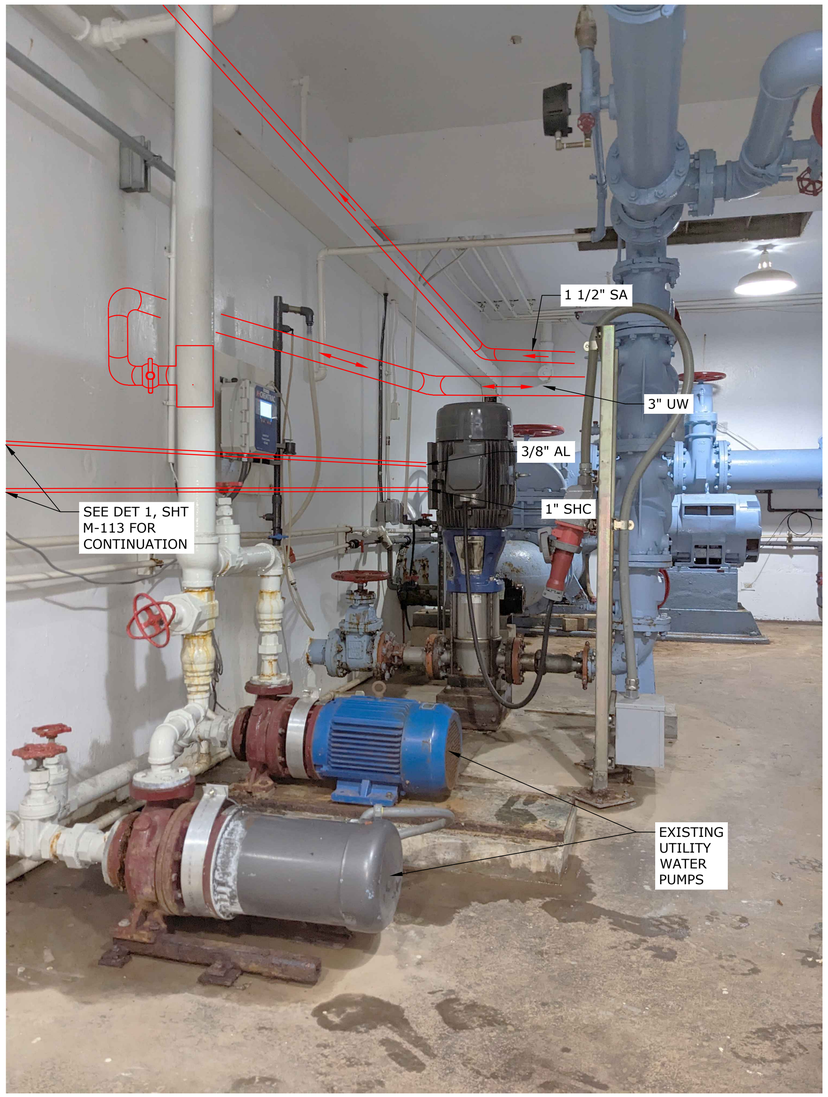

EXISTING PUMP ROOM DETAIL (1 / -)
SCALE: N.T.S.

POLYMER PIPE ROUTING DETAIL (2 / -)
SCALE: N.T.S.

NO.	DATE	BY	REVISION

NOTICE
0 ½ 1
IF THIS BAR DOES NOT MEASURE 1" THEN DRAWING IS NOT TO SCALE

HLB DESIGNED
JLC DRAWN
HLB CHECKED

REGISTERED PROFESSIONAL ENGINEER 105439PE OREGON MARCH 11, 2025 HEATHER LEIGH BURNS
Digitally signed by Heather Leigh Burns
Date: 2026.07.27 13:08:50 PDT
RENEWS 12-31-27

BID SET

consor
Stantec

South Fork WATER
PURE WATER SINCE 1915
WATER QUALITY SYSTEMS BUILDING

MECHANICAL

EXISTING FACILITY INJECTION LOCATIONS - 4

PROJECT NO.: W253326OR | SCALE: AS SHOWN | DATE: AUGUST 2026

SHEET M-115

\\EgnyteDrive\Consor Files_V-W\Projects\OR\South Fork Water\2025\W253326OR.00\12 CADD\12-5 Sheets\M-111-116 EXISTING FACILITY INJECTION LOCATIONS.dwg M-115 7/29/2026 11:00 AM JUSTIN.DEUEL 24.3s (LMS Tech)

NO.	DATE	BY	REVISION

NOTICE

0 ½ 1

IF THIS BAR DOES NOT MEASURE 1" THEN DRAWING IS NOT TO SCALE

HLB
DESIGNED

JLC
DRAWN

HLB
CHECKED

REGISTERED PROFESSIONAL ENGINEER
105439PE
Digitally signed by Heather Leigh Burns
Date: 2026.07.27 13:38:52 -07'00'
OREGON
MARCH 11, 2025
HEATHER LEIGH BURNS
RENEWS 12-31-27

BID SET

consor

Stantec

South Fork WATER
PURE WATER SINCE 1915

WATER QUALITY SYSTEMS BUILDING

MECHANICAL

EXISTING FACILITY INJECTION LOCATIONS - 5

PROJECT NO.: W253326OR | SCALE: AS SHOWN | DATE: AUGUST 2026

SHEET

M-116

\\EgnyteDrive\Consor Files_V-W\Projects\OR\South Fork Water\2025\W253326OR.00\12 CADD\12-5 Sheets\M-111-116 EXISTING FACILITY INJECTION LOCATIONS.dwg M-116 7/29/2026 11:00 AM JUSTIN.DEUEL 24.3s (LMS Tech)

NOTES:

1. DIMENSIONS SHOWN FOR ONSITE GENERATION UNITS ARE AVAILABLE SPACE REQUIRED FOR MULTIPLE OSG MANUFACTURERS, NOT REPRESENTATIVE OF ACTUAL SKID DIMENSIONS.

2. SINGLE LOOP HEAT TRACING TO BE USED FOR BOTH PIPES, CONTRACTOR TO ROUTE AND SECURE HEAT TRACING ALONG TANK. MOUNT CONTROLLER TO LOWER PIPE OR TO ADJACENT WALL.

3. CONTRACTOR SHALL SUPPLY ALL REQUIRED PROCESS PIPING UP TO CONNECTION POINTS AT MANUFACTURER PROVIDED ONSITE GENERATION SKIDS, INCLUDING BRINE SOLUTION, SOFTENED WATER, SODIUM HYPOCHLORITE SOLUTION, AND BLOWER AND VENT PIPING, AND ALL ELECTRICAL CONNECTIONS. LOCATIONS OF PIPING CONNECTIONS WILL VARY BY ONSITE GENERATION MANUFACTURER.

4. ELEVATIONS SHOWN ARE RELATIVE TO FINISH FLOOR ELEVATION. EL 0.00 = FINISHED FLOOR EL 324.20.

NOTES, CONT'D:

5. MOTOR ACTUATED BUTTERFLY VALVE ON BRINE TANK OUTLET SHALL HAVE AN OUTDOOR RATED ENCLOSURE.

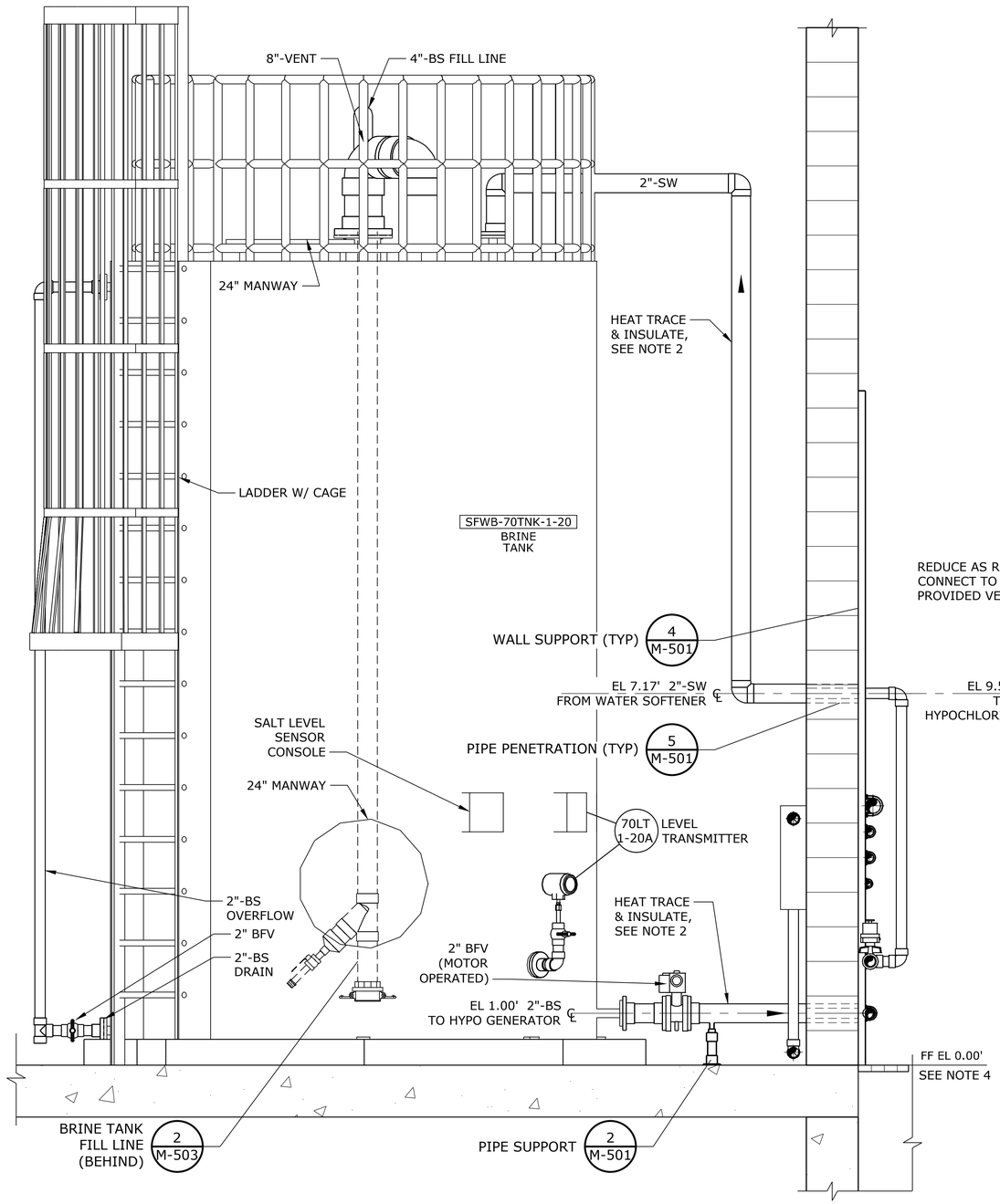

SECTION A M-103
SCALE: 3/4" = 1'-0"

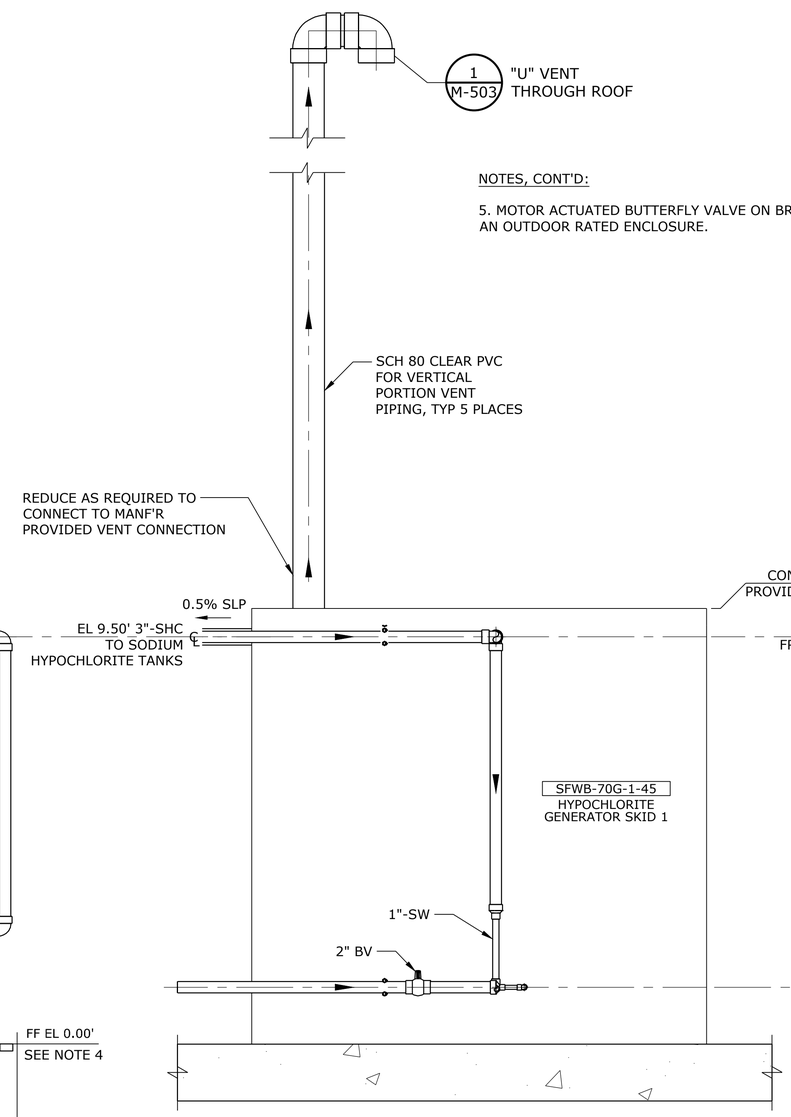

SECTION B M-102
SCALE: 3/4" = 1'-0"

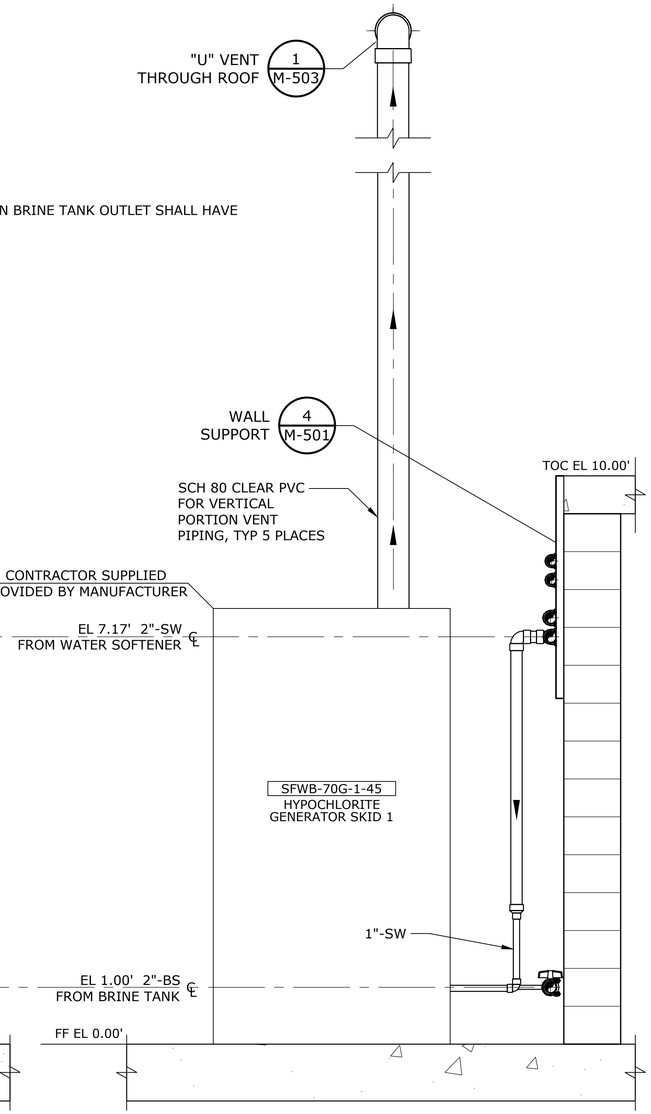

SECTION C M-102
SCALE: 3/4" = 1'-0"

NO.	DATE	BY	REVISION

NOTICE
0 ½ 1
IF THIS BAR DOES NOT MEASURE 1" THEN DRAWING IS NOT TO SCALE

HLB DESIGNED
JLC DRAWN
HLB CHECKED

REGISTERED PROFESSIONAL ENGINEER 105439PE OREGON MARCH 11, 2025 HEATHER LEIGH BURNS
Digitally signed by Heather Leigh Burns Date: 2026.07.27 13:59:50 PDT
RENEWS 12-31-27

BID SET

consor
Stantec

South Fork WATER PURE WATER SINCE 1915
WATER QUALITY SYSTEMS BUILDING

MECHANICAL
SODIUM HYPOCHLORITE SECTIONS - 1

PROJECT NO.: W253326OR | SCALE: AS SHOWN | DATE: AUGUST 2026

SHEET M-301

\\EgnyteDrive\Consor Files_V-W\Projects\OR\South Fork Water\2025\W253326OR.00\12 CADD\12-5 Sheets\M-301 TREATMENT BUILDING SODIUM HYPOCHLORITE SECTIONS.dwg M-301 7/29/2026 11:01 AM JUSTIN.DEUEL 24.3s (LMS Tech)

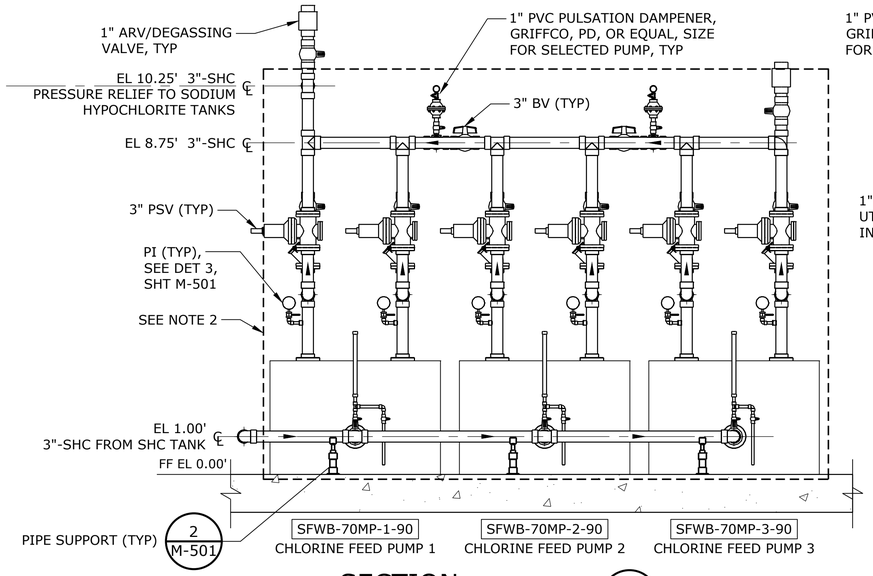

SECTION A M-104
SCALE: 1/2" = 1'-0"

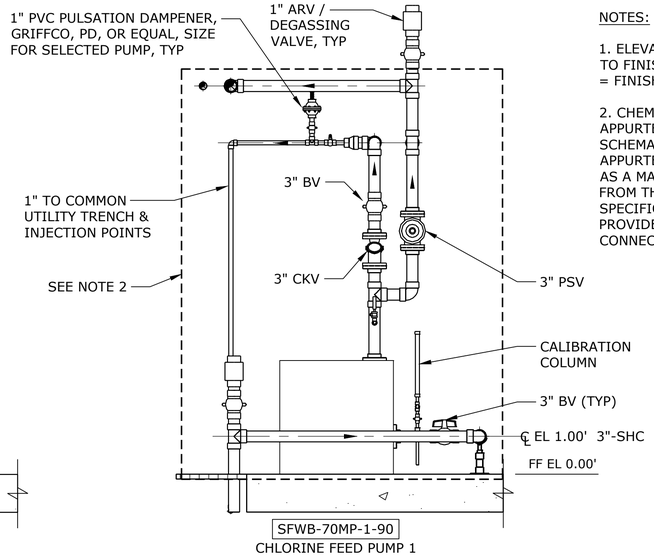

SECTION B M-104
SCALE: 1/2" = 1'-0"

NOTES:

1. ELEVATIONS SHOWN ARE RELATIVE TO FINISH FLOOR ELEVATION. EL 0.00 = FINISHED FLOOR EL 324.20.

2. CHEMICAL METERING PUMPS AND APPURTENANCES SHOWN SCHEMATICALLY. PUMPS, PIPING, AND APPURTENANCES SHALL BE PROCURED AS A MANUFACTURED SKID PACKAGE FROM THE PUMP MANUFACTURER. SEE SPECIFICATIONS. CONTRACTOR SHALL PROVIDE PIPING UP TO SKID CONNECTIONS.

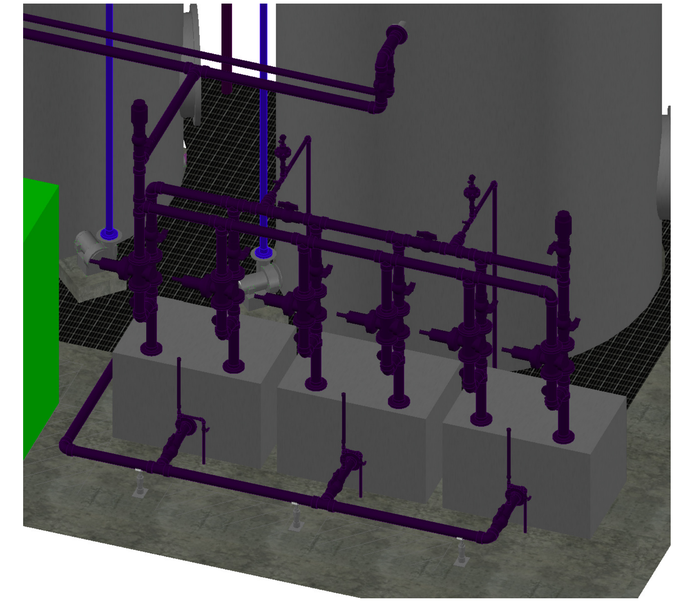

3D PERSPECTIVE
SCALE: N.T.S.

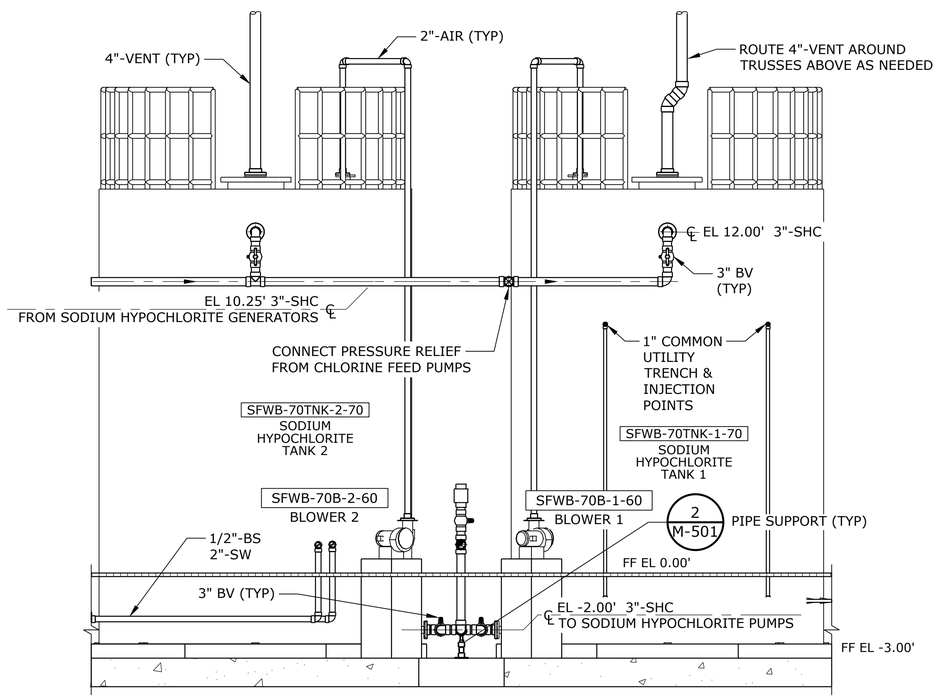

SECTION C M-105
SCALE: 3/8" = 1'-0"

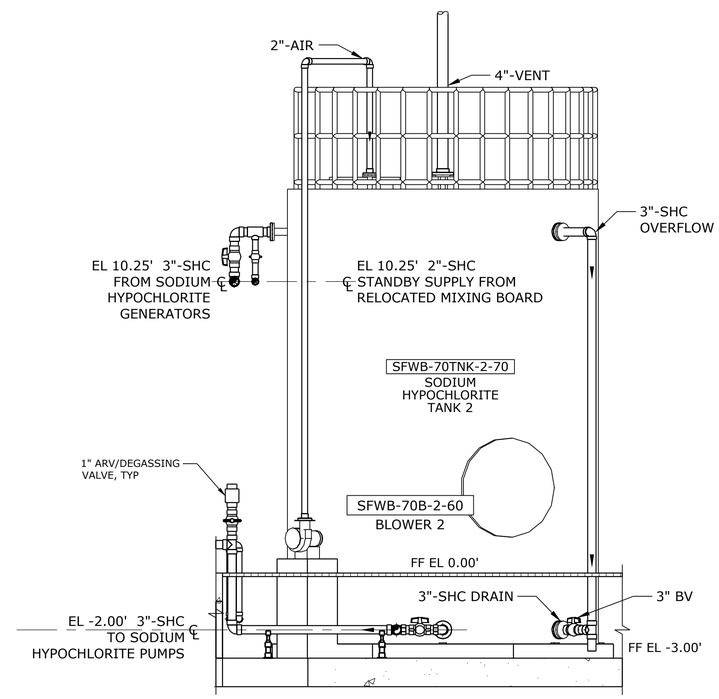

SECTION D M-105
SCALE: 3/8" = 1'-0"

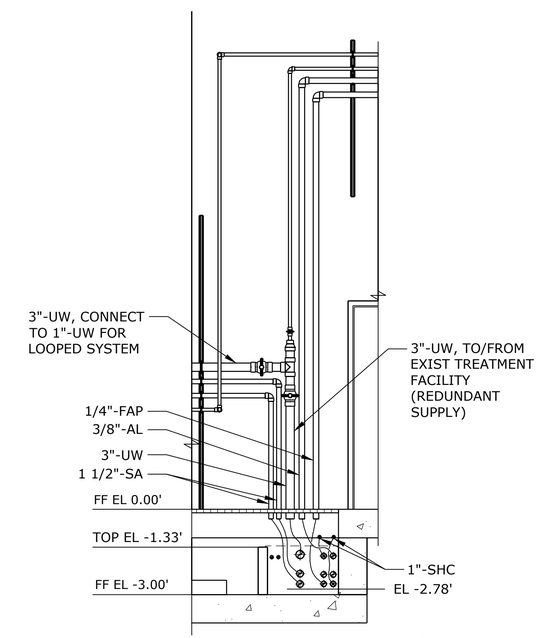

SECTION E M-105
SCALE: 3/8" = 1'-0"

NO.	DATE	BY	REVISION

NOTICE
0 ½ 1
IF THIS BAR DOES NOT MEASURE 1" THEN DRAWING IS NOT TO SCALE

HLB DESIGNED
JLC DRAWN
HLB CHECKED

REGISTERED PROFESSIONAL ENGINEER 105439PE OREGON MARCH 11, 2025 HEATHER LEIGH BURNS
Digitally signed by Heather Leigh Burns Date: 2026.07.27 13:08:50 PDT
RENEWS 12-31-27

BID SET

consor
Stantec

South Fork WATER
PURE WATER SINCE 1915

WATER QUALITY SYSTEMS BUILDING

MECHANICAL

SODIUM HYPOCHLORITE SECTIONS - 2

PROJECT NO.: W253326OR | SCALE: AS SHOWN | DATE: AUGUST 2026

SHEET
M-302

\\EgnyteDrive\Consor Files_V-W\Projects\OR\South Fork Water\2025\W253326OR.00\12 CADD\12-5 Sheets\M-302 TREATMENT BUILDING SODIUM HYPOCHLORITE SECTIONS 2 OF 3.dwg M-302 7/29/2026 11:01 AM JUSTIN.DEUEL 24.3s (LMS Tech

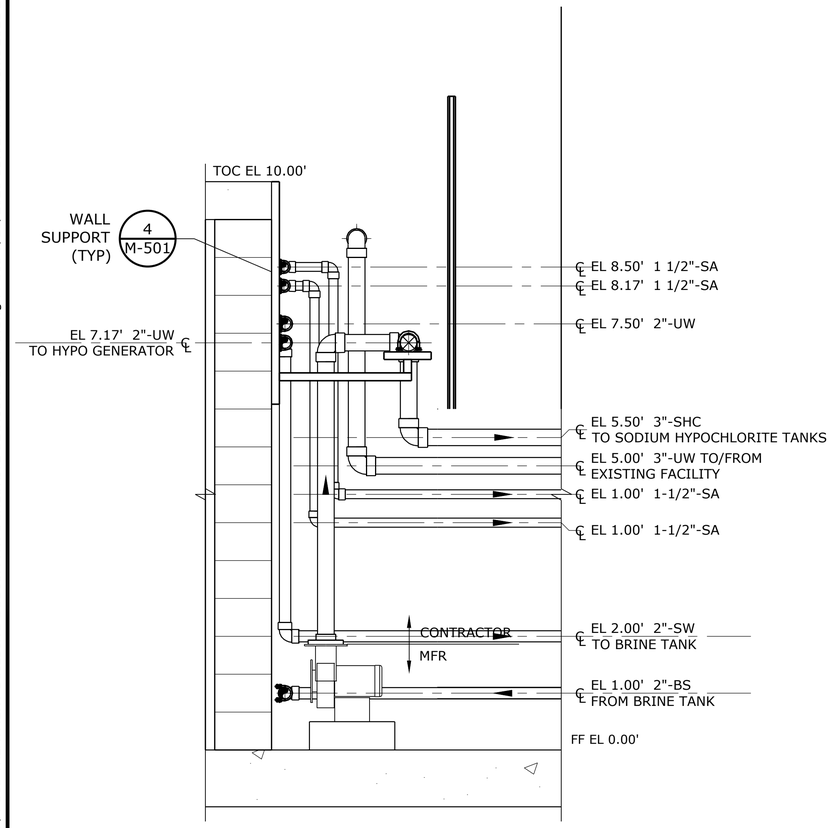

SECTION A / M-103

SCALE: 3/4" = 1'-0"

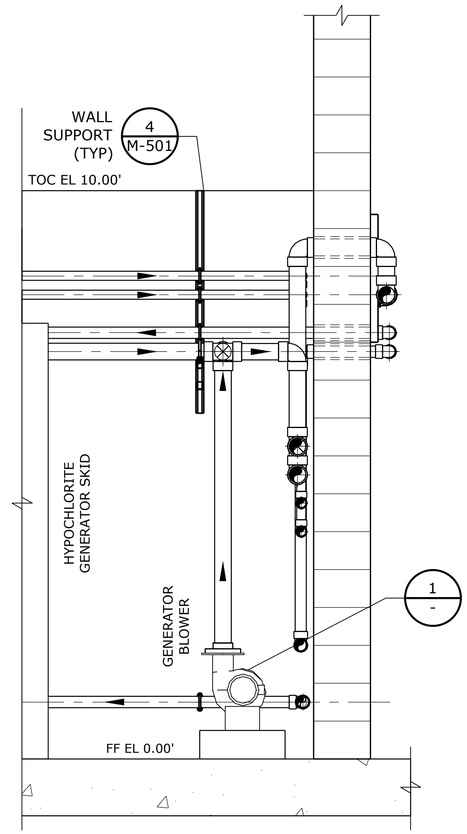

SECTION B / M-103

SCALE: 3/4" = 1'-0"

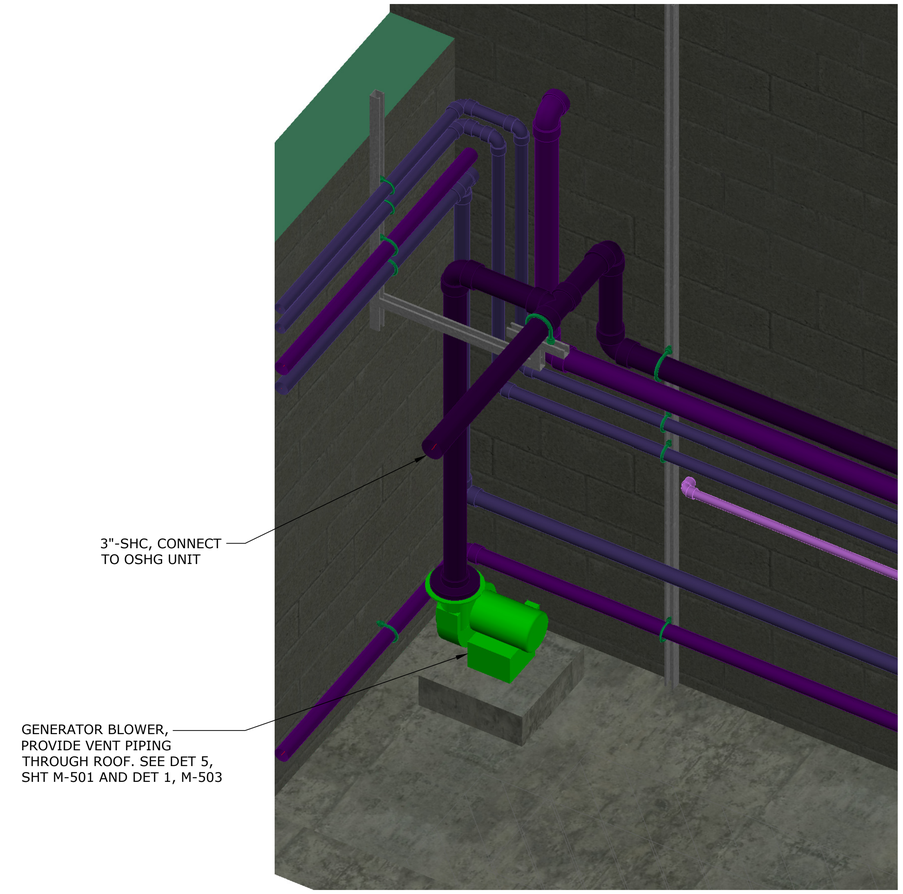

3D PERSPECTIVE

SCALE: N.T.S.

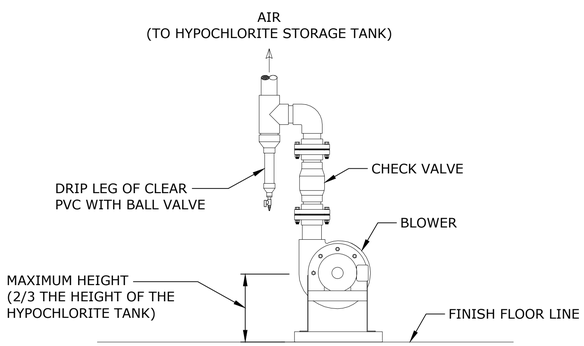

BLOWER DETAIL / 1 / -

SCALE: NTS

NOTES:

1. ELEVATIONS SHOWN ARE RELATIVE TO FINISH FLOOR ELEVATION. EL 0.00 = FINISHED FLOOR EL 324.20.

2. CONTRACTOR SHALL SUPPLY ALL REQUIRED PROCESS PIPING UP TO CONNECTION POINTS AT MANUFACTURER PROVIDED ONSITE GENERATION SKIDS, INCLUDING BRINE SOLUTION, SOFTENED WATER, SODIUM HYPOCHLORITE SOLUTION, AND BLOWER AND VENT PIPING, AND ALL ELECTRICAL CONNECTIONS. LOCATIONS OF PIPING CONNECTIONS WILL VARY BY ONSITE GENERATION MANUFACTURER.

NO.	DATE	BY	REVISION

NOTICE
0 ½ 1
IF THIS BAR DOES NOT MEASURE 1" THEN DRAWING IS NOT TO SCALE

HLB DESIGNED
JLC DRAWN
HLB CHECKED

REGISTERED PROFESSIONAL ENGINEER 105439PE OREGON MARCH 11, 2025 HEATHER LEIGH BURNS
Digitally signed by Heather Leigh Burns
Date: 2026.07.27 13:08:50 PDT
RENEWS 12-31-27

BID SET

consor
Stantec

South Fork WATER
PURE WATER SINCE 1915
WATER QUALITY SYSTEMS BUILDING

MECHANICAL
SODIUM HYPOCHLORITE SECTIONS - 3

PROJECT NO.: W253326OR | SCALE: AS SHOWN | DATE: AUGUST 2026

SHEET
M-303

\\EgnyteDrive\Consor Files_V-W\Projects\OR\South Fork Water\2025\W253326OR.00\12 CADD\12-5 Sheets\M-303 TREATMENT BUILDING SODIUM HYPOCHLORITE SECTIONS 3 OF 3.dwg M-303 7/29/2026 11:02 AM JUSTIN.DEUEL 24.3s (LMS Tech

\\EgnyteDrive\Consor Files_V-W\Projects\OR\South Fork Water\2025\W253326OR.00\12 CADD\12-5 Sheets\M-304 TREATMENT BUILDING ALUM SYSTEM SECTIONS.dwg M-304 7/29/2026 11:03 AM JUSTIN.DEUEL 24.3s (LMS Tech)

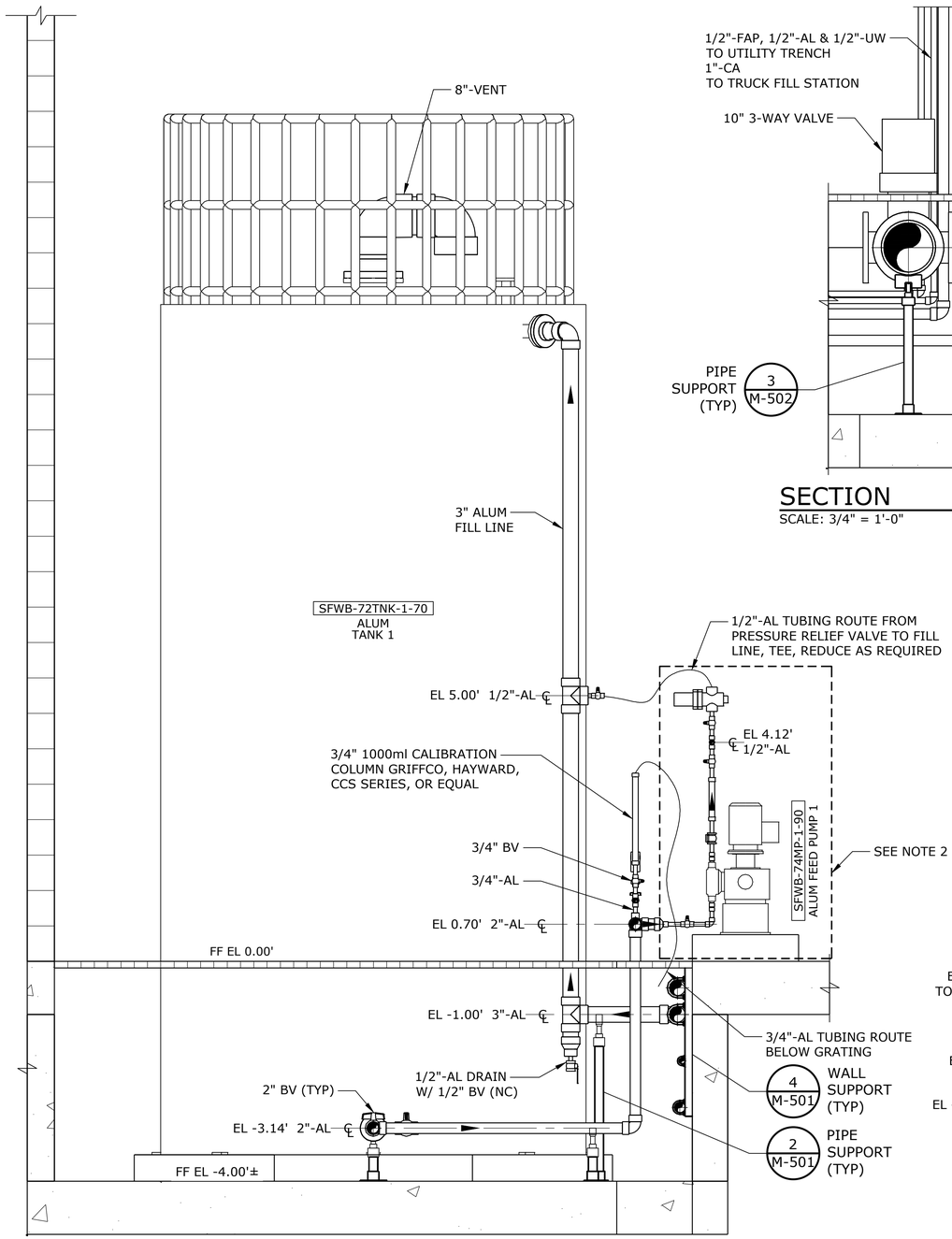

SECTION A M-106
SCALE: 3/4" = 1'-0"

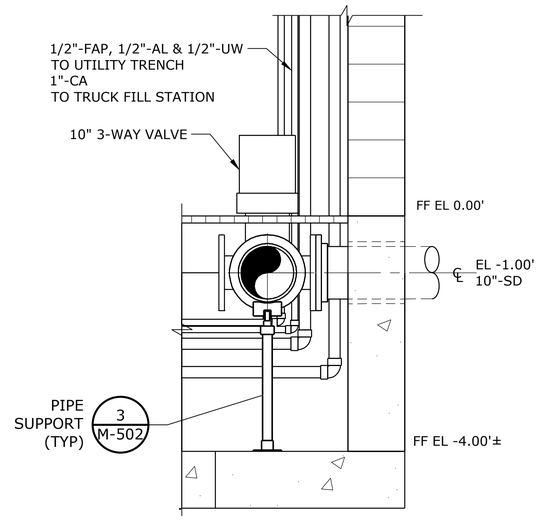

SECTION D M-106
SCALE: 3/4" = 1'-0"

NOTES:

1. ELEVATIONS SHOWN ARE RELATIVE TO FINISH FLOOR ELEVATION. EL 0.00 = FINISHED FLOOR EL 324.20.

2. CHEMICAL METERING PUMPS AND APPURTENANCES SHOWN SCHEMATICALLY. PUMPS, PIPING, AND APPURTENANCES SHALL BE PROCURED AS A MANUFACTURED SKID PACKAGE FROM THE PUMP MANUFACTURER. SEE SPECIFICATIONS. CONTRACTOR SHALL PROVIDE PIPING UP TO SKID CONNECTIONS.

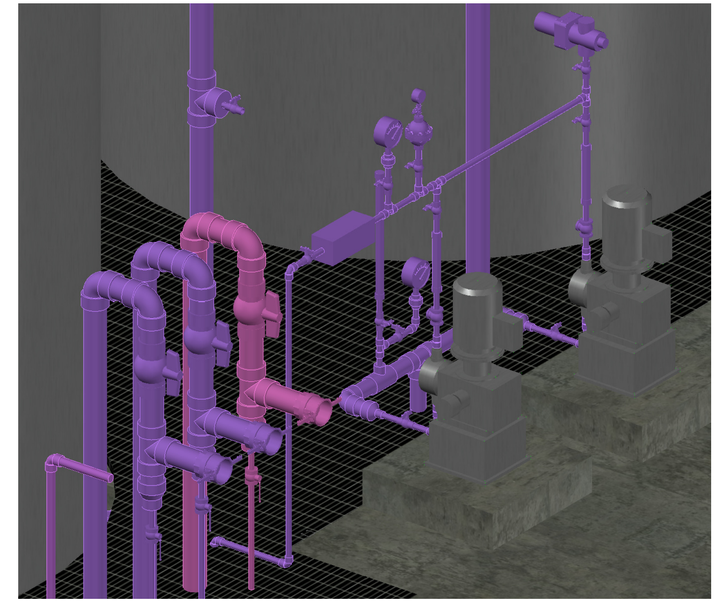

3D PERSPECTIVE
SCALE: N.T.S.

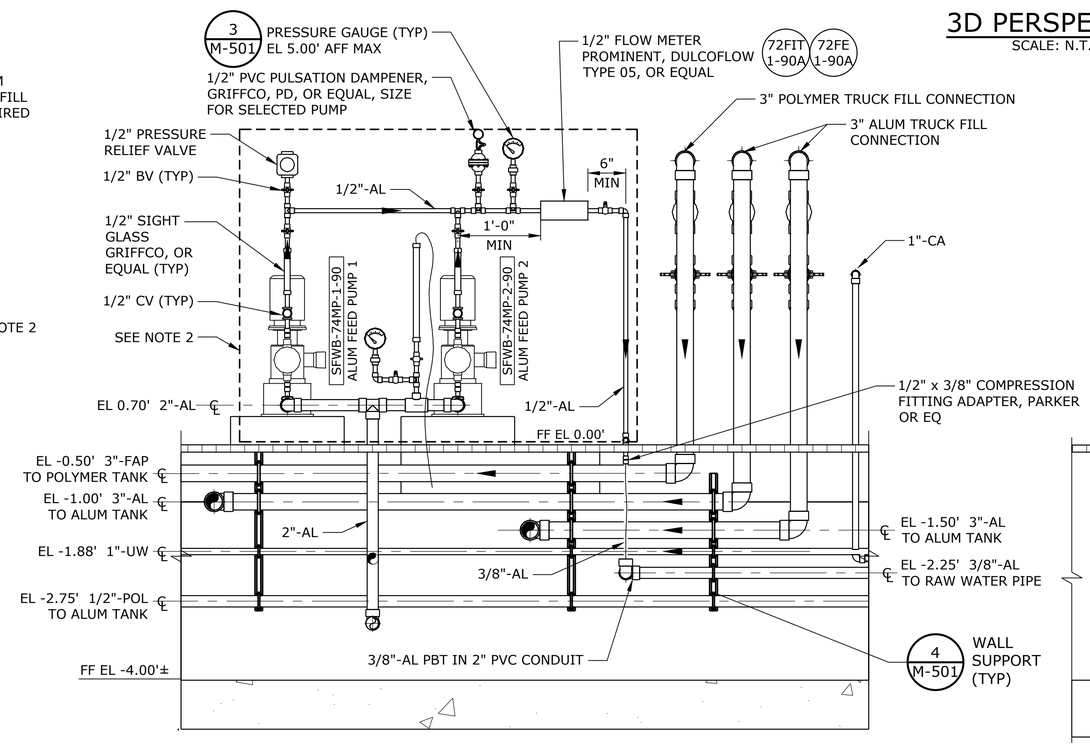

SECTION B M-106
SCALE: 3/4" = 1'-0"

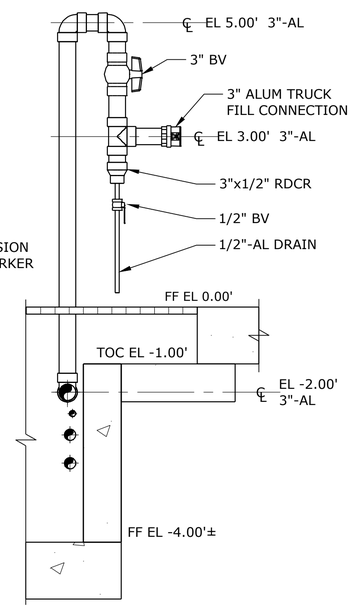

SECTION C M-106
SCALE: 3/4" = 1'-0"

NO.	DATE	BY	REVISION

NOTICE
0 ½ 1
IF THIS BAR DOES NOT MEASURE 1" THEN DRAWING IS NOT TO SCALE

HLB DESIGNED
JLC DRAWN
HLB CHECKED

REGISTERED PROFESSIONAL ENGINEER 105439PE OREGON MARCH 11, 2025 HEATHER LEIGH BURNS
Digitally signed by Heather Leigh Burns Date: 2026.07.27 13:59:50 -07'00'
RENEWS 12-31-27

BID SET

consor
Stantec

South Fork WATER PURE WATER SINCE 1915
WATER QUALITY SYSTEMS BUILDING

MECHANICAL
ALUM SYSTEM SECTIONS

PROJECT NO.: W253326OR | SCALE: AS SHOWN | DATE: AUGUST 2026

SHEET M-304

\\EgnyteDrive\Consor Files_V-W\Projects\OR\South Fork Water\2025\W253326OR.00\12 CADD\12-5 Sheets\M-305 TREATMENT BUILDING POLYMER SYSTEM SECTIONS.dwg M-305 7/29/2026 11:04 AM JUSTIN.DEUEL 24.3s (LMS Tech)

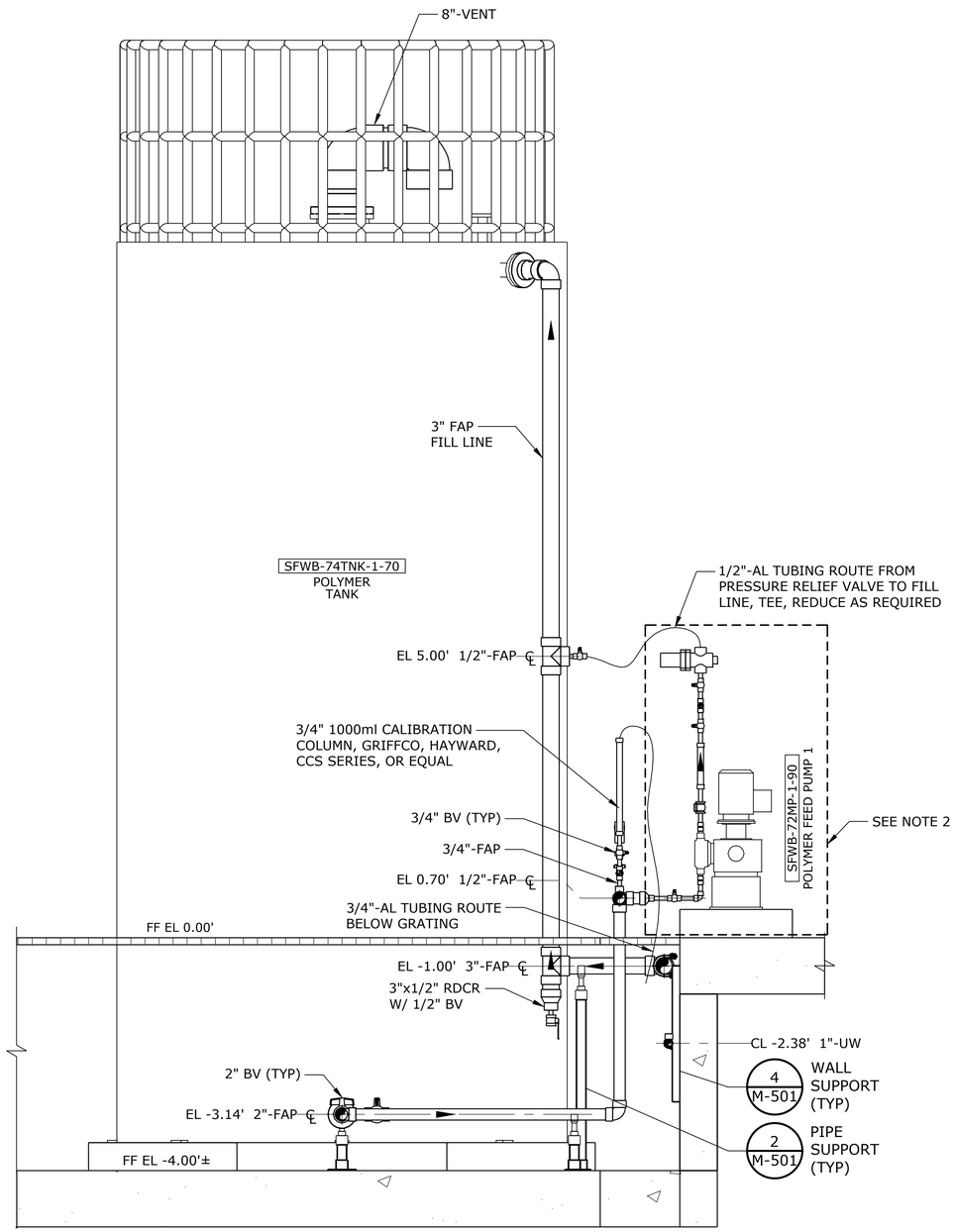

SECTION A / M-107
SCALE: 3/4" = 1'-0"

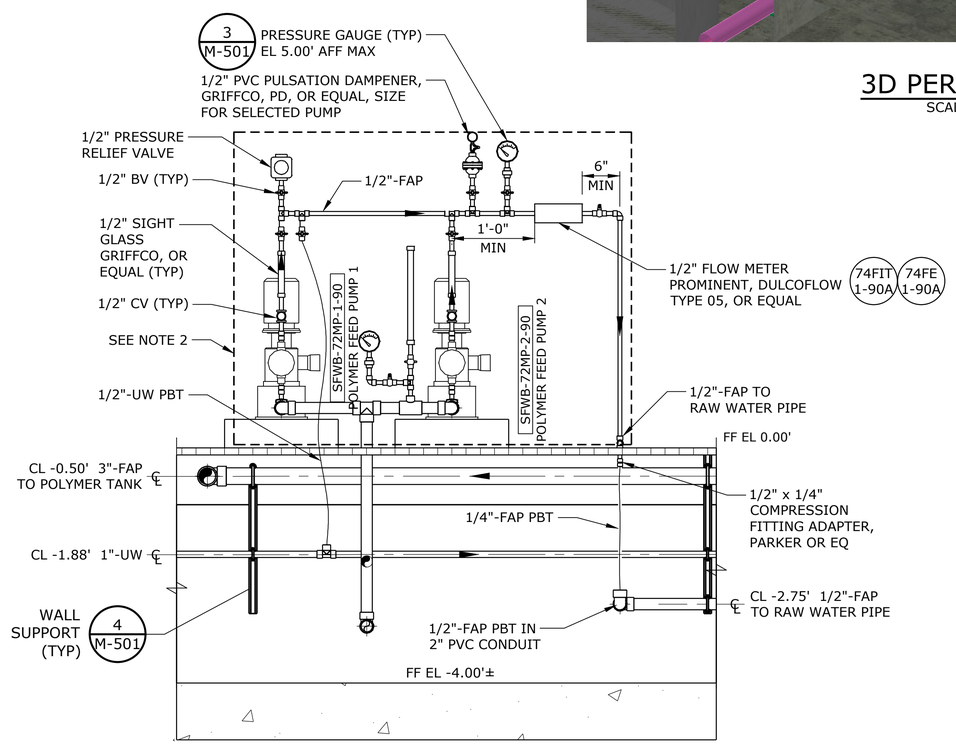

SECTION B / M-107
SCALE: 3/4" = 1'-0"

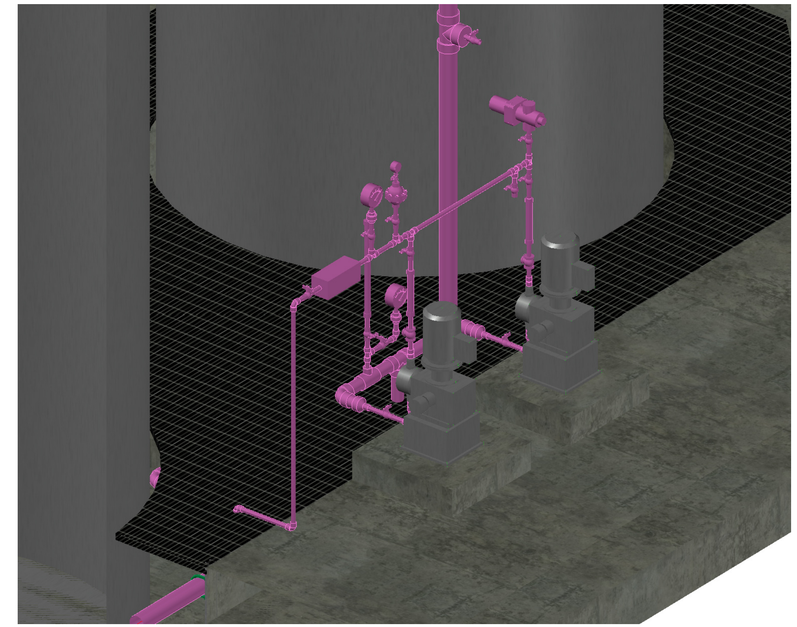

3D PERSPECTIVE
SCALE: N.T.S.

NOTES:

1. ELEVATIONS SHOWN ARE RELATIVE TO FINISH FLOOR ELEVATION. EL 0.00 = FINISHED FLOOR EL 324.20.

2. CHEMICAL METERING PUMPS AND APPURTENANCES SHOWN SCHEMATICALLY. PUMPS, PIPING, AND APPURTENANCES SHALL BE PROCURED AS A MANUFACTURED SKID PACKAGE FROM THE PUMP MANUFACTURER. SEE SPECIFICATIONS. CONTRACTOR SHALL PROVIDE PIPING UP TO SKID CONNECTIONS.

NO.	DATE	BY	REVISION

NOTICE
0 ½ 1
IF THIS BAR DOES NOT MEASURE 1" THEN DRAWING IS NOT TO SCALE

HLB DESIGNED
JLC DRAWN
HLB CHECKED

REGISTERED PROFESSIONAL ENGINEER 105439PE OREGON MARCH 11, 2025 HEATHER LEIGH BURNS
Digitally signed by Heather Leigh Burns
Date: 2026.07.27 13:34:50 PDT
RENEWS 12-31-27

BID SET

consor
Stantec

South Fork WATER
PURE WATER SINCE 1915
WATER QUALITY SYSTEMS BUILDING

MECHANICAL

POLYMER SYSTEM SECTIONS

PROJECT NO.: W253326OR | SCALE: AS SHOWN | DATE: AUGUST 2026

SHEET
M-305

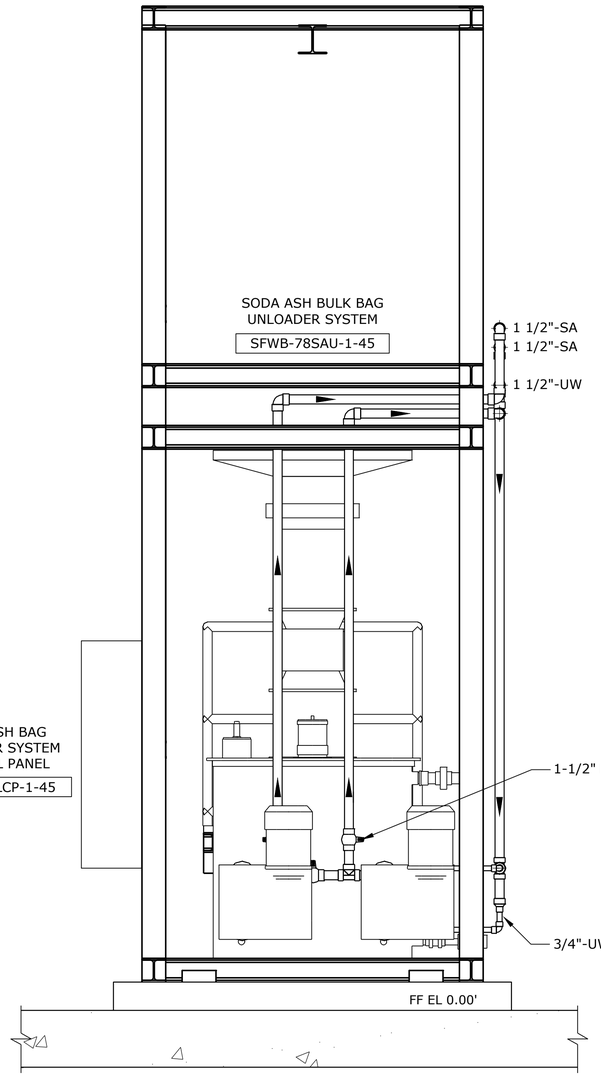

SECTION A M-108

SCALE: 3/4" = 1'-0"

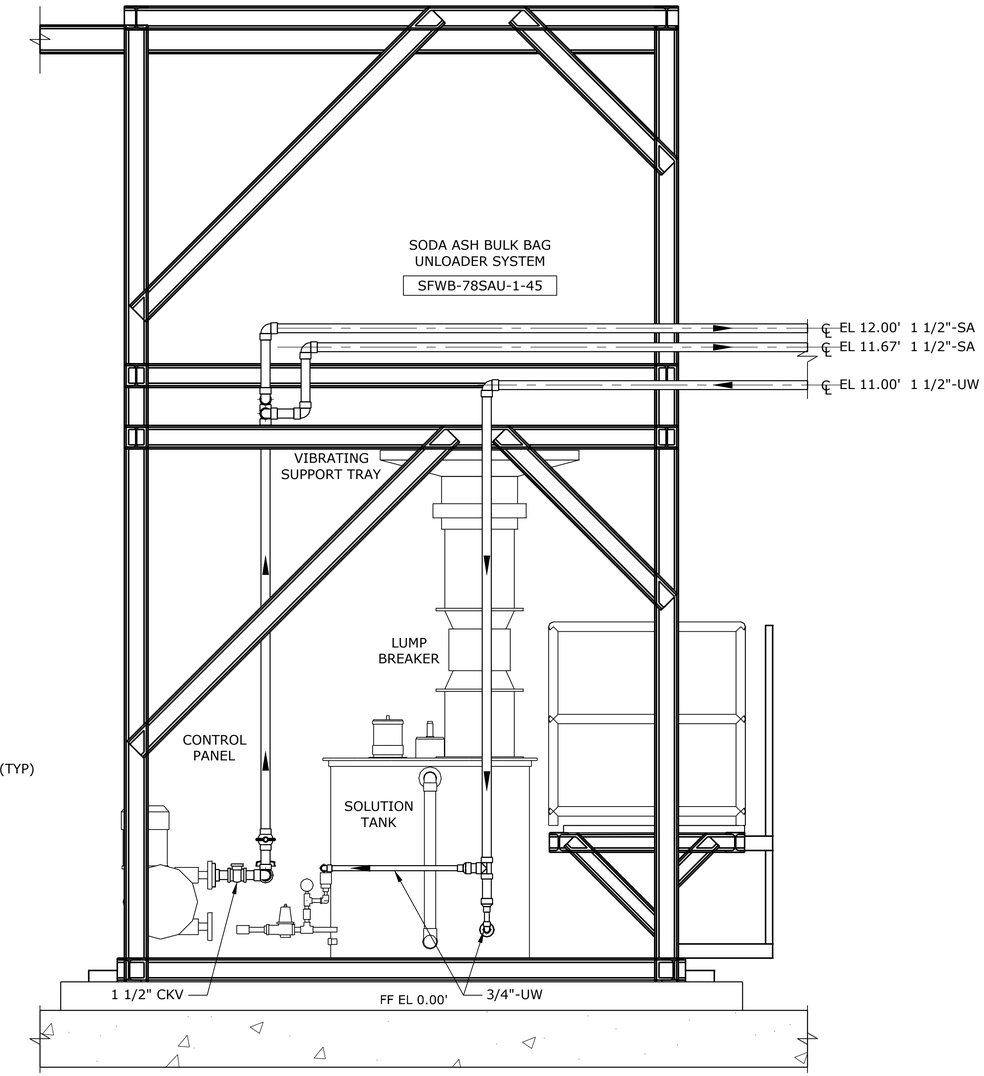

SECTION B M-108

SCALE: 3/4" = 1'-0"

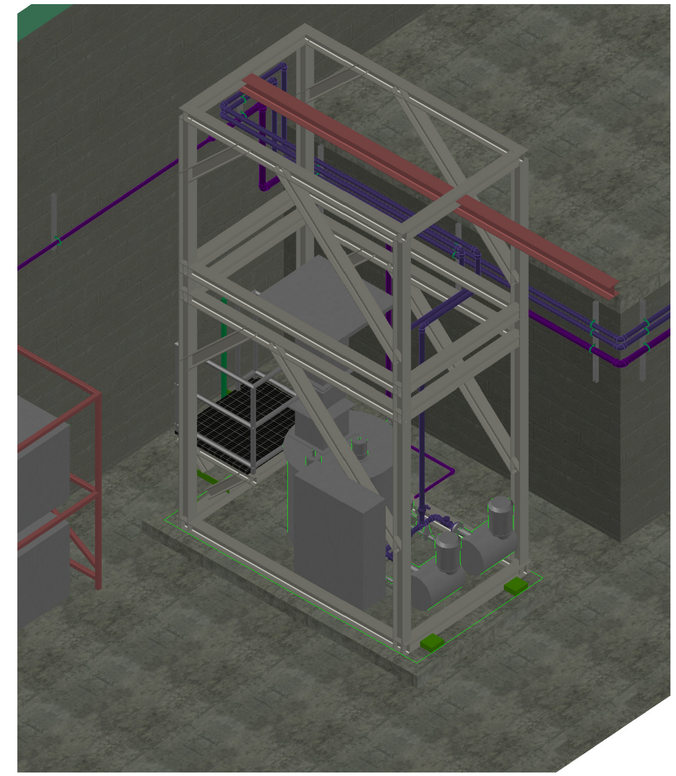

3D PERSPECTIVE

SCALE: N.T.S.

NOTE:

1. ELEVATIONS SHOWN ARE RELATIVE TO FINISH FLOOR ELEVATION. EL 0.00 = FINISHED FLOOR EL 324.20.

2. COMPONENTS AND DIMENSIONS NOTED ARE SHOWN FOR CONTRACTORS REFERENCE. ACTUAL EQUIPMENT VARIES PER MANUFACTURER.

NO.	DATE	BY	REVISION

NOTICE

0 ½ 1

IF THIS BAR DOES NOT MEASURE 1" THEN DRAWING IS NOT TO SCALE

HLB DESIGNED
JLC DRAWN
HLB CHECKED

REGISTERED PROFESSIONAL ENGINEER 105439PE OREGON MARCH 11, 2025 HEATHER LEIGH BURNS
Digitally signed by Heather Leigh Burns
Date: 2026.07.27 13:59:50 PDT
RENEWS 12-31-27

BID SET

consor
Stantec

South Fork WATER
PURE WATER SINCE 1915

WATER QUALITY SYSTEMS BUILDING

MECHANICAL

SODA ASH FEED SYSTEM SECTIONS

PROJECT NO.: W253326OR | SCALE: AS SHOWN | DATE: AUGUST 2026

SHEET M-306

\\EgnyteDrive\Consor Files_V-W\Projects\OR\South Fork Water\2025\W253326OR.00\12 CADD\12-5 Sheets\M-306 TREATMENT BUILDING SODA ASH SECTIONS.dwg M-306 7/29/2026 11:04 AM JUSTIN.DEUEL 24.3s (LMS Tech)

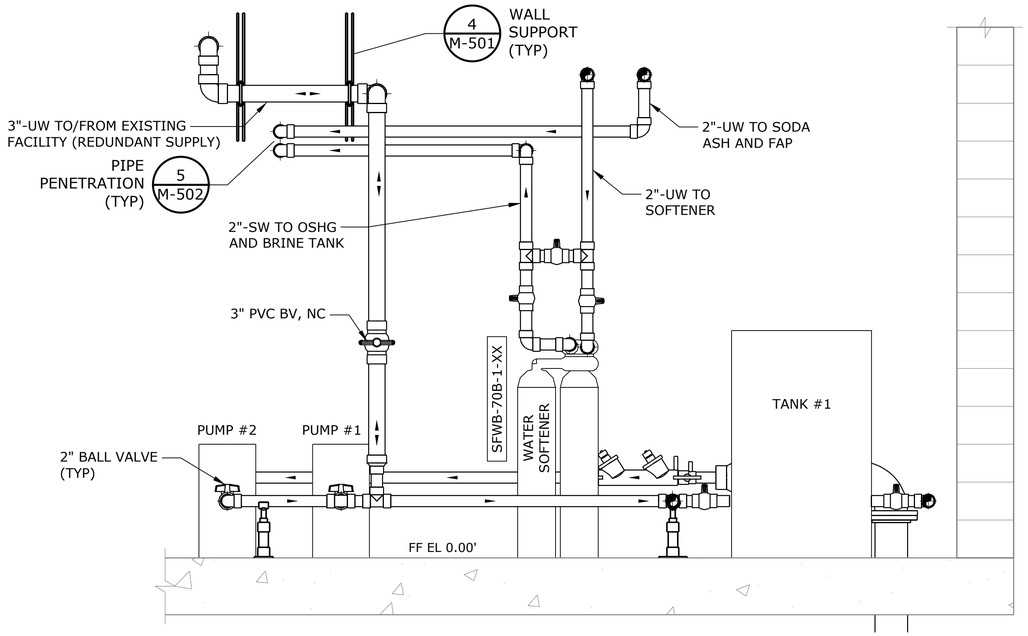

SECTION A M-109
SCALE: 3/4" = 1'-0"

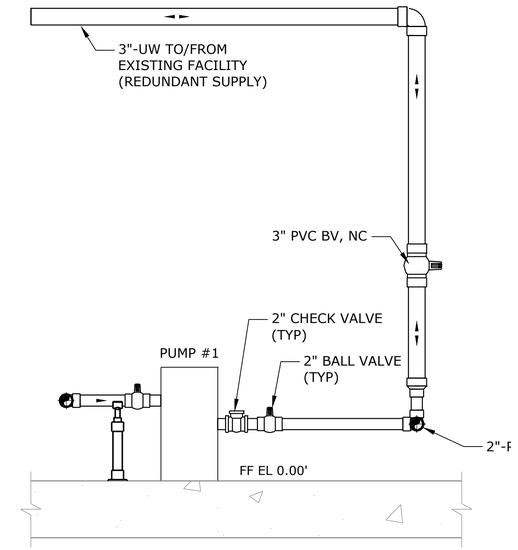

SECTION B M-109
SCALE: 3/4" = 1'-0"

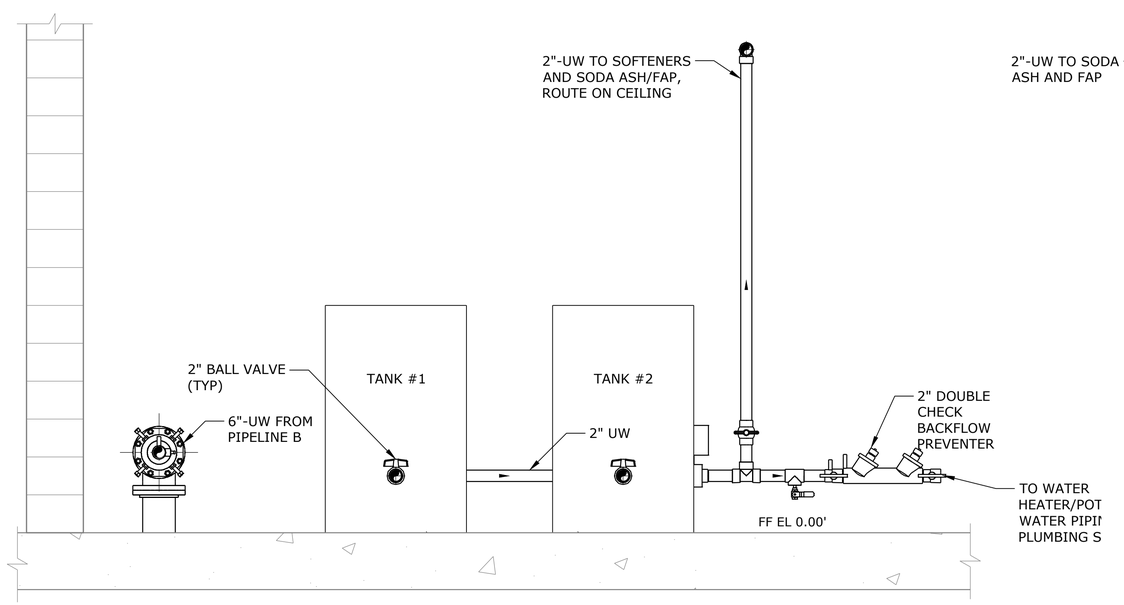

SECTION C M-109
SCALE: 3/4" = 1'-0"

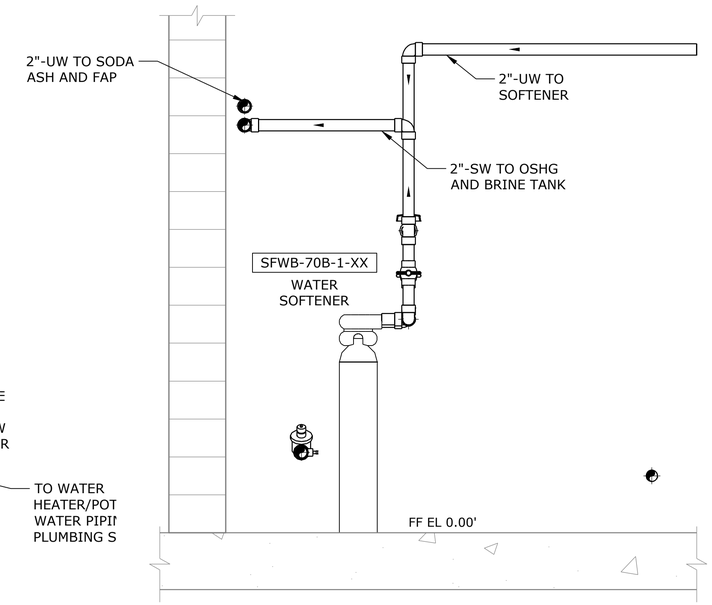

SECTION D M-109
SCALE: 3/4" = 1'-0"

NOTES:

1. ELEVATIONS SHOWN ARE RELATIVE TO FINISH FLOOR ELEVATION. EL 0.00 = FINISHED FLOOR EL 324.20.

2. COMPONENTS AND DIMENSIONS NOTED ARE SHOWN FOR CONTRACTORS REFERENCE. ACTUAL EQUIPMENT VARIES PER MANUFACTURER.

NO.	DATE	BY	REVISION

NOTICE
0 ½ 1
IF THIS BAR DOES NOT MEASURE 1" THEN DRAWING IS NOT TO SCALE

BR DESIGNED
JLC DRAWN
LHO CHECKED

REGISTERED PROFESSIONAL ENGINEER 105439PE OREGON MARCH 11, 2025 HEATHER LEIGH BURNS
Digitally signed by Heather Leigh Burns Date: 2026.07.27 13:09:50 PDT
RENEWS 12-31-27

BID SET

consor
Stantec

South Fork WATER PURE WATER SINCE 1915
WATER QUALITY SYSTEMS BUILDING

MECHANICAL

MECHANICAL ROOM SECTIONS

PROJECT NO.: W253326OR | SCALE: AS SHOWN | DATE: AUGUST 2026

SHEET M-307

\\EgnyteDrive\Consor Files_V-W\Projects\OR\South Fork Water\2025\W253326OR.00\12 CADD\12-5 Sheets\M-307 MECHANICAL ROOM SECTIONS.dwg M-307 7/29/2026 11:04 AM JUSTIN.DEUEL 24.3s (LMS Tech)

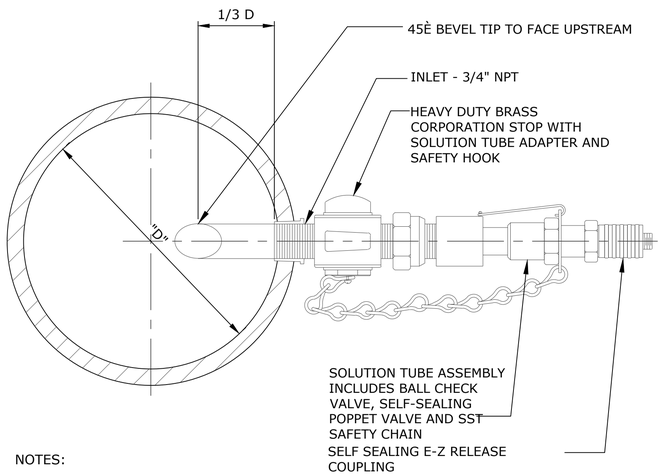

NOTES:

1. REFER TO SITE PIPING DWGS FOR "D"
2. INJECTION QUILL CONNECTION SHOWN HORIZONTAL FOR CLARITY. INSTALL AT 45° FROM VERTICAL
3. CHEMICAL INJECTION ASSEMBLIES WILL BE SAF-T-FLO MODEL EB-191, OR EQUAL.
4. SAMPLE TAPS WILL BE SAF-T-FLO MODEL EB-179 OR EQUAL.

CHEMICAL INJECTION AND SAMPLE TAP (1 / -)

SCALE: NTS

PIPE DIA (IN)	'A'	'B'	'C'	'D'	'E'	
					MIN	MAX
2 1/2	2 1/2	3 1/2	9	1 1/2	8	13
3	2 1/2	3 3/4	9	1 1/2	8 1/4	13 1/4
3 1/2	2 1/2	4	9	1 1/2	8 1/2	13 1/2
4	3	4 1/4	9	2 1/2	9 1/4	14
5	3	4 7/8	9	2 1/2	10	14 3/4
6	3	5 1/2	9	2 1/2	10 1/2	15 1/4
8	3	6 7/8	9	2 1/2	11 3/4	16 1/2
10	3	8 1/2	9	2 1/2	13 1/2	18 1/4
12	3	9 15/16	9	2 1/2	15	19 3/4
14	4	10 15/16	11	3	16 1/4	20 3/4
16	4	12 3/8	11	3	17 3/4	22 1/4
18	6	13 7/8	13 1/2	3 1/2	19 1/2	24
20	6	15 3/8	13 1/2	3 1/2	21	25 1/2
24	6	17 15/16	13 1/2	4	23 3/4	28 1/4
30	6	21 5/16	17 1/2	4	22	26 3/4

1. PROVIDE HALF ROUND RIGID INSULATION & INSULATION PROTECTION SHIELD, SIMILAR TO GRINNELL FIG 167 OR B-LINE B-3151, WHEN PIPING IS INSULATED
2. PROVIDE NEOPRENE WAFFLE ISOLATION PAD SIMILAR TO MASON TYPE 'W' OR KORFUND KORPAD 40, UNDER SUPPORT FOOT WHEN PIPING IS ISOLATED OR SUPPORT IS ADJACENT TO MECHANICAL EQUIPMENT
3. SEE TABLE FOR BASE, HEIGHT, & FLANGE DIMENSIONS

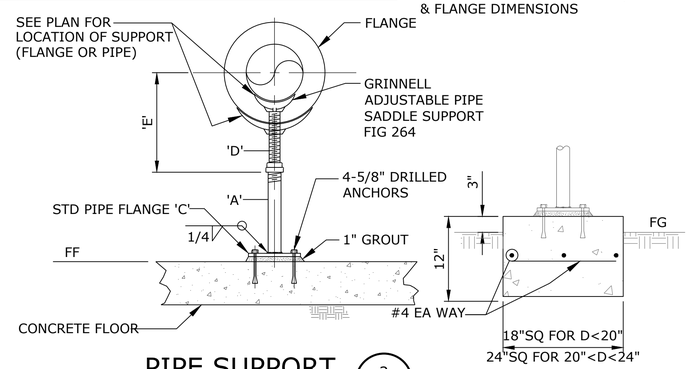

CONCRETE BASE IF SUPPORT IS LOCATED OFF OF A SLAB

PIPE SUPPORT (2 / -)

SCALE: NTS

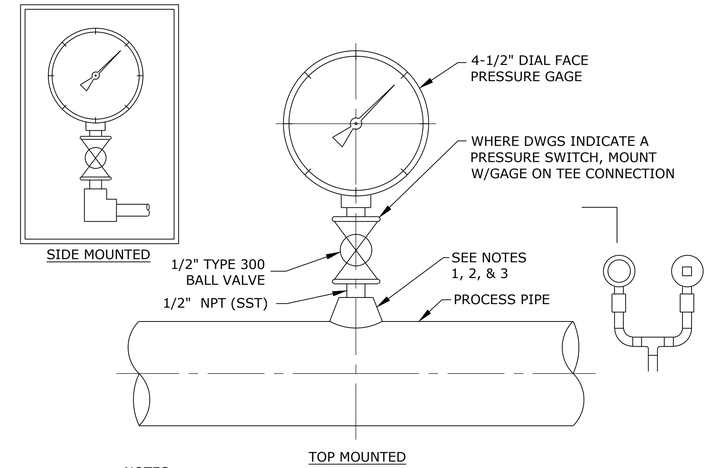

NOTES:

1. FOR STL, GALV & PVC 2-1/2" & SMALLER USE A BUSHING IN A TEE
2. FOR DI & FRP ALL SIZES, USE PIPE SADDLE W/BUSHING
3. FOR STL & SST PIPES 3" & LARGER, & PRESSURE VESSELS, USE THRED-O-LET AS SHOWN
4. PROVIDE SNUBBER FOR POSITIVE DISPLACEMENT PUMP INSTALLATIONS

PRESSURE GAUGE MOUNTING (3 / -)

SCALE: NTS

NOTES:

1. SEE PLANS FOR NUMBER AND MATERIAL OF PIPES.
2. FOR INSTALLATION REQUIRING A BRACKET LONGER THAN 18", USE UNISTRUT 2540 SERIES, KIN-LINE 323, OR EQUAL UP TO 36".

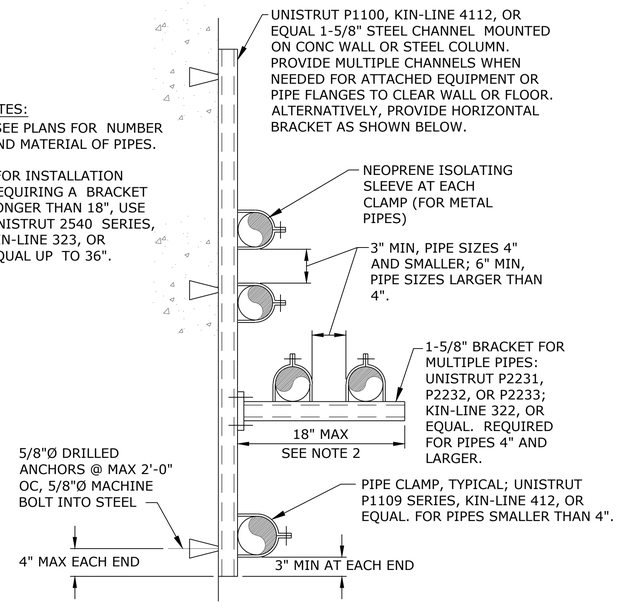

SINGLE OR STACKED WALL PIPE SUPPORT (4 / -)

SCALE: NTS

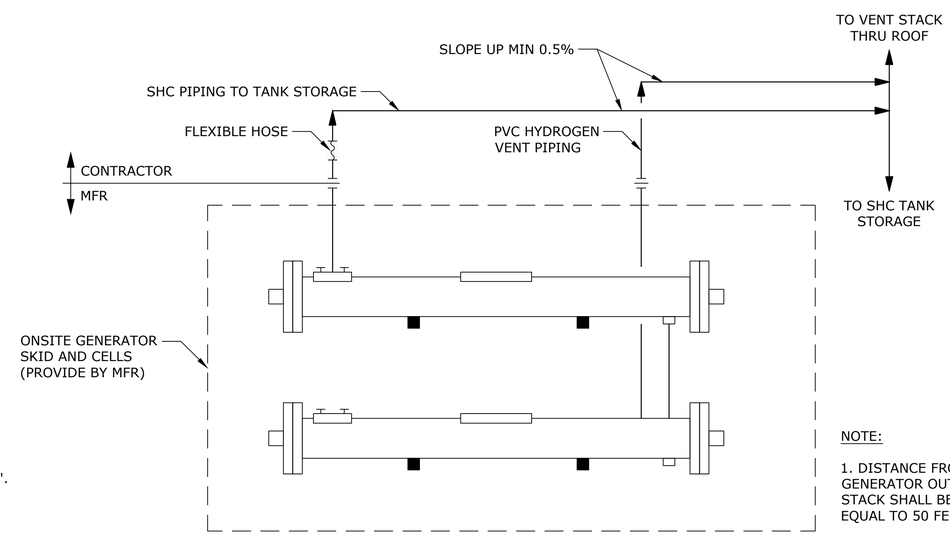

NOTE:

1. DISTANCE FROM SODIUM HYPO GENERATOR OUTLET AND VENT STACK SHALL BE LESS THAN OR EQUAL TO 50 FEET.

SODIUM HYPOCHLORITE VENT PIPING SCHEMATIC (5 / M-503)

SCALE: NTS

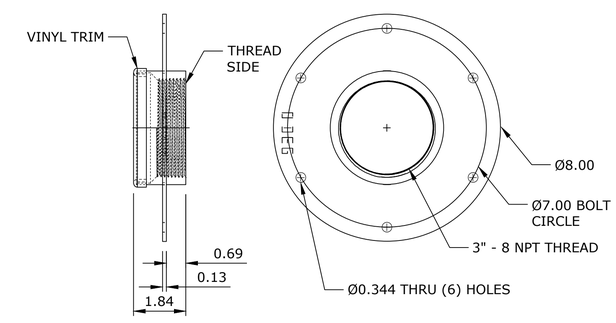

BRINE LEVEL SENSOR TANK MOUNT DETAIL (6 / M-504)

SCALE: NTS

NO.	DATE	BY	REVISION

NOTICE: 0 ½ 1 — IF THIS BAR DOES NOT MEASURE 1" THEN DRAWING IS NOT TO SCALE

HLB DESIGNED
JLC DRAWN
HLB CHECKED

REGISTERED PROFESSIONAL ENGINEER 105439PE OREGON MARCH 11, 2025 HEATHER LEIGH BURNS — RENEWS 12-31-27

BID SET

consor
Stantec

South Fork WATER — PURE WATER SINCE 1915

WATER QUALITY SYSTEMS BUILDING

MECHANICAL

MECHANICAL DETAILS

PROJECT NO.: W253326OR | SCALE: AS SHOWN | DATE: AUGUST 2026

SHEET M-501

\\EgnyteDrive\Consor Files_V-W\Projects\OR\South Fork Water\2025\W253326OR.00\12 CADD\12-5 Sheets\M-501-03 MECHANICAL DETAILS.dwg M-501 7/29/2026 11:05 AM JUSTIN.DEUEL 24.3s (LMS Tech)

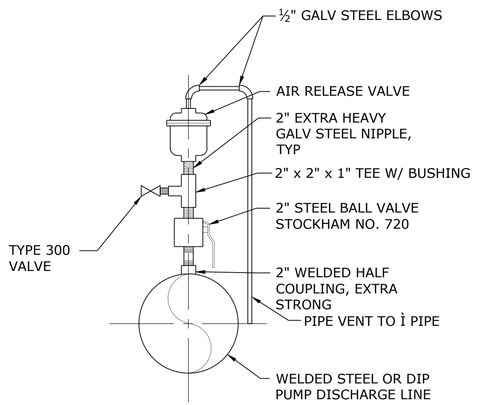

AIR RELEASE VALVE DETAIL (1 / -)

SCALE: NTS

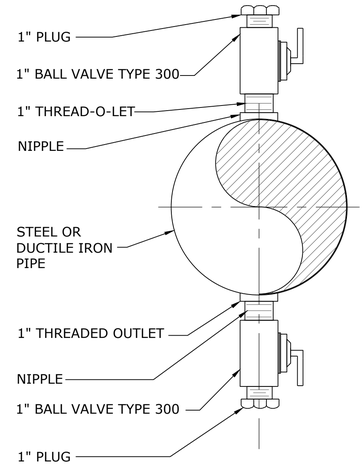

NOTE:

1. ALL PIPE AND FITTINGS SHALL BE SCH 40 BRASS

THREADED OUTLET (2 / -)

SCALE: NTS

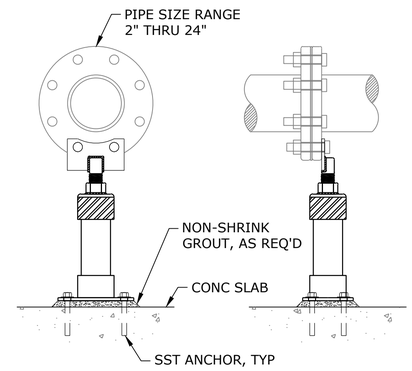

S-89 PIPE SUPPORT DETAIL (3 / -)

SCALE: NTS

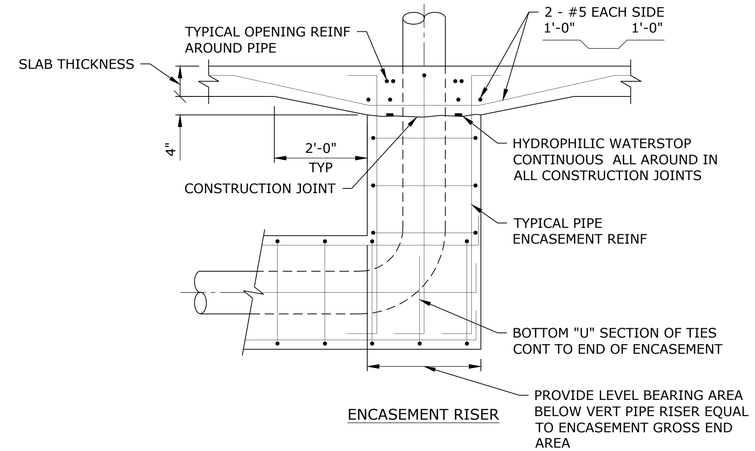

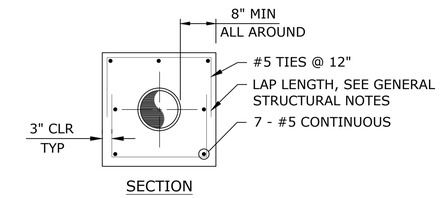

NOTES:

1. WHEN PIPE ENCASEMENT IS CLOSER THAN 4" TO SLAB ABOVE, TIE SLAB TOGETHER
2. STOP UNDER BUILDING PIPE ENCASEMENTS AT EDGE OF BUILDING FOOTING

CONCRETE PIPE ENCASEMENT BENEATH SLAB (4 / -)

SCALE: NTS

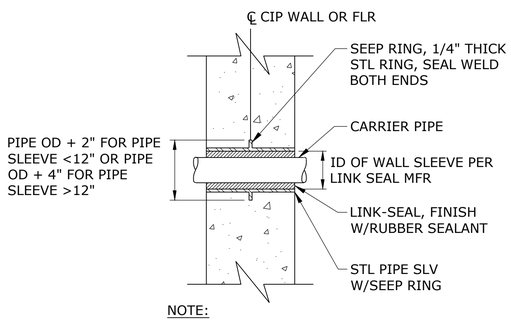

NOTE:

1. FLOOR SLEEVE WITH SEEP RING TO BE HOT DIP GALVANIZED.

STEEL FLOOR/WALL SLEEVE (5 / -)

SCALE: NTS

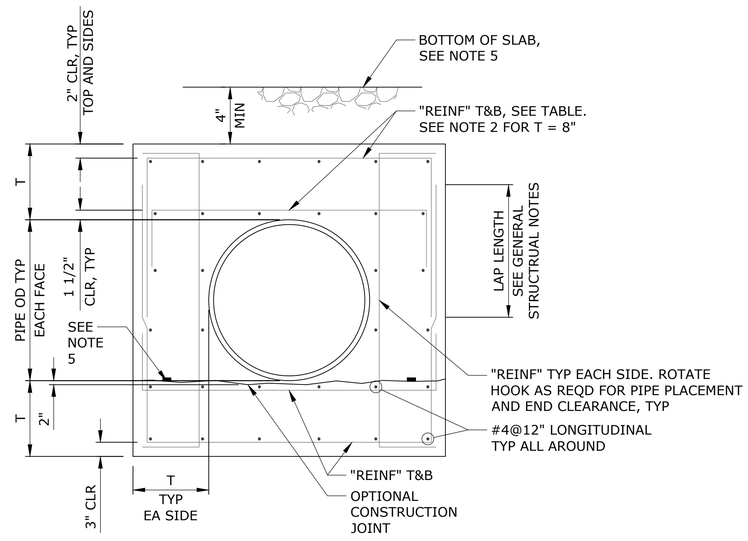

PIPE ENCASEMENT (6 / -)

SCALE: NTS

PIPE ENCASEMENT TABLE

PIE DATA (IN.)	H=10 FEET		H=20 FEET		H=30 FEET		H=40 FEET	
	T (IN)	REINF	T (IN)	REINF	T (IN)	REINF	T (IN)	REINF
20 THRU 30	8	#5@12"	10	#5@12"	10	#5@12"	10	#6@12"
36 THRU 42	10	#5@12"	10	#6@12"	10	#7@12"	10	#6@6"
48 THRU 54	10	#6@12"	10	#7@12"	10	#7@6"	12	#7@6"

1. THIS DETAIL APPLIES TO PIPE DIAMETER OF 20" AND LARGER.
2. FOR T = 8" REINFORCEMENT SHALL BE ONE LAYER AND CENTERED IN SLABS OR WALLS.
3. "H" IS FILL HEIGHT OR WATER DEPTH OR COMBINATION ABOVE PIPE.
4. WHEN PIPE ENCASEMENT CLOSER THAN 4" TO SLAB ABOVE, TIE SLAB AND ENCASEMENT TOGETHER.
5. HYDROPHILIC WATER STOP CONTINUOUS ALL AROUND IN ALL CONSTRUCTION JOINTS.
6. STOP UNDER BUILDING PIPE ENCASEMENTS AT EDGE OF BUILDING FOOTING.

NO.	DATE	BY	REVISION

NOTICE
0 ½ 1
IF THIS BAR DOES NOT MEASURE 1" THEN DRAWING IS NOT TO SCALE

HLB DESIGNED
JLC DRAWN
HLB CHECKED

REGISTERED PROFESSIONAL ENGINEER 105439PE OREGON MARCH 11, 2025 HEATHER LEIGH BURNS
Digitally signed by Heather Leigh Burns
Date: 2026.07.27 13:56:50 PDT
RENEWS 12-31-27

BID SET

consor
Stantec

South Fork WATER PURE WATER SINCE 1915
WATER QUALITY SYSTEMS BUILDING

MECHANICAL
MECHANICAL DETAILS

PROJECT NO.: W253326OR | SCALE: AS SHOWN | DATE: AUGUST 2026

SHEET M-502

\\EgnyteDrive\Consor Files_V-W\Projects\OR\South Fork Water\2025\W253326OR.00\12 CADD\12-5 Sheets\M-501-03 MECHANICAL DETAILS.dwg M-502 7/29/2026 11:05 AM JUSTIN.DEUEL 24.3s (LMS Tech)

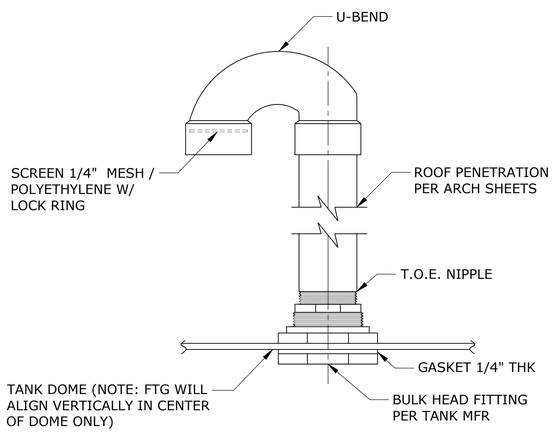

NOTE:

1. CONTRACTOR SHALL MAKE VENT PIPING CONNECTION FROM SODIUM HYPOCHLORITE TANKS AND ONSITE SODIUM HYPOCHLORITE GENERATORS TO BLOWERS AND THROUGH ROOF PER MANUFACTURER REQUIREMENTS.

"U" VENT DETAIL (1 / -)

SCALE: NTS

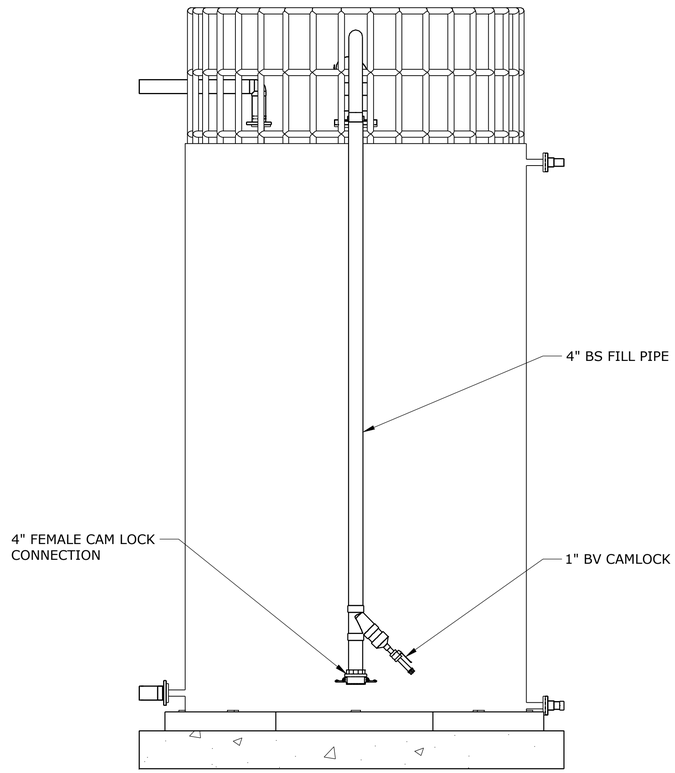

BRINE TANK FILL LINE DETAIL (2 / -)

SCALE: NTS

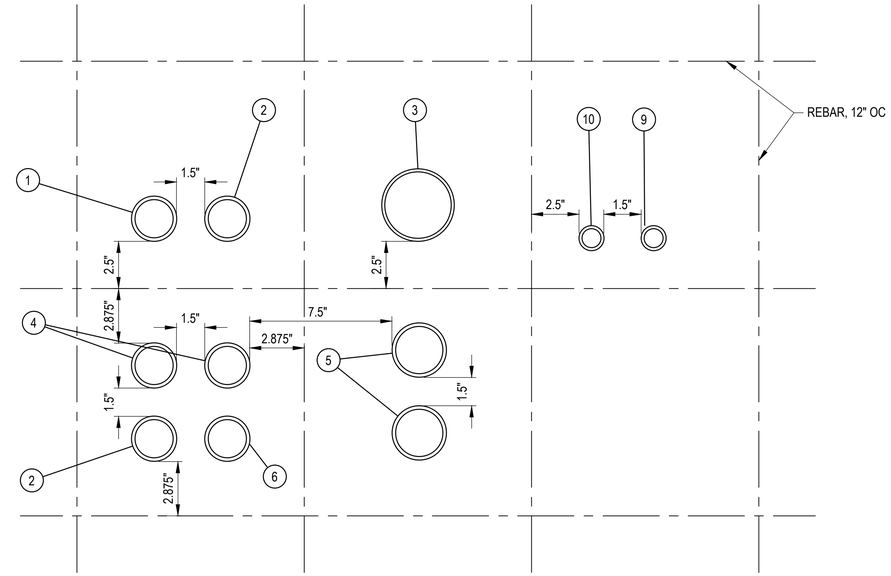

EXISTING PUMP ROOM WALL PENETRATION DETAIL (3 / -)

SCALE: 3"=1'-0"

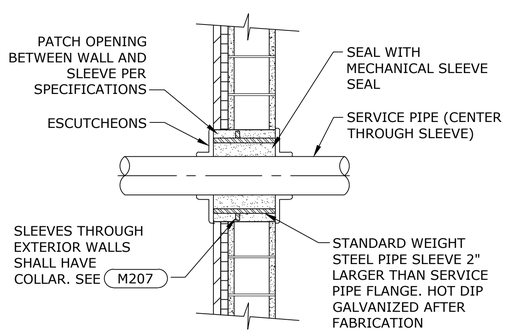

MASONRY WALL PIPE PENETRATION (5 / -)

SCALE: NTS

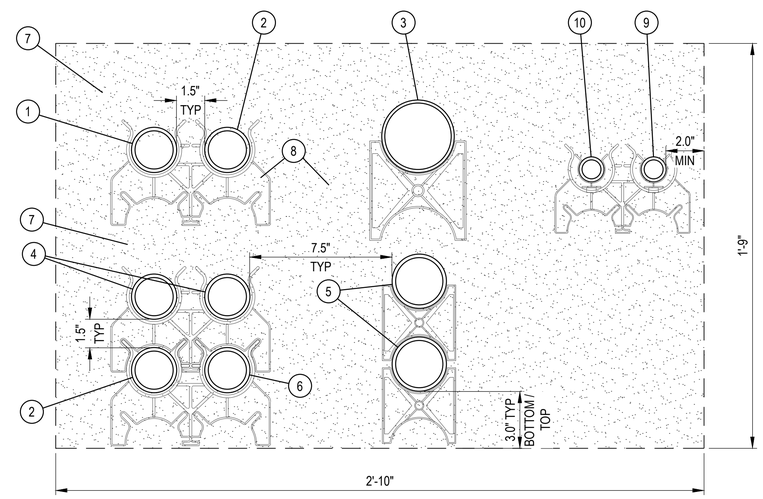

COMMON UTILITY TRENCH (4 / -)

SCALE: 3"=1'-0"

KEY NOTES

1. ALUM; 2-INCH SCH 80 PVC CONDUIT, 3/8-INCH POLY BRAIDED TUBING (PBT) CARRIER PIPE
2. SHC; 2-INCH SCH 80 PVC CONDUIT, 1-INCH PBT CARRIER PIPE
3. UW; 3-INCH SCH 80 PVC CARRIER PIPE
4. SPARE; 1.5-INCH SCH 80 PVC CONDUIT
5. SODA ASH; 2.5-INCH SCH 80 PVC CONDUIT, 1.5-INCH PBT CARRIER PIPE
6. POLYMER; 2.0-INCH SCH 80 PVC CONDUIT, 1/4-INCH PBT CARRIER PIPE
7. CDF BACKFILL
8. CASING SPACERS, CARLON SNAP-N-STAC COMBO SPACERS, OR EQUAL
9. POWER; 1-INCH SCH 80 PVC CARRIER PIPE
10. CONTROL; 1-INCH SCH 80 PVC CARRIER PIPE

NOTES

1. PROVIDE 2-INCH MIN CLR FROM REBAR, UNLESS SHOWN OTHERWISE.
2. PROVIDE 1.5-INCH MIN SPACING BETWEEN CONDUITS/PIPING.
3. CONTRACTOR TO PROVIDE HORIZ AND VERT FITTINGS AS REQ'D TO CONNECT EXISTING BLDG WITH PENETRATIONS AS SHOWN IN WQSB, AND MAINTAIN 6" VERT SEPARATION SEE FROM STORM FACILITIES. SEE STORM PLANS FOR.
4. PROVIDE MIN 12 INCHES OF COVER OVER THE TOP OF ALL PIPES FOR FROST PROTECTION.

NO.	DATE	BY	REVISION

NOTICE: 0 ½ 1 — IF THIS BAR DOES NOT MEASURE 1" THEN DRAWING IS NOT TO SCALE

HLB DESIGNED
JLC DRAWN
HLB CHECKED

REGISTERED PROFESSIONAL ENGINEER 105439PE OREGON MARCH 11, 2025 HEATHER LEIGH BURNS — RENEWS 12-31-27

BID SET

consor
Stantec

South Fork WATER — PURE WATER SINCE 1915

WATER QUALITY SYSTEMS BUILDING

MECHANICAL

MECHANICAL DETAILS

PROJECT NO.: W253326OR | SCALE: AS SHOWN | DATE: AUGUST 2026

SHEET M-503

\\EgnyteDrive\Consor Files_V-W\Projects\OR\South Fork Water\2025\W253326OR.00\12 CADD\12-5 Sheets\M-501-03 MECHANICAL DETAILS.dwg M-503 7/29/2026 11:05 AM JUSTIN.DEUEL 24.3s (LMS Tech)

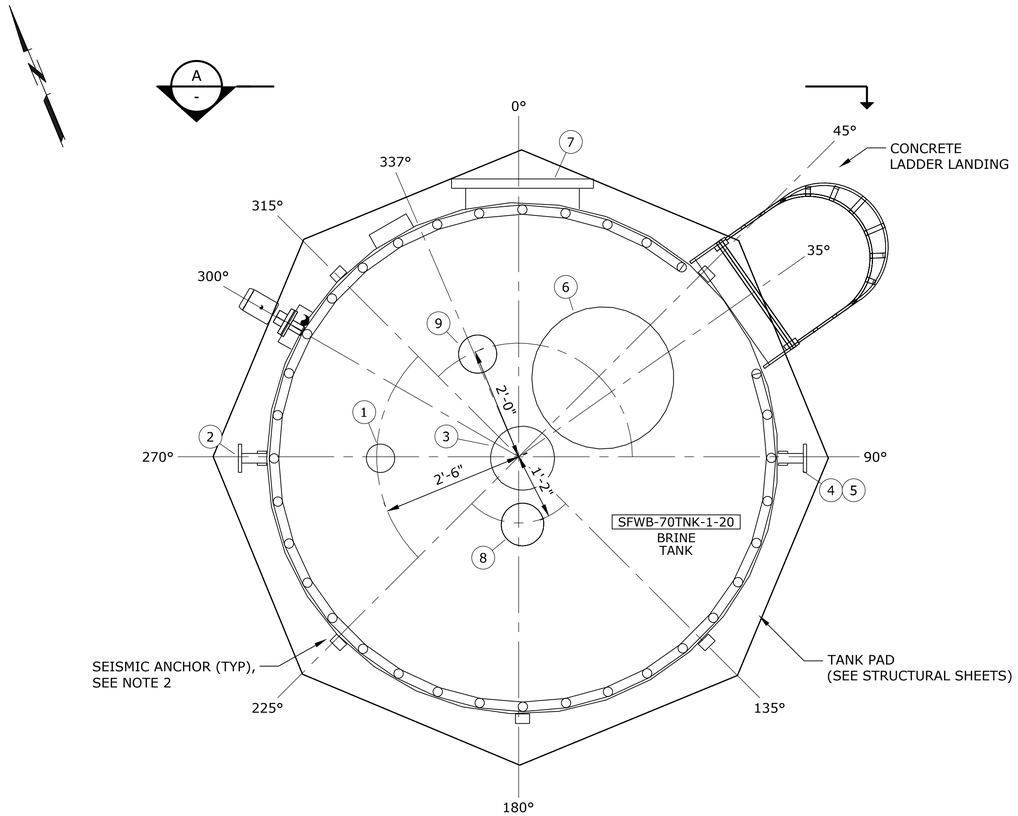

PLAN

SCALE: 3/4" = 1'-0"

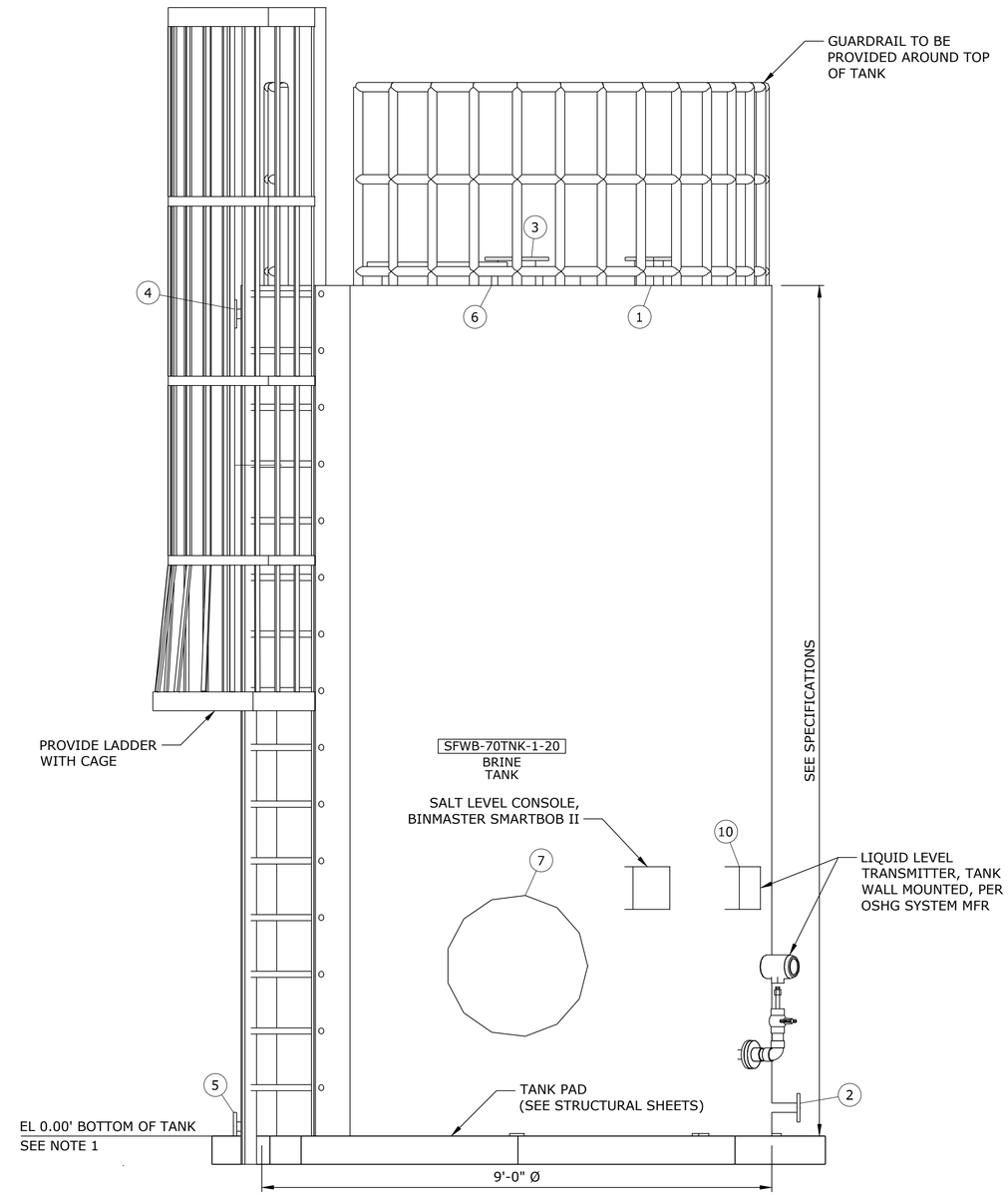

SECTION

SCALE: 3/4" = 1'-0"

A
-

NOTE: TANK MATERIAL IS FRP

TANK NOZZLE SCHEDULE (SFWB-70TNK-1-20)

NO.	ITEM	DIAMETER	FITTING	ROTATION	CL ELEVATION (FROM TANK BOTTOM)
1	INLET	2"	FLANGED	270 DEG	TOP
2	OUTLET	2"	FLANGED	270 DEG	6"
3	VENT	8"	FLANGED	CENTER	TOP
4	OVERFLOW	2"	FLANGED	90 DEG	14'-6"
5	DRAIN	2"	FLANGED	90 DEG	2"
6	MANWAY	24"		45 DEG	TOP
7	MANWAY	24"		0 DEG	3'-0"
8	FILL LINE	4"	FLANGED	180°	TOP
9	BRINE LEVEL SENSOR	3"	THREADED	337°	TOP
10	LEVEL TRANSMITTER	PER MFR	PER MFR	300°	WALL, PER MFR

NOTES:

1. ELEVATIONS SHOWN ARE RELATIVE TO THE BOTTOM OF TANK. EL 0.00 = 324.8.

2. TANK MANUFACTURER TO PROVIDE SEISMIC ANCHORS AND CABLES WITH STAMPED STRUCTURAL CALCULATIONS.

3. SEE DET 6, SHT M-501 FOR BRINE LEVEL SENSOR TANK MOUNT DETAIL.

NO.	DATE	BY	REVISION

NOTICE
0 ½ 1
IF THIS BAR DOES NOT MEASURE 1" THEN DRAWING IS NOT TO SCALE

HLB DESIGNED
JLC DRAWN
HLB CHECKED

REGISTERED PROFESSIONAL ENGINEER 105439PE OREGON MARCH 11, 2025 HEATHER LEIGH BURNS
Digitally signed by Heather Leigh Burns
Date: 2026.07.27 13:08:50 PDT
RENEWS 12-31-27

BID SET

consor
Stantec

South Fork WATER
PURE WATER SINCE 1915

WATER QUALITY SYSTEMS BUILDING

MECHANICAL

BRINE TANK DETAILS

PROJECT NO.: W253326OR | SCALE: AS SHOWN | DATE: AUGUST 2026

SHEET
M-504

\\EgnyteDrive\Consor Files_V-W\Projects\OR\South Fork Water\2025\W253326OR.00\12 CADD\12-5 Sheets\M-504 BRINE TANK DETAILS.dwg M-504 7/29/2026 11:05 AM JUSTIN.DEUEL 24.3s (LMS Tech)

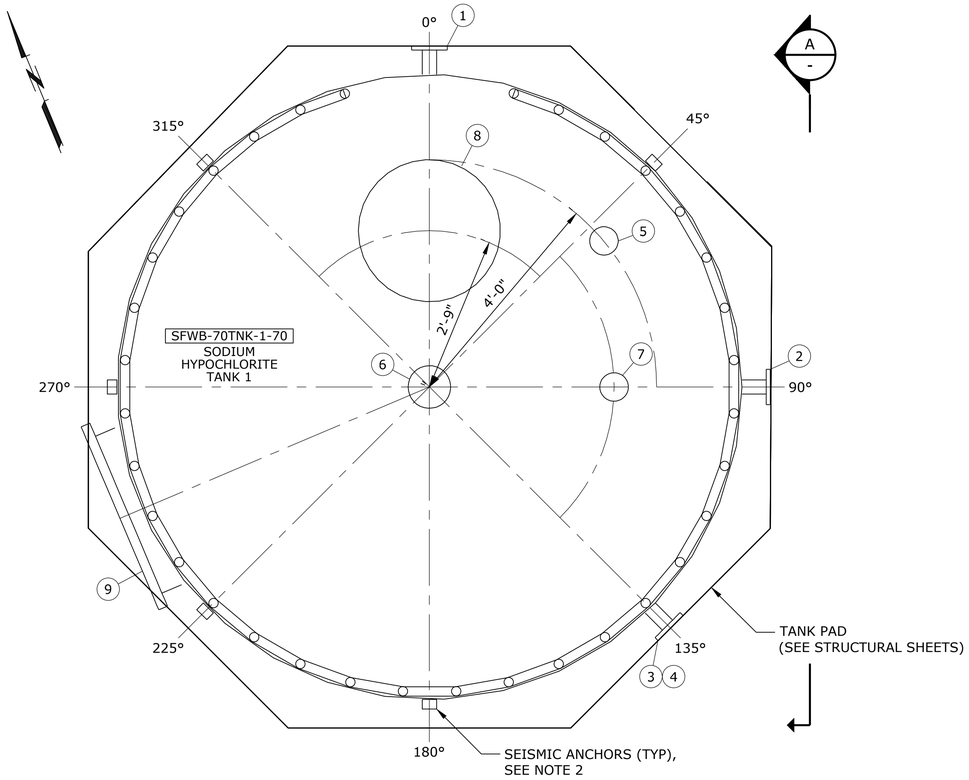

PLAN

SCALE: 3/4" = 1'-0"

NOTE: TANK MATERIAL IS FRP

TANK NOZZLE SCHEDULE (SFWB-70TNK-1-70)

NO.	ITEM	DIAMETER	FITTING	ROTATION	CL ELEVATION (FROM TANK BOTTOM)
1	INLET	3"	FLANGED	0 DEG	14'-6"
2	OUTLET	3"	FLANGED	90 DEG	6"
3	OVERFLOW	3"	FLANGED	135 DEG	14'-6"
4	DRAIN	3"	FLANGED	135 DEG	6"
5	AIR INLET	2"	FLANGED	51.25 DEG	TOP
6	VENT	4"	FLANGED	CENTER	TOP
7	LEVEL TRANSMITTER	2"	FLANGED	90 DEG	TOP
8	MANWAY	24"		0 DEG	TOP
9	SIDE MANWAY	30"		247 DEG	5'-6"

NOTE: TANK MATERIAL IS FRP

TANK NOZZLE SCHEDULE (SFWB-70TNK-2-70)

NO.	ITEM	DIAMETER	FITTING	ROTATION	CL ELEVATION (FROM TANK BOTTOM)
1	INLET	3"	FLANGED	0 DEG	14'-6"
2	OUTLET	3"	FLANGED	270 DEG	6"
3	OVERFLOW	3"	FLANGED	225 DEG	14'-6"
4	DRAIN	3"	FLANGED	225 DEG	6"
5	AIR INLET	2"	FLANGED	308.75 DEG	TOP
6	VENT	4"	FLANGED	CENTER	TOP
7	LEVEL TRANSMITTER	2"	FLANGED	270 DEG	TOP
8	MANWAY	24"		0 DEG	TOP
9	SIDE MANWAY	30"		247 DEG	5'-6"

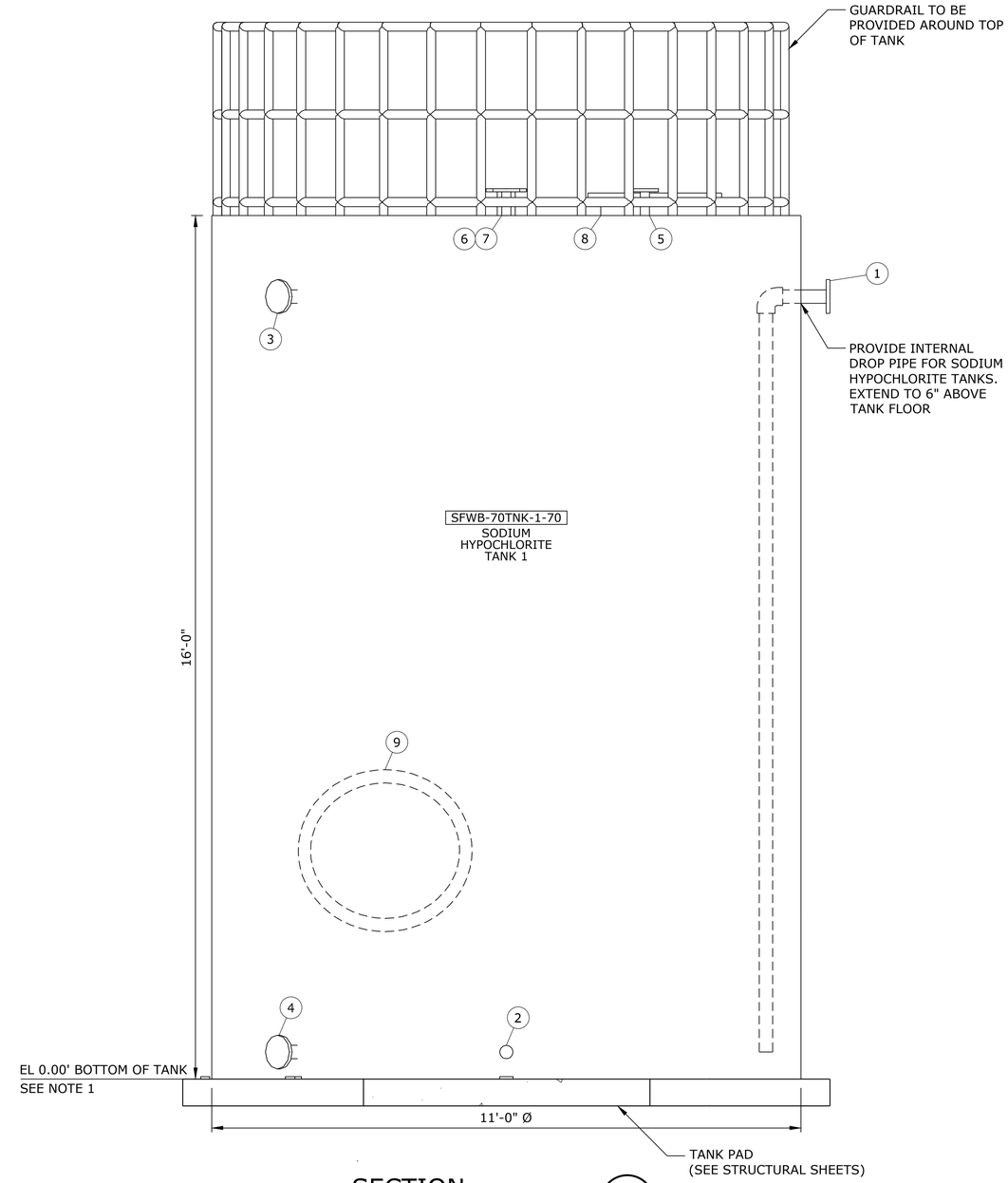

SECTION A

SCALE: 3/4" = 1'-0"

NOTES:

1. ELEVATIONS SHOWN ARE RELATIVE TO THE BOTTOM OF TANK. EL 0.00 = 321.8.

2. TANK MANUFACTURER TO PROVIDE SEISMIC ANCHORS AND CABLES WITH STAMPED STRUCTURAL CALCULATIONS.

NO.	DATE	BY	REVISION

NOTICE

0 ½ 1

IF THIS BAR DOES NOT MEASURE 1" THEN DRAWING IS NOT TO SCALE

HLB DESIGNED

JLC DRAWN

HLB CHECKED

REGISTERED PROFESSIONAL ENGINEER 105439PE OREGON MARCH 11, 2025 HEATHER LEIGH BURNS

Digitally signed by Heather Leigh Burns
Date: 2026.07.27 13:09:50 PDT

RENEWS 12-31-27

BID SET

consor

Stantec

South Fork WATER PURE WATER SINCE 1915

WATER QUALITY SYSTEMS BUILDING

MECHANICAL

SODIUM HYPOCHLORITE TANK DETAILS

PROJECT NO.: W253326OR | SCALE: AS SHOWN | DATE: AUGUST 2026

SHEET M-505

\\EgnyteDrive\Consor Files_V-W\Projects\OR\South Fork Water\2025\W253326OR.00\12 CADD\12-5 Sheets\M-505 SODIUM HYPOCHLORITE TANK DETAILS.dwg M-505 7/29/2026 11:05 AM JUSTIN.DEUEL 24.3s (LMS Tech)

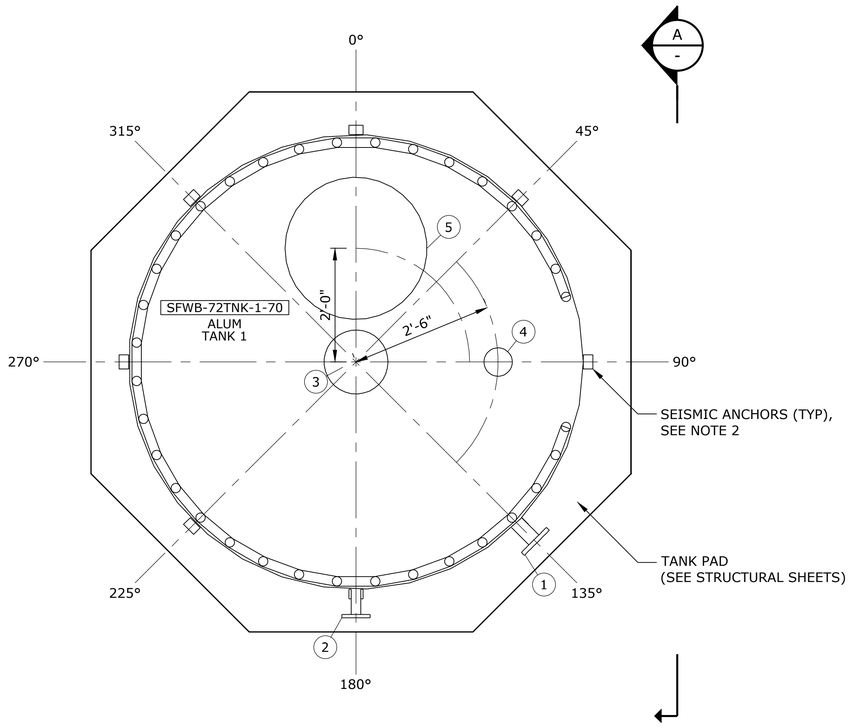

PLAN
SCALE: 3/4" = 1'-0"

NOTE: TANK MATERIAL IS XLPE

TANK NOZZLE SCHEDULE (SFWB-72TNK-1-70)					
NO.	ITEM	DIAMETER	FITTING	ROTATION	CL ELEVATION (FROM TANK BOTTOM)
1	INLET	3"	FLANGED	135 DEG	14'-6"
2	OUTLET	3"	FLANGED	180 DEG	6"
3	VENT	8"	FLANGED	CENTER	TOP
4	LEVEL TRANSMITTER	2"	FLANGED	90 DEG	TOP
5	MANWAY	24"		0 DEG	TOP

NOTE: TANK MATERIAL IS XLPE

TANK NOZZLE SCHEDULE (SFWB-72TNK-2-70)					
NO.	ITEM	DIAMETER	FITTING	ROTATION	CL ELEVATION (FROM TANK BOTTOM)
1	INLET	3"	FLANGED	45 DEG	15'-6"
2	OUTLET	3"	FLANGED	0 DEG	6"
3	VENT	8"	FLANGED	CENTER	TOP
4	LEVEL TRANSMITTER	2"	FLANGED	90 DEG	TOP
5	MANWAY	24"		0 DEG	TOP

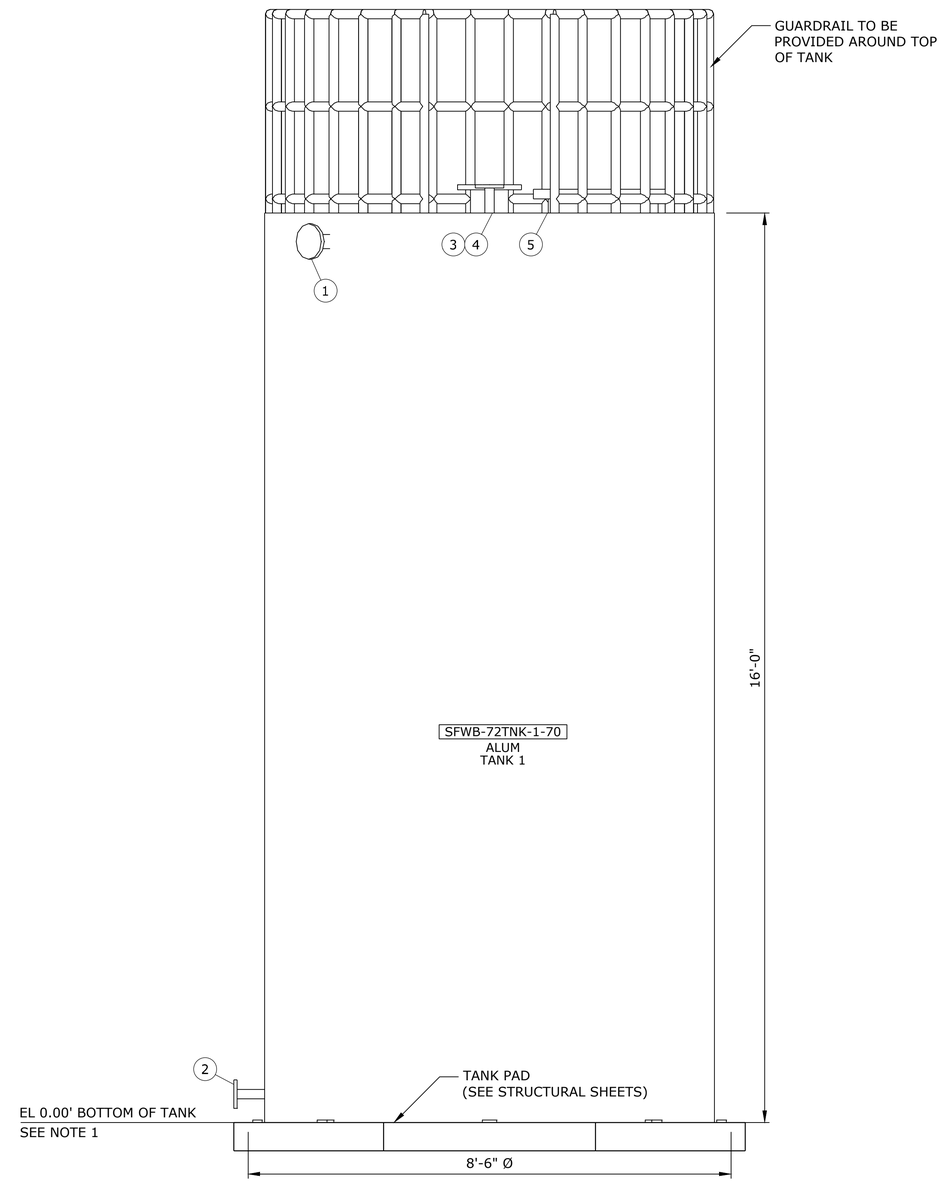

SECTION
SCALE: 3/4" = 1'-0"

A
-

NOTES:

1. ELEVATIONS SHOWN ARE RELATIVE TO THE BOTTOM OF TANK. EL 0.00 = 324.8.

2. TANK MANUFACTURER TO PROVIDE SEISMIC ANCHORS AND CABLES WITH STAMPED STRUCTURAL CALCULATIONS.

NO.	DATE	BY	REVISION

NOTICE
0 ½ 1
IF THIS BAR DOES NOT MEASURE 1" THEN DRAWING IS NOT TO SCALE

HLB
DESIGNED
JLC
DRAWN
HLB
CHECKED

REGISTERED PROFESSIONAL ENGINEER
105439PE
Digitally signed by Heather Leigh Burns
Date: 2026.07.27 13:59:50 PDT
OREGON
MARCH 11, 2025
HEATHER LEIGH BURNS
RENEWS 12-31-27

BID SET

consor
Stantec

South Fork WATER
PURE WATER SINCE 1915

WATER QUALITY SYSTEMS BUILDING

MECHANICAL

ALUM TANK DETAILS

PROJECT NO.: W253326OR | SCALE: AS SHOWN | DATE: AUGUST 2026

SHEET
M-506

\\EgnyteDrive\Consor Files_V-W\Projects\OR\South Fork Water\2025\W253326OR.00\12 CADD\12-5 Sheets\M-506 ALUM TANK DETAILS.dwg M-506 7/29/2026 11:05 AM JUSTIN.DEUEL 24.3s (LMS Tech)

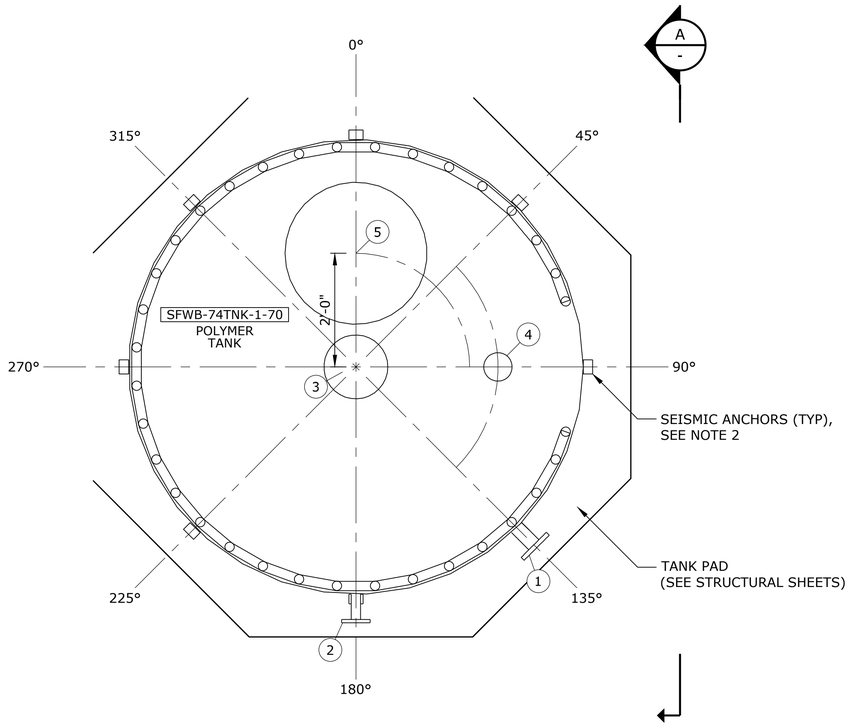

PLAN

SCALE: 3/4" = 1'-0"

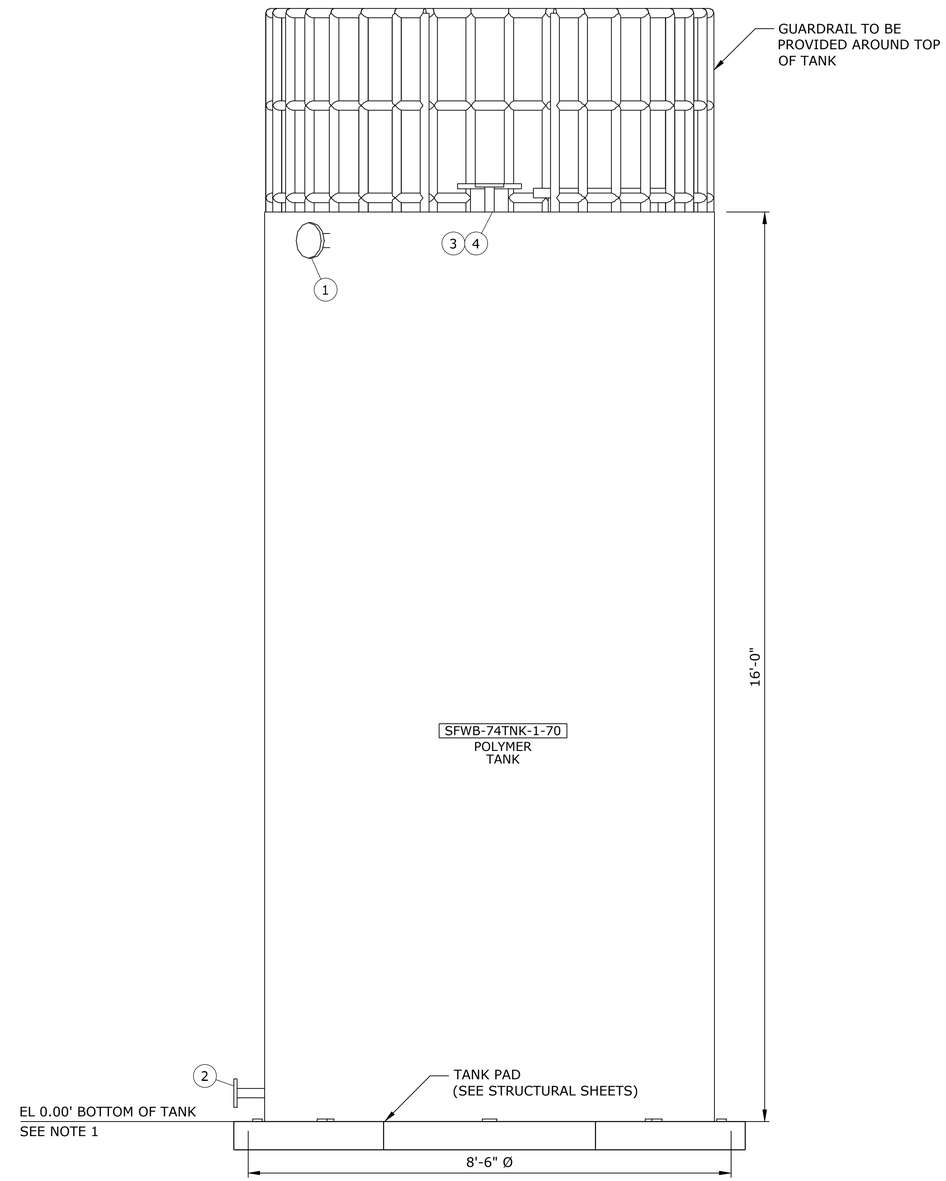

SECTION A

SCALE: 3/4" = 1'-0"

NOTE: TANK MATERIAL IS XLPE

TANK NOZZLE SCHEDULE (SFWB-74TNK-1-70)

NO.	ITEM	DIAMETER	FITTING	ROTATION	CL ELEVATION (FROM TANK BOTTOM)
1	INLET	3"	FLANGED	135 DEG	15'-6"
2	OUTLET	3"	FLANGED	180 DEG	6"
3	VENT	8"	FLANGED	CENTER	TOP
4	LEVEL TRANSMITTER	2"	FLANGED	90 DEG	TOP
5	MANWAY	24"		0 DEG	TOP

NOTES:

1. ELEVATIONS SHOWN ARE RELATIVE TO THE BOTTOM OF TANK. EL 0.00 = 320.56.

2. TANK MANUFACTURER TO PROVIDE SEISMIC ANCHORS AND CABLES WITH STAMPED STRUCTURAL CALCULATIONS.

NO.	DATE	BY	REVISION

NOTICE
0 ½ 1
IF THIS BAR DOES NOT MEASURE 1" THEN DRAWING IS NOT TO SCALE

HLB DESIGNED
JLC DRAWN
HLB CHECKED

REGISTERED PROFESSIONAL ENGINEER 105439PE OREGON MARCH 11, 2025 HEATHER LEIGH BURNS
Digitally signed by Heather Leigh Burns
Date: 2026.07.27 13:08:50 PDT
RENEWS 12-31-27

BID SET

consor
Stantec

South Fork WATER
PURE WATER SINCE 1915
WATER QUALITY SYSTEMS BUILDING

MECHANICAL

POLYMER TANK DETAILS

PROJECT NO.: W253326OR | SCALE: AS SHOWN | DATE: AUGUST 2026

SHEET
M-507

\\EgnyteDrive\Consor Files_V-W\Projects\OR\South Fork Water\2025\W253326OR.00\12 CADD\12-5 Sheets\M-507 POLYMER TANK DETAILS.dwg M-507 7/29/2026 11:05 AM JUSTIN.DEUEL 24.3s (LMS Tech)

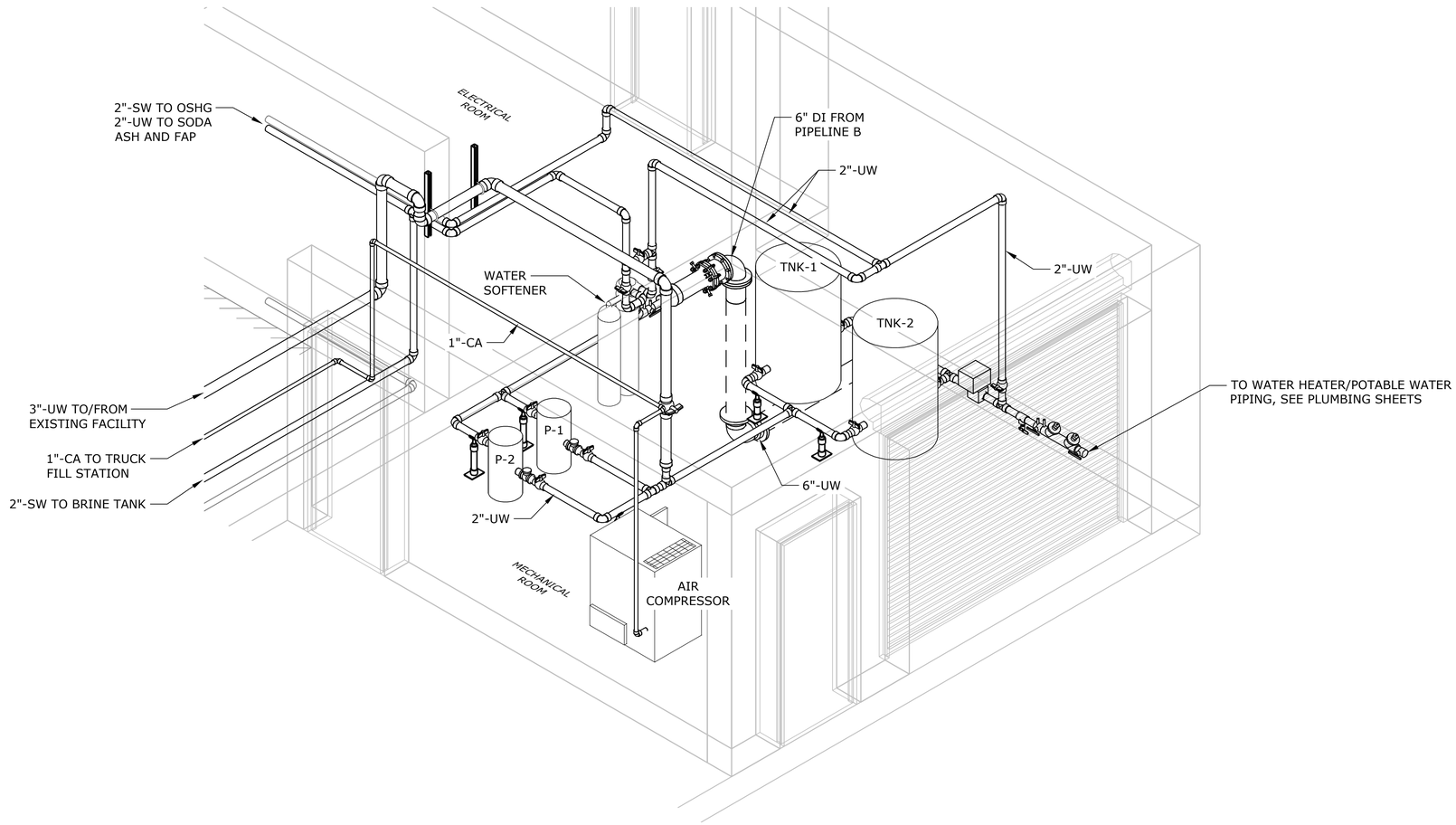

ISOMETRIC
SCALE: NTS

NOTE:

1. POTABLE WATER SYSTEM NOT SHOWN FOR CLARITY, SEE PLUMBING SHEETS.

NO.	DATE	BY	REVISION

NOTICE
0 ½ 1
IF THIS BAR DOES NOT MEASURE 1" THEN DRAWING IS NOT TO SCALE

BR
DESIGNED
JLC
DRAWN
LHO
CHECKED

REGISTERED PROFESSIONAL ENGINEER
105439PE
Digitally signed by Heather Leigh Burns
Date: 2026.07.27 13:09:50-07'00'
OREGON
MARCH 11, 2025
HEATHER LEIGH BURNS
RENEWS 12-31-27

BID SET

consor
Stantec

South Fork WATER
PURE WATER SINCE 1915

WATER QUALITY SYSTEMS BUILDING

MECHANICAL

MECHANICAL ROOM ISOMETRIC

PROJECT NO.: W253326OR | SCALE: AS SHOWN | DATE: AUGUST 2026

SHEET
M-901

\\EgnyteDrive\Consor Files_V-W\Projects\OR\South Fork Water\2025\W253326OR.00\12 CADD\12-5 Sheets\M-901 MECHANICAL ROOM ISOMETRIC.dwg M-901 7/29/2026 11:06 AM JUSTIN.DEUEL 24.3s (LMS Tech)

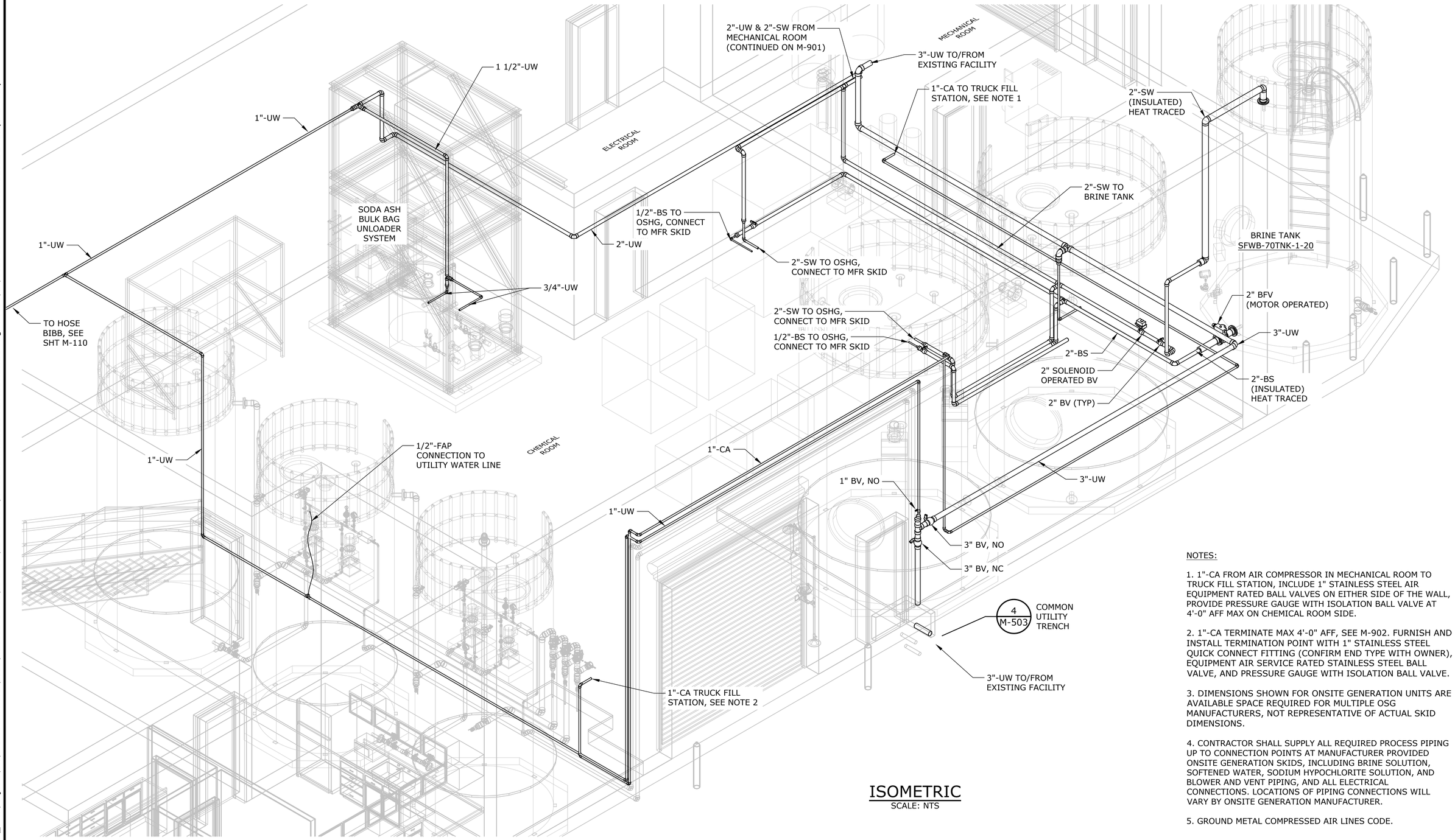

ISOMETRIC
SCALE: NTS

NOTES:

1. 1"-CA FROM AIR COMPRESSOR IN MECHANICAL ROOM TO TRUCK FILL STATION, INCLUDE 1" STAINLESS STEEL AIR EQUIPMENT RATED BALL VALVES ON EITHER SIDE OF THE WALL, PROVIDE PRESSURE GAUGE WITH ISOLATION BALL VALVE AT 4'-0" AFF MAX ON CHEMICAL ROOM SIDE.

2. 1"-CA TERMINATE MAX 4'-0" AFF, SEE M-902. FURNISH AND INSTALL TERMINATION POINT WITH 1" STAINLESS STEEL QUICK CONNECT FITTING (CONFIRM END TYPE WITH OWNER), EQUIPMENT AIR SERVICE RATED STAINLESS STEEL BALL VALVE, AND PRESSURE GAUGE WITH ISOLATION BALL VALVE.

3. DIMENSIONS SHOWN FOR ONSITE GENERATION UNITS ARE AVAILABLE SPACE REQUIRED FOR MULTIPLE OSG MANUFACTURERS, NOT REPRESENTATIVE OF ACTUAL SKID DIMENSIONS.

4. CONTRACTOR SHALL SUPPLY ALL REQUIRED PROCESS PIPING UP TO CONNECTION POINTS AT MANUFACTURER PROVIDED ONSITE GENERATION SKIDS, INCLUDING BRINE SOLUTION, SOFTENED WATER, SODIUM HYPOCHLORITE SOLUTION, AND BLOWER AND VENT PIPING, AND ALL ELECTRICAL CONNECTIONS. LOCATIONS OF PIPING CONNECTIONS WILL VARY BY ONSITE GENERATION MANUFACTURER.

5. GROUND METAL COMPRESSED AIR LINES CODE.

NO.	DATE	BY	REVISION

NOTICE
0 ½ 1
IF THIS BAR DOES NOT MEASURE 1" THEN DRAWING IS NOT TO SCALE

BR
DESIGNED
JLC
DRAWN
LHO
CHECKED

REGISTERED PROFESSIONAL ENGINEER
105439PE
Digitally signed by Heather Leigh Burns
Date: 2026.07.27 13:08:30-07'00'
OREGON
MARCH 11, 2025
HEATHER LEIGH BURNS
RENEWS 12-31-27

BID SET

consor
Stantec

South Fork WATER
PURE WATER SINCE 1915

WATER QUALITY SYSTEMS BUILDING

MECHANICAL

UTILITY WATER AND COMPRESSED AIR ISOMETRIC

PROJECT NO.: W253326OR | SCALE: AS SHOWN | DATE: AUGUST 2026

SHEET
M-902

\\EgnyteDrive\Consor Files_V-W\Projects\OR\South Fork Water\2025\W253326OR.00\12 CADD\12-5 Sheets\M-902 COMPRESSED AIR ISOMETRIC.dwg M-902 7/29/2026 11:06 AM JUSTIN.DEUEL 24.3s (LMS Tech)

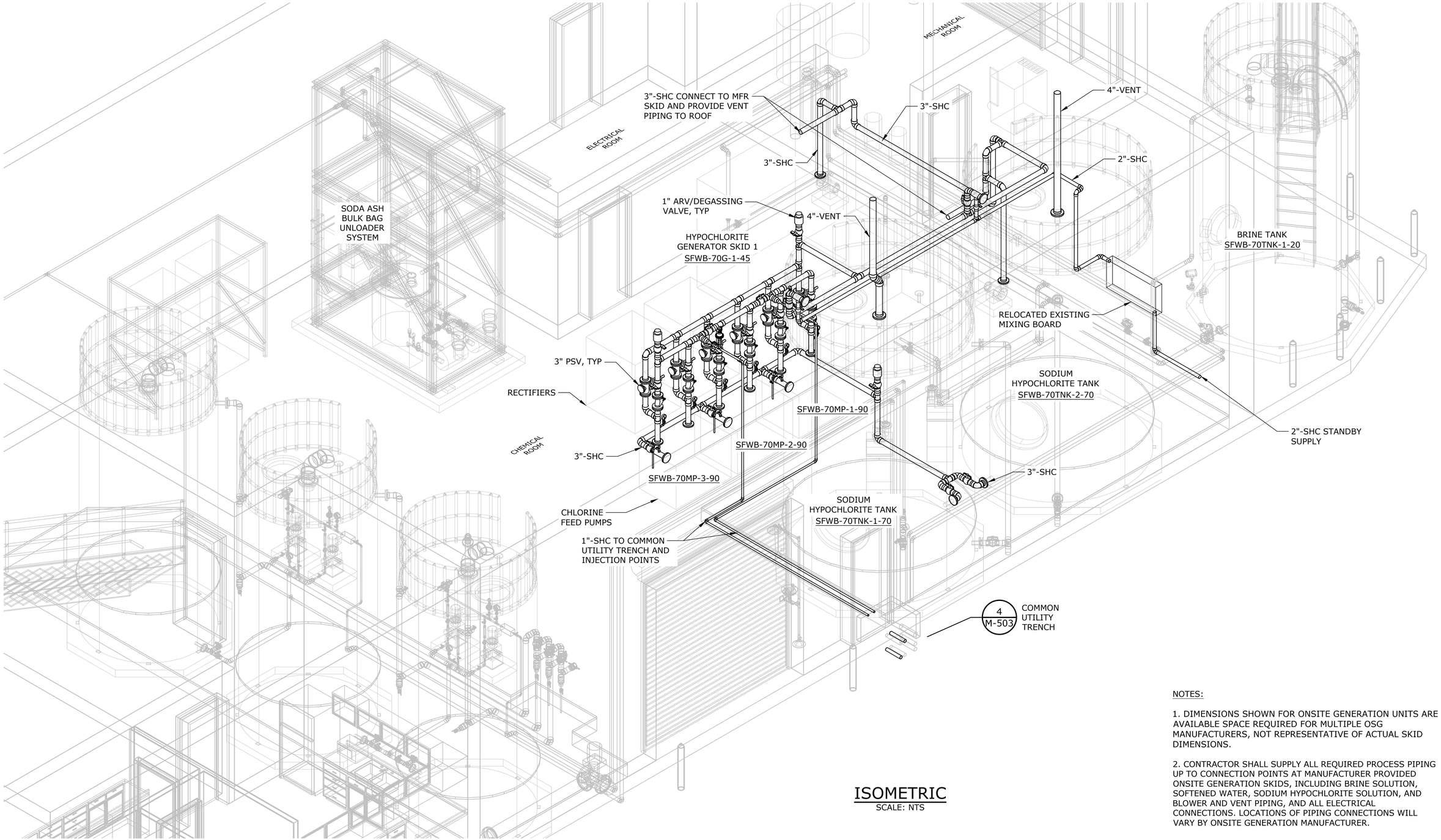

ISOMETRIC
SCALE: NTS

NOTES:

1. DIMENSIONS SHOWN FOR ONSITE GENERATION UNITS ARE AVAILABLE SPACE REQUIRED FOR MULTIPLE OSG MANUFACTURERS, NOT REPRESENTATIVE OF ACTUAL SKID DIMENSIONS.

2. CONTRACTOR SHALL SUPPLY ALL REQUIRED PROCESS PIPING UP TO CONNECTION POINTS AT MANUFACTURER PROVIDED ONSITE GENERATION SKIDS, INCLUDING BRINE SOLUTION, SOFTENED WATER, SODIUM HYPOCHLORITE SOLUTION, AND BLOWER AND VENT PIPING, AND ALL ELECTRICAL CONNECTIONS. LOCATIONS OF PIPING CONNECTIONS WILL VARY BY ONSITE GENERATION MANUFACTURER.

NO.	DATE	BY	REVISION

NOTICE
0 ½ 1
IF THIS BAR DOES NOT MEASURE 1" THEN DRAWING IS NOT TO SCALE

HLB DESIGNED
JLC DRAWN
HLB CHECKED

REGISTERED PROFESSIONAL ENGINEER 105439PE OREGON MARCH 11, 2025 HEATHER LEIGH BURNS
Digitally signed by Heather Leigh Burns
Date: 2026.07.27 13:08:50 PDT
RENEWS 12-31-27

BID SET

consor
Stantec

South Fork WATER
PURE WATER SINCE 1915

WATER QUALITY SYSTEMS BUILDING

MECHANICAL

SODIUM HYPOCHLORITE ISOMETRIC

PROJECT NO.: W253326OR | SCALE: AS SHOWN | DATE: AUGUST 2026

SHEET
M-903

\\EgnyteDrive\Consor Files_V-W\Projects\OR\South Fork Water\2025\W253326OR.00\12 CADD\12-5 Sheets\M-903 SODIUM HYPOCHLORITE ISOMETRIC.dwg M-903 7/29/2026 11:06 AM JUSTIN.DEUEL 24.3s (LMS Tech)

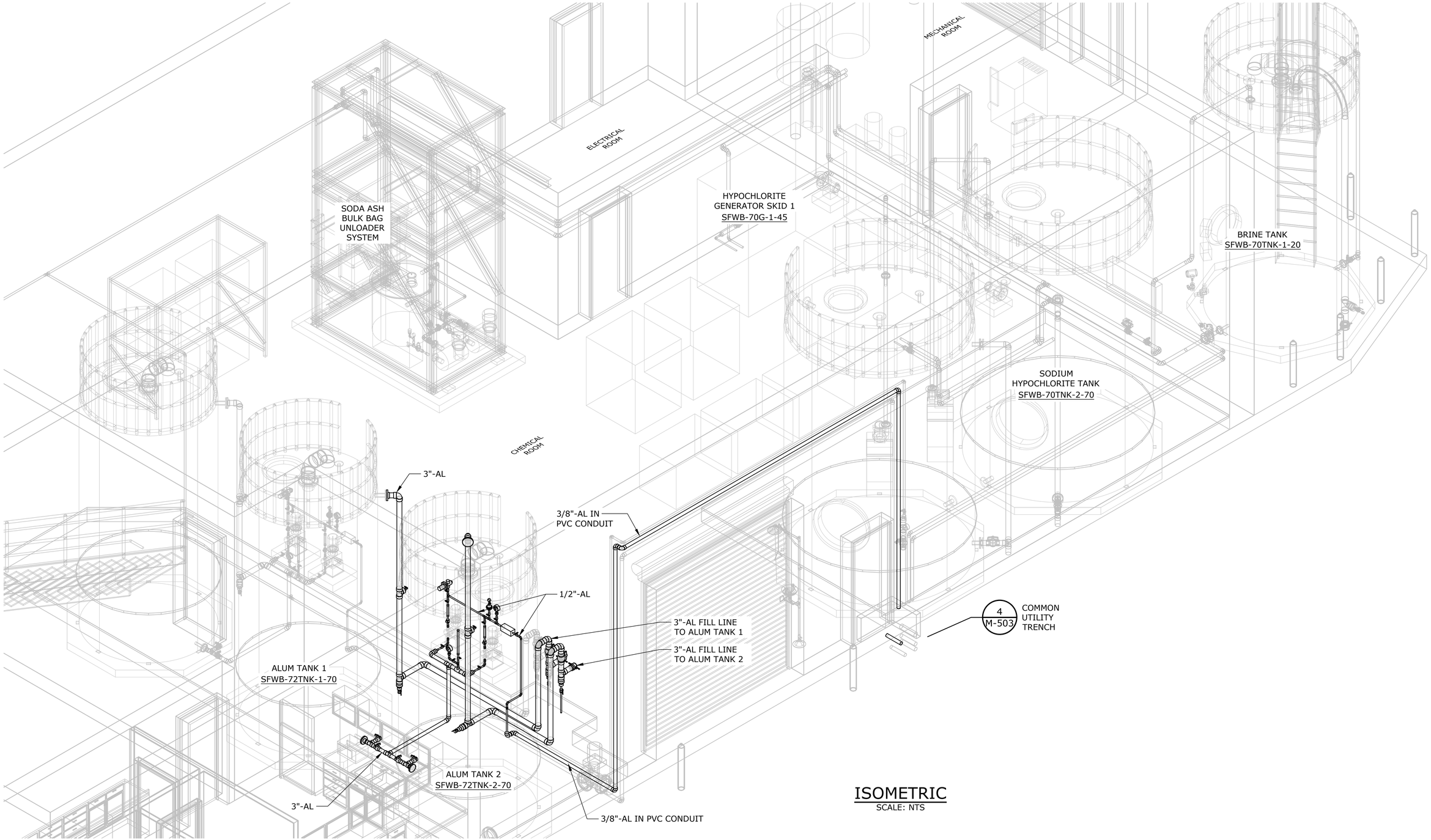

ISOMETRIC
SCALE: NTS

NO.	DATE	BY	REVISION

NOTICE
0 ½ 1
IF THIS BAR DOES NOT MEASURE 1" THEN DRAWING IS NOT TO SCALE

HLC DESIGNED
JLC DRAWN
HLB CHECKED

REGISTERED PROFESSIONAL ENGINEER 105439PE OREGON MARCH 11, 2025 HEATHER LEIGH BURNS
Digitally signed by Heather Leigh Burns
Date: 2026.07.27 13:58:50 PDT
RENEWS 12-31-27

BID SET

consor
Stantec

South Fork WATER
PURE WATER SINCE 1915

WATER QUALITY SYSTEMS BUILDING

MECHANICAL

ALUM ISOMETRIC

PROJECT NO.: W253326OR | SCALE: AS SHOWN | DATE: AUGUST 2026

SHEET
M-904

\\EgnyteDrive\Consor Files_V-W\Projects\OR\South Fork Water\2025\W253326OR.00\12 CADD\12-5 Sheets\M-904 ALUM ISOMETRIC.dwg M-904 7/29/2026 11:07 AM JUSTIN.DEUEL 24.3s (LMS Tech)

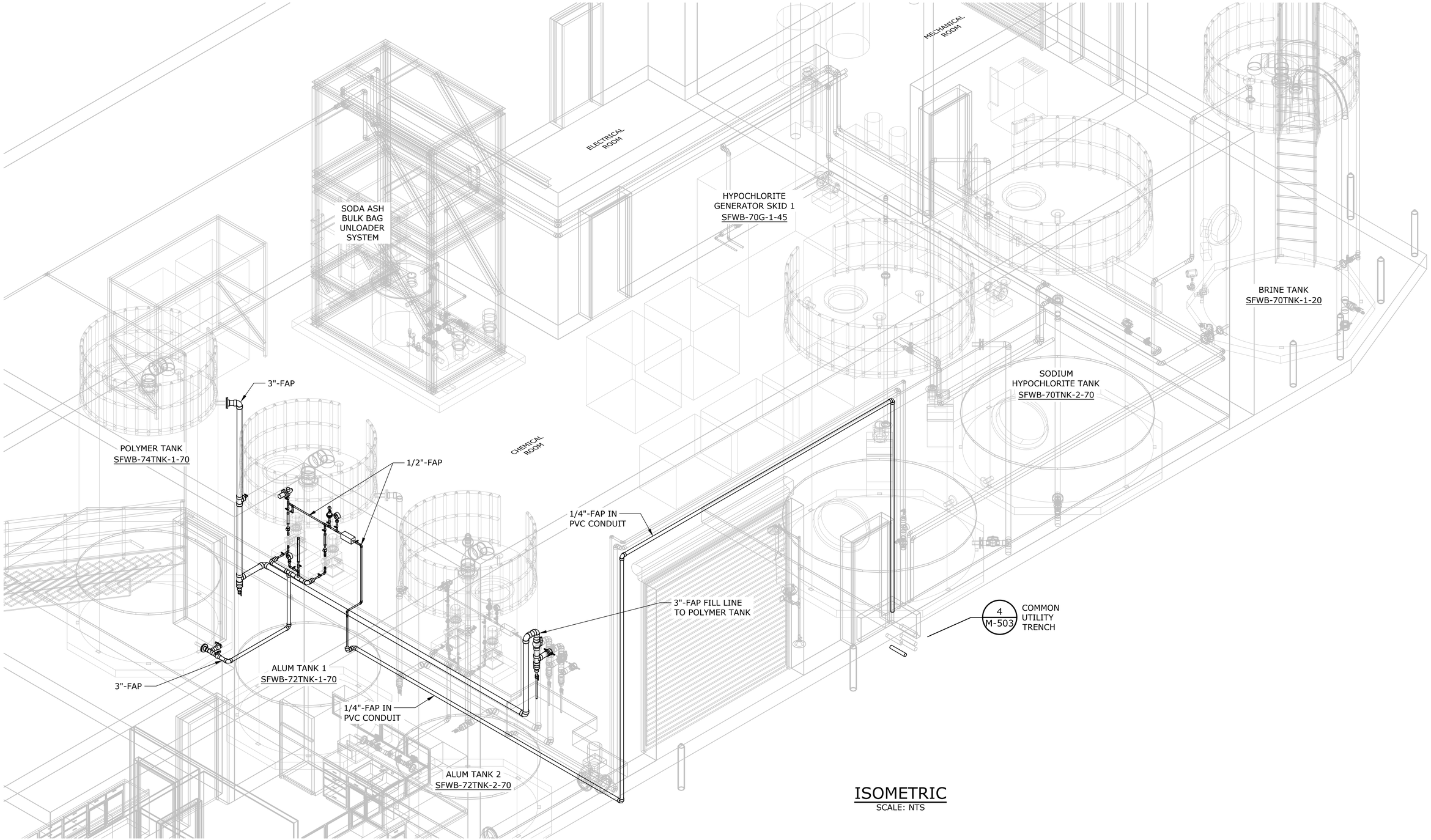

ISOMETRIC
SCALE: NTS

NO.	DATE	BY	REVISION

NOTICE
0 ½ 1
IF THIS BAR DOES NOT MEASURE 1" THEN DRAWING IS NOT TO SCALE

HLB DESIGNED
JLC DRAWN
HLB CHECKED

REGISTERED PROFESSIONAL ENGINEER 105439PE OREGON MARCH 11, 2025 HEATHER LEIGH BURNS
Digitally signed by Heather Leigh Burns
Date: 2026.07.27 13:58:50 PDT
RENEWS 12-31-27

BID SET

consor
Stantec

South Fork WATER
PURE WATER SINCE 1915

WATER QUALITY SYSTEMS BUILDING

MECHANICAL

POLYMER ISOMETRIC

PROJECT NO.: W253326OR | SCALE: AS SHOWN | DATE: AUGUST 2026

SHEET
M-905

\\EgnyteDrive\Consor Files_V-W\Projects\OR\South Fork Water\2025\W253326OR.00\12 CADD\12-5 Sheets\M-905 POLYMER ISOMETRIC.dwg M-905 7/29/2026 11:07 AM JUSTIN.DEUEL 24.3s (LMS Tech)

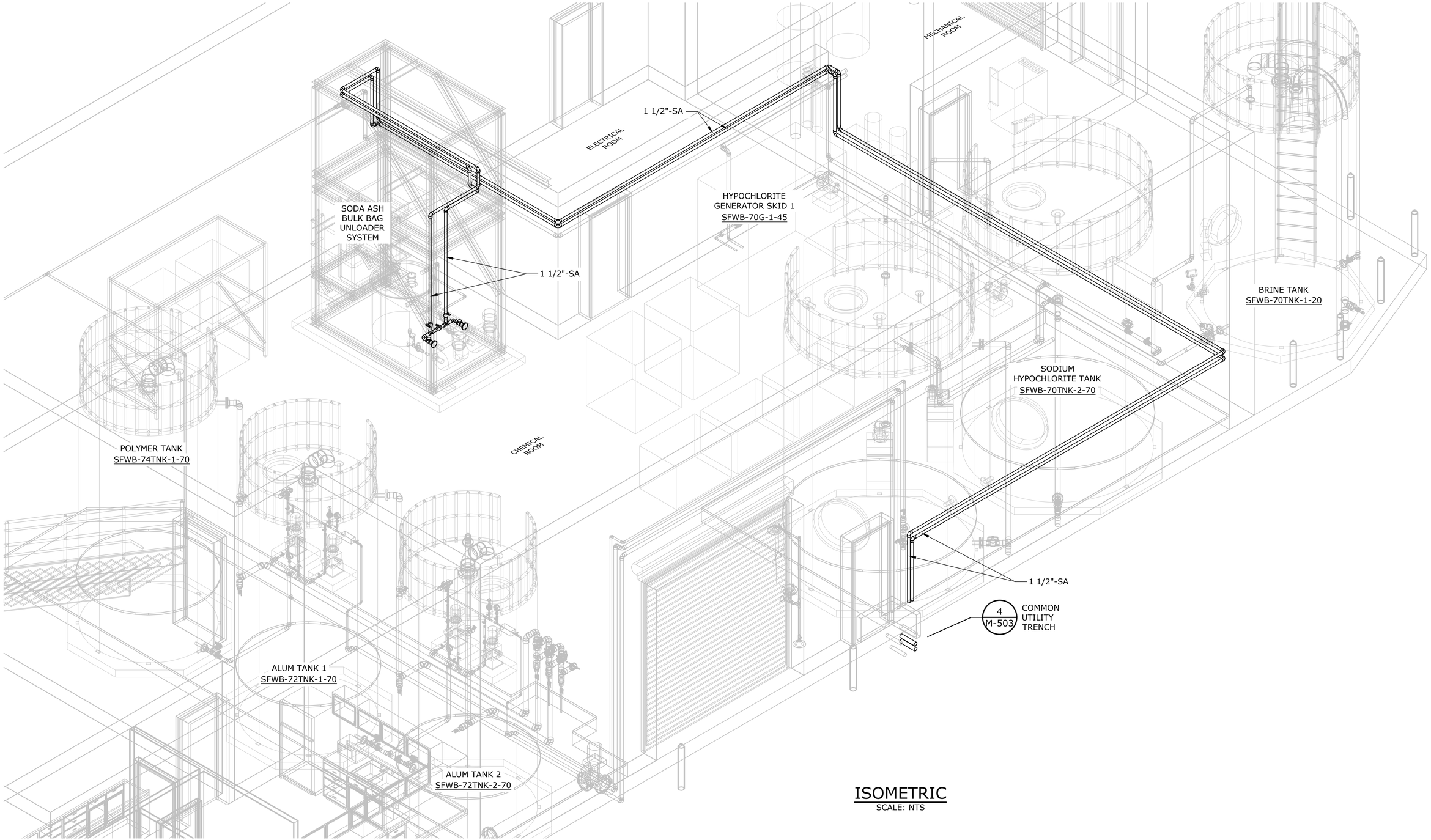

ISOMETRIC
SCALE: NTS

\\EgnyteDrive\Consor Files_V-W\Projects\OR\South Fork Water\2025\W253326OR.00\12 CADD\12-5 Sheets\M-906 SODA ASH ISOMETRIC.dwg M-906 7/29/2026 11:07 AM JUSTIN.DEUEL 24.3s (LMS Tech)

NO.	DATE	BY	REVISION

NOTICE
0 ½ 1
IF THIS BAR DOES NOT MEASURE 1" THEN DRAWING IS NOT TO SCALE

JLC DESIGNED
HLB DRAWN
HLB CHECKED

REGISTERED PROFESSIONAL ENGINEER 105439PE OREGON MARCH 11, 2025 HEATHER LEIGH BURNS
Digitally signed by Heather Leigh Burns
Date: 2026.07.27 13:58:50 PDT
RENEWS 12-31-27

BID SET

consor
Stantec

South Fork WATER
PURE WATER SINCE 1915

WATER QUALITY SYSTEMS BUILDING

MECHANICAL

SODA ASH ISOMETRIC

PROJECT NO.: W253326OR | SCALE: AS SHOWN | DATE: AUGUST 2026

SHEET
M-906

ABBREVIATIONS

A	
AC	AIR CONDITIONING UNIT
AFF	ABOVE FINISHED FLOOR
AFM	AIR FLOW MEASURING STATION
ALT	ALTITUDE
AHU	AIR HANDLING UNIT
ARCH	ARCHITECT(URAL)
AUTO	AUTOMATIC
AUX	AUXILIARY
ATC	AUTOMATIC TEMP CONTROL
B	
B	BOILER
B/	BOTTOM OF
BHP	BRAKE HORSE POWER
BTU	BRITISH THERMAL UNIT
BLDG	BUILDING
C	
CDR	CONDENSER WATER RETURN
CDS	CONDENSER WATER SUPPLY
CFM	CUBIC FEET PER MINUTE
CH	CHILLER
CT	COOLING TOWER
CU	CONDENSING UNIT
CWR	CHILLED WATER RETURN
CWS	CHILLED WATER SUPPLY
CA	COMBUSTION AIR
CC	COOLING COIL
COP	COEFFICIENT OF PERFORMANCE
CLR	CENTERLINE RADIUS
CD	CONDENSATE DRAIN
D	
DB	DRY BULB TEMPERATURE
DIA	DIAMETER
DISCH	DISCHARGE
DL	DOOR LOUVER
DWG	DRAWING
E	
EA	EXHAUST AIR
EAT	ENTERING AIR TEMPERATURE
EER	ENERGY EFFICIENCY RATIO
EF	EXHAUST FAN
EL	ELEVATION
ESP	EXTERNAL STATIC PRESSURE
EUH	ELECTRIC UNIT HEATER
EAT	ENTERING AIR TEMPERATURE
EFF	EFFICIENCY
ELEC	ELECTRIC(AL)
EMS	ENERGY MANAGEMENT SYSTEM
EWT	ENTERING WATER TEMPERATURE
EXISTING	EXIST (E)
F	
FCU	FAN COIL UNIT
FD	FIRE DAMPER
FRP	FIBER-REINFORCED PLASTIC
°F	DEGREE FAHRENHEIT
FCV	FLOW CONTROL VALVE
FD	FLOOR DRAIN
FL	FLOOR
FLA	FULL LOAD AMPS
FP	FIRE PROTECTION
FPM	FEET PER MINUTE
FT	FEET OR FOOT
G	
GAL	GALLON
GND	GROUND
GPM	GALLONS PER MINUTE
H	
H	HUMIDISTAT
HB	HOSE BIBB
HP	HORSEPOWER
HPU	HEAT PUMP UNIT
HWR	HOT WATER RETURN
HWS	HOT WATER SUPPLY
HZ	HERTZ
I	
IH	INTAKE HOOD
IN	INCH
INV	INVERT
K	
KW	KILOWATT
L	
L	LOUVER
LAT	LEAVING AIR TEMP
LBS	POUNDS
LAT	LEAVING AIR TEMPERATURE
LWT	LEAVING WATER TEMPERATURE

M	
MD	MOTORIZED DAMPER
MAU	MAKE-UP AIR HANDLING UNIT
MBH	THOUSAND BTU PER HOUR
MCA	MINIMUM CIRCUIT AMPACITY
MTD	MOUNTED
MCC	MAXIMUM MAX MOTOR CONTROL CENTER
MFR	MANUFACTURE(ER)(ED)
MISC	MISCELLANEOUS
MPD	MEDIUM PRESSURE GAS
N	
NC	NORMALLY CLOSED
NO	NORMALLY OPEN
NTS	NOT TO SCALE
N/A	NOT APPLICABLE
NEG	NEGATIVE
NPSH	NET POSITIVE SUCTION HEAD
O	
OA	OUTSIDE AIR
OAT	OUTSIDE AIR TEMPERATURE
OBD	OPPOSED BLADE DAMPER
OD	OUTDOOR AMBIENT TEMPERATURE
OD	AMB OUTSIDE DIAMETER
P	
P	PUMP
PW	POTABLE WATER
PD	PRESSURE DROP
PH	PHASE
POC	POINT OF CONNECTION
PPM	PARTS PER MILLION
PRES	PRESSURE
PRF	PREFILTER
PRV	PRESSURE REDUCING VALVE
PSIG	POUNDS PER SQUARE INCH GAGE
PVC	POLY-VINYL CHLORIDE
Q	
QTY	QUANTITY
R	
RA	RETURN AIR
RF	RETURN FAN
RPM	REVOLUTIONS PER MINUTE
REF	REFERENCE
RH	RELATIVE HUMIDITY (PERCENT)
RLA	RATED LOAD AMPS
RPBP	REDUCE. PRESSURE BACKFLOW PREVENTOR
S	
SA	SUPPLY AIR
SD	SMOKE DETECTOR
SEER	SEASONAL ENERGY EFFICIENCY RATIO
SEN	SENSIBLE HEAT
SF	SUPPLY FAN
SS	STAINLESS STEEL
SCFM	STANDARD CFM
SOV	SHUT OFF VALVE
SP	STATIC PRESSURE
SQFT	SQUARE FEET (OR FOOT)
STD	STANDARD
T	
T	THERMOSTAT
TA	TRANSFER AIR
TBD	TO BE DETERMINED
TYP	TYPICAL
U	
UG	UNDERGROUND
UTR	UP THROUGH ROOF
V	
VD	VOLUME DAMPER
V-PH-C	VOLTS-PHASE-CYCLE
V	VOLT(AGE)
VB	VACUUM BREAKER
VEL	VELOCITY
VTR	VENT THROUGH ROOF
W	
WB	WET BULB
WG	WATER GAUGE
WH	WATER HEATER
W/	WITH
W/O	WITHOUT
WC	WATER COLUMN
WT	WEIGHT

LEGENDS

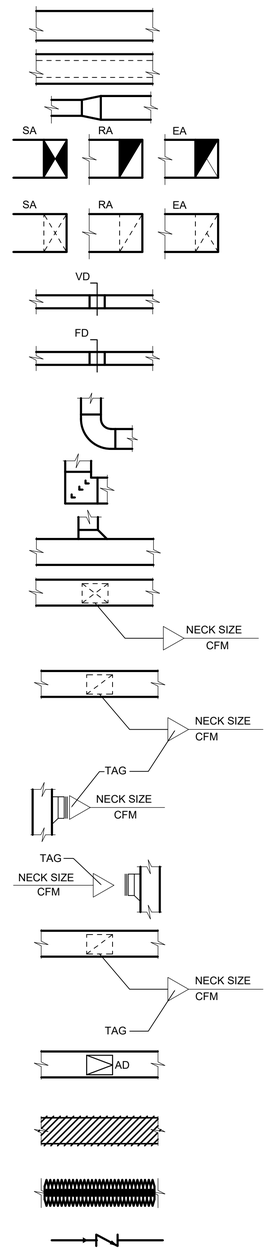

- DUCTWORK
- DUCTWORK WITH DUCT LINING
- REDUCER OR INCREASER
- SUPPLY DUCTWORK RISE UP TO FLOOR ABOVE, RETURN DUCTWORK DROP DOWN FROM FLOOR ABOVE, AND EXHAUST DUCTWORK DROP DOWN FROM FLOOR ABOVE
- SUPPLY DUCTWORK DROP DOWN TO BELOW RETURN DUCTWORK RISE UP FROM BELOW, AND EXHAUST DUCTWORK RISE UP FROM BELOW
- VOLUME DAMPER (VD)
- FIRE DAMPER (FD)
- RADIUS ELBOW (CLR=1.5)
- ELBOW WITH TURNING VANES
- BRANCH DUCT TAKE-OFF
- DIFFUSER
- CEILING RETURN REGISTER OR GRILLE
- SUPPLY AIR GRILLE (G) OR SUPPLY AIR REGISTER (R)
- RETURN AND/OR EXHAUST AIR GRILLE (G) OR REGISTER (R)
- CEILING EXHAUST AIR REGISTER OR GRILLE
- ACCESS DOOR (AD)
- EXISTING DUCT TO BE REMOVED
- FLEXIBLE DUCT
- CHECK VALVE

EQUIPMENT SYMBOLS

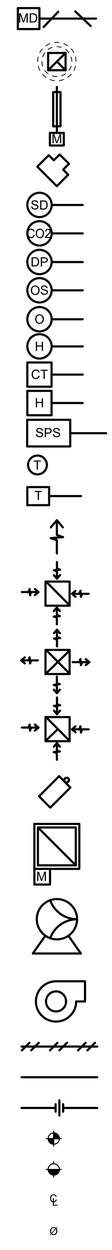

- MOTORIZED DAMPER (OPPOSED BLADE)
- EXHAUST FAN
- LOUVER WITH MOTORIZED DAMPERS
- ELECTRIC UNIT HEATER
- SMOKE DETECTOR
- CARBON DIOXIDE SENSOR
- DIFFERENTIAL PRES SENSOR
- OZONE SENSOR
- OCCUPANCY SENSOR
- HUMIDISTAT
- CURRENT TRANSFORMER
- HUMIDITY SENSOR
- STATIC PRESSURE SENSOR
- THERMOSTAT
- TEMPERATURE SENSOR
- AIRFLOW
- RETURN AIR CEILING DIFFUSER WITH DIRECTION OF THROWS AS INDICATED
- SUPPLY AIR CEILING DIFFUSER WITH DIRECTION OF THROWS AS INDICATED
- EXHAUST AIR CEILING DIFFUSER WITH DIRECTION OF THROWS AS INDICATED
- GAS UNIT HEATER
- INTAKE HOOD
- PUMP
- FAN OR BLOWER
- PNEUMATIC PIPING
- ELECTRICAL WIRING
- FLOW INDICATOR
- POINT OF CONNECTION
- POINT OF DISCONNECTION
- ℄ CENTERLINE
- Ø DIAMETER

DUCTWORK MATERIAL SCHEDULE

LOCATION	MATERIAL	REMARKS
ALL AREAS UNLESS OTHERWISE NOTED	ALUMINUM	-
UNCLASSIFIED PROCESS AREAS	ALUMINUM	-
ELECTRICAL ROOMS	ALUMINUM	-

NOTES:
1. GALVANIZED SHEET METAL IS NOT ACCEPTABLE IN ANY AREA

DUCTWORK INSULATION AND LINER

LOCATION	REQUIREMENT	REMARKS
ALL CONCEALED DUCTWORK	INSULATE	-
ALL EXTERIOR DUCTWORK	INSULATE	WITH SS JACKET
OUTSIDE AIR DUCTWORK	INSULATE	-
SUPPLY AIR DUCTWORK	NONE	ONLY IF IN CONDITIONED SPACE
EXHAUST AIR DUCTWORK	INSULATE	-

NOTES:
1. REFER TO SPECIFICATION FOR THICKNESS. MINIMUM R-VALUES SHALL MEET CURRENT IECC AND LOCAL REQUIREMENTS.
2. FREE INSIDE DUCTWORK DIMENSION SHALL BE MAINTAINED ON LINED DUCTWORK

GENERAL HVAC NOTES

1. SCOPE OF WORK
   - 1.1. THE HVAC CONTRACTOR IS RESPONSIBLE FOR ALL WORK, MATERIALS, AND LABOR TO SATISFY A COMPLETE WORKING SYSTEM WHETHER SPECIFIED OR IMPLIED.
   - 1.2. ALL WORK IS TO BE PERFORMED IN STRICT COMPLIANCE WITH THE 2022 OREGON MECHANICAL SPECIALITY CODE, ALL LOCAL CODES AND ALL OTHER REGULATIONS GOVERNING THE WORK OF THIS NATURE.
   - 1.3. BEFORE SUBMITTING ANY PROPOSAL, THE HVAC CONTRACTOR SHALL EXAMINE THE PROPOSED SITE AND SHALL DETERMINE THE CONDITIONS THAT MAY AFFECT THE WORK. NO ALLOWANCE SHALL BE MADE BECAUSE THE HVAC CONTRACTOR FAILS TO MAKE SUCH EXAMINATIONS.
   - 1.4. ALL EQUIPMENT AND MATERIALS SHALL BE AS SPECIFIED OR "APPROVED EQUAL" BY THE ENGINEER.THE EQUIPMENT SPECIFIED ON THE DRAWINGS HAVE BEEN SELECTED AS THE BASIS OF DESIGN. THE USE OF REVIEWED OR SPECIFIED EQUALS SHALL BE COORDINATED BY THE CONTRACTOR AS TO SPACE REQUIREMENTS, EQUIPMENT DIMENSIONS AND PERFORMANCE. ANY ADDITIONAL COSTS EITHER DIRECTLY OR INDIRECTLY CAUSED BY EQUALS SHALL BE THE RESPONSIBILITY OF THE CONTRACTOR.
   - 1.5. DRAWINGS ARE DIAGRAMMATIC AND SHOW THE GENERAL DESIGN INTENT, ARRANGEMENT AND EXTENT OF SYSTEMS. DO NOT SCALE DRAWINGS NOR USE AS SHOP DRAWINGS. THE HVAC CONTRACTOR SHALL VERIFY THE ACTUAL DIMENSIONS OF THE EQUIPMENT AND ENSURE THAT IT WILL FIT IN THE AVAILABLE SPACE. WHERE ALTERNATE ROUTING, OFFSETS AND TRANSITIONS ARE REQUIRED FOR FIELD COORDINATION OF ALL TRADES, THIS CONTRACTOR SHALL MAKE CHANGES WITHOUT ADDITIONAL COSTS.
2. SHOP DRAWINGS
   - 2.1. REFER TO THE SPECIFICATIONS FOR SHOP DRAWING REQUIREMENTS.
3. DUCTWORK
   - 3.1. DUCTWORK MATERIAL SHALL BE PER SCHEDULE ON THIS SHEET.
   - 3.2. DUCTWORK SHALL BE CONSTRUCTED IN ACCORDANCE WITH SMACNA STANDARDS. ALL DUCTWORK SHALL BE THE LOW VELOCITY TYPE, UNLESS SPECIFIED OTHERWISE.
   - 3.3. THE HVAC CONTRACTOR SHALL PROVIDE AND INSTALL APPROVED FIRE DAMPERS AND PANELS IN ALL DUCTWORK THAT PENETRATES A HORIZONTAL OR VERTICAL FIRE PARTITION. UNLESS OTHERWISE SHOWN ON THE DRAWINGS.
   - 3.4. ALL BRANCH DUCTS SHALL HAVE VOLUME DAMPERS.
   - 3.5. WHERE FLOW EXCEEDS 150 CFM, THE CONTRACTOR SHALL USE SMOOTH RADIUS ELBOWS OR TURNING VANES.
   - 3.6. ALL DUCT JOINTS SHALL BE SEALED IN ACCORDANCE WITH SMACNA STANDARDS AND ACCEPTED GOOD PRACTICE.
   - 3.7. ALL DUCT DIMENSIONS ARE NET INSIDE VALUES. DIMENSIONS MAY BE CHANGED PROVIDED THAT THE NET FREE AREA IS MAINTAINED.
4. HVAC CONTROLS
   - 4.1. THE HVAC CONTRACTOR SHALL SUPPLY AND INSTALL ALL CONTROL WIRING AND THERMOSTATS AS REQUIRED.
5. ELECTRICAL
   - 5.1. THE HVAC CONTRACTOR SHALL COORDINATE WITH THE ELECTRICAL CONTRACTOR FOR LOCATION OF POWER WIRING TO EACH HVAC UNIT.
6. DUCTWORK AND PIPE SUPPORTS
   - 6.1. ALL DUCTWORK AND PIPE SHALL BE SUPPORTED FROM THE BUILDING STRUCTURE IN A NEAT AND WORKMANLIKE MANNER. THE USE OF WIRE OR METAL STRAPS TO SUPPORT PIPES WILL NOT BE PERMITTED. SPACING OF PIPE SUPPORTS SHALL NOT EXCEED 8 FEET FOR ALL PIPING. PLASTIC PIPING SHALL BE SUPPORTED EVERY 4 FEET.
7. MISCELLANEOUS
   - 7.1. WIND RESISTANCE: EXTERIOR MECHANICAL EQUIPMENT SHALL BE ANCHORED/TIED DOWN TO STRUCTURE OR CONCRETE PADS TO RESIST THE WIND PRESSURES DETERMINED IN ACCORDANCE WITH THE INTERNATIONAL BUILDING CODE, AND LOCAL REQUIREMENTS.
   - 7.2. SEISMIC RESISTANCE: MECHANICAL SYSTEM SUPPORTS SHALL BE DESIGNED AND INSTALLED FOR THE SEISMIC FORCES IN ACCORDANCE WITH THE INTERNATIONAL BUILDING CODE. RESTRAINTS SHALL BE DESIGN FOR THE PROJECT'S LOCATION'S SEISMIC DESIGN CATEGORY AND SEISMIC RISK CATEGORY.
   - 7.3. ALL EXTERIOR OPENINGS SHALL BE PROPERLY CAULKED AND SEALED TO PREVENT INFILTRATION OF OUTSIDE AIR INTO THE CONDITIONED SPACE.
   - 7.4. COORDINATE THE INSTALLATION OF ALL ROOF FLASHING AT ROOF PENETRATIONS.
   - 7.5. THE HVAC CONTRACTOR SHALL VERIFY ALL FIGURES, CONDITIONS, AND DIMENSIONS AT THE JOB SITE.
8. TESTING AND BALANCING
   - 8.1. THE HVAC SYSTEMS SHALL BE TESTED AND BALANCED PER SPECIFICATION 23 05 00 - HVAC TESTING AND BALANCING.
9. COMMISSIONING
   - 9.1. THE HVAC SYSTEMS SHALL BE COMMISSIONED PER SPECIFICATION 23 08 00 - HVAC COMMISSIONING
10. GUARANTEE
   - 10.1. MATERIALS, EQUIPMENT, AND INSTALLATION SHALL BE GUARANTEED FOR A PERIOD OF ONE (1) YEAR FROM THE DATE OF ACCEPTANCE. DEFECTS THAT APPEAR DURING THAT PERIOD SHALL BE CORRECTED AT THE CONTRACTOR'S EXPENSE.
   - 10.2. COMPRESSOR SHALL COME WITH MANUFACTURER'S STANDARD 5-YEAR WARRANTY.

NO.	DATE	BY	REVISION

NOTICE
0 ½ 1
IF THIS BAR DOES NOT MEASURE 1" THEN DRAWING IS NOT TO SCALE

RK DESIGNED
SP DRAWN
SHS CHECKED

REGISTERED PROFESSIONAL ENGINEER 99804PE OREGON MAY 10, 2022 SHIVAMI AMOL SAPTARISHY
EXPIRES: 06/30/2028

BID SET

consor
Stantec

South Fork WATER
PURE WATER SINCE 1915

WATER QUALITY SYSTEMS BUILDING

HVAC

ABBREVIATIONS NOTES, AND LEGEND

PROJECT NO.: 21-3045 | SCALE: | DATE: AUGUST 2026

SHEET
H-001

C:\pwworkdir\d0513047\0609600H-001.dwg GA-02 7/27/2026 2:45 PM RYAKIM 25.0s (LMS Tech)

HVAC DESIGN SUMMARY

SPACE NAME	AREA [FT²]	HEIGHT [FT]	SPACE VOLUME [FT³]	AIR CONDITIONING METHOD	HEATING METHOD	VENTILATION METHOD	BASIS OF VENTILATION RATES	NEC CLASSIFICATION AFTER APPLYING VENTILATION	DESIGN SPACE TEMPERATURE [F]		MINIMUM OUTSIDE AIR (CFM)	NOTE
									SUMMER	WINTER		
CHEMICAL ROOM	3080	21	57750	NOT PROVIDED	NATURAL GAS HEATING VIA MAKEUP AIR HANDLING UNIT	MAKEUP AIR HANDLING UNIT AND EXHAUST FAN	1.5 ACH	UNCLASSIFIED	104	60	1550	1
ELECTRICAL ROOM	290	10	2900	VRF HEAT PUMP	VRF HEAT PUMP	NOT PROVIDED	N/A	UNCLASSIFIED	80	60	N/A	1
MECHANICAL ROOM	300	10.3	3090	NOT PROVIDED	ELECTRIC UNIT HEATER	EXHAUST FAN AND INTAKE LOUVER	INTERMITTENT VENTILATION TO REMOVE INTERNAL HEAT GAIN	UNCLASSIFIED	104	60	N/A	1
MEETING ROOM	930	8.2	7626	VRF HEAT PUMP	VRF HEAT PUMP	INTAKE LOUVER AND SUPPLY FAN	5 CFM/ PERSON +0.06 CFM/ FT²	UNCLASSIFIED	75	70	290	1
KITCHEN	184	8	1472	VRF HEAT PUMP	VRF HEAT PUMP	INTAKE LOUVER AND SUPPLY FAN	7.5 CFM/PERSON + 0.12 CFM/SQFT	UNCLASSIFIED	75	70	60	1
STORAGE	1414	11	15554	VRF HEAT PUMP	VRF HEAT PUMP	INTAKE LOUVER AND SUPPLY FAN	0.12 CFM/SQFT	UNCLASSIFIED	80	60	170	1
UNISEX A (RESTROOM)	47	8	376	NOT PROVIDED	NOT PROVIDED	DOOR GRILLE AND EXHAUST FAN	75 CFM PER TOILET AND URINAL INTERMITTENT EXHAUST	UNCLASSIFIED	75	70	N/A	1
UNISEX B (RESTROOM)	47	8	376	NOT PROVIDED	NOT PROVIDED	DOOR GRILLE AND EXHAUST FAN	75 CFM PER TOILET AND URINAL INTERMITTENT EXHAUST	UNCLASSIFIED	75	70	N/A	1
JANITOR	37	8	296	NOT PROVIDED	NOT PROVIDED	DOOR GRILLE AND EXHAUST FAN	50 CFM PER TOILET AND URINAL INTERMITTENT EXHAUST	UNCLASSIFIED	75	70	N/A	1
ENTRY	112	8	896	VRF HEAT PUMP	VRF HEAT PUMP	NOT PROVIDED	N/A	UNCLASSIFIED	75	70	N/A	1

NOTE:
1. ACCORDING TO 2021 ASHRAE WEATHER DATA, AURORA, OR, USA HAS A SUMMER DESIGN TEMPERATURE OF 92.4F DB/67.1 F WB AND A WINTER DESIGN TEMPERATURE OF 25.4 F DB THESE TEMPERATURES DO NOT REPRESENT EXTREME WEATHER CONDITIONS THAT MAY OCCUR.

NO.	DATE	BY	REVISION

NOTICE
0 ½ 1
IF THIS BAR DOES NOT MEASURE 1" THEN DRAWING IS NOT TO SCALE

RK
DESIGNED
SP
DRAWN
SHS
CHECKED

REGISTERED PROFESSIONAL ENGINEER
99804PE
OREGON
MAY 10, 2022
SHIVAMI AMOL SAPTARISHY
EXPIRES: 06/30/2028

BID SET

consor
Stantec

South Fork WATER
PURE WATER SINCE 1915

WATER QUALITY SYSTEMS BUILDING

HVAC

DESIGN SUMMARY

PROJECT NO.: 21-3045
SCALE:
DATE: AUGUST 2026

SHEET
H-002

C:\pwworkdir\d0513047\0609600H-002.dwg GA-02 7/27/2026 2:46 PM RYAKIM 25.0s (LMS Tech)

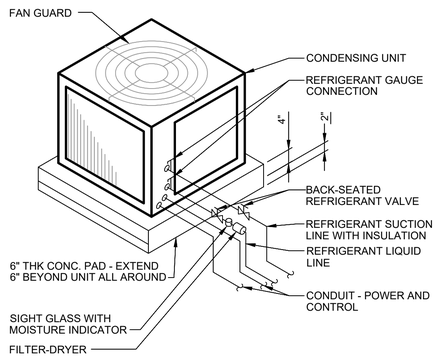

M-105 AIR-COOLED CONDENSING UNIT
(SLAB MOUNTED AT GRADE)
REV 010119

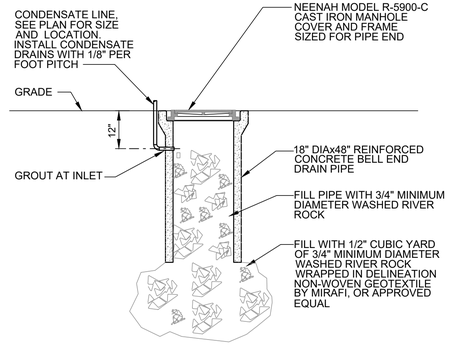

M-113 CONDENSATE DRAIN DRYWELL
REV 010119

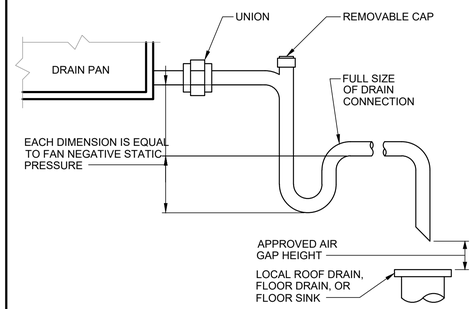

M-114 CONDENSATE DRAIN DETAIL
REV 010119

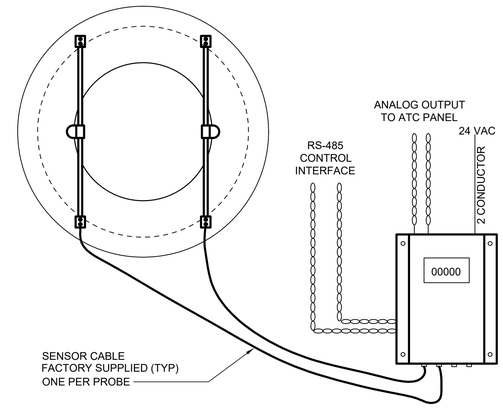

NOTES:
1. CONTRACTOR SHALL INSTALL AIR FLOW MEASUREMENT STATION PER THE MANUFACTURES REQUIREMENTS AND INSTRUCTIONS.
2. CONTRACTOR SHALL COORDINATE WITH MANUFACTURE FOR APPROPRIATE REQUIRED MOUNTING STYLE OPTION FOR THE FAN INLET.
3. TRANSMITTER SHALL BE EQUIPPED WITH AN ANALOG AIRFLOW OUTPUT AND TEMPERATURE OUTPUT THAT CAN BE CONFIGURED AS AN ALARM OUTPUT.ALARM CAN BE SET AS ACTIVE HIGH, ACTIVE LOW OR SETPOINT.
4. CONNECT OUTPUT SIGNAL CABLE DRAINS TO EARTH GROUND AT ONE END ONLY.
5. ON MULTIPLE TRANSMITTER INSTALLATIONS WITH A COMMON 24 VAC SOURCE, WIRE 24 VAC POWER TO THE SAME TERMINALS ON ALL TRANSMITTERS (E.G. L1 TO L1, L2 TO L2).
6. ALL WIRING SHALL BE INSTALLED IN CONDUITS.
7. CONTRACTOR SHALL INSTALL LABEL OF DESIGN AR FLOW RATES ABOVE THE LCD DISPLAY.

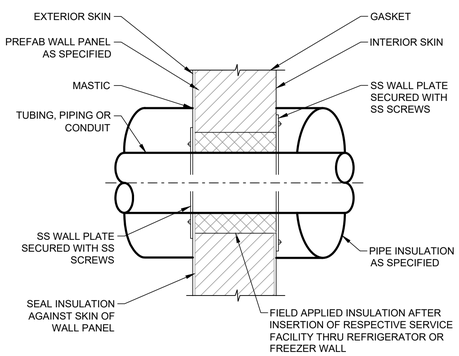

M-117 TUBING, PIPING AND CONDUITS
(PASSING THRU PRE-FAB INSULATED WALL PANELS)
REV 030122

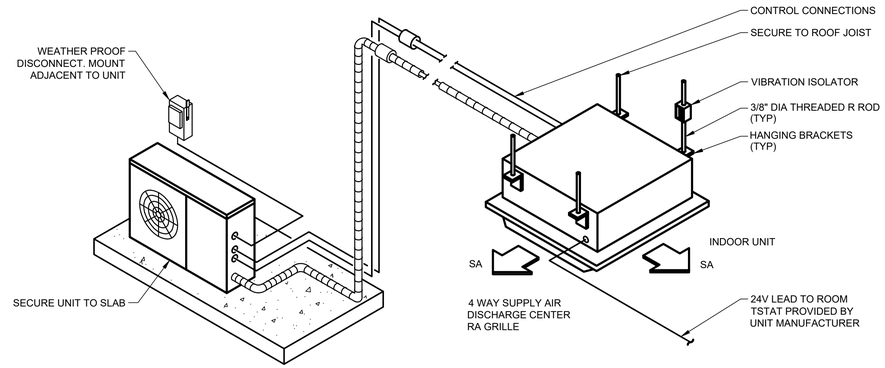

M-122 DUCTLESS AIR CONDITIONER UNIT
REV 030122

AIRFLOW MEASUREMENT STATION SCHEDULE

EQUIPMENT TAG NUMBER	SERVICE	LOCATION	MANUFACTURER & MODEL (OR EQUAL)	OPTIONS & ACCESSORIES
AFD	MAU-01 EF-01, 02, 03	MAU DISCHARGE AND EXHAUST FAN INLET	EBTRON GTX-116P	1, 2, 3, 4, 5, 6

OPTIONS & ACCESSORIES:
1. THE CONTRACTOR SHALL COORDINATE THE ACTUAL FAN THROAT, FORWARD AND FACE DIAMETER WITH THE MANUFACTURER OF THE AIRFLOW MEASURING DEVICE, AFTER THE AIR HANDLING EQUIPMENT HAS BEEN APPROVED BY THE ENGINEER.
2. AIRFLOW MEASURING DEVICE SHALL BE OF THE THERMAL DISPERSION TYPE. (REFER TO SPECIFICATION 23 09 23).
3. TRANSMITTER SHALL BE EQUIPPED WITH AN ANALOG TEMPERATURE AND AIRFLOW OUTPUT AND ETHERNET NETWORK CONNECTION.
4. TRANSMITTER SHALL BE EQUIPPED WITH LCD DISPLAY OF AIRFLOW. CONTRACTOR SHALL PROVIDE LABEL OF DESIGN AIRFLOW ABOVE DISPLAY.
5. THE CONTRACTOR SHALL INSTALL A LABEL ABOVE THE LCD DISPLAY SHOWING THE DESIGNED AIR FLOW REQUIREMENTS.
6. THE AIRFLOW MEASURING DEVICE SHALL BE INSTALLED PER MANUFACTURER'S RECOMMENDATIONS.

M-120 AIR FLOW MEASUREMENT ON FAN INLET
NO SCALE

NO.	DATE	BY	REVISION

NOTICE
0 ½ 1
IF THIS BAR DOES NOT MEASURE 1" THEN DRAWING IS NOT TO SCALE

RK DESIGNED
SP DRAWN
SHS CHECKED

REGISTERED PROFESSIONAL ENGINEER 99804PE OREGON MAY 10, 2022 SHIVANI AMOL SAPTARISHI
EXPIRES: 06/30/2028

BID SET

consor
Stantec

South Fork WATER
PURE WATER SINCE 1915
WATER QUALITY SYSTEMS BUILDING

HVAC
STANDARD DETAILS - I

PROJECT NO.: 21-3045 SCALE: DATE: AUGUST 2026

SHEET H-003

C:\pwworkdir\d0513047\0609600H-003.dwg GA-02 7/27/2026 2:47 PM RYAKIM 25.0s (LMS Tech)

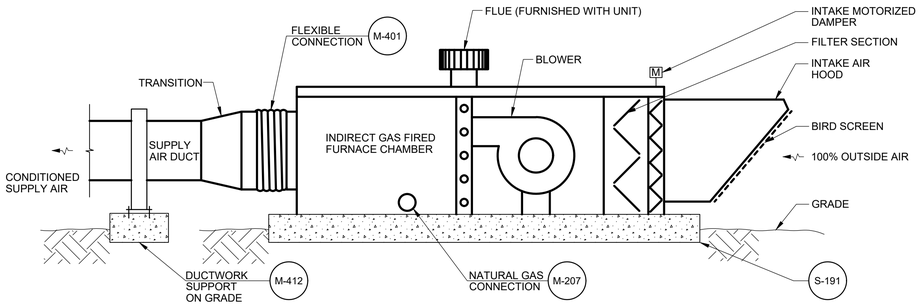

NOTES:

1. UNIT SHALL BE ANCHORED TO CONCRETE SLAB.
2. UNIT SHALL BE SHIMMED OR GROUTED AS REQUIRED TO LEVEL.

M-203 GAS FIRED MAKE UP AIR UNIT

(MOUNTED AT GRADE)

REV 010119

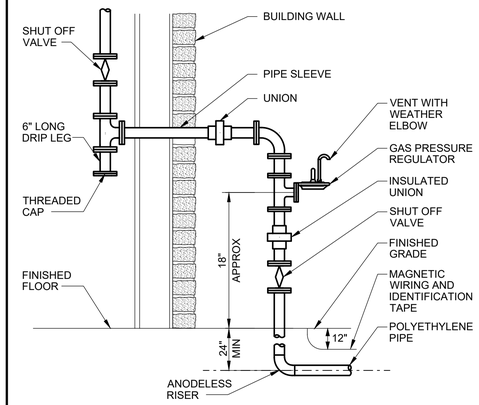

M-207 GAS PRESSURE REGULATOR

REV 010119

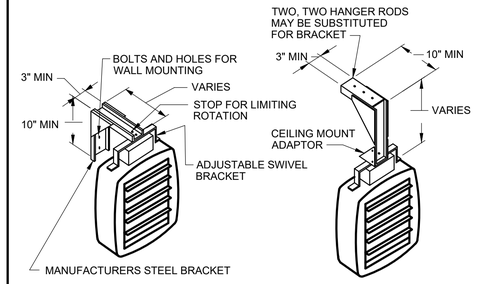

NOTES:

1. HEATER TO BE CONTROLLED FROM WALL-MOUNTED THERMOSTAT, UNLESS OTHERWISE SHOWN.
2. ELECTRIC UNIT HEATER AS SPECIFIED.

M-302 ELECTRIC UNIT HEATER

REV 010119

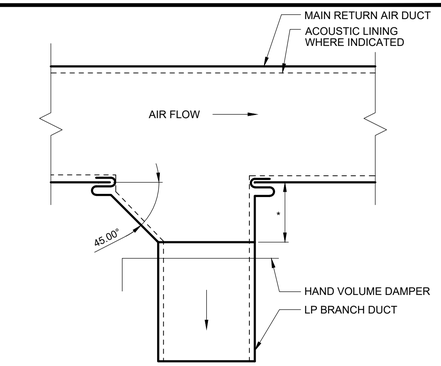

* - EQUALS WIDTH OF BRANCH DUCT UP TO 12"
12" FOR ALL BRANCH DUCTS LARGER THAN 12"

M-405 TYPICAL SUPPLY AIR BRANCH

(DUCT TAKE-OFF)

REV 010119

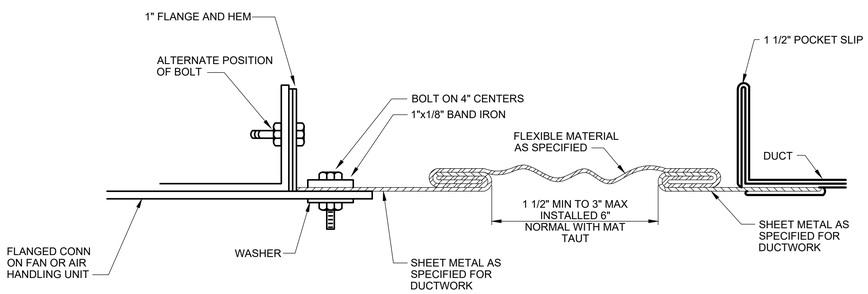

M-401 RECTANGULAR FLEXIBLE CONNECTION

REV 010119

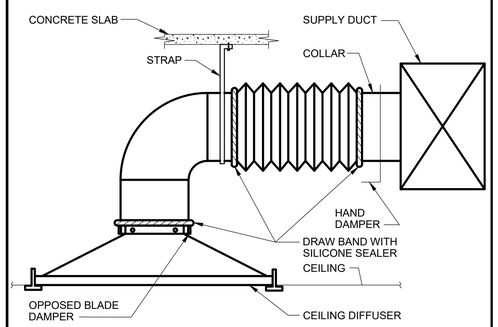

NOTE:

1. FLEXIBLE DUCT CONNECTORS LENGTH SHALL NOT EXCEED 5'-0". USE RIGID ELBOWS FOR CHANGE OF DIRECTION GREATER THAN 45°. FLEX DUCT SIZE SHALL MATCH DIFFUSER NECK SIZE.

M-413 TYPICAL DIFFUSER CONNECTION

REV 010119

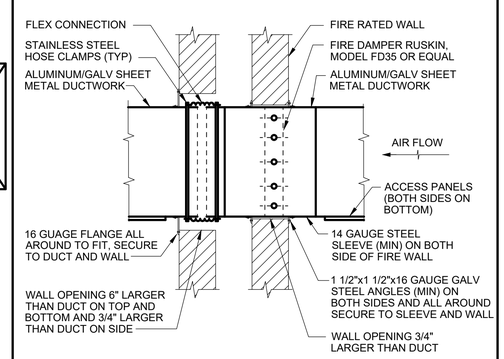

M-420 DUCT PENETRATION

(THROUGH FIRE RATED WALL)

REV 010119

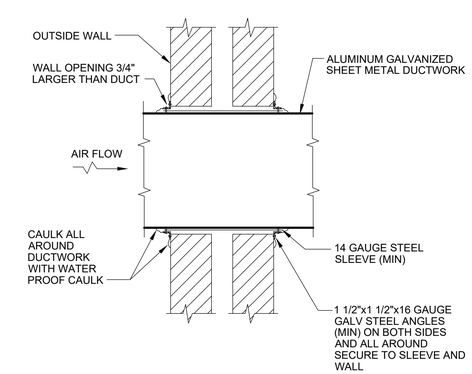

M-424 DUCT PENETRATION

(THROUGH OUTSIDE WALL)

REV 010119

NO.	DATE	BY	REVISION

NOTICE

0 ½ 1

IF THIS BAR DOES NOT MEASURE 1" THEN DRAWING IS NOT TO SCALE

RK DESIGNED

SP DRAWN

SHS CHECKED

REGISTERED PROFESSIONAL ENGINEER 99804PE OREGON MAY 10, 2022 SHIVANI AMOL SAPTARISHY

EXPIRES: 06/30/2028

BID SET

consor

Stantec

South Fork WATER PURE WATER SINCE 1915

WATER QUALITY SYSTEMS BUILDING

HVAC

STANDARD DETAILS - II

PROJECT NO.: 21-3045 | SCALE: | DATE: AUGUST 2026

SHEET H-004

C:\pwworkdir\d0513047\0609600H-004.dwg GA-02 7/27/2026 2:48 PM RYAKIM 25.0s (LMS Tech)

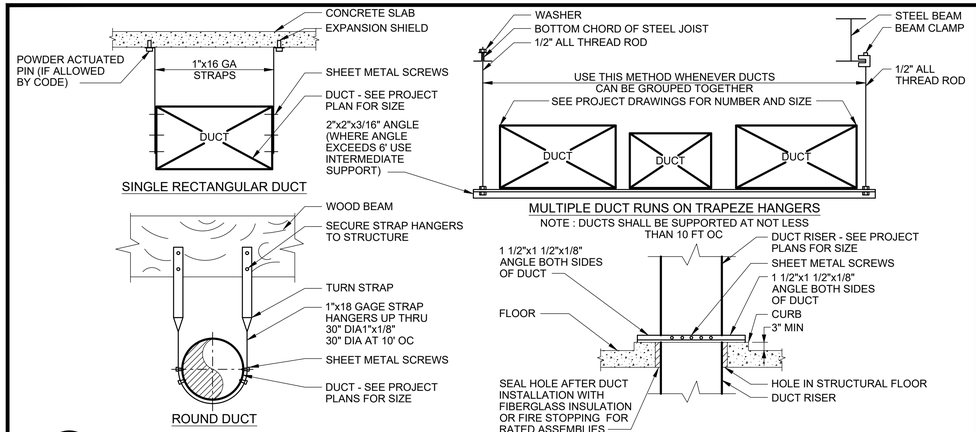

M-410 HANGER AND SUPPORT

(LOW PRESSURE DUCT)

REV 010119

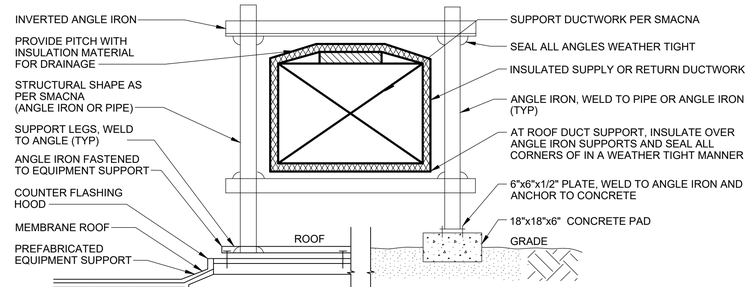

NOTES:

1. DUCTWORK WITH EXTERIOR INSULATION WHICH IS EXPOSED TO THE WEATHER SHALL BE PROTECTED WITH AN ALUMINUM-MAGNESIUM ALLOY JACKET HAVING A MINIMUM THICKNESS OF 0.016 INCH.
2. THE JACKET SHALL BE LAPPED AT LEAST 3 INCHES AT JOINTS, AND SECURED WITH STAINLESS STEEL BANDS ON 6-INCH CENTERS.
3. INSTALL DUCTWORK MINIMUM 2'-0" ABOVE GRADE OR ROOF.

M-412 EXTERIOR DUCT SUPPORT

REV 010119

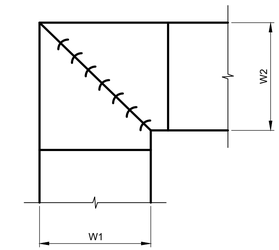

NOTES:

1. ALL VANE ELBOWS SHALL BE CONSTRUCTED AND INSTALLED AS DETAILED BY SMACNA.
2. WHEN W1 DOES NOT EQUAL W2, VANE SHALL BE SINGLE THICKNESS VANE TYPE REGARDLESS OF W DIMENSION.
3. ALL SINGLE THICKNESS VANES SHALL HAVE A 2" RADIUS, 1 1/2" MAXIMUM SPACE BETWEEN VANES AND A 3/4" TRAILING EDGE.
4. WHEN W EQUALS W2 AND W1 IS GREATER THAN 20" VANES SHALL BE DOUBLE VANE TYPE.

M-431 DUCTWORK SQUARE VANE ELBOWS

REV 030122

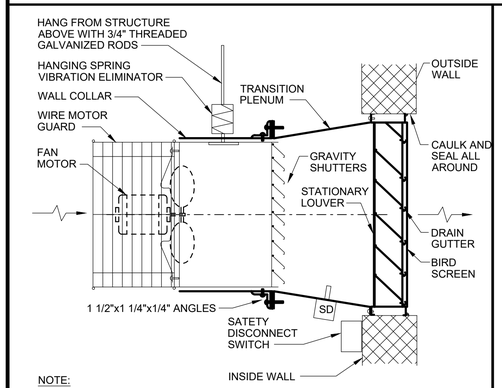

NOTE:

FOR LOUVER INSTALLATION DETAILS, SEE ARCHITECTURAL AND STRUCTURAL DRAWINGS.

M-511 SIDEWALL EXHAUST FAN

(WITH LOUVER)

REV 010119

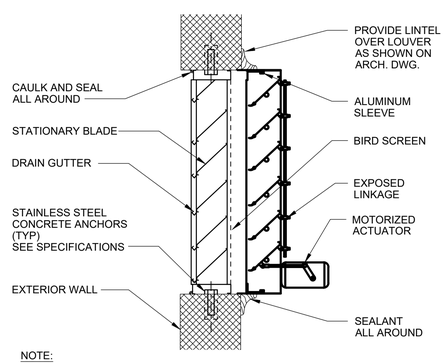

NOTE:

LOUVER AND CONTROL DAMPER SHALL BE INSTALLED TO BE IN COMPLIANCE WITH FLORIDA BUILDING CODE FOR INSTALLATION WITHIN MIAMI DADE COUNTY FOR CLOSED STRUCTURES.

M-610 STATIONARY LOUVER

(W/ MOTORIZED DAMPER)

REV 051524

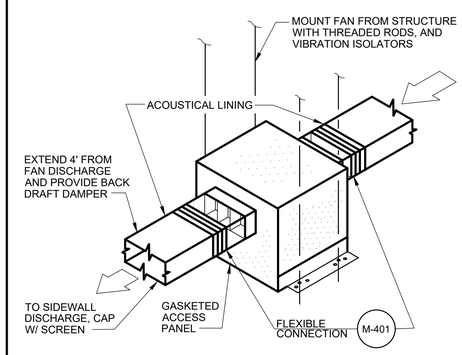

M-505 IN-LINE CEILING EXHAUST FAN

REV 010119

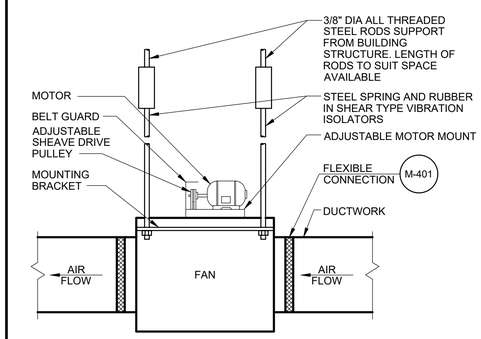

M-504 CENTRIFUGAL IN-LINE FAN

REV 010119

C:\pwworkdir\d0513047\0609600H-005.dwg GA-02 7/27/2026 2:50 PM RYAKIM 25.0s (LMS Tech)

NO.	DATE	BY	REVISION

NOTICE

0 ½ 1

IF THIS BAR DOES NOT MEASURE 1" THEN DRAWING IS NOT TO SCALE

RK DESIGNED

SP DRAWN

SHS CHECKED

REGISTERED PROFESSIONAL ENGINEER 99804PE OREGON MAY 10, 2022 SHIVANI AMOL SAPTARSHY

EXPIRES: 06/30/2028

BID SET

consor

Stantec

South Fork WATER PURE WATER SINCE 1915

WATER QUALITY SYSTEMS BUILDING

HVAC

STANDARD DETAILS - III

PROJECT NO.: 21-3045 | SCALE: | DATE: AUGUST 2026

SHEET H-005

GENERAL INFORMATION ABOUT HVAC CONTROLS

HVAC CONTROLS:
HVAC CONTROLS LOGIC IS BASED ON STANDALONE HVAC CONTROLS.

IN THE NOTES BELOW, "HVAC CONTROLLER" REFERS TO BOTH EQUIPMENT CONTROLLERS AS INDICATED ON THE EQUIPMENT SCHEDULES AND AUTOMATIC TEMPERATURE CONTROL PANELS INDICATED ON THE SEQUENCE OF OPERATIONS.

FOR ALL AREAS THAT ARE NOT PROTECTED BY THE FIRE ALARM SYSTEM, SMOKE DETECTION SIGNAL SHALL FIRST BE SENT TO THE HVAC CONTROLLER ASSOCIATED WITH THE ACTIVATED SMOKE DETECTOR, AND THE CONTROLLER SHALL THEN:

A. SHUTDOWN THE INDICATED HVAC EQUIPMENT (SEE SEQUENCE OF OPERATION)
B. SEND A SIGNAL TO THE SCADA

THE HVAC CONTRACTOR SHALL BE RESPONSIBLE FOR COORDINATING DELIVERY OF ALL HVAC ALARMS AND CONTROLS BETWEEN THE HVAC CONTROLLER AND SCADA WITH THE I&C CONTRACTOR, WHERE SUCH COMMUNICATIONS BETWEEN THE SYSTEMS ARE NOTED IN THE SEQUENCE OF OPERATION.

CONDUIT AND WIRING OF ALL HVAC CONTROLS INCLUDING 120 VOLTS CONTROLS SHALL BE PROVIDED BY DIVISION 23.

CONDUIT AND WIRING BETWEEN THE HVAC CONTROLLER AND THE SCADA PLC SHALL BE PROVIDED BY DIVISION 26.

HVAC AUTOMATIC TEMPERATURE CONTROL (ATC) PANEL:

HVAC AUTOMATIC TEMPERATURE CONTROL PANELS SHALL CONTAIN ALL ACCESSORIES NECESSARY TO PROVIDE THE CONTROL SEQUENCES DESCRIBED HEREIN.

ALL AUTOMATIC TEMPERATURE CONTROL PANELS (ATCs) SHALL INCLUDE HOA SWITCHES, HIGH AND LOW SPEED CONTROLLERS, AND EXTRA DRY CONTACTS FOR SENDING SIGNALS TO SCADA.

ATC CONTROL PANEL CONSTRUCTION:

PANELS SHALL BE 316 STAINLESS STEEL, NEMA 4X CONSTRUCTION, AND INCLUDE A HINGED FRONT DOOR WITH LOCKING HANDLE.

ALL MANUAL SWITCHES AND DIRECT READING GAUGES SHALL BE FLUSH MOUNTED ON THE FRONT FACE, AND BE IDENTIFIED BY ENGRAVED AND RIVETED BAKELITE OR LAMINATED PLASTIC NAMEPLATES WITH BLACK LETTERS ON WHITE BACKGROUND.

MANUAL SWITCHES AND PILOT LIGHTS SHALL BE HEAVY DUTY, OIL TIGHT CONSTRUCTION.

ATC PANEL CONSTRUCTION AND COMPONENTS SHALL CONFORM TO SPECIFICATION 26 06 15.

DIVISION 23 SHALL BE RESPONSIBLE FOR ALL HVAC CONTROL PANELS AND WIRING TO AND FROM THE ATCs AND HVAC EQUIPMENT.

115/120V CONDUIT AND WIRING TO CONTROL DAMPERS SHALL BE PROVIDED BY DIV 23 CONTRACTOR.

EACH ATC SHALL BE POWERED BY ONE 208V 3-PHASE BRANCH CIRCUIT BY DIV 26 , AND THE VENDOR SHALL CONNECT THEIR LOADS TO THE PHASES TO BALANCE THE LOAD TO THE EXTENT POSSIBLE.

SEQUENCE OF OPERATIONS OF VRF SYSTEM SAFETY SHUTOFF VALVE AND REFRIGERANT LEAK

OVERVIEW:

ALL VRF INDOOR UNIT (AC-01 TO AC-11) ARE EQUIPPED WITH A R32 LEAK DETECTION SENSORS

SAFETY SHUTOFF VALVE ARE PROVIDED UPSTREAM OF INDOOR UNIT (AC-01, 02, 03, 04, 05, AC-07, 08, 11) FOR MITIGATION CONTROL.

LEAK DETECTION:
UPON DETECTION OF R32 REFRIGERANT CONCENTRATION AT OR ABOVE 25% OF THE LOWER FLAMMABILITY LIMIT (LFL) AT ANY INDOOR UNIT, THE ASSOCIATED LEAK DETECTION SENSOR SHALL TRANSMIT AN ALARM SIGNAL TO THE VRF VALVE BOX CONTROL SYSTEM.

SYSTEM SHUTDOWN:
UPON RECEIPT OF THE LEAK DETECTION SIGNAL, THE CONTROL SYSTEM SHALL:

CLOSE THE SAFETY SHUTOFF VALVE AND

COMMAND THE VRF COMPRESSOR TO SHUT DOWN.

EXHAUST FAN EF-05 (RESTROOMS AND JANITOR ROOM) CONTROLLED BY ATC-02

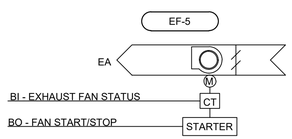

RUN CONDITIONS:

1. WITH THE HOA SWITCH IN THE "H" POSITION, EXHAUST FAN (EF-05) SHALL START
2. WITH THE HOA SWITCH IN THE "O" OFF POSITION, EXHAUST FAN (EF-05) SHALL STOP AND REMAIN OFF.
3. WITH THE HOA SWITCH IN THE "A" AUTO POSITION, EXHAUST FAN (EF-05) SHALL START WHENEVER ACTIVATED BY THE OCCUPANCY SENSOR IN THE RESTROOMS OR JANITOR ROOM PER SIGNAL RECEIVED FROM THE ATC PANEL

SEQUENCE OF OPERATIONS OF VRF SYSTEM FOR OCCUPIED SPACES CONTROLLED BY ATC-02

EACH ZONE IS PROVIDED WITH A VRF FAN COIL UNIT AND ZONE THERMOSTAT.

THE VRF SYSTEM INCLUDES CONDENSING UNIT AND FAN COIL UNITS AS INDICATED ON THE EQUIPMENT SCHEDULES.

CENTRALIZED NAVIGATION CONTROLLER, IS PROVIDED BY THE VRF SYSTEM MANUFACTURER AND IS DESIGNED TO MONITOR AND CONTROL THE VRF SYSTEM.

THE VRF SYSTEM CONTROLLER SHALL PROVIDE AUTOMATIC CHANGE OVER BETWEEN COOLING AND HEATING REFRIGERANT PIPE SIZES SHALL BE DETERMINED BY THE VRF SYSTEM MANUFACTURER.

ATC-02 SHALL ACTIVATE A LOCAL VISUAL AND AUDIBLE ALARMS, AND SEND A COMMON ALARM SIGNAL TO THE SCADA SYSTEM FOR THE FOLLOWINGS:

A. UNIT FAILURE: WHEN ANY OF THE FAN COIL UNITS OR CONDENSING UNIT IS COMMANDED TO RUN BUT FAILED.
B. HIGH AND LOW TEMPERATURE: ROOM TEMPERATURE IS GREATER THAN OR LOWER THAN THE TEMPERATURE SET POINT BY 5 DEGREES (ADJ.) FOR MORE THAN 30 MINUTES (ADJ.).

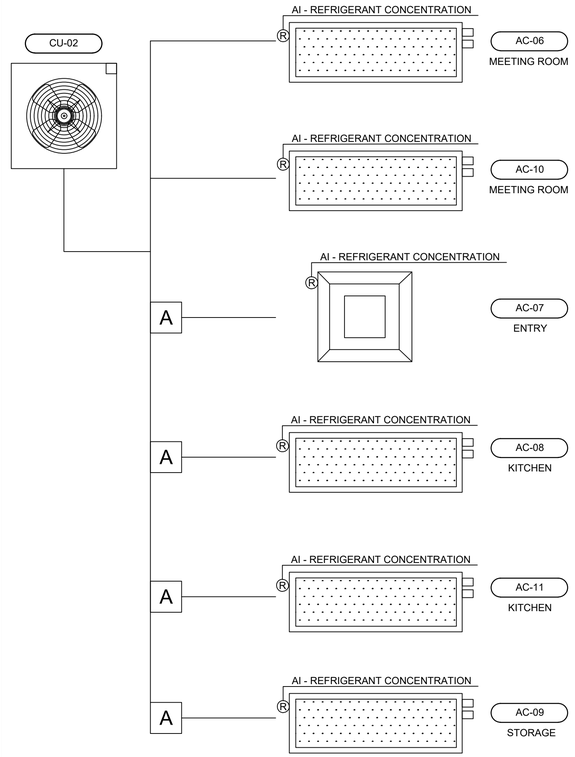

SEQUENCE OF OPERATIONS OF LOUVER AND MOTORIZED DAMPER, L-09 AND MD-09, (KITCHEN) CONTROLLED BY ATC-02

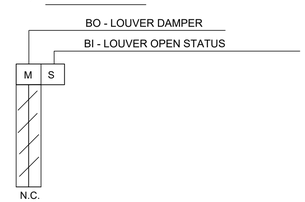

RUN CONDITION:

THE KITCHEN IS PROVIDED WITH AN INTAKE LOUVER AND MOTORIZED DAMPER INTERLOCKED WITH THE KITCHEN HOOD. THE MOTORIZED DAMPER SHALL OPEN WHEN THE KITCHEN HOOD IS IN OPERATION TO PROVIDE MAKEUP AIR AND SHALL CLOSE WHEN THE KITCHEN HOOD IS OFF.
A LOCAL AUDIBLE AND VISUAL ALARM SHALL ACTIVATE AND A COMMON ALARM SIGNAL SHALL BE SENT TO SCADA FOR THE FOLLOWING EVENTS:
MD-09 IS COMMANDED TO RUN BUT FAILS TO START.

GENERAL SHEET NOTES

1. REFRIGERANT PIPING DIAGRAM IS DIAGRAMMATICAL. CONTRACTOR SHALL FIELD ROUTE PIPING LAYOUT. PIPING SHALL NOT BE INSTALLED ABOVE ELECTRICAL EQUIPMENT.
2. REFRIGERANT PIPING SIZES SHALL BE CONFIRMED BY THE VRF MANUFACTURER, AND INSTALL IN STRICT ACCORDANCE TO THE MANUFACTURERS INSTRUCTION.
3. HVAC CONTROLLER PANEL ATC-01 AND ATC-02 SHALL HOUSE THE VRF SYSTEM CONTROLLERS WHICH ARE PROVIDED BY THE VRF SYSTEM MANUFACTURER AND IS USED FOR PROVIDING LOCAL ALARMS AND SENDING SIGNALS TO SCADA

CONTROL SEQUENCE OF OPERATIONS OF AC-07 (ENTRY) CONTROLLED BY ATC-02

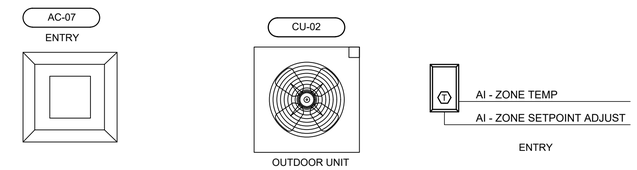

ENTRY IS EQUIPPED WITH THE VRF SYSTEM THAT INCLUDES ONE CASSETTE ASSOCIATED WITH THE OUTDOOR CONDENSING UNIT, CU-02 TO MAINTAIN 75 DEG F (ADJ.) DURING SUMMER AND 70 DEG F (ADJ.) DURING WINTER.

CONTROL PANEL ATC-02 IS USED FOR MONITORING THE ROOM TEMPERATURE.

COOLING MODE:
WHEN THE ROOM TEMPERATURE INCREASES TO 75°F (ADJ.), THE INDOOR UNIT SHALL TURN ON.
WHEN THE ROOM TEMPERATURE DECREASES TO 73°F (ADJ.), THE INDOOR UNIT SHALL STOP.

HEATING MODE:
WHEN THE ROOM TEMPERATURE DECREASES TO 70°F (ADJ.), THE INDOOR UNIT SHALL TURN ON.
WHEN THE ROOM TEMPERATURE INCREASES TO 72°F (ADJ.), THE INDOOR UNIT SHALL STOP.

ALARMS:
ATC-02 SHALL ACTIVATE A LOCAL VISUAL AND AUDIBLE ALARMS, AND SEND A COMMON ALARM SIGNAL TO THE SCADA SYSTEM FOR THE FOLLOWINGS:

A. UNIT FAILURE WHEN EACH OF THE UNIT'S IS COMMANDED TO RUN BUT FAILS.
B. HIGH AND LOW ROOM TEMPERATURE: ROOM TEMPERATURE IS GREATER OR LOWER THEN THE TEMPERATURE SET POINT BY 5 DEGREES FOR MORE THAN 30 MINUTES (ADJ.)
C. DIRTY FILTER: WHEN THE UNIT REACHES 2500 OPERATION HOURS (ADJ.)

NO.	DATE	BY	REVISION

NOTICE
0 ½ 1
IF THIS BAR DOES NOT MEASURE 1" THEN DRAWING IS NOT TO SCALE

RK DESIGNED
SP DRAWN
SHS CHECKED

REGISTERED PROFESSIONAL ENGINEER 99804PE OREGON MAY 10, 2022 SHIVANI AMOL SAPTARISHY
EXPIRES: 06/30/2028

BID SET

consor
Stantec

South Fork WATER PURE WATER SINCE 1915
WATER QUALITY SYSTEMS BUILDING

HVAC
SEQUENCE OF OPERATIONS I

PROJECT NO.: 21-3045 SCALE: DATE: AUGUST 2026

SHEET H-006

C:\pwworkdir\d0513047\0609600H-006.dwg GA-02 7/27/2026 2:51 PM RYAKIM 25.0s (LMS Tech)

CONTROL SEQUENCE OF OPERATIONS OF AC-06, AC-08, AC-09, SF-01, SF-02, SF-03, MD-01, MD-03, MD-04 (MEETING ROOM, STORAGE, AND KITCHEN) CONTROLLED BY ATC-02

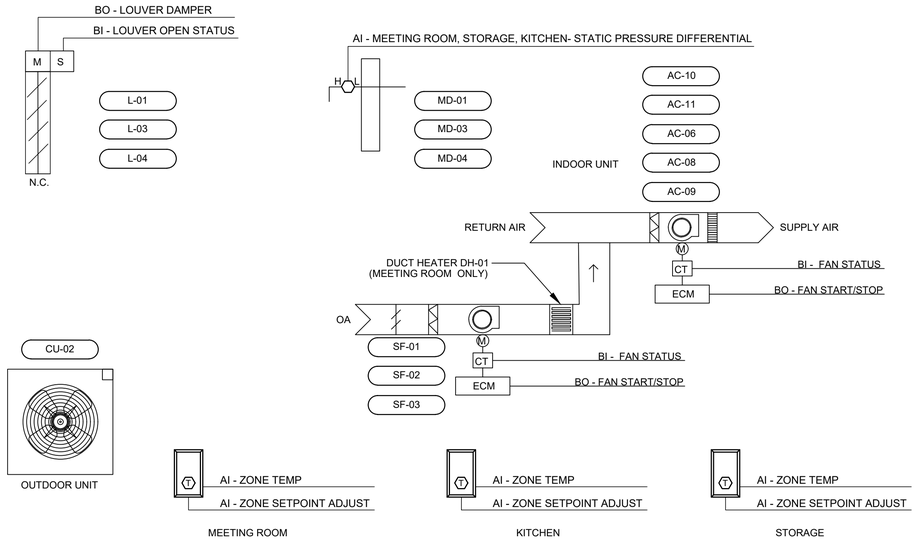

OVERVIEW:

1. MEETING ROOM, KITCHEN, AND STORAGE ROOMS ARE EQUIPPED WITH THE VRF SYSTEM THAT INCLUDES A CONDENSING UNIT AND INDOOR AIR HANDLING UNITS
2. OUTDOOR UNIT, CU-02, IS ASSOCIATED WITH INDOOR UNITS, AC-06, 08, 09, 10 AND 11
3. CONTROLLER IS USED FOR MONITORING THE ROOM TEMPERATURE.
4. MEETING ROOM AND KITCHEN ARE EQUIPPED WITH TWO INDOOR UNITS OPERATING IN LEAD/LAG MODE TO MAINTAIN 75°F (ADJ.) IN THE SUMMER AND 70°F (ADJ.) IN THE WINTER. ONE UNIT SHALL BE DESIGNATED AS THE LEAD UNIT, AND THE OTHER SHALL BE THE LAG UNIT. EVERY 48 HOURS, THE LEAD, AND THE LAG UNIT DESIGNATIONS SHALL ROTATE AMONG THE UNITS.

PRESSURIZATION SUPPLY FAN AND MOTORIZED DAMPER:
SUPPLY FANS SF-01 THROUGH SF-03 SHALL ENERGIZE WHENEVER THEIR ASSOCIATED INDOOR UNITS ARE ENERGIZED. ONCE SUPPLY FANS RECEIVE A COMMAND TO START,
MOTORIZED DAMPERS MD-01, MD-03, AND MD-04 SHALL OPEN FIRST; THE ASSOCIATED SUPPLY FAN SHALL START ONLY AFTER PROOF OF DAMPER OPEN POSITION IS CONFIRMED.

STATIC PRESSURE PRESSURE CONTROL:
THE CONTROLLER SHALL MEASURE THE ROOM STATIC PRESSURE IN THE MEETING, KITCHEN, AND STORAGE ROOMS AND MODULE THE SUPPLY AIR TO MAINTAIN A POSITIVE STATIC PRESSURE OF 0.1 IN WC IN THE MEETING, KITCHEN, AND STORAGE ROOMS

MEETING ROOM

DUCT HEATER DH-01 SHALL ENERGIZE UPON PROOF THAT SUPPLY FAN SF-01 IS IN OPERATION AND WHEN THE DUCT THERMOSTAT SENSES OUTDOOR AIR TEMPERATURE BELOW 60°F.

COOLING MODE:
WHEN THE ROOM TEMPERATURE INCREASES TO 75°F (ADJ.), THE LEAD UNIT SHALL TURN ON.
WHEN THE ROOM TEMPERATURE INCREASES TO 79°F (ADJ.), THE LAG UNIT SHALL TURN ON.
WHEN THE ROOM TEMPERATURE DECREASES TO 77°F (ADJ.), THE LAG UNIT SHALL STOP WHILE THE LEAD UNIT REMAINS ON.
WHEN THE ROOM TEMPERATURE DECREASES TO 73°F (ADJ.), THE LEAD UNIT SHALL STOP.

HEATING MODE:
WHEN THE ROOM TEWHEN THE ROOM TEMPERATURE DECREASES TO 70°F (ADJ.), THE LEAD UNIT SHALL TURN ON.
WHEN THE ROOM TEMPERATURE INCREASES TO 66°F (ADJ.), THE LAG UNIT SHALL TURN ON.
WHEN THE ROOM TEMPERATURE DECREASES TO 68°F (ADJ.), THE LAG UNIT SHALL STOP WHILE THE LEAD UNIT REMAINS ON.
WHEN THE ROOM TEMPERATURE INCREASES TO 72°F (ADJ.), THE LEAD UNIT SHALL STOP.MPERATURE INCREASES TO 66°F (ADJ.), THE LAG UNIT SHALL TURN ON.

KITCHEN

COOLING MODE:
WHEN THE ROOM TEMPERATURE INCREASES TO 75°F (ADJ.), THE LEAD UNIT SHALL TURN ON.
WHEN THE ROOM TEMPERATURE INCREASES TO 79°F (ADJ.), THE LAG UNIT SHALL TURN ON.
WHEN THE ROOM TEMPERATURE DECREASES TO 77°F (ADJ.), THE LAG UNIT SHALL STOP WHILE THE LEAD UNIT REMAINS ON.
WHEN THE ROOM TEMPERATURE DECREASES TO 73°F (ADJ.), THE LEAD UNIT SHALL STOP.

HEATING MODE:
WHEN THE ROOM TEWHEN THE ROOM TEMPERATURE DECREASES TO 70°F (ADJ.), THE LEAD UNIT SHALL TURN ON.
WHEN THE ROOM TEMPERATURE INCREASES TO 66°F (ADJ.), THE LAG UNIT SHALL TURN ON.
WHEN THE ROOM TEMPERATURE DECREASES TO 68°F (ADJ.), THE LAG UNIT SHALL STOP WHILE THE LEAD UNIT REMAINS ON.
WHEN THE ROOM TEMPERATURE INCREASES TO 72°F (ADJ.), THE LEAD UNIT SHALL STOP.MPERATURE INCREASES TO 66°F (ADJ.), THE LAG UNIT SHALL TURN ON.

STORAGE

COOLING MODE:
WHEN THE ROOM TEMPERATURE INCREASES TO 80 °F (ADJ), THEINDOOR UNIT SHALL TURN ON.
WHEN THE ROOM TEMPERATURE DECREASES TO 78 F (ADJ), THEINDOOR UNIT SHALL STOP.

HEATING MODE:
WHEN THE ROOM TEMPERATURE DECREASES TO 60'F (ADJ), THEINDOOR UNIT SHALL TURN ON.
WHEN THE ROOM TEMPERATURE INCREASES TO 62'F (ADJ), THEINDOOR UNIT SHALL STOP.

ALARMS:
ATC-02 SHALL ACTIVATE A LOCAL VISUAL AND AUDIBLE ALARMS, AND SEND A COMMON ALARM SIGNAL TO THE SCADA SYSTEM FOR THE FOLLOWINGS:

1. UNIT FAILURE WHEN EACH OF THE UNIT'S IS COMMANDED TO RUN BUT FAILS.
2. HIGH AND LOW ROOM TEMPERATURE: ROOM TEMPERATURE IS GREATER OR LOWER THEN THE TEMPERATURE SET POINT BY 5 DEGREES FOR MORE THAN 30 MINUTES (ADJ.)
3. DIRTY FILTER: WHEN THE UNITS REACH 2500 OPERATION HOURS (ADJ.)

SEQUENCE OF OPERATIONS FOR EXHAUST FAN EF-01 TO 03 AND MAU-01 FOR CHEMICAL ROOM (ATC-01)

MAU-01, EF-01, EF-02, AND EF-03 SHALL BE PROVIDED WITH HOA SWITCHES.

WITH THE HOA SWITCHES OF MAU-01, EF-01, EF-02, AND EF-03 IN THE "H" POSITION:
THE OUTSIDE AIR DAMPER OF MAU-01 WILL OPEN 100% FIRST. ONCE THERE IS PROOF THAT THE DAMPER IS OPEN, MAKE-UP AIR HANDLING UNIT MAU-01 SHALL ENERGIZE FOLLOWING ITS FACTORY BUILT START-UP SEQUENCE. ONCE MAU-01 STARTS, ALLOW 30 SECONDS (ADJ.) TO START EF-01, EF-02, AND EF-03. THE SPEED OF MAU-01, EF-01, EF-02, AND EF-03 SHALL BE ADJUSTED AT THEIR RESPECTIVE VARIABLE SPEED DRIVE.

WITH THE HOA SWITCHES OF MAU-01, EF-01, EF-02, AND EF-03 IN THE "O" POSITION:
THE FAN OF MAU-01, EF-01, EF-02, AND EF-03 SHALL DE-ENERGIZE FIRST, AND THEN THE OA DAMPER OF MAU-01 SHALL CLOSE.

WITH THE HOA SWITCHES OF MAU-01, EF-01, EF-02, AND EF-03 IN THE "A" POSITION:
THE EXHAUST AIRFLOW SHALL ALWAYS BE 10% (ADJ.) GREATER THAN THE MAKE-UP AIRFLOW.

SUMMER (COOLING) MODE:

1. NORMAL VENTILATION (1.5 AIR CHANGES PER HOUR):
   THE OUTSIDE AIR MOTORIZED DAMPER OF MAU-01 SHALL OPEN 50%. ONCE THERE IS PROOF THAT THE MOTORIZED DAMPER IS OPEN, MAU-01 SHALL ENERGIZE FOLLOWING ITS FACTORY BUILT START-UP SEQUENCE AND RUN AT 50% SPEED. ONCE MAU-01 STARTS, ALLOW 30 SECONDS (ADJ.) TO START EF-01, EF-02, AND EF-03. EF-01, EF-02, AND EF-03 SHALL RUN TO EXHAUST 520 CFM EACH (1560 CFM TOTAL).

2. INCREASED VENTILATION (WHEN THE ROOM TEMPERATURE RISES ABOVE 90 DEG F (ADJ.)):
   THE OUTSIDE AIR MOTORIZED DAMPER OF MAU-01 SHALL OPEN 100%. ONCE THERE IS PROOF THAT THE MOTORIZED DAMPER IS OPEN, MAU-01 SHALL ENERGIZE FOLLOWING ITS FACTORY BUILT START-UP SEQUENCE AND RUN AT 100% SPEED. ONCE MAU-01 STARTS, ALLOW 30 SECONDS (ADJ.) TO START EF-01, EF-02, AND EF-03. EF-01, EF-02, AND EF-03 SHALL RUN TO EXHAUST 1030 CFM EACH (3100 CFM TOTAL). WHEN THE ROOM TEMPERATURE DROPS BELOW 86 DEG F (ADJ.), EF-01, EF-02, AND EF-03 SHALL DECREASE SPEED TO EXHAUST 520 CFM EACH (1550 CFM TOTAL) AND 10 SECONDS (ADJ.) AFTER THE EXHAUST FANS DECREASE SPEED, THE MOTORIZED MAU-01 MOTORIZED DAMPER SHALL MODULATE TO 50% OPEN POSITION, AND MAU-01 SUPPLY FAN SHALL OPERATE AT 50% SPEED.

WINTER (HEATING) MODE:

1. NORMAL VENTILATION (1.5 AIR CHANGES PER HOUR):
   THE OUTSIDE AIR MOTORIZED DAMPER OF MAU-01 SHALL OPEN 50%. ONCE THERE IS PROOF THAT THE MOTORIZED DAMPER IS OPEN, MAU-01 SHALL ENERGIZE FOLLOWING ITS FACTORY BUILT START-UP SEQUENCE AND RUN AT 50% SPEED. ONCE MAU-01 STARTS, ALLOW 30 SECONDS (ADJ.) TO START EF-01, EF-02, AND EF-03. EF-01, EF-02, AND EF-03 SHALL RUN TO EXHAUST 520 CFM EACH.

THE NATURAL GAS HEAT SHALL BE ENABLED WHENEVER:

1. THE OUTSIDE AIR TEMPERATURE IS LESS THAN 60 DEG F (ADJ.).
2. AND THE SUPPLY FAN OF MAU-01 IS ON.

FILTER DIFFERENTIAL PRESSURE MONITOR:
THE CONTROLLER SHALL MONITOR THE DIFFERENTIAL PRESSURE ACROSS THE MAU-01 FILTER.

DUCT SMOKE DETECTOR ACTIVATION:
UPON A SMOKE DETECTOR ACTIVATION, EF-01, EF-02, AND EF-03 SHALL SHUT DOWN. THE MOTORIZED DAMPERS OF MAU-01, EF-01, EF-02, AND EF-03 SHALL CLOSE. A LOCAL ALARM WILL BE GENERATED AND A SIGNAL SHALL BE SENT TO SCADA.

A LOCAL AUDIBLE AND VISUAL ALARM SHALL ACTIVATE AND A COMMON ALARM SIGNAL SHALL BE SENT TO SCADA FOR THE FOLLOWING EVENTS:

1. LOW ROOM TEMPERATURE: ROOM TEMPERATURE IS BELOW 60 DEG F (ADJ.) FOR MORE THAN 30 MINUTES (ADJ.).
2. HIGH ROOM TEMPERATURE: ROOM TEMPERATURE EXCEEDS 104 DEG F (ADJ.) FOR MORE THAN 30 MINUTES (ADJ.).
3. ANY SMOKE DETECTOR IS ACTIVATED.
4. MAU-01, EF-01, EF-02, AND EF-03 AIRFLOW IS LESS THAN 90% OF THE DESIGN AIRFLOW FOR MORE THAN 30 MINUTES (ADJ.).
5. MAU-01 IS COMMANDED TO RUN BUT FAILED.
6. ANY OF EF-01, EF-02, AND EF-03 OS COMMANDED TO RUN BUT FAILED.

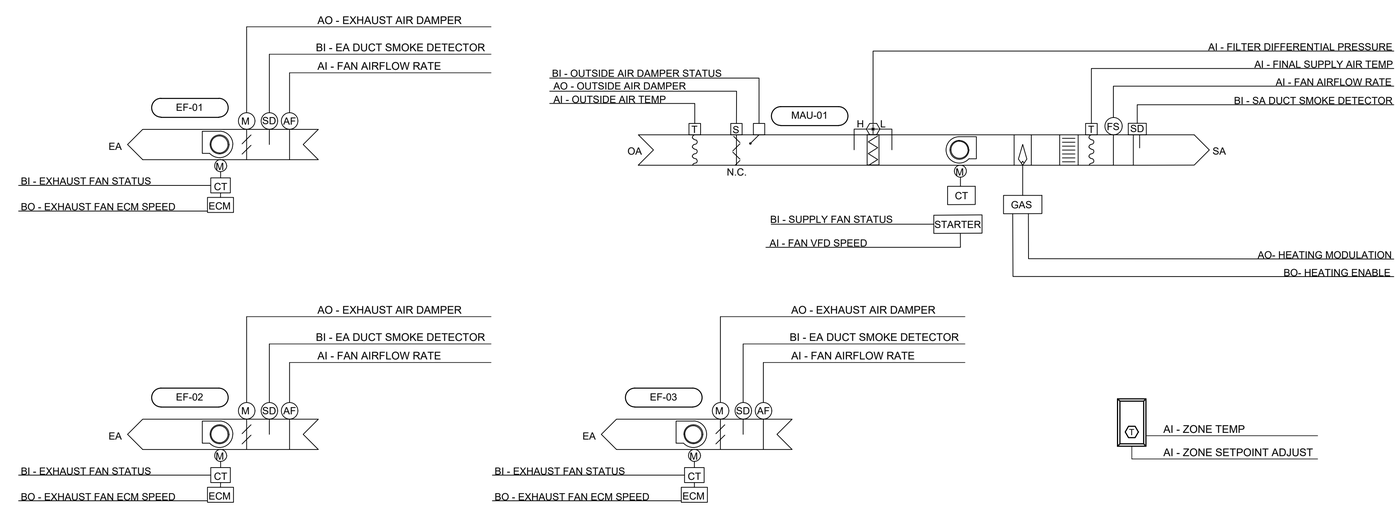

NO.	DATE	BY	REVISION

NOTICE
0 ½ 1
IF THIS BAR DOES NOT MEASURE 1" THEN DRAWING IS NOT TO SCALE

RK
DESIGNED
SP
DRAWN
SHS
CHECKED

REGISTERED PROFESSIONAL ENGINEER
99804PE
OREGON
MAY 10, 2022
SHIVANI AMOL SAPTARISHI
EXPIRES: 06/30/2028

BID SET

consor
Stantec

South Fork WATER
PURE WATER SINCE 1915

WATER QUALITY SYSTEMS BUILDING

HVAC

SEQUENCE OF OPERATIONS II

PROJECT NO.: 21-3045
SCALE:
DATE: AUGUST 2026

SHEET
H-007

C:\pwworkdir\d0513047\0609600H-007.dwg GA-02 7/27/2026 2:58 PM RYAKIM 25.0s (LMS Tech)

SEQUENCE OF OPERATIONS OF VRF SYSTEM FOR ELECTRICAL ROOM CONTROLLED BY ATC-01

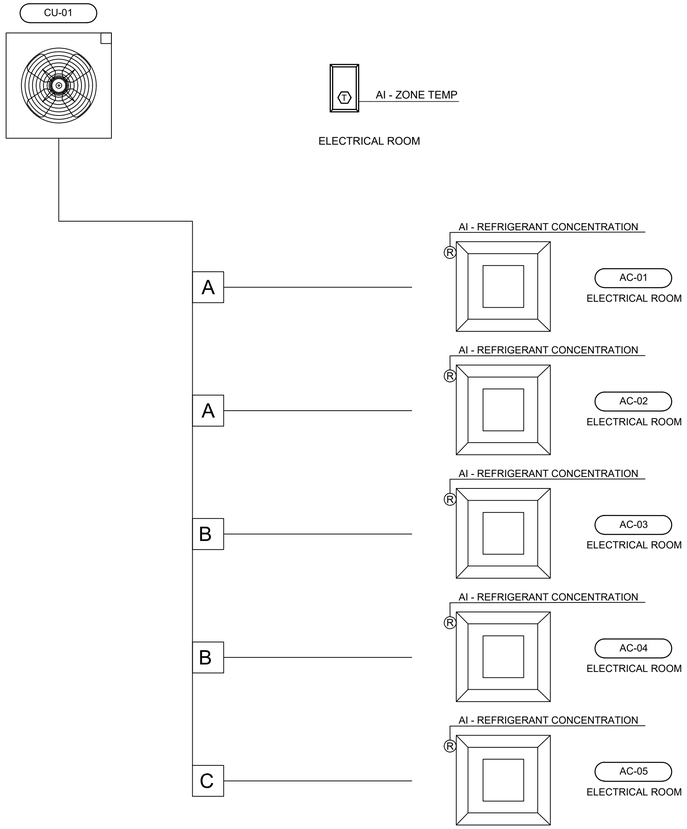

OVERVIEW:
THE ELECTRICAL ROOM IS EQUIPPED WITH (5) HEAT PUMP UNITS OPERATING IN LEAD/LAG MODE TO MAINTAIN 80 DEG F (ADJ.) IN THE SUMMER AND 60 DEG F (ADJ.) IN THE WINTER.
ONE UNIT SHALL BE DESIGNATED AS THE LEAD UNIT, AND THE OTHERS SHALL BE LAG-1, LAG-2, LAG-3, AND LAG-4. EVERY 48 HOURS, THE LEAD, LAG-1, LAG-2, LAG-3, LAG-4, DESIGNATIONS SHALL ROTATE AMONG THE UNITS.

OUTDOOR CONDENSING UNIT CU-01 IS ASSOCIATED WITH INDOOR UNIT AC-01, 02, 03, 04, AND 10

THE FAN COIL UNITS AC-01, 02, 03, 04, AND 05 SHALL OPERATE IN LEAD-LAG FASHION.

CONTROL PANEL ATC-01 IS USED FOR MONITORING THE ROOM TEMPERATURE, SWITCHING THE LEAD/LAG OPERATION OF THE UNITS, AND SENDING SIGNALS TO PLC/SCADA.

COOLING MODE

WHEN THE ROOM TEMPERATURE RISES TO 76°F (ADJ.), THE LEAD UNIT WILL TURN ON.
WHEN THE ROOM TEMPERATURE DROPS TO 74°F (ADJ.), THE LEAD UNIT WILL STOP.

WHEN THE ROOM TEMPERATURE RISES TO 78°F (ADJ.), THE LAG-01 UNIT WILL TURN ON.
WHEN THE ROOM TEMPERATURE DROPS TO 76°F (ADJ.), THE LAG-01 UNIT WILL STOP.

WHEN THE ROOM TEMPERATURE RISES TO 80°F (ADJ.), THE LAG-02 UNIT WILL TURN ON.
WHEN THE ROOM TEMPERATURE DROPS TO 78°F (ADJ.), THE LAG-02 UNIT WILL STOP.

WHEN THE ROOM TEMPERATURE RISES TO 82°F (ADJ.), THE LAG-03 UNIT WILL TURN ON.
WHEN THE ROOM TEMPERATURE DROPS TO 80°F (ADJ.), THE LAG-03 UNIT WILL STOP.

WHEN THE ROOM TEMPERATURE RISES TO 84°F (ADJ.), THE LAG-04 UNIT WILL TURN ON.
WHEN THE ROOM TEMPERATURE DROPS TO 82°F (ADJ.), THE LAG-04 UNIT WILL STOP.

HEATING MODE

ALL HEAT PUMPS SHALL SWITCH TO HEATING MODEL WHEN THE ROOM TEMPERATURE DROPS TO 68 DEG F

WHEN THE ROOM TEMPERATURE DROPS TO 64°F (ADJ.), THE LEAD UNIT WILL TURN ON.
WHEN THE ROOM TEMPERATURE RISES TO 66°F (ADJ.), THE LEAD UNIT WILL STOP

WHEN THE ROOM TEMPERATURE DROPS TO 62°F (ADJ.), THE LAG-01 UNIT WILL TURN ON.
WHEN THE ROOM TEMPERATURE RISES TO 64°F (ADJ.), THE LAG-01 UNIT WILL STOP

WHEN THE ROOM TEMPERATURE DROPS TO 60°F (ADJ.), THE LAG-02 UNIT WILL TURN ON.
WHEN THE ROOM TEMPERATURE RISES TO 62°F (ADJ.), THE LAG-02 UNIT WILL STOP

WHEN THE ROOM TEMPERATURE DROPS TO 58°F (ADJ.), THE LAG-03 UNIT WILL TURN ON
WHEN THE ROOM TEMPERATURE RISES TO 60°F (ADJ.), THE LAG-03 UNIT WILL STOP

WHEN THE ROOM TEMPERATURE DROPS TO 56°F (ADJ.), THE LAG-04 UNIT WILL TURN ON.
WHEN THE ROOM TEMPERATURE RISES TO 58°F (ADJ.), THE LAG-04 UNIT WILL STOP

THE HEAT PUMP SYSTEM CONTROLLER SHALL PROVIDE AUTOMATIC CHANGE OVER BETWEEN COOLING AND HEATING MODES
THE HEAT PUMP SYSTEM CONTROLLER SHALL AUTOMATICALLY ADJUST EACH SYSTEM OPERATION CAPACITY AS THE ROOM HEATING/COOLING LOAD CHANGES.

A LOCAL AUDIBLE AND VISUAL ALARM SHALL ACTIVATE AND A COMMON ALARM SIGNAL SHALL BE SENT TO THE SCADA FOR THE FOLLOWING EVENTS:

A) ROOM TEMPERATURE IS GREATER THAN THE TEMPERATURE SETPOINT BY 5°F ADJ FOR MORE THAN 30 MINUTES ADJ.
B) ROOM TEMPERATURE IS LOWER THAN THE TEMPERATURE SETPOINT BY 5°F ADJ FOR MORE THAN 30 MINUTES ADJ.
C) ANY AC OR CU UNIT FAILS

SEQUENCE OF OPERATIONS OF EF-04 AND L-05 FOR MECHANICAL ROOM CONTROLLED BY ATC-01

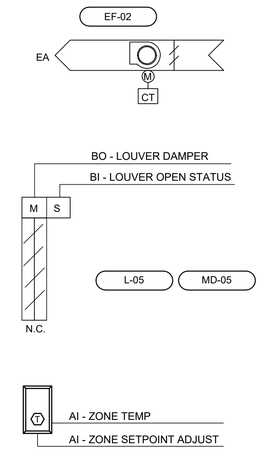

AUTOMATIC CONTROL PANEL:
1. EXHAUST FAN IS CONTROLLED BY AN ASSOCIATED THERMOSTAT.
2. EXHAUST FAN SHALL BE PROVIDED WITH AN HOA SWITCH.
3. INTAKE AIR LOUVERS L-05 IS EQUIPPED WITH MOTORIZED DAMPERS MD-05

EXHAUST FAN RUN CONDITIONS:
1. WITH THE HOA SWITCH IN THE "H" (HAND OR MANUAL) POSITION, THE EXHAUST FAN SHALL START AND THE SPEED SHALL BE ADJUSTED AT THE VARIABLE SPEED DRIVE
2. WITH THE HOA SWITCH IN THE "O" (OFF) POSITION, THE EXHAUST FAN SHALL STOP.
3. WITH THE HOA SWITCH IN THE "A" (AUTOMATIC) POSITION, THE EXHAUST FANS SHALL BE ENABLED TO RUN WHEN THE ROOM TEMPERATURE REACHES 90°F (ADJ.), AND SHALL CONTINUE TO RUN AS LONG AS THE ROOM TEMPERATURE IS ABOVE 92°F (ADJ.).
4. WHEN THE ROOM TEMPERATURE EXCEEDS 100 F (ADJ.) THE EXHAUST FAN SHALL TURN ON AND RUN AT 100% SPEED AND, WHEN THE ROOM TEMPERATURE DROPS TO 98 F (ADJ.) THE EXHAUST FAN SHALL TURN OFF

MOTORIZED DAMPER MD-05 OF LOUVER L-05 :
1. MOTORIZED DAMPER SHALL OPEN WHEN THE EXHAUST FAN IS COMMANDED TO RUN AND SHALL CLOSE WHEN THE FAN STOPS.
2. MOTORIZED DAMPERS SHALL BE PROVEN OPEN BEFORE THE EXHAUST FAN ARE ENERGIZED AND SHALL CLOSE 30 SEC (ADJ.) AFTER THE FAN STOPS.

ALARMS:
1. ATC-01 SHALL ACTIVATE A LOCAL VISUAL AND AUDIBLE ALARMS, AND SEND A COMMON ALARM SIGNAL TO THE SCADA SYSTEM FOR THE FOLLOWINGS:
   A. EXHAUST FANS ARE COMMANDED TO RUN BUT FAILED.
   B. HIGH ROOM TEMPERATURE: WHEN ROOM TEMPERATURE IS GREATER THAN 104 DEG F (ADJ.) FOR MORE THAN 30 MINUTES (ADJ.)
   C. LOW ROOM TEMPERATURE: WHEN THE ROOM TEMPERATURE IS LESS THAN 50 DEG F (ADJ.) FOR MORE THAN 30 MINUTES (ADJ.)

ELECTRICAL UNIT HEATERS SEQUENCE OF OPERATION

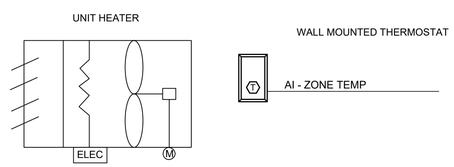

ZONE SETPOINT ADJUST:

THE OCCUPANT SHALL BE ABLE TO TO ADJUST THE ZONE TEMPERATURE HEATING SETPOINTS AT THE INTEGRAL THERMOSTAT.

THE TEMPERATURE SETPOINT OF THE HEATERS SHALL BE ADJUSTED TO 60 F (ADJ).

NO.	DATE	BY	REVISION

NOTICE
0 ½ 1
IF THIS BAR DOES NOT MEASURE 1" THEN DRAWING IS NOT TO SCALE

RK DESIGNED
SP DRAWN
SHS CHECKED

REGISTERED PROFESSIONAL ENGINEER 99804PE OREGON MAY 10, 2022 SHIVANI AMOL SAPTARISHI
EXPIRES: 06/30/2028

BID SET

consor
Stantec

South Fork WATER
PURE WATER SINCE 1915
WATER QUALITY SYSTEMS BUILDING

HVAC
SEQUENCE OF OPERATIONS III

PROJECT NO.: 21-3045 | SCALE: | DATE: AUGUST 2026

SHEET H-008

C:\pwworkdir\d0513047\0609600H-008.dwg GA-02 7/27/2026 2:53 PM RYAKIM 25.0s (LMS Tech)

SEQUENCE OF OPERATIONS OF VRF SYSTEM FOR ELECTRICAL ROOM CONTROLLED BY ATC-01

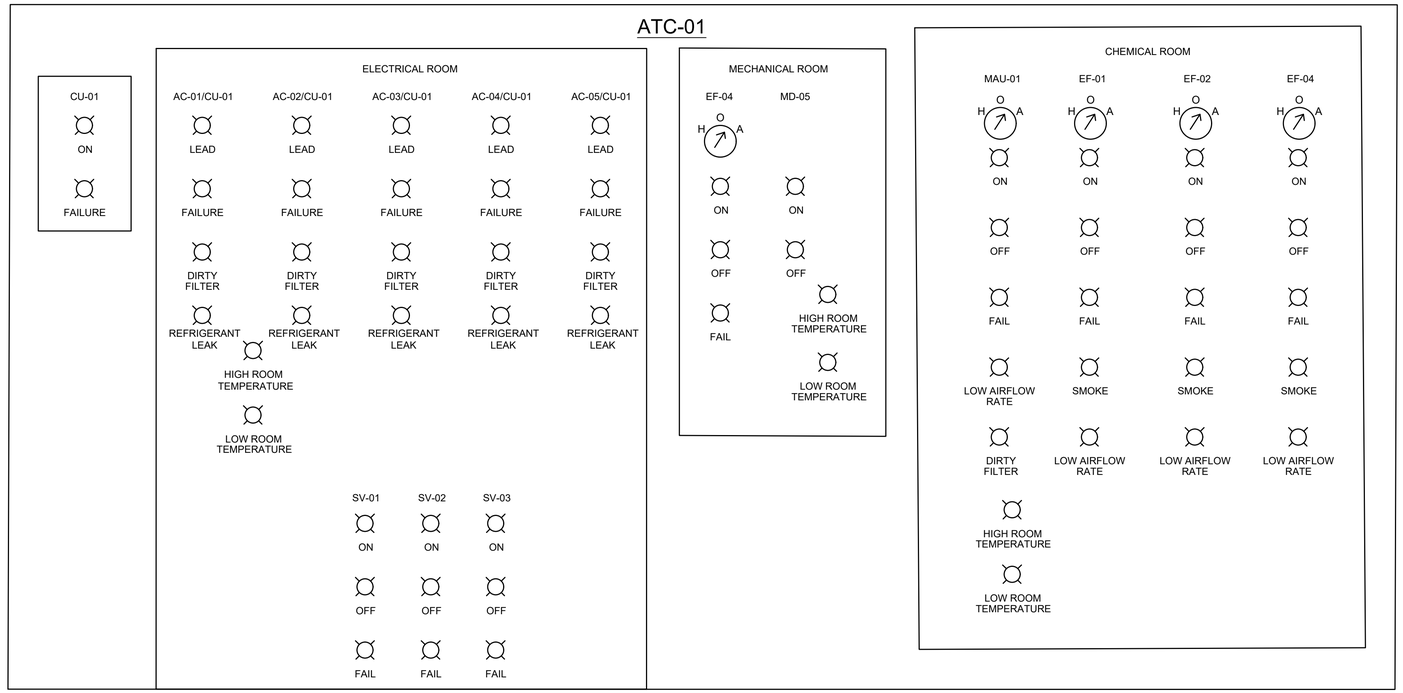

SEQUENCE OF OPERATIONS OF VRF SYSTEM FOR OCCUPIED SPACES CONTROLLED BY ATC-02

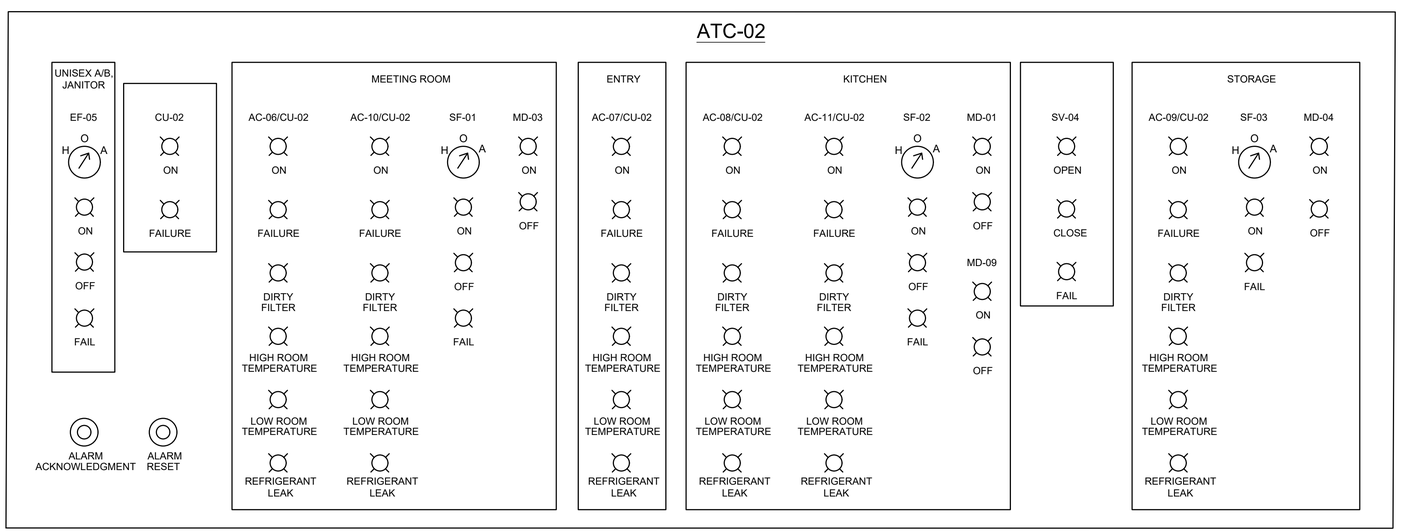

NO.	DATE	BY	REVISION

NOTICE
0 ½ 1
IF THIS BAR DOES NOT MEASURE 1" THEN DRAWING IS NOT TO SCALE

RK
DESIGNED
SP
DRAWN
SHS
CHECKED

REGISTERED PROFESSIONAL ENGINEER
99804PE
OREGON
MAY 10, 2022
SHIVAMI AMOL SAPTARISHY
EXPIRES: 06/30/2028

BID SET

consor
Stantec

South Fork WATER
PURE WATER SINCE 1915

WATER QUALITY SYSTEMS BUILDING

HVAC

SEQUENCE OF OPERATIONS IV

PROJECT NO.: 21-3045
SCALE:
DATE: AUGUST 2026

SHEET
H-009

C:\pwworkdir\d0513047\0609600H-009.dwg GA-02 7/27/2026 2:54 PM RYAKIM 25.0s (LMS Tech)

FAN SCHEDULE

EQUIPMENT NUMBER	SERVICE	LOCATION	TYPE	CFM	EXTERNAL STATIC PRESS (IN W G)	FAN RPM	DRIVE TYPE	MOTOR							WEIGHT (LBS)	MANUFACTURER & MODEL	OPTIONS-ACCESSORIES
								BHP	HP	RPM	V/PH/CY	ENCL	Lwa	dBA			
EF-01	CHEMICAL ROOM	INDOOR	CENTRIFUGAL INLINE	1030 / 520	0.75	3602	DIRECT	0.32	1/2	3900	208/1/60	TEFC	82	71	57	GREENHECK/SQ-7-VG	1-5,10
EF-02	CHEMICAL ROOM	INDOOR	CENTRIFUGAL INLINE	1030 / 520	0.75	3602	DIRECT	0.32	1/2	3900	208/1/60	TEFC	82	71	57	GREENHECK/SQ-7-VG	1-5,10
EF-03	CHEMICAL ROOM	INDOOR	CENTRIFUGAL INLINE	1030 / 520	0.75	3602	DIRECT	0.32	1/2	3900	208/1/60	TEFC	82	71	57	GREENHECK/SQ-7-VG	1-5,10
EF-04	MECHANICAL ROOM	ROOF MOUNTED	UPBLAST CENTRIFUGAL	1200	0.5	1282	DIRECT	0.19	1/4	1400	208/1/60	TEFC	72	61	69	GREENHECK/CUE-120-VG	1-6,10
EF-05	RESTROOMS AND JANITOR	INDOOR	CEILING EXHAUST FAN	190	0.5	1000	DIRECT	-	83W	-	115/1/60	TENV	-	-	31	GREENHECK/SP-A250	7-8,10,11
SF-01	MEETING ROOM	INDOOR	CENTRIFUGAL INLINE	290	0.5	1520	DIRECT	0.06	1/10	1725	208/1/60	TENV	65	54	40	GREENHECK/SQ-90-VG	1-5,9,10
SF-02	KITCHEN	INDOOR	CENTRIFUGAL INLINE	60	0.4	1602	DIRECT	0.03	1/15	1750	208/1/60	TENV	58	47	30	GREENHECK/SQ-70-VG	1-5,9,10
SF-03	STORAGE	INDOOR	CENTRIFUGAL INLINE	170	0.5	1188	DIRECT	0.06	1/4	1725	208/1/60	TENV	66	55	51	GREENHECK/SQ-98-VG	1-5,9,10

OPTIONS-ACCESSORIES:
1. CONTROL - 0-10VDC INPUT, HAND/OFF/AUTO TO PROVIDE TWO SPEED CONTROL
2. UL/CUL 705 LISTED - "POWER VENTILATORS"
3. SWITCH, NEMA-4X, TOGGLE
4. COATED WITH HI-PRO POLYESTER, CONCRETE GRAY-RAL 7023
5. DAMPER SHIPPED LOOSE, INLINE, BD-330-PB-14X14, GRAVITY OPERATED
6. 14" HIGH ROOF CURB
7. MOTOR WITH THERMAL OVERLOAD
8. ADJUSTABLE EASY INSTALLATION MOUNTING BRACKET
9. SPRING, HANGING, 2 INCH ISOLATOR PN: 855858, INCL. 4 ISOLATORS AND 4 BRACKETS
10. DISCONNECT PROVIDED BY VENDOR IN ACCORDANCE WITH 26 05 15 - INDUSTRIAL CONTROL PANELS
11. MOTOR STARTED PROVIDED BY VENDOR

ELECTRIC UNIT HEATER SCHEDULE

EQUIPMENT TAG NO	SERVICE	TYPE	RATED (CFM)	HEATING OUTPUT KW	V-PH-CY	MANUFACTURER & MODEL NUMBER	OPTIONS AND ACCESSORIES
EUH-01	MECHANICAL ROOM	HOSE DOWN CORROSION RESISTANT	405	3	208/1/60	CHROMALOX/HD3D-300	1-5

OPTIONS AND ACCESSORIES:
1. REMOTE THERMOSTAT TO BE MOUNTED ON THE WALL
2. DISCONNECT PROVIDED BY VENDOR
3. WALL MOUNTING BRACKET
4. SELECTOR SWITCH AND PILOT LIGHT
5. MANUAL RESET CUTOUT

VRF HEAT PUMP OUTDOOR UNIT SCHEDULE

EQUIPMENT NO	SERVICE	COOLING CAPACITY [BTU/HR]	HEATING CAPACITY [BTU/HR]	EER	IEER	REFRIGERANT PIPE SIZE		ELECTRICAL			REFRIGERANT TYPE	WEIGHT (LBS)	MANUFACTURER OR EQUAL	MODEL	ASSOCIATED UNIT	OPTION AND ACCESSORIES
						GAS PIPE CONNECTION (INCHES)	LIQUID PIPE (INCHES)	V/PH/CY	MCA (A)	MOCP (A)						
CU-01	ELECTRICAL ROOM	254936	237567	11.0	21.6	1-3/8	3/4	208/3/60	89.9	90	R-32	1525	DAIKIN	RXYA264AATJA	AC-01 TO 05	1-5,6
CU-02	MEETING ROOM, STORAGE ROOM ENTRY, KITCHEN	114000	114000	11.1/11.1	22.8/20.0	7/8	1/2	208/3/60	40.0	45	R-32	739	DAIKIN	RXYA120AATJA	AC-06 TO 11	1-4,6

OPTIONS-ACCESSORIES:
1. COOLING CAPACITY BASED ON 95°F DB & 75'F WB OUTDOOR TEMPERATURE, 80°F DW/ 67°F WB INDOOR AIR TEMPERATURE
2. HEATING CAPACITY BASED ON 47°F DB & 43°F WB OUTDOOR TEMPERATURE, 70°F DW/ 60°F WB INDOOR AIR TEMPERATURE
3. CENTRALIZED REMOTE CONTROLLER
4. DISCONNECT SWITCH PROVIDED BY VENDOR IN ACCORDANCE WITH 26 05 15 - INDUSTRIAL CONTROL PANELS.
5. COMBINATION OF RXYA120AATJA + RXYA144AATJA OR EQUIVALENT MODEL FROM APPROVED MANUFACTURER
6. DKN PLUS INTERFACE FOR BACNET MSTP COMMUNICATION

VRF HEAT PUMP INDOOR UNIT SCHEDULE

EQUIPMENT NO	SERVICE	TYPE	DX COOLING		HEATING CAPACITY [BTU/ HR]	AIR FLOW		ELECTRICAL			MANUFACTURER OR EQUAL	MODEL	ASSOCIATED UNIT	OPTION AND ACCESSORIES
			TOTAL COOLING CAPACITY [BTU/HR]	SENSIBLE COOLING CAPACITY [BTU/HR]		SUPPLY AIR [CFM]	OUTSIDE AIR [CFM]	V/PH/CY	MCA (A)	MOP (A)				
AC-01 TO 05	ELECTRICAL ROOM	CEILING CASSETTE	48000	35000	54000	1253/971/741	N/A	208-230/1/60	1.6	15	DAIKIN	FXFA48AAVJU	CU-01	1-4,6
AC-06	MEETING ROOM	CONCEALED DUCTED UNIT	12000	9700	13500	335/283/247	145	208-230/1/60	0.9	15	DAIKIN	FXSA12AAVJU	CU-02	1-4,6
AC-07	ENTRY	CEILING CASSETTE	5800	4700	6500	300/247/229	N/A	208-230/1/60	0.3	15	DAIKIN	FXZA05AAVJU	CU-02	1-4,6
AC-08	KITCHEN	CONCEALED DUCTED UNIT	12000	9700	13500	335/283/247	N/A	208-230/1/60	0.9	15	DAIKIN	FXSA12AAVJU	CU-02	1-4,6
AC-09	STORAGE ROOM	CONCEALED DUCTED UNIT	54000	38600	60000	1377/1183/989	140	208-230/1/60	3.3	15	DAIKIN	FXSA54AAVJU	CU-02	1-4,6
AC-10	MEETING ROOM	CONCEALED DUCTED UNIT	12000	9700	13500	335/283/247	N/A	208-230/1/60	0.9	15	DAIKIN	FXSA12AAVJU	CU-02	1-4,6
AC-11	KITCHEN	CONCEALED DUCTED UNIT	12000	9700	13500	335/283/247	N/A	208-230/1/60	0.9	15	DAIKIN	FXSA12AAVJU	CU-02	1-4,6

OPTIONS-ACCESSORIES:
1. DCM601B71 INTELLIGENT TOUCH MANAGER
2. DECORATION PANEL, WHITE
3. MERV 13 FILTER BOX
4. INTEGRAL CONDENSATE PUMP
5. DISCONNECT PROVIDED BY VENDOR IN ACCORDANCE WITH 26 05 15 - INDUSTRIAL CONTROL PANELS.
6. PIPE REFNET JOINT FOR THE BRANCHING WITHIN THE REFRIGERANT PIPING NETWORK PER MANUFACTURERS RECOMMENDATIONS

LOUVER SCHEDULE

EQUIPMENT NO	SERVICE	LOCATION	WIDTH (INCHES)	HEIGHT (INCHES)	AIR FLOW (CFM)	FREE AREA (SQFT)	FREE AREA VELOCITY (FPM)	PRESSURE DROP (IN W.G.)	MANUFACTURER AND MODEL	OPTIONS AND ACCESSORIES
L-01	INTAKE	KITCHEN	16	16	60	0.73	137	0.01	RUSKIN / ELF6375DXH	1
L-02	EXHAUST	RESTROOM	16	16	190	0.73	260	0.01	RUSKIN / ELF6375DXH	1
L-03	INTAKE	MEETING ROOM	16	16	290	0.73	397	0.03	RUSKIN / ELF6375DXH	1
L-04	INTAKE	STORAGE ROOM	16	16	140	0.73	192	0.01	RUSKIN / ELF6375DXH	1
L-05	INTAKE	MECHANICAL ROOM	32	32	1200	1.68	713	0.06	RUSKIN / ACL1245	1,2
L-06 TO 08	EXHAUST	CHEMICAL ROOM	24	24	1030	1.89	546	0.04	RUSKIN / ELF6375DXH	1
L-09	INTAKE	KITCHEN	16	16	600	0.73	822	0.11	RUSKIN / ELF6375DXH	1

OPTIONS & ACCESSORIES:
1. BIRD SCREEN
2. ACOUSTICAL LOUVER

MOTORIZED DAMPER SCHEDULE

EQUIPMENT TAG	SERVICE	LOCATION	WIDTH (INCHES)	HEIGHT (INCHES)	AIR FLOW (CFM)	MANUFACTURER AND MODEL	OPTIONS AND ACCESSORIES
MD-01	KITCHEN VENTILATION	KITCHEN	16	16	60	RUSKIN / CD-50	1
MD-03	MEETING ROOM VENTILATION	MEETING ROOM	16	16	290	RUSKIN / CD-50	1
MD-04	STORAGE VENTILATION	STORAGE	16	16	140	RUSKIN / CD-50	1
MD-05	MECHANICAL ROOM VENTILATION	MECHANICAL ROOM	32	32	900	RUSKIN / CD-50	1
MD-09	KITCHEN MAKE UP AIR	KITCHEN	16	16	600	RUSKIN / CD-50	1

OPTIONS & ACCESSORIES:
1. ALUMINUM OPPOSED BLADE DAMPER WITH 120V MOTORIZED ACTUATOR (2 POSITION, SPRING CLOSE, POWER OPEN)

NO.	DATE	BY	REVISION

NOTICE
0 ½ 1
IF THIS BAR DOES NOT MEASURE 1" THEN DRAWING IS NOT TO SCALE

RK DESIGNED
SP DRAWN
SHS CHECKED

REGISTERED PROFESSIONAL ENGINEER 99804PE OREGON MAY 10, 2022 SHIVANI AMOL SAPTARSHY
EXPIRES: 06/30/2028

BID SET

consor
Stantec

South Fork WATER
PURE WATER SINCE 1915

WATER QUALITY SYSTEMS BUILDING

HVAC

SCHEDULES - I

PROJECT NO.: 21-3045 | SCALE: | DATE: AUGUST 2026

SHEET H-601

C:\pwworkdir\d0513047\0609600H-601.dwg GA-02 7/27/2026 2:56 PM RYAKIM 25.0s (LMS Tech)

MAKE-UP AIR UNIT WITH GAS HEATING SCHEDULE

EQUIPMENT NUMBER	SERVICE	LOCATION	DESIGN AIRFLOW HIGH (CFM)		DESIGN AIRFLOW LOW (CFM)		FAN SECTION				HEATING SECTION (NATURAL GAS)				TEMPERATURE RISE		ELECTRICAL				WEIGHT (LBS)	MANUFACTURER LANUFACT MODEL NO.	OPTIONS & ACCESSORIES
			SUPPLY	OUTDOOR AIR	SUPPLY	OUTDOOR AIR	OPERATING BHP	MOTOR HP	ESP (IN WG)	SPEED (RPM)	BURNER TYPE	INPUT (MBH)	OUTPUT (MBH)	GAS PRESSURE (IN WC)	MIN (F)	MAX (F)	V/P/C	MCA (A)	MOCP (A)	FLA	(EXCLUDING CURB)		
MAU-01	CHEMICAL ROOM	OUTDOOR	3100	3100	1550	1550	1.65	2	1.5	1673	INDIRECT	200	162	6	3	48.3	460/3/60	4.9	15	3.9	1569	GREENHECK/ RV-40-0-G-F1	1-17

OPTIONS-ACCESSORIES:
1. INSULATION - 2 INCH 2.4# R16 FORM
2. CORROSION RESISTANT FASTENERS
3. FACTORY WIRED VFD
4. FACTORY WIRED NON-FUSED DISCONNECT SWITCH
5. STAINLESS STEEL CONDENSATE DRAIN PAN AND CONNECTION
6. CONDENSATE DRAIN TRAP
7. BMS PROTOCOL - BACNET MSTP
8. HEATING IS LOCKED OUT ABOVE 60 F AMBIENT TEMPERATURE
9. SUPPLY FAN CONTROL - 0-10 VDC FOR TWO SPEED CONTROLS
10. DAMPER CONTROL - 100% OA-NO RECIRCULATION
11. FURNACE CONTROL - 12:1
12. DIRTY FILTER SENSOR(S) - SUPPLY
13. OUTDOOR AIR DAMPER - LOW LEAKAGE
14. SUPPLY AIR FILTERS-2' MERV 8, 2-20X20X2, 2-20X24X2
15. DISCONNECT PROVIDED BY VENDOR IN ACCORDANCE WITH 26 05 15 - INDUSTRIAL CONTROL PANELS.
16. INTERNALLY MOUNTED CONTROL CENTER WITH 24 VAC CONTROLTRANSFORMER(S)
17. UNIT CONTROLS- FULL FACTORY CONTROL

GRILLE, REGISTER AND DIFFUSER SCHEDULE

TAG NO.	DESCRIPTION	MATERIAL	DAMPER	FINISH	FRAME	MANUFACTURER AND MODEL
A	EXHAUST GRILLE	ALUMINUM	DUCT	CLEAR ANODIZED	DUCT	TITUS 350-FL
B	SUPPLY AIR REGISTER	ALUMINUM	DUCT	WHITE	DUCT	TITUS 300-FL
C	SUPPLY AIR DIFFUSER	ALUMINUM	DUCT	WHITE	SURFACE MOUNTED	TITUS OMNI-AA
D	RETURN AIR DIFFUSER	ALUMINUM	DUCT	WHITE	SURFACE MOUNTED	TITUS PAR-AA

SAFETY SHUTOFF VALVES FOR VRF SYSTEM

TAG NO.	DESCRIPTION	LOCATION	SERVE	ELECTRICAL			MANUFACTURER AND MODEL
				V/PH/CY	MCA	MOCP	
SV-01 TO 03	SAFETY SHUT OFF VALVE	CHEMICAL ROOM	AC-01 TO 05/CU-01	208/60/1	0.9	15	DAIKIN/SVA96AAVJ & SVA60AAVJ
SV-04	SAFETY SHUT OFF VALVE	STORAGE ROOM	AC-07,08, 11/CU-01	208/60/1	0.9	15	DAIKIN/SVA60AAVJ

NOTES:
1. PROVIDES LOW AMBIENT COOLING CAPACITY FOR HP UNITS DOWN TO - 4F

ELECTRIC DUCT HEATER SCHEDULE

EQUIPMENT TAG NO	SERVICE	LOCATION	ELECTRIC HEATER		AIRFLOW (CFM)	ELECTRICAL		DUCT DIMENSIONS		WEIGHT	MANUFACTURER & MODEL	OPTIONS AND ACCESSORIES
			KW	STAGES		V-PH-CY	AMPS	HEIGHT (IN) MIN/MAX	WIDTH (IN) MIN/MAX			
DH-01	MEETING ROOM	MEETING ROOM	3	1	290	480/3/60	3.6	8	8	15 LBS	GREENHECK/IDHE	1-4

OPTIONS-ACCESSORIES:
1. DISCONNECT BY VENDOR IN ACCORDANCE WITH 26 05 15 - INDUSTRIAL CONTROL PANELS.
2. DUCT THERMOSTAT
3. FAN INTERLOCK
4. PILOT SWITCH

NO.	DATE	BY	REVISION

NOTICE
0 ½ 1
IF THIS BAR DOES NOT MEASURE 1" THEN DRAWING IS NOT TO SCALE

RK DESIGNED
SP DRAWN
SHS CHECKED

REGISTERED PROFESSIONAL ENGINEER 99804PE OREGON MAY 10, 2022 SHIVANI AMOL SAPTARISHY
EXPIRES: 06/30/2028

BID SET

consor
Stantec

South Fork WATER
PURE WATER SINCE 1915

WATER QUALITY SYSTEMS BUILDING

HVAC

SCHEDULES - II

PROJECT NO.: 21-3045 | SCALE: | DATE: AUGUST 2026

SHEET H-602

C:\pwworkdir\d0513047\0609600H-602.dwg GA-02 7/27/2026 2:57 PM RYAKIM 25.0s (LMS Tech)

DATE : 7/27/2026 1:15:43 PM

USER : SP

SHEET KEYNOTES

A. REFRIGERANT OR CONDENSATE PIPING SHALL NOT BE INSTALLED ABOVE ANY ELECTRICAL EQUIPMENT, CONDUITS, OR CABLE TRAYS.

B. CONDENSATE DRAIN PIPING SHALL BE SLOPED AT 20 MM PER METER (1/4" PER FOOT) (2% SLOPE).

C. SIZE AND INSTALL REFRIGERANT LINES AND CONDENSATE DRAINS PER MANUFACTURER'S RECOMMENDATIONS.

D. 2" MERV 8 THROW AWAY PLEATED FILTER

E. INSTALL REFRIGERANT SHUTOFF VALVE IN ACCORDANCE WITH MANUFACTURER'S INSTALLATION INSTRUCTIONS. LOCATE SHUTOFF VALVE AND IN ACCESSIBLE AREAS FOR MAINTENANCE.

F. PROVIDE INSULATION FOR VRF SAFETY SHU-OFF VALVE IN ACCORDANCE WITH MANUFACTURER'S INSTALLATION MANUAL. INSULATION SHALL BE GLASS WOOL OR POLYETHYLENE, MINIMUM 3/8" THICK.

G. REFRIGERANT PIPING ROUTING SHOWN IS SCHEMATIC. CONTRACTOR SHALL VERIFY FINAL ROUTING AND REQUIRED CLEARANCES PRIOR TO INSTALLATION AND SHALL SUBMIT SHOP DRAWINGS SHOWING REFRIGERANT PIPE SIZES, LENGTHS, AND ASSOCIATED ACCESSORIES IN ACCORDANCE WITH SPECIFICATION 23 23 00 – REFRIGERANT PIPING.

GENERAL SHEET NOTES

1. ALL PLUMBING SYSTEM, EQUIPMENT, AND COMPONENTS SHALL BE FURNISHED AND INSTALLED IN STRICT COMPLIANCE WITH 2023 OREGON PLUMBING SPECIALTY CODE AND RELATED CODES.
2. PIPING INSULATION SHALL COMPLY WITH 2023 OREGON EFFICIENCY SPECIALTY CODE. COLD WATER PIPING INSULATION THICKNESS SHALL BE 1/2 INCH FOR PIPE SIZES UP TO 1 INCH, AND 1 INCH FOR PIPE SIZES LARGER THAN 1 INCH. HOT WATER PIPING INSULATION THICKNESS SHALL BE 1 INCH FOR PIPE SIZES UP TO 1 INCH AND 1-1/2 INCH FOR PIPE SIZES LARGER THAN 1 INCH.
3. NO PIPING OR DUCTWORK SHALL BE LOCATED ABOVE ANY ELECTRICAL PANEL

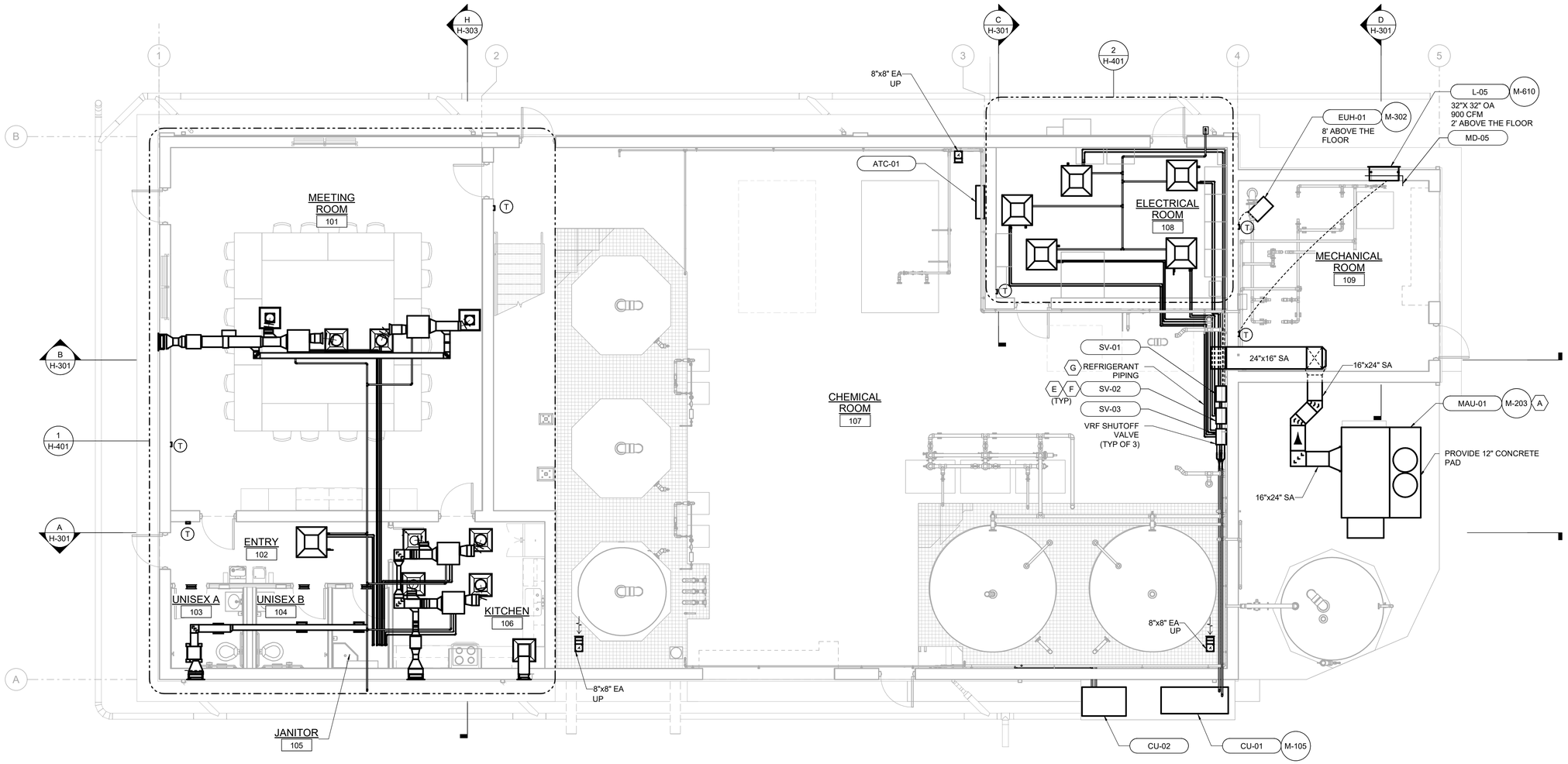

LOW LEVEL FLOOR PLAN

SCALE: 3/16" = 1'-0"

B:\0513047\06009600H_MOD.rvt

NO.	DATE	BY	REVISION

NOTICE
0 ½ 1
IF THIS BAR DOES NOT MEASURE 1" THEN DRAWING IS NOT TO SCALE

RK DESIGNED
SP DRAWN
SHS CHECKED

REGISTERED PROFESSIONAL ENGINEER 99804PE OREGON MAY 10, 2022 SHIVAMI AMOL SAPTARISHY
EXPIRES: 06/30/2028

BID SET

consor
Stantec

South Fork WATER
PURE WATER SINCE 1915

WATER QUALITY SYSTEMS BUILDING

HVAC

FLOOR PLAN

PROJECT NO.: 21-3045 SCALE: 3/16" = 1'-0" DATE: AUGUST 2026

SHEET H-101

DATE : 7/27/2026 1:15:47 PM

USER : SP

GENERAL SHEET NOTES

1. NO PIPING OR DUCTWORK SHALL BE LOCATED ABOVE ANY ELECTRICAL PANEL

SHEET KEYNOTES

A. REFER TO PLUMBING DRAWINGS FOR DETAILS ON THE NATURAL GAS PIPING

B. INSTALL REFRIGERANT SHUTOFF VALVE IN ACCORDANCE WITH MANUFACTURER'S INSTALLATION INSTRUCTIONS. LOCATE SHUTOFF VALVE AND IN ACCESSIBLE AREAS FOR MAINTENANCE.

C. PROVIDE INSULATION FOR VRF SAFETY SHU-OFF VALVE IN ACCORDANCE WITH MANUFACTURER'S INSTALLATION MANUAL. INSULATION SHALL BE GLASS WOOL OR POLYETHYLENE, MINIMUM 3/8" THICK.

D. EACH ATC PANEL SHALL BE POWERED BY ONE 208V 3 PHASE BRANCH CIRCUIT, AND THE VENDOR SHALL CONNECT THEIR LOADS TO THE PHASES TO BALANCE THE LOAD TO THE EXTENT POSSIBLE.

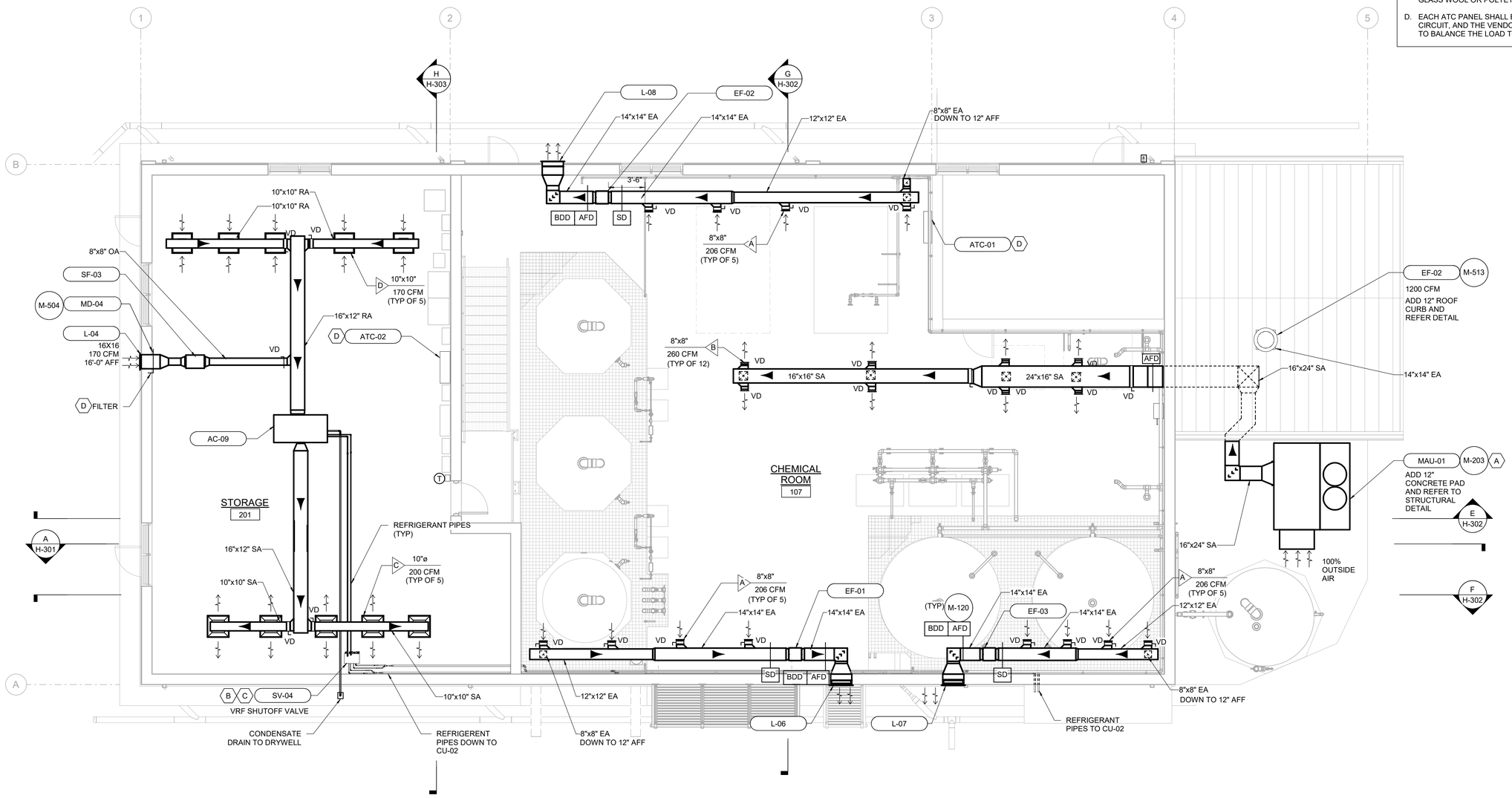

UPPER LEVEL FLOOR PLAN

SCALE: 3/16" = 1'-0"

B:\d0513047\06096001H_MOD.rvt

NO.	DATE	BY	REVISION

NOTICE

0 ½ 1

IF THIS BAR DOES NOT MEASURE 1" THEN DRAWING IS NOT TO SCALE

RK
DESIGNED
SP
DRAWN
SHS
CHECKED

REGISTERED PROFESSIONAL ENGINEER
99804PE
OREGON
MAY 10, 2022
SHIVAMI AMOL SAPTARISHY
EXPIRES: 06/30/2028

BID SET

consor

Stantec

South Fork WATER
PURE WATER SINCE 1915

WATER QUALITY SYSTEMS BUILDING

HVAC

UPPER LEVEL FLOOR PLAN

PROJECT NO.: 21-3045 | SCALE: 3/16" = 1'-0" | DATE: AUGUST 2026

SHEET

H-102

DATE : 7/27/2026 1:15:49 PM

USER : SP

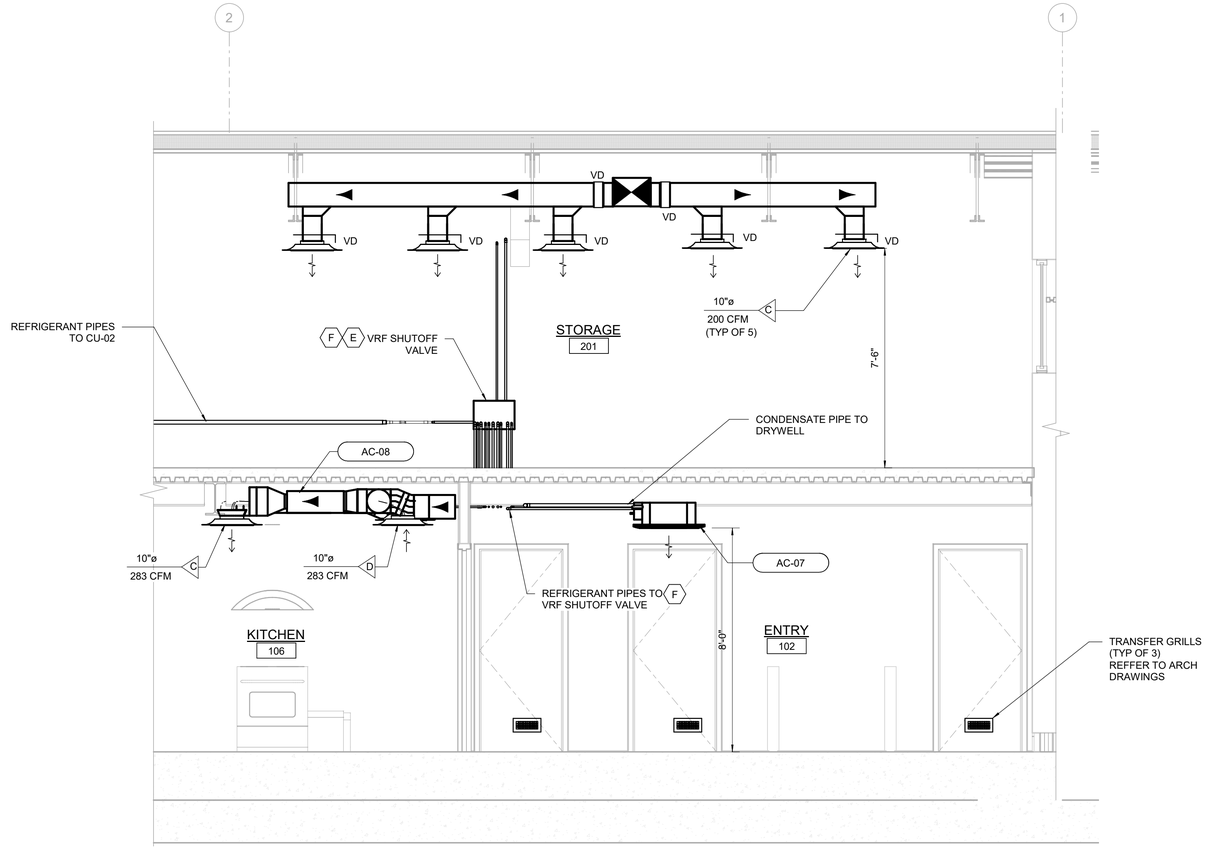

A H-101 SECTION
SCALE: 3/8" = 1'-0"

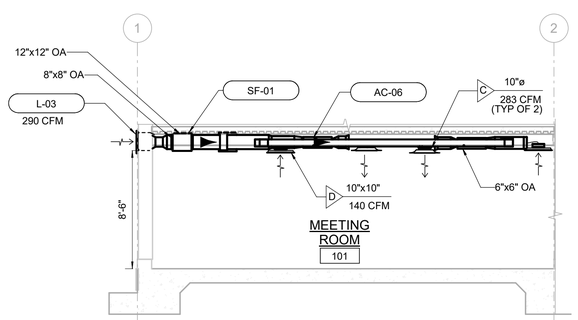

B H-101 SECTION
SCALE: 3/16" = 1'-0"

SHEET KEYNOTES

A. REFRIGERANT OR CONDENSATE PIPING SHALL NOT BE INSTALLED ABOVE ANY ELECTRICAL EQUIPMENT, CONDUITS, OR CABLE TRAYS.

B. CONDENSATE DRAIN PIPING SHALL BE SLOPED AT 20 MM PER METER (1/4" PER FOOT) (2% SLOPE).

C. SIZE AND INSTALL REFRIGERANT LINES AND CONDENSATE DRAINS PER MANUFACTURER'S RECOMMENDATIONS.

D. 2" MERV 8 THROW AWAY PLEATED FILTER

E. INSTALL REFRIGERANT SHUTOFF VALVE IN ACCORDANCE WITH MANUFACTURER'S INSTALLATION INSTRUCTIONS. LOCATE SHUTOFF VALVE AND IN ACCESSIBLE AREAS FOR MAINTENANCE.

F. PROVIDE INSULATION FOR VRF SAFETY SHU-OFF VALVE IN ACCORDANCE WITH MANUFACTURER'S INSTALLATION MANUAL. INSULATION SHALL BE GLASS WOOL OR POLYETHYLENE, MINIMUM 3/8" THICK.

G. REFRIGERANT PIPING ROUTING SHOWN IS SCHEMATIC. CONTRACTOR SHALL VERIFY FINAL ROUTING AND REQUIRED CLEARANCES PRIOR TO INSTALLATION AND SHALL SUBMIT SHOP DRAWINGS SHOWING REFRIGERANT PIPE SIZES, LENGTHS, AND ASSOCIATED ACCESSORIES IN ACCORDANCE WITH SPECIFICATION 23 23 00 – REFRIGERANT PIPING.

GENERAL SHEET NOTES

1. ALL PLUMBING SYSTEM, EQUIPMENT, AND COMPONENTS SHALL BE FURNISHED AND INSTALLED IN STRICT COMPLIANCE WITH 2023 OREGON PLUMBING SPECIALTY CODE AND RELATED CODES.
2. PIPING INSULATION SHALL COMPLY WITH 2023 OREGON EFFICIENCY SPECIALTY CODE. COLD WATER PIPING INSULATION THICKNESS SHALL BE 1/2 INCH FOR PIPE SIZES UP TO 1 INCH, AND 1 INCH FOR PIPE SIZES LARGER THAN 1 INCH. HOT WATER PIPING INSULATION THICKNESS SHALL BE 1 INCH FOR PIPE SIZES UP TO 1 INCH AND 1-1/2 INCH FOR PIPE SIZES LARGER THAN 1 INCH.
3. NO PIPING OR DUCTWORK SHALL BE LOCATED ABOVE ANY ELECTRICAL PANEL

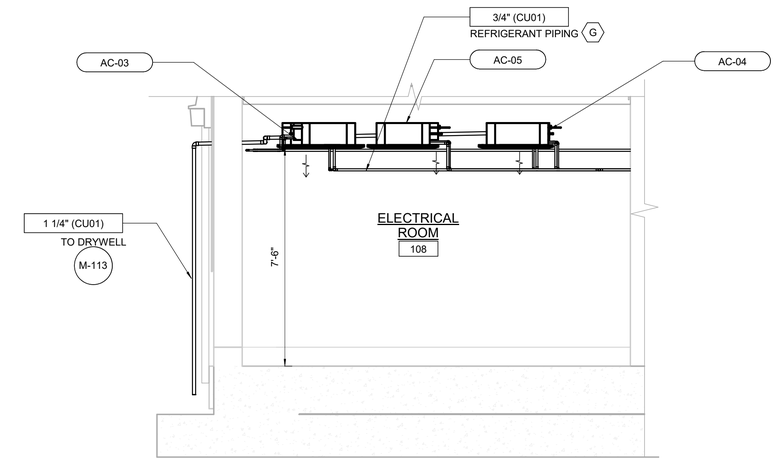

C H-101 SECTION
SCALE: 3/8" = 1'-0"

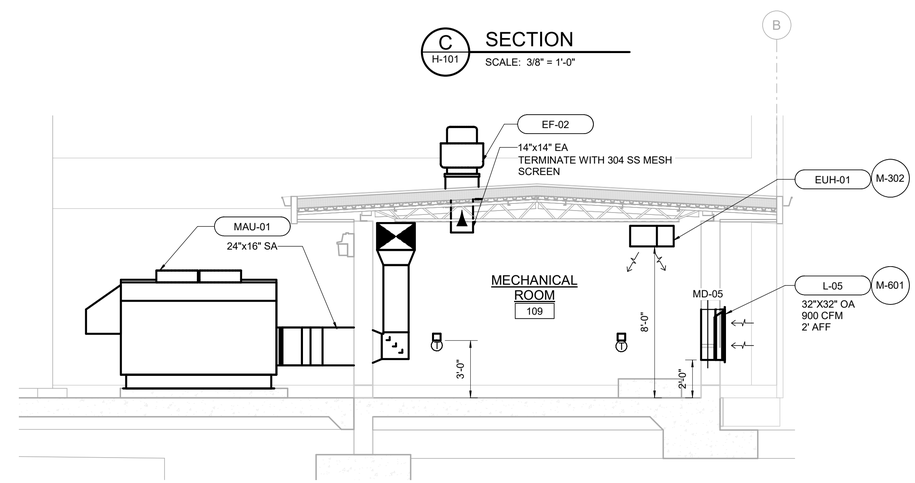

D H-101 SECTION D
SCALE: 1/4" = 1'-0"

B:\051304\06096001H_MOD.rvt

NO.	DATE	BY	REVISION

NOTICE
0 ½ 1
IF THIS BAR DOES NOT MEASURE 1" THEN DRAWING IS NOT TO SCALE

RK
DESIGNED
SP
DRAWN
SHS
CHECKED

REGISTERED PROFESSIONAL ENGINEER 99804PE OREGON MAY 10, 2022 SHIVAMI AMOL SAPTARISHY
EXPIRES: 06/30/2028

BID SET

consor
Stantec

South Fork WATER
PURE WATER SINCE 1915

WATER QUALITY SYSTEMS BUILDING

HVAC

SECTIONS

PROJECT NO.: 21-3045 | SCALE: As indicated | DATE: AUGUST 2026

SHEET
H-301

DATE : 7/27/2026 1:15:50 PM

USER : SP

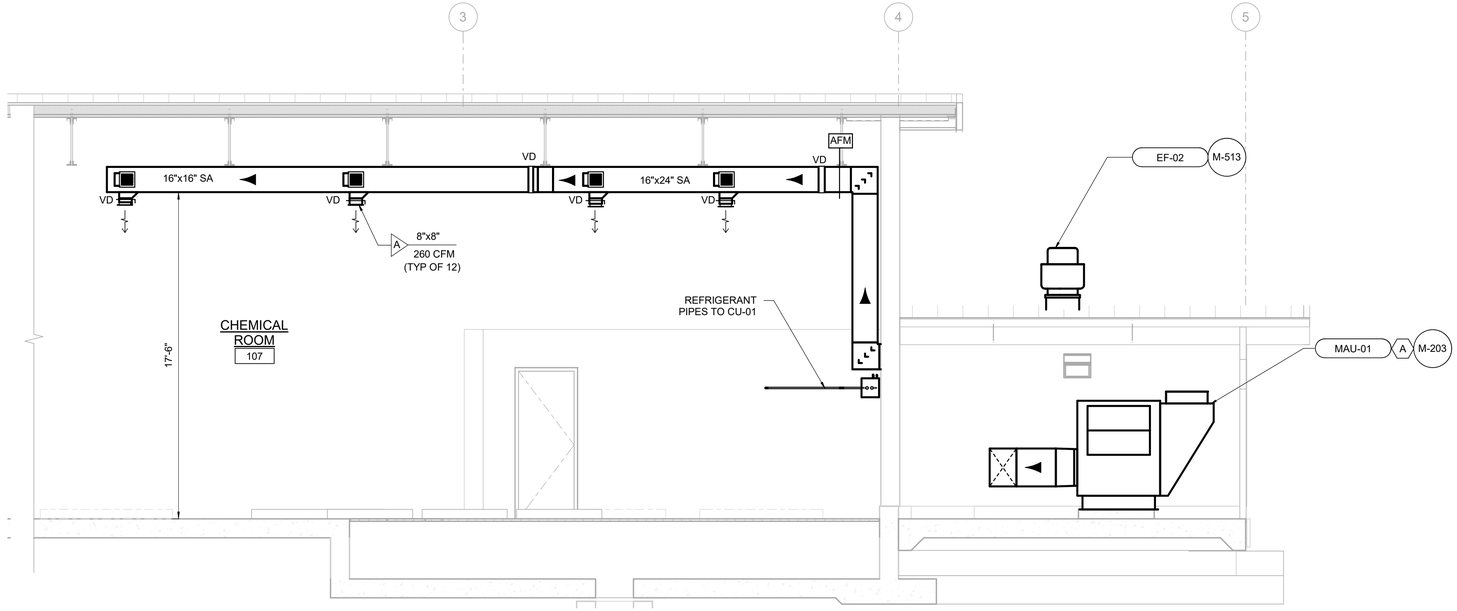

E H-102 SECTION

SCALE: 1/4" = 1'-0"

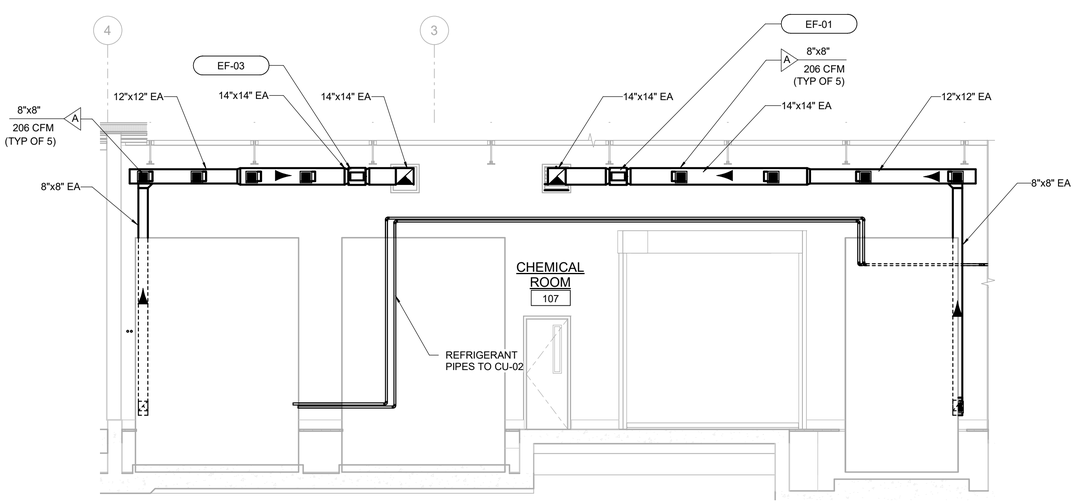

F H-102 SECTION

SCALE: 3/16" = 1'-0"

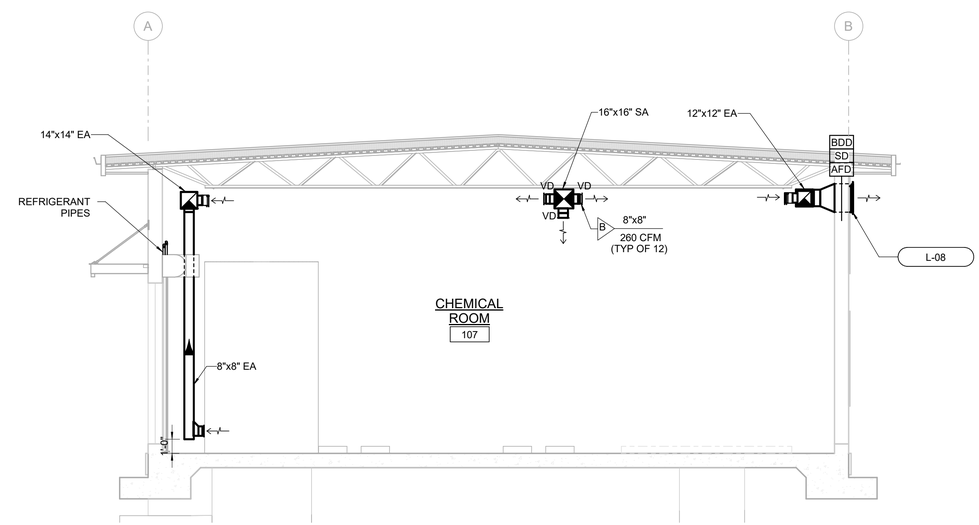

G H-102 SECTION

SCALE: 3/16" = 1'-0"

GENERAL SHEET NOTES

1. ALL PLUMBING SYSTEM, EQUIPMENT, AND COMPONENTS SHALL BE FURNISHED AND INSTALLED IN STRICT COMPLIANCE WITH 2023 OREGON PLUMBING SPECIALTY CODE AND RELATED CODES.
2. PIPING INSULATION SHALL COMPLY WITH 2023 OREGON EFFICIENCY SPECIALTY CODE. COLD WATER PIPING INSULATION THICKNESS SHALL BE 1/2 INCH FOR PIPE SIZES UP TO 1 INCH, AND 1 INCH FOR PIPE SIZES LARGER THAN 1 INCH. HOT WATER PIPING INSULATION THICKNESS SHALL BE 1 INCH FOR PIPE SIZES UP TO 1 INCH AND 1-1/2 INCH FOR PIPE SIZES LARGER THAN 1 INCH.
3. NO PIPING OR DUCTWORK SHALL BE LOCATED ABOVE ANY ELECTRICAL PANEL

SHEET KEYNOTES

A. REFRIGERANT OR CONDENSATE PIPING SHALL NOT BE INSTALLED ABOVE ANY ELECTRICAL EQUIPMENT, CONDUITS, OR CABLE TRAYS.

B. CONDENSATE DRAIN PIPING SHALL BE SLOPED AT 20 MM PER METER (1/4" PER FOOT) (2% SLOPE).

C. SIZE AND INSTALL REFRIGERANT LINES AND CONDENSATE DRAINS PER MANUFACTURER'S RECOMMENDATIONS.

D. 2" MERV 8 THROW AWAY PLEATED FILTER

E. INSTALL REFRIGERANT SHUTOFF VALVE IN ACCORDANCE WITH MANUFACTURER'S INSTALLATION INSTRUCTIONS. LOCATE SHUTOFF VALVE AND IN ACCESSIBLE AREAS FOR MAINTENANCE.

F. PROVIDE INSULATION FOR VRF SAFETY SHU-OFF VALVE IN ACCORDANCE WITH MANUFACTURER'S INSTALLATION MANUAL. INSULATION SHALL BE GLASS WOOL OR POLYETHYLENE, MINIMUM 3/8" THICK.

G. REFRIGERANT PIPING ROUTING SHOWN IS SCHEMATIC. CONTRACTOR SHALL VERIFY FINAL ROUTING AND REQUIRED CLEARANCES PRIOR TO INSTALLATION AND SHALL SUBMIT SHOP DRAWINGS SHOWING REFRIGERANT PIPE SIZES, LENGTHS, AND ASSOCIATED ACCESSORIES IN ACCORDANCE WITH SPECIFICATION 23 23 00 – REFRIGERANT PIPING.

B:\051304\06090600H_MOD.rvt

NO.	DATE	BY	REVISION

NOTICE
0 ½ 1
IF THIS BAR DOES NOT MEASURE 1" THEN DRAWING IS NOT TO SCALE

RK
DESIGNED
SP
DRAWN
SHS
CHECKED

REGISTERED PROFESSIONAL ENGINEER 99804PE OREGON MAY 10, 2022 SHIVAMI AMOL SAPTARISHY
EXPIRES: 06/30/2028

BID SET

consor
Stantec

South Fork WATER
PURE WATER SINCE 1915

WATER QUALITY SYSTEMS BUILDING

HVAC

SECTIONS

PROJECT NO.: 21-3045 | SCALE: As indicated | DATE: AUGUST 2026

SHEET
H-302

DATE : 7/27/2026 1:15:52 PM

USER : SP

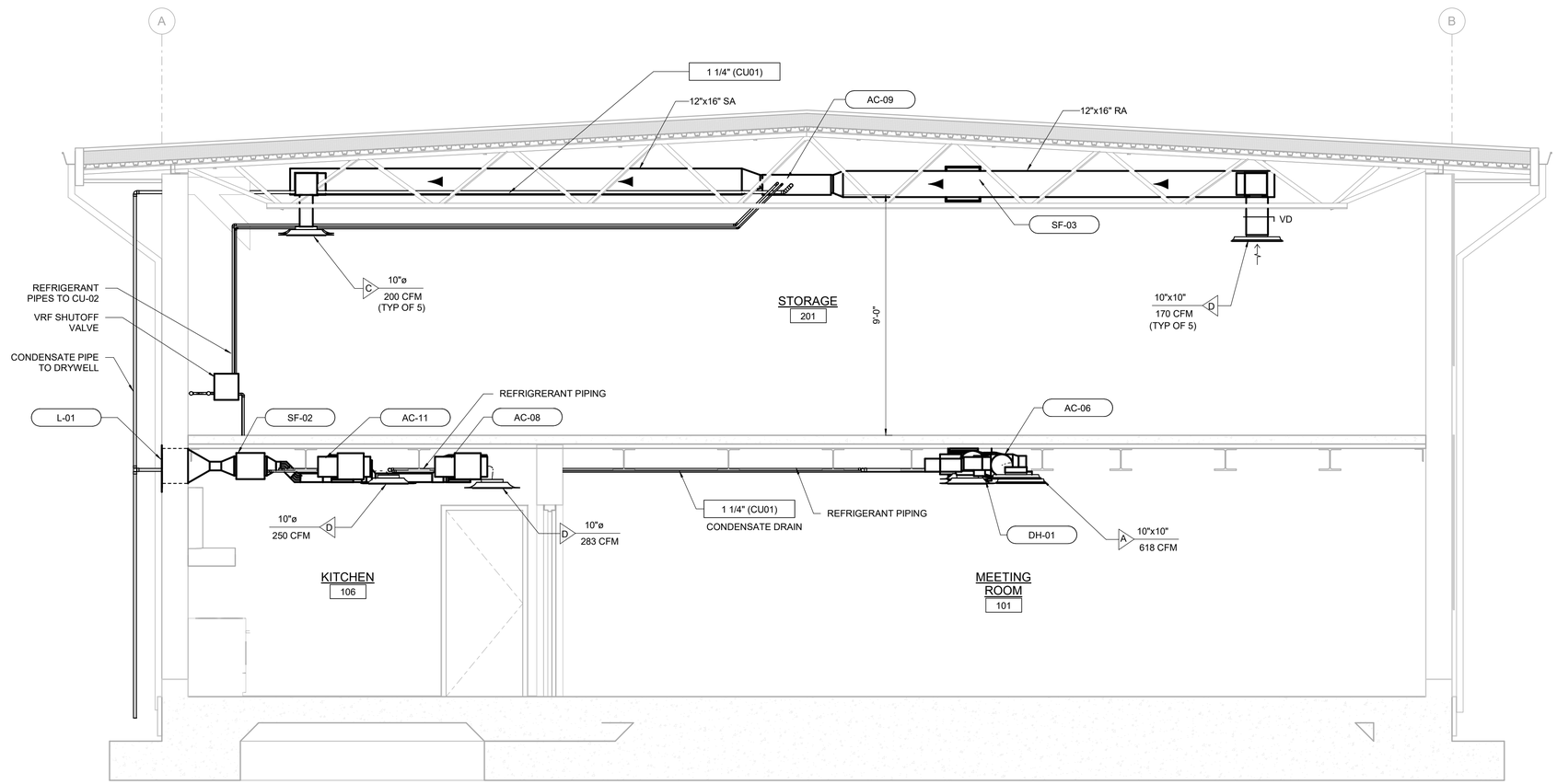

H
H-101
SECTION
SCALE: 3/8" = 1'-0"

B:\d051304710609600H_MOD.rvt

NO.	DATE	BY	REVISION

NOTICE
0 ½ 1
IF THIS BAR DOES NOT MEASURE 1" THEN DRAWING IS NOT TO SCALE

RK
DESIGNED
SP
DRAWN
SHS
CHECKED

REGISTERED PROFESSIONAL ENGINEER
99804PE
OREGON
MAY 10, 2022
SHIVANI AMOL SAPTARISHY
EXPIRES: 06/30/2028

BID SET

consor
Stantec

South Fork WATER
PURE WATER SINCE 1915

WATER QUALITY SYSTEMS BUILDING

HVAC

SECTION

PROJECT NO.: 21-3045 | SCALE: 3/8" = 1'-0" | DATE: AUGUST 2026

SHEET
H-303

DATE : 7/27/2026 1:15:54 PM

USER : SP

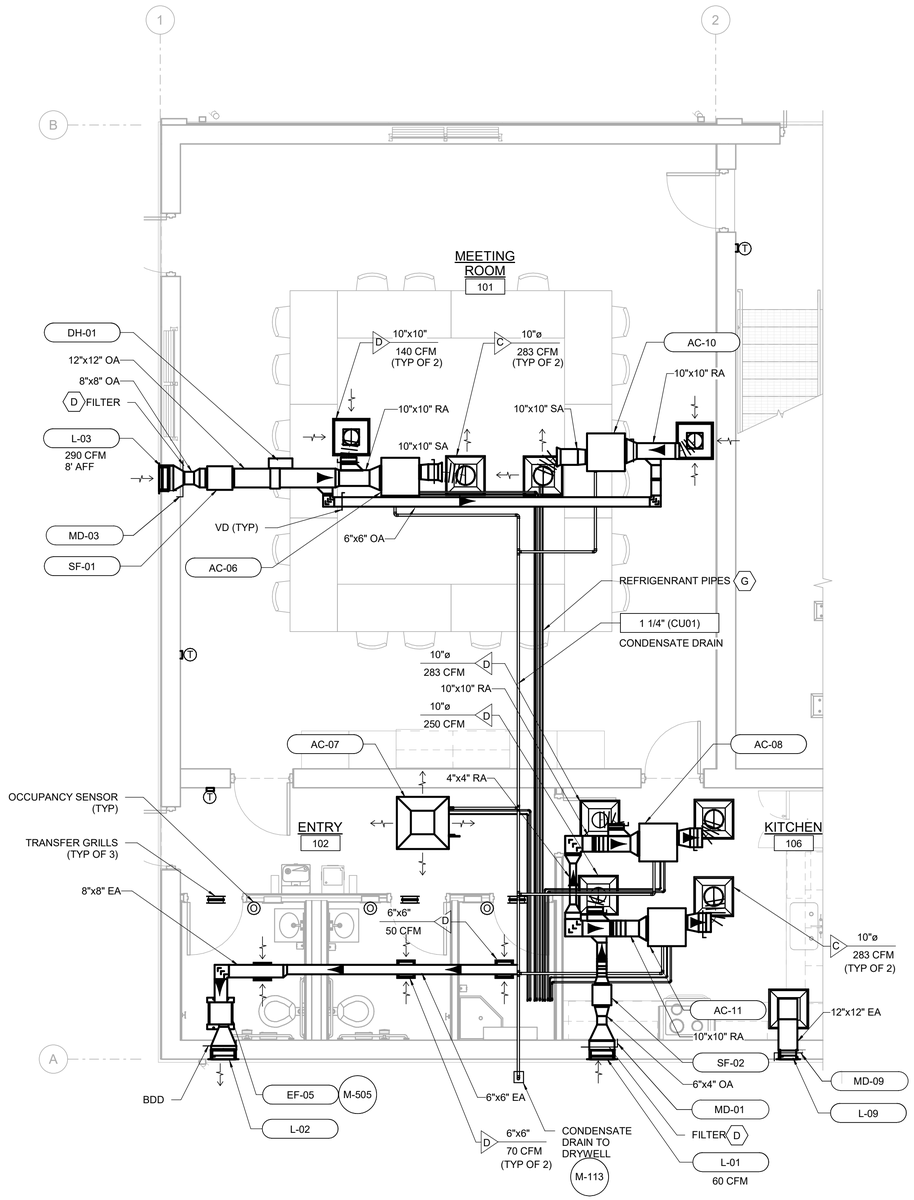

1 H-101 LOW LEVEL ENLARGE PLAN

SCALE: 1/4" = 1'-0"

SHEET KEYNOTES

A. REFRIGERANT OR CONDENSATE PIPING SHALL NOT BE INSTALLED ABOVE ANY ELECTRICAL EQUIPMENT, CONDUITS, OR CABLE TRAYS.

B. CONDENSATE DRAIN PIPING SHALL BE SLOPED AT 20 MM PER METER (1/4" PER FOOT) (2% SLOPE).

C. SIZE AND INSTALL REFRIGERANT LINES AND CONDENSATE DRAINS PER MANUFACTURER'S RECOMMENDATIONS.

D. 2" MERV 8 THROW AWAY PLEATED FILTER

E. INSTALL REFRIGERANT SHUTOFF VALVE IN ACCORDANCE WITH MANUFACTURER'S INSTALLATION INSTRUCTIONS. LOCATE SHUTOFF VALVE AND IN ACCESSIBLE AREAS FOR MAINTENANCE.

F. PROVIDE INSULATION FOR VRF SAFETY SHU-OFF VALVE IN ACCORDANCE WITH MANUFACTURER'S INSTALLATION MANUAL. INSULATION SHALL BE GLASS WOOL OR POLYETHYLENE, MINIMUM 3/8" THICK.

G. REFRIGERANT PIPING ROUTING SHOWN IS SCHEMATIC. CONTRACTOR SHALL VERIFY FINAL ROUTING AND REQUIRED CLEARANCES PRIOR TO INSTALLATION AND SHALL SUBMIT SHOP DRAWINGS SHOWING REFRIGERANT PIPE SIZES, LENGTHS, AND ASSOCIATED ACCESSORIES IN ACCORDANCE WITH SPECIFICATION 23 23 00 – REFRIGERANT PIPING.

GENERAL SHEET NOTES

1. ALL PLUMBING SYSTEM, EQUIPMENT, AND COMPONENTS SHALL BE FURNISHED AND INSTALLED IN STRICT COMPLIANCE WITH 2023 OREGON PLUMBING SPECIALTY CODE AND RELATED CODES.
2. PIPING INSULATION SHALL COMPLY WITH 2023 OREGON EFFICIENCY SPECIALTY CODE. COLD WATER PIPING INSULATION THICKNESS SHALL BE 1/2 INCH FOR PIPE SIZES UP TO 1 INCH, AND 1 INCH FOR PIPE SIZES LARGER THAN 1 INCH. HOT WATER PIPING INSULATION THICKNESS SHALL BE 1 INCH FOR PIPE SIZES UP TO 1 INCH AND 1-1/2 INCH FOR PIPE SIZES LARGER THAN 1 INCH.
3. NO PIPING OR DUCTWORK SHALL BE LOCATED ABOVE ANY ELECTRICAL PANEL
4. PROVIDE DRIP PANS BENEATH ALL PIPING ROUTED DIRECTLY ABOVE ELECTRICAL EQUIPMENT

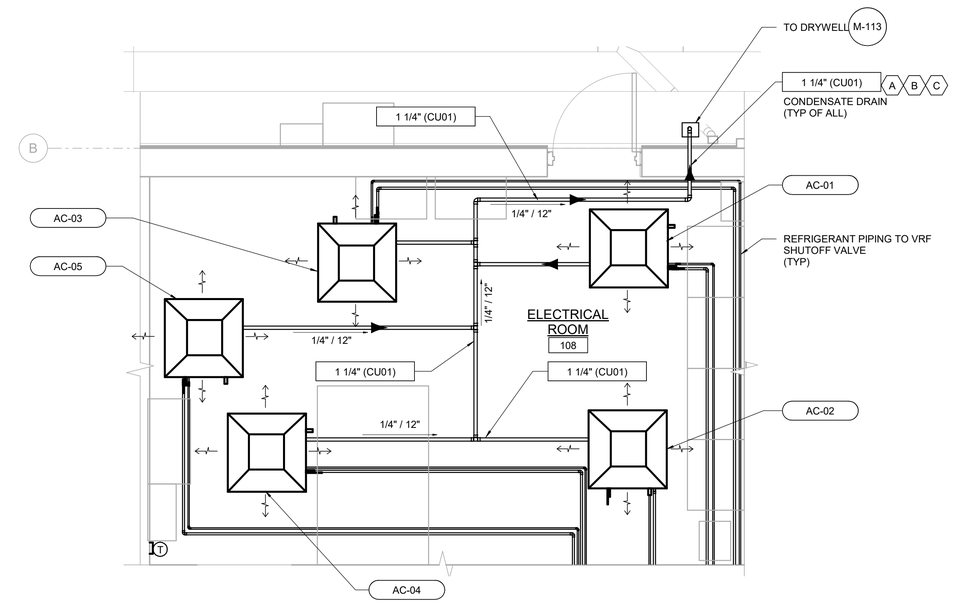

2 H-101 LOW LEVEL ENLARGE PLAN

SCALE: 3/8" = 1'-0"

B:\d0513047\0609600H_MOD.rvt

NO.	DATE	BY	REVISION

NOTICE

0 ½ 1

IF THIS BAR DOES NOT MEASURE 1" THEN DRAWING IS NOT TO SCALE

RK DESIGNED
SP DRAWN
SHS CHECKED

REGISTERED PROFESSIONAL ENGINEER 99804PE OREGON MAY 10, 2022 SHIVANI AMOL SAPTARISHY

EXPIRES: 06/30/2028

BID SET

consor

Stantec

South Fork WATER PURE WATER SINCE 1915

WATER QUALITY SYSTEMS BUILDING

HVAC

ENLARGED PLAN

PROJECT NO.: 21-3045 | SCALE: As indicated | DATE: AUGUST 2026

SHEET H-401

DATE : 7/27/2026 1:15:55 PM

USER : SP

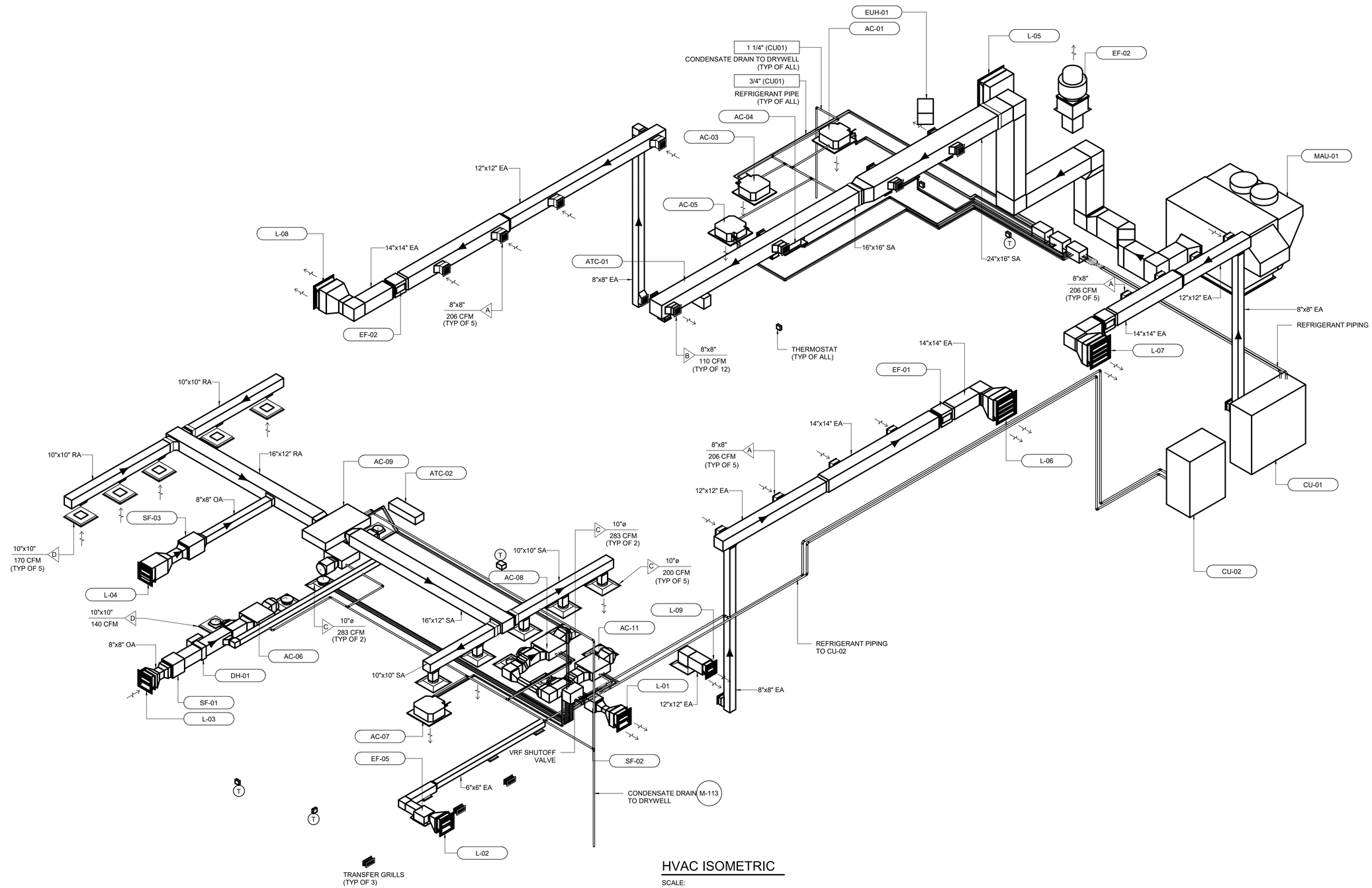

HVAC ISOMETRIC

SCALE:

B:\d0513047\0609600H_MOD.rvt

NO.	DATE	BY	REVISION

NOTICE

0 ½ 1

IF THIS BAR DOES NOT MEASURE 1" THEN DRAWING IS NOT TO SCALE

RK
DESIGNED
SP
DRAWN
SHS
CHECKED

REGISTERED PROFESSIONAL ENGINEER
99804PE
OREGON
MAY 10, 2022
SHIVANI AMOL SAPTARISHY
EXPIRES: 06/30/2028

BID SET

consor

Stantec

South Fork WATER
PURE WATER SINCE 1915

WATER QUALITY SYSTEMS BUILDING

HVAC

ISOMETRIC

PROJECT NO.: 21-3045 | SCALE: | DATE: AUGUST 2026

SHEET

H-901

SINGLE LINE DIAGRAM, SCHEMATIC DIAGRAM SYMBOLOGY AND PLAN SYMBOLOGY

LOC — THERMAL MAGNETIC CIRCUIT BREAKER
LOC = LOCATION
100 — FRAME (AMPS)
20 — TRIP (AMPS)

LOC — MCP CIRCUIT BREAKER
LOC = LOCATION
100 — CONTINUOUS AMPS
MCP — INSTANTANEOUS TRIP
MOTOR CIRCUIT PROTECTOR

LOW VOLTAGE DRAWOUT CIRCUIT BREAKER
100
20
(L-S-I-G)

L	LONG TIME
S	SHORT TIME
I	INSTANTANEOUS
G	GROUND FAULT

X — COMBINATION NEMA RATED STARTER WITH MCP DISCONNECT AND CONTROL POWER TRANSFORMER
40
MCP
ROMAN NUMERAL = NEMA SIZE
X = LOCATION
* = STARTER TYPE

(BLANK)	FULL VOLTAGE NON-REVERSING
FVR	FULL VOLTAGE REVERSING
2S2W	TWO SPEED TWO WINDING
2S1W	TWO SPEED ONE WINDING

VFD — VARIABLE FREQUENCY DRIVE
X = AMPERE RATING

RVSS — REDUCED VOLTAGE SOLID STATE STARTER
X = AMPERE RATING

PACKAGED EQUIPMENT
X = EQUIPMENT SIZE
Y = TYPE (KW, KVA, OR HP AS INDICATED)

GENERATOR
RATINGS AS INDICATED

TRANSFER SWITCH (MANUAL OR AUTOMATIC)
RATINGS AS INDICATED

METERING DEVICE
X = METER TYPE

WHM	WATT HOUR METER
WM	WATT METER
AM	AMMETER
VM	VOLTMETER
PFM	POWER FACTOR METER

480/120 — POTENTIAL TRANSFORMER
RATIO AND NUMBER OF PT'S AS INDICATED
(3)

100/5 (3) — CURRENT TRANSFORMER
RATIO AND NUMBER OF CT'S AS INDICATED

GROUND FAULT CURRENT TRANSFORMER
RATIO AS INDICATED

5A — FUSE
SIZE AS INDICATED

MOTOR
X = HORSEPOWER
* = FULL LOAD AMPS

DELTA-WYE TRANSFORMER WITH
SECONDARY KVA SIZE AND VOLTAGE
RATIO AS INDICATED

MOV — ELECTRICAL MOTOR OPERATED VALVE, WITH INTEGRAL REVERSING STARTER

30A — DISCONNECT SWITCH
SIZE AS INDICATED

30A / 30A — FUSED DISCONNECT SWITCH
SIZE AS INDICATED

SPD — SURGE PROTECTIVE DEVICE

SSM — SOLID STATE METERING DEVICE

SSMP — SOLID STATE MOTOR PROTECTIVE DEVICE

L O R — THREE - POSITION SELECTOR SWITCH

VACUUM OR PRESSURE SWITCH
CLOSE ON RISING PRESSURE

VACUUM OR PRESSURE SWITCH
OPEN ON RISING PRESSURE

FLOAT LEVEL SWITCH
CLOSE ON RISING LEVEL

FLOAT LEVEL SWITCH
OPEN ON RISING LEVEL

NORMALLY OPEN

NORMALLY CLOSED

NORMALLY OPEN HELD CLOSED

NORMALLY CLOSED HELD OPEN

TEMPERATURE SWITCH
CLOSE ON RISING TEMPERATURE

TEMPERATURE SWITCH
OPEN ON RISING TEMPERATURE

FLOW SWITCH
CLOSE ON INCREASING FLOW

FLOW SWITCH
OPEN ON INCREASING FLOW

E-STOP PUSHBUTTON

CONTROL RELAY OR COIL
X = DEVICE

CR	CONTROL RELAY
TD	TIME DELAY RELAY (TIMING RANGE AS INDICATED)
M	MOTOR STARTER
PC	PHOTOCELL

NORMALLY OPEN CONTACT

NORMALLY CLOSED CONTACT

TIMED CONTACTS
CONTACT ACTION IS DELAYED AFTER COIL IS:

ENERGIZED

TD1 — NORMALLY OPEN WITH TIME DELAY CLOSING

TD1 — NORMALLY CLOSED WITH TIME DELAY OPENING

DE-ENERGIZED

TD1 — NORMALLY OPEN WITH INSTANT CLOSING AND TIME DELAY OPENING

TD1 — NORMALLY CLOSED WITH INSTANT OPENING AND TIME DELAY CLOSING

START — NORMALLY OPEN PUSHBUTTON (MOMENTARY)

STOP — NORMALLY CLOSED PUSHBUTTON (MOMENTARY)

OFF ON — NO/NC MAINTAINED PUSHBUTTON

PILOT LIGHT
X = LENS COLOR

R	RED
G	GREEN
A	AMBER
W	WHITE

PILOT LIGHT (PUSH-TO-TEST)
X = LENS COLOR (SEE ABOVE)

HORN

ETM — ELAPSED TIME METER

HEATER

GROUND CONNECTION

CROSSING OF CONDUCTORS - NOT CONNECTED

CROSSING OF CONDUCTORS - CONNECTED

FUSE

VOLTAGE SURGE SUPPRESSOR

CONDUIT AND RACEWAY SYMBOLOGY

EXPOSED OR CONCEALED CONDUIT

CONDUIT RUN (UNDERGROUND OR IN CONCRETE)

CONDUIT RUN (CHANGE IN ELEVATION)

CONDUIT TURNING UP

CONDUIT TURNING DOWN

CONDUITS GROUPED TOGETHER BUT SHOWN AS A SINGLE LINE FOR CLARITY

CONDUIT FROM FLOOR ABOVE TO FLOOR BELOW

CONDUIT CAPPED, OR SEALED

J — JUNCTION BOX OR FITTING

GROUNDING SYMBOLOGY

GROUND ROD AND GROUND WELL

GROUND ROD (3/4" X 10'-0")

GROUND CONNECTION - BOLTED TYPE

GROUND CONNECTION - EXOTHERMIC TYPE

BARE COPPER GROUND TO GROUND WIRE IN SLAB, OR UNDERGROUND GROUND GRID, SIZE AS NOTED

EARTH GROUNDING

MISCELLANEOUS ELECTRICAL SYMBOLOGY

POWER PANEL

DISCONNECT SWITCH

M — MOTOR

T — THERMOSTAT

HORN

COMBINATION STARTER

CR — CARD READER, SECURITY

LIGHTING SYMBOLOGY

X-#a — VAPORTIGHT LED LUMINAIRE
X = LIGHTING PANEL DESIGNATION
# = CIRCUIT NUMBER
a = SWITCH DESIGNATION

VAPORTIGHT LED LUMINAIRE - ON EMERGENCY LIGHTING UPS

WALL MOUNTED LED LUMINAIRE - ON EMERGENCY LIGHTING UPS

SUSPENDED CEILING LED LUMINAIRE - ON EMERGENCY LIGHTING UPS

LED FLOODLIGHT - ON EMERGENCY LIGHTING UPS

EXIT LIGHT, SHOWN WITH TWO ILLUMINATED SIDES, ARROWS INDICATE DIRECTION OF EXIT - ON EMERGENCY LIGHTING UPS

A / * — LUMINAIRE CALLOUT
A = LUMINAIRE TYPE
* = APPROXIMATE MOUNTING HEIGHT AFF
CLG = CEILING MOUNT
(SEE LUMINAIRE SCHEDULE FOR MORE DETAILS)

$ X-#a / * — LIGHT SWITCH
X = ROOM NUMBER CONTROLLED
# = CIRCUIT DESIGNATION
a = SWITCH DESIGNATION
* = SWITCH TYPE

3	3 WAY
4	4 WAY
D	DIMMER
M	MANUAL MOTOR STARTER

LIGHTING PANEL (ELECTRICAL PANELBOARD)

* — LIGHTING CONTROL DEVICE
* = SENSOR TYPE
OS = OCCUPANCY SENSOR
DS = DAYLIGHT SENSOR
(DEVICE FUNCTION MAY BE PART OF OTHER DEVICES)

RECEPTACLES

X-# — 120V DUPLEX RECEPTACLE, NEMA CONFIGURATION 5-20R (WALL MOUNT)
X = PANELBOARD DESIGNATION
# = CIRCUIT DESIGNATION
* = TYPE

WP	WEATHERPROOF
XP	EXPLOSION PROOF
GFCI	GROUND FAULT CIRCUIT INTERRUPTER

FLOOR MOUNTED DUPLEX RECEPTACLE

CEILING MOUNTED DUPLEX RECEPTACLE

— WALL MOUNTED TELECOM OUTLET
(# DENOTES NUMBER OF CABLES, 1 CAT7 STP IF NOT NOTED)

— FLOOR MOUNTED TELECOM OUTLET
(# DENOTES NUMBER OF CABLES, 1 CAT7 STP IF NOT NOTED)

ELECTRICAL ABBREVIATIONS

A	AMPERE, AUTOMATIC
AC	ALTERNATING CURRENT
AF	CIRCUIT BREAKER FRAME SIZE
AM	AMMETER
ANN	ANNUNCIATOR
AS	ADJUSTABLE SPEED
AT	AMPERE TRIP
ATS	AUTOMATIC TRANSFER SWITCH
AUTO	AUTOMATIC
AV	AUDIOVISUAL
AWG	AMERICAN WIRE GAUGE
BATT	BATTERY
BC	BARE COPPER
BKR	BREAKER
C	CONDUIT, CLOSED
CAP	CAPACITOR
CAT7	CATEGORY 6A STP ETHERNET CABLE
CB	CIRCUIT BREAKER
CKT	CIRCUIT
CLF	CURRENT LIMITING FUSE
COM	COMMON
COMM	COMMUNICATIONS
COMP	COMPARTMENT
CP	CONTROL PANEL
CPT	CONTROL POWER TRANSFORMER
CR	CONTROL RELAY, CARD READER
CT	CURRENT TRANSFORMER
DCS	DISTRIBUTED CONTROL SYSTEM
DISC	DISCONNECT
DISTR	DISTRIBUTION
DPDT	DOUBLE POLE DOUBLE THROW
DPST	DOUBLE POLE SINGLE THROW
E	EMERGENCY
EMT	ELECTRICAL METALLIC TUBING
EN	ETHERNET
ENCL	ENCLOSURE
ETM	ELAPSED TIME METER
F	FREQUENCY, FUSE, FIXED
FDR	FEEDER
FLA	FULL LOAD AMPS
FLUOR	FLUORESCENT
FM	FREQUENCY METER
FO	FIBER OPTIC
FVR	FULL VOLTAGE REVERSING
FVNR	FULL VOLTAGE NON-REVERSING
GEN	GENERATOR
GFCI	GROUND FAULT CIRCUIT INTERRUPTER
GND	GROUND
H	HAND
HD	HEAT DETECTOR
HDMI	HIGH-DEFINITION MULTIMEDIA INTERFACE
HH	HAND HOLE
HID	HIGH INTENSITY DISCHARGE
HOA	HAND-OFF-AUTOMATIC
HPS	HIGH PRESSURE SODIUM
HS	HAND SWITCH
Hz	HERTZ
IMC	INTERMEDIATE METALLIC CONDUIT
INCAND	INCANDESCENT
IND	INDICATION
INST	INSTANTANEOUS
I/O	INPUT/OUTPUT
Isc	SHORT CIRCUIT CURRENT, AMPS
ISO	ISOLATION
J,JB	JUNCTION BOX
kA	KILO AMPERES
kAIC	KILO AMP INTERRUPTING CURRENT
kCMIL	KILO CIRCULAR MILS
kVA	KILOVOLT AMPERE
L	LOCAL
LCP	LOCAL CONTROL PANEL
LCS	LOCAL CONTROL STATION
LOC	LOCAL
LOR	LOCAL-OFF-REMOTE
LOS	LOCKOUT STOP PUSHBUTTON
LP	LIGHTING PANEL
LRA	LOCKED ROTOR AMPS
LS	LEVEL SWITCH; LONG SWEEP (CONDUIT FITTING)
LSIG	LONG, SHORT, INSTANTANEOUS, GROUND
LTG	LIGHTING
LTS	LIGHTS
M	MOTOR CONTACTOR COIL
mA	MILLIAMPERE
MCP	MOTOR CIRCUIT PROTECTOR
MFR	MANUFACTURER
MIN	MINIMUM
MINS	MINUTES
MLO	MAIN LUGS ONLY
MOV	MOTOR OPERATED VALVE
MS	MANUAL MOTOR STARTER
MTS	MANUAL TRANSFER SWITCH
SHC	SODIUM HYPOCHLORITE
NEUT	NEUTRAL
NP	NAMEPLATE
O	OPEN, OFF
OL	OVERLOAD
PA	PUBLIC ADDRESS
PB	PUSHBUTTON, PULLBOX
PC	PHOTOCELL
PCM	PROCESS CONTROL MODULE
PF	POWER FACTOR
PFM	POWER FACTOR METER
PH	PHASE
PL	PILOT LIGHT
PNL	PANELBOARD
PNLBD	PANEL
PP	POWER PANELBOARD
POS	POSITION
POT	POTENTIOMETER
PRI	PRIMARY
PT	POTENTIAL TRANSFORMER
PTZ	PAN-TILT-ZOOM
PWR	POWER
R	REMOTE
RECPT	RECEPTACLE
RGS	RIGID GALVANIZED STEEL
RMS	ROOT MEAN SQUARE
RTU	REMOTE TERMINAL UNIT
RVSS	REDUCED VOLTAGE SOLID STATE
SEL SW	SELECTOR SWITCH
SEQ	SEQUENCE
SHLD	SHIELDED
SIG	SIGNAL
SP	SPARE
SP HTR	SPACE HEATER
SPDT	SINGLE POLE DOUBLE THROW
SPST	SINGLE POLE SINGLE THROW
SSM	SOLID STATE METER
SSMP	SOLID STATE MOTOR PROTECTOR
ST, SH	SHUNT TRIP
STP	SHIELDED TWISTED PAIR
STR	STARTER
SSTU	SOLID STATE TRIP UNIT
SW	SWITCH
SWBD	SWITCHBOARD
SWGR	SWITCHGEAR
TACH	TACHOMETER
TB	TERMINAL BOX
TEL	TELEPHONE
TERM	TERMINAL
TM	REPEAT CYCLE TIMER
TD	TIME DELAY RELAY
TS	TEMPERATURE SWITCH
UPS	UNINTERRUPTIBLE POWER SUPPLY
V	VOLTAGE, VOLTS
VA	VOLT AMPERE
VAR	VOLT AMPERE REACTIVE
VCP	VENDOR CONTROL PANEL
VFD	VARIABLE FREQUENCY DRIVE
VM	VOLTMETER
VP	VAPOR PROOF
W	WATTS, WIRE
WM	WATT METER
WP	WEATHERPROOF
WTP	WATER TREATMENT PLANT
XFMR	TRANSFORMER
XMTR	TRANSMITTER
XP	EXPLOSION PROOF

NO.	DATE	BY	REVISION

NOTICE
0 ½ 1
IF THIS BAR DOES NOT MEASURE 1" THEN DRAWING IS NOT TO SCALE

JCD — DESIGNED
JCD — DRAWN
EWM — CHECKED

REGISTERED PROFESSIONAL ENGINEER 54440PE OREGON JAN. 12, 1988 JOHN C. DEERKOP
7/24/2026
EXPIRES:12/31/27

BID SET

consor
Stantec

South Fork WATER
PURE WATER SINCE 1915
WATER QUALITY SYSTEMS BUILDING

ELECTRICAL

SYMBOLS AND ABBREVIATIONS

PROJECT NO.: 21-3045 | SCALE: NONE | DATE: AUGUST 2026

SHEET
GE-1

C:\Projects\SFWB New Chemical Building_2025 Revive_Working\0609600E-001.dwg GE-1 7/24/2026 2:35 PM JDEERKOP 24.2s (LMS Tech)

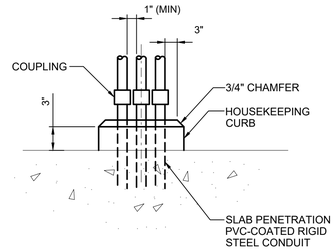

NOTE:

HOUSEKEEPING CURB REQUIRED AT ALL LOCATIONS FOR SINGLE AND MULTIPLE RISERS.

E203 – CONCRETE HOUSEKEEPING CURB NON-HAZARDOUS LOCATIONS

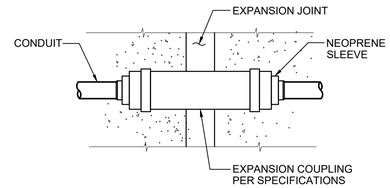

NOTE:

PROVIDE EXTERNAL BONDING JUMPER WITH METALLIC CONDUIT AND WHEN COUPLING HAS NO INTERNAL JUMPER.

E204 – EXPANSION COUPLING NO SCALE

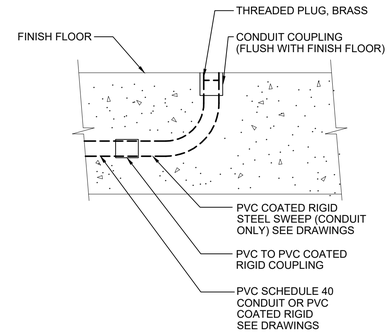

E206 – CONDUIT TERMINATION FOR FUTURE EQUIPMENT

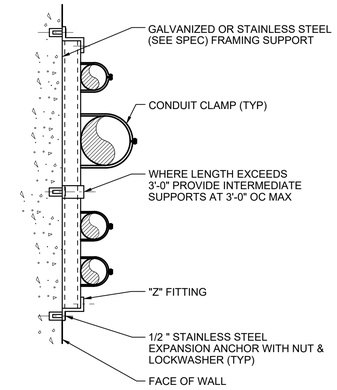

E212 – CONDUIT SUPPORT, FLUSH MOUNT NO SCALE

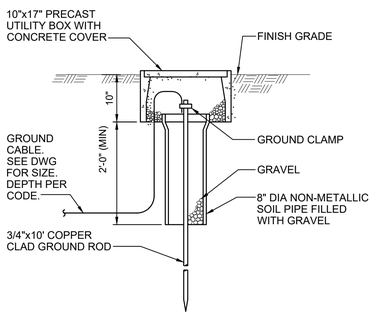

E303 – GROUND ROD AND WELL NO SCALE

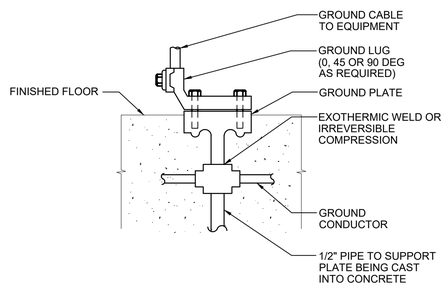

NOTE:

1. ALL BOLTS SHALL BE INSERTED IN BOLT HOLES BEFORE THE INSERT IS EMBEDDED.

E308 – GROUNDING INSERT NO SCALE

GENERAL ELECTRICAL NOTES

1. ALL RACEWAYS AND EQUIPMENT SHALL BE INSTALLED AND GROUNDED IN ACCORDANCE WITH THE NATIONAL ELECTRICAL CODE (NEC) AND APPLICABLE LOCAL CODES.
2. THE CONTRACTOR SHALL VERIFY THE EXACT LOCATION OF TERMINAL BOXES AND CONDUIT ENTRANCES OF ALL EQUIPMENT AGAINST APPROVED SHOP DRAWINGS BEFORE STUBBING UP CONDUITS.
3. REFER TO SPECIFICATION SECTION 26 05 33 FOR REQUIREMENTS RELATED TO FLEXIBLE CONDUIT INSTALLATION.
4. CONDUIT RUNS ARE SHOWN DIAGRAMMATICALLY ONLY AND SHALL BE INSTALLED IN A MANNER TO PREVENT CONFLICTS WITH EQUIPMENT OR STRUCTURAL CONDITIONS. EXPOSED CONDUIT SHALL BE INSTALLED PARALLEL OR PERPENDICULAR TO BEAMS AND WALLS.
5. ALL SURFACE MOUNTED PANELS AND PANELBOARDS ON WALLS OR IN OTHER LOCATIONS CONSIDERED DAMP OR WET SHALL BE MOUNTED SO AS TO MAINTAIN A 1/4 INCH (MINIMUM) AIR SPACE BETWEEN THE ENCLOSURE AND THE WALL.
6. LOCATION OF PULLBOXES ARE APPROXIMATE. THE CONTRACTOR SHALL COORDINATE EXACT LOCATION WITH PIPING AND OTHER UTILITIES. PULLBOXES SHALL BE 6 INCHES (MINIMUM) AWAY FROM PIPING, ETC.
7. THE CONTRACTOR SHALL PROVIDE ADDITIONAL PULLBOXES WHERE REQUIRED TO MAKE A WORKABLE INSTALLATION.
8. THE WORK SHALL BE PERFORMED IN ACCORDANCE WITH THE DETAILS WHETHER OR NOT THEY ARE REFERENCED ON THE DRAWINGS.
9. CONNECTIONS BETWEEN RIGID CONDUIT AND EQUIPMENT SUBJECT TO VIBRATION SHALL BE FLEXIBLE LIQUID-TIGHT CONDUIT.
10. CONDUITS SHALL BE TERMINATED SO AS TO PERMIT NEAT CONNECTION TO EQUIPMENT.
11. ELECTRICAL CONTRACTOR SHALL VISIT THE SITE PRIOR TO BIDDING THE PROJECT TO VERIFY THE SCOPE OF WORK WITH FIELD CONDITIONS. PARTICULAR ATTENTION SHOULD BE GIVEN TO NEW CONDUIT RUNS AT EXISTING SITES.
12. EQUIPMENT LOCKOUTS SHALL BE IN STRICT ACCORDANCE WITH OWNER'S REQUIREMENTS AND PERFORMED BY THE CONTRACTOR.
13. CONTRACTOR SHALL PROVIDE ALL NECESSARY CONDUITS, WIRES, FITTINGS, JUNCTION BOXES AND ALL NECESSARY COMPONENTS SHOWN OR NOT SHOWN ON THE DRAWINGS, TO MAKE THE ELECTRICAL INSTALLATION COMPLETE AND OPERATIONAL. ALL CONDUIT RUNS SHALL BE CONCEALED UNLESS INDICATED OTHERWISE.
14. FOR LIGHTING AND RECEPTACLE SYSTEMS, ONLY CIRCUIT NUMBERS ARE SHOWN. CONTRACTOR SHALL PROVIDE ALL NECESSARY CONDUITS, WIRES, FITTINGS, JUNCTION BOXES AND ALL NECESSARY COMPONENTS SHOWN OR NOT SHOWN ON THE DRAWINGS, TO MAKE THE ELECTRICAL INSTALLATION COMPLETE AND OPERATIONAL. CIRCUIT LOADING SHALL BE AS INDICATED IN THE PANEL SCHEDULES. ALL LIGHTING AND RECEPTACLE CIRCUITS SHALL INCLUDE A GROUND WIRE.
15. RACEWAYS ARE SHOWN AS INDIVIDUAL RUNS FOR CLARITY. CONDUCTORS MAY BE COMBINED IN ACCORDANCE WITH CODES, REGULATIONS AND SPECIFICATIONS.
16. POWER SOURCES, RACEWAYS AND CONDUCTORS FOR VENDOR SUPPLIED AND HVAC EQUIPMENT IS BASED ON A SINGLE VENDOR'S INFORMATION. PROVIDE POWER, RACEWAYS, CONDUCTORS AND APPURTENANCES AS REQUIRED OR RECOMMENDED BY THE EQUIPMENT PROVIDED.

SHEET KEYNOTES

A. ALL BUILDING LIGHT FIXTURES ARE POWERED FROM LIGHTING PANELBOARD LP-433 WHICH IS POWERED BY THE EMERGENCY LIGHTING UNINTERRUPTIBLE POWER SUPPLIES (UPS-432) WITH 90 MINUTES RUNTIME. INDIVIDUAL FIXTURE BATTERIES ARE NOT REQUIRED. THE PARKING LOT LIGHTS ARE NOT UPS BACKED.

ELECTRICAL LUMINAIRE SCHEDULE (A)

SYMBOL	TYPE	LAMPS	LUMENS	POWER (WATTS)	MANUFACT-URER	CATALOG NO. / VOLTAGE	DESCRIPTION
	A	LED	6,033	51 WATTS TOTAL	EATON/ METALUX	4VT3-LD5-6-W-UNV-L840-CD1-SSL-U / 120VAC, 51 WATTS	VAPORTIGHT LENSED FIXTURE, FRP HOUSING, 4FT LED, CLEAR LENS. 5,000K COLOR. DIMMING DRIVER.
	B	LED	N/A	1.3 WATTS TOTAL	EATON/ SURE-LITES	APC7R / 120VAC. 1.3 WATTS	EXIT LIGHT FIXTURE, SINGLE FACED, NEMA 4X POLYCARBONATE BODY, WITH BATTERY BACKUP AND TEST FEATURE.
	D	LED	2,445	17 WATTS TOTAL	EATON/ METALUX	2VT3-LD5-2-W-UNV-L850-CD1-U / 120-277VC	VAPORTIGHT LENSED FIXTURE, FRP HOUSING, 2FT LED, WIDE DIST, 5,000K COLOR. DIMMING DRIVER.
	F	LED	2,494	21.5 WATTS TOTAL	EATON/ METALUX	22FPX-21-EL14W-L840-HCD / 120-277VAC	FLAT PANEL FIXTURE, 2 X 2 FT LED, STANDARD EFFICACY, 4,000K COLOR, DIMMING DRIVER. PROVIDE MOUNTING ACCESSORIES FOR SUSPENDED CEILING AND SEPARATE SEISMIC BRACING.
	H	LED	15,400	120.2 WATTS TOTAL	EATON	PFME15LY-UNV1-66 / 120VAC	LED FLOODLIGHT, 5,000K COLOR, 120 DEGREE DISTRIBUTION. DIMMING DRIVER. CAN BE AIMED UPWARD. WET LOCATION LABEL.
	I	LED	3,351	29 WATTS TOTAL	EATON	VMV 3LJ/UNV1 / 120-277VAC	LED FLOODLIGHT, 5,000K COLOR, ANGLED STANTION MOUNT.
	P	LED	9,267	71 WATTS TOTAL	LITHONIA	KAD LED-40C-530-40K-R5-MVOLT-SPD04-PIRH1FC3V-DDBXD, 20FT POLE / 120-277VAC	POLE MOUNTED AREA LUMINAIRE, DARK BRONZE HOUSING, 40 LEDS, 4,000K COLOR, TYPE V DISTRIBUTION, DIMMING DRIVER, PHOTOCELL, MOTION SENSOR CONTROL FOR 50% REDUCTION. 20 FT SQUARE NON-TAPERED ALUMINUM POLE WITH HANDHOLE, 4" ARM. FIXTURES SHOWN ON CIVIL DRAWINGS C-106 AND C-109.
	U	LED	2,189	20.1 WATTS TOTAL	COOPER/ INVUE	ENT-SA1A-727-U-T4FT-BK-MS/DIM-L20 / 120-277VAC	LOW PROFILE WALL PACK, BLACK ALUMINUM HOUSING, LED, 2,700K COLOR, PHOTOCELL, TYPE IV FORWARD THROW DISTRIBUTION, DIMMING DRIVER, PHOTOCELL, MOTION SENSOR CONTROL FOR 50% REDUCTION. PROVIDE MOUNTING ACCESSORIES. PROVIDE ONE CONFIGURATION TOOL FOR PROJECT.
	V	LED	2,867	25.4 WATTS TOTAL	COOPER/ INVUE	ENT-SA1B-727-U-T4W-BK-MS/DIM-L20 / 120-277VAC	LOW PROFILE WALL PACK, BLACK ALUMINUM HOUSING, LED, 2,700K COLOR, PHOTOCELL, TYPE IV WIDE DISTRIBUTION, DIMMING DRIVER, PHOTOCELL, MOTION SENSOR CONTROL FOR 50% REDUCTION. PROVIDE MOUNTING ACCESSORIES.

NO.	DATE	BY	REVISION

NOTICE

0 ½ 1

IF THIS BAR DOES NOT MEASURE 1" THEN DRAWING IS NOT TO SCALE

JCD DESIGNED
JCD DRAWN
EWM CHECKED

REGISTERED PROFESSIONAL ENGINEER 54440PE OREGON JAN. 12, 1988 JOHN C. DEERKOP
7/24/2026
EXPIRES: 12/31/27

BID SET

consor
Stantec

South Fork WATER PURE WATER SINCE 1915

WATER QUALITY SYSTEMS BUILDING

ELECTRICAL

STANDARD DETAILS, NOTES AND SCHEDULES

PROJECT NO.: 21-3045 | SCALE: NONE | DATE: AUGUST 2026

SHEET GE-2

C:\Projects\SFWB New Chemical Building_2025 Revive_Working\0609600E-001.dwg GE-2 7/24/2026 2:36 PM JDEERKOP 24.2s (LMS Tech)

GENERAL SHEET NOTES

1. SEE THE GENERAL NOTES ON SHEET GE-2.
2. SEE THE ONE-LINE DIAGRAM AND PANEL SCHEDULES FOR ADDITIONAL INFORMATION.
3. FOR LIGHTING AND RECEPTACLE SYSTEMS, ONLY CIRCUIT NUMBERS ARE SHOWN. CONTRACTOR SHALL PROVIDE ALL NECESSARY CONDUITS, WIRES, FITTINGS, JUNCTION BOXES AND ALL NECESSARY COMPONENTS SHOWN OR NOT SHOWN ON THE DRAWINGS, TO MAKE THE ELECTRICAL INSTALLATION COMPLETE AND OPERATIONAL. CIRCUIT LOADING SHALL BE AS INDICATED IN THE PANEL SCHEDULES. ALL LIGHTING AND RECEPTACLE CIRCUITS SHALL INCLUDE A GROUND WIRE.
4. CIRCUITS FOR PANELBOARDS NOT SHOWN EXPLICITLY ON THE DRAWINGS SHALL BE NUMBERED AS "PAAABB" WHERE "AAA" IS THE PANELBOARD NUMBER AND "BB" IS THE CIRCUIT/POLE NUMBER. USE THE LOWEST CIRCUIT/POLE NUMBER FOR MULTI-POLE BREAKERS.
5. OUTDOOR AREA LIGHTING AND WATER FEATURE ARE SHOWN ON THE CIVIL DRAWINGS.

208/120 VOLTS — Ph: 3 — SURGE PROTECTIVE DEVICE: YES
250 A MAIN BREAKER — W: 4 — PANELBOARD: LP-412, NORMAL POWER, EAST — FEED: BOTTOM
22 kAIC SHORT CIRCUIT — A: 400 — LOCATION: RM 108, ELECTRICAL — MOUNTING: SURFACE

LOAD DESCRIPTION	kVA Ph.A	Ph.B	Ph.C	LTG.	REC.	MIS.	CIR.	BKR.		BKR.	CIR.	MIS.	REC.	LTG.	kVA Ph.A	Ph.B	Ph.C	LOAD DESCRIPTION
SFWB-PLC01B-00 BACKUP POWER	1.44					X	1	20		20	2		X		1.80			RM 107 CHEMICAL, RECPTS
SPARE							3	15		20	4		X			1.80		RM 107 CHEMICAL, RECPTS
SPARE							5	20		20	6		X				1.80	RM 107 CHEMICAL, RECPTS
SFWB-PLC01-02 BACKUP POWER	1.44					X	7	20		20	8		X		0.72			RM 108 ELECTRICAL, RECPTS
SPARE 2P							9	15		20	10		X			0.72		RM 108 ELECTRICAL, RECPTS
--------							11			20	12		X				1.80	RM 109 MECHANICAL, RECPTS
ATC-01 HVAC CONTROLLER	1.19					X	13			20	14							SPARE
RM 107 CHEMICAL 3P		1.68				X	15	60		20	16							SPARE
--------			1.68			X	17			20	18		X				0.72	EXTERIOR, NORTH RECPTS
CU-01 HEAT PUMP, OUTDOOR	6.24					X	19			20	20		X		0.72			EXTERIOR, EAST RECPTS
RM 108 ELECTRICAL 3P		6.24				X	21	90		20	22		X			0.72		EXTERIOR, SOUTH RECPTS
--------			6.24			X	23			20	24							SPARE
SPARE						X	25			30	26	X			2.88			2P SFWB-70G-1-45
-------- 3P						X	27	40			28	X				2.88		SHC GENERATOR CONTROLS
--------						X	29			30	30	X					2.88	2P SFWB-70G-2-45
SPARE 2P							31	30			32	X			2.88			SHC GENERATOR CONTROLS
--------							33			30	34	X				1.62		2P SFWB-82LCP-1-45
SPARE 2P							35	20			36	X					1.62	UTILITY WATER BOOSTER PUMPS
--------							37			30	38							2P SPARE
EUH-01, HEATER 2P		1.50				X	39	30			40							--------
RM 109 MECHANICAL			1.50			X	41			20	42							SPARE
SPARE							43	20			44							--------
SPARE							45	20		30	46							3P SPARE
SPARE							47	20			48							--------
SPARE							49	20		15	50							SPARE
SPARE							51	20		15	52							SPARE
SPARE							53	15		15	54							SPARE
SODA ASH BAG UNLOADER CNTRLS	0.20					X	55	15		20	56							SPARE
SPARE							57	20		20	58							SPARE
CP-01, WATER HEATER CIRC PUMP			0.05			X	59	20		20	60							SPARE
BULK HYPO DILUTION PUMP RECPT	0.36					X	61	15		20	62							SPARE
SPARE							63	15		20	64							SPARE
ATS-400, AUTO TRANSFER SWITCH			0.10			X	65	15		20	66							SPARE
SPARE							67	20		30	68							SPARE
SPARE							69	20		30	70							SPARE
SPARE							71	20		30	72							SPARE
SPARE							73	15			74							--------
SPARE							75	15		20	76							3P SPARE
WATER FEATURE OUTLET, OUTDOOR			0.67		X		77	15			78							--------
SPARE GFCI-B							79	20		20	80	X			0.00			
HEAT TRACE HVAC DRAIN GFCI-B		0.06				X	81	20		20	82	X				0.00		3P SURGE PROTECTIVE DEVICE
BRINE TANK PIPE HEAT TRACE GFCI-B			0.26			X	83	15		20	84	X					0.00	
	10.87	9.49	10.50				TOTAL				TOTAL				9.00	7.74	8.82	

PHASE LOAD			TOTAL LOAD	
19.87	17.22	19.31	56.4 kVA	(CONNECTED LOAD, NOT DEMAND LOAD)

208/120 VOLTS — Ph: 3 — SURGE PROTECTIVE DEVICE: YES
150 A MAIN BREAKER — W: 4 — PANELBOARD: LP-422, NORMAL POWER, WEST — FEED: BOTTOM
14 kAIC SHORT CIRCUIT — A: 200 — LOCATION: RM 201, STORAGE — MOUNTING: SURFACE

LOAD DESCRIPTION	kVA Ph.A	Ph.B	Ph.C	LTG.	REC.	MIS.	CIR.	BKR.		BKR.	CIR.	MIS.	REC.	LTG.	kVA 1.26	Ph.B	Ph.C	LOAD DESCRIPTION
ATC-02, HVAC CONTROLLER	3.88					X	1			20	2		X		0.72			RM 101 MEETING, CONTRLD RECPTS
RM 201 STORAGE 3P		3.88				X	3	40		20	4		X			0.72		RM 101 MEETING, CONTRLD RECPTS
--------			4.05			X	5			20	6		X				0.36	RM 101 MEETING, CONTRLD RECPTS
CU-02 HEAT PUMP, OUTDOOR	2.53					X	7			20	8		X		0.90			RM 101 MEETING, CONTRLD RECPTS
RM 201, 101, 106, 102 3P		2.53				X	9	40		20	10		X			1.08		RM 101 MEETING, CONTRLD RECPTS
--------			2.53			X	11			20	12		X				1.08	RM 102, 103, 104, 105, RECPTS
							13			20	14		X		1.08			RM 106 KITCHEN, CONTRLD RECPTS
SPARE 3P							15	60		20	16		X			1.08		RM 106 KITCHEN, CONTRLD RECPTS
--------							17			20	18		X				1.08	RM 106 KITCHEN, RECPTS
							19			20	20		X		1.26			RM 106 KITCHEN, RECPTS
SPARE 3P							21	30		20	22		X			1.14		RM 106 KITCHEN, FRIDGE RECPT
--------							23			20	24		X				1.20	RM 106 KITCHEN, MICROWAV RECPT
							25			15	26		X		1.53			RM 106 KITCHEN, OVEN & HOOD
SPARE 3P							27	15		15	28		X					SPARE
--------							29			20	30		X					SPARE
SPARE 2P							31	20		20	32		X		0.90			RM 201 STORAGE, CONTRLD RECPTS
--------							33			20	34		X			0.90		RM 201 STORAGE, CONTRLD RECPTS
SPARE 2P							35	20		20	36		X				1.08	RM 201 STORAGE, CONTRLD RECPTS
--------							37			20	38		X		0.72			RM 201 STORAGE, CONTRLD RECPTS
SPARE 2P							39	20		20	40		X			0.72		RM 201 STORAGE, CONTRLD RECPTS
--------							41			20	42							SPARE
SPARE 2P							43	15		20	44		X		0.72			EXTERIOR, WEST RECPTS
--------							45			20	46							SPARE
SPARE 2P							47	15		20	48							SPARE
--------							49			20	50							SPARE
PARKING LOT LIGHTS 2P		0.07		X			51	15		20	52							SPARE
TYPE "P" FIXTURES			0.07	X			53			20	54							SPARE
SPARE							55	20		20	56							SPARE
SPARE							57	20		20	58							SPARE
SPARE							59	20		20	60							SPARE
SPARE							61	20		20	62							SPARE
SPARE							63	20		20	64							SPARE
SPARE							65	20		20	66							SPARE
SPARE							67	15		20	68							SPARE
SPARE							69	15		20	70							SPARE
SPARE							71	15		20	72							SPARE
SPARE							73	15		20	74							SPARE
SPARE							75	15		20	76							SPARE
SPARE							77	15		20	78							SPARE
SPARE GFCI-B							79	20			80	X			0.00			
SPARE GFCI-B							81	20		30	82	X				0.00		3P SURGE PROTECTIVE DEVICE
HEAT TRACE HVAC DRAIN GFCI-B			0.13			X	83	20			84	X					0.00	
	6.41	6.41	6.58				TOTAL				TOTAL				7.11	5.64	4.80	

PHASE LOAD			TOTAL LOAD	
13.52	12.05	11.38	37.0 kVA	(CONNECTED LOAD, NOT DEMAND LOAD)

208/120 VOLTS — Ph: 3 — SURGE PROTECTIVE DEVICE: NO — FED FROM UPS-432
60 A MAIN BREAKER — W: 4 — PANELBOARD: LP-433, LIGHTING, UPS — FEED: BOTTOM
10 kAIC SHORT CIRCUIT — A: 100 — LOCATION: RM 201, STORAGE — MOUNTING: SURFACE

LOAD DESCRIPTION	kVA Ph.A	Ph.B	Ph.C	LTG.	REC.	MIS.	CIR.	BKR.		BKR.	CIR.	MIS.	REC.	LTG.	kVA Ph.A	Ph.B	Ph.C	LOAD DESCRIPTION
RM 101 MEETING, LIGHTS	0.39			X			1	15		15	2			X	1.05			RM 107 CHEMICAL, LIGHTS
RM 102 ENTRY, LIGHTS		0.04		X			3	15		15	4			X		0.81		RM 107 CHEMICAL, LIGHTS
RM 103 & 4 UNISEX A & B, LIGHTS			0.03	X			5	15		15	6			X			1.02	RM 107 CHEMICAL, LIGHTS
RM 105 JANITOR, LIGHTS	0.02			X			7	15		15	8			X	0.10			RM 108 ELECTRICAL, LIGHTS
RM 106 KITCHEN, LIGHTS		0.09		X			9	15		15	10			X		0.10		RM 109 MECHANICAL, LIGHTS
SPARE							11	15		15	12							SPARE
SPARE							13	15		15	14			X	0.51			RM 201 STORAGE, LIGHTS
SPARE							15	15		15	16							SPARE
SPARE							17	15		15	18	X					0.22	EXTERIOR, LIGHTS
SPARE							19	15		15	20							SPARE
SPARE							21	15		15	22							SPARE
SPARE							23	15		15	24							SPARE
	0.40	0.13	0.03				TOTAL				TOTAL				1.66	0.91	1.24	

PHASE LOAD			TOTAL LOAD	
2.06	1.03	1.27	4.4 kVA	(CONNECTED LOAD, NOT DEMAND LOAD)

208/120 VOLTS — Ph: 3 — SURGE PROTECTIVE DEVICE: NO — FED FROM UPS-442
110 A MAIN BREAKER — W: 4 — PANELBOARD: LP-443, SCADA/IT LOADS, UPS — FEED: BOTTOM
10 kAIC SHORT CIRCUIT — A: 125 — LOCATION: RM 201, STORAGE — MOUNTING: SURFACE

LOAD DESCRIPTION	kVA Ph.A	Ph.B	Ph.C	LTG.	REC.	MIS.	CIR.	BKR.		BKR.	CIR.	MIS.	REC.	LTG.	kVA Ph.A	Ph.B	Ph.C	LOAD DESCRIPTION
SFWB-PLC01B-00 CONTROL POWER	1.44					X	1	20		20	2							SPARE
ACCESS CONTROL PANEL, VCP-AC		0.50				X	3	15		20	4							SPARE
BLDG MNGMT PANEL, VCP-BMS			0.20			X	5	15		20	6	X					1.44	IT SERVER RACK, 1 UPPER
SFWB-PLC01-02 CONTROL POWER	1.44					X	7	20		20	8	X			1.44			IT SERVER RACK, 1 LOWER
SPARE							9	15		20	10	X				1.44		IT SERVER RACK, 2 UPPER
SPARE							11	15		20	12	X					1.44	IT SERVER RACK, 2 LOWER
SPARE							13	20		20	14							SPARE
SPARE							15	20		20	16							SPARE
SPARE							17	15		30	18							SPARE
SPARE							19	15		30	20							SPARE
SPARE							21	15		30	22							SPARE
SPARE							23	15		30	24							SPARE
	2.88	0.50	0.20				TOTAL				TOTAL				1.44	1.44	2.88	

PHASE LOAD			TOTAL LOAD	
4.32	1.94	3.08	9.3 kVA	(CONNECTED LOAD, NOT DEMAND LOAD)

208/120 VOLTS — Ph: 3 — SURGE PROTECTIVE DEVICE: NO — FED FROM UPS-452
110 A MAIN BREAKER — W: 4 — PANELBOARD: LP-453, COMPUTER LOADS, UPS — FEED: BOTTOM
10 kAIC SHORT CIRCUIT — A: 125 — LOCATION: RM 201, STORAGE — MOUNTING: SURFACE

LOAD DESCRIPTION	kVA Ph.A	Ph.B	Ph.C	LTG.	REC.	MIS.	CIR.	BKR.		BKR.	CIR.	MIS.	REC.	LTG.	kVA Ph.A	Ph.B	Ph.C	LOAD DESCRIPTION
RM 101 MEETING, UPS RECPTS	0.72					X	1	20		20	2		X		0.90			RM 201 STORAGE, UPS RECPTS
RM 101 MEETING, UPS RECPTS		0.90				X	3	20		20	4		X			0.72		RM 201 STORAGE, UPS RECPTS
RM 101 MEETING, UPS RECPTS			0.36			X	5	20		20	6		X				1.08	RM 201 STORAGE, UPS RECPTS
RM 101 MEETING, UPS RECPTS	0.90					X	7	20		20	8		X		0.72			RM 201 STORAGE, UPS RECPTS
RM 101 MEETING, UPS RECPTS		1.08				X	9	20		20	10		X			0.72		RM 201 STORAGE, UPS RECPTS
RM 101 MEETING, UPS RECPTS, EQPT	0.72		0.43			X	11	20		20	12							SPARE
RM 101 MEETING, UPS RECPTS, EQPT	0.21					X	13	20		20	14							SPARE
SPARE							15	20		20	16							SPARE
SPARE							17	20		20	18							SPARE
SPARE							19	20		20	20							SPARE
SPARE							21	20		20	22							SPARE
SPARE							23	20		20	24							SPARE
	1.83	1.98	0.79				TOTAL				TOTAL				1.62	1.44	1.08	

PHASE LOAD			TOTAL LOAD	
3.45	3.42	1.87	8.7 kVA	(CONNECTED LOAD, NOT DEMAND LOAD)

NO.	DATE	BY	REVISION

NOTICE
0 ½ 1
IF THIS BAR DOES NOT MEASURE 1" THEN DRAWING IS NOT TO SCALE

JCD DESIGNED
JCD DRAWN
EWM CHECKED

REGISTERED PROFESSIONAL ENGINEER 54440PE OREGON JAN. 12, 1988 JOHN C. DEERKOP
7/24/2026
EXPIRES: 12/31/27

BID SET

consor
Stantec

South Fork WATER — PURE WATER SINCE 1915
WATER QUALITY SYSTEMS BUILDING

ELECTRICAL
PANELBOARD SCHEDULES - 1

PROJECT NO.: 21-3045 | SCALE: NONE | DATE: AUGUST 2026

SHEET GE-3

C:\Projects\SFWB New Chemical Building_2025 Revive_Working\0609600E-001.dwg GE-3 7/24/2026 2:36 PM JDEERKOP 24.2s (LMS Tech)

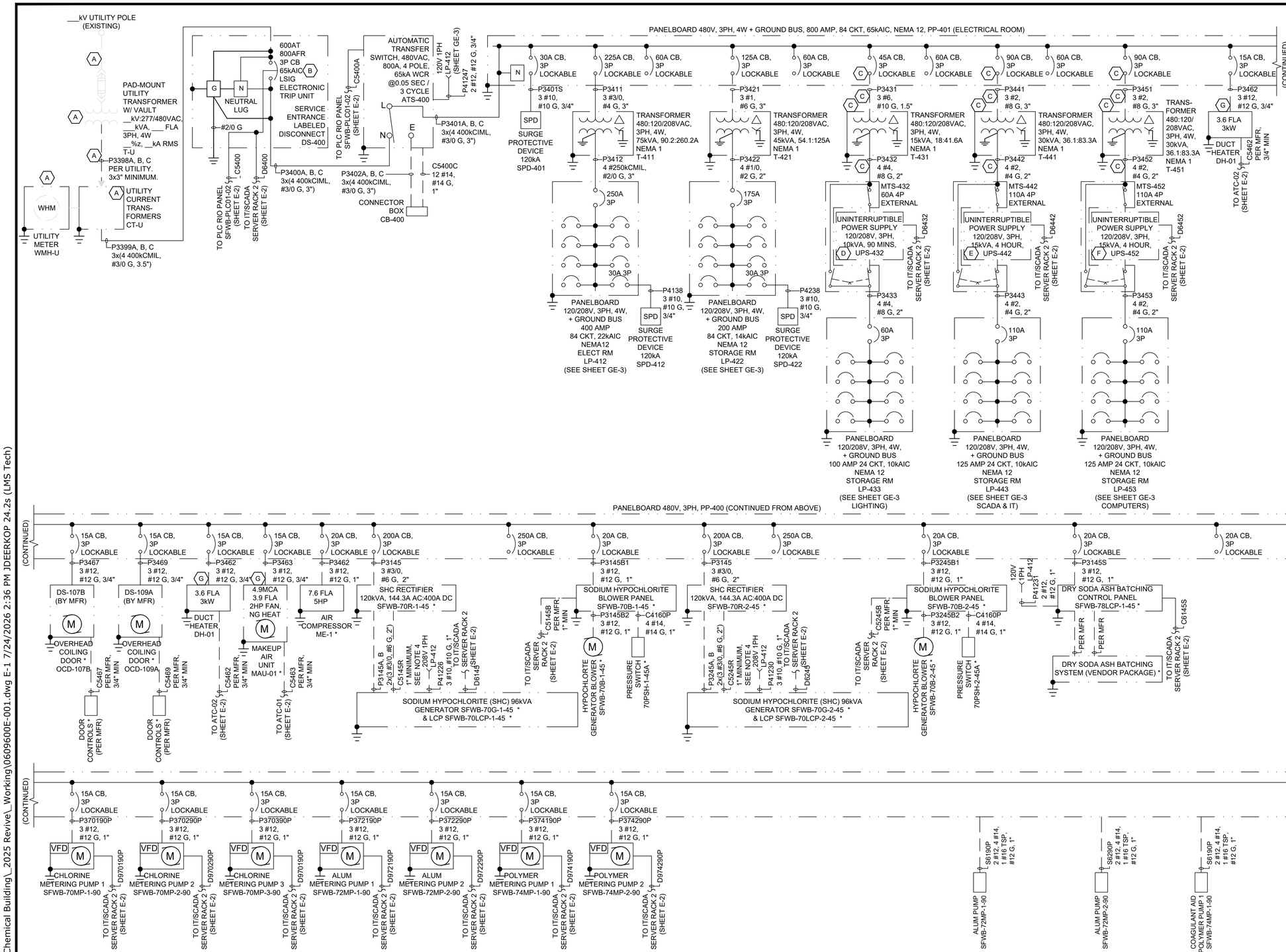

GENERAL SHEET NOTES

1. SEE THE GENERAL NOTES ON SHEET GE-2. CONDUIT AND WIRING FOR LIGHTS AND RECEPTACLES ARE NOT SHOWN ON THIS SHEET. SEE THE CIVIL AND ELECTRICAL SITE PLANS FOR ADDITIONAL WORK INCLUDING CONNECTING EXISTING EQUIPMENT.
2. SEE THE SITE PLAN, PANEL SCHEDULES AND CONDUIT DEVELOPMENT DIAGRAM FOR ADDITIONAL INFORMATION.
3. PROVIDE RACEWAYS, CONDUCTORS, APPURTENANCES, ETC. FOR VENDOR PACKAGE EQUIPMENT PER THE MANUFACTURER'S RECOMMENDATIONS, CODE, AND CONTRACT DOCUMENTS AND TO CONNECT ALL ACCESSORIES AND INSTRUMENTS.
4. * = VENDOR PROVIDED EQUIPMENT. CONTRACTOR SHALL PROVIDE CONDUIT, WIRE AND APPURTENANCES PER THE MANUFACTURERS RECOMMENDATIONS TO MOUNT AND CONNECT THE EQUIPMENT FOR A COMPLETE AND OPERABLE SYSTEM.

SHEET KEYNOTES

A. PROVIDE NEW 480/277VAC UTILITY ELECTRICAL SERVICE WITH CENTER GROUNDED WYE. CONTRACTOR SHALL PROVIDE ALL COMPONENTS NOT PROVIDED BY THE UTILITY, MOUNTING HARDWARE, ETC. TO PROVIDE A COMPLETE AND OPERABLE SYSTEM. PROVIDE ACCESSIBLE GROUNDING POINT. PROVIDE A SPARE PRIMARY CONDUIT FROM THE UTILITY POLE TO THE TRANSFORMER VAULT. CONDUITS FROM THE TRANSFORMER SECONDARY SHALL BE THE MINIMUM SHOWN OR MORE/LARGER AS REQUIRED BY THE UTILITY.

B. PROVIDE DS-400 ADJUSTABLE TRIP CIRCUIT BREAKER WITH LSIG FUNCTIONS AND ETHERNET COMMUNICATIONS WITH STATUS, ALARM AND POWER METERING DATA TO THE PLANT PLC. PROVIDE AUXILIARY CONTACTS TO INDICATE OPEN, CLOSED AND TRIPPED POSITIONS TO THE PLANT PLC. SIZE GROUNDING OF SERVICE ENTRANCE EQUIPMENT FOR MAXIMUM FRAME RATING OF EQUIPMENT.

C. PROVIDE UPS FEEDER CIRCUIT BREAKER, CONDUIT, WIRE AND TRANSFORMER TO MEET OR EXCEED UPS MANUFACTURERS RECOMMENDATIONS.

D. EMERGENCY LIGHTING UNINTERRUPTIBLE POWER SUPPLIES (UPS-432) SHALL BE 120/208V 3PH 10kVA WITH 90 MINUTES RUNTIME AT FULL LOAD, INTERNAL INPUT AND OUTPUT CIRCUIT BREAKERS, EXTERNAL MAINTENANCE BYPASS SWITCH, AND UL 924 LISTED. PROVIDE ETHERNET STATUS/ALARM DATA TO PLANT PLC.

E. SCADA/IT UNINTERRUPTIBLE POWER SUPPLIES (UPS-442) SHALL BE 120/208V 3PH 15kVA WITH 4 HOURS RUNTIME AT 12kVA LOAD, INTERNAL INPUT AND OUTPUT CIRCUIT BREAKERS, EXTERNAL MAINTENANCE BYPASS SWITCH. PROVIDE ETHERNET STATUS/ALARM DATA TO PLANT PLC.

F. CRITICAL OPERATIONS UNINTERRUPTIBLE POWER SUPPLIES (UPS-452) SHALL BE 120/208V 3PH 15kVA WITH 4 HOURS RUNTIME AT 12kVA LOAD, INTERNAL INPUT AND OUTPUT CIRCUIT BREAKERS, EXTERNAL MAINTENANCE BYPASS SWITCH. PROVIDE ETHERNET STATUS/ALARM DATA TO PLANT PLC.

G. PROVIDE POWER DISCONNECT SWITCH FOR HVAC EQUIPMENT WHERE NOT PROVIDED BY THE MANUFACTURER/SUPPLIER AND REQUIRED BY CODE. SEE THE HVAC DRAWINGS FOR ADDITIONAL INFORMATION.

ELECTRICAL LOADS

NAME	HP	kVA	FLA	PEAKING FACTOR
T-411	-	75.0	90.2	0.752
T-421	-	45.0	54.1	0.822
T-431	-	15.0	18.0	0.293
T-441	-	30.0	36.1	0.310
T-451	-	30.0	36.1	0.290
SFWB-70R-1-45	-	120.0	144.3	1.0
SFWB-70R-2-45	-	120.0	144.3	0.0
SFWB-70B-1-45	5.1	6.1	7.9	1.0
SFWB-70B-2-45	5.1	6.1	7.9	0.0
SFWB-78LCP-1-45	5	6.1	7.6	1.0
SFWB-70MP-1-90	0.5	0.9	1.1	1.0
SFWB-70MP-2-90	0.5	0.9	1.1	0.0
SFWB-70MP-3-90	0.5	0.9	1.1	0.0
SFWB-72MP-1-90	0.5	0.9	1.1	1.0
SFWB-72MP-2-90	0.5	0.9	1.1	0.0
SFWB-74MP-1-90	0.5	0.9	1.1	1.0
SFWB-74MP-2-90	0.5	0.9	1.1	0.0
OCD-107B	0.5	0.9	1.1	1.0
OCD-109A	0.5	0.9	1.1	1.0
DH-01	-	3.0	3.6	1.0
MAU-01	24.1	4.9	1.0	
ME-1	56.1	7.6	1.0	
25% OF LARGEST MOTOR	1.25	1.5	1.9	1.0
CONNECTED LOAD		475.9	574.5	
PEAK LOAD		267.1	322.6	

NO.	DATE	BY	REVISION

NOTICE
0 ½ 1
IF THIS BAR DOES NOT MEASURE 1" THEN DRAWING IS NOT TO SCALE

JCD DESIGNED
JCD DRAWN
EWM CHECKED

REGISTERED PROFESSIONAL ENGINEER 54440PE OREGON JAN. 12, 1988 JOHN C. DEERKOP
7/24/2026
EXPIRES:12/31/27

BID SET

consor
Stantec

South Fork WATER
PURE WATER SINCE 1915
WATER QUALITY SYSTEMS BUILDING

ELECTRICAL
ONE-LINE DIAGRAM - 1

PROJECT NO.: 21-3045 | SCALE: NONE | DATE: AUGUST 2026

SHEET E-1

C:\Projects\SFWB New Chemical Building_2025 Revive_Working\0609600E-001.dwg E-1 7/24/2026 2:36 PM JDEERKOP 24.2s (LMS Tech)

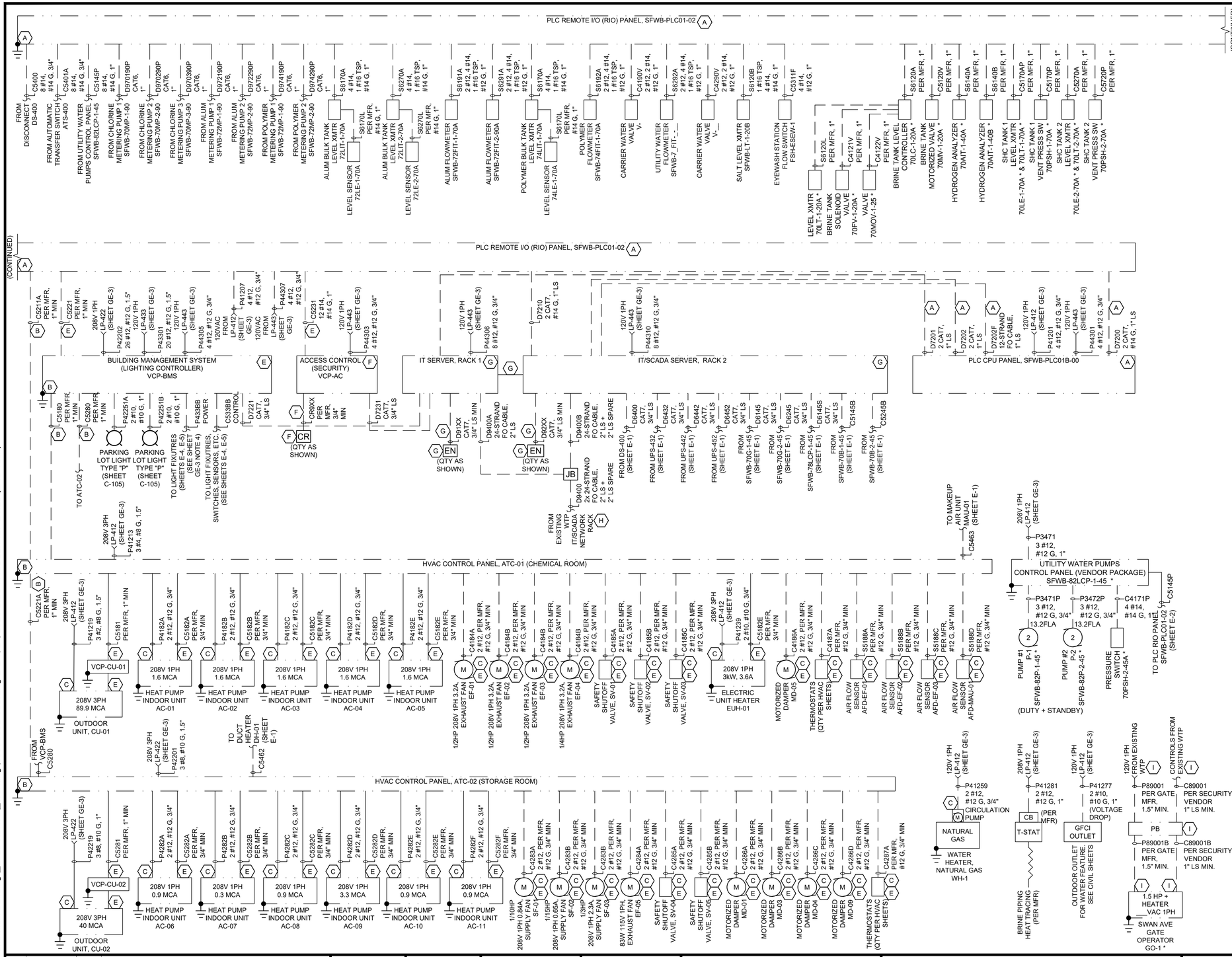

GENERAL SHEET NOTES

1. SEE THE GENERAL NOTES ON SHEET GE-1. CONDUIT AND WIRING FOR LIGHTS AND RECEPTACLES ARE NOT SHOWN ON THIS SHEET. SEE THE CIVIL AND ELECTRICAL SITE PLANS FOR ADDITIONAL WORK INCLUDING CONNECTING EXISTING EQUIPMENT. CAT7 CABLES SHALL BE SHIELDED TWISTED PAIR TYPE PER SHEET GE-1.
2. SEE THE CIVIL SITE PLAN, BUILDING PLANS, PANEL SCHEDULES AND SINGLE-LINE DIAGRAM FOR ADDITIONAL INFORMATION. SEE SHEETS E-4 GENERAL SHEET NOTE 8, AND SHEET E-5 GENERAL SHEET NOTE 6 REGARDING WIRING METHODS IN THE WEST ADMINISTRATIVE AREA.
3. PROVIDE RACEWAYS, CONDUCTORS, APPURTENANCES, ETC. FOR VENDOR PACKAGE EQUIPMENT PER THE MANUFACTURER'S RECOMMENDATIONS, CODE, AND CONTRACT DOCUMENTS.
4. * = VENDOR PROVIDED EQUIPMENT. CONTRACTOR SHALL PROVIDE CONDUIT, WIRE AND APPURTENANCES PER THE MANUFACTURERS RECOMMENDATIONS TO MOUNT AND CONNECT THE EQUIPMENT FOR A COMPLETE AND OPERABLE SYSTEM.

SHEET KEYNOTES

A. PLC PANELS SHALL WILL BE DESIGNED AND BUILT BY OWNER'S SYSTEM INTEGRATOR AND INSTALLED BY THE CONTRACTOR. THE CONTRACTOR SHALL PROVIDE WIRE, CONDUIT, MOUNTING HARDWARE, ETC. TO PROVIDE A COMPLETE AND OPERABLE SYSTEM. THE CONTRACTOR SHALL PROVIDE AND TERMINATE FIELD WIRES AS DIRECTED BY THE OWNER'S SYSTEM INTEGRATOR. PROVIDE CONDUIT, WIRES, AND APPURTENANCES TO CONNECT EXISTING PLANT PLC PANEL TO THE NEW PLC PANEL AS DIRECTED BY THE OWNER'S SYSTEM INTEGRATOR. POWER TO INSTRUMENTS IS FED FROM THE PLC PANEL.

B. PROVIDE CONDUIT, WIRE, POWER FOR HVAC EQUIPMENT AS REQUIRED/RECOMMENDED BY THE MANUFACTURER. NOT ALL SENSORS AND APPURTENANCES MAY BE SHOWN. THE CONDUIT, WIRE AND APPURTENANCES SHOWN ARE FOR ONE MANUFACTURER'S INFORMATION.

C. PROVIDE POWER DISCONNECT SWITCH FOR HVAC EQUIPMENT WHERE NOT PROVIDED BY THE MANUFACTURER/SUPPLIER AND REQUIRED BY CODE. SEE THE HVAC DRAWINGS FOR ADDITIONAL INFORMATION.

D. PROVIDE RACEWAYS FOR FUTURE EQUIPMENT. CAP CONDUITS AT LEAST 18" ABOVE FINISHED FLOOR OR GRADE.

E. PROVIDE CONDUIT, WIRE, POWER, AND APPURTENANCE FOR BUILDING MANAGEMENT SYSTEM EQUIPMENT AS REQUIRED/RECOMMENDED BY THE MANUFACTURER. THE SENSORS, APPURTENANCES, CONNECTIONS TO HVAC, CONTROLLED RECEPTACLES, INTERIOR AND EXTERIOR LIGHTING ARE NOT SHOWN. PROVIDE A RELAY OUTPUT TO EACH HVAC CONTROL PANEL FOR EACH ROOM INDICATING OCCUPANCY STATUS. SEE THE HVAC DRAWINGS FOR ADDITIONAL INFORMATION.

F. PROVIDE CONDUIT, WIRE, POWER, LOW VOLTAGE POWER SUPPLIES, AND APPURTENANCES FOR BUILDING ACCESS CONTROL EQUIPMENT AS REQUIRED/RECOMMENDED BY THE OWNER'S EXISTING SECURITY SYSTEM MANUFACTURER. THE SENSORS, APPURTENANCES, CONNECTIONS TO DOOR LOCKS ARE NOT SHOWN. ASSIGN UNIQUE CONDUIT NUMBERS FOR EACH RACEWAY IN LIEU OF THE "XX" SHOWN. COORDINATE WITH SECURITY SYSTEM VENDOR. CARD READERS (CR) SHALL BE HID SIGNO READER, MODEL 40K TO MATCH OWNER'S EXISTING INSTALLATIONS.

G. PROVIDE CONDUIT, CABLE, POWER AND APPURTENANCES FOR IT SERVER RACKS AND ETHERNET JACKS AS REQUIRED OR RECOMMENDED BY THE MANUFACTURER. SEE THE PLAN SHEETS FOR THE QUANITY AND LOCATION OF THE RACKS AND JACKS. EACH SERVER RACK SHALL BE AT A MINIMUM: 42U CAPACITY 19" RACK, SOUNDPROOF (28DB REDUCTION) FLOOR MOUNTED ENCLOSURE WITH A MINIMUM USEABLE DEPTH OF 32", 115V FANS, PDU'S, MOUNTING AND OTHER APPURTENANCES REQUIRED FOR A COMPLETE INSTALLATION. COORDINATE POWER AND CONDUIT LOCATIONS WITH THE ENCLOSURE PROVIDED. PROVIDE RACEWAYS FOR ALL CABLES IN FLOORS AND WALLS. ASSIGN UNIQUE CONDUIT NUMBERS FOR EACH RACEWAY IN LIEU OF THE "XX" SHOWN.
- INSTALL IN RACK 1: THREE 48-PORT CAT7 PATCH PANEL; ONE 1U IT NETWORK SWITCH (FURNISHED BY OTHERS); ONE 1U FIBER PATCH PANEL, LEVITON 5R1UL-F03 CHASSIS, 5R1UX-CMT CABLE MANAGEMENT TRAY, 5R100-14R CABLE MANAGEMENT SPOOL; 5F100-4LL ADAPTER PLATE FOR FIBERS TO WTP (QUAD LC, OS1/2 SINGLE-MODE, 24 FIBERS PER ADAPTER).
- INSTALL IN RACK 2: ONE 48-PORT CAT7 PATCH PANEL; ONE 1U SCADA NETWORK SWITCH (FURNISHED BY OCD); ONE 1U FIBER PATCH PANEL, LEVITON 5R1UL-F03 CHASSIS, 5R1UX-CMT CABLE MANAGEMENT TRAY, 5R100-14R CABLE MANAGEMENT SPOOL; 5F100-4LL ADAPTER PLATE FOR FIBERS TO WTP (QUAD LC, OS1/2 SINGLE-MODE, 24 FIBERS PER ADAPTER); 5F100-2LL ADAPTER PLATE FOR FIBERS TO PLC CPU PANEL; ONE RELOCATED EXISTING SCADA SERVER (TOWER UNIT, NOT RACK-MOUNTED).

H. PROVIDE TWO LEVITON 5F100-4LL ADAPTER PLATES TO BE INSTALLED IN THE EXISTING WTP NETWORK RACK.

I. PROVIDE CONDUIT, WIRE, POWER FOR GATE OPERATOR AS REQUIRED/RECOMMENDED BY THE MANUFACTURER AND SECURITY VENDOR. NOT ALL SENSORS AND APPURTENANCES ARE SHOWN. THE CONDUIT, WIRE AND APPURTENANCES SHOWN ARE FOR ONE MANUFACTURER'S INFORMATION. COORDINATE POWER SOURCE, CONTROL CONNECTION AND ROUTING INSIDE EXISTING WATER TREATMENT PLANT (WTP) WITH OWNER. PROVIDE GROUND ROD AT GATE OPERATOR AND BOND TO GATE OPERATOR AND GATE POSTS ON BOTH SIDES OF DRIVEWAY.

NO.	DATE	BY	REVISION

NOTICE
0 ½ 1
IF THIS BAR DOES NOT MEASURE 1" THEN DRAWING IS NOT TO SCALE

JCD DESIGNED
JCD DRAWN
EWM CHECKED

REGISTERED PROFESSIONAL ENGINEER 54440PE OREGON JAN. 12, 1988 JOHN C. DEERKOP
7/24/2026
EXPIRES: 12/31/27

BID SET

consor
Stantec

South Fork WATER
PURE WATER SINCE 1915

WATER QUALITY SYSTEMS BUILDING

ELECTRICAL

ONE-LINE DIAGRAM - 2

PROJECT NO.: 21-3045 | SCALE: NONE | DATE: AUGUST 2026

SHEET E-2

C:\Projects\SFWB New Chemical Building_2025 Revive_Working\0609600E-001.dwg E-2 7/24/2026 2:36 PM JDEERKOP 24.2s (LMS Tech)

GENERAL SHEET NOTES

1. SEE THE GENERAL NOTES ON SHEET GE-2. CONDUIT AND WIRING FOR LIGHTS AND RECEPTACLES ARE NOT SHOWN ON THIS SHEET. SEE THE CIVIL AND ELECTRICAL SITE PLANS FOR ADDITIONAL WORK INCLUDING CONNECTING EXISTING EQUIPMENT. SEE THE PROCESS MECHANICAL SHEETS REGARDING ALTERNATIVE EQUIPMENT OPTIONS.
2. SEE THE CIVIL SITE PLAN, PANEL SCHEDULES AND CONDUIT DEVELOPMENT DIAGRAM FOR ADDITIONAL INFORMATION. SEE THE HVAC DRAWINGS FOR THERMSTAT, ETC. LOCATIONS.
3. PROVIDE RACEWAYS, CONDUCTORS, APPURTENANCES, ETC. FOR VENDOR PACKAGE EQUIPMENT PER THE MANUFACTURER'S RECOMMENDATIONS, CODE, AND CONTRACT DOCUMENTS AND TO CONNECT ALL ACCESSORIES AND INSTRUMENTS.
4. * = VENDOR PROVIDED EQUIPMENT. CONTRACTOR SHALL PROVIDE CONDUIT, WIRE AND APPURTENANCES PER THE MANUFACTURERS RECOMMENDATIONS TO MOUNT AND CONNECT THE EQUIPMENT FOR A COMPLETE AND OPERABLE SYSTEM.

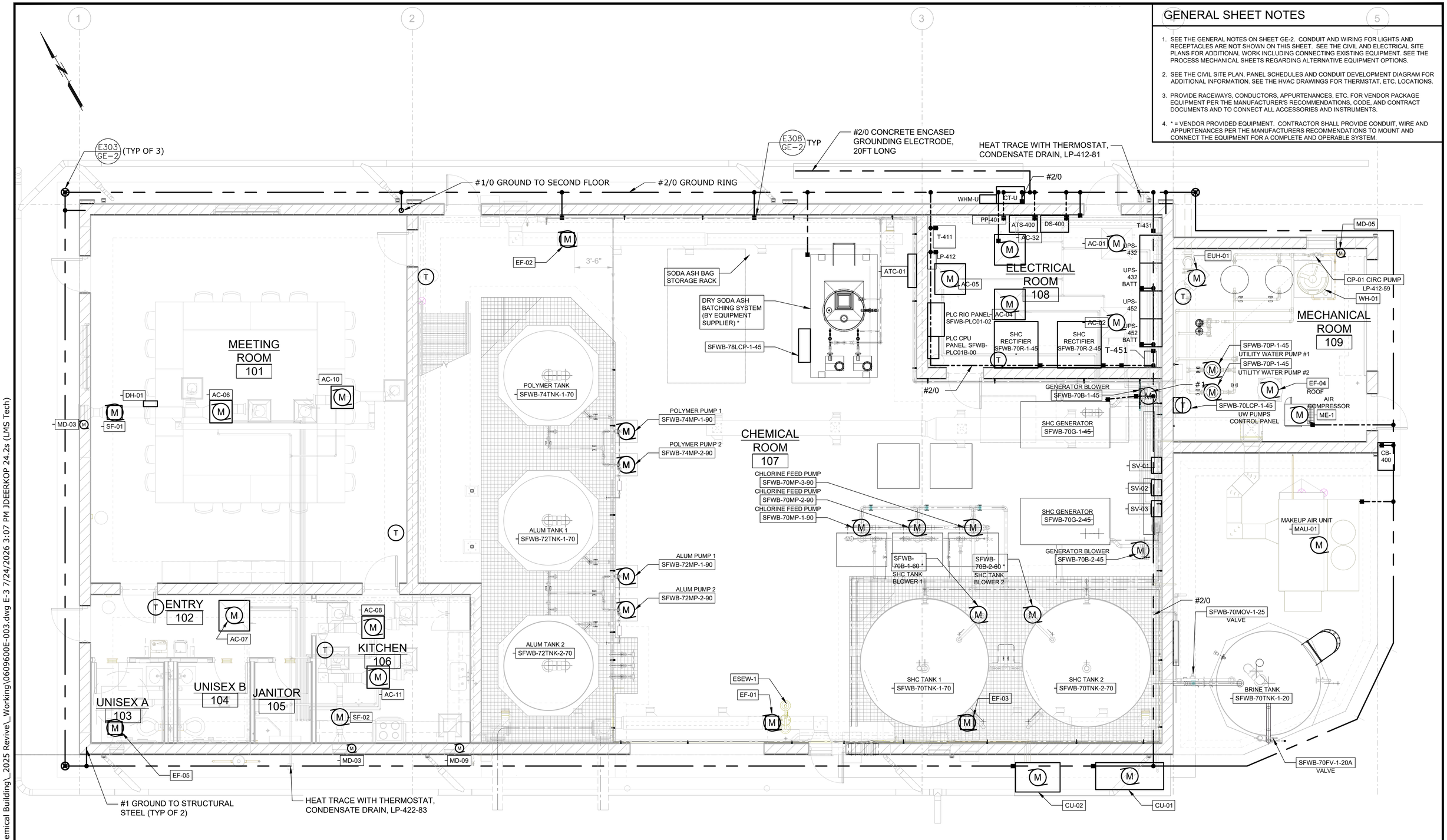

C:\Projects\SFWB New Chemical Building_2025 Revive_Working\0609600E-003.dwg E-3 7/24/2026 3:07 PM JDEERKOP 24.2s (LMS Tech)

NO.	DATE	BY	REVISION

NOTICE
0 ½ 1
IF THIS BAR DOES NOT MEASURE 1" THEN DRAWING IS NOT TO SCALE

JCD DESIGNED
JCD DRAWN
EWM CHECKED

REGISTERED PROFESSIONAL ENGINEER 34440PE OREGON JAN. 12, 1996 JOHN C. DEERKOP
7/24/2026
EXPIRES: 12/31/27

BID SET

consor
Stantec

South Fork WATER
PURE WATER SINCE 1915

WATER QUALITY SYSTEMS BUILDING

ELECTRICAL

FIRST FLOOR PLAN - GROUNDING

PROJECT NO.: 21-3045 | SCALE: NONE | DATE: AUGUST 2026

SHEET
E-3

GENERAL SHEET NOTES

1. SEE THE GENERAL NOTES ON SHEET GE-2.
2. SEE THE ONE-LINE DIAGRAM AND PANEL SCHEDULES FOR ADDITIONAL INFORMATION. SEE THE PROCESS MECHANICAL SHEETS REGARDING ALTERNATIVE EQUIPMENT OPTIONS.
3. LIGHTING OCCUPANCY SENSORS ARE SHOWN TO INDICATE SPACES THAT SHALL BE PROVIDED WITH THEM. LOCATIONS AND QUANTITIES SHALL BE DETERMINED BY THE LIGHTING SUPPLIER PER THE MANUFACTURERS RECOMMENDATIONS AND CODES. SEE SECTION 26 50 00 - LIGHTING.
4. SEE SHEET E-5 FOR LIGHTING DESIGN CRITERIA. LIGHTING SUPPLIER SHALL DESIGN FINAL QUANTITIES, LOCATIONS AND CONTROLS FOR ALL INTERIOR AND EXTERIOR LIGHTING BASED ON THE EQUIPMENT TO BE SUPPLIED, LIGHTING DESIGN CRITERIA, STATE AND LOCAL CODES.
4. SEE THE CIVIL DRAWINGS C-105 AND C-106 FOR THE LOCATIONS OF THE AREA LIGHT FIXTURES.
5. SEE ARCHITECTURAL DRAWINGS FOR EXTERIOR LIGHT LOCATIONS.
6. SEE SHEET E-2 SHEET KEYNOTES REGARDING THE BUILDING MANAGEMENT SYSTEM (BMS), ACCESS CONTROL SYSTEM, AND IT (ETHERNET). DOOR LOCK HARDWARE IS NOT SHOWN.
7. IN THE WEST SIDE ADMINISTRATIVE AREAS NORMAL COMMERCIAL WIRING METHODS ARE ALLOWED, INCLUDING THE USE OF EMT RACEWAYS IN ACCORDANCE WITH THE NEC, STATE AND LOCAL CODES.

SHEET KEYNOTES

A. MOST RECEPTACLES IN MEETING ROOM, 101, ARE SPLIT DUPLEX TYPE. THE UPPER OUTLET OF EACH NON-EQUIPMENT RECEPTACLE SHALL BE CONTROLLED BASED ON ROOM OCCUPANCY AND POWERED BY PANELBOARD LP-422. THE LOWER OUTLETS AND UPPER EQUIPMENT OUTLETS SHALL BE UNCONTROLLED AND POWERED BY UPS BACKED PANELBOARD LP-453.

B. IN KITCHEN, ROOM 106, COORDINATE LOCATIONS OF RECEPTACLES FOR EQUIPMENT, UNDER SINK, ETC. WITH OTHER TRADES.

C. CONTRACTOR SHALL COORDINATE MOUNTING HEIGHT OF OUTLETS AND JACKS BEHIND EQUIPMENT WITH THE ARCHITECTURAL DRAWINGS AND EQUIPMENT SUBMITTALS.

D. PROVIDE HEAT TRACING AND THERMOSTAT FOR BRINE PIPING PER INSTRUMENTATION AND MECHANICAL SHEETS.

E. IN CHEMICAL ROOM 107 ADJUST THE AIM OF THE TYPE "H" LIGHT FIXTURES, INCLUDING AIMING UPWARD TO ILLUMINATE ALL THE ROOM, AND HIGHLIGHTING WORK AREAS AROUND THE CHEMICAL EQUIPMENT.

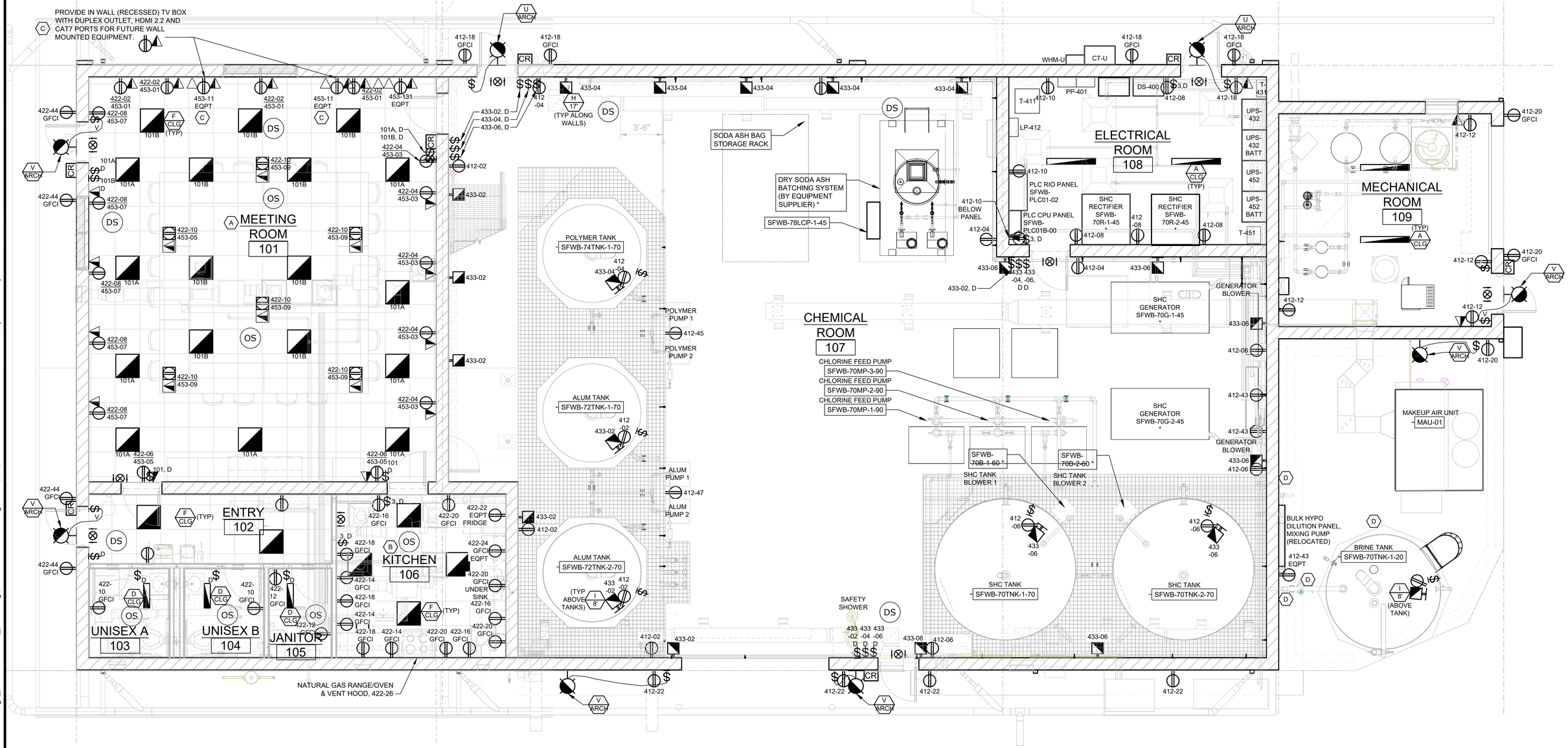

NO.	DATE	BY	REVISION

NOTICE
0 ½ 1
IF THIS BAR DOES NOT MEASURE 1" THEN DRAWING IS NOT TO SCALE

JCD DESIGNED
JCD DRAWN
EWM CHECKED

REGISTERED PROFESSIONAL ENGINEER 44404PE OREGON JAN. 12, 1996 JOHN C. DEERKOP
7/24/2026
EXPIRES: 12/31/27

BID SET

consor
Stantec

South Fork WATER
PURE WATER SINCE 1915
WATER QUALITY SYSTEMS BUILDING

ELECTRICAL

FIRST FLOOR PLAN - LIGHTING

PROJECT NO.: 21-3045 | SCALE: NONE | DATE: JULY 2026

SHEET
E-4

C:\Projects\SFWB New Chemical Building_2025 Revive_Working\0609600E-003.dwg E-4 7/24/2026 3:07 PM JDEERKOP 24.2s (LMS Tech)

GENERAL SHEET NOTES

1. SEE THE GENERAL NOTES ON SHEET GE-2.
2. SEE THE ONE-LINE DIAGRAM AND PANEL SCHEDULES FOR ADDITIONAL INFORMATION.
3. LIGHTING OCCUPANCY SENSORS ARE SHOWN TO INDICATE SPACES THAT SHALL BE PROVIDED WITH THEM. LOCATIONS AND QUANTITIES SHALL BE DETERMINED BY THE LIGHTING SUPPLIER PER THE MANUFACTURERS RECOMMENDATIONS AND CODES. SEE SECTION 26 50 00 - LIGHTING.
4. SEE THE LIGHTING DESIGN CRITERIA. LIGHTING SUPPLIER SHALL DESIGN FINAL QUANTITIES, LOCATIONS AND CONTROLS FOR ALL INTERIOR AND EXTERIOR LIGHTING BASED ON THE EQUIPMENT TO BE SUPPLIED, LIGHTING DESIGN CRITERIA, STATE AND LOCAL CODES.
5. IN THE WEST SIDE ADMINISTRATIVE AREAS NORMAL COMMERCIAL WIRING METHODS ARE ALLOWED, INCLUDING THE USE OF EMT RACEWAYS IN ACCORDANCE WITH THE NEC, STATE AND LOCAL CODES.

SHEET KEYNOTES

A. RECEPTACLES IN STORAGE ROOM 201 ARE SPLIT DUPLEX TYPE. THE UPPER OUTLET OF EACH RECEPTACLE SHALL BE CONTROLLED BASED ON ROOM OCCUPANCY AND POWERED BY PANELBOARD LP-422. THE LOWER OUTLETS SHALL BE UNCONTROLLED AND POWERED BY UPS BACKED PANELBOARD LP-453.

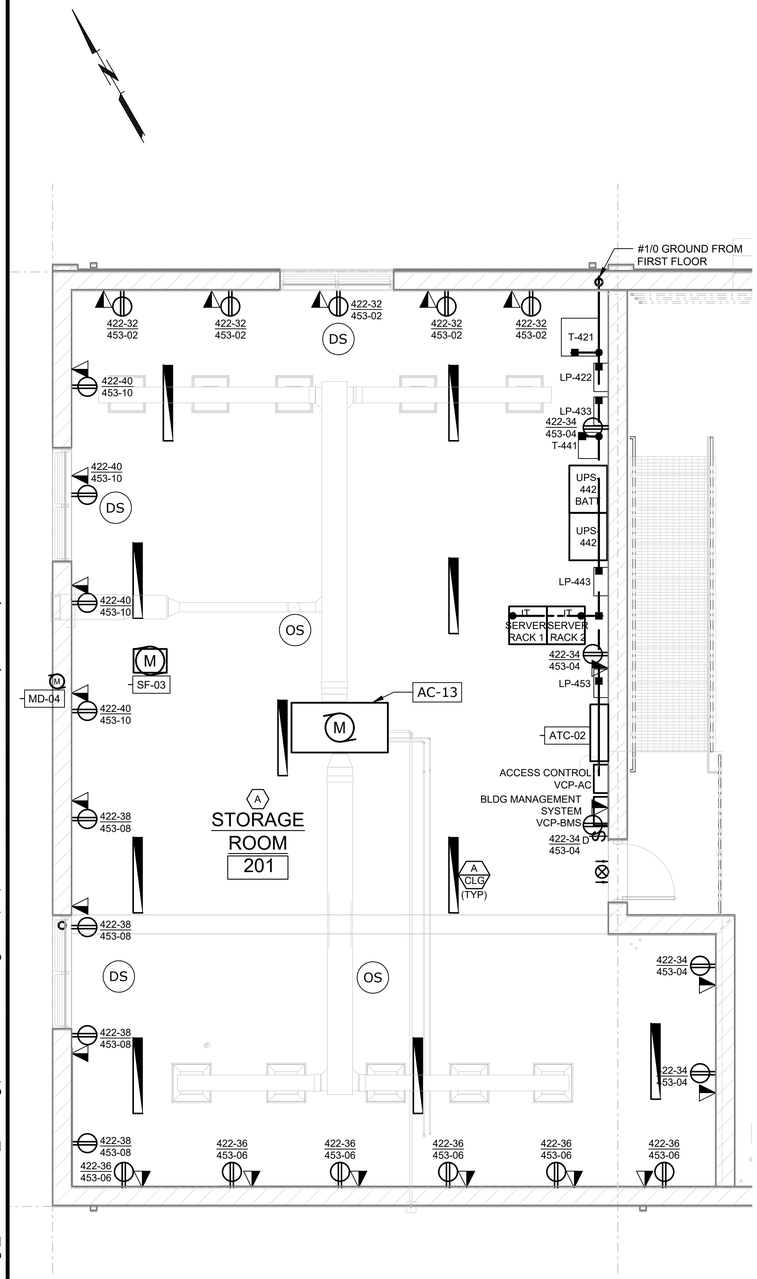

LIGHTING DESIGN CRITERIA

2025 OREGON ZERO ENERGY READY COMMERCIAL CODE
(CHAPTER 13 OF THE 2025 OREGON STRUCTURAL SPECIALTY CODE)
LIGHTING POWER DENSITY (LPD) METHOD

INTERIOR SPACES - TABLE 9.5.2.1-1

ROOM NO.	BUDGET MAX. WATTS	INSTALLED MAX. WATTS	LIGHTING FOOT-CANDLES	LOCAL CONTROL 9.4.1.1(a)	MANUAL ON 9.4.1.1(b)	PARTIAL AUTO ON 9.4.1.1(c)	MULTILEVEL LIGHTING CONTROL 9.4.1.1(d)	DAYLIGHT RESPONSIVE SIDELIGHT 9.4.1.1(e)b	DAYLIGHT RESPONSIVE TOPLIGHTING 9.4.1.1(f)b	AUTO REDUCTION (FULL OFF COMPLIES) 9.4.1.1(g)	AUTO FULL OFF 9.4.1.1(h)	SCHEDULED SHUTOFF 9.4.1.1(i)
101 MEETING ROOM	907.0	387.0	30	REQ	ADD1	ADD1	REQ	REQ	N/A	-	REQ	-
102 ENTRY	48.0	43.0	26	REQ	-	-	[OR]	REQ	N/A	-	ADD2	-
103 UNISEX A	29.4	17.0	30	-	-	-	-	N/A	N/A	-	REQ	-
104 UNISEX B	29.5	17.0	30	-	-	-	-	N/A	N/A	-	REQ	-
105 JANITOR	19.1	17.0	30	REQ	-	ADD1	REQ	N/A	N/A	-	ADD2	ADD2
106 KITCHEN	108.6	86.0	30	REQ	ADD1	ADD1	[OR]	N/A	N/A	-	REQ	-
107 CHEMICAL ROOM	1,196.9	1,827.8	38	REQ	-	-	-	-	N/A	-	-	-
108 ELECTRICAL ROOM	111.8	98.0	30	REQ	-	-	-	-	N/A	-	-	-
109 MECHANICAL ROOM	129.2	98.0	30	REQ	-	-	-	N/A	N/A	-	-	-
201 STORAGE	538.3	490.0	30	REQ	-	-	[OR]	[OR]	N/A	-	REQ	-
BLDG INTERIOR TOTAL	3,117.8	3,080.8										

LEGEND:
REQ = REQUIRED
ADD1 = REQUIRED ADDITIONAL CONTROLS
ADD2 = REQUIRED ADDITIONAL CONTROLS
N/A = NOT APPLICABLE
[OR] = OWNER REQUIREMENT, BEYOND CODE

a. WHERE BOTH A COMMON SPACE TYPE AND A BUILDING-SPECIFIC SPACE TYPE ARE LISTED, THE BUILDING SPECIFIC SPACE TYPE SHALL APPLY (SEE TABLE 9.5.2.1-2 FOR BUILDING-SPECIFIC SPACE TYPES).
b. AUTOMATIC DAYLIGHT RESPONSIVE CONTROLS ARE MANDATORY ONLY IF THE SPACE MEETS THE REQUIREMENTS OF THE SPECIFIED SECTIONS.

EXTERIOR AREAS

EXTERIOR LIGHTING BUDGET 1,450 WATTS MAXIMUM = 200W BASE ALLOWANCE + (14W / LINEAR FT OF ENTRY WAYS * 40 FT) + (0.1 W / SQFT WALKWAYS X 2,400 SQFT)+ (0.05 W / SQFT PARKING LOTS AND DRIVES X 8,990 SQFT).

INSTALLED 309 WATTS = (2 TYPE P X 71.0 W / FIXTURE) + (2 TYPE U X 20.1 W / FIXTURE) + (5 TYPE V X 25.4 W / FIXTURE)

FACADE LIGHTING AND SPECIAL FEATURE AREAS, WALKWAYS, PLAZAS	LUMINAIRES SHALL BE TURNED OFF OR THE POWER REDUCED BY A MINIMUM OF 75% DURING NONOPERATING HOURS.
LANDSCAPE	LUMINAIRES SHALL BE TURNED OFF OR THE POWER REDUCED BY A MINIMUM OF 75% DURING NONOPERATING HOURS.
ENTRY DOORS [DIMLY LIT]	LUMINAIRES SHALL BE TURNED OFF OR THE POWER REDUCED BY A MINIMUM OF 75% DURING NONOPERATING HOURS.
ENTRY DOORS	LUMINAIRES SHALL BE TURNED OFF OR THE POWER REDUCED BY A MINIMUM OF 75% DURING NONOPERATING HOURS.
STAIRS AND RAMPS	NO ADDITIONAL CONTROLS REQUIRED.
PARKING LOTS AND DRIVES	LUMINAIRES SHALL BE TURNED OFF OR THE POWER REDUCED BY A MINIMUM OF 75% DURING NONOPERATING HOURS.
ALL OTHER AREAS NOT LISTED	LUMINAIRES SHALL BE TURNED OFF OR THE POWER REDUCED BY A MINIMUM OF 75% DURING NONOPERATING HOURS.

NO.	DATE	BY	REVISION

NOTICE
0 ½ 1
IF THIS BAR DOES NOT MEASURE 1" THEN DRAWING IS NOT TO SCALE

JCD DESIGNED
JCD DRAWN
EWM CHECKED

REGISTERED PROFESSIONAL ENGINEER 54440PE OREGON JAN. 12, 1988 JOHN C. DEERKOP
7/24/2026
EXPIRES: 12/31/27

BID SET

consor
Stantec

South Fork WATER
PURE WATER SINCE 1915
WATER QUALITY SYSTEMS BUILDING

ELECTRICAL
SECOND FLOOR PLAN

PROJECT NO.: 21-3045 | SCALE: NONE | DATE: JULY 2026

SHEET
E-5

C:\Projects\SFWB New Chemical Building_2025 Revive_Working\0609600E-003.dwg E-5 7/24/2026 3:10 PM JDEERKOP 24.2s (LMS Tech)

FLOW LINES

- PRIMARY FLOW
- SECONDARY FLOW
- EXST PRIMARY FLOW
- EXST SECONDARY FLOW
- FUTURE PRIMARY FLOW
- FUTURE SECONDARY FLOW
- INSTRUMENT / PLANT AIR
- VENDOR FLOW
- VENDOR AIR

INSTRUMENT LINES

- ELECTRICAL SIGNAL
- PNEUMATIC SIGNAL
- HYDRAULIC SIGNAL
- SOFTWARE SIGNAL
- CAPILLARY TUBE
- INSTRUMENT SUPPLY
- ELECTROMAGNETIC SIGNAL
- ELECTROMAGNETIC SIGNAL (NOT GUIDED)
- UNDEFINED SIGNAL

MISC. LINES

- EQUIPMENT
- EXISTING EQUIPMENT
- FUTURE EQUIPMENT
- INSTRUMENTATION
- EXISTING INSTRUMENTATION
- FUTURE INSTRUMENTATION
- VENDOR BOUNDARY
- BUILDING/FACILITY BOUNDARY

VALVE SYMBOLS

CLOSED	OPEN	
		GATE VALVE
		GLOBE VALVE
		BUTTERFLY VALVE
		CHECK VALVE
		BALL CHECK VALVE
		BALL VALVE
		PLUG VALVE
		3 WAY VALVE
		DIAPHRAGM VALVE
		4 WAY VALVE
		ROTARY VALVE
		ANGLE VALVE
		DIVERTER VALVE
		EXCESS FLOW VALVE
		GENERIC ROTARY VALVE
		NEEDLE VALVE
		PINCH VALVE
		STOP CHECK VALVE
		KNIFE GATE VALVE
		PRESSURE RELIEF VALVE
		PRESSURE & VACUUM RELIEF VALVE
		SAFETY VALVE
		PILOT OPERATED RELIEF VALVE
		PRESSURE RELIEF WITH SOLENOID
		RUPTURE DISC FOR PRESSURE RELIEF
		RUPTURE DISC FOR VACUUM RELIEF
		AIR/VACUUM RELIEF
		GENEREIC GATE
		SLIDE GATE
		SLUICE GATE

ACTUATOR SYMBOLS

- MANUAL ACTUATOR
- HAND WHEEL ACTUATOR
- SOLENOID
- DIGITAL
- PISTON ACTUATOR
- DIAPHRAGM ACTUATOR
- THROTTLING ACTUATOR
- PRESSURE REDUCING REGULATOR
- BACKPRESSURE REGULATOR SELF CONTAINED
- PRESSURE REDUCING REGULATOR W/ INTEGRAL OUTLET
- PRESSURE REDUCING REGULATOR W/ EXTERNAL TAP
- BACKPRESSURE REGULATOR W/ EXTERNAL PRESSURE TAP
- PRESSURE BALANCED DIAPHRAGM ACTUATOR
- DIFFERENTIAL PRESSURE REDUCING REGULATOR
- SPRING
- DIAPHRAGM SPRING
- SOLENOID MANUAL RESET
- SOLENOID REMOTE RESET
- ROTARY MOTOR
- ELECTRO-HYDRAULIC
- SURGE ANTICIPATION RELIEF VALVE
- CALIBRATION COLUMN

EQUIPMENT LEGEND

- CENTRIFUGAL PUMP
- BLOWER
- SUMP PUMP
- VERTICAL TURBINE PUMP
- RESTRICTION ORIFICE
- UNION
- RESTRICTION ORIFICE DRILLED IN VALVE
- VORTEX SENSOR
- ELECTROMAGNETIC FLOW METER
- PROPELLER FLOW METER
- SONIC FLOW METER
- MASS FLOW METER
- PITOT TUBE
- CORNER TAP
- AVERAGING PITOT TUBE
- FLOW NOZZLE
- VENTURI
- FLUME
- WEIR
- POSITIVE DISPLACMENT
- ORIFICE IN PLATE QUICK-CHANGE FITTING
- TARGET
- ROTARY FEEDER
- CONDENSATE TRAP
- MOTOR
- STATIC MIXER
- ROTARY LOBE PUMP
- FLAME ARRESTOR
- PULSATION DAMPENER
- DRAIN / FLUSHING PORT
- VARIABLE AREA METER
- FLOW CONDITIONING DEVICE
- FLOAT TYPE LEVEL INDICATOR
- SURFACE MOUNTED TEMPERATURE SENSOR
- INSTRUMENT WELL
- CAP
- QUICK COUPLING/HOSE CONNECTION
- REDUCER
- ECC REDUCER
- FLANGED NOZZLE
- FLEX CONNECTION
- WYE
- ULTRASONIC LEVEL SENSOR
- DIAPHRAGM SEAL
- ANNULAR SEAL
- FEEDER
- SCREW CONVEYOR
- METERING PUMP
- FILTER PRESS
- FLEX COUPLING
- MIXER
- VENT
- OPEN VENT
- OPEN DRAIN
- CLOSED DRAIN
- PRESSURE GAUGE
- PIPE INSULATION
- VFD — VARIABLE FREQUENCY DRIVE
- STR — STARTER
- GAP / BREAK
- XX — INLINE 2 CHARACTER
- XXX — INLINE 3 CHARACTER
- BAG FILTER
- STRAINER

INSTRUMENT SYMBOLS

- FIELD MOUNTED DISCRETE INSTRUMENT STYLE
- FIELD MOUNTED SHARED DISPLAY, SHARED CONTROL
- FIELD PLC
- FIELD MOUNTED COMPUTER
- PRIMARY ACCESSIBLE DISCRETE INSTRUMENT
- PRIMARY LOCATION NORMALLY ACCESSIBLE SHARED DISPLAY
- PRIMARY ACCESSIBLE PLC
- PRIMARY ACCESSIBLE COMPUTER
- AUXILIARY ACCESSIBLE DISCRETE INSTRUMENT
- AUXILIARY ACCESSIBLE SHARED DISPLAY
- AUXILIARY ACCESSIBLE PLC
- AUXILIARY ACCESSIBLE COMPUTER
- PRIMARY INACCESSIBLE DISCRETE INSTRUMENT
- PRIMARY LOCATION NORMALLY INACCESSIBLE SHARED DISPLAY
- PRIMARY INACCESSIBLE PLC
- PRIMARY INACCESSIBLE COMPUTER
- AUXILIARY INACCESSIBLE DISCRETE INSTRUMENT
- AUXILIARY INACCESSIBLE SHARED DISPLAY
- AUXILIARY INACCESSIBLE PLC
- AUXILIARY INACCESSIBLE COMPUTER
- FIELD MOUNTED DISCRETE HARDWARE INTERLOCK STYLE
- UNDEFINED INTERLOCK LOGIC (I)
- REST FOR LATCH-TYPE ACTUATOR (R)
- PANEL MOUNTED PATCH BOARD (C)
- PURGE OR FLUSHING DEVICE (P)
- TIE IN POINT (T)

SUPPLY VOLTAGE — 120V
CLARIFYING ABBREVIATION — COND
FE XXXX — INSTRUMENT TYPE (SEE INSTRUMENT CODES); TAG NO.
AI — SIGNAL TYPE (SEE SIGNAL CODES)

SEGMENT BREAKER

PIPE SPECIFICATION CODE
AREA SPECIFICATION CODE
PIPE SPECIFICATION CODE

PIPE TAG

1"-PVC-B
PIPE SERVICE (SEE PIPE SERVICE CODES)
PIPE MATERIAL (SEE PIPE SPEC CODES)
PIPE DIAMETER (INCHES)

OFF-PAGE CONNECTOR

SERVICE CODE
SHEET NUMBER
CONNECTOR NUMBER
ORIGIN OR DESTINATION

EQUIPMENT & VALVE TAG

MX-1011
EQUIPMENT IDENTIFICATION
EQUIPMENT TYPE (SEE EQUIPMENT CODES)

NO.	DATE	BY	REVISION

NOTICE
0 ½ 1
IF THIS BAR DOES NOT MEASURE 1" THEN DRAWING IS NOT TO SCALE

LHO — DESIGNED
JLC — DRAWN
LHO — CHECKED

REGISTERED PROFESSIONAL ENGINEER 105439PE OREGON MARCH 11, 2025 HEATHER LEIGH BURNS
Digitally signed by Heather Leigh Burns Date: 2026.07.27 13:56:50 -07'00'
RENEWS 12-31-27

BID SET

consor
Stantec

South Fork WATER — PURE WATER SINCE 1915

WATER QUALITY SYSTEMS BUILDING

INSTRUMENTATION & CONTROL

P&ID LEGEND AND SYMBOLS

PROJECT NO.: W253326OR | SCALE: AS SHOWN | DATE: AUGUST 2026

SHEET I-001

\\EgnyteDrive\Consor Files_V-W\Projects\OR\South Fork Water\2025\W253326OR.00\12 CADD\12-5 Sheets\I-001 P&ID LEGEND.dwg I-001 7/29/2026 11:07 AM JUSTIN.DEUEL 24.3s (LMS Tech)

EQUIPMENT CODES

CODE	DESCRIPTION
A	AGITATOR
AD	COMPRESSED AIR DRYER
AHU	AIR HANDLING UNIT
AF	AIR FILTER
B	BLOWER
BFP	BELT FILTER PRESS
BIN	BIN
BO	BOILER
BVF	BIN VIBRATORY FEEDER
BWA	BACKWASH AIR
C	COMPRESSOR
CFA	COMPRESSION FITTING ADAPTER
CY	CONVEYOR
DC	DUST COLLECTOR
DGV	DEGASSING VALVE
DRM	DRUM
EF	EXHAUST FAN
ESEW	EMERGENCY SHOWER/EYEWASH
EW	EYEWASH
F	FEEDERS
G	GENERATOR
HST	HOIST
IJ	INJECTION SYSTEM
M	METER
MOT	MOTOR
P	PUMP
S	SUMP
SMXR	STATIC MIXER
TNK	TANK
TO	TOTE
V	VESSEL

VALVE CODES

CODE	DESCRIPTION
BFV	BUTTERFLY VALVE
BPSF	BACK PRESSURE SUSTAINING VALVE
BV	BALL VALVE
CHK	CHECK VALVE
GV	GATE VALVE
GLV	GLOBE VALVE
HV	MANUAL VALVE
KNV	KNIFE GATE VALVE
PRV	PRESSURE REGULATING VALVE
PRFV	PRESSURE RELIEF VALVE
PV	PLUG VALVE

SIGNAL CODES

CODE	DESCRIPTION
AI	ANALOG INPUT
AO	ANALOG OUTPUT
DI	DISCRETE INPUT
DO	DISCRETE OUTPUT

PIPE SERVICE CODES

CODE	DESCRIPTION
ACS	ADSORRPTION CLARIFIER SUPPLY
AI	AIR, INSTRUMENT
AIR	COMPRESSED AIR
ALP	AIR, LOW PRESSURE
BS	BRINE SOLUTION
BWA	BACKWASH AIR
BWW	BACKWASH WASTE
BYP	BYPASS
CAU	CAUSTIC
CIP	CLEAN-IN-PLACE SOLUTION
CL	CHLORINE FEED
COA	COAGULANT
CW	COLD WATER (DOMESTIC)
D	DRAIN (SANITARY)
DSC	DEWATERED SLUDGE CAKE
DSL	DECANT SLUDGE
DW	DISTILLED WATER
EFF	EFFLUENT
F	FILTRATE
FA	FOUL AIR
FE	FILTER EFFLUENT
FI	FILTER INFLUENT
FLP	FLOCCULANT POLYMER
FOS	FUEL OIL SUPPLY
FS	FIRE SYSTEM
FTW	FILTER TO WASTE
FW	FLUSH WATER
GWW	GROUND WATER WELLS
HO	HYDRAULIC OIL
HPHW	HIGH PRESSURE HOT WATER
HPR	HIGH PRESSURE RETURN
HPS	HIGH PRESSURE STEAM
HW	HOT WATER (POTABLE)
HWR	HEATING WATER RETURN
HWS	HEATING WATER SUPPLY
KmNO4	POTASSIUM PERMANGANATE
NaOCl	SODIUM HYPOCHLORITE
OD	OVERFLOW DRAIN
ORD	OVERFLOW ROOF DRAIN
P	PROPANE GAS
PH	PH ADJUSTMENT
PI	PRIMARY INFLUENT
PLE	PLANT EFFLUENT
PP	POTASSIUM PERMANAGANATE
PW	POTABLE WATER
PYS	POLYMER SOLUTION
RE	RECLAIM WATER
RW	RAW WATER
SHC	SODIUM HYPOCHLORITE
SL	UNTHICKENED SLUDGE
SS	SANITARY SEWER
SD	STORM DRAIN
STW	STORM WATER
SW	SOLUTION WATER
TO	THICKENER OVERFLOW
TSL	THICKENED SLUDGE
TW	TEMPERED WATER (POTABLE)
UW	UTILITY WATER
V	VENT
W	WASTE

INSTRUMENT CODES

CODE	DESCRIPTION
AAH	ANALYSIS ALARM HIGH
AC	ANALYSIS CONTROLLER, BLIND
AE	ANALYSIS ELEMENT, PRIMARY
AI	ANALYSIS INDICATING DEVICE
AIT	ANALYSIS TRANSMITTER, INDICATING
ASH	ANALYSIS SWITCH HIGH
AY	ANALYSIS SOLENOID, RELAYS, COMPUTING DEVICE
CV	GENERAL CONTROL VALVE
FAH	FLOW RATE ALARM HIGH
FAL	FLOW RATE ALARM LOW
FCV	FLOW RATE CONTROL VALVE
FE	FLOW RATE ELEMENT, PRIMARY
FFC	FLOW RATIO CONTROLLER, BLIND
FI	FLOW RATE INDICATING DEVICE
FIT	FLOW RATE TRANSMITTER, INDICATING
FS	FLOW RATE SWITCH
FSL	FLOW RATE SWITCH LOW
FV	FLOW RATE ELEMENT, FINAL
HOA	HAND OFF AUTO
HS	HAND SWITCH
LAH	LEVEL ALARM HIGH
LAHH	LEVEL ALARM HIGH HIGH
LAL	LEVEL ALARM LOW
LE	LEVEL ELEMENT, PRIMARY
LI	LEVEL INDICATING DEVICE
LIT	LEVEL TRANSMITTER, INDICATING
LOR	LOCAL OFF REMOTE SWITCH
LS	LEVEL SWITCH
LSH	LEVEL SWITCH HIGH
LSHH	LEVEL SWITCH HIGH HIGH
LSL	LEVEL SWITCH LOW
LT	LEVEL TRANSMITTER, BLIND
LY	LEVEL SOLENOID, RELAYS, COMPUTING DEVICE
MB	MOD BUS
NAH	TORQUE ALARM HIGH
OL	OVERLOAD
PAH	PRESSURE/VACUUM ALARM HIGH
PC	PRESSURE/VACUUM CONTROLLER, BLIND
PI	PRESSURE/VACUUM INDICATING DEVICE
PIT	PRESSURE/VACUUM TRANSMITTER, INDICATING
PS	PRESSURE/VACUUM SWITCH
PSH	PRESSURE/VACUUM SWITCH HIGH
PT	PRESSURE/VACUUM TRANSMITTER, BLIND
PY	PRESSURE/VACUUM SOLENOID, RELAYS, COMPUTING DEVICE
REM	REMOTE
SC	SPEED/FREQUENCY CONTROLLER, BLIND
ST	SPEED/FREQUENCY TRANSMITTER
SV	SPEED/FREQUENCY ELEMENT, FINAL
TAH	TEMPERATURE ALARM HIGH
TAL	TEMPERATURE ALARM LOW
TE	TEMPERATURE ELEMENT, PRIMARY
TI	TEMPERATURE INDICATING DEVICE
TIT	TEMPERATURE TRANSMITTER, INDICATING
TSH	TEMPERATURE SWITCH HIGH
TSL	TEMPERATURE SWITCH LOW
TURB	TURBIDITY
TV	TEMPERATURE ELEMENT, FINAL
XA	GENERAL ALARM
XC	CLOSE CONTROL VALVE
XD	OPEN CONTROL VALVE
XO	OPEN CONTROL VALVE
YC	MOTOR (PUMP/MIXER) START/STOP CONTROL
YL	STATUS, LIGHT
YN	MOTOR (PUMP/MIXER) RUNNING
ZC	POSITION CONTROL
ZI	POSITION INDICATING DEVICE
ZSC	PROXIMITY SWITCH CLOSED
ZSO	PROXIMITY SWITCH OPEN

ELECTRICAL CODES

CODE	DESCRIPTION
CP	CONTROL PANEL
CST	CONTROL STATION
ECP	ELECTRICAL CONTROL PANEL
MCP	MOTOR CONTROL PANEL
MDP	MAIN DISTRIBUTION PANEL
OIT	OPERATOR INTERFACE TERMINAL
PDP	POWER DISTRIBUTION PANEL
PLC	PROGRAMMABLE LOGIC CONTROLLER
PNL	CONTROL PANEL
PP	POWER PANEL
REM	REMOTE
SRV	SCADA SERVER
VCP	VENDOR CONTROL PANEL

PIPE SPECIFICATION CODES

CODE	DESCRIPTION
BS	BLACK STEEL, ASTM A53, THREADED
CI1	CAST IRON, AWWA C106/8, ASTM A74, HUBBED JOINTS
CI2	CAST IRON, AWWA C106/8, ASTM A74 & A888, HUBLESS JOINTS
CPVC	CPVC, SCHEDULE 80, ASTM F2618, FLANGED
CS1	CARBON STEEL, PER SPECIFICATION
CU1	COPPER TYPE L, ASTM B88, SOLDERED
CU2	COPPER TYPE K, ASTM B88, SOLDERED
CU3	COPPER TBD
DI1	DUCTILE IRON, PER SPECIFICATION
GV1	GALVANIZED CARBON STEEL, STANDARD WEIGHT, ASTM A53 GR.B, THREADED
HD1	HDPE, PER SPECIFICATION
PV1	PVC SCHEDULE 40, ASTM D-3034, SOLVENT WELDED
PV2	PVC PIPE, SCHEDULE 80, ASTM D-1785, SOLVENT WELDED
PV3	PVC PIPE, SCHEDULE 80, ASTM D-1785, FLANGED
SS1	STAINLESS STEEL 304, WELDED
SS2	STAINLESS STEEL 316, WELDED
TT	TEFL TUBING

INSTRUMENT IDENTIFICATION LETTERS

	1ST LETTER	2ND LETTER	3RD LETTER	4TH LETTER
A	ANALYSIS	ALARM		
B	BURNER			
C	CONDUCTIVITY	CONTROL	CONTROL OR CLOSE	CONTROL OR CLOSE
D	DENSITY	DIFFERENTIAL		
E	ELECTRIC OR VOLTAGE	ELEMENT		
F	FLOW	RATIO		
G		GLASS		
H	HAND OPERATED		HIGH	HIGH
I	CURRENT	INDICATOR	INDICATOR	
J	POWER	SCAN		
K	TIME	CONTROL STATION		
L	LEVEL	LIGHT	LOW OR LIGHT	
M	MOISTURE	MOTOR	MEDIUM	MEDIUM
N	USER'S CHOICE			
O	N/A	ORIFICE		
P	PRESSURE	TEST CONNECTION		
Q	QUANTITY			
R	RADIATION OR RESTRICTION	RECORD	RECORD	
S	SPEED/SOLENOID	SWITCH	SWITCH	
T	TEMPERATURE	TRANSMITTER	TRANSMITTER	
U	VARIABLE			
V	VIBRATION	VALVE/DAMPER	VALVE/DAMPER	VALVE/DAMPER
W	WEIGHT	WELL		
X	USER'S CHOICE			
Y	USER'S CHOICE	RELAY, CONVERTER, SOLENOID		
Z	POSITION	FINAL CONTROL ELEMENT		
PNL	CONTROL PANEL			

GENERAL NOTES:

1. THIS IS A STANDARD LEGEND, THEREFORE NOT ALL OF THE INFORMATION MAY BE USED ON THIS PROJECT.
2. P & I D INSTRUMENTATION DETAILS DO NOT REPRESENT INSTRUMENTS AND CONTROLS INTEGRAL TO VENDOR SUPPLIED CONTROL PANELS OR EQUIPMENT. SEE EQUIPMENT SPECIFICATIONS FOR THIS INFORMATION
3. FOR INFORMATION REGARDING DIGITAL AND ANALOG ELECTRONIC CONTROL SIGNALING REFER TO E-001
4. P & I D DOES NOT REPRESENT EQUIPMENT HARDWIRED INTERLOCK AND ENABLE CIRCUITRY. REFERENCE MCC ELECTRICAL ELEMENTARY SCHEMATICS FOR THIS INFORMATION
5. * DENOTES VENDOR SUPPLIED EQUIPMENT
6. P&IDS IN THIS CONTRACT ONLY INCLUDE DESIGN INFORMATION FOR THE FIELD PORTION. SCADA AND PLC INTEGRATION SHALL BE DONE BY OTHERS. ANY INFORMATION ABOVE THE FIELD LINE IS FOR REFERENCE ONLY AND SHOULD BE CONFIRMED BY THE OWNER'S INTEGRATOR.

NO.	DATE	BY	REVISION

NOTICE

0 ½ 1

IF THIS BAR DOES NOT MEASURE 1" THEN DRAWING IS NOT TO SCALE

DSN DESIGNED
DWN DRAWN
CHK CHECKED

REGISTERED PROFESSIONAL ENGINEER 105439PE OREGON MARCH 11, 2025 HEATHER LEIGH BURNS
Digitally signed by Heather Leigh Burns Date: 2026.07.27 13:59:50 PDT
RENEWS 12-31-27

BID SET

consor
Stantec

South Fork WATER PURE WATER SINCE 1915

WATER QUALITY SYSTEMS BUILDING

INSTRUMENTATION & CONTROL

P&ID ABBREVIATIONS

PROJECT NO.: W253326OR | SCALE: AS SHOWN | DATE: AUGUST 2026

SHEET I-002

\\EgnyteDrive\Consor Files_V-W\Projects\OR\South Fork Water\2025\W253326OR.00\12 CADD\12-5 Sheets\I-001 P&ID LEGEND.dwg I-002 7/29/2026 11:08 AM JUSTIN.DEUEL 24.3s (LMS Tech)

SCADA (INTEGRATION BY OTHERS)

PLC (INTEGRATION BY OTHERS)

SFWB REDUNDANT PLANT PLC PROCESSOR AND PANEL NAME - SFWB-PLC01B-00
NEXT REMOTE I/O RACK AND PANEL TAG - SFWB-PLC01-02

FIELD

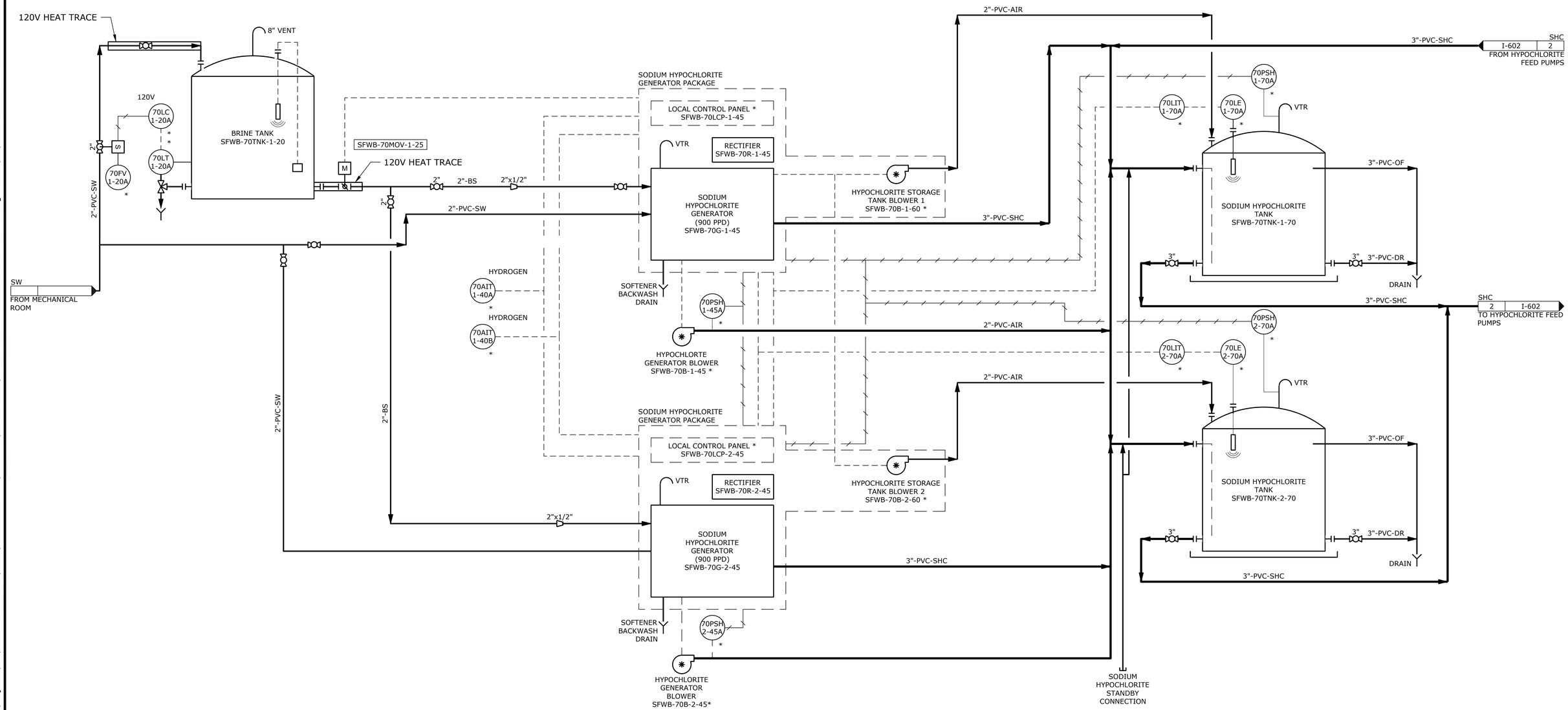

NO.	DATE	BY	REVISION

NOTICE
0 ½ 1
IF THIS BAR DOES NOT MEASURE 1" THEN DRAWING IS NOT TO SCALE

BR DESIGNED
JLC DRAWN
LHO CHECKED

REGISTERED PROFESSIONAL ENGINEER 105439PE OREGON MARCH 11, 2025 HEATHER LEIGH BURNS
Digitally signed by Heather Leigh Burns
Date: 2026.07.27 13:08:50 PDT
RENEWS 12-31-27

BID SET

consor
Stantec

South Fork WATER
PURE WATER SINCE 1915

WATER QUALITY SYSTEMS BUILDING

INSTRUMENTATION & CONTROL

P&ID HYPOCHLORITE SYSTEM 1

PROJECT NO.: W253326OR | SCALE: AS SHOWN | DATE: AUGUST 2026

SHEET
I-601

\\EgnyteDrive\Consor Files_V-W\Projects\OR\South Fork Water\2025\W253326OR.00\12 CADD\12-5 Sheets\I-601 P&ID HYPOCHLORITE SYSTEM 1.dwg I-601 7/29/2026 11:08 AM JUSTIN.DEUEL 24.3s (LMS Tech)

SCADA (INTEGRATION BY OTHERS)

PLC (INTEGRATION BY OTHERS)

FIELD

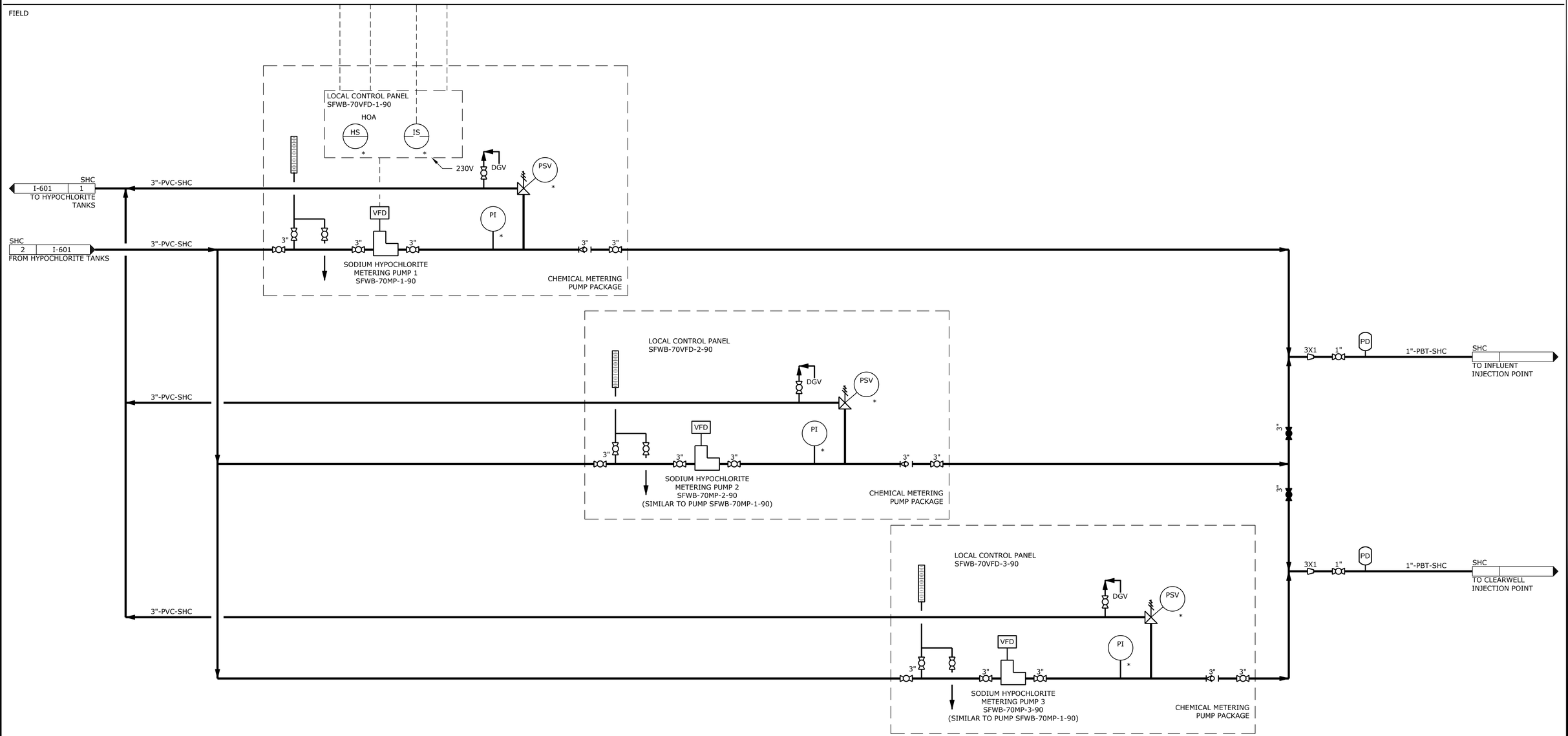

NO.	DATE	BY	REVISION

NOTICE

0 ½ 1

IF THIS BAR DOES NOT MEASURE 1" THEN DRAWING IS NOT TO SCALE

DSN
DESIGNED

DWN
DRAWN

CHK
CHECKED

REGISTERED PROFESSIONAL ENGINEER
105439PE
OREGON
MARCH 11, 2025
HEATHER LEIGH BURNS
Digitally signed by Heather Leigh Burns
Date: 2026.07.27 13:08:50 PDT
RENEWS 12-31-27

BID SET

consor

Stantec

South Fork WATER
PURE WATER SINCE 1915

WATER QUALITY SYSTEMS BUILDING

INSTRUMENTATION & CONTROL

P&ID HYPOCHLORITE SYSTEM 2

PROJECT NO.: W253326OR | SCALE: AS SHOWN | DATE: AUGUST 2026

SHEET

I-602

\\EgnyteDrive\Consor Files_V-W\Projects\OR\South Fork Water\2025\W253326OR.00\12 CADD\12-5 Sheets\I-602 P&ID HYPOCHLORITE SYSTEM 2.dwg I-602 7/29/2026 11:08 AM JUSTIN.DEUEL 24.3s (LMS Tech)

SCADA (INTEGRATION BY OTHERS)

PLC (INTEGRATION BY OTHERS)

FIELD

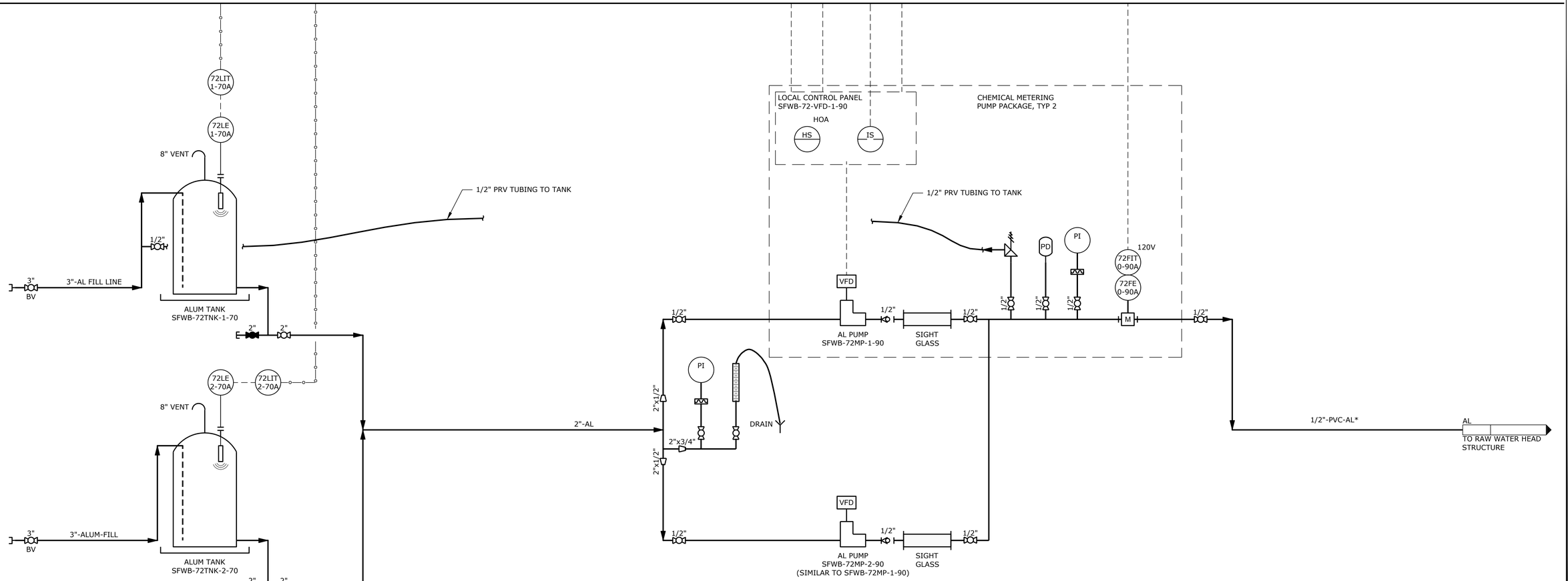

NOTES:

1. * INDICATES PIPE SIZE AND MATERIAL SHOWN IS CASING PIPE. SEE DRAWINGS AND PIPE SCHEDULE FOR CONDUIT PIPE SIZE AND MATERIAL.

NO.	DATE	BY	REVISION

NOTICE
0 ½ 1
IF THIS BAR DOES NOT MEASURE 1" THEN DRAWING IS NOT TO SCALE

DSN DESIGNED
DWN DRAWN
CHK CHECKED

REGISTERED PROFESSIONAL ENGINEER 105439PE OREGON MARCH 11, 2025 HEATHER LEIGH BURNS
Digitally signed by Heather Leigh Burns
Date: 2026.07.27 13:59:50 PDT
RENEWS 12-31-27

BID SET

consor
Stantec

South Fork WATER
PURE WATER SINCE 1915

WATER QUALITY SYSTEMS BUILDING

INSTRUMENTATION & CONTROL

P&ID ALUM SYSTEM

PROJECT NO.: W253326OR | SCALE: AS SHOWN | DATE: AUGUST 2026

SHEET
I-603

\\EgnyteDrive\Consor Files_V-W\Projects\OR\South Fork Water\2025\W253326OR.00\12 CADD\12-5 Sheets\I-603 P&ID ALUM SYSTEM.dwg I-603 7/29/2026 11:08 AM JUSTIN.DEUEL 24.3s (LMS Tech)

SCADA (INTEGRATION BY OTHERS)

PLC (INTEGRATION BY OTHERS)

FIELD

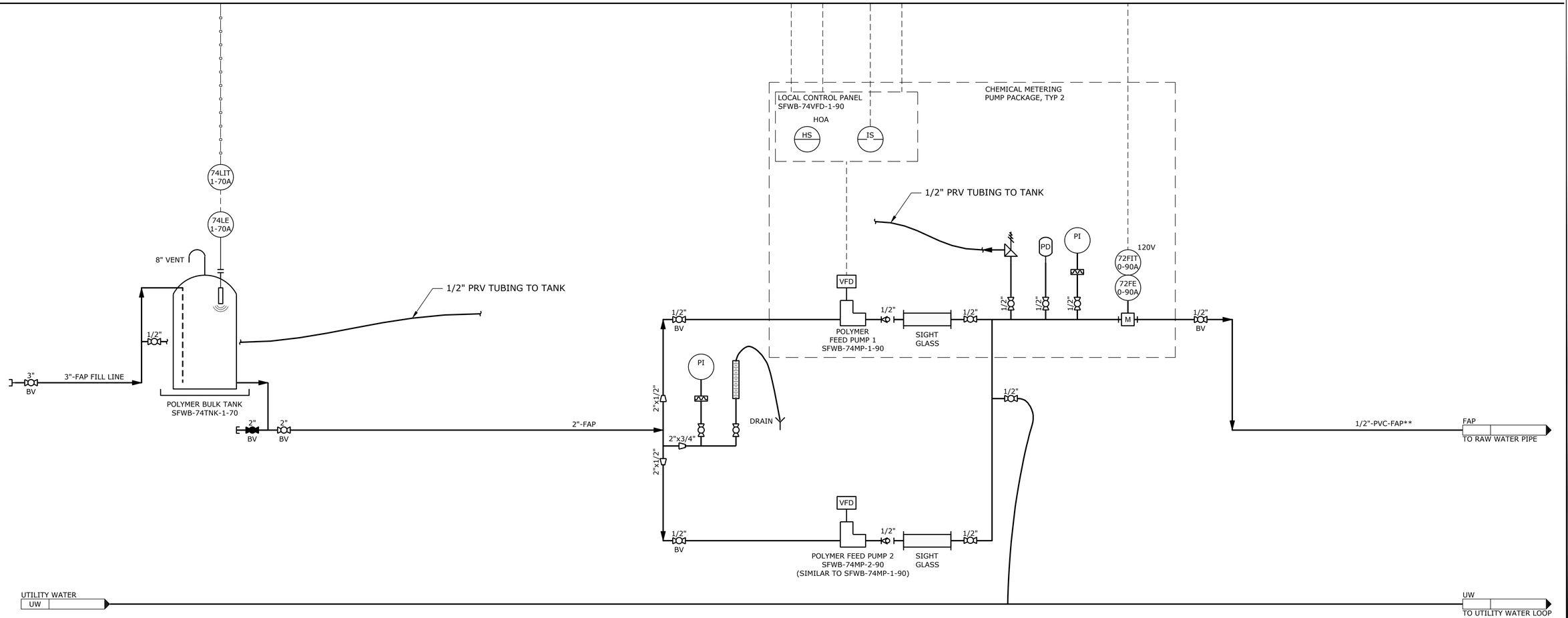

NOTES:

1. ** INDICATES PIPE SIZE AND MATERIAL SHOWN IS CASING PIPE. SEE DRAWINGS AND PIPE SCHEDULE FOR CONDUIT PIPE SIZE AND MATERIAL.

NO.	DATE	BY	REVISION

NOTICE

0 ½ 1

IF THIS BAR DOES NOT MEASURE 1" THEN DRAWING IS NOT TO SCALE

DSN DESIGNED

DWN DRAWN

CHK CHECKED

REGISTERED PROFESSIONAL ENGINEER 105439PE OREGON MARCH 11, 2025 HEATHER LEIGH BURNS

Digitally signed by Heather Leigh Burns
Date: 2026.07.27 13:59:50 -07'00'

RENEWS 12-31-27

BID SET

consor

Stantec

South Fork WATER PURE WATER SINCE 1915

WATER QUALITY SYSTEMS BUILDING

INSTRUMENTATION & CONTROL

P&ID POLYMER SYSTEM

PROJECT NO.: W253326OR | SCALE: AS SHOWN | DATE: AUGUST 2026

SHEET

I-604

\\EgnyteDrive\Consor Files_V-W\Projects\OR\South Fork Water\2025\W253326OR.00\12 CADD\12-5 Sheets\I-604 P&ID POLYMER.dwg I-604 7/29/2026 11:08 AM JUSTIN.DEUEL 24.3s (LMS Tech)

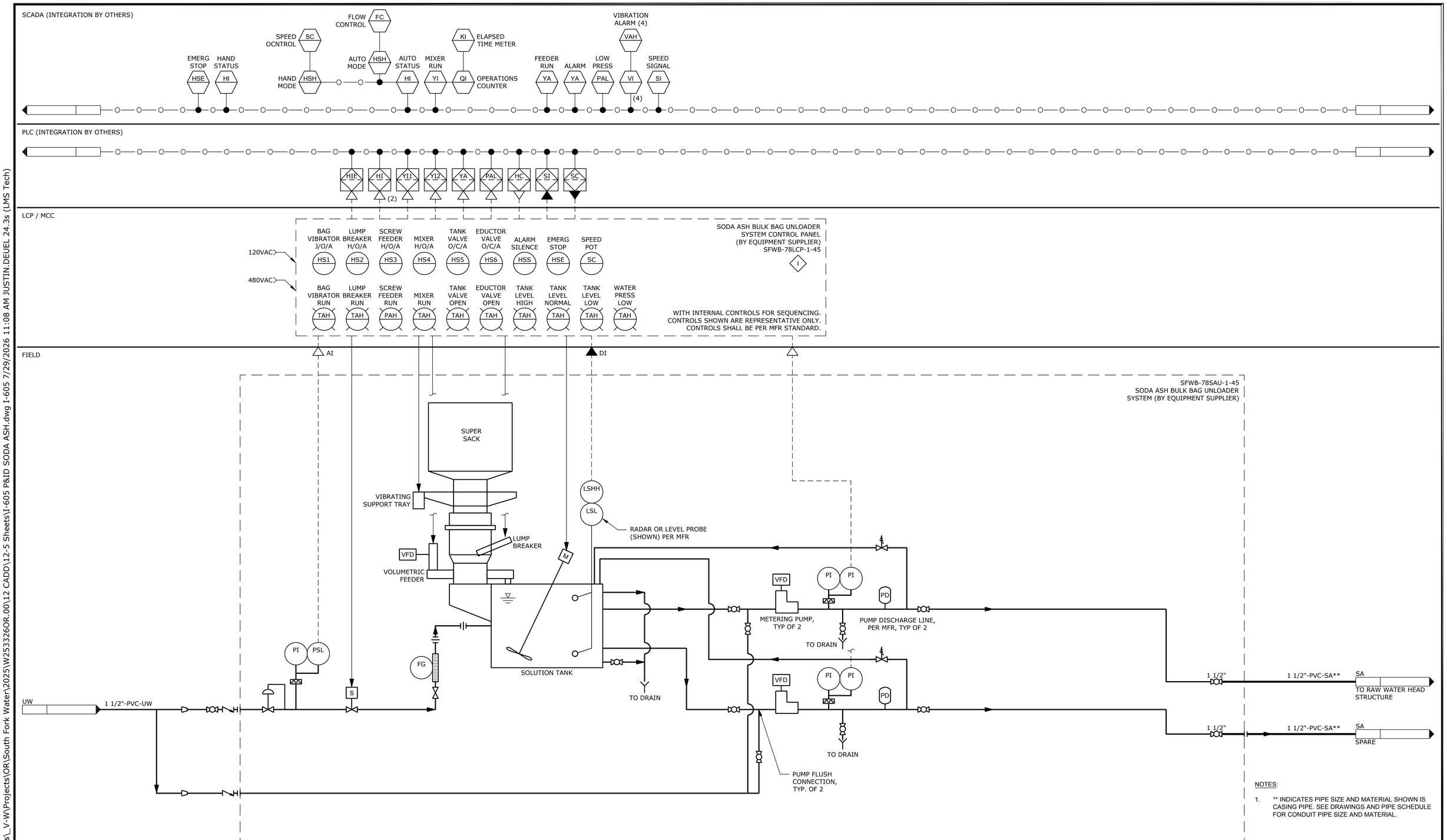

NOTES:

1. ** INDICATES PIPE SIZE AND MATERIAL SHOWN IS CASING PIPE. SEE DRAWINGS AND PIPE SCHEDULE FOR CONDUIT PIPE SIZE AND MATERIAL.

NO.	DATE	BY	REVISION

NOTICE
0 ½ 1
IF THIS BAR DOES NOT MEASURE 1" THEN DRAWING IS NOT TO SCALE

DSN DESIGNED
DWN DRAWN
CHK CHECKED

REGISTERED PROFESSIONAL ENGINEER 105439PE OREGON MARCH 11, 2025 HEATHER LEIGH BURNS
Digitally signed by Heather Leigh Burns Date: 2025.07.27 13:04:30 -07'00'
RENEWS 12-31-27

BID SET

consor
Stantec

South Fork WATER PURE WATER SINCE 1915

WATER QUALITY SYSTEMS BUILDING

INSTRUMENTATION & CONTROL

P&ID SODA ASH

PROJECT NO.: W253326OR | SCALE: AS SHOWN | DATE: AUGUST 2026

SHEET I-605

\\EgnyteDrive\Consor Files_V-W\Projects\OR\South Fork Water\2025\W253326OR.00\12 CADD\12-5 Sheets\I-605 P&ID SODA ASH.dwg 1-605 7/29/2026 11:08 AM JUSTIN.DEUEL 24.3s (LMS Tech)