WALLA WALLA COUNTY
PUBLIC WORKS DEPARTMENT

WALLULA AVENUE BRIDGE REPLACEMENT PROJECT

CRP 22-03

BRS-L360(001)

TA-7561

Commisioners

District 1

Bertha J. Clayton

District 2

Todd L. Kimball

District 3

Gunner Fulmer

Walla Walla County
PUBLIC WORKS

990 NAVION LN
WALLA WALLA, WA 99362

(509) 524-2710

DAVID EVANS AND ASSOCIATES INC.

9/8/2025
PLOT DATE

CALL 2 BUSINESS DAYS
BEFORE YOU DIG
(EXCLUDING WEEKENDS & HOLIDAYS)

1-800-424-5555

THE UNDERGROUND UTILITIES SHOWN HAVE BEEN LOCATED AS ACCURATELY AS POSSIBLE FROM FIELD SURVEY INFORMATION AND EXISTING DRAWINGS. WALLA WALLA COUNTY MAKES NO GUARANTEES THAT THE UNDERGROUND UTILITIES SHOWN COMPRISE ALL SUCH UTILITIES IN THE AREA, EITHER IN-SERVICE OR ABANDONED. FURTHER, WE DO NOT WARRANT THAT THE UNDERGROUND UTILITIES SHOWN ARE IN EXACT LOCATION INDICATED, ALTHOUGH WE DO CERTIFY THAT THEY ARE LOCATED AS ACCURATELY AS POSSIBLE FROM INFORMATION AVAILABLE.

GENERAL CONSTRUCTION NOTES:

1. ALL EXISTING COUNTY SIGNS SHALL BE REMOVED AND SALVAGED FOR COUNTY.
2. ALL MAILBOXES SHALL REMAIN ACCESSIBLE AT ALL TIMES.
3. ALL ADDRESS POSTS SHALL REMAIN VISIBLE TO TRAFFIC AT ALL TIMES.
4. FOR CLARIFICATION PURPOSES, VARIOUS TREES ARE SHOWN IN THE PLANS FOR REMOVAL. ANY ADDITIONAL TREES, SHRUBS, AND/OR STUMPS WITHIN THE COUNTY RIGHT-OF-WAY, AND THE PROJECT LIMITS, THAT WILL OBSTRUCT THE PROPOSED CUT, FILL, AND CLEAR ZONE AREAS SHALL BE REMOVED AS DIRECTED BY THE ENGINEER OR COUNTY REPRESENTATIVE.
5. VERTICAL DATUM - NAVD88
   HORIZONTAL DATUM - FEMA FIRM 5301940440B DATUM NGVD29 = NAVD88 - 3.27

LEGEND

EXISTING	PROPOSED		EXISTING	PROPOSED	
P		UNDERGROUND POWER LINE	700	700	MAJOR CONTOUR
OP		OVERHEAD POWER LINE			MINOR CONTOUR
T		UNDERGROUND TELEPHONE LINE		C	CUT CATCH LINE
OT		OVERHEAD TELEPHONE LINE		F	FILL CATCH LINE
FO		UNDERGROUND FIBER OPTIC LINE			HINGE POINT
OFO		OVERHEAD FIBER OPTIC LINE			SWALE BOTTOM
SD	SD	STORM SEWER		DITCH	DITCH BOTTOM
X X	X X	FENCE	R/W R/W		RIGHT OF WAY
	X	GATE			EASEMENT
		ORDINARY HIGH WATER (OHW)			SURVEY MONUMENT (TO BE SET BY COUNTY)
		GUARDRAIL			MAILBOX
TJR		TELEPHONE JUNCTION BOX			
P		POWER VAULT			
		POWER POLE			
		GUY WIRE ANCHOR			
		TREE			

SHEET INDEX

SHEET	DESCRIPTIONS	SHEET	DESCRIPTIONS
1	VICINITY MAP	21	TYPICAL SECTION
2	SUMMARY OF QUANTITIES	22	GIRDER SCHEDULE
3	ROADWAY SITE PREPARATION PLAN	23-25	GIRDER DETAILS
4	TEMPORARY EROSION & SEDIMENT CONTROL PLAN	26	INTERMEDIATE DIAPHRAGM DETAILS
5-6	PLAN AND PROFILE - WALLULA AVENUE	27	END DIAPHRAGM DETAILS
7	PLAN AND PROFILE - HARDING ROAD	28	GIRDER BEARING DETAILS
8	TYPICAL ROAD SECTIONS	29-30	TRAFFIC BARRIER-SINGLE SLOPE 42" DETAILS
9	SWALE DETAILS	31-33	APPROACH SLAB DETAILS
10	STORM & CULVERT PROFILES	34	UTILITY HANGER DETAILS
10A	APPROACH DETAILS	35	BARLIST
11	LANDSCAPING PLAN	36-37	TEMPORARY TRAFFIC CONTROL
12	PERMANENT TRAFFIC CONTROL	38	STREAM CHANNEL OVERVIEW
13	BRIDGE LAYOUT	39	STREAM PLAN & PROFILE
14	GENERAL STRUCTURAL NOTES	40	SCOUR COUNTERMEASURE PLAN
15	FOUNDATION PLAN	41	STREAM RESTORATION PLAN
16	FOUNDATION DETAILS	42-43	LARGE WOODY MATERIAL DETAILS
17	PIER PLAN AND ELEVATION	44	STREAM MATERIAL PLACEMENT DETAILS
18	PIER DETAILS	45	STREAM RESTORATION DETAILS
19	WINGWALL DETAILS	46	TYPICAL REVETMENT SECTIONS
20	FRAMING PLAN	47	TYPICAL STREAM SECTIONS

AGENCY APPROVAL

DATE

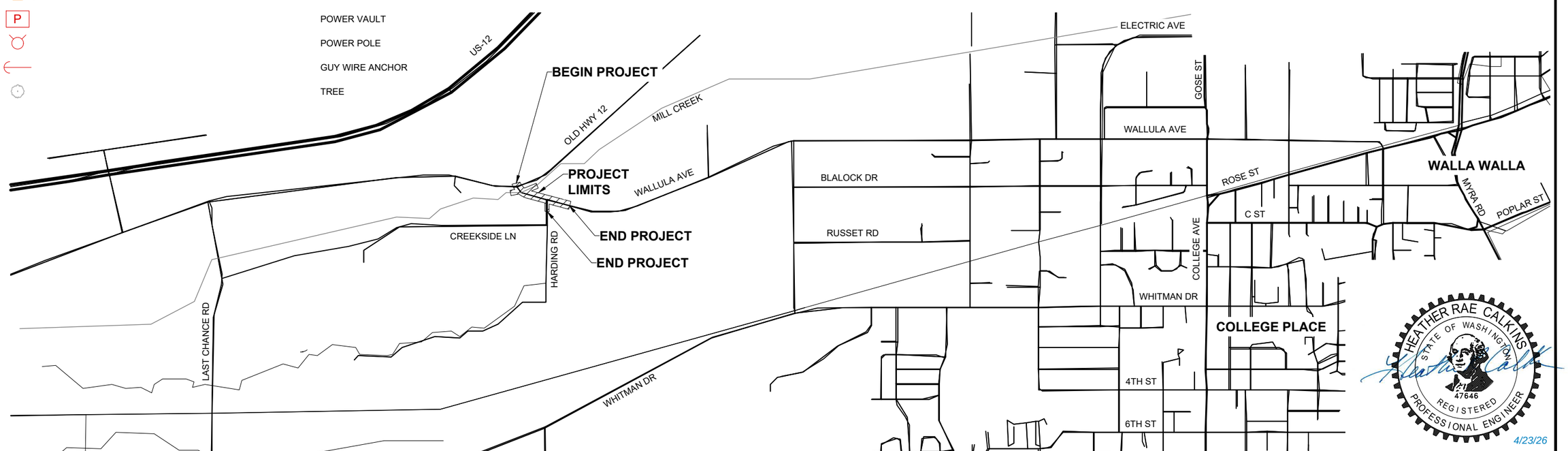

HEATHER RAE CALKINS
STATE OF WASHINGTON
47646
REGISTERED
PROFESSIONAL ENGINEER
4/23/26

P:\W\WALL00PW0001\0400CAD\SHEETS\WALL00PW0001_SHEET_ VICINITY MAP.dwg				
DRAWN: AWRA				
DESIGNER: LXHE				
CHECKED: HRC				
PROJ. ENG.: HRC				
APPROVED BY:				
4/22/2026	REV DATE	REVISION	BY	APP'D

REGION NO.	STATE	FEDERAL AID PROJECT NO.
10	WASH	BRS-L360(001) TA-7561
JOB NUMBER		
22-03		

DAVID EVANS AND ASSOCIATES INC.
908 N Howard St, Ste 300
Spokane, WA 99201
Phone: 509.327.8697

Walla Walla County

PUBLIC WORKS DEPARTMENT

4/22/2026
PLOT DATE

COUNTY OF WALLA WALLA

WALLULA AVENUE BRIDGE

VICINITY MAP

SHEET
1
1 OF 47

SUMMARY OF QUANTITIES

NO.	QUANTITY	UNIT	ITEM
PREPARATION			
1	1	LS	MOBILIZATION
2	0.49	ACRE	CLEARING AND GRUBBING
3	1	EST	ARCHAEOLOGICAL AND HISTORICAL SALVAGE
4	1	LS	REMOVAL OF STRUCTURES AND OBSTRUCTIONS
5	1	LS	REMOVING EXISTING BRIDGE
GRADING			
6	930	CY	ROADWAY EXCAVATION INCL. HAUL
7	500	CY	UNSUITABLE FOUNDATION EXCAVATION, INCL. HAUL
8	2550	CY	SELECT BORROW INCL. HAUL
9	2970	CY	EMBANKMENT COMPACTION
DRAINAGE			
10	150	CY	STREAMBED COBBLES 12 IN.
11	60	EACH	STREAMBED BOULDER TYPE THREE
12	1350	CY	ROCK FOR EROSION AND SCOUR PROTECTION CLASS B
13	6700	CY	CHANNEL EXCAVATION INCL. HAUL
14	7.6	CY	QUARRY SPALLS
15	550	CY	STREAMBED SEDIMENT
16	68	LF	PLAIN STEEL CULV. PIPE 0.064 IN. TH. 18IN. DIAM
17	1	LS	TEMPORARY STREAM DIVERSION
18	200	CY	STREAMBED BOULDER TYPE ONE
19	300	CY	STREAMBED SAND
STORM SEWER			
20	2	EACH	CATCH BASIN TYPE 1L
21	122	LF	SOLID WALL PVC STORM SEWER PIPE 12 IN. DIAM.
STRUCTURE			
22	164	CY	STRUCTURE EXCAVATION CLASS A INCL. HAUL
23	1	LS	SHORING OR EXTRA EXCAVATION CL. A
24	110	CY	GRAVEL BACKFILL FOR WALLS
25	455	LF	FURNISHING ST. PILING
26	14	EACH	DRIVING ST. PILE
27	1	LS	SUPERSTRUCTURE
28	351	LF	TRAFFIC BARRIER
29	450	SY	WATERPROOF MEMBRANE BR. NO.
30	190	SY	BRIDGE APPROACH SLAB
31	64	LF	PAVED PANEL JOINT SEAL
32	14	EACH	FURNISHING STEEL PILE TIP OR SHOE
33	110	LF	SUPERSTRUCTURE - UTILITY SLEEVE
34	13825	LB	ST. REINF. BAR - SUBSTRUCTURE
35	99	CY	CONC. CLASS 4000 FOR SUBSTRUCTURE
SURFACING			
36	1400	CY	CRUSHED SURFACING BASE COURSE
HOT MIX ASPHALT			
37	645	TON	HMA CL 1/2" PG 64H-28

NO.	QUANTITY	UNIT	ITEM
EROSION CONTROL AND ROADSIDE PLANTING			
38	1320	LF	SILT FENCE
39	1.2	ACRE	TOPSOIL TYPE B
40	5600	SY	SEEDING, FERTILIZING, AND MULCHING
41	200	SY	SEEDING AND MULCHING
42	2	EACH	INLET PROTECTION
43	125	LF	WATTLE
44	1100	SY	FINE COMPOST
45	1	EST	EROSION/WATER POLLUTION CONTROL
46	710	EACH	PSIPE NO. 1 CONTAINERS
47	475	EACH	PSIPE NO. 2 CONTAINERS
48	360	EACH	LIVE POLE
49	1300	SY	BIODEGRADABLE EROSION CONTROL BLANKET
50	30	EACH	1.5' DBH, 15' LONG LWM WITH ROOTWAD
51	30	EACH	1' DBH, 15' LONG LWM WITH ROOTWAD
TRAFFIC			
52	32	LF	CEMENT CONC. TRAFFIC CURB AND GUTTER
53	5	EACH	BEAM GUARDRAIL TYPE 31 NON-FLARED TERMINAL
54	230	LF	EXTRUDED CURB TYPE 4
55	75	LF	BEAM GUARDRAIL TYPE 31
56	4	EACH	BEAM GUARDRAIL TRANSITION SECTION TYPE 21
57	3860	LF	PAINT LINE
58	30	LF	PAINTED WIDE LINE
59	21	EACH	FLEXIBLE GUIDE POST
60	73	LF	PAINTED STOP LINE
61	1	LS	PERMANENT SIGNING
62	1	LS	PROJECT TEMPORARY TRAFFIC CONTROL
63	21	DAY	PORTABLE CHANGEABLE MESSAGE SIGN
OTHER ITEMS			
64	1	LS	STRUCTURE SURVEYING
65	1	LS	ROADWAY SURVEYING
66	166	LF	WIRE FENCE TYPE 1
67	4270	SY	CONSTRUCTION GEOTEXTILE FOR SEPARATION
68	2500	SY	CONSTRUCTION GEOTEXTILE FOR PERMANENT EROSION CONTROL
69	2	EACH	MAILBOX SUPPORT TYPE 2
70	1	CALC	MINOR CHANGE
71	1	LS	SPCC PLAN

HEATHER RAE CALKINS
STATE OF WASHINGTON
47646
REGISTERED
PROFESSIONAL ENGINEER
4/23/26

UNDERGROUND UTILITIES
- FIBER OPTIC
- TELEPHONE
- POWER

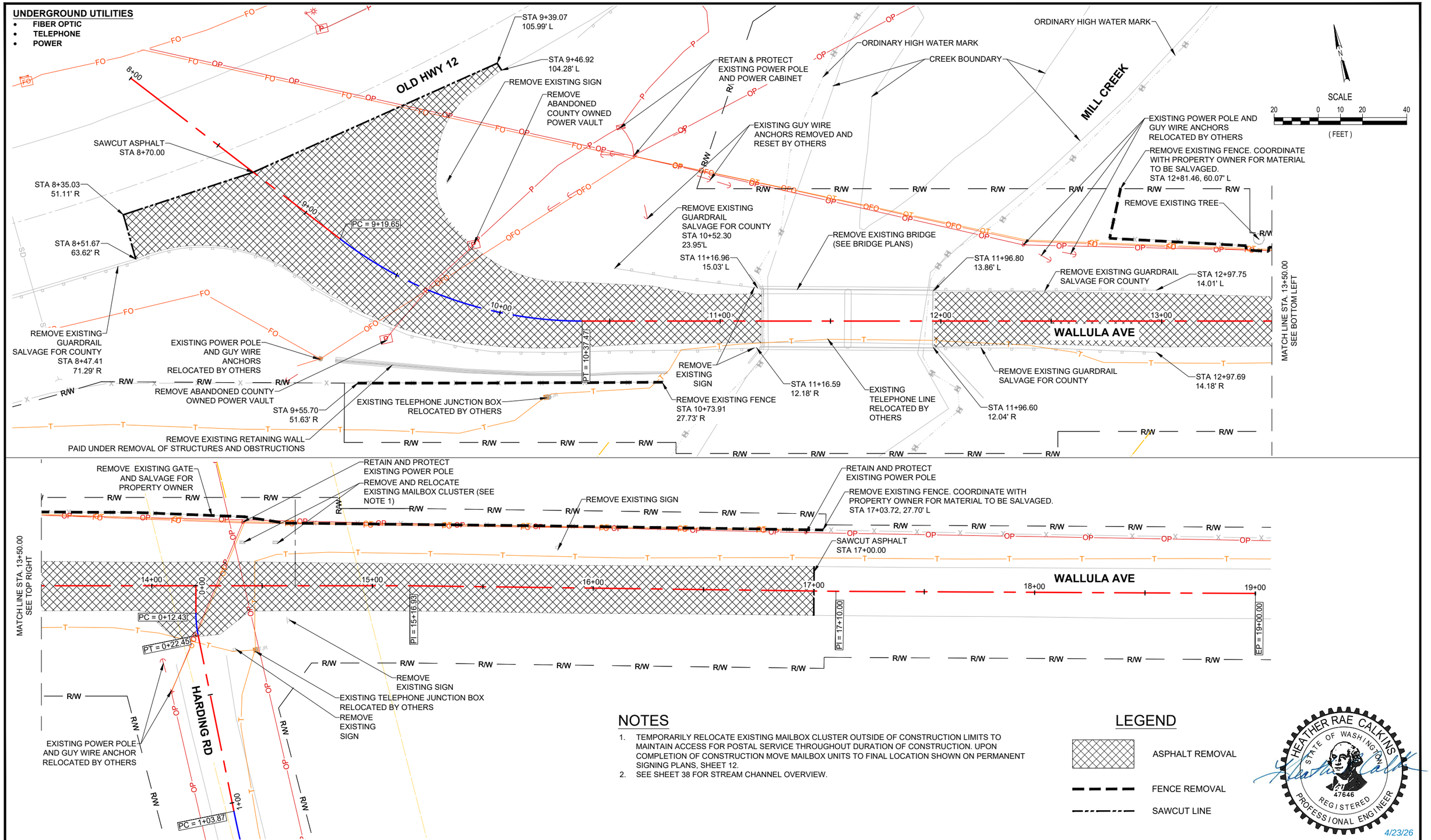

NOTES

1. TEMPORARILY RELOCATE EXISTING MAILBOX CLUSTER OUTSIDE OF CONSTRUCTION LIMITS TO MAINTAIN ACCESS FOR POSTAL SERVICE THROUGHOUT DURATION OF CONSTRUCTION. UPON COMPLETION OF CONSTRUCTION MOVE MAILBOX UNITS TO FINAL LOCATION SHOWN ON PERMANENT SIGNING PLANS, SHEET 12.
2. SEE SHEET 38 FOR STREAM CHANNEL OVERVIEW.

LEGEND

- ASPHALT REMOVAL
- FENCE REMOVAL
- SAWCUT LINE

HEATHER RAE CALKINS
STATE OF WASHINGTON
47646
REGISTERED PROFESSIONAL ENGINEER
4/23/26

P:\WWALL00PW0001\0400CAD\SHEETS\WALL00PW0001_SHEET_ SP.dwg				
DRAWN: AWRA				
DESIGNER: LXHE				
CHECKED: HRC				
PROJ. ENG.: HRC				
APPROVED BY:				
4/23/2026	REV DATE	REVISION	BY	APP'D

REGION NO.	STATE	FEDERAL AID PROJECT NO.
10	WASH	BRS-L360(001) TA-7561
JOB NUMBER 22-03		

DAVID EVANS AND ASSOCIATES INC.
908 N Howard St, Ste 500
Spokane, WA 99201
Phone: 509.327.8697

Walla Walla County

PUBLIC WORKS DEPARTMENT

4/23/2026
PLOT DATE

COUNTY OF WALLA WALLA

WALLULA AVENUE BRIDGE

ROADWAY SITE PREPARATION PLAN

SHEET 3
3 OF 47

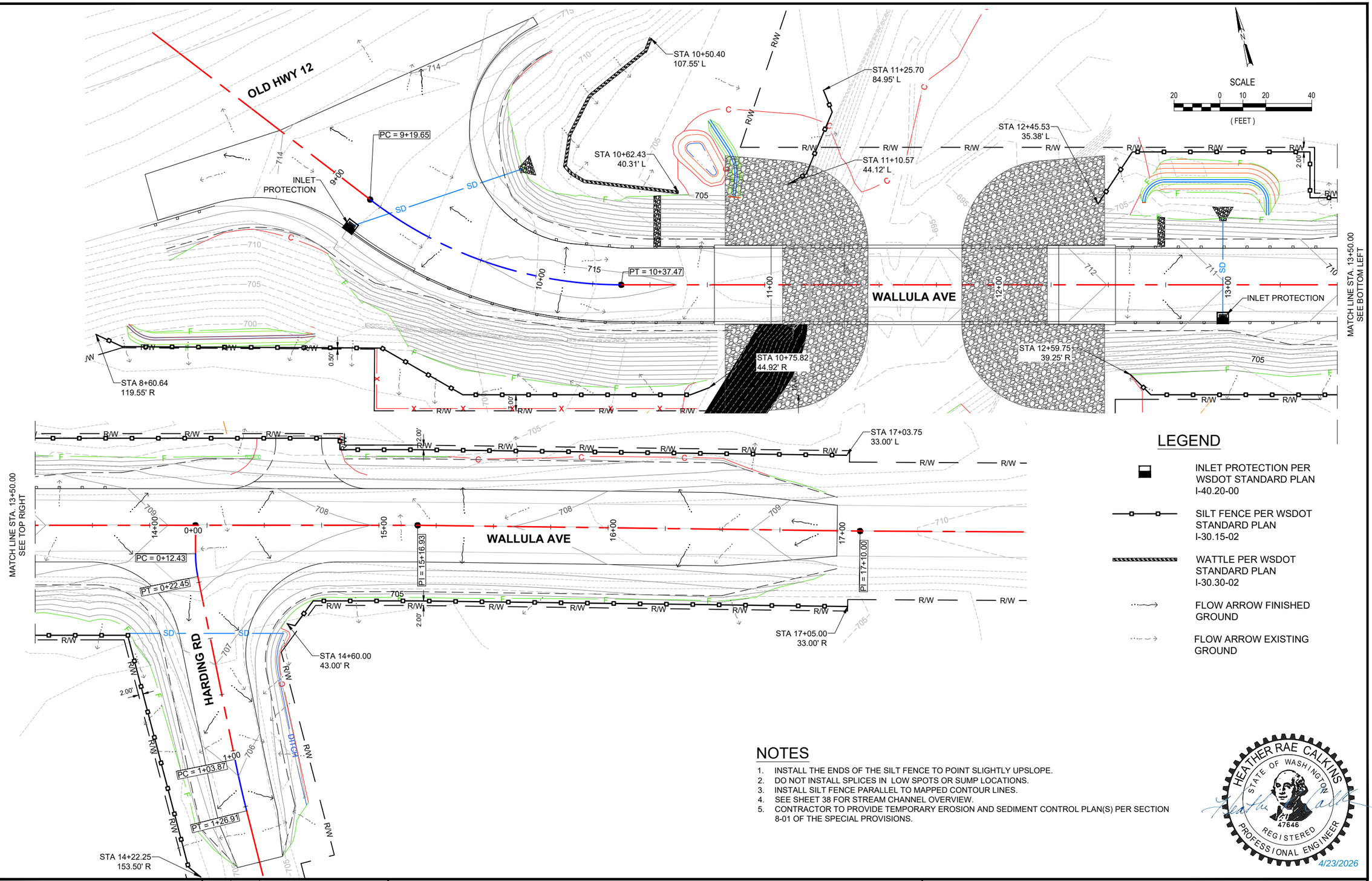

LEGEND

- INLET PROTECTION PER WSDOT STANDARD PLAN I-40.20-00
- SILT FENCE PER WSDOT STANDARD PLAN I-30.15-02
- WATTLE PER WSDOT STANDARD PLAN I-30.30-02
- FLOW ARROW FINISHED GROUND
- FLOW ARROW EXISTING GROUND

NOTES

1. INSTALL THE ENDS OF THE SILT FENCE TO POINT SLIGHTLY UPSLOPE.
2. DO NOT INSTALL SPLICES IN LOW SPOTS OR SUMP LOCATIONS.
3. INSTALL SILT FENCE PARALLEL TO MAPPED CONTOUR LINES.
4. SEE SHEET 38 FOR STREAM CHANNEL OVERVIEW.
5. CONTRACTOR TO PROVIDE TEMPORARY EROSION AND SEDIMENT CONTROL PLAN(S) PER SECTION 8-01 OF THE SPECIAL PROVISIONS.

HEATHER RAE CALKINS
STATE OF WASHINGTON
47646
REGISTERED
PROFESSIONAL ENGINEER
4/23/2026

P:\WWALL00PW0001\0400CAD\SHEETS\WALL00PW0001_SHEET_ TESC.dwg

DRAWN: AWRA				
DESIGNER: LXHE				
CHECKED: HRC				
PROJ. ENG.: HRC				
APPROVED BY:				
9/25/2025	REV DATE	REVISION	BY	APP'D

REGION NO.	STATE	FEDERAL AID PROJECT NO.
10	WASH	BRS-L360(001) TA-7561
JOB NUMBER		
22-03		

DAVID EVANS AND ASSOCIATES INC.
908 N Howard St, Ste 300
Spokane, WA 99201
Phone: 509.327.8897

Walla Walla County

PUBLIC WORKS DEPARTMENT

4/23/2026
PLOT DATE

COUNTY OF WALLA WALLA

WALLULA AVENUE BRIDGE

TEMPORARY EROSION & SEDIMENT CONTROL PLAN

SHEET 4
4 OF 47

UNDERGROUND UTILITIES
- FIBER OPTIC
- TELEPHONE
- POWER

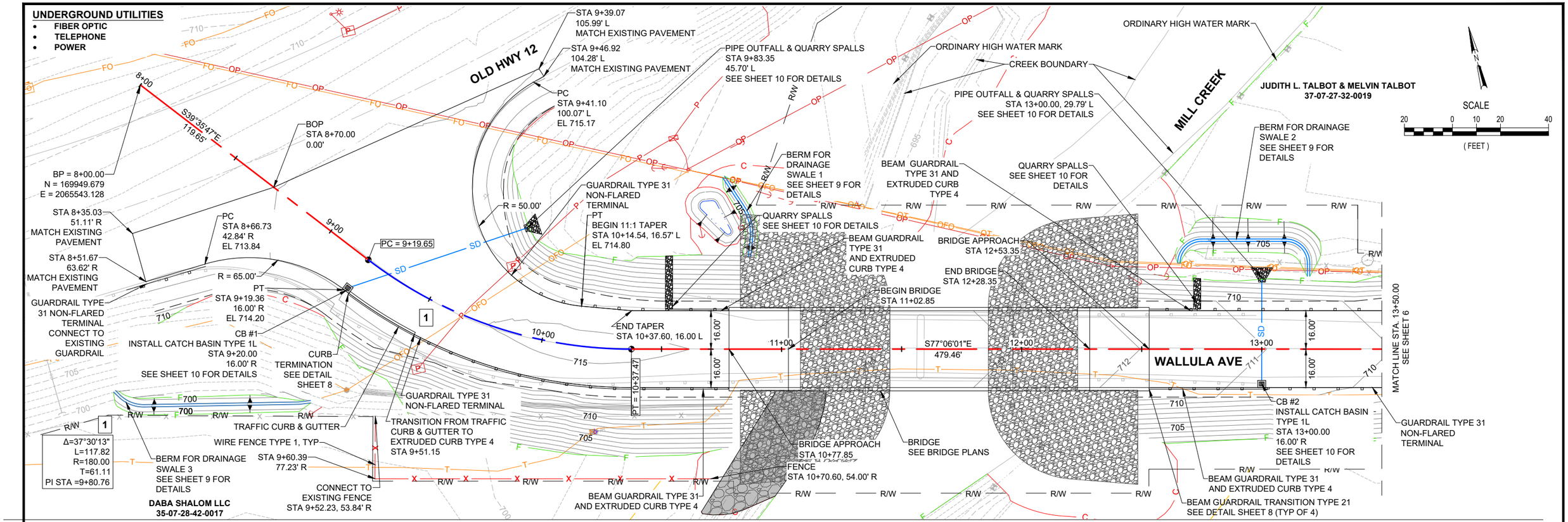

WSDOT STANDARD PLANS
- BEAM GUARDRAIL TYPE 31 - C-20.10-09
- BEAM GUARDRAIL TYPE 31 PLACEMENT, CASE 5-31 - C-20.15-03
- BEAM GUARDRAIL TYPE 31 NON-FLARED TERMINAL (ALL POSTED SPEEDS) - C-22.40-11
- BEAM GUARDRAIL (TYPE 31) TRANSITION SECTION TYPE 21 - C-25.20-07
- CEMENT CONCRETE TRAFFIC CURB & GUTTER - F-10.12-04
- EXTRUDED CURB TYPE 4 - F-10.42-00
- WIRE FENCE TYPE 1 - L-10.10-02

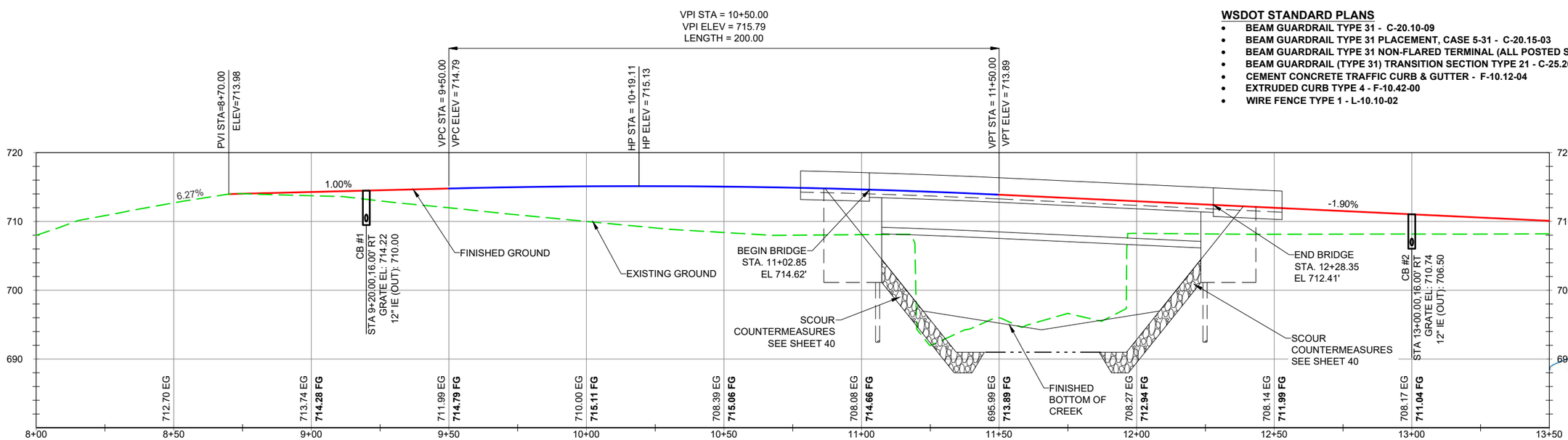

HEATHER RAE CALKINS
STATE OF WASHINGTON
47646
REGISTERED PROFESSIONAL ENGINEER
4/23/26

P:\W\WALL00PW0001\0400CAD\SHEETS\WALL00PW0001_SHEET_ PLPR_WALLULA.dwg				
DRAWN: AWRA				
DESIGNER: LXHE				
CHECKED: HRC				
PROJ. ENG.: HRC				
APPROVED BY:				
4/22/2026	REV DATE	REVISION	BY	APP'D

REGION NO.	STATE	FEDERAL AID PROJECT NO.
10	WASH	BRS-L360(001) TA-7561
JOB NUMBER		
22-03		

DAVID EVANS AND ASSOCIATES INC.
908 N Howard St. Ste 300
Spokane, WA 99201
Phone: 509.327.8697

Walla Walla County
PUBLIC WORKS DEPARTMENT
4/22/2026
PLOT DATE

COUNTY OF WALLA WALLA

WALLULA AVENUE BRIDGE
PLAN and PROFILE - WALLULA AVENUE

SHEET 5
5 OF 47

UNDERGROUND UTILITIES

- FIBER OPTIC
- TELEPHONE
- POWER

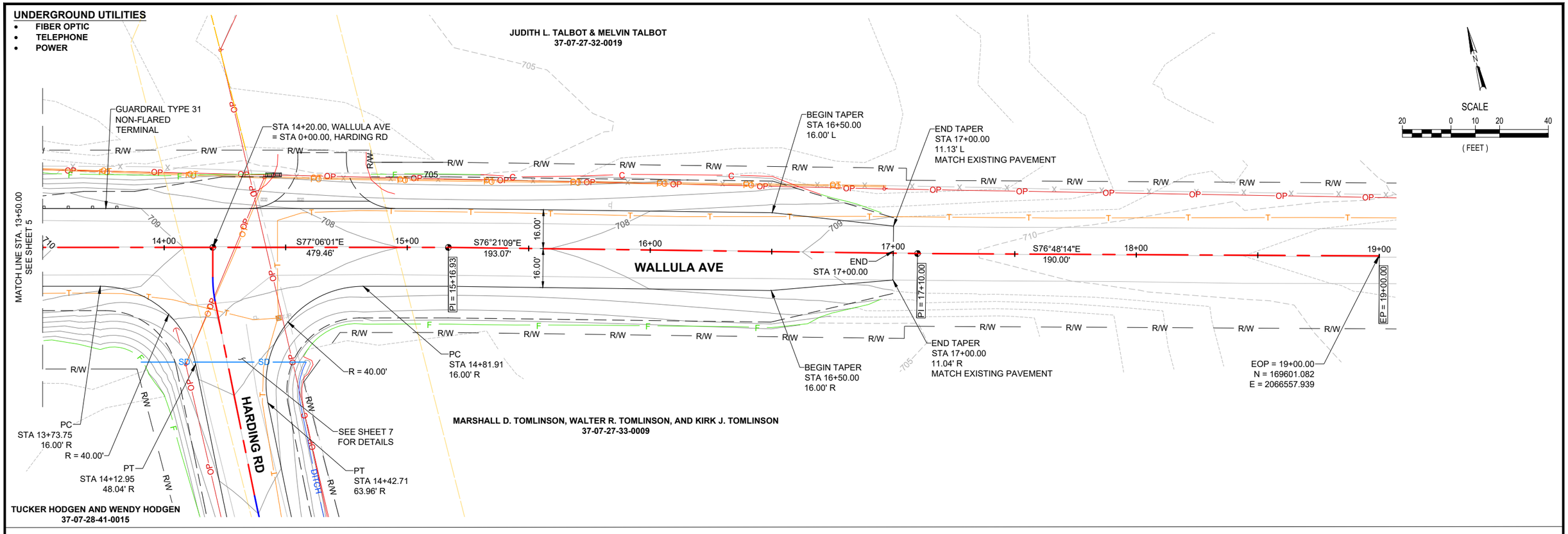

WSDOT STANDARD PLANS

- BEAM GUARDRAIL TYPE 31 NON-FLARED TERMINAL (ALL POSTED SPEEDS) - C-22.40-11

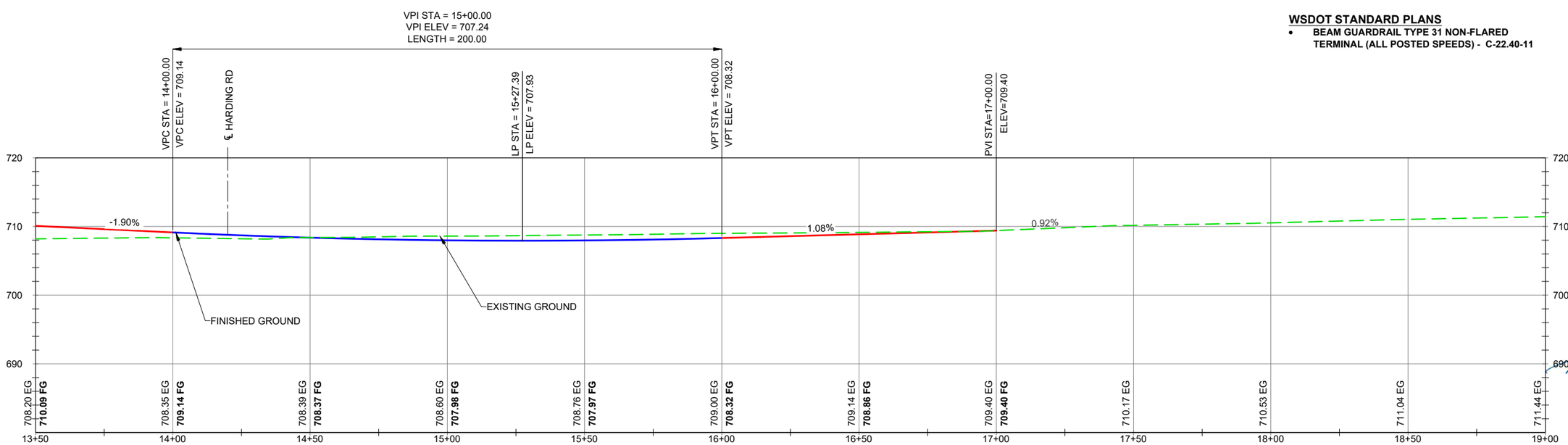

HEATHER RAE CALKINS
STATE OF WASHINGTON
47646
REGISTERED
PROFESSIONAL ENGINEER
4/23/26

P:\WWALL00PW0001\0400CAD\SHEETS\WALL00PW0001_SHEET_ PLPR_WALLULA.dwg				
DRAWN: AWRA				
DESIGNER: LXHE				
CHECKED: HRC				
PROJ. ENG.: HRC				
APPROVED BY:				
4/22/2026	REV DATE	REVISION	BY	APP'D

REGION NO.	STATE	FEDERAL AID PROJECT NO.
10	WASH	BRS-L360(001) TA-7561
JOB NUMBER 22-03		

DAVID EVANS AND ASSOCIATES INC.
908 N Howard St, Ste 300
Spokane, WA 99201
Phone: 509.327.8697

Walla Walla County

PUBLIC WORKS DEPARTMENT

4/22/2026
PLOT DATE

COUNTY OF WALLA WALLA

WALLULA AVENUE BRIDGE

PLAN and PROFILE - WALLULA AVENUE

SHEET 6
6 OF 47

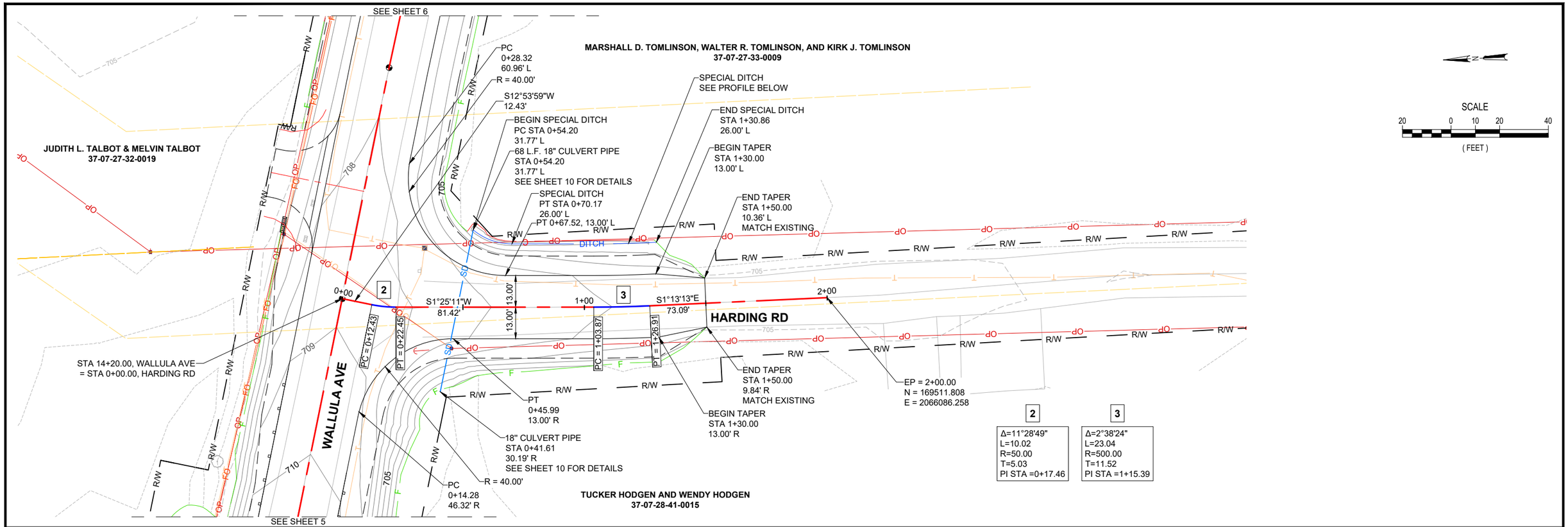

2	3
Δ=11°28'49"	Δ=2°38'24"
L=10.02	L=23.04
R=50.00	R=500.00
T=5.03	T=11.52
PI STA =0+17.46	PI STA =1+15.39

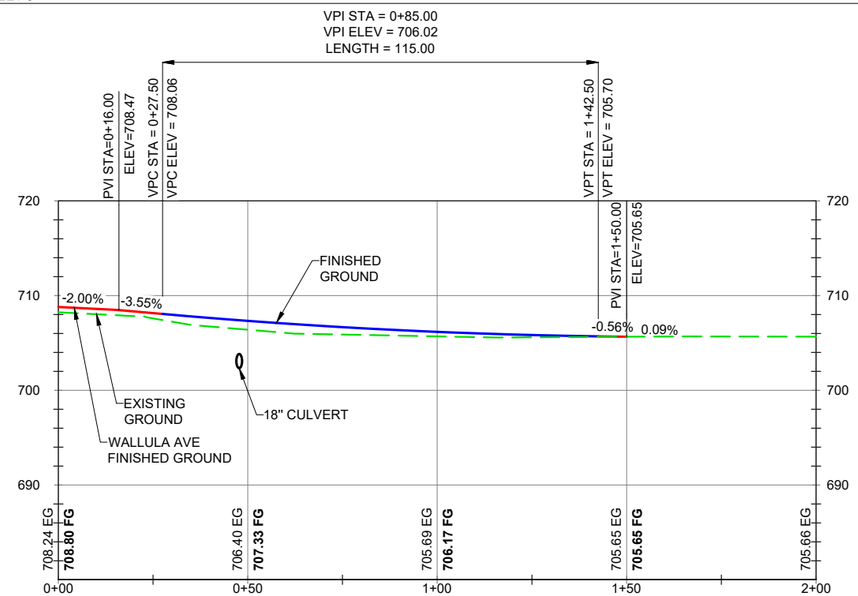

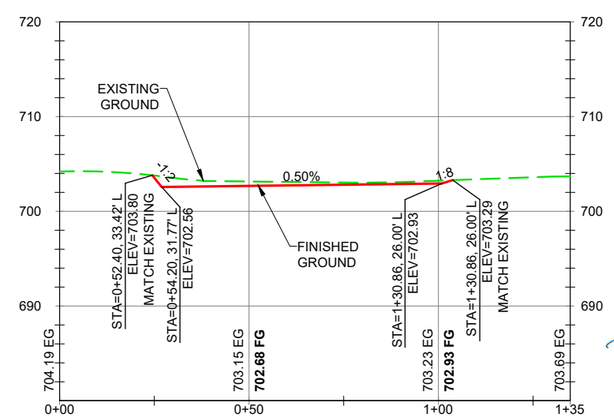

SPECIAL DITCH PROFILE

HEATHER RAE CALKINS
STATE OF WASHINGTON
47646
REGISTERED
PROFESSIONAL ENGINEER
4/23/26

P:\WWALL00PW0001\0400CAD\SHEETS\WALL00PW0001_SHEET_ PLPR_HARDING.dwg				
DRAWN: AWRA				
DESIGNER: LXHE				
CHECKED: HRC				
PROJ. ENG.: HRC				
APPROVED BY:				
9/8/2025	REV DATE	REVISION	BY	APP'D

REGION NO.	STATE	FEDERAL AID PROJECT NO.
10	WASH	BRS-L360(001) TA-7561
JOB NUMBER		
22-03		

DAVID EVANS AND ASSOCIATES INC.
908 N Howard St. Ste 300
Spokane, WA 99201
Phone: 509.327.8697

Walla Walla County

PUBLIC WORKS DEPARTMENT

4/23/2026
PLOT DATE

COUNTY OF WALLA WALLA

WALLULA AVENUE BRIDGE

PLAN and PROFILE - HARDING ROAD

SHEET
7
7 OF 47

WALLULA AVE

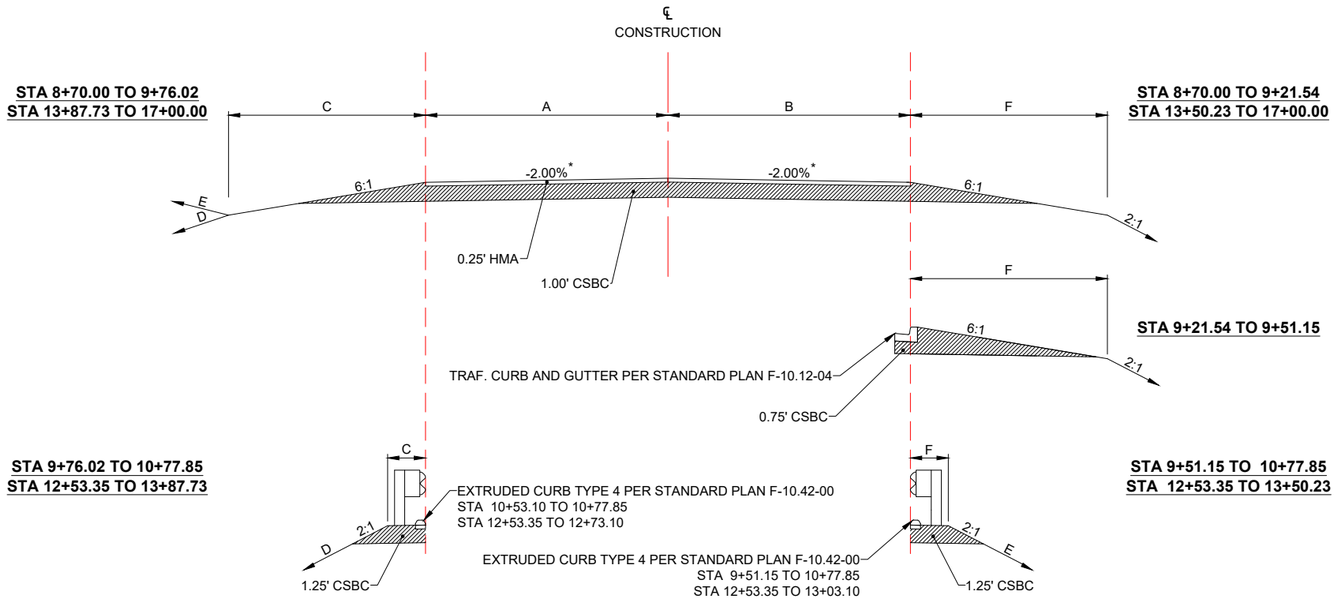

WALLULA AVE
TYPICAL ROAD SECTION

A: VARIES FROM 121.00' TO 16.00' FROM STA 8+70.00 TO STA 10+37.60
16.00' FROM STA 10+37.60 TO STA 10+77.85
SEE BRIDGE PLANS FROM STA 10+77.85 TO 12+53.35
16.00' FROM STA 12+53.35 TO STA 16+50.00
VARIES FROM 16.00' TO 11.13' FROM STA 16+50.00 TO STA 17+00.00

B: VARIES FROM 66.00' TO 16.00' FROM STA 8+70.00 TO STA 9+19.65
16.00' FROM STA 9+19.65 TO STA 10+77.85
SEE BRIDGE PLANS FROM STA 10+77.85 TO 12+53.35
16.00' FROM STA 12+53.35 TO STA 13+73.75
HARDING RD INTERSECTION FROM STA 13+73.75 TO STA 14+81.91
16.00' FROM STA 14+81.91 TO STA 16+50.00
VARIES FROM 16.00' TO 11.04' FROM STA 16+50.00 TO STA 17+00.00

C: 13.00' FROM STA 8+70.00 TO STA 9+57.88
VARIES FROM 13.00' TO 7.00' FROM STA 9+57.88 TO STA 9+79.04
7.00' FROM STA 9+79.04 TO STA 9+99.16
VARIES FROM 7.00' TO 4.00' FROM STA 9+99.16 TO STA 10+50.34
4.00' FROM STA 10+50.34 TO STA 10+77.85
SEE BRIDGE PLANS FROM STA 10+77.85 TO 12+53.35
4.00' FROM STA 12+53.35 TO STA 13+38.73
VARIES FROM 4.00' TO 7.00' FROM STA 13+38.73 TO STA 13+66.73
7.00' FROM STA 13+66.73 TO STA 13+87.73
VARIES FROM 7.00' TO 13.00' FROM STA 13+87.73 TO STA 14+23.73
13.00' FROM STA 14+23.73 TO STA 17+00.00

D: 2:1 FROM STA 8+70.00 TO STA 10+77.85
SEE BRIDGE PLANS FROM STA 10+77.85 TO 12+53.35
2:1 FROM STA 12+53.35 TO STA 17+00.00

E: 2:1 FROM STA 8+70.00 TO STA 10+77.85
SEE BRIDGE PLANS FROM STA 10+77.85 TO 12+53.35
2:1 FROM STA 12+53.35 TO STA 17+00.00

F: 13.00' FROM STA 8+70.00 TO STA 9+40.20
VARIES FROM 13.00' TO 7.00' FROM STA 9+40.20 TO STA 9+62.62
7.00' FROM STA 9+62.62 TO STA 9+81.27
VARIES FROM 7.00' TO 4.00' FROM STA 9+81.27 TO STA 10+07.74
4.00' FROM STA 10+07.74 TO STA 10+77.85
SEE BRIDGE PLANS FROM STA 10+77.85 TO 12+53.35
4.00' FROM STA 12+53.35 TO STA 13+03.35
VARIES FROM 4.00' TO 10.00' FROM STA 13+03.35 TO STA 13+29.23
10.00' FROM STA 13+29.23 TO STA 13+73.75
HARDING RD INTERSECTION FROM STA 13+73.75 TO STA 14+81.91
13.00' FROM STA 14+81.91 TO STA 17+00.00

* TRANSITION FROM MATCHING EXISTING CROSS SLOPE AT OLD HWY 12 STA 8+70.00 TO BEGIN NORMAL CROWN STA 10+14.54

HARDING RD

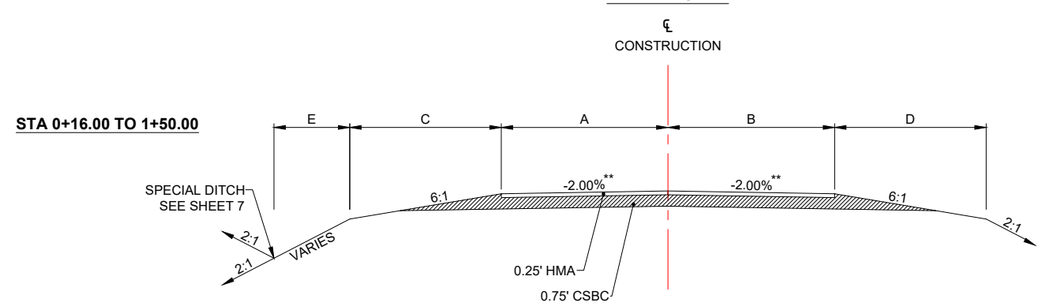

HARDING RD
TYPICAL ROAD SECTION

STA 0+16.00 TO 1+50.00

A: VARIES FROM 60.00' TO 13.00' FROM STA 0+16.00 TO STA 0+67.52
13.00' FROM STA 0+67.52 TO STA 1+30.00
VARIES FROM 13.00' TO 10.36' FROM STA 1+30.00 TO STA 1+50.00

B: VARIES FROM 45.00' TO 13.00' FROM STA 0+16.00 TO STA 0+45.99
13.00' FROM STA 0+45.99 TO STA 1+30.00
VARIES FROM 13.00' TO 9.84' FROM STA 1+30.00 TO STA 1+50.00

C: VARIES FROM 13.00' TO 8.00' FROM STA 0+16.00 TO STA 0+67.52
8.00' FROM STA 0+67.52 TO STA 1+50.00

D: VARIES FROM 10.00' TO 8.00' FROM STA 0+16.00 TO STA 0+45.99
8.00' FROM STA 0+45.99 TO STA 1+50.00

E: 0' FROM STA 0+16.00 TO STA 0+54.20
5.00' FROM STA 0+54.20 TO STA 1+30.86

** TRANSITION FROM WALLULA AVE FINISHED GROUND STA 0+16.00 TO BEGIN NORMAL CROWN STA 0+67.52

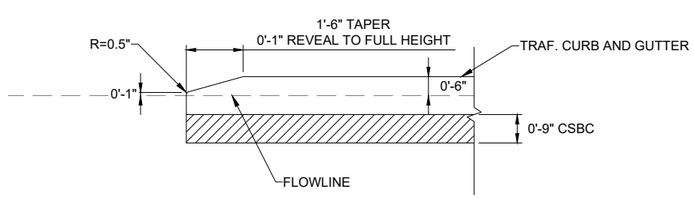

CURB TERMINATION DETAIL
ELEVATION VIEW

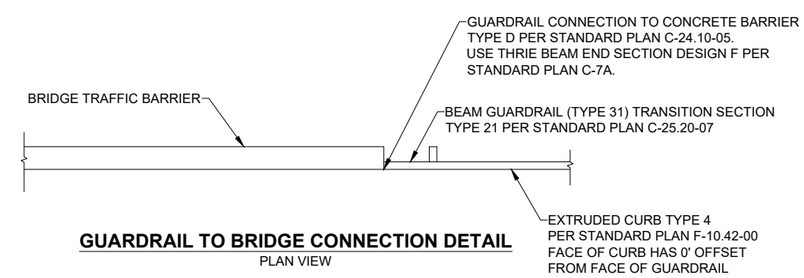

GUARDRAIL TO BRIDGE CONNECTION DETAIL
PLAN VIEW

P:\W\WALL00PW0001\0400CAD\SHEETS\WALL00PW0001_SHEET_ TYP.dwg				
DRAWN: AWRA				
DESIGNER: LXHE				
CHECKED: HRC				
PROJ. ENG.: HRC				
APPROVED BY:				
9/8/2025	REV DATE	REVISION	BY	APP'D

REGION NO.	STATE	FEDERAL AID PROJECT NO.
10	WASH	BRS-L360(001) TA-7561
JOB NUMBER 22-03		

DAVID EVANS AND ASSOCIATES INC.
908 N Howard St. Ste 300
Spokane, WA 99201
Phone: 509.327.8697

Walla Walla County
PUBLIC WORKS DEPARTMENT
9/8/2025
PLOT DATE

WALLULA AVENUE BRIDGE
TYPICAL ROAD SECTIONS

SHEET 8
8 OF 47

POINT TABLE			
POINT #	STATION	OFFSET	DESCRIPTION
1	10+76.26	72.07' L	PI
2	10+84.80	58.99' L	PC
3	10+87.95	45.95' L	PT
4	10+87.13	38.22' L	PI
5	10+78.85	49.64' L	PC
6	10+77.77	49.06' L	RP
7	10+76.91	48.18' L	PT
8	10+66.60	58.23' L	PC
9	10+68.03	59.65' L	RP
10	10+67.84	61.66' L	PT
11	10+70.90	61.90' L	PC
12	10+71.03	59.87' L	RP
13	10+72.81	60.85' L	PT

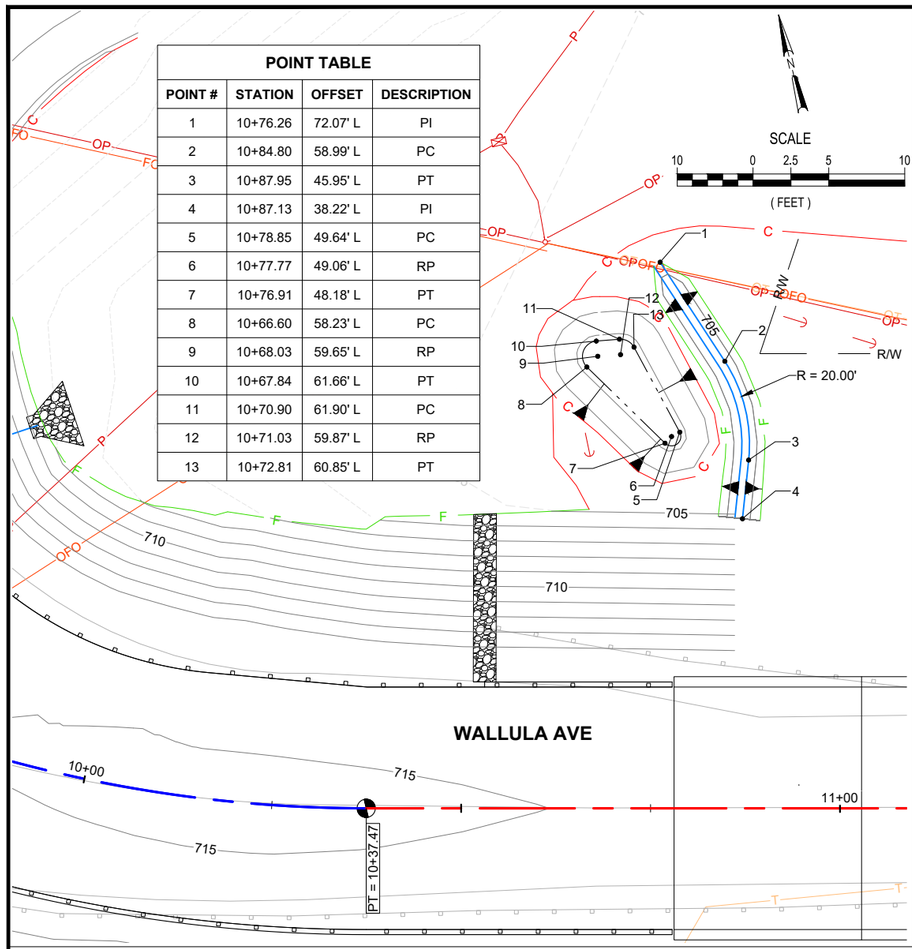

PLAN VIEW
SWALE 1

POINT TABLE			
POINT #	STATION	OFFSET	DESCRIPTION
14	12+65.00	35.89' L	PC
15	12+75.00	45.89' L	PT
16	13+10.00	45.89' L	PC
17	13+20.00	35.89' L	PT
18	13+20.00	30.41' L	PI

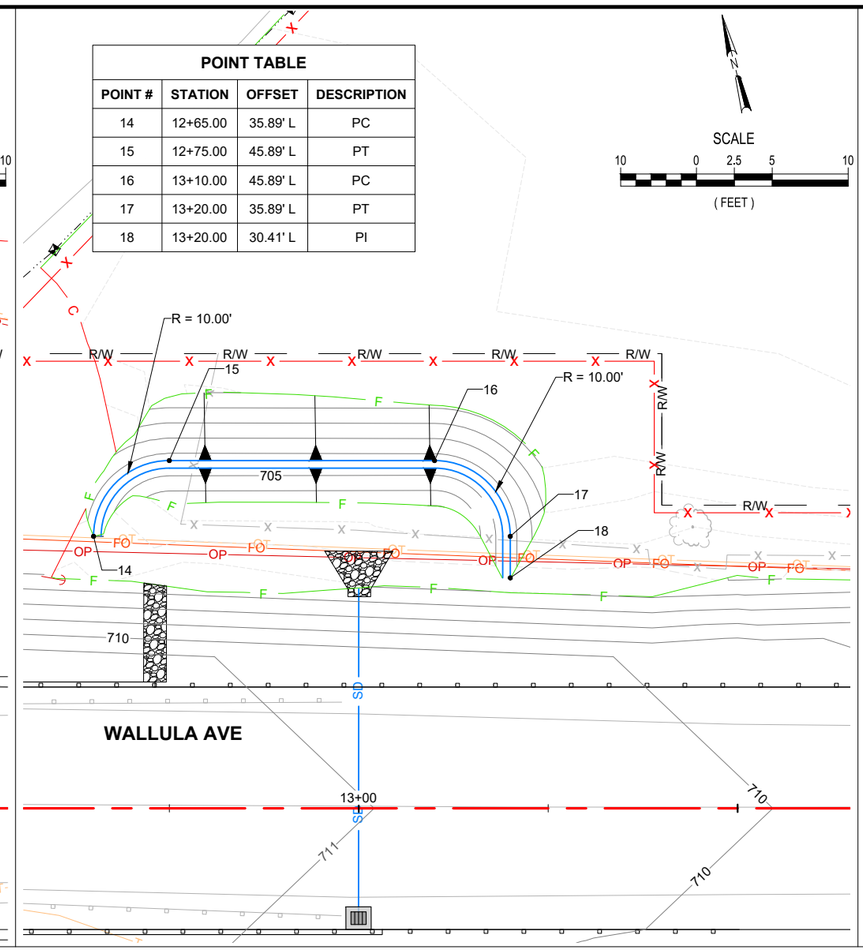

PLAN VIEW
SWALE 2

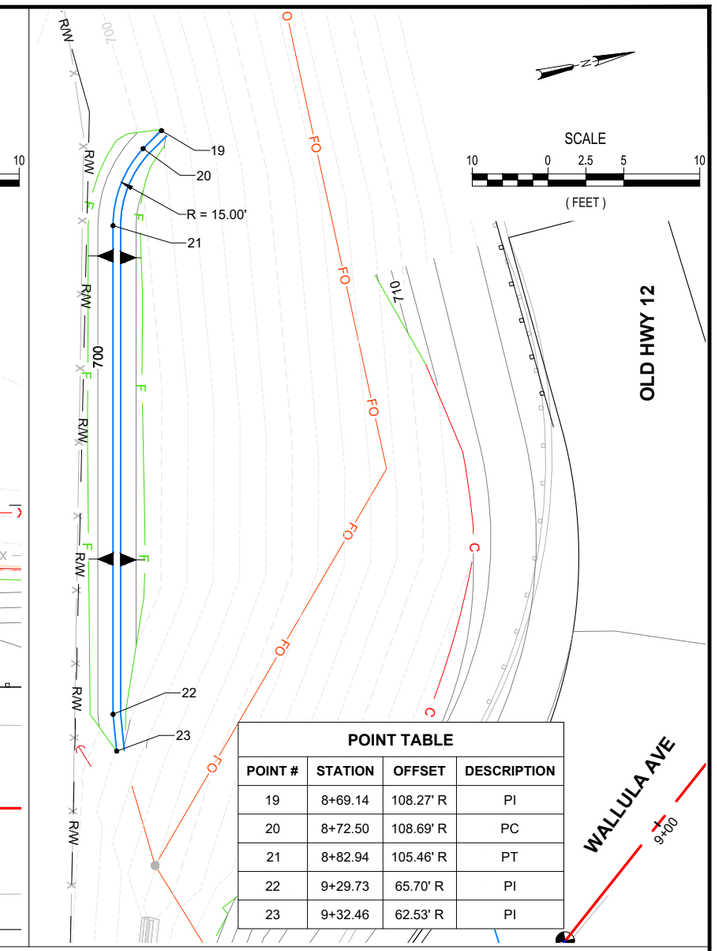

POINT TABLE			
POINT #	STATION	OFFSET	DESCRIPTION
19	8+69.14	108.27' R	PI
20	8+72.50	108.69' R	PC
21	8+82.94	105.46' R	PT
22	9+29.73	65.70' R	PI
23	9+32.46	62.53' R	PI

PLAN VIEW
SWALE 3

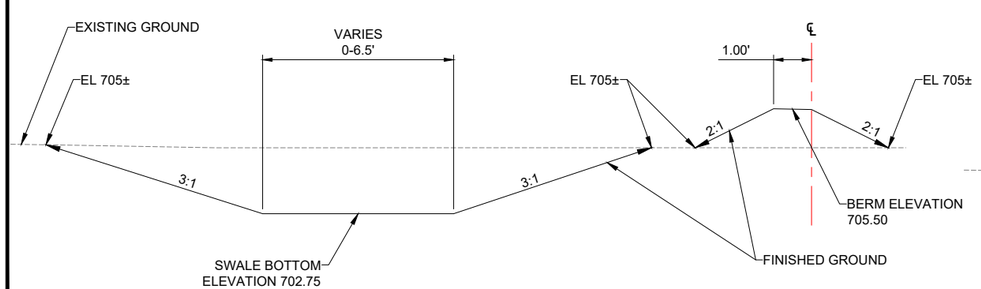

TYPICAL SECTION
SWALE 1 (N.T.S.)

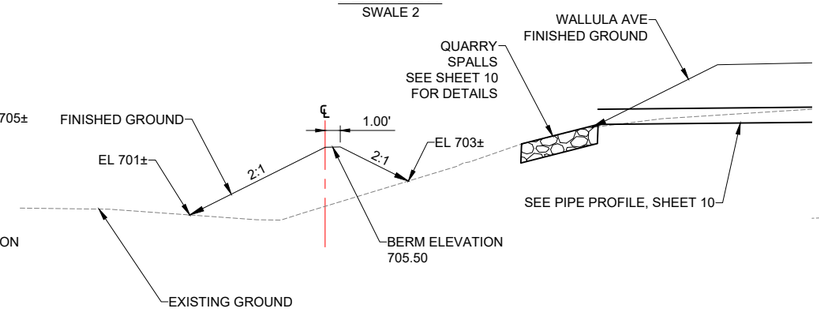

TYPICAL SECTION
SWALE 2 (N.T.S.)

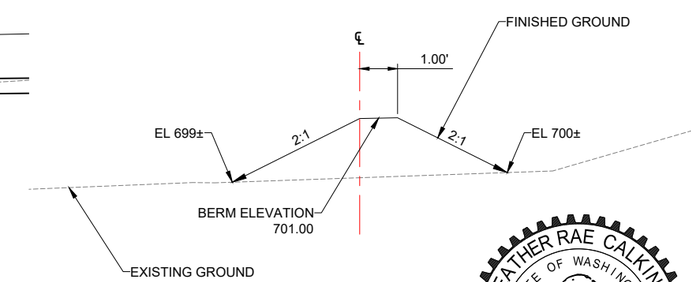

TYPICAL SECTION
SWALE 3 (N.T.S.)

POINT DESCRIPTION LEGEND	
PI	POINT OF INTERSECTION
PC	POINT OF CURVATURE
PT	POINT OF TANGENCY
RP	RADIUS POINT

NOTES

- **BERMS AND SWALES ARE INCLUDED IN EXCAVATION AND EMBANKMENT WORK**

HEATHER RAE CALKINS
STATE OF WASHINGTON
47646
REGISTERED
PROFESSIONAL ENGINEER
9/9/2025

P:\W\WALL00PW0001\0400CAD\SHEETS\WALL00PW0001_SHEET_ SWALE DETAIL.dwg

DRAWN: AWRA				
DESIGNER: LXHE				
CHECKED: HRC				
PROJ. ENG.: HRC				
APPROVED BY:				
9/8/2025	REV DATE	REVISION	BY	APP'D

REGION NO.	STATE	FEDERAL AID PROJECT NO.
10	WASH	BRS-L360(001) TA-7561
JOB NUMBER 22-03		

DAVID EVANS AND ASSOCIATES INC.
908 N Howard St, Ste 500
Spokane, WA 99201
Phone: 509.327.8697

Walla Walla County

PUBLIC WORKS DEPARTMENT

9/8/2025
PLOT DATE

COUNTY OF WALLA WALLA

WALLULA AVENUE BRIDGE

SWALE DETAILS

SHEET
9
9 OF 47

NOTES:

1. PIPE ZONE BEDDING AND BACKFILL PER WSDOT STANDARD PLAN B-55.20-03. PIPE ZONE BEDDING, BACKFILL AND FITTINGS SHALL BE INCIDENTAL TO PIPE INSTALLATION.
2. COUPLING BANDS AND GASKETS PER WSDOT STANDARD PLAN B-60.40-01.
3. GEOTEXTILE FABRIC BENEATH QUARRY SPALLS SHALL MEET THE REQUIREMENTS OF WSDOT SPECIFICATION SECTION 9-33 GEOTEXTILE FOR PERMANENT EROSION CONTROL, HIGH SURVIVABILITY, WOVEN, CLASS B.

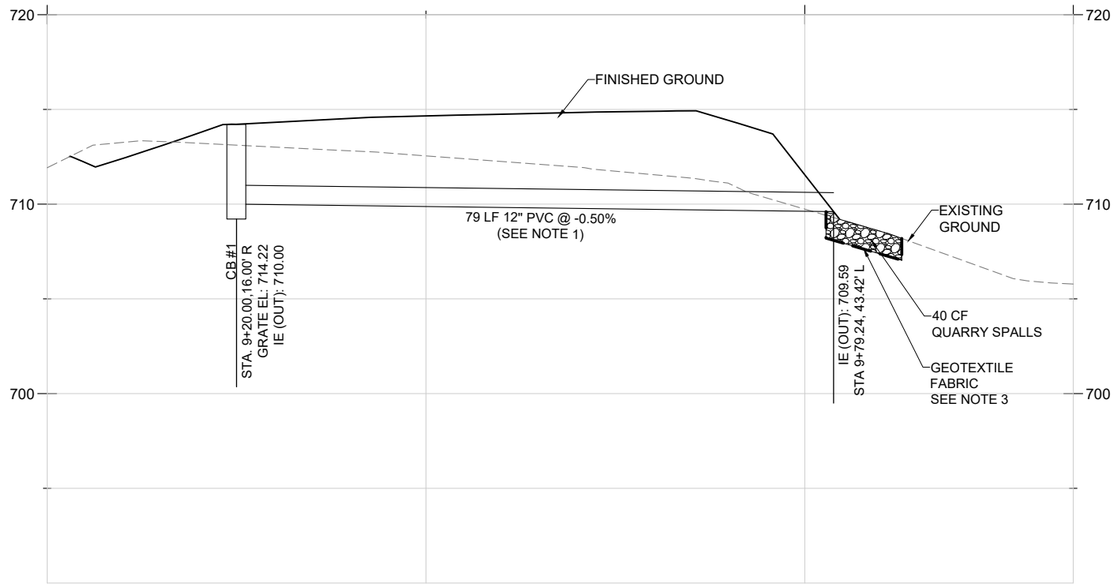

CB #1 TO OUTFALL
STORM SEWER PROFILE

QUARRY SPALL AT CURB TERMINATION DETAIL

N.T.S.

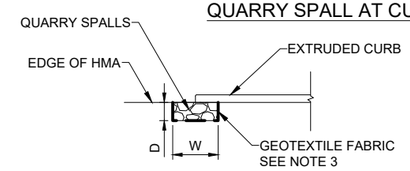

CURB TERMINATION QUARRY SPALL				
STA	L	W	D	V
10+53.10	22.16'	3.00'	1.20'	80 CF
12+73.10	12.85'	3.00'	1.20'	46 CF

(ELEVATION)

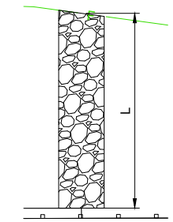

(PLAN)

QUARRY SPALL AT PIPE OUTFALL DETAIL

N.T.S.

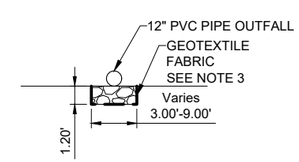

(ELEVATION)

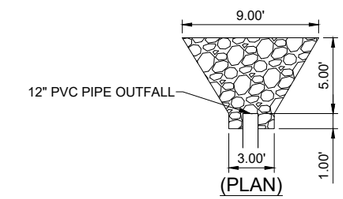

(PLAN)

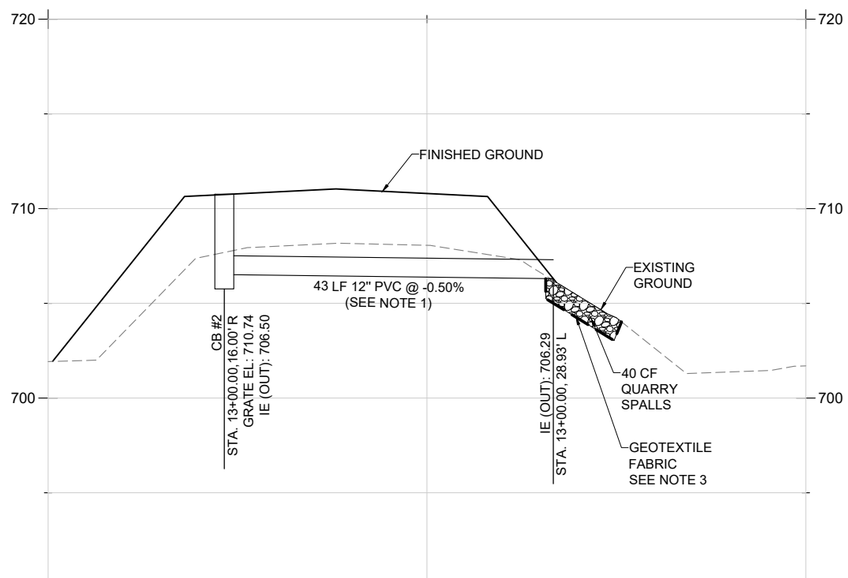

CB #2 TO OUTFALL
STORM SEWER PROFILE

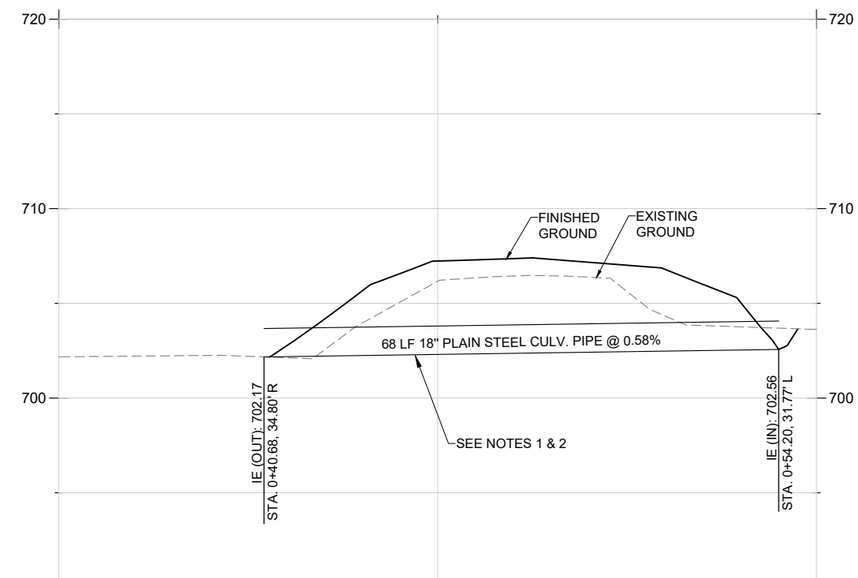

HARDING ROAD
CULVERT PROFILE

SCALE
10 0 5 10 20
(FEET)

HEATHER RAE CALKINS
STATE OF WASHINGTON
47646
REGISTERED
PROFESSIONAL ENGINEER
9/9/2025

P:\W\WALL00PW0001\0400CAD\SHEETS\WALL00PW0001_SHEET_ SWALE DETAIL.dwg				
DRAWN: AWRA				
DESIGNER: LXHE				
CHECKED: HRC				
PROJ. ENG.: HRC				
APPROVED BY:				
9/8/2025	REV DATE	REVISION	BY	APP'D

REGION NO.	STATE	FEDERAL AID PROJECT NO.
10	WASH	BRS-L360(001) TA-7561
JOB NUMBER 22-03		

DAVID EVANS AND ASSOCIATES INC.
908 N Howard St. Ste 300
Spokane, WA 99201
Phone: 509.327.8697

Walla Walla County

PUBLIC WORKS DEPARTMENT

9/8/2025
PLOT DATE

COUNTY OF WALLA WALLA

WALLULA AVENUE BRIDGE

STORM & CULVERT PROFILES

SHEET 10
10 OF 47

NOTE:

1. TRANSITION ALL APPROACH CROSS SLOPES FROM WALLULA AVE RD TO MATCH EXISTING.
2. ALL RADIUS POINT STATIONING REFERENCES THE WALLULA AVE ALIGNMENT

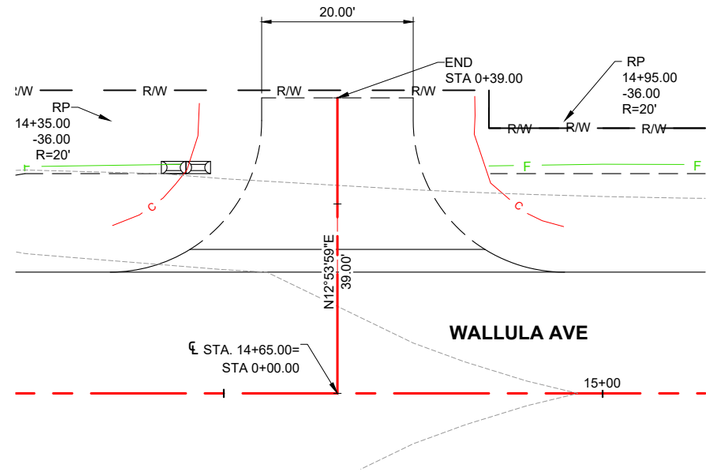

APPROACH STA 14+65.00

WALLULA AVE

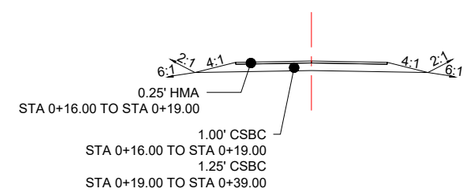

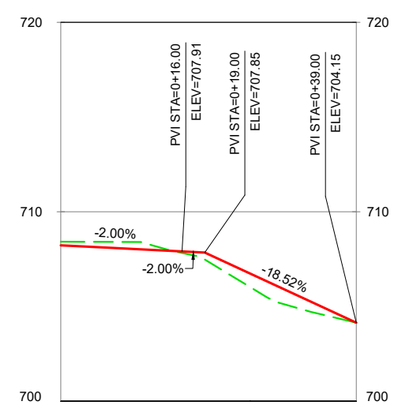

HEATHER RAE CALKINS
STATE OF WASHINGTON
47646
REGISTERED
PROFESSIONAL ENGINEER
4/23/26

P:\W\WALL00PW0001\0400CAD\SHEETS\WALL00PW0001_SHEET_ PLPR_Approach.dwg				
DRAWN: AWRA				
DESIGNER: LXHE				
CHECKED: HRC				
PROJ. ENG.: HRC				
APPROVED BY:				
4/22/2026	REV DATE	REVISION	BY	APP'D

REGION NO.	STATE	FEDERAL AID PROJECT NO.
10	WASH	BRS-L360(001) TA-7561
JOB NUMBER		
22-03		

DAVID EVANS AND ASSOCIATES INC.
908 N Howard St. Ste 300
Spokane, WA 99201
Phone: 509.327.8897

Walla Walla County

PUBLIC WORKS DEPARTMENT

4/22/2026
PLOT DATE

COUNTY OF WALLA WALLA

WALLULA AVENUE BRIDGE

APPROACH DETAILS

SHEET
10A
10A OF 47

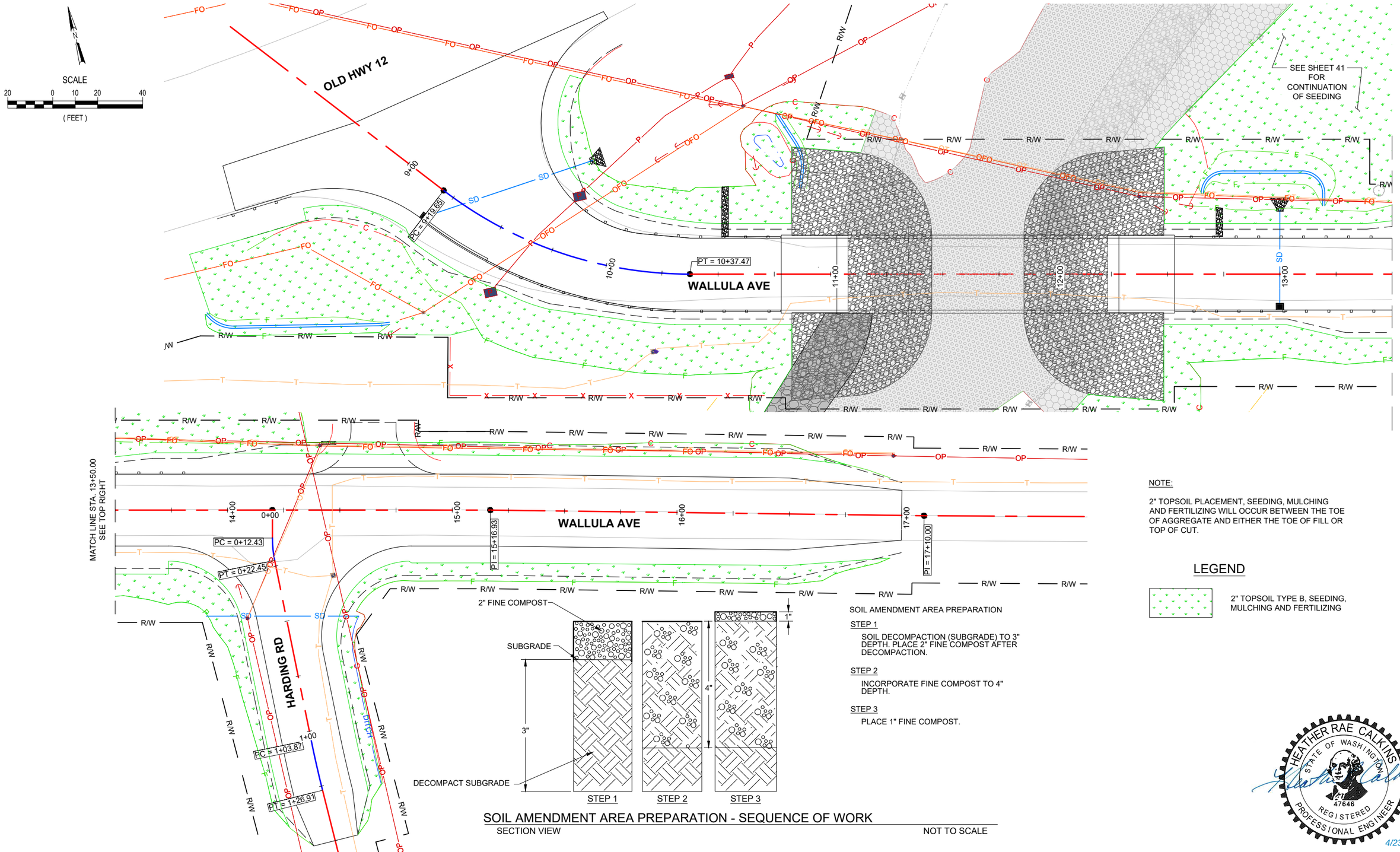

SOIL AMENDMENT AREA PREPARATION - SEQUENCE OF WORK

SECTION VIEW

NOT TO SCALE

SOIL AMENDMENT AREA PREPARATION

STEP 1

SOIL DECOMPACTION (SUBGRADE) TO 3" DEPTH. PLACE 2" FINE COMPOST AFTER DECOMPACTION.

STEP 2

INCORPORATE FINE COMPOST TO 4" DEPTH.

STEP 3

PLACE 1" FINE COMPOST.

NOTE:

2" TOPSOIL PLACEMENT, SEEDING, MULCHING AND FERTILIZING WILL OCCUR BETWEEN THE TOE OF AGGREGATE AND EITHER THE TOE OF FILL OR TOP OF CUT.

LEGEND

2" TOPSOIL TYPE B, SEEDING, MULCHING AND FERTILIZING

HEATHER RAE CALKINS
STATE OF WASHINGTON
47646
REGISTERED PROFESSIONAL ENGINEER
4/23/26

P:\W\WALL00PW0001\0400CAD\SHEETS\WALL00PW0001_SHEET_ Landscape.dwg				
DRAWN: AWRA				
DESIGNER: LXHE				
CHECKED: HRC				
PROJ. ENG.: HRC				
APPROVED BY:				
4/22/2026	REV DATE	REVISION	BY	APP'D

REGION NO.	STATE	FEDERAL AID PROJECT NO.
10	WASH	BRS-L360(001) TA-7561
JOB NUMBER 22-03		

DAVID EVANS AND ASSOCIATES INC.
908 N Howard St, Ste 300
Spokane, WA 99201
Phone: 509.327.8697

Walla Walla County

PUBLIC WORKS DEPARTMENT

4/23/2026
PLOT DATE

COUNTY OF WALLA WALLA

WALLULA AVENUE BRIDGE

LANDSCAPING PLAN

SHEET 11
11 OF 47

GENERAL NOTES:

1. DOUBLE CENTERLINE, PER WSDOT STANDARD PLAN M-20.10-04
2. EDGE LINE, PER WSDOT STANDARD PLAN M-20.10-04
3. STOP LINE, PER WSDOT STANDARD PLAN M-24.60-04
4. INSTALL SIGN, SIGN SUPPORT PER WSDOT STANDARD PLAN G-24.50-05 TYPE ST-4 WITH 2" POST AND 2 ¼" PSST ANCHOR, SIGN LOCATION PER WSDOT STANDARD PLAN G-20.10-03
5. INSTALL 6" ROAD NAME SIGN D3-102, ROAD NAME SIGNS SHALL BE INCIDENTAL TO PERMANENT SIGNING
6. DOTTED LANE LINE, PER WSDOT STANDARD PLAN M-20.10-04
7. WIDE EDGE LINE, PER WSDOT STANDARD PLAN M-20.10-04
8. INSTALL MAILBOX SUPPORT TYPE 2, PER WSDOT STANDARD PLAN H-70.20-02 (TYP OF 2)

LEGEND:

- GUIDE POST TYPE G1, PER WSDOT STANDRAD PLAN M-40.30-01 & M-40.10-04
- GUIDE POST TYPE G2, PER WSDOT STANDRAD PLAN M-40.30-01 & M-40.10-04
- GUIDE POST TYPE WW, PER WSDOT STANDARD PLAN M-40.10-04, LAYOUT PER WSDOT STANDARD PLAN M-40.40-00 & M-40.30-01

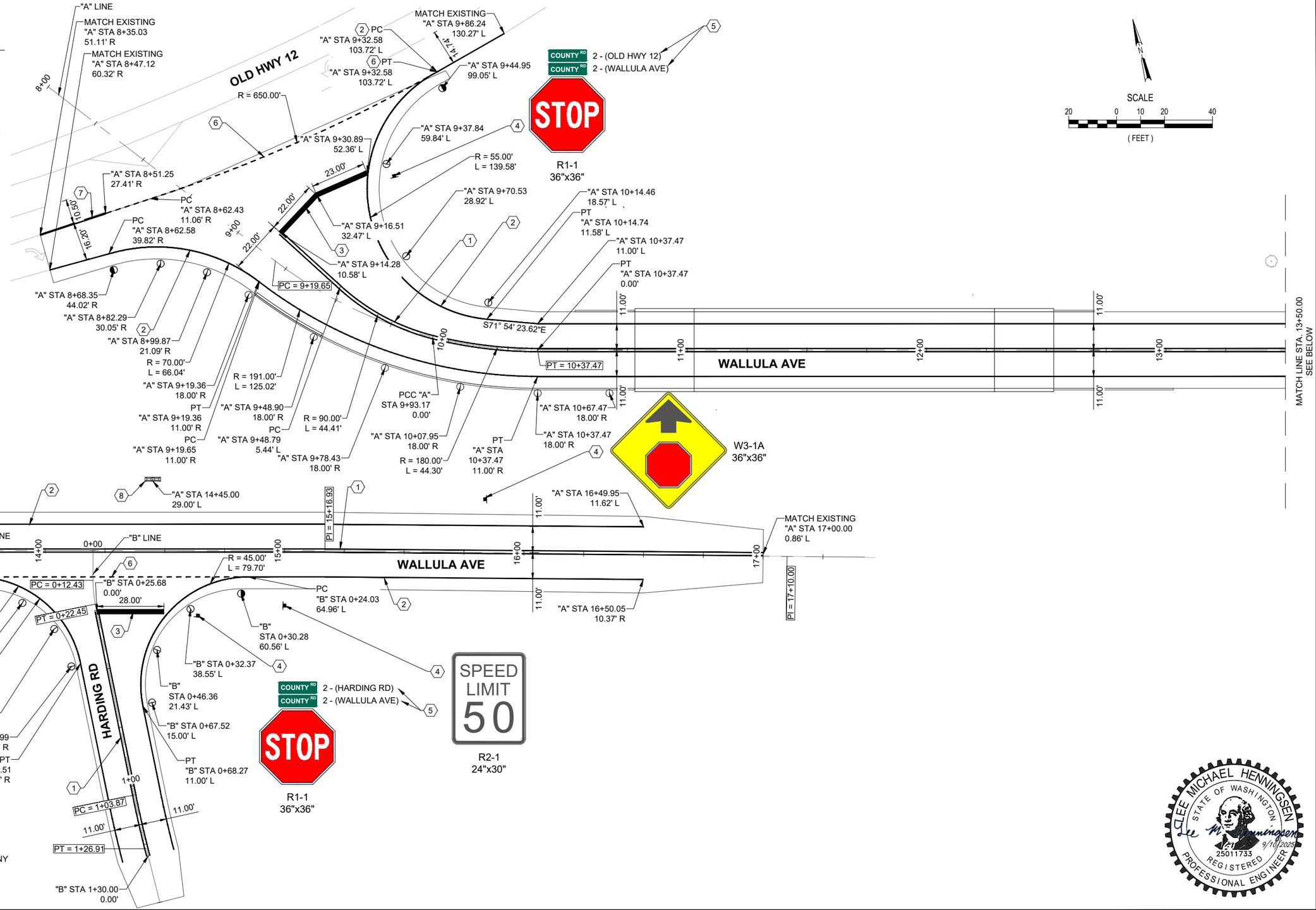

NOTE:
CONTRAST PAINT SHALL NOT BE USED FOR ANY PAINT LINE

LEE MICHAEL HENNINGSEN
STATE OF WASHINGTON
9/10/2025
25011733
REGISTERED PROFESSIONAL ENGINEER

P:\W\WALL00PW\0001\0400CAD\SHEETS\WALL00PW0001_SHEET_ PTC_WALLULA.dwg				
DRAWN: AWRA				
DESIGNER: LXHE				
CHECKED: HRC				
PROJ. ENG.: HRC				
APPROVED BY:				
7/29/2025	REV DATE	REVISION	BY	APP'D

REGION NO.	STATE	FEDERAL AID PROJECT NO.
10	WASH	BRS-L360(001) TA-7561
JOB NUMBER		
22-03		

DAVID EVANS AND ASSOCIATES INC.
908 N Howard St. Ste 300
Spokane, WA 99201
Phone: 509.327.8697

Walla Walla County

PUBLIC WORKS DEPARTMENT

9/8/2025
PLOT DATE

WALLULA AVENUE BRIDGE

PERMANENT TRAFFIC CONTROL

SHEET 12
12 OF 47

SEC. 28, T7N, R35E
WALLA WALLA COUNTY

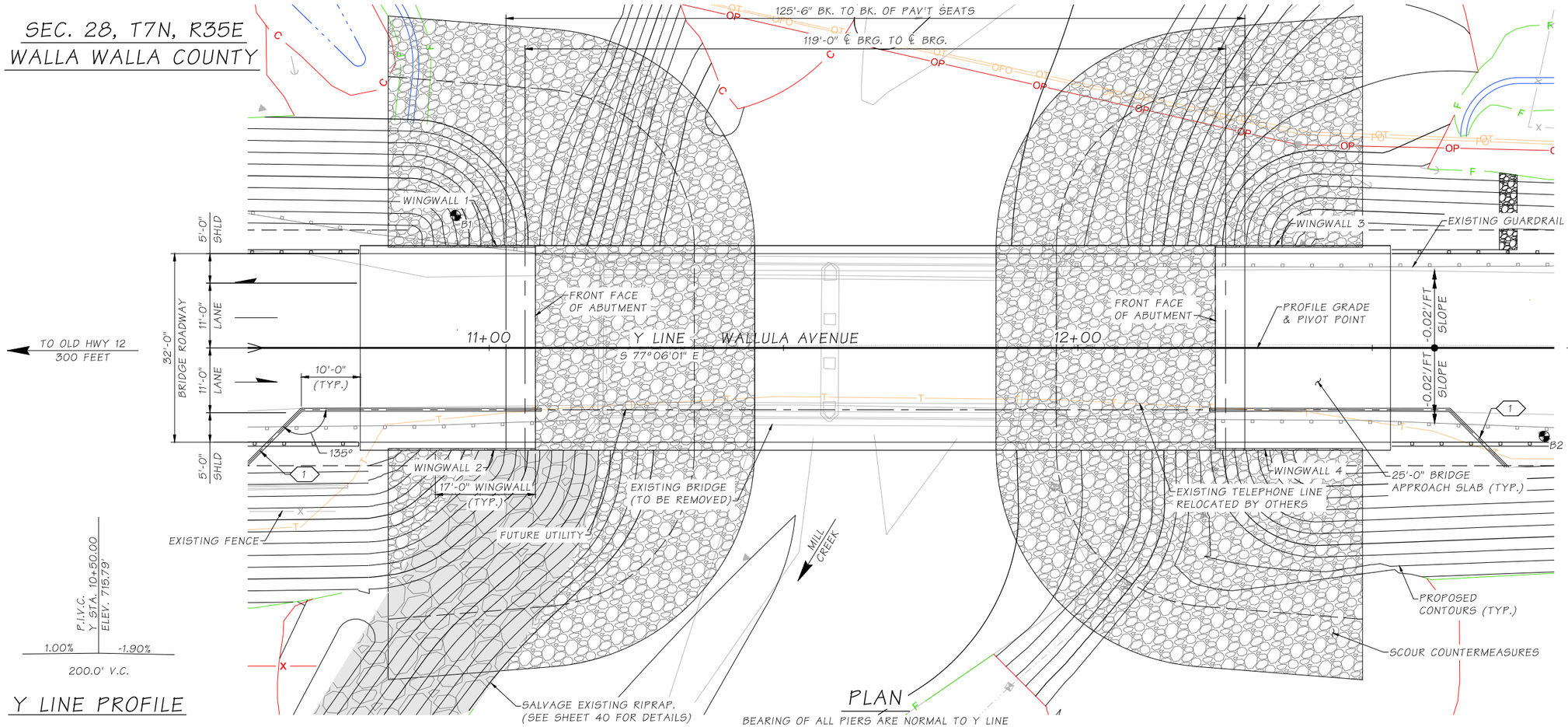

PLAN

Y LINE PROFILE

NOTES:

1. 6" DIA. PVC SLEEVE FOR FUTURE UTILITY, EXTEND 1'-0" PAST END DIAPHRAGM, AND ROADWAY EMBANKMENT, CAP EACH END.
2. SEE SHEET 39 FOR STREAM PLAN AND PROFILE

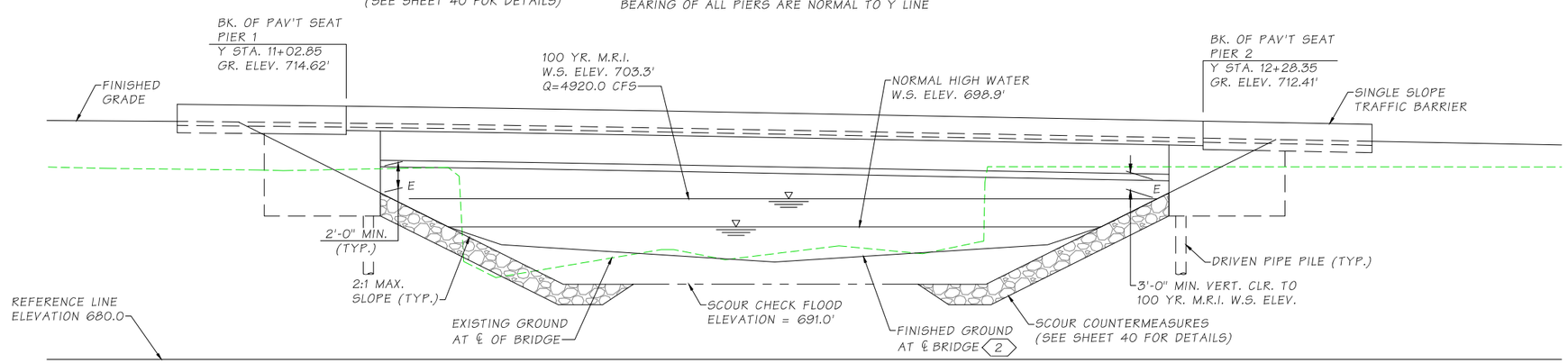

ELEVATION

GRADE ELEVATIONS SHOWN ARE FINISH GRADES AT TOP OF HMA OVERLAY ON Y LINE AND ARE EQUAL TO PROFILE GRADE. SEE STANDARD PLAN A-50.10 FOR EMBANKMENT DETAILS AT BRIDGE ENDS

DATUM

NAVD 1983

NOTE: 500 YR M.R.I.
W.S. ELEV. 704.3'
Q = 6680.0 CFS

JOHN R. LEMASTER
STATE OF WASHINGTON
56771
REGISTERED PROFESSIONAL ENGINEER
4/23/2026

P.C. GIRDERS (WF53DG)
W/ 3" ASPHALT OVERLAY
LOADING: HL-93

SEISMIC OPERATING CLASSIFICATION = ORDINARY

P:\WWALL00PW0001\0400CAD\SHEETS\EB\WALL00PW0001_BR_LAYOUT.dwg

DRAWN: DRFO				
DESIGNER: JXLE				
CHECKED: EJF				
PROJ. ENG.: JDWA				
APPROVED BY:				
4/23/2026	REV DATE	REVISION	BY	APP'D

REGION NO.	STATE	FEDERAL AID PROJECT NO.
10	WASH	BRS-L360(001) TA-7561
JOB NUMBER		
22-03		

DAVID EVANS AND ASSOCIATES INC.
908 N Howard St. Ste 300
Spokane, WA 99201
Phone: 509.327.8697

Walla Walla County

PUBLIC WORKS DEPARTMENT

4/23/2026
PLOT DATE

COUNTY OF WALLA WALLA

WALLULA AVENUE BRIDGE

BRIDGE LAYOUT

SHEET 13
13 OF 47

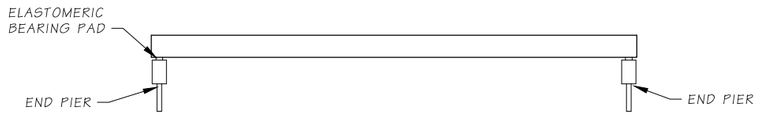

SEQUENCE 1
SET GIRDERS IN PLACE

INSTALL TEMPORARY BRACING FOR ERECTION IN ACCORDANCE WITH STD. SPEC. SECTION 6-02.3(17)F4.

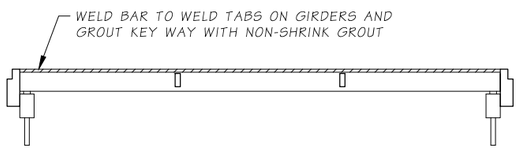

SEQUENCE 2
MECHANICALLY CONNECT GIRDERS AND GROUT KEYWAYS

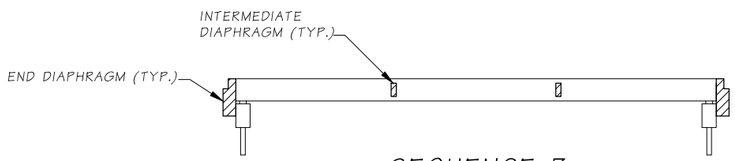

SEQUENCE 3
CAST DIAPHRAGMS

INSTALL TEMPORARY BRACING FOR DIAPHRAGM PLACEMENT IN ACCORDANCE WITH STD. SPEC. SECTION 6-02.3(17)F5.

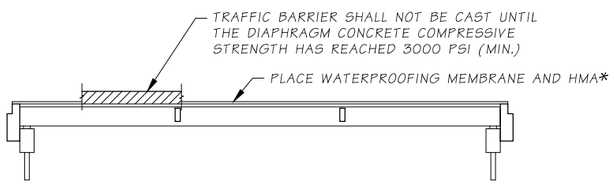

SEQUENCE 4
CAST TRAFFIC BARRIERS AND PLACE WATERPROOFING MEMBRANE AND HMA

CONSTRUCTION SEQUENCE - SUPERSTRUCTURE

* FOR WATERPROOFING MEMBRANE PLACEMENT EXTENTS SEE BR SHT. 33 "APPROACH ANCHOR - METHOD A" DETAILS.

LEGEND

B / 15 — IDENTIFIES SECTION OR VIEW; TAKEN OR SHOWN ON BRIDGE SHEET 15

1 / — IDENTIFIES DETAIL; TAKEN OR SHOWN ON SAME SHEET

99 — NOTE FLAG: IDENTIFIES KEY NOTE REFERENCE ON THE SAME SHEET

EPOXY COATED BAR

GENERAL STRUCTURE NOTES:

1. ALL MATERIAL AND WORKMANSHIP SHALL BE IN ACCORDANCE WITH THE REQUIREMENTS OF THE WASHINGTON STATE DEPARTMENT OF TRANSPORTATION STANDARD SPECIFICATIONS FOR ROAD, BRIDGE, AND MUNICIPAL CONSTRUCTION CURRENT EDITION AND IN ACCORDANCE WITH THE PROJECT SPECIAL PROVISIONS.
2. THIS STRUCTURE HAS BEEN DESIGNED IN ACCORDANCE WITH THE REQUIREMENTS OF THE AASHTO LRFD BRIDGE DESIGN SPECIFICATIONS 9TH EDITION 2020. BRIDGE TRAFFIC BARRIER HAS BEEN DESIGNED PER TEST LEVEL (TL-4).
3. THE SEISMIC DESIGN OF THE STRUCTURE HAS BEEN COMPLETED IN ACCORDANCE WITH THE REQUIREMENTS OF THE AASHTO GUIDE SPECIFICATIONS FOR LRFD SEISMIC BRIDGE DESIGN 2ND EDITION 2011 WITH INTERIMS THROUGH 2022, USING SEISMIC DESIGN CATEGORY B, SITE CLASS D, A PEAK GROUND ACCELERATION OF 0.112, AND 0.2 SECOND AND 1.0 SECOND SPECTRAL ACCELERATION OF 0.246 AND 0.071, RESPECTIVELY ON SITE CLASS B.
4. THE CONTRACTOR SHALL PLAN AND CONDUCT THE WORK IN SUCH A MANNER THAT NO OBJECTS OR FOREIGN MATERIALS FALL FROM THE WORK ON THE EXISTING OR NEW BRIDGE INTO THE CREEK CHANNEL BELOW. THE CONTRACTOR'S PLAN FOR ACCOMPLISHING THIS SHALL BE SUBMITTED TO THE ENGINEER FOR APPROVAL PRIOR TO THE START OF CONSTRUCTION.
5. THE CONCRETE IN BRIDGE APPROACH SLABS SHALL BE CLASS 4000A. ALL OTHER CAST-IN-PLACE CONCRETE SHALL BE CLASS 4000.
6. REINFORCING BARS SHALL CONFORM TO ASTM A706 GRADE 60, UNLESS OTHERWISE NOTED.
7. UNLESS OTHERWISE SHOWN IN THE PLANS, CONCRETE COVER MEASURED FROM THE FACE OF CONCRETE TO THE FACE OF ANY REINFORCING STEEL SHALL BE 3" AT THE BOTTOM OF THE PIER CAPS, AND 2" AT ALL OTHER LOCATIONS.
8. THE BACKFILL BEHIND THE ABUTMENT MAY BE PLACED TO THE BOTTOM OF THE END DIAPHRAGM PRIOR TO PLACEMENT OF THE SUPERSTRUCTURE IN ACCORDANCE WITH SECTION 3-07.3(1)E.
9. FALSEWORK SHALL BE CAREFULLY RELEASED TO PREVENT IMPACT OR UNDUE STRESS IN THE STRUCTURE.
10. ALL EXPOSED CONCRETE CORNERS SHALL BE CHAMFERED ¾", UNLESS OTHERWISE NOTED.
11. THE BRIDGE SHALL BE CONSTRUCTED TO THE LINE AND PROFILE OF THE Y LINE. ALL ELEVATIONS ARE BASED OFF THE Y LINE. HMA OVERLAY THICKNESS MAY VARY ALONG THE LENGTH OF THE BRIDGE TO ACHIEVE DESIGN PROFILE DUE TO GIRDER CAMBER.
12. THE DEEP FOUNDATION DESIGN ASSUMES THE SOIL PROTECTED BY THE BURIED REVETMENT SCOUR COUTERMEASURES REMAINS IN PLACE.

DESIGN DATA:

1. DESIGN SPECIFICATIONS:
   - AASHTO LRFD BRIDGE DESIGN SPECIFICATIONS 9TH EDITION 2020
   - STATE OF WASHINGTON, DEPARTMENT OF TRANSPORTATION, BRIDGE DESIGN MANUAL (LRFD), JUNE 2022.
   - SEISMIC DESIGN IN ACCORDANCE WITH AASHTO GUIDE SPECIFICATIONS FOR LRFD SEISMIC BRIDGE DESIGN, 2ND EDITION WITH INTERIMS THROUGH 2022.
2. DESIGN LOADS:
   - UNIT WEIGHTS:
     REINFORCED CONCRETE = 155 PCF
     BACKFILL = 130 PCF
   - LIVE LOAD: HL-93
   - EARTH PRESSURE COEFFICIENTS: Ka = 0.27, Ko = 0.43, Kae = 0.32
   - FUTURE WEARING SURFACE: 35 PSF
   - SEISMIC PARAMETERS (FOR SITE CLASS D):
     ZERO PERIOD RESPONSE ACCELERATION (As) = 0.176g
     SHORT PERIOD ACCELERATION (SDS) = 0.393g
     LONG PERIOD ACCELERATION (SD1) = 0.171g
     SEISMIC DESIGN CATEGORY = B
3. BARRIER LOADS:
   - BARRIERS ARE DESIGNED PER TEST LEVEL 4 (TL-4)

JOHN R. LEMASTER — STATE OF WASHINGTON — 56771 — REGISTERED PROFESSIONAL ENGINEER — 4/23/2026

P:\WWALL00PW0001\0400CAD\SHEETS\EB\WALL00PW0001_BR_GN.dwg				
DRAWN: DRFO				
DESIGNER: JXLE				
CHECKED: EJF				
PROJ. ENG.: JDWA				
APPROVED BY:				
4/23/2026	REV DATE	REVISION	BY	APP'D

REGION NO.	STATE	FEDERAL AID PROJECT NO.
10	WASH	BRS-L360(001) TA-7561
JOB NUMBER		
22-03		

DAVID EVANS AND ASSOCIATES INC.
908 N Howard St. Ste 300
Spokane, WA 99201
Phone: 509.327.8897

Walla Walla County
PUBLIC WORKS DEPARTMENT
4/23/2026
PLOT DATE

COUNTY OF WALLA WALLA

WALLULA AVENUE BRIDGE

GENERAL STRUCTURE NOTES

SHEET 14
14 OF 47

SEC. 28, T7N, R35E
WALLA WALLA COUNTY

SCALE
10 0 5 10 20
(FEET)
1 INCH = 10 FT.

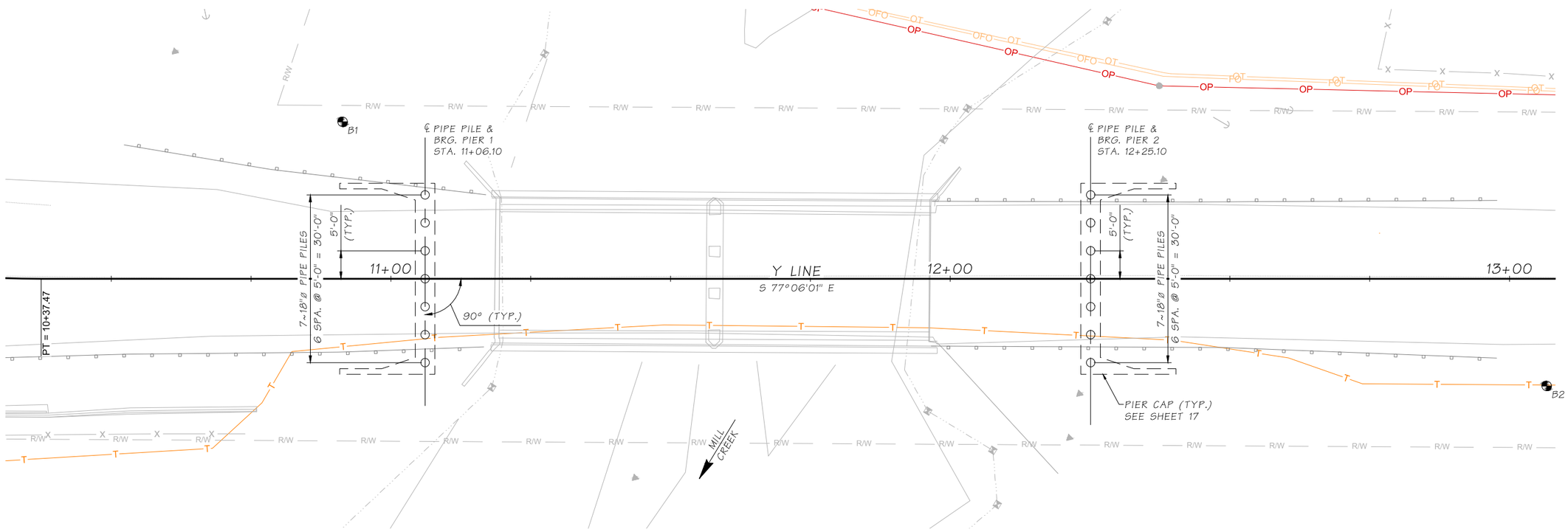

FOUNDATION PLAN

JOHN R. LEMASTER
STATE OF WASHINGTON
REGISTERED
PROFESSIONAL ENGINEER
9/9/2025

P:\WWALL00PW0001\0400\CAD\SHEETS\EB\WALL00PW0001_BR_FOUNDATION PLAN.dwg

DRAWN: DRFO				
DESIGNER: JXLE				
CHECKED: EJF				
PROJ. ENG.: JDWA				
APPROVED BY:				
9/9/2025	REV DATE	REVISION	BY	APP'D

REGION NO.	STATE	FEDERAL AID PROJECT NO.
10	WASH	BRS-L360(001) TA-7561
JOB NUMBER		
22-03		

DAVID EVANS AND ASSOCIATES INC.
908 N Howard St. Ste 300
Spokane, WA 99201
Phone: 509.327.8697

Walla Walla County

PUBLIC WORKS DEPARTMENT

9/9/2025
PLOT DATE

COUNTY OF WALLA WALLA

WALLULA AVENUE BRIDGE

FOUNDATION PLAN

SHEET
15
15 OF 47

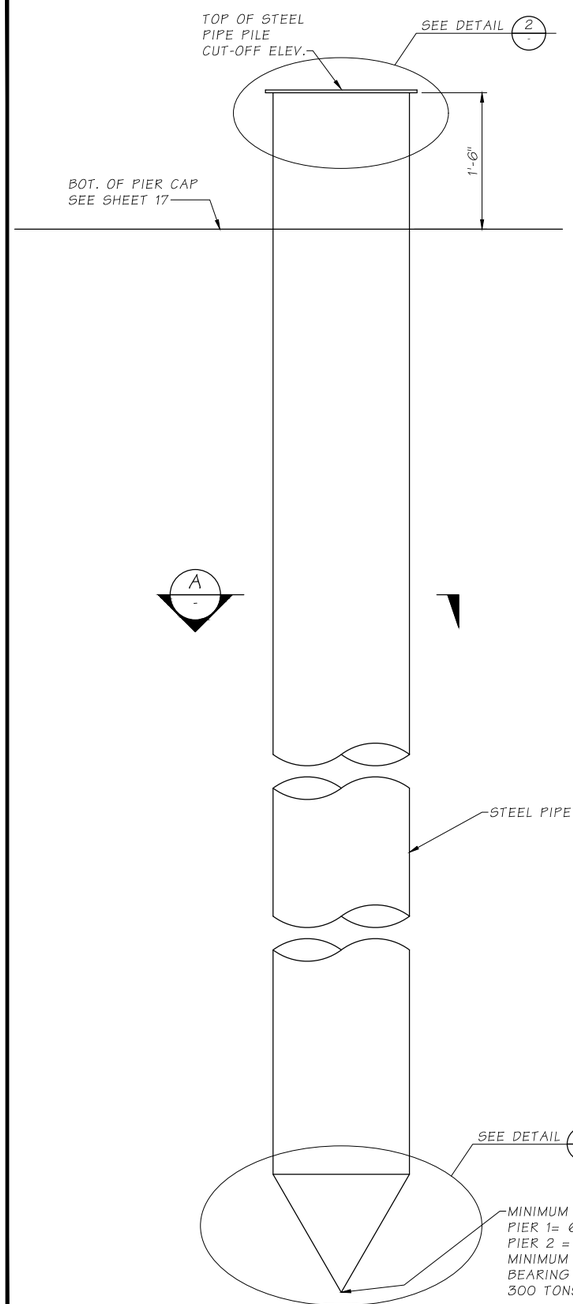

ELEVATION

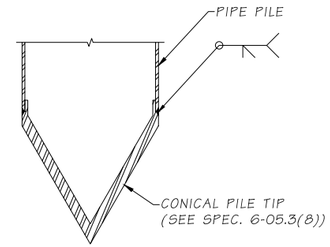

DETAIL 1

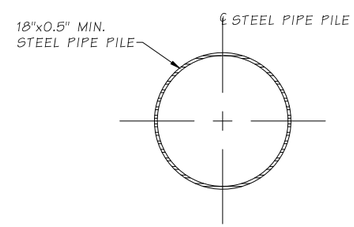

SECTION A

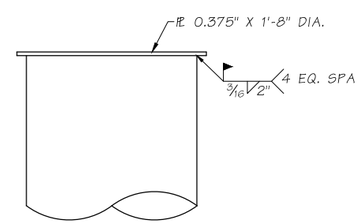

DETAIL 2

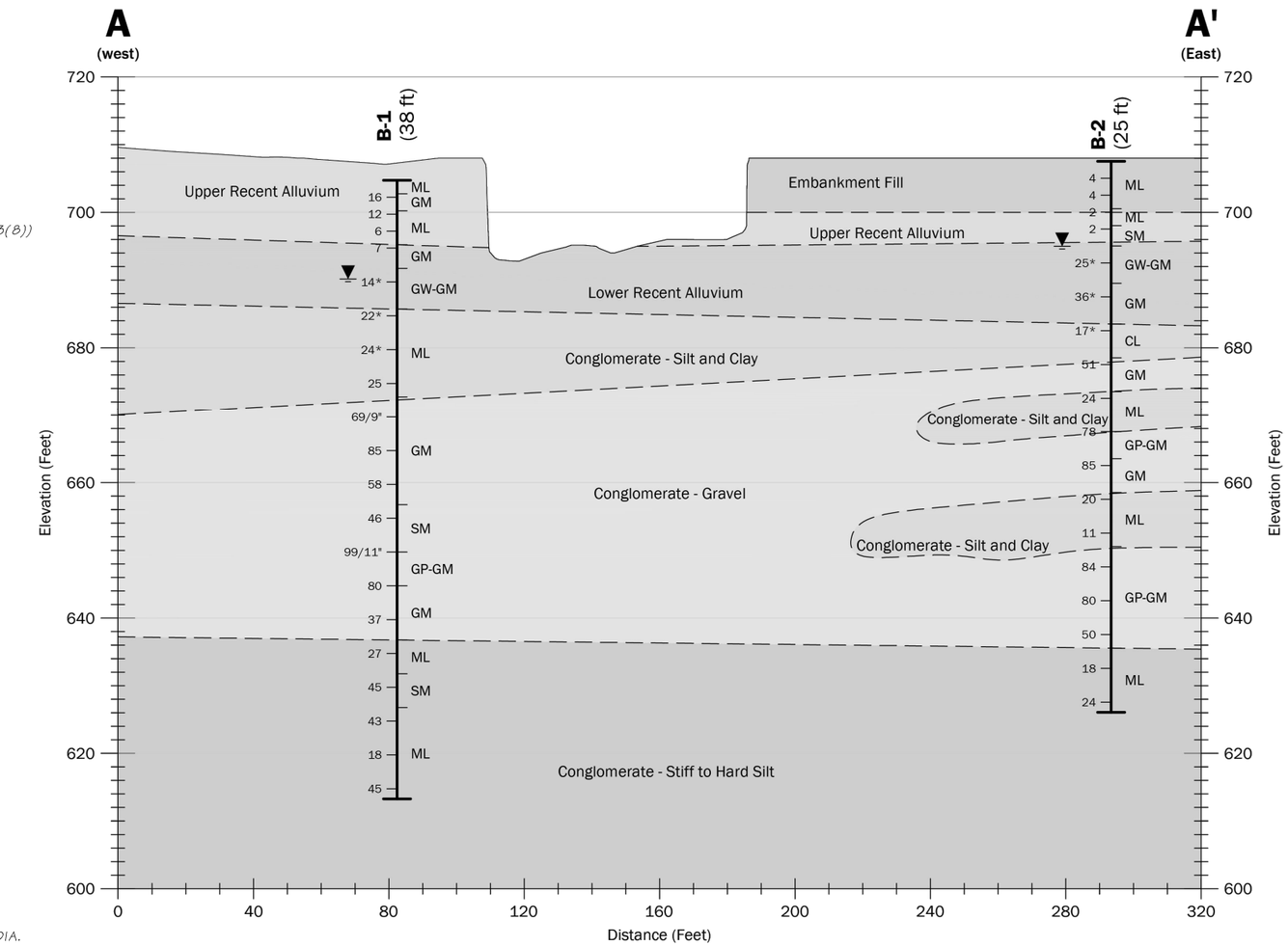

BORING DATA

SEE GEOTECHNICAL ENGINEERING EVALUATION REPORT FOR MORE DETAIL

NOTES:

1. PREBORING MAY BE REQUIRED TO ACHIEVE MINIMUM PENETRATION DEPTH AND TIP ELEVATIONS.
2. MATERIAL FOR STEEL PILES SHALL CONFORM TO ASTM A252, GRADE 3 MOD.

JOHN R. LEMASTER
STATE OF WASHINGTON
REGISTERED
PROFESSIONAL ENGINEER
9/9/2025

P:\W\WALL00PW0001\0400CAD\SHEETS\EB\WALL00PW0001_BR_FOUNDATION DETAILS.dwg

DRAWN: DRFO				
DESIGNER: JXLE				
CHECKED: EJF				
PROJ. ENG.: JDWA				
APPROVED BY:				
7/30/2025	REV DATE	REVISION	BY	APP'D

REGION NO.	STATE	FEDERAL AID PROJECT NO.
10	WASH	BRS-L360(001) TA-7561
JOB NUMBER 22-03		

DAVID EVANS AND ASSOCIATES INC.
908 N Howard St. Ste 300
Spokane, WA 99201
Phone: 509.327.8697

Walla Walla County

PUBLIC WORKS DEPARTMENT

8/20/2025
PLOT DATE

COUNTY OF WALLA WALLA

WALLULA AVENUE BRIDGE

FOUNDATION DETAILS

SHEET 16
16 OF 47

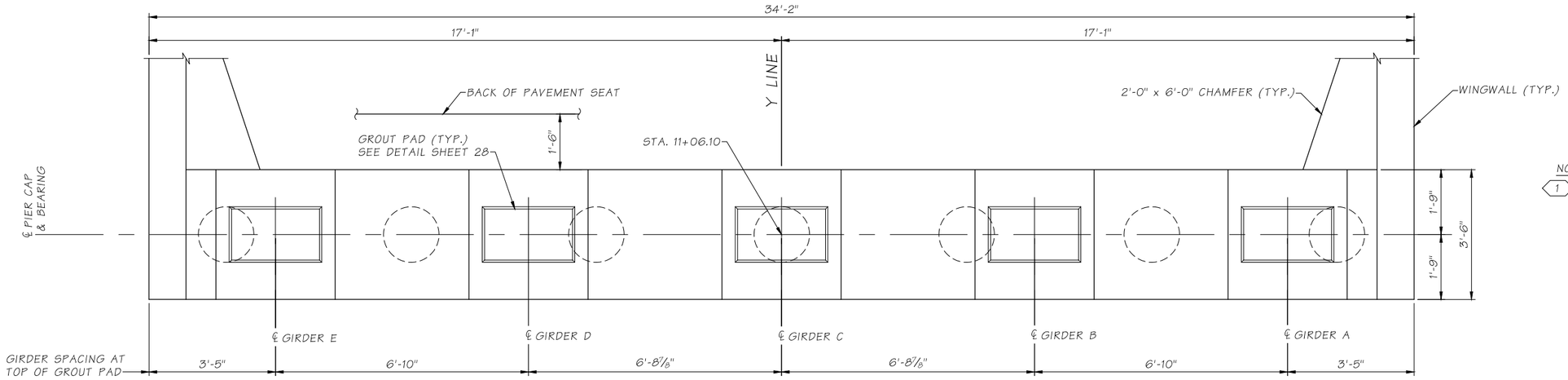

NOTES:

1. HOOK CROSS-TIES AROUND HORIZONTAL AND VERTICAL REINFORCEMENT ALTERNATE HOOKS IN ADJACENT CROSS-TIES. SPACE AS SHOWN 1½" CONCRETE COVER TO TIE

PLAN

(PIER 1 SHOWN, PIER 2 SIMILAR)

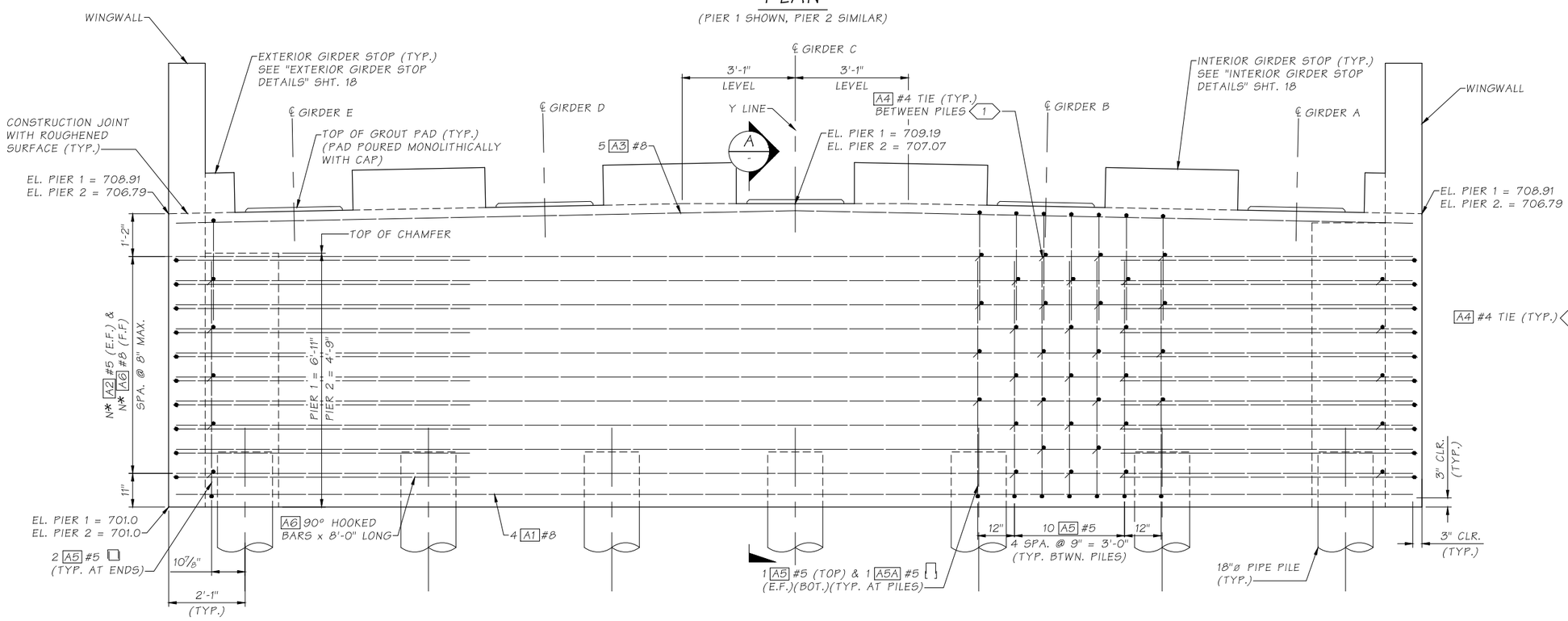

N* ~ PIER 1 = 10, PIER 2 = 7

ELEVATION

(LOOKING BACK ON STATION)
(PIER 1 SHOWN, PIER 2 SIMILAR)
WINGWALL REINFORCEMENT NOT SHOWN FOR CLARITY, SEE SHT. 19 FOR DETAILS

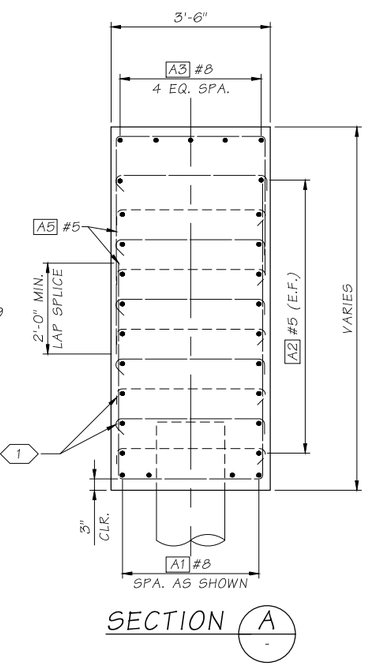

SECTION A

TOP OF GROUT PAD AT ℄ BRG AND ℄ GIRDER					
GIRDER	A	B	C	D	E
PIER 1	709.11	709.25	709.31	709.25	709.11
PIER 2	706.99	707.12	707.19	707.12	706.99

GROUT PAD PLACED LEVEL LONGITUDINALLY AND PARALLEL TO CROSS-SLOPE TRANSVERSELY

P:\W\WALL00PW0001\0400CAD\SHEETS\EB\WALL00PW0001_BR_ PIER 1 PLAN ELEVATION.dwg

DRAWN: DRFO				
DESIGNER: JXLE				
CHECKED: EJF				
PROJ. ENG.: JDWA				
APPROVED BY:				
8/20/2025	REV DATE	REVISION	BY	APP'D

REGION NO.	STATE	FEDERAL AID PROJECT NO.
10	WASH	BRS-L360(001) TA-7561
JOB NUMBER		
22-03		

DAVID EVANS AND ASSOCIATES INC.
908 N Howard St. Ste 300
Spokane, WA 99201
Phone: 509.327.8697

Walla Walla County

PUBLIC WORKS DEPARTMENT

8/20/2025
PLOT DATE

WALLULA AVENUE BRIDGE

PIER PLAN AND ELEVATION

SHEET 17
17 OF 47

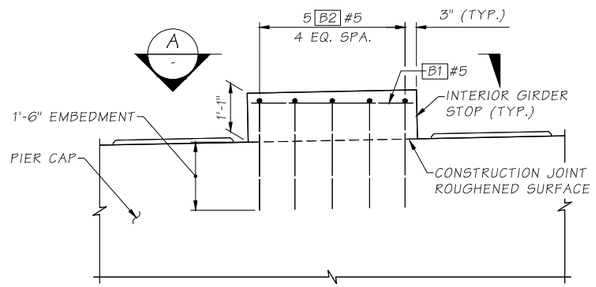

INTERIOR GIRDER STOP

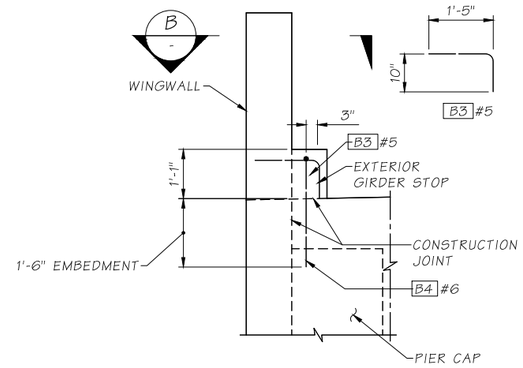

EXTERIOR GIRDER STOP

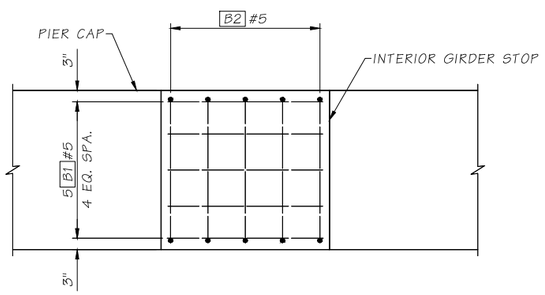

VIEW A

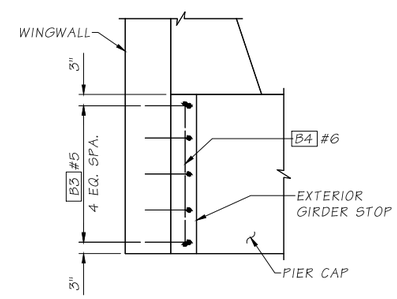

VIEW B

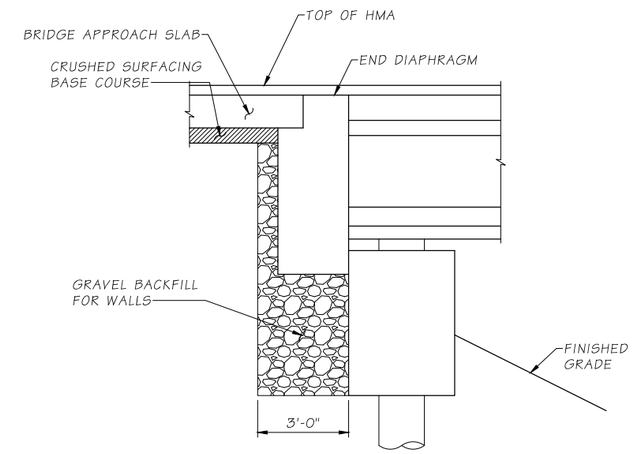

GRAVEL BACKFILL FOR SUBSTRUCTURE

P:\W\WALL00PW0001\0400\CAD\SHEETS\EB\WALL00PW0001_BR_PIER DETAILS.dwg				
DRAWN: DRFO				
DESIGNER: JXLE				
CHECKED: EJF				
PROJ. ENG.: JDWA				
APPROVED BY:				
7/30/2025	REV DATE	REVISION	BY	APP'D

REGION NO.	STATE	FEDERAL AID PROJECT NO.
10	WASH	BRS-L360(001) TA-7561
JOB NUMBER		
22-03		

DAVID EVANS AND ASSOCIATES INC.
908 N Howard St. Ste 300
Spokane, WA 99201
Phone: 509.327.8697

Walla Walla County

PUBLIC WORKS DEPARTMENT

8/20/2025
PLOT DATE

COUNTY OF WALLA WALLA

WALLULA AVENUE BRIDGE

PIER DETAILS

SHEET 18
18 OF 47

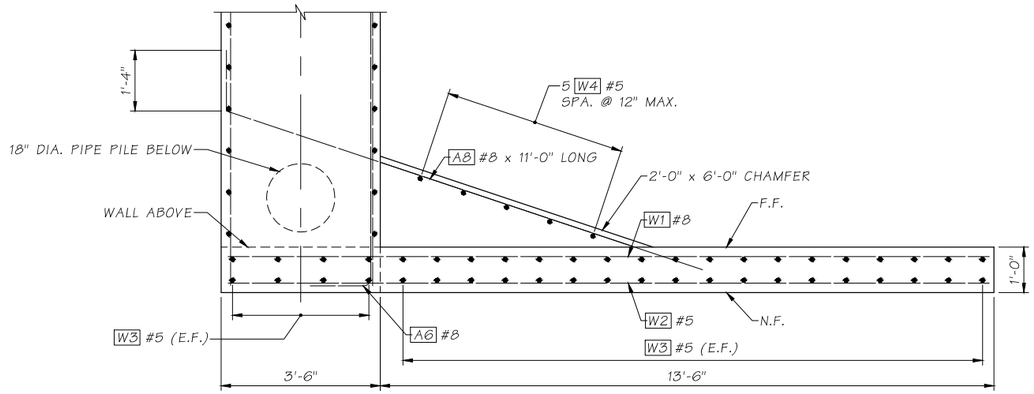

SECTION A

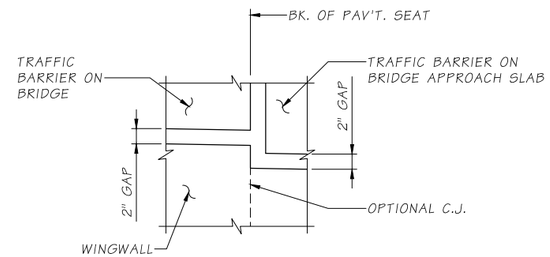

DETAIL 1

WINGWALL ELEVATIONS						
	EL. A	EL. B	EL. C	EL. D	EL. E	EL. F
WING 1	712.92	712.98	712.75	712.89	708.91	701.00
WING 2	712.92	712.98	712.75	712.89	708.91	701.00
WING 3	710.85	710.76	710.53	710.30	706.79	701.00
WING 4	710.85	710.76	710.53	710.30	706.79	701.00

NOTES:
ELEVATIONS ARE TAKEN AT N.F. OF WINGWALLS
SEE SHEET 13 FOR WINGWALL LOCATION
N.F. = NEAR FACE
F.F. = FAR FACE
E.F. = EACH FACE

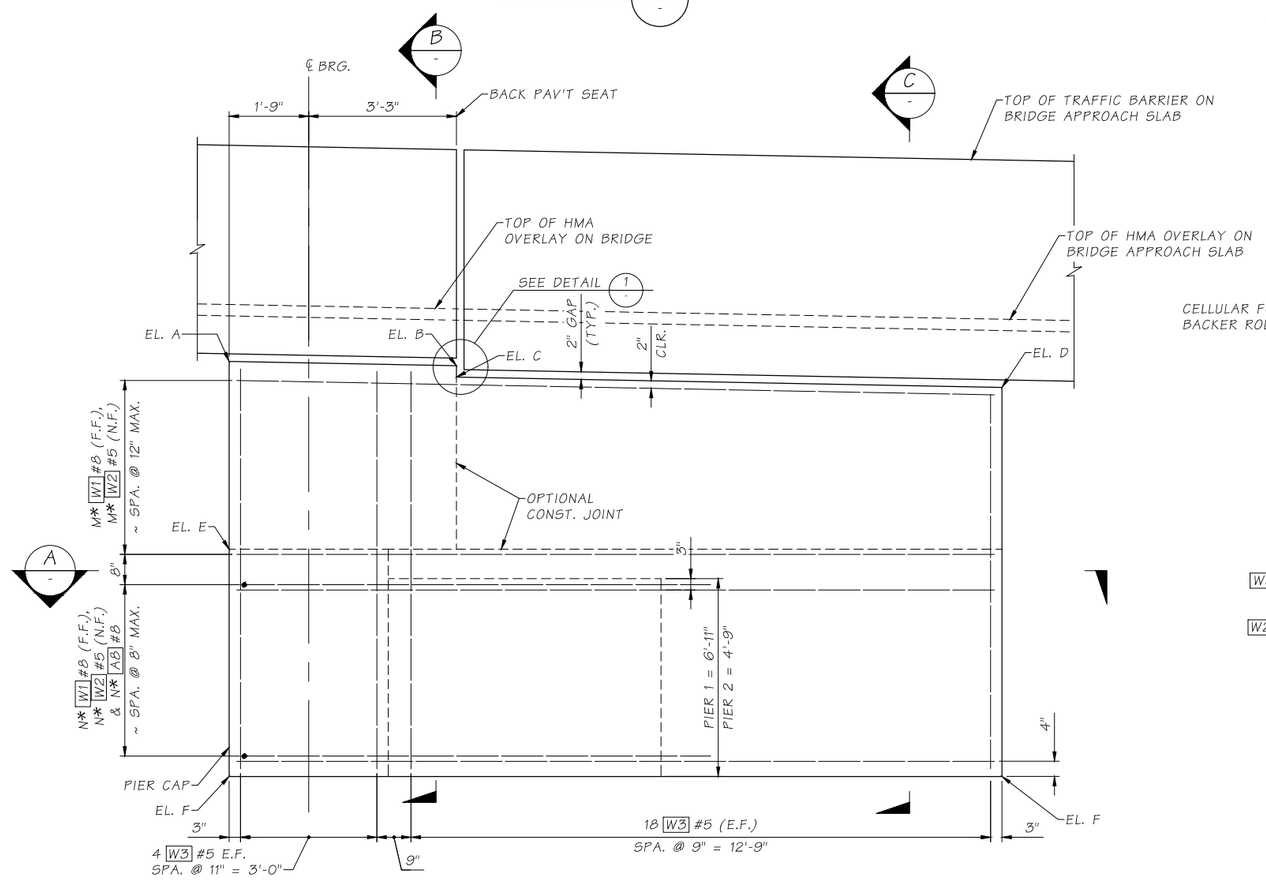

N* ~ PIER 1 = 11, PIER 2 = 9
M* ~ PIER 1 = 6, PIER 2 = 4

OUTSIDE ELEVATION WINGWALL

N.F. REINFORCEMENT SHOWN. F.F. REINF. NOT SHOWN FOR CLARITY, EXCEPT WHERE NOTED. FOR PIER REINFORCEMENT NOT SHOWN SEE PIER PLANS. PIER 2 RIGHT SHOWN, OTHERS SIMILAR

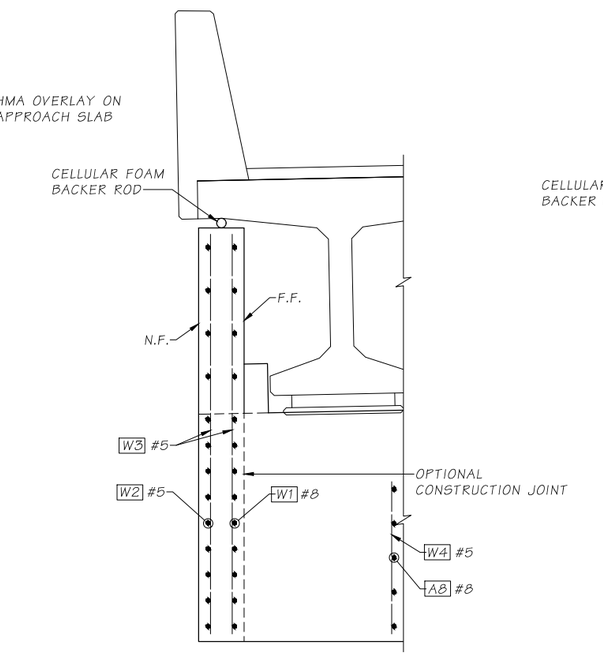

SECTION B

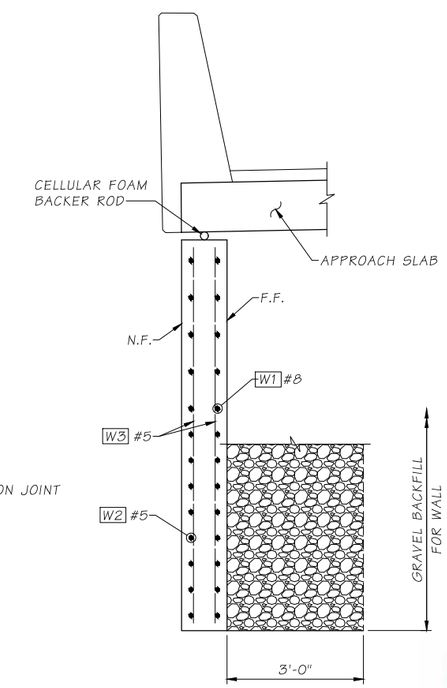

SECTION C

JOHN R. LEMASTER
STATE OF WASHINGTON
REGISTERED
PROFESSIONAL ENGINEER
9/9/2025

P:\WWALL00PW0001\0400CAD\SHEETS\EB\WALL00PW0001_BR_WINGWALL 1.dwg

DRAWN: DRFO				
DESIGNER: JXLE				
CHECKED: EJF				
PROJ. ENG.: JDWA				
APPROVED BY:				
8/20/2025	REV DATE	REVISION	BY	APP'D

REGION NO.	STATE	FEDERAL AID PROJECT NO.
10	WASH	BRS-L360(001) TA-7561
JOB NUMBER		
22-03		

DAVID EVANS AND ASSOCIATES INC.
908 N Howard St. Ste 300
Spokane, WA 99201
Phone: 509.327.8897

Walla Walla County

PUBLIC WORKS DEPARTMENT

8/20/2025
PLOT DATE

COUNTY OF WALLA WALLA

WALLULA AVENUE BRIDGE

WINGWALL DETAILS

SHEET 19
19 OF 47

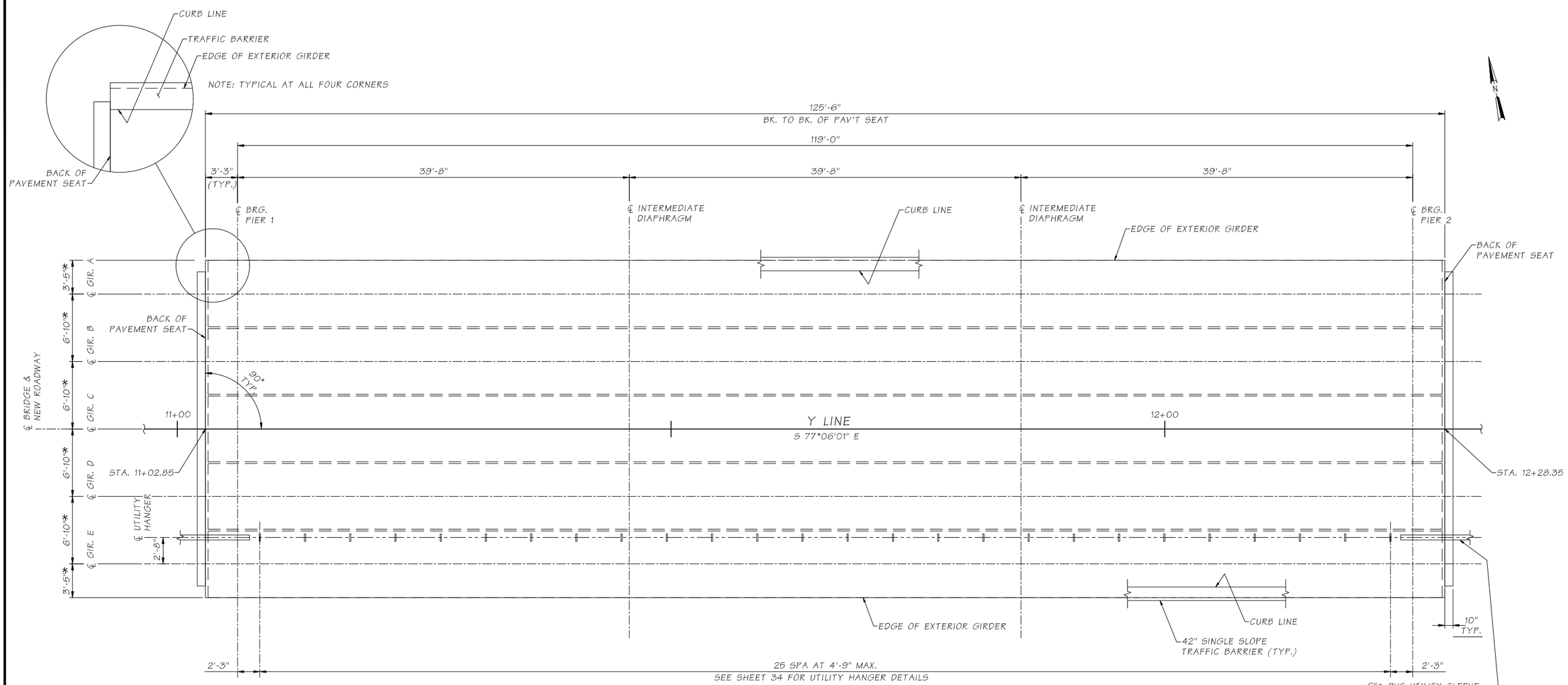

FRAMING PLAN

BEARING OF ALL PIERS ARE NORMAL TO Y LINE

*DIMENSIONS MEASURED ALONG ROADWAY SLOPE AT TOP OF DECK GIRDER

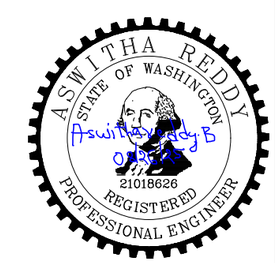

G:\WA-LACE-EXI\Projects\Walla Walla, County\2313 - Wallula Road Bridge - Sub to DEA\02-CADD\Sheets\WALL00PW0001_BR_FRAMING PLAN.dwg

DRAWN: MH				
DESIGNER: AR				
CHECKED: HC				
PROJ. ENG.: JDWA				
APPROVED BY:				
8/25/2025	REV DATE	REVISION	BY	APP'D

REGION NO.	STATE	FEDERAL AID PROJECT NO.
10	WASH	BRS-L360(001) TA-7561
JOB NUMBER 22-03		

exeltech
8729 Commerce Pl. Dr. NE
Lacey, WA 98516
(360) 357-8289
www.xltech.com

Walla Walla County
PUBLIC WORKS DEPARTMENT
8/25/2025
PLOT DATE

WALLULA AVENUE BRIDGE

FRAMING PLAN

SHEET 20
20 OF 47

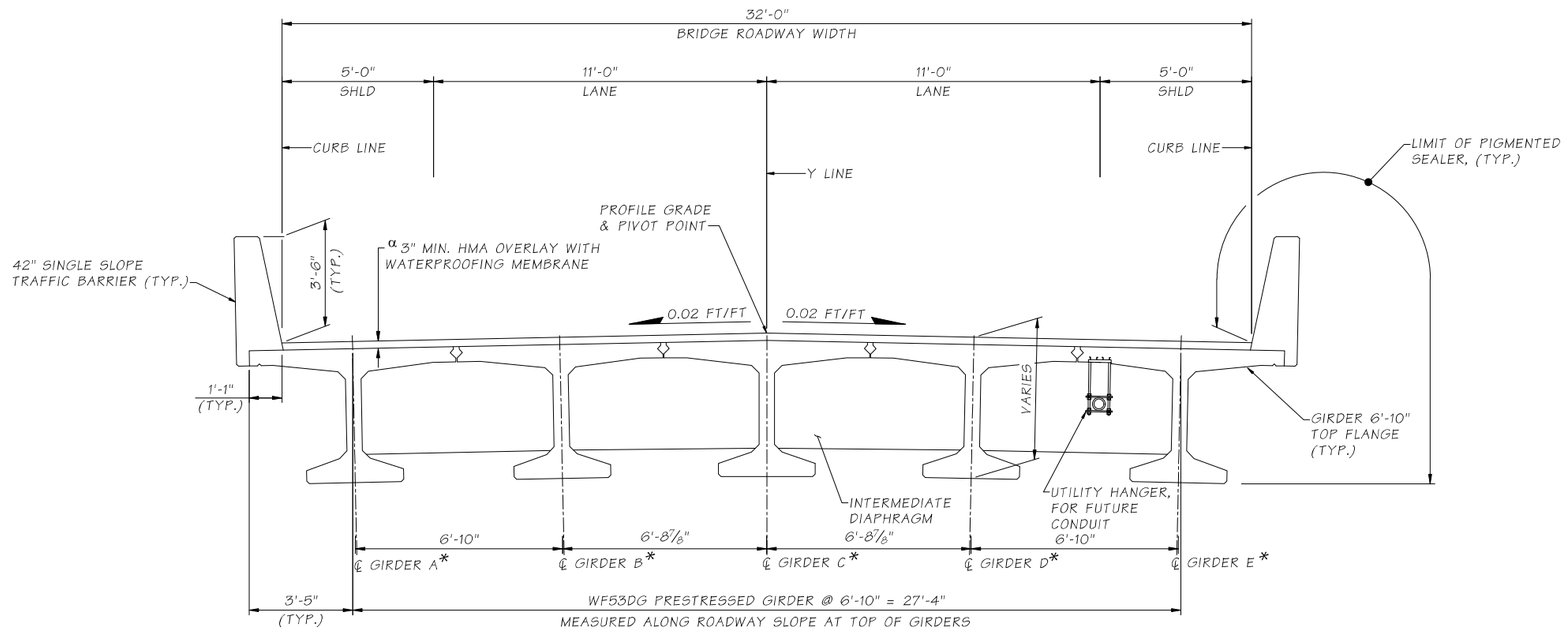

TYPICAL SECTION

* ℄ GIRDER NORMAL TO ROADWAY SLOPE
α FOR WATERPROOFING MEMBRANE PLACEMENT EXTENTS
SEE SHEET 33, "APPROACH EXPANSION ANCHOR - METHOD A" DETAILS
\# SEE SHEET 34 FOR UTILITY HANGER DETAILS

ASWITHA REDDY
STATE OF WASHINGTON
Aswitha Reddy B
08/25/25
21018626
REGISTERED
PROFESSIONAL ENGINEER

Q:\WA-LACE-EX\Projects\Walla Walla, County\2313 - Wallula Road Bridge - Sub to DEA\02-CADD\Sheets\WALL00PW0001_BR_TYP.SEC.dwg

DRAWN: MH				
DESIGNER: AR				
CHECKED: HC				
PROJ. ENG.: JDWA				
APPROVED BY:				
8/25/2025	REV DATE	REVISION	BY	APP'D

REGION NO.	STATE	FEDERAL AID PROJECT NO.
10	WASH	
JOB NUMBER		BRS-L360(001)
22-03		TA-7561

exeltech
8729 Commerce Pl. Dr. NE
Lacey, WA 98516
(360) 357-8289
www.xltech.com

Walla Walla County
PUBLIC WORKS DEPARTMENT
8/25/2025
PLOT DATE

COUNTY OF WALLA WALLA

WALLULA AVENUE BRIDGE
TYPICAL SECTION

SHEET
21
21 OF 47

GIRDER SCHEDULE

SPAN	GIRDER	GIRDER SERIES	TOP FLANGE WIDTH W	PLAN LENGTH (ALONG GIRDER GRADE) (SEE GIRDER NOTE 1)	GIRDER END DETAILS							MIN. CONC. COMP. STRENGTH		NUMBER OF STRANDS (SEE GIRDER NOTE 2)		LOCATION OF C.G. STRANDS			STRAIGHT STRANDS TO EXTEND		MIDSPAN VERTICAL DEFLECTION D		REINFORCEMENT DETAILS						SHIPPING AND HANDLING DETAILS					
					END 1 TYPE	END 2 TYPE	La	θ1	θ2	P1	P2	@ 28-DAYS F'C (KSI)	@ RELEASE F'CI (KSI)	STRAIGHT	HARPED	E	F℄	Fo	END 1	END 2	LOWER BOUND @ 40 DAYS	UPPER BOUND @ 120 DAYS	ZONE 1 SPACING	ZONE 1 LENGTH	ZONE 2 SPACING	ZONE 2 LENGTH	ZONE 3 SPACING	ZONE 3 LENGTH	MAXIMUM MIDSPAN VERTICAL DEFLECTION AT SHIPPING	L	L1	L2	K_θ MINIMUM SHIPPING SUPPORT ROTATIONAL SPRING CONSTANT	W_{CC} MINIMUM SHIPPING SUPPORT CNTR.-TO-CNTR. WHEEL SPACING
1-	A, E	WF53DG	6'-10"	123'-3¼"	A	A	-	90.00	90.00	2'-½"	2'-½"	7.80 KSI	6.0 KSI	32	14	3"	4⅜"	9⅛"	5 6 15 16	3 4 17 18	2¾"	6½"	3½"	1¾"	6"	1'-0"	9"	4½"	6⅞"	3'-0"	4'-10⅛"	4'-10⅛"	40,000.00 KIP-IN/RAD	6'-0"
1-	B, D	WF53DG	6'-10"	123'-3¼"	A	A	-	90.00	90.00	2'-½"	2'-½"	7.80 KSI	6.0 KSI	30	14	2⅞"	4⅜"	9⅛"	5 6 15 16	3 4 17 18	2½"	5⅞"	3½"	1¾"	6"	1'-0"	9"	4½"	6¾"	3'-0"	4'-10⅛"	4'-10⅛"	40,000.00 KIP-IN/RAD	6'-0"
1-	C	WF53DG	6'-10"	123'-3¼"	A	A	-	90.00	90.00	2'-½"	2'-½"	7.80 KSI	6.0 KSI	30	14	2⅞"	4⅜"	10"	5 6 15 16	3 4 17 18	2½"	6⅛"	3½"	1¾"	6"	1'-0"	9"	4½"	6¾"	3'-0"	4'-10⅛"	4'-10⅛"	40,000.00 KIP-IN/RAD	6'-0"

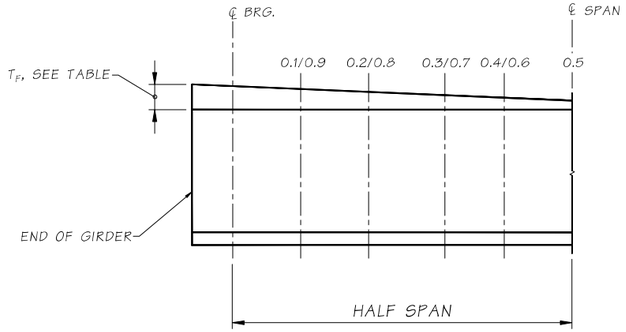

GIRDER TOP FLANGE THICKENING DETAIL

(AT GIRDER CASTING)

SPAN	TOP FLANGE THICKNESS, TF*												
	GIR. 10TH PT.												
	END OF GIRDER	℄ BRG.	0.1	0.2	0.3	0.4	0.5	0.6	0.7	0.8	0.9	℄ BRG.	END OF GIRDER
1	10⅜"	10¼"	9⅜"	8 9/16"	7 11/16"	6⅞"	6"	6⅛"	7 11/16"	8 9/16"	9⅜"	10¼"	10⅜"

* AT GIRDER C ADJUST TOP FLANGE TO ACCOUNT FOR GIRDER CROSS SLOPE

GIRDER NOTES:

1. PLAN LENGTH SHALL BE INCREASED AS NECESSARY TO COMPENSATE FOR SHORTENING DUE TO PRESTRESS AND SHRINKAGE.
2. ALL PRETENSIONED AND TEMPORARY STRANDS SHALL BE 0.6"ø AASHTO M203 GRADE 270 LOW RELAXATION STRANDS, JACKED TO 202.5 KSI (43.94 KIPS PER STRAND).
3. STRUCTURAL STEEL SHAPES AND ASSEMBLIES SHALL BE ASTM A36. THEY SHALL BE PAINTED WITH A PRIMER COAT IN ACCORDANCE WITH STD. SPEC. 6-07.3(9). WELD TIES SHALL BE PAINTED WITH A FIELD PRIMER COAT OF AN ORGANIC ZINC PAINT AFTER FIELD WELDING.
4. THE ENTIRE TOP SURFACE OF GIRDERS SHALL BE TEXTURED IN ACCORDANCE WITH 6-02.3(25)H.
5. HMA THICKNESS VARIES ALONG LENGTH OF BRIDGE DUE TO PROFILE GRADE AND GIRDER CAMBER. THICKNESS AT ℄ BEARINGS AND ON APPROACH SLABS IS 3.5". CONTRACTOR TO DETERMINE THICKNESS AT 10TH POINTS BASED ON ACTUAL GIRDER CAMBER AT TIME OF GIRDER ERECTION AND SHALL SUBMIT FOR REVIEW.

ASWITHA REDDY
STATE OF WASHINGTON
21018626
REGISTERED
PROFESSIONAL ENGINEER

Aswitha Reddy B
08/25/25

Q:\WA-LACE-EX\Projects\Walla Walla, County\2313 - Wallula Road Bridge - Sub to DEA\02-CADD\Sheets\WALL00PW0001_BR_GIRDER DETAILS.dwg

DRAWN: MH				
DESIGNER: AR				
CHECKED: HC				
PROJ. ENG.: JDWA				
APPROVED BY:				
8/25/2025	REV DATE	REVISION	BY	APP'D

REGION NO.	STATE	FEDERAL AID PROJECT NO.
10	WASH	BRS-L360(001)
JOB NUMBER		TA-7561
22-03		

exeltech
8729 Commerce Pl. Dr. NE
Lacey, WA 98516
(360) 357-8289
www.xltech.com

Walla Walla County
PUBLIC WORKS DEPARTMENT
8/25/2025
PLOT DATE

COUNTY OF WALLA WALLA

WALLULA AVENUE BRIDGE

GIRDER SCHEDULE

SHEET 22
22 OF 47

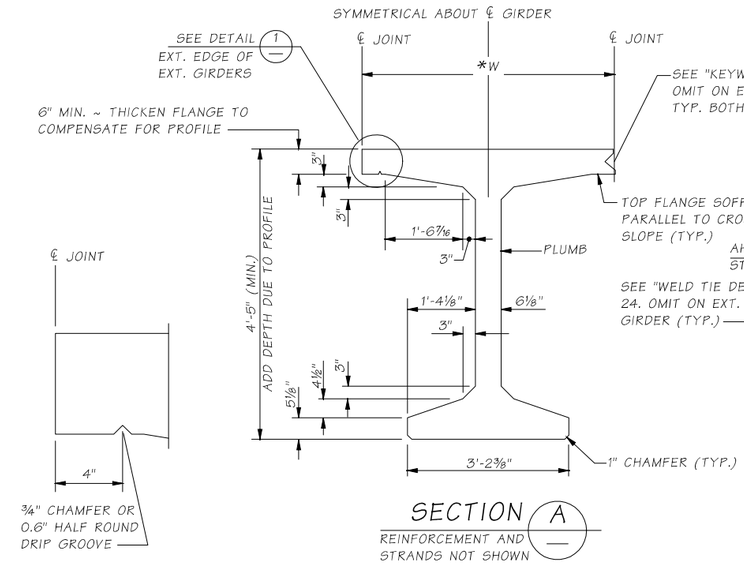

SECTION A

REINFORCEMENT AND STRANDS NOT SHOWN

DETAIL 1

EXTERIOR EDGE OF EXTERIOR GIRDERS

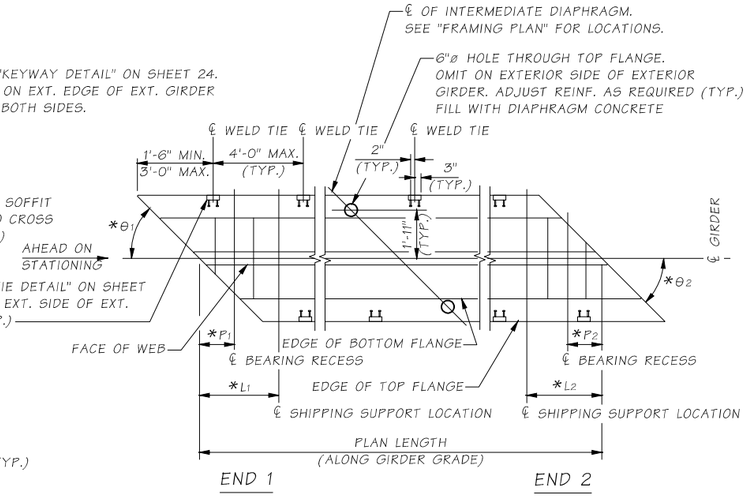

GIRDER PLAN

*SEE SHEET 22 FOR DIMENSIONS

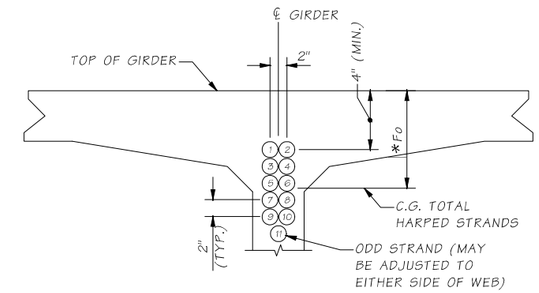

VIEW B

HARPED STRAND LOCATION SEQUENCE SHALL BE AS SHOWN 1, 2 ETC.

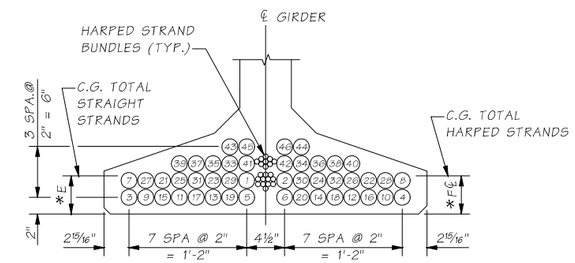

SECTION C

STRAIGHT STRAND LOCATION SEQUENCE SHALL BE AS SHOWN 1, 2 ETC.

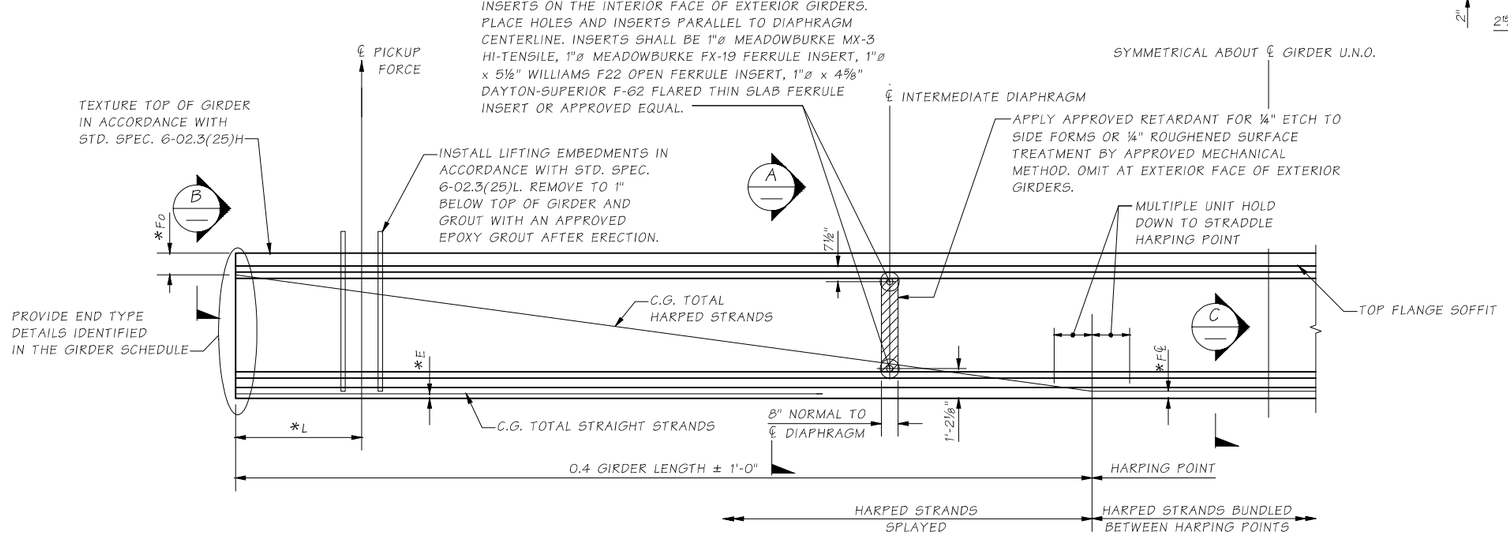

GIRDER ELEVATION

*SEE SHEET 22 FOR DIMENSIONS

ASWITHA REDDY
STATE OF WASHINGTON
21018626
REGISTERED
PROFESSIONAL ENGINEER

Q:\WA-LACE-EX\Projects\Walla Walla, County\2313 - Wallula Road Bridge - Sub to DEA\02-CADD\Sheets\WALL00PW0001_BR_GIRDER DETAILS.dwg				
DRAWN: MH				
DESIGNER: AR				
CHECKED: HC				
PROJ. ENG.: JDWA				
APPROVED BY:				
9/10/2025	REV DATE	REVISION	BY	APP'D

REGION NO.	STATE	FEDERAL AID PROJECT NO.
10	WASH	BRS-L360(001)
JOB NUMBER		TA-7561
22-03		

exeltech
8729 Commerce Pl. Dr. NE
Lacey, WA 98516
(360) 357-8289
www.xltech.com

Walla Walla County

PUBLIC WORKS DEPARTMENT

9/10/2025
PLOT DATE

COUNTY OF WALLA WALLA

WALLULA AVENUE BRIDGE

GIRDER DETAIL 1 OF 3

SHEET 23
23 OF 47

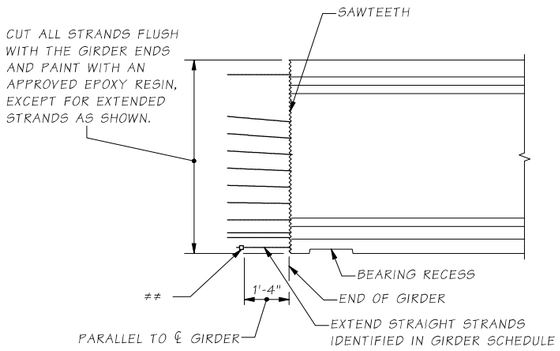

END TYPE A

1 1/16"ø MIN. STRAND CHUCK OR ASTM A108 2 3/4"ø x 1 1/8" STRAND ANCHOR. ANCHOR STRAND WITH WEDGES BEFORE GIRDER ERECTION. VERIFY WEDGES ARE SEATED TIGHTLY IMMEDIATELY BEFORE PLACING DIAPHRAGM CONCRETE.

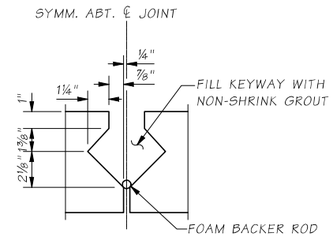

KEYWAY DETAIL

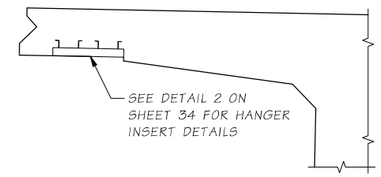

HANGER INSERT DETAIL

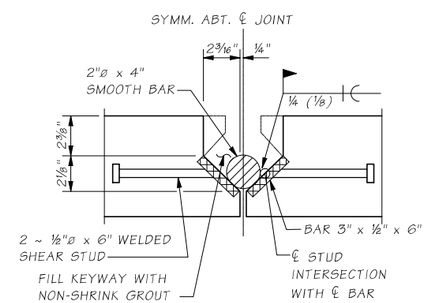

WELD TIE DETAIL

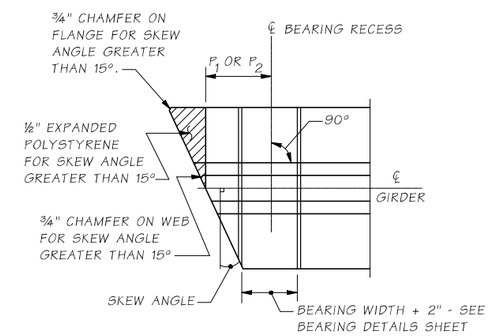

PLAN

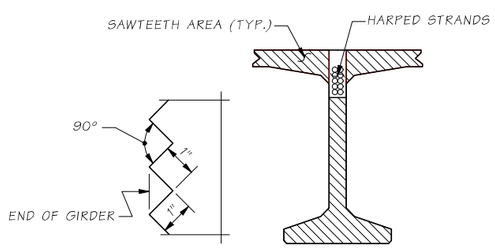

SAWTEETH DETAIL

SAWTEETH SHALL BE FULL WIDTH OVER AREA SHOWN

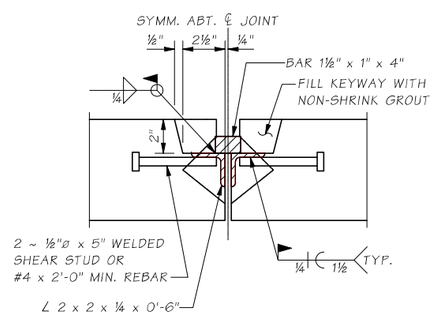

ALT. WELD TIE DETAIL

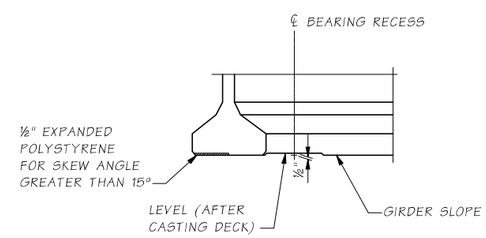

ELEVATION

BEARING RECESS AND BOTTOM FLANGE SPALL PROTECTION DETAIL

BEARING RECESS FORMS SHALL BE CONSTRUCTED AND FASTENED TO AVOID GIRDER DAMAGE DURING STRAND RELEASE. REINFORCEMENT NOT SHOWN FOR CLARITY.

G:\WA-LACE-EX\Projects\Walla Walla, County\2313 - Wallula Road Bridge - Sub to DEA\02-CADD\Sheets\WALL00PW0001_BR_GIRDER DETAILS.dwg

DRAWN: MH				
DESIGNER: AR				
CHECKED: HC				
PROJ. ENG.: JDWA				
APPROVED BY:				
8/26/2025	REV DATE	REVISION	BY	APP'D

REGION NO.	STATE	FEDERAL AID PROJECT NO.
10	WASH	BRS-L360(001) TA-7561
JOB NUMBER		
22-03		

exeltech
8729 Commerce Pl. Dr. NE
Lacey, WA 98516
(360) 357-8289
www.xltech.com

Walla Walla County

PUBLIC WORKS DEPARTMENT

8/26/2025
PLOT DATE

WALLULA AVENUE BRIDGE

GIRDER DETAIL 2 OF 3

SHEET 24
24 OF 47

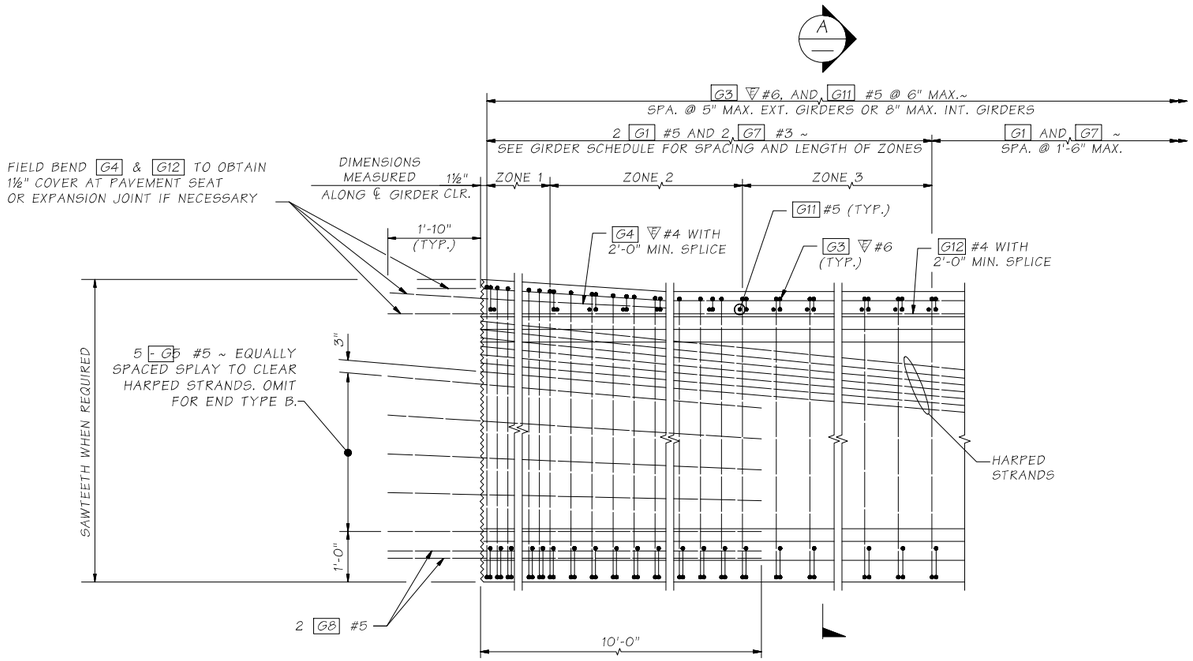

REINFORCEMENT END ELEVATION

STRAIGHT AND TEMPORARY STRANDS NOT SHOWN FOR CLARITY.

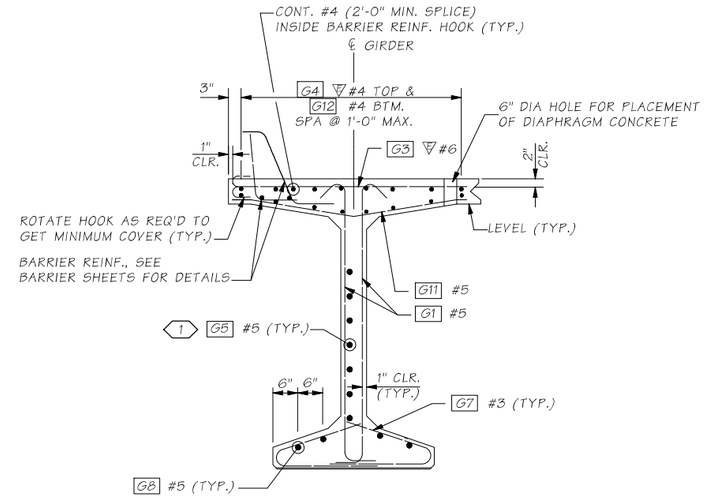

SECTION A

STRANDS NOT SHOWN

BENDING DIAGRAM

(ALL DIMENSIONS ARE OUT TO OUT)

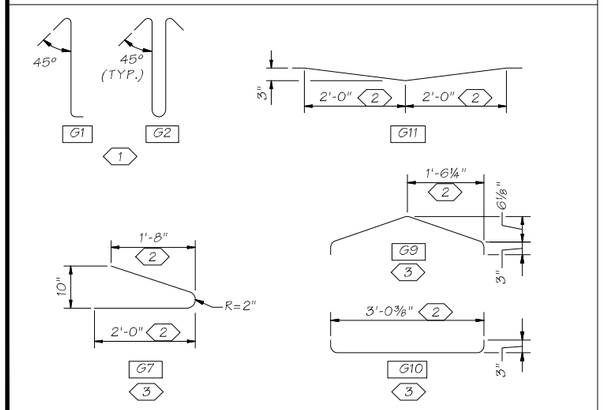

REINFORCEMENT NOTES:

1. DEFORMED WELDED WIRE REINFORCEMENT MAY BE SUBSTITUTED FOR MILD REINFORCEMENT IN ACCORDANCE WITH STANDARD SPECIFICATION 6-02.3(25)A.

NOTES:

1. 1 G2 MAY BE SUBSTITUTED FOR 2 G1 WITHIN ZONE 1.
2. VARIES FOR SKEWED ENDS.
3. PAIRS OF G7 BARS, OR G9 AND G10 BARS, MAY BE USED INTERCHANGEABLY AS BOTTOM FLANGE TIES.

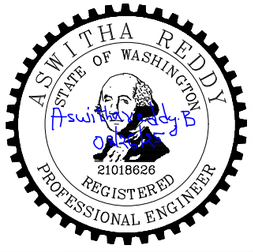

C:\WA-LACE-EX\Projects\Walla Walla, County\2313 - Wallula Road Bridge - Sub to DEA\02-CADD\Sheets\WALL00PW0001_BR_GIRDER DETAILS.dwg				
DRAWN: MH				
DESIGNER: AR				
CHECKED: HC				
PROJ. ENG.: JDWA				
APPROVED BY:				
8/25/2025	REV DATE	REVISION	BY	APP'D

REGION NO.	STATE	FEDERAL AID PROJECT NO.
10	WASH	
JOB NUMBER		BRS-L360(001)
22-03		TA-7561

exeltech
8729 Commerce Pl. Dr. NE
Lacey, WA 98516
(360) 357-8289
www.xltech.com

Walla Walla County

PUBLIC WORKS DEPARTMENT

8/25/2025
PLOT DATE

WALLULA AVENUE BRIDGE

GIRDER DETAIL 3 OF 3

SHEET 25
25 OF 47

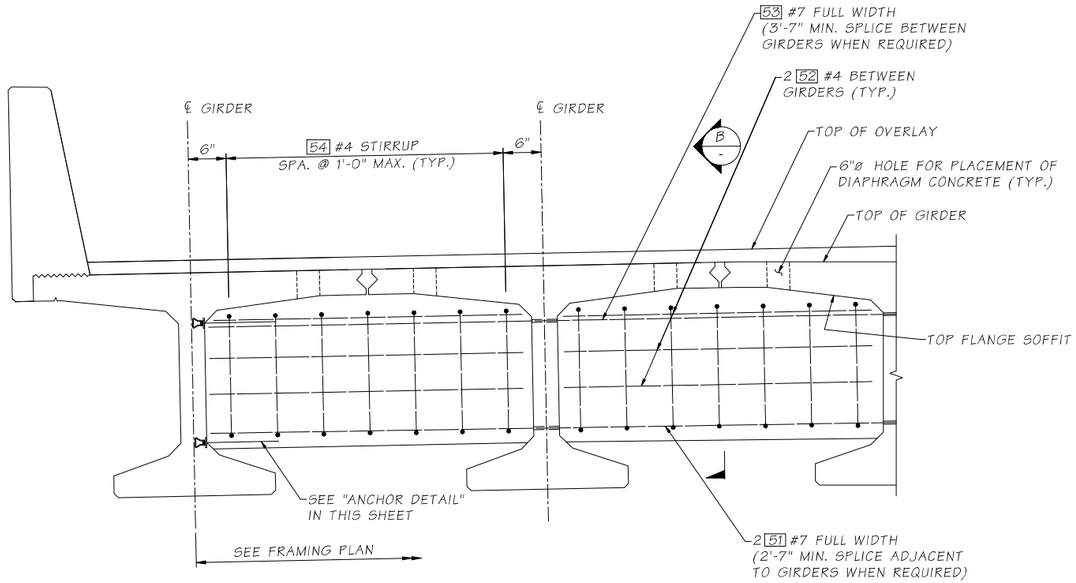

ELEVATION
INTERMEDIATE DIAPHRAGM

DIMENSIONS ARE ALONG DIAPHRAGM

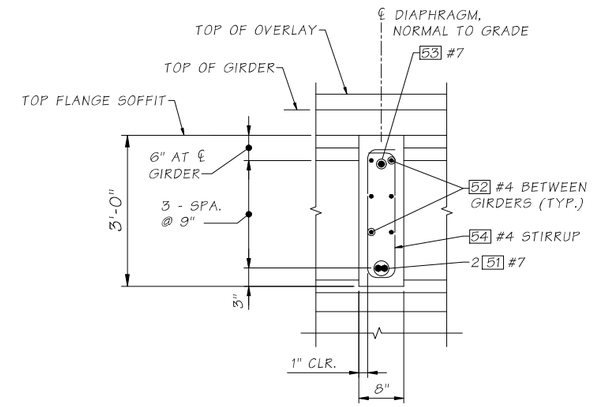

SECTION B

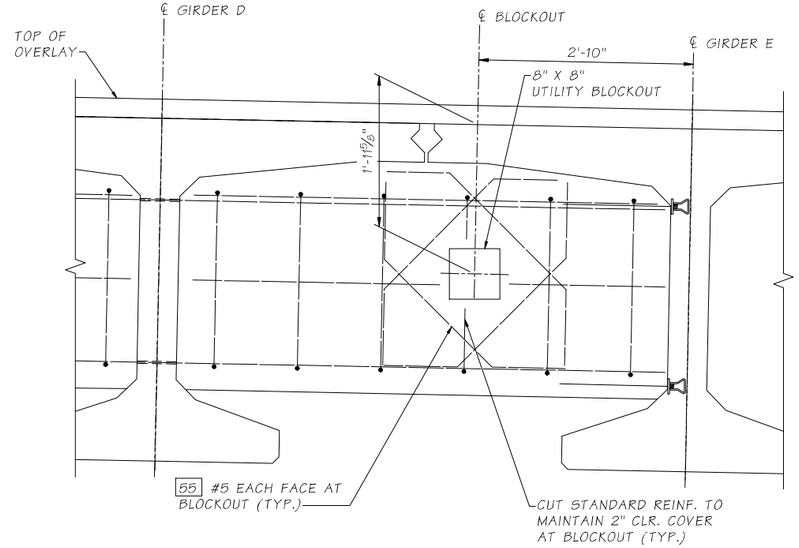

UTILITY BLOCKOUT DETAIL

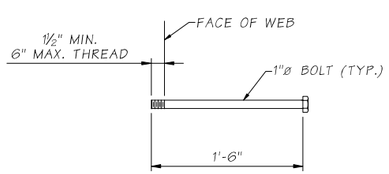

ANCHOR DETAIL

ASTM A307

DIAPHRAGM NOTES:

1. GIRDERS SHALL BE HELD RIGIDLY IN PLACE WHEN DIAPHRAGMS ARE PLACED.
2. IT MAY BE NECESSARY TO THREAD REINFORCING BARS THROUGH HOLES IN GIRDERS PRIOR TO PLACING EXTERIOR GIRDERS.
3. LONGITUDINAL DIMENSIONS ARE NORMAL TO SKEW.

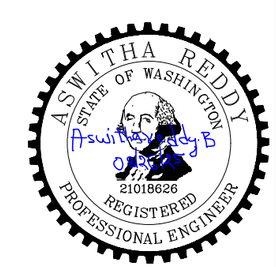

Q:\WA-LACE-EX\Projects\Walla Walla, County\2313 - Wallula Road Bridge - Sub to DEA\02-CADD\Sheets\WALL00PW0001_BR_INTERMEDIATE DIAPHRAGM DETAILS.dwg				
DRAWN: MH				
DESIGNER: AR				
CHECKED: HC				
PROJ. ENG.: JDWA				
APPROVED BY:				
8/21/2025	REV DATE	REVISION	BY	APP'D

REGION NO.	STATE	FEDERAL AID PROJECT NO.
10	WASH	
JOB NUMBER		BRS-L360(001)
22-03		TA-7561

exeltech
8729 Commerce Pl. Dr. NE
Lacey, WA 98516
(360) 357-8289
www.xltech.com

Walla Walla County
PUBLIC WORKS DEPARTMENT
8/25/2025
PLOT DATE

WALLULA AVENUE BRIDGE
INTERMEDIATE DIAPHRAGM DETAILS

SHEET 26
26 OF 47

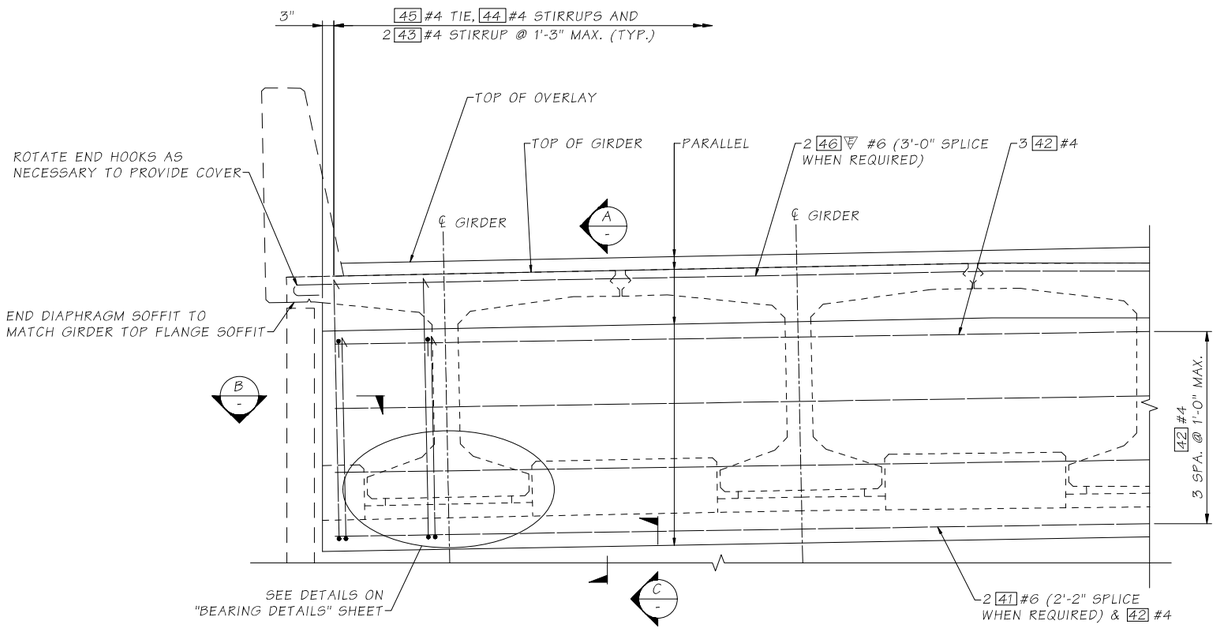

ELEVATION END DIAPHRAGM

DIMENSIONS ARE ALONG ℄ DIAPHRAGM

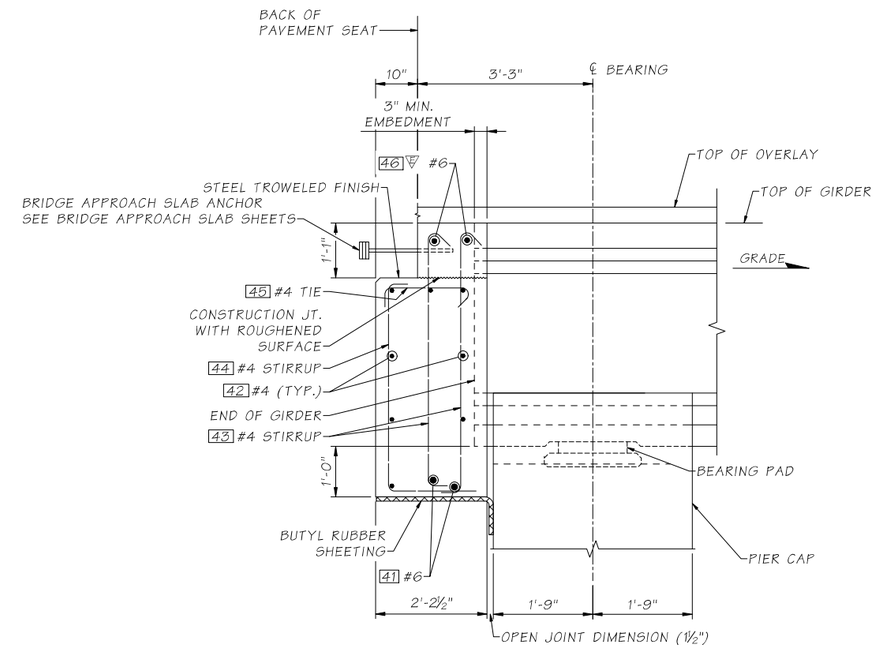

SECTION A

ALL LONGITUDINAL DIMENSIONS ARE NORMAL TO PIER WALL.

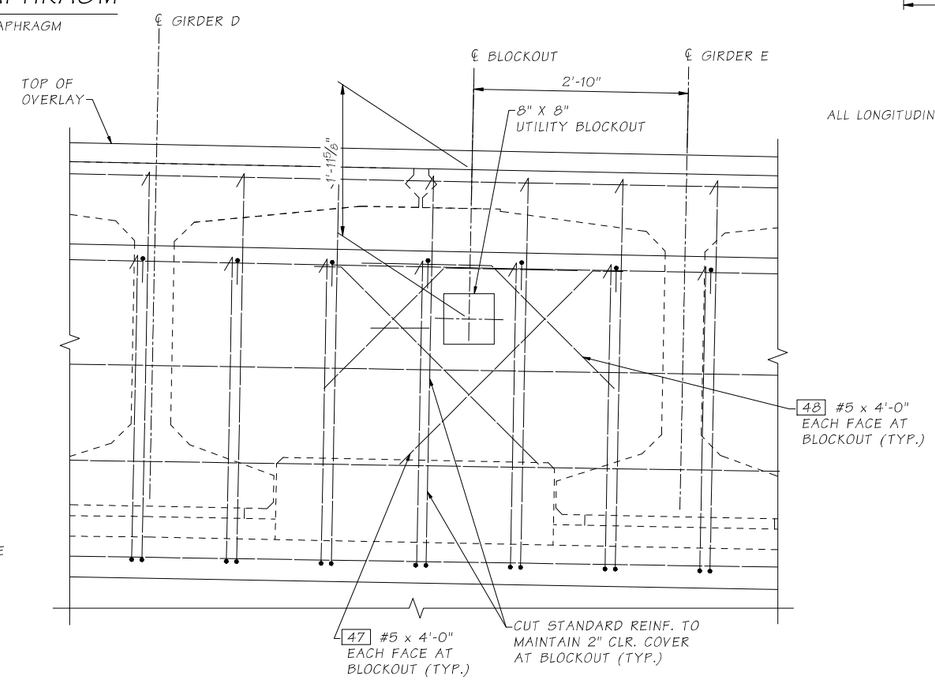

UTILITY BLOCKOUT DETAIL

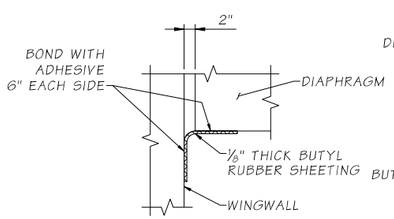

SECTION B

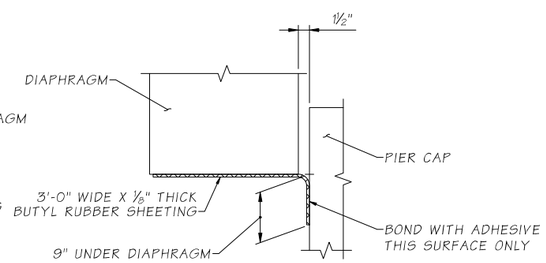

SECTION C

DIAPHRAGM NOTES:

1. GIRDERS SHALL BE HELD RIGIDLY IN PLACE WHEN DIAPHRAGMS ARE PLACED.
2. CUT/RELEASE GIRDER TEMPORARY STRANDS BEFORE CASTING DIAPHRAGM. SEE TEMPORARY STRAND CUTTING SEQUENCE.
3. EXTENDED STRANDS AND GIRDER REINFORCING NOT SHOWN FOR CLARITY.

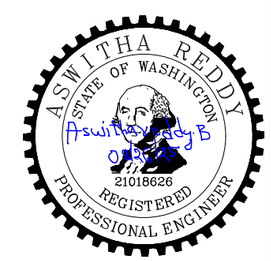

O:\WA-LACE-EX\Projects\Walla Walla, County\2313 - Wallula Road Bridge - Sub to DEA\02-CADD\Sheets\WALL00PW0001_BR_END DIAPHRAGM DETAILS.dwg				
DRAWN: MH				
DESIGNER: AR				
CHECKED: HC				
PROJ. ENG.: JDWA				
APPROVED BY:				
7/29/2025	REV DATE	REVISION	BY	APP'D

REGION NO.	STATE	FEDERAL AID PROJECT NO.
10	WASH	BRS-L360(001)
JOB NUMBER		TA-7561
22-03		

exeltech
8729 Commerce Pl. Dr. NE
Lacey, WA 98516
(360) 357-8289
www.xltech.com

Walla Walla County

PUBLIC WORKS DEPARTMENT

8/25/2025
PLOT DATE

WALLULA AVENUE BRIDGE

END DIAPHRAGM DETAILS

SHEET 27
27 OF 47

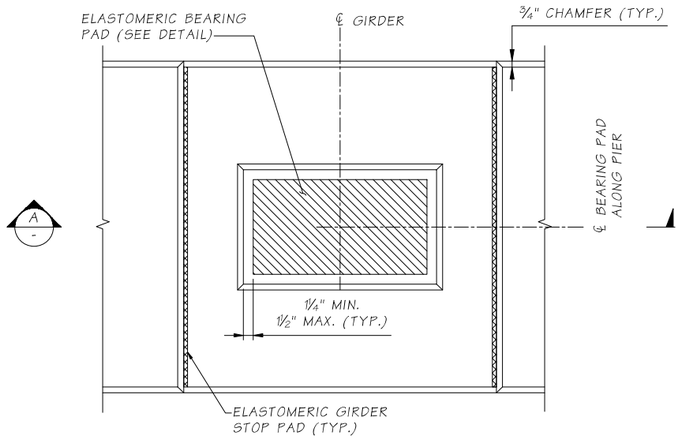

GROUT PAD DETAIL

GIRDER NOT SHOWN FOR CLARITY

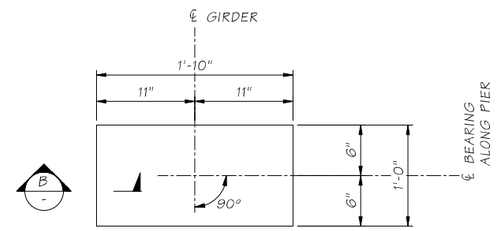

ELASTOMERIC BEARING PAD

LAMINATED ELASTOMERIC BEARING PAD (4 SHIMS).

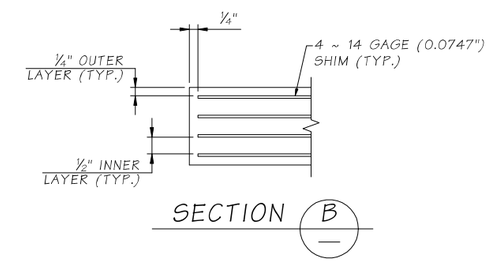

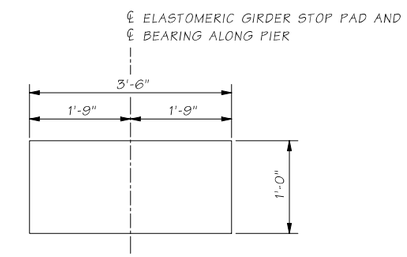

ELASTOMERIC GIRDER STOP PAD

SHEAR MODULUS = 165 PSI

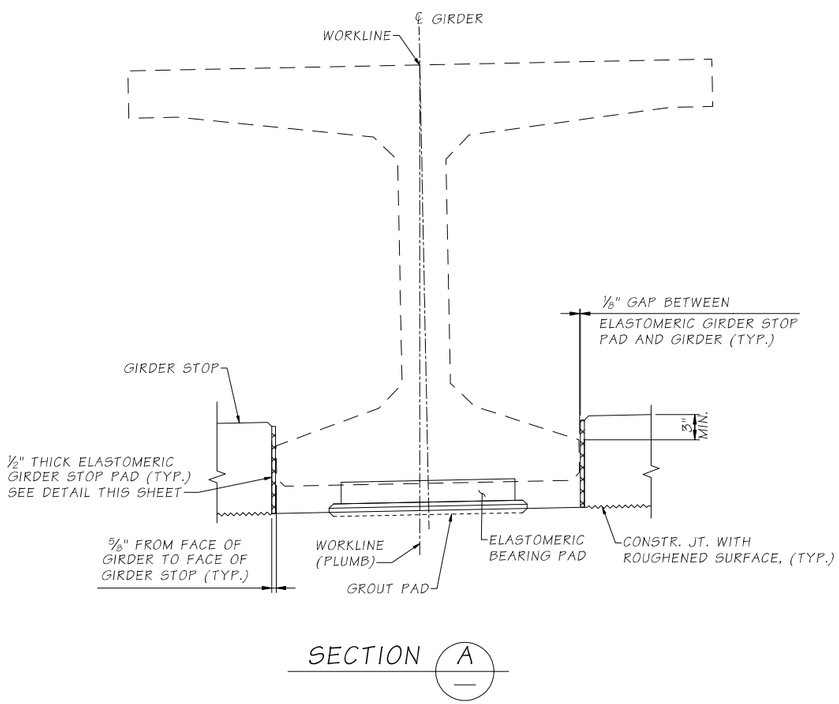

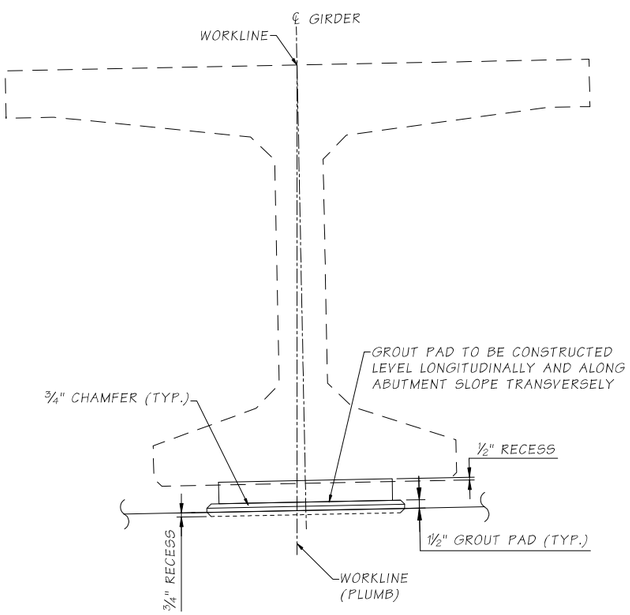

GROUT PAD ELEVATION

BEARING DESIGN TABLE AASHTO METHOD B DESIGN	
SERVICE - I LIMIT STATE	
DEAD LOAD (DL) REACTION	146 KIPS
LIVE LOAD REACTION (W/O IMPACT)	42 KIPS
UNLOADED HEIGHT	2.30 IN
LOADED HEIGHT (DL)	2.28 IN
SHEAR MODULUS	165 PSI

NOTES:

1. GIRDER STOPS SHALL BE CONSTRUCTED AFTER GIRDER PLACEMENT.
2. THE ELASTOMERIC GIRDER STOP PADS SHALL BE BONDED TO THE GIRDER STOPS WITH AN APPROVED ADHESIVE.

Q:\WA-LACE-EX\Projects\Walla Walla, County\2313 - Wallula Road Bridge - Sub to DEA\02-CADD\Sheets\WALL00PW0001_BR_GIRDER BEARING DETAILS.dwg

DRAWN: MH				
DESIGNER: AR				
CHECKED: HC				
PROJ. ENG.: JDWA				
APPROVED BY:				
8/21/2025	REV DATE	REVISION	BY	APP'D

REGION NO.	STATE	FEDERAL AID PROJECT NO.
10	WASH	BRS-L360(001)
JOB NUMBER		TA-7561
22-03		

exeltech
8729 Commerce Pl. Dr. NE
Lacey, WA 98516
(360) 357-8289
www.xltech.com

Walla Walla County

PUBLIC WORKS DEPARTMENT

8/25/2025
PLOT DATE

WALLULA AVENUE BRIDGE

GIRDER BEARING DETAILS

SHEET 28
28 OF 47

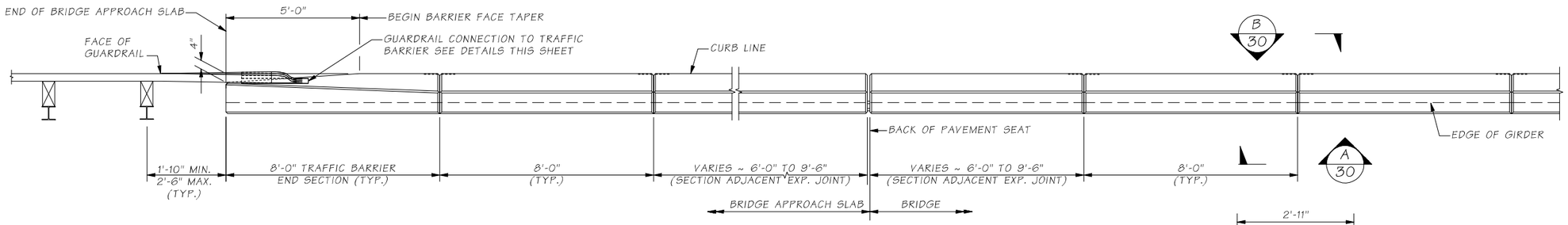

PLAN
TRAFFIC BARRIER
1

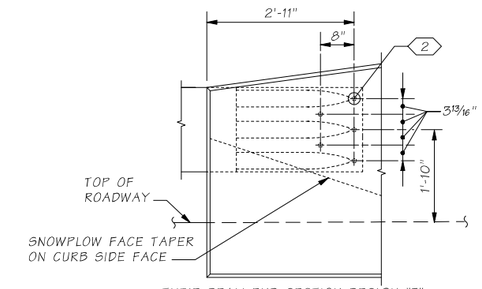

THRIE BEAM END SECTION DESIGN "F"
(SEE STD. PLAN C-7a)

OUTSIDE ELEVATION
TRAFFIC BARRIER - GUARDRAIL CONNECTION
(WHERE SHOWN ON LAYOUT)

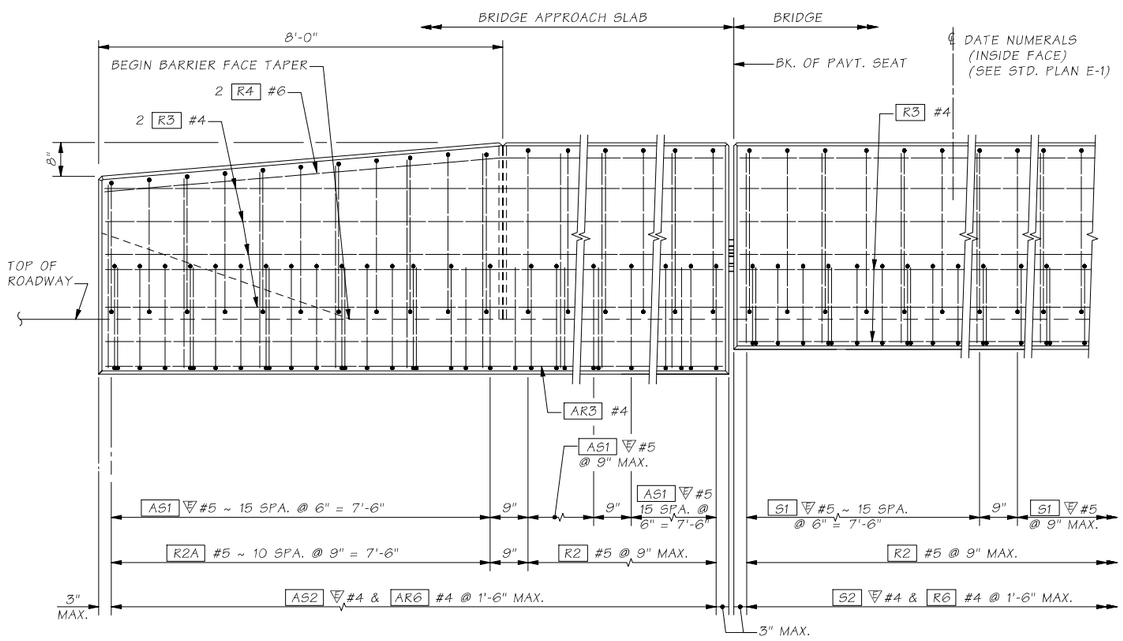

OUTSIDE ELEVATION
END OF TRAFFIC BARRIER
SHOWN WITH BRIDGE APPROACH SLAB

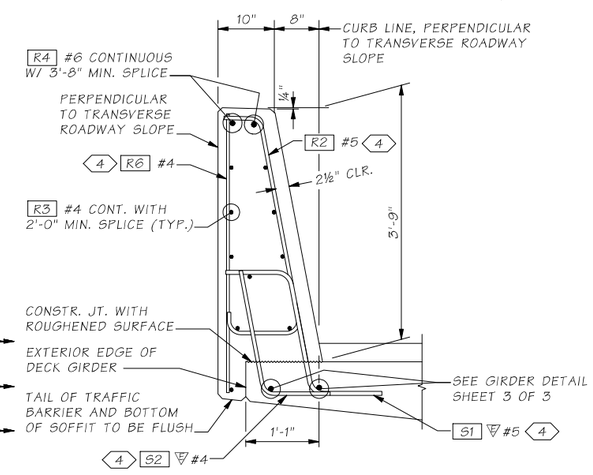

TYPICAL SECTION
TRAFFIC BARRIER
SHOWN ON BRIDGE

NOTES:

1. BARRIER CONTINUOUS BETWEEN BRIDGE DECK EXPANSION JOINTS. CONSTRUCTION JOINTS WITH SHEAR KEYS ARE PERMISSIBLE AT DUMMY JOINT LOCATIONS. FORM JOINTS BETWEEN DUMMY JOINTS SHALL NOT BE PERMITTED.
2. ⅞"ø ROCKET/KOHLER F-50, LANCASTER MALLEABLE, OR DAYTON/RICHMOND F-62 FLARED THIN SLAB FERRULE INSERTS OR APPROVED EQUAL (TYP.). RESIN-BONDED ANCHORS MAY BE SUBSTITUTED.
3. TRAFFIC BARRIER IS DESIGNED FOR TEST LEVEL (TL-4).
4. SEE BENDING DIAGRAM ON SHEET 30.

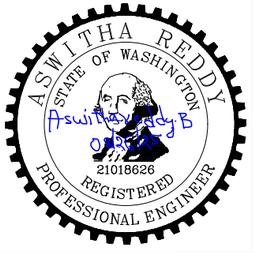

Q:\WA-LACE-EX\Projects\Walla Walla, County\2313 - Wallula Road Bridge - Sub to DEA\02-CADD\Sheets\WALL00PW0001_BR_BARRIER.RAILING.DETAILS.dwg

DRAWN: MH				
DESIGNER: AR				
CHECKED: HC				
PROJ. ENG.: JDWA				
APPROVED BY:				
8/21/2025	REV DATE	REVISION	BY	APP'D

REGION NO.	STATE	FEDERAL AID PROJECT NO.
10	WASH	
JOB NUMBER		BRS-L360(001)
22-03		TA-7561

exeltech
8729 Commerce Pl. Dr. NE
Lacey, WA 98516
(360) 357-8289
www.xltech.com

Walla Walla County
PUBLIC WORKS DEPARTMENT
8/25/2025
PLOT DATE

WALLULA AVENUE BRIDGE
TRAFFIC BARRIER - SINGLE SLOPE 42"
DETAILS 1 OF 2

SHEET 29
29 OF 47

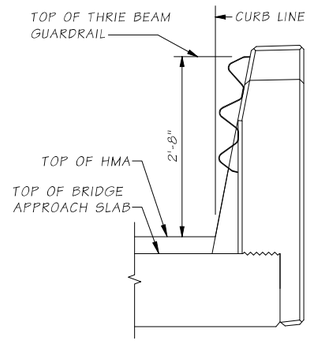

END VIEW

THRIE BEAM SHOWN WITH "D" CONNECTION (SEE STD. PLAN C-7a)

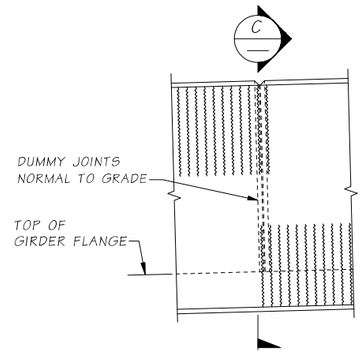

VIEW A / 29

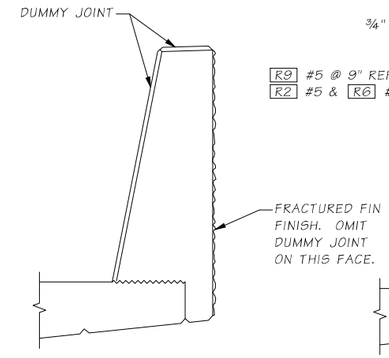

SECTION C / —

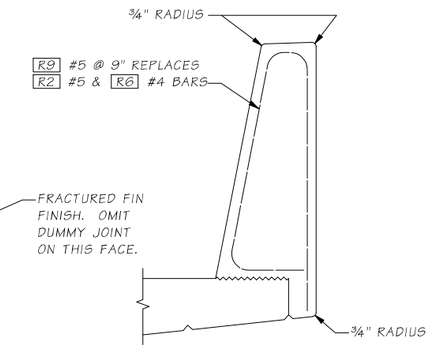

SLIPFORM ALTERNATE

SEE "TYPICAL SECTION - TRAFFIC BARRIER", ON SHEET 29, FOR ADDITIONAL DETAILS.

THE CONTRACTOR IS ADVISED THAT THE SLIPFORM CONSTRUCTION METHOD IS A PATENTED PROPRIETARY PROCESS FOR BARRIERS WITH A FRACTURED FIN FINISH.

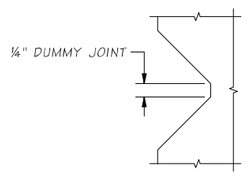

DUMMY JOINT DETAIL

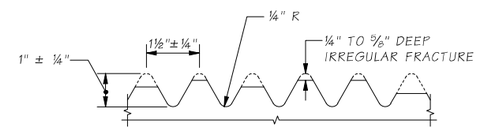

FRACTURED FIN FINISH

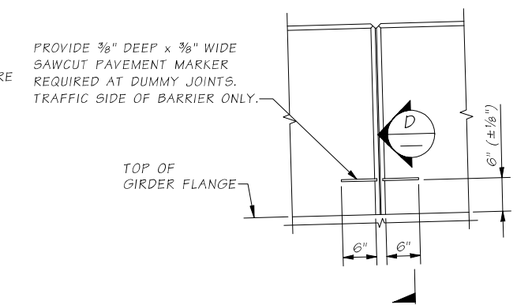

VIEW B / 29

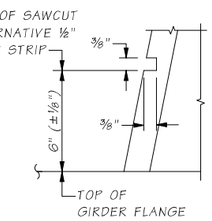

SECTION D / —
PAVEMENT MARKER

BENDING DIAGRAM

ALL DIMENSIONS ARE OUT TO OUT.

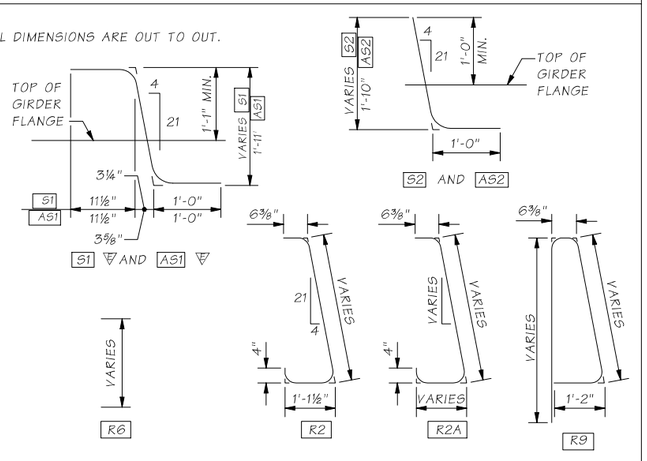

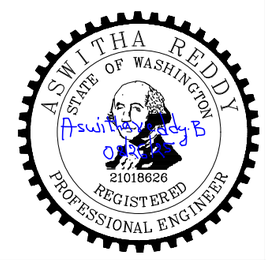

Q:\WA-LACE-EX\Projects\Walla Walla, County\2313 - Wallula Road Bridge - Sub to DEA\02-CADD\Sheets\WALL00PW0001_BR_BARRIER RAILING DETAILS.dwg				
DRAWN: MH				
DESIGNER: AR				
CHECKED: HC				
PROJ. ENG.: JDWA				
APPROVED BY:				
8/21/2025	REV DATE	REVISION	BY	APP'D

REGION NO.	STATE	FEDERAL AID PROJECT NO.
10	WASH	BRS-L360(001)
JOB NUMBER 22-03		TA-7561

exeltech
8729 Commerce Pl. Dr. NE
Lacey, WA 98516
(360) 357-8289
www.xltech.com

Walla Walla County
PUBLIC WORKS DEPARTMENT
8/25/2025
PLOT DATE

WALLULA AVENUE BRIDGE

TRAFFIC BARRIER - SINGLE SLOPE 42" DETAILS 2 OF 2

SHEET 30
30 OF 47

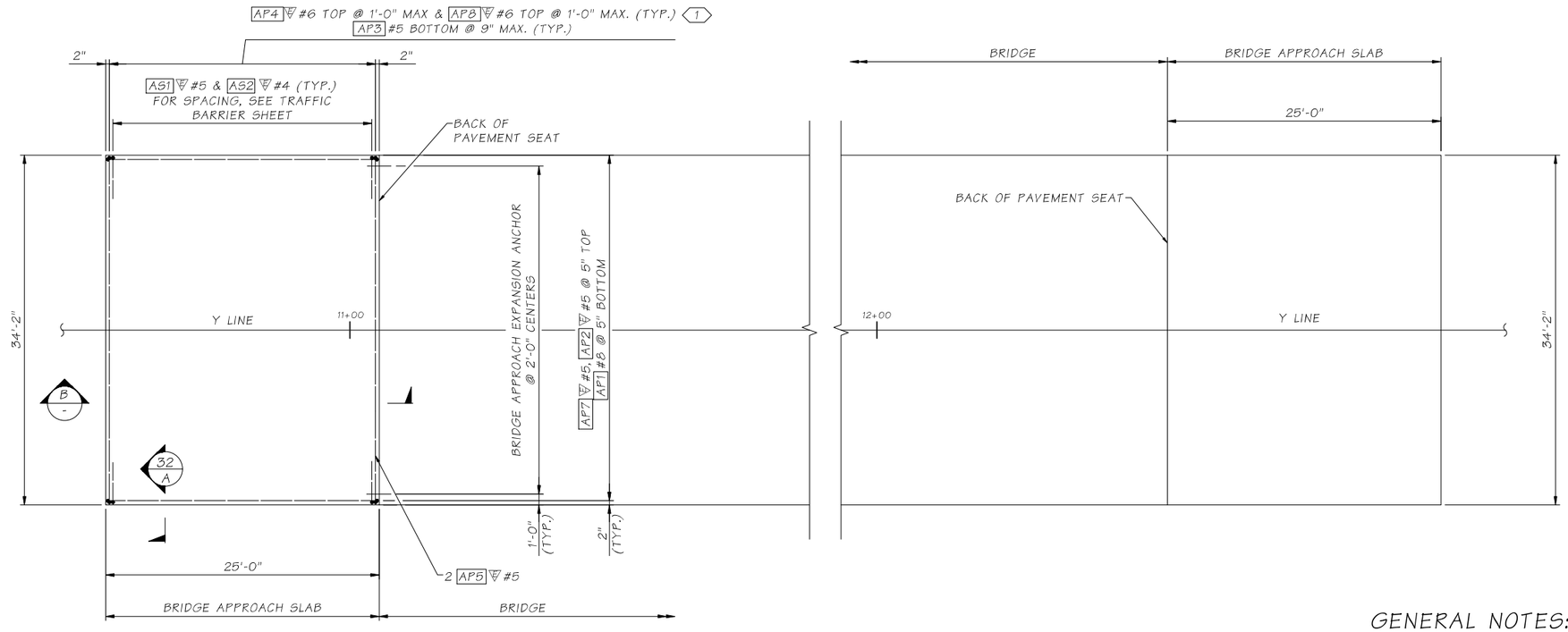

PLAN

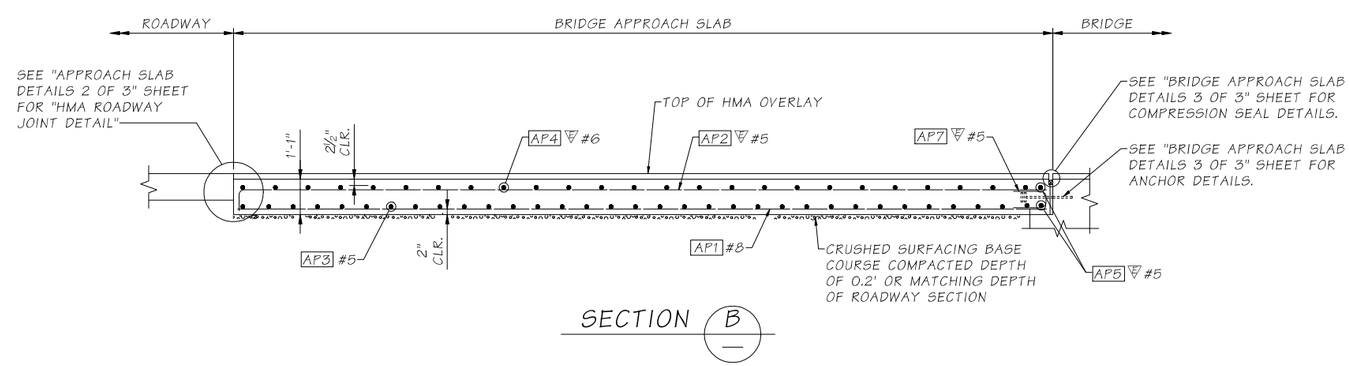

SECTION B

BENDING DIAGRAM

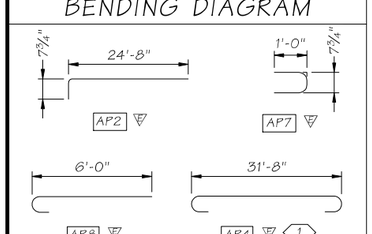

= EPOXY COATED REINFORCING STEEL

NOTE: ALL DIMENSIONS ARE OUT TO OUT

GENERAL NOTES:

1. ALL EDGES OF BRIDGE APPROACH SLAB SHALL HAVE ½" RADIUS EXCEPT AT LONGITUDINAL JOINTS AND ADJACENT TO L-TYPE ABUTMENTS.
2. THE MINIMUM LAP SPLICE OF #5 IS 2'-0", #5 IS 2'-6", #6 IS 3'-0", AND #8 IS 3'-3". ALL LAP SPLICES SHALL BE STAGGERED SO THAT NO MORE THAN 50% OF REBAR IS SPLICED AT THE SAME LOCATION. LAP SPLICES SHALL BE LOCATED WITHIN THE MIDDLE HALF OF THE BRIDGE APPROACH SLAB. OPTIONAL SPLICES ARE ALLOWED FOR AP4 #6.
3. FOR TRAFFIC BARRIER DETAILS, INCLUDING ANY BRIDGE APPROACH SLAB BLOCKOUT INFORMATION, SEE TRAFFIC BARRIER SHEETS.

NOTES:

1 AP4 HOOKS ARE ONLY REQUIRED AT THE TRAFFIC BARRIER EDGE.

ASWITHA REDDY
STATE OF WASHINGTON
21018626
REGISTERED
PROFESSIONAL ENGINEER
Aswitha Reddy B
08/25/25

Q:\WA-LACE-EX\Projects\Walla Walla, County\2313 - Wallula Road Bridge - Sub to DEA\02-CADD\Sheets\WALL00PW0001_BR_APPROACH SLAB DETAILS.dwg				
DRAWN: MH				
DESIGNER: AR				
CHECKED: HC				
PROJ. ENG.: JDWA				
APPROVED BY:				
8/25/2025	REV DATE	REVISION	BY	APP'D

REGION NO.	STATE	FEDERAL AID PROJECT NO.
10	WASH	BRS-L360(001)
JOB NUMBER		TA-7561
22-03		

exeltech
8729 Commerce Pl. Dr. NE
Lacey, WA 98516
(360) 357-8289
www.xltech.com

Walla Walla County
PUBLIC WORKS DEPARTMENT
8/25/2025
PLOT DATE

WALLULA AVENUE BRIDGE

APPROACH SLAB DETAILS 1 OF 3

SHEET 31
31 OF 47

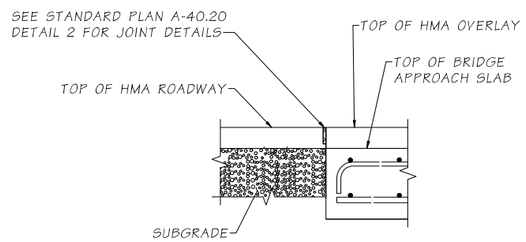

HMA ROADWAY JOINT DETAIL

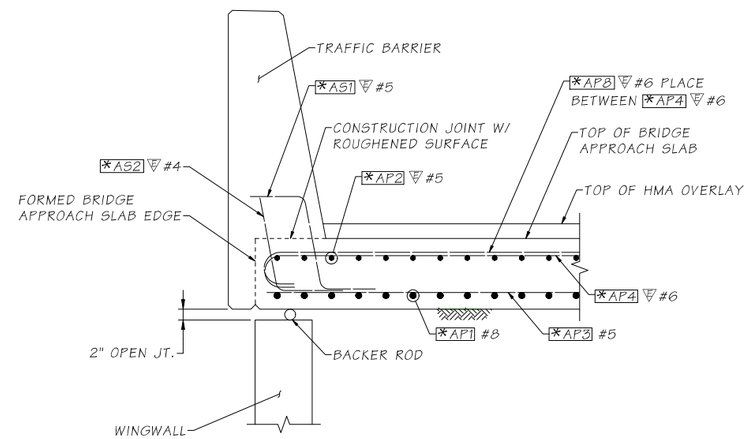

SECTION A/31

*SEE SHEET 36 FOR BENDING DIAGRAM

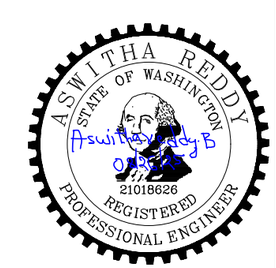

Q:\WA-LACE-EX\Projects\Walla Walla, County\2313 - Wallula Road Bridge - Sub to DEA\02-CADD\Sheets\WALL00PW0001_BR_APPROACH SLAB DETAILS.dwg				
DRAWN: MH				
DESIGNER: AR				
CHECKED: HC				
PROJ. ENG.: JDWA				
APPROVED BY:				
8/25/2025	REV DATE	REVISION	BY	APP'D

REGION NO.	STATE	FEDERAL AID PROJECT NO.
10	WASH	
JOB NUMBER		BRS-L360(001)
22-03		TA-7561

exeltech
8729 Commerce Pl. Dr. NE
Lacey, WA 98516
(360) 357-8289
www.xltech.com

Walla Walla County
PUBLIC WORKS DEPARTMENT
8/25/2025
PLOT DATE

WALLULA AVENUE BRIDGE

APPROACH SLAB DETAILS 2 OF 3

SHEET 32
32 OF 47

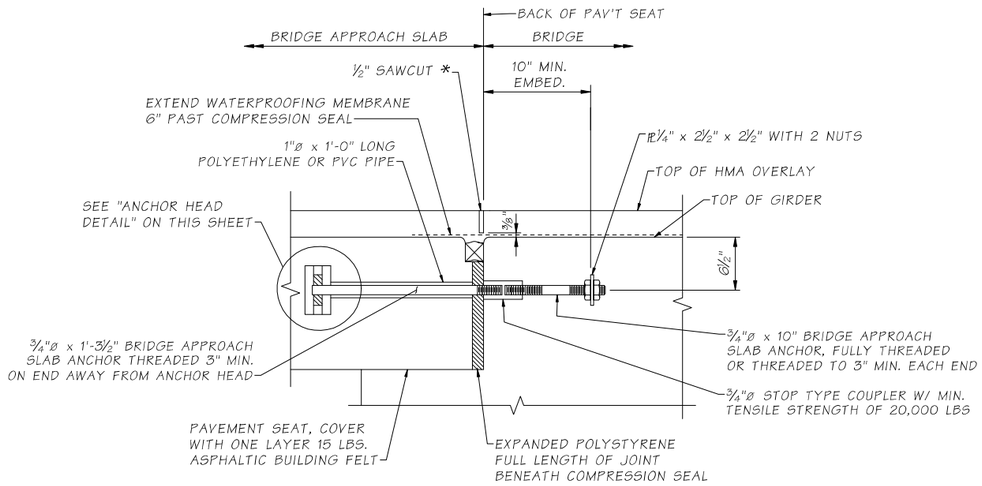

APPROACH EXPANSION ANCHOR - METHOD A

* SAWCUT SHALL CONFORM TO STD. SPEC. SECTION 5-05.3(8) AND SEALED IN ACCORDANCE WITH STD. SPEC. SECTION 5-05.3(8) SAWCUT SHALL BE FULL WIDTH FROM CURB TO CURB ALONG BACK OF PAV'T SEAT.

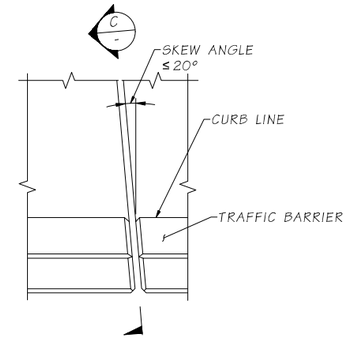

PLAN
EXPANSION JOINT

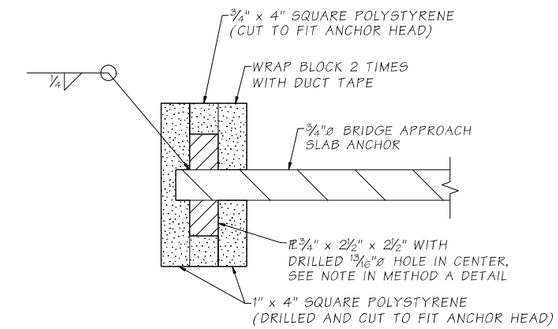

ANCHOR HEAD DETAIL

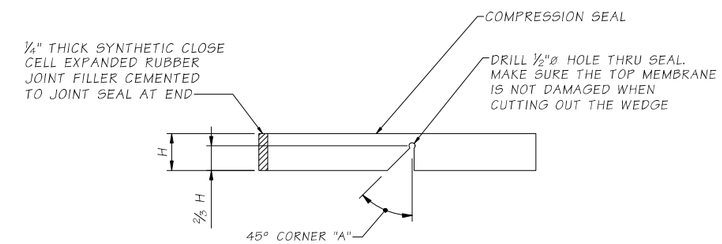

SEAL CUTTING DETAIL

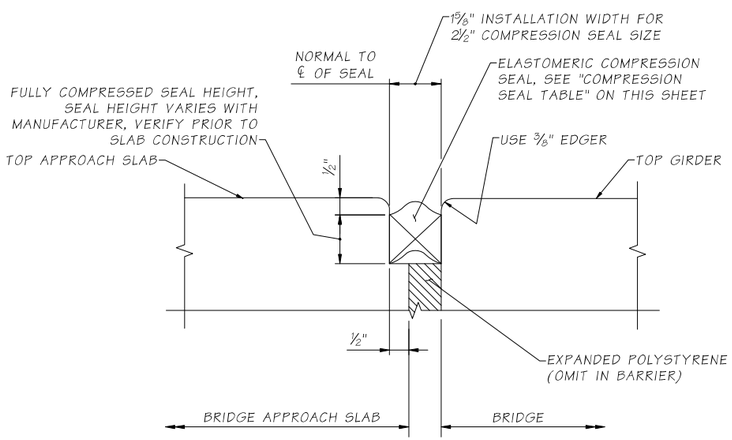

COMPRESSION SEAL DETAIL

EXPANSION JOINT AT BACK OF PAVEMENT SEAT
HMA OVERLAY AND WATERPROOF MEMBRANE NOT SHOWN

COMPRESSION SEAL TABLE

D.S. BROWN		WATSON BOWMAN ACME	
SEAL	WIDTH	SEAL	WIDTH
CV-2502	2⅛	WA-250	2⅛

TESTING SHALL BE PER ASTM D 2628 PRIOR TO USE.

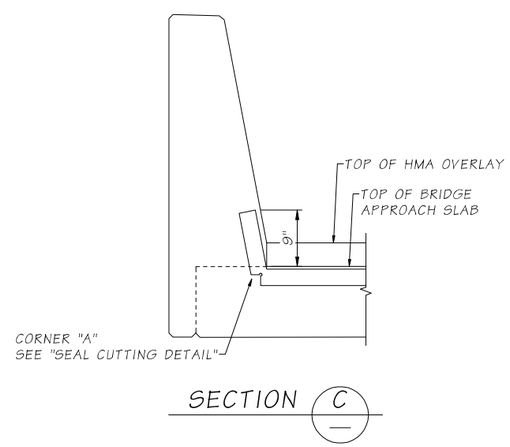

SECTION C

GENERAL NOTES:

1. ALL METAL PARTS OF THE APPROACH EXPANSION ANCHOR SHALL RECEIVE ONE COAT OF PAINT CONFORMING TO STANDARD SPECIFICATION SECTION 9-08.1(2)F OR BE GALVANIZED IN ACCORDANCE WITH AASHTO M 232.
2. BRIDGE APPROACH SLAB ANCHORS SHALL BE INSTALLED PARALLEL TO ROADWAY AND TO EACH OTHER.

ASWITHA REDDY
STATE OF WASHINGTON
21018626
REGISTERED
PROFESSIONAL ENGINEER
Aswitha Reddy B
08/25/25

Q:\WA-LACE-EX\Projects\Walla Walla, County\2313 - Wallula Road Bridge - Sub to DEA\02-CADD\Sheets\WALL00PW0001_BR_APPROACH SLAB DETAILS.dwg				
DRAWN: MH				
DESIGNER: AR				
CHECKED: HC				
PROJ. ENG.: JDWA				
APPROVED BY:				
8/25/2025	REV DATE	REVISION	BY	APP'D

REGION NO.	STATE	FEDERAL AID PROJECT NO.
10	WASH	BRS-L360(001)
JOB NUMBER		TA-7561
22-03		

exeltech
8729 Commerce Pl. Dr. NE Lacey, WA 98516
(360) 357-8289 www.xltech.com

Walla Walla County
PUBLIC WORKS DEPARTMENT
8/25/2025
PLOT DATE

WALLULA AVENUE BRIDGE

APPROACH SLAB DETAILS 3 OF 3

SHEET 33
33 OF 47

GENERAL NOTES:

1. ALL MATERIALS SHALL BE GALVANIZED AFTER FABRICATION PER AASHTO M 111 OR AASHTO M 232, SEE SPECIAL PROVISIONS

NOTES:

1. L 3½" x 3½" x ⅜" WITH 2 - ⅞"ø HOLES FOR ¾"ø HANGER RODS AT EVERY OTHER VERTICAL SUPPORT, NEAR PIERS, AND AT EXPANSION JOINTS
2. ¾"ø GALV. HANGER RODS WITH 8 HEX HEAD NUTS, STD. WASHERS, AND LOCK WASHERS.
3. COOPER B-LINE B22-I-12, POWERSTRUT PS 349 OR UNISTRUT P3253, WITH SPRING NUT (TYP.). CHASE THREADS ON HANGER ROD FOR THREAD COMPATIBILITY WITH SPRING NUT. INSERT TO BE INSTALLED LEVEL LONGITUDINALLY AND TRANSVERSELY. PLACE INSERT TO PROVIDE FOR TRANSVERSE ADJUSTMENT OF HANGER RODS. HANGER RODS SHALL NOT BE WITHIN 2" OF THE END OF THE INSERT. TWO INSERTS MAY BE USED TO ACCOMMODATE SUPERELEVATION.

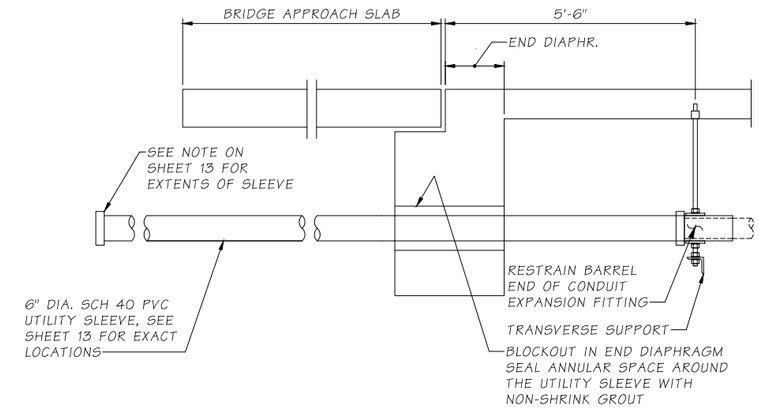

UTILITY SLEEVE PLACEMENT DETAIL

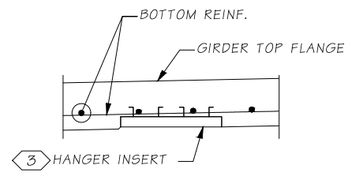

DETAIL 2

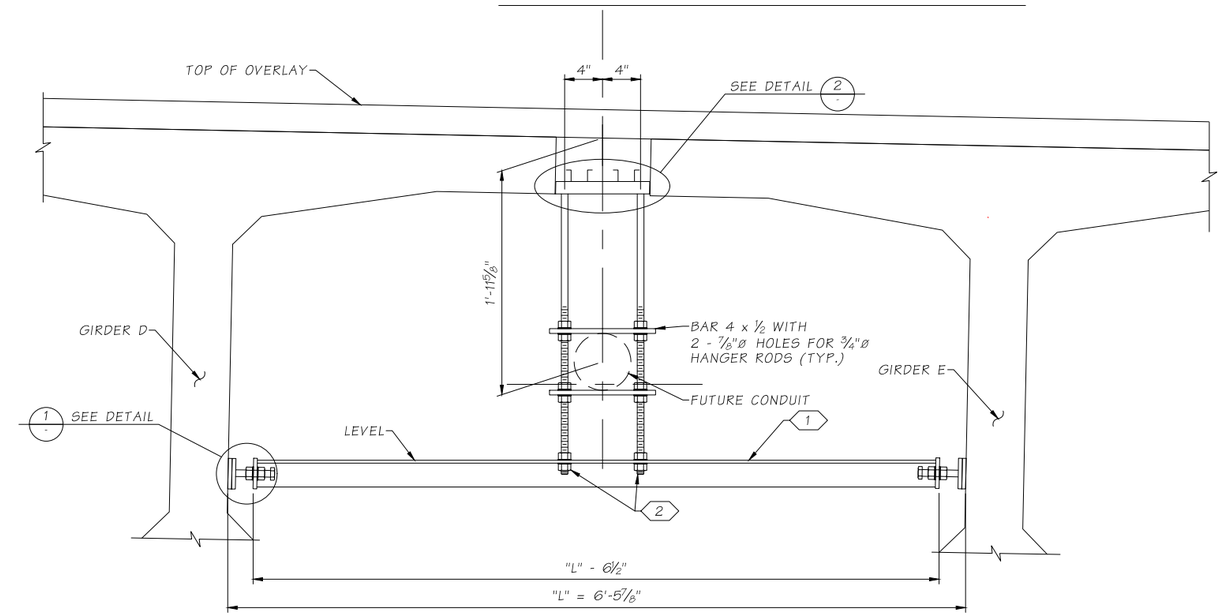

HANGER UTILITY SUPPORT

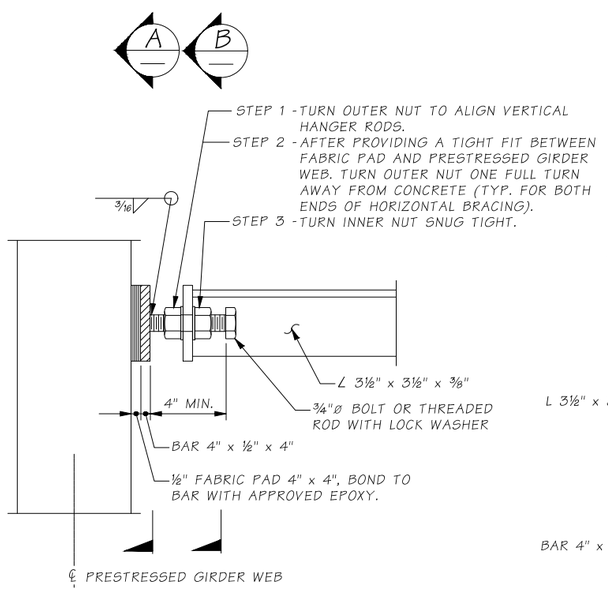

DETAIL 1

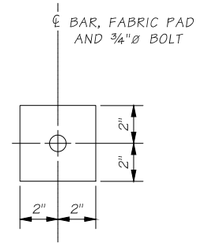

SECTION A

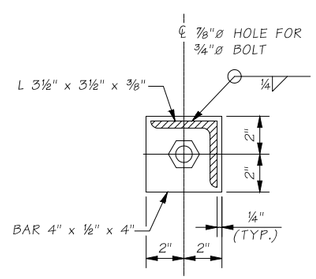

SECTION B

P:\WWALL00PW0001\0400CAD\SHEETS\EB\WALL00PW0001_BR_HANGERDETAILS.dwg				
DRAWN: DRFO				
DESIGNER: JXLE				
CHECKED: EJF				
PROJ. ENG.: JDWA				
APPROVED BY:				
8/20/2025	REV DATE	REVISION	BY	APP'D

REGION NO.	STATE	FEDERAL AID PROJECT NO.
10	WASH	BRS-L360(001) TA-7561
JOB NUMBER		
22-03		

DAVID EVANS AND ASSOCIATES INC.
908 N Howard St. Ste 500
Spokane, WA 99201
Phone: 509.327.8697

Walla Walla County

PUBLIC WORKS DEPARTMENT

8/20/2025
PLOT DATE

COUNTY OF WALLA WALLA

WALLULA AVENUE BRIDGE

UTILITY DETAILS

SHEET 34
34 OF 47

S = BAR IS INCLUDED IN SUBSTRUCTURE QUANTITIES
L = LUMP SUM QUANTITY
T S OR E = TIE, STIRRUP OR EARTHQUAKE
E = BAR IS TO BE EPOXY COATED.
V = BAR DIMENSIONS VARY BETWEEN DIMENSIONS SHOWN ON THIS LINE AND THE FOLLOWING LINE.

MARK NO.	LOCATION	SIZE	NO. REQUIRED	BEND TYPE	T, S or E	LUMP SUM	SUBSTR.	EPOXY COAT	VARIES	NO. EACH	DIMENSIONS (Out to Out) U FT.	U IN.	W FT.	W IN.	X FT.	X IN.	Y FT.	Y IN.	Z FT.	Z IN.	Q_1 DEG.	Q_2 DEG.	LENGTH FT.	LENGTH IN.	WEIGHT LBS.
	PIER 1 - PILE CAP																								
A1	BOTTOM LONGITUDINAL	8	4	50			S				33	10											135	4	362
A2	LONGITUDINAL (BOTH FACES)	5	20	50			S				33	10											676	8	706
A3	TOP LONGITUDINAL	8	5	50			S				33	10											169	2	452
A4	TIES	4	188	58	T		S				3	3											611	0	409
A5	VERTICAL BOTTOM	5	32	74	T		S				3	3	4	10	4	10							413	4	432
A5A	VERTICAL BOTTOM (PARTIAL)	5	14	74	T		S				0	8	4	10									77	0	81
A5	VERTICAL TOP	5	39	74	T		S		V		3	3	4	10	4	10							520	0	543
											3	3	5	3	5	3									
A6	HOOK WINGWALL	8	20	54			S				8	0											160	0	428
	PIER 2 - PILE CAP																								
A1	BOTTOM LONGITUDINAL	8	4	50			S				33	10											135	4	362
A2	LONGITUDINAL (BOTH FACES)	5	14	50			S				33	10											473	8	495
A3	TOP LONGITUDINAL	8	5	50			S				33	10											169	2	452
A4	TIES	4	130	58	T		S				3	3											422	6	283
A5	VERTICAL BOTTOM	5	32	74	T		S				3	3	3	9	3	9							344	0	359
A5A	VERTICAL BOTTOM (PARTIAL)	5	14	74	T		S				0	8	3	9									61	10	65
A5	VERTICAL TOP	5	39	74	T		S		V		3	3	3	9	3	9							433	11	453
											3	2	4	2	4	2									
A6	HOOK WINGWALL	8	14	54			S				8	0											112	0	300
	PIER 1 - GIRDER STOPS																								
B1	INTERIOR HORIZONTAL	5	20	50			S				3	7											70	8	74
B2	INTERIOR VERTICAL	5	20	74	T		S				3	2	2	5	2	5							160	0	167
B3	EXTERIOR HORIZONTAL	5	10	74			S				1	5	0	10									22	6	24
B4	EXTERIOR VERTICAL	6	2	74	T		S				3	2	2	5	2	5							16	0	25
	PIER 2 - GIRDER STOPS																								
B1	INTERIOR HORIZONTAL	5	20	50			S				3	7											70	8	74
B2	INTERIOR VERTICAL	5	20	74	T		S				3	2	2	5	2	5							160	0	167
B3	EXTERIOR HORIZONTAL	5	10	74			S				1	5	0	10									22	6	24
B4	EXTERIOR VERTICAL	6	2	74	T		S				3	2	2	5	2	5							16	0	25
	PIER 1 - WINGWALLS																								
W1	HORIZONTALS (F.F)	8	34	50			S				16	8											566	8	1,513
W2	HORIZONTALS (N.F)	5	34	50			S				16	8											566	8	592
W3	VERTICALS (E.F.)	5	88	50			S				11	7											1019	4	1,064
W4	VERTICALS FILLET	5	10	50			S				6	7											65	10	69
A8	HORIZONTAL FILLETS	8	22	80			S				11	0	1	4			0	4			108		278	8	745
	PIER 2 - WINGWALLS																								
W1	HORIZONTALS (F.F)	8	26	50			S				16	8											433	4	1,157
W2	HORIZONTALS (N.F)	5	26	50			S				16	8											433	4	452
W3	VERTICALS (E.F.)	5	88	50			S				9	0											792	0	827
W4	VERTICALS FILLET	5	10	50			S				4	5											44	2	47
A8	HORIZONTAL FILLETS	8	18	80			S				11	0	1	4			0	4			108		228	0	609
	END DIAPHRAGM																								
41	BOTTOM HORIZONTAL	6	4	50							31	6											126	0	190
42	TYPICAL HORIZONTAL	4	16	50							31	6											504	0	337
43	LONG STIRRUP	4	96	58	T						4	7											440	0	294
44	SHORT STIRRUP	4	48	76	T						3	6	1	7.5	1	7.5							324	0	217
45	TOP TIE	4	48	58	T						1	7.5											78	0	53
46	TOP HORIZONTAL	6	4	50				E			31	6											126	0	189
47	BLOCKOUT - BOTTOM	5	8	80	T						3	8	0	4			0	1.5			135		33	0	35
48	BLOCKOUT - TOP	5	8	80	T						2	4	1	8			0	1.5			135		33	0	35
	INTERMEDIATE DIAPHRAGM																								
51	BOTTOM HORIZONTAL	7	4	50							26	3											105	0	215
52	TYPICAL HORIZONTAL	4	48	50							6	0											288	0	193
53	TOP HORIZONTAL	7	2	50							26	3											52	6	108
54	STIRRUP	4	56	61	T						0	6	2	3	2	3	0	4	0	4			317	4	212
55	BLOCKOUT	5	16	80	T						2	0	1	0	1	0	0	1.5	0	2	135	135	68	0	71

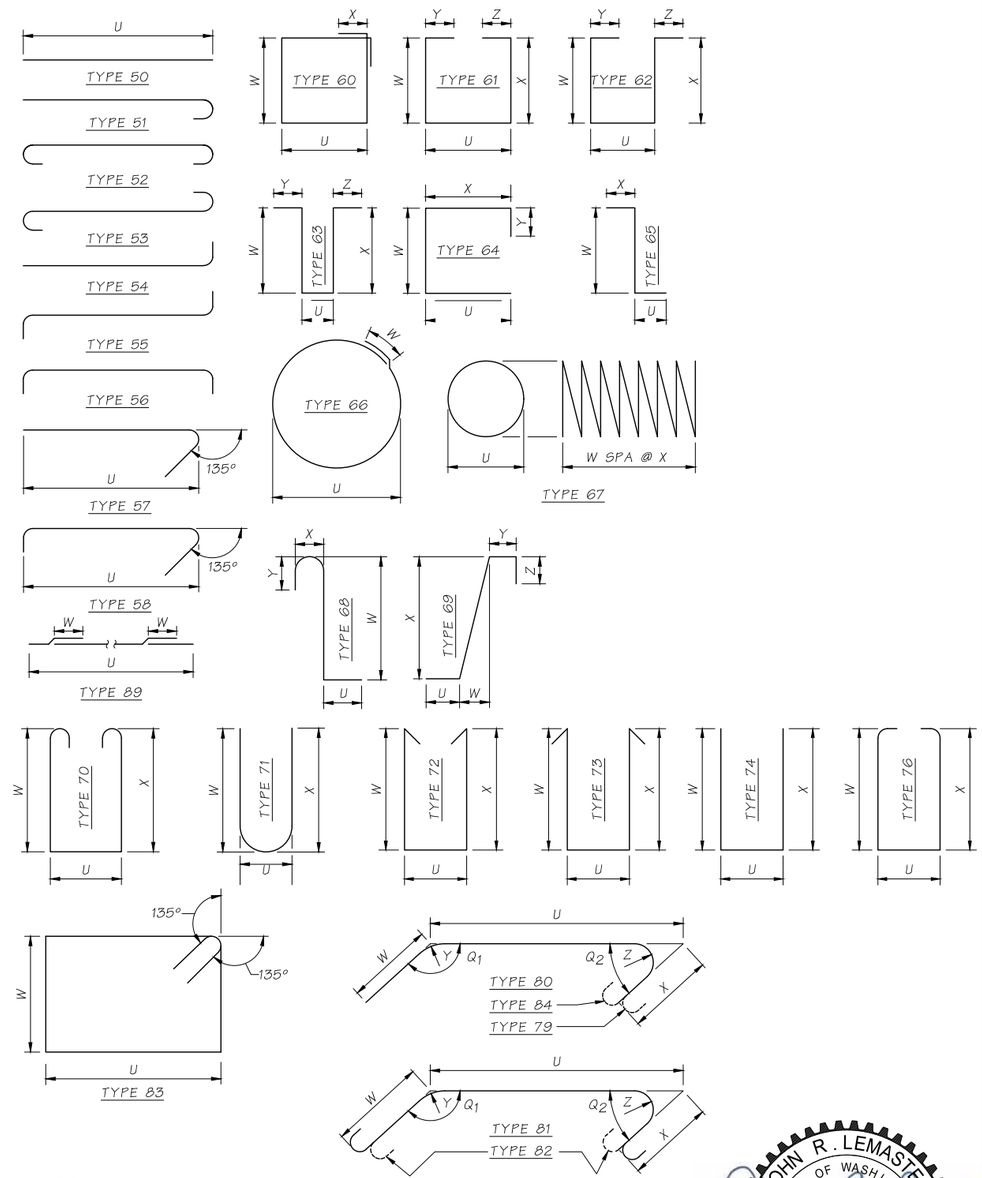

NOTES:

1. ALL REINFORCING BARS ON THIS SHEET SHALL BE ASTM A706 UNLESS SHOWN OTHERWISE.
2. NUMBER AND LENGTH OF BARS TO BE DETERMINED BY THE CONTRACTOR FROM PLANS.
3. THE PURPOSE OF THIS BAR LIST IS TO ASSIST IN DETERMINING A SUFFICIENTLY APPROPRIATE VALUE FOR WEIGHT OF REINFORCING STEEL FOR BIDDING PURPOSES.

JOHN R. LEMASTER
STATE OF WASHINGTON
35772
REGISTERED
PROFESSIONAL ENGINEER
8/37/2025

P:\W\WALL00PW0001\0400CAD\SHEETS\EB\WALL00PW0001_BR_BC1.dwg

DRAWN: DRFO				
DESIGNER: JXLE				
CHECKED: EJF				
PROJ. ENG.: JDWA				
APPROVED BY:				
8/20/2025	REV DATE	REVISION	BY	APP'D

REGION NO.	STATE	FEDERAL AID PROJECT NO.
10	WASH	BRS-L360(001) TA-7561
JOB NUMBER 22-03		

DAVID EVANS AND ASSOCIATES INC.
908 N Howard St. Ste 300
Spokane, WA 99201
Phone: 509.327.8697

Walla Walla County

PUBLIC WORKS DEPARTMENT

8/20/2025
PLOT DATE

WALLULA AVENUE BRIDGE

BARLIST

SHEET 35
35 OF 47

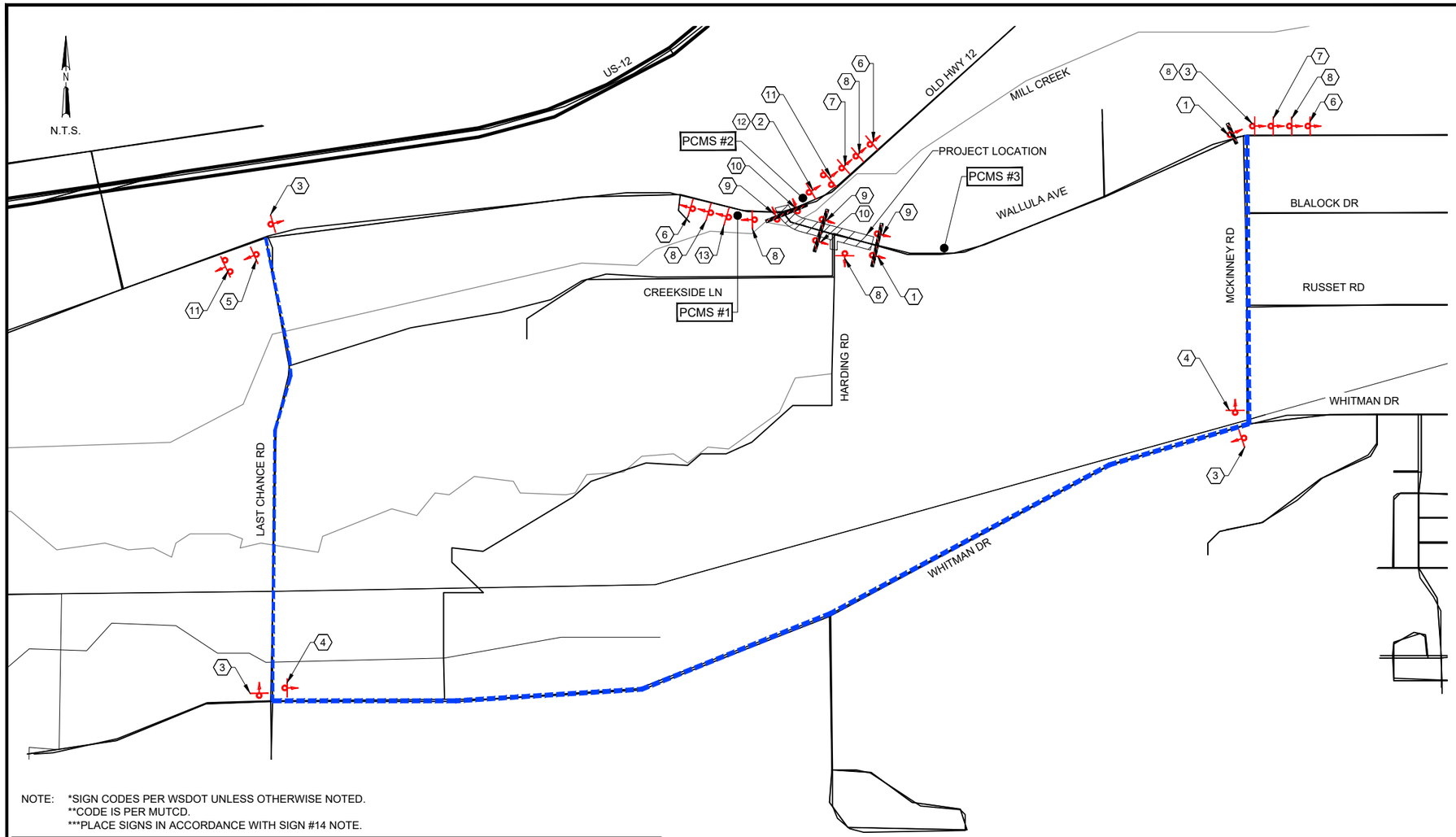

NOTES

1. ALL REGULATORY TRAFFIC CONTROL DEVICES SHALL BE IN COMPLIANCE WITH THE LATEST EDITION OF MUTCD AND ALL TRAFFIC OPERATIONS MUST BE APPROVED.
2. ALL TRAFFIC CONTROL SIGNS AND DEVICES SHALL BE IN NEW OR LIKE NEW CONDITION.
3. ALL TRAFFIC CONTROL SIGNS AND DEVICES SHALL HAVE REFLECTORIZED SHEETING ATTACHED, PAINT WILL NOT BE ALLOWED.
4. TWO FLASHING WARNING LIGHTS SHALL BE USED TO MARK EACH BARRICADE.
5. WHEN ROAD IS OPEN TO TRAFFIC, ROAD CLOSED AHEAD SIGNS SHALL BE COVERED WITH ROAD WORK AHEAD SIGNS.
6. SEE SPECIAL PROVISIONS FOR TYPE III BARRICADE DETAIL.
7. USE WSDOT STANDARD PLAN G-20.10-03 FOR TEMPORARY CONSTRUCTION SIGN PLACEMENT.
8. ONCE BRIDGE REMOVAL IS COMPLETE, TYPE III BARRICADES SHALL BE PLACED ON THE OUTSIDE EDGE OF BOTH ABUTMENTS, SPANNING ACROSS THE EXISTING ROAD. PLACE R11-2a AND R11-2 SIGNS ON BARRICADES, WITH ONE (1) SIGN PER BARRICADE.

PCMS MESSAGE	
PHASE 1	PHASE 2
WALLULA AVE CLOSED	MMM DD TO MMM DD
1.5 SEC	1.5 SEC
USE 1 WEEK PRIOR TO WORK ON PCMS #1, #2 & #3	

LEGEND

- WORK AREA
- DETOUR ROUTE
- SIGN SINGLE POST
- SIGN DOUBLE POST
- TYPE III BARRICADE
- PCMS — PORTABLE CHANGEABLE MESSAGE SIGN

SIGN SPACING = X(1)		
RURAL HIGHWAYS	60 / 65 MPH	800'
RURAL ROADS	45 / 50 MPH	500'
RURAL ROADS & URBAN ARTERIALS	35 / 40 MPH	350'
URBAN ROADS, URBAN ARTERIALS, RESIDENTIAL & BUSINESS DISTRICTS	25 / 30 MPH	200' (2)
URBAN STREETS	25 MPH OR LESS	100' (2)
(1) ALL SPACING MAY BE ADJUSTED TO ACCOMMODATE INTERSECTIONS AND DRIVEWAYS (2) THIS SPACING MAY BE REDUCED IN URBAN AREAS TO FIT ROADWAY CONDITIONS		

NOTE: *SIGN CODES PER WSDOT UNLESS OTHERWISE NOTED.
**CODE IS PER MUTCD.
***PLACE SIGNS IN ACCORDANCE WITH SIGN #14 NOTE.

SIGN SCHEDULE

SIGN #	SIGN CODE*	QUANTITY	SIZE INCHES	AREA SF	COLOR	POST PER SIGN	DESCRIPTION
1	R11-3**	2	60X30	12.5	BLACK / WHITE	1	ROAD CLOSED LOCAL TRAFFIC ONLY
2	M4-9S**	1	48X36	12	BLACK / ORANGE	1	DETOUR / STRAIGHT ARROW
3	M4-10L	4	48X18	6	BLACK / ORANGE / BLACK	1	DETOUR / ARROW LEFT
4	M4-10R	2	48X18	6	BLACK / ORANGE / BLACK	1	DETOUR ARROW RIGHT
5	M4-9R	1	48X36	12	BLACK / ORANGE	1	DETOUR / RIGHT ARROW
6	W20-1	3	36X36	9	BLACK / ORANGE	1	ROAD WORK AHEAD
7	W20-2	2	36X36	9	BLACK / ORANGE	1	DETOUR AHEAD
8	W20-3	6	36X36	9	BLACK / ORANGE	1	ROAD CLOSED AHEAD
9	R11-2(MOD)	3	48X30	10	BLACK / WHITE	1	BRIDGE OUT
10	R11-2	2	48X30	10	BLACK / WHITE	1	ROAD CLOSED
11	CUSTOM	2	60X30	12.5	BLACK / WHITE	2	WALLULA AVE CLOSED USE DETOUR
12	W20-5L	1	36X36	9	BLACK / ORANGE	1	LEFT LANE CLOSED AHEAD
13	W20-5R	1	36X36	9	BLACK / ORANGE	1	RIGHT LANE CLOSED AHEAD
14	W21-1701	***	36X36	9	BLACK / ORANGE	N/A	MOTORCYCLES USE EXTREME CAUTION

1. ROAD CLOSED LOCAL TRAFFIC ONLY — R11-3 (MOD) 60"x30"
2. DETOUR — M4-9S 48"x36"
3. DETOUR — M4-10L 18"x48"
4. DETOUR — M4-10R 18"x48"
5. DETOUR — M4-9R 48"x36"
6. ROAD WORK AHEAD — W20-1 36"x36"
7. DETOUR AHEAD — W20-2 36"x36"
8. ROAD CLOSED AHEAD — W20-3 36"x36"
9. BRIDGE OUT — R11-2(MOD) 48"x30"
10. ROAD CLOSED — R11-2 48"x30"
11. WALLULA AVE CLOSED USE DETOUR — CUSTOM 60"x30" (MOUNT ON 2 POSTS)
12. LEFT LANE CLOSED AHEAD — W20-5L 36"x36"
13. RIGHT LANE CLOSED AHEAD — W20-5L 36"x36"
14. MOTOR-CYCLES USE EXTREME CAUTION — W21-1701 36"x36"

"MOTORCYCLES USE EXTREME CAUTION" SIGNS SHALL BE INSTALLED PRIOR TO ANY LOCATION WHERE LOOSE GRAVEL AND/OR A PLANED SURFACE EXISTS

LEE MICHAEL HENNINGSEN — STATE OF WASHINGTON — 25011733 — 9/10/2025 — REGISTERED PROFESSIONAL ENGINEER

P:\W\WALL00PW0001\0400CAD\SHEETS\WALL00PW0001_Traffic Control.dwg

DRAWN: AWRA				
DESIGNER: LXHE				
CHECKED: HRC				
PROJ. ENG.: HRC				
APPROVED BY:				
9/8/2025	REV DATE	REVISION	BY	APP'D

REGION NO.	STATE	FEDERAL AID PROJECT NO.
10	WASH	BRS-L360(001) TA-7561
JOB NUMBER		
22-03		

DAVID EVANS AND ASSOCIATES INC.
908 N Howard St. Ste 300
Spokane, WA 99201
Phone: 509.327.8897

Walla Walla County

PUBLIC WORKS DEPARTMENT

9/8/2025
PLOT DATE

COUNTY OF WALLA WALLA

WALLULA AVENUE BRIDGE

TEMPORARY TRAFFIC CONTROL I

SHEET 36
36 OF 47

SIGN SPACING = X(1)		
RURAL HIGHWAYS	60 / 65 MPH	800'
RURAL ROADS	45 / 50 MPH	500'
RURAL ROADS & URBAN ARTERIALS	35 / 40 MPH	350'
URBAN ROADS, URBAN ARTERIALS, RESIDENTIAL & BUSINESS DISTRICTS	25 / 30 MPH	200' (2)
URBAN STREETS	25 MPH OR LESS	100' (2)
(1) ALL SPACING MAY BE ADJUSTED TO ACCOMMODATE INTERSECTIONS AND DRIVEWAYS (2) THIS SPACING MAY BE REDUCED IN URBAN AREAS TO FIT ROADWAY CONDITIONS		

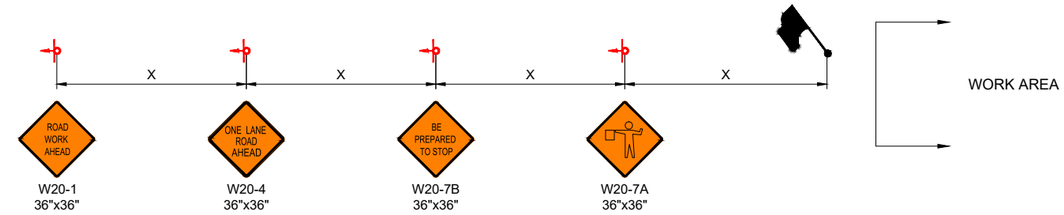

FLAGGING DETAIL

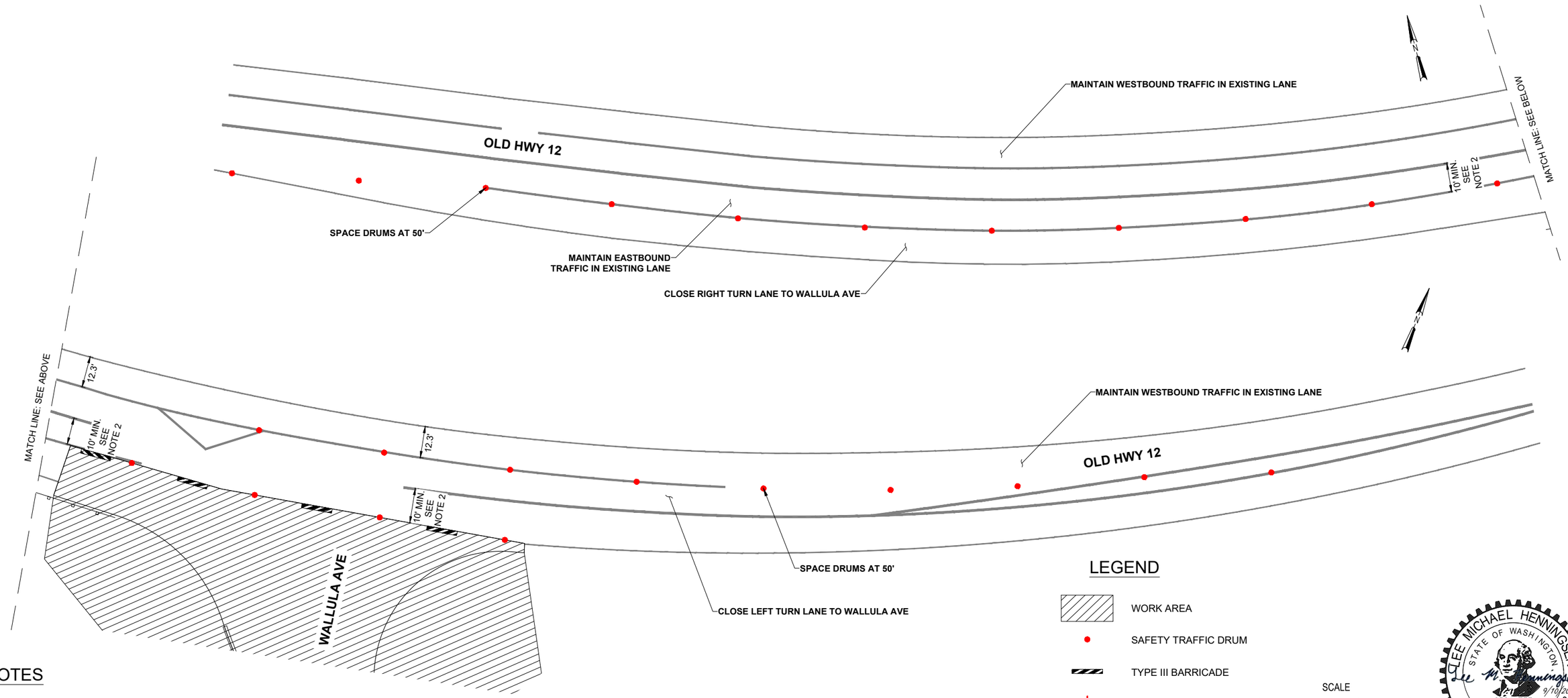

LEGEND

- WORK AREA
- SAFETY TRAFFIC DRUM
- TYPE III BARRICADE
- SIGN
- FLAGGING STATION

SCALE

20 0 10 20 40

(FEET)

LEE MICHAEL HENNINGSEN
STATE OF WASHINGTON
25011733
9/10/2025
REGISTERED PROFESSIONAL ENGINEER

NOTES

1. PLACE DRUMS AND TYPE III BARRICADES ACROSS WALLULA AVE INTERSECTION, LEAVING MIN 10' TRAVEL LANE FOR EASTBOUND TRAFFIC.
2. SHORT TERM LANE CLOSURE REQUIRED WHEN 10' MINIMUM TRAVEL LANE CANNOT BE MET PER FLAGGING DETAIL SHOWN.
3. THE TRAVEL LANE SHALL BE CLEAR OF ALL MATERIALS, EQUIPMENT, AND RESTRICTIONS UNTIL FLAGGERS HAVE STOPPED TRAFFIC, AND BEFORE FLAGGERS RELEASE TRAFFIC.

P:\W\WALL00PW0001\0400CAD\SHEETS\WALL00PW0001_Traffic Control.dwg

DRAWN: AWRA				
DESIGNER: LXHE				
CHECKED: HRC				
PROJ. ENG.: HRC				
APPROVED BY:				
9/8/2025	REV DATE	REVISION	BY	APP'D

REGION NO.	STATE	FEDERAL AID PROJECT NO.
10	WASH	BRS-L360(001) TA-7561
JOB NUMBER		
22-03		

DAVID EVANS AND ASSOCIATES INC.
908 N Howard St. Ste 300
Spokane, WA 99201
Phone: 509.327.8697

Walla Walla County

PUBLIC WORKS DEPARTMENT

9/8/2025
PLOT DATE

COUNTY OF WALLA WALLA

WALLULA AVENUE BRIDGE

TEMPORARY TRAFFIC CONTROL II

SHEET
37
37 OF 47

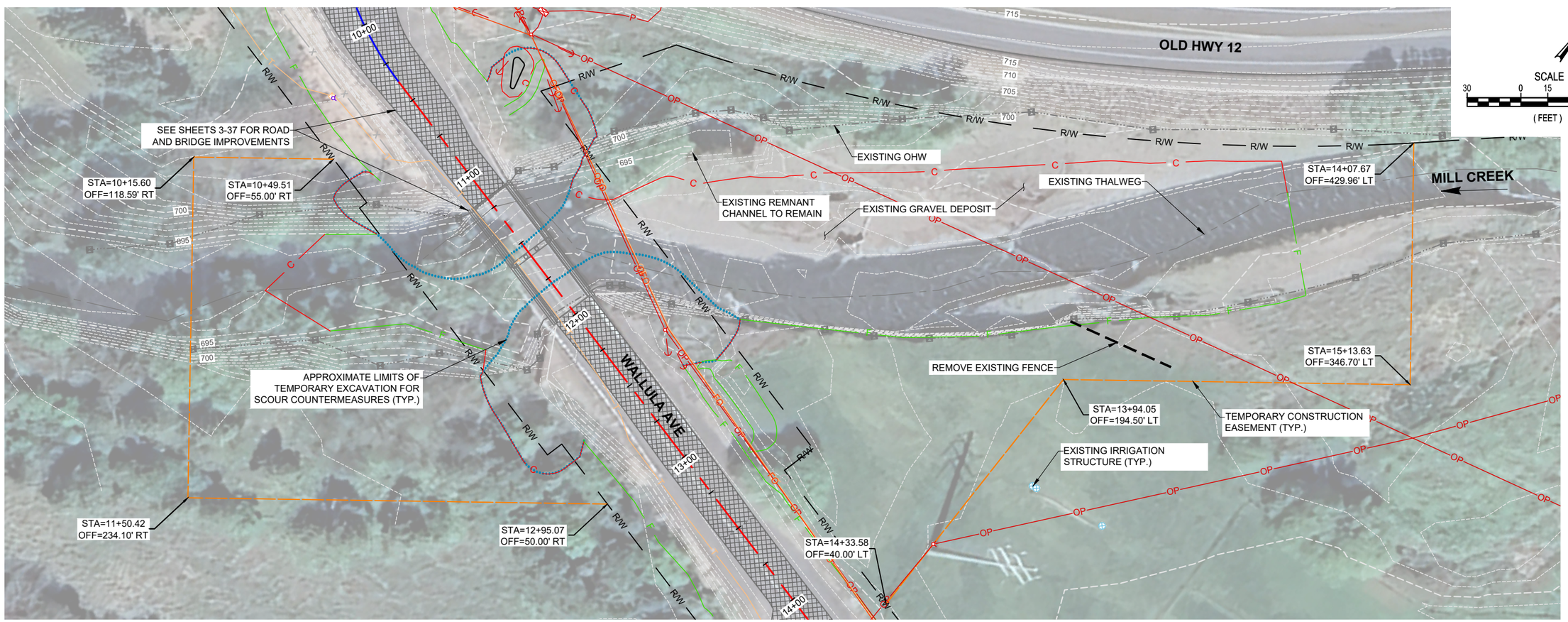

NOTES:

1. SEE SHEET 3 FOR THE ROADWAY SITE PREPARATION PLAN.
2. CONTRACTOR TO PROVIDE TEMPORARY EROSION AND SEDIMENT CONTROL PLAN(S) PER SECTION 8-01 OF THE SPECIAL PROVISIONS.
3. CONTRACTOR TO PROVIDE TEMPORARY STREAM DIVERSION PLAN(S) PER SECTION 8-31 OF THE SPECIAL PROVISIONS.

MICCO EMESON
STATE OF WASHINGTON
4/23/2026
21036403
REGISTERED
PROFESSIONAL ENGINEER

P:\WWALL00PW0001\0400CAD\SHEETS\WALL00PW0001_SHEET_HYDR_SP-EC.dwg				
DRAWN: RHW				
DESIGNER: RHW				
CHECKED: MAEM				
PROJ. ENG.: MAEM				
APPROVED BY:				
9/18/2025	REV DATE	REVISION	BY	APP'D

REGION NO.	STATE	FEDERAL AID PROJECT NO.
10	WASH	BRS-L360(001) TA-7561
JOB NUMBER		
22-03		

DAVID EVANS AND ASSOCIATES INC.
608 N Howard St. Ste 300
Spokane, WA 99201
Phone: 509.927.8667

Walla Walla County

PUBLIC WORKS DEPARTMENT

4/23/2026
PLOT DATE

COUNTY OF WALLA WALLA

WALLULA AVENUE BRIDGE

STREAM CHANNEL OVERVIEW

SHEET 38
38 OF 47

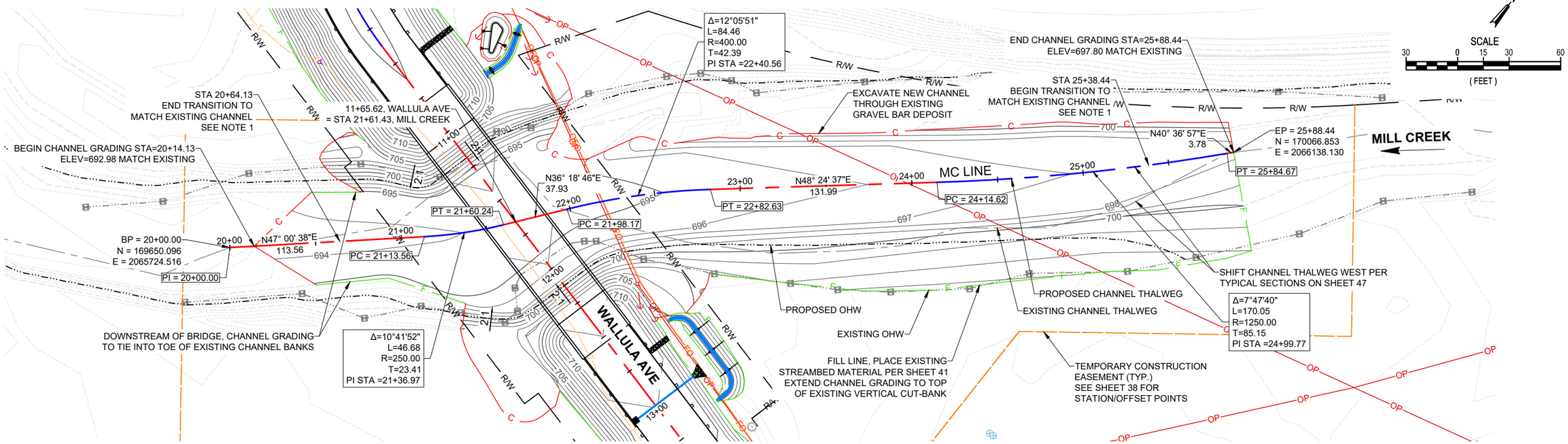

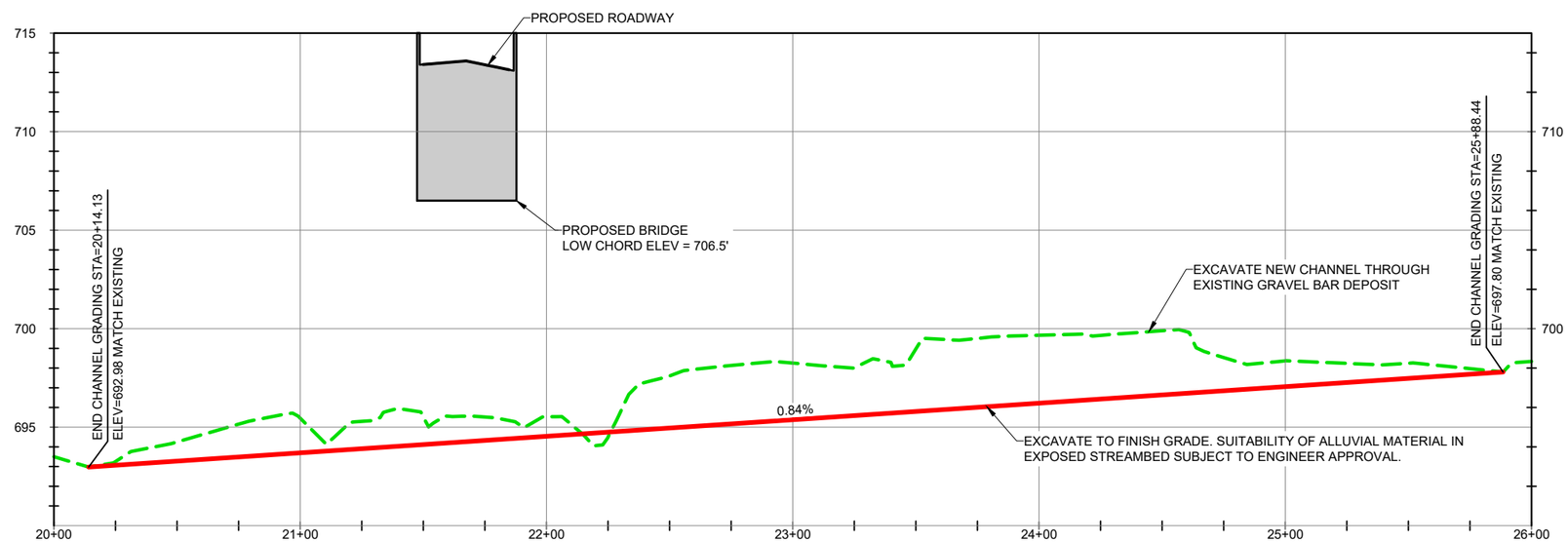

NOTES:

1. CONTRACTOR SHALL CONSTRUCT THE CHANNEL USING THE LINES AND GRADES INDICATED. SOME FIELD ADJUSTMENTS OF THE LINES AND GRADES FOR THE FINISH GRADING MAY BE NECESSARY WITHIN THE IDENTIFIED TRANSITION ZONES DUE TO LIKELY CHANGES IN CHANNEL CONDITIONS BETWEEN THE DATE OF THE TOPOGRAPHIC SURVEY AND CONSTRUCTION. CONTRACTOR SHALL PRODUCE FINISH GRADING THAT IS FREE OF ABRUPT CHANGES IN THE LINES AND GRADES OF THE CHANNEL AND OVERBANK AREAS. CONFIRM ACCEPTABILITY OF FINAL GRADING IN THE TRANSITION ZONES WITH ENGINEER PRIOR TO SOIL AMENDMENTS, SEEDING, AND PERMANENT EROSION CONTROL INSTALLATION.

MICCO EMESON
STATE OF WASHINGTON
4/24/2026
21036403
REGISTERED
PROFESSIONAL ENGINEER

P:\W\WALL00PW0001\0400CAD\SHEETS\WALL00PW0001_SHEET_HYDR_PLPR.dwg				
DRAWN: RHW				
DESIGNER: RHW				
CHECKED: MAEM				
PROJ. ENG.: MAEM				
APPROVED BY:				
9/17/2025	REV DATE	REVISION	BY	APP'D

REGION NO.	STATE	FEDERAL AID PROJECT NO.
10	WASH	BRS-L360(001) TA-7561
JOB NUMBER		
22-03		

DAVID EVANS AND ASSOCIATES INC.
608 N Howard St. Ste 300
Spokane, WA 99201
Phone: 509.927.8697

Walla Walla County

PUBLIC WORKS DEPARTMENT

4/23/2026
PLOT DATE

COUNTY OF WALLA WALLA

WALLULA AVENUE BRIDGE

STREAM PLAN & PROFILE

SHEET
39
39 OF 47

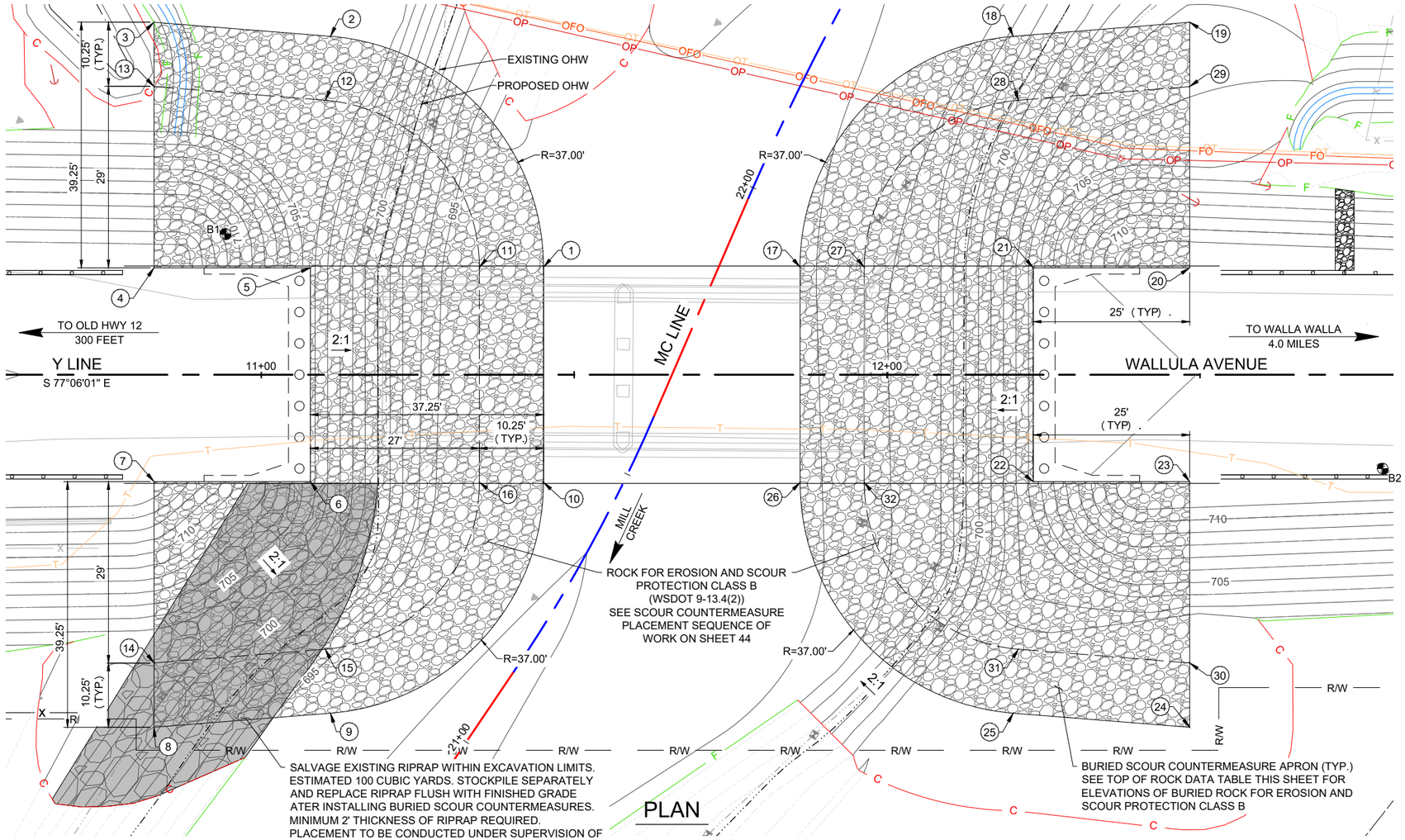

PLAN

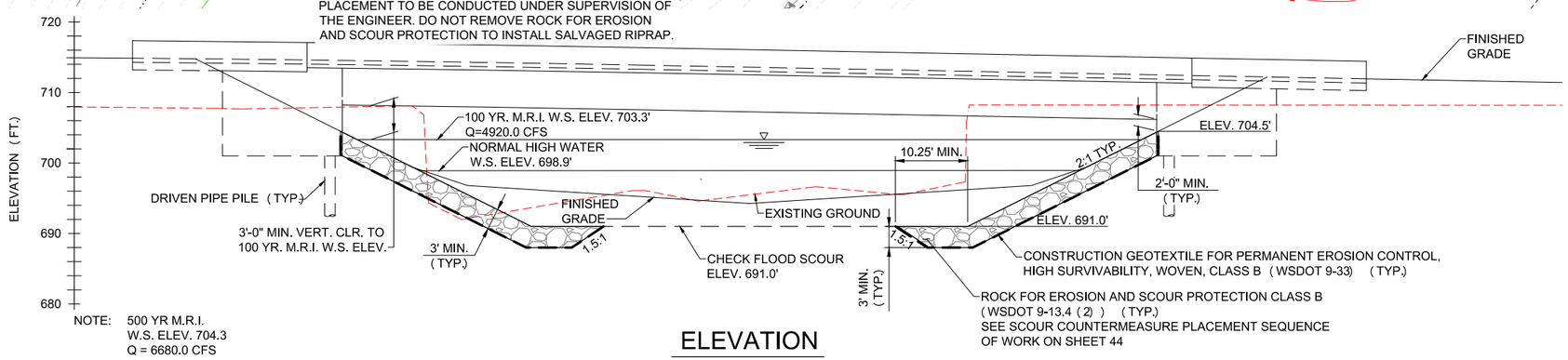

NOTE: 500 YR M.R.I.
W.S. ELEV. 704.3
Q = 6680.0 CFS

ELEVATION

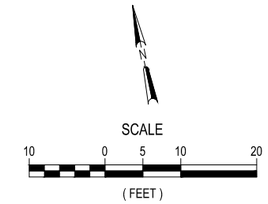

TOP OF ROCK DATA TABLE

ID	STATION*	OFFSET*	ELEVATION
1	11+45.10	17.20' LT	691.0
2	11+11.05	54.08' LT	691.0
3	10+82.85	56.33' LT	691.0
4	10+82.85	17.08' LT	705.5
5	11+07.85	17.08' LT	704.5
6	11+07.85	17.08' RT	704.5
7	10+82.85	17.08' RT	705.5
8	10+82.85	56.33' RT	691.0
9	11+11.05	54.08' RT	691.0
10	11+45.10	17.20' RT	691.0
11	11+34.85	17.20' LT	691.0
12	11+10.24	43.86' LT	691.0
13	10+82.85	46.05' LT	691.0
14	10+82.85	46.05' RT	691.0
15	11+10.24	43.86' RT	691.0
16	11+34.85	17.20' RT	691.0
17	11+86.10	17.20' LT	691.0
18	12+20.15	54.08' LT	691.0
19	12+48.35	56.33' LT	691.0
20	12+48.35	17.08' LT	705.5
21	12+23.35	17.08' LT	704.5
22	12+23.35	17.08' RT	704.5
23	12+48.35	17.08' RT	705.5
24	12+48.35	56.33' RT	691.0
25	12+20.15	54.08' RT	691.0
26	11+86.10	17.20' RT	691.0
27	11+96.35	17.20' LT	691.0
28	12+20.97	43.86' LT	691.0
29	12+48.35	46.05' LT	691.0
30	12+48.35	46.05' RT	691.0
31	12+20.97	43.86' RT	691.0
32	11+96.35	17.20' RT	691.0

*STATIONS AND OFFSETS BASED OFF OF
WALLULA AVENUE ALIGNMENT (Y LINE)

P:\WWALL00P\W0001\0400C-AD\SHEETS\WALL00P\W0001_SHEET_Scour Countermeasure Plan.dwg

DRAWN: RHW				
DESIGNER: MAEM				
CHECKED: BJME				
PROJ. ENG.: MAEM				
APPROVED BY:				
4/23/2026	REV DATE	REVISION	BY	APP'D

REGION NO.	STATE	FEDERAL AID PROJECT NO.
10	WASH	BRS-L360(001) TA-7561
JOB NUMBER		
22-03		

DAVID EVANS AND ASSOCIATES INC.
908 N Howard St, Ste 300
Spokane, WA 99201
Phone: 509.327.8697

Walla Walla County

PUBLIC WORKS DEPARTMENT

4/23/2026
PLOT DATE

WALLULA AVENUE BRIDGE

SCOUR COUNTERMEASURE PLAN

SHEET 40
40 OF 47

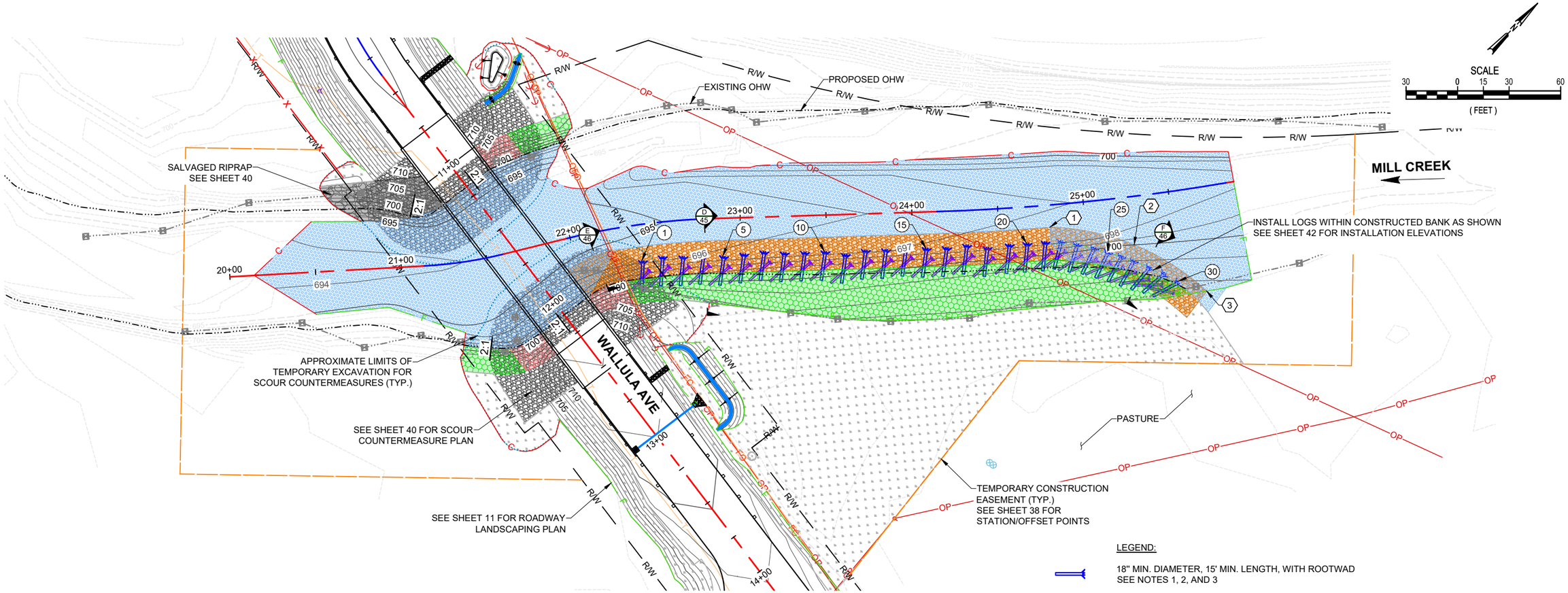

NOTES:

1. LARGE WOODY MATERIAL (LWM) STRUCTURE NUMBERS INCREASE FROM WEST TO EAST. EVERY FIFTH STRUCTURE IS LABELED ON THIS SHEET FOR REFERENCE.
2. SEE SHEET 42 FOR LWM PLACEMENT TABLE AND DETAILS.
3. EACH 18" MIN. DIA. LOG SHALL BE ANCHORED IN PLACE WITH BOULDER BALLAST COMPRISED OF 2 STREAMBED BOULDERS TYPE THREE (WSDOT 9-03.11(5)). SEE SHEET 43 FOR TYPICAL BOULDER BALLAST DETAIL.
4. ROUNDED REVETMENT ROCK SHALL CONSIST OF 40% STREAMBED BOULDERS TYPE ONE (9-03.11(5)), 30% 12" STREAMBED COBBLES (9-03.11(4)), AND 30% STREAMBED SEDIMENT (9-03.11(1)).
5. SUITABILITY OF ALLUVIAL MATERIAL IN EXPOSED STREAMBED SUBJECT TO ENGINEER APPROVAL.
6. CONTRACTOR TO INSTALL APPROXIMATELY 355 LINEAR FEET OF FENCE ALONG THE PERIMETER OF THE RESTORATION AREA, AND REPLACE THE EXISTING FENCE INTERIOR TO THE PASTURE. INTENT OF FENCE IS TO PREVENT LIVESTOCK GRAZING OF THE RESTORATION AREA. FIELD FIT MODIFICATIONS MAY BE NECESSARY TO ENSURE ADEQUATE EXCLUSION OF LIVESTOCK FROM RESTORATION AREA. CONTRACTOR TO COORDINATE WITH ENGINEER OR COUNTY REPRESENTATIVE.
7. SEE SHEET 45 FOR PLANTING SCHEDULE.
8. SEE SHEET 46 FOR BIODEGRADABLE EROSION CONTROL BLANKET INSTALLATION.
9. SEE SHEET 47 FOR TYPICAL SECTIONS.
10. FERTILIZER SHALL NOT BE APPLIED WITHIN 5 FEET OF THE TOP OF THE ROUNDED REVETMENT ROCK. THIS AREA SHALL BE TREATED WITH SEEDING AND MULCHING ONLY. SEE SECTION D ON SHEET 45.

REVETMENT DATA TABLE

ID	STATION*	OFFSET	REVETMENT REFERENCE ELEVATION**
1	24+79.6	12.8' RT	697.4
2	25+26.5	28.0' RT	697.8
3	25+63.3	60.3' RT	698.1

* STATIONING BASED OFF PROPOSED MILL CREEK ALIGNMENT
** SEE SECTION D ON SHEET 45 FOR REFERENCE POINT LOCATION

LEGEND:

- 18" MIN. DIAMETER, 15' MIN. LENGTH, WITH ROOTWAD SEE NOTES 1, 2, AND 3
- 12" MIN. DIAMETER, 15' MIN. LENGTH, WITH ROOTWAD SEE NOTES 1 AND 2
- SOIL AMENDMENT PER DETAIL B ON SHEET 44 LIVE POLES CONTAINER PLANTINGS WITH BARK MULCH RINGS SEEDING, FERTILIZING AND MULCHING BIODEGRADABLE EROSION CONTROL BLANKET, SEE NOTE 8 SEE NOTES 7 AND 10
- SOIL AMENDMENT PER DETAIL B ON SHEET 44 LIVE POLES SEEDING, FERTILIZING AND MULCHING BIODEGRADABLE EROSION CONTROL BLANKET, SEE NOTE 8 SEE NOTE 7
- ROUNDED REVETMENT ROCK PER DETAIL C ON SHEET 44 LIVE POLES SEE NOTES 4 AND 7
- REDEPOSITED STREAMBED MATERIAL PER DETAIL A ON SHEET 44 SEE NOTE 5
- 2" TOPSOIL TYPE B SEEDING, MULCHING AND FERTILIZING, SEE SHEET 11
- PLACE SALVAGED RIPRAP FLUSH WITH FINISHED GRADE SEE SHEET 40
- # LARGE WOODY MATERIAL (LWM) STRUCTURE ID SEE SHEET 42
- # REVETMENT REFERENCE POINT ID

MICCO EMESON
STATE OF WASHINGTON
4/24/2026
21036403
REGISTERED
PROFESSIONAL ENGINEER

P:\W\WALL00PW0001\0400CAD\SHEETS\WALL00PW0001_SHEET_HYDR_REST.dwg				
DRAWN: RHW				
DESIGNER: RHW				
CHECKED: BJME				
PROJ. ENG.: MAEM				
APPROVED BY:				
4/22/2026	REV DATE	REVISION	BY	APP'D

REGION NO.	STATE	FEDERAL AID PROJECT NO.
10	WASH	BRS-L360(001) TA-7561
JOB NUMBER		
22-03		

DAVID EVANS AND ASSOCIATES INC.
908 N Howard St. Ste 200
Spokane, WA 99201
Phone: 509.927.8097

Walla Walla County

PUBLIC WORKS DEPARTMENT

4/23/2026
PLOT DATE

COUNTY OF WALLA WALLA

WALLULA AVENUE BRIDGE

STREAM RESTORATION PLAN

SHEET 41
41 OF 47

LARGE WOODY MATERIAL (LWM) DATA TABLE

STRUCTURE	LOG TYPE	BOLE STATION*	BOLE OFFSET	BOLE REFERENCE ELEVATION**	ROOTWAD STATION*	ROOTWAD OFFSET	ROOTWAD REFERENCE ELEVATION**
1	A	22+37.0	37.8' RT	693.8	22+39.9	23.0' RT	695.4
	B	22+30.1	37.4' RT	N/A	22+42.7	27.9' RT	N/A
2	A	22+49.4	36.8' RT	693.9	22+52.4	22.0' RT	695.5
	B	22+42.5	36.4' RT	N/A	22+55.1	26.9' RT	N/A
3	A	22+62.0	37.8' RT	694.0	22+64.9	23.0' RT	695.6
	B	22+55.1	37.4' RT	N/A	22+67.7	27.9' RT	N/A
4	A	22+74.5	37.8' RT	694.1	22+77.4	23.0' RT	695.7
	B	22+67.6	37.4' RT	N/A	22+80.2	27.9' RT	N/A
5	A	22+86.9	38.8' RT	694.2	22+89.5	24.0' RT	695.8
	B	22+80.4	38.5' RT	N/A	22+92.1	28.9' RT	N/A
6	A	22+98.7	37.8' RT	694.3	23+01.3	23.0' RT	695.9
	B	22+92.5	37.5' RT	N/A	23+03.9	27.9' RT	N/A
7	A	23+10.5	36.8' RT	694.4	23+13.1	22.0' RT	696.0
	B	23+04.3	36.5' RT	N/A	23+15.7	26.9' RT	N/A
8	A	23+22.4	37.8' RT	694.5	23+24.9	23.0' RT	696.1
	B	23+16.1	37.5' RT	N/A	23+27.6	27.9' RT	N/A
9	A	23+34.1	37.8' RT	694.6	23+36.7	23.0' RT	696.2
	B	23+27.9	37.5' RT	N/A	23+39.4	27.9' RT	N/A
10	A	23+46.0	37.8' RT	694.7	23+48.6	23.0' RT	696.3
	B	23+39.7	37.6' RT	N/A	23+51.2	27.9' RT	N/A
11	A	23+57.8	39.8' RT	694.8	23+60.4	25.0' RT	696.4
	B	23+51.5	39.5' RT	N/A	23+63.0	29.9' RT	N/A
12	A	23+69.6	37.8' RT	694.9	23+72.2	23.1' RT	696.5
	B	23+63.3	37.6' RT	N/A	23+74.8	27.9' RT	N/A
13	A	23+81.4	37.8' RT	695.0	23+84.0	23.0' RT	696.6
	B	23+75.1	37.6' RT	N/A	23+86.6	27.9' RT	N/A
14	A	23+93.2	36.8' RT	695.1	23+95.8	22.0' RT	696.7
	B	23+87.0	36.5' RT	N/A	23+98.4	26.9' RT	N/A
15	A	24+05.0	37.8' RT	695.2	24+07.6	23.0' RT	696.8
	B	23+98.8	37.5' RT	N/A	24+10.2	27.8' RT	N/A
16	A	24+16.8	37.8' RT	695.3	24+19.3	23.0' RT	696.9
	B	24+10.6	37.5' RT	N/A	24+21.9	27.8' RT	N/A
17	A	24+28.4	36.8' RT	695.4	24+31	22.0' RT	697.0
	B	24+22.3	36.5' RT	N/A	24+33.5	26.9' RT	N/A
18	A	24+40.1	38.8' RT	695.5	24+42.6	24.0' RT	697.1
	B	24+34.0	38.6' RT	N/A	24+45.1	28.8' RT	N/A
19	A	24+52.7	37.8' RT	695.6	24+55.3	23.0' RT	697.2
	B	24+46.6	37.5' RT	N/A	24+57.8	27.9' RT	N/A
20	A	24+63.1	37.8' RT	695.7	24+65.6	23.0' RT	697.3
	B	24+57.0	37.5' RT	N/A	24+68.1	27.8' RT	N/A

* STATIONING BASED OFF OF PROPOSED MILL CREEK ALIGNMENT
** SEE SECTION D ON SHEET 45 FOR REFERENCE POINT LOCATION

LWM DATA TABLE

STRUCTURE	LOG TYPE	BOLE STATION*	BOLE OFFSET	BOLE REFERENCE ELEVATION**	ROOTWAD STATION*	ROOTWAD OFFSET	ROOTWAD REFERENCE ELEVATION**
21	A	24+73.4	37.8' RT	695.8	24+76.0	23.0' RT	697.4
	B	24+67.3	37.5' RT	N/A	24+78.5	27.9' RT	N/A
22	A	24+79.8	37.2' RT	695.9	24+84.8	23.1' RT	697.4
	B	24+73.9	35.9' RT	N/A	24+86.5	28.3' RT	N/A
23	A	24+88.1	39.7' RT	695.9	24+93.6	25.8' RT	697.5
	B	24+82.2	38.1' RT	N/A	24+95.1	31.1' RT	N/A
24	A	24+95.3	41.5' RT	696.0	25+02.9	28.7' RT	697.6
	B	24+89.7	39.0' RT	N/A	25+03.5	34.2' RT	N/A
25	A	25+02.8	44.5' RT	696.1	25+10.5	31.8' RT	697.6
	B	24+97.2	42.0' RT	N/A	25+11.0	37.3' RT	N/A
26	A	25+09.4	47.4' RT	696.1	25+17.7	35.1' RT	697.7
	B	25+04.0	44.5' RT	N/A	25+18.0	40.6' RT	N/A
27	A	25+15.9	50.7' RT	696.2	25+24.3	38.5' RT	697.8
	B	25+10.5	47.8' RT	N/A	25+24.5	44.0' RT	N/A
28	A	25+21.9	53.6' RT	696.3	25+32.5	43.3' RT	697.8
	B	25+17.2	49.6' RT	N/A	25+31.7	48.7' RT	N/A
29	A	25+28.0	56.1' RT	696.3	25+40.0	47.8' RT	697.9
	B	25+24.0	51.4' RT	N/A	25+38.4	53.0' RT	N/A
30	A	25+33.4	59.0' RT	696.4	25+46.8	53.7' RT	698.0
	B	25+30.5	53.4' RT	N/A	25+44.1	58.4' RT	N/A

NOTES:

1. TYPE B LOGS SHALL BE INSTALLED WITH A SLOPE OF 0% MEASURED ALONG THE LOG'S LONG AXIS.
2. LOG PLACEMENT WITH RESPECT TO TOP AND TOE OF BANK IS DEPICTED AS TYPICAL. SEE LWM DATA TABLE FOR ACTUAL/EXACT LOCATIONS.
3. FINAL LOG PLACEMENT TO BE APPROVED BY ENGINEER IN FIELD.
4. LOGS SHALL NOT DISPLACE OR INTERFERE WITH THE ROCK FOR EROSION AND SCOUR PROTECTION CLASS B ASSOCIATED WITH BRIDGE SCOUR COUNTERMEASURES.

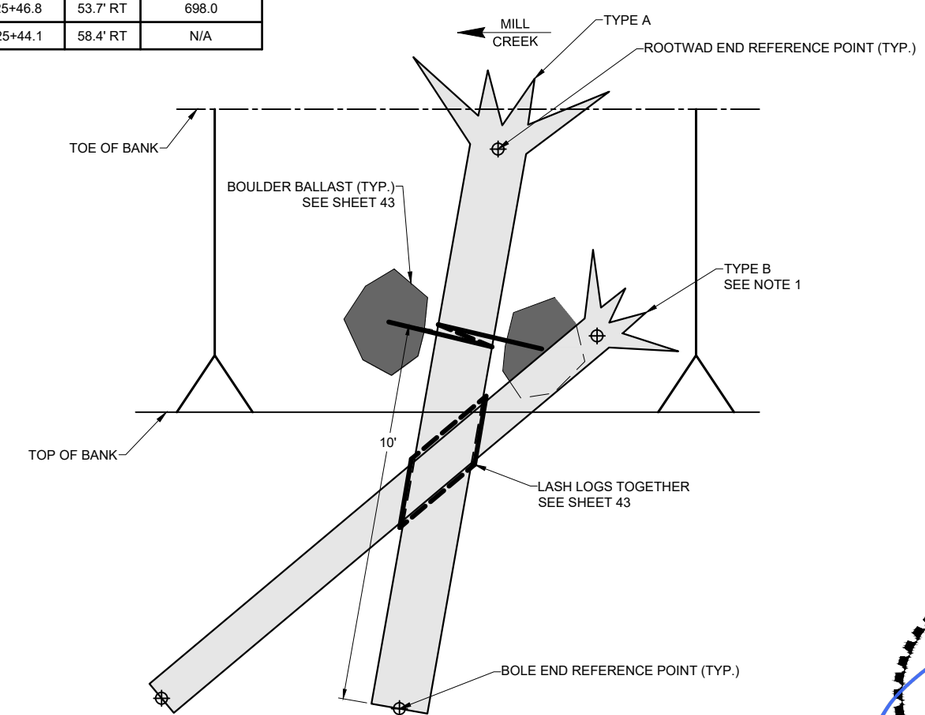

LWM STRUCTURE

NOT TO SCALE

MICCO EMESON
STATE OF WASHINGTON
4/23/2026
21036403
REGISTERED
PROFESSIONAL ENGINEER

P:\WWALL00PW0001\0400CAD\SHEETS\WALL00PW0001_SHEET_HYDR_DETAILS.dwg				
DRAWN: RHW				
DESIGNER: RHW				
CHECKED: BJME				
PROJ. ENG.: MAEM				
APPROVED BY: ----				
4/23/2026	REV DATE	REVISION	BY	APP'D

REGION NO.	STATE	FEDERAL AID PROJECT NO.
10	WASH	BRS-L360(001) TA-7561
JOB NUMBER 22-03		

DAVID EVANS AND ASSOCIATES INC.
608 N Howard St. Ste 300
Spokane, WA 99201
Phone: 509.927.8667

Walla Walla County

PUBLIC WORKS DEPARTMENT

4/23/2026
PLOT DATE

COUNTY OF WALLA WALLA

WALLULA AVENUE BRIDGE

LARGE WOODY MATERIAL DETAILS (1 OF 2)

SHEET 42
42 OF 47

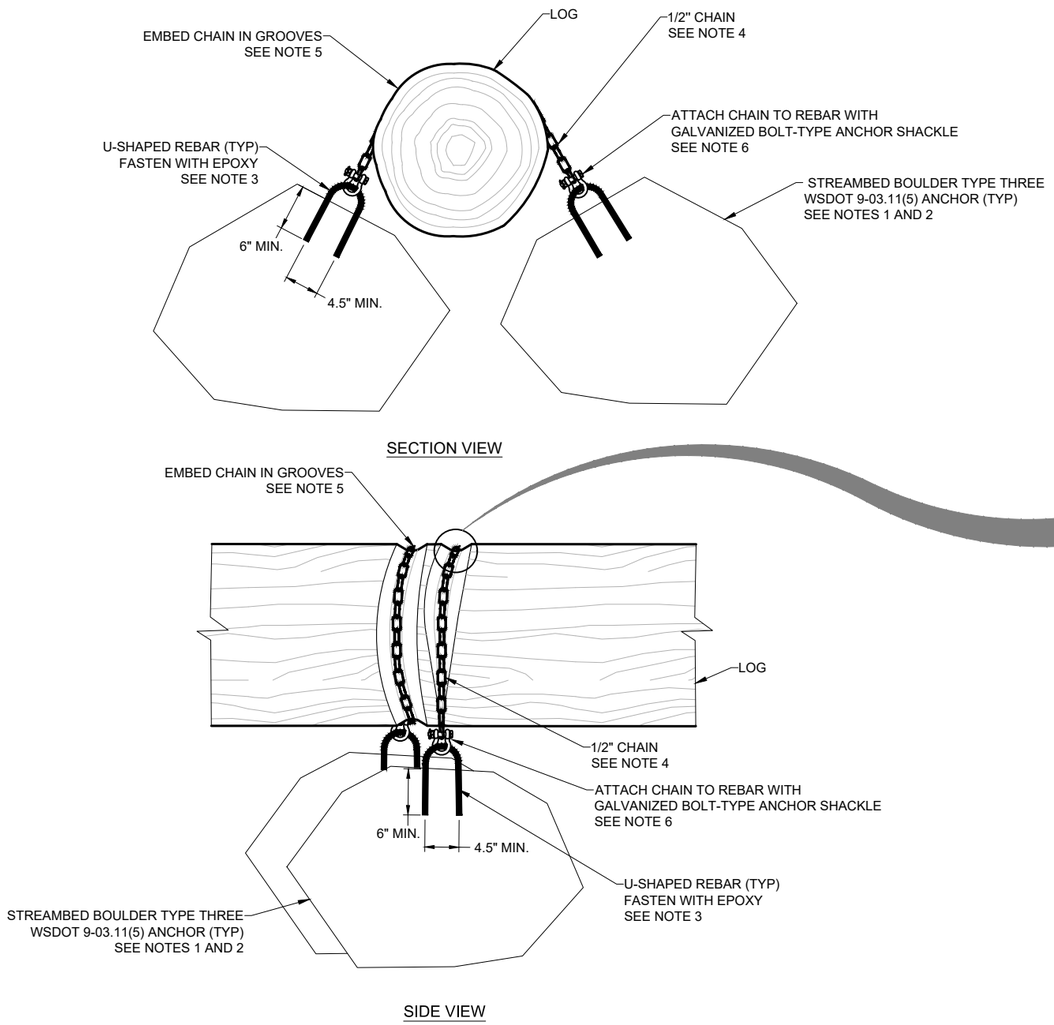

TYPICAL BOULDER BALLAST DETAIL

NOT TO SCALE

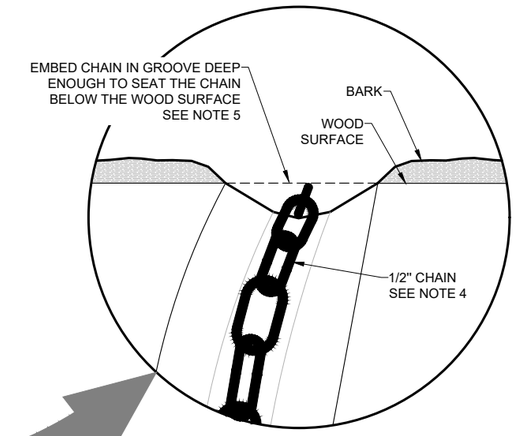

LOG GROOVE DETAIL

NOT TO SCALE

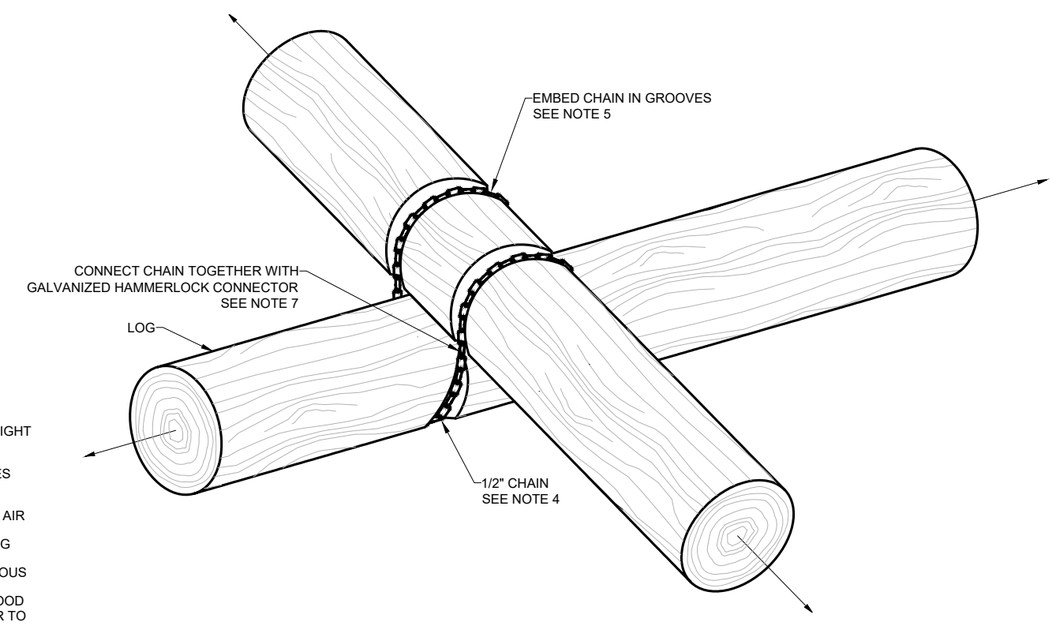

CHAIN LASHING CONNECTION

NOT TO SCALE

NOTES:

1. BOULDERS SHALL BE SOUND, DURABLE, AND FREE OF FRACTURES. BOULDERS SHALL NOT FRACTURE WHEN HANDLED, PLACED, OR DROPPED FROM A HEIGHT OF UP TO 8 FEET DURING CONSTRUCTION. BOULDERS THAT FRACTURE OR BREAK DURING HANDLING SHALL BE REJECTED.
2. BOULDERS SHALL BE FULLY BURIED.
3. REBAR ANCHORS SHALL BE MINIMUM #5, ASTM A615 GRADE 60, EPOXY-COATED OR GALVANIZED. REBAR SHALL BE EPOXY-SET IN 7/8-INCH DIAMETER HOLES DRILLED IN BOULDERS USING A TWO-COMPONENT ADHESIVE ANCHOR SYSTEM SUITABLE FOR WET CONDITIONS AND INSTALLATION IN NATURAL ROCK, MEETING ASTM C881 TYPE IV, AND V, GRADE 3, CLASS C, OR APPROVED EQUAL. INSTALL EPOXY AND REBAR IN ACCORDANCE WITH THE MANUFACTURER'S WRITTEN INSTRUCTIONS. HOLES DRILLED IN BOULDERS MUST BE THOROUGHLY CLEANED OF ALL ROCK POWDER, DIRT, AND DEBRIS USING COMPRESSED AIR PRIOR TO PLACEMENT OF EPOXY.
4. CHAIN SHALL BE GALVANIZED 1/2-INCH GRADE 43 HIGH-TEST CHAIN OR APPROVED EQUAL. CHAIN SHALL BE INSTALLED TAUT. USE TEMPORARY TENSIONING DEVICES (COME-ALONG OR RATCHET BINDER) TO REMOVE SLACK PRIOR TO FINAL CONNECTION. FINAL INSTALLED CHAIN SHALL HAVE NO VISIBLE SLACK. TEMPORARY TENSIONING DEVICES SHALL BE REMOVED AFTER INSTALLATION. ENGINEER SHALL VERIFY TENSION IN THE FIELD. CHAIN SHALL BE CONTINUOUS BETWEEN TERMINAL CONNECTIONS; NO EXTRA COUPLING LINKS ARE PERMITTED.
5. PROVIDE GROOVES IN LOGS AT ALL CHAIN CONTACT LOCATIONS. GROOVES SHALL BE SIZED TO SEAT THE CHAIN BELOW THE OUTER SURFACE OF THE WOOD TO PREVENT SLIPPAGE AND REDUCE ABRASION. REMOVE BARK AT ALL CONTACT LOCATIONS. CHAINS BETWEEN LASHED LOGS SHALL BE PERPENDICULAR TO THE LOG FACES; GROOVE PLACEMENT SHALL BE ESTABLISHED TO PREVENT ANGLED SEGMENTS OF CHAIN BETWEEN THE LOGS.
6. BOLT-TYPE ANCHOR SHACKLES SHALL BE USED FOR ALL PERMANENT CONNECTIONS BETWEEN CHAIN AND EMBEDDED REBAR ANCHORS. SHACKLES SHALL BE GALVANIZED. COTTER PINS SHALL BE STAINLESS STEEL. SCREW-PIN SHACKLES SHALL NOT BE USED.
7. GALVANIZED HAMMERLOCK (COUPLING LINK) CONNECTORS SHALL BE USED FOR CHAIN-TO-CHAIN CONNECTIONS. DOUBLE CLEVIS LINKS SHALL NOT BE USED.
8. ALL CONNECTING HARDWARE, INCLUDING SHACKLES AND HAMMERLOCK LINKS, SHALL HAVE A WORKING LOAD LIMIT EQUAL TO OR GREATER THAN THE CHAIN.

MICCO EMESON
STATE OF WASHINGTON
4/23/2026
21036403
REGISTERED
PROFESSIONAL ENGINEER

P:\WWALL00PW0001\0400CAD\SHEETS\WALL00PW0001_SHEET_HYDR_DETAILS.dwg					REGION NO.	STATE	FEDERAL AID PROJECT NO.
DRAWN: RHW					10	WASH	BRS-L360(001) TA-7561
DESIGNER: MAEM					JOB NUMBER		
CHECKED: BJME					22-03		
PROJ. ENG.: MAEM							
APPROVED BY:							
4/23/2026	REV DATE	REVISION	BY	APP'D			

DAVID EVANS AND ASSOCIATES INC.
908 N Howard St, Ste 200
Spokane, WA 99201
Phone: 509.927.8697

Walla Walla County

PUBLIC WORKS DEPARTMENT

4/23/2026
PLOT DATE

COUNTY OF WALLA WALLA

WALLULA AVENUE BRIDGE

LARGE WOODY MATERIAL DETAILS (2 OF 2)

SHEET 43
43 OF 47

NOTES:

1. REFER TO SECTION 8-30 OF THE SPECIAL PROVISIONS FOR THIS PROJECT FOR ADDITIONAL DETAILS ON THE CONSTRUCTION OF THE STREAMBED.

STEP 1A

EXCAVATE CHANNEL AS NECESSARY TO THE LINES AND GRADES SHOWN ON THESE PLANS.

STEP 2A

PLACE A LIFT OF STREAMBED MATERIAL WITH A MAXIMUM THICKNESS OF 12 INCHES.

STEP 3A

PLACE A LAYER OF STREAMBED SAND UNIFORMLY OVER THE TOP OF THE STREAMBED MATERIAL. THE THICKNESS OF THE STREAMBED SAND LAYER SHALL BE A MINIMUM THICKNESS OF 1 INCH AT ALL POINTS WITHIN THE LIMITS OF STREAMBED MATERIAL PLACEMENT.

STEP 4A

APPLY WATER TO SAND LAYER TO WASH DOWN INTO THE STREAMBED MATERIAL. SAND AND WATER SHALL BE APPLIED IN 1 INCH LIFTS AS NEEDED UNTIL THE FLOW NO LONGER GOES SUBSURFACE THROUGHOUT THE ENTIRE PROJECT LIMITS. SUFFICIENT FILLING OF THE VOIDS SHALL BE APPROVED BY THE ENGINEER IN THE FIELD.

STEP 5A

IF IN A AREA SHOWN RECEIVING SOIL AMENDMENT ON SHEET 41, REPEAT STEPS 2A-4A AS NEEDED TO CONSTRUCT THE STREAMBED TO ONE FOOT BELOW THE REQUIRED THICKNESS AND ELEVATION SHOWN ON THE PLANS AND SEE DETAIL B ON THIS SHEET. ELSEWHERE, REPEAT STEPS 2A-4A AS NEEDED TO CONSTRUCT THE STREAMBED TO THE REQUIRED THICKNESS AND ELEVATION SHOWN ON THE PLANS.

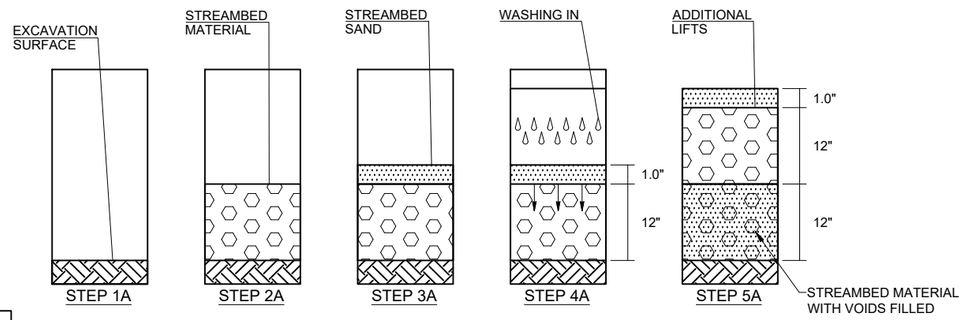

A STREAMBED MATERIAL PLACEMENT SEQUENCE OF WORK

NOT TO SCALE

STEP 1B

PLACE STREAMBED MATERIAL PER DETAIL A ON THIS SHEET TO ONE FOOT BELOW THE LINES AND GRADES SHOWN ON THESE PLANS.

STEP 2B

PLACE A LIFT OF SALVAGED STREAMBED MATERIAL WITH A THICKNESS OF 12 INCHES.

STEP 3B

PLACE A UNIFORM 1-INCH LAYER OF FINE COMPOST OVER THE TOP OF THE SALVAGED STREAMBED MATERIAL.

STEP 4B

APPLY WATER TO THE COMPOST LAYER TO WASH DOWN INTO THE SALVAGED STREAMBED MATERIAL.

STEP 5B

REPEAT STEPS 3B AND 4B AT LEAST THREE TIMES AND AS NEEDED TO FILL THE VOIDS IN THE STREAMBANK MATERIAL. CONTRACTOR SHALL OBTAIN ENGINEER APPROVAL THAT THE COMPOST HAS BEEN APPLIED PROPERLY AND IN SUFFICIENT QUANTITY PER THIS DETAIL PRIOR TO SEEDING AND PLANTING.

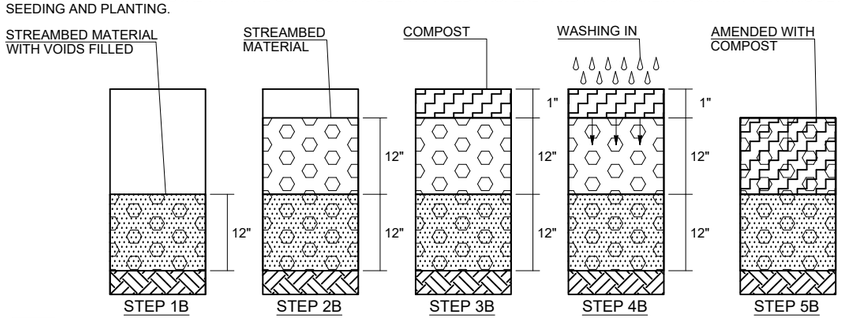

B OVERBANK COMPOST AMENDMENT PLACEMENT SEQUENCE OF WORK

NOT TO SCALE

STEP 1C

EXCAVATE CHANNEL AS NECESSARY TO THE LINES AND GRADES SHOWN ON THESE PLANS AND PLACE CONSTRUCTION GEOTEXTILE.

STEP 2C

PLACE A LIFT OF ROUNDED REVETMENT ROCK WITH A MAXIMUM THICKNESS OF 12 INCHES. SOME OF THE LARGER PIECES OF ROCK MAY EXCEED THIS LIFT THICKNESS.

STEP 3C

PLACE A LAYER OF STREAMBED SAND UNIFORMLY OVER THE TOP OF THE ROUNDED REVETMENT ROCK. THE THICKNESS OF THE STREAMBED SAND LAYER SHALL BE A MINIMUM THICKNESS OF 1 INCH AT ALL POINTS WITHIN THE LIMITS OF ROUNDED REVETMENT ROCK PLACEMENT.

STEP 4C

APPLY WATER TO SAND LAYER TO WASH DOWN INTO THE ROUNDED REVETMENT ROCK. SAND AND WATER SHALL BE APPLIED IN 1 INCH LIFTS AS NEEDED UNTIL THE FLOW NO LONGER GOES SUBSURFACE THROUGHOUT THE ENTIRE PROJECT LIMITS. SUFFICIENT FILLING OF THE VOIDS SHALL BE APPROVED BY THE ENGINEER IN THE FIELD.

STEP 5C

REPEAT STEPS 2C-4C AS NEEDED TO CONSTRUCT THE REVETMENT SECTION TO THE REQUIRED THICKNESS AND ELEVATION SHOWN ON THE PLANS.

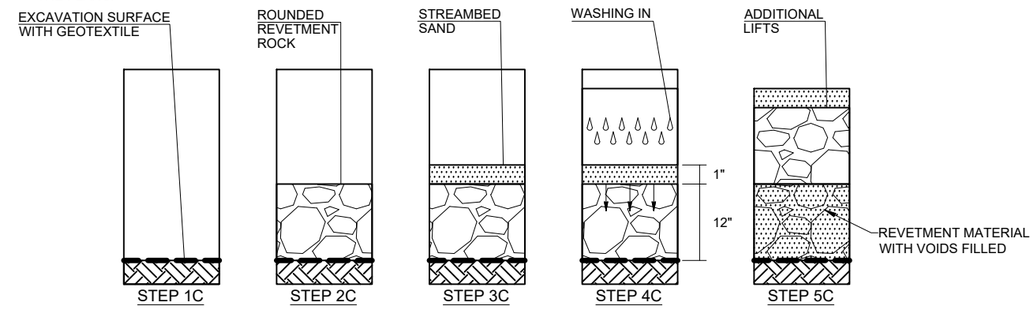

C ROUNDED REVETMENT ROCK PLACEMENT SEQUENCE OF WORK

NOT TO SCALE

STEP 1D

EXCAVATE CHANNEL AS NECESSARY TO THE LINES AND GRADES SHOWN ON THESE PLANS AND PLACE CONSTRUCTION GEOTEXTILE.

STEP 2D

PLACE A LIFT OF ROCK FOR EROSION AND SCOUR PROTECTION CLASS B WITH A MAXIMUM AVERAGE THICKNESS OF 24 INCHES. SOME OF THE LARGER PIECES OF ROCK MAY EXCEED THIS LIFT THICKNESS.

STEP 3D

PLACE A LAYER OF STREAMBED SEDIMENT UNIFORMLY OVER THE TOP OF THE SCOUR COUNTERMEASURE MATERIAL. THE THICKNESS OF THE STREAMBED SEDIMENT LAYER SHALL BE A MINIMUM THICKNESS OF 1 INCH AT ALL POINTS WITHIN THE LIMITS OF SCOUR COUNTERMEASURE PLACEMENT.

STEP 4D

APPLY WATER TO SEDIMENT LAYER TO WASH DOWN INTO THE SCOUR COUNTERMEASURE MATERIAL. SEDIMENT AND WATER SHALL BE APPLIED IN 1 INCH LIFTS AS NEEDED UNTIL THE FLOW NO LONGER GOES SUBSURFACE THROUGHOUT THE ENTIRE PROJECT LIMITS. SUFFICIENT FILLING OF THE VOIDS SHALL BE APPROVED BY THE ENGINEER IN THE FIELD.

STEP 5D

REPEAT STEPS 2D-4D AS NEEDED TO CONSTRUCT THE SCOUR COUNTERMEASURE SECTION TO THE REQUIRED THICKNESS AND ELEVATION SHOWN ON THE PLANS.

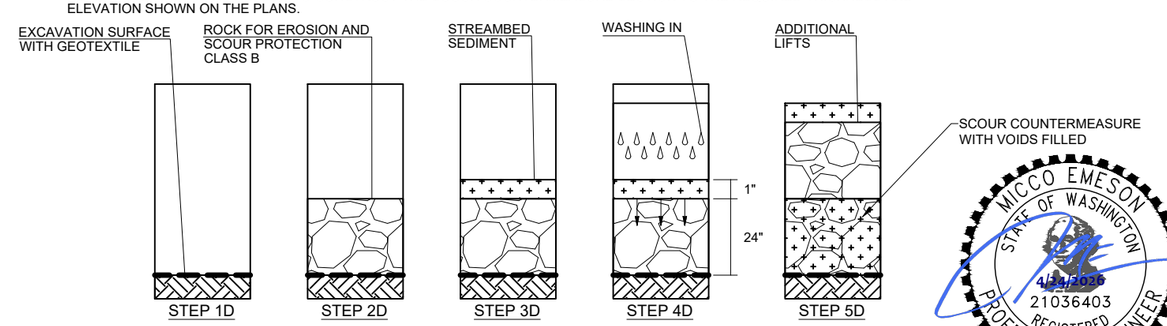

D SCOUR COUNTERMEASURE PLACEMENT SEQUENCE OF WORK

NOT TO SCALE

MICCO EMESON
STATE OF WASHINGTON
4/23/2026
21036403
REGISTERED
PROFESSIONAL ENGINEER

P:\WWALL00PW0001\0400CAD\SHEETS\WALL00PW0001_SHEET_HYDR_DETAILS.dwg				
DRAWN: RHW				
DESIGNER: RHW				
CHECKED: BJME				
PROJ. ENG.: MAEM				
APPROVED BY:				
4/23/2026	REV DATE	REVISION	BY	APP'D

REGION NO.	STATE	FEDERAL AID PROJECT NO.
10	WASH	BRS-L360(001) TA-7561
JOB NUMBER		
22-03		

DAVID EVANS AND ASSOCIATES INC.
908 N Howard St. Ste 200
Spokane, WA 99201
Phone: 509.927.8697

Walla Walla County

PUBLIC WORKS DEPARTMENT

4/23/2026
PLOT DATE

COUNTY OF WALLA WALLA

WALLULA AVENUE BRIDGE

STREAM MATERIAL PLACEMENT DETAILS

SHEET 44
44 OF 47

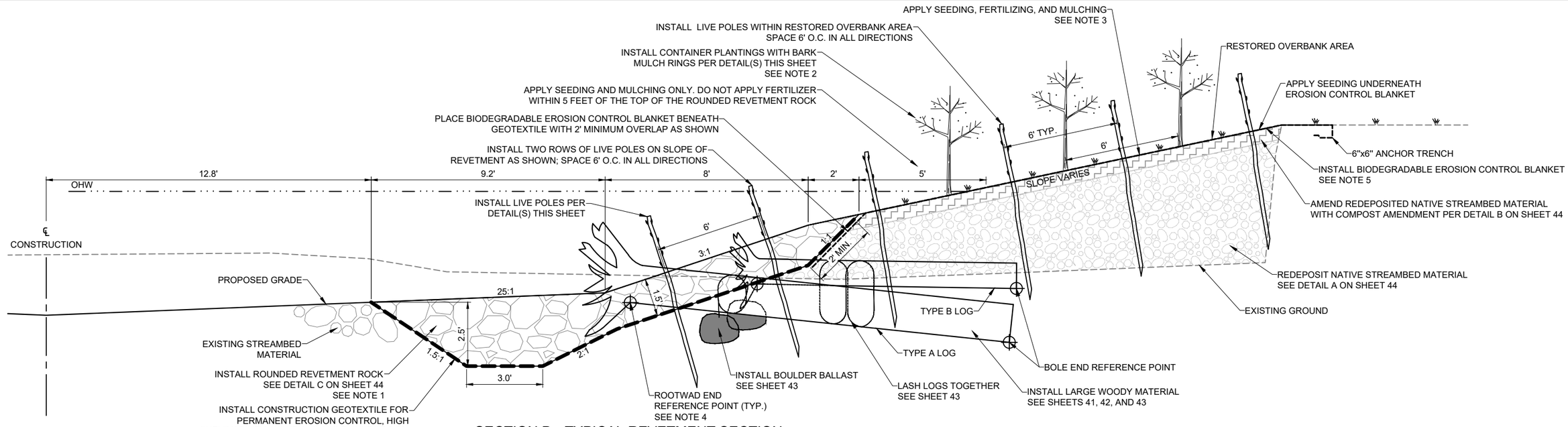

SECTION D - TYPICAL REVETMENT SECTION

SECTION VIEW — NOT TO SCALE

STA 22+23.20 TO 24+79.60

NOTES:

1. ROUNDED REVETMENT ROCK SHALL CONSIST OF 40% STREAMBED BOULDERS TYPE ONE (9-03.11(5)), 30% 12" STREAMBED COBBLES (9-03.11(4)), AND 30% STREAMBED SEDIMENT (9-03.11(1)).
2. INSTALL CONTAINER PLANTINGS IN GROUPS OF 3-7 PLANTS OF THE SAME SPECIES.
3. SEED MIX AND FERTILIZER RATE AND COMPOSITION SHALL BE PER SPECIAL PROVISIONS. MULCH SHALL BE LONG TERM MULCH PER 8-02.3(11) A AND AT RATE OF 3500 LBS/ACRE.
4. ROOTWAD PLACEMENT VARIES ALONG THE REVETMENT SUCH THAT THE ROOTWADS DO NOT PROJECT INTO THE CHANNEL UNIFORMLY, I.E. THE DISTANCE FROM THE ROOTWAD TO THE REVETMENT TOE IS NOT CONSTANT. USE STATION, OFFSET, AND ELEVATION DATA PROVIDED ON SHEET 42.
5. INSTALL BIODEGRADABLE EROSION CONTROL BLANKET (WSDTO STD. SPEC 9-14.6(2)) PER WSDOT STANDARD PLAN I-60.10-01. ALL BIODEGRADABLE EROSION CONTROL BLANKETS WILL CONFORM TO WSDOT STD. SPEC. 9-14.6(2) A, REGARDLESS OF SLOPE. THE BLANKET SHALL BE PLACED SO THAT THE UPSTREAM STRIP WILL OVERLAP THE NEXT DOWNSTREAM STRIP. WHEN PLACED ON SLOPES, EACH STRIP SHALL OVERLAP THE NEXT DOWNHILL STRIP. ANCHOR BIODEGRADABLE EROSION CONTROL BLANKET WITH 2" X 4" X 18" WOOD STAKE, RIPPED DIAGONALLY. DRIVE STAKES UNTIL 1"-2" REMAINS ABOVE BLANKET.

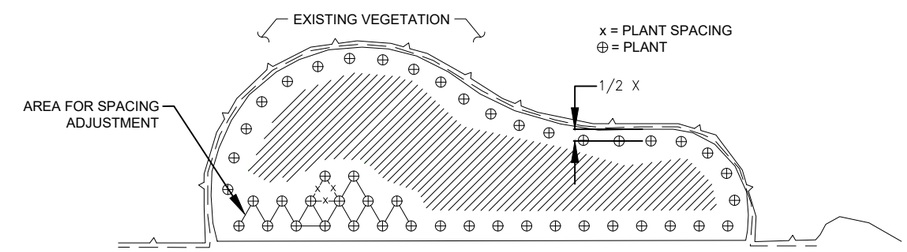

PLANTING AREA LAYOUT

PLAN VIEW — NOT TO SCALE

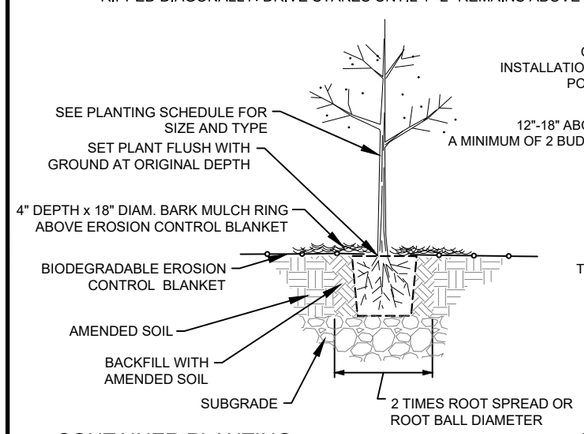

CONTAINER PLANTING

NOT TO SCALE

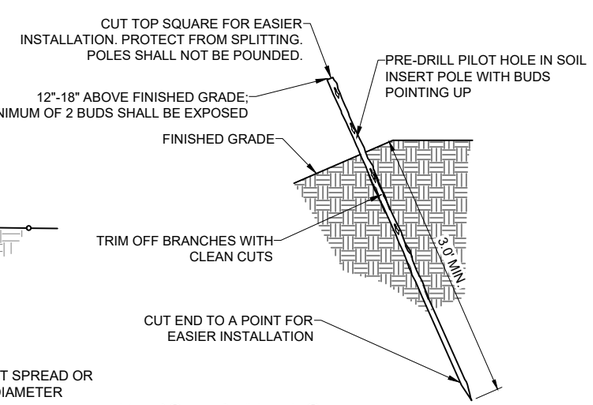

LIVE POLE PLANTING

NOT TO SCALE

PLANTING SCHEDULE

M	COMMON NAME	CONDITION	QTY	SIZE	SPACING	REMARKS
TREES						
SALIX LUCIDA	PACIFIC WILLOW	LIVE POLE	90	2"-3.5" DIA., 4.5' LENGTH	6' O.C.	INSTALL IN REVETMENT SLOPE AND OVERBANK
BETULA OCCIDENTALIS	WATER BIRCH	NO. 2 CONTAINER	66	18" MIN. HT.	6' O.C.	INSTALL IN OVERBANK, NOTE 2
SHRUBS						
PRUNUS VIRGINIANA	COMMON CHOKECHERRY	NO. 2 CONTAINER	66	18" MIN. HT.	6' O.C.	INSTALL IN OVERBANK, NOTE 2
PHILADELPHUS LEWISII	MOCK ORANGE	NO. 1 CONTAINER	66	18" MIN. HT.	6' O.C.	INSTALL IN OVERBANK, NOTE 2
SALIX EXIGUA	SANDBAR WILLOW	NO. 1 CONTAINER	66	12" MIN. HT.	6' O.C.	INSTALL IN OVERBANK, NOTE 2
CORNUS SERICEA	RED OSIER DOGWOOD	NO. 1 CONTAINER	66	12" MIN. HT.	6' O.C.	INSTALL IN OVERBANK, NOTE 2
GRASSES						
LEYMUS CINEREUS	BASIN WILDRYE	SEED	0.3 AC			APPLY UNDER TOP LAYER OF EROSION CONTROL FABRIC
ELYMUS LANCEOLATUS	STREAMBANK WHEATGRASS	SEED	0.3 AC			APPLY UNDER TOP LAYER OF EROSION CONTROL FABRIC

MICCO EMESON
STATE OF WASHINGTON
4/24/2026
21036403
REGISTERED
PROFESSIONAL ENGINEER

P:\W\WALL00PW0001\0400CAD\SHEETS\WALL00PW0001_SHEET_HYDR_DETAILS.dwg

DRAWN: RHW				
DESIGNER: RHW				
CHECKED: BJME				
PROJ. ENG.: MAEM				
APPROVED BY:				
4/23/2026	REV DATE	REVISION	BY	APP'D

REGION NO.	STATE	FEDERAL AID PROJECT NO.
10	WASH	BRS-L360(001) TA-7561
JOB NUMBER		
22-03		

DAVID EVANS AND ASSOCIATES INC.
608 N Howard St. Ste 300
Spokane, WA 99201
Phone: 509.327.8697

Walla Walla County

PUBLIC WORKS DEPARTMENT

4/23/2026
PLOT DATE

COUNTY OF WALLA WALLA

WALLULA AVENUE BRIDGE

STREAM RESTORATION DETAILS

SHEET 45
45 OF 47

NOTES:

1. ROUNDED REVETMENT ROCK SHALL CONSIST OF 40% STREAMBED BOULDERS TYPE ONE (9-03.11(5)), 30% 12" STREAMBED COBBLE (9-03.11(4)), AND 30% STREAMBED SEDIMENT (9-03.11(1)).
2. INSTALL BIODEGRADABLE EROSION CONTROL BLANKET (WSDTO STD. SPEC 9-14.6(2)) PER WSDOT STANDARD PLAN I-60.10-01. ALL BIODEGRADABLE EROSION CONTROL BLANKETS WILL CONFORM TO WSDOT STD. SPEC. 9-14.6(2)A, REGARDLESS OF SLOPE. THE BLANKET SHALL BE PLACED SO THAT THE UPSTREAM STRIP WILL OVERLAP THE NEXT DOWNSTREAM STRIP. WHEN PLACED ON SLOPES, EACH STRIP SHALL OVERLAP THE NEXT DOWNHILL STRIP. ANCHOR BIODEGRADABLE EROSION CONTROL BLANKET WITH 2" X 4" X 18" WOOD STAKE, RIPPED DIAGONALLY. DRIVE STAKES UNTIL 1"-2" REMAINS ABOVE BLANKET.
3. ROOTWAD PLACEMENT VARIES ALONG THE REVETMENT SUCH THAT THE ROOTWADS DO NOT PROJECT INTO THE CHANNEL UNIFORMLY, I.E. THE DISTANCE FROM THE ROOTWAD TO THE REVETMENT TOE IS NOT CONSTANT. USE STATION, OFFSET, & ELEVATION DATA PROVIDED ON SHEET 42.

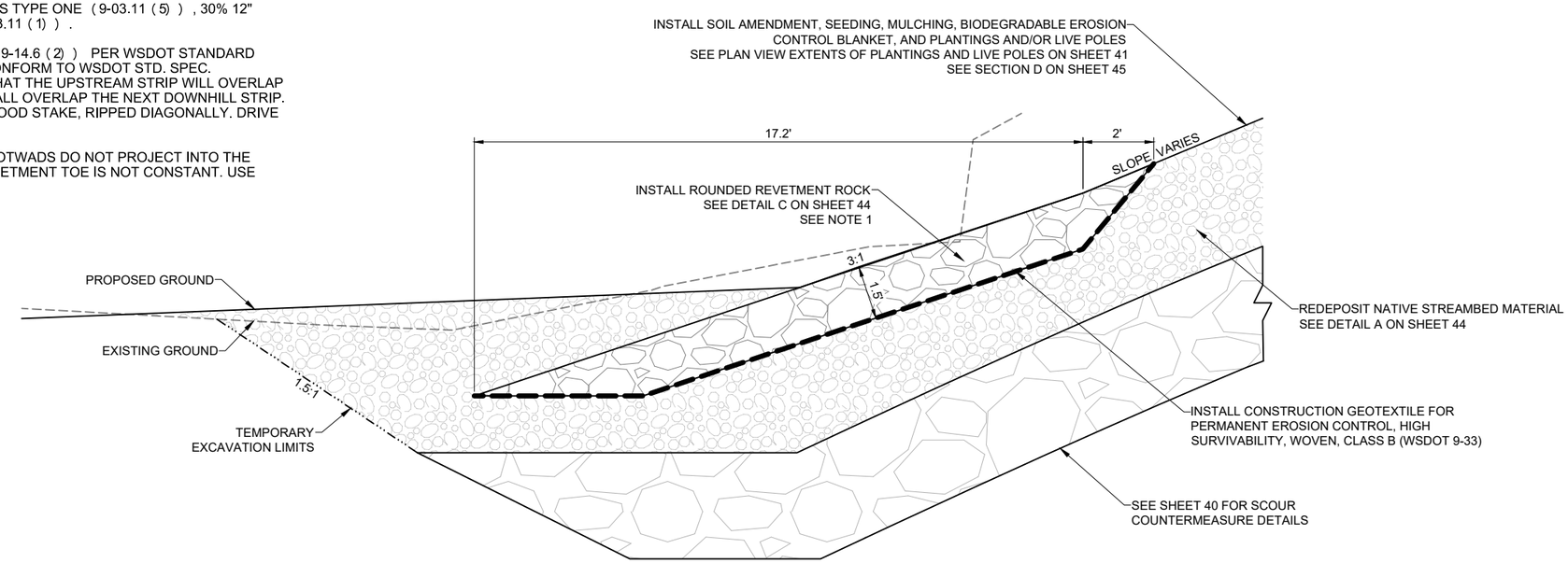

SECTION E - REVETMENT ABOVE SCOUR COUNTERMEASURES

SECTION VIEW — NOT TO SCALE

STA 21+94.30 TO 22+23.20

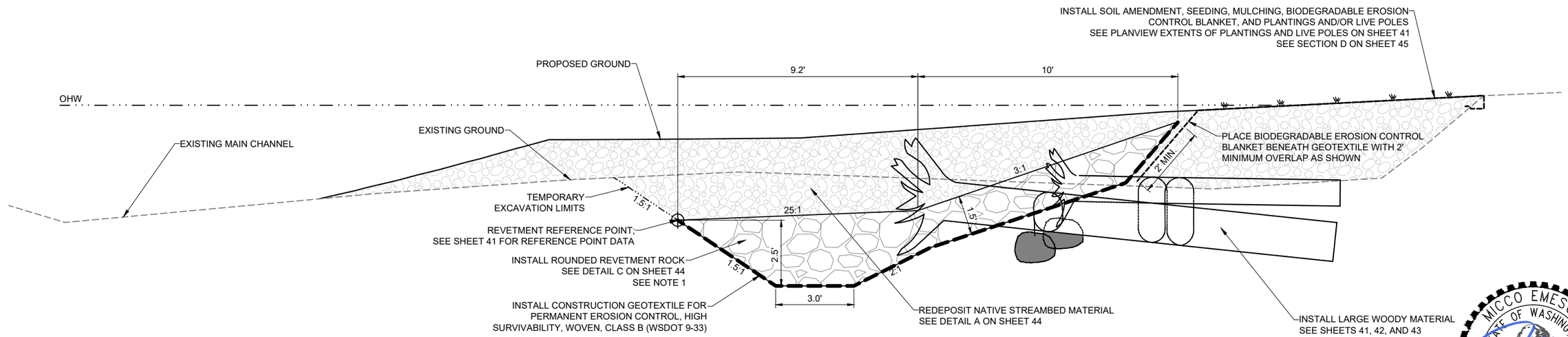

SECTION F - EMBEDDED REVETMENT

SECTION VIEW — NOT TO SCALE

STA 24+79.60 TO 25+63.30

MICCO EMESON — STATE OF WASHINGTON — 21036403 — REGISTERED PROFESSIONAL ENGINEER — 4/23/2026

P:\WWALL00PW0001\0400CAD\SHEETS\WALL00PW0001_SHEET_HYDR_DETAILS.dwg				
DRAWN: RHW				
DESIGNER: RHW				
CHECKED: BJME				
PROJ. ENG.: MAEM				
APPROVED BY:				
4/23/2026	REV DATE	REVISION	BY	APP'D

REGION NO.	STATE	FEDERAL AID PROJECT NO.
10	WASH	BRS-L360(001) TA-7561
JOB NUMBER		
22-03		

DAVID EVANS AND ASSOCIATES INC.
908 N Howard St. Ste 200
Spokane, WA 99201
Phone: 509.927.8097

Walla Walla County

PUBLIC WORKS DEPARTMENT

4/23/2026
PLOT DATE

COUNTY OF WALLA WALLA

WALLULA AVENUE BRIDGE

TYPICAL REVETMENT SECTIONS

SHEET 46
46 OF 47

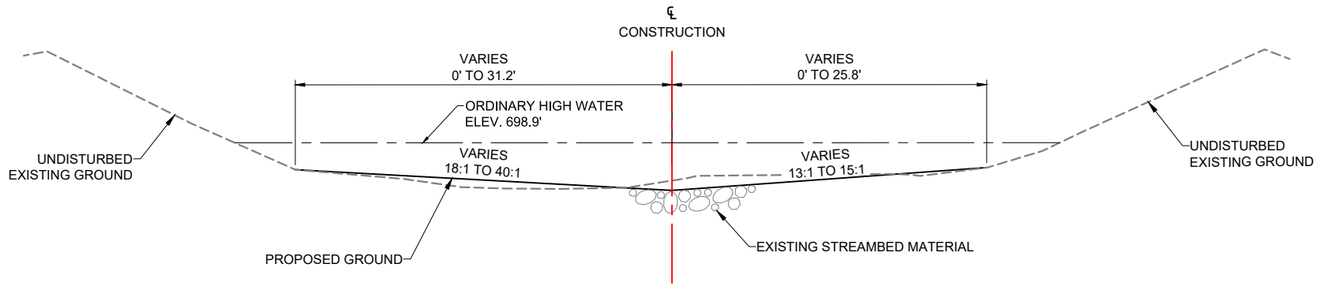

SECTION A - DOWNSTREAM OF BRIDGE

NOT TO SCALE

STA 20+14 TO 21+21

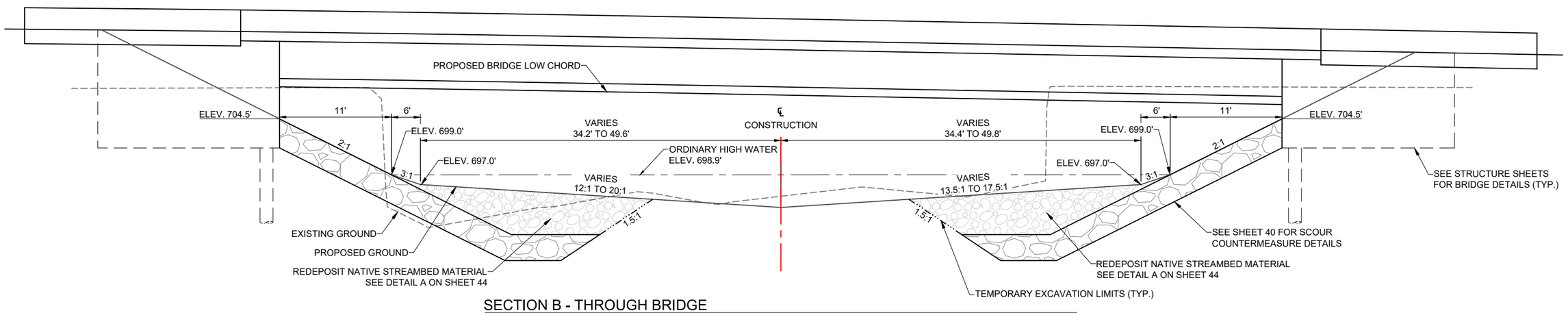

SECTION B - THROUGH BRIDGE

NOT TO SCALE

STA 21+21 TO 22+07

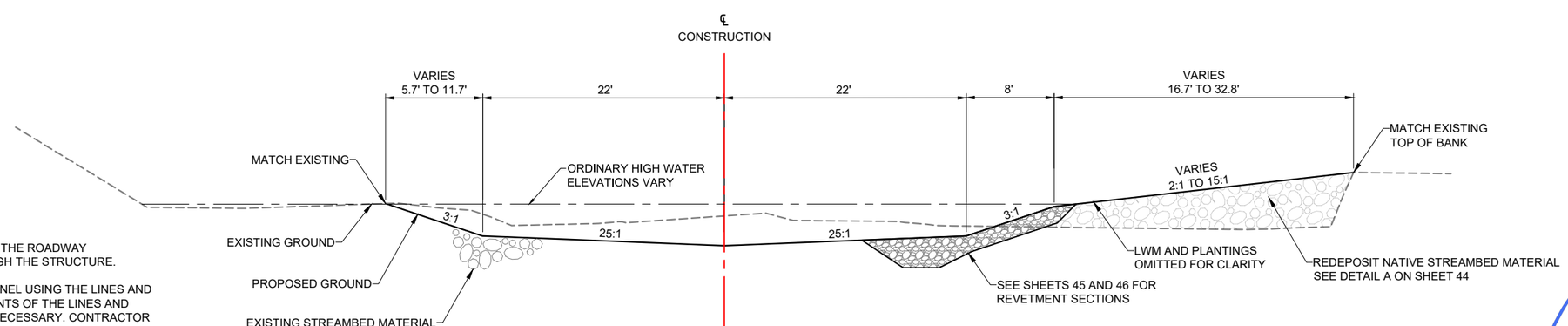

SECTION C - UPSTREAM OF BRIDGE

NOT TO SCALE

STA 22+07 TO 25+88

NOTES:

1. CHANNEL SECTION B IS TAKEN PARALLEL TO THE ROADWAY ALIGNMENT DUE TO CHANNEL SKEW THROUGH THE STRUCTURE.
2. CONTRACTOR SHALL CONSTRUCT THE CHANNEL USING THE LINES AND GRADES INDICATED. SOME FIELD ADJUSTMENTS OF THE LINES AND GRADES FOR THE FINISH GRADING MAY BE NECESSARY. CONTRACTOR SHALL PRODUCE FINISH GRADING THAT IS FREE OF ABRUPT CHANGES IN THE LINES AND GRADES OF THE CHANNEL AND OVERBANK AREAS. CONFIRM ACCEPTABILITY OF FINAL GRADING WITH ENGINEER OR COUNTY REPRESENTATIVE PRIOR TO SOIL AMENDMENTS, SEEDING, AND PERMANENT EROSION CONTROL INSTALLATION.

MICCO EMESON
STATE OF WASHINGTON
4/24/2026
21036403
REGISTERED
PROFESSIONAL ENGINEER

P:\WWALL00PW0001\0400CAD\SHEETS\WALL00PW0001_SHEET_HYDR_SECTIONS.dwg				
DRAWN: RHW				
DESIGNER: RHW				
CHECKED: MAEM				
PROJ. ENG.: MAEM				
APPROVED BY:				
9/17/2025	REV DATE	REVISION	BY	APP'D

REGION NO.	STATE	FEDERAL AID PROJECT NO.
10	WASH	BRS-L360(001) TA-7561
JOB NUMBER		
22-03		

DAVID EVANS AND ASSOCIATES INC.
908 N Howard St. Ste 200
Spokane, WA 99201
Phone: 509.927.9027

Walla Walla County

PUBLIC WORKS DEPARTMENT

4/23/2026
PLOT DATE

COUNTY OF WALLA WALLA

WALLULA AVENUE BRIDGE

TYPICAL STREAM SECTIONS

SHEET
47
47 OF 47

SEC. 27 & 28, T. 7N., R. 35E., W.M.

SURVEY MONUMENT					
POINT #	STATE PLANE NORTHING	STATE PLANE EASTING	PROJECT NORTHING	PROJECT EASTING	DESCRIPTION
1002	269692.48	2165937.45	169712.34	2066096.94	FND BENT NAIL
1004	270600.83	2165890.53	170620.76	2066050.02	FND 4"X5" STONE IN 6"X6" STEEL BOX
1005	269278.06	2165929.65	169297.89	2066089.14	FND 1" IRON PIPE (PINCHED)
1006	269279.58	2165931.15	169299.41	2066090.64	FND 1/2" REBAR W/ YPC (ILLEGIBLE)
1007	269278.74	2165911.28	169298.57	2066070.77	FND 5/8" REBAR W/ YPC (TOMKINS SURVEYING)
1009	269888.14	2165020.90	169908.02	2065180.33	FND 2" IRON PIPE FILLED W/ CONCRETE & RIFLE CASING CONCRETED INSIDE PIPE (135280 PC) IN MONUMENT CASE
1010	269898.06	2165543.23	169917.93	2065702.69	FND 2" ID IRON PIPE FILLED W/ CONCRETE & RIFLE CASING CONCRETED INSIDE PIPE (135800.00 POC) IN MONUMENT CASE
1011	270150.31	2165990.18	170170.20	2066149.67	FND 2" ID IRON PIPE FILLED W/ CONCRETE & RIFLE CASING CONCRETED INSIDE PIPE (136310.61 PT) IN MONUMENT CASE
1012	269667.37	2165899.21	169687.22	2066058.70	FND 5/8" REBAR W/ YPC (TOMKINS SURVEYING)
1013	269798.74	2165339.93	169818.61	2065499.37	FND 5/8" REBAR W/ YPC (TOMKINS SURVEYING)
1014	269824.75	2165010.29	169844.61	2065169.71	FND 5/8" REBAR

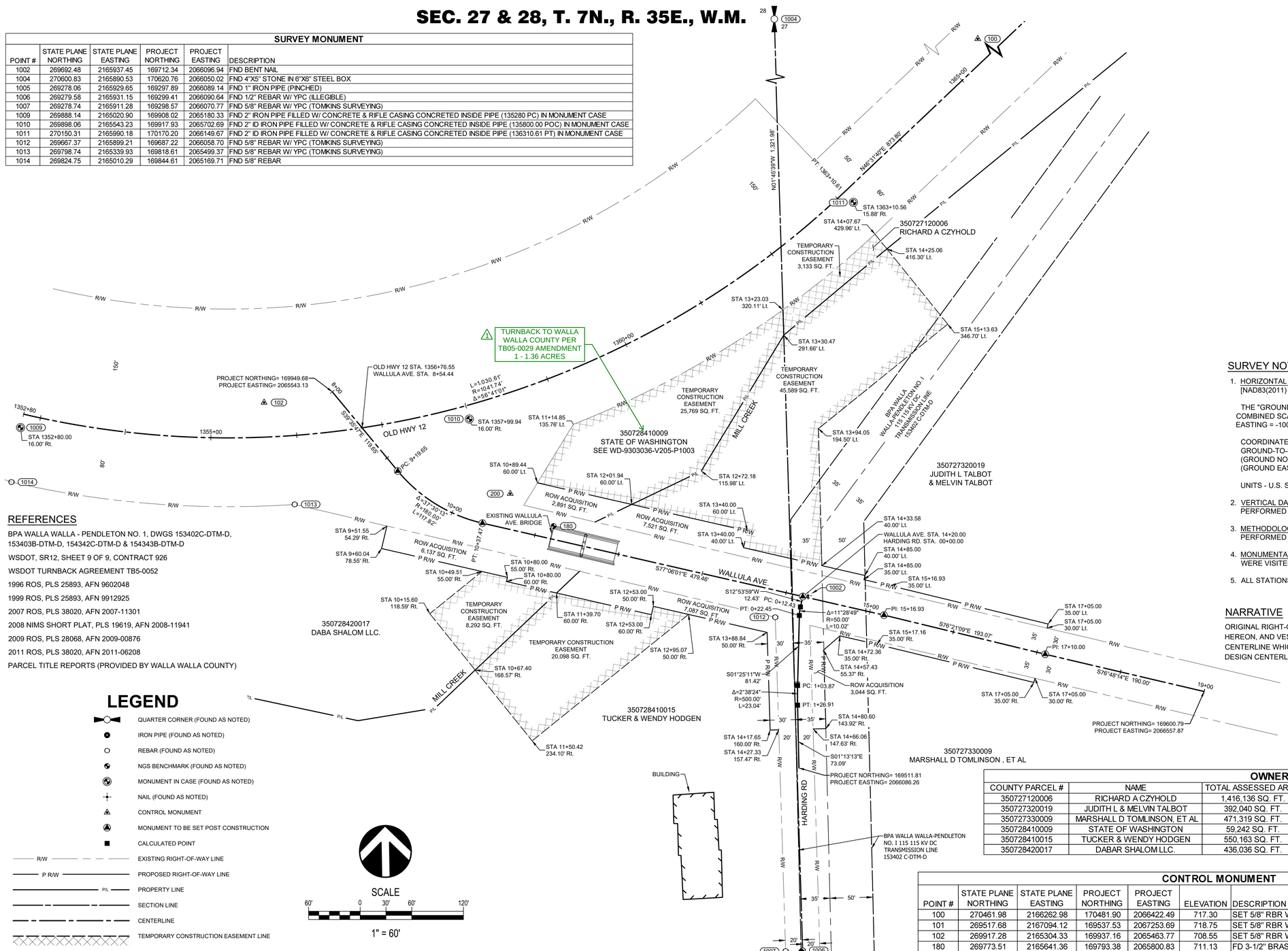

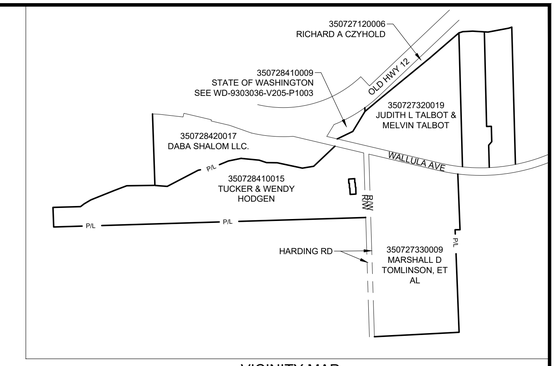

VICINITY MAP

1" = 600'

REFERENCES

BPA WALLA WALLA - PENDLETON NO. 1, DWGS 153402C-DTM-D, 153403B-DTM-D, 154342C-DTM-D & 154343B-DTM-D

WSDOT, SR12, SHEET 9 OF 9, CONTRACT 926

WSDOT TURNBACK AGREEMENT TB5-0052

1996 ROS, PLS 25893, AFN 9602048

1999 ROS, PLS 25893, AFN 9912925

2007 ROS, PLS 38020, AFN 2007-11301

2008 NIMS SHORT PLAT, PLS 19619, AFN 2008-11941

2009 ROS, PLS 28068, AFN 2009-00876

2011 ROS, PLS 38020, AFN 2011-06208

PARCEL TITLE REPORTS (PROVIDED BY WALLA WALLA COUNTY)

LEGEND

- QUARTER CORNER (FOUND AS NOTED)
- IRON PIPE (FOUND AS NOTED)
- REBAR (FOUND AS NOTED)
- NGS BENCHMARK (FOUND AS NOTED)
- MONUMENT IN CASE (FOUND AS NOTED)
- NAIL (FOUND AS NOTED)
- CONTROL MONUMENT
- MONUMENT TO BE SET POST CONSTRUCTION
- CALCULATED POINT
- R/W — EXISTING RIGHT-OF-WAY LINE
- P R/W — PROPOSED RIGHT-OF-WAY LINE
- P/L — PROPERTY LINE
- SECTION LINE
- CENTERLINE
- TEMPORARY CONSTRUCTION EASEMENT LINE

SCALE

60' 0 30' 60' 120'

1" = 60'

SURVEY NOTES

1. HORIZONTAL DATUM: "GROUND" COORDINATES BASED ON WASHINGTRON STATE PLANE, SOUTH ZONE [NAD83(2011) EPOCH 2010.0000]. BASIS OF BEARING IS GRID NORTH.

   THE "GROUND SYSTEM" WAS DEVELOPED BY SCALING STATE PLANE COORDINATES FROM 0,0 USING A COMBINED SCALE FACTOR = 1.000073635, AND THEN APPLYING A FALSE NORTHING = -100000.00 AND A FALSE EASTING = -100000.00.

   COORDINATE CONVERSION EQUATION:
   GROUND-TO-STATE PLANE SCALE FACTOR= 0.99992637 (RECIPROCAL OF 1.000073635)
   (GROUND NORTHING + 100000.000) * 0.99992637= STATE PLANE NORTHING
   (GROUND EASTING + 100000.000) * 0.99992637 = STATE PLANE EASTING

   UNITS - U.S. SURVEY FEET

2. VERTICAL DATUM NAVD-88. A CLOSED LEVEL LOOP THAT ORIGINATING FROM NGS BM SA0180 WAS PERFORMED THROUGH THE CONTROL.

3. METHODOLOGY FIELD MEASUREMENT FOR TOPOGRAPHIC AND BOUNDARY FOR THIS SURVEY WERE PERFORMED USING A TRIMBLE S7 TOTAL STATION, TRIMBLE R10-2 & R12I GPS RECEIVERS.

4. MONUMENTATION VISITATION ALL SURVEY MONUMENTS AND OTHER SURVEY MARKERS SHOWN HEREON WERE VISITED DURING APRIL 2023 UNLESS OTHERWISE INDICATED.

5. ALL STATIONS SHOWN ARE FROM THE DESIGN ALIGNMENT FOR THE WALLULA AVE. BRIDGE.

NARRATIVE

ORIGINAL RIGHT-OF-WAY (RW) WAS RESOLVED FROM RECOVERED RECORD MONUMENTS, REFERENCES LISTED HEREON, AND VESTING DEED DESCRIPTIONS. THE WALLULA AVE CENTERLINE SHOWN HEREON IS THE DESIGN CENTERLINE WHICH VARIES FROM THE ORIGINAL RW CENTERLINE. ALL STATION/OFFSETS ARE RELATIVE TO THE DESIGN CENTERLINE

OWNERSHIPS						
COUNTY PARCEL #	NAME	TOTAL ASSESSED AREA	R/W	PERM. EASMT	TEMP. EASMT	REMAINDER
350727120006	RICHARD A CZYHOLD	1,416,136 SQ. FT.	N/A	N/A	3,133 SQ.FT.	1,416,136 SQ. FT.
350727320019	JUDITH L & MELVIN TALBOT	392,040 SQ. FT.	7,521 SQ. FT.	N/A	45,589 SQ. FT.	384,519 SQ. FT.
350727330009	MARSHALL D TOMLINSON, ET AL	471,319 SQ. FT.	3,044 SQ. FT.	N/A	N/A	468,275 SQ. FT.
350728410009	STATE OF WASHINGTON	59,242 SQ. FT.	2,891 SQ. FT.	N/A	25,769 SQ. FT.	56,351 SQ. FT.
350728410015	TUCKER & WENDY HODGEN	550,163 SQ. FT.	7,087 SQ. FT.	N/A	20,098 SQ. FT.	543,076 SQ. FT.
350728420017	DABAR SHALOM LLC.	436,036 SQ. FT.	6,137 SQ. FT.	N/A	8,292 SQ. FT.	429,899 SQ. FT

CONTROL MONUMENT						
POINT #	STATE PLANE NORTHING	STATE PLANE EASTING	PROJECT NORTHING	PROJECT EASTING	ELEVATION	DESCRIPTION
100	270461.98	2166262.98	170481.90	2066422.49	717.30	SET 5/8" RBR W/ 2-1/2" ALUMINUM CAP STAMPED (DEA CONTROL 100 2023)
101	269517.68	2167094.12	169537.53	2067253.69	718.75	SET 5/8" RBR W/ 2-1/2" ALUMINUM CAP STAMPED (DEA CONTROL 101 2023)
102	269917.28	2165304.33	169937.16	2065463.77	708.55	SET 5/8" RBR W/ 2-1/2" ALUMINUM CAP STAMPED (DEA CONTROL 100 2023)
180	269773.51	2165641.36	169793.38	2065800.83	711.13	FD 3-1/2" BRASS CAP STAMPED (WALLA WALLA COUNTY EL. 708.54)
200	269811.15	2165590.82	169831.01	2065750.28	705.28	FND 5/8" REBAR W/ RPC STAMPED (TETRATECH SURVEY CONTROL)

06/09/2025

P:\W\WALL00PW0001\0400CAD\BASES\RIGHT-OF-WAY\WALL00PW0001_SV_RW.dwg

DRAWN: DHM	05/06/2026	WSDOT TURN BACK	DLP	GCBA
DESIGNER: DHM				
CHECKED: DLP				
PROJ. ENG.:				
APPROVED BY: GCB				
6/5/2025	REV DATE	REVISION	BY	APP'D

REGION NO.	STATE	FEDERAL AID PROJECT NO.
10	WASH	BRS-L360 (001) TA-7561
JOB NUMBER		
CRP 22-03		

DAVID EVANS AND ASSOCIATES INC.
908 N Howard St. Ste 300
Spokane, WA 99201
Phone: 509.327.8697

Walla Walla County

PUBLIC WORKS DEPARTMENT

6/5/2025
PLOT DATE

WALLULA AVE. BRIDGE REPLACEMENT

RIGHT OF WAY PLAN

SHEET 1
1 OF 1

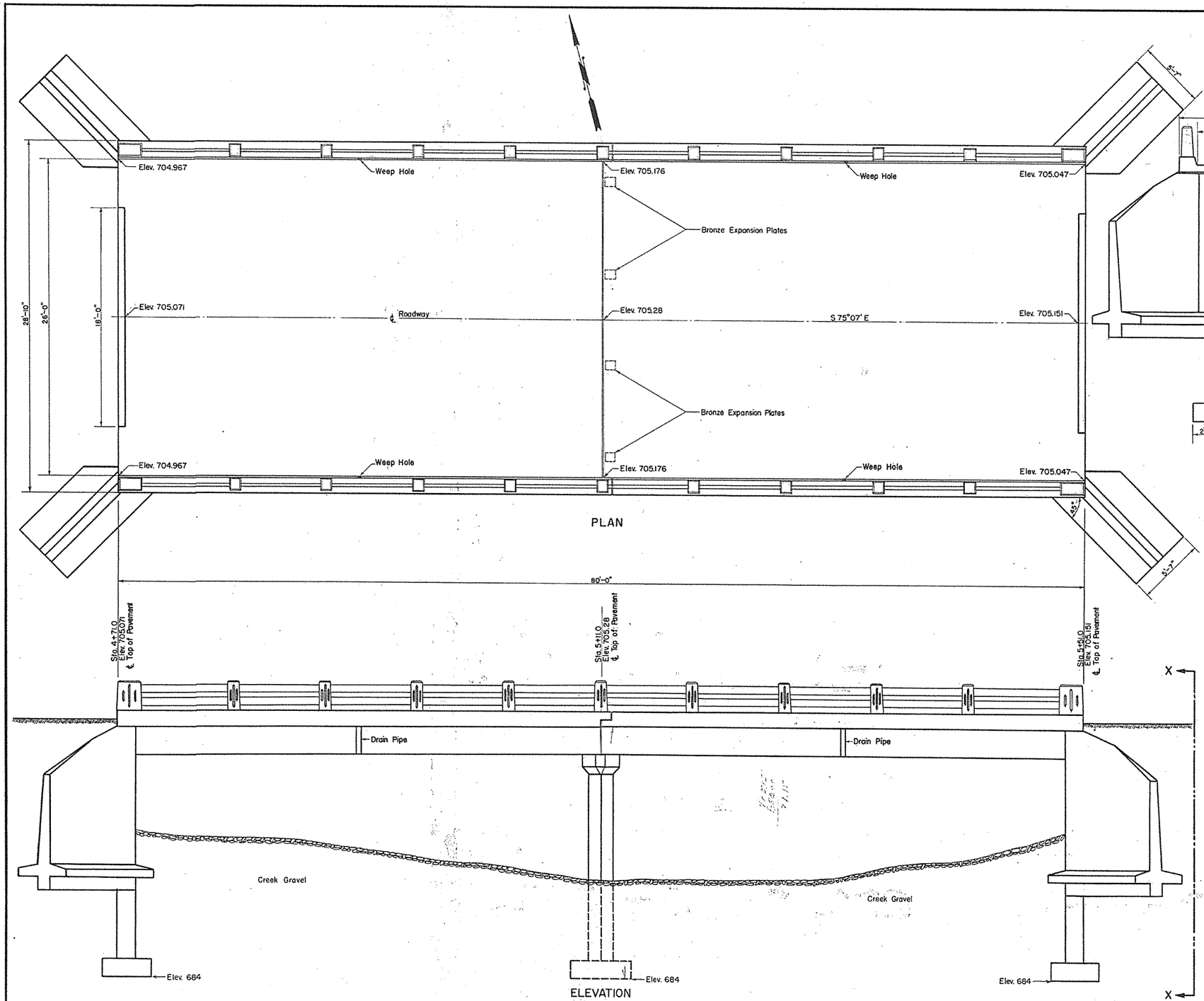

NOTE:
Date Numerals & County Markings
To be Furnished by the County Engineer.

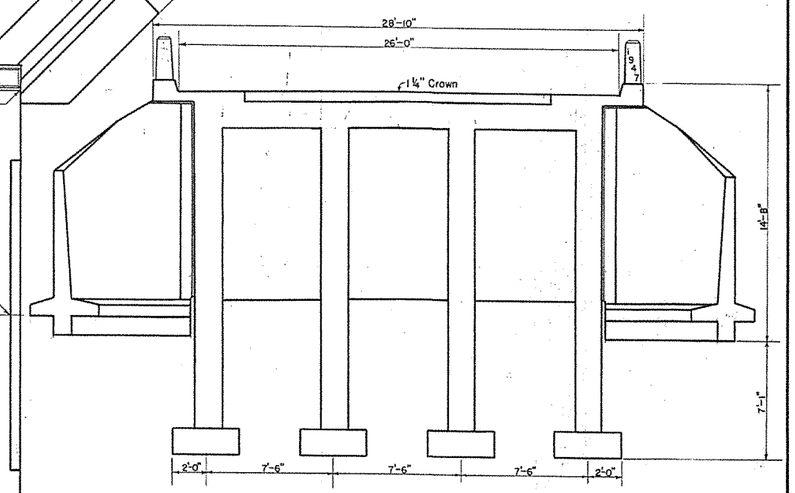

END ELEVATION
X-X

APPROXIMATE QUANTITIES

Structural Excavation	190	Cu. Yds.
Concrete Class "A"	134.5	Cu. Yds.
Concrete Class "B"	25.5	Cu. Yds.
Concrete Class "F"	15.0	Cu. Yds.
Steel Reinforcing Bars in Place	48,740	Pounds
Bridge Drains	4	Only
Handrail Posts and Timber Rails	160	Lin. Feet
Expansion Plates	8	Only

NOTES:

The approximate quantities of the structural excavation has been computed to vertical planes one foot outside of and parallel to the neat lines of the footings. Measurement of structural excavation will be as provided in article 45-4 of Standard Specifications.

The above items to be the only pay items for the erection of this structure; the mastic, one angle iron and bolts for column shield, placing of numerals in end posts to be included in the above item bid prices.

	BY	DATE
DESIGNED	B.L.S.	4-28-47
DETAILED	M.L.S.	" "
TRACED	O.D.S.	" "
CHECKED	B.L.S. M.E.S.	O.D.S.

LOADING
H-20-44

COUNTY ROAD PROJECT No. 129
WALLULA AVE. BRIDGE
MILL CREEK
WALLA WALLA COUNTY
OFFICE COUNTY ENGINEER
WALLA WALLA, WASHINGTON
SCALE: ¼"=1'-0"
APPROVED APRIL 28 1947
B. Loyal Smith
COUNTY ROAD ENGINEER
SHEET 1 OF 5 SHEETS

B. LOYAL SMITH
STATE OF WASHINGTON
REGISTERED
PROFESSIONAL ENGINEER

REV. July 29, 1947 — Handrail Change B.L.S.

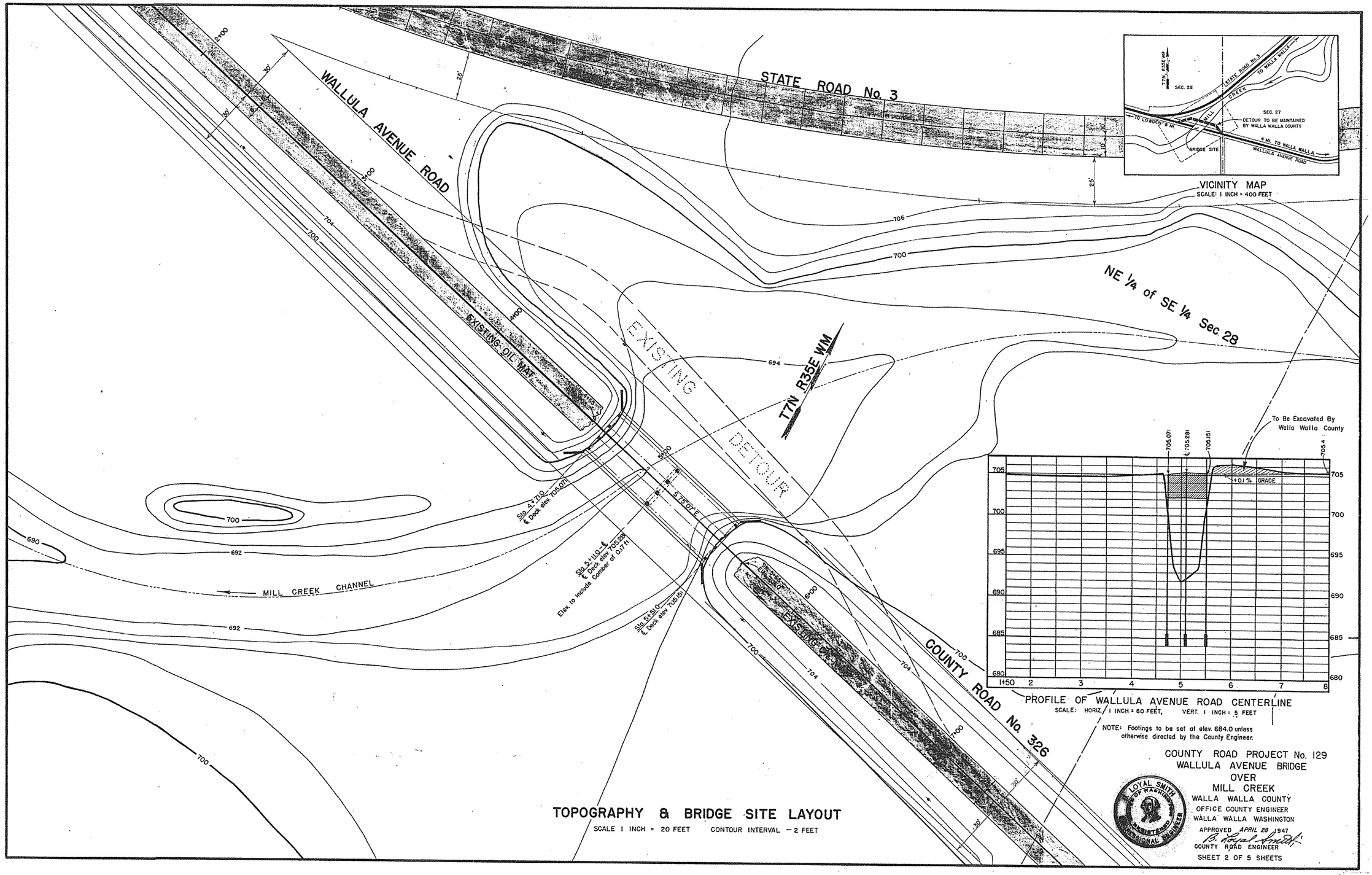
STATE ROAD No. 3
WALLULA AVENUE ROAD
EXISTING OIL MAT
EXISTING DETOUR
T7N R35E WM
NE 1/4 of SE 1/4 Sec. 28
MILL CREEK CHANNEL
COUNTY ROAD No. 326
S 75°07' E
Sta. 4+71.0 ℄ Deck elev. 705.071
Sta. 5+11.0 ℄ Deck elev. 705.281 Elev. to include Camber of 0.21 ft
Sta. 5+51.0 ℄ Deck elev. 705.151
To Be Excavated By Walla Walla County
+0.1 % GRADE
VICINITY MAP
SCALE: 1 INCH = 400 FEET
T7N, R35E WM
SEC. 28
SEC. 27
STATE ROAD No. 3
TO WALLA WALLA
MILL CREEK
TO LOWDEN 8 MI.
DETOUR TO BE MAINTAINED BY WALLA WALLA COUNTY
BRIDGE SITE
4 MI. TO WALLA WALLA
WALLULA AVENUE ROAD
PROFILE OF WALLULA AVENUE ROAD CENTERLINE
SCALE: HORIZ. 1 INCH = 80 FEET, VERT. 1 INCH = 5 FEET
NOTE: Footings to be set at elev. 684.0 unless otherwise directed by the County Engineer.
COUNTY ROAD PROJECT No. 129
WALLULA AVENUE BRIDGE
OVER
MILL CREEK
WALLA WALLA COUNTY
OFFICE COUNTY ENGINEER
WALLA WALLA WASHINGTON
APPROVED APRIL 28 1947
COUNTY ROAD ENGINEER
SHEET 2 OF 5 SHEETS
LOYAL SMITH STATE OF WASHINGTON REGISTERED PROFESSIONAL ENGINEER
TOPOGRAPHY & BRIDGE SITE LAYOUT
SCALE 1 INCH = 20 FEET CONTOUR INTERVAL — 2 FEET
SURVEYED
PLOTTED
TRACED
CHECKED
NOTE BOOK NO. 592
BY L.S.
DATE 1-15-47
1-16-47
1-18-47

2283 F-28

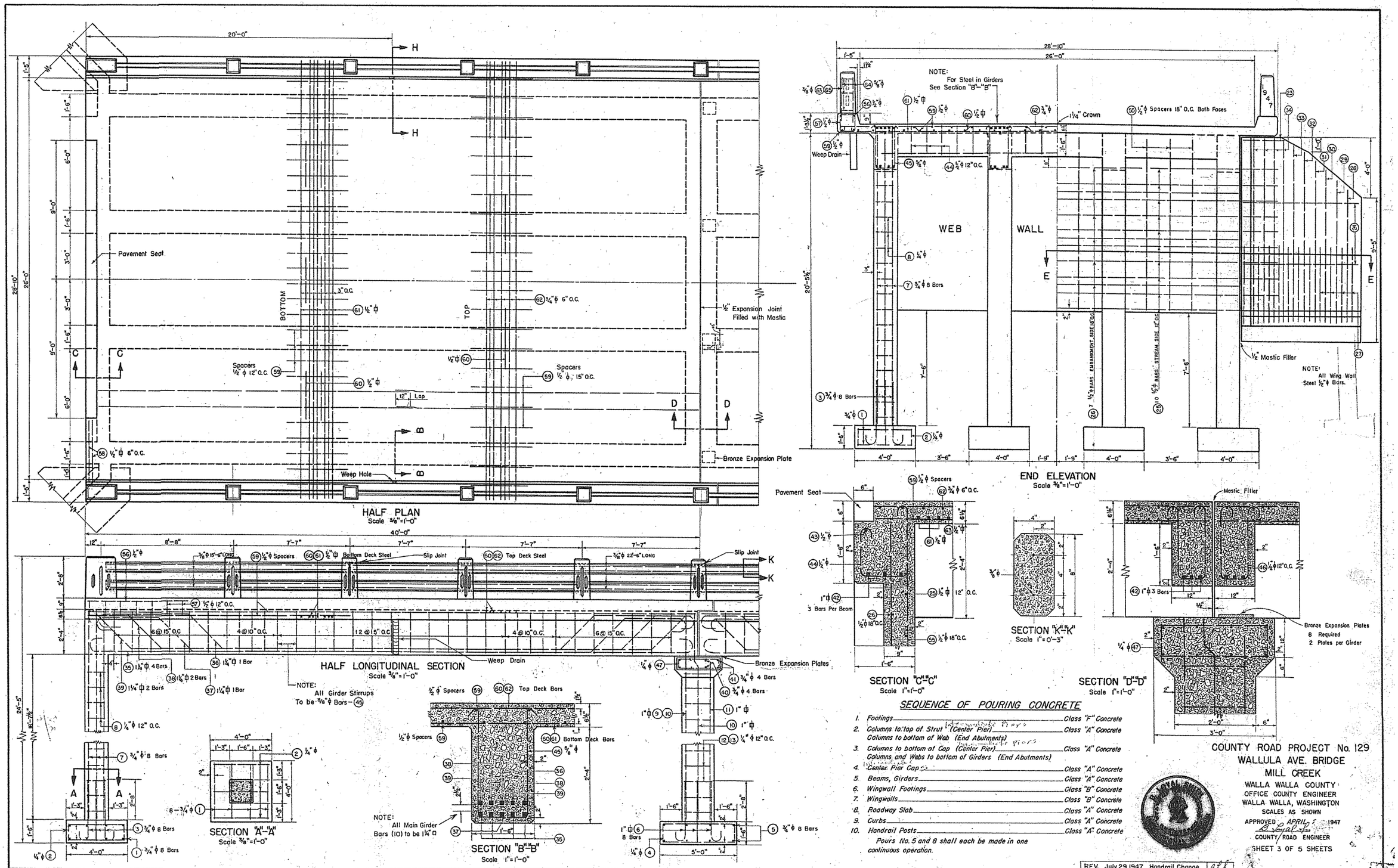

SEQUENCE OF POURING CONCRETE

1. Footings ____ Class "F" Concrete
2. Columns to top of Strut (Center Pier) ____ Class "A" Concrete
   Columns to bottom of Web (End Abutments)
3. Columns to bottom of Cap (Center Pier) ____ Class "A" Concrete
   Columns and Webs to bottom of Girders (End Abutments)
4. Center Pier Cap ____ Class "A" Concrete
5. Beams, Girders ____ Class "A" Concrete
6. Wingwall Footings ____ Class "B" Concrete
7. Wingwalls ____ Class "B" Concrete
8. Roadway Slab ____ Class "A" Concrete
9. Curbs ____ Class "A" Concrete
10. Handrail Posts ____ Class "A" Concrete

Pours No. 5 and 8 shall each be made in one continuous operation.

COUNTY ROAD PROJECT No. 129
WALLULA AVE. BRIDGE
MILL CREEK
WALLA WALLA COUNTY
OFFICE COUNTY ENGINEER
WALLA WALLA, WASHINGTON
SCALES AS SHOWN
APPROVED APRIL 7 1947
COUNTY ROAD ENGINEER
SHEET 3 OF 5 SHEETS

REV. July 29, 1947 Handrail Change

	BY	DATE
DESIGNED	B.L.S.	4-28-47
DETAILED	M.E.S.	"
TRACED	O.D.S.	"
CHECKED	B.L.S. M.E.S. O.D.S.	"

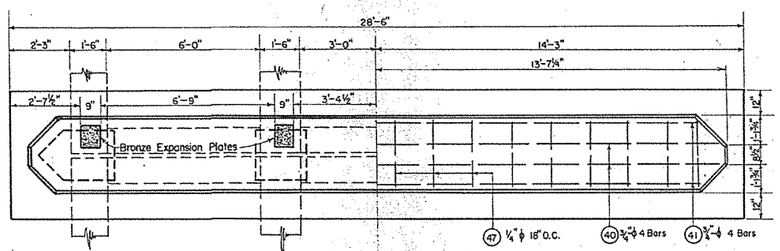

PLAN OF CENTER PIER
Scale ⅜"=1'-0"

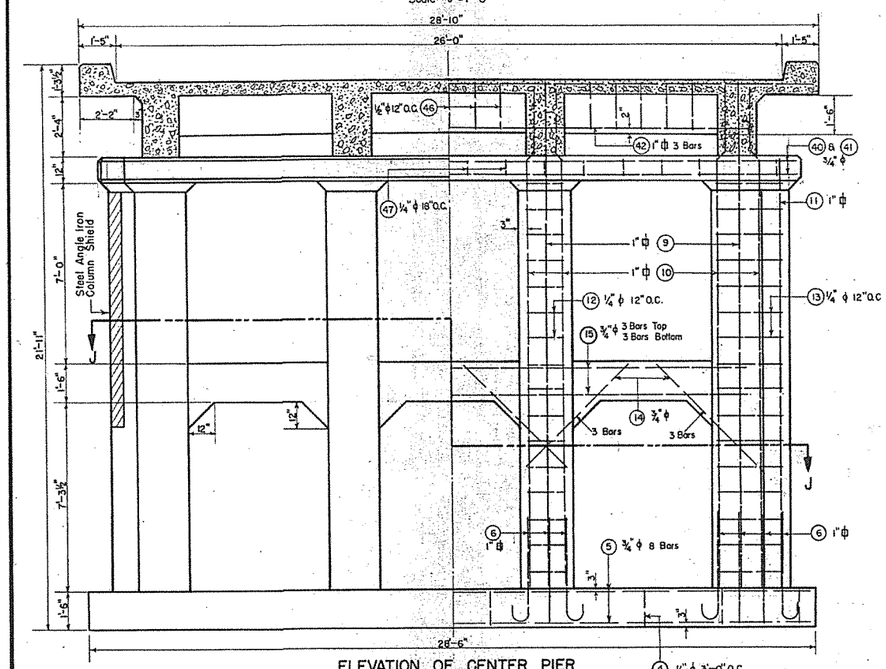

ELEVATION OF CENTER PIER
Scale ⅜"=1'-0"

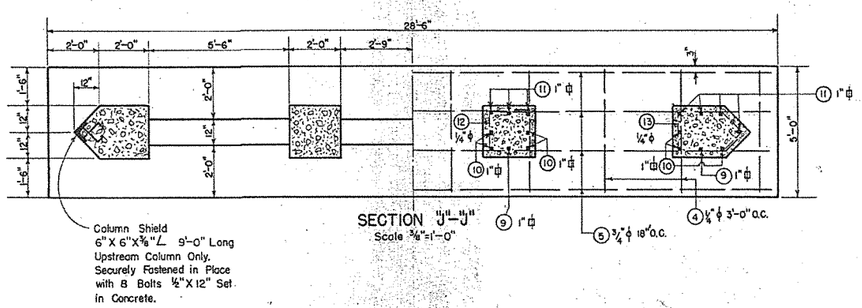

Column Shield 6"X6"X⅜" L 9'-0" Long Upstream Column Only. Securely Fastened in Place with 8 Bolts ½"X12" Set in Concrete.

SECTION "J"-"J"
Scale ⅜"=1'-0"

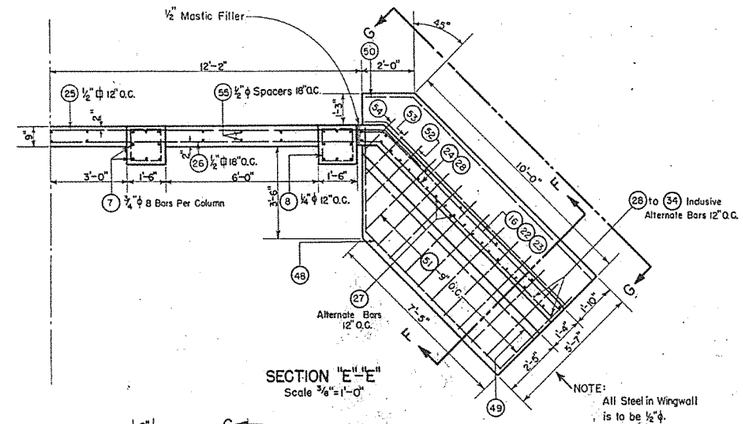

SECTION "E"-"E"
Scale ⅜"=1'-0"

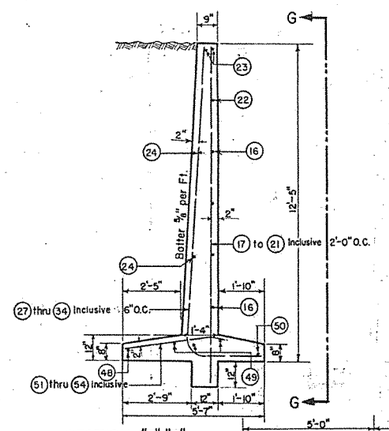

SECTION "F"-"F"
Scale ⅜"=1'-0"

NOTE: All Steel in Above View ½"φ.

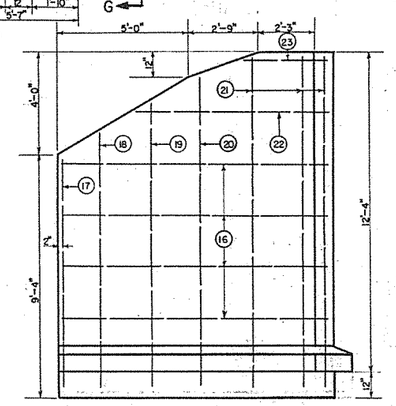

SECTION "G"-"G"
Scale ⅜"=1'-0"

NOTE: All Steel in Above View ½"φ. Steel in Stream Face 2'-0" O.C. in Both Directions.

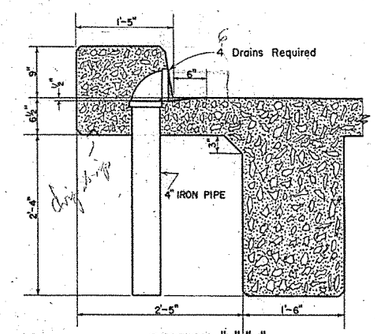

SECTION "H"-"H"
Scale 1"=1'-0"

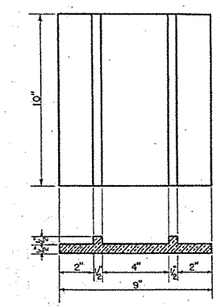

EXPANSION PLATES
Scale 3"=1'-0"

Bronze Expansion Plates as per Washington State Highway Specification No. 53-2.05

8 Required

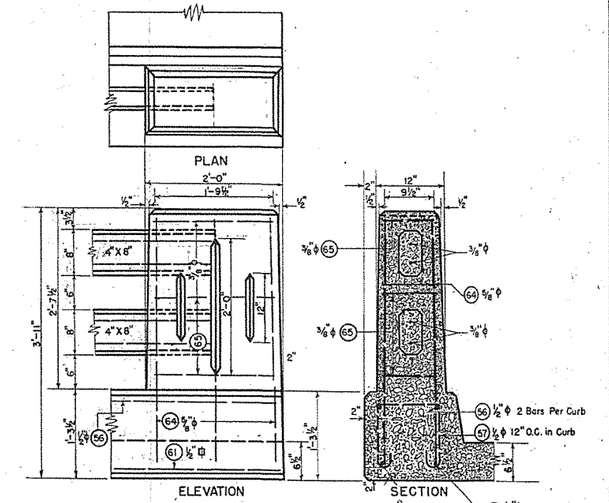

END POST
Scale 1"=1'-0"

NOTE: On Posts indicated as Slip Joints, the Concrete Rails will be wrapped with Mastic. 1" will be provided as expansion space between ends of Concrete Rails.

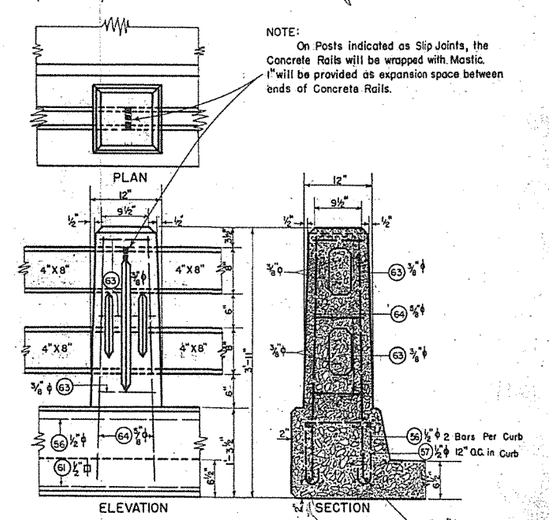

GUARD RAIL POST
Scale 1"=1'-0"

DESIGNED	BY	DATE
DETAILED	B.L.S.	4-29-47
TRACED	M.E.S.	"
CHECKED	O.D.S.	"
	B.L.S. M.E.S. O.D.S.	"

COUNTY ROAD PROJECT No. 129
WALLULA AVE. BRIDGE
MILL CREEK
WALLA WALLA COUNTY
OFFICE COUNTY ENGINEER
WALLA WALLA, WASHINGTON
SCALES AS SHOWN
APPROVED APRIL 28 1947
B. Loyal Smith
COUNTY ROAD ENGINEER

B. LOYAL SMITH STATE OF WASHINGTON REGISTERED ENGINEER

SHEET 4 OF 5 SHEETS

REV. July 29, 1947 Handrail Change

F-30

BAR LIST

MARK	LOCATION	NO.	SIZE	LENGTH	BENDING DIAGRAM
1	End Pier Footing	64	3/4" ϕ	3'-8"	Straight
2	" " "	24	1/4" ϕ	9'-10"	
3	" " "	64	3/4" ϕ	4'-9"	
4	Center Pier Footing	10	1/4" ϕ	11'-10"	
5	" " "	8	3/4" ϕ	28'-0"	Straight
6	" " "	32	1" ϕ	5'-0"	
7	End Columns	64	3/4" ϕ	18'-9"	Straight
8	" "	128	1/4" ϕ	5'-4"	
9	Center Columns	4	1" ϕ	18'-9"	Straight
10	" "	14	1" ϕ	18'-9"	
11	" "	14	1" ϕ	16'-3"	Straight
12	" "	32	1/4" ϕ	7'-4"	
13	" "	32	1/4" ϕ	8'-0"	
14	Knee Bracing	18	3/4" ϕ	5'-6"	Straight
15	Cross Beam	6	3/4" ϕ	24'-0"	"
16	Wing Wall	16	1/2" ϕ	10'-7"	
17	" "	4	1/2" ϕ	9'-0"	Straight
18	" "	4	1/2" ϕ	9'-9"	"
19	" "	4	1/2" ϕ	11'-0"	"
20	" "	4	1/2" ϕ	12'-0"	"
21	" "	12	1/2" ϕ	12'-9"	"
22	" "	4	1/2" ϕ	7'-8"	
23	" "	8	1/2" ϕ	3'-6"	
24	" "	12	1/2" ϕ	10'-3"	
25	Web - End Abutment	40	1/2" ϕ	15'-10"	
26	" " "	14	1/2" ϕ	23'-6"	Straight
27	Wing Wall	44	1/2" ϕ	7'-10"	
28	" "	4	1/2" ϕ	11'-8"	
29	" "	4	1/2" ϕ	12'-3"	
30	" "	4	1/2" ϕ	12'-10"	
31	" "	4	1/2" ϕ	13'-5"	
32	" "	4	1/2" ϕ	13'-11"	
33	" "	4	1/2" ϕ	14'-4"	
34	" "	16	1/2" ϕ	14'-10"	
35	Girder	32	1 1/4" ϕ	42'-2"	
36	"	8	1 1/4" ϕ	43'-6"	

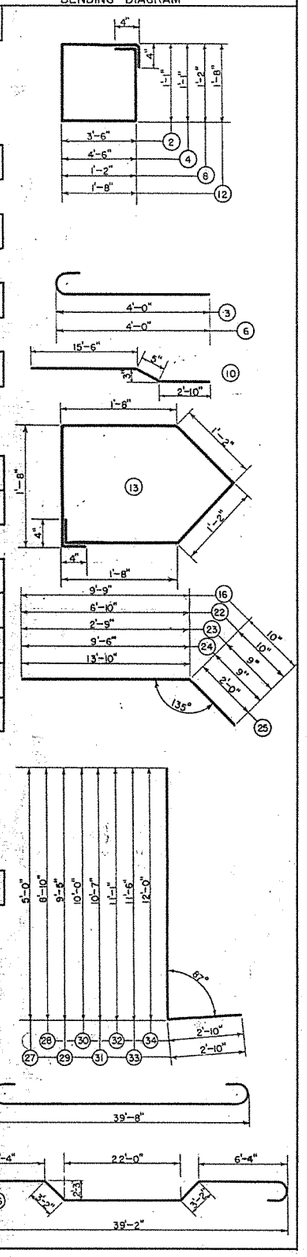

MARK	LOCATION	NO.	SIZE	LENGTH	BENDING DIAGRAM
37	Girder	8	1 1/4" ϕ	43'-0"	
38	"	16	1 1/4" ϕ	43'-6"	
39	"	16	1 1/4" ϕ	43'-6"	
40	Center Pier Cap	4	3/4" ϕ	27'-0"	Straight
41	" " "	4	3/4" ϕ	25'-0"	"
42	Cross Beam Over Piers	12	1" ϕ	25'-6"	
43	End Pier Cross Beam	2	1/2" ϕ	22'-6"	Straight
44	" " " "	30	1/2" ϕ	5'-2"	
45	Girder	264	5/8" ϕ	7'-8"	
46	Center Pier Cross Beam	30	1/2" ϕ	5'-2"	
47	Center Pier Caps	18	1/4" ϕ	7'-4"	
48	Wing Wall	4	1/2" ϕ	11'-6"	
49	" "	8	1/2" ϕ	9'-3"	Straight
50	" "	4	1/2" ϕ	11'-0"	
51	" "	44	1/2" ϕ	4'-0"	Straight
52	" "	4	1/2" ϕ	3'-0"	"
53	" "	4	1/2" ϕ	2'-5"	"
54	" "	4	1/2" ϕ	1'-7"	"
55	Web - End Abutment	36	1/2" ϕ	11'-3"	"
56	Curb	16	1/2" ϕ	21'-3"	"
57	"	164	1/2" ϕ	3'-10"	
58	Top Deck Ends	8	1/2" ϕ	5'-0"	Straight
59	Longitudinal Deck (Top and Bottom)	200	1/2" ϕ	20'-6"	"
60	Top & Bottom of Deck	76	1/2" ϕ	30'-3"	
61	Bottom Deck	224	1/2" ϕ	28'-6"	Straight
62	Top Deck	158	3/4" ϕ	30'-0"	
63	Guard Rail Post	54	3/8" ϕ	3'-4"	
64	" " "	96	5/8" ϕ	3'-6"	Straight
65	End Guard Rail Post	12	3/8" ϕ	5'-4"	

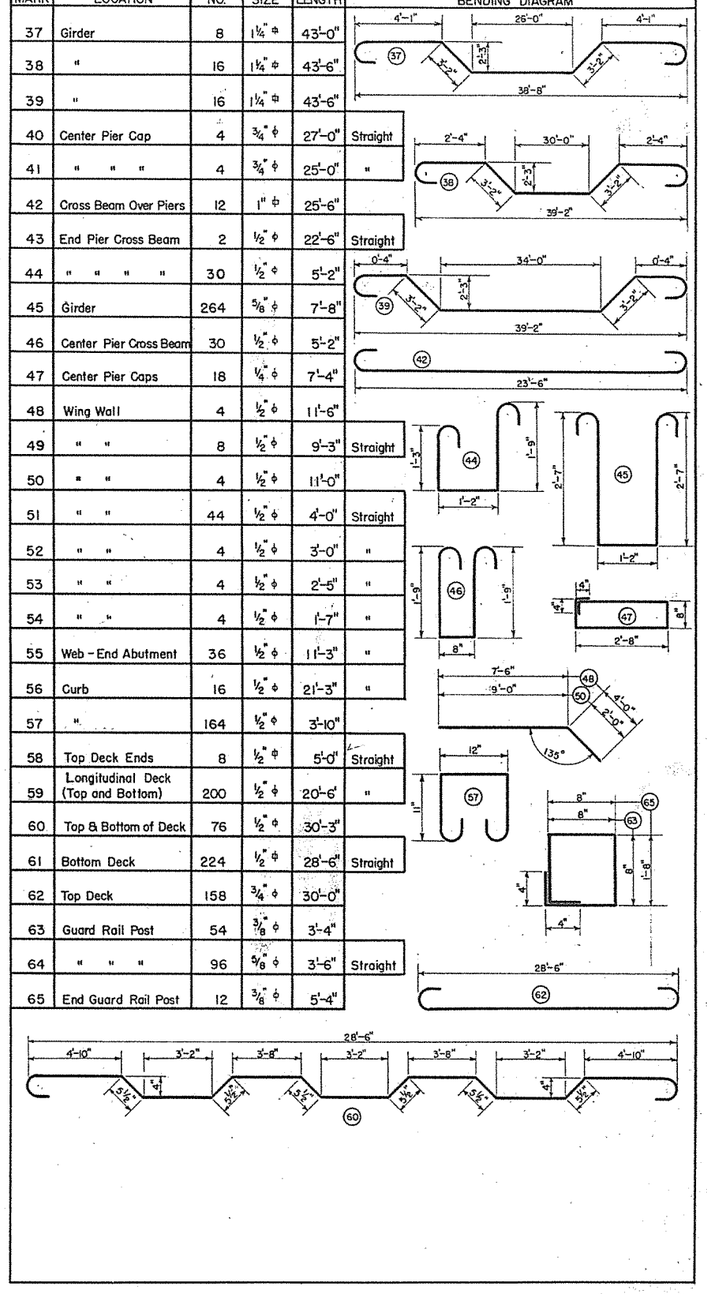

GENERAL NOTES

All material and workmanship shall be in accordance with the requirements of the "Standard Specifications for Road & Bridge Construction" dated January 1941, Department of Highways, State of Washington, together with all current amendments thereto.

Footing Elevations are subject to change depending upon the foundation material encountered, exact footing elevation to be determined in the field by the County Engineer.

Concrete in all footings of this bridge shall be of Class "F."

Concrete in Wingwalls shall be of Class "B."

All other Concrete shall be of Class "A".

All reinforcing steel in this structure shall be of STRUCTURAL grade.

Shear Keys of 2" by 8" material on 1'-4" centers for the width of beams and girders shall be provided at all construction joints between Girders and Slab; and between Beams and Slab. Shear Keys of suitable size shall be provided at all cold construction joints.

All exposed corners shall be chamfered three fourths (3/4") inch.

The thickness of Concrete cover over main reinforcement bars shall be 2" except as otherwise noted on these plans. The minimum cover over stirrups and ties shall be 1".

All falsework shall be released prior to the placing of the concrete Handrail Posts.

	BY	DATE
DESIGNED	R.L.S.	4-28-47
DETAILED	M.E.S.	"
TRACED	O.D.S.	"
CHECKED	R.L.S. M.E.S. O.D.S.	"

COUNTY ROAD PROJECT No. 129
WALLULA AVE. BRIDGE
MILL CREEK
WALLA WALLA COUNTY
OFFICE COUNTY ENGINEER
WALLA WALLA, WASHINGTON
SCALES AS SHOWN
APPROVED APRIL 28, 1947
B. Loyal Smith
COUNTY ROAD ENGINEER
SHEET 5 OF 5 SHEETS

B. LOYAL SMITH STATE OF WASHINGTON REGISTERED PROFESSIONAL ENGINEER