PROJECT LICENSED PROFESSIONAL CERTIFICATES

Craig Boone 06/18/2026 AS A LICENSED PROFESSIONAL IN DIRECT RESPONSIBLE CHARGE OF DEVELOPING THIS CONTRACT, I CERTIFY THAT ALL PLANS THAT CONTAIN MY STAMP HAVE BEEN DEVELOPED UNDER MY SUPERVISION.	Alireza Mahmoudi 06/18/2026 AS A LICENSED PROFESSIONAL IN DIRECT RESPONSIBLE CHARGE OF DEVELOPING THIS CONTRACT, I CERTIFY THAT ALL PLANS THAT CONTAIN MY STAMP HAVE BEEN DEVELOPED UNDER MY SUPERVISION.	AS A LICENSED PROFESSIONAL IN DIRECT RESPONSIBLE CHARGE OF DEVELOPING THIS CONTRACT, I CERTIFY THAT ALL PLANS THAT CONTAIN MY STAMP HAVE BEEN DEVELOPED UNDER MY SUPERVISION.	AS A LICENSED PROFESSIONAL IN DIRECT RESPONSIBLE CHARGE OF DEVELOPING THIS CONTRACT, I CERTIFY THAT ALL PLANS THAT CONTAIN MY STAMP HAVE BEEN DEVELOPED UNDER MY SUPERVISION.
AS A LICENSED PROFESSIONAL IN DIRECT RESPONSIBLE CHARGE OF DEVELOPING THIS CONTRACT, I CERTIFY THAT ALL PLANS THAT CONTAIN MY STAMP HAVE BEEN DEVELOPED UNDER MY SUPERVISION.	AS A LICENSED PROFESSIONAL IN DIRECT RESPONSIBLE CHARGE OF DEVELOPING THIS CONTRACT, I CERTIFY THAT ALL PLANS THAT CONTAIN MY STAMP HAVE BEEN DEVELOPED UNDER MY SUPERVISION.	AS A LICENSED PROFESSIONAL IN DIRECT RESPONSIBLE CHARGE OF DEVELOPING THIS CONTRACT, I CERTIFY THAT ALL PLANS THAT CONTAIN MY STAMP HAVE BEEN DEVELOPED UNDER MY SUPERVISION.	AS A LICENSED PROFESSIONAL IN DIRECT RESPONSIBLE CHARGE OF DEVELOPING THIS CONTRACT, I CERTIFY THAT ALL PLANS THAT CONTAIN MY STAMP HAVE BEEN DEVELOPED UNDER MY SUPERVISION.
AS A LICENSED PROFESSIONAL IN DIRECT RESPONSIBLE CHARGE OF DEVELOPING THIS CONTRACT, I CERTIFY THAT ALL PLANS THAT CONTAIN MY STAMP HAVE BEEN DEVELOPED UNDER MY SUPERVISION.	AS A LICENSED PROFESSIONAL IN DIRECT RESPONSIBLE CHARGE OF DEVELOPING THIS CONTRACT, I CERTIFY THAT ALL PLANS THAT CONTAIN MY STAMP HAVE BEEN DEVELOPED UNDER MY SUPERVISION.	AS A LICENSED PROFESSIONAL IN DIRECT RESPONSIBLE CHARGE OF DEVELOPING THIS CONTRACT, I CERTIFY THAT ALL PLANS THAT CONTAIN MY STAMP HAVE BEEN DEVELOPED UNDER MY SUPERVISION.	AS A LICENSED PROFESSIONAL IN DIRECT RESPONSIBLE CHARGE OF DEVELOPING THIS CONTRACT, I CERTIFY THAT ALL PLANS THAT CONTAIN MY STAMP HAVE BEEN DEVELOPED UNDER MY SUPERVISION.

NOTES:

1. THIS PLAN SET WAS DEVELOPED ELECTRONICALLY UNDER THE DIRECT SUPERVISION OF THE LICENSED PROFESSIONALS THAT HAVE AFFIXED THEIR SIGNATURE TO THIS PAGE.
2. THIS SHEET SERVES AS THE CERTIFICATION BY THE ABOVE LICENSED PROFESSIONALS OF ALL SHEETS IN THIS PLAN SET WHERE THEIR STAMPS AND SIGNATURES APPEAR.

KEY NOTES:

1. SEE "PLATE DETAILS" ON BRIDGE SHEET BG7 EDGE BAR REQUIREMENTS AT PANELS P1 AND P30.
2. ALL ANCHOR BARS SHALL BE SHOP-DRILLED AT LOCATIONS SHOWN IN THE GRID DECK DETAILS ON THIS SHEET.
3. ASSUMES BOLT TO BE TENSIONED FROM UNDER STRINGER.

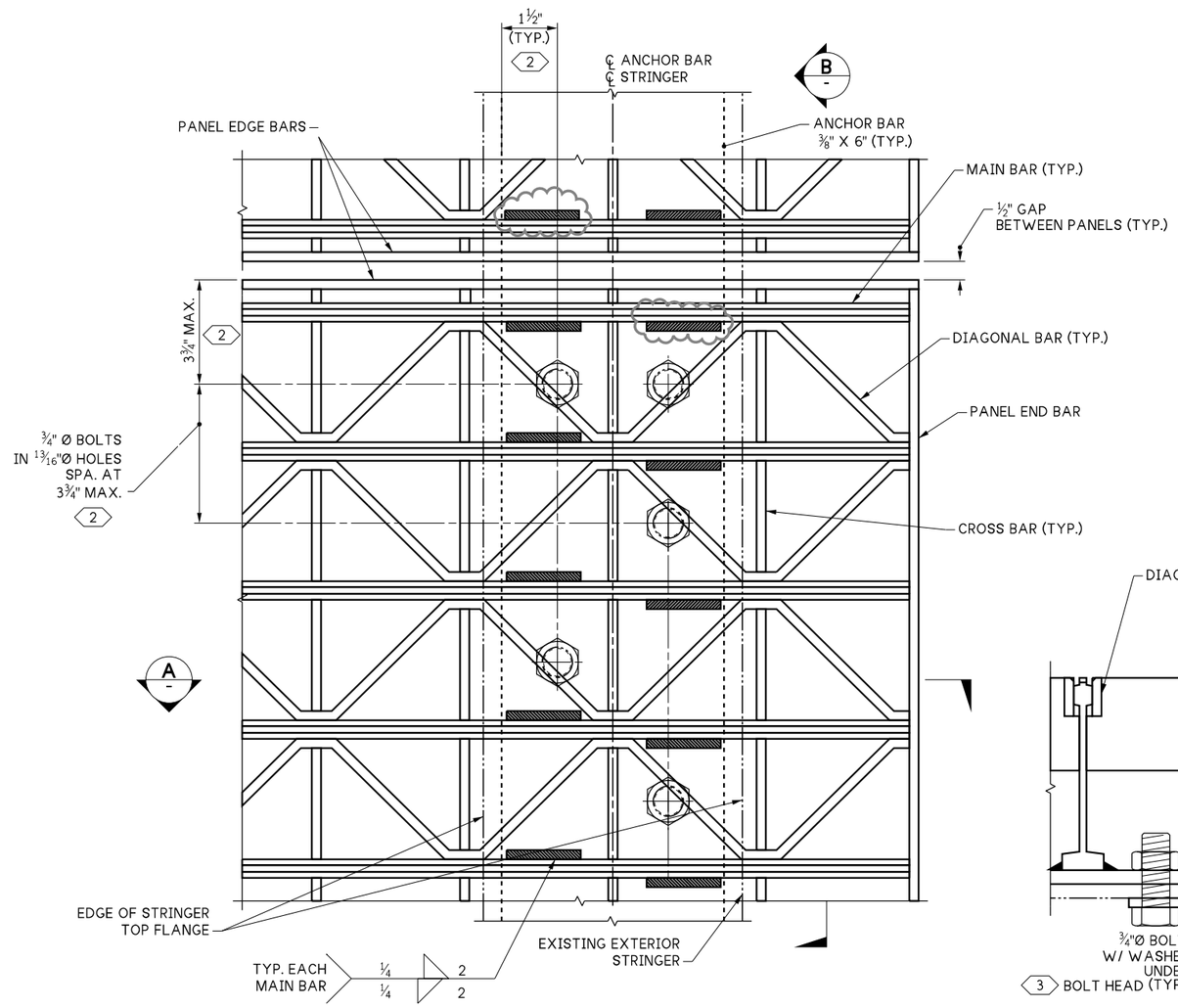

GRID DECK DETAIL

EXTERIOR STRINGER SHOWN, INTERIOR STRINGER SIMILAR

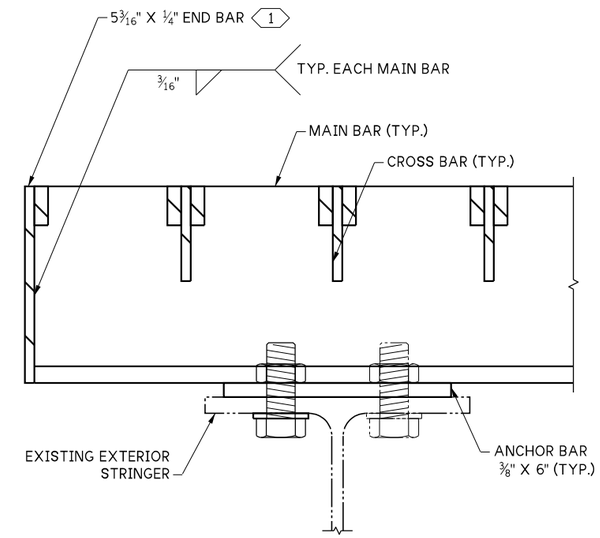

SECTION A
-

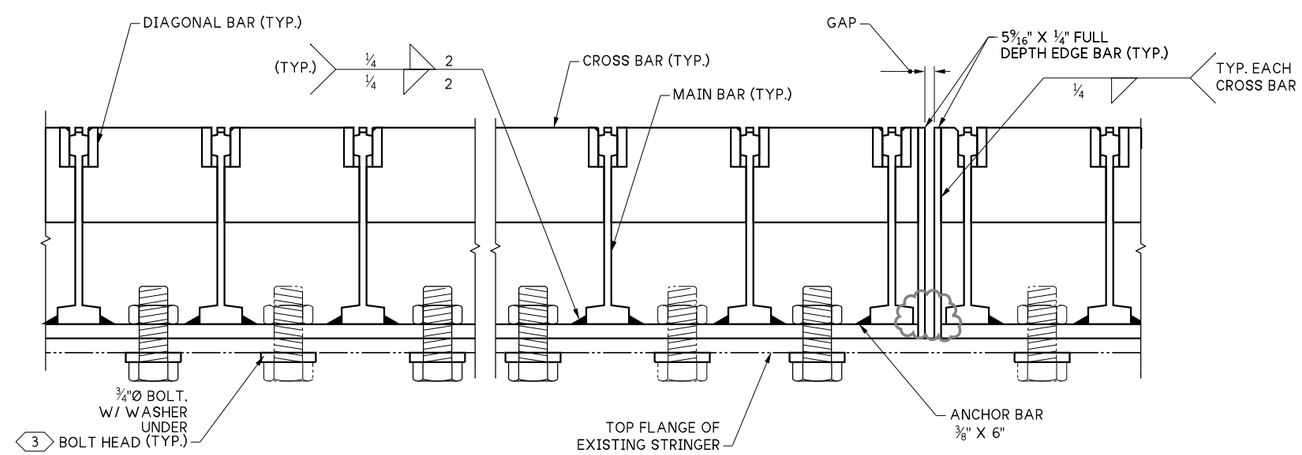

SECTION B
-

FILE NAME	AD3 09 GRID DECK CONNECTION DET_4-22-26.dgn			
BRIDGE DES. ENG.	Leland, A			
BRIDGE PROJ. ENG.	Rosa, M			
SUPERVISOR	Boone, C			
DESIGNED BY	Mahmoudi, A			
CHECKED BY	Saathoff, D			
ENTERED BY	Davis, E	4/22/26 AD3 - KEY NOTE NO.2 REVISION	AM	CRB
PRELIM. PLAN BY		4/13/26 AD3 - REVISED WELD LOCATION	AM	CRB
ARCH. / SPEC.		REVISION	DATE	BY

REGION NO.	STATE
10	WASH

JOB NUMBER 25C516

CONTRACT NO.

WSDOT

ALIREZA MAHMOUDI RAHMANI, STATE OF WASHINGTON, 24034874, REGISTERED PROFESSIONAL ENGINEER

SEE CERTIFICATION SHEET

DATE

STAMP BOX

CRAIG R. BOONE, STATE OF WASHINGTON, 37348, PROFESSIONAL ENGINEER

SEE CERTIFICATION SHEET

DATE

STAMP BOX

US 12
HERON ST BRIDGE
GRID DECK REPLACEMENT

HERON STREET BRIDGE NO.12/12S

GRID DECK PANEL DETAILS

PLAN REF NO BG9

SHEET 12 OF 22 SHEETS

PLOT DATE: 04-May-2026 PLOT TIME: 1:19:43 PM PLOTTED BY: DavisEl FILE PATH: pw://projectstore.wsdot.wa.gov:WSDOT/Documents/_HQ/Bridge & Structures/Bridge Design/_Design Projects/012/BR 12-12S/2025_Deck Replacement_XL6982/_CADD/_Sheets/AD3 09 GRID DECK CONNECTION DET_4-22-26.dgn