CITY OF VANCOUVER, WA

WS14 PFAS TREATMENT DESIGN

ISSUED FOR BID
MARCH 2026

VOLUME 1 OF 1



IMAGE IS REPRESENTATION OF PROPOSED IMPROVEMENTS WITH EXISTING FACILITIES

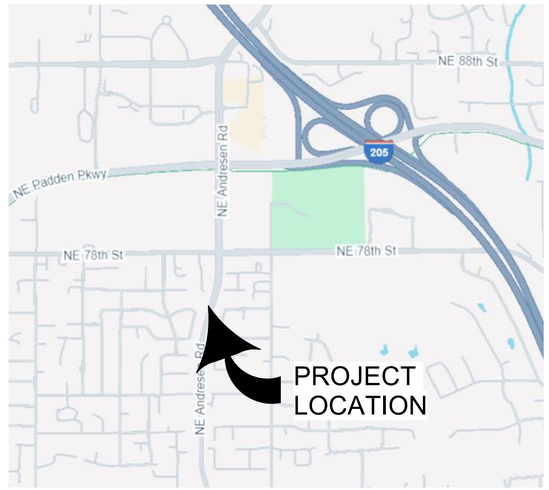

Vicinity Map
NTS

PLAN
NORTH

Know what's below. Call before you dig.

Brown AND Caldwell

LYNN MICHELLE STEPHENS
STATE OF WASHINGTON
50145
REGISTERED
PROFESSIONAL ENGINEER

Signer Name: Lynn Stephens
Signing Reason: I approved this document
Signing Time: 2026-02-11 09:58:05(EST)

GENERAL NOTES:

1. ALL MATERIALS AND METHODS OF CONSTRUCTION AND INSTALLATION FOR WATER, STORM WATER FACILITIES AND EROSION CONTROL MEASURES, SHALL CONFORM TO THE CITY OF VANCOUVER ENGINEERING SERVICES "GENERAL REQUIREMENTS AND DETAILS FOR THE DESIGN AND CONSTRUCTION OF WATER AND SURFACE WATER SYSTEMS", AND SHALL CONFORM TO CLARK REGIONAL WASTEWATER FOR SANITARY SEWER. CONSTRUCTION SHALL BE AS PER THE MOST CURRENT STANDARD DETAIL CONTAINED THEREIN.

2. HORIZONTAL DATUM:
   NAD 1983/1981 WASHINGTON STATE PLANE SYSTEM.
   UNITS: SURVEY FEET.
   VERTICAL DATUM:
   CITY OF VANCOUVER NGVD 1929.
   CLARK COUNTY AND CRWWD NGVD 29 (47) DATUM, ADD 0.36 FT TO ELEVATIONS ON PLANS
   BENCHMARKS:
   CONTROL POINT CP1, ELEV 257.97, LOCATED OPPOSITE THE WATER STATION 14 DRIVE ENTRY ACROSS NE 78TH STREET

3. SEWER PROVIDED BY CLARK REGIONAL WASTEWATER DISTRICT.

PROJECT - PRJ100893
FUND - 448
COST CENTER - CC0194
PARCEL NUMBER - 156823000

CITY LEAD:
MEHRIN SELIMGIR, PE
Mehrin.selimgir@cityofvancouver.us
360-487-7128

BROWN AND CALDWELL LEAD:
LYNN STEPHENS, PE
Lstephens@brwncald.com
206-749-2893

SITE ADDRESS:
6803 NE 78TH ST
VANCOUVER, WA 98661
360-487-7130

APPROVED BY: Kris Olinger
UTILITIES ENGINEERING MANAGER

Plot Date: 2/9/2026 4:03:55 PM Path: Autodesk Docs://180318 - WS 14 PFAS Treatments Design/180318-G-00V21.rvt

cd890e27f5e4edb1b37ce4d2b9210963

DWG NO.	TITLE
GENERAL	
G-000-001	COVER SHEET
G-000-002	DRAWING INDEX
G-000-003	GENERAL NOTES AND SYMBOLS
G-000-004	ABBREVIATIONS 1
G-000-005	ABBREVIATIONS 2 AND PROCESS SERVICE IDENTIFIERS
G-000-601	PROCESS FLOW DIAGRAM
G-000-602	PROCESS DESIGN CRITERIA
G-000-603	HYDRAULIC PROFILE
CIVIL	
C-000-001	CIVIL NOTES 1
C-000-002	CIVIL NOTES 2
C-000-003	LEGEND AND SYMBOLS
C-000-111	EXISTING SITE AND SURVEY CONTROL
C-000-201	SITE DEMOLITION PLAN
C-000-213	OVERALL SITE PLAN
C-000-214	STREET FRONTAGE ANDRESEN RD SOUTH OF PLANT
C-000-315	TEMPORARY EROSION AND SEDIMENT CONTROL PLAN
C-000-316	PAVING PLAN
C-000-317	GRADING AND DRAINAGE PLAN
C-000-318	DRAINAGE MAP
C-000-411	YARD PIPING AND UTILITIES PLAN
C-000-601	SANITARY SEWER FORCE MAIN
C-000-602	RINSE WATER DISCHARGE
C-000-801	CIVIL DETAILS 1
C-000-802	CIVIL DETAILS 2
C-000-803	CIVIL DETAILS 3
C-000-804	CIVIL DETAILS 4
C-000-805	CIVIL DETAILS 5
C-000-806	CIVIL DETAILS 6
C-000-807	CIVIL DETAILS 7
C-000-808	CIVIL DETAILS 8
C-000-809	CIVIL DETAILS 9
LANDSCAPE	
L-000-001	LEVEL II TREE, VEGETATION, AND SOIL LEGEND AND NOTES
L-000-002	LANDSCAPE LEGEND AND NOTES
L-000-003	IRRIGATION LEGEND AND NOTES
L-000-101	LEVEL II TREE, VEGETATION, AND SOIL PLAN 1
L-000-102	LEVEL II TREE, VEGETATION, AND SOIL PLAN 2
L-000-201	LANDSCAPE PLAN 1
L-000-202	LANDSCAPE PLAN 2
L-000-301	IRRIGATION PLAN 1
L-000-302	IRRIGATION PLAN 2
ARCHITECTURAL	
A-000-001	ARCHITECTURAL GENERAL NOTES
A-000-002	ASSEMBLIES SHEET
A-000-003	ARCHITECTURAL DETAILS 1
A-000-004	ARCHITECTURAL DETAILS 2
A-000-005	ARCHITECTURAL DETAILS 3
A-000-006	ARCHITECTURAL DETAILS 4
A-000-101	RESTROOM AND STORAGE BUILDING CODE SHEET
A-B02-101	RESTROOM AND STORAGE BUILDING PLANS
A-B02-301	RESTROOM AND STORAGE BUILDING SECTIONS
A-B02-401	RESTROOM AND STORAGE BUILDING EXTERIOR ELEVATIONS
A-B02-402	INTERIOR ELEVATIONS AND SCHEDULES

DWG NO.	TITLE
STRUCTURAL	
S-000-001	STRUCTURAL GENERAL NOTES 1
S-000-002	STRUCTURAL GENERAL NOTES 2
S-000-003	STRUCTURAL SPECIAL INSPECTIONS NOTES 1
S-000-004	STRUCTURAL SPECIAL INSPECTIONS NOTES 2
S-000-005	TYPICAL DETAILS 1
S-000-006	TYPICAL DETAILS 2
S-000-007	TYPICAL DETAILS 3
S-000-008	TYPICAL DETAILS 4
S-000-009	TYPICAL DETAILS 5
S-000-010	TYPICAL DETAILS 6
S-B02-101	RESTROOM AND STORAGE BUILDING PLANS AND SECTION
S-B02-401	RESTROOM AND STORAGE BUILDING ELEVATIONS
S-P01-101	PFAS TREATMENT OVERALL FOUNDATION PLAN
S-P02-101	RINSE WATER TANK PLANS AND SECTION
PROCESS	
D-000-001	PROCESS GENERAL NOTES, LEGEND, AND SYMBOLS
D-000-002	DETAILS 1
D-000-003	DETAILS 2
D-000-004	PIPE SUPPORT STANDARD DETAILS 1
D-000-005	PIPE SUPPORT STANDARD DETAILS 2
D-B01-301	PUMP IMPROVEMENT ELEVATION
D-P01-101	PFAS TREATMENT PLAN
D-P01-301	PFAS TREATMENT SECTION 1
D-P01-302	PFAS TREATMENT SECTION 2 AND DETAIL
D-P01-303	PFAS TREATMENT SECTION 3
D-P01-901	PFAS TREATMENT ISOMETRIC VIEW 1
D-P01-902	PFAS TREATMENT ISOMETRIC VIEW 2
D-P02-101	RINSE WATER TANK PLAN
D-P02-102	VAULT PLANS AND SECTIONS
D-P02-301	RINSE WATER TANK SECTIONS 1
D-P02-302	RINSE WATER TANK SECTIONS 2
D-P02-901	RINSE WATER TANK ISOMETRIC
MECHANICAL HVAC	
M-000-001	ABBREVIATIONS, SYMBOLS AND LEGEND
M-B02-101	RESTROOM PLANS AND SECTION
M-B02-601	RESTROOM SCHEDULES AND DIAGRAMS
PLUMBING	
P-B02-101	RESTROOM AND STORAGE BUILDING PLANS AND SECTIONS
P-B02-601	RESTROOM AND STORAGE BUILDING SCHEDULES AND DIAGRAMS

DWG NO.	TITLE
ELECTRICAL	
E-000-001	LEGEND AND SYMBOLS 1
E-000-002	LEGEND AND SYMBOLS 2
E-000-003	GENERAL NOTES
E-000-004	ELECTRICAL DETAILS 1
E-000-005	ELECTRICAL DETAILS 2
E-000-101	SITE AND AREA LIGHTING PLAN
E-000-701	PANEL SCHEDULES
E-000-702	CONDUIT AND WIRE SCHEDULE 1
E-000-703	CONDUIT AND WIRE SCHEDULE 2
E-000-704	LUMINAIRE SCHEDULE
E-000-705	DUCT BANK SCHEDULE
E-000-801	WS14 ONE-LINE DIAGRAM
E-B02-111	RESTROOM AND STORAGE BUILDING POWER, CONTROL AND SIGNAL PLAN
E-B02-121	RESTROOM AND STORAGE BUILDING GROUNDING AND LIGHTING PLAN
E-B02-801	PUMP 101 MOTOR CONTROL SCHEMATIC
E-P01-111	PFAS TREATMENT POWER, CONTROL AND SIGNAL PLAN
E-P01-121	PFAS TREATMENT GROUNDING AND LIGHTING PLAN
E-P02-111	RINSE WATER TANK POWER, CONTROL AND SIGNAL PLAN
E-P02-121	RINSE WATER TANK GROUNDING AND LIGHTING PLAN
E-W01-111	WELL 1 PLAN
E-W01-401	WELL 1 MCC ELEVATION
INSTRUMENTATION	
I-000-001	LEGEND AND SYMBOLS 1
I-000-002	LEGEND AND SYMBOLS 2
I-000-003	LEGEND AND SYMBOLS 3
I-000-004	INSTRUMENTATION DETAILS 1
I-000-005	INSTRUMENTATION DETAILS 2
I-000-301	WS14 NETWORK DIAGRAM
I-B01-101	BOOSTER PUMP
I-P01-101	PFAS TREATMENT CONTROL
I-P01-102	PRESSURE VESSELS F0100 AND F0200
I-P01-103	PRESSURE VESSELS F0300 AND F0400
I-P01-104	PRESSURE VESSELS F0500 AND F0600
I-P02-101	RINSE WATER TANK
I-U05-101	LIFT STATION GRINDER PUMP
I-W01-201	WELL 1 PLC PANEL LAYOUT
I-W01-801	WELL 1 PLC PANEL POWER DISTRIBUTION
I-W01-802	WELL 1 TYPICAL DISCRETE INTERCONNECTION DIAGRAM
I-W01-803	WELL 1 TYPICAL ANALOG INTERCONNECTION DIAGRAM

Brown AND Caldwell
PORTLAND, OREGON

Signer Name: Lynn Stephens
Signing Reason: I approved this document.
Signing Time: 2025-03-10 19:54:18(EDT)

LYNN MICHELLE STEPHENS
STATE OF WASHINGTON
50145
REGISTERED
PROFESSIONAL ENGINEER

ISSUED FOR BID

CITY OF Vancouver WASHINGTON

WS14 PFAS TREATMENT DESIGN

REVISIONS

REV	DATE	DESCRIPTION

LINE IS 2 INCHES AT FULL SIZE

DESIGNED: D.IRWIN
DRAWN: D.IRWIN
CHECKED: T.ACTIS
CHECKED: J.HESBY
APPROVED: L.STEPHENS

FILENAME
180318-G-00V21.rvt

BC PROJECT NUMBER
180318

CLIENT PROJECT NUMBER
PRJ100893

GENERAL

DRAWING INDEX

DRAWING NUMBER
G-000-002

SHEET NUMBER 2 OF 125

Plot Date: 3/10/2025 12:10:32 PM Path: BIM 360://180318 - WS 14 PFAS Treatments Design/180318-G-00V21.rvt

5230065e73c9d6a8a72411fc31b09c48

CROSS REFERENCING SYSTEM

VIEW TITLES

1. PLAN TITLES:

SINGLE PLAN VIEW ON SHEET

PLAN TITLE
SCALE: 1/4" = 1'-0"

MULTIPLE PLAN VIEWS ON SHEET



2. ENLARGED PLAN TITLES:

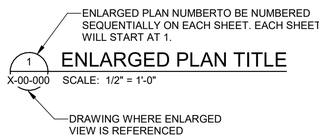

3. SECTION TITLES:

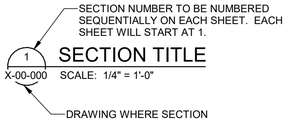

4. DETAIL AND PHOTO TITLES:

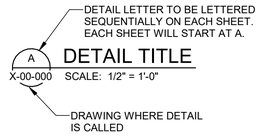

5. STANDARD DETAIL TITLES:



VIEW REFERENCE/CALLOUTS

1. SECTION CUTS:

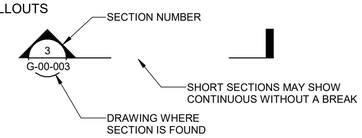

2. ELEVATIONS:

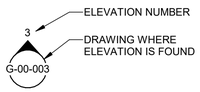

3. DETAIL CALLOUT:

A: BY CALLOUT:

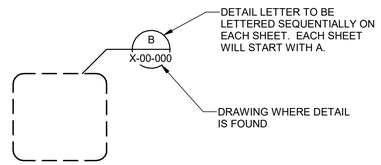

B: BY NOTE: "SEE DETAIL B/D-01-105"

B IS DETAIL REFERENCE LETTER

D-01-105 IS DRAWING WHERE DETAIL IS SHOWN

4. PHOTO INDICATORS



5. STANDARD DETAIL REFERENCE

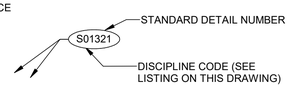

NOTATIONS

1. PROPOSED NOTES (WITH LEADERS)



2. EXISTING NOTES (WITH LEADERS)



ALL EXISTING NOTES SHALL BE SCREENED.

3. KEYNOTES



KEYNOTES ARE NUMBERED SEQUENTIALLY ON PAGE. (ORDER IS NOT RELEVANT TO IMPORTANCE AND MAY BE RANDOM.)

MISCELLANEOUS

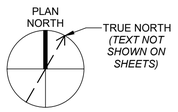

NORTH ARROW

MATCH LINE
SEE SHEET X-XX-XXX

NEW/PROPOSED LINEWORK

EXISTING LINEWORK

FUTURE LINEWORK

ROOM NAME
100

ROOM NAME AND NUMBER

DIMENSIONS

1'-9" — FEET AND INCHES

12.75' — DECIMAL FEET (CIVIL)

1'-9" — EXISTING FEET AND INCHES

12.75' — EXISTING DECIMAL FEET (CIVIL)

PIPING IDENTIFICATION SYSTEM

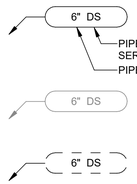

NEW/PROPOSED PIPING

SERVICE ABBREVIATIONS (SEE LISTINGS ON DWG 00-G-005)

EXISTING PIPING (SEE GENERAL NOTE 2)

FUTURE PIPING

EQUIPMENT DESIGNATORS

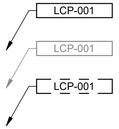

PROPOSED EQUIPMENT DESIGNATOR

EXISTING EQUIPMENT DESIGNATOR

FUTURE EQUIPMENT DESIGNATOR

GENERAL NOTES

1. THE NOTE IN THE TITLEBLOCK OF THIS DRAWING WHICH READS "TWO INCHES AT FULL SCALE" APPEARS ON DRAWINGS FOR IDENTIFICATION OF SCALE DISTORTIONS ON HALF SIZE DRAWINGS AND DRAWING REPRODUCTIONS. IT SHALL MEAN THAT THE DRAWING IS FULL SIZE AND THE DRAWING SCALES ACCURATE WHEN THE LENGTH OF THIS LINE IS TWO INCHES. IF THE LENGTH IS OTHER THAN TWO INCHES, DRAWING SCALES MUST BE ADJUSTED ACCORDINGLY.
2. EXISTING PIPING IS DESIGNATED BY SERVICE RATHER THAN MATERIAL TYPE. MATERIAL TYPES, IF KNOWN, APPEAR OUTSIDE THE PIPING CALLOUT BUBBLE, AND MAY NOT BE THE SAME MATERIAL TYPES SPECIFIED FOR NEW PIPING.
3. ABBREVIATIONS USED IN THIS CONTRACT DOCUMENT CONFORM TO ANSI Y1.1, UNLESS NOTED OTHERWISE ON DRAWINGS. SEE SPEC.
4. ALL STANDARD DETAILS APPLY TO ALL THE CONTRACTORS WORK WHETHER SPECIFICALLY REFERENCED OR NOT.
5. SEE FRONT END SHEETS FOR EACH DISCIPLINES STANDARD SYMBOLS, ETC.
6. SEE ADDITIONAL GENERAL NOTES THROUGHOUT DRAWING SET.
7. ALL WORK IS SUBJECT TO FIELD INSPECTION. DO NOT COVER WORK PRIOR TO CITY INSPECTION.

LEVELS, GRIDS AND ELEVATION INDICATORS

FIRST FLOOR
EL XXXX.XX
LEVEL INDICATOR LEFT

FIRST FLOOR
EL XXXX.XX
LEVEL INDICATOR RIGHT

TOC
EL XXXX.XX
SPOT ELEVATION LEFT

TOC
EL XXXX.XX
SPOT ELEVATION RIGHT

CL EL XXXX.XX
PIPE CENTERLINE ELEVATION LEFT

CL EL XXXX.XX
PIPE CENTERLINE ELEVATION RIGHT

WATER SURFACE ELEVATION

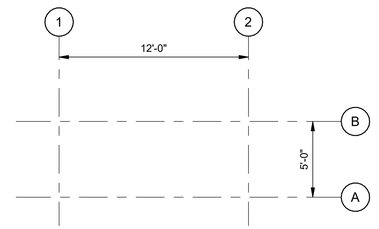

REVISIONS

1 — REVISION TAG

REVISION CLOUD

DEMOLITION

DEMOLITION HATCH

DRAWING NUMBERING SYSTEM

DISCIPLINES

- G GENERAL
- XD DEMOLITION (X - DENOTES DISCIPLINE)
- C CIVIL
- S STRUCTURAL
- A ARCHITECTURAL
- D PROCESS/MECHANICAL
- M MECHANICAL/HVAC
- P PLUMBING
- E ELECTRICAL
- I INSTRUMENTATION

G-000-101
- SEQUENTIAL NUMBER
- SHEET TYPE
- AREA
- DISCIPLINE

SHEET TYPE DESIGNATOR	GENERAL	SURVEY/MAPPING/ GEOTECHNICAL / CIVIL / LANDSCAPING	STRUCTURAL / ARCHITECTURAL	PLUMBING	PROCESS MECHANICAL / HVAC	ELECTRICAL	INSTRUMENTATION
0	COVER SHEET, NOTES, LEGENDS, ABBREVIATIONS AND STANDARD / PROJECT / CLIENT DETAILS	NOTES, LEGENDS, ABBREVIATIONS AND STANDARD / PROJECT / CLIENT DETAILS	NOTES, LEGENDS, ABBREVIATIONS AND STANDARD / PROJECT / CLIENT DETAILS	NOTES, LEGENDS, ABBREVIATIONS AND STANDARD / PROJECT / CLIENT DETAILS	NOTES, LEGENDS, ABBREVIATIONS AND STANDARD / PROJECT / CLIENT DETAILS	NOTES, LEGENDS, ABBREVIATIONS AND STANDARD / PROJECT / CLIENT DETAILS	NOTES, LEGENDS, ABBREVIATIONS AND STANDARD / PROJECT / CLIENT DETAILS
1	USER DEFINED	EXISTING CONDITIONS	PLANS (PLANS, AREA PLANS)	PLANS (PLANS, AREA PLANS)	PLANS (PLANS, AREA PLANS)	PLANS (SEPERATED BY TYPE AND SEQUENCE)	P&IDS
2	USER DEFINED	SITE PLANS	ENLARGED PLANS	ENLARGED PLANS	ENLARGED PLANS	LARGE SCALE VIEWS (ENLARGED DETAIL VIEWS OF PLAN AREAS)	PANEL LAYOUTS
3	USER DEFINED	GRADING AND DRAINAGE PLANS	SECTIONS AND DETAILS	SECTIONS AND DETAILS	SECTIONS AND DETAILS	SECTIONS AND DETAILS	NETWORK DRAWINGS
4	USER DEFINED	YARD PIPING AND UTILITY PLANS	ELEVATIONS	ELEVATIONS	ELEVATIONS	MCC AND SWGR FRONT ELEVATIONS	USER DEFINED
5	USER DEFINED	ROADWAY PLANS	USER DEFINED	ISOMETRIC DIAGRAMS AND RISER DIAGRAMS	DIAGRAMS	USER DEFINED	USER DEFINED
6	USER DEFINED	PIPELINE PLAN AND PROFILES	USER DEFINED	TEPID WATER SCHEMETIC	HVAC OR PLUMBING CONTROLS	USED DEFINED	USER DEFINED
7	SCHEDULES	SCHEDULES	SCHEDULES	SCHEDULES	SCHEDULES	SCHEDULES (PANEL, LOAD AND ENERGY CODE)	SCHEDULES
8	USER DEFINED	SECTIONS AND DETAILS	USER DEFINED	USER DEFINED	USER DEFINED	ONE LINE DIAGRAM, MOTOR ELEMENTARIERS AND OTHER DIAGRAMS	USER DEFINED
9	3D REPRESENTATIONS (ISOMETRICS, PERSPECTIVES AND PHOTOGRAPHS)	CONSTRUCTION FACILITIES AND TEMPORARY EROSION AND SEDIMENT CONTROL PLANS	3D REPRESENTATIONS (ISOMETRICS, PERSPECTIVES, PHOTOGRAPHS)	3D REPRESENTATIONS (ISOMETRICS, PERSPECTIVES, PHOTOGRAPHS)	3D REPRESENTATIONS (ISOMETRICS, PERSPECTIVES, PHOTOGRAPHS)	3D REPRESENTATIONS (ISOMETRICS, PERSPECTIVES, RENDERINGS)	USER DEFINED

Brown AND Caldwell
PORTLAND, OREGON

Signer Name: Lynn Stephens
Signing Reason: I approved this document
Signing Time: 2025-01-23 16:25:52(EST)

LYNN MICHELLE STEPHENS
STATE OF WASHINGTON
50145
REGISTERED
PROFESSIONAL ENGINEER

ISSUED FOR BID

CITY OF Vancouver WASHINGTON

WS14 PFAS TREATMENT DESIGN

REVISIONS

REV	DATE	DESCRIPTION

LINE IS 2 INCHES AT FULL SIZE

DESIGNED: D.IRWIN
DRAWN: D.IRWIN
CHECKED: T.ACTIS
CHECKED: J.HESBY
APPROVED: L.STEPHENS

FILENAME
180318-G-00V21.rvt

BC PROJECT NUMBER
180318

CLIENT PROJECT NUMBER
PRJ100893

GENERAL

GENERAL NOTES AND SYMBOLS

DRAWING NUMBER
G-000-003

SHEET NUMBER 3 OF 125

Path: BIM 360://180318 - WS 14 PFAS Treatments Design/180318-G-00V21.rvt
Plot Date: 1/20/2025 3:34:37 PM

38107ae5012effadd3b3be896a38f684

A

A	AMPHERE, AERATION, AERATOR, AIR
AA	ATOMIC ABSORPTION UNIT
AB	ANCHOR BOLT
ABAND	ABANDONED
ABBR	ABBREVIATION
A/C	AIR CONDITIONING
AC	ASPHALT CONCRETE, ALTERNATING CURRENT, AIR CONDITIONER, ABOVE CEILING
ACC	AREA CONTROL CENTER, AIR COOLED CONDENSER
ACOU	ACOUSTIC
ACU	AIR CONDITIONING UNIT
AD	AREA DRAIN
ADD	ADDITION, ADDITIONAL
ADJ	ADJUSTABLE, ADJACENT
ADMIN	ADMINISTRATION
ADPT	ADAPTER
AF	AIR FILTER
AFF	ABOVE FINISHED FLOOR
AFG	ABOVE FINISHED GRADE
AG	ABOVE GROUND
AGGR	AGGREGATE
AHAP	AS HIGH AS POSSIBLE
AHU	AIR HANDLING UNIT
AI	ANALOG INPUT
AIC	AMPS INTERRUPTING CURRENT
AL	ALUMINUM
ALM	ALARM
ALT	ALTERNATE
AMB	AMBIENT
AMP	AMPERE (S)
ANC	ANCHOR
ANSI	AMERICAN NATIONAL STANDARDS INSTITUTE
AO	ANALOG OUTPUT
APPROX	APPROXIMATE(LY)
APVD	APPROVED
ARCH	ARCHITECTURAL
ARV	AIR RELEASE VALVE
AS	ABOVE SLAB
ASSY	ASSEMBLY
ASTM	AMERICAN SOCIETY FOR TESTING AND MATERIALS
ATM	ATMOSPHERED
ATP	AIR RELEAS VALVE FOR VERTICAL TURBINE PUMPS
ATS	AUTOMATIC TRANSFER SWITCH
AUTO	AUTOMATIC
AUX	AUXILIARY
AVG	AVERAGE
AWG	AMERICAN WIRE GAUGE

B

B	BOILER, BOTTOM, BLOWER, BRINE
B/	BOTTOM OF
BC	BEGINNING OF CURVE, BARE COPPER, BOLT CIRCLE, BOTTOM OF CURB, BACK OF CURB, BIOFILTER CIRCULATION
BCR	BEGINNING OF CURVE RETURN
BCTL	BOILER CHEMICAL TREATMENT, LOW PRESSURE
BCTM	BOILER CHEMICAL TREATMENT, MEDIUM PRESSURE
BD	BLOW DOWN, BOARD
BF	BLIND FLANGE
BFV	BUTTERFLY VALVE
BG	BELOW GRADE
BK	BACK
BLDG	BUILDING
BLK	BLOCK, BLACK
BM	BEAM, BENCHMARK
BMP	BEST MANAGEMENT PRACTICES
BMS	BUILDING MANAGEMENT SYSTEM
BO	BLOW OFF
BOT	BOTTOM
BR	BADGE READER
BRG	BEARING
BRK	BRICK
BRZ	BRONZE
BS	BELOW SLAB
BT	BOLT
BV	BALL VALVE
BVC	BEGINNING OF VERTICAL CURVE
BW	BACKWASH, BOTTOM OF WALL

C

C	CONDUIT, CONDUCTOR, CELSIUS, CIRCUMFERENCE, CHANNEL, COIL
CAM	CAMERA
CAP	CAPACITY
CAV	COMBINATION AIR RELEASE VALVE
CB	CATCH BASIN, CIRCUIT BREAKER
C-C	CENTER TO CENTER
CCP	CONCRETE CYLINDER PIPE
CCSP	CONCRETE LINED AND COATED STEEL PIPE
CCTV	CLOSED CAPTION TELEVISION
CCW	CONDENSER COOLING WATER
CD	CEILING DIFFUSER, CHEMICAL DRAIN
CDR	CONDENSER WATER RETURN
CDS	CONDENSER WATER SUPPLY
CDU	CONDENSING UNIT
CE	CONSTRUCTION EASEMENT
CEM	CEMENT
CF	CUBIC FEET
CFH	CUBIC FEET PER HOUR
CFM	CUBIC FEET PER MINUTE
CFR	CODE OF FEDERAL REGULATIONS, CHEMICAL FEEDER
CFS	CUBIC FEET PER SECOND
C&G	CURB AND GUTTER
CH	CHANNEL
CHG	CHANGE
CHKR	CHECKER
CHR	CHILLER
CHWR	CHILLED WATER RETURN
CHWS	CHILLED WATER SUPPLY
CI	CAST IRON
CIP	CAST IRON PIPE, CLEAN IN PLACE
CIPP	CURED IN PLACE PIPE
CIRC	CIRCUMFERENCE
CJ	CONSTRUCTION JOINT
CKPL	CHECKER PLATE
CKT	CIRCUIT
CKV	CHECK VALVE
CL	CENTER LINE, CLASS, CONDENSATE LOW PRESSURE
CLG	CEILING, COOLING, CHLORINE GAS
CLO	CLOSET
CLR	CLEAR, CLEARANCE

C

CM	CENTIMETERS, CONDENSATE MEDIUM PRESSURE
CMP	CORRUGATED METAL PIPE
CMU	CONCRETE MASONRY UNIT
CND	CONDENSATE DRAIN, CONDUIT
CNTL	CONTROL
CO	CLEANOUT, CONDUIT ONLY
COL	COLUMN, COLLECTOR
COM	COMMINUTOR, COMPACTOR
COMB	COMBINED
CON	CONVEYOR
CONC	CONCRETE
COND	CONDUCTIVITY, CONDENSATE, CONDUCTOR
CONN	CONNECTION
CONT	CONTINUED, CONTINUOUS
CONST	CONSTRUCTION
COORD	COORDINATE
C.O.	CONDUIT ONLY, SPARE
COV	CITY OF VANCOUVER
CP	COMPRESSOR, CIRCULATION PUMP, COMPUTED POINT
CPLG	COUPLING
CPP	CORRUGATED PLASTIC PIPE
CPT	CONTROL POWER TRANSFORMER, CARPET
CPVC	CHLORINATED POLYVINYL CHLORIDE
CR	CARD READER, CONTROL RELAY, CONTROL ROOM
CRN	CRANE
CRWWD	CLARK REGIONAL WASTEWATER DISTRICT
CT	CURRENT TRANSFORMER, CERAMIC TILE
CTR	CONTRACTOR, CENTER
CTRL	CONTROL
CU	CONTROL UNIT, COPPER, CUBIC, CONDENSING UNIT
CULV	CULVERT
CV	CONTROL VALVE, CHECK VALVE, FLOW VALVE COEFFICIENT
CVT	CHEMICAL VENT
CW	COLD WATER
CY	CUBIC YARD

D

D	DRAIN, DEGREE, DEEP
DB	DUCT BANK, DIRECT BURIAL, DRY BULB TEMPERATURE
DBL	DOUBLE
DC	DIRECT CURRENT, DATA CABLE, DOOR CONTROLLER
DCU	DISTRIBUTED CONTROL UNIT
DEMO	DEMOLITION
DEPT	DEPARTMENT
DET	DETAIL
DF	DRINKING FOUNTAIN
DI	DUCTILE IRON, DIGITAL INPUT, DROP INLET
DIA	DIAMETER
DIAG	DIAGRAM, DIAGONAL
DIF	DIFFUSER
DIFF	DIFFERENTIAL
DIM	DIMENSION
DIP	DUCTILE IRON PIPE
DIR	DIRECTION
DISC	DISCONNECT
DISCH	DISCHARGE
DISP	DISPENSER
DIST	DISTANCE
DM	DAMPER MOTOR
DMS	DIAPHRAGM SEAL
DN	DOWN
DO	DIGITAL OUTPUT
DR	DRAIN ROCK, DRAINAGE, DRIVE, DOOR
DRG	DEGRATING
DS	DISCONNECT SWITCH, DOWNSPOUT
DSF	DIESEL FUEL
DTL	DETAIL
DWG	DRAWING
DWH	DOMESTIC WATER HEATER
DWS	DENVER WATER SUPPLY
DWY	DRIVEWAY

E

E	EAST, ENGINE
EA	EXHAUST AIR, EACH
EB	EXPANSION BOLT OR ANCHOR, ENGINE BLOWER UNIT, EQUALIZATION BASIN
EC	END OF CURVE, EVAPORATIVE COOLER, EMPTY CONDUIT
ECC	ECCENTRIC
ED	EXTRACTOR DAMPER, EQUIPMENT DRAIN
EDB	ELECTRICAL DUCTBANK
EE	EACH END, ENGINE EXHAUST
EEW	EMERGENCY EYE WASH
EF	EACH FACE, EXHAUST FAN
EFF	EFFLUENT
EG	EXHAUST GRILLE, ENGINE GENERATOR SET, EXISTING GRADE
EHH	ELECTRICAL HAND HOLE
EIFS	EXTERIOR INSULATION & FINISH SYSTEM
EJ	EXPANSION JOINT
EL	ELEVATION
ELEC	ELECTRIC(AL)
ELEV	ELEVATOR, ELEVATION
ELL	ELBOW
EMBD	EMBEDDED
EMH	ELECTRICAL MANHOLE
EMER	EMERGENCY
ENCL	ENCLOSURE/ENCLOSED
ENT	ENTRANCE
EO	ELECTRICALLY OPERATED
EOS	EDGE OF SLAB
EP	EDGE OF PAVEMENT, ELECTRIC/PNEUMATIC CONVERTER, ELECTRICAL PULLBOX, EXPLOSION PROOF
EPB	ELECTRICAL PULLBOX
EPDM	ETHYLENE PROPYLENE DIENE MONOMER
EQ	EQUAL
EQUIP	EQUIPMENT
EQUIV	EQUIVALENT
ES	EXISTING SURFACE, ELECTRICAL SERVICE, EQUALIZED SLUDGE ELECTRONIC SWITCH
ESCAL	ESCALATOR
ETM	ELAPSED TIME METER
EVAP	EVAPORATE
EVC	END OF VERTICAL CURVE
EW	EACH WAY
EW T&B	EACH WAY TOP AND BOTTOM
EX	EXTRA, EXAMPLE, EXISTING
EXT	EXTERIOR

F

F	FAHRENHEIT, FACE, FUSE(D), FAN, FLOAT
FC	FAIL CLOSED
FCO	FLOOR CLEANOUT
FD	FLOOR DRAIN, FIRE DAMPER, FOUNDATION DRAIN
FDR	FEEDER
FE	FLOWMETER, FINAL EFFLUENT, FIRE EXTINGUISHER
FEC	FIRE EXTINGUISHER CABINET
FHC	FIRE HOSE CABINET
FIT	FLOW INDICATING TRANSMITTER
FFE	FINISHED FLOOR ELEVATION
FG	FLAP GATE, FINISH GRADE
FIG	FIGURE
FH	FIRE HYDRANT
FIN	FINISH(ED)
FL	FLUORESCENT, FAIL LAST POSITION
FLA	FULL LOAD AMPS
FLEX	FLEXIBLE, FLEXIBLE CONDUIT
FLG	FLANGE(D), FLOORING
FLR	FLOOR
FLT	FILTER, CARTRIDGE FILTER
FM	FORCE MAIN
FND	FOUNDATION
FO	FAIL OPEN, FIBER OPTIC
FOC	FACE OF CONCRETE, FACE OF CURB
FP	FIRE PROTECTION
FPM	FEET PER MINUTE
FPP	FIBER PATCH PANEL
FPS	FEET PER SECOND
FR	FRAME
FRP	FIBERGLASS REINFORCED PIPE / PLASTIC
FS	FAR SIDE, FINE SCREENINGS, FINISHED SURFACE
FT	FEET, FOOT
FTG	FOOTING
FTGS	FITTINGS
FU	FUSE(S)
FUR	FURNACE
FUT	FUTURE
FW	FILTERED WATER

G

G	GUTTER, GATE, GAS
GA	GAUGE
GAC	GRANULAR ACTIVATED CARBON
GAL	GALLON
GALV	GALVANIZED
GAS	GASOLINE
GB	GRADE BREAK
GC	GENERAL CONTRACTOR, GAS CIRCULATION
GD	GUARD
GDR	GRINDER, GROUNDING RESISTOR
GEC	GROUND ELECTRODE CONDUCTOR
GEN	GENERAL, GENERATOR
GF	GROUND FAULT
GFI	GROUND FAULT INTERRUPTOR
GFCI	GROUND FAULT CIRCUIT INTERRUPTOR
GFRP	GLASS FIBER REINFORCED PLASTIC
GI	GALVANIZED IRON
GL	GLASS
GM	GAS METER
GND	GROUND
GP	GATE POST, GUARD POST
GPD	GALLONS PER DAY
GPM	GALLONS PER MINUTE
GR	GRADE, GROUND, GRIT
GRD	GRINDER
GRS	GALVANIZED RIGID STEEL
GRT	GROUT
GRTG	GRATING
GS	GALVANIZED STEEL, GROUND SPOT
GSKT	GASKET
GSP	GALVANIZED STEEL PLATE
GV	GATE VALVE
GWT	GROUND WATER TABLE

H

H	HIGH, HORIZONTAL
HA	HAND AUTO
HB	HOSE BIB
HC	HEATING COIL, HANDICAP, HOLLOW CORE
HD	HEAVY DUTY
HDOT	HEAVY DUTY OIL TIGHT
HDPE	HIGH DENSITY POLYETHYLENE
HDR	HEADER
HDWR	HARDWARE
HEX	HEAT EXCHANGER, HEXAGONAL
HG	HIGH GRADE, MERCURY
HGR	HANGER
HGT	HEIGHT
HHWR	HEATING HOT WATER RETURN
HHWS	HEATING HOT WATER SUPPLY
HM	HOLLOW METAL
HMI	HUMAN MACHINE INTERFACE
HOA	HAND-OFF-AUTO
HOH	HIGH PRESSURE HYDRAULIC OIL
HOR	HORIZONTAL
HP	HIGH PRESSURE, HIGH POINT, HEAT PUMP, HORSEPOWER
HPA	HIGH PRESSURE AIR
HPEL	HIGH POINT ELEVATION
HR	HANDRAIL, HEAT RESERVOIR, HOUR, HYDRAULIC OIL RETURN
HRR	HEAT RESERVOIR RETURN
HRS	HEAT RESERVOIR SUPPLY
HRW	RECIRCULATING POTABLE HOT WATER
HS	HYDRAULIC OIL SUPPLY, HAND SWITCH
HST	HOIST
HT	HEIGHT
HTP	HEAT TRACE PANEL
HTR	HEATER
HV	HOSE VALVE, HEATING AND VENTILATING UNIT, HIGH VOLTAGE, HAND OPERATED VALVE
HUM	HUMIDITY
HVAC	HEATING, VENTILATING, AND AIR CONDITIONING
HW	HOT WATER -POTABLE
HYD	HYDRAULIC, HYDRANT
HYDT	HYDRANT
HZ	HERTZ

I

IA	INSTRUMENT AIR
ICOM	INTERCOM
ID	INSIDE DIAMETER
IE	INVERT ELEVATION
IF	INSIDE FACE
IL	INDICATING LAMP, INSTRUMENT LOOP, INTAKE LOUVER
IMC	INTERMEDIATE METAL CONDUIT
INCAND	INCANDESCENT
IN	INCH
INC	INCORPORATION
INF	INFLUENT
INFO	INFORMATION
INS	INSULATE(D)(ION)
INST	INSTANTANEOUS
INSTR	INSTRUMENTATION
INT	INTERIOR
INTER	INTERMEDIATE
INTLK	INTERLOCK
INV	INVERT
IO	INPUT OUTPUT
IPB	INSTRUMENT PULLBOX
IRRIG	IRRIGATION
IT	INFORMATION TECHNOLOGY
IX	ION EXCHANGE
IXF	ION EXCHANGE FLUSH
IXEFF	ION EXCHANGE EFFLUENT

J

JAN	JANITOR
JB	JUNCTION BOX
JCT	JUNCTION
JST	JOIST
JT	JOINT

K

KKIP	(1000 POUNDS)
KCMIL	1000 CIRCULAR MIL
KG	KILOGRAM
KL	KILOLITER
KO	KNOCK OUT
KV	KILOVOLT
KVA	KILOVOLT AMPERE
KVAR	KILOVAR, KILOVOLT AMPERE REACTIVE
KVM	KEYBOARD VIDEO MOUSE
KW	KILOWATT
KWH	KILOWATT HOUR

L

L	LENGTH, LONG, ANGLE
LAM	LAMINATED
LAT	LEAVING AIR TEMPERATURE, LATERAL, LATITUDE
LAV	LAVATORY
LB(S)	POUND(S)
LC	LIGHTING CONTRACTOR
LCP	LOCAL CONTROL PANEL
LCS	LOCAL CONTROL STATION
LCV	LEVEL CONTROL VALVE
LED	LIGHT EMMITING DIODE
LF	LIGHT FIXTURE, LINEAR FEET
LG	LONG, LARGE
LHH	LOW VOLTAGE HANDHOLE
LMH	LOW VOLTAGE MANHOLE
LLH	LONG LEG HORIZONTAL
LLV	LONG LEG VERTICAL
LOC	LOCATION
LONG	LONGITUDINAL
LOR	LUBE OIL RETURN, LOCAL OFF-REMOTE
LOS	LOCKOUT STOP, LUBE OIL SUPLY
LOTO	LOCKOUT TAG OUT
LOW	LUBE OILD WASTE
LP	LOW PRESSURE, LIGHTING PANEL, LOW POINT
LPEL	LOW POINT ELEVATION
LSG	LOW PRESSURE SLUDGE GAS
LT	LONG TIME, LEFT
LTG	LIGHTING
LV	LOW VOLTAGE
LVG	LEAVING
LVL	LEVEL
LVR	LOUVER
LWR	LOWER

M

M	METER, MOTOR CONTACT
MA	MILLIAMPERE(S)
MAINT	MAINTENANCE
MAL	MALLEABLE
MAN	MANUAL(LY)
MAX	MAXIMUM
MBS	MANUAL BYPASS SWITCH
MCC	MOTOR CONTROL CENTER
MCP	MOTOR CIRCUIT PROTECTOR
MD	MOTORIZED DAMPER
MECH	MECHANICAL
MEMB	MEMBRANE
MEZZ	MEZZANINE
MFR	MANUFACTURE(R)
MFRD	MANUFACTURED
MG	MILLION GALLONS, MIXED GAS
MGD	MILLION GALLONS PER DAY
MG/L	MILLIGRAMS PER LITER
MGR	MANAGER
MH	MANHOLE, METAL HALIDE
MI	MALLEABLE IRON
MIC	MICROPHONE
MILS	1/1000 OF AN INCH
MIN	MINIMUM, MINUTE
MIS	MANGEMENT INFORMATION STATION
MISC	MISCELLANEOUS
MJ	MECHANICAL JOINT
ML	MILLILITER, MIXED LIQUOR
MM	MILLIMETER(S)
MMH	MEDIUM VOLTAGE MANHOLE
MOD	MODULUS, MODIFICATIONS
MOP	MOTOR OPERATOR
MOV	MOTOR OPERATED VALVES
MPC	MINI POWER CENTER
MPH	MILES PER HOUR
MSDS	MATERIAL SAFETY DATA SHEET
MSS	MANUFACTURERS STANDARDIZATION SOCIETY
MTD	MOUNTED
MTG	MOUNTING
MTL	METAL, MATERIAL
MTR	MOTOR
MUL/DIV	MULTIPLY/DIVIDE
MV	MILLIVOLT, MEDIUM VOLTAGE
MVMC	MEDIUM VOLTAGE MOTOR CONTROL
MX	MIXER

N

N	NEUTRAL, NORTH
NA	NONAUTOMATIC, NOT APPLICABLE
NBS	NATIONAL BUREAU OF STANDARDS
NC	NORMALLY CLOSED, NOISE CRITERIA
ND	NOMINAL DIAMETER
NE	NORTHEAST
NEG	NEGATIVE
NEUT, N	NEUTRAL
NF	NONFUSED, NEAR FACE
NFPA	NATIONAL FIRE PROTECTION ASSOCIATION
NIC	NOT IN CONTRACT
NL	NAIL
NO	NORMALLY OPEN, NUMBER
NOM	NOMINAL
NP	NAMEPLATE
NPS	NOMINAL PIPE SIZE
NR	NETWORK RACK
NRC	NOISE REDUCTION COEFFICIENT
NTS	NOT TO SCALE
NW	NORTHWEST

O

OC	ON CENTER
OCC	OPERATION CONTROL CENTER
OD	OUTSIDE DIAMETER
OF	OUTSIDE FACE, OVERFLOW
OFC	OVERFLOW CHEMICAL
OFE	OWNER FURNISHED EQUIPMENT
OH	OVERHEAD, OPPOSITE HAND
OIS	OPERATOR INTERFACE STATION
OL	OVERLOAD
OLP	OXYGEN LOW PRESSURE
O/O	OUT TO OUT, ON-OFF
OPNG	OPENING
OPP	OPPOSITE
O/R	OWNER'S REPRESENATIVE
O/S	OFFSET
OSC	OPEN-STOP-CLOSE
OT	OIL TIGHT
OWS	OPERATOR WORKSTATION

Plot Date: 1/20/2025 3:34:38 PM Path: BIM 360://180318 - WS 14 PFAS Treatments Design/180318-G-00V21.rvt

Brown AND Caldwell
PORTLAND, OREGON

Signer Name: Lynn Stephens
Signing Reason: I approved this document.
Signing Time: 2025-01-23 16:25:31(ET)

LYNN MICHELLE STEPHENS
STATE OF WASHINGTON
50145
REGISTERED PROFESSIONAL ENGINEER

ISSUED FOR BID

CITY OF Vancouver WASHINGTON

WS14 PFAS TREATMENT DESIGN

REVISIONS

REV	DATE	DESCRIPTION

LINE IS 2 INCHES AT FULL SIZE

DESIGNED:	D.IRWIN
DRAWN:	D.IRWIN
CHECKED:	T.ACTIS
CHECKED:	J.HESBY
APPROVED:	L.STEPHENS
FILENAME	180318-G-00V21.rvt
BC PROJECT NUMBER	180318
CLIENT PROJECT NUMBER	PRJ100893

GENERAL

ABBREVIATIONS 1

DRAWING NUMBER
G-000-004

SHEET NUMBER 4 OF 125

376f11e5a9abb81d6ce3c69151bd83c8

P

P	PUMP, PHASE, PROCESS, POLE
P&ID	PROCESS AND INSTRUMENTATION DIAGRAM
PAR	PARALLEL, PARAGRAPH
PART	PARTITION
PB	PUSHBUTTON
PBD	PANELBOARD
PC	PLAIN CONCRETE, PIPE COUPLING, PRECAST, POINT OF CURVATURE, PERSONAL COMPUTER
PCC	PLANT CONTROL CENTER, PORTLAND CEMENT CONCRETE
PCF	POUNDS PER CUBIC FOOT
PCM	PROCESS CONTROL MAIN (PANEL)
PCP	PLAIN CONCRETE PIPE
PCS	PIECES
PD	PUMPED DRAINAGE, PROCESS/PLANT DRAIN, PRESSURE DROP
PDR	PROCESS/PLANT DRAIN RECYCLE
P/E	PNEUMATIC/ELECTRICAL CONVERTER
PE	PLAIN END, PRIMARY EFFLUENT, POLYETHYLENE, PHOTO-ELECTRIC CELL
PER	PERIMETER
PF	POWER FACTOR, PRESSURIZED FLOW
PG	PRESSURE GAUGE
PGIS	POLLUTANT GENERATIONG IMPERVIOUS SURFACE
PH	PHASE
PI	POINT OF INTERSECTION, PRIMARY INFLUENT
PIVC	POINT OF INTERSECTION ON VERTICAL CURVE
PL	PROPERTY LINE, PIPELINE, PLATE
PLAM	PLASTIC LAMINATE
PLAS	PLASTER, PLASTIC
PLBG	PLUMBING
PLC	PROGRAMMABLE LOGIC CONTROLLER
PLCS	PLACES
PLY	PLYWOOD
PMM	POWER METERING MODULE
PMP	PUMP
PNE	PNEUMATIC CONVEYANCE
PNL	PANEL, PANELBOARD
POC	POINT OF CURVE, POINT OF CONNECTION
POP	PNEUMATIC OPERATOR
PP	POWER PANEL
PPE	PERSONAL PROTECTIVE EQUIPMENT
PPM	PARTS PER MILLION
PR	PAIR, PELLET REACTORS
PRCT	PRECAST
PREFIN	PREFINISHED
PRES	PRESSURE
PRI	PRIMARY
PRV	PRESSURE REGULATING (REDUCING) VALVE, PRESSURE RELIEF VALVE
PS	PUMP STATION, PIPE SUPPORT
PSF	POUNDS PER SQUARE FOOT
PSI	POUNDS PER SQUARE INCH
PSIA	POUNDS PER SQUARE INCH ABSOLUTE
PSIG	POUNDS PER SQUARE INCH GAGE
PT	POTENTIAL TRANSFORMER, PRESSURE TREATED, POINT OF TANGENCY
PTD	PAINTED
PV	PLUG VALVE, PROCESS VARIABLE
PVC	POLYVINYL CHLORIDE
PVL	PRESSURE VESSEL
PVRV	PRESSURE VACUUM RELIEF VALVE
PVT	PAVEMENT
PWR	POWER

Q

Q	RATE OF FLOW
QSB	QUARTZ STANDBY
QTY	QUANTITY

R

R	RADIUS, RISER
RB	RESILIENT BASE
RCA	RECIRCULATED AIR
RCP	REINFORCED CONCRETE PIPE, REFLECTED CEILING PLAN
RCPT	RECEPTACLE
RD	ROOF DRAIN, ROUND
RDWY	ROADWAY
REC	RECEIVER, RECYCLE
RECD	RECEIVED
RECIRC	RECIRCULATION
RECP	RECEPTACLE
RED	REDUCE(R)
REF	REFERENCE, REFER
REG	REGULATOR
REINF	REINFORCE(D), REINFORCING
REM	REMOVE, REMOVABLE
REQD	REQUIRED
RES	RESISTOR
RESIL	RESILIENT
RE-STL	REINFORCING STEEL
RET	RETURN
REV	REVISED, REVISION
RF	RAISED FACE, RETURN FAN, ROOF
RGS	RIGID GALVANIZED STEEL
RL	REDUCED LEVEL
RM	ROOM
RMS	ROOT MEANS SQUARE
RND	ROUND
RO	REVERSE OSMOSIS, RELAY OUTPUT
RP	REDUCED PRESSURE BACKFLOW PREVENTER, RADIUS POINT
RPM	REVOLUTIONS PER MINUTE
RS	ROOF SCUPPER
RT	RIGHT, RECTANGULAR TUBE
RTD	RESISTANCE TEMPERATURE DETECTOR
RTU	REMOTE TERMINAL UNIT
RVVS	REDUCED VOLTAGE SOLID STATE STARTER
RW	RAW WATER
RWP	RAINWATER PIPE
RWR	RECLAIMED WATER

S

S	SOUTH, SILENCER, SLOPE
SA	SURGE ARRESTOR
SAC	SUSPENDED ACCOUSTICAL CEILING
SB	SIGNAL BOX, STABILIZATION BASIN
SCCR	SHORT CIRCUIT CURRENT RATING
SCF	STANDARD CUBIC FEET PER MINUTE
SCH	SCHEDULE
SCN	SCREEN (BAR, ETC.)
SCR	SCRUBBER, SILICON CONTROLLED RECTIFIER, STEAM CLEAN RINSE
SCR'D	SCREWED
SCS	STEAM CLEAN SUPPLY
SD	SANITARY DRAIN, SPLITTER DAMPER, SMOKE DETECTOR
SDS	SAFETY DATA SHEET
SE	SOUTHEAST, SECONDARY EFFLUENT
SEC	SECONDARY
SECT	SECTION
SEL	SELECTOR
SEP	SEPARATOR, SEPTAGE
SF	SQUARE FOOT(FEET), SUPPLY FILTER, SUPPLY FAN, SILT FENCE
SG	SUPPLY GRILLE, SLUICE GATE-MANUAL
SHH	SIGNAL HANDHOLE
SHT	SHEET
SIM	SIMILAR
SLR	SILENCER
SMACNA	SHEET METAL AND AIR CONDITIONING CONTRACTORS NATIONAL ASSOCIATION
SMH	SIGNAL MANHOLE
SMP	SAMPLE, SAMPLER
SN	SCREEN, SUPERNATANT
SO	SLIP-ON
SOV	SOLENOID VALVE
SP	SPACE, SPACING, SET POINT, STATIC PRESSURE, STEEL PIPE
SPCS	SPACES
SPD	SUMP PUMP DISCHARGE, SURGE PROTECTION DEVICE
SPEC	SPECIFICATION(S)
SPG	SPACING
SPKLR	FIRE SPRINKLER SYSTEM
SPL	SPLICE
SPS	STATIC PRESSURE STATION
SQ	SQUARE
SQRT	SQUARE ROOT
SRT	SOLIDS RETENTION TIME
SS	STAINLESS STEEL, SPEED SELECTRO, SUSPENDED SOLIDS, SAND SEPARATOR, SANITARY SEWER
SSK	SERVICE SINK
ST	SHORT TIME, STEAM TRAP
STA	STATION, STARTING AIR
STD	STANDARD, STORM DRAIN
STL	STEEL
STOR	STORAGE
STP	SHIELDED TWISTED PAIR
STR	STRUCTUR(E)(AL)
STRG	STRONG
SUB	SUBSTITUTE, SUBSTATION
SURF	SURFACE
SUSP	SUSPEND(ED)
SV	SOLENOID VALVE, SAFETY VALVE, SHEET VINYL
SW	SOUTHWEST, SOCKETWELD, SEAL WATER, SWITCH
SWBD	SWITCHBOARD
SWGR	SWITCHGEAR
SY	SQUARE YARD
SYM	SYMMETRICAL
SYS	SYSTEM

T

T	TOP, TANGENT, TREAD`, TRAP
T/	TOP OF
TB	TERMINAL BLOCK, TERMINAL BOX
T&B	TOP AND BOTTOM
T/B	TOP OF BANK
TBE	THREADED BOTH ENDS
TBN	TURBINE
TC	THERMOCOUPLE
T/C	TOP OF CURB, TOP OF CONCRETE
TCL	TOTALLY CLOSED
TCOM	TELECOMMUNICATIONS
TD	TANK DRAIN, TEMPERATURE DIFFERENCE, TIME DELAY
TDH	TOTAL DYNAMIC HEAD
TE	TOTALLY ENCLOSED
TEL	TELEPHONE
TEMP	TEMPERED, TEMPORARY, TEMPERATURE
TFR	TRANSFORMER
THK	THICK
THD	THREAD(ED)
THRESH	THRESHOLD
THRU	THROUGH
TMR	TIMER
TNK	TANK
TO	TOP OF
TOC	TOP OF CONCRETE, TOP OF CURB
TOP	TOP OF PIPE
TOW	TOP OF WALL
TPD	TONS PER DAY
TPG	TOPPING
TPLX	TRIPLEXED
TR	STAIR TREAD, TIMING RELAY
TRANS	TRANSFER
TRI	TRIAD
TS	TEMPERATURE SWITCH, TUBE STEEL, TOTAL SOLIDS, TERMINAL STRIP
TV	TELEVISION
TVSS	TRANSIENT VOLTAGE SURGE SUPPRESSOR
TYP	TYPICAL

U

UBX	UTILITY BOX
UG	UNDERGROUND
UH	UNIT HEADER
UL	ULTIMATE LOAD, UNDERWRITERS LABORATORY
UN	UNION
UON	UNLESS OTHERWISE NOTED
UPS	UNINTERRUPTABLE POWER SUPPLY
U/S	UNDERSIDE
US	UTILITY STATION
UTIL	UTILITIES
UVEF	UVAOP EFFLUENT

V

V	VALVE, VENT, VOLT, VERTICAL, VAULT
VA	VOLTAMPERE
VAC	VACUUM, VOLTS ALTERNATING CURRENT
VAR	VARIES, VARIABLE, VOLTAMPERE REACTIVE
VBX	VALVE BOX
VC	VERTICAL CURVE, VACUUM CONTACTOR, CHEMICAL VENT
VCP	VENDOR CONTROL PANEL
VCT	VINAL COMPOSITE TILE
VDC	VOLTS DIRECT CURRENT
VEL	VELOCITY
VERT	VERTICAL
VFD	VARIABLE FREQUENCY DRIVE
VIF	VERIFY IN FIELD
VND	VENDOR
VOL	VOLUME
VP	VAPOR PRESSURE, VACUUM PUMP
VTR	VENT THROUGH ROOF

W

W	WEST, WIDTH, WOMENS, WATER, WASTE, WATT, WIRE
W/	WITH
WC	WATER CLOSET
W/O	WITHOUT
WF	WIDE FLANGE
WG	WATER GAUGE, WITH GROUND
WH	WATER HEATER
WL	WATER LINE
WM	WATER METER, WATER MAIN
WP	WORKING POINT, WEATHERPROOF, WATER PROOFING
WSR	WALL SUPPLY REGISTER, WATER SOFTENER UNIT
WW	WIREWAY
WWF	WELDED WIRE FABRIC, WET WEATHER FLOW

X

XFMR	TRANSFORMER
XMTR	TRANSMITTER
XP	EXPLOSION PROOF

Y

YD	YARD
YR	YEAR

Z

Z	IMPEDANCE

PROCESS SERVICE IDENTIFIER	PROCESS SERVICE
D	PROCESS DRAIN
FLUSH	FLUSH
FW	FINISHED WATER
GFM	GAC FRESH MEDIA
GSM	GAC SPENT MEDIA
OF	OVERFLOW
PD	PROCESS DRAIN
PEF	PFAS EFFLUENT
RAW	RAW WATER/PFAS TREATMENT FEED
RWS	RINSE WATER SUPPLY
RWD	RINSE WATER DISCHARGE
SA	SERVICE AIR
SAN	DRAIN (SANITARY)
SMP	SAMPLE
STM	STORM DRAIN
SS	SANITARY SEWER
VT, V	VENT
W	WATER

PLANT AREA NUMBER KEY

W01	WELLHOUSE 1
W02	WELLHOUSE 2
B01	TREATMENT BUILDING
B02	RESTROOM AND STORAGE BUILDING
P01	PFAS TREATMENT
P02	RINSE WATER TANK
U01	METER VAULT 1
U02	INJECTION VAULT
U03	VALVE VAULT 3
U04	GRINDER PUMP
U05	GRINDER PUMP FLOW METER VAULT

Brown AND Caldwell
PORTLAND, OREGON

Signer Name: Lynn Stephens
Signing Reason: I approved this document
Signing Time: 2025-01-25 16:25:32(EST)

LYNN MICHELLE STEPHENS
STATE OF WASHINGTON
50145
REGISTERED
PROFESSIONAL ENGINEER

ISSUED FOR BID

CITY OF Vancouver WASHINGTON

WS14 PFAS TREATMENT DESIGN

REVISIONS

REV	DATE	DESCRIPTION

LINE IS 2 INCHES AT FULL SIZE

DESIGNED: D.IRWIN
DRAWN: D.IRWIN
CHECKED: T.ACTIS
CHECKED: J.HESBY
APPROVED: L.STEPHENS

FILENAME
180318-G-00V21.rvt

BC PROJECT NUMBER
180318

CLIENT PROJECT NUMBER
PRJ100893

GENERAL

ABBREVIATIONS 2 AND PROCESS SERVICE IDENTIFIERS

DRAWING NUMBER
G-000-005

SHEET NUMBER 5 OF 125

Path: BIM 360://180318 - WS 14 PFAS Treatments Design/180318-G-00V21.rvt
Plot Date: 1/20/2025 3:34:38 PM

a2a6f6971dd4120d6714beb736de9ec2

GENERAL NOTES:

1. REFER TO PROCESS MECHANICAL AND PROCESS AND INSTRUMENTATION DIAGRAM DRAWINGS FOR DETAILED PIPING, VALVING, AND INSTRUMENTATION CONFIGURATION. THIS DIAGRAM IS INTENDED FOR GENERAL REPRESENTATION PURPOSES ONLY.
2. OBJECTIVE OF PROCESS FLOW DIAGRAM IS TO HIGHLIGHT MAJOR TREATMENT AND CONVEYANCE PROCESSES FOR PFAS REMOVAL. ANCILLARY PROCESSES AND EQUIPMENT, INCLUDING MANHOLE LIFT STATION TO SEWER, ARE NOT DETAILED HERE FOR CLARITY.

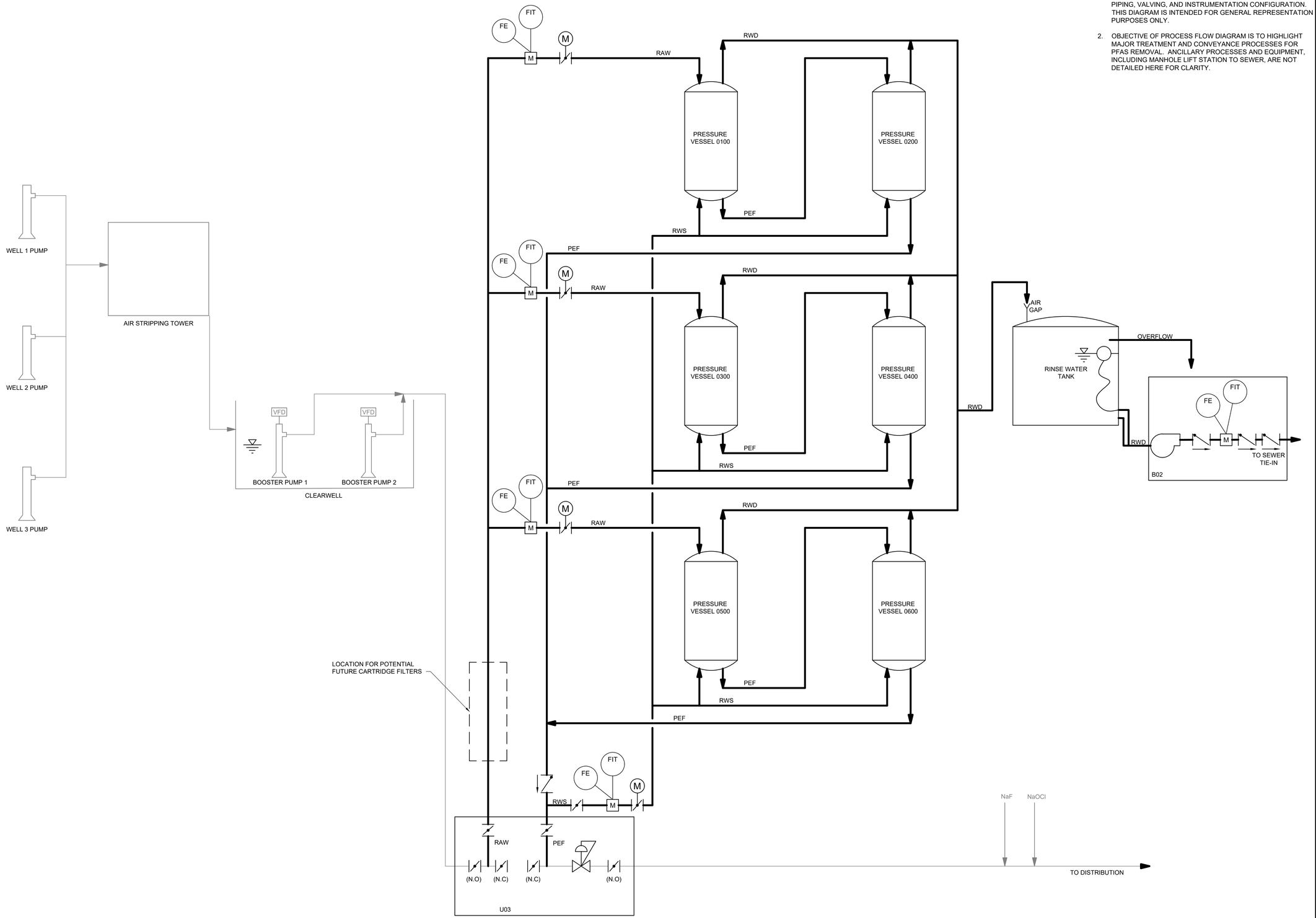

Path:

Plot Date:

Brown AND Caldwell
PORTLAND, OREGON

Signer Name: Lynn Stephens
Signing Reason: I approved this document
Signing Time: 2025-01-25 16:25:50(EST)

LYNN MICHELLE STEPHENS
STATE OF WASHINGTON
50145
REGISTERED PROFESSIONAL ENGINEER

ISSUED FOR BID

CITY OF Vancouver WASHINGTON

WS14 PFAS TREATMENT DESIGN

REVISIONS

REV	DATE	DESCRIPTION

LINE IS 2 INCHES AT FULL SIZE

DESIGNED: C. CYR
DRAWN: T. LEMON
CHECKED: K. HAY
CHECKED: J. HESBY
APPROVED: L. STEPHENS

FILENAME
G-000-601.dwg

BC PROJECT NUMBER
180318

CLIENT PROJECT NUMBER
PRJ100893

GENERAL

PROCESS FLOW DIAGRAM

DRAWING NUMBER
G-000-601

SHEET NUMBER 6 OF 125

1adc687c912590e4e9b91868f2d70340

GENERAL NOTES:

1. THIS SYSTEM IS BEING DESIGNED WITH THE FLEXIBILITY FOR CONVERSION TO ION EXCHANGE IN THE FUTURE.

DESCRIPTION	UNITS	CRITERIA
PLANT PRODUCTION CAPACITY		
MINIMUM	GPM	1000
AVERAGE	GPM	2200
MAXIMUM	GPM	3200
BOOSTER PUMPS (MODIFY EXISTING)		
NUMBER OF PUMPS	NO.	2
PUMP IDENTIFICATION	NO.	B01-PMP100, B01-PMP200
LOCATION	-	TREATMENT BUILDING - WET WELL
PUMP TYPE	-	VERTICAL TURBINE
CONFIGURATION	-	DUTY
OPERATING FLOW RATE RANGE	GPM	1000 - 2000
TOTAL DYNAMIC HEAD	FT	180 - 200
SPEED	RPM	1800
MOTOR SIZE, EACH	HP	125
MOTOR TYPE	-	VARIABLE SPEED
PRESSURE VESSELS		
SYSTEM CONFIGURATION	-	PARALLEL TRAINS
NUMBER OF TRAINS	NO.	3
NUMBER OF VESSELS PER TRAIN	NO.	2
TOTAL NUMBER OF VESSELS	NO.	6
TRAIN CONFIGURATION	-	LEAD-LAG
VESSEL DIAMETER	FT	12
DESIGN FLOW RATES		
MINIMUM LOADING RATE, PER VESSEL, PER MEDIA MANUFACTURER	GPM/SF	3.2
MAXIMUM LOADING RATE, PER VESSEL, PER MEDIA MANUFACTURER	GPM/SF	9.4
MEDIA TYPE, INITIAL FILL	-	GRANULAR ACTIVATED CARBON
MINIMUM MEDIA AMOUNT PER VESSEL	LB	40,000
EMPTY BED CONTACT TIME (EBCT) (@ MAXIMUM FLOW RATE, PER VESSEL)	MIN	9.6
RINSE WATER TANK		
TYPE	-	CAST-IN-PLACE CONCRETE
NOMINAL CAPACITY	GAL	90,000 MIN.
DIAMETER	FT	26
INTERNAL HEIGHT	FT	25
MAXIMUM OPERATING DEPTH	FT	23
RINSE WATER PUMP		
NOMINAL CAPACITY	GPM	45
TDH	FT	70

Brown AND Caldwell
PORTLAND, OREGON

Signer Name: Lynn Stephens
Signing Reason: I approved this document.
Signing Time: 2025-01-23 16:25:35(EST)

LYNN MICHELLE STEPHENS
STATE OF WASHINGTON
50145
REGISTERED PROFESSIONAL ENGINEER

ISSUED FOR BID

CITY OF Vancouver WASHINGTON

WS14 PFAS TREATMENT DESIGN

REVISIONS

REV	DATE	DESCRIPTION

LINE IS 2 INCHES AT FULL SIZE

DESIGNED: T.ACTIS
DRAWN: T.LEMON
CHECKED: K.BRINKER
CHECKED: J.HESBY
APPROVED: L.STEPHENS

FILENAME 180318-G-00V21.rvt
BC PROJECT NUMBER 180318
CLIENT PROJECT NUMBER PRJ100893

GENERAL

PROCESS DESIGN CRITERIA

DRAWING NUMBER G-000-602

SHEET NUMBER 7 OF 125

Path: BIM 360://180318 - WS 14 PFAS Treatments Design/180318-G-00V21.rvt
Plot Date: 1/20/2025 3:34:39 PM

9dcee0c55684e448fcabd13142e0fc91

GENERAL NOTES:

1. VERTICAL DATUM: NGVD 1929

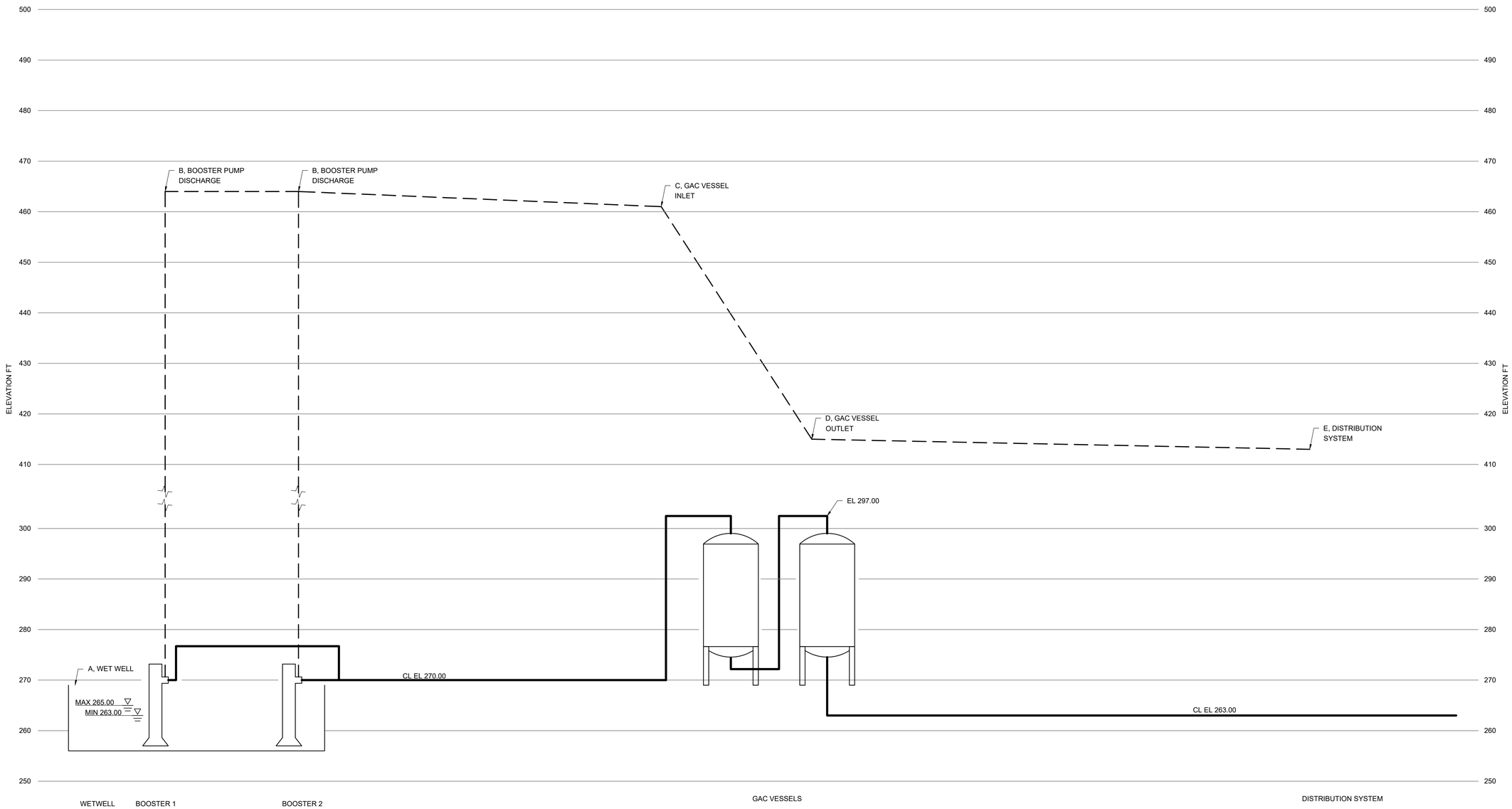

SCENARIO	DESCRIPTION	FLOW RATE SCENARIO	WET WELL WSE	BOOSTER PUMP DISCHARGE	GAC VESSEL PAIR INLET	GAC VESSEL PAIR OUTLET	DISTRIBUTION SYSTEM PIPING
			A	B	C	D	E
		GPM	HGL, FT (PSI)				
1	PLANT MAXIMUM (HIGH FRICTION, SHOWN ON DRAWING)	3200	263 (0)	464 (84)	461 (71)	415 (61)	413 (65)
2	PLANT MINIMUM (LOW FRICTION)	3200	265 (0)	447 (77)	437 (61)	418 (62)	413 (65)

NOTES:

1. MAX FLOW RATES: 3200 GPM, MAX STATIC HEAD, HIGH FRICTION AND DIRTY FILTERS
2. MIN FLOW RATES: 3200 GPM, MIN STATIC HEAD, LOW FRICTION AND CLEAN FILTERS
3. HYDRAULIC PROFILE IS BASED ON GAC MEDIA AND EXCLUDES CONSIDERATIONS FOR IX MEDIA

Brown AND Caldwell
PORTLAND, OREGON

Signer Name: Lynn Stephens
Signing Reason: I approved
this document
Signing Time: 2025-01-23
16:25:31(EST)

LYNN MICHELLE STEPHENS
STATE OF WASHINGTON
50145
REGISTERED
PROFESSIONAL ENGINEER

ISSUED FOR BID

CITY OF Vancouver WASHINGTON

WS14 PFAS TREATMENT DESIGN

REVISIONS

REV	DATE	DESCRIPTION

LINE IS 2 INCHES AT FULL SIZE

DESIGNED: C. CYR
DRAWN: T. LEMON
CHECKED: K. HAY
CHECKED: J. HESBY
APPROVED: L. STEPHENS

FILENAME
G-000-603.dwg

BC PROJECT NUMBER
180318

CLIENT PROJECT NUMBER
PRJ100893

GENERAL

HYDRAULIC PROFILE

DRAWING NUMBER
G-000-603

SHEET NUMBER 8 OF 125

Path:

Plot Date:

f832d10aebceda9c0679c99c2c6b61cb

GENERAL NOTES

1. CONTRACTOR SHALL VERIFY LOCATION OF ALL EXISTING UTILITIES IN THE VICINITY OF WORK. CALL 811 48 HOURS IN ADVANCE OF WORK AS NECESSARY.
2. NOTIFY THE CITY OF VANCOUVER A MINIMUM OF 5 WORKING DAYS IN ADVANCE OF ALL REQUESTS FOR TESTING OR INSPECTIONS.
3. FURNISH SHOP DRAWINGS FOR APPROVAL WHERE REQUIRED BY THE DETAIL SPECIFICATIONS AND FOR VARIATION FROM THE APPROVED DRAWING.
4. INSTALL EQUIPMENT IN ACCORDANCE WITH MANUFACTURER'S RECOMMENDATIONS AND CITY OF VANCOUVER SPECIFICATIONS.
5. ALL DUCTILE IRON PIPE SHALL BE CLASS 52 WITH EXTERNAL ZINC BASED COATING IN ACCORDANCE WITH SECTION 33 05 19.
6. COORDINATE ALL SHUTDOWNS OF THE WATER SYSTEM, AND CONNECTIONS TO THE EXISTING WATER SYSTEM WITH THE CITY OF VANCOUVER. A MINIMUM 10-WORKING DAYS NOTICE OF INTENT SHALL BE PROVIDED. SHUTDOWNS SHALL BE LIMITED TO BETWEEN 8AM AND 3PM UNLESS OTHERWISE INDICATED, DIRECTED OR APPROVED BY THE CITY OF VANCOUVER.
7. CUT-INS SHALL BE DIRECTLY SUPERVISED BY CONSTRUCTION MANAGER OR THE CITY OF VANCOUVER. FIELD VERIFY LOCATION, DEPTH AND COORDINATES OF CUT-IN LOCATION.
8. WATER SERVICE LINE TAPS SHALL BE DIRECTLY SUPERVISED BY CONSTRUCTION MANAGER. FIELD VERIFY LOCATION, DEPTH AND COORDINATES OF TAP LOCATION.
9. CONTRACTOR IS RESPONSIBLE FOR VERIFYING ALL EXISTING PIPE TYPES, JOINT TYPES, AND SIZES FOR COUPLINGS, CONNECTIONS AND LIVE TAPS.
10. IT SHALL BE THE RESPONSIBILITY OF THE CONTRACTOR TO HAVE A SET OF THESE APPROVED PLANS ON THE JOB SITE WHENEVER CONSTRUCTION IS IN PROGRESS. NO CHANGES ARE TO BE MADE WITHOUT PRIOR WRITTEN APPROVAL BY THE ENGINEER AND THE CITY OF VANCOUVER.
11. ALL PARTS MUST BE ON-SITE AND INSPECTED BY THE CITY OF VANCOUVER OR CONSTRUCTION MANAGER MINIMUM OF 2 WORKING DAYS PRIOR TO SCHEDULING ANY/ALL INSTALLATIONS.
12. SUPPLY A REDUCED PRESSURE (RP) BACKFLOW DEVICE FOR ALL TEMPORARY CONNECTIONS TO THE EXISTING WATER SYSTEM. CONTRACTOR IS RESPONSIBLE TO HAVE THE DEVICE TESTED AFTER INSTALLATION. TESTING APPROVAL SHALL BE PROVIDED TO THE CITY OF VANCOUVER. WATER USES OTHER THAN THOSE SHOWN WILL BE EVALUATED BY THE CITY OF VANCOUVER FOR COMPLIANCE WITH BACKFLOW PREVENTION REQUIREMENTS.
13. WATER LINE SEPARATION SHALL BE 10' HORIZONTAL FROM SANITARY SEWER, 5' HORIZONTAL FROM ALL OTHER UTILITIES. WATER LINE SHALL HAVE AN 18" MINIMUM VERTICAL CLEARANCE ABOVE SANITARY SEWER CROSSINGS, 6" MINIMUM VERTICAL CLEARANCE FOR ALL OTHERS. WHERE NOT POSSIBLE SEWER SHALL BE DIP AND ENCASED IN CONCRETE OR IN A STEEL CASING PER CITY OF VANCOUVER STANDARDS. AT CROSSINGS, SEWER PIPE JOINTS SHALL NOT BE OVER WATER PIPE, BUT EQUIDISTANT USING MAXIMUM POSSIBLE LENGTH OF SEWER PIPE.
14. MAXIMUM ALLOWABLE DEFLECTION AT EACH JOINT FOR DUCTILE IRON PIPE SHALL NOT EXCEED 3 DEGREES.
15. ALL WORK SHALL BE PERFORMED IN ACCORDANCE WITH APPLICABLE LOCAL, STATE AND FEDERAL LAWS. ALL WORK SHALL CONFORM TO THE TECHNICAL PROJECT SPECIFICATIONS, AND STANDARD DETAILS OF THE CITY OF VANCOUVER WHERE SPECIFIED.
16. INSTALL AND MAINTAIN TESC MEASURES FOR WORK AS SPECIFIED ON CONSTRUCTION TESC DRAWINGS, REQUIRED BY THE CONSTRUCTION MANAGER AND SPECIFIED IN GOVERNING SPECIFICATIONS.
17. MAINTAIN OPERATIONAL AND FUNCTIONING STORM SEWER LINES, POTABLE WATER LINES, POWER, TELEPHONE, CABLE TV AND ALL OTHER LINES IN THE WORK AREA.
18. MAINTAIN STORM DRAINAGE FLOWS DURING CONSTRUCTION AND DURING THE REPLACEMENT OR RESTORATION OF EXISTING STORM DRAINAGE FACILITIES AND SURFACE FEATURES.
19. RESTORE ALL PRIVATE AND PUBLIC PROPERTY AFFECTED BY THIS WORK AS NOTED IN THE SPECIFICATIONS. RESTORATION WORK INCLUDES, BUT IS NOT LIMITED TO, PAVEMENT, BASE, SUBGRADE, CONCRETE CURBS, TRAFFIC MARKINGS, SIDEWALKS, DRIVEWAY APRONS, STORM WATER PIPE, ETC. DISTURBED AREA RESTORED TO GRASS SHALL BE HYDROSEEDED. ALL RESTORATION WORK SHALL BE PER SPECIFICATIONS.
20. WHERE EXISTING IMPROVEMENTS ARE TO BE REPLACED, ALL MATERIALS REQUIRED TO COMPLETE WORK SHALL BE NEW AND OF SAME SIZE AND DIMENSION AS THAT OF THE EXISTING IMPROVEMENTS, UNLESS OTHERWISE NOTED.
21. IF NECESSARY, USE TEMPORARY SHEETING OR TRENCH BOXES TO MINIMIZE THE SIZE OF THE EXCAVATIONS TO PROTECT ADJACENT EXISTING ROADWAYS, UTILITIES AND OTHER FACILITIES.
22. CONTRACTOR IS RESPONSIBLE FOR TRAFFIC CONTROL PLANS. THE CONTRACTOR SHALL COMPLY WITH WSDOT STANDARD SPECIFICATIONS SECTION 1-07.23 AND WITH ALL PERMIT CONDITIONS.
23. USE CDF MATERIAL TYPE O (WSDOT 2-09.3(1)E) BACKFILL AT ALL UTILITY CROSSINGS (A MINIMUM OF 4-FT BEYOND EXISTING UTILITY) AND WHEN COVER IS LESS THAN 30" (PER PRE-APPROVAL).
24. COMPACTION TESTING IS REQUIRED FOR BOTH BASE AND TOP COURSE LAYERS PRIOR TO PAVEMENT RESTORATION.

STANDARD GRAVITY SEWER CONSTRUCTION NOTES

1. ALL SANITARY SEWER CONSTRUCTION SHALL CONFORM TO THE CURRENT ADOPTED DISTRICT GENERAL SPECIAL PROVISIONS AND STANDARD DRAWINGS.
2. ALL WORK IN PUBLIC RIGHT-OF-WAY SHALL CONFORM TO THE REQUIREMENTS OF THE CLARK COUNTY UTILITY PERMIT, CITY OF VANCOUVER, CITY OF RIDGEFIELD, CITY OF BATTLE GROUND, APPLICABLE RAILROAD PERMITS, WSDOT, OR DISTRICT REQUIREMENTS, WHICHEVER ARE MORE RESTRICTIVE.
3. CONTRACTOR SHALL CONTACT THE NW UTILITY NOTIFICATION CENTER AT 1-800-424-5555 AT LEAST TWO (2) WORKING DAYS BEFORE BUT NOT MORE THAN (10) TEN WORKING DAYS BEFORE THE START OF CONSTRUCTION OF THE WORK AND SHALL COMPLY WITH STATE REQUIREMENTS FOR UTILITY LOCATING.
4. ALL SURVEY MONUMENTATION SHALL BE PROTECTED FROM DAMAGE UNLESS OTHERWISE PERMITTED BY DEPARTMENT OF NATURAL RESOURCES.
5. A PRECONSTRUCTION CONFERENCE SHALL BE HELD PRIOR TO THE START OF CONSTRUCTION OF THE PROJECT.
6. GRAVITY SANITARY SEWER PIPE MATERIALS FOR LINES SIX (6) INCHES INSIDE DIAMETER AND LARGER SHALL BE:
   A. AWWA C-900 OR C-905 SDR 18 PVC, OR CLASS 50 DUCTILE IRON PIPE AT DEPTHS OF COVER FROM THREE (3) FEET TO LESS THAN FIVE (5) FEET IN A VEHICLE-TRAVELED AREA AND DEPTHS OF COVER GREATER THAN TWENTY (20) FEET; OR
   B. ASTM D3034 SDR 35 PVC PIPE AT DEPTHS OF COVER OF FIVE (5) FEET TO DEPTHS OF COVER OF TWENTY (20) FEET.
7. GRAVITY SANITARY SEWER PIPE MATERIALS FOR LINES FOUR (4) INCHES INSIDE DIAMETER AND SMALLER SHALL BE OF THE SAME MATERIAL AS THE MAIN. SCHEDULE 40 ABS MAY BE USED WITH ASTM D3034 SDR 35 PVC MAINS.
8. CONNECTIONS FOR SIDE SEWERS (LATERALS) SHALL BE:
   A. WYES FOR NEW SANITARY SEWERS.
   B. DISTRICT INSTALLED TAPS FOR EXISTING PLASTIC LINES: A "REQUEST FOR TAP" FORM MUST BE COMPLETED BY THE CONTRACTOR AND A TWO (2) WORKING DAY NOTICE BE GIVEN TO THE DISTRICT TO ALLOW THE TAP TO BE SCHEDULED.
   C. CONTRACTOR SHALL CUT IN WYES FOR EXISTING NON-PLASTIC PIPE.
9. THE ENDS OF SIDE SEWERS (LATERALS) SHALL BE:
   A. BACK-FILLED ONLY AFTER DISTRICT INSPECTION AND APPROVAL AND THE DESIGN ENGINEER OR SURVEYOR HAS OBTAINED RECORD DRAWING INFORMATION.
   B. MARKED WITH A 2"X4"X10' WRAPPED WITH A14 GAUGE WIRE NOT CONNECTED TO THE TONING WIRE AND AT A 90-DEGREE ANGLE FROM THE END OF THE LATERAL. THE MARKER WILL EXTEND AT LEAST THREE (3) FEET ABOVE THE FINISHED GROUND SURFACE. TWO (2) FEET OF EACH END OF THE 2"X4"X10' SHALL BE PAINTED GREEN. IF THE 2"X4" IS NOT TEN (10) FEET LONG, THE CONTRACTOR SHALL MARK THE ACTUAL LENGTH ON THE 2"X4" WITHIN SIX INCHES OF THE TOP AND ON BOTH SIDES.
   C. INDICATED BY AN "S" THAT IS STAMPED INTO THE CURB DIRECTLY ABOVE THE SIDE SEWER.
10. MANHOLE JOINTS SHALL BE EXTERNALLY SEALED IN ACCORDANCE WITH 7-05.3 AND WHERE SHOWN ON THE PLANS.
11. MANHOLES SHALL NOT HAVE EDGES OF MANHOLE CASTING AND COVER WITHIN THREE (3) FEET OF THE CURB GUTTER. WHERE DETERMINED BY THE DISTRICT, INFLOW DISHES SHALL BE INSTALLED IN MANHOLES.
12. ALL TESTING SHALL BE IN ACCORDANCE WITH THE GENERAL SPECIAL PROVISIONS.
13. THE DESIGN ENGINEER OR SURVEYOR SHALL SUBMIT PRE-PAVING RECORD DRAWINGS.
14. FINAL RECORD DRAWINGS SHALL BE SUBMITTED TO THE DISTRICT PRIOR TO FINAL ACCEPTANCE.
15. ALL SIDE SEWER (LATERALS) SHALL BE INSTALLED WITH TONING WIRE. TONING WIRE SHALL BE INSTALLED ON MAIN LINES WHERE SHOWN ON THE PLANS.
16. INVERT ELEVATIONS OF ALL CLEANOUTS SHALL BE VERIFIED PRIOR TO BACKFILLING.

STANDARD PRESSURE SEWER CONSTRUCTION NOTES

1. ALL SANITARY SEWER CONSTRUCTION SHALL CONFORM TO THE CURRENT ADOPTED DISTRICT GENERAL SPECIAL PROVISIONS AND STANDARD DRAWINGS.
2. ALL WORK IN PUBLIC RIGHT-OF-WAY SHALL CONFORM TO THE REQUIREMENTS OF THE CLARK COUNTY UTILITY PERMIT, CITY OF VANCOUVER, CITY OF RIDGEFIELD, CITY OF BATTLE GROUND, APPLICABLE RAILROAD PERMITS, WSDOT, OR DISTRICT REQUIREMENTS, WHICHEVER ARE MORE RESTRICTIVE.
3. CONTRACTOR SHALL CONTACT THE NW UTILITY NOTIFICATION CENTER AT 1-800-424-5555 AT LEAST TWO (2) WORKING DAYS BEFORE BUT NOT MORE THAN (10) TEN WORKING DAYS BEFORE THE START OF CONSTRUCTION OF THE WORK AND SHALL COMPLY WITH STATE REQUIREMENTS FOR UTILITY LOCATING.
4. ALL SURVEY MONUMENTATION SHALL BE PROTECTED FROM DAMAGE UNLESS OTHERWISE PERMITTED BY DEPARTMENT OF NATURAL RESOURCES.
5. A PRECONSTRUCTION CONFERENCE SHALL BE HELD PRIOR TO THE START OF CONSTRUCTION OF THE PROJECT.
6. PRESSURE SANITARY SEWER PIPE MATERIALS FOR DEPTHS OF COVER LESS THAN TWENTY (20) FEET FOR LINES TWO (2) INCHES INSIDE DIAMETER AND LARGER SHALL BE:
   A. DUCTILE IRON PIPE (DIP), STANDARD THICKNESS CLASS 50, AWWA C151; OR
   B. POLYVINYL CHLORIDE (PVC) PIPE ASTM D2241, SDR 21, CLASS 200; OR
   C. POLYVINYL CHLORIDE (PVC) PIPE AWWA C900 OR AWWA C905, SDR 18; OR
   D. HIGH DENSITY POLYETHYLENE (HDPE) PIPE PE 3408, MINIMUM SDR 17, 100 PSI, ASTM D3350, PE 3454C AND ASTM D-1248 TYPE III, CLASS C, CATEGORY 5, GRADE P3; AND
   E. ALL FITTINGS SHALL MATCH THE PIPE MATERIAL INSTALLED.
   F. PRESSURE SANITARY SEWER PIPE MATERIALS FOR SPECIAL INSTALLATIONS (E.G., DEPTHS OF COVER TWENTY (20) FEET OR GREATER, STREAM CROSSINGS, SUSPENDED PIPES) SHALL BE SUBMITTED TO THE DISTRICT ENGINEER FOR APPROVAL.
7. PRESSURE SERVICE LINE PIPE FOR RESIDENTIAL INSTALLATIONS SHALL BE:
   A. ONE AND ONE-QUARTER (1¼) INCH DIAMETER SCHEDULE 40 POLYVINYL CHLORIDE (PVC) FOR STEP SYSTEMS; AND
   B. TWO (2) INCH DIAMETER SCHEDULE 40 POLYVINYL CHLORIDE (PVC) FOR GRINDER PUMP SYSTEMS.
8. CONNECTIONS FOR SINGLE-FAMILY RESIDENTIAL PRESSURE SERVICE LINES SHALL BE:
   A. ONE AND ONE-QUARTER (1¼) INCH BY MAIN DIAMETER SELF-TAPPING PVC FULL CIRCLE STAINLESS STEEL SADDLES FOR STEP SYSTEMS ON NEW FORCE MAINS; AND
   B. TWO (2) INCH BY MAIN DIAMETER SELF-TAPPING PVC FULL CIRCLE STAINLESS STEEL SADDLES FOR GRINDER PUMP SYSTEMS ON NEW FORCE MAINS; AND
   C. THE DISTRICT WILL INSTALL TAPS ON ALL EXISTING FORCE MAINS. A "REQUEST FOR TAP" FORM MUST BE COMPLETED BY THE CONTRACTOR, FEES PAID, AND A TWO (2) WORKING DAY NOTICE BE GIVEN TO THE DISTRICT SUPERINTENDENT TO ALLOW THE TAP TO BE SCHEDULED.
9. ALL FORCE MAINS AND PRESSURE SERVICE LINES INSTALLED (BOTH PUBLIC AND PRIVATE) SHALL INCLUDE THE INSTALLATION OF TONING WIRE WITH APPROPRIATE LOCATE ACCESS POINTS. A CONTINUOUS TONING WIRE SHALL BE ATOP OF THE PRESSURE SERVICE LINE. THE TONING WIRE SHALL END IN THE VALVE BOX WITH A MINIMUM OF A TWO (2) FOOT COIL OF WIRE. THE TONING WIRE SHALL BE TESTED FOR CONTINUITY PRIOR TO ACCEPTANCE.
10. DETECTABLE MARKING TAPE SHALL BE INSTALLED EIGHTEEN (18) INCHES ABOVE THE FORCE MAIN.
11. THE ENDS OF PRESSURE SERVICE LINES SHALL BE:
   A. GENERALLY MARKED WITH A 2"X4"X8' WITH THE TONING WIRE FROM THE PRESSURE SERVICE LINE WRAPPED AROUND THE MARKER. THE MARKER SHALL EXTEND THREE (3) FEET ABOVE THE FINISHED GROUND SURFACE. TWO (2) FEET OF EACH END OF THE 2"X4"X8' SHALL BE PAINTED GREEN. IF THE 2"X4" IS NOT EIGHT (8) FEET LONG, CONTRACTOR WILL MARK ACTUAL LENGTH ON THE 2"X4".
12. ALL TESTING SHALL BE IN ACCORDANCE WITH THE DISTRICT'S GENERAL SPECIAL PROVISIONS.
13. FINAL RECORD DRAWINGS WILL BE SUBMITTED TO THE DISTRICT PRIOR TO APPROVAL OF SEWER PERMITS.

STANDARD NOTES FOR WORK IN RIGHT OF WAY

1. ANY DAMAGE TO EXISTING TRAFFIC SIGNAL DETECTION SHALL NECESSITATE THE DEVELOPER TO REPLACE BY UPDATING THE DETECTION TO CURRENT CITY STANDARD WHICH IS FLIR THERMAL DETECTION SENSORS. ANY DETECTION MODIFICATIONS OR ADDITIONAL DETECTION THAT ARE REQUIRED BASED ON LANE CHANNELIZATION CHANGES WILL NECESSITATE THE INSTALLATION OF FLIR THERMAL DETECTION SENSOR(S).
2. A RIGHT-OF-WAY CONSTRUCTION PERMIT IS REQUIRED FOR ANY PROJECT THAT INTENDS TO CLOSE OR ALTER A SIDEWALK OR CURB RAMP FOR CONSTRUCTION PURPOSES. EACH PERMIT MUST INCLUDE A PEDESTRIAN TRAFFIC CONTROL PLAN (PTCP). IN GENERAL, THE PTCP MUST LIMIT SIDEWALK CLOSURES AND AVOID DETOURING OF PEDESTRIANS TO THE OPPOSITE SIDE OF THE STREET DURING CONSTRUCTION. THE DESIGNERS OF THE PTCP MUST MAKE EVERY EFFORT TO ALLOW PEDESTRIANS TO CONTINUE USING THE SIDEWALK ON THE SAME SIDE OF THE STREET AS THE CONSTRUCTION PROJECT, IF POSSIBLE. SUCH MEASURES AS OVERHEAD PROTECTIVE SCAFFOLDING AND/OR TEMPORARY RAMPS AND JERSEY BARRIERS TO TEMPORARILY DIVERT PEDESTRIANS INTO A PROTECTED PEDESTRIAN ROUTE ON THE STREET SHOULD BE CONSIDERED. SHORT-TERM SIDEWALK CLOSURES AND STREET-CROSSING DETOURS MAY BE ALLOWED WHEN THE BUILDING FOUNDATION WORK IS BEING COMPLETED, PRIMARILY IN SITUATIONS WHERE THE BUILDING FOUNDATION IS BEING CONSTRUCTED AT THE IMMEDIATE BACK OF SIDEWALK, AND HAVING PEDESTRIANS TOO CLOSE TO ACTIVE FOUNDATION CONSTRUCTION COULD POSE A SAFETY HAZARD. HOWEVER, ONCE THOSE FOUNDATIONS ARE COMPLETE, THE CONTRACTOR WILL BE EXPECTED TO RESTORE THE PEDESTRIAN ROUTE ON THE SAME SIDE OF THE STREET AS SOON AS PRACTICAL. PTCPS WILL BE EVALUATED ON A CASE-BY-CASE BASIS; SPECIFIC REQUIREMENTS WILL VARY DEPENDING ON LOCATION.
3. SLIP-RESISTANT SURFACING FOR JUNCTION BOXES, CABLE VAULTS, AND PULL BOXES
4. WHERE SLIP-RESISTANT JUNCTION BOXES, CABLE VAULTS, OR PULL BOXES ARE REQUIRED, EACH BOX OR VAULT SHALL HAVE SLIP-RESISTANT SURFACING MATERIAL APPLIED TO THE STEEL LID AND FRAME OF THE BOX OR VAULT. WHERE THE EXPOSED PORTION OF THE FRAME IS 1/2-INCH WIDE OR LESS, SLIP-RESISTANT SURFACING MATERIAL MAY BE OMITTED FROM THAT PORTION OF THE FRAME.
5. SLIP-RESISTANT SURFACING MATERIAL SHALL BE IDENTIFIED WITH A PERMANENT MARKING ON THE UNDERSIDE OF EACH BOX OR VAULT LID WHERE IT IS APPLIED. THE PERMANENT MARKING SHALL BE FORMED WITH A MILD STEEL WELD BEAD, WITH A LINE THICKNESS OF AT LEAST 1/8 INCH. THE MARKING SHALL INCLUDE A TWO CHARACTER IDENTIFICATION CODE FOR THE TYPE OF MATERIAL USED AND THE YEAR OF MANUFACTURE OR APPLICATION. THE FOLLOWING MATERIALS ARE APPROVED FOR APPLICATION AS SLIP-RESISTANT MATERIAL, AND SHALL USE THE ASSOCIATED IDENTIFICATION CODES:

   A) HARSCO INDUSTRIAL IKG, MEBAC #1 - STEEL: M1
   B) W. S. MOLNAR CO., SLIPNOT GRADE 3 - COARSE: S3
   C) THERMION, SAFTRAX TH604 GRADE #1 - COARSE: T1

Brown AND Caldwell
PORTLAND, OREGON

Signer Name: Natalie Chow
Signing Reason: I approved this document
Signing Time: 2025-01-23 11:15:56(EST)

NATALIE CHOW
STATE OF WASHINGTON
23022506
REGISTERED PROFESSIONAL ENGINEER

ISSUED FOR BID

CITY OF Vancouver WASHINGTON

WS14 PFAS TREATMENT DESIGN

REVISIONS

REV	DATE	DESCRIPTION

LINE IS 2 INCHES AT FULL SIZE

DESIGNED: T.ROSSILLON
DRAWN: E.STILES
CHECKED: J.FAUST
CHECKED:
APPROVED: N.CHOW

FILENAME C-000-001.dwg
BC PROJECT NUMBER 180318
CLIENT PROJECT NUMBER PRJ100893

CIVIL

CIVIL NOTES 1

DRAWING NUMBER C-000-001

SHEET NUMBER 9 OF 125

Plot Date: 12/17/2024 11:02:26 AM Path: C:\bcpw\d3450201\C-000-001.dwg

d71a333a5ae512eaf4f033e2f916075a

GENERAL STORM WATER CONSTRUCTION NOTES

1. ALL MATERIALS AND INSTALLATION OF STORM SEWERS AND DRAINAGE SYSTEMS SHALL BE IN CONFORMANCE WITH THE REQUIREMENTS IN THE CITY OF VANCOUVER'S LATEST VERSION OF "GENERAL REQUIREMENTS AND STANDARD DETAILS MANUAL" AND THE LATEST EDITION OF THE STANDARD SPECIFICATIONS FOR ROAD, BRIDGE, AND MUNICIPAL CONSTRUCTION CHAPTER OF THE AMERICAN PUBLIC WORKS ASSOCIATION (APWA) AND THE WASHINGTON STATE DEPARTMENT OF TRANSPORTATION, WHERE THE CITY OF VANCOUVER GENERAL REQUIREMENTS SHALL TAKE PRECEDENCE. WHEREVER THE STANDARD SPECIFICATIONS REFER TO THE OWNER,AS THE "STATE" OR "SECRETARY" OR WHEN REFERENCE IS MADE TO THE DEPARTMENT OF TRANSPORTATION IT SHALL BE UNDERSTOOD THAT THE STANDARD SPECIFICATIONS SHOULD READ THE "CITY".
2. ALL PUBLIC STORM SEWER AND DRAINAGE SYSTEM CONSTRUCTION IS SUBJECT TO INSPECTION AND APPROVAL BY THE CITY OF VANCOUVER'S DEPARTMENT OF PUBLIC WORKS. THE CONTRACTOR SHALL NOTIFY THE CONSTRUCTION OFFICE (360) 487-7780 AT LEAST 48 HOURS PRIOR TO THE START OF ANY CONSTRUCTION. THE CITY MAY REQUIRE THAT A PRECONSTRUCTION CONFERENCE BE HELD.
3. THE CONTRACTOR IS REQUIRED TO NOTIFY ALL UTILITIES 48 HOURS PRIOR TO COMMENCEMENT OF WORK. THE CONTRACTOR MAY CONTACT THE NORTHWEST UTILITY NOTIFICATION CENTER AT 1-800-424-5555 IN LIEU OF CONTACTING INDIVIDUAL UTILITIES.
4. IT SHALL BE THE RESPONSIBILITY OF THE DEVELOPER AND/OR CONTRACTOR TO PROCURE AND COMPLY WITH THE PROVISIONS OF ALL APPLICABLE PERMITS, EASEMENTS, LICENSES AND CERTIFICATES IN CONJUNCTION WITH THE CONSTRUCTION OF STORM SEWERS AND DRAINAGE SYSTEMS. COMPLIANCE SHALL BE AT ALL LEVELS; FEDERAL, STATE, AND CITY, RELATING TO THE PERFORMANCE OF THIS WORK. THE CONTRACTOR SHALL OBTAIN A STREET CUT PERMIT FOR WORK WITHIN THE PUBLIC RIGHT-OF-WAY.
5. THE CONTRACTOR SHALL OBTAIN AND SUBMIT AN APPROVED TRAFFIC CONTROL PLAN PRIOR TO BEGINNING CONSTRUCTION. THE SHALL BE APPROVED BY THE CITY TRANSPORTATION DIVISION (360) 487-7735.
6. A REGISTERED PROFESSIONAL ENGINEER, ENGINEERING GEOLOGIST, OR A DESIGNATED REPRESENTATIVE WORKING UNDER THEIR DIRECT SUPERVISION, SHALL OBSERVE THE CONSTRUCTION OF THE INFILTRATION FACILITY AND CONDUCT CONFIRMATION INFILTRATION TESTING ON SOILS EXPOSED AT THE BASE OF THE FACILITY. CONFIRMATION TESTING SHALL TAKE PLACE PRIOR TO INSTALLATION OF THE FACILITY (E.G. PLACEMENT Of DRAIN ROCK, PERFORATED PIPE, DRYWELLS, ETC.) AND SHALL BE CONDUCTED IN ACCORDANCE WITH THE RECOMMENDATIONS OUTLINED IN 6.2 CONSTRUCTION OBSERVATION AND TESTING OF SWWASCE INFILTRATION STANDARDS.
7. THE CONTRACTOR SHALL OBTAIN ALL OFFSITE CONSTRUCTION EASEMENTS PRIOR TO THE START OF CONSTRUCTION. THE CONTRACTOR SHALL VERIFY THAT ALL OFFSITE UTILITIES EASEMENTS HAVE BEEN OBTAINED BY THE OWNER PRIOR TO THE COMMENCEMENT OF ANY OFFSITE CONSTRUCTION.
8. THE CONTRACTOR IS TO REPORT ANY SITE DISCREPANCIES IMMEDIATELY TO THE ENGINEER. ITEMS TO REPORT INCLUDE, BUT ARE NOT LIMITED TO, THE FOLLOWING:
   -EXISTING PIPE SIZE, TYPE, SLOPE AND INVERT ELEVATION
   -ROADWAY CENTERLINE AND TOP OF CURB ELEVATIONS
   -GROUNDWATER ENCOUNTERED WITHIN 5-FEET OF THE BOTTOM OF INFILTRATION FACILITIES.
9. WATER QUALITY DEVICES WILL BE INSTALLED AND FUNCTIONING PRIOR TO COMMENCING WITH INSTALLATION OF PAVEMENT FOR ALL AREAS DRAINING INTO THE WATER QUALITY SYSTEM. BIORETENTION FACILITIES SHALL HAVE BIORETENTION SOIL MIX INSTALLED. MECHANICAL DEVICES SHALL HAVE FILTER MEDIA INSTALLED.
10. ALL NEW CATCH BASINS SHALL BE LABELED WITH "PROTECT WATER * ONLY IN DRAIN" MEDALLIONS.MEDALLIONS SHALL BE AFFIXED TO DRY SURFACES WITH HIGH QUALITY POLYURETHANE SEALANT AND RIVETS. APPROVED MEDALLIONS ARE AVAILABLE FOR PURCHASE AT THE CITY'S PERMIT COUNTER (360)487-7804.
11. ROOF DOWNSPOUT RUNOFF MUST BE RETAINED ON EACH SPECIFIC SITE. DOWNSPOUTS SHALL NOT DRAIN TO THE STREET OR ANY ADJACENT PROPERTIES UNLESS SPECIFIC APPROVAL HAS BEEN SHOWN ON APPROVED CIVIL ENGINEERING PLANS.
12. THE CONTRACTOR SHALL PROVIDE A TELEVISION REPORT, VIDEOS, AND TABULAR AS-BUILT OF ALL PUBLIC STORM MAINS AND LATERALS PRIOR TO PAVING. THIS TV INFORMATION SHALL BE SUBMITTED TO THE CITY INSPECTOR FOR REVIEW. TV INSPECTION SHALL DEMONSTRATE NO MANUFACTURING OR INSTALLATION DEFECTS, OR ANY DEBRIS IN THE LINES, FOR APPROVAL AND ACCEPTANCE THE CITY. FINAL ACCEPTANCE AND CONSTRUCTION OF STORM SEWERS ARE SUBJECT TO SECTIONS 1-05.12, AND 7-04.3 OF THE STANDARD SPECIFICATIONS. PIPE DEFLECTION TESTING MUST PER 7-17.3(2)G OF THE STANDARD SPECIFICATIONS AND ITS AMENDMENTS.

* - ALL NOTES IN THIS SECTION ARE CITY OF VANCOUVER STANDARD CONSTRUCTION NOTES FOR STORM SEWERS (D-1.0)

GENERAL EROSION PREVENTION & SEDIMENT CONTROL NOTES *

1. ALL EROSION AND SEDIMENT CONTROL MEASURES SHALL BE IN PLACE AND IN WORKING CONDITION PRIOR TO ANY LAND DISTURBING ACTIVITY INCLUDING CLEARING OR GRADING, EROSION AND SEDIMENT CONTROL MEASURES SHALL BE APPROVED BY THE CITY EROSION SPECIALIST PRIOR TO THE COMMENCEMENT OF WORK. AN ONSITE INSPECTION SHALL BE REQUESTED WHEN EROSION AND SEDIMENT CONTROL MEASURES ARE IN PLACE AND PRIOR TO COMMENCEMENT OF WORK. ONCE APPROVED, THE SITE MUST BE MAINTAINED THROUGH THE LIFE OF THE PROJECT, AS SHOWN ON THE PLANS. ADDITIONAL MEASURES MAY BE REQUIRED TO MEET THE PROVISIONS OF THE CITY EROSION PREVENTION AND SEDIMENT CONTROL ORDINANCE VMC 14.24.
2. EROSION AND SEDIMENT CONTROL BMPS SHALL BE SITED, DESIGNED AND CONSTRUCTED IN ACCORDANCE WITH THE REQUIREMENTS IN THE CITY OF VANCOUVER'S LATEST VERSION OF GENERAL REQUIREMENTS AND STANDARD DETAILS MANUAL AND THE WASHINGTON STATE DEPARTMENT OF ECOLOGY STORMWATER MANAGEMENT MANUAL FOR WESTERN WASHINGTON, WHERE THE CITY OF VANCOUVER GENERAL REQUIREMENTS SHALL TAKE PRECEDENCE.
3. THE DEVELOPER AND/OR OWNER IS RESPONSIBLE FOR MAINTAINING EROSION PREVENTION AND SEDIMENT CONTROL BMPS DURING AND AFTER INSTALLATION OF ALL UTILITY WORK ASSOCIATED WITH UTILITY TRENCHES.
4. PRIOR TO ANY SITE EXCAVATION, ALL STORM DRAIN INLETS SHALL BE PROTECTED DOWN SLOPE FROM ANY DISTURBED OR CONSTRUCTION AREAS PER STANDARD DETAIL E-2.20 TO PREVENT SEDIMENT FROM ENTERING THE STORM DRAINAGE SYSTEM PRIOR TO PERMANENT STABILIZATION OF THE DISTURBED AREAS. CLEAN INLET FILTER AS NECESSARY TO MAINTAIN DRAINAGE. REMOVE FILTER AND CLEAN CATCH BASINS FOLLOWING COMPLETION OF SITE WORK.
5. NEWLY CONSTRUCTED OR MODIFIED INLETS AND CATCH BASINS SHALL BE PROTECTED FROM SEDIMENT IMMEDIATELY UPON INSTALLATION.
6. THE CONTRACTOR SHALL NOT ALLOW SEDIMENT OR DEBRIS TO ENTER NEW OR EXISTING PIPES, CATCH BASINS OR INFILTRATION SYSTEMS. IF THIS OCCURS, THE CONTRACTOR SHALL REMOVE ALL ACCUMULATED SEDIMENT FROM THE CATCH BASINS, DRYWELLS, AND STORM PIPES IMMEDIATELY. FINAL ACCEPTANCE WILL NOT BE ISSUED BY THE CITY UNTIL THIS OCCURS.
7. PRIOR TO LEAVING A CONSTRUCTION SITE OR PRIOR TO DISCHARGING INTO AN INFILTRATION SYSTEM, SEDIMENT-LADEN WATER SHALL PASS THROUGH A SEDIMENT POND, TRAP, OR OTHER APPROVED BMP SYSTEM.
8. ALL EXPOSED AND UNWORKED SOILS SHALL BE STABILIZED BY THE APPROPRIATE BEST MANAGEMENT PRACTICES (BMPS) FROM OCTOBER 1 TO APRIL 30, NO SOILS SHALL BE EXPOSED AND UNWORKED FOR MORE THAN TWO (2) DAYS. FROM MAY 1 TO SEPTEMBER 30, NO SOILS SHALL BE EXPOSED AND UNWORKED FOR MORE THAN SEVEN (7) DAYS.
9. SOIL STOCKPILES SHALL BE STABILIZED FROM EROSION, PROTECTED WITH SEDIMENT TRAPPING MEASURES, AND WHEN POSSIBLE, BE LOCATED AWAY FROM STORM DRAIN INLETS, WATER WAYS AND DRAINAGE CHANNELS.
10. CONSTRUCTION ROADS AND PARKING AREAS SHALL BE STABILIZED WHEREVER THEY ARE CONSTRUCTED, WHETHER PERMANENT OR TEMPORARY, FOR THE USE OF CONSTRUCTION TRAFFIC.
11. IF THE BMPS APPLIED TO A SITE ARE INSUFFICIENT TO PREVENT SEDIMENT FORM REACHING WATER BODIES, ADJACENT PROPERTIES, STORM FACILITIES OR PUBLIC RIGHT-OF-WAY, THEN THE CITY SHALL REQUIRE ADDITIONAL BMPS.
12. IF THE CITY INSPECTOR OR ENGINEER(S) HAS EVIDENCE OF POOR CONSTRUCTION PRACTICES OR IMPROPER EROSION PREVENTION BMPS, CITATIONS AND/OR A STOP WORK ORDER SHALL BE ISSUED UNTIL PROPER MEASURES HAVE BEEN TAKEN AND APPROVED BY THE CITY OF VANCOUVER.

PROTECTION OF ADJACENT PROPERTIES, ROADS/STREETS AND PAVED SURFACES

13. PROVIDE A 12-INCH DEEP PAD OF CRUSHED ROCK FOR A DISTANCE OF 100 FEET INTO THE SITE FOR ALL ACCESS POINTS UTILIZED BY CONSTRUCTION `` AND TRUCKS. PAD WIDTH SHALL BE A MINIMUM OF 20 FEET. ALL VEHICLES LEAVING THE SITE SHALL EGRESS ACROSS THE PAD. ACCUMULATED SEDIMENT SHALL BE PERIODICALLY REMOVED, OR ADDITIONAL ROCK SHALL BE PLACED UPON THE PAD SURFACE. ROCK SHALL BE CLEAN 4-INCH TO 8-INCH QUARRY SPALLS. ALL MATERIALS SPILLED, DROPPED, WASHED, OR TRACKED FROM VEHICLES ONTO ROADWAYS OR INTO STORM DRAINS SHALL BE REMOVED IMMEDIATELY. MECHANICAL BROOM SWEEPERS ARE NOT ALLOWED.
14. IF SEDIMENT, MUD OR DEBRIS IS TRANSPORTED ONTO A PAVED SURFACE OR ROADWAY, THE PAVED SURFACES SHALL BE THOROUGHLY CLEANED WITH HIGH EFFICIENCY STREET SWEEPERS AT THE END OF EACH WORKDAY, OR MORE OFTEN IS NECESSARY. PUBLICLY TRAVELED PAVED SURFACES NEED TO BE CLEANED IMMEDIATELY. SIGNIFICANT SOIL DEPOSITS SHALL BE REMOVED FROM ROADS BY SHOVELING AND SWEEPING. STREET WASHING IS NOT ALLOWED UNLESS APPROVED BY THE DIRECTOR AND ONLY AFTER SEDIMENT IS REMOVED IN THE MANNER DESCRIBED ABOVE. MECHANICAL BROOM SWEEPERS ARE NOT ALLOWED.
15. SLURRY AND CUTTINGS SHALL BE VACUUMED DURING CUTTING AND SURFACING OPERATIONS. COLLECTED SLURRY AND CUTTINGS SHALL BE DISPOSED OF IN A MANNER THAT DOES NOT VIOLATE GROUNDWATER OR SURFACE WATER QUALITY STANDARDS.
16. A WHEEL WASH MAY BE REQUIRED IF CONSTRUCTION ENTRANCE IS NOT SUFFICIENT IN PREVENTING SEDIMENT FROM BEING TRACKED ONTO PAVEMENT. WHEEL WASH SHALL BE PER STANDARD PLAN E-1.06 AND THE STORMWATER MANUAL.
17. INSTALL SEDIMENT FENCE PER STANDARD PLAN E-2.33 PRIOR TO BUILDING CONSTRUCTION AND/OR EXCAVATION TO PREVENT SILT INTRUSION UPON ADJACENT LOTS. IF CONSTRUCTION OCCURS SIMULTANEOUSLY ON ADJACENT LOTS AND THE LOTS HAVE THE SAME OWNER DURING CONSTRUCTION, THE SILT FENCE ALONG THE COMMON LOT LINE MAY BE ELIMINATED.
18. PROPOSED PERMEABLE PAVEMENT AREAS SHALL BE SHOWN ON THE EROSION CONTROL PLAN. PERMEABLE PAVEMENT AREAS SHALL BE PROTECTED FROM SEDIMENT DURING AND AFTER INSTALLATION, UNTIL THE DEVELOPMENT CONSTRUCTION IS COMPLETED.
19. WASHOUT OF CONCRETE TRUCKS MUST BE PERFORMED OFFSITE OR IN DESIGNATED CONCRETE WASHOUT AREAS ONLY. WASHING OUT CONCRETE TRUCKS, CHUTES, TOOLS OR EQUIPMENT ON THE GROUND OR INTO STORM DRAINS, OPEN DITCHES, STREETS OR STREAMS IS PROHIBITED.
20. SUBMIT DEWATERING PLAN PRIOR TO DISCHARGING TURBID AND CONTAMINATED STORMWATER AND GROUNDWATER OFFSITE. TREATMENT OR DISPOSAL OPTIONS MAY INCLUDE: INFILTRATION, TRANSPORT OFFSITE IN A VEHICLE, FOR LEGAL DISPOSAL IN A MANNER THAT DOES NOT POLLUTE STATE WATER; ECOLOGY APPROVED ONSITE CHEMICAL TREATMENT; SANITARY OR COMBINED SEWER DISCHARGE WITH LOCAL SEWER DISTRICT APPROVAL; USE OF THE SEDIMENTATION BAG WITH OUTFALL TO A DITCH OR SWALE FOR SMALL VOLUMES OF LOCALIZED DEWATERING.
21. PERMANENT STORM WATER FACILITIES SHALL BE ISOLATED AND PROTECTED FROM SEDIMENTATION WITH AN APPROVED BMP.

MAINTENANCE OF EROSION PREVENTION AND SEDIMENT CONTROL BMPS

22. ALL EROSION PREVENTION AND SEDIMENT CONTROL BMPS SHALL BE REGULARLY INSPECTED AND MAINTAINED TO ENSURE CONTINUED PERFORMANCE OF THEIR INTENDED FUNCTION.
23. THE CONTRACTOR/CESCL SHALL MAINTAIN AND HAVE ONSITE A WRITTEN LOG OF EROSION PREVENTION AND SEDIMENT CONTROL BMP MAINTENANCE. CONSTRUCTION SITES SHALL BE INSPECTED AT LEAST ONCE A WEEK AND AFTER EACH RAINFALL EVENT.
24. ALL TEMPORARY EROSION PREVENTION AND SEDIMENT CONTROL MEASURES SHALL BE REMOVED WITHIN 30 DAYS AFTER SITE STABILIZATION IS ACHIEVED OR AFTER TEMPORARY BMPS ARE NO LONGER NEEDED. TRAPPED SEDIMENT SHALL BE REMOVED OR STABILIZED ONSITE. DISTURBED SOIL AREAS RESULTING FROM REMOVAL SHALL BE PERMANENTLY STABILIZED PER THE STORMWATER MANUAL.

DUST CONTROL

25. IN AREAS SUBJECT TO SURFACE AND AIR MOVEMENT OF DUST, REFER TO THE STORMWATER MANUAL FOR DUST CONTROL BMP'S.

TEMPORARY SEEDING

26. EXPOSED SURFACES THAT WILL NOT BE BROUGHT TO FINAL GRADE OR GIVEN A PERMANENT COVER TREATMENT WITH 30 DAYS OF EXPOSURE SHALL HAVE SEED MIX AND MULCH PLACED TO STABILIZE THE SOIL AND REDUCE EROSION SEDIMENTATION.
27. AN APPROVED TEMPORARY SEEDING MIXTURE SHALL BE APPLIED TO THE PREPARED SEED BED AT A RATE OF 120 LBS/ACRE. NOTE: "HYDROSEEDING" APPLICATIONS WITH APPROVED SEED-MULCH-FERTILIZER MIXTURES MAY ALSO BE USED.

PROTECTION OF LOW IMPACT DEVELOPMENT (LID) BMP'S

28. PROTECT ALL BIORETENTION AND RAIN GARDEN FACILITIES FROM SEDIMENTATION THROUGH INSTALLATION AND MAINTENANCE OF EROSION AND SEDIMENT CONTROL BMP'S.
29. RESTORE LID FACULTIES TO FULL FUNCTIONING CONDITION IF THEY ACCUMULATE SEDIMENT DURING CONSTRUCTION.
30. MAINTAIN THE INFILTRATION CAPABILITIES OF BIORETENTION AND RAIN GARDEN FACILITIES BY PROTECTING AGAINST COMPACTION.
31. CONTROL EROSION AND PREVENT SEDIMENT FROM CONTAMINATING PERMEABLE PAVEMENTS. CLEAN PERMEABLE PAVEMENT FOULED WITH SEDIMENT OR NO LONGER PASSING AN INITIAL INFILTRATION TEST.
32. KEEP HEAVY EQUIPMENT OFF EXISTING SOILS UNDER PROPOSED LID FACILITIES THAT HAVE BEEN EXCAVATED TO FINAL GRADE TO RETAIN THE SOIL INFILTRATION RATE.
33. CLEARING LIMITS FOR CRITICAL AREAS AND THEIR BUFFERS, AND TREES THAT ARE TO BE PRESERVED WITHIN THE CONSTRUCTION AREA SHALL BE CLEARLY MARKED PRIOR TO LAND-DISTURBING ACTIVITY.

* - ALL NOTES IN THIS SECTION ARE CITY OF VANCOUVER STANDARD NOTES FOR EROSION PREVENTION AND SEDIMENT CONTROL (E-1.00a AND E-1.00b)

GEOTECHNICAL BORING NOTES

1. FOR GEOTECHNICAL BORING INFORMATION REFER TO:

   GEOTECHNICAL DATA REPORT, VANCOUVER WATER STATION NO. 14, PFAS TREATMENT PREPARED BY SHANNON AND WILSON, (DRAFT) DATED MARCH, 2024

Brown AND Caldwell
PORTLAND, OREGON

Signer Name: Natalie Chow
Signing Reason: I approved this document.
Signing Time: 2025-01-23 11:15:56(EST)

NATALIE CHOW
STATE OF WASHINGTON
23022506
REGISTERED PROFESSIONAL ENGINEER

ISSUED FOR BID

CITY OF Vancouver WASHINGTON

WS14 PFAS TREATMENT DESIGN

REVISIONS

REV	DATE	DESCRIPTION

LINE IS 2 INCHES AT FULL SIZE

DESIGNED: T.ROSSILLON
DRAWN: E.STILES
CHECKED: J.FAUST
CHECKED:
APPROVED:N.CHOW

FILENAME C-000-002.dwg
BC PROJECT NUMBER 180318
CLIENT PROJECT NUMBER PRJ100893

CIVIL

CIVIL NOTES 2

DRAWING NUMBER C-000-002

SHEET NUMBER 10 OF 125

Plot Date: 12/17/2024 10:55:48 AM Path: C:\bcgwd\34502001\C-000-002.dwg

21c3782743cea1c4e7fe13af9634ba88

WATER SYMBOLS

SYMBOL	DESCRIPTION
FH	FIRE HYDRANT
WM	WATER METER
BO	BLOW-OFF
WV	WATER VALVE
	MONITORING WELL
	WELL CASING
	IRRIGATION CONTROL VALVE
	IRRIGATION CONTROL BOX

SANITARY SEWER / STORM SYMBOLS

SYMBOL	DESCRIPTION
S	SAN. SEWER MANHOLE
C	CLEAN OUT
SD	STORM MANHOLE
	STORM CATCH BASIN OR AREA DRAIN
	CURB INLET

POWER SYMBOLS

SYMBOL	DESCRIPTION
	POWER POLE
	PAD MOUNTED TRANSFORMER
	POLE ANCHOR
	GUY POLE

GAS SYMBOLS

SYMBOL	DESCRIPTION
M	GAS METER
	GAS VALVE
Gas Vent	GAS VENT
Gas FInk	GAS FINK
GV	GAS VAULT
	GAS RISER

TELEPHONE / FIBER OPTIC SYMBOLS

SYMBOL	DESCRIPTION
T	TELEPHONE PEDESTAL OR CLOSURE BOX
T	TELEPHONE VAULT
T	TELEPHONE MANHOLE
TB	TELEPHONE BOOTH
TC	TELEPHONE CABINET

STREET LIGHT SYMBOLS

SYMBOL	DESCRIPTION
	STREET LIGHT
	DECORATIVE LAMP
	STREET LIGHT LUMINARIE ON WOOD POLE

SURFACE FEATURES/LANDSCAPING

SYMBOL	DESCRIPTION
	SIGN
	SIGN POST
	POST
	BOLLARD
	SOIL BORE
	TREE (CONIFEROUS)
	TREE (DECIDUOUS OR FRUIT)
	TREE CLUMP
	SHRUB (DECIDUOUS)
	SHRUB (EVERGREEN)
	ORNAMENTAL TREE
	ORNAMENTAL SHRUB
	STUMP
	WETLAND/NO WORK AREA

SURVEY SYMBOLS

SYMBOL	DESCRIPTION
	SECTION CORNER
	QUARTER CORNER N/S
	QUARTER CORNER E/W
	BENCH MARK
	PK NAIL
	MONUMENT
Survey	SURVEY CONTROL POINT

UTILITY LINETYPES

LINETYPE	DESCRIPTION
W	WATER LINE
SAN	SANITARY SEWER
STM	STORM SEWER
PUD	POWER
OH	OVERHEAD POWER
TEL	TELEPHONE
G	GAS
TV	CABLE TV

FEATURE LINETYPES

LINETYPE	DESCRIPTION
	PROPERTY BOUNDARY/ROW LINE
	EDGE OF ASPHALT
	EDGE OF GRAVEL
	EDGE OF CONCRETE
	SIDEWALK
	TOP FACE OF CURB
	BOTTOM FACE CURB (AT GUTTER)
	EXTRUDED CURB
	FLOWLINE
	GUARDRAIL
	BUILDING FACE OUTLINE
	BUILDING DRIPLINE
	TOP/BOTTOM/BREAKLINE OF SLOPE
	TREELINE
	BRUSHLINE
	CHAINLINK FENCE
	EXISTING FENCE (TYPE VARIES)
	80-FOOT WETLAND BUFFER BOUNDARY

PROPOSED LEGEND

	PIPE > 16"
	PIPE <= 16"
RWD	RINSE WATER DRAIN
W	WATER LINE
DB	DUCT BANK
	WORK LIMITS
SF	SILT FENCE
SW	STRAW WATTLE
XX	CONSTRUCTION FENCE
	GATE VALVE
	DAYLIGHT GRADING LINE
	FENCE
	DRAINAGE DITCH
STM	STORM PIPE
SS	SANITARY SEWER PIPE
D	DRAIN PIPE
	EDGE OF PAVEMENT
	AREA OF DEMOLITION
	GRAVEL SURFACE OVER EXISTING
	GRAVEL SURFACE
	STABILIZED CONSTRUCTION ENTRANCE
	TREE OR SHRUB TO BE REMOVED
X X X	TREE PROTECTION
	INLET PROTECTION
	GRASS
	ASPHALT PAVEMENT
OR	CATCHBASIN/AREA INLET
	CURB INLET
	STOCK PILE
	BOLLARD

Brown AND Caldwell
PORTLAND, OREGON

Signer Name: Natalie Chow
Signing Reason: I approved this document
Signing Time: 2025-01-23 11:15:56(EST)

NATALIE CHOW
STATE OF WASHINGTON
23022506
REGISTERED PROFESSIONAL ENGINEER

ISSUED FOR BID

CITY OF Vancouver WASHINGTON

WS14 PFAS TREATMENT DESIGN

REVISIONS

REV	DATE	DESCRIPTION

LINE IS 2 INCHES AT FULL SIZE

DESIGNED: T.ROSSILLON
DRAWN: E.STILES
CHECKED: J.FAUST
CHECKED:
APPROVED:N.CHOW

FILENAME
C-000-003.dwg
BC PROJECT NUMBER
180318
CLIENT PROJECT NUMBER
PRJ100893

CIVIL

LEGENDS AND SYMBOLS

DRAWING NUMBER
C-000-003

11 SHEET NUMBER OF 125

Plot Date: 12/17/2024 11:04:54 AM Path: C:\bcpw\d3450201\C-000-003.dwg

650c0ed63e360694b8de789231867cf0

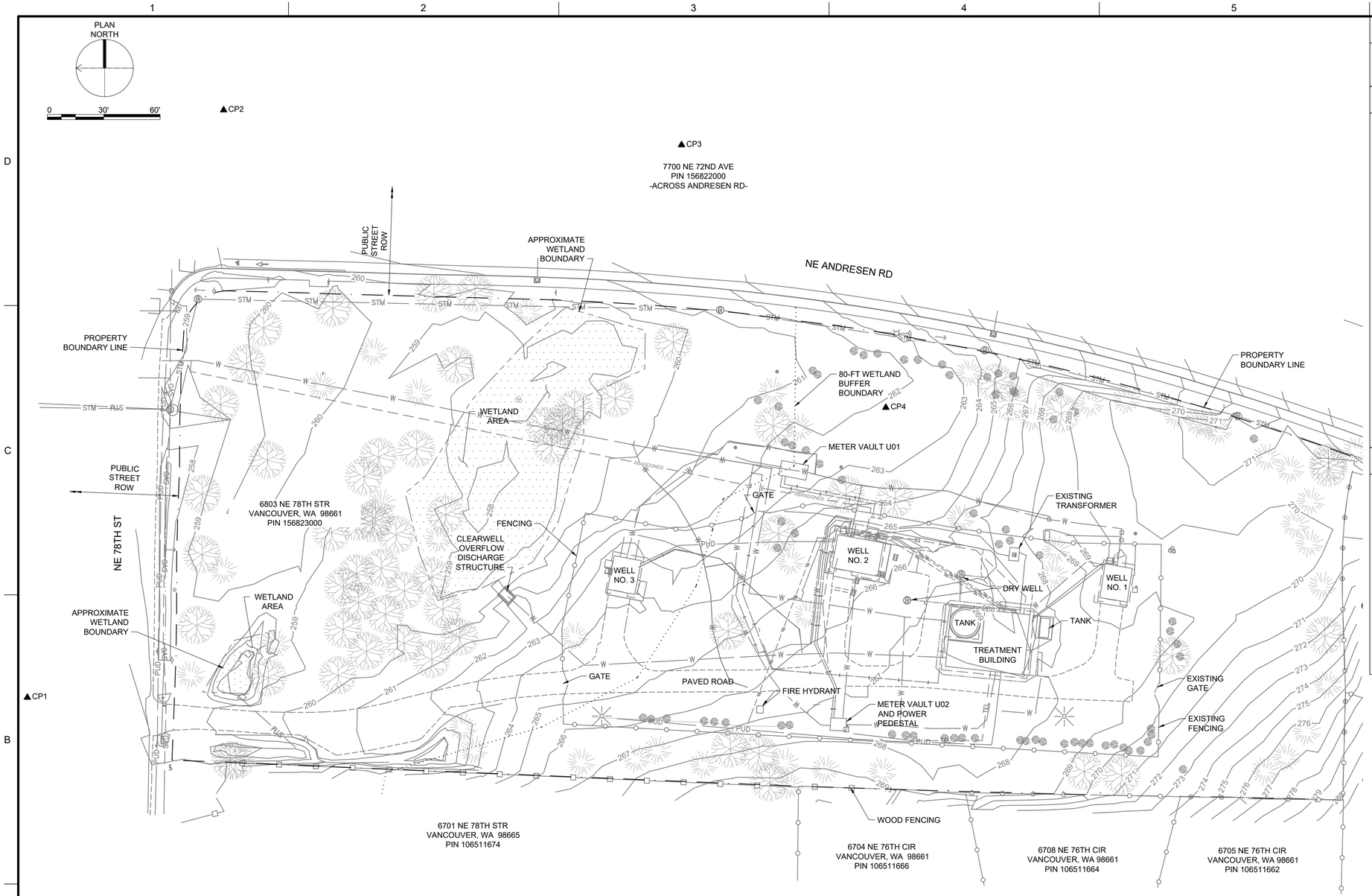

GENERAL NOTE:

1. WETLANDS WERE DELINEATED BY ESA ON JANUARY 16, 2024.

SURVEY NOTES:

1. THIS TOPOGRAPHIC SURVEY REPRESENTS THE EXISTING CONDITIONS OF THE WATER STATION 14 PROJECT #100893 (57-23). FIELDWORK WAS COMPLETED IN NOVEMBER 2023 AND PROVIDED TO BROWN AND CALDWELL BY THE CITY OF VANCOUVER.
2. THIS SURVEY RESIDES IN THE NORTHEAST 1/4 OF THE NORTHEAST 1/4 OF SECTION 7, T2N, R2E, CLARK COUNTY, WASHINGTON.
3. THIS SURVEY MEETS OR EXCEEDS THE MINIMUM ACCURACY STANDARDS AS DESIGNATED IN WASHINGTON ADMINISTRATIVE CODE (WAC) 332-130-090.
4. CONTOURS FOR THIS TOPOGRAPHIC SURVEY ARE DERIVED FROM DIRECT FIELD TIES, MAJOR CONTOURS EVERY 5 FEET AND MINOR CONTOURS EVERY 1 FOOT.
5. LOCATES:

   UNDERGROUND UTILITIES WERE FIELD MEASURED AS MARKED ON THE GROUND FROM LOCATE REQUEST TICKET NUMBER #23375176.
6. THIS IS NOT A BOUNDARY SURVEY.

PROJECT DATUMS:

1. HORIZONTAL DATUM:

   PROJECT CONTROL WAS ESTABLISHED IN 2023 FOR THE WATER STATION 14 TOPOGRAPHIC SURVEY. WASHINGTON STATE PLANE SOUTH ZONE GROUND COORDINATES ESTABLISHED FROM GPS OBSERVATION ON CONTROL POINTS 1 AND 2 AND THEN A CLOSED LOOP TRAVERSE WAS PERFORMED AROUND THE SITE. SEE SURVEY CONTROL POINTS TABLE BELOW.
2. VERTICAL DATUM: NGVD 1929

   VERTICAL DATUM, CITY OF VANCOUVER DATUM CALCULATED BY -3.64 FT FROM GPS OBSERVATIONS.

SURVEY CONTROL POINTS			
ID	NORTHING	EASTING	ELEVATION
CP1	133200.729	1102841.703	257.97
CP2	133096.334	1103153.937	259.83
CP3	132852.780	1103135.379	263.35
CP4	132744.130	1102995.768	262.12

Brown AND Caldwell
PORTLAND, OREGON

NATALIE CHOW
STATE OF WASHINGTON
23022506
REGISTERED PROFESSIONAL ENGINEER

ISSUED FOR BID

CITY OF Vancouver WASHINGTON

WS14 PFAS TREATMENT DESIGN

REVISIONS

REV	DATE	DESCRIPTION
1	04/29/25	ADDENDUM 2

LINE IS 2 INCHES AT FULL SIZE

DESIGNED: T.ROSSILLON
DRAWN: E.STILES
CHECKED: J.FAUST
CHECKED: T.ROSSILLON
APPROVED: N.CHOW

FILENAME
C-000-111.dwg

BC PROJECT NUMBER
180318

CLIENT PROJECT NUMBER
PRJ100893

CIVIL

EXISTING SITE AND SURVEY CONTROL

DRAWING NUMBER
C-000-111

SHEET NUMBER
OF

Path: C:\Users\trossillon\DC\ACCDocs\BC ACC Project Hub\99837 - Vancouver WS14 PFAS Treatment Dsgn\Project Files\300 Design\CAD\002 C\Sheets\C-000-111.dwg

Plot Date: 4/30/2025 7:22:44 AM

PLAN NORTH

0 30' 60'

KEY NOTES:

1. DEMOLISH FENCING
2. DEMOLISH GATE ENTRY AND FENCING
3. DEMOLISH DRIVE ENTRY OFF OF NE 78TH STREET
4. REMOVE SIGN AND SALVAGE FOR RE-USE AT THIS SITE
5. RELOCATE UTILITY PEDESTALS
6. DEMOLISH CULVERT AND END TREATMENTS
7. REMOVE TREE (TYP). SEE LANDSCAPE PLANS FOR TREE REMOVAL AND PROTECTION DETAILS.
8. ABANDON CULVERT IN PLACE; USE GROUT FILL IN WEST END OF PIPE TO FILL A MINIMUM OF THREE FEET OF PIPE TO SEAL OFF THE CULVERT ENTRANCE; DO NOT ALLOW GROUT TO FLOW THROUGH TO THE DISCHARGE END OF PIPE
9. REMOVE SHRUB (TYP). SEE LANDSCAPE PLANS FOR TREE REMOVAL AND PROTECTION DETAILS.
10. REMOVE FENCE AS SHOWN TO THE NEAREST FENCE POST AND BEGIN NEW FENCE CONSTRUCTION FROM THAT POST

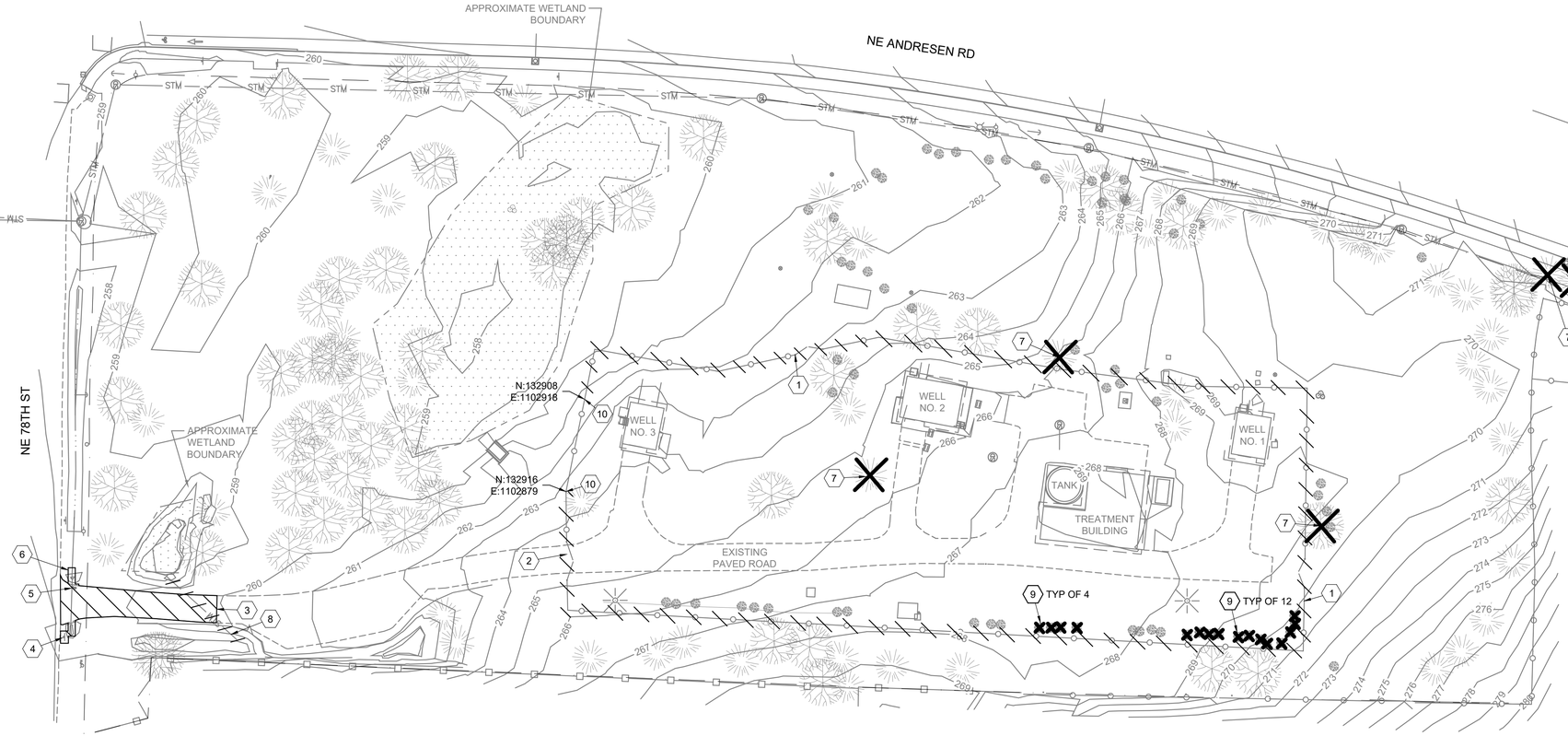

Brown AND Caldwell
PORTLAND, OREGON

Signer Name: Natalie Chow
Signing Reason: I approved this document.
Signing Time: 2025-01-23 11:51:57(EST)

NATALIE CHOW
STATE OF WASHINGTON
23022506
REGISTERED PROFESSIONAL ENGINEER

ISSUED FOR BID

CITY OF Vancouver WASHINGTON

WS14 PFAS TREATMENT DESIGN

REVISIONS

REV	DATE	DESCRIPTION

LINE IS 2 INCHES AT FULL SIZE

DESIGNED:	T.ROSSILLON
DRAWN:	E.STILES
CHECKED:	J.FAUST
CHECKED:	T.ROSSILLON
APPROVED:	N.CHOW

FILENAME
C-000-201.dwg

BC PROJECT NUMBER
180318

CLIENT PROJECT NUMBER
PRJ100893

CIVIL

SITE DEMOLITION PLAN

DRAWING NUMBER
C-000-201

SHEET NUMBER 13 OF 125

Plot Date: 1/16/2025 10:26:21 AM Path: C:\bcpwd34502011C-000-201.dwg

167e1970f7a992cbd085b61f5e5c2a6d

PLAN NORTH

0 30' 60'

FENCE POINT TABLE		
Point #	Northing	Easting
1	132915.2	1102799.4
2	132915.6	1102826.5
3	132915.8	1102842.5
4	132916.0	1102856.5
5	132916.1	1102860.5
6	132916.2	1102864.5
7	132916.4	1102878.4
8	132908.3	1102918.2
9	132805.5	1102997.5
10	132666.6	1102981.0

FENCE POINT TABLE		
Point #	Northing	Easting
11	132614.1	1102990.4
12	132556.1	1102974.4
13	132550.9	1102952.8
14	132497.5	1102954.6
15	132536.7	1102893.1
16	132536.2	1102831.2
17	132558.0	1102809.5
18	132609.8	1102809.5
19	132654.1	1102815.3
20	132706.4	1102815.3

FENCE POINT TABLE		
Point #	Northing	Easting
21	132776.1	1102820.2
22	132784.3	1102820.8
23	132865.6	1102826.5

7700 NE 72ND AVE
PIN 156822000
-ACROSS ANDRESEN RD-

APPROXIMATE WETLAND 1 BOUNDARY (0.22 AC)

NE ANDRESEN RD

NE 78TH ST

6803 NE 78TH STR
VANCOUVER, WA 98661
PIN 156823000

APPROXIMATE WETLAND 2 BOUNDARY (0.01 AC)

TIE INTO EXISTING FENCE

EXISTING PAVED ROAD

FIRE HYDRANT

METER VAULT U02 AND POWER PEDESTAL

U01 U02 U03

W01 W02 WO3

B01 TREATMENT BUILDING

TANK

B02

P01 P02

FLOW METER VAULT (U05)
N 132655.06 E 1102976.09

N 132652.09 E 1102967.64

GRINDER PUMP (U04)
N 132656.51 E 1102970.26

N 132620.18
E 1102973.80

N 132586.81
E 1102964.22

N 132556.91
E 1102944.82

N 132583.76
E 1102943.29

N 132547.38
E 1102884.29

N 132545.86
E 1102858.03

N 132578.99
E 1102859.40

N 132557.27
E 1102819.99

N 132551.27
E 1102819.56

N 132558.51
E 1102814.10

N 132701.15
E 1102830.40

N 132721.15
E 1102821.40

N 132584.00
E 1102823.74

N 132578.58
E 1102816.92

24.0 FT

16.0 FT

26.7 FT

14.0 FT

31.1 FT

6.0 FT

6.0 FT

(TYP OF 5)

1 TYP

ASPHALT DRIVEWAY ENTRANCE INSTALLED PER COV STD DETAIL T01-04B

FUTURE FILTER CARTRIDGE FACILITY LOCATION

6628 NE 75TH STR
VANCOUVER, WA 98661
PIN 106512148

6624 NE 75TH STR
VANCOUVER, WA 98661
PIN 106512150

6701 NE 78TH STR
VANCOUVER, WA 98665
PIN 106511674

6704 NE 76TH CIR
VANCOUVER, WA 98661
PIN 106511666

6708 NE 76TH CIR
VANCOUVER, WA 98661
PIN 106511664

6705 NE 76TH CIR
VANCOUVER, WA 98661
PIN 106511662

GENERAL NOTES:

1. AREAS SHOWN ON THE DRAWINGS AS DESIGNATED WETLAND AREAS SHALL NOT BE DISTURBED BY CONSTRUCTION ACTIVITIES, INCLUDING CONTROLLING RUNOFF AND SEDIMENT TRANSPORT TO AVOID DISCHARGE INTO THE WETLAND AREAS SHOWN.
2. NO CONSTRUCTION WORK OR STAGING IN AREAS TO THE NORTH OF THE 80-FOOT WETLAND BUFFER BOUNDARY SHOWN ON THESE DRAWINGS SHALL BE PERMITTED, EXCEPT FOR THE MINIMUM DISTURBANCE NEEDED TO CONSTRUCT THE FENCING AND ENTRY DRIVE IMPROVEMENTS.
3. PROTECT EXISTING TREES NOT SHOWN FOR REMOVAL FROM DAMAGE DURING CONSTRUCTION. TREES NEAR NEW CONSTRUCTION MAY BE TRIMMED BACK ONLY AS LITTLE AS NEEDED TO COMPLETE THE ADJACENT CONSTRUCTION. HOWEVER, LIMIT TRIMMING TO NO MORE THAN 20% OF THE DISTANCE FROM THE TRUNK TO THE DRIP LINE UNLESS AUTHORIZED BY THE ENGINEER IN WRITING.
4. DAMAGE TO EXISTING FENCING OR OTHER IMPROVEMENTS ON NEIGHBORING PROPERTIES NOT SHOWN FOR DEMOLITION SHALL BE REPAIRED OR REPLACED IN-KIND.
5. SITE FACILITIES AREA IDENTIFIERS AS SHOWN ON DWG. G-000-003.
6. LOCATE ALL SUBSURFACE UTILITIES AND CONDUITS BEFORE INSTALLING BOLLARDS. HAND EXCAVATE FOR BOLLARDS WHERE UNDERGROUND FACILITIES ARE WITHIN 5 FEET.
7. RINSE WATER DRAIN PIPING BETWEEN P01 AND P02, AND BETWEEN 02 AND B02 IS LOCATED ABOVE GROUND AND IS NOT SHOWN ON THE CIVIL PLANS, SEE DWGS D-P02-101 AND D-P02-901.
8. SPLIT RAIL FENCE WITH SIGNS ON THE SHALL BE INSTALLED ON THE PROPERTY LINES AND WETLAND BUFFER BOUNDARY ADJACENT TO THE ON-SITE WETLAND AREA TO MARK THE AREA. SEE DWG L-000-001 FOR FENCE DESIGN AND SIGNAGE REQUIREMENTS.

KEY NOTES:

1 PFAS TREATMENT VESSELS MOUNTED ON CONCRETE PAD (P01)

2 RINSE WATER TANK (P02)

3 ENLARGED, PAVED DRIVEWAY ENTRANCE

4 6-FOOT-HIGH BLACK POLYMER-COATED, CHAINLINK PERIMETER FENCE; SEE DETAIL 1/C-000-802

5 PAVED ACCESS DRIVE; SEE DETAIL 3/C-000-801 FOR PAVEMENT SECTION

6 RESTROOM AND STORAGE FACILITY (B02)

7 80-FOOT WETLAND BUFFER BOUNDARY

8 20-FOOT OPENING DOUBLE-LEAF ENTRY GATE; SEE DETAILS 2 AND 3/C-000-802; THE 12-FT WESTERN LEAF SHALL BE MOTOR OPERATED. KNOX BOX REQUIRED SEE SPECIFICATION SECTION 32 31 15.

9 RETAINING WALL, APPROXIMATELY 4-FOOT HIGH (MAX), SET BACK AS SHOWN FROM CONCRETE PAD; SEE DETAIL 4/C-000-801

10 SITE ENTRANCE DRIVE EXPANDED FOR TRUCK DELIVERIES TO THE SITE

11 RELOCATE EXISTING SPRINKLER VALVE AND BOX BACK TO 2 FEET OFF OF PAVEMENT EDGE

12 BOLLARDS; SEE DETAIL 2/C-000-801

13 8-FOOT OPENING DOUBLE-LEAF ENTRY GATE; SEE DETAILS 2 AND 3/C-000-802

14 VALVE VAULT 3. PRECAST CONCRETE VAULT CONSTRUCTION. SEE DWG D-P02-102

15 4-FOOT OPENING SINGLE LEAF PERSONNEL GATE. SEE DETAILS 2 AND 3/C-000-802

16 SPLASH PAD, SEE DETAIL 3/C-000-805

Brown AND Caldwell
PORTLAND, OREGON

Signer Name: Natalie Chow
Signing Reason: I approved this document.
Signing Time: 2025-05-10 20:58:55(EDT)

NATALIE CHOW
STATE OF WASHINGTON
23022506
REGISTERED PROFESSIONAL ENGINEER

ISSUED FOR BID

CITY OF Vancouver WASHINGTON

WS14 PFAS TREATMENT DESIGN

REVISIONS

REV	DATE	DESCRIPTION

LINE IS 2 INCHES AT FULL SIZE

DESIGNED: T.ROSSILLON
DRAWN: E.STILES
CHECKED: J.FAUST
CHECKED: T.ROSSILLON
APPROVED: N.CHOW

FILENAME
C-000-213.dwg

BC PROJECT NUMBER
180318

CLIENT PROJECT NUMBER
PRJ100893

CIVIL

OVERALL SITE PLAN

DRAWING NUMBER
C-000-213

SHEET NUMBER 14 OF 125

Path: C:\bcpw\d3450201\C-000-213.dwg
Plot Date: 3/6/2025 10:30:26 AM

d0fc9bdfdcb2b3c3ae95339401241bb6

PLAN NORTH

0 10' 20'

KEY NOTES:

1 PROVIDE 4 FT DIA MANHOLE. SANITARY SEWER CONNECTION POINT APPROX EXISTING PIPE INV IS ELEV 275.9 AT CONNECTION POINT. SEE DETAIL 2/C-000-806 FOR MANHOLE REQUIREMENTS AND PIPING CONNECTION TO MANHOLE.

GENERAL NOTES

1. UTILITY PIPING SHALL BE CONSTRUCTED IN ACCORDANCE WITH CITY OF VANCOUVER STANDARDS AND SPECIFICATIONS, EXCEPT WHERE NOTED OTHERWISE.
2. PIPE MATERIAL DESIGNATIONS ON THIS DRAWING ARE PROVIDED FOR REFERENCE. SEE THE APPROPRIATE SPECIFICATIONS SECTIONS IN DIVISION 33 AND SECTION 40 05 02.23 FOR DETAILED PIPE AND FITTING REQUIREMENTS.
3. VERIFY THAT NO OTHER UTILITY LINES ARE LOCATED IN THE WEST SIDE RIGHT OF WAY FOR NE ANDRESEN ROAD THAT MAY CONFLICT WITH SANITARY AND DRAIN PIPING AS SHOWN.
4. UNLESS OTHERWISE NOTED IN THESE PLANS, ALL BURIED PIPING SHALL HAVE A MINIMUM COVER OVER THE TOP OF PIPE OF 36-INCHES.
5. PIPE TRENCHES FOR SANITARY SEWER, INCLUDING FORCE MAIN FROM GRINDER PUMP SHALL BE IN ACCORDANCE WITH CRWWD STRD DETAIL 5/C-000-807. FORCE MAIN PIPING IS BURIED 3.0 FEET (MIN) IN DOUBLE-CONTAINED PIPING AS SHOWN ON THE PROFILE SHEET C-000-601.
6. DIMENSIONS SHOWN ALONG PIPING ALIGNMENT ARE NOT TYPICAL FOR THE ENTIRE LENGTH OF THE PIPE RUN FROM THE PLANT SITE TO THE EXISTING SEWER CONNECTION. PIPE ALIGNMENT LAYOUT POINTS ARE ON C-000-601 AN/D/OR C-000-602.

FOGSTRIPE

BACK OF SIDEWALK

FOGSTRIPE

STORM INLET (NOT CONNECTED TO 24" STORM LINE IN WEST SIDE ROW)

ROADWAY CENTER STRIPING

5 FT ATTACHED SIDEWALK

DEMO EXISTING TREES (3)

1.5" FM (SS)
DOUBLE CONTAINED PVC PIPE (4" CASING)

2" RWD (PVC)

FACE OF CURB/GUTTER FLOWLINE

EXISTING CHAIN LINK FENCE

SEE PIPING P&P DWGS FOR DETAILED INFORMATION ON SS AND RD PIPING TO EXISTING SEWER

EXISTING MASONRY WALL

EXISTING 24" HDPE (N-12) STORM DRAIN PIPE; APPROXIMATE BURY DEPTH 1-2 FT SLOPES TO NORTH @3.51%

2'-11"

5'-9"

8'-1"

EXISTING STORM DRAIN MANHOLE
STORM MH RIM=280.48'
24" HDPE(N) IE=276.15'
15" HDPE (S) IE=276.34'
18" CMP (SW) IE=278.00'
SUMP=276.0'

DEMO EXISTING SHRUB

EXIST SS MH 37-4124
(OFF SHEET)
RIM ELEV 281.31
INV ELEV 273.16

EXIST SS MH 37 412
(OFF SHEET)
RIM ELEV 289.12
INV ELEV 279.92

SS RWD STM SAN

Plot Date: 12/18/2024 9:41:24 AM Path: C:\bcpwd\3450201\C-000-214.dwg

Brown AND Caldwell
PORTLAND, OREGON

Signer Name: Natalie Chow
Signing Reason: I approved this document
Signing Time: 2025-01-25 11:75:17(EST)

NATALIE CHOW
STATE OF WASHINGTON
23022506
REGISTERED PROFESSIONAL ENGINEER

ISSUED FOR BID

CITY OF Vancouver WASHINGTON

WS14 PFAS TREATMENT DESIGN

REVISIONS

REV	DATE	DESCRIPTION

LINE IS 2 INCHES AT FULL SIZE

DESIGNED: T.ROSSILLON
DRAWN: E.STILES
CHECKED: J.FAUST
CHECKED:
APPROVED:N.CHOW

FILENAME
C-000-214.dwg

BC PROJECT NUMBER
180318

CLIENT PROJECT NUMBER
PRJ100893

CIVIL

STREET FRONTAGE ANDRESEN RD SOUTH OF PLANT

DRAWING NUMBER
C-000-214

SHEET NUMBER 15 OF 125

f5a77149aac18fd3ab25931a76dec80e

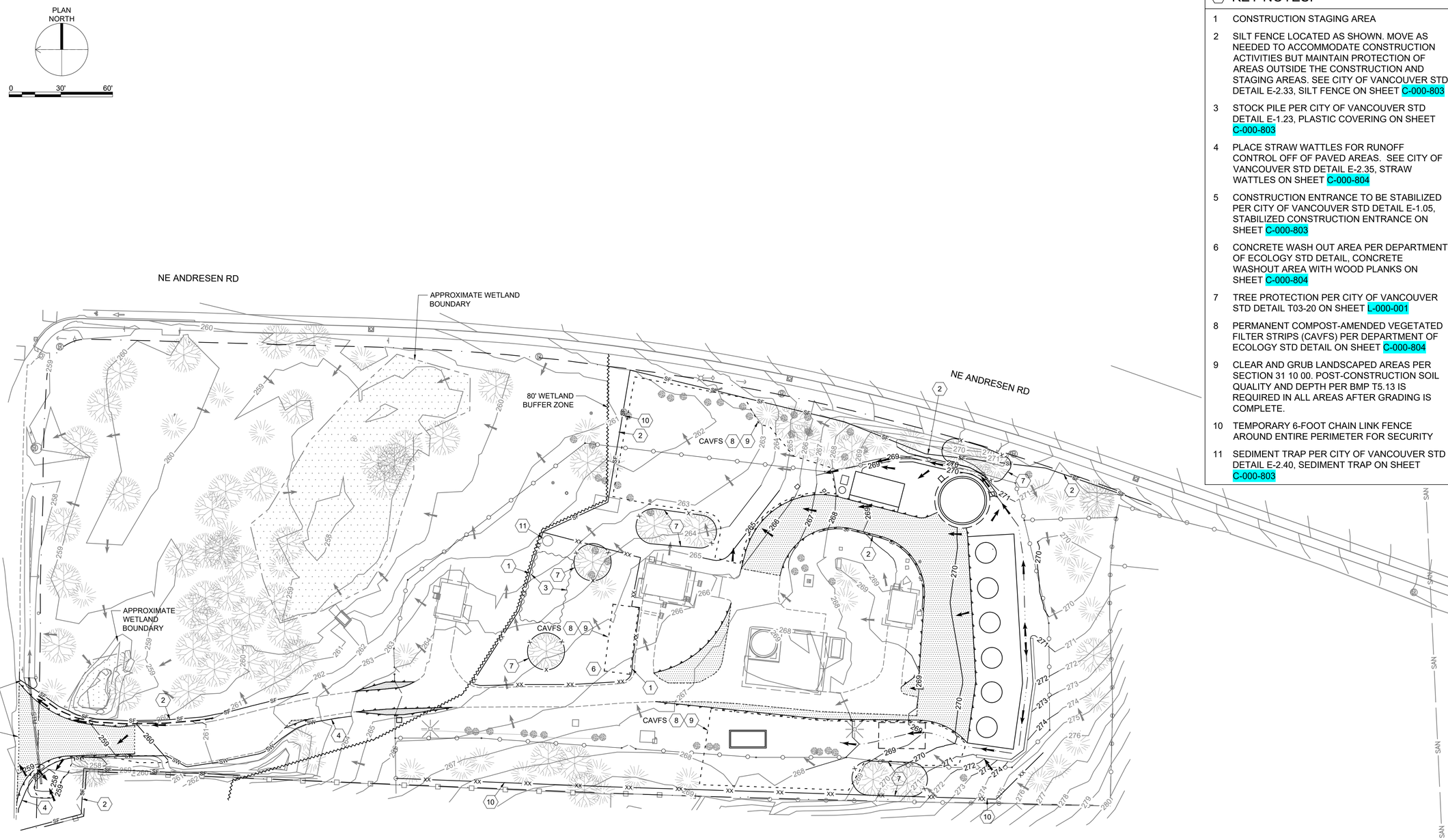

KEY NOTES:

1. CONSTRUCTION STAGING AREA
2. SILT FENCE LOCATED AS SHOWN. MOVE AS NEEDED TO ACCOMMODATE CONSTRUCTION ACTIVITIES BUT MAINTAIN PROTECTION OF AREAS OUTSIDE THE CONSTRUCTION AND STAGING AREAS. SEE CITY OF VANCOUVER STD DETAIL E-2.33, SILT FENCE ON SHEET C-000-803
3. STOCK PILE PER CITY OF VANCOUVER STD DETAIL E-1.23, PLASTIC COVERING ON SHEET C-000-803
4. PLACE STRAW WATTLES FOR RUNOFF CONTROL OFF OF PAVED AREAS. SEE CITY OF VANCOUVER STD DETAIL E-2.35, STRAW WATTLES ON SHEET C-000-804
5. CONSTRUCTION ENTRANCE TO BE STABILIZED PER CITY OF VANCOUVER STD DETAIL E-1.05, STABILIZED CONSTRUCTION ENTRANCE ON SHEET C-000-803
6. CONCRETE WASH OUT AREA PER DEPARTMENT OF ECOLOGY STD DETAIL, CONCRETE WASHOUT AREA WITH WOOD PLANKS ON SHEET C-000-804
7. TREE PROTECTION PER CITY OF VANCOUVER STD DETAIL T03-20 ON SHEET L-000-001
8. PERMANENT COMPOST-AMENDED VEGETATED FILTER STRIPS (CAVFS) PER DEPARTMENT OF ECOLOGY STD DETAIL ON SHEET C-000-804
9. CLEAR AND GRUB LANDSCAPED AREAS PER SECTION 31 10 00. POST-CONSTRUCTION SOIL QUALITY AND DEPTH PER BMP T5.13 IS REQUIRED IN ALL AREAS AFTER GRADING IS COMPLETE.
10. TEMPORARY 6-FOOT CHAIN LINK FENCE AROUND ENTIRE PERIMETER FOR SECURITY
11. SEDIMENT TRAP PER CITY OF VANCOUVER STD DETAIL E-2.40, SEDIMENT TRAP ON SHEET C-000-803

Brown AND Caldwell
PORTLAND, OREGON

Signer Name: Natalie Chow
Signing Reason: I approved this document.
Signing Time: 2025-01-23 11:15:32(EST)

NATALIE CHOW
STATE OF WASHINGTON
23022506
REGISTERED PROFESSIONAL ENGINEER

ISSUED FOR BID

CITY OF Vancouver WASHINGTON

WS14 PFAS TREATMENT DESIGN

REVISIONS

REV	DATE	DESCRIPTION

LINE IS 2 INCHES AT FULL SIZE

DESIGNED: T.ROSSILLON
DRAWN: E.STILES
CHECKED: J.FAUST
CHECKED: T.ROSSILLON
APPROVED: N.CHOW

FILENAME
C-000-315.dwg

BC PROJECT NUMBER
180318

CLIENT PROJECT NUMBER
PRJ100893

CIVIL

TEMPORARY EROSION AND SEDIMENT CONTROL PLAN

DRAWING NUMBER
C-000-315

16 SHEET NUMBER OF 125

Plot Date: 1/16/2025 10:05:20 AM Path: C:\bcpwd34502011\C-000-315.dwg

cdf1194307ede4de0aa367d90277fc62

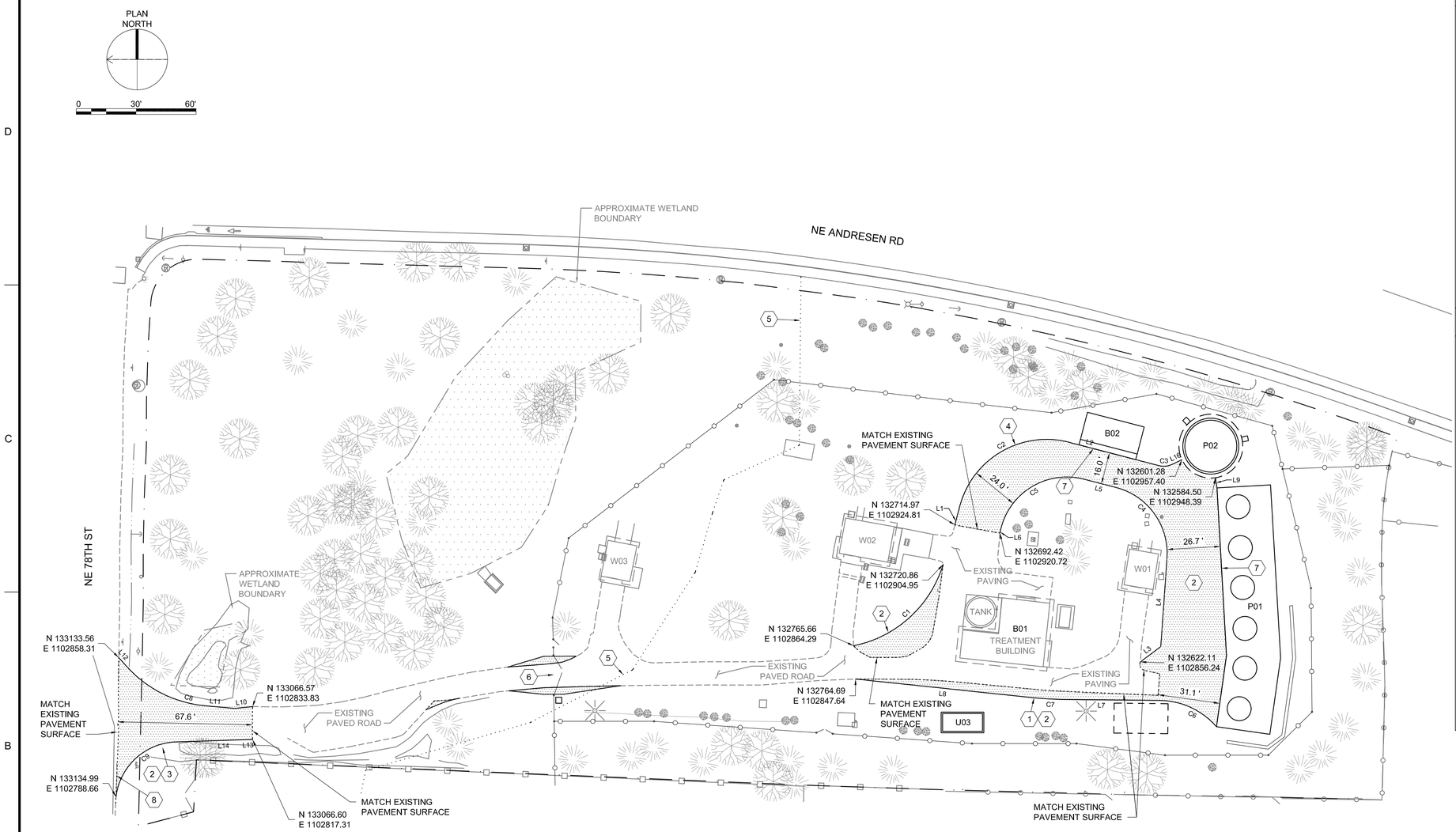

GENERAL NOTES:

1. ASPHALT PAVEMENT SECTION FOR THE INTERIOR ROADWAYS SHOWN ON THIS DRAWING IS 5 INCHES OF ASPHALT CEMENT PAVEMENT OVER 10 INCHES OF AGGREGATE BASE, WITH AN UNDERLAYMENT OF A HIGH TENSILE STRENGTH WOVEN GEOTEXTILE.
2. PAVEMENT SECTION IN ACCORDANCE WITH GEOTECHNICAL ENGINEER RECOMMENDATIONS IN FINAL GEOTECHNICAL ENGINEERING REPORT, PREPARED BY SHANNON & WILSON
3. EXISTING PAVEMENT DAMAGED DURING CONSTRUCTION SHALL BE REPLACED TO MATCH NEW PAVEMENT SECTION.
4. FOR ALL LOCATIONS WHERE NEW PAVEMENT IS SHOWN TO BE PLACED AGAINST EXISTING PAVEMENT, THE EXISTING PAVEMENT SHALL BE SAW CUT TO PROVIDE A CLEAN, FLAT SURFACE TO PAVE AGAINST. APPLY TACK COAT TO CUT FACE IN ACCORDANCE WITH SECTION 32 12 16.

KEY NOTES:

1 WIDEN EXISTING ASPHALT DRIVE TO 14-FEET ALONG SOUTH SIDE OF TREATMENT BUILDING

2 NEW ASPHALT PAVEMENT

3 ENLARGED, PAVED DRIVEWAY ENTRANCE

4 ACCESS DRIVE PAVEMENT WIDTH TRANSITIONS FROM 16 TO 24 FEET AROUND CURVE TO ACCOMMODATE DELIVERY TRUCK TRAFFIC

5 80-FOOT WETLAND BUFFER BOUNDARY

6 16-FOOT (MIN) GATE OPENING

7 APPLY TACK COAT WHERE NEW PAVEMENT IS AGAINST A CONCRETE PAD OR CUT EDGES OF EXISTING PAVEMENT ABUTTING NEW PAVEMENT

8 IF EXISTING ROAD EDGE IS DAMAGED WHERE DRIVE PAVEMENT ABUTS THE ROAD, SAW CUT THE EXISTING PAVEMENT AND RESTORE THE ROADWAY PAVING AS SHOWN ON CITY OF VANCOUVER STD DETAIL T05-01A AND IN ACCORDANCE WITH THE GENERAL NOTES ON CITY OF VANCOUVER STD DETAILS T05-04A AND T05-04B; IF DAMAGED, THE ROAD RESTORATION LIMIT IS TO THE FOG STRIPE OR TO THE RIGHT TURN LANE STRIPE, AS APPROPRIATE

PAVEMENT LAYOUT LINE AND CURVE TABLES

LINE TABLE		
Line #	Length	Bearing
L1	9.48'	S75° 23' 04"E
L2	48.28'	S14° 34' 30"W
L3	12.78'	S36° 45' 11"E
L4	44.41'	S85° 59' 36"E
L5	16.78'	N14° 34' 30"E
L6	1.09'	N78° 06' 25"W
L7	46.07'	N0° 33' 28"E
L8	87.71'	N6° 00' 35"E
L9	5.15'	S81° 42' 07"W
L10	9.05'	S5° 42' 38"E
L11	14.80'	S5° 06' 49"W
L12	6.02'	S47° 58' 45"W
L13	3.06'	N0° 27' 27"W
L14	34.36'	N1° 52' 20"W
L16	5.35'	S25° 15' 26"E

CURVE TABLE			
Curve #	Length	Radius	Delta
C1	63.53'	58.96'	61°44'18"
C2	68.69'	45.00'	87°27'27"
C3	6.95'	10.00'	39°49'56"
C4	47.14'	34.00'	79°25'54"
C5	55.00'	34.00'	92°40'56"
C6	32.26'	38.00'	48°38'48"
C7	19.03'	200.00'	5°27'08"
C8	44.89'	60.00'	42°51'56"
C9	45.28'	31.30'	82°53'32"

Brown AND Caldwell
PORTLAND, OREGON

Signer Name: Natalie Chow
Signing Reason: I approved this document
Signing Time: 2025-01-23 11:15:51(EST)

NATALIE CHOW
STATE OF WASHINGTON
23022506
REGISTERED PROFESSIONAL ENGINEER

ISSUED FOR BID

CITY OF Vancouver WASHINGTON

WS14 PFAS TREATMENT DESIGN

REVISIONS

REV	DATE	DESCRIPTION

LINE IS 2 INCHES AT FULL SIZE

DESIGNED: T.ROSSILLON
DRAWN: E.STILES
CHECKED: J.FAUST
CHECKED: T.ROSSILLON
APPROVED: N.CHOW

FILENAME C-000-316.dwg
BC PROJECT NUMBER 180318
CLIENT PROJECT NUMBER PRJ100893

CIVIL

PAVING PLAN

DRAWING NUMBER C-000-316

17 SHEET NUMBER OF 125

Plot Date: 1/20/2025 6:30:26 PM Path: C:\bcpw\d3450201\C-000-316.dwg

92a62daa8adde33d2c389cbbb57ea9b7

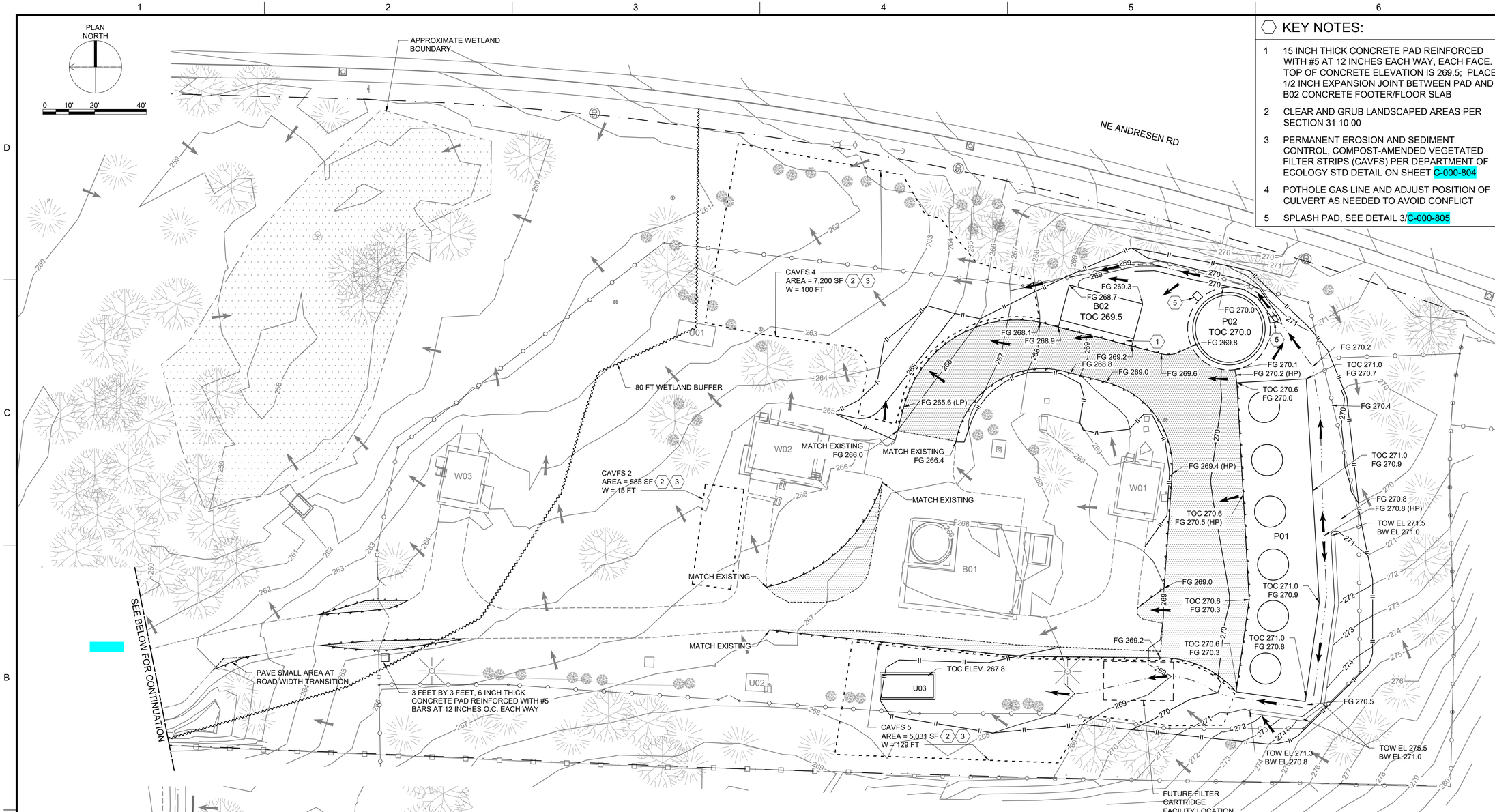

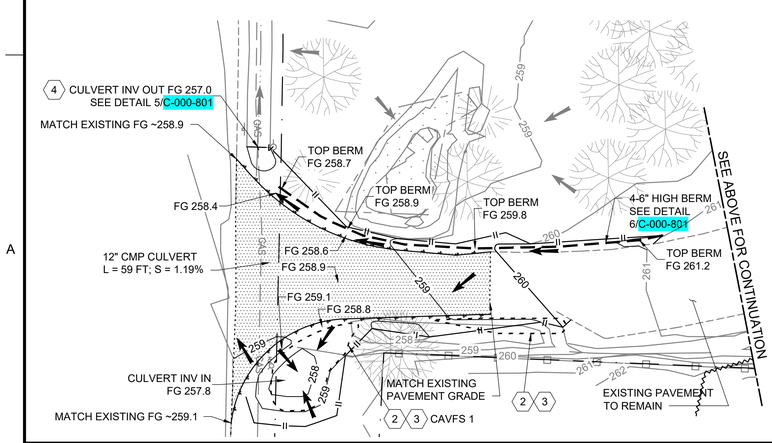

KEY NOTES:

1. 15 INCH THICK CONCRETE PAD REINFORCED WITH #5 AT 12 INCHES EACH WAY, EACH FACE. TOP OF CONCRETE ELEVATION IS 269.5; PLACE 1/2 INCH EXPANSION JOINT BETWEEN PAD AND B02 CONCRETE FOOTER/FLOOR SLAB
2. CLEAR AND GRUB LANDSCAPED AREAS PER SECTION 31 10 00
3. PERMANENT EROSION AND SEDIMENT CONTROL, COMPOST-AMENDED VEGETATED FILTER STRIPS (CAVFS) PER DEPARTMENT OF ECOLOGY STD DETAIL ON SHEET C-000-804
4. POTHOLE GAS LINE AND ADJUST POSITION OF CULVERT AS NEEDED TO AVOID CONFLICT
5. SPLASH PAD, SEE DETAIL 3/C-000-805

CAVFS DIMENSIONS BY DRAINAGE BASIN

CAVFS #	BASIN(S)	CAVFS WIDTH (FT)	CAVFS LENGTH (FT)	CAVFS AREA (SF)	SURFACE PONDING DEPTH
1	1 & 3	15.0	30.7	460	1.0
2	2	15.0	39.0	585	1.0
4	4 & 6	100.0	72.0	7,200	1.0
5	5	129.0	39.0	5,031	1.0

Brown AND Caldwell
PORTLAND, OREGON

Signer Name: Natalie Chow
Signing Reason: I approved this document.
Signing Time: 2025-01-23 11:15:12(EST)

NATALIE CHOW
STATE OF WASHINGTON
23022506
REGISTERED PROFESSIONAL ENGINEER

ISSUED FOR BID

CITY OF Vancouver WASHINGTON

WS14 PFAS TREATMENT DESIGN

REVISIONS

REV	DATE	DESCRIPTION

LINE IS 2 INCHES AT FULL SIZE

DESIGNED: T.ROSSILLON
DRAWN: E.STILES
CHECKED: J.FAUST
CHECKED: T.ROSSILLON
APPROVED: N.CHOW

FILENAME C-000-317.dwg
BC PROJECT NUMBER 180318
CLIENT PROJECT NUMBER PRJ100893

CIVIL

GRADING AND DRAINAGE PLAN

DRAWING NUMBER C-000-317

18 SHEET NUMBER OF 125

Plot Date: 1/16/2025 10:08:26 AM Path: C:\bcpw\d3450201\C-000-317.dwg

547b1b32eaf3f2d8a6f5c02add9c053f

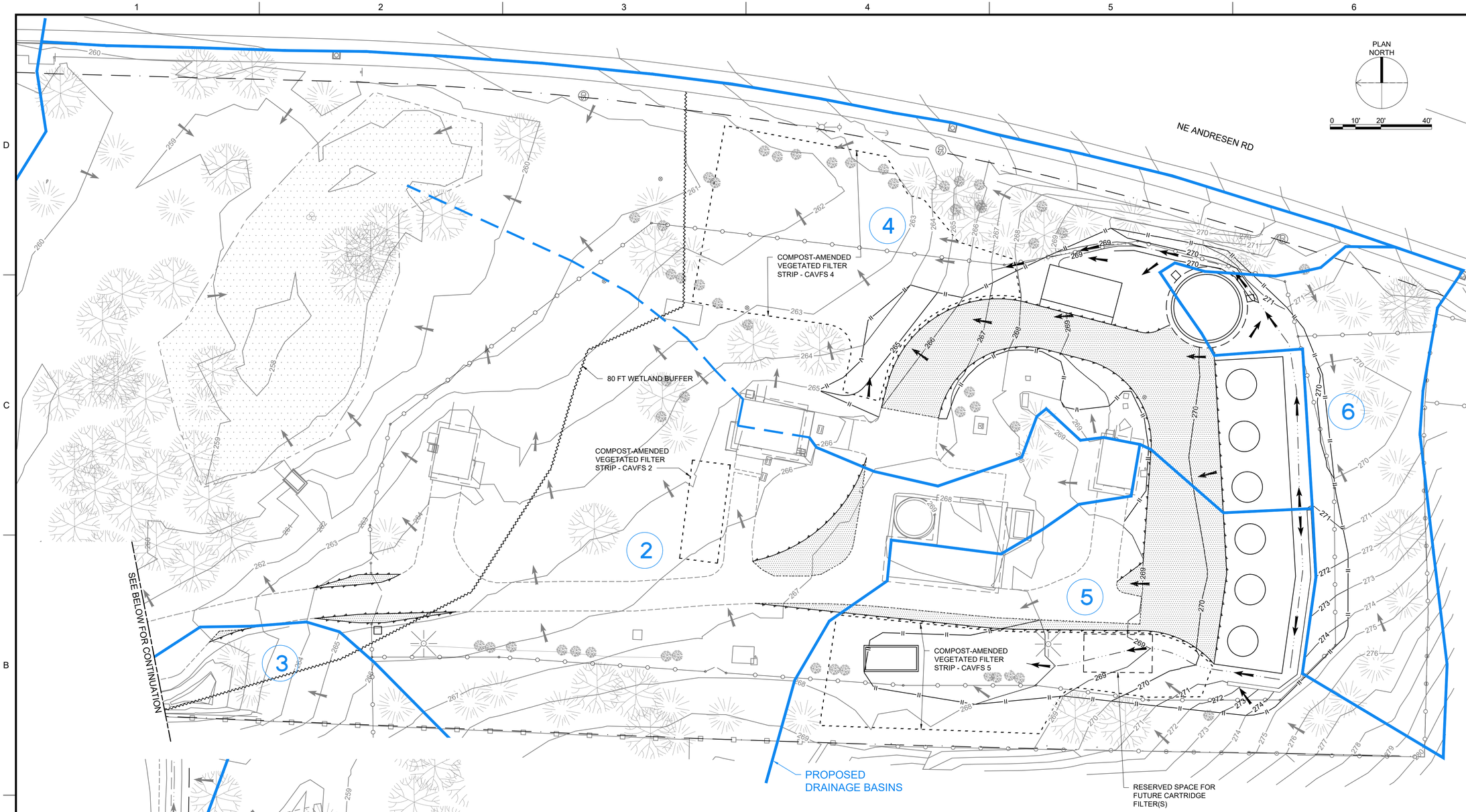

Basin	PGIS (sf)	PGIS (ac)	Non-PGIS (sf)	Non-PGIS (ac)	Total New Impervious Area (sf)	Total New Impervious Area (ac)	Total Replaced Impervious Area (sf)	Total Replaced Impervious Area (ac)
1	1,724	0.040	-	0.000	1,724	0.040	739	0.017
2	860	0.020	-	0.000	860	0.020	-	0.000
3	18	0.000	-	0.000	18	0.000	-	0.000
4	3,843	0.088	2,323	0.053	6,166	0.142	-	0.000
5	2,482	0.057	2,026	0.047	4,508	0.103	-	0.000
6	-	0.000	631	0.014	631	0.014	-	0.000
Total	8,927	0.205	4,980	0.114	13,907	0.319	739	0.017

Brown AND Caldwell
PORTLAND, OREGON

Signer Name: Natalie Chow
Signing Reason: I approved this document
Signing Time: 2025-01-25 11:15:12(EST)

NATALIE CHOW
STATE OF WASHINGTON
23022506
REGISTERED PROFESSIONAL ENGINEER

ISSUED FOR BID

CITY OF Vancouver WASHINGTON

WS14 PFAS TREATMENT DESIGN

REVISIONS

REV	DATE	DESCRIPTION

LINE IS 2 INCHES AT FULL SIZE

DESIGNED: T.ROSSILLON
DRAWN: E.STILES
CHECKED: J.FAUST
CHECKED: T.ROSSILLON
APPROVED: N.CHOW

FILENAME C-000-318.dwg
BC PROJECT NUMBER 180318
CLIENT PROJECT NUMBER PRJ100893

CIVIL

DRAINAGE MAP

DRAWING NUMBER C-000-318

SHEET NUMBER 19 OF 125

Plot Date: 1/16/2025 10:10:07 AM Path: C:\bcpwd\34502011\C-000-318.dwg

b8e7738d6c0b2a5c08a1b5cb7a53d0d6

PLAN NORTH

0 10' 20' 40'

PIPE POINT TABLE				
Point #	Description	Invert	Northing	Easting
1	16" PEF TEE IN U03	263.67	132710.1	1102822.4
2	16" RAW TEE IN U03	263.67	132704.0	1102822.4
3	16" PEF 90° BEND	264.25	132710.1	1102810.0
4	16" RAW 90° BEND	264.25	132704.0	1102812.5
5	16" PEF 90° V. BEND	266.00	132562.0	1102815.9
6	16" RAW 90° BEND	266.00	132555.2	1102817.6
7	16" RAW 11.25° BEND	266.00	132549.5	1102858.2
8	16" RAW 90° V. BEND	266.00	132549.9	1102865.7
9	16" PEF 11-1/4° BEND	266.00	132620.7	1102811.8
10	16" RAW 11-1/4° BEND	266.00	132621.0	1102814.2

PIPE POINT TABLE				
Point #	Description	Invert	Northing	Easting
11	16" PEF 22-1/2° BEND	266.00	132589.3	1102819.9
12	16" RAW 22-1/2° BEND	266.00	132589.5	1102822.4
13	1.5" FW BLDG ENTRY	265.50	132637.1	1102978.2
14	1.5" FW 90° BEND	265.50	132636.6	1102979.9
15	1.5" FW 11-1/4° BEND	265.25	132649.0	1102983.1
16	1.5" FW 45° BEND	265.50	132669.0	1102984.2
17	1.5" FW 45° BEND	262.00	132698.0	1102958.4
18	1.5" FW 90° BEND	258.75	132816.0	1102970.3
19	2" FW SVC TAP	258.75 MATCH	132816.6	1102965.8
20	4" D 45° BEND	263.60	132664.0	1102972.2

PIPE POINT TABLE				
Point #	Description	Invert	Northing	Easting
21	4" D CO WYE	263.80	132683.1	1102957.0
22	4" D 45° BEND	264.00	132688.9	1102907.0
23	4" D CO WYE	264.50 MATCH	132685.1	1102902.2
24	4" D WYE	263.90	132686.8	1102925.8
25	4" D CO WYE	264.00	132688.6	1102924.4
26	4" D CO WYE	264.19	132735.1	1102931.4
27	4" D 45° BEND	264.20	132736.7	1102930.2
28	4" D 45° BEND	265.00	132652.3	1102898.5
29	4" D CO WYE	265.30	132635.9	1102911.1

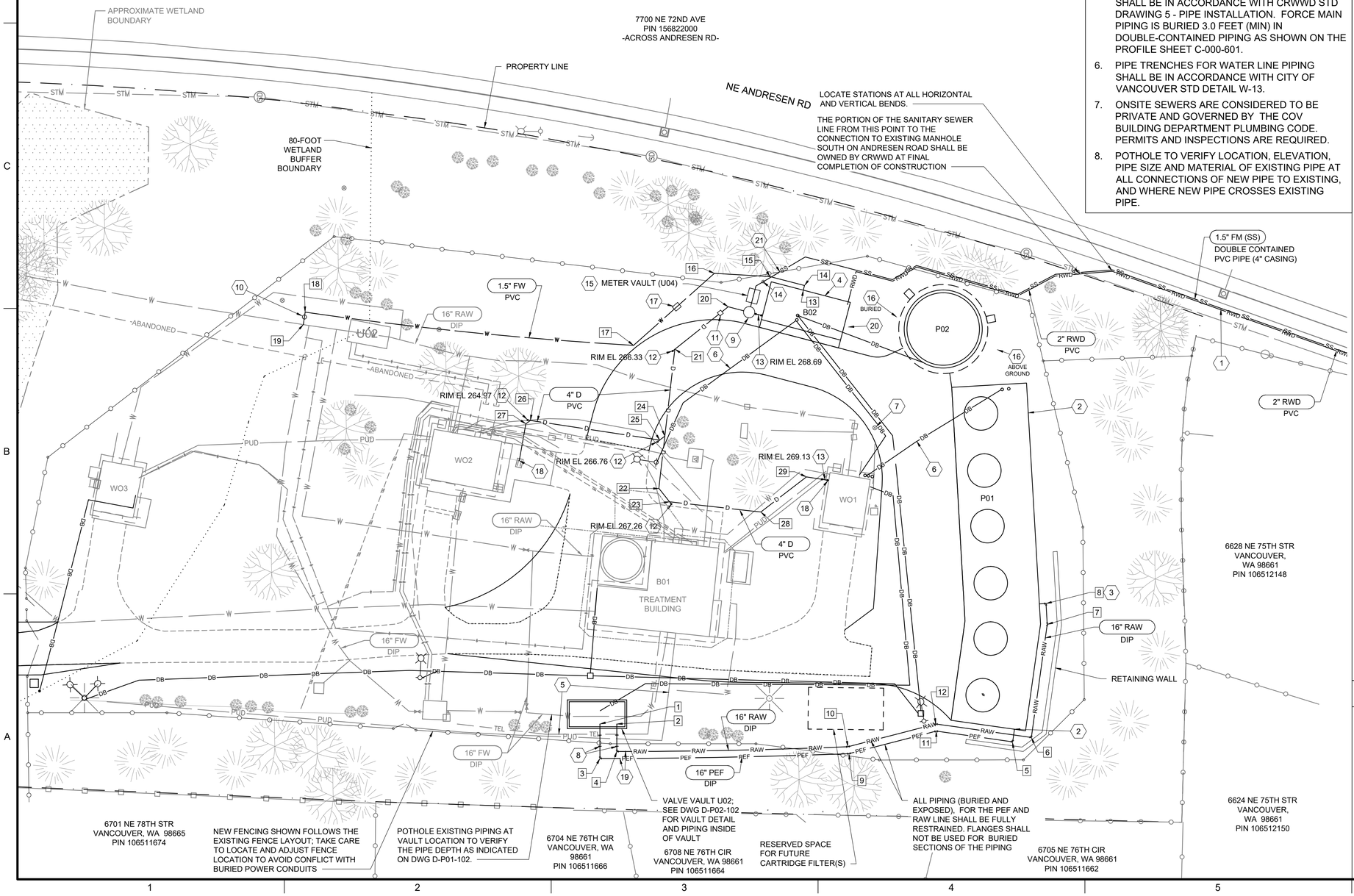

GENERAL NOTES

1. UTILITY PIPING SHALL BE CONSTRUCTED IN ACCORDANCE WITH CITY OF VANCOUVER (COV) STANDARDS AND SPECIFICATIONS, EXCEPT WHERE NOTED OTHERWISE.
2. PIPE MATERIAL DESIGNATIONS ON THIS DRAWING ARE PROVIDED FOR REFERENCE. SEE THE APPROPRIATE SPECIFICATIONS SECTIONS IN DIVISION 33 AND SECTION 40 05 02.23 FOR DETAILED PIPE AND FITTING REQUIREMENTS.
3. SEE THE ELECTRICAL SITE PLAN E-000-101 FOR ROUTING OF DUCT BANKS AND CONDUITS IN YARD AREAS.
4. UNLESS OTHERWISE NOTED IN THESE PLANS, ALL BURIED PIPING SHALL HAVE A MINIMUM COVER OVER THE TOP OF PIPE OF 36-INCHES.
5. PIPE TRENCHES FOR SANITARY SEWER, INCLUDING FORCE MAIN FROM GRINDER PUMP SHALL BE IN ACCORDANCE WITH CRWWD STD DRAWING 5 - PIPE INSTALLATION. FORCE MAIN PIPING IS BURIED 3.0 FEET (MIN) IN DOUBLE-CONTAINED PIPING AS SHOWN ON THE PROFILE SHEET C-000-601.
6. PIPE TRENCHES FOR WATER LINE PIPING SHALL BE IN ACCORDANCE WITH CITY OF VANCOUVER STD DETAIL W-13.
7. ONSITE SEWERS ARE CONSIDERED TO BE PRIVATE AND GOVERNED BY THE COV BUILDING DEPARTMENT PLUMBING CODE. PERMITS AND INSPECTIONS ARE REQUIRED.
8. POTHOLE TO VERIFY LOCATION, ELEVATION, PIPE SIZE AND MATERIAL OF EXISTING PIPE AT ALL CONNECTIONS OF NEW PIPE TO EXISTING, AND WHERE NEW PIPE CROSSES EXISTING PIPE.

KEY NOTES:

1 SEE SHEETS C-000-601 AND -602 FOR SEWER AND DRAIN PIPING PLAN AND PROFILE

2 FOR CONNECTION DETAILS TO PFAS TREATMENT FACILITY (P01), SEE D-P01-101

3 END YARD PIPING AT VERTICAL BEND UP; BEGIN PROCESS PIPING, SEE DWG D-P02-302

4 RESTROOM AND STORAGE FACILITY (B02)

5 RELOCATE EXISTING TELEPHONE AND ELECTRICAL LINES

6 DUCT BANK; SEE DWG E-00-101

7 RELOCATE EXISTING SPRINKLER VALVE AND BOX BACK TO 2 FEET OFF OF PAVEMENT EDGE

8 PROVIDE FLEXIBLE JOINT AT VAULT U02 PIPE PENETRATION. SEE PIPE CONNECTION TO STRUCTURE DETAIL 1/C-000-805.

9 PROVIDE GRINDER PUMP STATION (STRUCTURE U04). SEE SPECIFICATION SECTION 33 22 16. FINISHED GRADE AT PUMP LOCATED AS SHOWN IS ELEVATION 268.25. FORCE MAIN PIPING IS DOUBLE-CONTAINMENT PIPE (1.5-INCH DIAMETER CARRIER PIPE) PER SPECIFICATION SECTION 40 50 31.19.

10 STANDARD 2" DIAMETER COPPER PIPE WATER SERVICE CONNECTION TO MAIN PER CITY OF VANCOUVER PUBLIC WORKS, WATER DEPARTMENT, STANDARD DETAIL W-2. REDUCE SERVICE LINE TO 1.5-INCH DIAMETER PAST THE METER SET.

11 FABRICATED YARD P-TRAP ON DRAIN LINE. SEE DETAIL 2/C-000-805

12 CLEANOUT ON GRAVITY DRAIN PIPING. SEE CRWWD STD DETAIL 15/C-000-807. PROVIDE 2 FT X 2 FT X 6" CONCRETE PAD WITH #4 REINFORCING @ 6-INCH CENTERS FOR CLEANOUT RISER.

13 INSTALL TWO-WAY CLEANOUT ON GRAVITY DRAIN PIPING. SEE CRWWD STD DETAIL 21/C-000-807. PROVIDE 2 FT X 2 FT X 6" CONCRETE PAD WITH #4 REINFORCING @ 6-INCH CENTERS FOR CLEANOUT RISER.

14 INSTALL VALVE BOX PER CRWWD STD DETAIL 53/C-000-807

15 FLOW METER VAULT FOR 1-1/2 INCH DIAMETER SANITARY FORCE MAIN (U05). SEE DETAIL 1/C-000-806

16 RWD PIPING TO AND FROM THE RINSE WATER TANK (NOT SHOWN) IS ROUTED ABOVE GROUND AND IS SHOWN ON DWGS D-P02-101 AND D-P02-901

17 PROVIDE 1-1/2-INCH STANDARD REDUCED PRESSURE PRINCIPLE BACKFLOW ASSEMBLY AS SHOWN ON CITY OF VANCOUVER STD WATER DETAIL W-23/C-000-809

18 CONNECT TO FLOOR/SAMPLING DRAIN PIPING FROM WELL HOUSE WITH A FERNCO STRONGBACK COUPLER. IF A REDUCER IS REQUIRED IT SHALL BE INSTALLED ON THE NEW PIPING, PAST THE CONNECTION.

19 PROVIDE TWO ANODES AND A FLUSH-MOUNTED ANODE TEST STATION FOR EACH PIPE. SEE CP DETAILS ON SHEET C-000-808 AND SECTION 33 14 42.

20 PROVIDE ONE ANODE AND TEST STATION FOR BURIED PIPE FROM TANK (PO2) TO BLDG. (B02). SEE D-P02-302. SEE CP DETAILS ON SHEET C-000-808 AND SECTION 33 14 42.

21 CLEARANCE BETWEEN WATER PIPING AND SS DOUBLE CONTAINMENT CASING PIPE IS 0.2 FT. CLSM ENCASEMENT OF BOTH PIPES REQUIRED. SEE DWG C-000-611.

PROJECT DATUM:

1. HORIZONTAL DATUM:

   PROJECT CONTROL WAS ESTABLISHED IN 2023 FOR THE WATER STATION 14 TOPOGRAPHIC SURVEY. WASHINGTON STATE PLANE SOUTH ZONE GROUND COORDINATES ESTABLISHED FROM GPS OBSERVATION ON CONTROL POINTS 1 AND 2. SEE SURVEY CONTROL POINTS ON DWG C-000-111.

2. VERTICAL DATUM: NGVD 1929

   VERTICAL DATUM, CITY OF VANCOUVER DATUM CALCULATED BY -3.64 FT FROM GPS OBSERVATIONS.

Brown AND Caldwell
PORTLAND, OREGON

NATALIE CHOW
STATE OF WASHINGTON
23022506
REGISTERED PROFESSIONAL ENGINEER

ISSUED FOR BID

CITY OF Vancouver WASHINGTON

WS14 PFAS TREATMENT DESIGN

REVISIONS

REV	DATE	DESCRIPTION

LINE IS 2 INCHES AT FULL SIZE

DESIGNED: T.ROSSILLON
DRAWN: E.STILES
CHECKED: J.FAUST
CHECKED: T.ROSSILLON
APPROVED: N.CHOW

FILENAME C-000-411.dwg
BC PROJECT NUMBER 180318
CLIENT PROJECT NUMBER PRJ100893

CIVIL

YARD PIPING AND UTILITIES PLAN

DRAWING NUMBER
C-000-411
SHEET NUMBER
OF

Plot Date: 4/28/2025 10:37:16 AM Path: C:\Users\trossillon\DCIACCDocs\BC ACC Project Hub\98837 - Vancouver WS14 PFAS Treatment Dsgn\Project Files\300 Design\CAD\002 C\Sheets\C-000-411.dwg

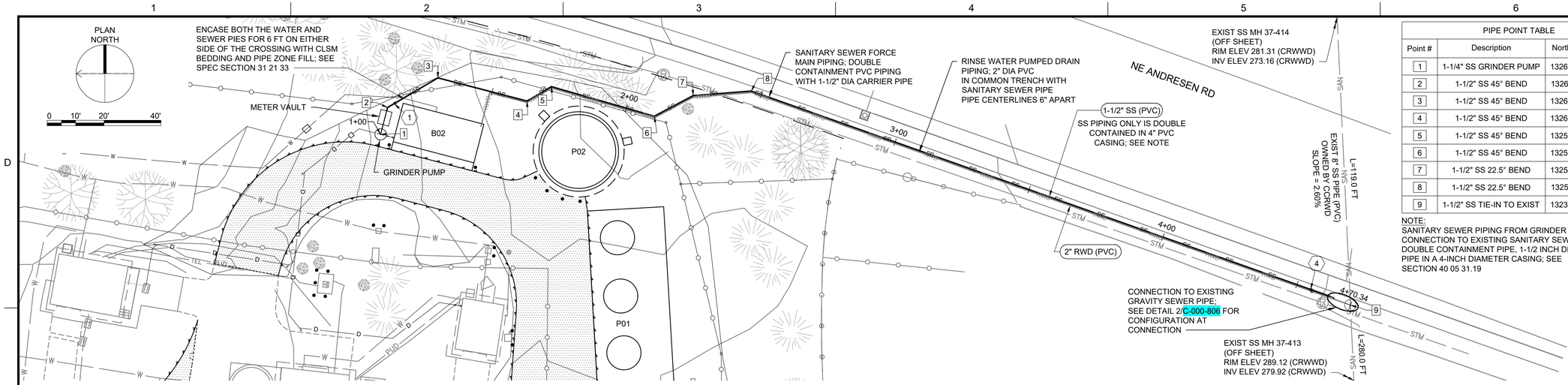

PIPE POINT TABLE			
Point #	Description	Northing	Easting
1	1-1/4" SS GRINDER PUMP	132656.5	1102970.3
2	1-1/2" SS 45° BEND	132654.1	1102979.7
3	1-1/2" SS 45° BEND	132636.3	1102990.1
4	1-1/2" SS 45° BEND	132605.0	1102982.0
5	1-1/2" SS 45° BEND	132596.4	1102987.0
6	1-1/2" SS 45° BEND	132560.2	1102976.6
7	1-1/2" SS 22.5° BEND	132546.5	1102983.9
8	1-1/2" SS 22.5° BEND	132526.1	1102985.5
9	1-1/2" SS TIE-IN TO EXIST	132315.3	1102910.2

NOTE:
SANITARY SEWER PIPING FROM GRINDER PUMP TO CONNECTION TO EXISTING SANITARY SEWER PIPE IS DOUBLE CONTAINMENT PIPE, 1-1/2 INCH DIAMETER CARRIER PIPE IN A 4-INCH DIAMETER CASING; SEE SECTION 40 05 31.19

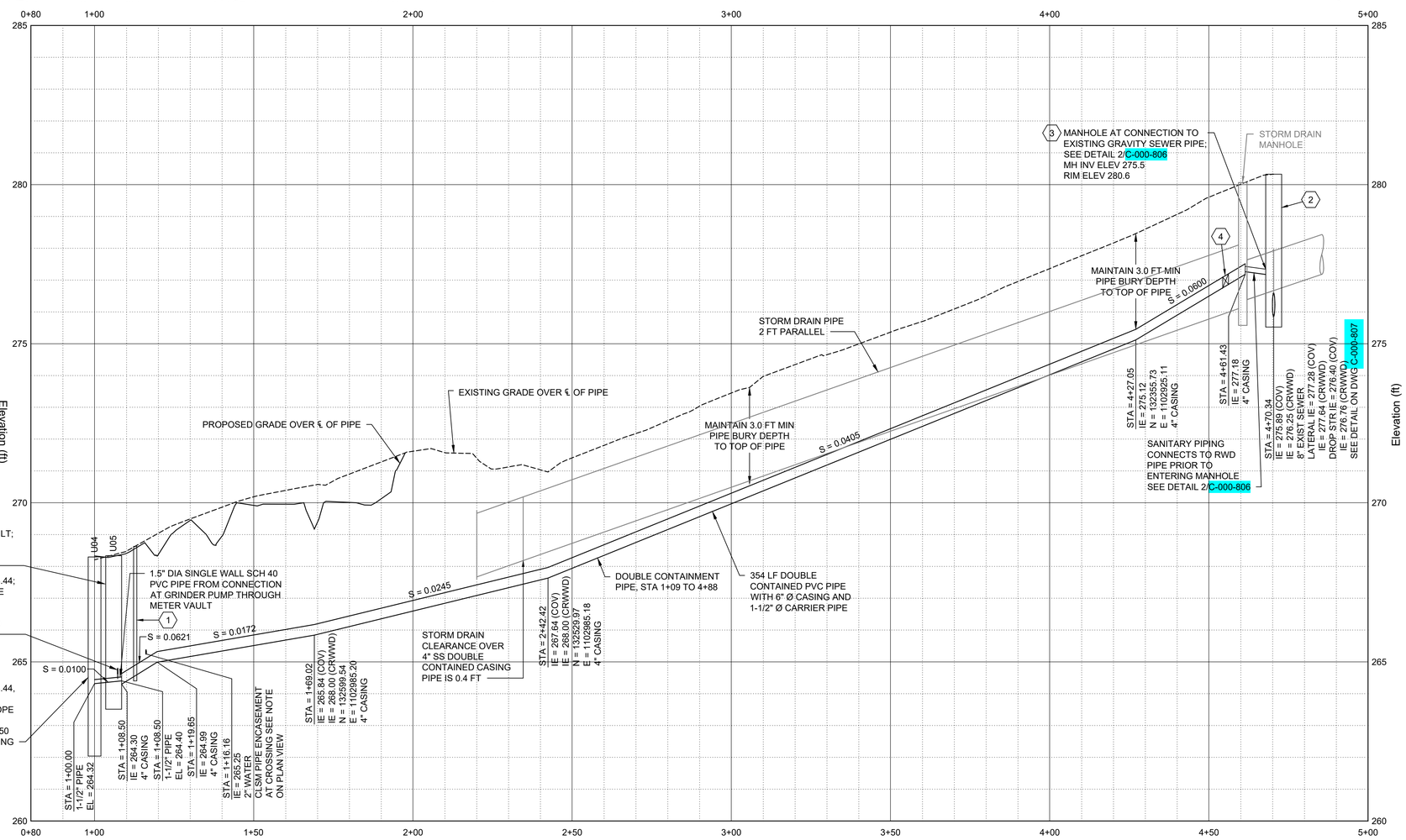

SANITARY SEWER FORCE MAIN

1" = 20' HORIZONTAL
1" = 2' VERTICAL

KEY NOTES:

1. INSTALL VALVE BOX PER CRWWD STD DETAIL 53/C-000-807
2. PROVIDE 4-FOOT DIAMETER TYPE 3 MANHOLE WITH A 4-INCH DROP PIPE. CUT IN PIPE (CRWWD STD DETAILS 8 AND 9). CONNECT WITH FERNCO STRONGBACK COUPLINGS ON EITHER END OF THE PIPE CUT FOR THE MANHOLE.
3. SEE DETAIL 2/C-000-806 FOR THE CONNECTION DETAIL OF THE SEWER AND RWD PIPES FOR DISCHARGE TO THE MANHOLE. SEE ALSO THE PLAN AND PROFILES FOR THE TWO PIPES ON C-00-601 AND C-00-602 FOR ADDITIONAL INFORMATION.
4. PROVIDE BRONZE GATE VALVE IN VALVE BOX AT STA 4+55. SEE CRWWD STD DETAIL 28/C-000-807. PROVIDE REQUIRED CONCRETE PAD AS SHOWN ON DETAIL.

PROJECT DATUMS:

1. HORIZONTAL DATUM:

   PROJECT CONTROL WAS ESTABLISHED IN 2023 FOR THE WATER STATION 14 TOPOGRAPHIC SURVEY. WASHINGTON STATE PLANE SOUTH ZONE GROUND COORDINATES ESTABLISHED FROM GPS OBSERVATION ON CONTROL POINTS 1 AND 2 AND A CLOSED LOOP TRAVERSE WAS PERFORMED AROUND THE SITE. CONTROL POINTS SHOWN ON DRAWING C-000-111.

2. VERTICAL DATUM: NGVD 1929

   VERTICAL DATUM, CITY OF VANCOUVER DATUM CALCULATED BY -3.64 FT FROM GPS OBSERVATIONS.

3. CLARK COUNTY AND CRWWD VERTICAL DATUM IS BASED ON NGVD 1929 (47) WHICH IS ADJUSTED 0.36 FEET ABOVE THE CITY OF VANCOUVER. ALL ELEVATIONS SHOWN ARE BASED ON THE CITY DATUM BASE AND NEED TO BE ADJUSTED BY ADDING 0.36 FT TO CONVERT TO CRWWD DATUM. NOTE THAT SELECT ELEVATION CALLOUTS ARE MARKED AS CRWWD TO INDICATE THE ELEVATIONS ARE ON THE CRWWD DATUM, OR WITH DUAL CALLOUTS BASED ON THE TWO DATUMS (COV & CRWWD).

Brown AND Caldwell
PORTLAND, OREGON

Signer Name: Natalie Chow
Signing Reason: I approved this document
Signing Time: 2025-05-19 20:58:56(EDT)

NATALIE CHOW
STATE OF WASHINGTON
23022506
REGISTERED PROFESSIONAL ENGINEER

ISSUED FOR BID

CITY OF Vancouver WASHINGTON

WS14 PFAS TREATMENT DESIGN

REVISIONS

REV	DATE	DESCRIPTION

LINE IS 2 INCHES AT FULL SIZE

DESIGNED: T.ROSSILLON
DRAWN: E.STILES
CHECKED: J.FAUST
CHECKED: T.ROSSILLON
APPROVED: N.CHOW

FILENAME C-000-601.dwg
BC PROJECT NUMBER 180318
CLIENT PROJECT NUMBER PRJ100893

CIVIL

SANITARY SEWER FORCE MAIN

DRAWING NUMBER
C-000-601

21 SHEET NUMBER OF 125

Plot Date: 3/7/2025 3:26:20 PM Path: C:\bcpwd\34502021\C-000-601.dwg

64f87ce7ee570f3a5e7367a6c3acfeff

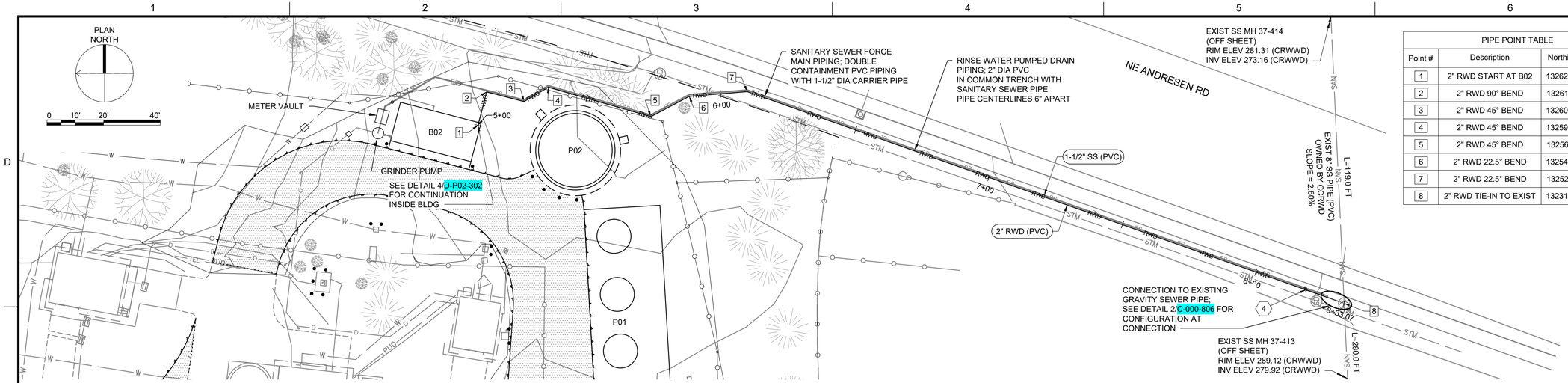

RINSE WATER DISCHARGE

1" = 20' HORIZONTAL
1" = 2' VERTICAL

PIPE POINT TABLE			
Point #	Description	Northing	Easting
1	2" RWD START AT B02	132621.2	1102973.0
2	2" RWD 90° BEND	132618.1	1102984.9
3	2" RWD 45° BEND	132605.0	1102981.4
4	2" RWD 45° BEND	132596.3	1102986.5
5	2" RWD 45° BEND	132560.1	1102976.1
6	2" RWD 22.5° BEND	132546.6	1102983.3
7	2" RWD 22.5° BEND	132526.1	1102985.0
8	2" RWD TIE-IN TO EXIST	132315.3	1102910.2

KEY NOTES:

1 PROVIDE 4-FOOT DIAMETER TYPE 3 MANHOLE WITH A 4-INCH DROP PIPE. CUT IN PIPE (CRWWD STD DETAILS 8 AND 9). CONNECT WITH FERNCO STRONGBACK COUPLINGS ON EITHER END OF THE PIPE CUT FOR THE MANHOLE.

2 SEE DETAIL 2/C-000-806 FOR THE CONNECTION DETAIL OF THE SEWER AND RWD PIPES FOR DISCHARGE TO THE MANHOLE. SEE ALSO THE PLAN AND PROFILES FOR THE TWO PIPES ON C-00-601 AND C-00-602 FOR ADDITIONAL INFORMATION.

3 PROVIDE BRONZE GATE VALVE IN VALVE BOX AT STA 4+55. SEE CRWWD STD DETAIL 28/C-000-807. PROVIDE REQUIRED CONCRETE PAD AS SHOWN ON DETAIL.

PROJECT DATUMS:

1. HORIZONTAL DATUM:

   PROJECT CONTROL WAS ESTABLISHED IN 2023 FOR THE WATER STATION 14 TOPOGRAPHIC SURVEY. WASHINGTON STATE PLANE SOUTH ZONE GROUND COORDINATES ESTABLISHED FROM GPS OBSERVATION ON CONTROL POINTS 1 AND 2 AND A CLOSED LOOP TRAVERSE WAS PERFORMED AROUND THE SITE. CONTROL POINTS SHOWN ON DRAWING C-000-111.

2. VERTICAL DATUM: NGVD 1929

   VERTICAL DATUM, CITY OF VANCOUVER DATUM CALCULATED BY -3.64 FT FROM GPS OBSERVATIONS.

3. CLARK COUNTY AND CRWWD VERTICAL DATUM IS BASED ON NGVD 1929 (47) WHICH IS ADJUSTED 0.36 FEET ABOVE THE CITY OF VANCOUVER. ALL ELEVATIONS SHOWN ARE BASED ON THE CITY DATUM BASE AND NEED TO BE ADJUSTED BY ADDING 0.36 FT TO CONVERT TO CRWWD DATUM. NOTE THAT SELECT ELEVATION CALLOUTS ARE MARKED AS CRWWD TO INDICATE THE ELEVATIONS ARE ON THE CRWWD DATUM, OR WITH DUAL CALLOUTS BASED ON THE TWO DATUMS (COV & CRWWD).

Brown AND Caldwell
PORTLAND, OREGON

Signer Name: Natalie Chow
Signing Reason: I approved this document.
Signing Time: 2025-05-10 20:50:56(EDT)

NATALIE CHOW
STATE OF WASHINGTON
23022506
REGISTERED PROFESSIONAL ENGINEER

ISSUED FOR BID

CITY OF Vancouver WASHINGTON

WS14 PFAS TREATMENT DESIGN

REVISIONS

REV	DATE	DESCRIPTION

LINE IS 2 INCHES AT FULL SIZE

DESIGNED: T.ROSSILLON
DRAWN: E.STILES
CHECKED: J.FAUST
CHECKED: T.ROSSILLON
APPROVED: N.CHOW

FILENAME C-000-602.dwg
BC PROJECT NUMBER 180318
CLIENT PROJECT NUMBER PRJ100893

CIVIL

RINSE WATER DISCHARGE

DRAWING NUMBER C-000-602

22 SHEET NUMBER OF 125

Path: C:\bcpwd\d3450201\C-000-602.dwg
Plot Date: 3/7/2025 3:27:29 PM

ab950b33f7b4dddc5f6ed848fa4c2c88

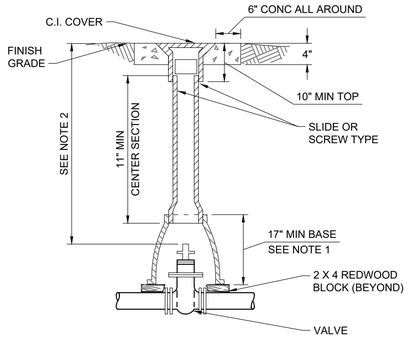

TYPICAL SHALLOW BURIAL VALVE

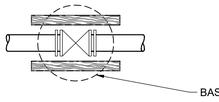

NOTES:

1. FOR ALL VALVES USE OVAL TYPE BASE.
2. USE THREE PIECE VALVE BOX FOR 2FT. 6IN. MIN. TO 4FT. 6IN. MAX.

1 - TYPICAL VALVE BOX
SCALE: NTS

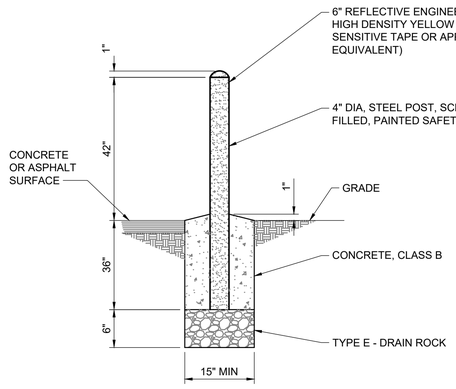

NOTES:

1. LOCATE BOLLARDS NOT LESS THAN 1.5 FEET FROM THE PROTECTED OBJECT.

2 - PIPE BOLLARD
SCALE: NTS

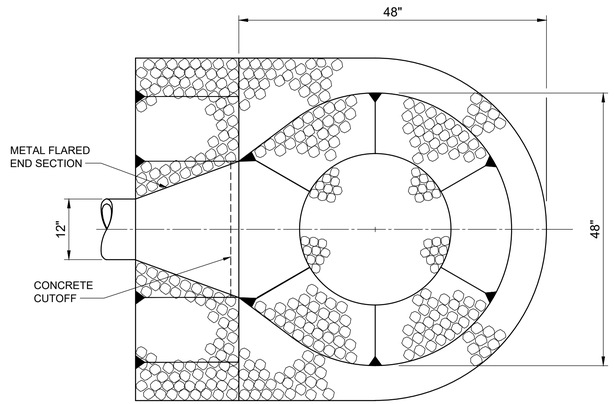

5 - CULVERT OUTLET PROTECTION
SCALE: NTS

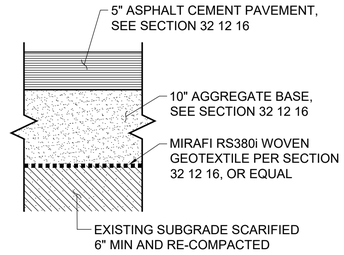

3 - PAVEMENT SECTION
SCALE: NTS

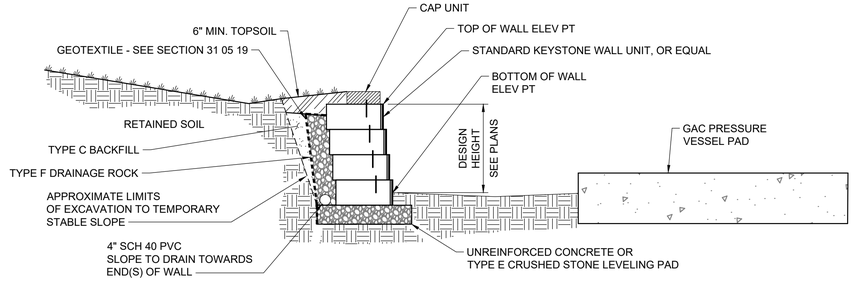

4 - DRY-STACKED RETAINING WALL SECTION
SCALE: NTS

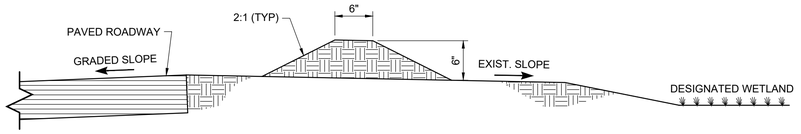

6 - WETLAND PROTECTION BERM
SCALE: NTS

Brown AND Caldwell
PORTLAND, OREGON

Signer Name: Natalie Chow
Signing Reason: I approved this document
Signing Time: 2025-01-23 11:15:51(EST)

NATALIE CHOW
STATE OF WASHINGTON
23022506
REGISTERED PROFESSIONAL ENGINEER

ISSUED FOR BID

CITY OF Vancouver WASHINGTON

WS14 PFAS TREATMENT DESIGN

REVISIONS

REV	DATE	DESCRIPTION

LINE IS 2 INCHES AT FULL SIZE

DESIGNED: T.ROSSILLON
DRAWN: E.STILES
CHECKED: J.FAUST
CHECKED:
APPROVED: N.CHOW

FILENAME C-000-801.dwg
BC PROJECT NUMBER 180318
CLIENT PROJECT NUMBER PRJ100893

CIVIL

CIVIL DETAILS 1

DRAWING NUMBER C-000-801

SHEET NUMBER 23 OF 125

Plot Date: 12/16/2024 7:19:45 PM Path: C:\bcpwd\3450201\C-000-801.dwg

4e70f92ca7cd49b57695fb79623f2618

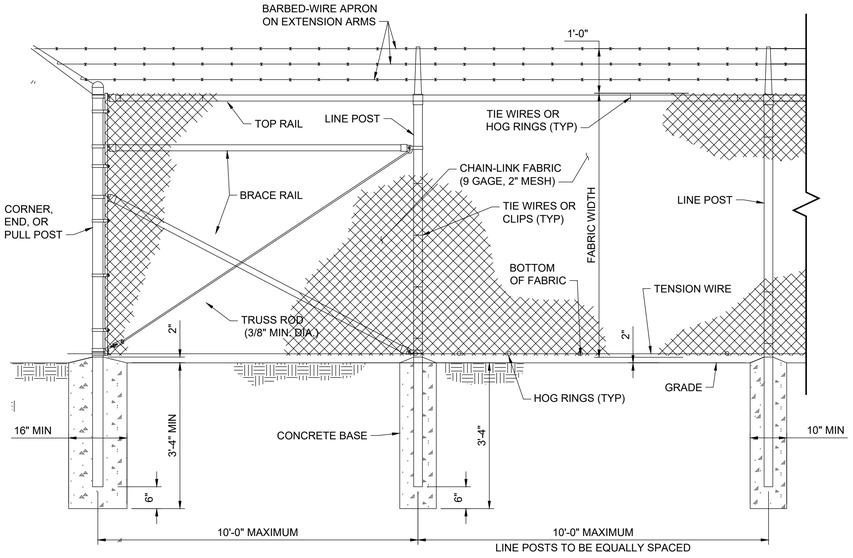

1 CHAIN-LINK SECURITY FENCE DETAIL
SCALE: NTS

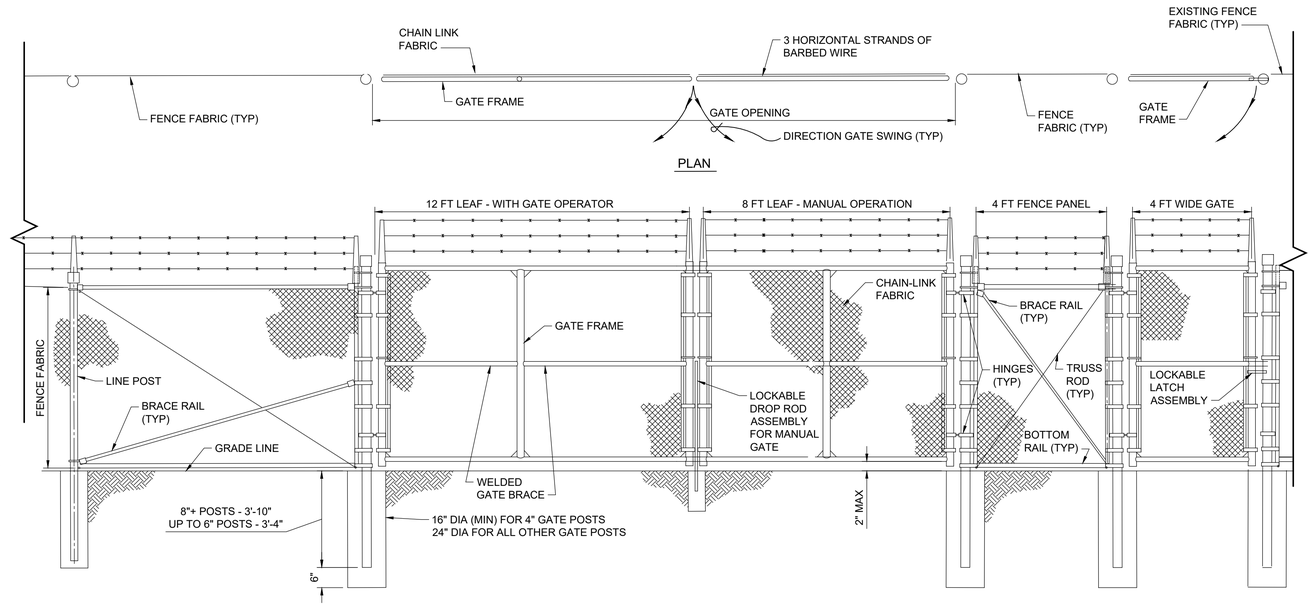

ELEVATION

2 CHAIN-LINK SECURITY GATE DETAIL
SCALE: NTS

GATE POST SCHEDULE	
GATE LEAF WIDTH (NOMINAL)	OUTSIDE DIMENSION (NOMINAL)
6' OR LESS	2.875" OD
MORE THAN 6' TO 13'	4.0" OD
MORE THAN 13' TO 18'	6.625" OD
MORE THAN 18'	8.625" OD

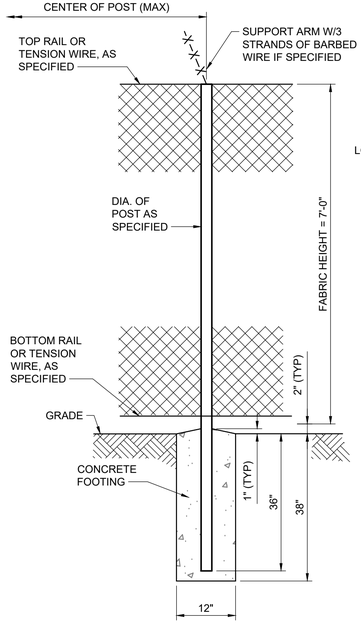

FENCE FOUNDATION

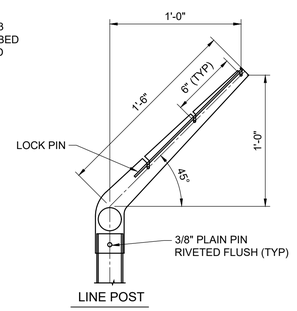

EXTENSION ARM POINTING OUTWARD

EXTENSION ARM DETAIL

NOTES:

1. DETAILS SHOWN ARE TO CLARIFY REQUIREMENTS AND ARE NOT INTENDED TO LIMIT OTHER TYPE OF FENCE SECTIONS AND METHODS OF INSTALLATION WHICH COMPLY WITH THE SPECIFICATIONS, SECTION 32 31 13.
2. SWING GATE OPERATOR FOR THE 12-FOOT LEAF (WEST LEAF) SHALL BE PROVIDED IN ACCORDANCE WITH SECTION 32 31 15. ALL OTHER GATES ARE MANUALLY OPERATED.
3. SWING GATES SHALL BE CONSTRUCTED WITH DROP RODS, PADLOCKS, AND LATCH ASSEMBLY EXCEPT AS NOTED.
4. ALL GATE FRAMES SHALL MEET THE MINIMUM REQUIREMENTS OF ASTM F900, AND SHALL BE A MINIMUM 1.90" NOMINAL (ROUND) OR 2.00" NOMINAL (SQUARE). THEY SHALL BE OF WELDED CONSTRUCTION FITTINGS. A WELDED HORIZONTAL BRACE SHALL BE USED TO BRACE THE ALL-WELDED GATE FRAMES. THE CONTRACTOR SHALL BE RESPONSIBLE FOR THE PROPER RIGID CONSTRUCTION OF ALL GATES SUPPLIED.
5. FENCE FOUNDATION CONCRETE SHALL BE MIN 2500 PSI @ 28 DAYS.
6. PROVIDE BRACE RAIL BETWEEN END POSTS AND LINE POSTS. LENGTHS AS REQUIRED.
7. PROVIDE GATE KEEPER SET IN CONCRETE, EACH GATE.
8. PROVIDE EXTENSION ARMS ON LINE, END AND CORNER POSTS & GATE POSTS.
9. ALL POSTS AND RAILS TO MATCH FENCE COLOR. SEE SECTION 32 31 13.
10. FENCING SHALL BE CONSTRUCTED USING A TOP RAIL AND BOTTOM TENSION WIRE.

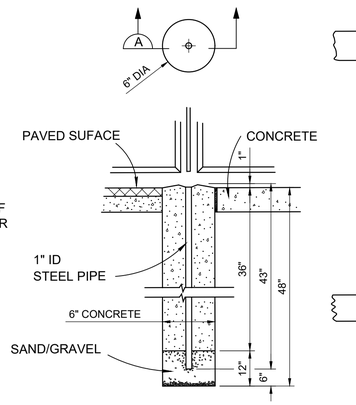

DROP ROD FOUNDATION

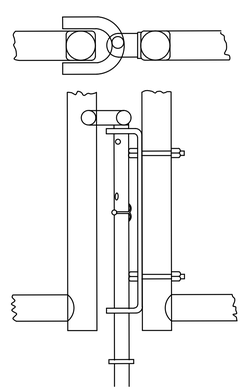

DROP ROD ASSEMBLY

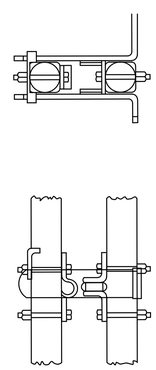

LATCH ASSEMBLY

3 CHAIN-LINK FENCE AND GATES DETAILS
SCALE: NTS

Brown AND Caldwell
PORTLAND, OREGON

Signer Name: Natalie Chow
Signing Reason: I approved this document.
Signing Time: 2025-01-23 11:15:14(EST)

NATALIE CHOW
STATE OF WASHINGTON
23022506
REGISTERED PROFESSIONAL ENGINEER

ISSUED FOR BID

CITY OF Vancouver WASHINGTON

WS14 PFAS TREATMENT DESIGN

REVISIONS

REV	DATE	DESCRIPTION

LINE IS 2 INCHES AT FULL SIZE

DESIGNED: T.ROSSILLON
DRAWN: E.STILES
CHECKED: J.FAUST
CHECKED:
APPROVED: N.CHOW

FILENAME C-000-802.dwg
BC PROJECT NUMBER 180318
CLIENT PROJECT NUMBER PRJ100893

CIVIL

CIVIL DETAILS 2

DRAWING NUMBER C-000-802

SHEET NUMBER 24 OF 125

Plot Date: 12/16/2024 7:21:34 PM Path: C:\bcpw\d3450201\C-000-802.dwg

ce6bb762927f3db8e94233068b7bdd02

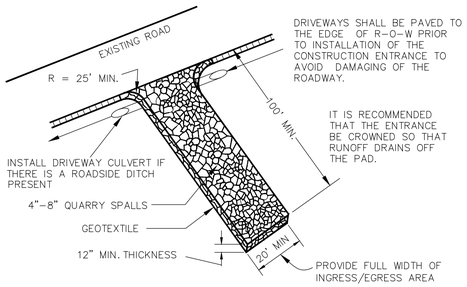

NOTES:

1. IF THE ENTRANCE SITS ON A SLOPE, PLACE A FILTER FABRIC FENCE DOWN GRADIENT.
2. TOP DRESS THE PAD WITH CLEAN 3" MINUS ROCK WHEN THE CONSTRUCTION ENTRANCE BECOMES CLOGGED WITH SEDIMENTS.
3. ANY SEDIMENT CARRIED FROM THE SITE ONTO THE STREET OR PAVED SURFACES SHALL BE CLEANED UP IMMEDIATELY.
4. IF EQUIPMENT TRAVELS EXTENSIVELY ON UNSTABILIZED ROADS ON THE SITE, A TIRE AND VEHICLE UNDERCARRIAGE WASH NEAR THE ENTRANCE WILL BE NEEDED. PERFORM WASHING ON CRUSHED ROCK. WASH WATER WILL REQUIRE TREATMENT IN A SEDIMENT POND OR TRAP.
5. WHERE CONSTRUCTION ACCESS ABUTS A CURB, MINIMUM 2" DIAMETER PVC AND COLD-PATCH ASPHALT SHOULD BE USED TO CONSTRUCT THE APPROACH IN ORDER TO PROTECT THE CURB AND MINIMIZE OBSTRUCTION TO STORMWATER FLOW IN THE GUTTER.
6. TRUCKS LEAVING THE SITE SHALL EGRESS ACROSS THE FULL LENGTH OF THE PAD.
7. SINGLE FAMILY LOT ENTRANCES SHALL USE CLEANED ROCK 2 INCH TO 4 INCH.
8. ACCESS SHALL BE LIMITED TO ONE ROUTE UNLESS APPROVED BY DIRECTOR. WHEREVER TWO OR MORE ACCESSES ARE USED, A CONSTRUCTION ROAD (BMP C107) MUST BE CONSTRUCTED TO STABILIZE ROUTES USED BY ALL CONSTRUCTION TRAFFIC AND EQUIPMENT.
9. RELOCATING CONSTRUCTION ACCESS OR ADDING ADDITIONAL ACCESSES SHALL BE APPROVED BY DIRECTOR AND INDICATED ON APPROVED PLANS.
10. THE 100' MINIMUM LENGTH OF THE ACCESS SHALL BE REDUCED TO THE MAXIMUM PRACTICABLE SIZE WHEN THE SIZE OR CONFIGURATION OF THE SITE DOES NOT ALLOW THE FULL LENGTH (100').

N.T.S.

CITY OF Vancouver WASHINGTON	STABILIZED CONSTRUCTION ENTRANCE			EROSION DETAIL NO.
CITY OF VANCOUVER DEPARTMENT OF PUBLIC WORKS SURFACE WATER MANAGEMENT	DRAWN BY	APPROVED BY	APPROVAL DATE	E-1.05
	MDH	AR	02-2024	
	REVISION	APPROVED BY	APPROVAL DATE	
	-	-	-	

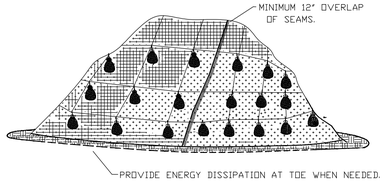

PLASTIC SHEETING

NOTES:

1. PLASTIC SHEETING IS USED TO PROVIDE IMMEDIATE PROTECTION TO SLOPES AND STOCKPILES.
2. DO NOT USE PLASTIC COVERING UPSLOPE OF AREAS SUCH AS STEEP AND/OR UNSTABLE SLOPES THAT MIGHT BE ADVERSELY AFFECTED BY CONCENTRATED RUNOFF.
3. WHEN POSSIBLE, INSTALL AN INTERCEPTOR DIKE AT THE TOP OF THE PLASTIC TO DIVERT FLOWS AWAY FROM THE PLASTIC.
4. TOE-IN THE TOP OF THE SHEETING IN A 6"x6" TRENCH BACKFILLED WITH COMPACTED NATIVE MATERIAL.
5. INSTALL A GRAVEL BERM, RIPRAP, OR OTHER SUITABLE PROTECTION AT THE TOP OF THE SLOPE IN ORDER TO DISSIPATE RUNOFF VELOCITY.
6. ANCHOR THE PLASTIC USING SANDBAGS OR OTHER SUITABLE TETHERED ANCHOR SYSTEM SPACED ON A 10' GRID SPACING IN ALL DIRECTIONS.
7. OVERLAP SEAMS 1-2', TAPE, ROLL AND STAKE THE SEAMS AND THEN WEIGH DOWN THE ENTIRE LENGTH.
8. PROVIDE ENERGY DISSIPATION AT TOE WHEN NEEDED
9. REPLACE TORN SHEETS AND REPAIR OPEN SEAMS. COMPLETELY REMOVE AND REPLACE PLASTIC WHEN IT BEGINS TO DETERIORATE.

N.T.S.

CITY OF Vancouver WASHINGTON	PLASTIC COVERING			EROSION DETAIL NO.
CITY OF VANCOUVER DEPARTMENT OF PUBLIC WORKS SURFACE WATER MANAGEMENT	DRAWN BY	APPROVED BY	APPROVAL DATE	E-1.23
	MDH	AR	02-2024	
	REVISION	APPROVED BY	APPROVAL DATE	
	-	-	-	

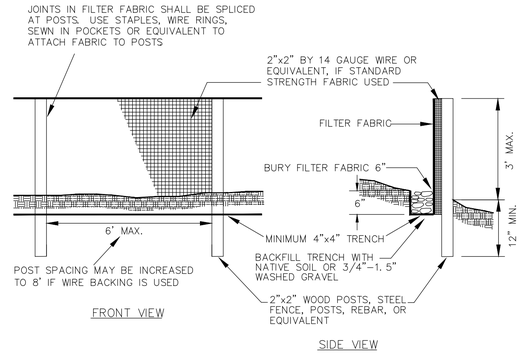

NOTE: FILTER FABRIC FENCES SHALL BE INSTALLED ALONG CONTOUR WHENEVER POSSIBLE

MAINTENANCE STANDARDS: ANY DAMAGE SHALL BE REPAIRED IMMEDIATELY

1. SILT FENCES AND FILTER BARRIERS SHALL BE INSPECTED IMMEDIATELY AFTER EACH RAINFALL AND AT LEAST DAILY DURING PROLONGED RAINFALL. ANY REQUIRED REPAIRS SHALL BE MADE IMMEDIATELY.
2. IF CONCENTRATED FLOWS ARE EVIDENT UPHILL OF THE FENCE, THEY MUST BE INTERCEPTED AND CONVEYED TO A SEDIMENT POND.
3. IT IS IMPORTANT TO CHECK THE UPHILL SIDE OF THE FENCE FOR SIGNS OF THE FENCE CLOGGING AND ACTING AS A BARRIER TO FLOW AND THEN CAUSING CHANNELIZATION OF FLOWS PARALLEL TO THE FENCE. IF THIS OCCURS, REPLACE THE FENCE OR REMOVE THE TRAPPED SEDIMENT.
4. SEDIMENT DEPOSITS SHALL EITHER BE REMOVED WHEN THE DEPOSIT REACHES APPROXIMATELY ONE-THIRD THE HEIGHT OF THE SILT FENCE, OR A SECOND SILT FENCE SHALL BE INSTALLED.
5. IF THE FILTER FABRIC (GEOTEXTILE) HAS DETERIORATED DUE TO ULTRAVIOLET BREAKDOWN, IT SHALL BE REPLACED.

N.T.S.

CITY OF Vancouver WASHINGTON	SILT FENCE			EROSION DETAIL NO.
CITY OF VANCOUVER DEPARTMENT OF PUBLIC WORKS SURFACE WATER MANAGEMENT	DRAWN BY	APPROVED BY	APPROVAL DATE	E-2.33
	MDH	AR	02-2024	
	REVISION	APPROVED BY	APPROVAL DATE	
	-	-	-	

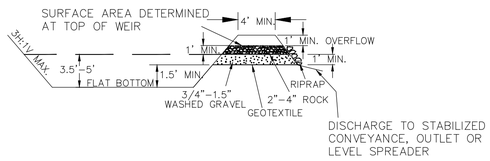

NOTE: TRAP MAY BE FORMED BY BERM OR BY PARTIAL OR COMPLETE EXCAVATION

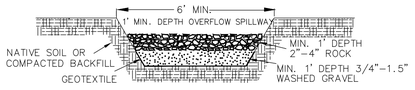

NOTES:

1. SEDIMENT TRAP MAY BE CONSTRUCTED BY EXCAVATION OR BY BUILDING A BERM.
2. OUTFLOW CHANNEL SHALL BE CONSTRUCTED BY EXCAVATION.
3. SEDIMENT TRAPS SHALL BE LIMITED TO LESS THAN 1 ACRE. FOR ANY SITE GREATER THAN 1 ACRE, SEE SEDIMENT BASIN.
4. SEDIMENT SHALL BE REMOVED BEFORE 1 FOOT ACCUMULATES.

N.T.S.

CITY OF Vancouver WASHINGTON	SEDIMENT TRAP			EROSION DETAIL NO.
CITY OF VANCOUVER DEPARTMENT OF PUBLIC WORKS SURFACE WATER MANAGEMENT	DRAWN BY	APPROVED BY	APPROVAL DATE	E-2.40
	MDH	AR	02-2024	
	REVISION	APPROVED BY	APPROVAL DATE	
	-	-	-	

Brown AND Caldwell
PORTLAND, OREGON

Signer Name: Natalie Chow
Signing Reason: I approved this document
Signing Time: 2025-01-23 11:15:54(EST)

NATALIE CHOW
STATE OF WASHINGTON
23022506
REGISTERED PROFESSIONAL ENGINEER

ISSUED FOR BID

CITY OF Vancouver WASHINGTON

WS14 PFAS TREATMENT DESIGN

REVISIONS

REV	DATE	DESCRIPTION

LINE IS 2 INCHES AT FULL SIZE

DESIGNED:	T.ROSSILLON
DRAWN:	E.STILES
CHECKED:	J.FAUST
CHECKED:	
APPROVED:	N.CHOW

FILENAME
C-000-803.dwg

BC PROJECT NUMBER
180318

CLIENT PROJECT NUMBER
PRJ100893

CIVIL

CIVIL DETAILS 3

DRAWING NUMBER
C-000-803

SHEET NUMBER 25 OF 125

Plot Date: 12/16/2024 7:22:25 PM Path: C:\bcpwd\3450201\C-000-803.dwg

df682c6d58f2fa837f12f6a1ca17c3ab

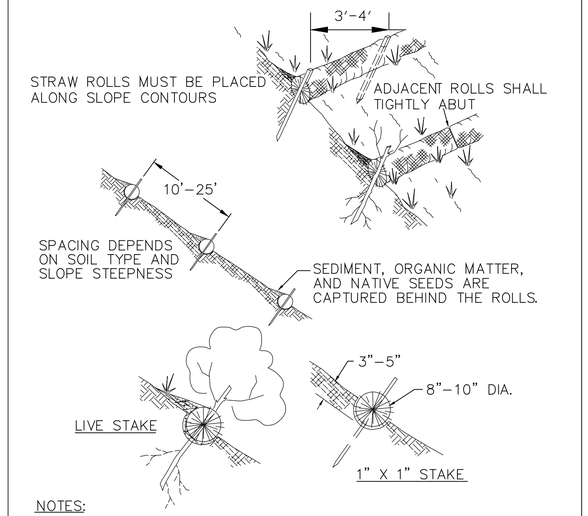

NOTES:

STRAW ROLL INSTALLATION REQUIRES THE PLACEMENT AND SECURE STAKING OF THE ROLL IN A TRENCH, 3"–5" DEEP, DUG ON CONTOUR. RUNOFF MUST NOT BE ALLOWED TO RUN UNDER OR AROUND ROLL.

N.T.S.

CITY OF Vancouver WASHINGTON

STRAW WATTLES

CITY OF VANCOUVER
DEPARTMENT OF PUBLIC WORKS
SURFACE WATER MANAGEMENT

DRAWN BY	APPROVED BY	APPROVAL DATE
MDH	AR	02-2024
REVISION	APPROVED BY	APPROVAL DATE
-	-	-

EROSION DETAIL NO. **E-2.35**

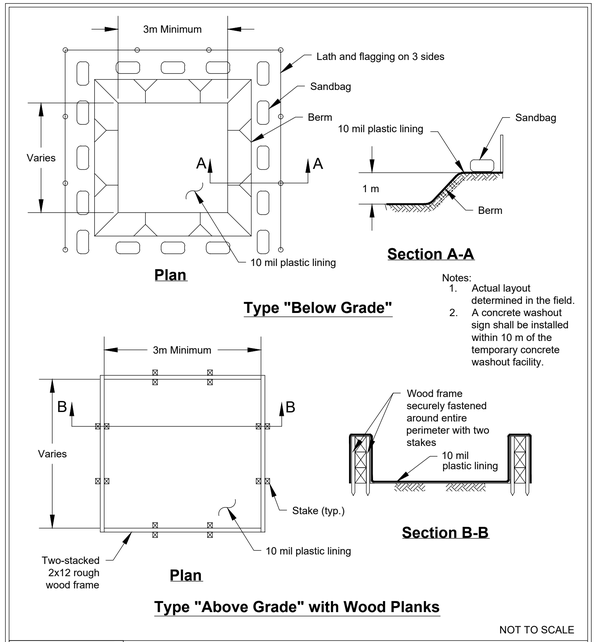

Notes:
1. Actual layout determined in the field.
2. A concrete washout sign shall be installed within 10 m of the temporary concrete washout facility.

NOT TO SCALE

DEPARTMENT OF ECOLOGY State of Washington

Figure II-4.1.7a
Concrete Washout Area

Revised June 2015

Please see http://www.ecy.wa.gov/copyright.html for copyright notice including permissions, limitation of liability, and disclaimer.

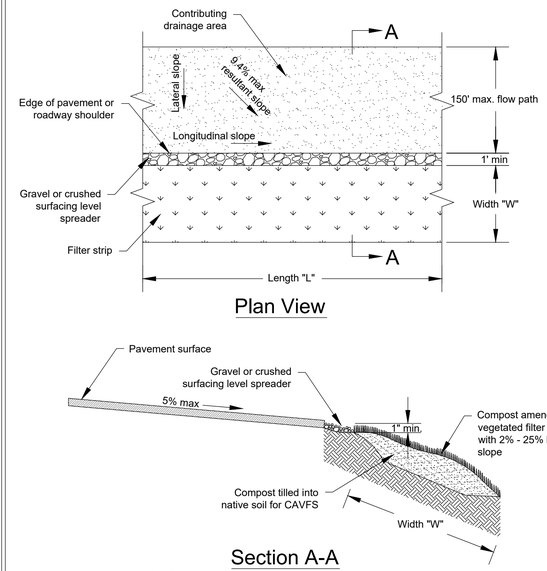

This drawing is only an example that needs to be adjusted and revised for each project.

NOT TO SCALE

DEPARTMENT OF ECOLOGY State of Washington

Figure V-7.4.3
Example of a Compost Amended Vegetated Filter Strip (CAVFS)

Revised February 2016

Please see http://www.ecy.wa.gov/copyright.html for copyright notice including permissions, limitation of liability, and disclaimer.

Brown AND Caldwell
PORTLAND, OREGON

Signer Name: Natalie Chow
Signing Reason: I approved this document
Signing Time: 2025-01-23 11:51:34[EST]

NATALIE CHOW
STATE OF WASHINGTON
23022506
REGISTERED PROFESSIONAL ENGINEER

ISSUED FOR BID

CITY OF Vancouver WASHINGTON

WS14 PFAS TREATMENT DESIGN

REVISIONS

REV	DATE	DESCRIPTION

LINE IS 2 INCHES AT FULL SIZE

DESIGNED: T.ROSSILLON
DRAWN: E.STILES
CHECKED: J.FAUST
CHECKED:
APPROVED: N.CHOW

FILENAME
C-000-804.dwg

BC PROJECT NUMBER
180318

CLIENT PROJECT NUMBER
PRJ100893

CIVIL

CIVIL DETAILS 4

DRAWING NUMBER
C-000-804

SHEET NUMBER 26 OF 125

Plot Date: 12/16/2024 7:23:50 PM Path: C:\bcgwid3450201\C-000-804.dwg

216fdf3e04ec4a01185193030f1e2bcd

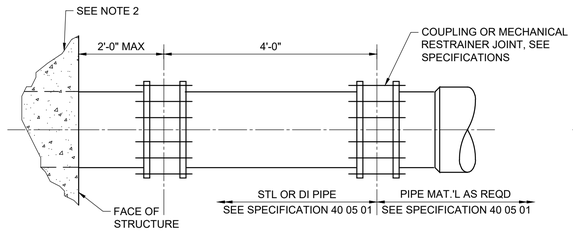

STEEL/DI

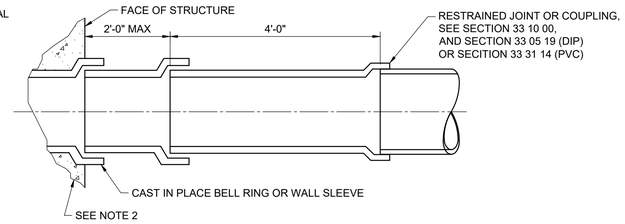

DI MECHANICAL JOINT CONNECTIONS (SEE NOTE 3)

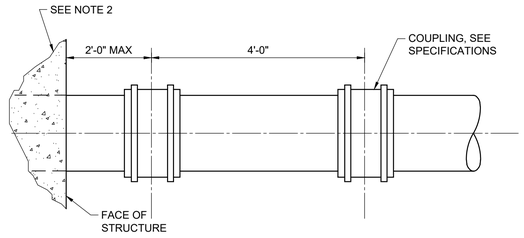

PVC/CPVC (6"-18")

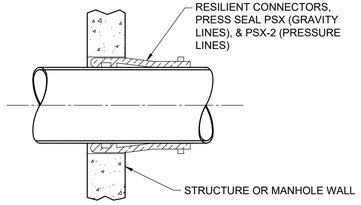

PVC/CPVC (2"-4")

NOTES:

1. ALL BURIED PIPING JOINTS FOR PRESSURE PIPE SHALL BE RESTRAINED USING COUPLINGS OR MECHANICAL RESTRAINT.
2. SEE PROCESS MECHANICAL PLANS FOR PIPE PENETRATION THROUGH WALL DETAILS ON DWG D-000-003.
3. IN ACCORDANCE WITH SPECIFICATION SECTION 40 05 06.16, 3.04, FLEXIBILITY IS REQUIRED AT EACH LOCATION WHERE PIPE TRANSITIONS FROM A STRUCTURE TO EARTH. WHERE PIPE IS UNDER PRESSURE (EITHER PRESSURIZED SYSTEMS SUCH AS PLANT WATER OR PROCESS SYSTEMS THAT ARE UNDER STATIC HEAD) RESTRAINT SHALL BE PROVIDED TO PREVENT SEPARATION OF THE PIPE. THIS REQUIREMENT DOES NOT APPLY TO PIPE ENTERING OR EXITING MANHOLES.

1 - PIPE CONECTION TO STRUCTURE
SCALE: NTS

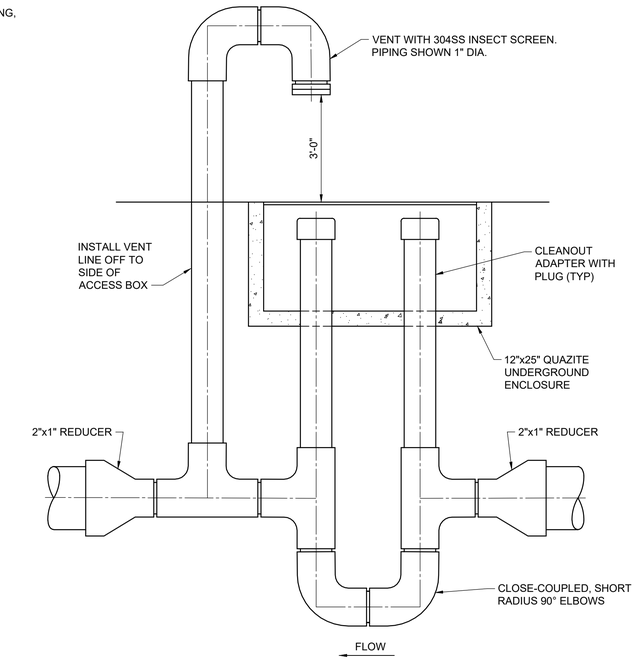

2 - FABRICATED P-TRAP
SCALE: NTS

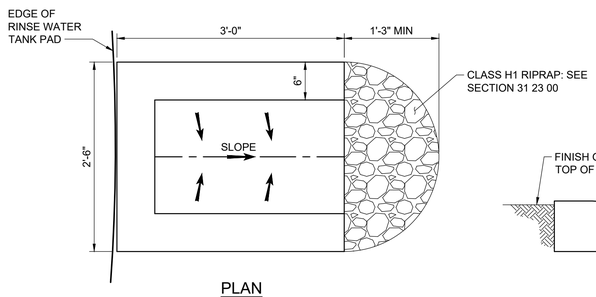

PLAN

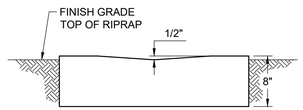

END VIEW

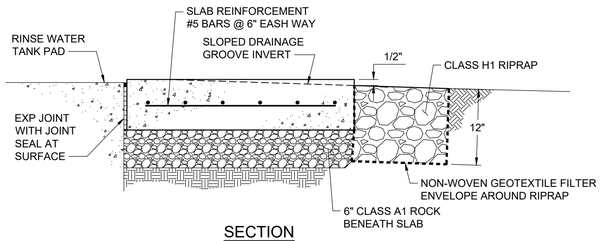

SECTION

3 - SPLASH PAD
SCALE: NTS

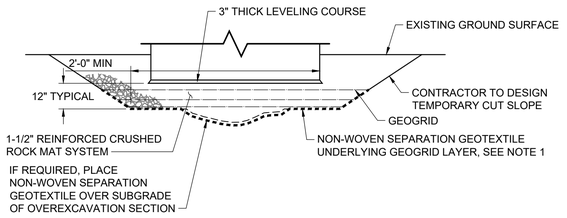

NOTES:

1. AN ALTERNATIVE TO PROVIDING SEPARATED NON-WOVEN SEPARATION GEOTEXTILE AND GEOGRID MATERIALS OVER THE SUBGRADE IS TO PROVIDE A MATERIAL WHERE THE TWO LAYERS ARE PRE-BONDED TOGETHER SIMILAR TO TENSAR RS580si.

4 - REINFORCED CRUSHED ROCK PAD DETAIL
SCALE: NTS

Brown AND Caldwell
PORTLAND, OREGON

Signer Name: Natalie Chow
Signing Reason: I approved this document.
Signing Time: 2025-01-23 11:15:51(EST)

NATALIE CHOW
STATE OF WASHINGTON
23022506
REGISTERED PROFESSIONAL ENGINEER

ISSUED FOR BID

CITY OF Vancouver WASHINGTON

WS14 PFAS TREATMENT DESIGN

REVISIONS

REV	DATE	DESCRIPTION

LINE IS 2 INCHES AT FULL SIZE

DESIGNED:	T.ROSSILLON
DRAWN:	E.STILES
CHECKED:	J.FAUST
CHECKED:	
APPROVED:	N.CHOW
FILENAME	C-000-805.dwg
BC PROJECT NUMBER	180318
CLIENT PROJECT NUMBER	PRJ100893

CIVIL

CIVIL DETAILS 5

DRAWING NUMBER
C-000-805

SHEET NUMBER 27 OF 125

Plot Date: 12/16/2024 7:25:37 PM Path: C:\bcpwd\34502011\C-000-805.dwg

c85dd48e5101b8fcc806f56d026f4049

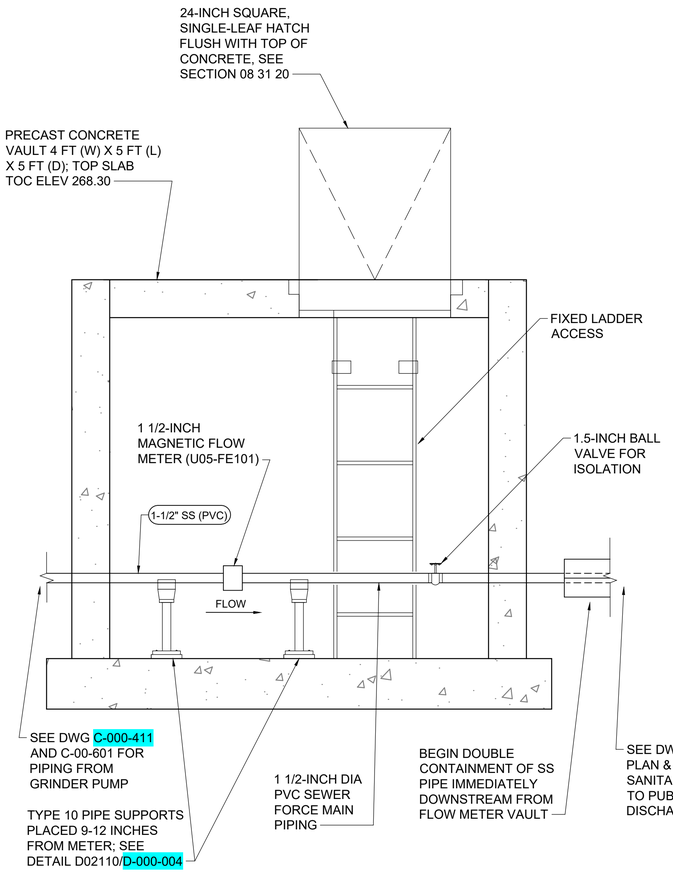

1 - FLOW METER AT GRINDER PUMP
SCALE: 1" = 1 FT

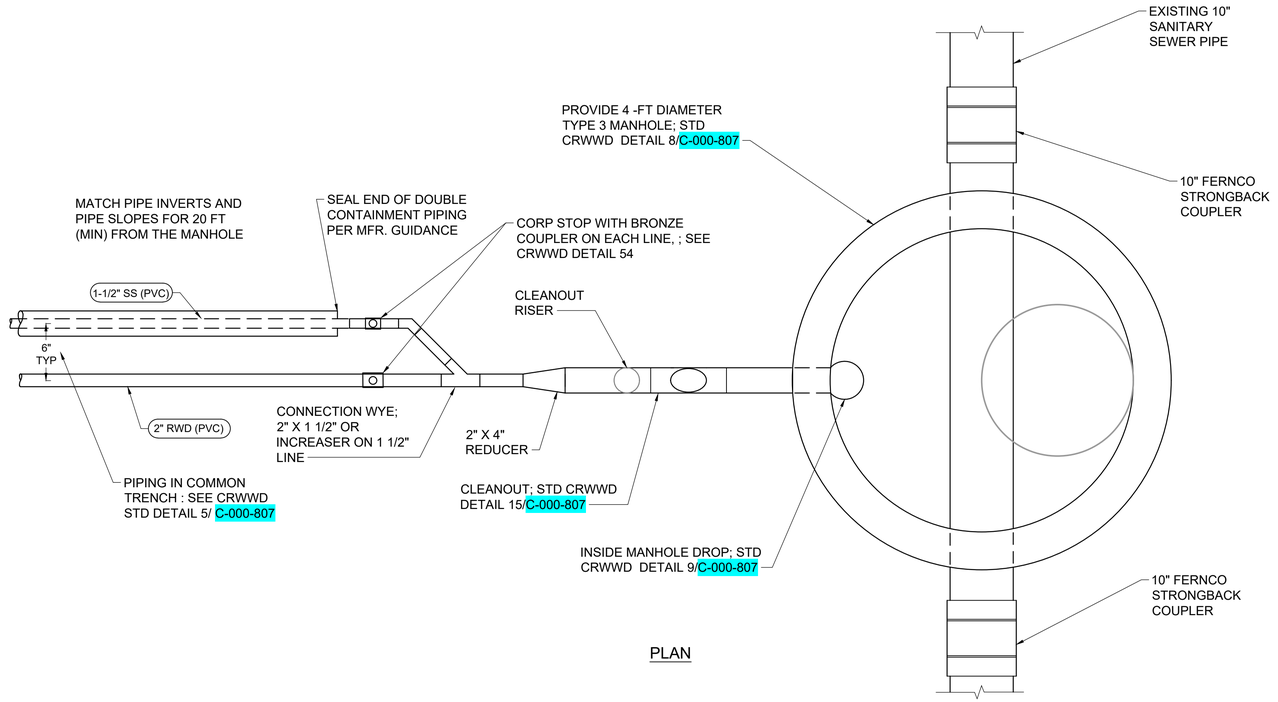

PLAN

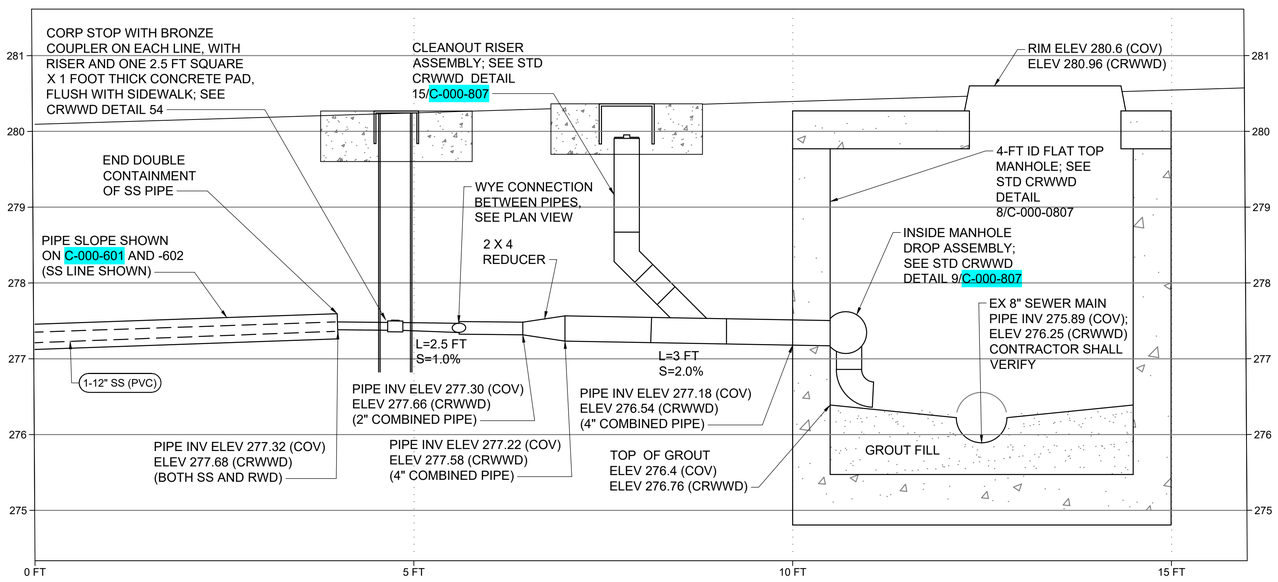

SECTION / PROFILE

2 - SEWER/DRAIN CONNECTION TO EXISTING SEWER
SCALE: 1" = 1 FT

Brown AND Caldwell
PORTLAND, OREGON

Signer Name: Natalie Chow
Signing Reason: I approved this document.
Signing Time: 2025-05-19 20:58:57(EDT)

NATALIE CHOW
STATE OF WASHINGTON
23022506
REGISTERED PROFESSIONAL ENGINEER

ISSUED FOR BID

CITY OF Vancouver WASHINGTON

WS14 PFAS TREATMENT DESIGN

REVISIONS

REV	DATE	DESCRIPTION

LINE IS 2 INCHES AT FULL SIZE

DESIGNED: N.CHOW
DRAWN: E.STILES
CHECKED: J.FAUST
CHECKED: T.ROSSILLON
APPROVED: N.CHOW

FILENAME
C-000-806.dwg
BC PROJECT NUMBER
180318
CLIENT PROJECT NUMBER
PRJ100893

CIVIL

CIVIL DETAILS 6

DRAWING NUMBER
C-000-806

28 SHEET NUMBER OF 125

Path: C:\bcpw\d3450201\C-000-806.dwg
Plot Date: 3/7/2025 2:32:57 PM

99b63f148b17a57f209d645ae61a0a7c

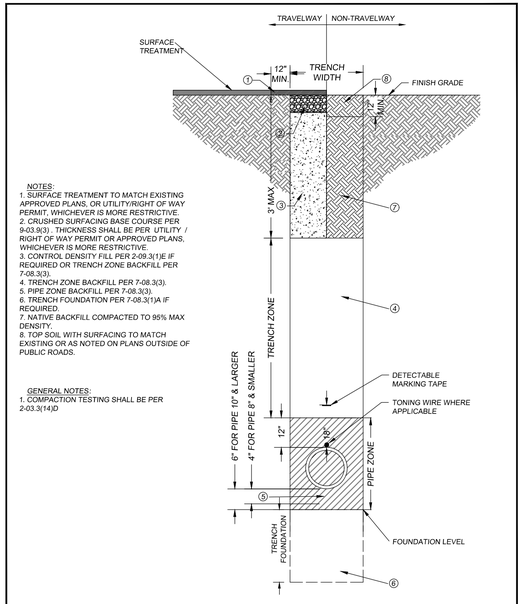

NOTES:
1. SURFACE TREATMENT TO MATCH EXISTING APPROVED PLANS, OR UTILITY/RIGHT OF WAY PERMIT, WHICHEVER IS MORE RESTRICTIVE.
2. CRUSHED SURFACING BASE COURSE PER 9-03.9(3) . THICKNESS SHALL BE PER UTILITY / RIGHT OF WAY PERMIT OR APPROVED PLANS, WHICHEVER IS MORE RESTRICTIVE.
3. CONTROL DENSITY FILL PER 2-09.3(1)E IF REQUIRED OR TRENCH ZONE BACKFILL PER 7-08.3(3).
4. TRENCH ZONE BACKFILL PER 7-08.3(3).
5. PIPE ZONE BACKFILL PER 7-08.3(3).
6. TRENCH FOUNDATION PER 7-08.3(1)A IF REQUIRED.
7. NATIVE BACKFILL COMPACTED TO 95% MAX DENSITY.
8. TOP SOIL WITH SURFACING TO MATCH EXISTING OR AS NOTED ON PLANS OUTSIDE OF PUBLIC ROADS.

GENERAL NOTES:
1. COMPACTION TESTING SHALL BE PER 2-03.3(14)D

CLARK REGIONAL WASTEWATER DISTRICT

PIPE INSTALLATION

STANDARD DRAWING

NTS **5**

APPROVED: APR 2020

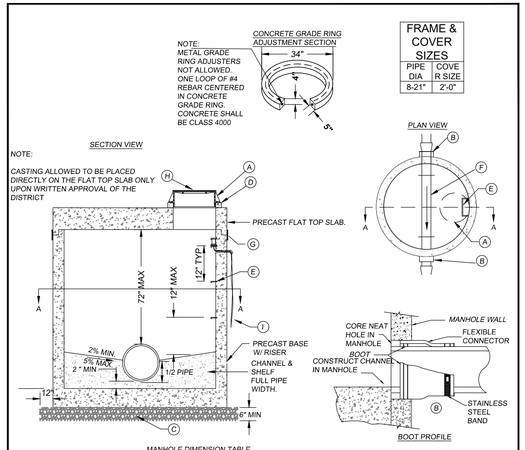

FRAME & COVER SIZES

PIPE DIA	COVE R SIZE
8-21"	2'-0"

MANHOLE DIMENSION TABLE

DIA.	WALL THICKNESS	BASE THICKNESS	MAXIMUM CORE SIZE	MINIMUM DISTANCE BETWEEN CORE
48"	4"	6"	36"	8"
60"	5"	8"	48	8"

A. STANDARD MANHOLE FRAME & COVER.
B. ALL MANHOLE PENETRATIONS SHALL BE CORED AND BOOTED PER 7-05.3. SEE BOOT PROFILE.
C. CRUSHED SURFACING BASE COURSE PER 9-03.9(3) COMPACTED TO 95% MAX DENSITY.
D. GRADE RING ADJUSTMENT PER 7-05.3(1).
E. MANHOLE STEPS NOT ALLOWED IN RISER RINGS.
F. 0.2 FT DROP THROUGH MANHOLES UNLESS OTHERWISE APPROVED.
G. EXTERNAL MANHOLE SEAL PER 7-05.3
H. MANHOLES LOCATED IN NON-TRAVELWAYS SHALL EXTEND A MINIMUM OF 12" ABOVE FINISHED GRADE OR HAVE A 4'X4' CONCRETE PAD. SEE STANDARD DRAWING #13 FOR CONCRETE PAD DETAIL.
I. SEE STANDARD DRAWING FOR TONING WIRE IN MANHOLE.

CLARK REGIONAL WASTEWATER DISTRICT

MANHOLE TYPE 3

STANDARD DRAWING

NTS **8**

APPROVED: APR 2020

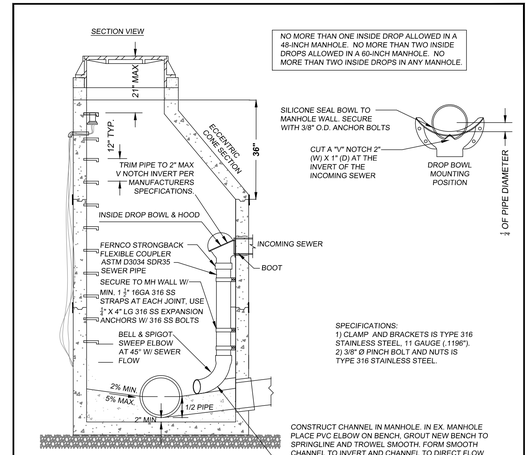

MANHOLE DIMENSION TABLE

INCOMING SEWER SIZE	DROP PIPE SIZE "X"	DROP BOWL MODEL
8" DIAMETER	6"	A-6
10" DIAMETER	8"	B-8
12" DIAMETER	10"	B-10

NOTE:
1. WRITTEN APPROVAL REQUIRED TO USE DROP MANHOLES.
2. SEE STANDARD DRAWINGS # 4-5, 6-14 FOR ADDITIONAL MANHOLE REQUIREMENTS
3. DROP BOWL & CONNECTIONS TO BE RELINER OR APPROVED EQUAL
4. DROP BOWL & CONNECTIONS SHALL BE LOCATED A MIN. OF 90 DEGREES FROM STAIRS

CLARK REGIONAL WASTEWATER DISTRICT

MANHOLE INSIDE DROP

STANDARD DRAWING

NTS **9**

APPROVED: APR 2020

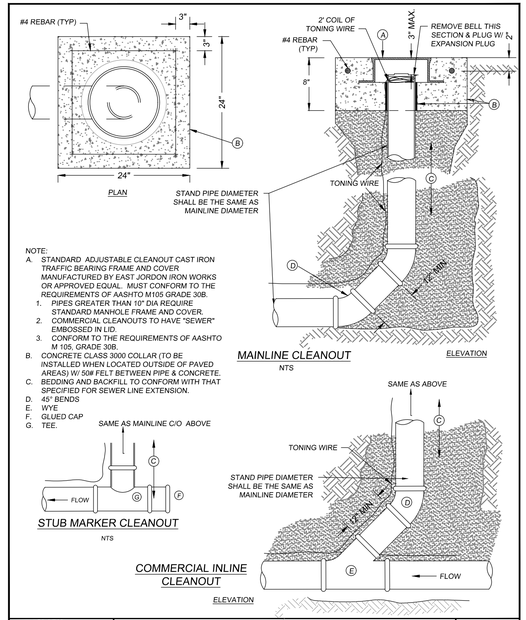

NOTE:
A. STANDARD ADJUSTABLE CLEANOUT CAST IRON TRAFFIC BEARING FRAME AND COVER MANUFACTURED BY EAST JORDON IRON WORKS OR APPROVED EQUAL. MUST CONFORM TO THE REQUIREMENTS OF AASHTO M105 GRADE 30B.
   1. PIPES GREATER THAN 10" DIA REQUIRE STANDARD MANHOLE FRAME AND COVER.
   2. COMMERCIAL CLEANOUTS TO HAVE "SEWER" EMBOSSED IN LID.
   3. CONFORM TO THE REQUIREMENTS OF AASHTO M 105, GRADE 30B.
B. CONCRETE CLASS 3000 COLLAR (TO BE INSTALLED WHEN LOCATED OUTSIDE OF PAVED AREAS) W/ 50# FELT BETWEEN PIPE & CONCRETE.
C. BEDDING AND BACKFILL TO CONFORM WITH THAT SPECIFIED FOR SEWER LINE EXTENSION.
D. 45° BENDS
E. WYE
F. GLUED CAP
G. TEE.

CLARK REGIONAL WASTEWATER DISTRICT

CLEANOUTS

STANDARD DRAWING

NTS **15**

APPROVED: APR 2020

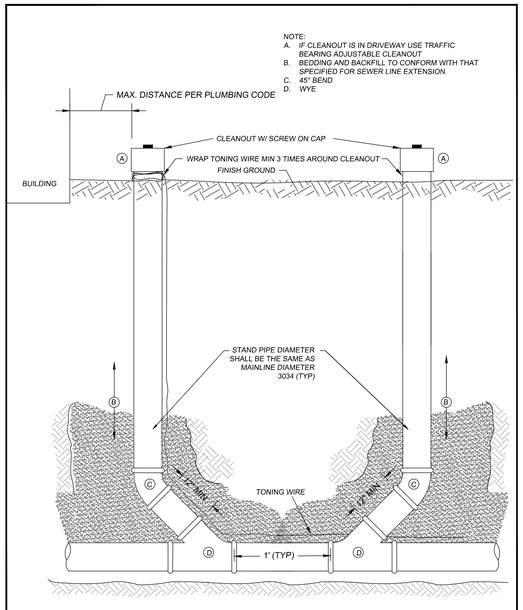

CLARK REGIONAL WASTEWATER DISTRICT

COMMERCIAL TWO WAY CLEANOUT ALTERNATE

STANDARD DRAWING

NTS **21**

APPROVED: APR 2020

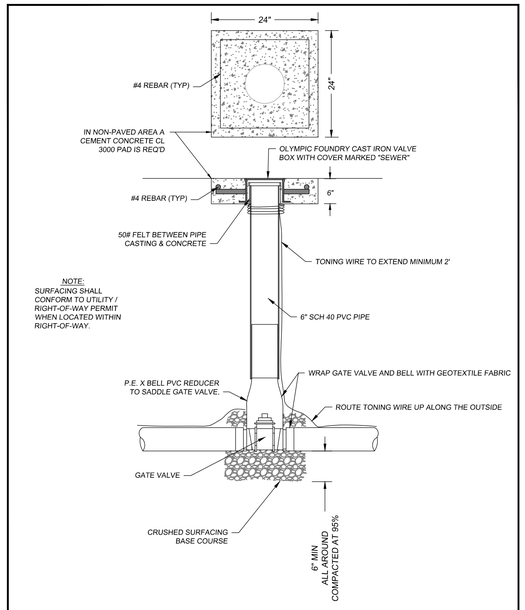

CLARK REGIONAL WASTEWATER DISTRICT

GATE VALVE

STANDARD DRAWING

NTS **28**

APPROVED: APR 2020

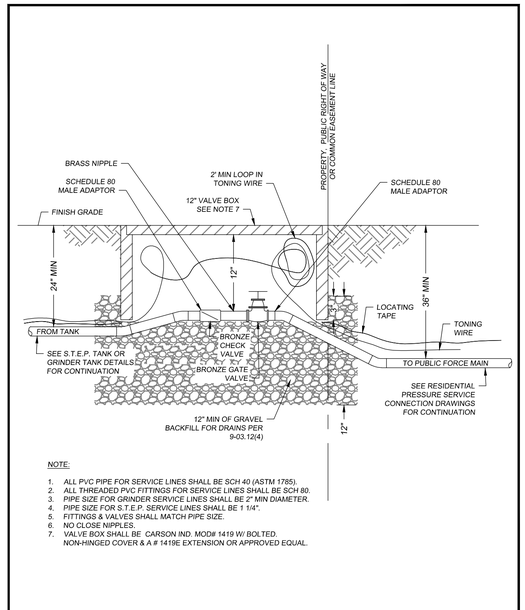

NOTE:
1. ALL PVC PIPE FOR SERVICE LINES SHALL BE SCH 40 (ASTM 1785).
2. ALL THREADED PVC FITTINGS FOR SERVICE LINES SHALL BE SCH 80.
3. PIPE SIZE FOR GRINDER SERVICE LINES SHALL BE 2" MIN DIAMETER.
4. PIPE SIZE FOR S.T.E.P. SERVICE LINES SHALL BE 1 1/4".
5. FITTINGS & VALVES SHALL MATCH PIPE SIZE.
6. NO CLOSE NIPPLES.
7. VALVE BOX SHALL BE CARSON IND. MOD# 1419 W/ BOLTED, NON-HINGED COVER & A # 1419E EXTENSION OR APPROVED EQUAL.

CLARK REGIONAL WASTEWATER DISTRICT

RESIDENTIAL GRINDER / S.T.E.P. VALVE BOX

STANDARD DRAWING

NTS **53**

APPROVED: APR 2020

Brown AND Caldwell

PORTLAND, OREGON

Signer Name: Natalie Chow
Signing Reason: I approved this document.
Signing Time: 2025-05-10 20:58:57(EDT)

NATALIE CHOW
STATE OF WASHINGTON
23022506
REGISTERED PROFESSIONAL ENGINEER

ISSUED FOR BID

CITY OF Vancouver WASHINGTON

WS14 PFAS TREATMENT DESIGN

REVISIONS

REV	DATE	DESCRIPTION

LINE IS 2 INCHES AT FULL SIZE

DESIGNED: N.CHOW
DRAWN: E.STILES
CHECKED: J.FAUST
CHECKED: T.ROSSILLON
APPROVED: N.CHOW

FILENAME C-000-807.dwg
BC PROJECT NUMBER 180318
CLIENT PROJECT NUMBER PRJ100893

CIVIL

CIVIL DETAILS 7

DRAWING NUMBER C-000-807

SHEET NUMBER 29 OF 125

Path: C:\bcpwd\34502011\C-000-807.dwg
Plot Date: 3/6/2025 4:21:42 PM

bd4d494ebe726eef488b010989c24dfa

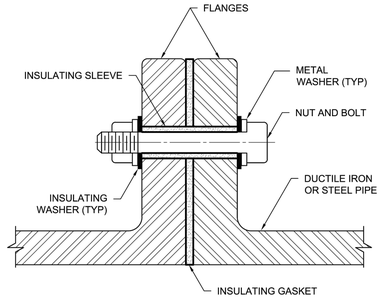

C64002 INSULATING FLANGE JOINT
NTS

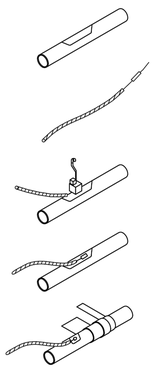

C64009 CABLE TO PIPE EXOTHERMIC WELD
NTS

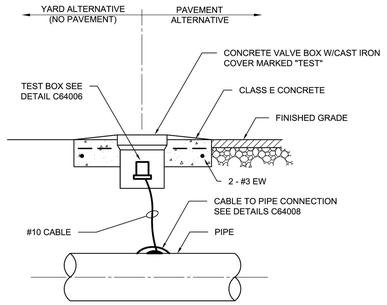

C64004 CABLE TEST STATION
NTS

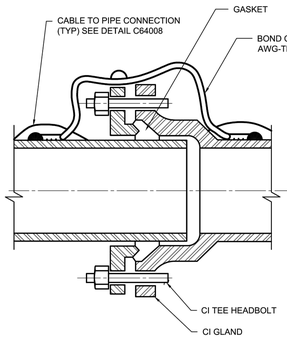

C64011 MECHANICAL JOINT BOND
SCALE: NTS

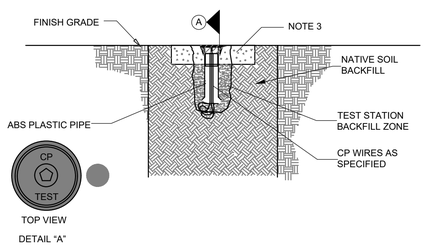

NOTES:
1. ALLOW A MINIMUM OF 24" OF SLACK IN THE WIRES IN ORDER THAT THE TERMINAL BLOCK CAN BE EXTENDED 18" ABOVE THE FINISHED GRADE.
2. THE ABS PLASTIC PIPE IS TYPICALLY 18" DEEP WITH FLARED BOTTOM TO RESIST SINKING AND DAMAGING THE WIRES.
3. CONCRETE PAD SHALL BE 24"W X 24"L 6"D. NO CONCRETE SHALL BE POURED INSIDE OR AT THE BASE OF THE ABS PIPE.

CP07 VAR BURIED TEST STATION
SCALE: NONE

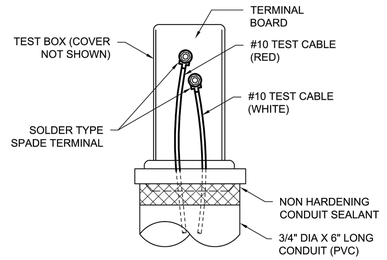

C64006 CABLE TEST TERMINAL BOX
NTS

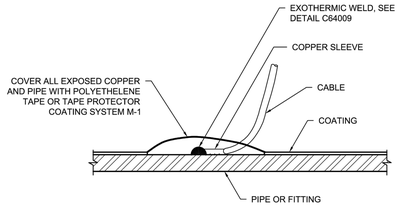

C64008 CABLE TO DUCTILE IRON PIPE
NTS

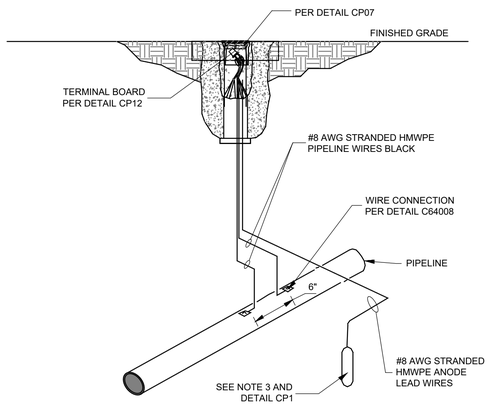

NOTES:
1. PLACE PLASTIC WARNING TAPE 12"ABOVE WIRE RUNS.
2. HORIZONTAL RUNS TO BE 36" BELOW GRADE.
3. NUMBER, TYPE, AND SIZE OF ANODE AS SPECIFIED ON THE CP SCHEDULE.
4. LABEL THE BOLLARD WITH THE PIPELINE NAME AND STATION. FILL THE ANNULAR SPACE WITH CONCRETE.
5. WHERE MULTIPLE ANODES ARE INSTALLED ALTERNATE THE ANODES ON EACH SIDE OF THE PIPELINE.

CP11 VAR SACRIFICIAL ANODE TEST STATION
SCALE: NONE

HIGH POTENTIAL ANODE INGOT CHEMICAL COMPOSITION

ELEMENT	AMOUNT BY WT
AL	0.010%
Mn	0.50-1.30%
Cu	0.02% Max
Ni	0.001% Max
Fe	0.03% Max
OTHER	0.30% Max
Mg	REMAINDER

ANODE MODEL	17D3
INGOT WEIGHT:	17-LB
PACKAGED WEIGHT:	45-LB
ANODE DIMENSIONS:	3.50 X 3.75 X 25.75

BACKFILL COMPOSITION
GYPSUM 75%
BENTONITE 20%
SODIUM SULPHATE 5%

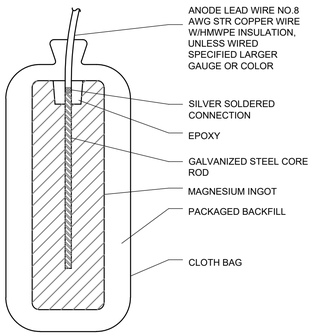

NOTES:
1. MAGNESIUM INGOT SHALL BE CENTERED IN BACKFILL MATERIAL. IF REQUIRED ROLL PACKAGED ANODE AFTER SHIPPING TO REPOSITION INGOT IN CENTER OF BACKFILL.
2. REMOVE PLASTIC SHIPPING MATERIAL PRIOR TO INSTALLATION.
3. MEASURE AND RECORD ANODE OPEN CIRCUIT POTENTIAL PRIOR TO INSTALLATION. INCLUDE TEST DATA IN TESTING SUBMITTALS.
4. DO NOT SUSPEND ANODE WEIGHT FROM COPPER WIRE. USE A ROPE SLING TO HOIST AND LOWER ANODE DURING INSTALLATION.

CP01 VAR MAGNESIUM ANODE
SCALE: NONE

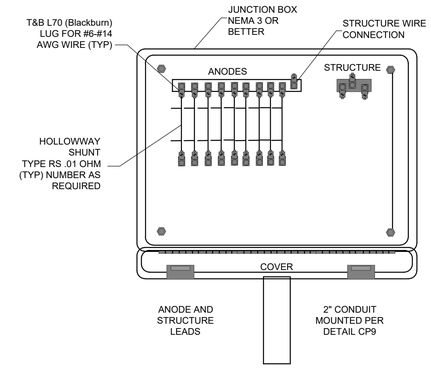

NOTES:
1. ALL ANODE SHALL BE CONNECTED TO AN INDIVIDUAL SHUNT.

CP04 VAR SACRIFICIAL ANODE JUNCTION BOX
SCALE: NONE

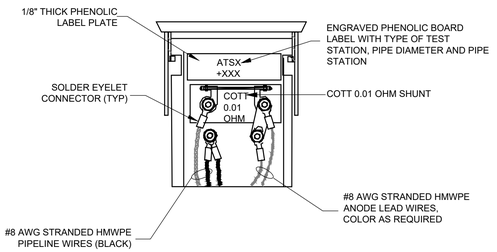

NOTE:
1. TERMINALS SHALL BE 1/4"STAINLESS STEEL WITH LOCKING WASHER, TWO FLAT WASHERS, AND DOUBLE NUTS

CP12 VAR ANODE TERMINAL BOARD
SCALE: NONE

Brown AND Caldwell
PORTLAND, OREGON

Signer Name: Natalie Chow
Signing Reason: I approved this document
Signing Time: 2025-01-23 14:52:56(CST)

NATALIE CHOW
STATE OF WASHINGTON
23022506
REGISTERED PROFESSIONAL ENGINEER

ISSUED FOR BID

CITY OF Vancouver WASHINGTON

WS14 PFAS TREATMENT DESIGN

REVISIONS

REV	DATE	DESCRIPTION

LINE IS 2 INCHES AT FULL SIZE

DESIGNED: N.CHOW
DRAWN: E.STILES
CHECKED: J.FAUST
CHECKED: T.ROSSILLON
APPROVED: N.CHOW

FILENAME C-000-808.dwg
BC PROJECT NUMBER 180318
CLIENT PROJECT NUMBER PRJ100893

CIVIL

CIVIL DETAILS 8

DRAWING NUMBER C-000-808

SHEET NUMBER 30 OF 125

Plot Date: 1/23/2025 11:04:03 AM Path: C:\bcpw\d34502011\C-000-808.dwg

51d3d87c49aee13c597c2710b674fa70

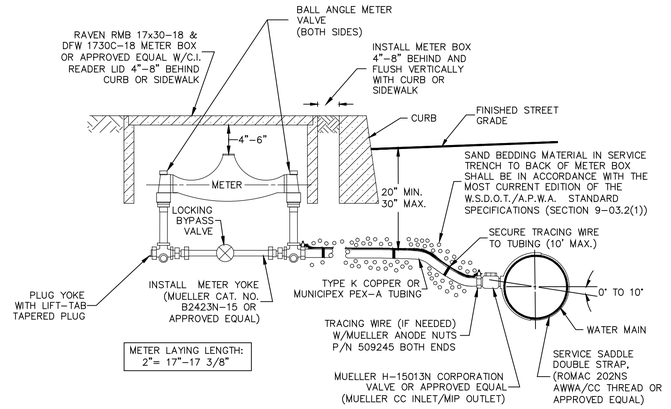

NOTES:

1. ALL DOMESTIC AND IRRIGATION METERS SHALL BE SUPPLIED, OWNED AND INSTALLED BY THE CITY OF VANCOUVER PER VMC 14.04.170(B)
2. ALL 1-1/2" AND 2" METERS MAY BE EITHER THE NUTATING DISC OR ULTRASONIC TYPE, TURBINE METERS ARE NOT ALLOWED.
3. PRIOR TO CITY INSTALLATION OF METERS, ALL SERVICE APPLICATIONS MUST BE COMPLETED AND APPROVED. SERVICE FEES PAID IN FULL AND AS-BUILTS SUBMITTED AND APPROVED.
4. CONTRACTOR SHALL CONTACT CITY CONSTRUCTION MANAGER'S OFFICE (360)487-7750 48 HOURS PRIOR TO INSTALLING ANY WATER SERVICE CONNECTIONS.
5. METERS WILL NOT BE SET BY THE CITY PRIOR TO DISINFECTION OF THE MAIN AND SERVICE, AND PRIOR TO A SUCCESSFUL BACTERIOLOGICAL TEST.
6. WATER SERVICES SHALL BE PRESSURE TESTED ALONG WITH THE MAIN.
7. USE 1-7/8" BIT FOR ALL 2" SADDLE TAPS.
8. METER BOX SHALL NOT BE ALLOWED IN HARD SURFACE AREAS WITHOUT PRIOR CITY OF VANCOUVER WRITTEN APPROVAL, IF METER BOX MUST BE LOCATED IN A WALKING AREA, A NON-SKID TRAFFIC RATED LID SHALL BE REQUIRED (SEE W-31)
9. METERS PLACED IN HARD SURFACED AREAS SHALL BE CALLED OUT AS SUCH ON THE PLANSET.
10. ALL SERVICES ARE SUBJECT TO REVIEW FOR BACKFLOW PROTECTION REQUIREMENTS.
11. ALL 1-1/2" AND 2" METER INSTALLATIONS SHALL BE 2" TAPS AND 2" SERVICE PIPING.
12. TRACER WIRE IS REQUIRED ON ALL MUNICIPEX PEX-A TUBING AND SHALL BE COPPERHEAD 1230 COPPER COATED STEEL WIRE DESIGNED FOR DIRECT BURY APPLICATIONS OR APPROVED EQUAL.
13. COMPRESSION FITTINGS WITH STAINLESS STEEL INSERTS SHALL BE USED ON ALL CONNECTIONS TO PEX-A TUBING.
14. TRACING WIRE SHALL NOT BE SPLICED AND SHALL BE TESTED FOR CONTINUITY PRIOR TO ACCEPTANCE.

N.T.S.

REV NO.	DATE	BY	APPROVED
8	1/15	G.P.H.	T.W.C.
9	1/17	G.P.H.	T.W.C.
10	1/19	G.P.H.	T.W.C.
11	1/21	G.P.H.	T.W.C.
12	1/23	G.P.H.	T.W.C.

CITY OF VANCOUVER PUBLIC WORKS WATER ENGINEERING

STANDARD 2" WATER SERVICE

STANDARD PLAN NUMBER W-2

23_WATER_DETAILS

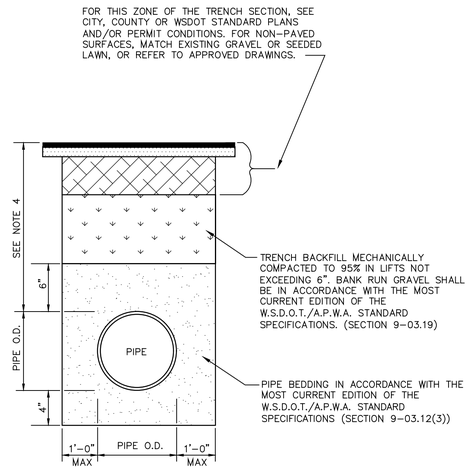

NOTE:

1. CLEAN NATIVE MATERIAL MAY BE USED AS PIPE BEDDING AND TRENCH BACKFILL AS APPROVED BY CITY OF VANCOUVER CONSTRUCTION INSPECTOR PER WSDOT SPECIFICATION (SECTION 9-03.12(3)).
2. CONTROL DENSITY FILL (CDF) MAY BE REQUIRED BASED ON THE LOCAL JURISDICTION'S STANDARDS.
3. OVERSIZE MATERIAL (4"+) SHALL NOT BE ALLOWED IN TRENCH.
4. PIPE DEPTH OF BURY MEASURED FROM TOP OF PIPE TO FINISH GRADE:
   36" FOR ALL PIPE 10" AND SMALLER
   48" FOR ALL PIPE DIAMETERS 12" AND LARGER

N.T.S.

REV NO.	DATE	BY	APPROVED
7	1/15	G.P.H.	T.W.C.
8	1/17	G.P.H.	T.W.C.
9	1/19	G.P.H.	T.W.C.
10	1/21	G.P.H.	T.W.C.
11	1/23	G.P.H.	T.W.C.

CITY OF VANCOUVER PUBLIC WORKS WATER ENGINEERING

WATER PIPE TRENCH BEDDING & BACKFILL

STANDARD PLAN NUMBER W-13

23_WATER_DETAILS

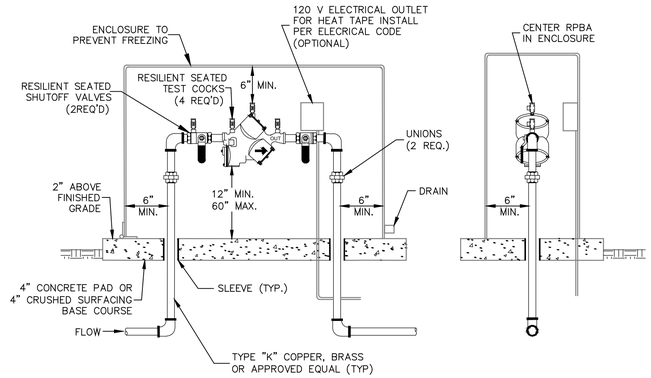

NOTES:

1. A WASHINGTON STATE APPROVED REDUCED PRESSURE BACKFLOW ASSEMBLY (RPBA) SHALL ONLY BE INSTALLED IN THE ORIENTATION (VERTICAL OR HORIZONTAL) FOR WHICH THEY ARE APPROVED ASSEMBLY MUST BE ACCESSIBLE.
2. ALL BACKFLOW PREVENTERS MUST BE LEAD FREE AND PLACED AS CLOSE TO THE PROPERTY LINE AND/OR BACKSIDE OF THE METER AS POSSIBLE ASSEMBLY MUST BE ACCESSIBLE.
3. A PLUMBING PERMIT IS REQUIRED-CONTACT THE APPROPRIATE JURISDICTION'S PERMITS COUNTER
4. THE WATER LINE SHALL BE DISINFECTED, THOROUGHLY FLUSHED AND PRESSURE TESTED PRIOR TO INSTALLING THE BACKFLOW ASSEMBLY.
5. DO NOT INSTALL IN A PIT, TRENCH OR AN AREA SUBJECT TO FLOODING.
6. HEAT AND/OR INSULATION SHALL BE PROVIDED TO PREVENT FREEZING.
7. A PLUMBING PERMIT IS REQUIRED-CONTACT THE APPROPRIATE JURISDICTION'S PERMITS COUNTER.
8. RPBA MUST BE TESTED WITHIN 30 DAYS AFTER INSTALLATION, RELOCATION OR REPAIR, THEN ANNUALLY BY A WA. STATE CERTIFIED BACKFLOW TESTER. RESULTS SHALL BE SENT TO THE CITY WATER QUALITY GROUP.
9. DRAIN SHALL BE SIZED PER THE AWWA CROSS CONNECTION CONTROL MANUAL.

(ABOVE GROUND INSTALLATION ONLY)

N.T.S.

REV NO.	DATE	BY	APPROVED
7	1/15	G.P.H.	T.W.C.
8	1/17	G.P.H.	T.W.C.
9	1/19	G.P.H.	T.W.C.
10	1/21	G.P.H.	T.W.C.
11	1/23	G.P.H.	T.W.C.

CITY OF VANCOUVER PUBLIC WORKS WATER ENGINEERING

STANDARD REDUCED PRESSURE PRINCIPLE BACKFLOW ASSEMBLY 2" & SMALLER

STANDARD PLAN NUMBER W-23

23_WATER_DETAILS

Brown AND Caldwell
PORTLAND, OREGON

Signer Name: Natalie Chow
Signing Reason: I approved this document.
Signing Time: 2025-05-18 20:58:57(EDT)

NATALIE CHOW
STATE OF WASHINGTON
23022506
REGISTERED PROFESSIONAL ENGINEER

ISSUED FOR BID

CITY OF Vancouver WASHINGTON

WS14 PFAS TREATMENT DESIGN

REVISIONS

REV	DATE	DESCRIPTION

LINE IS 2 INCHES AT FULL SIZE

DESIGNED: N.CHOW
DRAWN: E.STILES
CHECKED: J.FAUST
CHECKED: T.ROSSILLON
APPROVED: N.CHOW

FILENAME C-000-809.dwg
BC PROJECT NUMBER 180318
CLIENT PROJECT NUMBER PRJ100893

CIVIL

CIVIL DETAILS 9

DRAWING NUMBER C-000-809

SHEET NUMBER 31 OF 125

Path: C:\bcpw\d3450201\C-000-809.dwg
Plot Date: 3/6/2025 4:40:42 PM

a190cbdfea286813df247519c14c2c53

TREE REMOVAL AND PRESERVATION NOTES

1. PRE-CONSTRUCTION MEETING. PRIOR TO ANY SITE ACTIVITY, A PRE-CONSTRUCTION MEETING WITH THE OWNER, CONTRACTORS, AND PROJECT ARBORIST SHALL TAKE PLACE TO REVIEW TREE PROTECTION MEASURES AND ADDRESS QUESTIONS OR CONCERNS ON SITE.
2. TREE ROOT PROTECTION ZONE. THE ROOT PROTECTION ZONE (RPZ) OF PROTECTED TREES IS DEFINED AS THE DRIPLINE AREA REGARDLESS OF THE LOCATION OF TREE PROTECTION FENCING. PROTECTED TREE DRIPLINES ARE SHOWN TO SCALE ON TREE PLAN DRAWINGS. WHERE THE DRIPLINE OF PROTECTED TREES EXCEEDS THE LOCATION OF PROTECTION FENCING, THE CONTRACTOR SHALL BE MINDFUL OF WORKING WITHIN THE RPZ AND COORDINATE WITH THE PROJECT ARBORIST IN A TIMELY MANNER TO MONITOR EXCAVATION, DOCUMENT ROOT PRUNING, AND PROVIDE ON-THE-GROUND RECOMMENDATIONS AS NEEDED.
3. TEMPORARY TREE PROTECTION FENCING. PRIOR TO SITE ACTIVITY, TREES TO REMAIN ON SITE SHALL BE PROTECTED BY INSTALLATION OF TREE PROTECTION FENCING TO PREVENT INJURY TO TREE TRUNKS OR ROOTS, OR SOIL COMPACTION WITHIN THE RPZ. FENCES SHALL BE A MINIMUM 4-FOOT-HIGH CHAIN LINK OR GALVANIZED WELDED WIRE ON METAL POSTS. FENCING SHALL BE INSTALLED AS DEPICTED ON THE APPROVED PLANS AND SHALL NOT BE OPENED, ADJUSTED, OR REMOVED WITHOUT FIRST COORDINATING WITH THE PROJECT ARBORIST. TREES LOCATED FARTHER THAN 20-FEET FROM CONSTRUCTION ACTIVITY SHALL NOT REQUIRE TREE PROTECTION FENCING.
4. TREE PROTECTION ZONE. WITHOUT AUTHORIZATION FROM THE PROJECT ARBORIST, NONE OF THE FOLLOWING SHALL OCCUR BENEATH THE DRIPLINE OF ANY PROTECTED TREE:
   a) GRADE CHANGE OR CUT AND FILL;
   b) NEW IMPERVIOUS SURFACES;
   c) UTILITY OR DRAINAGE FIELD PLACEMENT;
   d) PLACING SOLVENTS OR IRRIGATED LANDSCAPING;
   e) STAGING OR STORAGE OF MATERIALS AND EQUIPMENT; OR
   f) VEHICLE MANEUVERING.

   THE CONTRACTOR SHALL BE RESPONSIBLE FOR CONTACTING THE PROJECT ARBORIST IN A TIMELY MANNER PRIOR TO WORKING BENEATH PROTECTED TREE DRIPLINES. ROOT PROTECTION ZONES MAY BE ENTERED FOR TASKS LIKE SURVEYING, MEASURING, AND SAMPLING. FENCES MUST BE CLOSED UPON COMPLETION OF THESE TASKS.
5. EROSION CONTROL. SILT FENCING REQUIRED TO BE INSTALLED WITHIN THE RPZ SHALL NOT BE TRENCHED IN PER MANUFACTURER SPECIFICATIONS TO AVOID ROOT DAMAGE. INSTEAD, ROLL THE BASE OF THE SILT FENCE AROUND A STRAW WATTLE AND STAKE THE WATTLE SECURELY INTO THE GROUND, OR USE COMPOST SOCKS OR OTHER SIMILAR MATERIALS THAT DO NOT REQUIRE TRENCHING.
6. TREE REMOVAL. TREES TO BE REMOVED SHALL BE CLEARLY IDENTIFIED WITH TREE-MARKING PAINT OR OTHER METHODS APPROVED IN ADVANCED BY THE PROJECT ARBORIST. APPROVAL OF TREES TO BE REMOVED IS REQUIRED AFTER FIELD MARKING. TREE REMOVAL SHALL BE PERFORMED BY A QUALIFIED TREE SERVICE. DIRECTIONALLY FELL TREES OR SURGICALLY REMOVE THEM WHERE NEEDED TO AVOID DAMAGE TO PROTECTED TREES. WHERE TREES ARE APPROVED FOR REMOVAL WITHIN A TREE PROTECTION ZONE, PROTECTION FENCING MAY BE TEMPORARILY OPENED FOR TREES TO BE FELLED. NO HEAVY MACHINERY IS ALLOWED INSIDE OF TREE PROTECTION ZONES, BUT A MACHINE MAY OPERATE OUTSIDE OF THE PROTECTION ZONE TO REACH IN AND DRAG FELLED TREES AWAY. CLOSE THE PROTECTION FENCING ONCE TREE REMOVAL IS COMPLETE.
7. STUMP REMOVAL. STUMPS OF TREES PLANNED FOR REMOVAL THAT ARE LOCATED WITHIN THE RPZ OF RETAINED TREES SHOULD REMAIN IN THE GROUND WHERE FEASIBLE. OTHERWISE, STUMPS MAY BE REMOVED BY STUMP GRINDING TO JUST BELOW THE GROUND SURFACE OR EXTRACTED FROM THE GROUND UNDER THE ON-SITE SUPERVISION OF THE PROJECT ARBORIST. STUMPS OF DECIDUOUS TREES TO REMAIN IN THE GROUND MAY BE TREATED WITH AN HERBICIDE TO INHIBIT SPROUTING; FOLLOW MANUFACTURER'S SPECIFICATIONS.
8. POST-CLEARING TREE ASSESSMENT. ONCE THE TREES APPROVED FOR REMOVAL HAVE BEEN REMOVED AND THE SITE IS STAKED AND PREPARED FOR CONSTRUCTION, COORDINATE WITH THE PROJECT ARBORIST TO REASSESS THE REMAINING TREES IN TERMS OF EXPOSURE FROM ADJACENT TREE REMOVAL AND SUITABILITY FOR PRESERVATION. IF ADDITIONAL TREES ARE DETERMINED TO BE STRUCTURALLY UNSOUND OR HAZARDOUS, THE ARBORIST SHALL DOCUMENT RECOMMENDATIONS AND ADDITIONAL TREES MAY BE REMOVED IF AUTHORIZED BY THE CITY.
9. CROWN PRUNING. PRUNING MAY BE NEEDED TO PROVIDE OVERHEAD CLEARANCE TO AVOID CROWN DAMAGE DURING CONSTRUCTION AND TO REMOVE DEAD AND DEFECTIVE BRANCHES FOR SAFETY. THE PROJECT ARBORIST CAN HELP IDENTIFY WHERE PRUNING IS NECESSARY ONCE TREES RECOMMENDED FOR REMOVAL HAVE BEEN REMOVED AND THE SITE IS PREPARED FOR CONSTRUCTION. CROWN PRUNING SHALL BE PERFORMED BY A QUALIFIED TREE SERVICE USING ISA BEST MANAGEMENT PRACTICES FOR PRUNING AND ANSI A300 STANDARDS.
10. DEMOLITION. WHERE EXISTING INFRASTRUCTURE IS REMOVED ADJACENT TO A PROTECTED TREE, COORDINATE WITH THE PROJECT ARBORIST IF TREE ROOTS ARE REVEALED. THE ARBORIST SHALL ASSESS THE ROOTS AND PROVIDE ON-THE-GROUND RECOMMENDATIONS WHICH MAY INCLUDE ROOT PRUNING, COVERING THE EXPOSED ROOTS WITH SOIL, OR OTHER RECOMMENDATIONS AS NEEDED.
11. EXCAVATION. EXCAVATION BENEATH THE DRIPLINES OF PROTECTED TREES SHALL BE AVOIDED IF ALTERNATIVES ARE AVAILABLE. EXCAVATION IMMEDIATELY ADJACENT TO ROOTS 2-INCHES AND LARGER IN DIAMETER BENEATH THE DRIPLINE OF RETAINED TREES SHALL BE BY HAND OR OTHER NON-INVASIVE TECHNIQUES TO ENSURE THAT ROOTS ARE NOT DAMAGED. WHERE FEASIBLE, MAJOR ROOTS SHALL BE PROTECTED BY TUNNELING OR OTHER MEANS TO AVOID DESTRUCTION OR DAMAGE. EXCEPTIONS CAN BE MADE IF, IN THE OPINION OF THE PROJECT ARBORIST, UNACCEPTABLE DAMAGE WILL NOT OCCUR TO THE TREE. THE CONTRACTOR IS RESPONSIBLE FOR COORDINATING WITH THE PROJECT ARBORIST IN A TIMELY MANNER PRIOR TO PERFORMING ANY EXCAVATION BENEATH A PROTECTED TREE DRIPLINE REGARDLESS OF THE APPROVED LOCATION OF TREE PROTECTION FENCING.
12. ROOT PRUNING. THE CONTRACTOR MAY PRUNE ROOTS SMALLER THAN 2-INCHES IN DIAMETER AS DIGGING PROGRESSES. ROOT PRUNING SHALL BE PERFORMED WITH PRUNING SHEARS OR A SHARP SAW. PRUNE ROOTS PERPENDICULAR TO THE NATURAL GROWTH DIRECTION WITH BARK FIRMLY ATTACHED. ROOTS MEASURING 2-INCHES AND LARGER IN DIAMETER SHOULD BE EXPOSED FOR THE PROJECT ARBORIST TO ASSESS PRIOR TO ROOT PRUNING. THE ARBORIST SHOULD DIRECT AND DOCUMENT PRUNING OF ROOTS 2-INCHES AND LARGER.
13. SURFACING. WHERE FEASIBLE, AVOID EXCAVATION AND USE A MODIFIED PROFILE TO BUILD UP FROM EXISTING GRADE (FIGURE 1). THE PROFILE INCLUDES A LAYER OF PERMEABLE WOVEN GEOTEXTILE FABRIC ON THE GROUND SURFACE AND CLEAN CRUSHED ROCK TO RAISE THE GRADE AS NEEDED. IF USED, SURFACING MAY INCLUDE ASPHALT, CONCRETE, OR OTHER MATERIALS. USE OF THIS SECTION REQUIRES PREAPPROVAL FROM THE ARBORIST, ENGINEER, AND CITY.

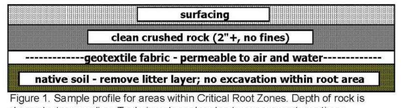

Figure 1. Sample profile for areas within Critical Root Zones. Depth of rock is dependent on grading. Technique based on best management practices.

14. LANDSCAPING. FOLLOWING CONSTRUCTION AND WHERE LANDSCAPING IS DESIRED, APPLY APPROXIMATELY 3-INCHES OF MULCH BENEATH THE DRIPLINE OF PROTECTED TREES IN A MINIMUM 5-FOOT RADIUS AROUND TREE TRUNKS; DO NOT PILE MULCH DIRECTLY AGAINST TREE TRUNKS. SHRUBS AND GROUND COVER PLANTS MAY BE PLANTED BENEATH PROTECTED TREE DRIPLINES, BUT NO CLOSER THAN 5-FEET TO TREE TRUNKS. IF IRRIGATION IS USED, USE DRIP IRRIGATION OR LOW FLOW EMITTERS INSTALLED AT NATIVE GRADE (NO TRENCHING) ONLY BENEATH THE DRIPLINES OF PROTECTED TREES. LANDSCAPING SHALL BE PERFORMED BY HAND AND WITH HAND TOOLS ONLY BENEATH PROTECTED TREE DRIPLINES; ADJUST THE LOCATION OF PLANTS TO AVOID TREE ROOT IMPACTS.
15. QUALITY ASSURANCE. THE PROJECT ARBORIST SHOULD SUPERVISE PROPER EXECUTION OF THIS PLAN ON-CALL DURING CONSTRUCTION ACTIVITIES THAT COULD ENCROACH ON RETAINED TREES. TREE PROTECTION SITE INSPECTION MONITORING REPORTS SHOULD BE PROVIDED TO THE CLIENT AND CITY FOLLOWING EACH SITE VISIT PERFORMED DURING CONSTRUCTION.
16. FINAL REPORT. AFTER THE PROJECT HAS BEEN COMPLETED, THE PROJECT ARBORIST SHALL PROVIDE A FINAL REPORT TO THE DEVELOPER AND THE CITY. THE FINAL REPORT SHALL INCLUDE CONCERNS ABOUT ANY TREES NEGATIVELY IMPACTED DURING CONSTRUCTION, AND DESCRIBE THE MEASURES NEEDED TO MAINTAIN AND PROTECT THE REMAINING TREES.

TREE REMOVAL AND PRESERVATION LEGEND

SYMBOL	ITEM
CONIFER DECIDUOUS	EXISTING TREES TO REMAIN
9" (CEDAR)	TREE ROOT PROTECTION ZONE (RPZ) - SEE NOTE 2 ON SHEET L-000-001.
6" (MAPLE)	DBH (DIAMETER AT BREAST HEIGHT - TYP)
	SPECIES
	EXISTING TREES TO BE REMOVED
	EXISTING SHRUB TO REMAIN
	EXISTING SHRUB TO BE REMOVED
	4' HT CHAIN-LINK TREE PROTECTION FENCING, REFER TO DETAIL ON SHEET L-000-001.
	3' HT WOODEN SPLIT-RAIL FENCE, REFER TO DETAIL ON SHEET L-000-001.
	PROJECT ARBORIST SHALL SUPERVISE AND MAKE RECOMMENDATIONS FOR EXCAVATION AND ROOT PRUNING WITHIN THE DRIPLINE OF EXISTING TREES TO REMAIN WHERE INDICATED.

SITE AND TREE SUMMARY

SITE AREA: 3.52 ACRES
ZONING: PUBLIC FACILITY
REQUIRED TREE DENSITY: (106 TREES)
EXISTING SITE TREES: (111 TREES) 6" DBH OR GREATER

NOTES:
1. SIGN SHALL READ AS FOLLOWS: "THE AREA BEYOND THIS SIGN IS A WETLAND OR WETLAND BUFFER. ALTERATION OR DISTURBANCE IS PROHIBITED BY LAW. PLEASE CALL THE CITY OF VANCOUVER FOR MORE INFORMATION.
2. INSTALL ONE SIGN ON NORTH, SOUTH, EAST AND WEST EDGES OF FENCING.

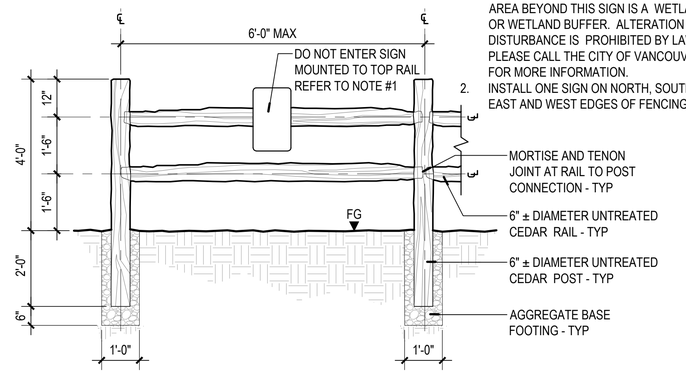

1 SPLIT RAIL FENCE — NOT TO SCALE
SECTION

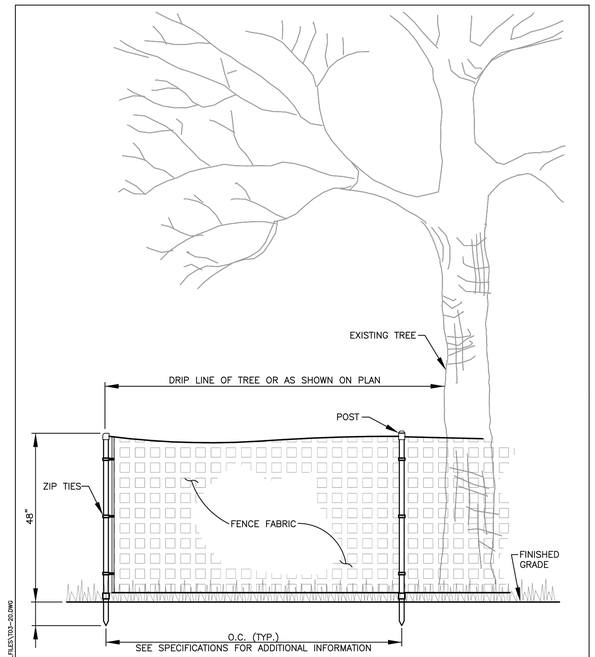

CITY OF Vancouver WASHINGTON

TREE PROTECTION FENCE DETAIL

CITY OF VANCOUVER
DEPARTMENT OF PUBLIC WORKS
TRANSPORTATION DIVISION

DRAWN BY	APPROVED BY	APPROVAL DATE
CDC		8/08
REVISION	APPROVED BY	APPROVAL DATE
5		3/24

STD. PLAN NO. T03-20

Brown AND Caldwell
PORTLAND, OREGON

GREENWORKS

Signer Name: Raymond G. Williams
Signing Reason: I approved this document
Signing Time: 2025-01-23 14:47:51(EST)

STATE OF WASHINGTON · RAYMOND G. WILLIAMS · NO. 1416 EXP. 12/09/2025 · LICENSED LANDSCAPE ARCHITECT

ISSUED FOR BID

CITY OF Vancouver WASHINGTON

WS14 PFAS TREATMENT DESIGN

REVISIONS

REV	DATE	DESCRIPTION

LINE IS 2 INCHES AT FULL SIZE

DESIGNED: PG
DRAWN: PG
CHECKED: GW
CHECKED: PG
APPROVED: GW

FILENAME

BC PROJECT NUMBER 180318
CLIENT PROJECT NUMBER PRJ100893

LANDSCAPE

LEVEL II TREE, VEGETATION, AND SOIL LEGEND AND NOTES

DRAWING NUMBER L-000-001

SHEET NUMBER 32 OF 125

Path: FILEPATH
Plot Date: TIMESTAMP
C:\CITYAPPS\AUTOCAD\STD_DETAILS\DRAWING_FILES\T03-20.DWG

9a775654ce53ab8943f35435b2abdf4e

LANDSCAPE PLANTING LEGEND

TREES	QTY	BOTANICAL NAME	COMMON NAME	SIZE AND TYPE	SPACING
				B&B = BALLED AND BURLAPPED	
	7	PINUS CONTORTA CONTORTA	SHORE PINE	6`-8` HT, B&B	AS SHOWN
	11	PSEUDOSTSUGA MENZIESII	DOUGLAS FIR	6`-8` HT, B&B	AS SHOWN

SHRUBS	QTY	BOTANICAL NAME	COMMON NAME	SIZE AND TYPE	SPACING
	40	MYRICA CALIFORNICA	PACIFIC WAX MYRTLE	5 GAL CONT	48" OC
	30	RHODODENDRON 'CUNNINGHAM'S WHITE'	CUNNINGHAM'S WHITE RHODODENDRON	5 GAL CONT	48" OC

GROUND COVER	QTY	BOTANICAL NAME	COMMON NAME	SIZE AND TYPE	SPACING
	2,014 SF (372)	MAHONIA REPENS	CREEPING MAHONIA	1 GAL CONT	30" OC
	10,178 SF	VEGETATED FILTER STRIP	TURF LAWN	FROM A TURFGRASS FARM WITHIN 25 MILES OF SITE. COVER ALL BARE SOIL AREAS.	

MITIGATION AREA	QTY	BOTANICAL NAME	COMMON NAME	SIZE AND TYPE	SPACING
14,000 SF	214	ROSA NOOTKANA	NOOTKA ROSE	1 GAL CONT	40% @ 5'-0" O.C.
	252	SYMPHORICARPOS ALBA	SNOWBERRY	1 GAL CONT	25% @ 4'-0" O.C.
	54	RUBUS SPECTABILIS	SALMONBERRY	1 GAL CONT	20% @ 6'-0" O.C.
	40	RUBUS PARVIFLORUS	THIMBLEBERRY	1 GAL CONT	15% @ 6'-0" O.C.
	70 LBS	FESTUCA RUBRA	RED FESCUE	SEED	5 LBS / 1,000 SF
	42 LBS	ELYMUS GLAUCUS	BLUE WILDRYE	SEED	3 LBS / 1,000 SF
	28 LBS	BROMUS CARINATUS	CALIFORNIA BROME	SEED	2 LBS / 1,000 SF

RESTORATION AREA	QTY	NOTES
	7,704 SF	REPAIR ALL LANDSCAPE AREA AFFECTED BY CONSTRUCTION TO PRE-DISTURBED CONDITIONS. REPLACEMENT TREE, SHRUB AND LAWN AREA PLANT MATERIALS TO MATCH EXISTING SPECIES.

LANDSCAPE PLANTING / IRRIGATION NOTES

1. ALL PROPOSED LANDSCAPE PLANTINGS WILL BE IRRIGATED FOR THE DURATION OF THE ESTABLISHMENT PERIOD AND THEN SEASONALLY AS NEEDED.

2. THE EXISTING IRRIGATION SYSTEM SYSTEM WILL BE CUT AN CAPPED AS NECESSARY TO ENSURE FUNCTIONALITY AND COVERAGE AFTER SITE ADDITIONS AND CONSTRUCTION ACTIVITIES FOR ALL EXISTING AND PROPOSED PLANTINGS.

Brown AND Caldwell
PORTLAND, OREGON

GREENWORKS

Signer Name: Raymond G. Williams
Signing Reason: I approved this document
Signing Time: 2025-01-25 14:47:10(EST)

STATE OF WASHINGTON
RAYMOND G. WILLIAMS
No. 1418 EXP 12/09/2025
LICENSED LANDSCAPE ARCHITECT

ISSUED FOR BID

CITY OF Vancouver WASHINGTON

WS14 PFAS TREATMENT DESIGN

REVISIONS

REV	DATE	DESCRIPTION

LINE IS 2 INCHES AT FULL SIZE

DESIGNED: PG
DRAWN: PG
CHECKED: GW
CHECKED: PG
APPROVED: GW
FILENAME
BC PROJECT NUMBER 180318
CLIENT PROJECT NUMBER PRJ100893
LANDSCAPE

LANDSCAPE LEGEND AND NOTES

DRAWING NUMBER
L-000-002
33 SHEET NUMBER OF 125

Path: FILEPATH
Plot Date: TIMESTAMP

763b7b15eed6ca05751839876504ee08

IRRIGATION SCHEDULE

SYMBOL	MANUFACTURER/MODEL/DESCRIPTION	QTY	PSI
T	MFG: HUNTER MODEL: MP CORNER PROS-00-PRS40 SHRUB ROTATOR, FIXED-RISER, PRESSURE REGULATED TO 40 PSI, MP ROTATOR NOZZLE T=TURQUOISE ADJ ARC 45-105.	7	40
L S R (LST SST RST)	MFG: HUNTER MODEL: MP STRIP PROS-00-PRS40 SHRUB ROTATOR, FIXED-RISER, PRESSURE REGULATED TO 40 PSI, MP ROTATOR NOZZLE LST=IVORY LEFT STRIP, SST=BROWN SIDE STRIP, RST=COPPER RIGHT STRIP.	18	40
M L O	MFG: HUNTER MODEL: MP1000 PROS-00-PRS40 SHRUB ROTATOR, FIXED-RISER, PRESSURE REGULATED TO 40 PSI, MP ROTATOR NOZZLE M=MAROON ADJ ARC 90 TO 210, L=LIGHT BLUE 210 TO 270 ARC, O=OLIVE 360 ARC.	20	40
K G R	MFG: HUNTER MODEL: MP2000 PROS-00-PRS40 SHRUB ROTATOR, FIXED-RISER, PRESSURE REGULATED TO 40 PSI, MP ROTATOR NOZZLE. K=BLACK ADJ ARC 90-210, G=GREEN ADJ ARC 210-270, R=RED 360 ARC.	74	40
B Y A	MFG: HUNTER MODEL: MP3000 PROS-00-PRS40 SHRUB ROTATOR, FIXED-RISER, PRESSURE REGULATED TO 40 PSI, MP ROTATOR NOZZLE. B=BLUE ADJ ARC 90-210, Y=YELLOW ADJ ARC 210-270, A=GRAY 360 ARC.	11	40

SYMBOL	MANUFACTURER/MODEL/DESCRIPTION	QTY
	MFG: RAIN BIRD MODEL: PEB PLASTIC INDUSTRIAL VALVES. LOW FLOW OPERATING CAPABILITY, GLOBE CONFIGURATION.	5
POC	POINT OF CONNECTION	3
1"	IRRIGATION LATERAL LINE: PVC CLASS 200 SDR 21 1"	1,940 L.F.
1½"	IRRIGATION LATERAL LINE: PVC CLASS 200 SDR 21 1 1/2"	76 L.F.
	IRRIGATION MAINLINE: PVC SCHEDULE 40 2"	120 L.F.
	PIPE SLEEVE: PVC SCHEDULE 40 2"	34 L.F.
	EXISTING IRRIGATION MAINLINE	

CONTROL VALVE TARGET

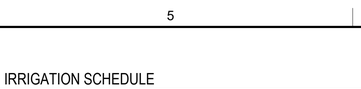

GENERAL IRRIGATION NOTES:

1. TAP EXISTING MAINLINE AT POC LOCATIONS SHOWN ON PLAN AND INSTALL PROPOSED MAINLINE.
2. WIRE NEW ZONE VALVES BACK TO EXISTING CONTROLLER LOCATION.

Brown AND Caldwell
PORTLAND, OREGON

GREENWORKS

Signer Name: Raymond G. Williams
Signing Reason: I approved this document
Signing Time: 2025-01-23 14:47:16(EST)

STATE OF WASHINGTON
RAYMOND G. WILLIAMS
No. 1418 EXP. 12/09/2025
LICENSED LANDSCAPE ARCHITECT

ISSUED FOR BID

CITY OF Vancouver WASHINGTON

WS14 PFAS TREATMENT DESIGN

REVISIONS

REV	DATE	DESCRIPTION

LINE IS 2 INCHES AT FULL SIZE

DESIGNED: PG
DRAWN: PG
CHECKED: GW
CHECKED: PG
APPROVED: GW

FILENAME

BC PROJECT NUMBER
180318

CLIENT PROJECT NUMBER
PRJ100893

LANDSCAPE

IRRIGATION LEGEND AND NOTES

DRAWING NUMBER
L-000-003

SHEET NUMBER 34 OF 125

Path: FILEPATH
Plot Date: TIMESTAMP

0281d9f41a33c5ec4c5a64fe1e8c7b45



TREE REMOVAL AND PRESERVATION LEGEND

SYMBOL	ITEM
CONIFER DECIDUOUS (9" (CEDAR), 6" (MAPLE))	EXISTING TREES TO REMAIN TREE ROOT PROTECTION ZONE (RPZ) - SEE NOTE 2 ON SHEET L-000-001. DBH (DIAMETER AT BREAST HEIGHT - TYP) SPECIES
	EXISTING TREES TO BE REMOVED
	EXISTING SHRUB TO REMAIN
	EXISTING SHRUB TO BE REMOVED
	4' HT CHAIN-LINK TREE PROTECTION FENCING, REFER TO DETAIL ON SHEET L-000-001.
	3' HT WOODEN SPLIT-RAIL FENCE, REFER TO DETAIL ON SHEET L-000-001.
	PROJECT ARBORIST SHALL SUPERVISE AND MAKE RECOMMENDATIONS FOR EXCAVATION AND ROOT PRUNING WITHIN THE DRIPLINE OF EXISTING TREES TO REMAIN WHERE INDICATED.

PLAN NORTH

0 20' 40'

Brown AND Caldwell
PORTLAND, OREGON

GREENWORKS

Signer Name: Raymond G. Williams
Signing Reason: I approved this document
Signing Time: 2025-01-23 14:47:58(EST)

STATE OF WASHINGTON
RAYMOND G. WILLIAMS
NO. 1418 EXP. 12/30/2025
LICENSED LANDSCAPE ARCHITECT

ISSUED FOR BID

CITY OF Vancouver WASHINGTON

WS14 PFAS TREATMENT DESIGN

REVISIONS

REV	DATE	DESCRIPTION

LINE IS 2 INCHES AT FULL SIZE

DESIGNED: PG
DRAWN: PG
CHECKED: GW
CHECKED: PG
APPROVED: GW
FILENAME

BC PROJECT NUMBER
180318
CLIENT PROJECT NUMBER
PRJ100893

LANDSCAPE

LEVEL II TREE, VEGETATION, AND SOIL PLAN 1

DRAWING NUMBER
L-000-101

SHEET NUMBER 35 OF 125

Path: FILEPATH
Plot Date: TIMESTAMP

c864cae18de1a3045de49587520b4735



TREE REMOVAL AND PRESERVATION LEGEND

SYMBOL	ITEM
CONIFER DECIDUOUS 9" (CEDAR) 6" (MAPLE)	EXISTING TREES TO REMAIN TREE ROOT PROTECTION ZONE (RPZ) - SEE NOTE 2 ON SHEET L-000-001. DBH (DIAMETER AT BREAST HEIGHT - TYP) SPECIES
	EXISTING TREES TO BE REMOVED
	EXISTING SHRUB TO REMAIN
	EXISTING SHRUB TO BE REMOVED
	4' HT CHAIN-LINK TREE PROTECTION FENCING, REFER TO DETAIL ON SHEET L-000-001.
	3' HT WOODEN SPLIT-RAIL FENCE, REFER TO DETAIL ON SHEET L-000-001.
	PROJECT ARBORIST SHALL SUPERVISE AND MAKE RECOMMENDATIONS FOR EXCAVATION AND ROOT PRUNING WITHIN THE DRIPLINE OF EXISTING TREES TO REMAIN WHERE INDICATED.

PLAN NORTH

0 20' 40'

Brown AND Caldwell
PORTLAND, OREGON

GREENWORKS

Signer Name: Raymond G. Williams
Signing Reason: I approved this document
Signing Time: 2025-01-23 14:47:11(EST)

STATE OF WASHINGTON
RAYMOND G. WILLIAMS
No. 1418 EXP. 12/29/2025
LICENSED LANDSCAPE ARCHITECT

ISSUED FOR BID

CITY OF Vancouver WASHINGTON

WS14 PFAS TREATMENT DESIGN

REVISIONS

REV	DATE	DESCRIPTION

LINE IS 2 INCHES AT FULL SIZE

DESIGNED:	PG
DRAWN:	PG
CHECKED:	GW
CHECKED:	PG
APPROVED:	GW

FILENAME

BC PROJECT NUMBER
180318

CLIENT PROJECT NUMBER
PRJ100893

LANDSCAPE

LEVEL II TREE, VEGETATION, AND SOIL PLAN 2

DRAWING NUMBER
L-000-102

SHEET NUMBER 36 OF 125

Path: FILEPATH
Plot Date: TIMESTAMP

ff010f67e64b4844f2b74e0aaff18187



LANDSCAPE PLANTING LEGEND

TREES	QTY	BOTANICAL NAME	COMMON NAME
	7	PINUS CONTORTA CONTORTA	SHORE PINE
	11	PSEUDOSTSUGA MENZIESII	DOUGLAS FIR

SHRUBS	QTY	BOTANICAL NAME	COMMON NAME
	40	MYRICA CALIFORNICA	PACIFIC WAX MYRTLE
	30	RHODODENDRON 'CUNNINGHAM'S WHITE'	CUNNINGHAM'S WHITE RHODODENDRON

GROUND COVER	QTY	BOTANICAL NAME	COMMON NAME
	2,014 SF (372)	MAHONIA REPENS	CREEPING MAHONIA
	10,178 SF	VEGETATED FILTER STRIP	TURF LAWN

MITIGATION AREA	QTY	BOTANICAL NAME	COMMON NAME
14,000 SF	214	ROSA NOOTKANA	NOOTKA ROSE
	252	SYMPHORICARPOS ALBA	SNOWBERRY
	54	RUBUS SPECTABILIS	SALMONBERRY
	40	RUBUS PARVIFLORUS	THIMBLEBERRY
	70 LBS	FESTUCA RUBRA	RED FESCUE
	42 LBS	ELYMUS GLAUCUS	BLUE WILDRYE
	28 LBS	BROMUS CARINATUS	CALIFORNIA BROME

RESTORATION AREA	QTY	NOTES
	7,704 SF	REPAIR ALL LANDSCAPE AREA AFFECTED BY CONSTRUCTION TO PRE-DISTURBED CONDITIONS. REPLACEMENT TREE, SHRUB AND LAWN AREA PLANT MATERIALS TO MATCH EXISTING SPECIES.

LANDSCAPE PLANTING / IRRIGATION NOTES

1. ALL PROPOSED LANDSCAPE PLANTINGS WILL BE IRRIGATED FOR THE DURATION OF THE ESTABLISHMENT PERIOD AND THEN SEASONALLY AS NEEDED.
2. THE EXISTING IRRIGATION SYSTEM SYSTEM WILL BE CUT AN CAPPED AS NECESSARY TO ENSURE FUNCTIONALITY AND COVERAGE AFTER SITE ADDITIONS AND CONSTRUCTION ACTIVITIES FOR ALL EXISTING AND PROPOSED PLANTINGS.

PLAN NORTH

0 20' 40'

Brown AND Caldwell
PORTLAND, OREGON

GREENWORKS

Signer Name: Raymond G. Williams
Signing Reason: I approved this document.
Signing Time: 2025-01-23 14:47:11(EST)

STATE OF WASHINGTON
RAYMOND G. WILLIAMS
No. 1418 EXP. 12/09/2025
LICENSED LANDSCAPE ARCHITECT

ISSUED FOR BID

CITY OF Vancouver WASHINGTON

WS14 PFAS TREATMENT DESIGN

REVISIONS

REV	DATE	DESCRIPTION

LINE IS 2 INCHES AT FULL SIZE

DESIGNED: PG
DRAWN: PG
CHECKED: GW
CHECKED: PG
APPROVED: GW

FILENAME

BC PROJECT NUMBER 180318

CLIENT PROJECT NUMBER PRJ100893

LANDSCAPE

LANDSCAPE PLAN 1

DRAWING NUMBER L-000-201

SHEET NUMBER 37 OF 125

Path: FILEPATH
Plot Date: TIMESTAMP

87b2bc27442a062708d72db41487dd80

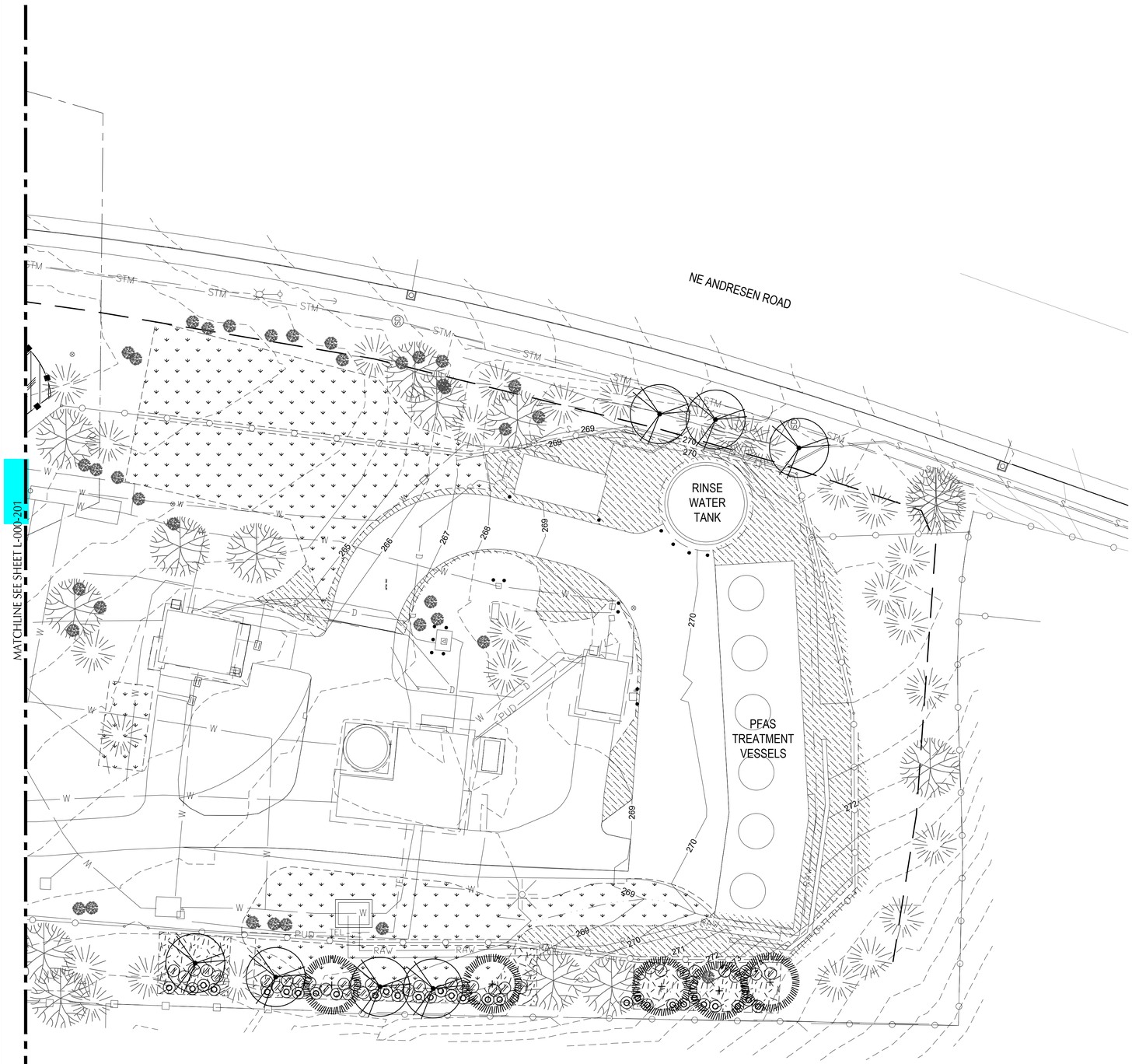

LANDSCAPE PLANTING LEGEND

TREES	QTY	BOTANICAL NAME	COMMON NAME
	7	PINUS CONTORTA CONTORTA	SHORE PINE
	11	PSEUDOSTSUGA MENZIESII	DOUGLAS FIR

SHRUBS	QTY	BOTANICAL NAME	COMMON NAME
	40	MYRICA CALIFORNICA	PACIFIC WAX MYRTLE
	30	RHODODENDRON 'CUNNINGHAM'S WHITE'	CUNNINGHAM'S WHITE RHODODENDRON

GROUND COVER	QTY	BOTANICAL NAME	COMMON NAME
	2,014 SF (372)	MAHONIA REPENS	CREEPING MAHONIA
	10,178 SF	VEGETATED FILTER STRIP	TURF LAWN

MITIGATION AREA	QTY	BOTANICAL NAME	COMMON NAME
14,000 SF	214	ROSA NOOTKANA	NOOTKA ROSE
	252	SYMPHORICARPOS ALBA	SNOWBERRY
	54	RUBUS SPECTABILIS	SALMONBERRY
	40	RUBUS PARVIFLORUS	THIMBLEBERRY
	70 LBS	FESTUCA RUBRA	RED FESCUE
	42 LBS	ELYMUS GLAUCUS	BLUE WILDRYE
	28 LBS	BROMUS CARINATUS	CALIFORNIA BROME

RESTORATION AREA	QTY	NOTES
	7,704 SF	REPAIR ALL LANDSCAPE AREA AFFECTED BY CONSTRUCTION TO PRE-DISTURBED CONDITIONS. REPLACEMENT TREE, SHRUB AND LAWN AREA PLANT MATERIALS TO MATCH EXISTING SPECIES.

LANDSCAPE PLANTING / IRRIGATION NOTES

1. ALL PROPOSED LANDSCAPE PLANTINGS WILL BE IRRIGATED FOR THE DURATION OF THE ESTABLISHMENT PERIOD AND THEN SEASONALLY AS NEEDED.
2. THE EXISTING IRRIGATION SYSTEM SYSTEM WILL BE CUT AN CAPPED AS NECESSARY TO ENSURE FUNCTIONALITY AND COVERAGE AFTER SITE ADDITIONS AND CONSTRUCTION ACTIVITIES FOR ALL EXISTING AND PROPOSED PLANTINGS.

PLAN NORTH

0 20' 40'

Brown AND Caldwell
PORTLAND, OREGON

GREENWORKS

Signer Name: Raymond G. Williams
Signing Reason: I approved this document
Signing Time: 2025-01-25 14:47:11(EST)

STATE OF WASHINGTON
RAYMOND G. WILLIAMS
No. 1418 EXP. 12/09/2025
LICENSED LANDSCAPE ARCHITECT

ISSUED FOR BID

CITY OF Vancouver WASHINGTON

WS14 PFAS TREATMENT DESIGN

REVISIONS

REV	DATE	DESCRIPTION

LINE IS 2 INCHES AT FULL SIZE

DESIGNED: PG
DRAWN: PG
CHECKED: GW
CHECKED: PG
APPROVED: GW

FILENAME

BC PROJECT NUMBER 180318
CLIENT PROJECT NUMBER PRJ100893

LANDSCAPE

LANDSCAPE PLAN 2

DRAWING NUMBER L-000-202

SHEET NUMBER 38 OF 125

Path: FILEPATH
Plot Date: TIMESTAMP

3dd638c70bcf512d7eebddec84f00819



IRRIGATION SCHEDULE

SYMBOL	MANUFACTURER/MODEL/DESCRIPTION	QTY	PSI
T	MFG: HUNTER MODEL: MP CORNER PROS-00-PRS40 SHRUB ROTATOR, FIXED-RISER, PRESSURE REGULATED TO 40 PSI, MP ROTATOR NOZZLE T=TURQUOISE ADJ ARC 45-105.	7	40
L S R (LST SST RST)	MFG: HUNTER MODEL: MP STRIP PROS-00-PRS40 SHRUB ROTATOR, FIXED-RISER, PRESSURE REGULATED TO 40 PSI, MP ROTATOR NOZZLE LST=IVORY LEFT STRIP, SST=BROWN SIDE STRIP, RST=COPPER RIGHT STRIP.	18	40
M L O	MFG: HUNTER MODEL: MP1000 PROS-00-PRS40 SHRUB ROTATOR, FIXED-RISER, PRESSURE REGULATED TO 40 PSI, MP ROTATOR NOZZLE M=MAROON ADJ ARC 90 TO 210, L=LIGHT BLUE 210 TO 270 ARC, O=OLIVE 360 ARC.	20	40
K G R	MFG: HUNTER MODEL: MP2000 PROS-00-PRS40 SHRUB ROTATOR, FIXED-RISER, PRESSURE REGULATED TO 40 PSI, MP ROTATOR NOZZLE. K=BLACK ADJ ARC 90-210, G=GREEN ADJ ARC 210-270, R=RED 360 ARC.	74	40
B Y A	MFG: HUNTER MODEL: MP3000 PROS-00-PRS40 SHRUB ROTATOR, FIXED-RISER, PRESSURE REGULATED TO 40 PSI, MP ROTATOR NOZZLE. B=BLUE ADJ ARC 90-210, Y=YELLOW ADJ ARC 210-270, A=GRAY 360 ARC.	11	40

SYMBOL	MANUFACTURER/MODEL/DESCRIPTION	QTY
	MFG: RAIN BIRD MODEL: PEB PLASTIC INDUSTRIAL VALVES. LOW FLOW OPERATING CAPABILITY, GLOBE CONFIGURATION.	5
POC	POINT OF CONNECTION	3
1"	IRRIGATION LATERAL LINE: PVC CLASS 200 SDR 21 1"	1,940 L.F.
1½"	IRRIGATION LATERAL LINE: PVC CLASS 200 SDR 21 1 1/2"	76 L.F.
	IRRIGATION MAINLINE: PVC SCHEDULE 40 2"	120 L.F.
	PIPE SLEEVE: PVC SCHEDULE 40 2"	34 L.F.
	EXISTING IRRIGATION MAINLINE	

CONTROL VALVE TARGET

TYPE: L - LAWN S - SHRUB D - DRIP
VALVE SIZE
STATION NUMBER
FLOW IN GPM

GENERAL IRRIGATION NOTES:

1. TAP EXISTING MAINLINE AT POC LOCATIONS SHOWN ON PLAN AND INSTALL PROPOSED MAINLINE.
2. WIRE NEW ZONE VALVES BACK TO EXISTING CONTROLLER LOCATION.

PLAN NORTH

0 20' 40'

Brown AND Caldwell
PORTLAND, OREGON

GREENWORKS

Signer Name: Raymond G. Williams
Signing Reason: I approved this document
Signing Time: 2025-01-23 14:47:72(EST)

STATE OF WASHINGTON
RAYMOND G. WILLIAMS
NO. 1418 EXP. 12/09/2025
LICENSED LANDSCAPE ARCHITECT

ISSUED FOR BID

CITY OF Vancouver WASHINGTON

WS14 PFAS TREATMENT DESIGN

REVISIONS

REV	DATE	DESCRIPTION

LINE IS 2 INCHES AT FULL SIZE

DESIGNED: PG
DRAWN: PG
CHECKED: GW
CHECKED: PG
APPROVED: GW

FILENAME

BC PROJECT NUMBER
180318

CLIENT PROJECT NUMBER
PRJ100893

LANDSCAPE

IRRIGATION PLAN 1

DRAWING NUMBER
L-000-301

SHEET NUMBER 39 OF 125

Path: FILEPATH
Plot Date: TIMESTAMP

5503d9ffbf913f8502df88f98a6e3df5

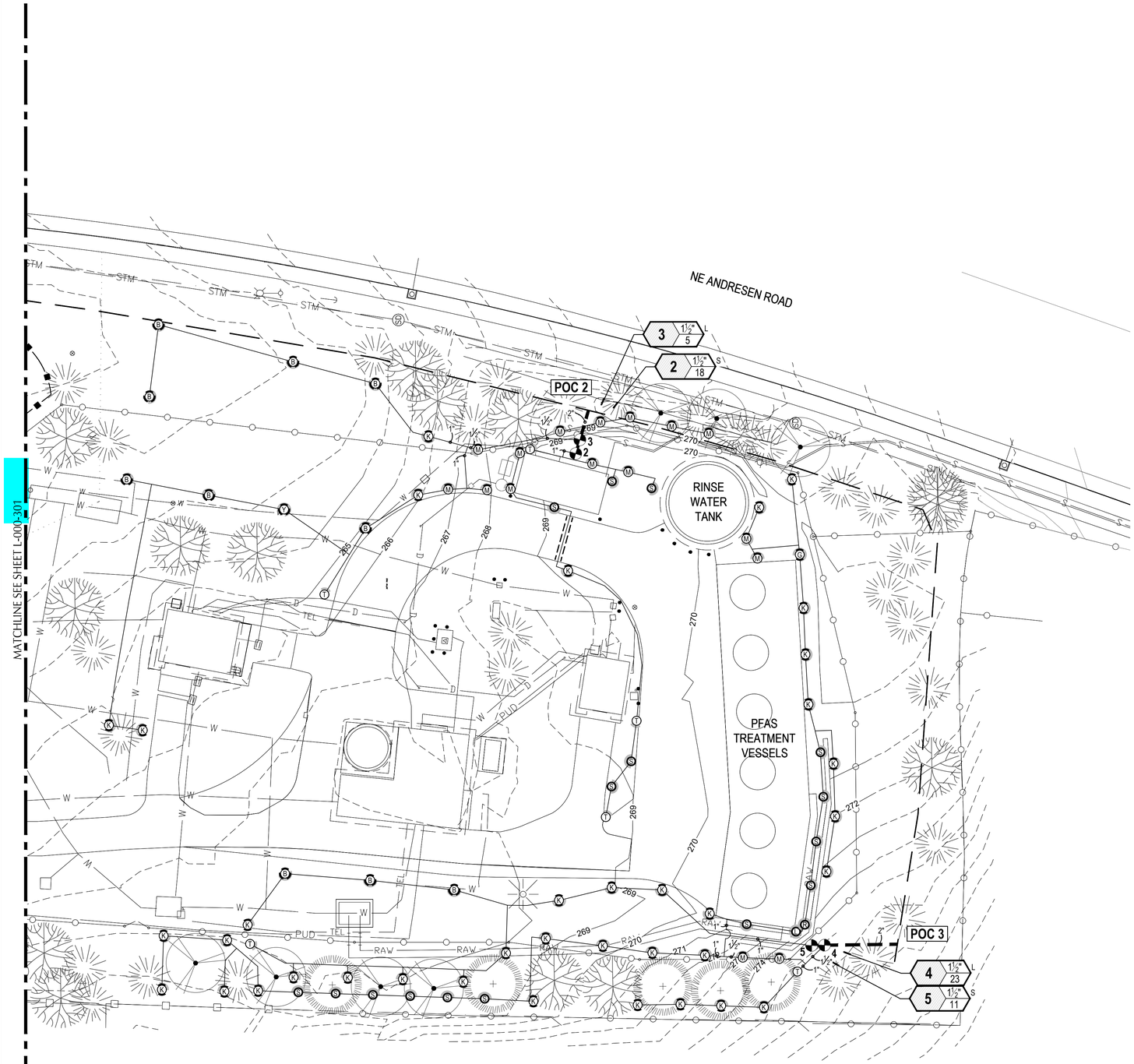

IRRIGATION SCHEDULE

SYMBOL	MANUFACTURER/MODEL/DESCRIPTION	QTY	PSI
T	MFG: HUNTER MODEL: MP CORNER PROS-00-PRS40 SHRUB ROTATOR, FIXED-RISER, PRESSURE REGULATED TO 40 PSI, MP ROTATOR NOZZLE T=TURQUOISE ADJ ARC 45-105.	7	40
L S R (LST SST RST)	MFG: HUNTER MODEL: MP STRIP PROS-00-PRS40 SHRUB ROTATOR, FIXED-RISER, PRESSURE REGULATED TO 40 PSI, MP ROTATOR NOZZLE LST=IVORY LEFT STRIP, SST=BROWN SIDE STRIP, RST=COPPER RIGHT STRIP.	18	40
M L O	MFG: HUNTER MODEL: MP1000 PROS-00-PRS40 SHRUB ROTATOR, FIXED-RISER, PRESSURE REGULATED TO 40 PSI, MP ROTATOR NOZZLE M=MAROON ADJ ARC 90 TO 210, L=LIGHT BLUE 210 TO 270 ARC, O=OLIVE 360 ARC.	20	40
K G R	MFG: HUNTER MODEL: MP2000 PROS-00-PRS40 SHRUB ROTATOR, FIXED-RISER, PRESSURE REGULATED TO 40 PSI, MP ROTATOR NOZZLE. K=BLACK ADJ ARC 90-210, G=GREEN ADJ ARC 210-270, R=RED 360 ARC.	74	40
B Y A	MFG: HUNTER MODEL: MP3000 PROS-00-PRS40 SHRUB ROTATOR, FIXED-RISER, PRESSURE REGULATED TO 40 PSI, MP ROTATOR NOZZLE. B=BLUE ADJ ARC 90-210, Y=YELLOW ADJ ARC 210-270, A=GRAY 360 ARC.	11	40

SYMBOL	MANUFACTURER/MODEL/DESCRIPTION	QTY
	MFG: RAIN BIRD MODEL: PEB PLASTIC INDUSTRIAL VALVES. LOW FLOW OPERATING CAPABILITY, GLOBE CONFIGURATION.	5
POC	POINT OF CONNECTION	3
1"	IRRIGATION LATERAL LINE: PVC CLASS 200 SDR 21 1"	1,940 L.F.
1½"	IRRIGATION LATERAL LINE: PVC CLASS 200 SDR 21 1 1/2"	76 L.F.
	IRRIGATION MAINLINE: PVC SCHEDULE 40 2"	120 L.F.
	PIPE SLEEVE: PVC SCHEDULE 40 2"	34 L.F.
	EXISTING IRRIGATION MAINLINE	

CONTROL VALVE TARGET

GENERAL IRRIGATION NOTES:

1. TAP EXISTING MAINLINE AT POC LOCATIONS SHOWN ON PLAN AND INSTALL PROPOSED MAINLINE.
2. WIRE NEW ZONE VALVES BACK TO EXISTING CONTROLLER LOCATION.

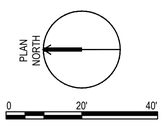

Brown AND Caldwell
PORTLAND, OREGON

GREENWORKS

Signer Name: Raymond G. Williams
Signing Reason: I approved this document
Signing Time: 2025-01-23 14:47:11(EST)

STATE OF WASHINGTON
RAYMOND G. WILLIAMS
No. 1418 EXP. 12/09/2025
LICENSED LANDSCAPE ARCHITECT

ISSUED FOR BID

CITY OF Vancouver WASHINGTON

WS14 PFAS TREATMENT DESIGN

REVISIONS

REV	DATE	DESCRIPTION

LINE IS 2 INCHES AT FULL SIZE

DESIGNED: PG
DRAWN: PG
CHECKED: GW
CHECKED: PG
APPROVED: GW
FILENAME
BC PROJECT NUMBER 180318
CLIENT PROJECT NUMBER PRJ100893
LANDSCAPE

IRRIGATION PLAN 2

DRAWING NUMBER
L-000-302

40 SHEET NUMBER OF 125

Path: FILEPATH
Plot Date: TIMESTAMP

fa2da9a3f657fd8b28b57349a166a0ad

APPLICABLE CODES

2021 WASHINGTON STATE BUILDING CODE
2021 WASHINGTON STATE COMMERCIAL ENERGY CODE
2021 WASHINGTON STATE MECHANICAL CODE
2023 WASHINGTON ELECTRICAL CODE
2021 WASHINGTON PLUMBING CODE
2017 WASHINGTON ACCESSIBILITY CODE

BUILDING DESCRIPTION

NEW CMU RESTROOM AND STORAGE BUILDING TO INCLUDE STORAGE, A MAINTENANCE ROOM AND ONE ACCESSIBLE UNISEX RESTROOM.

BUILDING FOOTPRINT : 410 SF
OCCUPIED AREA : 316 SF

BUILDING GENERAL INFO

BUILDING OWNER:	CITY OF VANCOUVER
PERMIT APPLICANT:	CITY OF VANCOUVER
PROJECT ADDRESS:	6803 NE 78TH ST. VANCOUVER, WA 98664
SEISMIC ZONE:	CODE MINIMUM = RISK CATEGORY III

ABBREVIATIONS

ARCHITECTURAL ABBREVIATIONS PROVIDED BELOW ONLY APPLY TO A-SERIES SHEETS. ADDITIONAL ABBREVIATIONS ARE PROVIDED ON GENERAL SHEETS G-000-004 & G-000-005

ACC	ACCESSORY
ADA	AMERICANS WITH DISABILITIES ACT
AFF	ABOVE FINISH FLOOR
FC	FOOTCANDLE
FO	FACE OF
GYP	GYPSUM
OCC	OCCUPANT
TBD	TO BE DETERMINED
T.O.F.F.	TOP OF FINISH FLOOR
WRB	WATER RESISTIVE BARRIER

ARCHITECTURAL SYMBOLS

ARCHITECTURAL PROVIDED PROVIDED BELOW ONLY APPLY TO A-SERIES SHEETS. ADDITIONAL SYMBOLS ARE PROVIDED ON GENERAL SHEET G-000-003.

- (?) — DOOR MARK, SEE SHEET A-B02-402
- ?| — ASSEMBLY TYPE, SEE SHEET A-000-002
- ALIGN — FINISH TO BE FLUSH
- SLOPE TO DRAIN
- ℄ — CENTERLINE
- +0'-0" — CEILING HEIGHT
- CPT / SV — FLOOR TRANSITION
- WORK POINT, CONTROL POINT, OR DATUM POINT

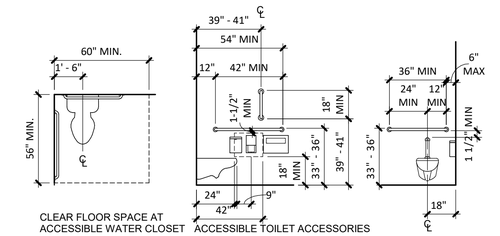

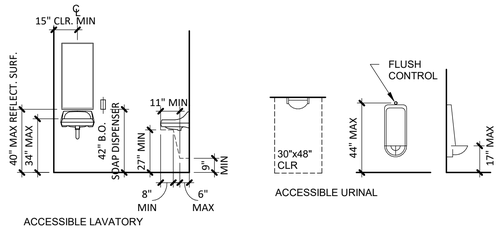

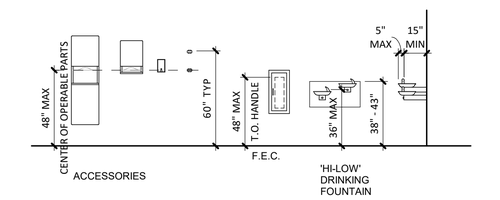

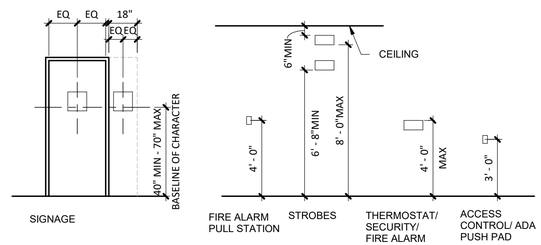

A ACCESSIBLE CLEARANCES AND MOUNTING
SCALE: 1/4" = 1'-0"

GENERAL NOTES:

A. VERIFY ALL DIMENSIONS AND CONDITIONS ON SITE. NOTIFY ARCHITECT OF ANY DISCREPANCIES BEFORE STARTING WORK.

B. ALL WORK TO COMPLY WITH THE WASHINGTON STATE BUILDING CODE, 2021 EDITION, AND WITH ALL OTHER APPLICABLE MUNICIPAL, COUNTY, STATE AND FEDERAL CODES AND REGULATIONS.

C. DO NOT SCALE THE DRAWINGS. UNLESS NOTED OTHERWISE, DIMENSIONS ARE FROM FACE OF STUD, MASONRY, AND CONCRETE, OR TO CENTERLINE OF POSTS AND WALLS. DIMENSIONS MARKED 'CLR' ARE TO BE HELD FROM FACE OF FINISH TO FACE OF FINISH. DO NOT SCALE THE DRAWINGS TO OBTAIN DIMENSIONS OR LOCATIONS. WHERE PLANS INDICATE 'ALIGN' MATCH FINISH TO FINISH.

D. THE CONTRACT DOCUMENTS ARE COMPLEMENTARY, AND WHAT IS REQUIRED BY ONE SHALL BE AS BINDING AS IF REQUIRED BY ALL; COORDINATE ALL PORTIONS OF THE WORK AS DESCRIBED IN THE CONTRACT DOCUMENTS. REQUEST CLARIFICATION FROM THE ARCHITECT FOR ALL DISCREPANCIES PRIOR TO CONSTRUCTION.

E. CONDITIONS AND DETAILS MARKED 'TYPICAL' SHALL APPLY IN ALL CASES, UNLESS SPECIFICALLY INDICATED OTHERWISE. WHERE NO SPECIFIC DETAIL IS SHOWN, THE CONSTRUCTION SHALL BE IDENTICAL OR SIMILAR TO THAT INDICATED FOR THE TYPICAL CONSTRUCTION ON THE PROJECT.

F. CONTRACTOR TO COORDINATE ANY REQUIRED WORK IN ADJACENT AREAS AND MAINTAIN A CLEAN AND ORGANIZED JOB SITE WITH RESPECT FOR NEIGHBORHOOD SURROUNDINGS.

G. PROVIDE SHORING, BRACING, SUPPORT AND PROTECTION AS REQUIRED TO MAINTAIN STRUCTURAL INTEGRITY OF THE PROJECT.

H. THE CONTRACTOR SHALL VERIFY ALL FIGURES, DIMENSIONS, MATERIALS, ETC., ON THE DRAWINGS WITH ALL OTHER DRAWINGS AND WITH THE VARIOUS MANUFACTURER'S INSTALLATION REQUIREMENTS BEFORE COMMENCING ANY OF THE WORK HEREIN SHOWN.

I. ANY WORK DEVIATING FROM THE DRAWINGS WILL BE REJECTED UNLESS THE CHANGE IS DULY AUTHORIZED.

Brown AND Caldwell
PORTLAND, OREGON

mwa architects

Signer Name: Jeffrey McGraw
Signing Reason: I approved this document
Signing Time: 2025-01-25 17:45:51(EST)

8044 REGISTERED ARCHITECT
JEFFREY J McGRAW
STATE OF WASHINGTON

ISSUED FOR BID

CITY OF Vancouver WASHINGTON

WS14 PFAS TREATMENT DESIGN

REVISIONS

REV	DATE	DESCRIPTION

LINE IS 2 INCHES AT FULL SIZE

DESIGNED:	T.STARK
DRAWN:	K.PLUCAR
CHECKED:	T.STARK
CHECKED:	
APPROVED:	J.MCGRAW

FILENAME
180318-A-00V21.rvt

BC PROJECT NUMBER
180318

CLIENT PROJECT NUMBER
PRJ100893

ARCHITECTURAL

ARCHITECTURAL GENERAL NOTES

DRAWING NUMBER
A-000-001

SHEET NUMBER 41 OF 125

Plot Date: 1/14/2025 10:57:13 AM Path: BIM 360://180318 - WS 14 PFAS Treatments Design/180318-A-00V21.rvt

8d7cc920e8650fc2b72f965a6a1791d6

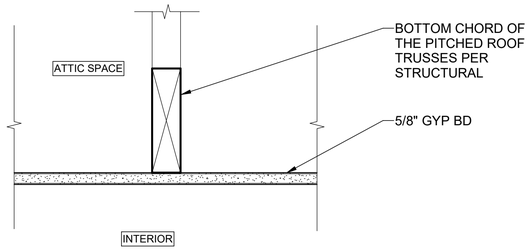

2 ASSEMBLY - GYP. CEILING
NTS

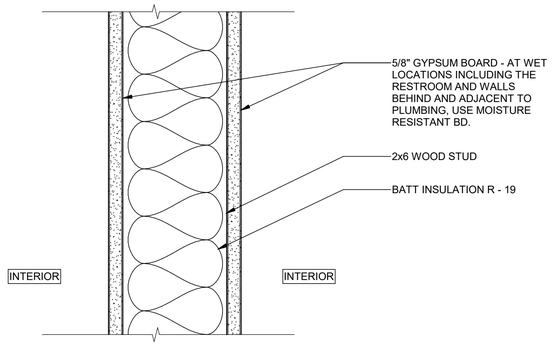

C ASSEMBLY - WOOD STUD WALL
NTS

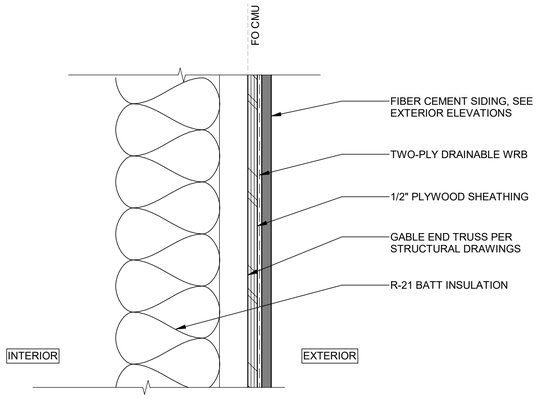

A ASSEMBLY - FIBER CEMENT SIDING
NTS

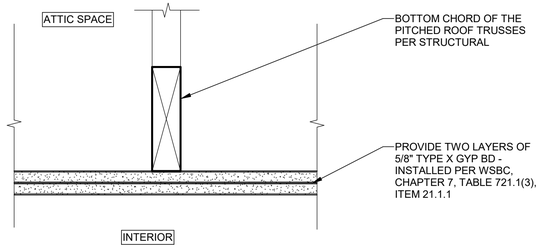

3 ASSEMBLY - 1 HR GYP. CEILING
NTS
WSBC TABLE 721.1(3) - 21.1.1

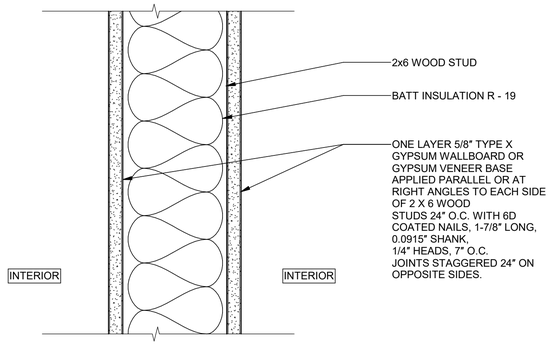

D ASSEMBLY - 1 HR WOOD STUD WALL
NTS
GA FILE NO. WP 3510

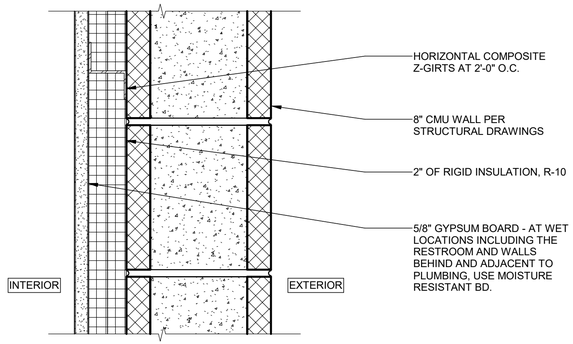

B ASSEMBLY - CMU WALL
NTS

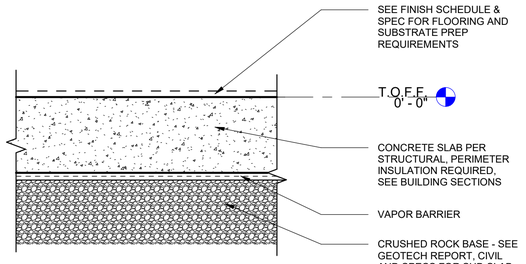

4 ASSEMBLY - CONCRETE SLAB
NTS

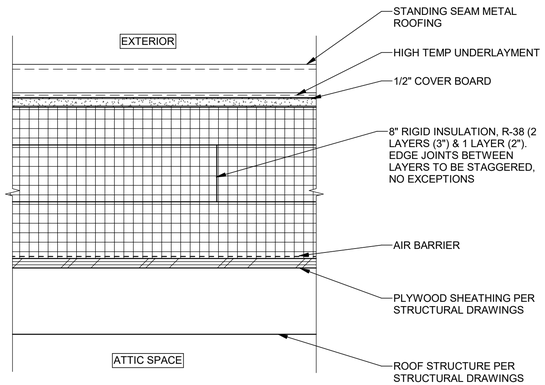

1 ASSEMBLY - STANDING SEAM METAL
NTS

Plot Date: 1/14/2025 10:57:13 AM Path: BIM 360://180318 - WS 14 PFAS Treatments Design/180318-A-00V21.rvt

Brown AND Caldwell
PORTLAND, OREGON

mwa architects

Signer Name: Jeffrey McGraw
Signing Reason: I approved this document.
Signing Time: 2025-01-23 17:45:54(EST)

8044 REGISTERED ARCHITECT
JEFFREY J McGRAW
STATE OF WASHINGTON

ISSUED FOR BID

CITY OF Vancouver WASHINGTON

WS14 PFAS TREATMENT DESIGN

REVISIONS

REV	DATE	DESCRIPTION

LINE IS 2 INCHES AT FULL SIZE

DESIGNED: T.STARK
DRAWN: K.PLUCAR
CHECKED: T.STARK
CHECKED:
APPROVED: J.MCGRAW

FILENAME
180318-A-00V21.rvt

BC PROJECT NUMBER
180318

CLIENT PROJECT NUMBER
PRJ100893

ARCHITECTURAL

ASSEMBLIES SHEET

DRAWING NUMBER
A-000-002

42 SHEET NUMBER OF 125

fe05df746a460f1350ab8d7217e12e9d

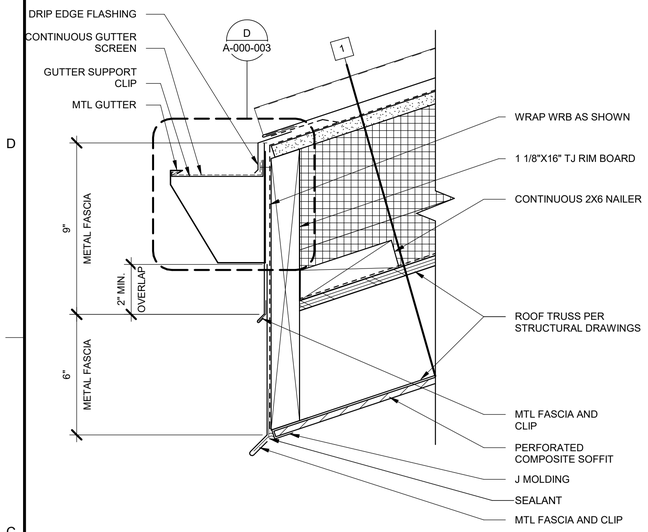

A ROOF EAVE
A-B02-301 SCALE: 3" = 1'-0"

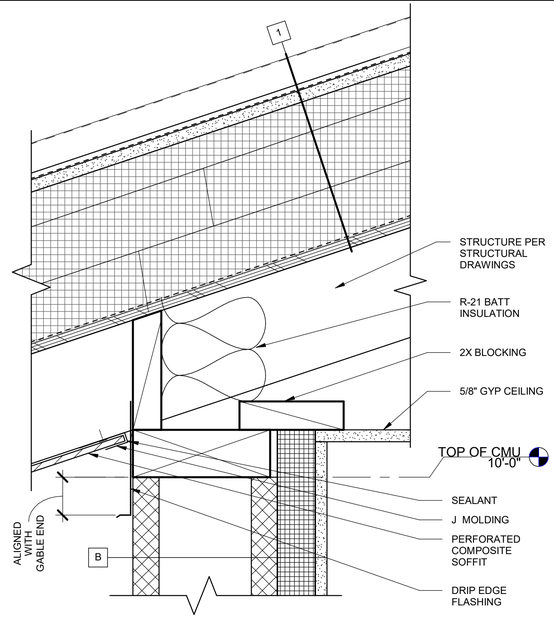

B ROOF @ WALL
A-B02-301 SCALE: 3" = 1'-0"

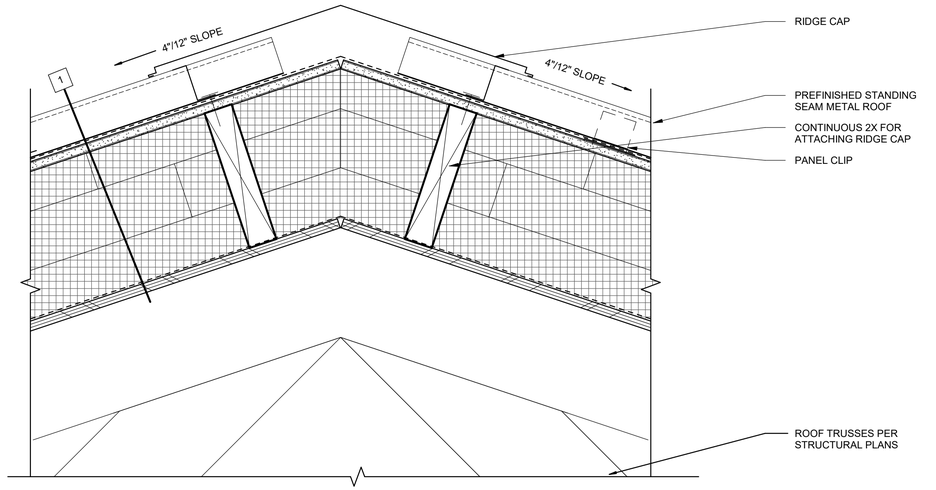

C ROOF RIDGE
A-B02-101 SCALE: 3" = 1'-0"

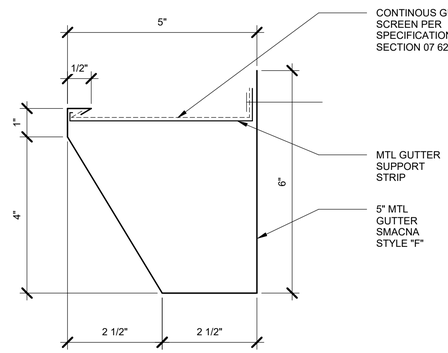

D GUTTER
A-000-003 SCALE: 6" = 1'-0"

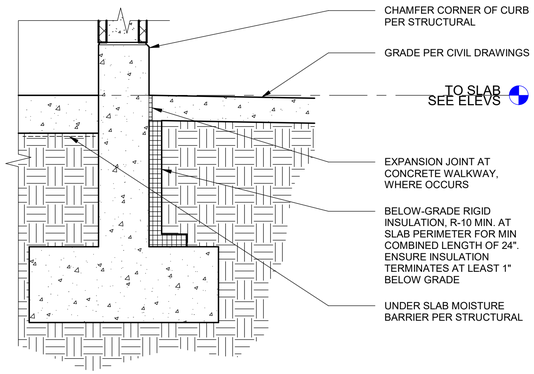

E PERIMETER SLAB INSULATION
A-B02-301 SCALE: 1" = 1'-0"

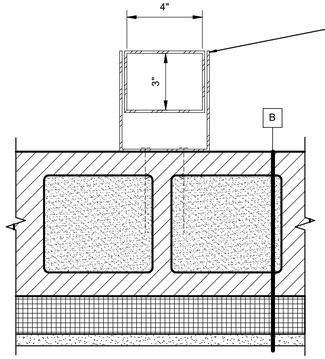

G DOWNSPOT @ CMU
A-B02-101 SCALE: 3" = 1'-0"

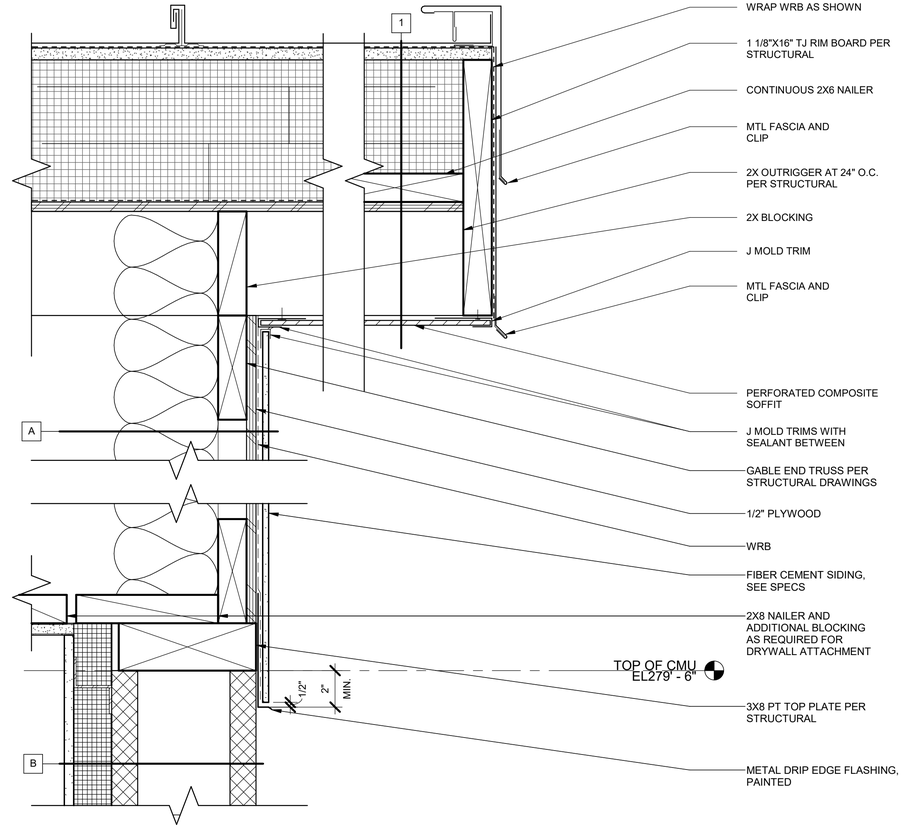

F ROOF RAKE AT SIDING
A-B02-301 SCALE: 3" = 1'-0"

Brown AND Caldwell
PORTLAND, OREGON

mwa architects

Signer Name: Jeffrey McGraw
Signing Reason: I approved this document
Signing Time: 2025-01-23 17:45:53(EST)

8044 REGISTERED ARCHITECT
JEFFREY J McGRAW
STATE OF WASHINGTON

ISSUED FOR BID

CITY OF Vancouver WASHINGTON

WS14 PFAS TREATMENT DESIGN

REVISIONS

REV	DATE	DESCRIPTION

LINE IS 2 INCHES AT FULL SIZE

DESIGNED:	T.STARK
DRAWN:	K.PLUCAR
CHECKED:	T.STARK
CHECKED:	
APPROVED:	J.MCGRAW
FILENAME	180318-A-00V21.rvt
BC PROJECT NUMBER	180318
CLIENT PROJECT NUMBER	PRJ100893

ARCHITECTURAL

ARCHITECTURAL DETAILS 1

DRAWING NUMBER
A-000-003

SHEET NUMBER 43 OF 125

Plot Date: 1/14/2025 10:57:14 AM Path: BIM 360://180318 - WS 14 PFAS Treatments Design/180318-A-00V21.rvt

52b19487d95b5b2635e3a2f68743848d

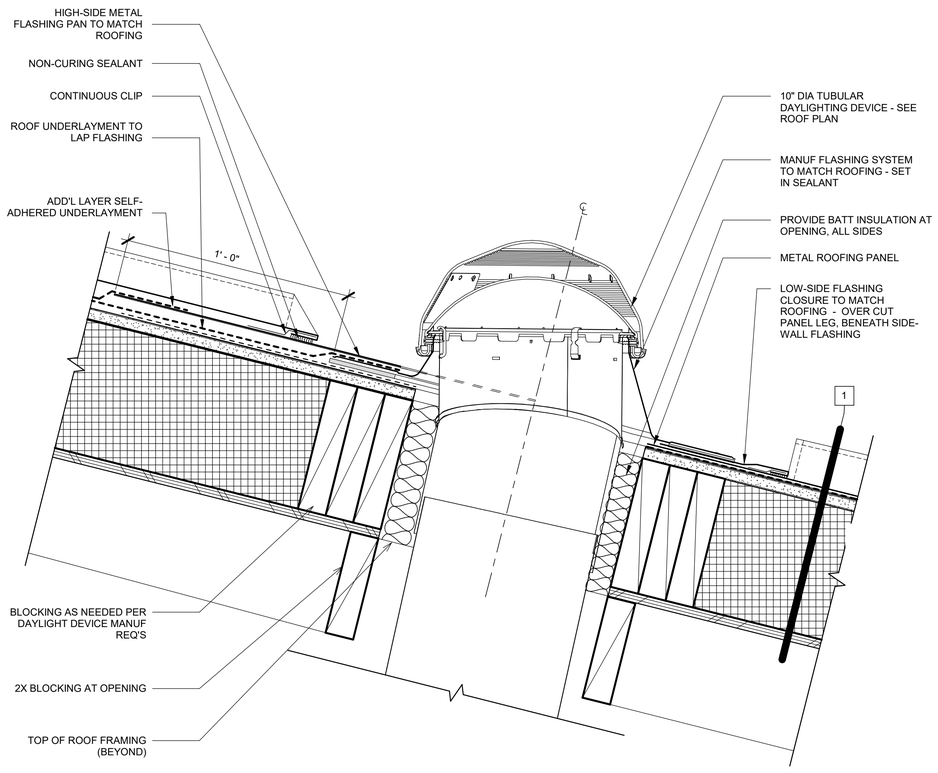

A TUBULAR DAYLIGHT DEVICE SECTION AT ROOF
A-B02-101 SCALE: 3" = 1'-0"

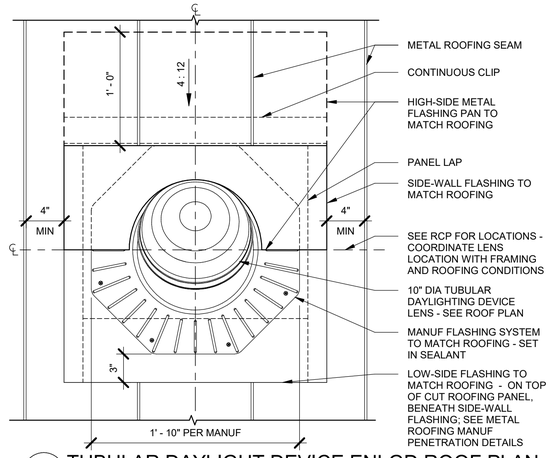

B TUBULAR DAYLIGHT DEVICE ENLGD ROOF PLAN
A-B02-101 SCALE: 1 1/2" = 1'-0"

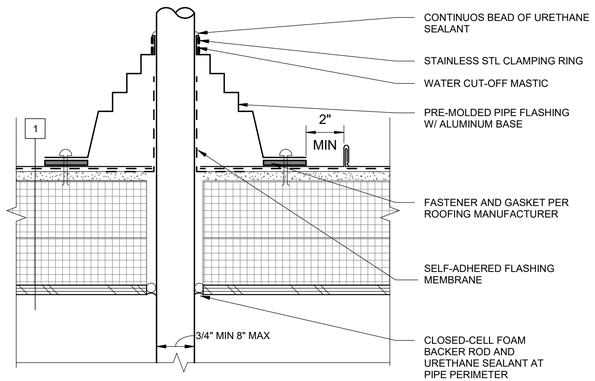

c PIPE PENETRATION AT ROOF
NTS

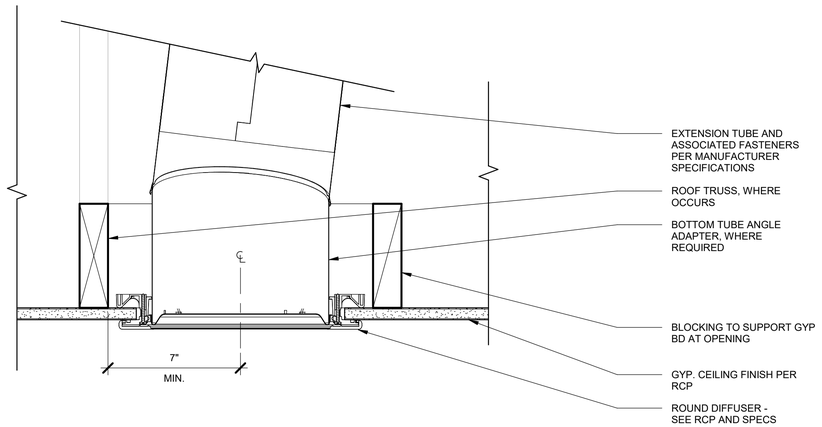

D TUBULAR DAYLIGHT DEVICE SECTION AT CEILING
A-B02-101 SCALE: 3" = 1'-0"

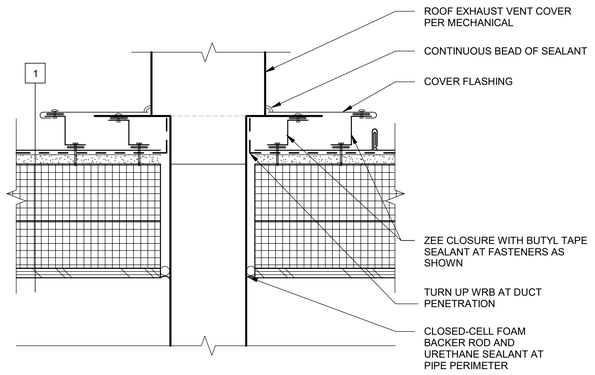

E EXHAUST PENETRATION AT ROOF
NTS

Brown AND Caldwell
PORTLAND, OREGON

mwa architects

Signer Name: Jeffrey McGraw
Signing Reason: I approved this document
Signing Time: 2025-01-25 17:45:51(EST)

8044 REGISTERED ARCHITECT
JEFFREY J McGRAW
STATE OF WASHINGTON

ISSUED FOR BID

CITY OF Vancouver WASHINGTON

WS14 PFAS TREATMENT DESIGN

REVISIONS

REV	DATE	DESCRIPTION

LINE IS 2 INCHES AT FULL SIZE

DESIGNED: T.STARK
DRAWN: K.PLUCAR
CHECKED: T.STARK
CHECKED:
APPROVED: J.MCGRAW

FILENAME 180318-A-00V21.rvt
BC PROJECT NUMBER 180318
CLIENT PROJECT NUMBER PRJ100893

ARCHITECTURAL

ARCHITECTURAL DETAILS 2

DRAWING NUMBER
A-000-004

SHEET NUMBER 44 OF 125

Plot Date: 1/14/2025 10:57:15 AM Path: BIM 360://180318 - WS 14 PFAS Treatments Design/180318-A-00V21.rvt

73658730a1fb00582a2da3c4ba7b9c89

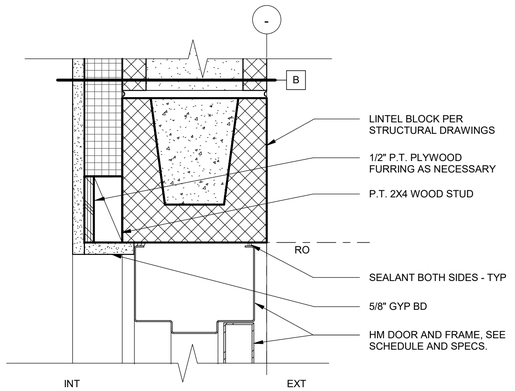

A DOOR HEAD
A-B02-301 SCALE: 3" = 1'-0"

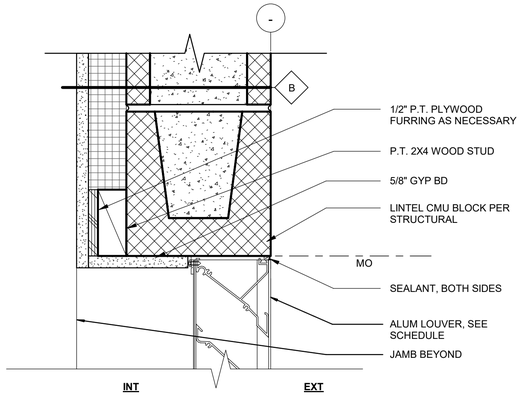

B LOUVER HEAD
A-000-005 SCALE: 3" = 1'-0"

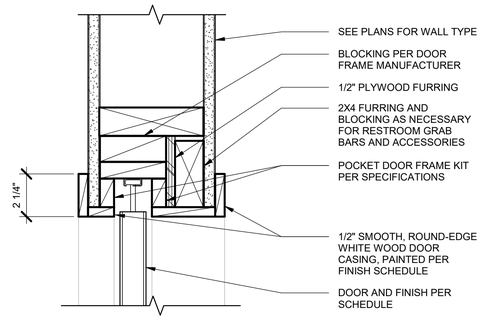

C POCKET DOOR HEAD
A-B02-402 SCALE: 3" = 1'-0"

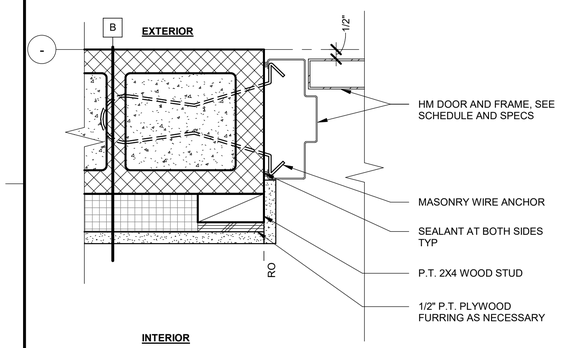

D DOOR JAMB
A-B02-401 SCALE: 3" = 1'-0"

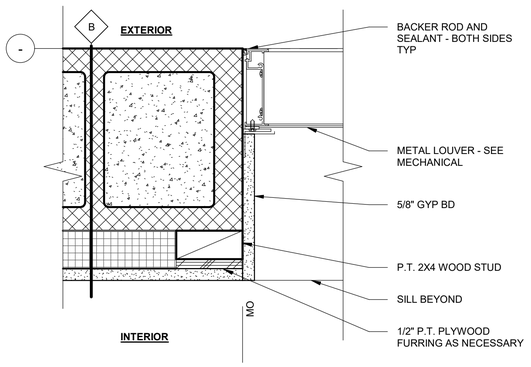

E LOUVER JAMB
A-000-005 SCALE: 3" = 1'-0"

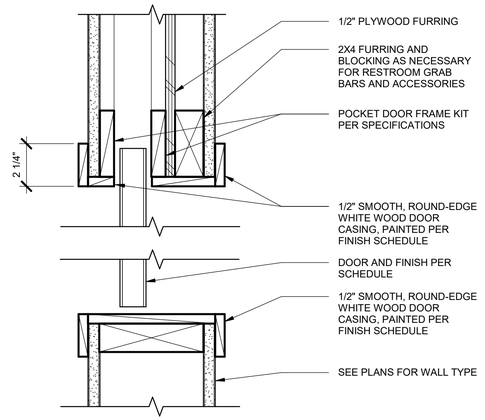

F POCKET DOOR JAMB
A-B02-402 SCALE: 3" = 1'-0"

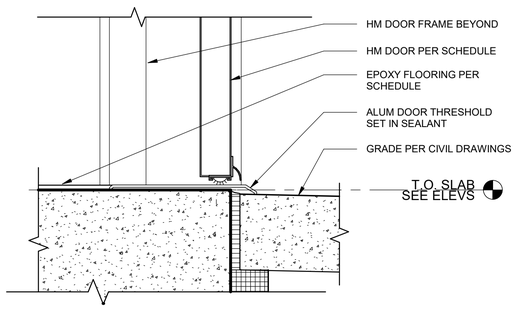

G EXT DOOR THRESHOLD @ GRADE
A-B02-301 SCALE: 3" = 1'-0"

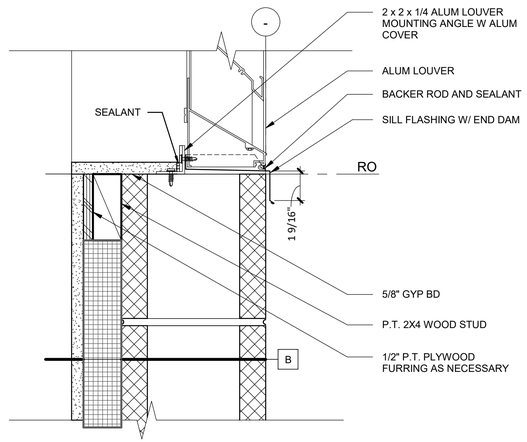

H LOUVER SILL
A-000-005 SCALE: 3" = 1'-0"

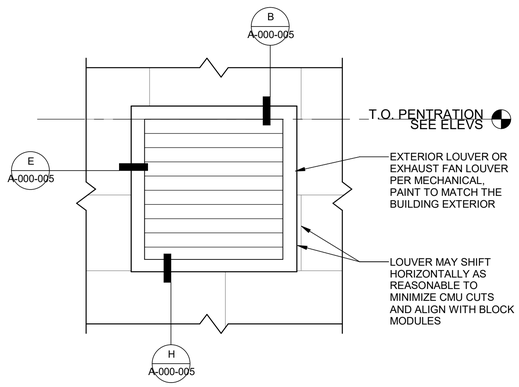

I ENLARGED LOUVER ELEVATION
A-B02-401 SCALE: 1 1/2" = 1'-0"

Brown AND Caldwell
PORTLAND, OREGON

mwa architects

Signer Name: Jeffrey McGraw
Signing Reason: I approved this document.
Signing Time: 2025-01-23 17:45:52(EST)

8044 REGISTERED ARCHITECT
JEFFREY J McGRAW
STATE OF WASHINGTON

ISSUED FOR BID

CITY OF Vancouver WASHINGTON

WS14 PFAS TREATMENT DESIGN

REVISIONS

REV	DATE	DESCRIPTION

LINE IS 2 INCHES AT FULL SIZE

DESIGNED:	T.STARK
DRAWN:	K.PLUCAR
CHECKED:	T.STARK
CHECKED:	
APPROVED:	J.MCGRAW

FILENAME
180318-A-00V21.rvt

BC PROJECT NUMBER
180318

CLIENT PROJECT NUMBER
PRJ100893

ARCHITECTURAL

ARCHITECTURAL DETAILS 3

DRAWING NUMBER
A-000-005

45 SHEET NUMBER OF 125

Plot Date: 1/14/2025 10:57:16 AM Path: BIM 360://180318 - WS 14 PFAS Treatments Design/180318-A-00V21.rvt

ba5c8512d82130c4c16b02471f106236

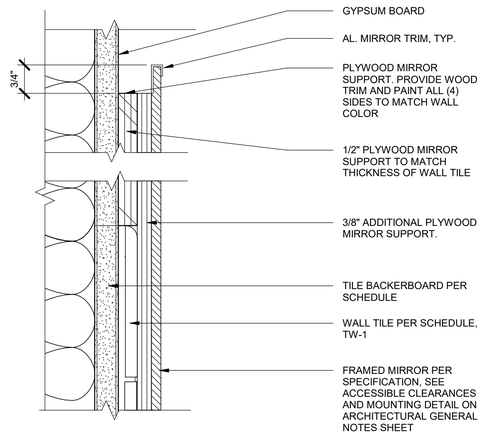

A MIRROR INSTALLATION DETAIL
A-B02-402 SCALE: 6" = 1'-0"

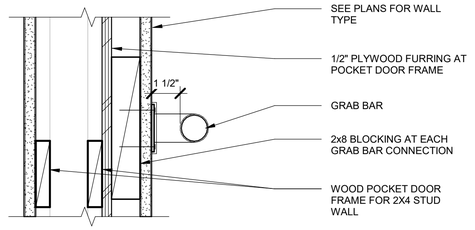

NOTES:
1. WOOD BLOCKING MAY BE REPLACED BY 20 GA. METAL STUD/ CHANNEL.
2. COORDINATE LOCATION WITH EQUIPMENT AND FIXTURE MOUNTING HEGHTS.
3. CONTRACTOR TO ENSURE NO FASTENERS PENETRATE INTO POCKET DOOR CAVITY.

B GRAB BAR AT POCKET DOOR
A-B02-402 SCALE: 3" = 1'-0"

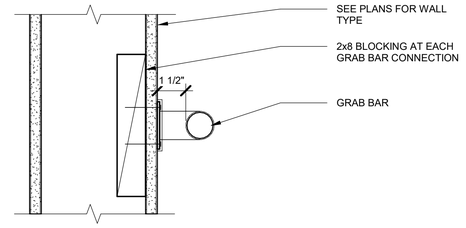

NOTES:
1. WOOD BLOCKING MAY BE REPLACED BY 20 GA. METAL STUD/ CHANNEL.
2. COORDINATE LOCATION WITH EQUIPMENT AND FIXTURE MOUNTING HEGHTS.
3. SEE ALTERNATE DETAIL FOR OCCURANCE AT THE POCKET DOOR FRAMING.

C GRAB BAR, TYP.
NTS

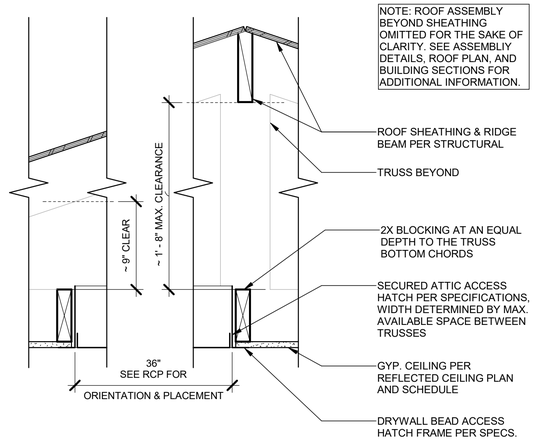

D ATTIC ACCESS HATCH
SCALE: 1 1/2" = 1'-0"

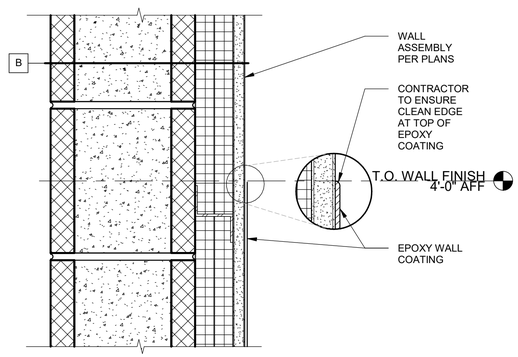

E EPOXY WALL COATING
A-B02-402 SCALE: 3" = 1'-0"

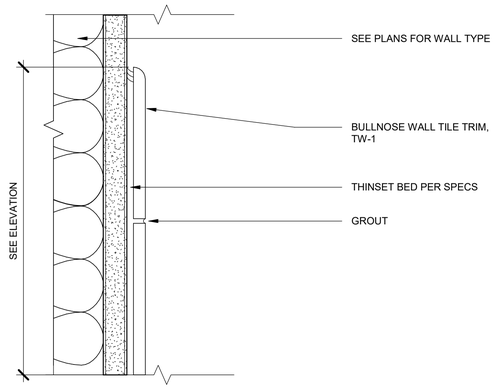

F TILE - BULLNOSE TRIM
A-B02-402 SCALE: 6" = 1'-0"

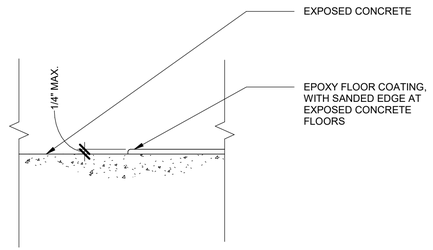

G EPOXY FLOORING TRANSITIONS
NTS

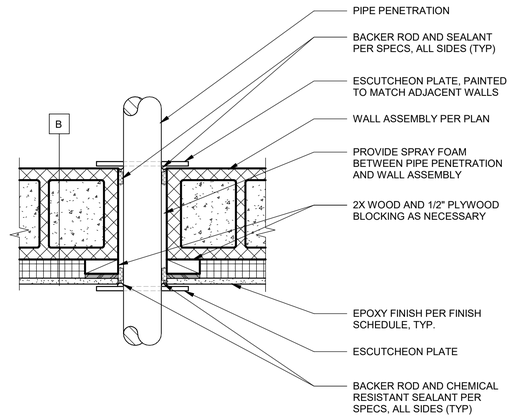

H PIPE PENETRATION AT WALL
NTS

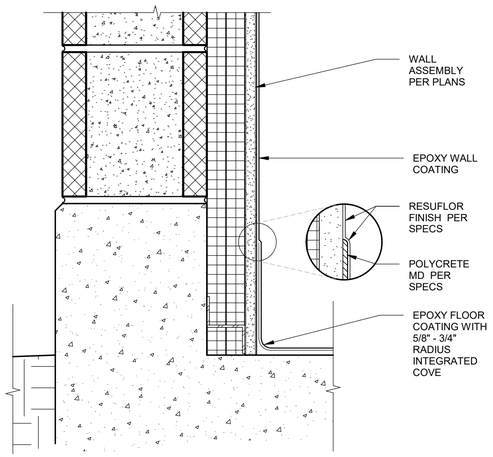

I EPOXY FLOOR COVE BASE
A-B02-402 SCALE: 3" = 1'-0"

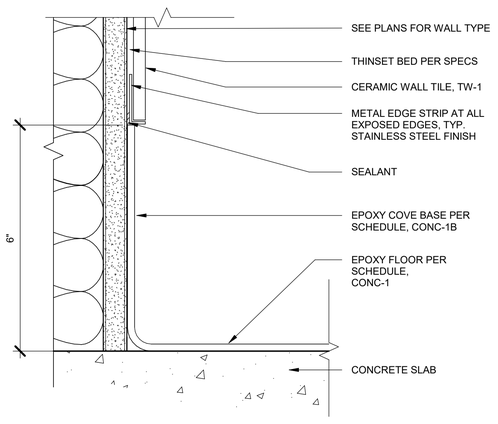

J EPOXY COVE BASE AT TILE
A-B02-402 SCALE: 6" = 1'-0"

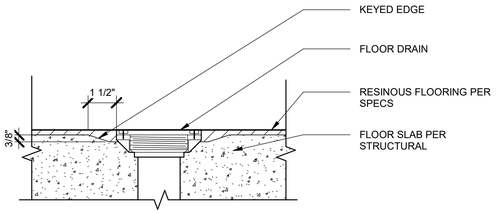

K FLOOR DRAIN AT EPOXY
NTS

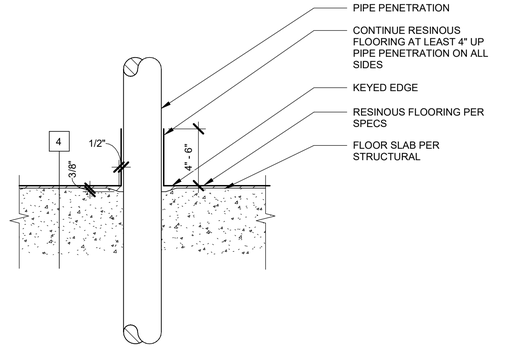

L PIPE PENETRATION AT FLOOR
NTS

Brown AND Caldwell
PORTLAND, OREGON

mwa architects

Signer Name: Jeffrey McGraw
Signing Reason: I approved this document
Signing Time: 2025-01-25 17:45:51(EST)

8044 REGISTERED ARCHITECT
JEFFREY J McGRAW
STATE OF WASHINGTON

ISSUED FOR BID

CITY OF Vancouver WASHINGTON

WS14 PFAS TREATMENT DESIGN

REVISIONS

REV	DATE	DESCRIPTION

LINE IS 2 INCHES AT FULL SIZE

DESIGNED: T.STARK
DRAWN: K.PLUCAR
CHECKED: T.STARK
CHECKED:
APPROVED: J.MCGRAW

FILENAME
180318-A-00V21.rvt
BC PROJECT NUMBER
180318
CLIENT PROJECT NUMBER
PRJ100893

ARCHITECTURAL

ARCHITECTURAL DETAILS 4

DRAWING NUMBER
A-000-006

46 SHEET NUMBER OF 125

Plot Date: 1/14/2025 10:57:16 AM Path: BIM 360://180318 - WS 14 PFAS Treatments Design/180318-A-00V21.rvt

b4c682d1179caf1377a5ccdfd64008cd

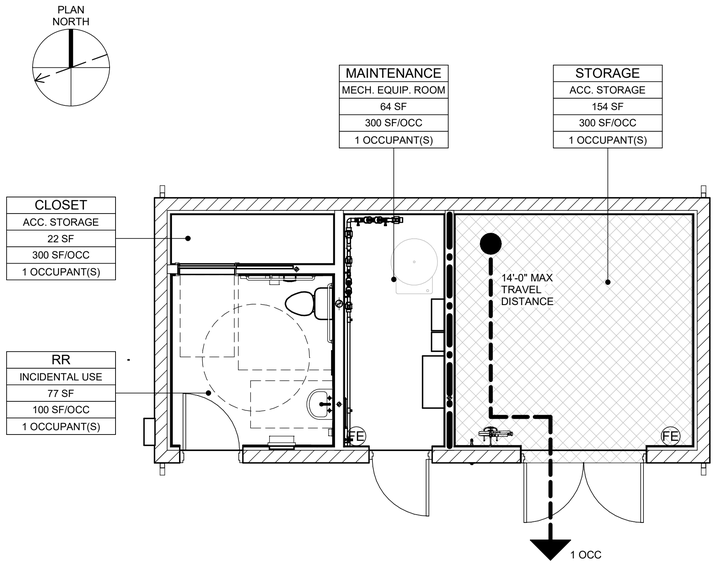

RESTROOM AND STORAGE BUILDING CODE PLAN

SCALE: 1/4" = 1'-0"

ENERGY CODE REQUIREMENTS

INSULATION REQUIREMENTS PER 2021 WA ENERGY CODE ZONE 4C		
PROVISIONS SHOWN ARE FOR COMMERCIAL STRUCTURES		
	REQUIRED	**PROVIDED**
ROOFS		
ATTICS AND OTHER	R-38	R-38
WALLS ABOVE GRADE		
MASS	R-9.5 ci	R-10
WOOD FRAMED AND OTHER	R-13 + R-7.5ci std	R-13 + R-10ci std
SLAB ON GRADE FLOORS		
UNHEATED	R-10 For 24" below	N/A
OPAQUE DOORS		
SWINGING	U-0.370	U-0.130

VERTICAL FENESTRATIONS	**REQUIRED**			**PROVIDED**
	MAX U	MAX SHGC	MIN VT/SHGC	
METAL FRAME - FIXED	0.38	0.36	1.10	U-0.24 / SHGC - 0.23

SPECIAL REQUIREMENTS

CH 3,4

THE DESIGN ANTICIPATES THE POTENTIAL FOR FUTURE HAZARDOUS CHEMICAL STORAGE WITHIN THIS BUILDING. IF HAZARDOUS CHEMICALS ARE STORED WITHIN THIS BUILDING, THEY ARE LIKELY TO CONSIST OF ONLY ONE OF THE HAZARDOUS MATERIALS AND ASSOCIATED QUANTITIES PROVIDED IN THE TABLE BELOW.

POTENTIAL FUTURE HAZARDOUS MATERIALS SHALL NOT EXCEED THE MAXIMUM 500 LIQUID GALLONS OF CORROSIVE CHEMICALS PER CONTROL AREA ALLOWABLE PER TABLE 307.1(2). THE STORAGE ROOM FOR CHEMICAL STORAGE IS A CONTROL AREA COMPLYING WITH SUBSECTION 414.2, INCLUDING A 1-HOUR FIRE BARRIER AS SHOWN.

NO PHYSICAL HAZARDS PRESENT PER 307.1(2).

IF FUTURE HAZARDOUS MATERIAL STORAGE DEVIATES FROM THE DESCRIPTION ABOVE MAY REQUIRE ADDITIONAL PERMITTING OR SPECIAL REQUIREMENTS.

HAZARDOUS MATERIAL DISCLOSURE			
CHEMICAL	USE	QUANTITY	HAZARD
HYDROCHLORIC ACID (31%)	STORAGE	275 GAL.	CORROSIVE
SODIUM HYDROXIDE (25%)	STORAGE	275 GAL.	CORROSIVE

BUILDING EXITS (PER 1006)

CH 10

BUILDING EXITING TABLE (REFER TO PLANS FOR EXITS)			
LEVEL	OCCUPANT LOAD	EXITS	
		REQUIRED	PROVIDED
1	4 OCC	1	1

OTHER EGRESS REQUIREMENTS

	REQUIRED	**PROVIDED**
ILLUMINATED EXIT SIGNS (1013.5)	NO	NO
EXIT ACCESS ILLUMINATION (1008.2.1)	1 FC AT FLOOR	YES
EXIT TRAVEL DISTANCE (TABLE 1017.2)	200' MAX	14'-0"
COMMON PATH OF EGRESS LIMIT (1006.2.1)	100' MAX	N/A
EXIT SEPARATION DISTANCE (1007.1.1)	N/A	N/A

FIRE AND SMOKE PROTECTION

CH 7 & CH 9

MAXIMUM AREA OF EXTERIOR WALL OPENINGS (TABLE 705.8)				
NON-SPRINKLERED BUILDING PER 903.2.9, 414.2.5, 414.2.5(1), & 414.2				
	NORTH	EAST	SOUTH	WEST
FIRE SEPARATION DISTANCE PROVIDED	>30'	>30'	>30'	>30'
AREA ALLOWED	NO LIMIT	NO LIMIT	NO LIMIT	NO LIMIT
AREA PROPOSED	N/A	N/A	N/A	N/A

FIRE PROTECTION ELEMENTS		
	Required	Provided
AUTOMATIC SPRINKLER SYSTEM PER 903.2.4	NO	NO
STANDPIPE SYSTEM PER 905.3	NO	NO
FIRE ALARM SYSTEM PER 907.2.10	NO	NO
SMOKE DETECTION SYSTEM PER 907.2.10	N/A	N/A
PORTABLE FIRE EXTINGUISHER PER NFPA 10	YES	YES
CARBON MONOXIDE DETECTION PER 915.1.1	NO	NO
SIGNAGE PER 912.5	NO	NO

LEGEND

USE	USE OF SPACE
OCC CATEGORY	OCCUPANCY CATEGORY (1004.5)
SF	AREA OF SPACE
SF/OCC	OCC LOAD FACTOR
OCCUPANT(S)	OCCUPANT LOAD

XX — TRAVEL PATH AND OCCUPANT COUNT

1 HOUR FIRE BARRIER

FE — FIRE EXTINGUISHER WALL MOUNTED

CONTROL AREA FOR POTENTIAL CHEMICAL STORAGE

ADA CLEARANCES

OCCUPANCY AND USE

CH 3 AND TABLE 1006.2.1

APPLICABLE OCCUPANCY CLASSIFICATION GROUPS:
S-1: MODERATE-HAZARD STORAGE

OCCUPANT LOAD SUMMARY (BUILDING)			
LEVEL	AREA (SF)	FUNCTION (PER 1004.5)	OCCUPANT LOAD
1	154	STORAGE	1
	64	MAINTENANCE	1
	77	RESTROOM	1
	22	STORAGE	1

CONSTRUCTION

CH 6

FIRE RESISTIVE RATING REQUIREMENTS FOR BUILDING ELEMENTS (TABLE 601)			
CONSTRUCTION TYPE = VB			
BUILDING ELEMENT		REQUIRED	PROPOSED
STRUCTURAL FRAME		0	0
BEARING WALLS	EXT	0	0
	INT	0	0
INTERIOR NONBEARING WALLS AND PARTITIONS		0	0 (1HR PER PLAN)
FLOOR CONSTRUCTION		0	0
ROOF CONSTRUCTION		0	0 (1HR PER PLAN)

FIRE RESISTIVE RATING REQUIREMENTS FOR EXTERIOR WALLS BASED ON FIRE SEPARATION DISTANCE (TABLE 602)				
	NORTH	EAST	SOUTH	WEST
FIRE SEPARATION DISTANCE PROVIDED	>30'	>30'	>30'	>30'
NONBEARING WALLS - EXT	0	0	0	0

BUILDING HEIGHT AND AREA

CH 5

ALLOWABLE HEIGHT (PER 504)

BUILDING CONSTRUCTION TYPE : VB NON SPRINKLERED VALUES (NS)	ALLOWED	PROPOSED
BUILDING HEIGHT (PER TABLE 504.3)	40' - 0"	13' - 0"
NUMBER OF STORIES (PER TABLE 504.4)	1	1
ALLOWABLE AREA (PER TABLE 506.2)	9,000	317 SF

Brown AND Caldwell
PORTLAND, OREGON

mwa architects

13092 REGISTERED ARCHITECT
ALAN PAUL ARMSTRONG
STATE OF WASHINGTON

ISSUED FOR BID

CITY OF Vancouver WASHINGTON

WS14 PFAS TREATMENT DESIGN

REVISIONS

REV	DATE	DESCRIPTION

LINE IS 2 INCHES AT FULL SIZE

DESIGNED: T.STARK
DRAWN: K.PLUCAR
CHECKED: T.STARK
CHECKED:
APPROVED: A. ARMSTRONG

FILENAME
180318-A-00V21.rvt
BC PROJECT NUMBER
180318
CLIENT PROJECT NUMBER
PRJ100893

ARCHITECTURAL

RESTROOM AND STORAGE BUILDING CODE SHEET

DRAWING NUMBER
A-000-101
SHEET NUMBER
OF

Plot Date: 2/6/2026 1:42:48 PM Path: Autodesk Docs://180318 - WS 14 PFAS Treatments Design/180318-A-00V21.rvt

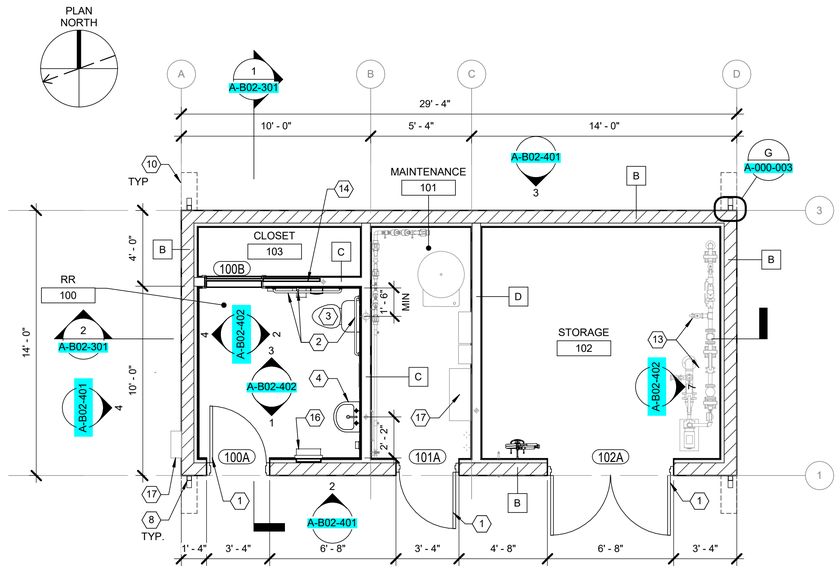

1 FLOOR PLAN
SCALE: 1/4" = 1'-0"

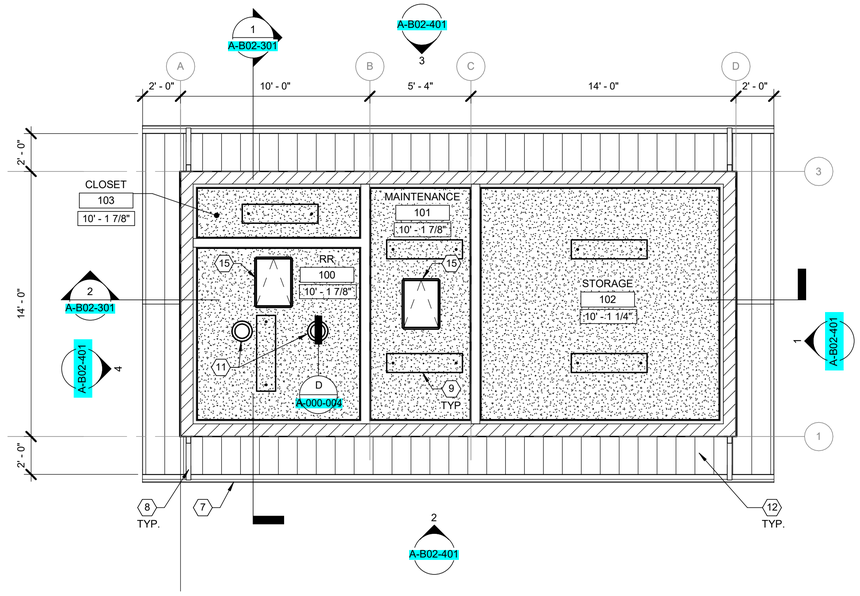

2 REFLECTED CEILING PLAN
SCALE: 1/4" = 1'-0"

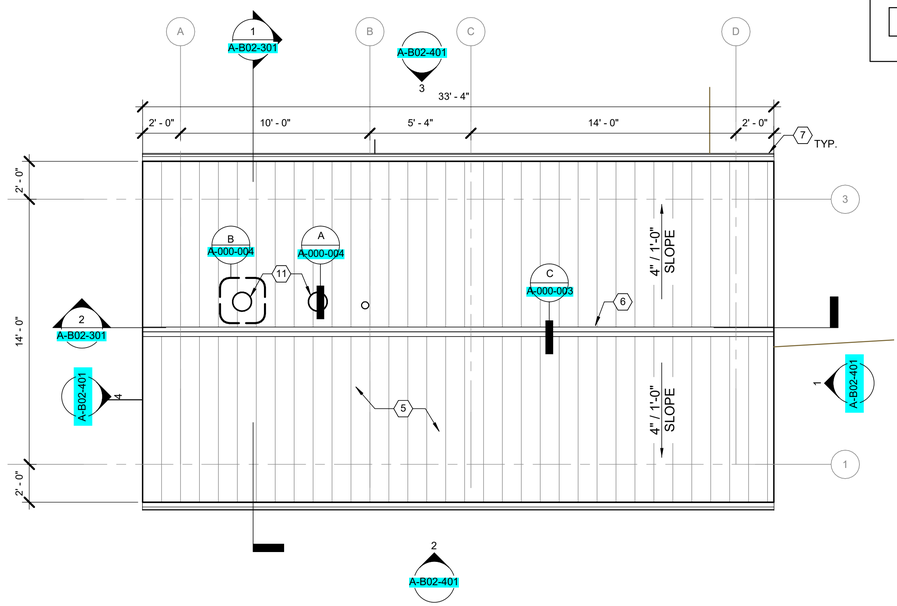

3 ROOF PLAN
SCALE: 1/4" = 1'-0"

GENERAL NOTES:

A. CONTRACTOR TO VERIFY ALL DIMENSIONS ON SITE.

B. DIMENSIONS ARE FROM FACE OF STUD, MASONRY, AND CONCRETE, UON.

C. SEE ELEVATIONS FOR LOUVER SILL HEIGHTS.

D. SEE MECHANICAL FOR ADDITIONAL LOUVER INFORMATION.

E. REFER TO SHEET A-000-001 FOR TYPICAL RESTROOM FIXTURE DIMENSIONS AND MOUNTING HEIGHTS. COORDINATE WITH PLUMBING.

F. PROVIDE WALL BLOCKING FOR ALL WALL MOUNTED RESTROOM ACCESSORIES.

G. REFER TO SHEET A-B02-402 FOR DOOR INFORMATION.

H. REFER TO ELECTRICAL AND MECHANICAL PLANS TO COORDINATE LIGHTING AND HVAC.

KEYNOTES:

1 EXTERIOR HM DOOR WITH THRESHOLD, SEE SPECS
2 GRAB BARS, PROVIDE BLOCKING
3 FLOOR MOUNTED WATER CLOSET, SEE PLUMBING SPECS.
4 SINK, SEE PLUMBING SPECS.
5 STANDING SEAM METAL ROOFING
6 RIDGE CAP
7 METAL GUTTER WITH SNAP-IN GUTTER GUARD
8 METAL DOWNSPOUT, SEE SPECS
9 LIGHT FIXTURE, SEE ELEC DRAWINGS
10 SPLASH BLOCK
11 TUBULAR DAYLIGHTING DEVICE
12 SOFFIT, SEE RCP LEGEND BELOW
13 CENTRIFUGE PUMP SYSTEM PER EQUIPMENT DRAWINGS
14 POCKET DOOR, SEE ASSOCIATED DETAILS FOR GRAB BAR BLOCKING
15 ATTIC ACCESS HATCH, MIN. 20"X30"
16 SEMI-RECESSED PAPER TOWEL DISPENSER AND WASTE RECEPTACLE
17 ELECTRICAL EQUIPMENT PER ELECTRICAL

RCP LEGEND:

GYPSUM BOARD CEILING

PERFORATED COMPOSITE SOFFIT

Brown AND Caldwell
PORTLAND, OREGON

mwa architects

Signer Name: Jeffrey McGraw
Signing Reason: I approved this document
Signing Time: 2025-01-23 17:45:52(EST)

8044 REGISTERED ARCHITECT
JEFFREY J McGRAW
STATE OF WASHINGTON

ISSUED FOR BID

CITY OF Vancouver WASHINGTON

WS14 PFAS TREATMENT DESIGN

REVISIONS

REV	DATE	DESCRIPTION

LINE IS 2 INCHES AT FULL SIZE

DESIGNED: T.STARK
DRAWN: K.PLUCAR
CHECKED: T.STARK
CHECKED:
APPROVED: J.MCGRAW

FILENAME
180318-A-00V21.rvt

BC PROJECT NUMBER
180318

CLIENT PROJECT NUMBER
PRJ100893

ARCHITECTURAL

RESTROOM AND STORAGE BUILDING PLANS

DRAWING NUMBER
A-B02-101

48 SHEET NUMBER OF 125

Plot Date: 1/14/2025 10:57:19 AM Path: BIM 360://180318 - WS 14 PFAS Treatments Design/180318-A-00V21.rvt

fdca026ab13d3ada4066c34091a8768a

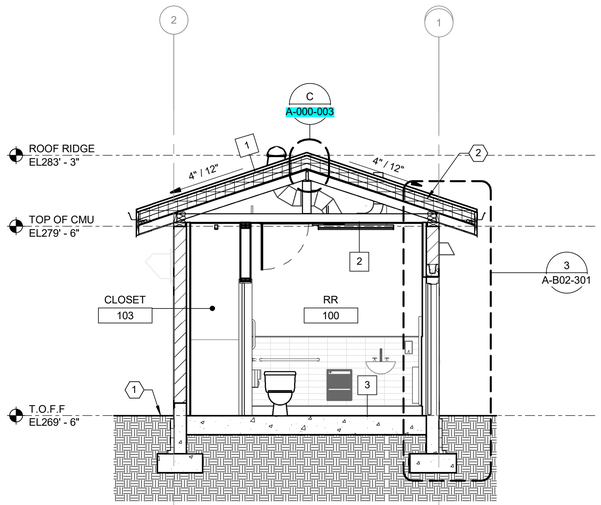

1 EAST-WEST SECTION
A-B02-101 SCALE: 1/4" = 1'-0"

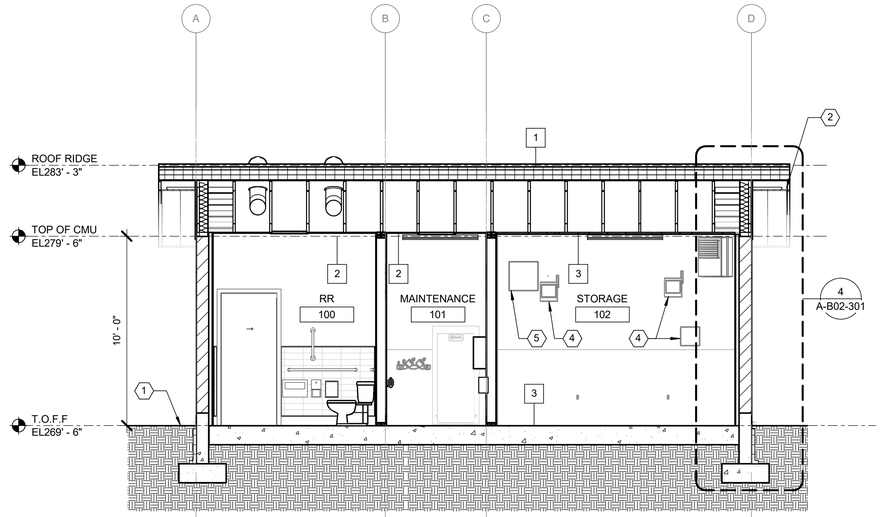

2 NORTH-SOUTH SECTION
A-B02-101 SCALE: 1/4" = 1'-0"

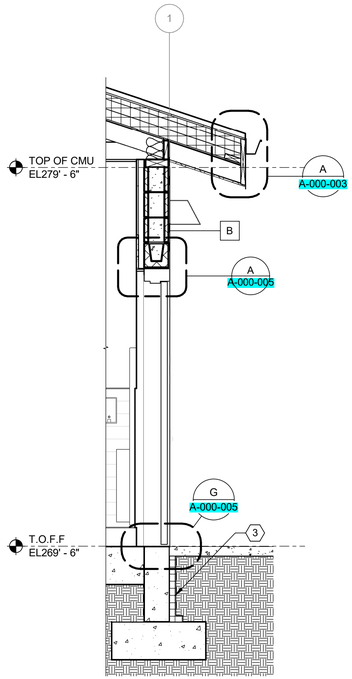

3 TYP. WALL SECTION
A-B02-301 SCALE: 1/2" = 1'-0"

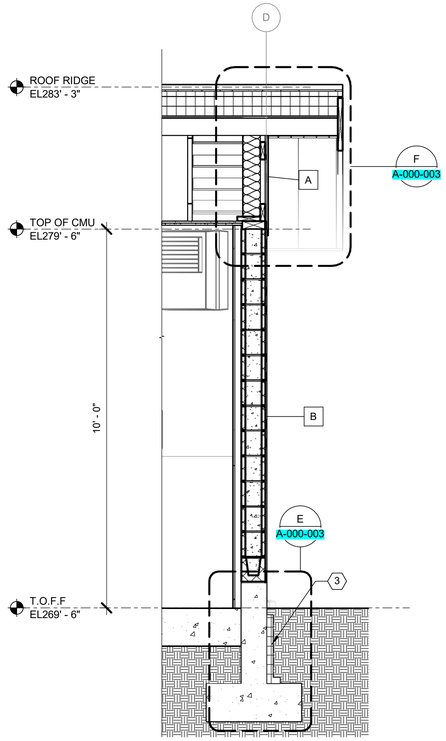

4 TYP. WALL SECTION AT GABLE ENDS
A-B02-301 SCALE: 1/2" = 1'-0"

GENERAL NOTES:

A. SEE MECHANICAL FOR ADDITIONAL LOUVER INFORMATION.

B. SEE CIVIL FOR FINISH FLOOR ELEVATION.

C. DIMENSIONS ARE FROM FACE OF STUD, MASONRY, AND CONCRETE, UNO.

KEYNOTES:

1 GRADE PER CIVIL DRAWINGS
2 TRUSS STRUCTURE PER STRUCTURAL DRAWINGS
3 CONTINUOUS R-10 RIGID INSULATION AT SLAB PERIMETER
4 ELECTRICAL EQUIPMENT PER ELECTRICAL DRAWINGS
5 MECHANICAL EQUIPMENT, SEE MECHANICAL DRAWINGS

Brown AND Caldwell
PORTLAND, OREGON

mwa architects

Signer Name: Jeffrey McGraw
Signing Reason: I approved this document
Signing Time: 2025-01-25 17:45:53(EST)

8044 REGISTERED ARCHITECT
JEFFREY J McGRAW
STATE OF WASHINGTON

ISSUED FOR BID

CITY OF Vancouver WASHINGTON

WS14 PFAS TREATMENT DESIGN

REVISIONS

REV	DATE	DESCRIPTION

LINE IS 2 INCHES AT FULL SIZE

DESIGNED: T.STARK
DRAWN: K.PLUCAR
CHECKED: T.STARK
CHECKED:
APPROVED: J.MCGRAW

FILENAME
180318-A-00V21.rvt

BC PROJECT NUMBER
180318

CLIENT PROJECT NUMBER
PRJ100893

ARCHITECTURAL

RESTROOM AND STORAGE BUILDING SECTIONS

DRAWING NUMBER
A-B02-301

49 SHEET NUMBER OF 125

Plot Date: 1/14/2025 10:59:48 AM Path: BIM 360://180318 - WS 14 PFAS Treatments Design/180318-A-00V21.rvt

884d4a7288512e6a3e9bd393c0e7010b

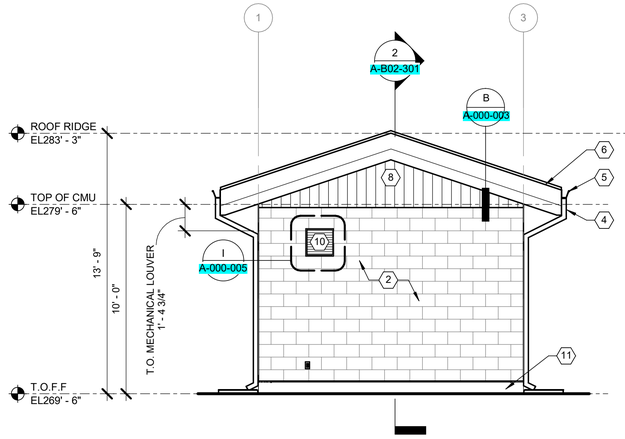

1 SOUTH ELEVATION
A-B02-101 SCALE: 1/4" = 1'-0"

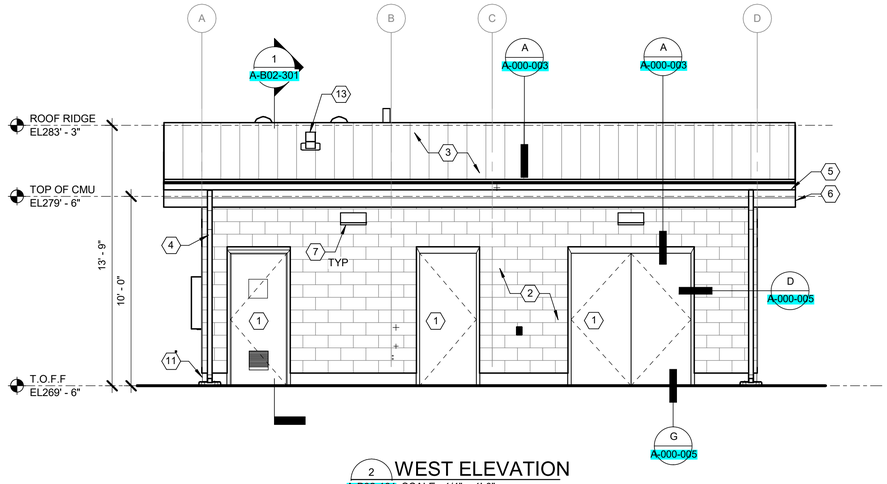

2 WEST ELEVATION
A-B02-101 SCALE: 1/4" = 1'-0"

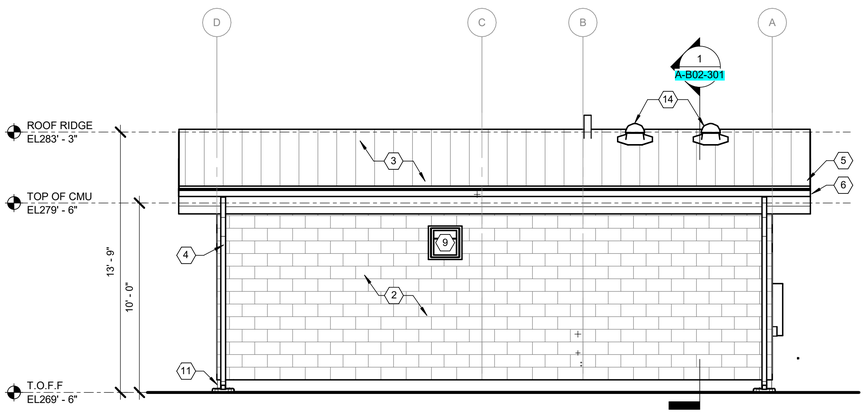

3 EAST ELEVATION
A-B02-101 SCALE: 1/4" = 1'-0"

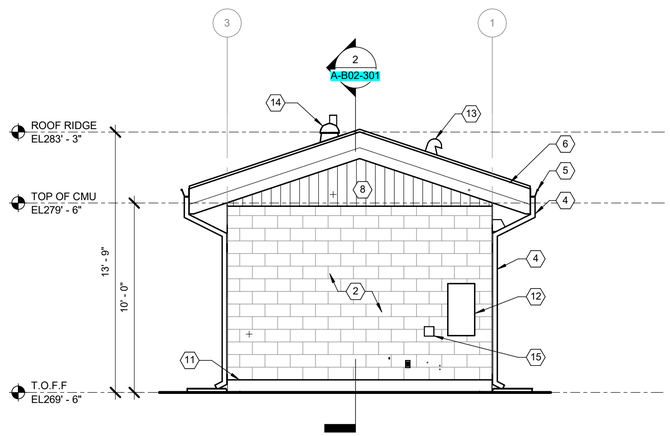

4 NORTH ELEVATION
A-B02-101 SCALE: 1/4" = 1'-0"

GENERAL NOTES:

A. SEE MECHANICAL FOR ADDITIONAL LOUVER INFORMATION.

B. SEE CIVIL FOR FINISH FLOOR ELEVATION.

C. DIMENSIONS ARE FROM FACE OF STUD, MASONRY, AND CONCRETE, UNO.

D. REFER TO THE ROOF PLAN FOR ROOF SLOPES.

KEYNOTES:

1 HM DOOR, PAINT TO MATCH EXISTING CAMPUS
2 PAINTED SPLIT FACED CMU, PAINT TO MATCH EXISTING CAMPUS
3 STANDING SEAM METAL ROOFING, MATCH EXISTING CAMPUS
4 METAL DOWNSPOUT WITH SPLASH BLOCK, MATCH EXISTING CAMPUS, TYP
5 METAL GUTTER, MATCH EXISTING CAMPUS TYP.
6 METAL FASCIA, MATCH EXISTING CAMPUS
7 LIGHT FIXTURE, SEE ELEC DRAWINGS
8 FIBER CEMENT SIDING, PAINT TO MATCH EXISTING CAMPUS
9 FAN LOUVER PER HVAC DRAWINGS
10 LOUVER PER MECHANICAL DRAWINGS
11 CURB PER STRUCTURAL
12 ELECTRICAL EQUIPMENT PER ELECTRICAL DRAWINGS
13 EXHAUST VENT PER MECHANICAL
14 SOLAR TUBE SKYLIGHT, SEE RCP FOR ADDITIONAL INFORMATION
15 DATA DEVICE PER ELECTRICAL

Brown AND Caldwell
PORTLAND, OREGON

mwa architects

Signer Name: Jeffrey McGraw
Signing Reason: I approved this document
Signing Time: 2025-01-25 17:45:53(EST)

8044 REGISTERED ARCHITECT
JEFFREY J McGRAW
STATE OF WASHINGTON

ISSUED FOR BID

CITY OF Vancouver WASHINGTON

WS14 PFAS TREATMENT DESIGN

REVISIONS

REV	DATE	DESCRIPTION

LINE IS 2 INCHES AT FULL SIZE

DESIGNED: T.STARK
DRAWN: K.PLUCAR
CHECKED: T.STARK
CHECKED:
APPROVED: J.MCGRAW

FILENAME 180318-A-00V21.rvt
BC PROJECT NUMBER 180318
CLIENT PROJECT NUMBER PRJ100893

ARCHITECTURAL

RESTROOM AND STORAGE BUILDING EXTERIOR ELEVATIONS

DRAWING NUMBER
A-B02-401

SHEET NUMBER 50 OF 125

Plot Date: 1/14/2025 10:59:49 AM Path: BIM 360://180318 - WS 14 PFAS Treatments Design/180318-A-00V21.rvt

a60020fc02b4ff1f240bb733e3b44fce

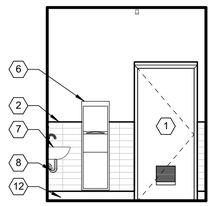

1 RR - WEST
A-B02-101 SCALE: 1/4" = 1'-0"

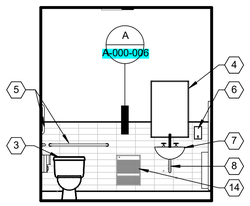

2 RR - SOUTH
A-B02-101 SCALE: 1/4" = 1'-0"

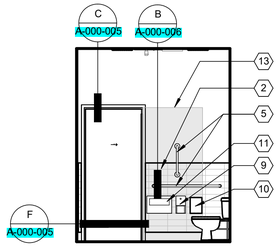

3 RR - EAST
A-B02-101 SCALE: 1/4" = 1'-0"

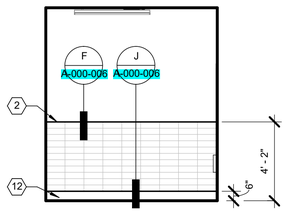

4 RR - NORTH
A-B02-101 SCALE: 1/4" = 1'-0"

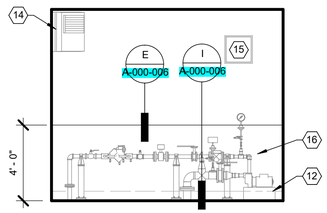

7 STOR. - SOUTH
A-B02-101 SCALE: 1/4" = 1'-0"

INTERIOR FINISH SCHEDULE

Number	Name	Floor	Base	Wall				Ceiling		Notes
				North	East	South	West	Finish	Height	
100	RR	CONC-1	CONC-1B	TW-1/P-2	TW-1/P-2	TW-1/P-2	TW-1/P-2	P-2	9'-11 3/8"	
101	MAINTENANCE	CONC-1	CONC-1B	EP-1 / P-1	EP-1 / P-1	EP-1 / P-1	EP-1 / P-1	P-1	9'-11 3/8"	EP-1 UP TO 4'-0" AFF
102	STORAGE	CONC-1	CONC-1B	EP-1 / P-1	EP-1 / P-1	EP-1 / P-1	EP-1 / P-1	P-1	9'-10 7/8"	EP-1 UP TO 4'-0" AFF
103	CLOSET	CONC-1	CONC-1B	EP-1 / P-1	EP-1 / P-1	EP-1 / P-1	EP-1 / P-1	P-1	9'-11 3/8"	EP-1 UP TO 4'-0" AFF

INTERIOR FINISH LEGEND

ABBREVIATION	TYPE	MANUFACTURER	PRODUCT	COLOR	FINISH	SIZE	THICKNESS	NOTES & REMARKS
WALL FINISH								
P-1	PAINT	SHERWIN WILLIAMS	SEE SPECIFICATION SECTION, 09 91 24	EXTRA WHITE	SATIN	-	-	GENERAL WALL AND CEILING
P-2	PAINT	SHERWIN WILLIAMS	SEE SPECIFICATION SECTION, 09 91 24	EXTRA WHITE	SEMI-GLOSS	-	-	RESTROOM WALL AND CEILING
P-3	PAINT	SHERWIN WILLIAMS	SEE SPECIFICATION SECTION, 09 91 24	SW 7660 EARL GREY	SEMI-GLOSS	-	-	INTERIOR SIDE OF HOLLOW METAL DOOR AND FRAME AT INTERIOR
TW-1	CERAMIC WALL TILE	DALTILE	COLORWHEEL LINEAR	ARCTIC WHITE 0790	MATTE	4" x 12"	5/16"	PROVIDE BULLNOSE TRIM AT EXPOSED TOP EDGE. 1/8" GROUT LINES TO BE LATICRETE 60 DUSTY GREY
EP-1	EPOXY COATING	SHERWIN WILLIAMS	SEE SPECIFICATION SECTION 09 67 23	STEEL GREY	-	-	-	
WALL BASE								
CONC-1B	EPOXY COVE BASE	SHERWIN WILLIAMS	SEE SPECIFICATION SECTION 09 67 23	STEEL GREY	-	-	1/8"	INTEGRATED COVE BASE
FLOOR FINISH								
CONC-1	EPOXY COATING	SHERWIN WILLIAMS	SEE SPECIFICATION SECTION 09 67 23	STEEL GREY	-	-	1/4"	

DOOR SCHEDULE

NO.	WIDTH	HEIGHT	PANEL TYPE	FIRE RATING	DOOR MATERIAL	DOOR FINISH	GLAZING	FRAME MATERIAL	FRAME FINISH	HW SET	HEAD	JAMB	THRESHOLD	COMMENTS
100A	3' - 0"	7'-0"	A	NONE (NOT RATED)	HM	PAINTED	NONE	HM	PAINTED	4.0	A / A-000-005	D / A-000-005	G / A-000-005	PROVIDE UNISEX ACCESSIBLE RESTROOM SIGNAGE AND LOUVER PER MECHNICAL
100B	3' - 0"	7'-0"	D	NONE (NOT RATED)	WD	PAINTED	NONE	WD	PAINTED	3.0	C / A-000-005	F / A-000-005	-	
101A	3' - 0"	7'-0"	B	NONE (NOT RATED)	HM	PAINTED	NONE	HM	PAINTED	2.0	A / A-000-005	D / A-000-005	G / A-000-005	
102A	6' - 4"	7'-0"	C	NONE (NOT RATED)	HM	PAINTED	NONE	HM	PAINTED	1.0	A / A-000-005	D / A-000-005	G / A-000-005	

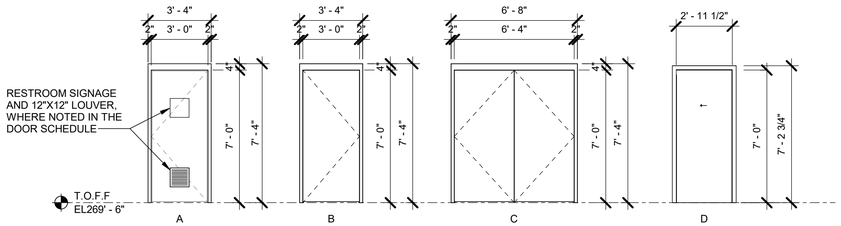

5 DOOR TYPES
SCALE: 1/4" = 1'-0"

GENERAL NOTES:

A. REFER TO SHEET A-000-001 FOR RESTROOM FIXTURE MOUNTING HEIGHTS AND REQUIRED CLEARANCES. COORDINATE WITH PLUMBING.

B. PROVIDE WALL BLOCKING FOR ALL WALL MOUNTED RESTROOM ACCESSORIES.

KEYNOTES:

1 HM DOOR WITH LOUVER, SEE SPECS
2 CERAMIC TILE, TW-1
3 FLOOR MOUNTED WATER CLOSET, SEE PLUMBING SPECS.
4 2' x 3' FRAMED MIRROR CENTERED ON LAVATORY, SEE SPECS
5 GRAB BARS, PROVIDE BLOCKING. FOR VERTICAL GRAB BAR, PROVIDE A WOOD SPACER THAT MATCHES THE WALL TILE THICKNESS ON THE TILE-FREE SIDE OF THE BRACKET. THE WOOD SPACER IS CUT TO THE SIZE OF THE GRAB BAR FLANGE AND PAINT TO MATCH WALL COLOR.
6 SEMI-RECESSED PAPER TOWEL DISPENSER AND WASTE RECEPTACLE
7 LAVATORY, SEE PLUMBING SPECS.
8 PROVIDE INSULATED COVER OVER EXPOSED PLUMBING PER ADA REQUIREMENTS
9 SURFACE MOUNTED TOILET TISSUE DISPENSER
10 SURFACE MOUNTED SANITARY NAPKIN DISPOSAL
11 SURFACE MOUNTED SEAT COVER DISPENSER
12 EPOXY COVE BASE PER SCHEDULE
13 POCKET DOOR FRAME CAVITY BEYOND, CONTRACTOR TO ENSURE FASTENERS DO NOT PENETRATE INTO THIS CAVITY
14 UNIT HEATER PER MECHANICAL
15 LOUVER PER MECHANICAL DRAWINGS
16 CENTRIFUGE PUMP SYSTEM PER EQUIPMENT DRAWINGS

Brown AND Caldwell
PORTLAND, OREGON

mwa architects

Signer Name: Jeffrey McGraw
Signing Reason: I approved this document.
Signing Time: 2025-01-23 17:45:51(EST)

8044 REGISTERED ARCHITECT
JEFFREY J McGRAW
STATE OF WASHINGTON

ISSUED FOR BID

CITY OF Vancouver WASHINGTON

WS14 PFAS TREATMENT DESIGN

REVISIONS

REV	DATE	DESCRIPTION

LINE IS 2 INCHES AT FULL SIZE

DESIGNED: T.STARK
DRAWN: K.PLUCAR
CHECKED: T.STARK
CHECKED:
APPROVED: J.MCGRAW

FILENAME
180318-A-00V21.rvt
BC PROJECT NUMBER
180318
CLIENT PROJECT NUMBER
PRJ100893

ARCHITECTURAL

INTERIOR ELEVATIONS AND SCHEDULES

DRAWING NUMBER
A-B02-402

51 SHEET NUMBER OF 125

Plot Date: 1/14/2025 10:59:52 AM Path: BIM 360://180318 - WS 14 PFAS Treatments Design/180318-A-00V21.rvt

c4e0d6bc449a917976e2868706697346

GENERAL

G 1 SCOPE
THE GENERAL NOTES AND STANDARD DETAILS ARE GENERAL AND APPLY TO THE ENTIRE PROJECT EXCEPT WHERE THERE ARE SPECIFIC INDICATIONS TO THE CONTRARY.

G 2 PRECEDENCE
IF THERE IS A CONFLICT BETWEEN PROJECT SPECIFICATIONS AND STRUCTURAL DRAWINGS, INCLUDING STRUCTURAL NOTES, CONTACT THE STRUCTURAL ENGINEER OF RECORD FOR CLARIFICATION. SPECIFIC NOTES AND DETAILS ON DRAWINGS TAKE PRECEDENCE OVER GENERAL NOTES AND TYPICAL DETAILS.

G 3 DIMENSIONS
STRUCTURAL DIMENSIONS CONTROLLED BY OR RELATED TO THE MECHANICAL OR ELECTRICAL EQUIPMENT AND DIMENSIONS RELATED TO EXISTING FACILITIES SHALL BE VERIFIED BY THE CONTRACTOR PRIOR TO CONSTRUCTION. CONTRACTOR IS RESPONSIBLE FOR COORDINATING ALL CONSTRUCTION DIMENSIONS AND NOTIFYING CONSTRUCTION MANAGER OF DISCREPANCIES IN A TIMELY FASHION.

G 4 PROVISIONS FOR EQUIPMENT
MECHANICAL AND ELECTRICAL EQUIPMENT SUPPORTS, ANCHORAGES, OPENINGS, RECESSES AND EMBEDMENTS NOT SPECIFIED ON THE STRUCTURAL DRAWINGS, BUT SPECIFIED ON OTHER CONTRACT DRAWINGS, SHALL BE PROVIDED PRIOR TO CASTING CONCRETE.

G 5 MEANS, METHODS & CONSTRUCTION LOADS
CONTRACT DRAWINGS AND SPECIFICATIONS REPRESENT THE FINISHED STRUCTURE. CONTRACTOR IS RESPONSIBLE FOR MEANS, METHODS AND SEQUENCE OF CONSTRUCTION, AND SHALL MAKE ADEQUATE PROVISION TO MAINTAIN THE INTEGRITY OF ALL STRUCTURES AT ALL STAGES OF CONSTRUCTION. DETERMINATION OF AND PROVISIONS FOR CONSTRUCTION LOADING SHALL BE PROVIDED BY THE CONTRACTOR.

G 6 SAFETY
CONTRACTOR SHALL TAKE ADEQUATE PRECAUTIONS TO ENSURE THE SAFETY OF WORKERS AND VISITORS TO THE SITE, INCLUDING BUT NOT LIMITED TO SHORING, BRACING AND ACCESS RESTRICTION. COMPLY WITH ALL FEDERAL, STATE AND LOCAL SAFETY CODES AND STANDARDS.

G 7 DRAINAGE SURFACES
SLOPE DRAINAGE SURFACES UNIFORMLY TO DRAIN. SLOPE SHALL BE 1/8" TO 1/4" PER FOOT EXCEPT WHERE NOTED OTHERWISE ON THE PLANS.

G 8 OPENINGS
OPENINGS THROUGH NEW AND EXISTING WALLS AND SLABS FOR PIPES, DUCTS, CONDUITS, ETC., ARE NOT ALL SHOWN ON THE STRUCTURAL DRAWINGS. THE CONTRACTOR SHALL COORDINATE WITH OTHER DISCIPLINES AND PROVIDE THESE OPENINGS IN ACCORDANCE WITH THE OTHER CONTRACT DOCUMENTS.

G 9 COVID19
CONTRACTOR TO ADHERE TO COVID19 EXPOSURE PROTOCALS RELATIVE TO THE LATEST CDC AND WASHINGTON STATE GUIDANCE, WHICHEVER IS MORE STRINGENT. CONTRACTOR TO SUBMIT PROJECT SAFETY PLAN FOR REVIEW AND APPROVAL PRIOR TO MOBILIZATION.

DESIGN CRITERIA

D 1 GOVERNING BUILDING CODE
CONSTRUCTION AND DESIGN SHALL BE IN ACCORDANCE WITH THE 2021 INTERNATIONAL BUILDING CODE. THIS CODE SHALL GOVERN EXCEPT WHERE OTHER APPLICABLE CODES OR CONTRACT PROVISIONS ARE MORE RESTRICTIVE.

D 2 CONSTRUCTION AND DESIGN OF CONCRETE TANKS SHALL BE IN ACCORDANCE WITH THE SPECIFICATIONS AND ACI 350-06 (RISK CATEGORY IV).

D 3 LIVE LOADS
1. PROCESS AREA SLAB ON GRADE ..... 250 PSF
2. ROOF LIVE LOAD ..... 20 PSF

D 4 MAJOR EQUIPMENT LOADS (ALL WEIGHTS OPERATING UNLESS NOTED OTHERWISE)
1. PRESSURE VESSEL..... 391 KIPS

D 5 SNOW LOADS
GROUND SNOW LOAD ..... p_g = 25 PSF
SNOW EXPOSURE FACTOR ..... C_e = 1.0
THERMAL FACTOR ..... C_t = 1.0
SNOW LOAD IMPORTANCE FACTOR
(FOR RESTROOM AND STORAGE BUILDING) ..... I_s = 1.1
SNOW LOAD IMPORTANCE FACTOR
(FOR PFAS TREATMENT STRUCTURES AND RINSE WATER TANK) ..... I_s = 1.2
UNIFORM ROOF DESIGN SNOW LOAD ..... p_r = 25 PSF
PLUS DRIFT LOADS IN ACCORDANCE WITH ASCE 7-16

D 6 WIND
BASIC WIND SPEED (ULTIMATE)
(FOR RESTROOM AND STORAGE BUILDING)..... 103 MPH
RISK CATEGORY (FOR RESTROOM AND STORAGE BUILDING) III
BASIC WIND SPEED (ULTIMATE)
(FOR PFAS TREATMENT STRUCTURES AND RINSE WATER TANK) ..... 107 MPH
RISK CATEGORY
(FOR PFAS TREATMENT STRUCTURES AND RINSE WATER TANK) IV
EXPOSURE CATEGORY C
TOPOGRAPHIC FACTOR ..... K_{zt}= 1.0

D 7 SEISMIC
MCE ACCELERATION, SHORT PERIOD ..... S_S = 0.806 g
MCE ACCELERATION, 1-SEC PERIOD ..... S_1 = 0.367 g
SITE CLASS ..... D
DESIGN ACCEL, SHORT PERIOD ..... S_{DS} = 0.633 g
DESIGN ACCEL, 1-SEC PERIOD ..... S_{D1} = 0.709 g
RISK CATEGORY (FOR RESTROOM AND STORAGE BUILDING) III
SEISMIC IMPORTANCE FACTOR
(FOR RESTROOM AND STORAGE BUILDING) ..... I_e = 1.25 I_P = 1.00,
EXCEPT FOR FIRE PROTECTION SYSTEM, EGRESS STAIRWAYS,
AND COMPONENTS CONTAINING HAZARDOUS MATERIALS ..... I_P = 1.50
RISK CATEGORY
(FOR PFAS TREATMENT STRUCTURES AND RINSE WATER TANK) IV
SEISMIC IMPORTANCE FACTOR
(FOR PFAS TREATMENT STRUCTURES
AND RINSE WATER TANK) ..... I_e = 1.5 I_P = 1.5
SEISMIC DESIGN CATEGORY ..... D
BEARING SPECIAL REINFORCED MASONRY
SHEAR WALLS (ASCE 7-16, TABLE 12.2-1) ..... R = 5 Ω_o = 2.5
FLAT-BOTTOM GROUND SUPPORTED STEEL TANKS:
MECHANICALLY ANCHORED (ASCE 7-16 TABLE 15.4-2) ..... R = 3 Ω_o = 2
ANALYSIS PROCEDURE: EQUIVALENT LATERAL FORCE
EXCEPT AT LIQUID CONTAINING BASINS ANALYSIS
BASED ON ACI 350.3-06 ..... R_i = 2 R_c = 1
ELEVATED VESSELS SUPPORTED ON SYMMETRICALLY
BRACED LEGS (ASCE 7-16, TABLE 15-4.2) ..... R = 3 Ω_o = 2

FOUNDATION

F 1 DESIGN BASIS
FOUNDATION DESIGN IS BASED ON RECOMMENDATIONS CONTAINED IN THE GEOTECHNICAL REPORT, VANCOUVER WATER STATION 14 PFAS TREATMENT DESIGN, VANCOUVER, WA. CONTRACTOR SHALL FOLLOW THE PROJECT SPECIFICATIONS AND TAKE INTO CONSIDERATION RECOMMENDATIONS CONTAINED IN THE REPORT. NOTIFY THE CONSTRUCTION MANAGER OF CONFLICTS BETWEEN SPECIFICATIONS AND THE REPORT RECOMMENDATIONS FOR RESOLUTION.

F 2 ALLOWABLE BEARING PRESSURE FOR PFAS TREATMENT PAD AND RINSE WATER TANK PAD
SHALLOW FOUNDATIONS SHALL BEAR ON AT LEAST 36-INCH-THICK REINFORCED CRUSHED ROCK PAD AND HAVE BEEN DESIGNED FOR AN ALLOWABLE BEARING PRESSURE OF 3,000 PSF. SEE GEOTECHNICAL ENGINEERING REPORT SECTION 6.3

F 3 ALLOWABLE BEARING PRESSURE FOR RESTROOM AND STORAGE BUILDING
SHALLOW FOUNDATIONS SHALL BEAR ON AT LEAST 6-INCH-THICK CRUSHED ROCK PAD AND HAVE BEEN DESIGNED FOR AN ALLOWABLE BEARING PRESSURE OF 2,000 PSF. SEE GEOTECHNICAL ENGINEERING REPORT SECTION 6.2

F 4 DIFFERING CONDITIONS
FOUNDATION CONDITIONS NOTED DURING CONSTRUCTION WHICH DIFFER FROM THOSE INDICATED IN THE REPORT SHALL BE IMMEDIATELY BROUGHT TO THE ATTENTION OF THE CONSTRUCTION MANAGER. CONTRACTOR IS RESPONSIBLE FOR REPLACING WORK CONDUCTED AFTER SUCH NOTIFICATION BUT BEFORE CONSTRUCTION MANAGER PROVIDES ADDITIONAL DIRECTIONS.

F 5 EXCAVATION, DE-WATERING, & SAFETY
CONTRACTOR SHALL PROVIDE FOR ALL DE-WATERING OF EXCAVATIONS, AND DESIGN / PROVIDE ALL CRIBBING, SHORING, AND BRACING REQUIRED FOR SAFETY AND TO ALLOW CONSTRUCTION OF THE WORK PRESENTED HEREIN.

F 6 STRUCTURAL BACKFILL
UNLESS NOTED OTHERWISE, STRUCTURAL BACKFILL SHALL BE PLACED IN UNIFORM LAYERS AND SHALL BE BROUGHT UP UNIFORMLY AROUND THE STRUCTURE. ADDITIONALLY, BACKFILL SHALL BE BROUGHT UP UNIFORMLY ON BOTH SIDES OF FOUNDATION WALLS. SEE SPECIFICATION 31 23 00 AND GEOTECHNICAL ENGINEERING REPORT FOR ADDITIONAL INFORMATION.

CONCRETE

C 1 APPLICABLE CODES
CONCRETE CONSTRUCTION SHALL CONFORM TO ACI 301-16 "SPECIFICATIONS FOR STRUCTURAL CONCRETE", AND THE FOLLOWING CODES:
ACI 318-19 "BUILDING CODE REQUIREMENTS FOR STRUCTURAL CONCRETE"
ACI 350-06 (FOR LIQUID CONTAINING STRUCTURES) - "CODE REQUIREMENTS FOR ENVIRONMENTAL ENGINEERING CONCRETE STRUCTURES"

C 2 REINFORCING STEEL DETAILS
ALL DETAILING, FABRICATION AND ERECTION OF REINFORCING BARS, UNLESS OTHERWISE NOTED, SHALL BE IN ACCORDANCE WITH ACI DETAILING MANUAL (ACI SP-66), LATEST EDITION.

C 3 DESIGN STRENGTH
1. STRUCTURAL CAST-IN-PLACE CONCRETE ..... f'c = 4,500 PSI
2. REINFORCING STEEL ..... ASTM A615, GRADE 60 DEFORMED BARS UNLESS OTHERWISE NOTED

C 4 CONCRETE COVER
CONCRETE COVER FOR REINFORCING BARS SHALL CONFORM TO ACI 350 AND AS FOLLOWS WITH MINIMUM COVER OF ONE BAR DIAMETER:
1. CONCRETE CAST AGAINST EARTH .....3"
2. CONCRETE EXPOSED TO EARTH, WASTEWATER, CHEMICALS OR WEATHER .....2"
3. CONCRETE NOT EXPOSED TO EARTH, WASTEWATER, CHEMICALS OR WEATHER .....1-1/2"

C 5 BAR DEVELOPMENT AND LAP SPLICE LENGTH
SEE TABLE AT THE END OF THESE STRUCTURAL NOTES. IN SLABS, BEAMS, GIRDERS AND HORIZONTAL REINFORCING AT WALLS, SPLICES OF ADJACENT REINFORCING STEEL BARS SHALL BE STAGGERED AT LEAST ONE SPLICE LENGTH, UNLESS OTHERWISE SPECIFIED.

C 6 WELDING REINFORCING BARS
ALL REINFORCING TO BE WELDED SHALL CONFORM TO ASTM A706. REBAR WELDING SHALL BE IN ACCORDANCE WITH AWS D1.4.

C 7 STANDARD HOOKS
BARS ENDING IN RIGHT ANGLE BENDS OR HOOKS SHALL CONFORM TO THE REQUIREMENTS OF ACI 318-19. PROVIDE STANDARD HOOK IN BARS WHICH TERMINATE AT WALL OR SLAB EDGES / INTERSECTIONS THAT PROVIDE LESS THAN THE SPECIFIED DEVELOPMENT LENGTH.

C 8 CHAMFERS
EXCEPT AS OTHERWISE REQUIRED, EXPOSED CONCRETE CORNERS AND EDGES SHALL HAVE 3/4" CHAMFERS. RE-ENTRANT CORNERS SHALL NOT HAVE FILLETS.

C 9 ANCHOR BOLTS
ANCHOR BOLTS SHALL BE STAINLESS STEEL TYPE 316 MATERIAL UNLESS OTHERWISE NOTED (SEE SPECIFICATIONS).

C 10 COMPATIBLE FINISHES
CURING COMPOUNDS AND OTHER SURFACE TREATMENTS, CONCRETE ADMIXTURES AND SUB-SLAB DRAINAGE SHALL BE REVIEWED BY CONTRACTOR AND CERTIFIED COMPATIBLE WITH FINISHES TO BE APPLIED LATER IN THE CONSTRUCTION SEQUENCE.

C 11 EXPOSED ENDS OF REINFORCING BARS AT SAWCUT OPENINGS IN EXISTING CONCRETE
REMOVE REINFORCING BARS 1 1/2 INCHES BACK FROM FACE OF OPENING BY FLAME GOUGING. FILL HOLE AND REPAIR SURFACE WITH CONCRETE REPAIR MORTAR.

GROUT

GR 1 PRECISION NON-SHRINK CEMENT GROUT FOR OPEN WEB STEEL JOIST BEARING BASE PLATES:
MASTERFLOW 928 GROUT OR EQUAL APPROVED BY OWNER.

GR 2 EQUIPMENT GROUTING
SEE MECHANICAL SPECIFICATIONS AND SPECIFICATION SECTION 03 60 00, GROUT.

GR 3 EPOXY ADHESIVE GROUT AT ANCHORS INTO CONCRETE: HILTI HIT-RE 500 V3
EPOXY ADHESIVE ANCHOR SYSTEM BY HILTI INC. OR EQUAL APPROVED BY ENGINEER OF RECORD. INSTALLERS OF HORIZONTAL OR UPWARDLY INCLINED ADHESIVE ANCHORS SHALL BE CERTIFIED IN ACCORDANCE WITH THE ACI / CRSI ADHESIVE ANCHOR INSTALLER CERTIFICATION PROGRAM.

GR 4 MASONRY ADHESIVE ANCHORS: HILTI HIT-HY 270.

DOWELS

DL 1 LOCATE HOLES IN EXISTING CONCRETE TO MISS MAIN REINFORCING BARS, STIRRUPS, AND EMBEDMENTS. THIS MAY INVOLVE RELOCATING DOWELS FROM POSITIONS SHOWN. NOTIFY THE OWNER OF ANY DOWEL RELOCATIONS. PRIOR TO DRILLING HOLES, FIELD VERIFY AND MARK THE LOCATION OF NEARBY EXISTING REINFORCING BARS, STIRRUPS AND EMBEDMENTS USING A PACHOMETER. IF THEY ARE HIT DURING DRILLING, NOTIFY THE OWNER.

DL 2 CLEAN AND PREPARE HOLES IN ACCORDANCE WITH THE EPOXY MANUFACTURER'S RECOMMENDATIONS. AS A MINIMUM, BLOW COMPRESSED OIL-FREE AIR FROM THE BOTTOM OF HOLE TOWARDS THE SURFACE. DRY AND CLEAN HOLE OF CONTAMINANTS.

DL 3 PRESSURE GROUT ALL HOLES DEEPER THAN TWO FEET. SUBMIT PROCEDURE AND TECHNIQUE FOR PRESSURE GROUTING TO OWNER FOR APPROVAL PRIOR TO PLACING EPOXY.

DL 4 FILL EACH HOLE WITH A SUFFICIENT AMOUNT OF EPOXY TO COMPLETELY SURROUND THE DOWEL. INSERT THE DOWEL AFTER THE EPOXY IS PLACED IN THE HOLE.

REINFORCED CONCRETE MASONRY

MA 1 CONCRETE MASONRY UNITS (CMU) SHALL BE HOLLOW LOAD BEARING UNITS CONFORMING TO ASTM C90, MEDIUM WEIGHT.

MA 2 SPECIFIED COMPRESSIVE STRENGTH OF CONCRETE MASONRY (f'm) = 2,000 PSI.

MA 3 CMU WALLS SHALL BE SOLID GROUTED.

MA 4 MORTAR SHALL BE TYPE S CONFORMING TO ASTM C270.

MA 5 CMU AND MORTAR AT WEATHER ENCLOSURE WALLS OR AT ELECTRICAL CONTROL ROOMS IN HIGH MOISTURE ENVIRONMENTS SHALL CONTAIN "DRY BLOCK ADMIXTURE" AS MANUFACTURED BY W.R. GRACE CO., AMOUNT PER MANUFACTURER'S RECOMMENDATION.

MA 6 GROUT SHALL BE f'c = 2,000 PSI CONFORMING TO ASTM C476.

MA 7 REINFORCING STEEL SHALL BE ASTM A615, GRADE 60 DEFORMED BARS.

MA 8 JOINT REINFORCEMENT SHALL BE LADDER TYPE WIRE REINFORCING WITH 9 GAUGE SIDE AND CROSS WIRES CONFORMING TO ASTM A951 AND A1064, AND HOT-DIP GALVANIZED PER ASTM A153 CLASS B-2.

MA 9 RUNNING BOND SHALL BE USED THROUGHOUT.

MA 10 USE 3/8" FLUSH MORTAR JOINTS THROUGHOUT, TOOLED CONCAVE.

STEEL

ST 1 ALL STRUCTURAL STEEL WORK SHALL BE IN ACCORDANCE WITH THE AISC "SPECIFICATION FOR STRUCTURAL STEEL BUILDINGS" (AISC 360-16) AND AISC "CODE OF STANDARD PRACTICE FOR STEEL BUILDINGS AND BRIDGES" (AISC 303-16).

ST 2 MATERIALS
1. STEEL WIDE FLANGE SHAPES SHALL CONFORM TO ASTM A992. OTHER STEEL SHAPES AND PLATES SHALL CONFORM TO ASTM A36.
2. STRUCTURAL STEEL PIPE SHALL CONFORM TO ASTM A53 TYPES E OR S, GRADE B. STRUCTURAL STEEL TUBING SHALL CONFORM TO ASTM A500 GRADE C (Fy = 50 KSI).
3. ALL STAINLESS STEEL SHALL BE TYPE 316 MEETING ASTM A276 FOR BARS AND SHAPES, AND ASTM A240 FOR PLATES, UNLESS OTHERWISE SPECIFIED. ALL STAINLESS STEEL SHALL BE PASSIVATED PER ASTM A380.

ST 3 WELDING
1. WELDING SHALL CONFORM TO AWS D1.1-1.
2. ELECTRODES FOR SHOP AND FIELD WELDS SHALL CONFORM TO AWS A5.1 OR A5.5, CLASS E70XX.
3. STAINLESS STEEL WELDING SHALL CONFORM TO AWS D1.6 WITH A5.4 OR A5.9 ELECTRODES.

ST 4 BOLTS
STRUCTURAL BOLTS AT STEEL FRAMING SHALL BE GALVANIZED AND CONFORM TO ASTM F3125 GRADE A325N (TYPE 1) FOR CONNECTION OF GALVANIZED OR PAINTED FRAMING. HIGH STRENGTH BOLTS SHALL BE FULLY TENSIONED UNLESS CONNECTING HSS SHAPES OR OTHERWISE NOTED. STAINLESS STEEL TYPE 316 BOLTS SHALL BE USED FOR CONNECTION OF STAINLESS STEEL AND ALUMINUM FRAMING.

ST 5 EXPANSION ANCHORS SHALL BE STAINLESS STEEL "KWIK BOLT TZ2" BY HILTI INC. OR EQUAL APPROVED BY OWNER.

ST 6 ENCASED STEEL
STEEL COMPLETELY ENCASED IN CONCRETE SHALL NOT BE GALVANIZED OR PAINTED AND SHALL HAVE A CLEAN SURFACE FOR BONDING TO CONCRETE UNLESS OTHERWISE NOTED ON THE DRAWINGS.

ST 7 PAINTING
STRUCTURAL STEEL SHALL BE PAINTED IN ACCORDANCE WITH SPECIFICATION. SHOP PRIMER SHALL BE COMPATIBLE WITH FINISH COATINGS.

ALUMINUM

A 1 APPLICABLE CODE
ALUMINUM CONSTRUCTION SHALL CONFORM TO THE 2020 EDITION OF THE ALUMINUM DESIGN MANUAL OF THE ALUMINUM ASSOCIATION.

A 2 MATERIAL
1. ALUMINUM STRUCTURAL SHAPES SHALL BE ALLOY 6061-T6 PER ASTM B308.
2. ALUMINUM PIPE AND TUBING SHALL BE ALLOY 6061-T6 PER ASTM B241.
3. ALUMINUM PLATE SHALL BE ALLOY 6061-T6 PER ASTM B209.
4. ALUMINUM RAISED PATTERN (CHECKERED PLATE) PLATE SHALL BE ALLOY 6061-T6 TREAD PLATE PER ASTM B632.

A 3 DISSIMILAR MATERIALS
WHERE ALUMINUM IS IN CONTACT WITH CONCRETE OR MASONRY SURFACES, CONTACT SURFACE SHALL BE COATED WITH A HEAVY COAT OF ALKALI-RESISTANT BITUMINOUS PAINT.

WOOD

W1 DIMENSIONAL FRAMING LUMBER SHALL BE DOUGLAS-FIR-LARCH WITH A MAXIMUM MOISTURE CONTENT OF 19%. MEMBER GRADE AND BENDING STRENGTH SHALL BE AS FOLLOWS:
STUDS AND PLATES (STUD GRADE) ..... F_b = 675 PSI
JOIST AND HEADERS (#2 GRADE) ..... F_b = 900 PSI
BEAMS AND STRINGERS (#1 AND BETTER) ..... F_b = 675 PSI

W2 ALL WOOD IN CONTACT WITH CONCRETE OR MASONRY SHALL BE PRESSURE TREATED.

W3 CONTRACTOR SHALL THOROUGHLY FAMILIARIZE HIMSELF WITH THE NAILING SCHEDULES FOUND IN THE BUILDING CODE. WHERE NOT SHOWN OTHERWISE ON PLANS, ALL NAILING OR SCREWING SHALL BE AS INDICATED IN THE BUILDING CODE. ALL SHEATHING OR GYP BOARD MUST BE NAILED OR SCREWED; ADHESIVE SHALL NOT BE USED IN PLACE OF NAILING.

W4 CONNECTORS FOR WOOD CONSTRUCTION SHALL BE SIMPSON OR APPROVED EQUAL. SIMPSON DESIGNATIONS FOR CONNECTORS ARE INDICATED ON PLAN. CONNECTORS SHALL BE INSTALLED PER MANUFACTURER'S REQUIREMENTS.

W5 FASTEN ALL SILL PLATES TO CONCRETE WITH 1/2" DIAMETER ANCHOR BOLTS WITH 12" EMBEDMENT AT 32" OC, UNLESS NOTED OTHERWISE.

W6 FABRICATED WOOD PRODUCTS (INCLUDING TRUSSES, JOISTS, BEAMS, ETC.) SHALL BE DESIGNED, FABRICATED, AND ERECTED BY THE SUPPLIER IN ACCORDANCE WITH THE APPROPRIATE REQUIREMENTS OF THE AMERICAN INSTITUTE OF TIMBER CONSTRUCTION (AITC), AMERICAN PLYWOOD ASSOCIATION (APA), TRUSS PLATE INSTITUTE (TPI), AND THE BUILDING CODE. IN THE CASE OF CONFLICTING DESIGN VALUES, THE MORE CONSERVATIVE VALUE SHALL APPLY.

W7 ERECTION DRAWINGS SHALL BE COMPLETE WITH ALL BRACING, BRIDGING, AND ANCHORAGE DETAILS FOR ALL BRACING, TEMPORARY OR PERMANENT. ALL CONNECTIONS NOT OTHERWISE SHOWN SHALL BE DESIGNED, DETAILED, AND HARDWARE SPECIFIED BY THE FABRICATOR, ELEMENTS SHALL BE DESIGNED SPECIFICALLY FOR THE HARDWARE SUPPLIED.

Brown AND Caldwell
PORTLAND, OREGON

Signer Name: Jonathan Harper
Signing Reason: I approved this document.
Signing Time: 2025-01-23 15:01:31(CST)

JONATHAN F. HARPER
STATE OF WASHINGTON
49638
STRUCTURAL ENGINEER
PROFESSIONAL ENGINEER

ISSUED FOR BID

CITY OF Vancouver WASHINGTON

WS14 PFAS TREATMENT DESIGN

REVISIONS

REV	DATE	DESCRIPTION

LINE IS 2 INCHES AT FULL SIZE

DESIGNED: A.QADAN
DRAWN: E.SCHOEL
CHECKED: J.HARPER
CHECKED: J.HESBY
APPROVED: J.HARPER

FILENAME
180318-G-00V21.rvt
BC PROJECT NUMBER
180318
CLIENT PROJECT NUMBER
PRJ100893

STRUCTURAL

STRUCTURAL GENERAL NOTES 1

DRAWING NUMBER
S-000-001

SHEET NUMBER 52 OF 125

Plot Date: 1/15/2025 9:01:23 AM Path: BIM 360://180318 - WS 14 PFAS Treatments Design/180318-G-00V21.rvt

dc37fdac84aa743fd880c31226dcf64a

SPECIAL INSPECTIONS

SI 1 AN INDEPENDENT TESTING COMPANY RETAINED BY THE OWNER AND APPROVED BY THE BUILDING OFFICIAL SHALL INSPECT THE FOLLOWING
(SEE EXPANDED LIST ON DRAWINGS S-000-003 AND S-000-004, SPECIFICATIONS AND GOVERNING CODE):

1. SOIL COMPACTION AT FOUNDATIONS.
2. REINFORCING BAR, CONCRETE PLACEMENT AND TAKING OF CONCRETE TEST SPECIMENS.
3. ANCHOR BOLTS.
4. FIELD WELDING OF STRUCTURAL STEEL AND ALUMINUM.
5. SHOP WELDING OF STRUCTURAL STEEL EXCEPT WHERE WELDING IS DONE IN AN APPROVED FABRICATOR'S SHOP IN ACCORDANCE WITH THE PROVISIONS OF THE GOVERNING BUILDING CODE.
6. EXPANSION ANCHOR INSTALLATION.
7. ANCHORS INSTALLED USING EPOXY ADHESIVE.
8. HIGH STRENGTH BOLTING.
9. MASONRY CONSTRUCTION.
10. MECHANICAL AND ELECTRICAL EQUIPMENT, PERIODIC SPECIAL INSPECTION OF STRUCTURAL COMPONENTS FOR SEISMIC RESISTANCE:
    - A. ANCHORAGE OF ELECTRICAL EQUIPMENT.
    - B. EMERGENCY AND STANDBY POWER SYSTEMS.
    - C. PIPING SYSTEMS INTENDED TO CARRY FLAMMABLE, COMBUSTIBLE OR HIGHLY TOXIC CONTENTS AND THEIR ASSOCIATED UNITS.
    - D. HVAC DUCTWORK THAT WILL CONTAIN HAZARDOUS MATERIALS.
    - E. INSTALLATION OF COMPONENTS WHERE THE COMPONENT IMPORTANCE FACTOR IS 1.5.
    - F. ELECTRICAL MOTORS, TRANSFORMERS, SWITCHGEAR UNIT SUBSTATIONS, AND MOTOR CONTROL CENTERS.
    - G. TANKS, HEAT EXCHANGERS, AND PRESSURE VESSELS.
    - H. EQUIPMENT USING COMBUSTIBLE ENERGY SOURCES.
    - I. EQUIPMENT VIBRATION ISOLATION SYSTEMS.

SI 2 CONTRACTOR SHALL NOTIFY THE TESTING COMPANY FOR ALL INSPECTIONS.

STRUCTURAL OBSERVATIONS

SO 1 THE OWNER SHALL RETAIN A REGISTERED DESIGN PROFESSIONAL TO PERFORM STRUCTURAL OBSERVATIONS. THE CONSTRUCTION MANAGER SHALL NOTIFY THE OWNER AT LEAST 48 HOURS BEFORE A DESIGNATED WORK IS TO BE COVERED. REFER TO SPECIFICATION 01 45 00 FOR ADDITIONAL REQUIREMENTS.

SO 2 REQUIRED STRUCTURAL OBSERVATIONS INCLUDE:

1. STRUCTURAL FILL.
2. FOUNDATIONS PREPARED FOR CONCRETE PLACEMENT.
3. COMPLETION OF BEARING WALLS PRIOR TO COVER-UP WITH NON-STRUCTURAL ELEMENTS.
4. PRIOR TO GROUTING FIRST LIFT OF CONCRETE MASONRY CONSTRUCTION.
5. COMPLETION OF LATERAL FORCE RESISTING ELEMENTS INCLUDING DIAPHRAGMS AND OTHER ELEMENTS.

STRUCTURAL DEFERRED SUBMITTALS (IBC 2021, SECTION 107.3.4.1)

SDS 1 THE CONTRACTOR SHALL SUBMIT DRAWINGS AND CALCULATIONS BEARING THE SEAL OF A PROFESSIONAL ENGINEER LICENSED IN WASHINGTON TO THE ENGINEER FOR REVIEW. STRUCTURAL DEFERRED SUBMITTALS INCLUDE:

1. ANCHOR BOLTS FOR ALL EQUIPMENT ANCHORAGE AND TANK ANCHORAGE.
2. GUARDRAILS AND HANDRAILS.
3. FLOOR ACCESS HATCHES.
4. ALTERNATE ROOF DECK FASTENING (IF USED).
5. PFAS STEEL VESSELS.
6. PREFABRICATED WOOD TRUSSES.
7. FREE STANDING CANOPY
8. SIDE WALL MANWAY

TENSION DEVELOPMENT AND LAP SPLICE LENGTHS (IN INCHES) FOR UNCOATED BARS IN NORMAL-WEIGHT CONCRETE WITH f_c' = 4,000 PSI OR HIGHER

THIS TABLE IS GOOD ONLY FOR CENTER/CENTER SPACING OF REINFORCING BARS EQUAL TO THE MINIMUM SHOWN OR GREATER. NO TRANSVERSE REINFORCING ASSUMED.

BAR SIZE	APPLICATION	CONCRETE COVER = 1.50 IN.			CONCRETE COVER = 2.00 IN.			CONCRETE COVER = 3.00 IN.		
		TOP	OTHER	MIN C/C SPACING	TOP	OTHER	MIN C/C SPACING	TOP	OTHER	MIN C/C SPACING
#3	DEVELOPMENT LAP SPLICE	12 16	12 16	3.50 3.75	12 16	12 16	4.50 4.75	12 16	12 16	6.50 6.75
#4	DEVELOPMENT LAP SPLICE	15 20	12 16	3.50 4.00	15 20	12 16	4.50 5.00	15 20	12 16	6.50 7.00
#5	DEVELOPMENT LAP SPLICE	19 24	15 19	3.75 4.25	19 24	15 19	4.75 5.25	19 24	15 19	6.75 7.25
#6	DEVELOPMENT LAP SPLICE	22 29	17 22	3.75 4.50	22 29	17 22	4.75 5.50	22 29	17 22	6.75 7.50
#7	DEVELOPMENT LAP SPLICE	37 48	28 37	4.00 4.75	33 42	25 33	5.00 5.75	33 42	25 33	7.00 7.75
#8	DEVELOPMENT LAP SPLICE	47 60	36 47	4.00 5.00	37 48	29 37	5.00 6.00	37 48	29 37	7.00 8.00

NOTES:

1. TABULATED VALUES ARE BASED ON GRADE 60 REINFORCING BARS AND NORMAL-WEIGHT CONCRETE.
2. TENSION DEVELOPMENT LENGTHS AND TENSION LAP SPLICE LENGTHS ARE CALCULATED PER ACI 318-19, SECTIONS 25.4.2.3 AND 25.5, RESPECTIVELY.
3. LAP SPLICE LENGTHS ARE LAP CLASS B = 1.3 l_d (ACI 318-19, SECTION 25.5.2).
4. TOP BARS ARE HORIZONTAL BARS WITH MORE THAN 12 IN. OF FRESH CONCRETE CAST BELOW THE BARS. NOTE THAT IN ADDITION TO TOP BARS IN BEAMS AND SLABS, ALL HORIZONTAL BARS IN WALLS ARE CONSIDERED TO BE TOP BARS.

Brown AND Caldwell
PORTLAND, OREGON

Signer Name: Jonathan Harper
Signing Reason: I approved this document
Signing Time: 2025-01-23 13:01:21(EST)

JONATHAN F. HARPER
STATE OF WASHINGTON
19638
STRUCTURAL ENGINEER
PROFESSIONAL ENGINEER

ISSUED FOR BID

CITY OF Vancouver WASHINGTON

WS14 PFAS TREATMENT DESIGN

REVISIONS

REV	DATE	DESCRIPTION

LINE IS 2 INCHES AT FULL SIZE

DESIGNED: A.QADAN
DRAWN: E.SCHOEL
CHECKED: J.HARPER
CHECKED: J.HESBY
APPROVED: J.HARPER

FILENAME 180318-G-00V21.rvt
BC PROJECT NUMBER 180318
CLIENT PROJECT NUMBER PRJ100893

STRUCTURAL

STRUCTURAL GENERAL NOTES 2

DRAWING NUMBER S-000-002

53 SHEET NUMBER OF 125

Plot Date: 1/15/2025 9:01:23 AM Path: BIM 360://180318 - WS 14 PFAS Treatments Design/180318-G-00V21.rvt

ed9b4b4ab1973c839c715cc7a26d1574

TABLE 1

REQUIRED SPECIAL INSPECTIONS - STRUCTURAL SYSTEMS

SYSTEM OR MATERIAL	REQUIRED INSPECTION	FREQUENCY OF INSPECTION		REMARKS
		CONTINUOUS	PERIODIC	
SOILS	VERIFY EXCAVATIONS ARE EXTENDED TO PROPER DEPTH AND HAVE REACHED PROPER MATERIAL		X	
	VERIFY SOIL MATERIALS BELOW FOOTINGS ARE ADEQUATE TO ACHIEVE DESIGN BEARING CAPACITY		X	
	PRIOR TO PLACEMENT OF CONTROLLED FILL, OBSERVE SUBGRADE AND VERIFY THAT SITE HAS BEEN PREPARED PROPERLY		X	
	PERFORM CLASSIFICATION AND TESTING OF CONTROLLED FILL MATERIALS		X	SEE TABLE 3
	VERIFY USE OF PROPER MATERIALS, DENSITIES AND LIFT THICKNESSES DURING PLACEMENT AND COMPACTION OF CONTROLLED FILL	X		SEE TABLE 3
CONCRETE	INSPECT FORMWORK FOR LOCATION AND DIMENSIONS OF MEMBER BEING FORMED		X	
	VERIFY MATERIAL FOR REINFORCEMENT		X	CONTRACTOR TO SUBMIT CERTIFIED MILL TEST REPORTS
	REINFORCING STEEL PLACEMENT		X	
	INSPECT ANCHORS TO BE CAST IN CONCRETE		X	PRIOR TO AND DURING CONCRETE PLACEMENT
	INSPECT POST-INSTALLED CONCRETE ANCHORS: - HORIZONTAL AND UPWARDLY INCLINED ADHESIVE ANCHORS - OTHER ANCHORS UNLESS ICC REPORT REQUIRED CONTINUOUS INSPECTION	X	X	INSPECTION TO CONFORM TO IBC AND TO ANCHOR MANUFACTURER'S RECOMMENDATIONS AND ICC REPORTS
	VERIFY USE OF REQUIRED CONCRETE MIX DESIGN(S)		X	
	AT THE TIME FRESH CONCRETE IS SAMPLED TO FABRICATE SPECIMENS FOR STRENGTH TESTS, PERFORM SLUMP AND AIR CONTENT TESTS, AND TEMPERATURE OF CONCRETE	X		CONTINUOUS DURING PREPARATION OF SAMPLES
	CONCRETE PLACEMENT	X		
	INSPECTION FOR MAINTENANCE OF CURING PROCEDURES AND TEMPERATURE		X	VERIFY APPROPRIATE CURING METHOD HAS BEEN IMPLEMENTED AFTER EACH POUR
	VERIFY IN-SITU CONCRETE STRENGTH PRIOR TO REMOVAL OF SHORES AND FORMS FROM STRUCTURAL SLABS AND BEAMS		X	
	CEMENTITIOUS GROUTING OF BASE PLATES AND EPOXY GROUTING FOR EQUIPMENT MOUNTING	X		
MASONRY	VERIFY PROPORTIONS OF SITE -PREPARED MORTAR AND GROUT		X	AT START OF MASONRY CONSTRUCTION
	VERIFY SPECIFIED TYPE, GRADE AND SIZE OF REINFORCEMENT		X	CONTRACTOR TO SUBMIT CERTIFIED MILL TEST REPORTS
	VERIFY MATERIALS FOR MASONRY UNITS, MORTAR, GROUT, ANCHORS, TIES AND ACCESSORIES		X	CONTRACTOR TO SUBMIT MANUFACTURER'S CERTIFIED COMPLIANCE REPORTS
	VERIFY TYPE, SIZE, LOCATION AND INSTALLATION OF EMBEDDED CONNECTORS AND ANCHORS		X	
	VERIFY SIZE AND LOCATION OF STRUCTURAL ELEMENTS		X	
	VERIFY TYPE, SIZE AND LOCATION OF ANCHORAGE OF MASONRY TO OTHER CONSTRUCTION		X	
	VERIFY PROTECTION PROVISIONS FOR COLD AND HOT WEATHER MASONRY CONSTRUCTION		X	
	PLACEMENT OF MASONRY UNITS AND CONSTRUCTION OF MORTAR JOINTS		X	
	REINFORCING STEEL PLACEMENT		X	
	VERIFY GROUT SPACE IS CLEAN		X	
	VERIFY PROPORTIONS OF GROUT; USE OF REQUIRED GROUT MIX DESIGN		X	
	OBSERVE GROUT PLACEMENT	X		
	OBSERVE PREPARATION OF ANY GROUT OR MORTAR SPECIMENS AND/OR PRISMS	X		CONTINUOUS DURING PREPARATION OF SAMPLES

TABLE 1

REQUIRED SPECIAL INSPECTIONS - STRUCTURAL SYSTEMS

SYSTEM OR MATERIAL	REQUIRED INSPECTION	FREQUENCY OF INSPECTION		REMARKS
		CONTINUOUS	PERIODIC	
STRUCTURAL STEEL AND ALUMINUM	FABRICATION OF STRUCTURAL ELEMENTS			FABRICATOR SHALL BE APPROVED IN ACCORDANCE WITH IBC, CHAPTER 17 TO PERFORM WORK WITHOUT SPECIAL INSPECTION
	VERIFY MATERIAL OF ANCHOR BOLTS AND THREADED RODS		X	CONTRACTOR TO SUBMIT MANUFACTURER'S CERTIFIED TEST REPORTS
	VERIFY MATERIAL OF HIGH-STRENGTH BOLTS, NUTS AND WASHERS		X	CONTRACTOR TO SUBMIT MANUFACTURER'S CERTIFIED TEST REPORTS
	VERIFY MATERIAL FOR STRUCTURAL STEEL AND ALUMINUM SHAPES, PLATES, BARS, ETC.		X	CONTRACTOR TO SUBMIT CERTIFIED MILL TEST REPORTS
	VERIFY MATERIALS FOR WELD FILLER MATERIALS		X	
	VERIFY WELDER QUALIFICATIONS		X	CONTRACTOR TO SUBMIT WELDERS CERTIFICATES
	VERIFY USE OF PROPER WELDING PROCEDURES		X	
	INSPECT COMPLETE AND PARTIAL-PENETRATION GROOVE WELDS, MULTI-PASS FILLET WELDS, AND SINGLE-PASS FILLET WELDS GREATER THAN 5/16"	X		
	INSPECT SINGLE-PASS FILLET WELDS LESS THAN OR EQUAL TO 5/16"		X	VISUALLY INSPECT ALL WELDS
	INSPECT HIGH-STRENGTH BEARING-TYPE BOLTED CONNECTIONS		X	
	INSPECT HIGH-STRENGTH SLIP CRITICAL-TYPE BOLTED CONNECTIONS	X		
	VERIFY TYPE, DEPTH AND GAGE OF DECKING AND GRATING		X	
	INSPECT INSTALLATION (ATTACHMENT) OF DECKING AND GRATING		X	
	INSPECT FRAME AND TRUSSES TO VERIFY THAT BRACING, STIFFENERS, MEMBER LOCATIONS AND JOINT DETAILS COMPLY WITH APPROVED CONSTRUCTION DRAWINGS		X	

QUALITY ASSURANCE NOTES

1. THE QUALITY OF THE WORKMANSHIP AND THE QUALITY OF THE MATERIALS OF CONSTRUCTION ARE GOVERNED BY THE INTERNATIONAL BUILDING CODE, 2021 EDITION (IBC).
2. RESTROOM AND STORAGE BUILDING TO BE CONSTRUCTED AS A PART OF THIS PROJECT ARE CLASSIFIED AS RISK CATEGORY III, IN ACCORDANCE WITH THE IBC. THE CONCRETE WATER TANKS AND PFAS VESSELS ARE CLASSIFIED AS RISK CATEGORY IV IN ACCORDANCE WITH THE IBC. ALL STRUCTURES ARE CLASSIFIED AS SEISMIC DESIGN CATEGORY D.
3. TO ASSURE THE QUALITY OF THE CONSTRUCTION OF THIS PROJECT, STRUCTURAL TESTS, SPECIAL INSPECTION AND STRUCTURAL OBSERVATION WILL BE PERFORMED IN ACCORDANCE WITH THE IBC, CHAPTER 17.
4. WHERE FREQUENCY OF INSPECTION IS SPECIFIED TO BE CONTINUOUS, THE SPECIAL INSPECTOR IS EXPECTED TO BE PRESENT IN THE AREA WHERE THE WORK IS BEING PERFORMED AND PROVIDING FULL-TIME OBSERVATION OF THE WORK REQUIRING SPECIAL INSPECTION.
5. WHERE FREQUENCY OF INSPECTION IS SPECIFIED TO BE PERIODIC, THE SPECIAL INSPECTOR IS EXPECTED TO BE PRESENT IN THE AREA WHERE THE WORK HAS BEEN OR IS BEING PERFORMED AND AT THE COMPLETION OF THE WORK (PRIOR TO THE NEXT CONSTRUCTION TASK).
6. SPECIAL INSPECTIONS ARE IN ADDITION TO INSPECTIONS BY THE BUILDING OFFICIALS. CONSTRUCTION IS SUBJECT TO INSPECTION BY THE BUILDING OFFICIAL. COORDINATE WITH BUILDING DEPARTMENT TO DETERMINE REQUIRED INSPECTIONS.
7. CONTRACTOR SHALL PROVIDE ACCESS TO THE WORK FOR REQUIRED INSPECTIONS. CONTRACTOR SHALL PROVIDE NOTIFICATION IN ADVANCE OF REQUIRED INSPECTIONS, TESTING AND STRUCTURAL OBSERVATIONS.

Brown AND Caldwell
PORTLAND, OREGON

Signer Name: Jonathan Harper
Signing Reason: I approved this document.
Signing Time: 2025-01-23 15:01:31(EST)

JONATHAN F. HARPER
STATE OF WASHINGTON
49638
STRUCTURAL ENGINEER
PROFESSIONAL ENGINEER

ISSUED FOR BID

CITY OF Vancouver WASHINGTON

WS14 PFAS TREATMENT DESIGN

REVISIONS

REV	DATE	DESCRIPTION

LINE IS 2 INCHES AT FULL SIZE

DESIGNED: A.QADAN
DRAWN: E.SCHOEL
CHECKED: J.HARPER
CHECKED: J.HESBY
APPROVED: J.HARPER

FILENAME
180318-G-00V21.rvt

BC PROJECT NUMBER
180318

CLIENT PROJECT NUMBER
PRJ100893

STRUCTURAL

STRUCTURAL SPECIAL INSPECTIONS NOTES 1

DRAWING NUMBER
S-000-003

54 SHEET NUMBER OF 125

Plot Date: 1/15/2025 9:01:24 AM Path: BIM 360://180318 - WS 14 PFAS Treatments Design/180318-G-00V21.rvt

4384a65300b7e355114d3be8a655b251

TABLE 2

REQUIRED SPECIAL INSPECTIONS - NONSTRUCTURAL SYSTEMS

SYSTEM OR MATERIAL	REQUIRED INSPECTION	FREQUENCY OF INSPECTION		REMARKS
		CONTINUOUS	PERIODIC	
ARCHITECTURAL	INSPECT WELDING OF GUARD AND HANDRAIL SYSTEMS		X	
	SUSPENDED CEILINGS AND THEIR ANCHORAGE		X	
MECHANICAL	INSPECT ANCHORAGE OF ALL MECHANICAL SYSTEMS (INCLUDING EQUIPMENT PIPING, DUCT WORK, ETC.) REQUIRING STANDBY POWER		X	
	CERTIFICATE OF COMPLIANCE FOR ALL MECHANICAL EQUIPMENT REQUIRING STANDBY POWER			EQUIPMENT MANUFACTURER SHALL PROVIDE CERTIFICATE OF COMPLIANCE
ELECTRICAL	INSPECT ANCHORAGE OF ELECTRICAL EQUIPMENT FOR STANDBY POWER		X	
	INSPECT ANCHORAGE OF ALL OTHER ELECTRICAL EQUIPMENT REQUIRING STANDBY POWER		X	
	CERTIFICATE OF COMPLIANCE FOR ALL ELECTRICAL EQUIPMENT FOR STANDBY POWER AND ALL ELECTRICAL EQUIPMENT REQUIRING STANDBY POWER			EQUIPMENT MANUFACTURER SHALL PROVIDE CERTIFICATE OF COMPLIANCE
	EMERGENCY LIGHTING		X	

TABLE 3

REQUIRED TESTING FOR SPECIAL INSPECTIONS

SYSTEM OR MATERIAL	TESTING		REMARKS
	CODE OR STANDARD REFERENCE	FREQUENCY	
GEOTECHNICAL			
PREPARED SUBGRADE DENSITY	ASTM D6938	EACH 300 SF OF PREPARED SUBGRADE	PER GEOTECHNICAL REPORT
FILL IN-PLACE DENSITY	ASTM D6938	EACH 300 SF OF EACH LIFT PLACED EACH DAY	PER GEOTECHNICAL REPORT
CONCRETE			
CONCRETE COMPRESSIVE STRENGTH	ASTM C31,ASTM C39,ASTM C172	SEE SPECIFICATION 03 30 00	
CONCRETE SLUMP	ASTM C143	WHENEVER CYLINDERS ARE CAST	
CONCRETE AIR CONTENT	ASTM C231	WHENEVER CYLINDERS ARE CAST	
CONCRETE TEMPERATURE	ASTM C1064	WHENEVER CYLINDERS ARE CAST	
CEMENTITIOUS AND EPOXY GROUT COMPRESSIVE STRENGTH	ASTM C942 (CEMENTITIOUS) ASTM C579 (EPOXY)		TEST 2" CUBES FOR EACH GROUT SHIPMENT TO THE FIELD
MASONRY			
COMPRESSIVE STRENGTH,f'm, OF MASONRY ASSEMBLIES			PRIOR TO START OF MASONRY CONSTRUCTION, CONTRACTOR SHALL SUBMIT VERIFICATION OF COMPRESSIVE STRENGTH FOR EACH TYPE OF MASONRY ASSEMBLY. PRISM TEST METHOD SHALL BE USED.
MASONRY UNIT STRENGTH	ASTM C140	(12) UNITS PER EACH 50000 UNITS	CONTRACTOR TO SUBMIT MANUFACTURER'S CERTIFIED TEST REPORTS FOR EACH TYPE OF MASONRY UNIT
GROUT STRENGTH	ASTM C1019	EACH 5000 SF OF WALL	COMPRESSIVE STRENGTH, AIR CONTENT, SLUMP, TEMPERATURE OF FILL FOR MASONRY ASSEMBLIES SHALL BE TESTED PER CONCRETE REQUIREMENTS ABOVE.
PRISM STRENGTH OF MASONRY ASSEMBLY	ASTM C1314	(3) PRISMS FOR EACH 5000 SF OF WALL	A SET OF TESTS IS REQUIRED FOR EACH TYPE OF MASONRY ASSEMBLY
STEEL			
MAGNETIC PARTICLE (MT) AND ULTRASONIC (UT) TESTING OF WELDS	MT - AWS D1.1 6.14.4 UT - AWS D1.1 6.13 & 6.14.3	AT ALL PARTIAL AND FULL PENETRATION FIELD WELDS	
PRE-INSTALLATION VERIFICATION OF PRETENSIONED HIGH STRENGTH BOLTS	RCSC SPECIFICATION FOR STRUCTURAL JOINTS USING ASTM A325 OR A490 BOLTS SECTION 7	EACH COMBINATION OF DIAMETER, LENGTH, GRADE, AND LOT TO BE USED IN THE WORK	

Brown AND Caldwell
PORTLAND, OREGON

Signer Name: Jonathan Harper
Signing Reason: I approved this document
Signing Time: 2025-01-23 13:01:21(EST)

JONATHAN F. HARPER
STATE OF WASHINGTON
49638
STRUCTURAL ENGINEER
PROFESSIONAL ENGINEER

ISSUED FOR BID

CITY OF Vancouver WASHINGTON

WS14 PFAS TREATMENT DESIGN

REVISIONS

REV	DATE	DESCRIPTION

LINE IS 2 INCHES AT FULL SIZE

DESIGNED: A.QADAN
DRAWN: E.SCHOEL
CHECKED: J.HARPER
CHECKED: J.HESBY
APPROVED: J.HARPER

FILENAME 180318-G-00V21.rvt
BC PROJECT NUMBER 180318
CLIENT PROJECT NUMBER PRJ100893

STRUCTURAL

STRUCTURAL SPECIAL INSPECTIONS NOTES 2

DRAWING NUMBER
S-000-004

55 SHEET NUMBER OF 125

Plot Date: 1/15/2025 9:01:24 AM Path: BIM 360://180318 - WS 14 PFAS Treatments Design/180318-G-00V21.rvt

386fdb8c807093b7c2b281ceabc5f0c6

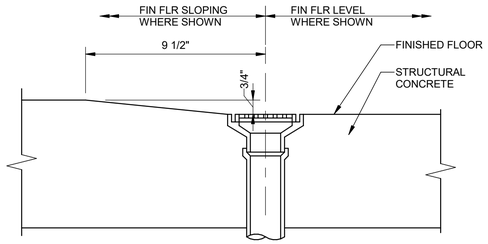

S01001 SLAB AT FLOOR DRAIN
NTS

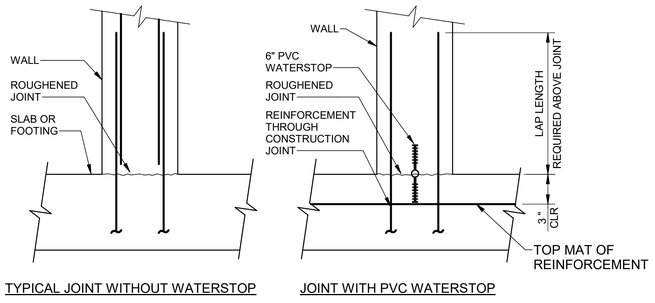

TYPICAL JOINT WITHOUT WATERSTOP

JOINT WITH PVC WATERSTOP

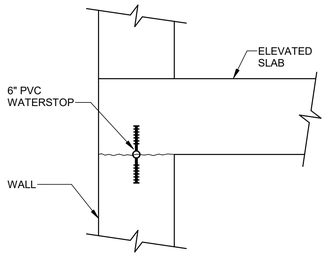

NOTES:

1. SEE SECTIONS AND DETAILS FOR TYPE OF JOINT REQUIRED.
2. ALL REINFORCING TO CONTINUE THROUGH JOINT.

WALL/ELEVATED SLAB JOINT WITH PVC WATERSTOP

S01004 HORIZONTAL WALL CONSTRUCTION JOINT
NTS

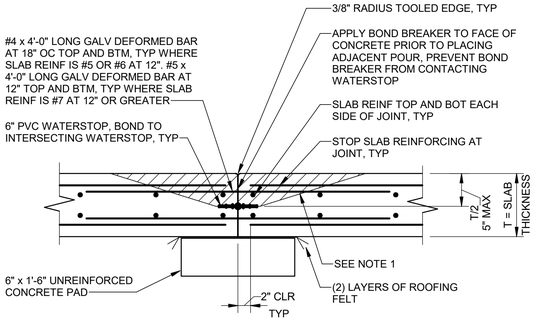

NOTES:

1. CONCRETE SHALL BE PLACED AND WORKED UNDER WATERSTOP BY HAND, MAKING SURE THAT AIR AND ROCK POCKETS HAVE BEEN ELIMINATED PRIOR TO PLACING CONCRETE ON TOP OF WATERSTOP. VIBRATE CONCRETE ALL AROUND WATERSTOP TO ASSURE COMPLETE EMBEDMENT OF THE WATERSTOP IN THE CONCRETE.
2. WATERSTOP IS NOT REQUIRED FOR THE PFAS CONCRETE PAD

S01005 BASE SLAB CONTROL JOINT
NTS

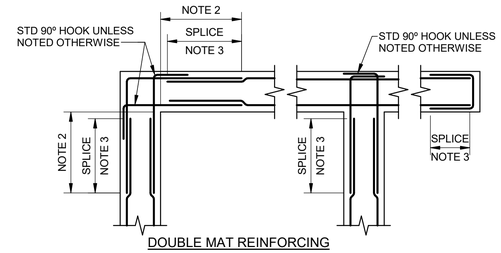

DOUBLE MAT REINFORCING

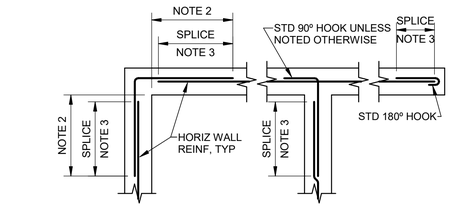

SINGLE MAT REINFORCING

NOTES:

1. UNLESS NOTED OTHERWISE, SIZE AND SPACING OF CORNER OR INTERSECTION REINFORCING SHALL MATCH HORIZONTAL REINFORCING SHOWN IN SPECIFIC SECTIONS OR DETAILS. VERTICAL REINFORCING NOT SHOWN FOR CLARITY.
2. UNLESS NOTED OTHERWISE, BAR SPLICE SHALL BE LOCATED OUTSIDE OF CORNER OR INTERSECTION AREA TO AVOID CONGESTION. CONTRACTORS OPTION TO PROVIDE SINGLE BENT BAR IN LIEU OF SPLICE CONFIGURATION AT ONE END ONLY.
3. SEE GENERAL STRUCTURAL NOTES FOR SPLICE LENGTH. HORIZONTAL WALL BARS SHALL BE CONSIDERED TOP BARS FOR DEVELOPMENT AND SPLICE LENGTHS.

S01002 HORIZONTAL WALL REINFORCING
NTS

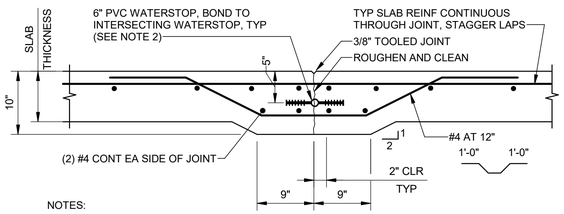

NOTES:

1. 10" THICKENED SLAB AND ADDITIONAL #4 REQUIRED ONLY AT JOINTS WITH WATERSTOPS.
2. FOR SLABS 10" THICK OR GREATER, NO THICKENING REQUIRED.

ONE LAYER OF REINFORCING

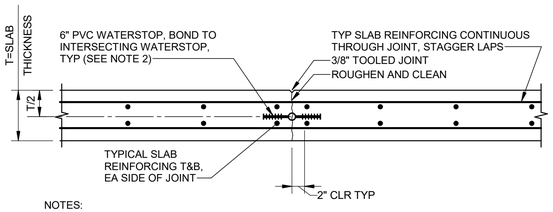

NOTES:

1. ALL REINFORCING SHALL BE CONTINUOUS THROUGH JOINT.
2. WATERSTOP REQUIRED AT LIQUID HOLDING BASINS AND TANKS, AND BELOW GRADE SLABS.

DOUBLE MAT OF REINFORCING

S01006 SLAB CONSTRUCTION JOINTS
NTS

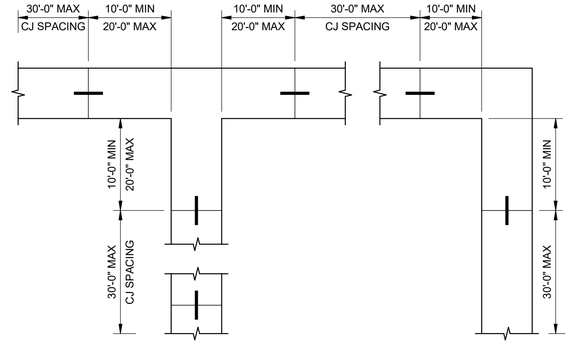

PLAN

WALL CONSTRUCTION JOINT SPACING

NOTES:

1. COORDINATE CONSTRUCTION JOINT LOCATIONS AND TIME BETWEEN CONCRETE POURS WITH SPECIFICATION 03 30 00.
2. LOCATE WALL CONSTRUCTION JOINTS AS SHOWN, UNLESS INDICATED OTHERWISE.

S01003 WALL CONSTRUCTION JOINT SPACING
NTS

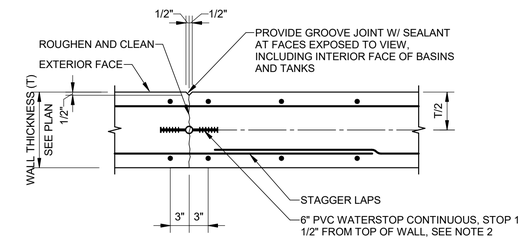

NOTES:

1. ALL REINFORCING SHALL BE CONTINUOUS THROUGH JOINT.
2. WATERSTOP REQUIRED AT LIQUID HOLDING BASINS AND TANKS, AND BELOW GRADE WALLS.

S01007 VERTICAL WALL CONSTRUCTION JOINT
NTS

Brown AND Caldwell
PORTLAND, OREGON

Signer Name: Jonathan Harper
Signing Reason: I approved
this document
Signing Time: 2025-01-23
13:01:24(EST)

JONATHAN F. HARPER
STATE OF WASHINGTON
STRUCTURAL ENGINEER
PROFESSIONAL ENGINEER
19638

ISSUED FOR BID

CITY OF Vancouver WASHINGTON

WS14 PFAS TREATMENT DESIGN

REVISIONS

REV	DATE	DESCRIPTION

LINE IS 2 INCHES AT FULL SIZE

DESIGNED:	A.QADAN
DRAWN:	E.SCHOEL
CHECKED:	J.HARPER
CHECKED:	J.HESBY
APPROVED:	J.HARPER

FILENAME
180318-G-00V21.rvt

BC PROJECT NUMBER
180318

CLIENT PROJECT NUMBER
PRJ100893

STRUCTURAL

TYPICAL DETAILS 1

DRAWING NUMBER
S-000-005

SHEET NUMBER 56 OF 125

Plot Date: 1/15/2025 9:01:25 AM Path: BIM 360://180318 - WS 14 PFAS Treatments Design/180318-G-00V21.rvt

03fa5437387cfe15978e0b7421e1aa13

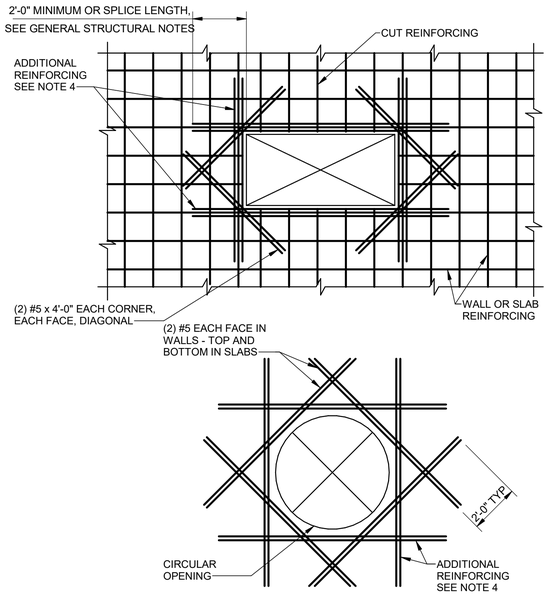

NOTES:

1. THIS DETAIL APPLIES TO OPENINGS UP TO 3'-0" MAXIMUM DIMENSION, UNLESS OTHERWISE SHOWN ON THE DRAWINGS. AT OPENINGS 12" OR LESS, NO ADDITIONAL #5 DIAGONAL REINFORCING IS REQUIRED UNLESS NOTED OTHERWISE. REINFORCING SHALL BE OFFSET, STILL MAINTAINING REQUIRED SPACING, TO ALLOW FOR OPENING WHERE PRACTICAL, OR CUT AT THE OPENING AND ADDITIONAL REINFORCING ADDED PER NOTE 4.
2. OPENINGS ARE NOT ALL SHOWN ON STRUCTURAL DRAWINGS. PROVIDE OPENINGS IN ACCORDANCE WITH ARCHITECTURAL, MECHANICAL, AND OTHER CONTRACT DRAWINGS.
3. ADDITIONAL REINFORCEMENT MAY BE OMITTED WHERE OPENING IS FRAMED BY BEAMS OR WALLS.
4. ADDITIONAL REINFORCING (4) SIDES OF OPENING, EACH FACE, EQUAL TO NUMBER AND SIZE OF CUT REINFORCING. WHERE AN ODD NUMBER OF REBAR ARE CUT, PROVIDE (ODD NO. +1)/2 EACH SIDE OF OPENING (MIN 2 ADDITIONAL BARS EACH SIDE).
5. MINIMUM SPACING BETWEEN OPENINGS TO BE 2X MAXIMUM OPENING SIZE.
6. OPENINGS SPACED CLOSER THAN THE MINIMUM SPACING SHALL BE REINFORCED AS A SINGLE OPENING.
7. OPENINGS LARGER THAN ALLOWED ON THIS DETAIL REQUIRE CONSULTATION WITH THE STRUCTURAL ENGINEER.

S02001 ADDITIONAL REINFORCING AT OPENINGS
NTS

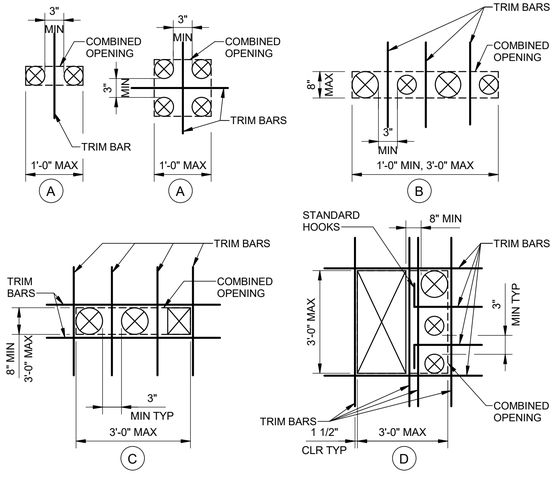

NOTE: SEE DETAIL S02001 FOR TRIM BAR NOTES AND REQUIREMENTS.

S02002 COMBINED OPENING TRIM BARS
NTS

TRIM BAR NOTES:

1. OPENINGS IN CONCRETE WHICH ARE CLOSER TO ONE ANOTHER THAN THE DIAMETER OR SHORTER SIDE OF THE LARGER OF THE TWO ARE CONSIDERED TO FORM A COMBINED OPENING.
2. THESE DIAGRAMS ARE FOR COMBINED OPENINGS WHOSE LARGER DIMENSION DOES NOT EXCEED 3'-0". SEE DRAWINGS FOR "ADDITIONAL REINFORCING AT OPENINGS" DETAIL FOR LARGER COMBINED OPENINGS
3. TRIM BAR SIZE IS SELECTED TO MATCH TYPICAL WALL OR SLAB REINFORCING IN EACH DIRECTION. PLACE TRIM BARS AT EACH FACE OR LAYER OF TYPICAL REINFORCING.
4. TRIM BAR EXTENSION PAST EDGES OF COMBINED OPENINGS SHALL BE 1'-0" FOR #4 BARS, 1'-6" FOR #5 BARS, AND ONE DEVELOPMENT LENGTH FOR LARGER BARS.
5. DISPLACE PRINCIPAL REINFORCEMENT TO EACH SIDE OF COMBINED OPENING OR PLACE BETWEEN INDIVIDUAL OPENINGS. DO NOT CUT PRINCIPAL REINFORCEMENT.
6. SEE " ADDITIONAL REINFORCING AT OPENINGS" DETAIL FOR TRIM BARS FOR INDIVIDUAL OPENINGS.
7. SUBMIT SPECIAL SITUATIONS TO ENGINEER FOR REVIEW.

TRIM BAR REQUIREMENTS:

A IF THE COMBINED OPENING IS SMALLER THAN 1'-0", PROVIDE (1) #5 EACH FACE BETWEEN OPENINGS.

B IF THE LARGER DIMENSION OF A COMBINED OPENING EXCEEDS 1'-0" BUT THE SMALLER DIMENSION IS LESS THAN OR EQUAL TO 8", AND PROVIDED THE COMBINED OPENING IS ALIGNED WITH THE PRINCIPAL REINFORCEMENT, PROVIDE (1) #5 EACH FACE BETWEEN OPENINGS.

C IN OTHER CASES WHERE OPENINGS ARE ARRANGED IN A SINGLE LINE, PROVIDE (1) #5 EACH FACE BETWEEN OPENINGS AND (1) #5 EACH FACE AROUND PERIMETER OF COMBINED OPENING.

D WHERE INDIVIDUAL OPENINGS OF A COMBINED OPENING FORM TWO OR MORE ROWS, SEPARATE THE ROWS BY AT LEAST 8" OF CONCRETE. PROVIDE (2) #5 EACH FACE BETWEEN ROWS OF OPENINGS, (1) #5 EACH FACE BETWEEN OPENINGS IN THE PERPENDICULAR DIRECTION, AND (1) #5 EACH FACE AROUND THE PERIMETER OF COMBINED OPENINGS. PROVIDE STANDARD HOOKS WHERE BARS TERMINATE WITHIN THE COMBINED OPENING.

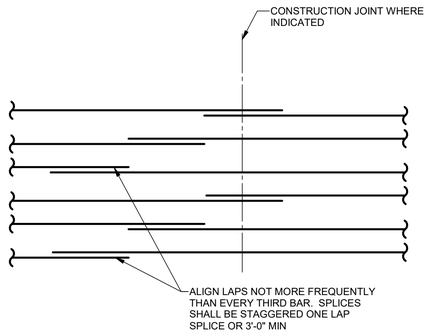

S02003 RADIAL WALL REINFORCING SPLICE
NTS

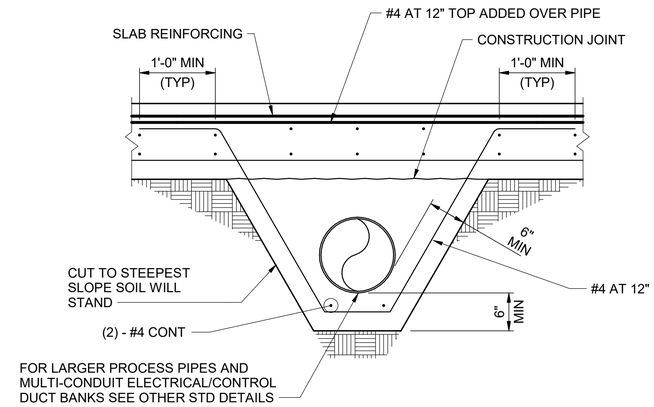

S02004 SMALL DIAMETER (LESS THAN 12" Ø) PIPE OR CONDUIT ENCASEMENT
NTS

Brown AND Caldwell
PORTLAND, OREGON

Signer Name: Jonathan Harper
Signing Reason: I approved this document.
Signing Time: 2025-01-23 15:01:14(EST)

JONATHAN F. HARPER
STATE OF WASHINGTON
49638
STRUCTURAL ENGINEER
PROFESSIONAL ENGINEER

ISSUED FOR BID

CITY OF Vancouver WASHINGTON

WS14 PFAS TREATMENT DESIGN

REVISIONS

REV	DATE	DESCRIPTION

LINE IS 2 INCHES AT FULL SIZE

DESIGNED:	A.QADAN
DRAWN:	E.SCHOEL
CHECKED:	J.HARPER
CHECKED:	J.HESBY
APPROVED:	J.HARPER

FILENAME
180318-G-00V21.rvt

BC PROJECT NUMBER
180318

CLIENT PROJECT NUMBER
PRJ100893

STRUCTURAL

TYPICAL DETAILS 2

DRAWING NUMBER
S-000-006

SHEET NUMBER 57 OF 125

Plot Date: 1/15/2025 9:01:26 AM
Path: BIM 360://180318 - WS 14 PFAS Treatments Design/180318-G-00V21.rvt

7a17c11b7d5347bbcccf28da2c51a6d9

MASONRY REINFORCING BAR LAP SPLICE SCHEDULE

BAR SIZE	f'm = 2,000 psi						
	6" CMU	8" CMU		10" CMU		12" CMU	
	CLASS	CLASS		CLASS		CLASS	
	A	A	B	A	B	A	B
#3	12"	12"	12"	12"	12"	12"	12"
#4	18"	13"	21"	12"	20"	12"	20"
#5	28"	20"	35"	16"	32"	13"	32"
#6	**	38"	54"	29"	54"	24"	54"
#7	--	52"	**	40"	**	33"	63"
#8	--	**	--	61"	**	52"	**
#9	--	--	--	79"	--	64"	--

NOTES:

1. CLASS A SPLICES MAY BE USED WHEN ONLY ONE BAR IS CONTINUOUS IN THE MASONRY CELL OR COURSE.
2. CLASS B SPLICES SHALL BE USED WHEN TWO BARS ARE CONTINUOUS IN THE MASONRY CELL OR COURSE.
3. ** INDICATES THAT A LAP SPLICE IS NOT ALLOWED AND MECHANICAL BAR COUPLERS ARE REQUIRED FOR THE BAR SPLICES. SPLICES SHALL BE OFFSET 2'-0" TO AVOID CONGESTION.
4. WHERE VERTICAL BARS HAVE A REQUIRED LAP SPLICE GREATER THAN THE HEIGHT OF THE GROUT POUR. THE BAR SPLICES SHALL BE MADE WITH A MECHANICAL BAR COUPLER. WHERE THE HEIGHT OF THE GROUT POUR EXCEEDS 60 INCHES, HIGH LIFT GROUTING PROCEDURES SHALL BE FOLLOWED.
5. WHERE MECHANICAL BAR COUPLERS ARE USED, THE CONNECTOR SHALL DEVELOP 125% OF THE SPECIFIED YIELD STRENGTH OF THE BAR IN TENSION AND COMPRESSION.

(S03001) MASONRY REINFORCING BAR LAP SPLICE SCHEDULE
NTS

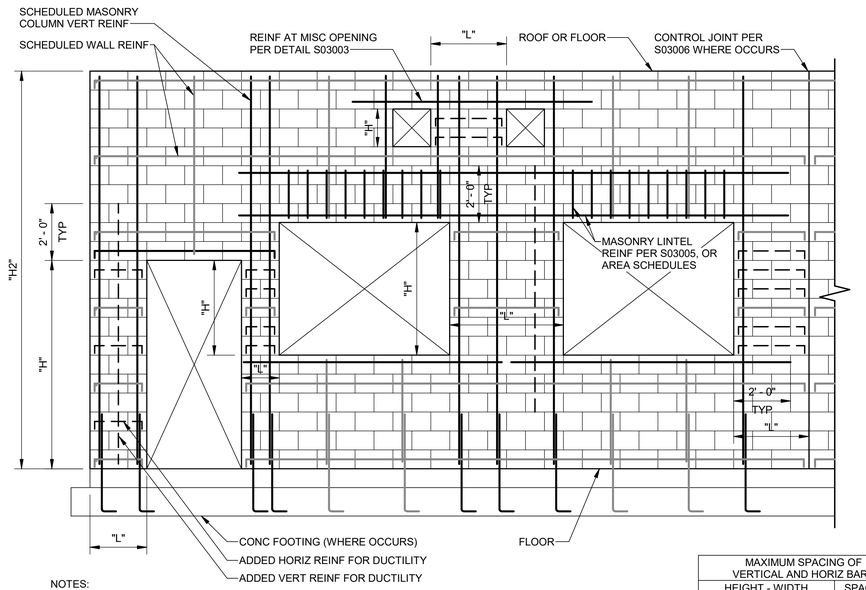

NOTES:

1. ADDED BAR SIZE SHALL BE (1) #4 MINIMUM.
2. ALL ADDED BARS SHALL BE EMBEDDED IN GROUT.
3. ALL ADDED HORIZONTAL REINFORCING SHALL BE TERMINATED WITH A 90 DEG OR 180 DEG STANDARD HOOK AROUND THE VERTICAL REINFORCING.
4. FOR WALLS WITH "H2" AND "L"≥12'-0" ADDITIONAL REINFORCING FOR DUCTILITY IS NOT REQUIRED.
5. TYPICAL WALL REINFORCING SHALL BE AS SHOWN ON AREA SCHEDULES OR PLAN DRAWINGS.
6. SEE DETAILS S03001, S03003, S03004, S03005 AND S03006 FOR ADDITIONAL INFORMATION.

WALL REINFORCING LEGEND:

- SCHEDULED WALL REINF
- SCHEDULED OPENING REINF
- ADDED REINF FOR DUCTILITY

MAXIMUM SPACING OF VERTICAL AND HORIZ BARS	
HEIGHT - WIDTH	SPACING
("H" OR "L") < 4'-0"	8" OC
4'-0" ≤ ("H" OR "L") < 6'-0"	16" OC
6'-0" ≤ ("H" OR "L") < 8'-0"	24" OC
8'-0" ≤ ("H" OR "L") < 10'-0"	32" OC
10'-0" ≤ ("H" OR "L") < 12'-0"	40" OC
12'-0" ≤ ("H" OR "L")	48" OC

(S03002) MASONRY WALL ELEVATION
NTS

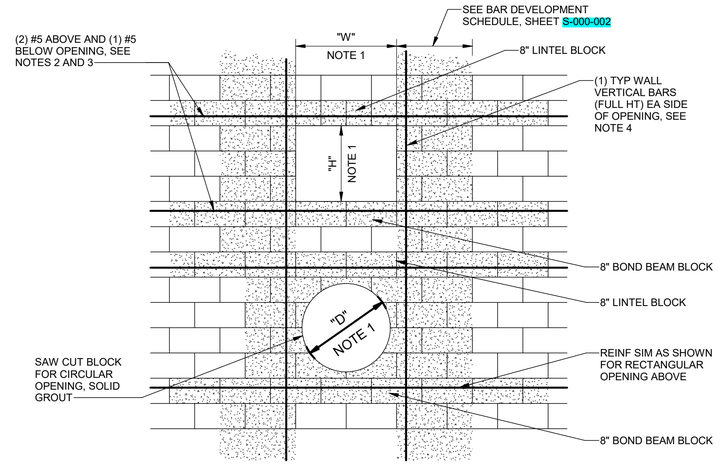

NOTES:

1. TYPICAL FOR ALL OPENINGS WITH (W,H, OR D) 2'-0" OR GREATER AND 4'-0" OR LESS, UNLESS NOTED OTHERWISE. SEE PLANS FOR LARGER OPENINGS.
2. AT ADJACENT OPENINGS WITH LESS THAN 8'-0" WALL BETWEEN, CONTINUE HORIZONTAL REINFORCING TO 3'-9" BEYOND FURTHEST OPENING.
3. AT OPENINGS LOCATED WITHIN 3'-9" OF CORNER, CONTINUE HORIZONTAL REINFORCING AROUND CORNER PER DETAIL S03004.
4. LOCATE VERTICAL BARS CENTERED IN 1 ADJACENT CELL IN 8" WALLS, LAP WITH MATCHING FOUNDATION DOWELS. SEE TABLE ON SHEET S-000-002 FOR LAP LENGTH.

(S03003) CMU OPENING REINFORCING
NTS

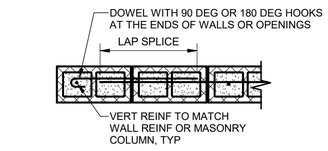

WALL ENDS / EDGES OF OPENINGS

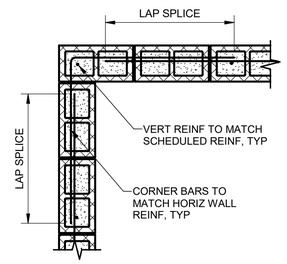

WALL CORNERS

(S03004) MASONRY WALL END AND CORNER REINFORCING
NTS

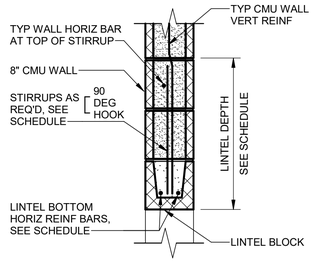

8" LINTEL SECTION

OPENING WIDTH	HORIZ REINF	LINTEL DEPTH
≤ 6'-0"	(1) #5	8"
< 6'-0" TO < 12'-0"	(2) #5	16"
< 12'-0" TO 14'-0"	(2) #6	24"

WHERE LINTEL DEPTH >8", MAY USE 8" DEEP LINTEL BLOCK AND 8" CMU BLOCKS WITH INNER WEB REMOVED. FILL LINTEL DEPTH WITH ONE MONOLITHIC CONCRETE GROUT POUR.

NOTE:

1. CMU LINTEL DETAIL TYP, UNLESS NOTED OTHERWISE ON PLANS.

(S03005) CMU LINTEL REINFORCING
NTS

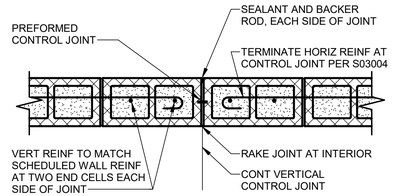

STOP HORIZONTAL REINF TYPICAL AT HORIZ BOND BEAM AND JOINT REINF

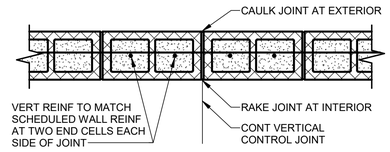

CONTINUOUS HORIZONTAL REINF TYPICAL AT HORIZ BOND BEAM AND JOINT REINF

(S03006) CONTROL JOINTS IN MASONRY WALLS
NTS

Brown AND Caldwell
PORTLAND, OREGON

Signer Name: Jonathan Harper
Signing Reason: I approved this document.
Signing Time: 2025-01-25 15:01:14(EST)

JONATHAN F. HARPER
STATE OF WASHINGTON
19638
STRUCTURAL ENGINEER
PROFESSIONAL ENGINEER

ISSUED FOR BID

CITY OF Vancouver WASHINGTON

WS14 PFAS TREATMENT DESIGN

REVISIONS

REV	DATE	DESCRIPTION

LINE IS 2 INCHES AT FULL SIZE

DESIGNED: A.QADAN
DRAWN: E.SCHOEL
CHECKED: J.HARPER
CHECKED: J.HESBY
APPROVED: J.HARPER

FILENAME 180318-G-00V21.rvt
BC PROJECT NUMBER 180318
CLIENT PROJECT NUMBER PRJ100893

STRUCTURAL

TYPICAL DETAILS 3

DRAWING NUMBER S-000-007

SHEET NUMBER 58 OF 125

Path: BIM 360://180318 - WS 14 PFAS Treatments Design/180318-G-00V21.rvt
Plot Date: 1/15/2025 9:01:26 AM

a361b1d7977e397b24fed49bfe0fe478

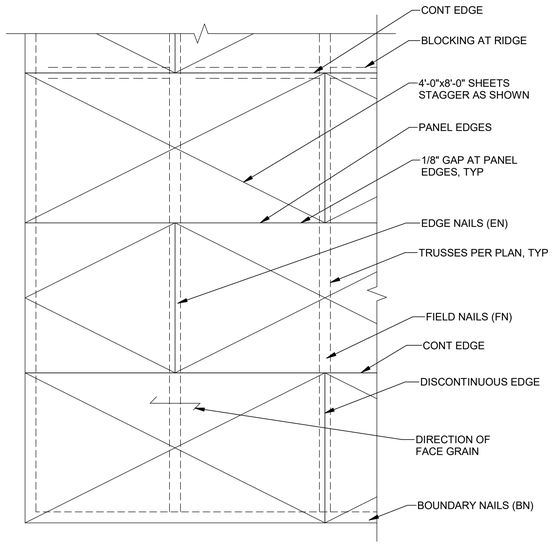

PLAN

DIAPHRAGM SHEATHING AND FASTENER SCHEDULE				
STRUCTURAL SHEATHING		NAILS		BLOCKING AT PLYWOOD EDGES
THICKNESS	REQUIREMENTS	EDGE & BOUNDARY NAILING (EN & BN)	FIELD NAILING (FN)	
15/32"	STRUCTURAL I, FIVE-PLY, FIVE LAYER, EXTERIOR	10d @ 6" OC	10d @ 12" OC	NOT REQUIRED

NOTES:

1. PLYWOOD PIECES SHALL CONTAIN NOT LESS THAN 8 SQUARE FEET NOR BE LESS THAN 2 FT WIDE.
2. ALL NAILS SHALL BE COMMON NAILS WITH MINIMUM DIAMETER = 0.148", MINIMUM PENETRATION INTO FRAMING MEMBER = 1 1/2".
3. BLOCKING IS 2x AND SHALL MATCH DEPTH OF TRUSS.

S04001 ROOF DIAPHRAGM SHEATHING
NTS

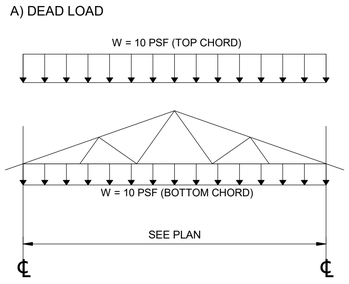

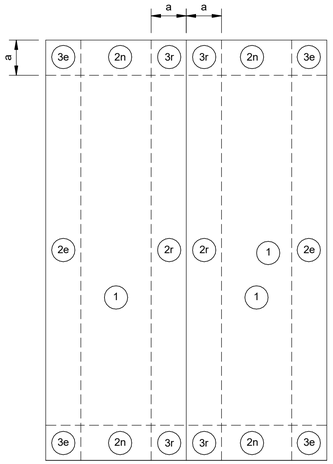

BUILDING PLAN
NOTE: a = 3.0 FT

COMPONENTS AND CLADDING ROOF WIND PRESSURES

SURFACE PRESSURE (PSF)								
AREA	2	10	20	50	75	100	200	250
NEGATIVE ZONE 1 & 2e	-52.9	-52.9	-52.9	-32.2	-23.0	-16.5	-16.5	-16.5
NEGATIVE ZONE 2n, 2r & 3e	-77.2	-77.2	-66.8	-52.9	-46.8	-42.5	-32.0	-28.6
NEGATIVE ZONE 3r	-91.8	-91.8	-78.6	-61.2	-53.5	-48.1	-48.1	-48.1
POSITIVE ALL ZONES	21.4	17.4	16	16	16	16	16	16
OVERHANG ZONE 1, 2e	-60.7	-60.7	-60.7	-46.9	-40.8	-36.4	-36.4	-36.4
OVERHANG ZONE 2n & 2r	-85.0	-85.0	-77.1	-66.8	-62.2	-58.9	-51.1	-48.6
OVERHANG ZONE 3e	-99.5	-99.5	-86.0	-68.0	-60.0	-54.4	-40.8	-36.4
OVERHANG ZONE 3r	-114.1	-114.1	-96.6	-73.4	-63.1	-55.8	-55.8	-55.8

NOTE: SURFACE PRESSURES LISTED ARE ULTIMATE PRESSURES PER ASCE 7-16

WOOD TRUSS GENERAL NOTES:

1. ALL LOADS SHOWN ARE SERVICE LOADS, UNLESS NOTED OTHERWISE.
2. REFERENCE THE DESIGN LOADS OUTLINED ON SHEET S-000-001 FOR ADDITIONAL DESIGN LOAD REQUIREMENTS.
3. TRUSSES SHALL BE DESIGNED TO TRANSFER 500 LBF AXIAL LOAD (SERVICE).
4. LATERAL LOADS SHOWN APPLY IN BOTH DIRECTIONS, NON-SIMULTANEOUSLY.
5. TRUSS MANUFACTURER TO PROVIDE LATERAL BRACING FOR COMPRESSIVE WIND OR SEISMIC LOADS AS REQUIRED. SEE DEFERRED APPROVAL NOTES SHEET.
6. TRUSS BRIDGING AND ERECTION ACCESSORIES SHALL BE THE RESPONSIBILITY OF THE PRE-ENGINEERED WOOD TRUSS MANUFACTURER.
7. TRUSS DESIGN LOADS ARE AS SHOWN ON LOADING DIAGRAMS.
8. SEE ROOF FRAMING PLAN FOR REQUIRED TRUSS CONFIGURATIONS.

S04002 PRE-ENGINEERED TRUSS DESIGN CRITERIA
NTS

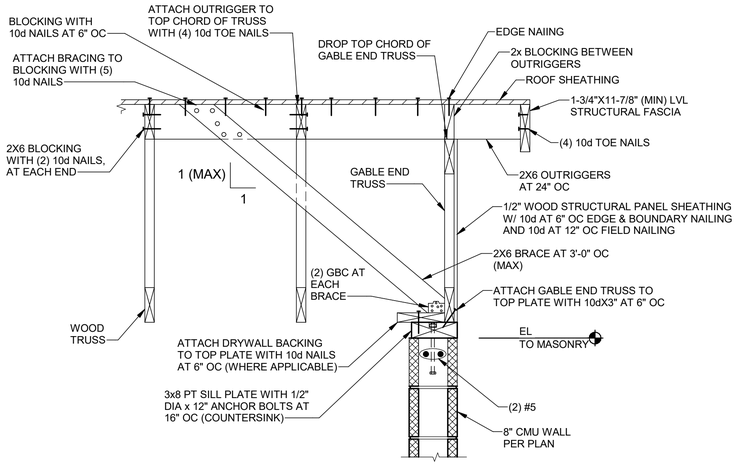

S04003 TYPICAL END BLOCKING FRAMING
NTS

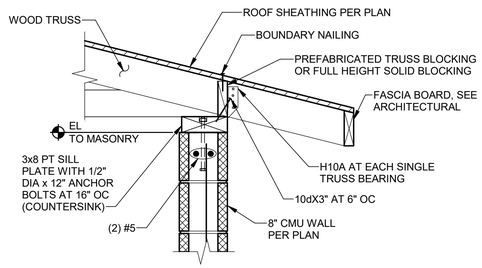

S04004 WOOD TRUSS AT MASONRY WALL
NTS

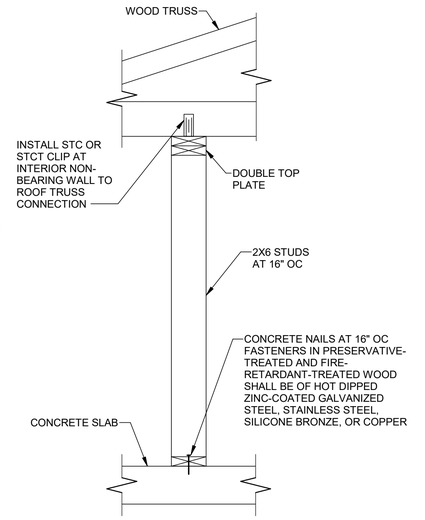

S04005 NON-BEARING INTERIOR WALL
NTS

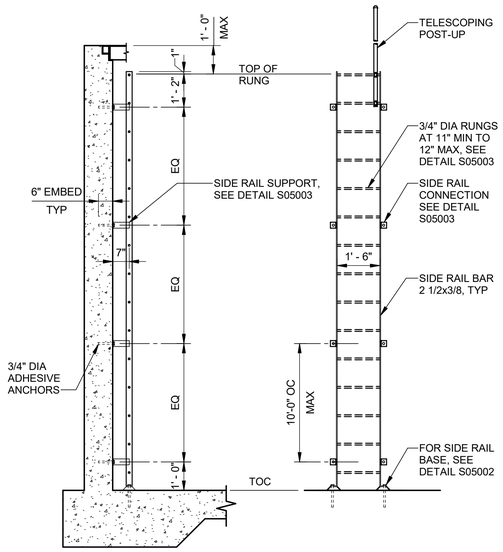

S04006 STEEL LADDER UNDER COVER
NTS

Brown AND Caldwell
PORTLAND, OREGON

Signer Name: Jonathan Harper
Signing Reason: I approved this document.
Signing Time: 2025-01-23 15:01:34(EST)

JONATHAN F. HARPER
STATE OF WASHINGTON
49638
STRUCTURAL ENGINEER
PROFESSIONAL ENGINEER

ISSUED FOR BID

CITY OF Vancouver WASHINGTON

WS14 PFAS TREATMENT DESIGN

REVISIONS

REV	DATE	DESCRIPTION

LINE IS 2 INCHES AT FULL SIZE

DESIGNED: A.QADAN
DRAWN: E.SCHOEL
CHECKED: J.HARPER
CHECKED: J.HESBY
APPROVED: J.HARPER

FILENAME 180318-G-00V21.rvt
BC PROJECT NUMBER 180318
CLIENT PROJECT NUMBER PRJ100893

STRUCTURAL

TYPICAL DETAILS 4

DRAWING NUMBER
S-000-008

SHEET NUMBER 59 OF 125

Plot Date: 1/15/2025 9:01:27 AM Path: BIM 360://180318 - WS 14 PFAS Treatments Design/180318-G-00V21.rvt

6f1125a5ba2ed8ed380dadf4cce44e50

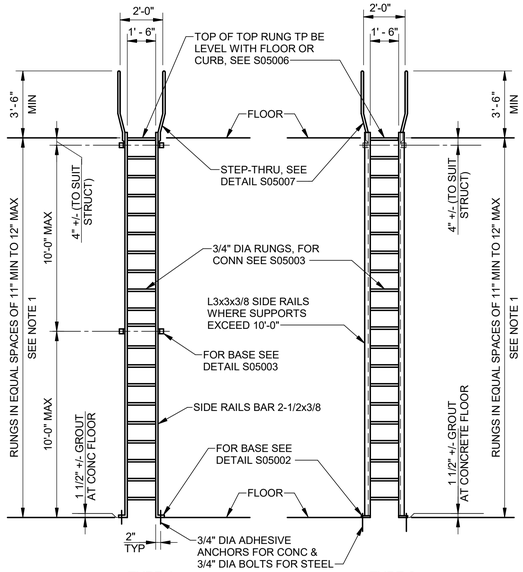

NOTES:

1. LADDER DETAILS APPLY TO LADDERS 30'-0" OR LESS IN FLOOR TO FLOOR HEIGHT.
2. LADDERS 20'-0" OR LONGER (30'-0" MAX) REQUIRE FALL ARREST.
3. ALL LADDERS AND CAGES SHALL BE GALVANIZED STEEL PAINTED SAFETY YELLOW.
4. STEEL MATETIAL FOR BARS, PLATES, AND RUNGS SHALL BE ASTM A36 STEEL.

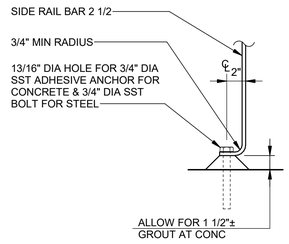

BAR SIDE RAIL BASE

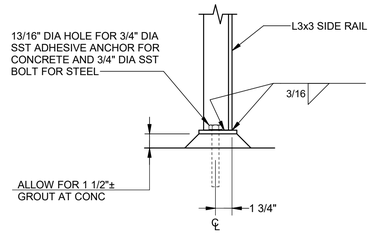

L SIDE RAIL BASE

S05002 LADDER SIDE RAIL BASE
NTS

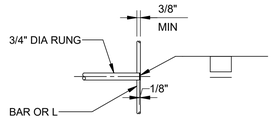

RUNG CONNECTION

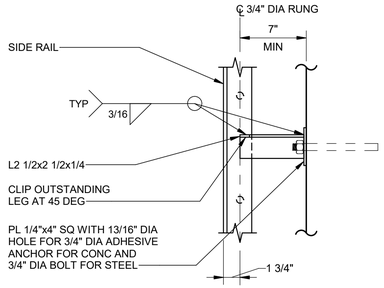

SIDE RAIL CONNECTION

S05003 LADDER RUNG AND SIDE RAIL CONNECTIONS
NTS

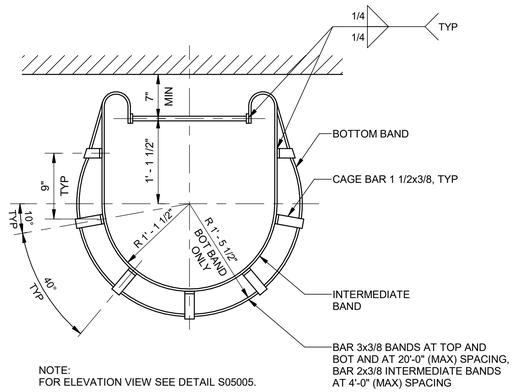

NOTE:
FOR ELEVATION VIEW SEE DETAIL S05005.

S05004 LADDER CAGE PLAN
NTS

S05001 STEP THRU LADDER ELEVATIONS
NTS

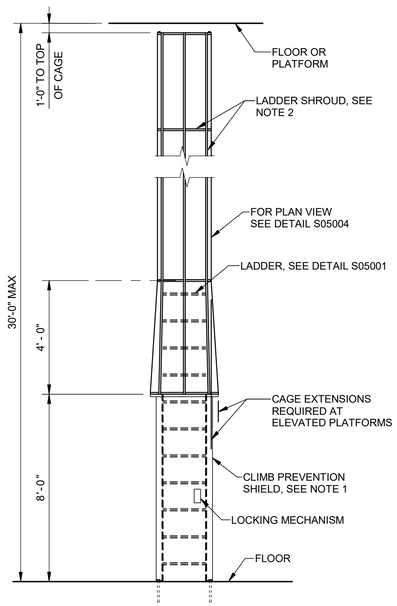

NOTES:

1. FURNISH AND INSTALL CLIMB PREVENTION SHIELD. THE SHIELD SHALL BE LOCKABLE AND HINGED AND WHEN OPENED SHALL ALLOW A USER TO CLIMB UP THE LADDER UNIMPEDED. WHEN CLOSED THE SHIELD SHALL COMPLETELY ENCLOSE ALL ELEMENTS OF THE LADDER AT THE BASE TO ELIMINATE ANY POTENTIAL FOR UNWANTED CLIMBING. FIELD VERIFY THE TANK AND FOUNDATION ELEMENTS PRIOR TO CREATING SHOP DRAWINGS AND FABRICATION.
2. FURNISH LADDER SHROUD AROUND THE CAGE. THE SHROUD SHALL BE MANUFACTURED FROM MINIMUM 16 GAUGE SHEET STEEL, FORMED TO FIT AROUND THE LADDER CAGE, AND SECURED TO THE TANK AND THE CAGE WITH WELDED OR BOLTED CONNECTIONS. THE SHROUD SHALL BE INTEGRATED WITH THE CLIMB PREVENTION SHIELD BELOW IT AND SHALL COMPLETELY ENCLOSE ALL ELEMENTS OF THE LADDER TO ELIMINATE ANY POTENTIAL FOR UNWANTED CLIMBING

S05005 LADDER CAGE ELEVATION
NTS

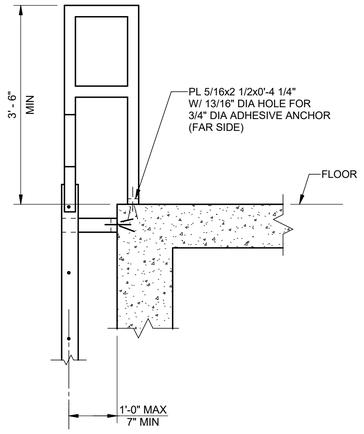

S05006 LADDER TO CONCRETE
NTS

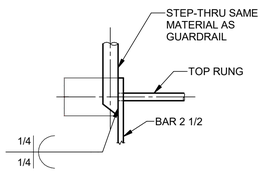

STEP-THRU CONNECTION AT BAR SIDE RIAL

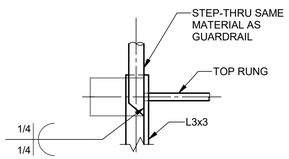

STEP-THRU CONNECTION AT L SIDE RIAL

S05007 STEP THRU CONNECTION
NTS

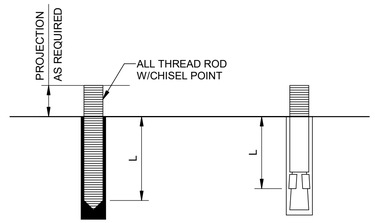

ADHESIVE ANCHOR EXPANSION ANCHOR

MINIMUM EMBEDMENT LENGTH, L		
DIAMETER	ADHESIVE ANCHOR	EXPANSION ANCHOR
3/8"	4 1/2"	3 1/2"
1/2"	6"	4 3/4"
5/8"	7 1/2"	5 1/2"
3/4"	9"	6 1/2"
7/8"	10 1/2"	-
1"	12"	-

NOTES:

1. CONFORM TO ICC EVALUATION SERVICE REPORT (ES REPORT) REQUIREMENTS AND MANUFACTURER'S RECOMMENDATIONS FOR INSTALLATION.
2. PROVIDE TYPE 316 STAINLESS STEEL ALL-THREAD ROD MATERIAL.
3. PROVIDE HOLE DIAMETER IN ACCORDANCE WITH MANUFACTURER'S RECOMMENDATION.
4. EXPANSION ANCHOR EMBEDMENT LENGTHS ARE BASED ON HILTI KWIK BOLT TZ STAINLESS STEEL ANCHORS. SUBMIT ICC EVALUATION SERVICE REPORT (ES REPORT) FOR ALTERNATE PRODUCTS.
5. ADHESIVE ANCHOR EMBEDMENT LENGTHS ARE BASED ON HILTI HIT-RE 500-V3 ADHESIVE. SUBMIT ICC ES REPORT FOR ALTERNATE PRODUCTS.

S05008 CONCRETE ANCHORS
NTS

Brown AND Caldwell
PORTLAND, OREGON

Signer Name: Jonathan Harper
Signing Reason: I approved this document.
Signing Time: 2025-01-23 15:01:35(EST)

JONATHAN F. HARPER
STATE OF WASHINGTON
STRUCTURAL ENGINEER
PROFESSIONAL ENGINEER
49638

ISSUED FOR BID

CITY OF Vancouver WASHINGTON

WS14 PFAS TREATMENT DESIGN

REVISIONS

REV	DATE	DESCRIPTION

LINE IS 2 INCHES AT FULL SIZE

DESIGNED: A.QADAN
DRAWN: E.SCHOEL
CHECKED: J.HARPER
CHECKED: J.HESBY
APPROVED: J.HARPER

FILENAME
180318-G-00V21.rvt
BC PROJECT NUMBER
180318
CLIENT PROJECT NUMBER
PRJ100893

STRUCTURAL

TYPICAL DETAILS 5

DRAWING NUMBER
S-000-009

60 SHEET NUMBER OF 125

Plot Date: 1/15/2025 9:01:28 AM Path: BIM 360://180318 - WS 14 PFAS Treatments Design/180318-G-00V21.rvt

fa50efc4845018c99b08bd365daeb8b2

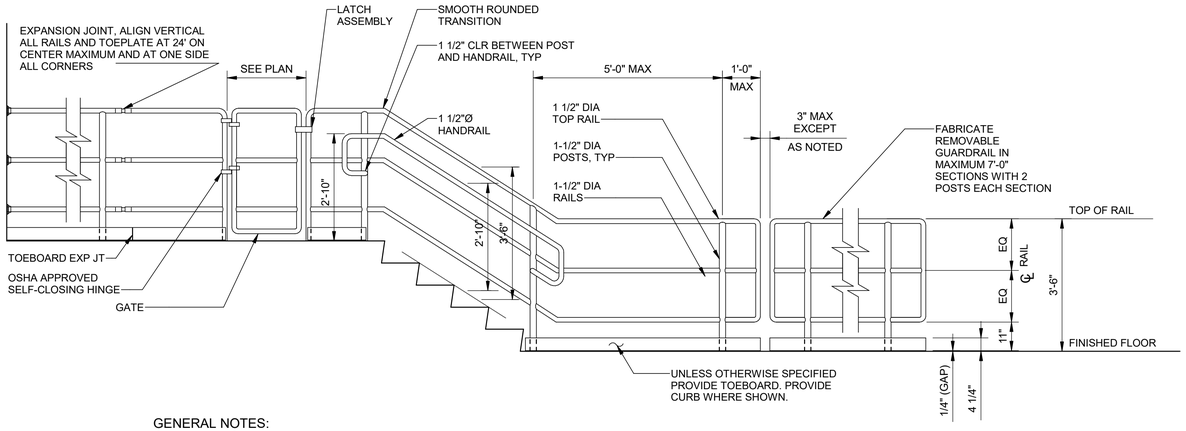

GENERAL NOTES:

1. UNLESS NOTED OTHERWISE, HANDRAIL, GUARDRAIL, AND MOUNTING APPURTENANCES SHALL BE ANODIZED ALUMINUM.
2. ALL FASTENERS SHALL BE STAINLESS STEEL, TYPE 316.
3. NUMBER OF ANCHORS AND SIZE OF ANCHORS ARE MINIMUM. PROVIDE LARGER ANCHOR SIZE IF NECESSARY TO MEET LOAD REQUIREMENTS. CONTRACTOR'S SUPPLIER AND ENGINEER ARE RESPONSIBLE FOR DESIGNING BASE BRACKET AND STAINLESS STEEL ANCHOR BOLT SIZE AND EMBEDMENT DEPTH INTO CONCRETE TO RESIST LOADS TAKING INTO ACCOUNT ANCHOR EDGE DISTANCES AND CONCRETE STRENGTHS AT THE POINT OF ATTACHMENT.
4. UNLESS SPECIFICALLY INDICATED OTHERWISE, GUARDRAIL MOUNTING MAY BE BY ANY SHOWN METHOD AS APPLICABLE.
5. RAILING POST LOCATION SHALL BE FIELD MEASURED AND RAILING FABRICATED TO FIT.
6. TOP AND MIDDLE RAILS SHALL BE CONTINUOUS EXCEPT AT GUARDRAIL SECTIONS SPECIFICALLY CALLED OUT ON DRAWINGS AS REMOVABLE GUARDRAIL.
7. THE SPACING OF EXPANSION JOINTS IN GUARDRAILS AND TOEBOARDS SHALL NOT EXCEED 24 FEET.
8. ALL ALUMINUM SURFACES IN CONTACT WITH CONCRETE, GROUT, OR DISSIMILAR METALS SHALL HAVE CONTACT SURFACE PROTECTED IN ACCORDANCE WITH SPECIFICATIONS.
9. SEE DETAIL S06002 FOR ADDITIONAL INFORMATION.
10. WHERE BOLTED BASE PLATE EXTENDS ABOVE WALKWAY SURFACE NOTCH TOEBOARD TO FIT AROUND BASE PLATE WITH MAXIMUM OF 1/4" GAP.

(S06001) HANDRAIL/GUARDRAIL - 3 RAIL
NTS

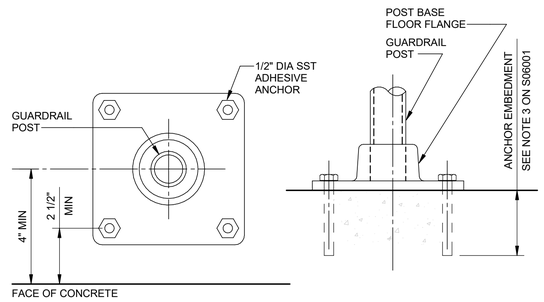

PLAN ELEVATION

(S06002) BASE FLANGE MOUNT
NTS

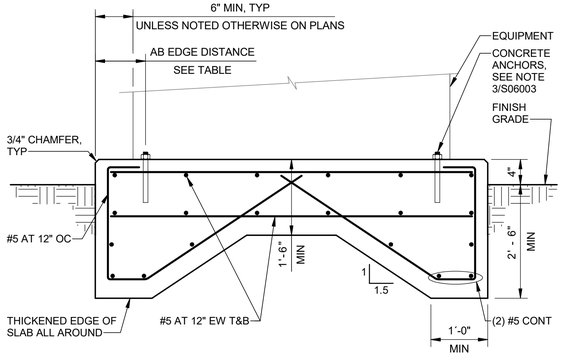

EQUIPMENT PAD DIMENSIONS										
AB DIA (IN.)	1/2	5/8	3/4	7/8	1	1 1/4	1 3/8	1 1/2	1 3/4	2
MIN AB EDGE DISTANCE	4 1/2	4 1/2	4 1/2	5 1/4	6	7 1/2	8 1/4	9	10 1/2	12

NOTES:

1. PAD SIZE SHALL BE MINIMUM INDICATED OR AS SHOWN ON THE PLANS OR AS INDICATED BY THE MANUFACTURER AND APPROVED BY THE PROJECT REPRESENTATIVE.
2. COORDINATE LOCATION OF ELECTRICAL CONDUIT AND DRAINAGE PIPING PENETRATIONS WITHIN THE EQUIPMENT PAD. STUB UP PENETRATIONS ON THE SAME SIDE OF THE EQUIPMENT AS REQUIRED FOR CONNECTION TO EQUIPMENT. EQUIPMENT DRAINS SHALL BE LOCATED AS REQUIRED FOR DRAINAGE FROM EQUIPMENT. EQUIPMENT PAD SHALL BE CONFIGURED ACCORDINGLY.
3. THE SIZE, NUMBER, TYPE, LOCATION, AND THREAD PROJECTION OF THE ANCHOR BOLTS SHALL BE DETERMINED BY THE EQUIPMENT MANUFACTURER AND AS APPROVED BY THE PROJECT REPRESENTATIVE. ANCHOR BOLTS SHALL BE HELD IN POSITION WITH A TEMPLATE OR OTHER ACCEPTABLE MEANS, MATCHING THE BASE PLATE, WHILE PAD IS BEING PLACED.
4. EQUIPMENT BASES SHALL BE INSTALLED LEVEL, SEE SPECIFICATION SECTION 43 05 13 FOR LEVELING REQUIREMENT.
5. WEDGES OR SHIMS SHALL BE USED TO SUPPORT THE BASE WHILE THE GROUT IS PLACED. ANCHOR BOLTS MAY BE USED FOR LEVELING WITH DOUBLE NUTS. HOWEVER, PRIOR TO TIGHTENING, THE BASE PLATE MUST BE HARD-SHIMMED AND THE LEVELING NUTS BACKED OFF. EACH ANCHOR BOLT MUST HAVE IT'S OWN SHIM PACK AND THE NUT FULLY TIGHTENED PRIOR TO GROUTING. WEDGES OR SHIMS THAT ARE LEFT IN PLACE SHALL NOT BE EXPOSED TO VIEW.
6. FOR GROUT APPLICATION, SEE SPECIFICATION SECTION 43 05 13.
7. ANCHOR BOLTS AND EQUIPMENT PADS FOR RIGID EQUIPMENT MOUNTS SHALL COMPLY WITH SPECIFICATION SECTION 43 05 13. REQUIREMENTS IN SECTION 43 05 13 SHALL CONTROL OVER THE STANDARD DETAILS SHOWN ON THIS DRAWING.

(S06003) CONCRETE EQUIPMENT PAD DETAILS
NTS

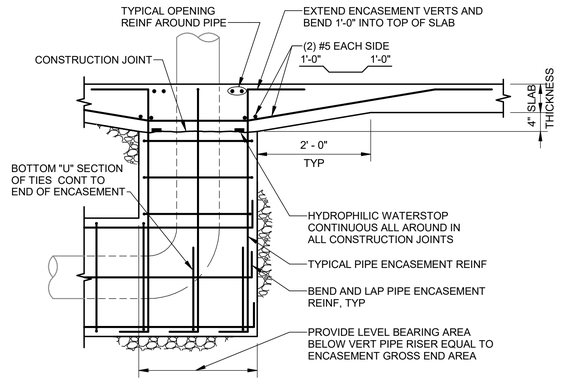

NOTES:

1. SECTION APPLIES TO PIPES WITH DIAMETERS 18" AND SMALLER.
2. WHEN PIPE ENCASEMENT IS CLOSER THAN 4" TO SLAB ABOVE, TIE SLAB AND ENCASEMENT TOGETHER.

SECTION

(S06004) CONCRETE PIPE ENCASEMENT FOR PIPES LESS THAN 18" DIAMETER
NTS

Brown AND Caldwell
PORTLAND, OREGON

Signer Name: Jonathan Harper
Signing Reason: I approved this document
Signing Time: 2025-01-23 13:01:21(EST)

JONATHAN F. HARPER
STATE OF WASHINGTON
49638
STRUCTURAL ENGINEER
PROFESSIONAL ENGINEER

ISSUED FOR BID

CITY OF Vancouver WASHINGTON

WS14 PFAS TREATMENT DESIGN

REVISIONS

REV	DATE	DESCRIPTION

LINE IS 2 INCHES AT FULL SIZE

DESIGNED: A.QADAN
DRAWN: E.SCHOEL
CHECKED: J.HARPER
CHECKED: J.HESBY
APPROVED: J.HARPER

FILENAME 180318-G-00V21.rvt
BC PROJECT NUMBER 180318
CLIENT PROJECT NUMBER PRJ100893

STRUCTURAL

TYPICAL DETAILS 6

DRAWING NUMBER S-000-010

SHEET NUMBER 61 OF 125

Plot Date: 1/15/2025 9:01:29 AM Path: BIM 360://180318 - WS 14 PFAS Treatments Design/180318-G-00V21.rvt

2a4abc2003246396ab52ca7663ac29c6

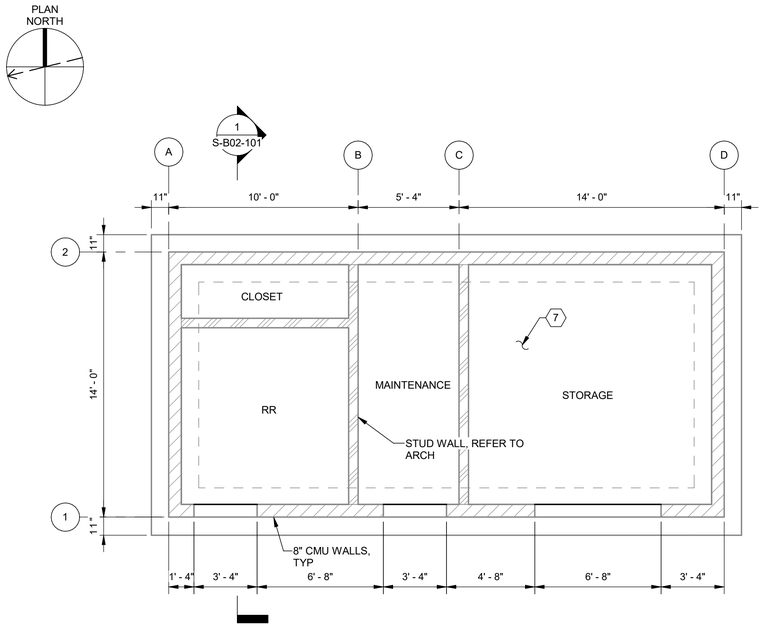

FOUNDATION LAYOUT
SCALE: 1/4" = 1'-0"

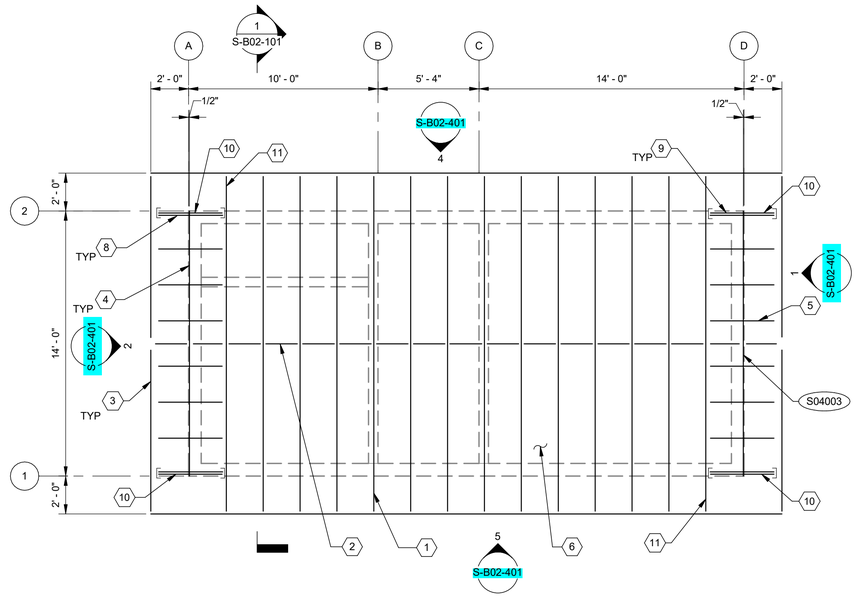

ROOF FRAMING LAYOUT
SCALE: 1/4" = 1'-0"

KEYNOTES:

1	TYP INTERIOR PRE-ENGINEERED WOOD ROOF TRUSS AT 24" OC MAX. FOR ROOF TRUSS LOADS, SEE DETAIL S04002
2	2X6 RIDGE BLOCKING
3	STRUCTURAL FASCIA, SEE DETAIL S04003
4	PRE-ENGINEERED GABLE END TRUSS
5	2X6 OUTRIGGER FRAMING AT 24" OC
6	ROOF SHEATHING, SEE DETAIL S04001
7	FOR EQUIPMENT PAD, SEE DETAIL D01007
8	ATTACH DOUBLE OUTRIGGER TO STRUCTURAL FASCIA WITH HUC26-2 HANGER
9	ATTACH DOUBLE OUTRIGGER TO TOP CHORD OF TRUSS WITH HUC26-2 HANGER W/ 0.148"X1-1/2" FASTENERS
10	DOUBLE 2X6 OUTRIGGER
11	GIRDER TRUSS

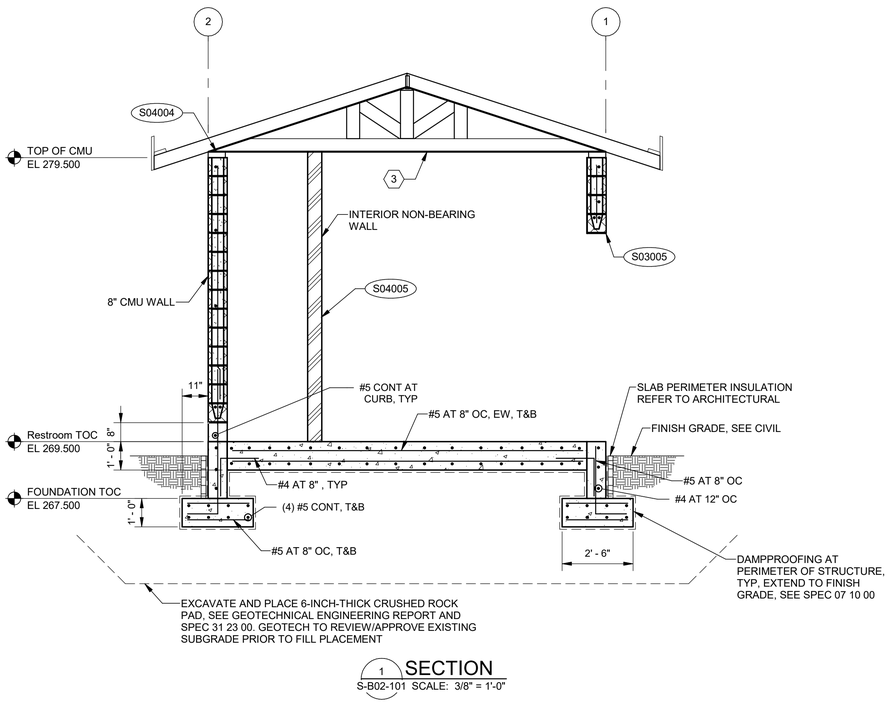

1 SECTION
S-B02-101 SCALE: 3/8" = 1'-0"

Brown AND Caldwell
PORTLAND, OREGON

Signer Name: Jonathan Harper
Signing Reason: I approved this document.
Signing Time: 2025-01-23 15:01:32(EST)

JONATHAN F. HARPER
STATE OF WASHINGTON
19638
STRUCTURAL ENGINEER
PROFESSIONAL ENGINEER

ISSUED FOR BID

CITY OF Vancouver WASHINGTON

WS14 PFAS TREATMENT DESIGN

REVISIONS

REV	DATE	DESCRIPTION

LINE IS 2 INCHES AT FULL SIZE

DESIGNED:	A.QADAN
DRAWN:	E.SCHOEL
CHECKED:	J.HARPER
CHECKED:	J.HESBY
APPROVED:	J.HARPER

FILENAME
180318-S-00V21.rvt

BC PROJECT NUMBER
180318

CLIENT PROJECT NUMBER
PRJ100893

STRUCTURAL

RESTROOM AND STORAGE BUILDING PLANS AND SECTION

DRAWING NUMBER
S-B02-101

SHEET NUMBER 62 OF 125

Plot Date: 1/15/2025 8:52:40 AM Path: BIM 360://180318 - WS 14 PFAS Treatments Design/180318-S-00V21.rvt

0dbe59dfc4eba8359dd8baa9f8868ee7

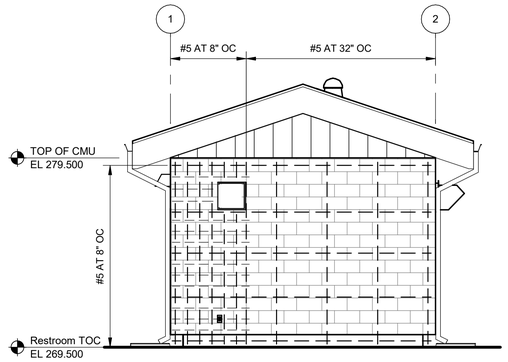

1 SOUTH ELEVATION
S-B02-101 SCALE: 1/4" = 1'-0"

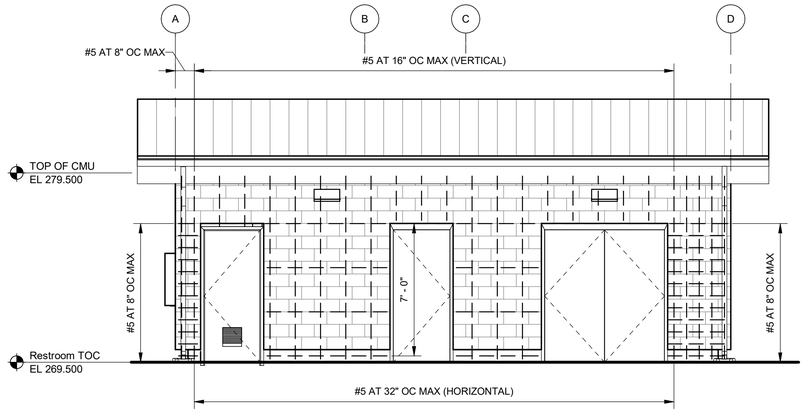

5 WEST ELEVATION
S-B02-101 SCALE: 1/4" = 1'-0"

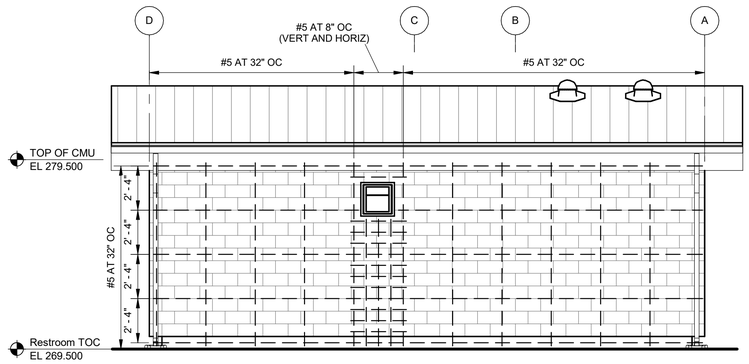

4 EAST ELEVATION
S-B02-101 SCALE: 1/4" = 1'-0"

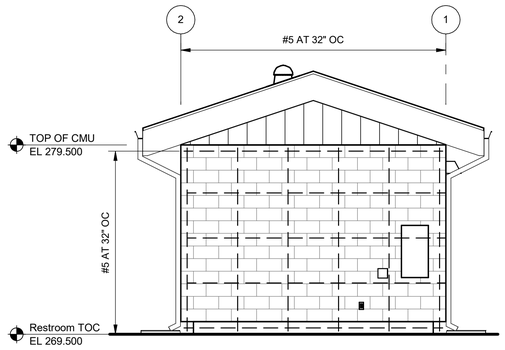

2 NORTH ELEVATION
S-B02-101 SCALE: 1/4" = 1'-0"

Plot Date: 1/15/2025 8:52:42 AM Path: BIM 360://180318 - WS 14 PFAS Treatments Design/180318-S-00V21.rvt

Brown AND Caldwell
PORTLAND, OREGON

Signer Name: Jonathan Harper
Signing Reason: I approved
this document
Signing Time: 2025-01-25
13:01:22(CST)

JONATHAN F. HARPER
STATE OF WASHINGTON
STRUCTURAL ENGINEER
PROFESSIONAL ENGINEER
19638

ISSUED FOR BID

CITY OF Vancouver WASHINGTON

WS14 PFAS TREATMENT DESIGN

REVISIONS

REV	DATE	DESCRIPTION

LINE IS 2 INCHES AT FULL SIZE

DESIGNED:	A.QADAN
DRAWN:	E.SCHOEL
CHECKED:	J.HARPER
CHECKED:	J.HESBY
APPROVED:	J.HARPER

FILENAME
180318-S-00V21.rvt

BC PROJECT NUMBER
180318

CLIENT PROJECT NUMBER
PRJ100893

STRUCTURAL

RESTROOM AND STORAGE BUILDING ELEVATIONS

DRAWING NUMBER
S-B02-401

63 SHEET NUMBER OF 125

b94d2cd4a1210004c104285ff97ff0a0

PLAN NORTH

KEYNOTES:

1. PIPE SUPPORT, SEE PROCESS MECHANICAL FOR MORE DETAILS
2. SLAB CONTROL JOINT, SEE DETAIL S01005
3. TANK MANUFACTURER SHALL DESIGN SEISMIC AND WIND RESISTANT ANCHORS TO BE FULLY DEVELOPED INTO MAT SLAB CONCRETE PAD BELOW, SEE SPEC 01 73 24
4. CONTRACTOR DESIGNED, FREE STANDING CANOPY STRUCTURES AT TANK SAMPLING PORT LOCATIONS, TYP. CANOPIES SHALL BE SIZED AS SHOWN WITH ROOF HEIGHT APPROXIMATELY 8 FT ABOVE CONCRETE SLAB ELEVATION. CONSTRUCTION MATERIAL SHALL BE GALVANIZED STEEL OR APPROVED EQUAL. PROVIDE SHOP DRAWINGS AND ASSOCIATED CALCULATIONS (INCLUDING ANCHOR BOLTS) FOR REVIEW/APPROVAL BY ENGINEER PRIOR TO CONSTRUCTION. LOCATE CANOPY STRUCTURES TO PROVIDE 3" CLEARANCE AT ADJACENT TANKS/PIPES, TYP. LOCATE CANOPY STRUCTURES CENTERED ABOUT TANKS

* CONTRACTOR TO COORDINATE DIMENSION WITH APPROVED PIPE SUPPORT SUBMITTAL.

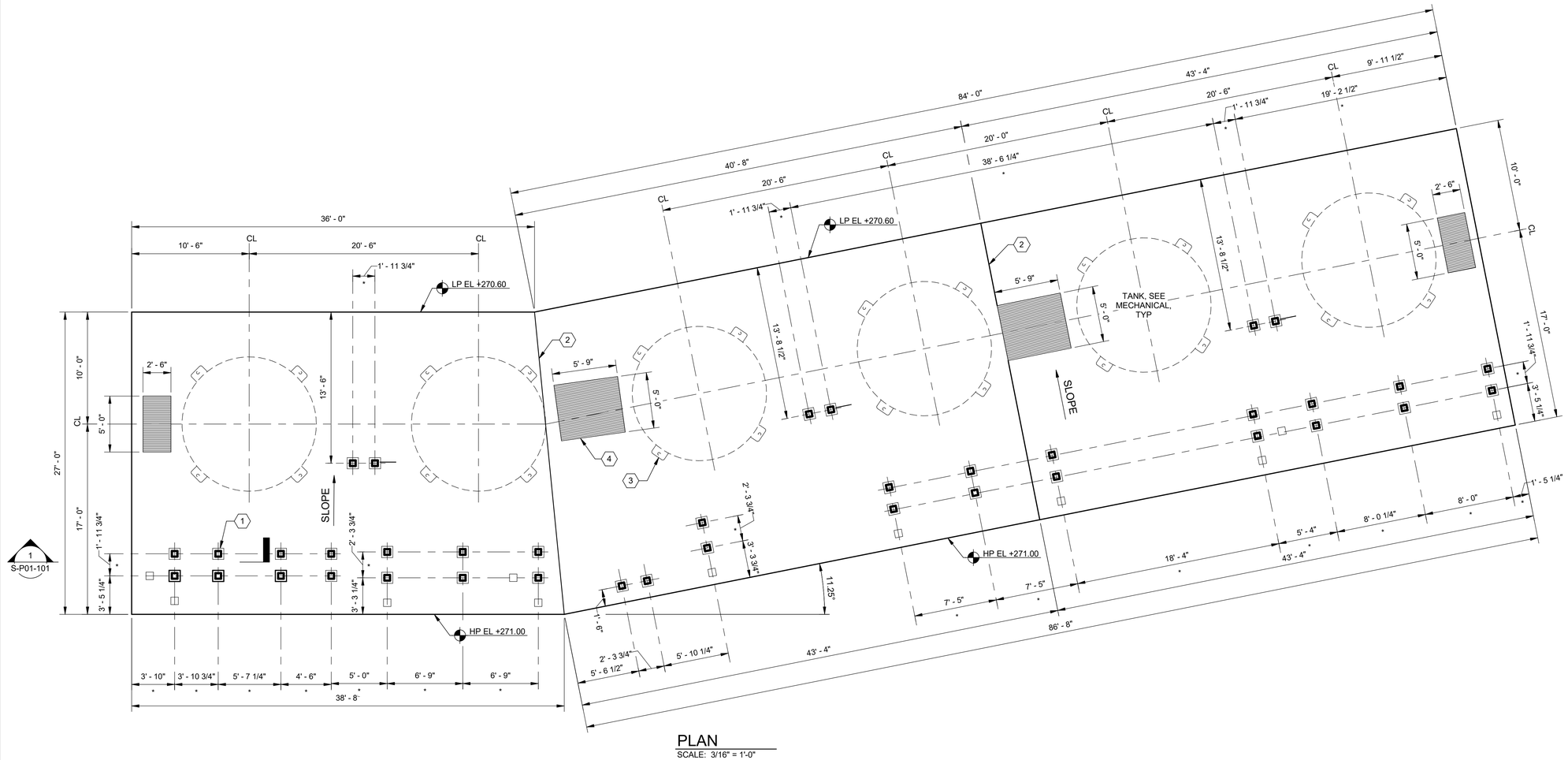

1 S-P01-101

PLAN

SCALE: 3/16" = 1'-0"

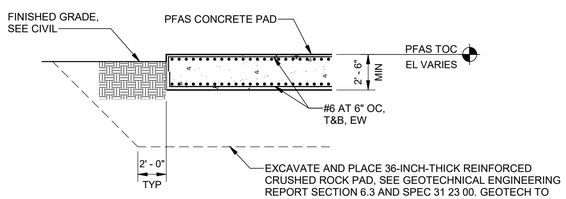

1 S-P01-101 NTS

SECTION

Brown AND Caldwell

PORTLAND, OREGON

Signer Name: Jonathan Harper
Signing Reason: I approved this document.
Signing Time: 2025-01-23 15:01:32(EST)

JONATHAN F. HARPER — STATE OF WASHINGTON — 49638 — STRUCTURAL ENGINEER — PROFESSIONAL ENGINEER

ISSUED FOR BID

CITY OF Vancouver WASHINGTON

WS14 PFAS TREATMENT DESIGN

REVISIONS

REV	DATE	DESCRIPTION

LINE IS 2 INCHES AT FULL SIZE

DESIGNED:	A.QADAN
DRAWN:	E.SCHOEL
CHECKED:	J.HARPER
CHECKED:	J.HESBY
APPROVED:	J.HARPER

FILENAME 180318-S-00V21.rvt

BC PROJECT NUMBER 180318

CLIENT PROJECT NUMBER PRJ100893

STRUCTURAL

PFAS TREATMENT OVERALL FOUNDATION PLAN

DRAWING NUMBER

S-P01-101

SHEET NUMBER 64 OF 125

Plot Date: 1/17/2025 8:53:56 AM Path: BIM 360://180318 - WS 14 PFAS Treatments Design/180318-S-00V21.rvt

b6f1d35a50a17c25c35f1851261923c9

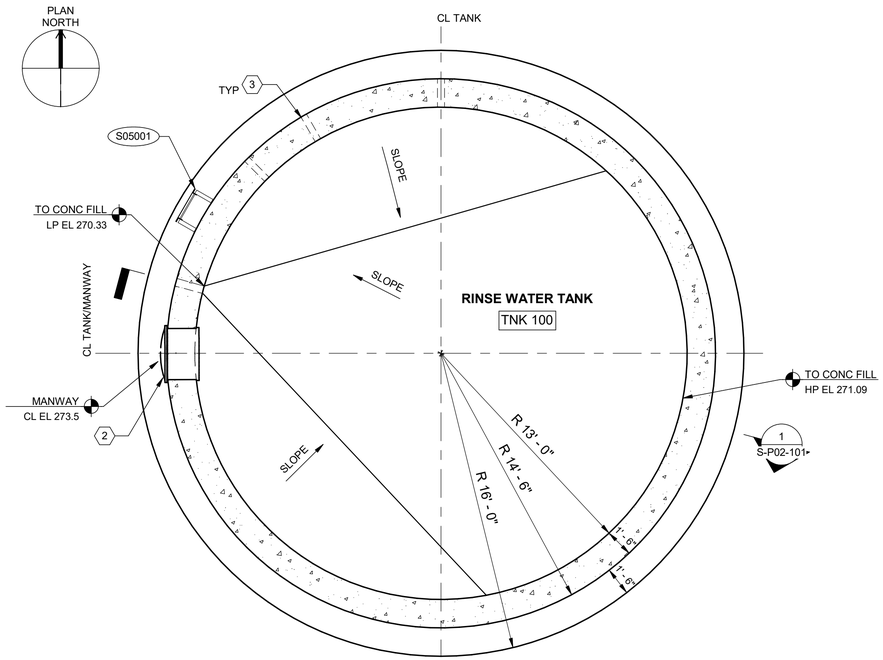

FOUNDATION PLAN

SCALE: 1/4" = 1'-0"

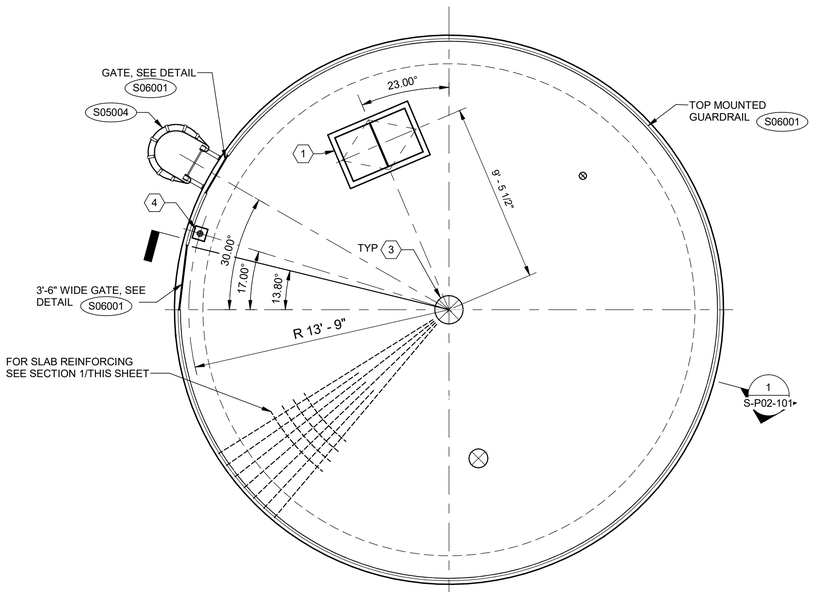

TOP OF TANK PLAN

SCALE: 1/4" = 1'-0"

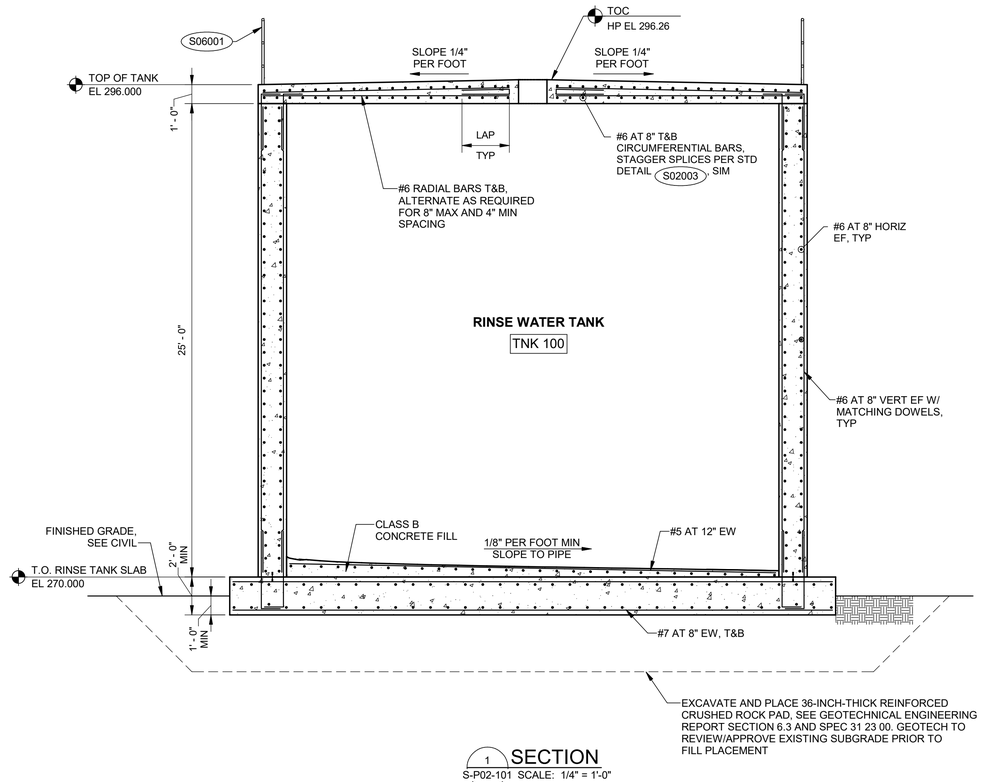

1 SECTION

S-P02-101 SCALE: 1/4" = 1'-0"

GENERAL NOTES:

1. REFER TO PROC-MECH FOR THE LOCATION AND SIZE OF PENETRATIONS.
2. RINSE WATER TANK ROOF LIVE LOAD = 50 PSF
3. TANK ROOF SLAB SHALL BE PLACED IN A SINGLE MONOLITHIC POUR. CONSTRUCTION JOINTS IN THE ROOF SLAB ARE NOT PERMITTED.

KEYNOTES:

1. 2'-6" X 4'-0" DOUBLE LEAF ROOF ACCESS HATCH, SEE SPEC 08 31 20
2. STAINLESS STEEL S316L CM-1 MANWAY BY CHASE SIZE 36" CLEAR OPENING OR APPROVED EQUAL. MANWAY SHOULD CONFORM WITH OSHA PERMIT REQUIRED CONFINED SPACE RULES. MANWAY SHOULD BE LIQUID-TIGHT WITH REPLACEABLE GASKET. MANWAY SHOULD BE RATED TO WITHSTAND WATER HEAD PRESSURE OF 24FT. SEE DETAIL S02001 FOR ADDITIONAL REINFORCING AT OPENINGS
3. PENETRATION, SEE PROC-MECH
4. TIE OFF POINT. SEE SPECIFICATION 05 50 00 FOR ADDITIONAL INFORMATION

Brown AND Caldwell
PORTLAND, OREGON

Signer Name: Jonathan Harper
Signing Reason: I approved this document
Signing Time: 2026-02-11 15:29:00(EST)

JONATHAN F. HARPER
STATE OF WASHINGTON
19638
STRUCTURAL ENGINEER
PROFESSIONAL ENGINEER

ISSUED FOR BID

CITY OF Vancouver WASHINGTON

WS14 PFAS TREATMENT DESIGN

REVISIONS

REV	DATE	DESCRIPTION
0	06/05/25	CONFORMED DRAWINGS

LINE IS 2 INCHES AT FULL SIZE

DESIGNED:	A.QADAN
DRAWN:	E.SCHOEL
CHECKED:	J.HARPER
CHECKED:	J.HESBY
APPROVED:	J.HARPER

FILENAME
180318-S-00V21.rvt

BC PROJECT NUMBER
180318

CLIENT PROJECT NUMBER
PRJ100893

STRUCTURAL

RINSE WATER TANK PLANS AND SECTION

DRAWING NUMBER
S-P02-101

SHEET NUMBER
OF

Path: Autodesk Docs://180318 - WS 14 PFAS Treatments Design/180318-S-00V21.rvt

Plot Date: 2/9/2026 1:24:09 PM

81e6e735c2d3e5c4f8dda720ab78be53

VALVES

DOUBLE LINE	SINGLE LINE	VALVE TYPE
		ANGLE VALVE
		BALL VALVE
		BUTTERFLY VALVE (LUGGED / WAFER)
		BUTTERFLY VALVE (AWWA)
		CHECK VALVE (BALL)
		CHECK VALVE (CONCENTRIC DUCKBILL)
		CHECK VALVE (DOUBLE LEAF)
		CHECK VALVE (ECCENTRIC DUCKBILL)
		CHECK VALVE (SWING)
		DIAPHRAGM VALVE
		FLAP GATE
		GATE VALVE (FLANGED)
		GLOBE VALVE
		KNIFE GATE VALVE
		MUD VALVE
		NEEDLE VALVE
		PLUG VALVE
		PUMP DISCHARGE VALVE
		TELESCOPING VALVE
		THREE WAY VALVE

DOUBLE LINE	SINGLE LINE	VALVE TYPE
		PRESSURE AND VACUUM RELIEF VALVE (WATER SERVICE)
		VACUUM RELIEF VALVE (WATER SERVICE)
		PRESSURE RELIEF VALVE (WATER SERVICE)
		PRESSURE AND VACUUM RELIEF VALVE (WASTE WATER SERVICE)
		PRESSURE RELIEF VALVE (WASTE WATER SERVICE)
		IN-LINE, SPRING LOADED RELIEF VALVE
		PRESSURE REGULATING VALVE
		BACK PRESSURE REGULATING VALVE
		AIR RELIEF VALVE (ARV) W/ ISOLATION

MISCELLANEOUS

SINGLE LINE	TYPE
A	UTILITY STATION (LETTER, IF ANY, DESIGNATES TYPE)
XKIP	RECOMMENDED MAIN ANCHOR POINT WITH ALLOWABLE FORCE ON STRUCTURE
	PIPE ANCHOR
	PIPE SUPPORT
	PIPE GUIDE
W	SEAL WATER CONTROL UNIT

PLAN NORTH

MECHANICAL PIPE AND FITTINGS

DOUBLE LINE	SINGLE LINE	FITTING TYPE
		FLANGED JOINT
		PLAIN OR GROOVED END MECHANICAL COUPLING
		PUSH ON OR BALL AND SOCKET JOINT
		MECHANICAL JOINT
		WELDED JOINT
		GROOVED END ADAPTER FLANGE x FLANGE
		UNION
		SLEEVE TYPE MECHANICAL COUPLING
		RESTRAINED SLEEVE TYPE MECHANICAL COUPLING
		FLANGED COUPLING ADAPTER
		RESTRAINED FLANGED COUPLING ADAPTER
		ELASTOMER AND FABRIC EXPANSION JOINT
		EXPANSION JOINT (SEE SPECS FOR TYPE)
		FLEXIBLE METAL HOSE
		EQUIPMENT CONNECTION FITTING
		DISMANTLING JOINT

DOUBLE LINE	SINGLE LINE	FITTING TYPE
		ELBOW (PLAN)
		ELBOW UP
		ELBOW DOWN
		TEE (PLAN)
		TEE UP
		TEE DOWN
		LATERAL (PLAN)
		LATERAL UP
		LATERAL DOWN
		CONCENTRIC REDUCER
		ECCENTRIC REDUCER
		BLIND FLANGE OR CAP
		TRUE WYE
		WALL HYDRANT

ACTUATORS

DOUBLE LINE	SINGLE LINE	ACTUATOR TYPE
	S	SOLENOID VALVE
		DIAPHRAGM OPERATED VALVE
		PRESSURE BALANCE OPERATED VALVE
	M	MOTOR OPERATED VALVE HIGH TORQUE
	M	MOTOR OPERATED VALVE LOW TORQUE
		PISTON OPERATED VALVE
		HANDLE (LEVER)
		HANDLE (TEE)
		HANDLE (WHEEL)
		GEAR BOX (HANDLE)
		GEAR BOX (CHAIN WHEEL)

GENERAL NOTES

1. ARRANGEMENT OF EQUIPMENT AND PIPING SHOWN IS NOT INTENDED TO SHOW DIMENSIONS FOR A SPECIFIC EQUIPMENT MANUFACTURER. THE DRAWINGS ARE DIAGRAMMATIC AND SOME FEATURES OF EQUIPMENT AND PIPING MAY REQUIRE REVISION TO MEET ACTUAL FIELD REQUIREMENTS. EQUIPMENT SELECTED BY THE CONTRACTOR SHALL NOT EXCEED THE SIZE SPECIFIED OR SHOWN ON THE DRAWINGS WITHOUT ENGINEER APPROVAL. CONTRACTOR SHALL COORDINATE AND CONFIRM ALL CRITICAL DIMENSIONS FOR ACTUAL EQUIPMENT AND PIPING SUPPLIED AND SHALL PROVIDE ALL REVISIONS NECESSARY TO THE EQUIPMENT AND PIPING LAYOUT AS REQUIRED. THESE REVISIONS SHALL BE SUBMITTED WITH THE PIPING LAYOUT DRAWINGS PRIOR TO PIPE FABRICATION.
2. MECHANICAL DRAWINGS SHOW EXISTING EQUIPMENT, PIPING, AND STRUCTURES IN ACCORDANCE WITH THE BEST AVAILABLE INFORMATION. HOWEVER, CONTRACTOR SHALL BE RESPONSIBLE FOR CONFIRMING ALL EXISTING CONDITIONS PRIOR TO SUBMISSION OF PIPING LAYOUT DRAWINGS AND COMMENCEMENT OF WORK. CONTRACTOR SHALL PROVIDE ALL BENDS, OFFSETS, ADDITIONAL PIPING, WALL AND FLOOR PENETRATIONS, EXISTING PIPE REROUTING, ETC. AS REQUIRED TO CONFORM WITH EXISTING CONDITIONS. THESE REVISIONS SHALL BE SUBMITTED WITH THE PIPING LAYOUT DRAWINGS PRIOR TO PIPE FABRICATION.
3. PIPING LAYOUT DRAWINGS SHALL BE SUBMITTED IN ACCORDANCE WITH THE SPECIFICATION AND SHALL CLARIFY DETAILED CONNECTIONS TO AND AVOIDANCE OF NEW AND EXISTING EQUIPMENT, PIPING, AND STRUCTURES. PIPING FITTING ANGLES, AND VERTICAL AND HORIZONTAL LOCATION SHALL BE DETERMINED BY THE CONTRACTOR. CONTRACTOR SHALL INCLUDE FITTING ANGLES, AND VERTICAL AND HORIZONTAL PIPE LOCATIONS ON PIPING LAYOUT DRAWINGS AND SHALL PROVIDE ALL PIPING, FITTINGS, WALL AND FLOOR PENETRATIONS, AND ANCILLARY DEVICES AS SHOWN, SPECIFIED, AND REQUIRED TO PROVIDE A FULLY FUNCTIONING SYSTEM.
4. THE CONTRACTOR SHALL PROVIDE FINAL DESIGN, INSTALLATION, INSPECTION, AND CERTIFICATION FOR PIPE SUPPORTS, SEISMIC RESTRAINTS, THRUST RESTRAINTS, AND FOR THE CONTROL OF PIPE EXPANSION AS SPECIFIED.
5. SEE SPECIFICATION SECTION 40 05 02 FOR PIPING SERVICE DESIGNATIONS. SEE SPECIFICATION SECTION 40 05 01 FOR GENERAL REQUIREMENTS FOR PIPING SYSTEMS, DESIGN OF PIPE HANGERS AND SUPPORTS, DESIGN OF SEISMIC RESTRAINTS FOR PIPING, AND DESIGN OF EXPANSION CONTROL SYSTEM.
6. ALL PIPING CONNECTED TO EQUIPMENT SHALL BE PROVIDED WITH UNIONS, EXPANSION JOINTS, OR COUPLINGS SUCH THAT EQUIPMENT MAY BE EASILY DISMANTLED AND REMOVED FROM PIPING SYSTEMS. PIPING SHALL BE SUPPORTED TO NOT IMPART ANY STRAIN OR FORCES UPON THE CONNECTED EQUIPMENT, WHETHER SHOWN OR NOT.
7. 1" GAGE TAPS WITH CAPS SHALL BE PROVIDED IMMEDIATELY UPSTREAM AND DOWNSTREAM OF ALL PUMPS AND COMPRESSORS, WHETHER SHOWN OR NOT.
8. HEADROOM CLEARANCE TO ANY EQUIPMENT OR PIPING OVERHEAD SHALL BE 7'-6" MINIMUM UNLESS SPECIFICALLY SHOWN OTHERWISE.
9. MOUNTING AND PAD DETAILS FOR MECHANICAL EQUIPMENT ARE SHOWN ON DETAIL SHEETS. DRAWINGS CALL OUT TYPE OF PAD AND SHOW APPROXIMATE SIZE. FINAL DIMENSIONS OF EQUIPMENT PADS SHALL BE DETERMINED BY THE CONTRACTOR FOR THE EQUIPMENT AND PIPING BEING SUPPLIED, THE REQUIREMENTS (ELEVATIONS, CLEARANCES, DIMENSIONS, ETC.) OF THE CONTRACT DOCUMENTS, AND THE REQUIREMENTS OF THE DETAILS REFERENCED.
10. SEE TYPICAL DETAILS FOR STRUCTURAL REQUIREMENTS FOR PIPING EMBEDDED IN CONCRETE OR ENCASED IN CONCRETE BELOW THE FOUNDATION.
11. UNLESS OTHERWISE SPECIFIED, PIPE PASSING FROM CONCRETE TO EARTH SHALL BE PROVIDED WITH TWO PIPE COUPLINGS OR FLEXIBLE JOINTS PER SECTION 40 05 06, REFER TO CIVIL FOR DETAILS.
12. IN CASE OF A CONFLICT BETWEEN THE DRAWINGS AND TYPICAL DETAILS, THE MOST STRINGENT REQUIREMENTS SHALL GOVERN UNLESS SPECIFICALLY APPROVED OTHERWISE BY THE ENGINEER.
13. MOUNT ALL VALVES AND MANUAL VALVE OPERATORS IN AN ACCESSIBLE LOCATION WITH UNOBSTRUCTED VALVE OPERATOR POSITION FOR EASE OF OPERATION LESS THAN 6'-0" ABOVE FINISHED FLOOR. WHERE MANUAL VALVES ARE INSTALLED OVER 7'-0" ABOVE FINISHED FLOOR AND THE DRAWINGS SPECIFY A VERTICAL VALVE SHAFT, REVISE THE GEAR OPERATOR AND/OR CHAIN WHEEL POSITION TO PROVIDE A HORIZONTAL CHAIN WHEEL SHAFT WHILE RETAINING THE VALVE ORIENTATION SPECIFIED ON THE DRAWINGS. EXCEPTION FOR ION EXCHANGE VALVE MANIFOLD SYSTEMS PROVIDE HANDWHEEL FOR ALL VALVES IN LIEU OF CHAIN WHEEL, REGARDLESS OF INSTALLATION HEIGHT.
14. STRUCTURE ELEVATIONS SHOWN ON MECHANICAL DRAWINGS ARE NORMAL AND APPROXIMATE. SEE STRUCTURAL DRAWINGS FOR ACTUAL ELEVATIONS OF ALL NEW WORK.
15. THE PROCESS AND INSTRUMENTATION DIAGRAMS TAKE PRECEDENCE OVER PLAN AND SECTION DRAWINGS IN THE REQUIREMENT TO FURNISH AND INSTALL MATERIALS AND EQUIPMENT. NOT ALL SYSTEM MATERIALS, EQUIPMENT, AND APPURTENANCES ARE CLEARLY SHOWN IN THE PLAN AND SECTION DRAWINGS.
16. SEQUENCE OF ALL CONSTRUCTION ACTIVITIES AS SPECIFIED IN SECTION 01 12 16 - WORK SEQUENCE.
17. PROVIDE PIPE IDENTIFICATION FOR ALL PIPING SYSTEMS AS SPECIFIED IN SECTION 40 05 45 - PIPING SYSTEM IDENTIFICATION.
18. SAMPLE PIPING, VALVES, AND WETTED APPURTENANCES SHALL BE PROHIBITED FROM UTILIZING PER- OR POLY-FLUOROALKYLATED (PFAS) MATERIALS SUCH AS TEFLON OR PTFE.

Brown AND Caldwell
PORTLAND, OREGON

Signer Name: Lynn Stephens
Signing Reason: I approved this document
Signing Time: 2025-01-25 16:25:31(CST)

LYNN MICHELLE STEPHENS
STATE OF WASHINGTON
50145
REGISTERED
PROFESSIONAL ENGINEER

ISSUED FOR BID

CITY OF Vancouver WASHINGTON

WS14 PFAS TREATMENT DESIGN

REVISIONS

REV	DATE	DESCRIPTION

LINE IS 2 INCHES AT FULL SIZE

DESIGNED:	C.CYR
DRAWN:	T.LEMON
CHECKED:	K.HAY
CHECKED:	J.HESBY
APPROVED:	L.STEPHENS

FILENAME
180318-D-00V21.rvt

BC PROJECT NUMBER
180318

CLIENT PROJECT NUMBER
PRJ100893

PROCESS

PROCESS GENERAL NOTES, LEGEND, AND SYMBOLS

DRAWING NUMBER
D-000-001

SHEET NUMBER 66 OF 125

Plot Date: 12/17/2024 7:39:21 PM Path: BIM 360://180318 - WS 14 PFAS Treatments Design/180318-D-00V21.rvt

2d89c5e3c6300c03cd1f052dbd2cbb9f

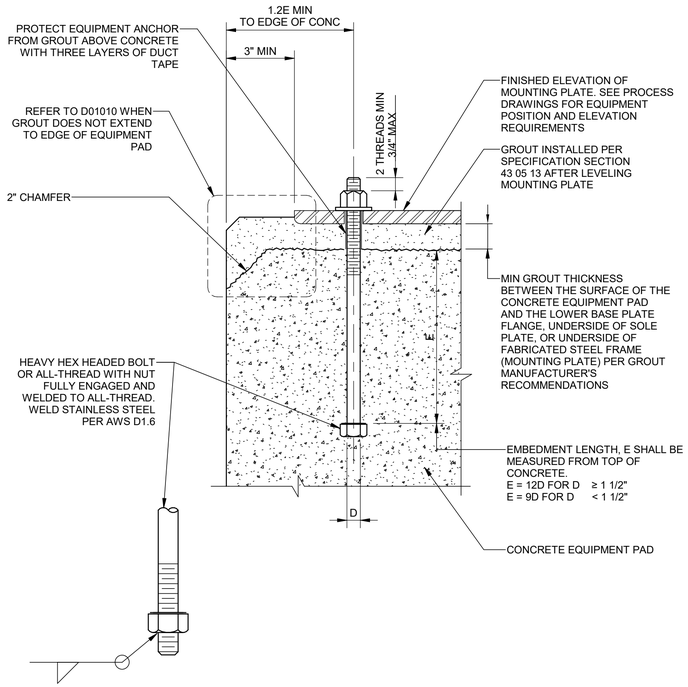

D01001 CAST-IN-PLACE ANCHOR BOLTS FOR EQUIPMENT ANCHORAGE
SCALE: 12" = 1'-0"

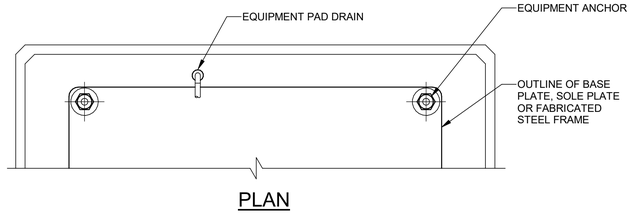

PLAN

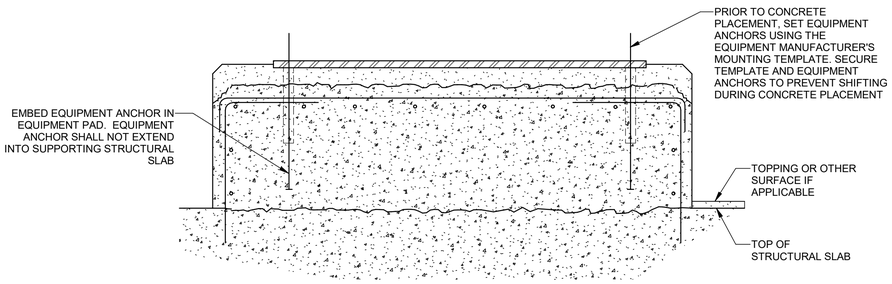

SECTION

NOTES:

1. EQUIPMENT PAD REINFORCEMENT, DRAINAGE, CONDUIT AND OTHER GENERAL REQUIREMENTS FOR EQUIPMENT PADS PER STANDARD DETAIL D01009.

D01007 PAD ANCHORED EQUIPMENT PAD
SCALE: 12" = 1'-0"

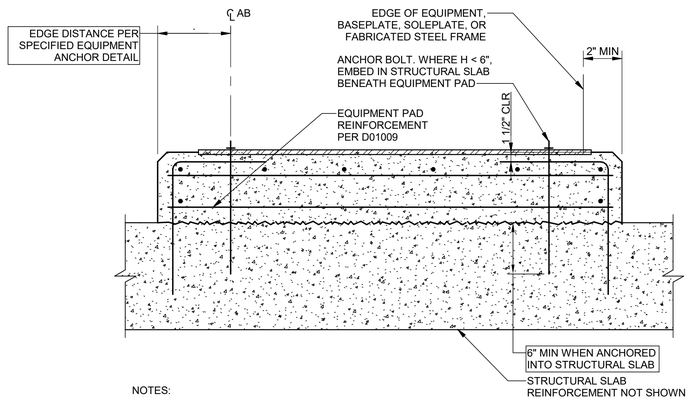

NOTES:

1. EQUIPMENT PAD REINFORCEMENT, DRAINAGE, CONDUIT AND OTHER GENERAL REQUIREMENTS FOR EQUIPMENT PADS PER STANDARD DETAIL D01009.

D01006 HOUSEKEEPING PAD
SCALE: 12" = 1'-0"

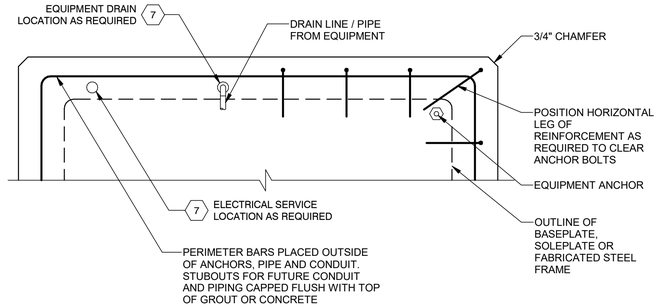

PLAN

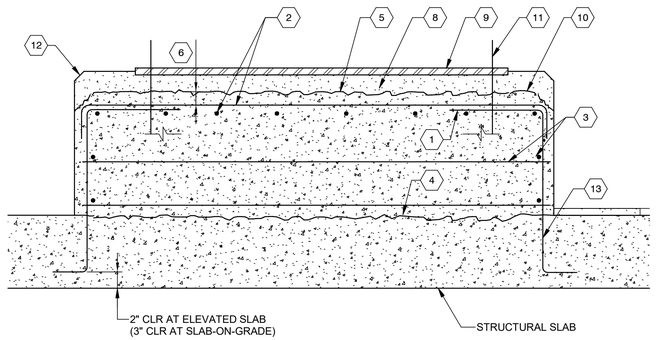

SECTION

KEY NOTES:

1 #4 @ 12" DOWELS FOR PADS ≤ 12" HIGH (#5 @ 12" FOR PADS > 12" HIGH) WITH 90 DEGREE STANDARD HOOK. PROVIDE 10" EMBEDMENT INTO STRUCTURAL SLAB OR HOOK BARS AT BOTTOM OF SLAB IF SLAB IS LESS THAN 12" THICK.

2 #4 @ 12" EACH WAY. TERMINATE WITH STANDARD HOOKS OR CLASS B LAP SPLICE WITH DOWEL HOOKS.

3 #4 CLOSED TIES @ 8" WITH 135° END HOOKS OR U-SHAPED BARS WITH LAP SPLICES.

4 ROUGHEN SLAB SURFACE TO 1/4" AMPLITUDE. REMOVE ALL LAITANCE AND LOOSE MATERIAL. APPLY BONDING AGENT 30 MINUTES OR LESS BEFORE PLACING CONCRETE. EXTENT OF ROUGHENED AREA SHALL BE 2 INCHES INSIDE THE PERIMETER OF THE EQUIPMENT PAD.

5. AFTER THE CONCRETE IS FULLY CURED, ROUGHEN TOP OF EQUIPMENT PAD PER SPECIFICATION SECTION 43 05 13.

6. MINIMUM 1" CLEAR AFTER ROUGHENING TOP OF EQUIPMENT PAD.

7. COORDINATE LOCATION OF ELECTRICAL CONDUIT AND DRAINAGE PIPING PENETRATIONS WITHIN THE EQUIPMENT PAD. ALL PENETRATIONS STUB-UP ON THE SAME SIDE OF THE EQUIPMENT AS REQUIRED FOR CONNECTION TO EQUIPMENT. LOCATE EQUIPMENT PAD DRAINS AT DRAINAGE CONNECTIONS FROM EQUIPMENT. CONFIGURE EQUIPMENT PAD ACCORDINGLY.

8 EQUIPMENT PAD GROUT. MINIMUM THICKNESS PER GROUT MANUFACTURER'S INSTRUCTIONS.

9 BASEPLATE, SOLEPLATE OR FABRICATED STEEL FRAME (MOUNTING PLATE).

10 2-INCH ROUGHENED CHAMFER IN CONCRETE EQUIPMENT PAD ALL AROUND WHERE GROUT EXTENDS TO EDGE OF PAD.

11 PRIOR TO CONCRETE PLACEMENT, SET EQUIPMENT ANCHORS USING THE EQUIPMENT MANUFACTURER'S MOUNTING TEMPLATE. SECURE TEMPLATE AND EQUIPMENT ANCHORS TO PREVENT SHIFTING DURING CONCRETE PLACEMENT. EQUIPMENT ANCHOR EMBEDDED IN EQUIPMENT PAD OR IN SUPPORTING FLOOR/FOUNDATION, AS SPECIFIED.

12 3/4-INCH CHAMFER IN EQUIPMENT PAD GROUT ALL AROUND.

13 FOR CONDITION WHERE STRUCTURAL SLAB IS EXISTING, DRILL HOLE AND ADHESIVE GROUT DOWELS A MINIMUM OF 6" INTO THE SLAB FOR #4 DOWELS AND 7 1/2" FOR #5 DOWELS.

D01009 GENERAL REQUIREMENTS FOR EQUIPMENT PADS
SCALE: 12" = 1'-0"

Brown AND Caldwell
PORTLAND, OREGON

Signer Name: Lynn Stephens
Signing Reason: I approved this document
Signing Time: 2025-01-25 16:25:34(EST)

LYNN MICHELLE STEPHENS
STATE OF WASHINGTON
50145
REGISTERED
PROFESSIONAL ENGINEER

ISSUED FOR BID

CITY OF Vancouver WASHINGTON

WS14 PFAS TREATMENT DESIGN

REVISIONS

REV	DATE	DESCRIPTION

LINE IS 2 INCHES AT FULL SIZE

DESIGNED: C.CYR
DRAWN: T.LEMON
CHECKED: K.HAY
CHECKED: J.HESBY
APPROVED: L.STEPHENS

FILENAME
180318-D-00V21.rvt
BC PROJECT NUMBER
180318
CLIENT PROJECT NUMBER
PRJ100893

PROCESS

DETAILS 1

DRAWING NUMBER
D-000-002

67 SHEET NUMBER OF 125

Plot Date: 12/17/2024 7:39:21 PM Path: BIM 360://180318 - WS 14 PFAS Treatments Design/180318-D-00V21.rvt

2ed0dd92831700db4d87e2b11373faab

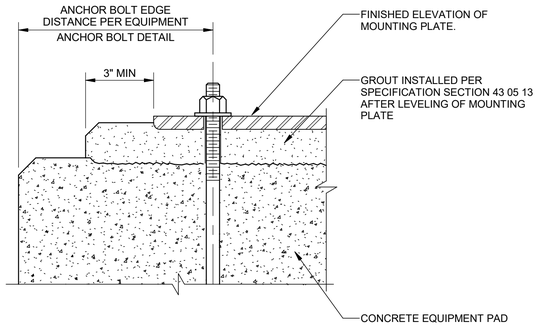

D01010 EQUIPMENT PAD GROUT EDGE
SCALE: 12" = 1'-0"

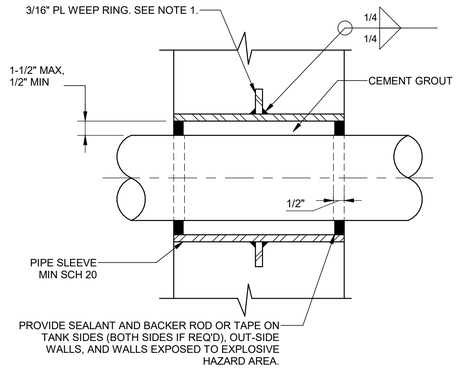

FOR WALLS

NOTES:
1. WEEP RINGS SHALL HAVE A MINIMUM DIAMETER 3-INCHES GREATER THAN THE OUTSIDE PIPE DIAMETER.

D12003 TYPE E PIPE PENETRATION
SCALE: 12" = 1'-0"

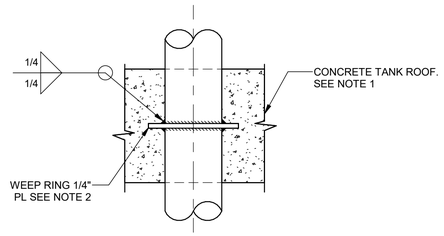

NOTES:
1. PROVIDE A MINIMUM OF 3" CLEARANCE BETWEEN REINFORCING STEEL AND FERROUS METAL PENETRATIONS.
2. WEEP RINGS SHALL HAVE A MINIMUM DIAMETER 3-INCHES GREATER THAN THE OUTSIDE PIPE DIAMETER.

FOR WALLS, FLOORS, AND CEILINGS

D13002 TYPE K PIPE PENETRATION
SCALE: 12" = 1'-0"

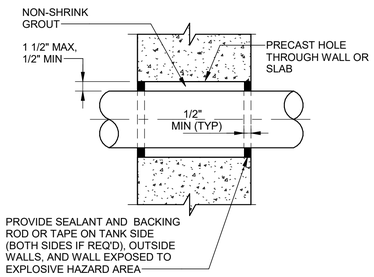

FOR PRECAST WALLS, FLOORS AND CEILINGS

NOTES:
1. INJECT POLYURETHANE SEALANT AS REQUIRED TO PROVIDE A WATER TIGHT SEAL.

D13006 TYPE X PIPE PENETRATION
SCALE: 12" = 1'-0"

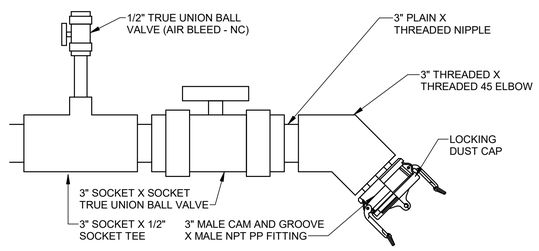

D32202 TRUCK CONNECTION DETAIL
SCALE: 3/4" = 1'-0"

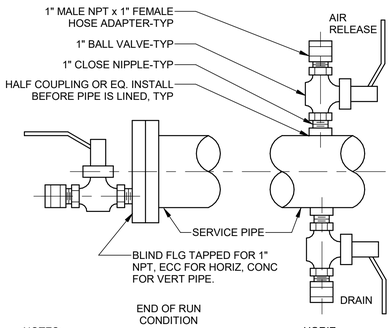

NOTES:
1. WHEN SERVICE PIPE IS MORE THAN 6 FEET ABOVE FLOOR, DRAIN AND/OR AIR RELEASE SHALL BE PIPED DOWN NEAREST WALL WITH VALVE 4 FEET ABOVE FLOOR.

(FOR AIR RELEASE OR DRAIN AS REQUIRED)

D32000 FLUSHING COCK
SCALE: 12" = 1'-0"

Brown AND Caldwell
PORTLAND, OREGON

Signer Name: Lynn Stephens
Signing Reason: I approved this document.
Signing Time: 2025-01-23 16:25:34(EST)

LYNN MICHELLE STEPHENS
STATE OF WASHINGTON
50145
REGISTERED PROFESSIONAL ENGINEER

ISSUED FOR BID

CITY OF Vancouver WASHINGTON

WS14 PFAS TREATMENT DESIGN

REVISIONS

REV	DATE	DESCRIPTION

LINE IS 2 INCHES AT FULL SIZE

DESIGNED: C.CYR
DRAWN: T.LEMON
CHECKED: K.HAY
CHECKED: J.HESBY
APPROVED: L.STEPHENS

FILENAME
180318-D-00V21.rvt

BC PROJECT NUMBER
180318

CLIENT PROJECT NUMBER
PRJ100893

PROCESS

DETAILS 2

DRAWING NUMBER
D-000-003

SHEET NUMBER 68 OF 125

Plot Date: 1/19/2025 11:32:04 AM Path: C:\Users\tlemon\OneDrive - Brown and Caldwell\Documents\180318-D-00V21_tomlemon2298.rvt

9666efb1eecb94af90af7fed622ef188

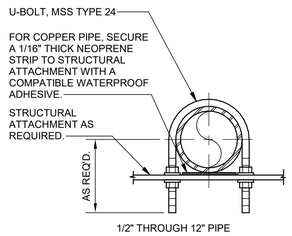

1/2" THROUGH 12" PIPE

D02107 TYPE 7 U-BOLT CLAMP
SCALE: 12" = 1'-0"

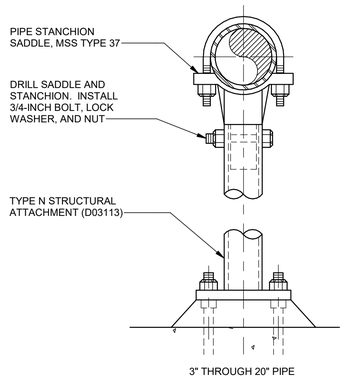

3" THROUGH 20" PIPE

D02110 TYPE 10 PIPE STANCHION SADDLE
SCALE: 12" = 1'-0"

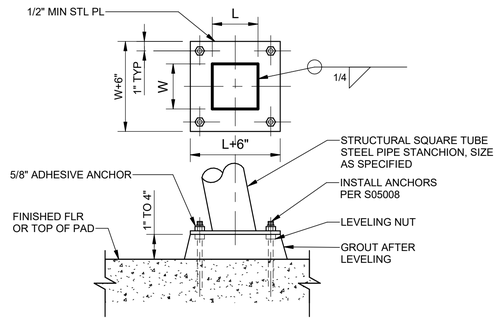

D03125 TYPE Q SEISMIC BRACE TUBE STEEL FLOOR ATTACHMENT
SCALE: 12" = 1'-0"

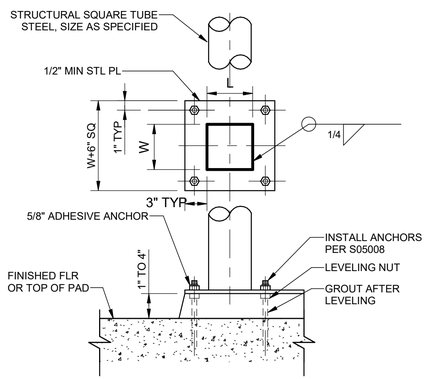

D03120 TYPE P VERTICAL TUBE STEEL FLOOR ATTACHMENT
SCALE: 12" = 1'-0"

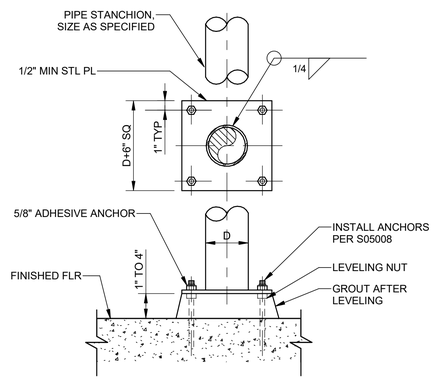

D03113 TYPE N PIPE STANCHION FLOOR ATTACHMENT
SCALE: 12" = 1'-0"

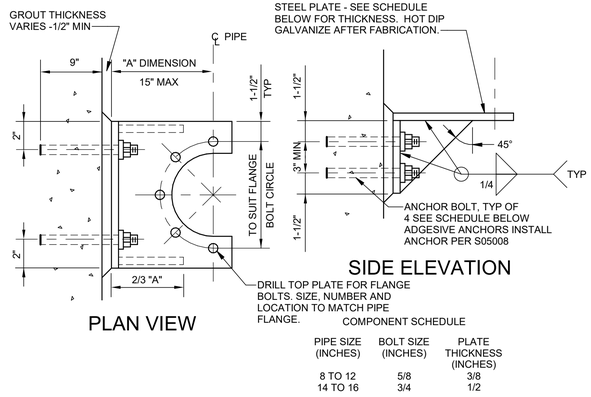

COMPONENT SCHEDULE

PIPE SIZE (INCHES)	BOLT SIZE (INCHES)	PLATE THICKNESS (INCHES)
8 TO 12	5/8	3/8
14 TO 16	3/4	1/2

D25017 TYPE T STRUCTURAL ATTACHMENT
SCALE: 12" = 1'-0"

Plot Date: 12/17/2024 7:39:23 PM Path: BIM 360://180318 - WS 14 PFAS Treatments Design/180318-D-00V21.rvt

Brown AND Caldwell
PORTLAND, OREGON

Signer Name: Lynn Stephens
Signing Reason: I approved this document
Signing Time: 2025-01-25 16:25:34(CST)

LYNN MICHELLE STEPHENS
STATE OF WASHINGTON
50145
REGISTERED PROFESSIONAL ENGINEER

ISSUED FOR BID

CITY OF Vancouver WASHINGTON

WS14 PFAS TREATMENT DESIGN

REVISIONS

REV	DATE	DESCRIPTION

LINE IS 2 INCHES AT FULL SIZE

DESIGNED: C.CYR
DRAWN: T.LEMON
CHECKED: K.HAY
CHECKED: J.HESBY
APPROVED: L.STEPHENS

FILENAME
180318-D-00V21.rvt

BC PROJECT NUMBER
180318

CLIENT PROJECT NUMBER
PRJ100893

PROCESS

PIPE SUPPORT STANDARD DETAILS 1

DRAWING NUMBER
D-000-004

SHEET NUMBER 69 OF 125

8eee2f38edaafba39626fc70c43e159a

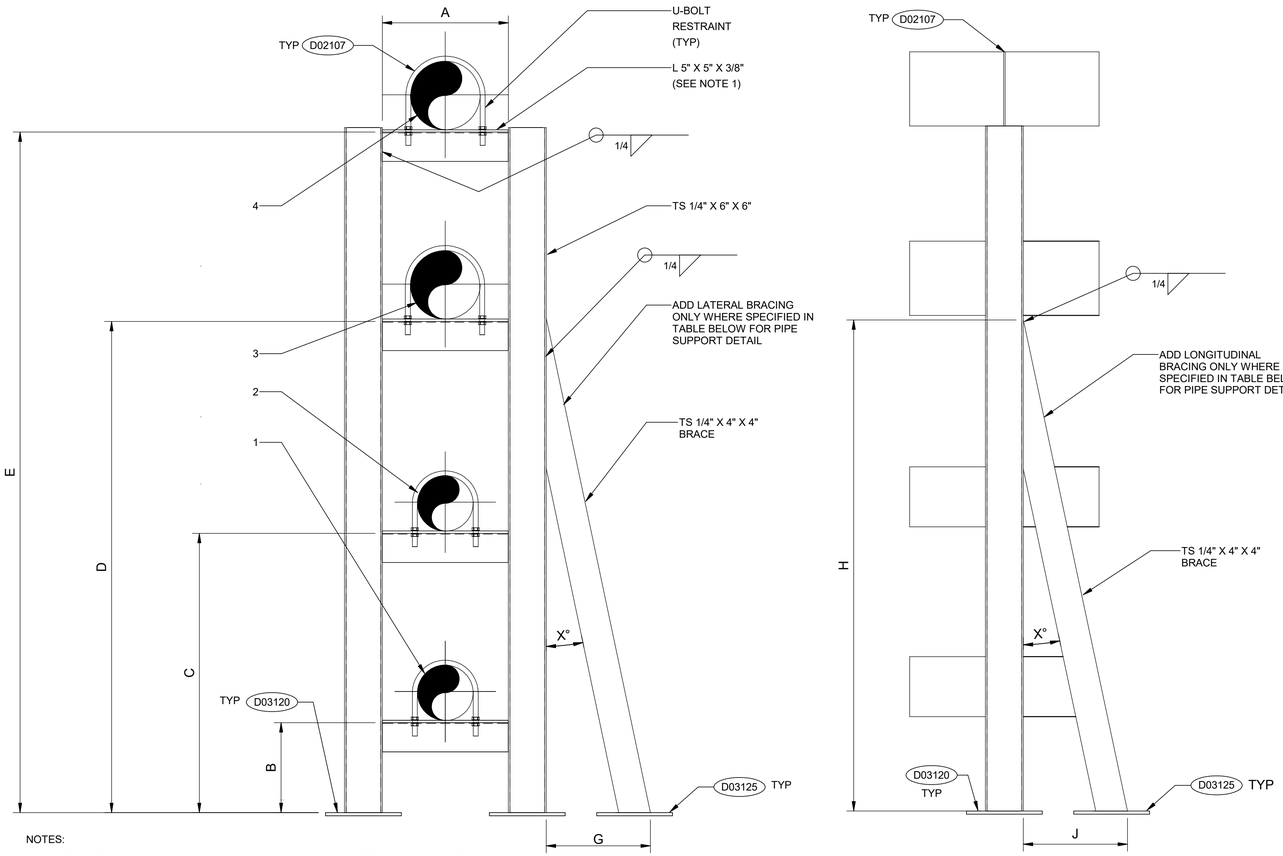

1 PIPE SUPPORT DETAIL
SCALE: 1" = 1'-0"

2 PIPE SUPPORT DETAIL SIDE
SCALE: 1" = 1'-0"

NOTES:

1. ALL STRUCTURAL MEMBERS SHALL BE GALVANIZED CARBON STEEL AS SPECIFIED IN SECTION 05 50 00.
2. EACH PIPE RACK SHALL HAVE A MINIMUM OF TWO CROSS MEMBERS FOR STABILITY

PIPE SUPPORT SCHEDULE

PIPE SUPPORT NO.	PIPES				DIMENSIONS								
	PIPE SIZE 1	PIPE SIZE 2	PIPE SIZE 3	PIPE SIZE 4	A	B	C	D	E	F	G	H	J
1	10"	16"	NA	NA	1'-5 2/3"	0'-8 1/4"	2'-11 11/16"	NA	NA	2'-11 11/16"	2'-1 1/2"	2'-11 11/16"	2'-1 1/2"
2	10"	16"	NA	NA	1'-5 2/3"	0'-8 1/4"	2'-11 11/16"	NA	NA	NA	NA	NA	NA
3	10"	16"	NA	NA	1'-5 2/3"	0'-8 1/4"	2'-11 11/16"	NA	NA	NA	NA	NA	NA
4	10"	16"	16"	NA	1'-5 2/3"	0'-8 1/4"	2'-11 11/16"	5'-10 1/4"	NA	NA	NA	NA	NA
5	10"	16"	16"	10"	1'-9 2/3"	0'-8 1/4"	2'-11 11/16"	5'-10 1/4"	8'-6 7/8"	5'-10 1/4"	2'-1 1/2"	NA	NA
6	10"	16"	16"	10"	1'-9 2/3"	0'-8 1/4"	2'-11 11/16"	5'-10 1/4"	8'-6 7/8"	NA	NA	NA	NA
7	10"	16"	16"	10"	1'-9 2/3"	0'-8 1/4"	2'-11 11/16"	5'-10 1/4"	8'-6 7/8"	5'-10 1/4"	2'-1 1/2"	5'-10 1/4"	2'-1 1/2"
8	16"	NA	NA	NA	1'-9 2/3"	NA	2'-11 11/16"	5'-10 1/4"	NA	NA	NA	NA	NA
9	10"	16"	16"	10"	1'-9 2/3"	0'-8 1/4"	2'-11 11/16"	5'-10 1/4"	8'-6 7/8"	5'-10 1/4"	2'-1 1/2"	NA	NA
10	10"	12"	12"	10"	1'-5 2/3"	0'-8 1/4"	2'-11 11/16"	5'-10 1/4"	8'-6 7/8"	5'-10 1/4"	2'-1 1/2"	NA	NA
11	10"	12"	12"	10"	1'-5 2/3"	0'-8 1/4"	2'-11 11/16"	5'-10 1/4"	8'-6 7/8"	NA	NA	NA	NA
12	10"	12"	12"	10"	1'-5 2/3"	0'-8 1/4"	2'-11 11/16"	5'-10 1/4"	8'-6 7/8"	5'-10 1/4"	2'-1 1/2"	NA	NA
13	10"	12"	12"	10"	1'-5 2/3"	0'-8 1/4"	2'-11 11/16"	5'-10 1/4"	8'-6 7/8"	5'-10 1/4"	2'-1 1/2"	5'-10 1/4"	2'-1 1/2"
14	10"	NA	NA	NA	1'-5 2/3"	NA	2'-11 11/16"	NA	8'-6 7/8"	NA	NA	NA	NA
15	10"	NA	NA	NA	1'-5 2/3"	NA	2'-11 11/16"	NA	8'-6 7/8"	NA	NA	NA	NA
16	10"	NA	NA	NA	1'-5 2/3"	NA	2'-11 11/16"	NA	8'-6 7/8"	5'-10 1/4"	2'-1 1/2"	NA	NA
17	10"	10"	8"	10"	1'-10"	0'-8 3/8"	3'-2 5/16"	6'-1 15/16"	8'-6 11/16"	NA	NA	NA	NA
18	10"	10"	8"	10"	1'-10"	0'-8 3/8"	3'-2 5/16"	6'-1 15/16"	8'-6 11/16"	NA	NA	NA	NA
19	10"	10"	8"	10"	1'-10"	0'-8 3/8"	3'-2 5/16"	6'-1 15/16"	8'-6 11/16"	NA	NA	NA	NA
20	10"	NA	NA	NA	1'-5 2/3"	NA	2'-11 11/16"	NA	9'-6 7/8"	NA	NA	NA	NA
21	10"	NA	NA	NA	1'-5 2/3"	NA	2'-11 11/16"	NA	9'-6 7/8"	5'-10 1/4"	2'-1 1/2"	5'-10 1/4"	2'-1 1/2"
22	4"	4"	NA	NA	1'-5 2/3"	1'-1 13/16"	3'-1 11/16"	NA	NA	NA	NA	NA	NA

NOTE: EACH PIPE RACK SHALL HAVE A MINIMUM OF TWO CROSS MEMBERS FOR STABILITY

3 D02000 - NUMBERED PIPE SUPPORT SCHEDULE
SCALE: 12" = 1'-0"

Brown AND Caldwell
PORTLAND, OREGON

Signer Name: Lynn Stephens
Signing Reason: I approved this document
Signing Time: 2025-01-23 16:25:35(EST)

LYNN MICHELLE STEPHENS
STATE OF WASHINGTON
50145
REGISTERED PROFESSIONAL ENGINEER

ISSUED FOR BID

CITY OF Vancouver WASHINGTON

WS14 PFAS TREATMENT DESIGN

REVISIONS

REV	DATE	DESCRIPTION

LINE IS 2 INCHES AT FULL SIZE

DESIGNED: C.CYR
DRAWN: T.LEMON
CHECKED: K.HAY
CHECKED: J.HESBY
APPROVED: L.STEPHENS

FILENAME 180318-D-00V21.rvt
BC PROJECT NUMBER 180318
CLIENT PROJECT NUMBER PRJ100893

PROCESS

PIPE SUPPORT STANDARD DETAILS 2

DRAWING NUMBER D-000-005

SHEET NUMBER 70 OF 125

Plot Date: 1/19/2025 11:32:04 AM Path: C:\Users\tlemon\OneDrive - Brown and Caldwell\Documents\180318-D-00V21_tomlemon2298.rvt

26d4be97915ec1a1c08d4f7c0c1a6ca2

GENERAL NOTES:

1. DRAWING CREATED FROM LATEST AVAILABLE RECORD DRAWINGS. ARRANGEMENT OF AN ACTUAL EQUIPMENT DEPICTED IS FOR GENERAL PURPOSE ONLY. ACTUAL CONDITIONS MAY VARY AND MUST BE COORDINATED WITH THE OWNER AND ENGINEER. CONTRACTOR SHALL BE RESPONSIBLE FOR FIELD VERIFYING ALL DIMENSIONS, ELEVATIONS, AND ACTUAL SITE DETAILS.
2. FOR CLARITY AND BASED ON LIMITED FACILITY SCOPE FOR THIS PROJECT, MINIMAL INFORMATION IS SHOWN FOR EXISTING FACILITY AND EQUIPMENT.
3. WHERE NO CONSTRUCTION DETAILS ARE SHOWN OR NOTED FOR ANY PART OF THE WORK, DETAILS SHALL BE THE SAME AS FOR OTHER SIMILAR WORK.

KEYNOTES:

1. CONTRACTOR TO TEMPORARILY REMOVE EXISTING PUMPS, REPLACE BOWL ASSEMBLY, AND REINSTALL PUMPS AS DESCRIBED IN SECTION 43 23 62. REFER TO SECTION 01 12 16 FOR SHUTDOWN SEQUENCING, SECTION 01 91 00 FOR STARTUP AND COMMISSIONING, AND SECTION 01 74 10 FOR DISINFECTION REQUIREMENTS. ALL ACTIVITIES TO BE COORDINATED AND APPROVED BY PUMP SUPPLIER, OWNER AND ENGINEER.
2. TEMPORARILY REMOVE PIPING, VALVES, PIPE SUPPORTS, INSTRUMENTATION, ELECTRICAL CONDUIT, AND CABLING AS REQUIRED FOR PUMP REMOVAL AND BOWL REPLACEMENT ACTIVITIES. CONTRACTOR SHALL PROTECT EXISTING FEATURES IN PLACE FOR RE-USE. ANY ASSETS NOT IN CONDITION FOR RE-INSTALLATION, AS DETERMINED THROUGH OWNER AND ENGINEER APPROVAL, SHALL BE REPLACED IN-KIND BY CONTRACTOR FOR NO ADDITIONAL COST.
3. EXISTING ROOF ACCESS HATCH AVAILABLE FOR CONTRACTOR USE. SEE PHOTOS ON THIS SHEET.
4. CONNECTION TO EXISTING DISCHARGE PIPING IS 10-INCH DIAMETER. FIELD VERIFY ALL CONDITIONS.



ROOF HATCH FROM BUILDING EXTERIOR
2 NTS



ROOF HATCH INTERIOR
3 NTS



ROOF HATCH INTERIOR LOCATION
4 NTS

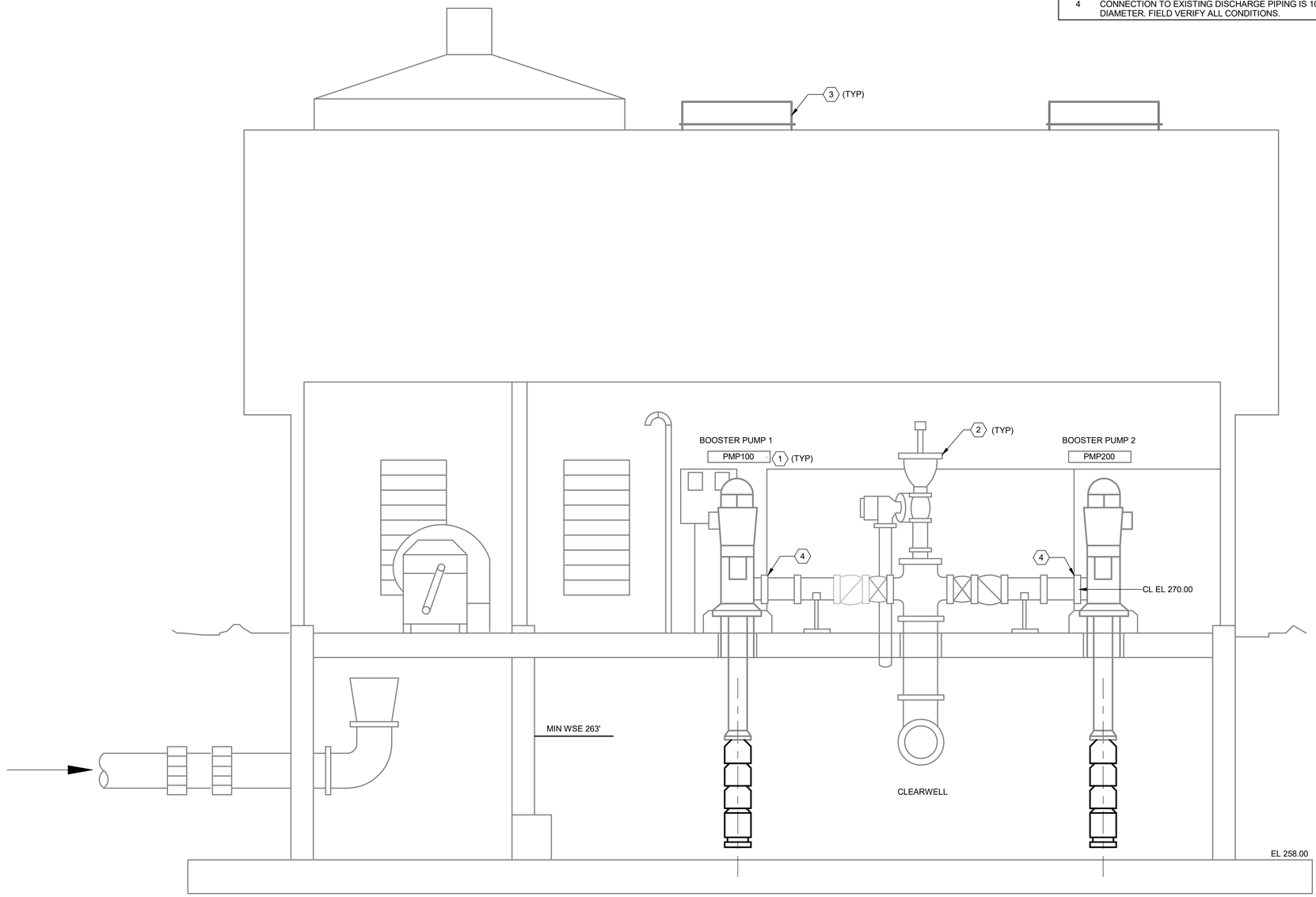

TREATMENT BUILDING WEST ELEVATION
SCALE: 3/8" = 1'-0"

Brown AND Caldwell
PORTLAND, OREGON

Signer Name: Lynn Stephens
Signing Reason: I approved this document
Signing Time: 2025-01-23 16:25:35(EST)

LYNN MICHELLE STEPHENS
STATE OF WASHINGTON
50145
REGISTERED PROFESSIONAL ENGINEER

ISSUED FOR BID

CITY OF Vancouver WASHINGTON

WS14 PFAS TREATMENT DESIGN

REVISIONS

REV	DATE	DESCRIPTION

LINE IS 2 INCHES AT FULL SIZE

DESIGNED:	C.CYR
DRAWN:	T.LEMON
CHECKED:	K.HAY
CHECKED:	J.HESBY
APPROVED:	L.STEPHENS

FILENAME
180318-D-00V21.rvt

BC PROJECT NUMBER
180318

CLIENT PROJECT NUMBER
PRJ100893

PROCESS

PUMP IMPROVEMENT ELEVATION

DRAWING NUMBER
D-B01-301

SHEET NUMBER 71 OF 125

Plot Date: 12/17/2024 7:39:28 PM Path: BIM 360://180318 - WS 14 PFAS Treatments Design/180318-D-00V21.rvt

cb0ad3fa04acae8eda737b603e0216c0

PLAN NORTH

VESSEL CENTERPOINT COORDINATE SCHEDULE

VESSEL NO.	NORTHING	EASTING
F0100	132556.87	1102833.96
F0200	132556.87	1102854.45
F0300	132559.60	1102874.18
F0400	132563.60	1102894.30
F0500	132567.51	1102913.92
F0600	132571.51	1102934.02

GENERAL NOTES:

1. SEE PROCESS AND INSTRUMENTATION DIAGRAMS FOR EXTENT OF PRESSURE VESSEL SYSTEM SUPPLIER SCOPE OF SUPPLY.
2. VESSEL CENTERPOINT COORDINATES PROVIDED IN TABLE ON THIS SHEET.
3. PROVIDE MINIMUM 5 PIPE DIAMETERS UPSTREAM AND 3 PIPE DIAMETERS DOWNSTREAM OF STRAIGHT PIPE FOR FLOW METER INSTALLATION UNLESS OTHERWISE NOTED.
4. REFER TO ISOMETRIC DRAWING D-P01-901 AND D-P01-902 FOR LAYOUT OF ABOVE GRADE PIPING HEADERS.
5. PIPE SUPPORT NUMBERS ON THIS SHEET CORRESPOND TO PIPE SUPPORTS IN TABLE ON D-000-005.
6. PROVIDE HEAT TRACING AND INSULATION ON EXPOSED PIPING AS SHOWN ON PROCESS AND INSTRUMENTATION DIAGRAMS.

KEYNOTES:

1. FROM RAW WATER TIE-IN AT U03.
2. TO FINISHED WATER TIE-IN AT U03.
3. MINIMUM 12" CLEARANCE BETWEEN PIPE TRANSITION TO BELOW GRADE AND EQUIPMENT PAD.
4. SEE CIVIL FOR CONTINUATION.
5. INSTALL RAIN CANOPY OVER SAMPLE TAP AREA - TYP. ALL VESSELS. SEE KEY NOTE #4 ON S-P01-101 FOR DETAILS.
6. PIPE SUPPORTS FOR ELEVATED PIPE AROUND VESSELS DESIGNED BY VESSEL SUPPLIER.
7. PIPE SUPPORT DESIGN FOR MANIFOLD AREA BY VESSEL SUPPLIER.
8. 4'-6" BY 4'-6" CONCRETE PAD, SEE DETAIL S06003.
9. 6'-6" BY 6'-6" CONCRETE PAD, SEE DETAIL S06003.
10. 2" BALL VALVE FOR FUTURE CHEMICAL INJECTION ON 8" RWS LINE.
11. MINIMUM 5" CLEARANCE BETWEEN EDGE OF BASEPLATE AND EDGE OF CONCRETE.
12. PROVIDE CATHODIC PROTECTION FOR BURIED PIPING, FITTINGS, AND APPURTENANCES IN ACCORDANCE WITH SECTION 33 14 42.
13. SLEEVE COUPLING PER SPEC 40 05 06.

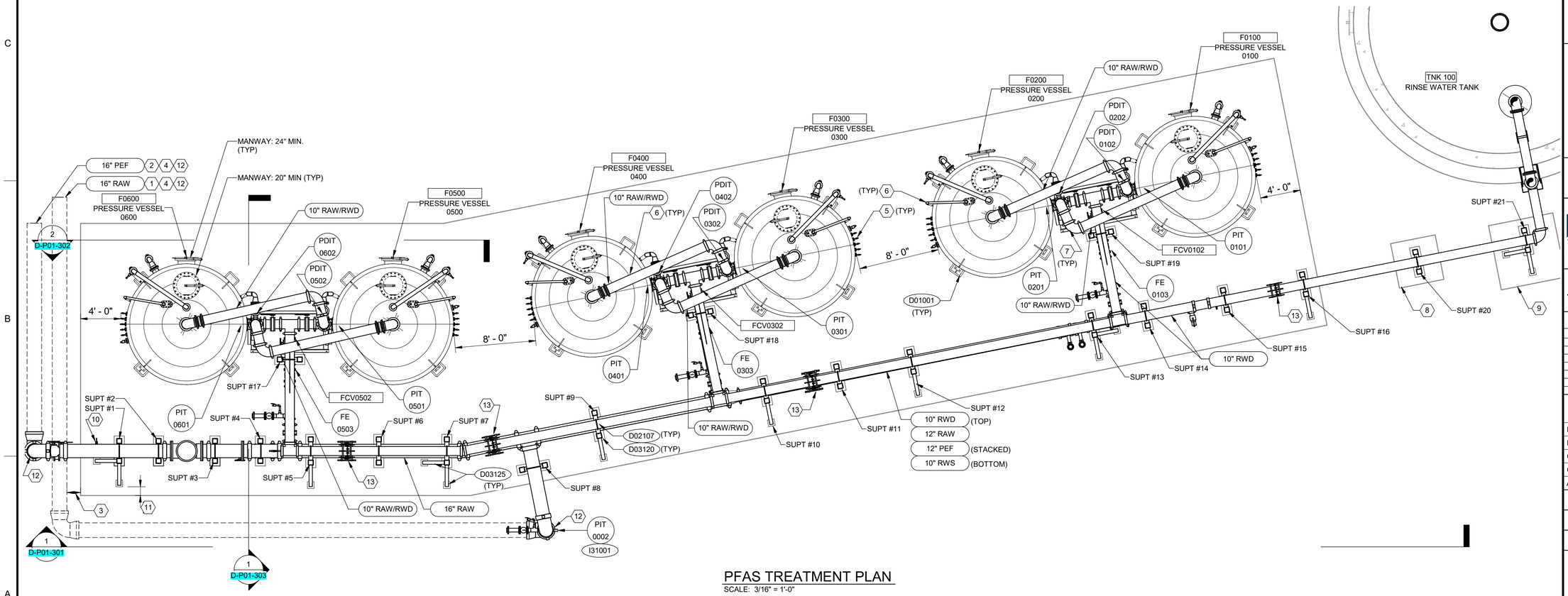

PFAS TREATMENT PLAN

SCALE: 3/16" = 1'-0"

Brown AND Caldwell

PORTLAND, OREGON

Signer Name: Lynn Stephens
Signing Reason: I approved this document
Signing Time: 2025-01-23 16:25:36(EST)

LYNN MICHELLE STEPHENS
STATE OF WASHINGTON
50145
REGISTERED PROFESSIONAL ENGINEER

ISSUED FOR BID

CITY OF Vancouver WASHINGTON

WS14 PFAS TREATMENT DESIGN

REVISIONS

REV	DATE	DESCRIPTION

LINE IS 2 INCHES AT FULL SIZE

DESIGNED: C.CYR
DRAWN: T.LEMON
CHECKED: K.HAY
CHECKED: J.HESBY
APPROVED: L.STEPHENS

FILENAME
180318-D-00V21.rvt

BC PROJECT NUMBER
180318

CLIENT PROJECT NUMBER
PRJ100893

PROCESS

PFAS TREATMENT PLAN

DRAWING NUMBER
D-P01-101

72 SHEET NUMBER OF 125

Plot Date: 1/19/2025 11:32:07 AM Path: C:\Users\tlemon\OneDrive - Brown and Caldwell\Documents\180318-D-00V21_tomlemon2298.rvt

45cf21201b304a02b67c0ffcd5c8ae9d

GENERAL NOTES:

1. SEE PROCESS AND INSTRUMENTATION DIAGRAMS FOR EXTENT OF PRESSURE VESSEL SYSTEM SUPPLIER SCOPE OF SUPPLY.
2. REFER TO ISOMETRIC DRAWING D-P01-901 AND D-P01-902 FOR LAYOUT OF ABOVE GRADE PIPING HEADERS.
3. REFER TO MECHANICAL AND STRUCTURAL DETAIL SHEETS FOR ALL EQUIPMENT PAD AND ANCHORING DETAILS.
4. PIPE SUPPORT NUMBERS ON THIS SHEET CORRESPOND TO PIPE SUPPORTS IN TABLE ON D-000-005.
5. PROVIDE HEAT TRACING AND INSULATION ON EXPOSED PIPING AS SHOWN ON PROCESS AND INSTRUMENTATION DIAGRAMS.

KEYNOTES:

1. 11.25-DEG ELBOW.
2. FROM RAW WATER TIE-IN AT U03.
3. TO FINISHED WATER TIE-IN AT U03.
4. PIPE SUPPORTS FOR ELEVATED PIPE AROUND VESSELS DESIGNED BY VESSEL SUPPLIER.
5. TO RINSE WATER TANK.
6. 2" BALL VALVE FOR FUTURE CHEMICAL INJECTION ON 8" RWS LINE.
7. 10" VESSEL INLET WILL PRIMARILY BE USED FOR RAW WATER. DURING BACKWASHING, THIS LINE WILL CONTAIN RWD.
8. PIPE SUPPORTS ATTACHED TO VESSELS AND IN THE VALVE MANIFOLD AREA ARE SHOWN FOR EXAMPLE ONLY - VESSEL SUPPLIER TO DESIGN ELEVATED PIPE SUPPORTS ATTACHED TO VESSEL AND PIPE SUPPORTS IN VESSEL VALVE MANIFOLD AREA.
9. SLEEVE COUPLING PER SPEC 40 05 06.
10. PROVIDE CATHODIC PROTECTION FOR BURIED PIPING, FITTINGS, AND APPURTENANCES IN ACCORDANCE WITH SECTION 33 14 42.

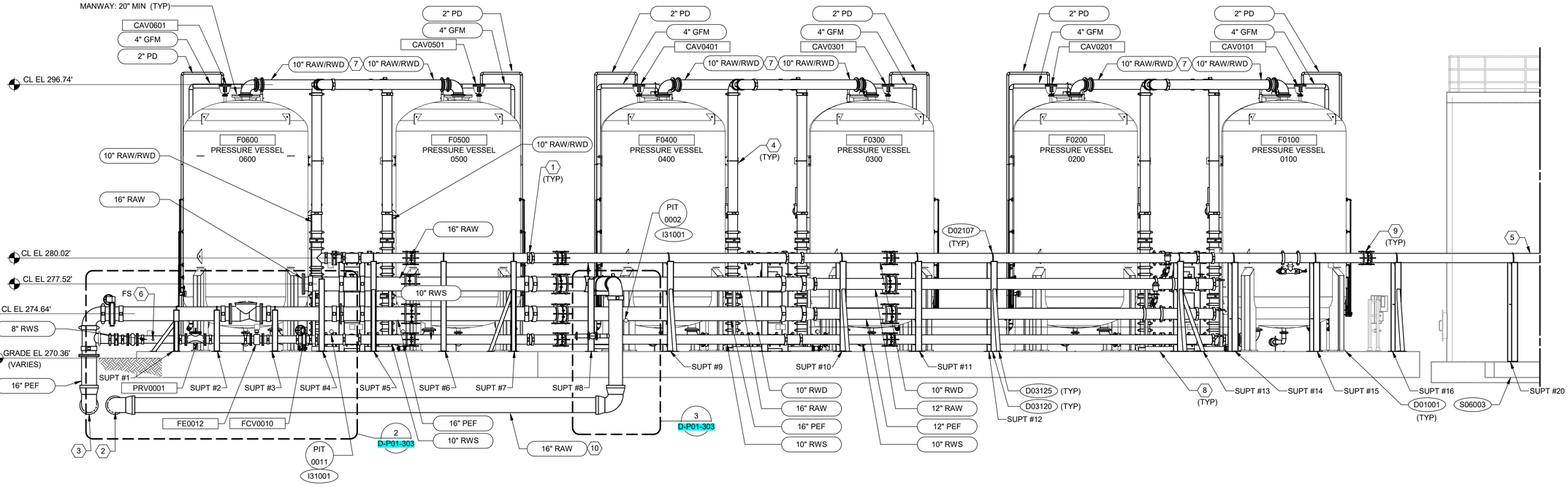

1 SECTION
D-P01-101 SCALE: 3/16" = 1'-0"

Path: BIM 360://180318 - WS 14 PFAS Treatments Design/180318-D-00V21.rvt

Plot Date: 1/17/2025 1:47:17 PM

Brown AND Caldwell
PORTLAND, OREGON

Signer Name: Lynn Stephens
Signing Reason: I approved
this document
Signing Time: 2025-01-25
16:25:36(EST)

LYNN MICHELLE STEPHENS
STATE OF WASHINGTON
50145
REGISTERED
PROFESSIONAL ENGINEER

ISSUED FOR BID

CITY OF Vancouver WASHINGTON

WS14 PFAS TREATMENT DESIGN

REVISIONS

REV	DATE	DESCRIPTION

LINE IS 2 INCHES AT FULL SIZE

DESIGNED: C.CYR
DRAWN: T.LEMON
CHECKED: K.HAY
CHECKED: J.HESBY
APPROVED: L.STEPHENS

FILENAME
180318-D-00V21.rvt
BC PROJECT NUMBER
180318
CLIENT PROJECT NUMBER
PRJ100893

PROCESS

PFAS TREATMENT SECTION 1

DRAWING NUMBER
D-P01-301

73 SHEET NUMBER OF 125

d2108718fe47ea0a383369d8b9d99642

VESSEL NOZZLE SCHEDULE							
NOZZLE NO.	NOZZLE SIZE/DESCRIPTION	SURFACE OF PENETRATION	ROTATION (0100, 0300, AND 0500)	ROTATION (0200, 0400, AND 0600)	FITTING TYPE	DISTANCE FROM CENTER OF VESSEL	DISTANCE FROM BOTTOM OF VESSEL
N1	4" GAC Fresh Media (Inlet)	Top	0 DEG	0 DEG	150# Flange	1'-6"	N/A
N2	4" GAC Spent Media 1 (Outlet)	Sidewall	30 DEG	330 DEG	150# Flange	N/A	1' 7"
N3	1/2" GAC 25% Sample Tap	Sidewall	75 DEG	285 DEG	150# Flange	N/A	9'-5"
N4	1/2" GAC 50% Sample Tap	Sidewall	80 DEG	280 DEG	150# Flange	N/A	6'-3"
N5	1/2" GAC 75%/IX 25% Sample Tap	Sidewall	85 DEG	275 DEG	150# Flange	N/A	2'-10"
N6	1/2" IX 50% Sample Tap	Sidewall	90 DEG	270 DEG	150# Flange	N/A	0'-6"
N7	1/2" IX 75% Sample Tap	Sidewall	95 DEG	265 DEG	150# Flange	N/A	0'-11"
N8	2" Undercone Vent	Sidewall	70 DEG	255 DEG	150# Flange	N/A	0'-9"
N9	2" Air/Vacuum Valve	Top	50 DEG	310 DEG	150# Flange	2'-11"	N/A
N10	10" Influent Connection	Top	0 DEG	0 DEG	150# Flange	0'-0"	N/A
N11	10" Effluent Connection	Bottom	270 DEG	90 DEG	150# Flange	0'-0"	N/A
N12	4" GAC Spent Media 2 (Outlet)	Bottom	0 DEG	0 DEG	150# Flange	0	N/A
M1	20" Manway	Top	0 DEG	0 DEG	Flat Face	3'-9"	N/A
M2	24" Manway	Sidewall	0 DEG	0 DEG	Flat Face	N/A	2'-2"
M3	18x14" Manway	Bottom	15 DEG	15 DEG	Flat Face	0	N/A

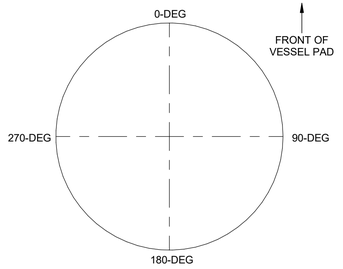

VESSEL NOZZLE ROTATION SCHEMATIC
NTS

GENERAL NOTES:

1. SEE PROCESS AND INSTRUMENTATION DIAGRAMS FOR EXTENT OF PRESSURE VESSEL SYSTEM SUPPLIER SCOPE OF SUPPLY.
2. PROVIDE MINIMUM 5 PIPE DIAMETERS UPSTREAM AND 3 PIPE DIAMETERS DOWNSTREAM OF STRAIGHT PIPE FOR FLOW METER INSTALLATION UNLESS OTHERWISE NOTED.
3. ENLARGED SECTIONS ARE REPRESENTATIVE OF ALL PRESSURE VESSEL TRAINS.
4. VALVE MANIFOLDS SHALL BE CONFIGURED TO PROVIDE MINIMUM 6" RADIAL CLEARANCE AROUND ALL VALVE HANDWHEELS. DIMENSIONS AND LAYOUT SHOWN ON DRAWINGS ARE FOR GENERAL REPRESENTATION PURPOSES AND MUST BE COORDINATED WITH SYSTEM SUPPLIER.
5. REFER TO MECHANICAL AND STRUCTURAL DETAIL SHEETS FOR ALL EQUIPMENT PAD AND ANCHORING DETAILS.
6. PRESSURE VESSEL UNDERDRAIN SYSTEM AND NOZZLES SUBJECT TO CHANGE BASED ON PRESSURE VESSEL SUPPLIER DESIGN.
7. GRADE AND TOP OF SLAB ELEVATIONS VARY; REFER TO CIVIL AND STRUCTURAL DRAWINGS FOR DETAILS.
8. PROVIDE HEAT TRACING AND INSULATION ON EXPOSED PIPING AS SHOWN ON PROCESS AND INSTRUMENTATION DIAGRAMS.

KEYNOTES:

1. SEE CIVIL FOR CONTINUATION.
2. ALL VALVES WITHIN THE GAC VENDOR PACKAGE SHALL HAVE HANDWHEELS.
3. ALL CONNECTIONS WITHIN THE GAC VENDOR PACKAGE SHALL HAVE FLANGED CONNECTIONS.
4. PIPE SUPPORTS FOR ELEVATED PIPE AROUND VESSELS DESIGNED BY VESSEL SUPPLIER.
5. ALL SAMPLE AND VENT VALVES MUST BE INDIVIDUALLY LOCKABLE.
6. DAVIT ON MANWAY COVER.
7. NOZZLE ROTATIONS ARE APPROXIMATE AND BASED ON ONE EXAMPLE MANUFACTURER. THE NOZZLES ARE NOT INTENDED TO BE EXACT FOR A SPECIFIC MANUFACTURER. NOZZLE ROTATIONS SHALL BE SUBMITTED IN ACCORDANCE WITH SECTION 43 31 13.13 FOR REVIEW AND APPROVAL BY THE ENGINEER.
8. PROVIDE CATHODIC PROTECTION FOR BURIED PIPING, FITTINGS, AND APPURTENANCES IN ACCORDANCE WITH SECTION 33 14 42.

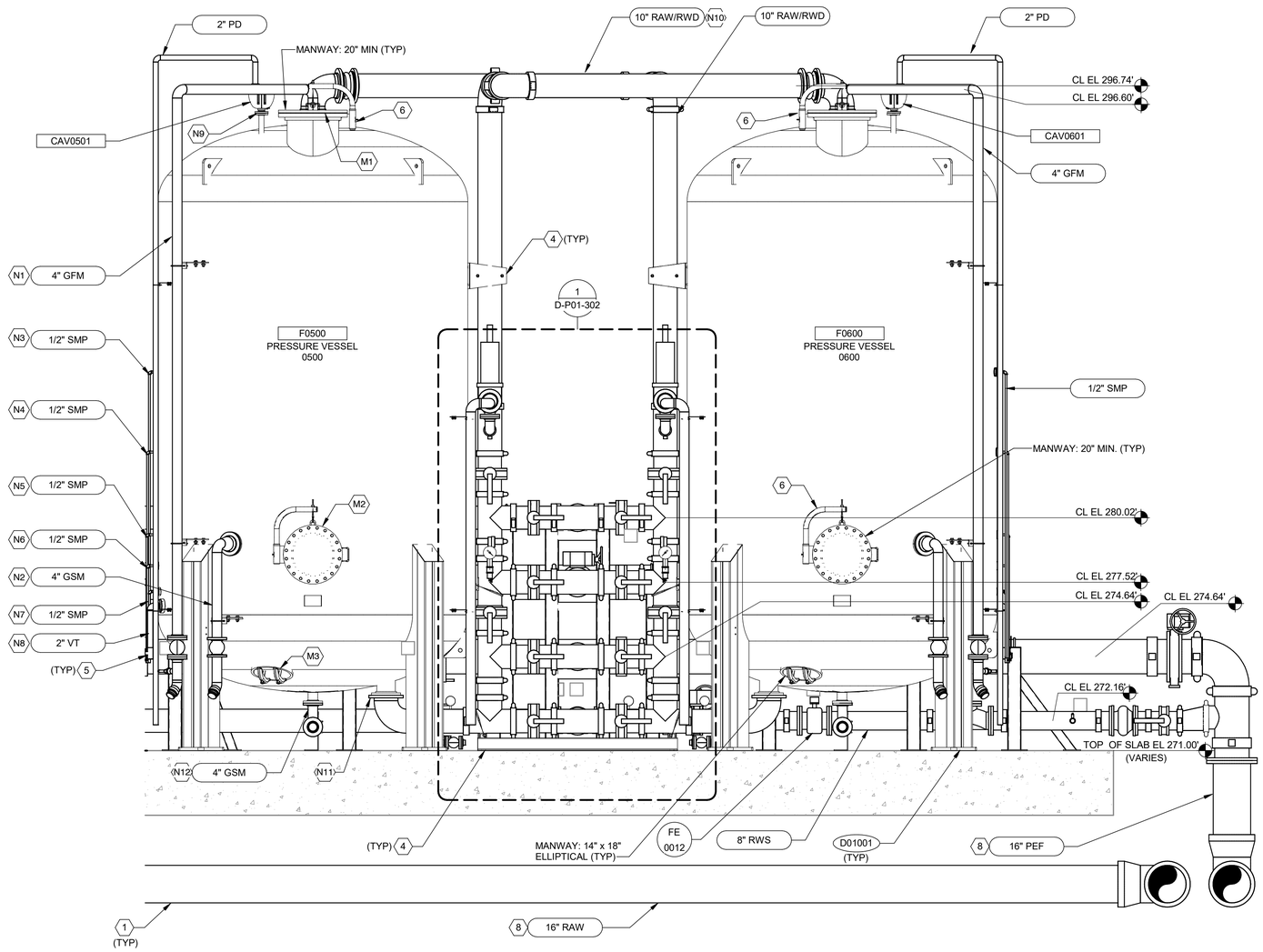

2 SECTION
D-P01-101 SCALE: 3/8" = 1'-0"

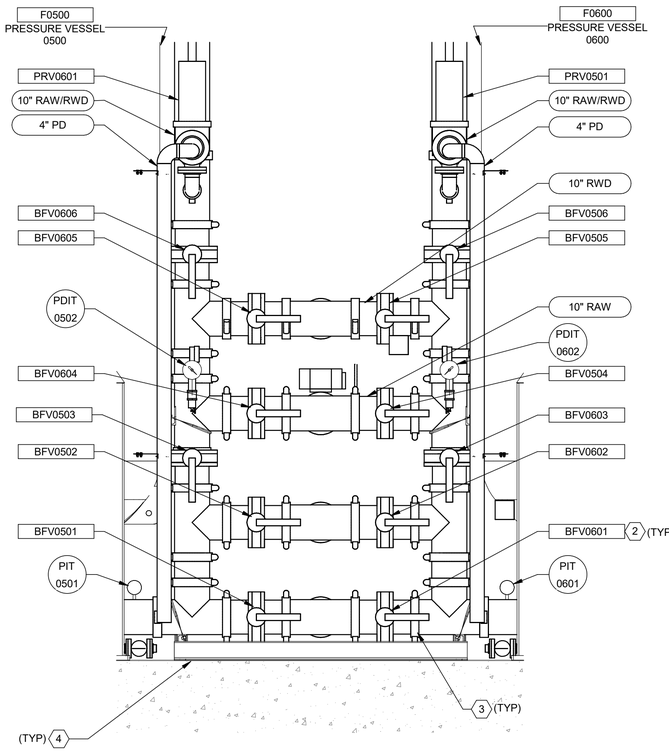

1 DETAIL
D-P01-302 SCALE: 1/2" = 1'-0"

Brown AND Caldwell
PORTLAND, OREGON

Signer Name: Lynn Stephens
Signing Reason: I approved this document.
Signing Time: 2026-02-11 08:58:01(IST)

LYNN MICHELLE STEPHENS
STATE OF WASHINGTON
50145
REGISTERED PROFESSIONAL ENGINEER

ISSUED FOR BID

CITY OF Vancouver WASHINGTON

WS14 PFAS TREATMENT DESIGN

REVISIONS

REV	DATE	DESCRIPTION
0	06/05/25	CONFORMED DRAWINGS

LINE IS 2 INCHES AT FULL SIZE

DESIGNED: C.CYR
DRAWN: T.LEMON
CHECKED: K.HAY
CHECKED: J.HESBY
APPROVED: L.STEPHENS

FILENAME
180318-D-00V21.rvt
BC PROJECT NUMBER
180318
CLIENT PROJECT NUMBER
PRJ100893

PROCESS

PFAS TREATMENT SECTION 2 AND DETAIL

DRAWING NUMBER
D-P01-302
SHEET NUMBER
OF

Plot Date: 2/10/2026 10:34:46 AM Path: Autodesk Docs://180318 - WS 14 PFAS Treatments Design/180318-D-00V21.rvt

4d8a61b7348bd130d3c07f98baf29484

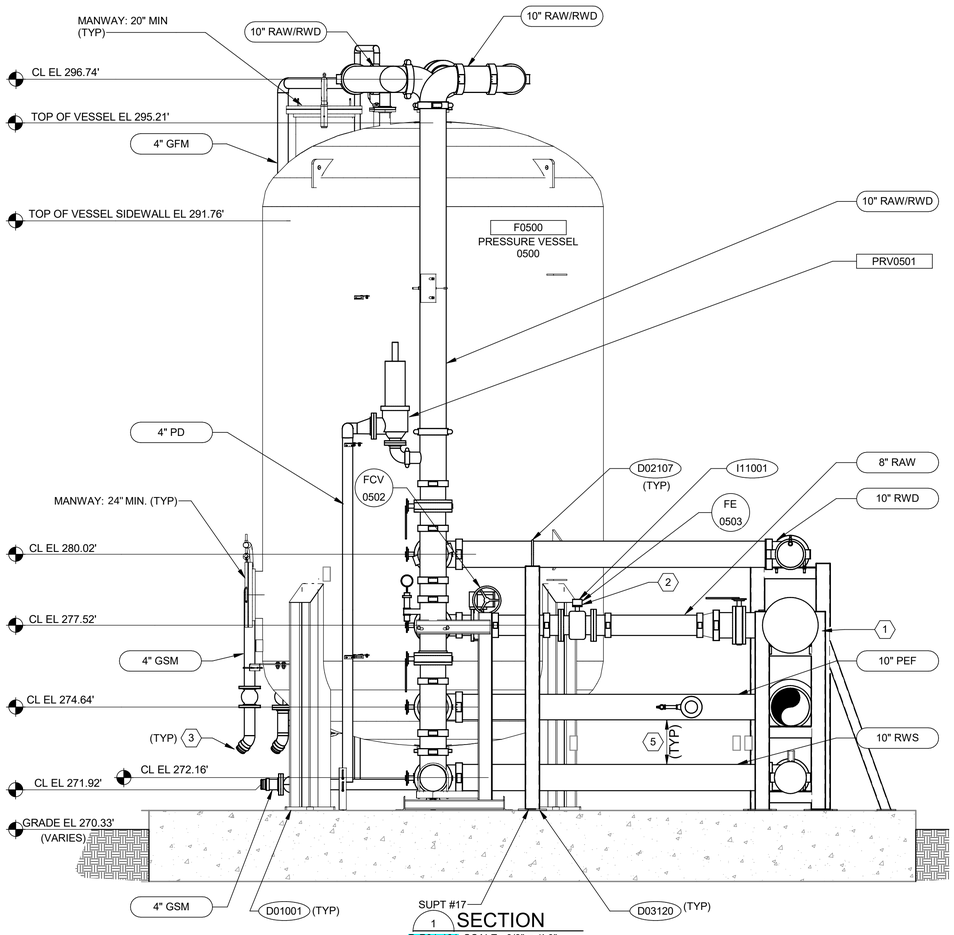

1 SECTION
D-P01-101 SCALE: 3/8" = 1'-0"

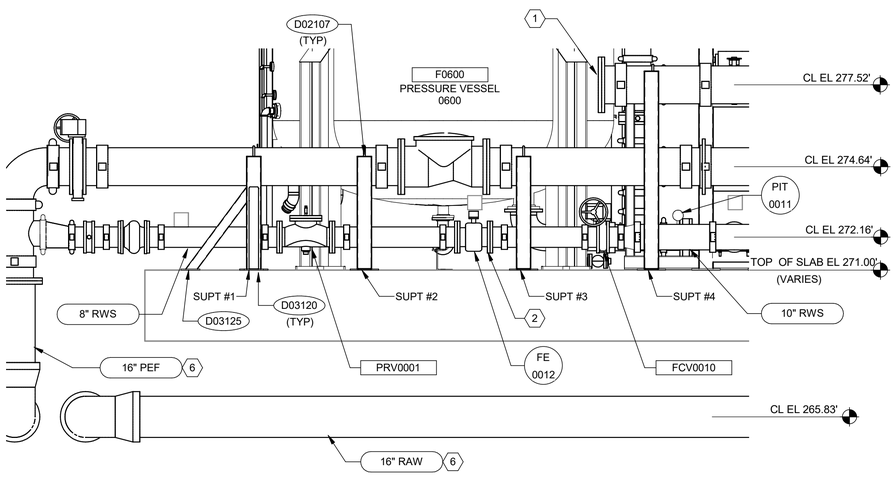

2 SECTION
D-P01-301 SCALE: 3/8" = 1'-0"

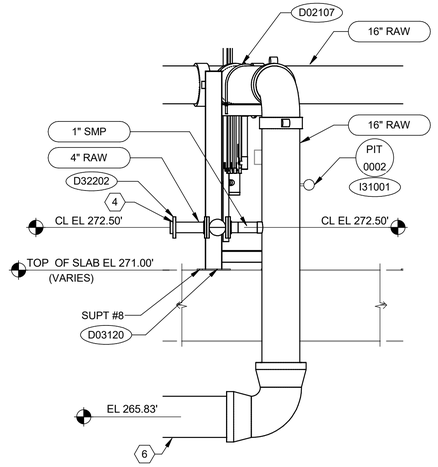

3 SECTION
D-P01-301 SCALE: 3/8" = 1'-0"

GENERAL NOTES:

1. SEE PROCESS AND INSTRUMENTATION DIAGRAMS FOR EXTENT OF PRESSURE VESSEL SYSTEM SUPPLIER SCOPE OF SUPPLY.
2. PROVIDE MINIMUM 5 PIPE DIAMETERS UPSTREAM AND 3 PIPE DIAMETERS DOWNSTREAM OF STRAIGHT PIPE FOR FLOW METER INSTALLATION UNLESS OTHERWISE NOTED.
3. ENLARGED SECTIONS ARE REPRESENTATIVE OF ALL PRESSURE VESSEL TRAINS.
4. VALVE MANIFOLDS SHALL BE CONFIGURED TO PROVIDE MINIMUM 6" RADIAL CLEARANCE AROUND ALL VALVE HANDWHEELS. DIMENSIONS AND LAYOUT SHOWN ON DRAWINGS ARE FOR GENERAL REPRESENTATION PURPOSES AND MUST BE COORDINATED WITH SYSTEM SUPPLIER.
5. REFER TO MECHANICAL AND STRUCTURAL DETAIL SHEETS FOR ALL EQUIPMENT PAD AND ANCHORING DETAILS.
6. PIPE SUPPORT NUMBERS ON THIS SHEET CORRESPOND TO PIPE SUPPORTS IN TABLE ON D-000-005.
7. PROVIDE HEAT TRACING AND INSULATION ON EXPOSED PIPING AS SHOWN ON PROCESS AND INSTRUMENTATION DIAGRAMS.

KEYNOTES:

1. INSTALL BLIND FLANGE.
2. PROVIDE MINIMUM 5 PIPE DIAMETERS UPSTREAM AND 3 PIPE DIAMETERS DOWNSTREAM OF STRAIGHT PIPE FOR FLOW METER INSTALLATION UNLESS OTHERWISE NOTED.
3. CAMLOCK TRUCK CONNECTIONS SHALL BE INSTALLED 2 FT AFF.
4. 4" VACTOR CONNECTION.
5. MINIMUM 12" CLEARANCE BETWEEN PIPES STACKED VERTICALLY.
6. PROVIDE CATHODIC PROTECTION FOR BURIED PIPING, FITTINGS, AND APPURTENANCES IN ACCORDANCE WITH SECTION 33 14 42.

Brown AND Caldwell
PORTLAND, OREGON

Signer Name: Lynn Stephens
Signing Reason: I approved this document.
Signing Time: 2025-01-23 16:25:36(EST)

LYNN MICHELLE STEPHENS
STATE OF WASHINGTON
50145
REGISTERED PROFESSIONAL ENGINEER

ISSUED FOR BID

CITY OF Vancouver WASHINGTON

WS14 PFAS TREATMENT DESIGN

REVISIONS

REV	DATE	DESCRIPTION

LINE IS 2 INCHES AT FULL SIZE

DESIGNED: C.CYR
DRAWN: T.LEMON
CHECKED: K.HAY
CHECKED: J.HESBY
APPROVED: L.STEPHENS

FILENAME
180318-D-00V21.rvt

BC PROJECT NUMBER
180318

CLIENT PROJECT NUMBER
PRJ100893

PROCESS

PFAS TREATMENT SECTION 3

DRAWING NUMBER
D-P01-303

SHEET NUMBER 75 OF 125

Plot Date: 1/19/2025 11:32:11 AM Path: C:\Users\tlemon\OneDrive - Brown and Caldwell\Documents\180318-D-00V21_tomlemon2298.rvt

d1170d86ce615876d8b67041fc740188

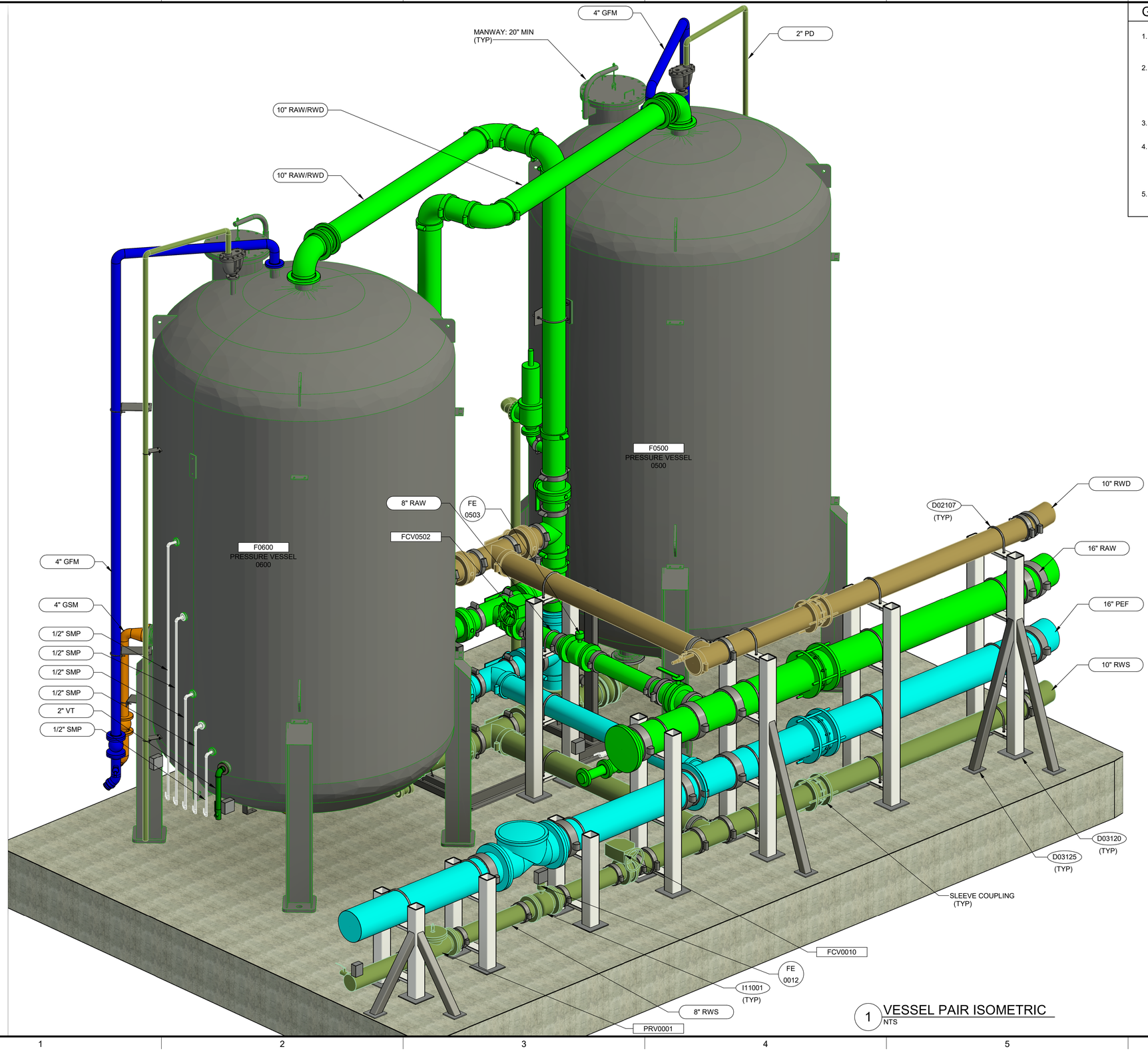

1 VESSEL PAIR ISOMETRIC
NTS

GENERAL NOTES:

1. SEE PROCESS AND INSTRUMENTATION DIAGRAMS FOR EXTENT OF PRESSURE VESSEL SYSTEM SUPPLIER SCOPE OF SUPPLY.
2. VALVE MANIFOLDS SHALL BE CONFIGURED TO PROVIDE MINIMUM 6" RADIAL CLEARANCE AROUND ALL VALVE HANDWHEELS. DIMENSIONS AND LAYOUT SHOWN ON DRAWINGS ARE FOR GENERAL REPRESENTATION PURPOSES AND MUST BE COORDINATED WITH SYSTEM SUPPLIER.
3. REFER TO MECHANICAL AND STRUCTURAL DETAIL SHEETS FOR ALL EQUIPMENT PAD AND ANCHORING DETAILS.
4. PIPE SUPPORTS ATTACHED TO VESSELS AND IN THE VALVE MANIFOLD AREA ARE SHOWN FOR EXAMPLE ONLY - VESSEL SUPPLIER TO DESIGN ELEVATED PIPE SUPPORTS ATTACHED TO VESSEL AND PIPE SUPPORTS IN VESSEL VALVE MANIFOLD AREA.
5. PROVIDE HEAT TRACING AND INSULATION ON EXPOSED PIPING AS SHOWN ON PROCESS AND INSTRUMENTATION DIAGRAMS.

Brown AND Caldwell
PORTLAND, OREGON

Signer Name: Lynn Stephens
Signing Reason: I approved this document
Signing Time: 2025-01-23 16:25:37(UTC)

LYNN MICHELLE STEPHENS
STATE OF WASHINGTON
50145
REGISTERED PROFESSIONAL ENGINEER

ISSUED FOR BID

CITY OF Vancouver WASHINGTON

WS14 PFAS TREATMENT DESIGN

REVISIONS

REV	DATE	DESCRIPTION

LINE IS 2 INCHES AT FULL SIZE

DESIGNED:	C.CYR
DRAWN:	T.LEMON
CHECKED:	K.HAY
CHECKED:	J.HESBY
APPROVED:	L.STEPHENS

FILENAME
180318-D-00V21.rvt

BC PROJECT NUMBER
180318

CLIENT PROJECT NUMBER
PRJ100893

PROCESS

PFAS TREATMENT ISOMETRIC VIEW 1

DRAWING NUMBER
D-P01-901

SHEET NUMBER 76 OF 125

Plot Date: 1/19/2025 11:33:12 AM Path: C:\Users\lemon\OneDrive - Brown and Caldwell\Documents\180318-D-00V21_tomlemon2298.rvt

7f6bf82fc1ec0b426e666ccd9ecc4629

GENERAL NOTES:

1. SEE PROCESS AND INSTRUMENTATION DIAGRAMS FOR EXTENT OF PRESSURE VESSEL SYSTEM SUPPLIER SCOPE OF SUPPLY.
2. VALVE MANIFOLDS SHALL BE CONFIGURED TO PROVIDE MINIMUM 6" RADIAL CLEARANCE AROUND ALL VALVE HANDWHEELS. DIMENSIONS AND LAYOUT SHOWN ON DRAWINGS ARE FOR GENERAL REPRESENTATION PURPOSES AND MUST BE COORDINATED WITH SYSTEM SUPPLIER.
3. REFER TO MECHANICAL AND STRUCTURAL DETAIL SHEETS FOR ALL EQUIPMENT PAD AND ANCHORING DETAILS.
4. PIPE SUPPORTS ATTACHED TO VESSELS AND IN THE VALVE MANIFOLD AREA ARE SHOWN FOR EXAMPLE ONLY - VESSEL SUPPLIER TO DESIGN ELEVATED PIPE SUPPORTS ATTACHED TO VESSEL AND PIPE SUPPORTS IN VESSEL VALVE MANIFOLD AREA.
5. PROVIDE HEAT TRACING AND INSULATION ON EXPOSED PIPING AS SHOWN ON PROCESS AND INSTRUMENTATION DIAGRAMS.
6. PIPE SUPPORT NUMBERS ON THIS SHEET CORRESPOND TO PIPE SUPPORTS IN TABLE ON D-000-005.

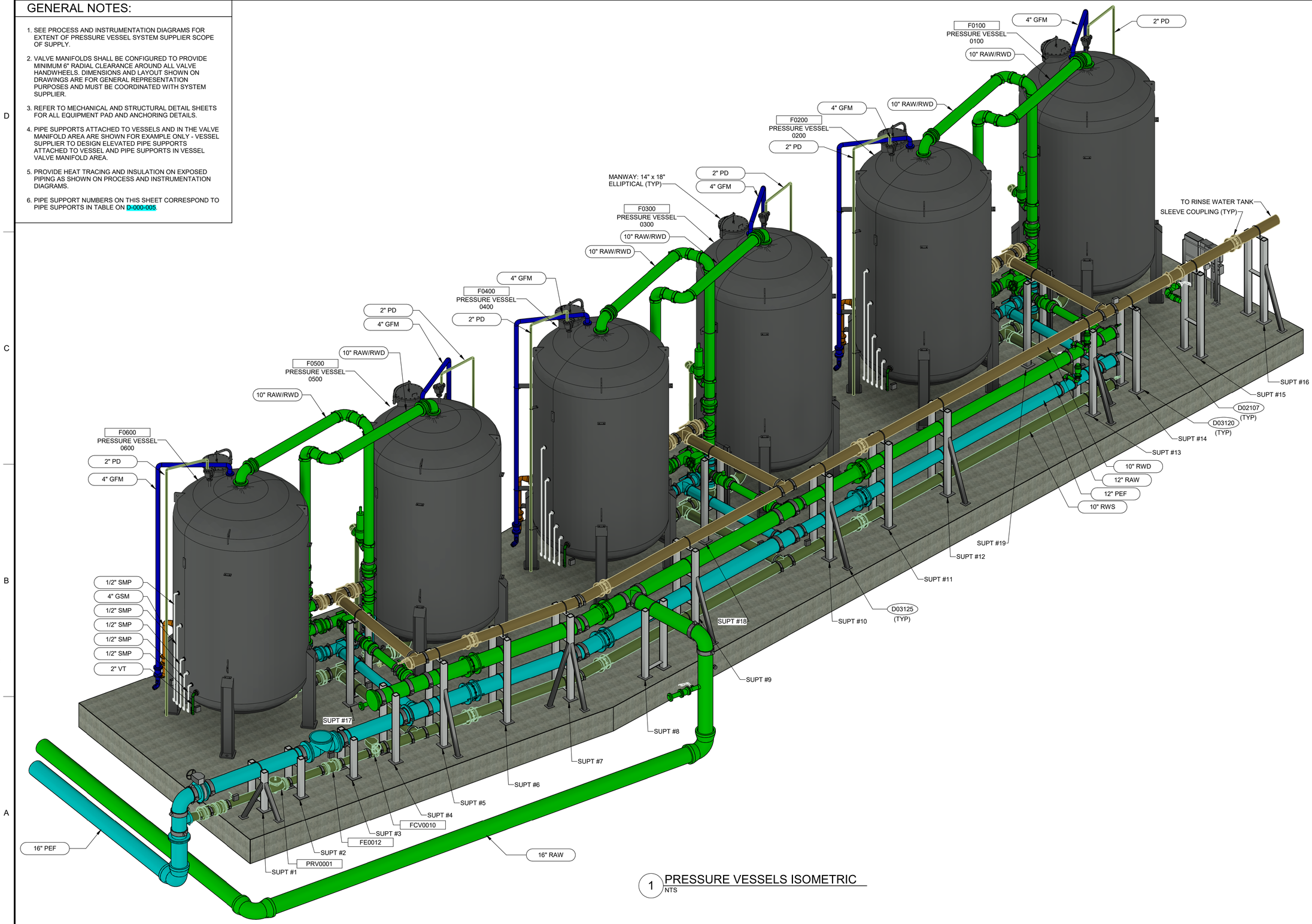

1 PRESSURE VESSELS ISOMETRIC
NTS

Brown AND Caldwell
PORTLAND, OREGON

Signer Name: Lynn Stephens
Signing Reason: I approved this document.
Signing Time: 2025-01-23 16:25:37(EST)

LYNN MICHELLE STEPHENS
STATE OF WASHINGTON
50145
REGISTERED PROFESSIONAL ENGINEER

ISSUED FOR BID

CITY OF Vancouver WASHINGTON

WS14 PFAS TREATMENT DESIGN

REVISIONS

REV	DATE	DESCRIPTION

LINE IS 2 INCHES AT FULL SIZE

DESIGNED:	C.CYR
DRAWN:	T.LEMON
CHECKED:	K.HAY
CHECKED:	J.HESBY
APPROVED:	L.STEPHENS

FILENAME
180318-D-00V21.rvt
BC PROJECT NUMBER
180318
CLIENT PROJECT NUMBER
PRJ100893

PROCESS

PFAS TREATMENT ISOMETRIC VIEW 2

DRAWING NUMBER
D-P01-902

SHEET NUMBER 77 OF 125

Path: BIM 360://180318 - WS 14 PFAS Treatments Design/180318-D-00V21.rvt
Plot Date: 12/18/2024 1:22:39 PM

6d61c81c6bb12fe9ac16e85d1931549c

PLAN NORTH

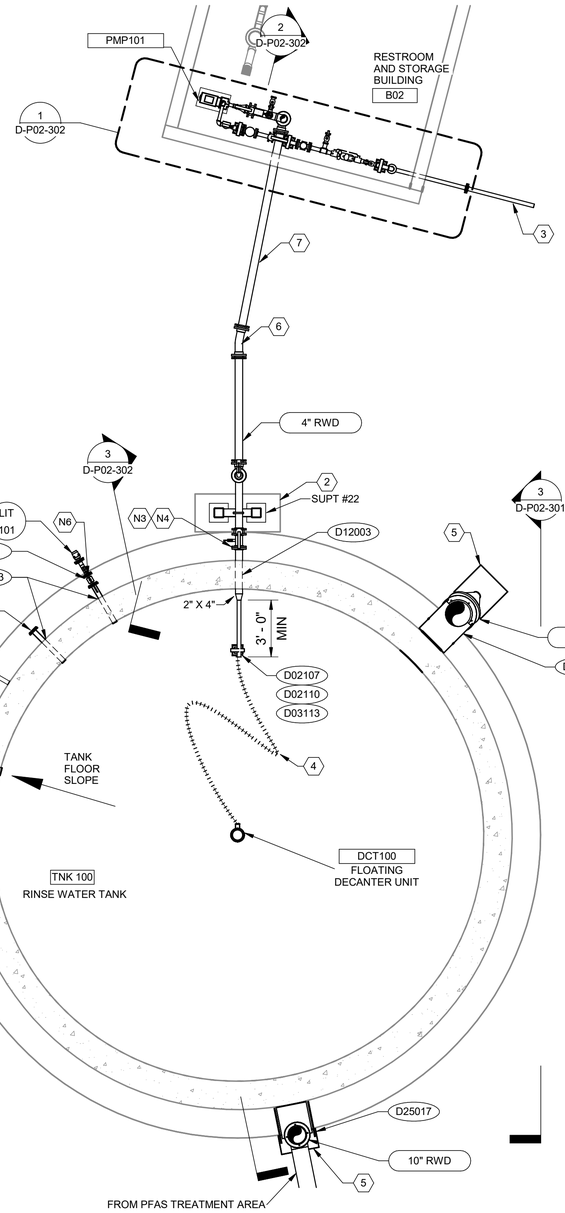

1 RINSE WATER TANK LOWER PLAN
SCALE: 1/4" = 1'-0"

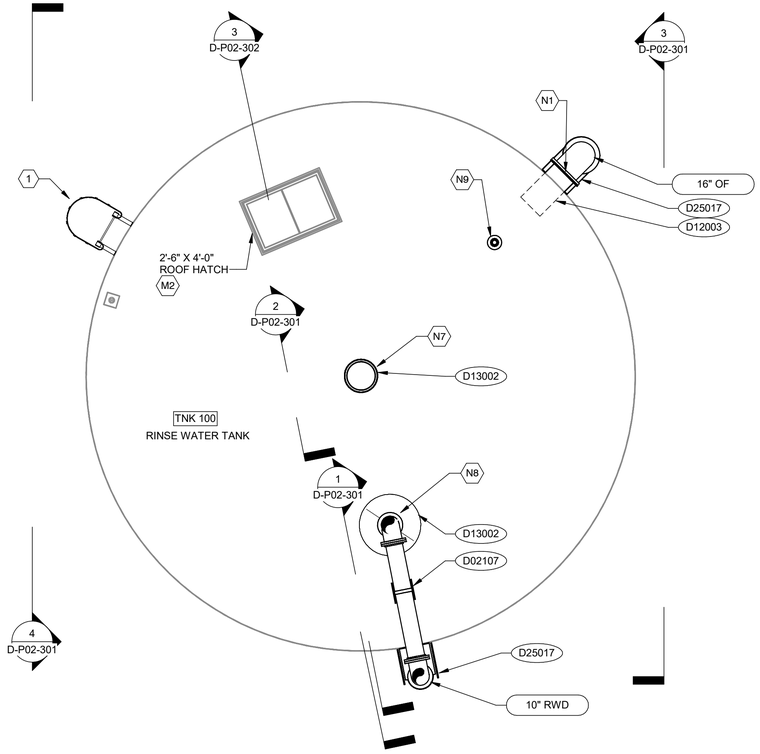

2 RINSE WATER TANK UPPER PLAN
SCALE: 1/4" = 1'-0"

TANK NOZZLE SCHEDULE

NOZZLE NO.	NOZZLE SIZE/DESCRIPTION	LOCATION	ORIENTATION	FITTING TYPE	DISTANCE FROM CENTER OF VESSEL	DISTANCE FROM PAD ELEVATION
N1	16" OVERFLOW	SIDEWALL	45 DEG	150# FLANGE	N/A	22'-10 1/2" INVERT
M1	36" MANWAY	SIDEWALL	270 DEG	FF COVER	N/A	3'-6" CL
N2	4" VACTOR CONN.	SIDEWALL	285 DEG	150# FLANGE	N/A	0'-6 1/2" CL
N3	4" DRAIN	SIDEWALL	0 DEG	150# FLANGE	N/A	1'-1/4" CL
N4	4" DISCHARGE	SIDEWALL	0 DEG	150# FLANGE	N/A	3'-4" CL
N5	2" SPARE	SIDEWALL	315 DEG	150# FLANGE	N/A	1'-5" CL
N6	2" LIT	SIDEWALL	330 DEG	150# FLANGE	N/A	0'-6" CL
M2	30" x 48" MANWAY	ROOF	N/A	FF COVER	9'-5 1/2" CL	N/A
N7	18" VENT	ROOF	N/A	150# FLANGE	0'-0" CL	N/A
N8	12" AIR GAP	ROOF	169 DEG	150# FLANGE	8'-0" CL	N/A
N9	4" SPARE	ROOF	45 DEG	150# FLANGE	9'-11 3/4" CL	N/A

GENERAL NOTES:

1. SEE PROCESS AND INSTRUMENTATION DIAGRAMS FOR DETAILED PIPING CONFIGURATION. DRAWING IS INTENDED FOR GENERAL REPRESENTATION PURPOSES ONLY.
2. PIPING UNDER SLAB SHALL BE CONCRETE ENCASED PER STRUCTURAL.
3. REFER TO MECHANICAL AND STRUCTURAL DETAILS FOR ALL EQUIPMENT PAD AND ANCHORING DETAILS.
4. PROVIDE MINIMUM 5 PIPE DIAMETERS UPSTREAM AND 3 PIPE DIAMETERS DOWNSTREAM OF STRAIGHT PIPE FOR FLOW METER INSTALLATION UNLESS OTHERWISE NOTED.
5. PIPE SUPPORT NUMBERS ON THIS SHEET CORRESPOND TO PIPE SUPPORTS IN TABLE ON D-000-005.
6. PROVIDE HEAT TRACING AND INSULATION ON EXPOSED PIPING AS SHOWN ON PROCESS AND INSTRUMENTATION DIAGRAMS.

KEYNOTES:

1. LADDER WITH SWING GATE. REFER TO STRUCTURAL SHEET S-000-008/9 FOR DETAILS.
2. 4'-6" BY 2-0" CONCRETE PAD, SEE DETAIL S06003.
3. SEE CIVIL FOR CONTINUATION.
4. 2" CLEAR POLYURETHANE HOSE REINFORCED WITH STEEL WIRE, FLEXALIST FLEXADUX PU FLX-THANE MD OR APPROVED EQUAL. CUT TO 30' LENGTH.
5. SPLASH PAD - REFER TO CIVIL DETAILS.
6. 11.25-DEG ELBOW.
7. PROVIDE CATHODIC PROTECTION FOR BURIED PIPING, FITTINGS, AND APPURTENANCES IN ACCORDANCE WITH SECTION 33 14 42.
8. SIDE MANWAY, SEE S-P02-101 FOR DETAILS

Brown AND Caldwell
PORTLAND, OREGON

Signer Name: Lynn Stephens
Signing Reason: I approved this document
Signing Time: 2026-02-11 08:58:04(EST)

LYNN MICHELLE STEPHENS
STATE OF WASHINGTON
50145
REGISTERED PROFESSIONAL ENGINEER

ISSUED FOR BID

CITY OF Vancouver WASHINGTON

WS14 PFAS TREATMENT DESIGN

REVISIONS

REV	DATE	DESCRIPTION
0	06/05/25	CONFORMED DRAWINGS

LINE IS 2 INCHES AT FULL SIZE

DESIGNED: C.CYR
DRAWN: T.LEMON
CHECKED: K.HAY
CHECKED: J.HESBY
APPROVED: L.STEPHENS

FILENAME 180318-D-00V21.rvt
BC PROJECT NUMBER 180318
CLIENT PROJECT NUMBER PRJ100893

PROCESS

RINSE WATER TANK PLAN

DRAWING NUMBER
D-P02-101

SHEET NUMBER
OF

Path: Autodesk Docs://180318 - WS 14 PFAS Treatments Design/180318-D-00V21.rvt
Plot Date: 2/9/2026 2:34:12 PM

36d2d2b1236515a0bc162953bf735379

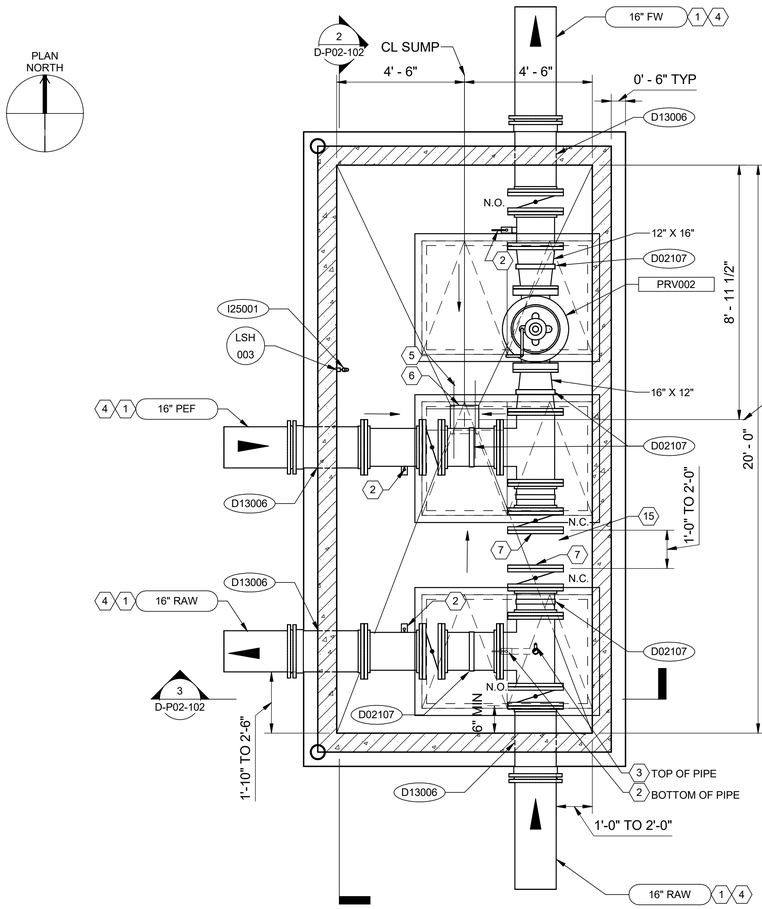

1 VALVE VAULT U03 PLAN
SCALE: 3/8" = 1'-0"

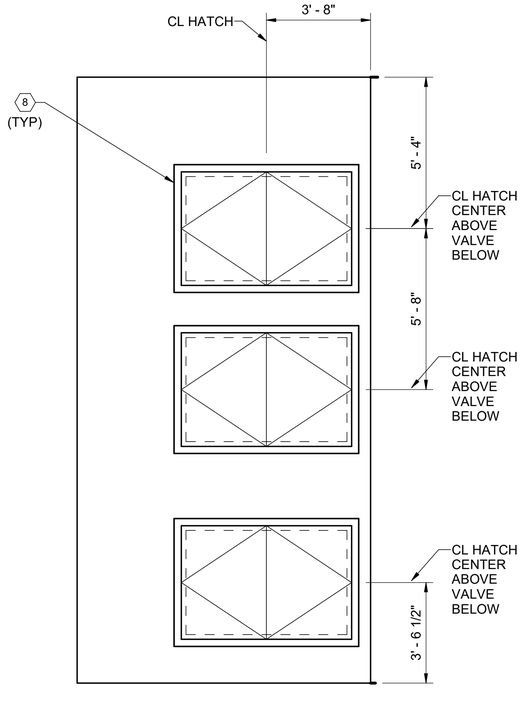

4 VALVE VAULT U03 TOP PLAN
SCALE: 3/8" = 1'-0"

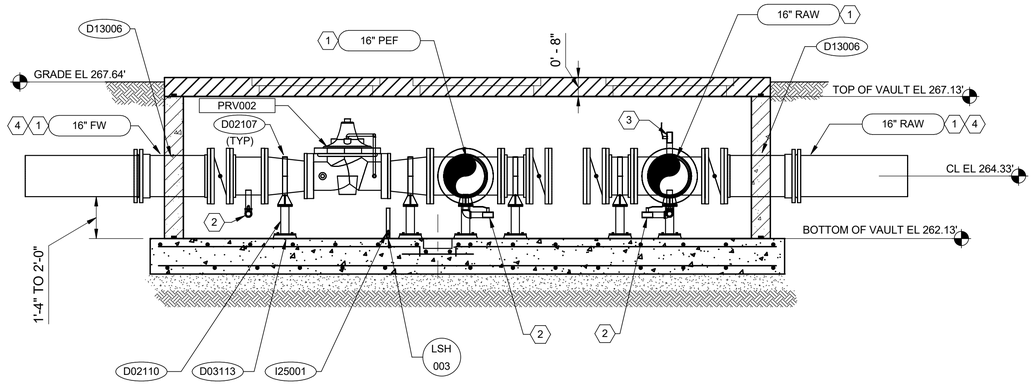

2 VALVE VAULT U03 SECTION 2
D-P02-102 SCALE: 3/8" = 1'-0"

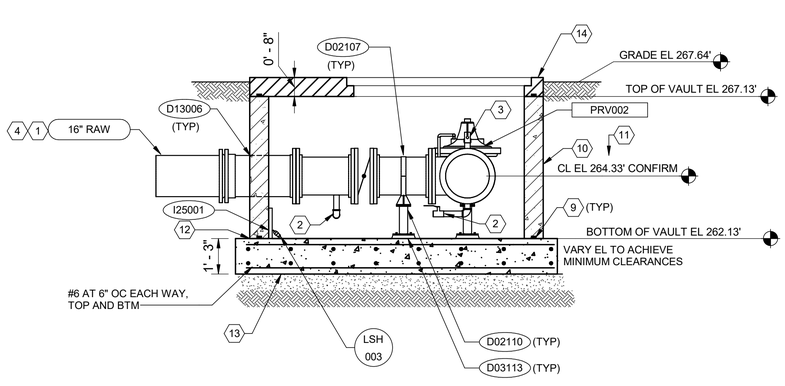

3 VALVE VAULT U03 SECTION 3
D-P02-102 SCALE: 3/8" = 1'-0"

GENERAL NOTES:

1. SEE PROCESS AND INSTRUMENTATION DIAGRAMS FOR DETAILED PIPING CONFIGURATION. DRAWING IS INTENDED FOR GENERAL REPRESENTATION PURPOSES ONLY.
2. PIPING UNDER SLAB SHALL BE CONCRETE ENCASED PER STRUCTURAL.
3. REFER TO MECHANICAL AND STRUCTURAL DETAIL SHEETS FOR ALL EQUIPMENT PAD AND ANCHORING DETAILS.
4. AREA EXPOSURE FOR PIPING WITHIN VAULT SHOULD BE CONSIDERED AS OUTDOOR EXPOSED NOT BURIED.
5. PRECAST UNITS SHALL HAVE PIPE OPENINGS CAST WITH SUPPLEMENTAL REINFORCING. DO NOT FIELD SAWCUT.

○ CIVIL CONTROL POINT, SEE CIVIL

⬡ KEYNOTES:

1	SEE DRAWING C-000-411 FOR CONTINUATION.
2	2" DRAIN VALVE.
3	2" FUTURE CHEMICAL INJECTION TAP.
4	PROVIDE CATHODIC PROTECTION FOR BURIED PIPING, FITTINGS, AND APPURTENANCES IN ACCORDANCE WITH SECTION 33 14 42.
5	TERMINATE TOP MAT REINF WITH STD HOOK AT SUMP PIT. PROVIDE (2) ADD'L #6 X 5'-0" EACH WAY AS SHOWN.
6	1 FT X 1 FT X 6" SUMP PIT.
7	INSTALL BLIND FLANGE.
8	4'-0" X 6'-0" DBL. LEAF ALUM HATCH PER SPEC 08 31 20, TYP.
9	HYDROPHILIC WATERSTOP AT PERIMETER PER SPEC 03 30 00.
10	PROVIDE DAMPPROOFING COATING PER SPEC 07 10 00.
11	POTHOLE EXISTING PIPING IN NEW VAULT AREA TO FIELD VERIFY PIPE LOCATION PRIOR TO ORDERING VAULT. CONTRACTOR TO FIELD VERIFY ALL ELEVATIONS.
12	SEALANT ALL AROUND PER SPECS 07 92 00 AND 07 91 26.
13	SUBGRADE PREP AND STABILIZATION PER SPEC 31 23 00.
14	PRECAST CONC VAULT, SEE SPEC 03 48 11
15	PROVIDE UNINSTALLED, REMOVABLE SPOOL PIECE AND BLIND FLANGES FOR BOTH ENDS. INCLUDE FLANGE COUPLING ADAPTER PER SECTION 40 05 06.

Brown AND Caldwell
PORTLAND, OREGON

Signer Name: Lynn Stephens
Signing Reason: I approved this document
Signing Time: 2025-01-23 16:25:37(EST)

LYNN MICHELLE STEPHENS
STATE OF WASHINGTON
50145
REGISTERED PROFESSIONAL ENGINEER

ISSUED FOR BID

CITY OF Vancouver WASHINGTON

WS14 PFAS TREATMENT DESIGN

REVISIONS

REV	DATE	DESCRIPTION

LINE IS 2 INCHES AT FULL SIZE

DESIGNED:	C.CYR
DRAWN:	T.LEMON
CHECKED:	K.HAY
CHECKED:	J.HESBY
APPROVED:	L.STEPHENS

FILENAME
180318-D-00V21.rvt

BC PROJECT NUMBER
180318

CLIENT PROJECT NUMBER
PRJ100893

PROCESS

VAULT PLANS AND SECTIONS

DRAWING NUMBER
D-P02-102

79 SHEET NUMBER OF 125

Plot Date: 1/20/2025 8:59:19 AM Path: C:\Users\tlemon\OneDrive - Brown and Caldwell\Documents\180318-D-00V21_tomlemon2298.rvt

0f9e9d5c7a73229581281511ecae490d

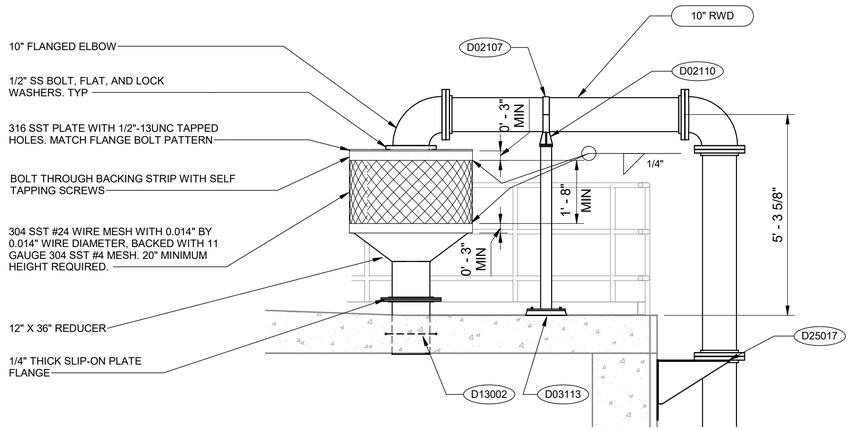

1 AIR GAP SECTION
D-P02-101 SCALE: 1/2" = 1'-0"

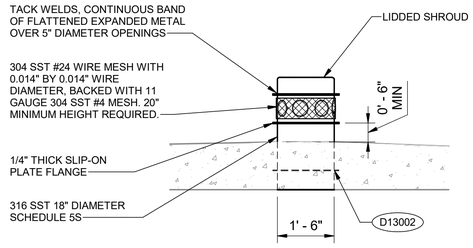

2 TANK VENT SECTION
D-P02-101 SCALE: 1/2" = 1'-0"

GENERAL NOTES:

1. SEE PROCESS AND INSTRUMENTATION DIAGRAMS FOR DETAILED PIPING CONFIGURATION. DRAWING IS INTENDED FOR GENERAL REPRESENTATION PURPOSES ONLY.
2. MINIMUM OF 1% SLOPE ON ALL BELOW GRADE PIPING UNLESS OTHERWISE NOTED.
3. PIPING UNDER SLAB SHALL BE CONCRETE ENCASED PER STRUCTURAL.
4. REFER TO MECHANICAL AND STRUCTURAL FOR ALL EQUIPMENT PAD AND ANCHORING DETAILS.
5. PROVIDE MINIMUM 5 PIPE DIAMETERS UPSTREAM AND 3 PIPE DIAMETERS DOWNSTREAM OF STRAIGHT PIPE FOR FLOW METER INSTALLATION UNLESS OTHERWISE NOTED.
6. FOR NOZZLE NUMBERS, REFER TO NOZZLE SCHEDULE ON D-P02-101.
7. PIPE SUPPORT NUMBERS ON THIS SHEET CORRESPOND TO PIPE SUPPORTS IN TABLE ON D-000-005.
8. FOR LADDER, HANDRAIL, AND SWING GATES DETAILS, REFER TO STRUCTURAL DRAWINGS AND DETAILS.
9. PROVIDE HEAT TRACING AND INSULATION ON EXPOSED PIPING AS SHOWN ON PROCESS AND INSTRUMENTATION DIAGRAMS.

KEYNOTES:

1	PROVIDE DUCK BILL CHECK VALVE ON OUTLET OF 16" OF PIPE. MINIMUM 11" FROM GRADE.
2	SPLASH PAD - REFER TO CIVIL DETAILS.
3	4'-6" BY 2-0" CONCRETE PAD, SEE DETAIL S06003.
4	1" SAMPLE VALVE.
5	10" SLEEVE COUPLING PER SPEC 40 05 06
6	11.25-DEG ELBOW.
7	PROVIDE CATHODIC PROTECTION FOR BURIED PIPING, FITTINGS, AND APPURTENANCES IN ACCORDANCE WITH SECTION 33 14 42.
8	2" VENT VALVE.
9	16" SLEEVE COUPLING PER SPEC 40 05 06
10	SIDE MANWAY, SEE S-P02-101 FOR DETAILS

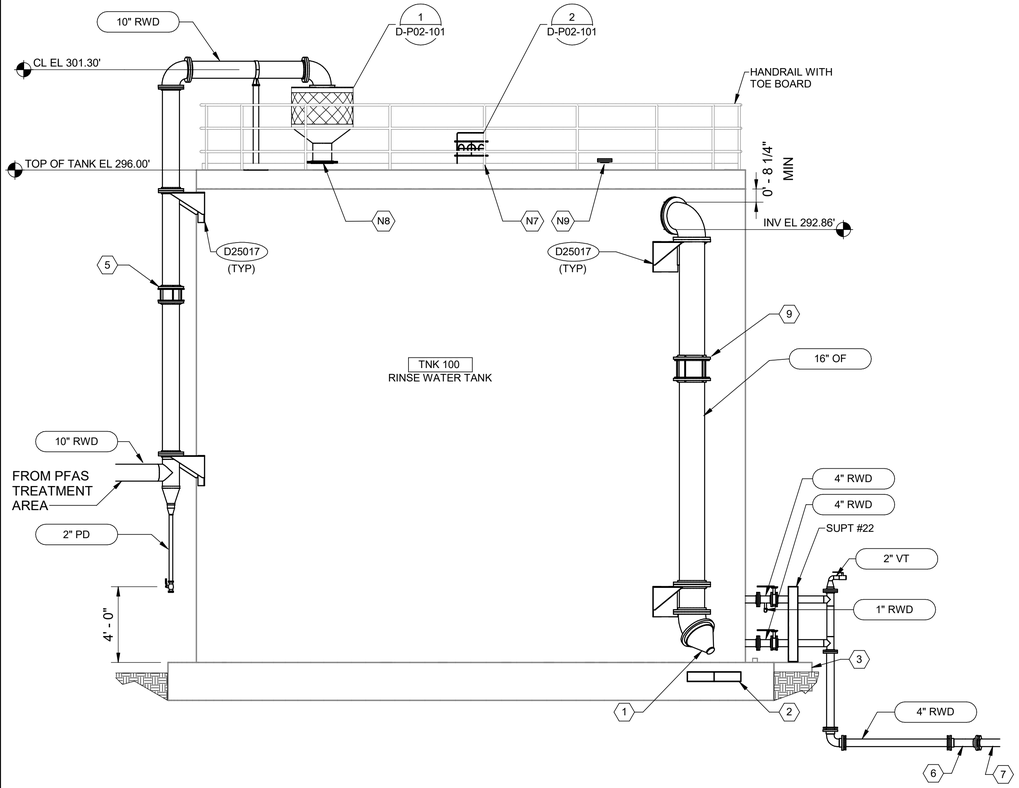

3 RINSE WATER TANK SECTION
D-P02-101 SCALE: 1/4" = 1'-0"

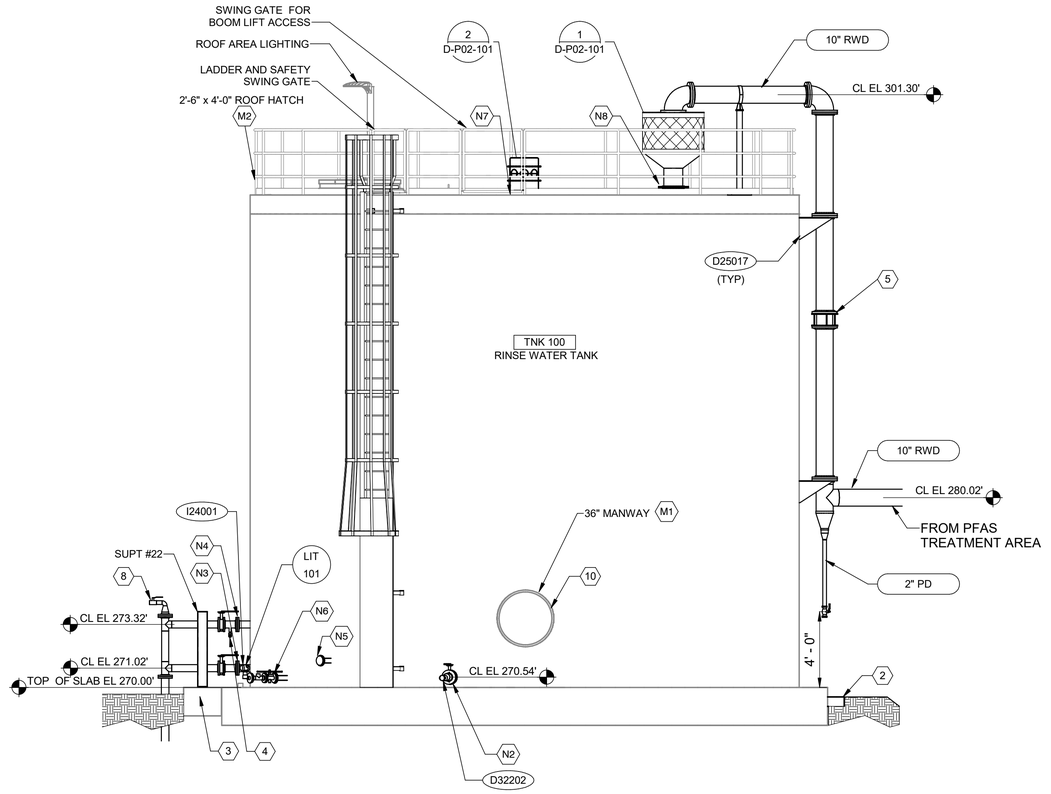

4 RINSE WATER TANK SECTION
D-P02-101 SCALE: 1/4" = 1'-0"

Brown AND Caldwell
PORTLAND, OREGON

Signer Name: Lynn Stephens
Signing Reason: I approved this document.
Signing Time: 2026-02-11 08:58:04(EST)

LYNN MICHELLE STEPHENS
STATE OF WASHINGTON
50145
REGISTERED PROFESSIONAL ENGINEER

ISSUED FOR BID

CITY OF Vancouver WASHINGTON

WS14 PFAS TREATMENT DESIGN

REVISIONS

REV	DATE	DESCRIPTION
0	06/05/25	CONFORMED DRAWINGS

LINE IS 2 INCHES AT FULL SIZE

DESIGNED:	C.CYR
DRAWN:	T.LEMON
CHECKED:	K.HAY
CHECKED:	J.HESBY
APPROVED:	L.STEPHENS

FILENAME
180318-D-00V21.rvt

BC PROJECT NUMBER
180318

CLIENT PROJECT NUMBER
PRJ100893

PROCESS

RINSE WATER TANK SECTIONS 1

DRAWING NUMBER
D-P02-301

SHEET NUMBER
OF

Path: Autodesk Docs://180318 - WS 14 PFAS Treatments Design/180318-D-00V21.rvt
Plot Date: 2/9/2026 2:34:15 PM

1c95c4ddf09c2ea380c7bbaa1eef23ad

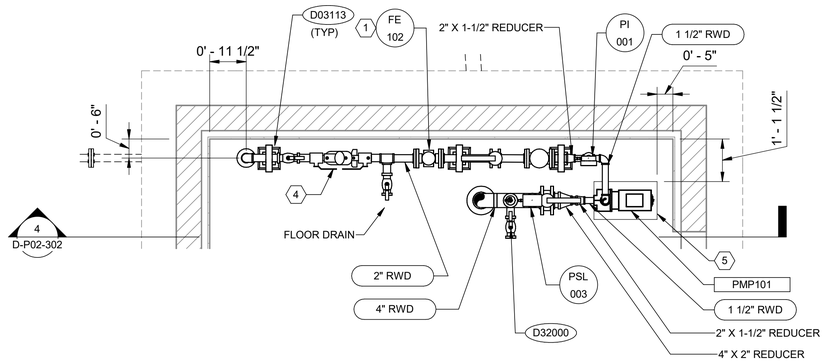

1 RINSE WATER STORAGE ROOM PLAN
D-P02-101 SCALE: 1/2" = 1'-0"

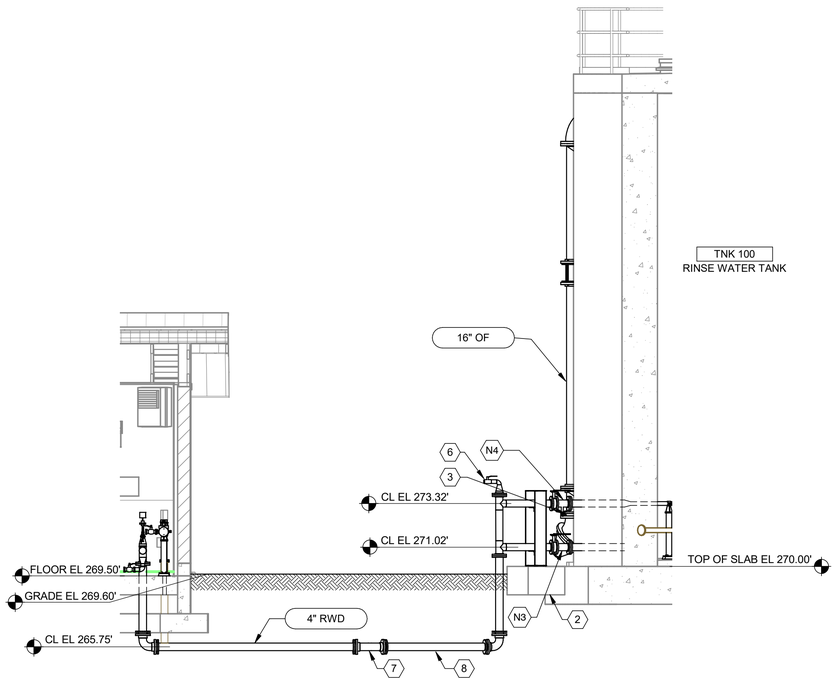

2 RINSE WATER TANK SECTION
D-P02-101 SCALE: 1/4" = 1'-0"

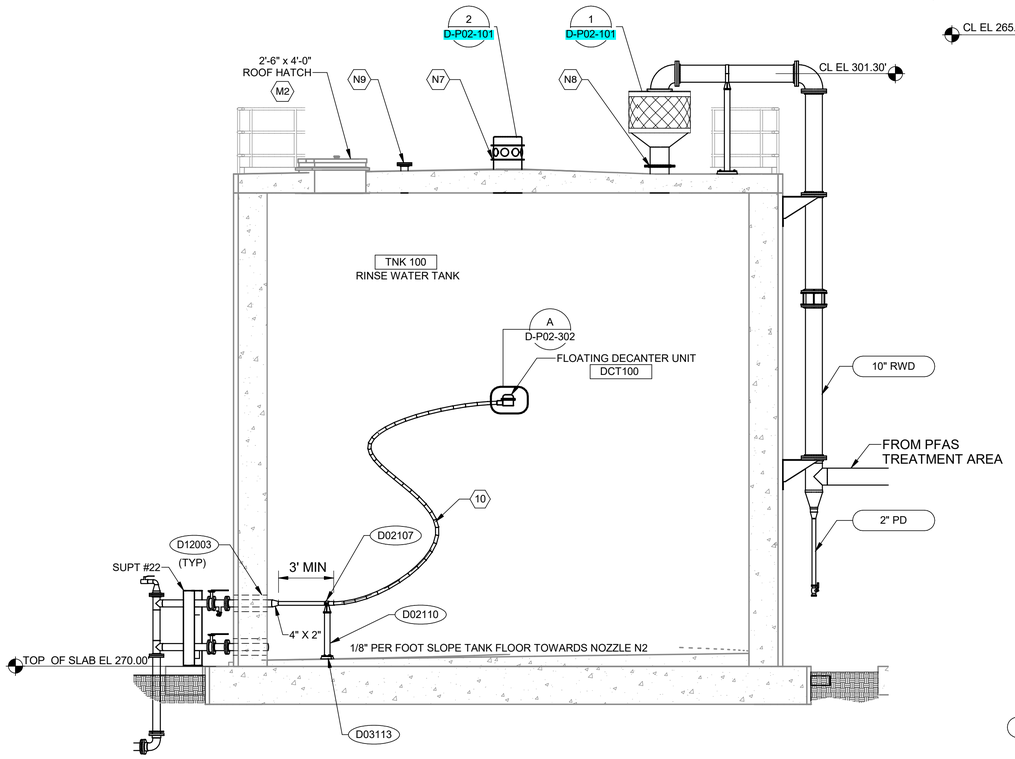

3 RINSE WATER TANK SECTION
D-P02-101 SCALE: 1/4" = 1'-0"

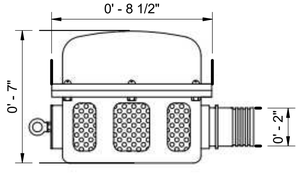

PER SECTION 46 22 30

A FLOATING DECANTER SECTION DETAIL
D-P02-302 SCALE: 6" = 1'-0"

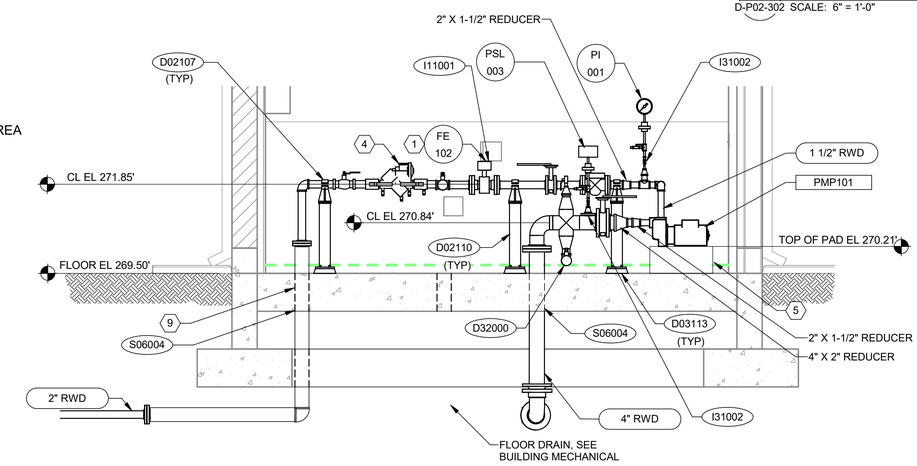

4 RINSE WATER STORAGE ROOM PIPING SECTION
D-P02-302 SCALE: 1/2" = 1'-0"

GENERAL NOTES:

1. SEE PROCESS AND INSTRUMENTATION DIAGRAMS FOR DETAILED PIPING CONFIGURATION. DRAWING IS INTENDED FOR GENERAL REPRESENTATION PURPOSES ONLY.
2. MINIMUM OF 1% SLOPE ON ALL BELOW GRADE PIPING UNLESS OTHERWISE NOTED.
3. PIPING UNDER SLAB SHALL BE CONCRETE ENCASED PER STRUCTURAL.
4. REFER TO MECHANICAL AND STRUCTURAL FOR ALL EQUIPMENT PAD AND ANCHORING DETAILS.
5. PROVIDE MINIMUM 5 PIPE DIAMETERS UPSTREAM AND 3 PIPE DIAMETERS DOWNSTREAM OF STRAIGHT PIPE FOR FLOW METER INSTALLATION UNLESS OTHERWISE NOTED.
6. FOR NOZZLE NUMBERS, REFER TO NOZZLE SCHEDULE ON D-P02-101.
7. PIPE SUPPORT NUMBERS ON THIS SHEET CORRESPOND TO PIPE SUPPORTS IN TABLE ON D-000-005.
8. PROVIDE HEAT TRACING AND INSULATION ON EXPOSED PIPING AS SHOWN ON PROCESS AND INSTRUMENTATION DIAGRAMS.

KEYNOTES:

1	PROVIDE MINIMUM 5 PIPE DIAMETERS UPSTREAM AND 3 PIPE DIAMETERS DOWNSTREAM OF STRAIGHT PIPE FOR FLOW METER INSTALLATION UNLESS OTHERWISE NOTED.
2	4'-6" BY 2-0" CONCRETE PAD, SEE DETAIL S06003.
3	1" SAMPLE VALVE.
4	WATTS 009M2-QT-FS 2 BACKFLOW PREVENTER OR APPROVED EQUAL.
5	1'-0" W X 1'-8" L X 8-1/2" H CONCRETE PEDESTAL. REFER TO MECHANICAL DETAIL D01007.
6	2" VENT VALVE.
7	11.25-DEG ELBOW.
8	PROVIDE CATHODIC PROTECTION FOR BURIED PIPING, FITTINGS, AND APPURTENANCES IN ACCORDANCE WITH SECTION 33 14 42.
9	PROVIDE SS PIPE THROUGH ENCASEMENT - PVC THROUGH ENCASEMENT IS PROHIBITED. CONTINUE SS PIPE W/CONCRETE ENCASEMENT UNTIL PIPE HAS EXTENDED BEYOND THE BUILDING WALL AND FOOTING, THEN TRANSITION TO PVC PIPE IN YARD.
10	2" CLEAR POLYURETHANE HOSE REINFORCED WITH STEEL WIRE, FLEXAUST FLEXADUX PU FLX-THANE MD OR APPROVED EQUAL. CUT TO 30' LENGTH.

Brown AND Caldwell
PORTLAND, OREGON

Signer Name: Lynn Stephens
Signing Reason: I approved this document
Signing Time: 2025-01-25 16:25:50(EST)

LYNN MICHELLE STEPHENS
STATE OF WASHINGTON
50145
REGISTERED
PROFESSIONAL ENGINEER

ISSUED FOR BID

CITY OF Vancouver WASHINGTON

WS14 PFAS TREATMENT DESIGN

REVISIONS

REV	DATE	DESCRIPTION

LINE IS 2 INCHES AT FULL SIZE

DESIGNED:	C.CYR
DRAWN:	T.LEMON
CHECKED:	K.HAY
CHECKED:	J.HESBY
APPROVED:	L.STEPHENS
FILENAME	180318-D-00V21.rvt
BC PROJECT NUMBER	180318
CLIENT PROJECT NUMBER	PRJ100893

PROCESS

RINSE WATER TANK SECTIONS 2

DRAWING NUMBER
D-P02-302

SHEET NUMBER 81 OF 125

Plot Date: 1/19/2025 11:33:19 AM Path: C:\Users\tlemon\OneDrive - Brown and Caldwell\Documents\180318-D-00V21_tomlemon2298.rvt

4dd61fc84625b38e65945ddbdf3b6a85

GENERAL NOTES:

1. REFER TO MECHANICAL AND STRUCTURAL FOR ALL EQUIPMENT PAD AND ANCHORING DETAILS.
2. REFER TO STRUCTURAL FOR LADDER, HANDRAIL, AND SWING GATES DETAILS. LADDER SHALL INCLUDE CLIMB PREVENTION SHIELD.
3. NOZZLE NUMBERS CORRESPOND TO THE NOZZLE SCHEDULE ON D-P02-101.
4. PIPE SUPPORT NUMBERS CORRESPOND TO PIPE SUPPORTS IN TABLE ON D-000-005.
5. PROVIDE HEAT TRACING AND INSULATION ON EXPOSED PIPING AS SHOWN ON PROCESS AND INSTRUMENTATION DIAGRAMS.

KEYNOTES:

1	SPLASH PAD - REFER TO CIVIL DETAILS.
2	10" SLEEVE COUPLING PER SPEC 40 05 06
3	16" SLEEVE COUPLING PER SPEC 40 05 06

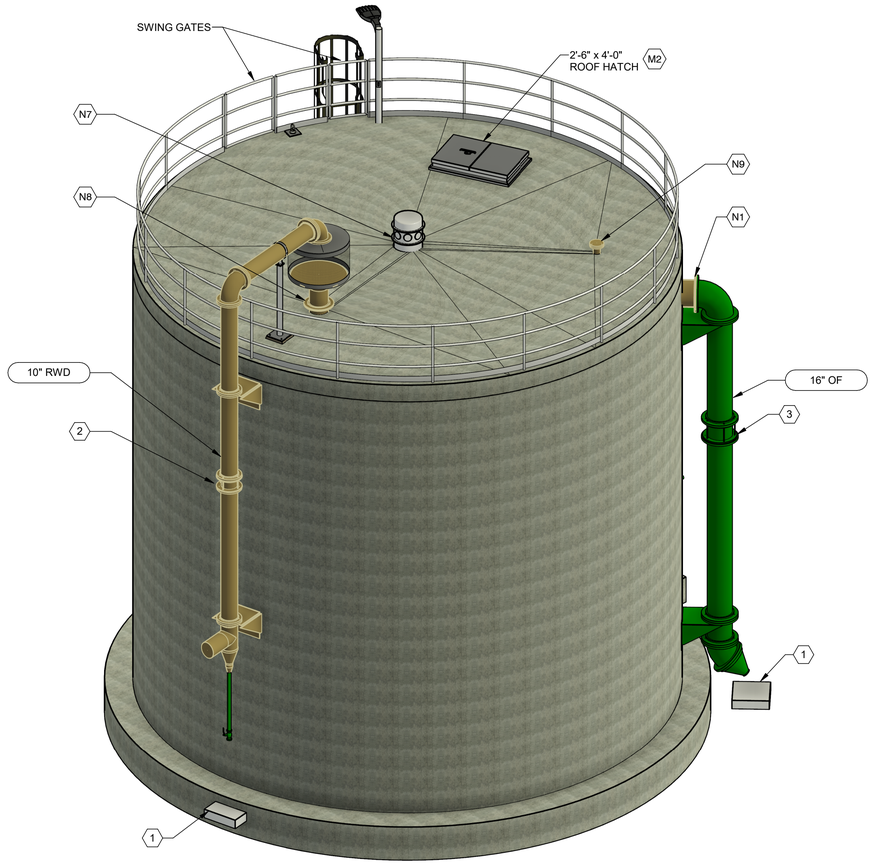

1 RINSE WATER TANK ISO 1
NTS

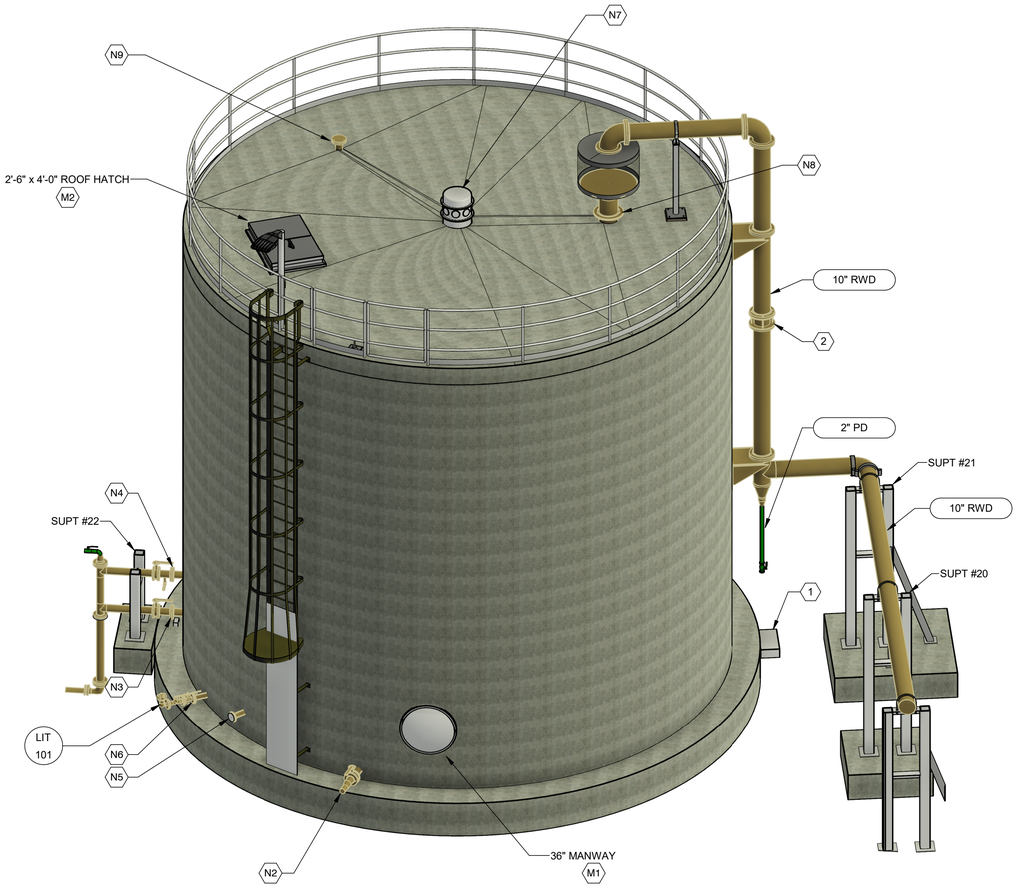

2 RINSE WATER TANK ISO 2
NTS

Brown AND Caldwell
PORTLAND, OREGON

Signer Name: Lynn Stephens
Signing Reason: I approved this document.
Signing Time: 2026-02-11 08:58:04(EST)

LYNN MICHELLE STEPHENS
STATE OF WASHINGTON
50145
REGISTERED PROFESSIONAL ENGINEER

ISSUED FOR BID

CITY OF Vancouver WASHINGTON

WS14 PFAS TREATMENT DESIGN

REVISIONS

REV	DATE	DESCRIPTION
0	06/05/25	CONFORMED DRAWINGS

LINE IS 2 INCHES AT FULL SIZE

DESIGNED: C.CYR
DRAWN: T.LEMON
CHECKED: K.HAY
CHECKED: J.HESBY
APPROVED: L.STEPHENS

FILENAME
180318-D-00V21.rvt

BC PROJECT NUMBER
180318

CLIENT PROJECT NUMBER
PRJ100893

PROCESS

RINSE WATER TANK ISOMETRIC

DRAWING NUMBER
D-P02-901

SHEET NUMBER
OF

Plot Date: 2/9/2026 2:34:35 PM
Path: Autodesk Docs://180318 - WS 14 PFAS Treatments Design/180318-D-00V21.rvt

02669cb783d58f064b64f31352cf635e

DUCTWORK FITTINGS

- 12x24 — AIR DUCT DIMENSIONS IN INCHES (FIRST DIMENSION DUCT SIDE SHOWN. SECOND DIMENSION SIDE NOT SHOWN)
- ACOUSTICALLY LINED DUCT (SIZES SHOWN ARE NET INSIDE)
- RECTANGULAR SUPPLY DUCT ELBOW TURNED TOWARD
- RECTANGULAR RETURN/EXHAUST DUCT ELBOW TURNED TOWARD
- ROUND SUPPLY DUCT ELBOW TURNED AWAY
- ROUND SUPPLY DUCT ELBOW TURNED TOWARD
- RECTANGULAR MAIN WITH ROUND BRANCH
- RECTANGULAR MAIN WITH RECTANGULAR BRANCH
- CONCENTRIC SQUARE TO ROUND
- CONCENTRIC TRANSITION, RECTANGLE OR ROUND
- ECCENTRIC TRANSITION, RECTANGLE OR ROUND
- SYMMETRICAL WYE
- MITERED ELBOW WITH TURNING VANES

PLAN SYMBOLS

- CONNECT TO EXISTING
- END OF DEMOLITION

DIFFUSERS, GRILLS AND REGISTERS

- X / SIZE / CFM — WALL OR DUCT EXHAUST OR RETURN GRILLE OR REGISTER X = DESIGNATION, IF ANY
- X / SIZE / CFM — WALL OR DUCT SUPPLY GRILLE OR DIFFUSER X = DESIGNATION, IF ANY
- X / SIZE / CFM — CEILING SUPPLY DIFFUSER X = DESIGNATION, IF ANY
- X / SIZE / CFM — CEILING EXHAUST OR RETURN GRILLE OR REGISTER X = DESIGNATION, IF ANY

DAMPERS

- BD — MANUAL BALANCING DAMPER
- DFD, SD, OR FSD — DUCT FIRE DAMPER, SMOKE DAMPER, OR FIRE/SMOKE DAMPER

CONTROLS

- (T) THERMOSTAT
- (TS) TEMPERATURE SWITCH
- (TE) TEMPERATURE SENSOR
- (PS) PRESSURE SWITCH
- (PE) PRESSURE SENSOR
- (SD) SMOKE DETECTOR
- (CO) CARBON DIOXIDE SENSOR
- (FS) FLOW SWITCH
- (HS) HAND SWITCH
- (M) MOTORIZED

HVAC EQUIPMENT

- AXIAL FAN
- CONDENSING UNIT
- 115V AC — ELECTRIC FINNED TUBE HEATER
- FAN COIL UNIT

AIRFLOW SCHEMATIC SYMBOLS

- CENTRIFUGAL FAN
- PROPELLER FAN
- AIR FLOW — BACKDRAFT DAMPER
- PARTICULATE FILTER
- CHEMICAL FILTER
- AIR FLOW — PARALLEL BLADE DAMPER
- AIR FLOW — OPPOSED BLADE DAMPER
- M / AIR FLOW — MOTORIZED DAMPER
- LOUVER
- ROOF EXHAUST FAN, PROPELLER OR CENTRIFUGAL TYPE
- HC — HOT WATER HEATING COIL
- X / C — DIRECT EXPANSION COIL
- H / C — ELECTRIC UNIT HEATER
- IN-LINE FAN
- XX / XXXX CFM — AIR FLOW

DUCT ACCESSORIES SYMBOLS

- MARK, SIZE, FLOW IN CFM, TYPE

MARK DESIGNATION	DESCRIPTION
SR	SUPPLY REGISTER
SD	SUPPLY DIFFUSER
EG	EXHAUST GRILLE

- MARK, TYPE

MARK DESIGNATION	DESCRIPTION
BDD	BACKDRAFT DAMPER
BD	BALANCING DAMPER
MD	MOTORIZED DAMPER
FD	FIRE DAMPER
FSD	FIRE SMOKE DAMPER

- EQUIPMENT NUMBER, EQUIPMENT NAME

HVAC DESIGNATIONS

- DAMPER, MANUAL VOLUME
- FIRE / SMOKE DAMPER
- FAN, EXHAUST ROOF VENT
- DUCT, FLEXIBLE
- DUCT SECTION, EXHAUST AIR
- DUCT SECTION, RETURN AIR
- DUCT SECTION, SUPPLY AIR DOWN
- DUCT SECTION, STANDARD BRANCH FOR SUPPLY AND RETURN
- AIR DISTRIBUTION, TURNING VANE IN DUCTWORK
- REGISTER GRILLE, CEILING SUPPLY
- CD — DIFFUSER, CEILING, THREE-WAY, RECTANGLE OR SQUARE
- CD — DIFFUSER, CEILING, TWO-WAY, RECTANGLE OR SQUARE
- 12x4 — AIR DUCT, FIRST DIMENSION DUCT SIDE SHOWN, SECOND DIMENSION NOT SHOWN, (FOR ACOUSTICAL LINING OR INTERNAL INSULATION, SEE SPECIFICATIONS)
- TURNING VANES IN DUCT

ABBREVIATIONS

A/C	AIR CONDITIONING
AFF	ABOVE FINISHED FLOOR
BD	BALANCING DAMPER
BDD	BACKDRAFT DAMPER
BTU	BRITISH THERMAL UNIT
BTUH	BRITISH THERMAL UNITS PER HOUR
CAP	CAPACITY
CC	COOLING COIL
CF	CUBIC FEET
CFM	CUBIC FEET PER MINUTE
D	DEGREE
DIA	DIAMETER
DN	DOWN
EA	EXHAUST AIR
EAT	ENTERING AIR TEMPERATURE
EL	ELEVATION
ESP	EXTERNAL STATIC PRESSURE
EWT	ENTERING WATER TEMPERATURE
EXH	EXHAUST
F	FAHRENHEIT
FD	FIRE DAMPER
FF	FINISHED FLOOR
FPM	FEET PER MINUTE
FPS	FEET PER SECOND
FSD	COMBINATION FIRE/SMOKE DAMPER
FT	FEET
GA	GAUGE
GAL	GALLONS
GALV	GALVANIZED
GPM	GALLONS PER MINUTE
HOA	HAND-OFF-AUTO
HP	HORSEPOWER
HR	HOUR
HVAC	HEATING, VENTILATING AND AIR COND
HW	HOT WATER
ID	INSIDE DIAMETER
IN	INCHES
INFIL	INFILTRATION
INSUL	INSULATE, INSULATION
I/O	INPUT/OUTPUT
KW	KILOWATT
LAT	LEAVING AIR TEMPERATURE
LBS	POUNDS
LTW	LOW TEMPERATURE WATER
LWT	LEAVING WATER TEMPERATURE
MAX	MAXIMUM
MBH	THOUSANDS BTU PER HOUR
MIN	MINIMUM, MINUTE
OA	OUTSIDE AIR
OD	OUTSIDE DIAMETER
ODP	OPEN DRIP PROOF
PH	PHASE
PI	PRESSURE INDICATOR
PRES	PRESSURE
PS	PRESSURE SWITCH
PSIA	POUNDS PER SQUARE INCH ABSOLUTE
PSIG	POUNDS PER SQUARE INCH GAGE
QTY	QUANTITY
RA	RETURN AIR
RG	RETURN GRILLE
RH	RELATIVE HUMIDITY
RPM	REVOLUTIONS PER MINUTE
SA	SUPPLY AIR
SCFM	STANDARD CUBIC FEET PER MINUTE
SD	SMOKE DETECTOR, SMOKE DAMPER
SF	SQUARE FEET, SUPPLY FILTER
SP	SET POINT, STATIC PRESSURE
SST	STAINLESS STEEL
T	THERMOSTAT, THERMOMETER
TD	TEMPERATURE DIFFERENCE
TDH	TOTAL DYNAMIC HEAD
TEAO	TOTALLY ENCLOSED AIR OVER
TEFC	TOTALLY ENCLOSED FAN COOLED
TEMP	TEMPERATURE
TS	TEMPERATURE SWITCH
TW	THERMOWELL
VAV	VARIABLE AIR VOLUME
VEL	VELOCITY
VTR	VENT THROUGH ROOF
W/	WITH
W/O	WITHOUT
WB	WET BULB
WC	WATER COLUMN
XP	EXPLOSION PROOF

GENERAL NOTES

1. GENERAL HVAC NOTES APPLY TO ALL HVAC DRAWINGS.
2. ALL SHEET METAL FLASHING REFERENCED IN DETAILS SHALL BE ALUMINUM.
3. CONTRACTOR SHALL BE AWARE THAT SOME HVAC EQUIPMENT MAY NEED TO BE INSTALLED BEFORE BUILDING ROOFS ARE PLACED.
4. CONTRACTOR SHALL SCHEDULE SUBMITTALS AND CONSTRUCTION ACCORDINGLY.
5. THIS DRAWING IS GENERAL IN NATURE. SOME DESIGNATIONS AND SYMBOLS MAY NOT BE USED ON THE CONTRACT DRAWINGS.
6. INSTALL HEATING, VENTILATING AND AIR CONDITIONING EQUIPMENT AND DUCTWORK TO AVOID INTERFERENCES WITH STRUCTURE, PIPING, EQUIPMENT, CONDUIT, LIGHTING, ETC. DUCTWORK AND ASSOCIATED ACCESSORIES MAY REQUIRE REROUTING TO FACILITATE THE PIPING, LIGHTING, AND EQUIPMENT INSTALLATION. CONTRACTOR SHALL SUBMIT THE PLAN AND DETAIL FOR REVIEW AND APPROVAL PRIOR TO FABRICATION.
7. OVERALL PHYSICAL SIZE OF THE EQUIPMENT SELECTED BY THE CONTRACTOR SHALL NOT EXCEED THE SIZE SHOWN ON THE DRAWINGS. CLEARANCES, DIMENSIONS OR SCALED DISTANCES SHOWN ON THE DRAWINGS SHALL BE MAINTAINED. ALL PROPOSED CHANGES AND ADDITIONS SHALL BE SUBMITTED FOR CONSTRUCTION MANAGER'S REVIEW AND SHALL BE DONE ONLY IF APPROVED BY THE CONSTRUCTION MANAGER AND AT NO ADDITIONAL COST TO THE OWNER. THE CONTRACTOR SHALL BEAR ALL COSTS OF ASSOCIATED CHANGES AND ADDITIONS.
8. DUCT CONNECTIONS TO EQUIPMENT, AND EQUIPMENT SUPPORTS SHALL BE VERIFIED AND ADJUSTED TO MATCH ACTUAL EQUIPMENT FURNISHED AT NO ADDITIONAL COST TO THE OWNER.
9. NOT ALL THE FITTINGS ARE SHOWN ON THE DRAWINGS. THE CONTRACTOR SHALL PROVIDE THE FITTINGS SHOWN ON THE DRAWINGS AND ADDITIONAL FITTINGS AS REQUIRED FOR THE DUCTWORK ARRANGEMENT SHOWN ON THE DRAWINGS AND FOR EQUIPMENT FURNISHED.
10. NOT ALL THE ITEMS ARE SHOWN IN PLANS, SECTIONS DETAILS, SCHEMATICS, AND P&ID DRAWINGS. THE CONTRACTOR SHALL PROVIDE ALL ITEMS EVEN IF THEY ARE SHOWN AT ONLY ONE LOCATION ON THE DRAWINGS. IN ADDITION, THE CONTRACTOR SHALL PROVIDE ALL ITEMS REQUIRED PER SPECIFICATION WHETHER OR NOT THEY ARE SHOWN ON THE DRAWINGS.
11. NOT ALL HANGERS, BRACKETS, SUPPORTS OR BRACES FOR DUCTWORK ARE INDICATED ON THE DRAWINGS. REFER TO THE SPECIFICATIONS FOR SUPPORT REQUIREMENTS IN ADDITION TO THOSE SHOWN ON THE DRAWINGS.
12. IN CASE OF CONFLICT BETWEEN THE DRAWINGS, THE MOST STRINGENT REQUIREMENTS SHALL GOVERN UNLESS SPECIFICALLY APPROVED OTHERWISE BY THE ENGINEER.
13. DUCT SIZES INDICATED ARE CLEAR DIMENSIONS INSIDE THE DUCT OR THE DUCT LINING.
14. AIRTIGHT ACCESS DOORS OF NOT LESS THAN 12" X 12" SIZE SHALL BE PROVIDED TO ALLOW INSPECTION OF ALL DAMPERS AND FILTERS.
15. THE LOCATION OF PIPING TO THE AIR HANDLING UNITS SHALL NOT INTERFERE WITH FILTER REMOVAL OR SERVICING THE EQUIPMENT.
16. ROOF FANS, VENTS AND HOODS SHALL BE PROVIDED WITH ½" MESH STAINLESS STEEL BIRD SCREEN OVER ALL OPENINGS.
17. ALL STAINLESS STEEL SHALL BE TYPE 316 OR 316L UNLESS SPECIFICALLY NOTED.

DESIGN SUMMARY

THE MECHANICAL DESIGN PROVIDES EXHAUST AND COMFORT HEATING FOR THE RESTROOM. THE OTHER SPACES ARE EXHAUSTED TO PROVIDE VENTILATION, WITH HEATERS FOR FREEZE PROTECTION ONLY.

Brown AND Caldwell
PORTLAND, OREGON

Signer Name: William D. Stewart
Signing Reason: I approved this document
Signing Time: 2025-01-25 08:58:01(ST)

WILLIAM D. STEWART — STATE OF WASHINGTON — 55266 — REGISTERED PROFESSIONAL ENGINEER

ISSUED FOR BID

CITY OF Vancouver WASHINGTON

WS14 PFAS TREATMENT DESIGN

REVISIONS

REV	DATE	DESCRIPTION

LINE IS 2 INCHES AT FULL SIZE

DESIGNED:	K.RICE
DRAWN:	M.FULK
CHECKED:	D.STEWART
CHECKED:	
APPROVED:	D.STEWART
FILENAME	180318-M-00V21.rvt
BC PROJECT NUMBER	180318
CLIENT PROJECT NUMBER	PRJ100893

MECHANICAL HVAC

ABBREVIATIONS, SYMBOLS AND LEGEND

DRAWING NUMBER
M-000-001

SHEET NUMBER 83 OF 125

Path: BIM 360://180318 - WS 14 PFAS Treatments Design/180318-M-00V21.rvt
Plot Date: 12/19/2024 9:17:33 AM

da04795141b6501c75e10284d4267aea



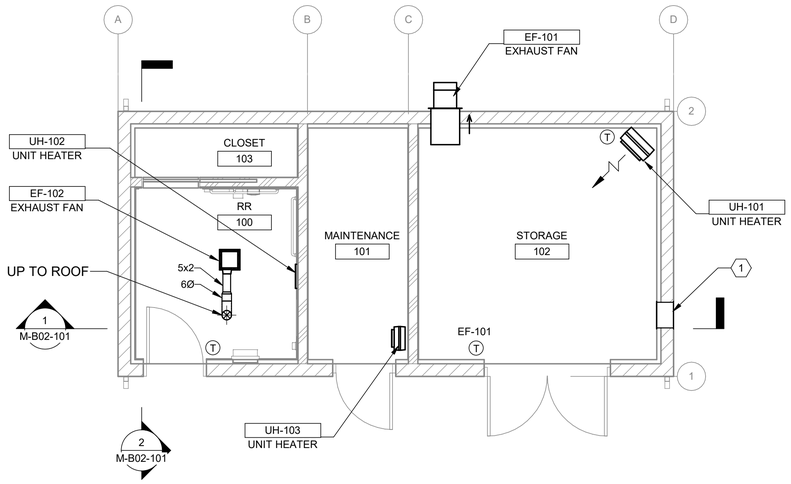

PLAN
SCALE: 1/4" = 1'-0"

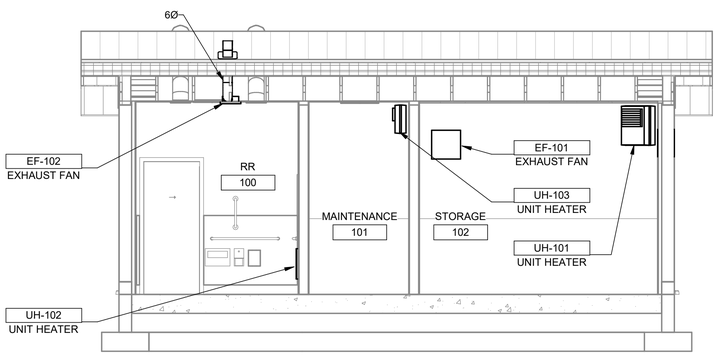

1 SECTION
M-B02-101 SCALE: 1/4" = 1'-0"

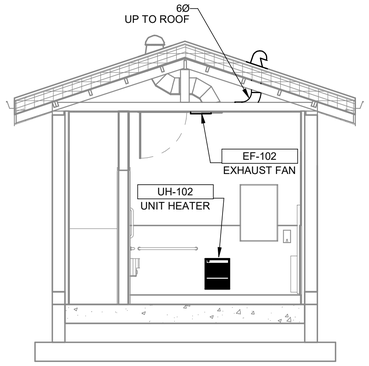

2 SECTION
M-B02-101 SCALE: 1/4" = 1'-0"

SEQUENCE OF OPERATIONS

EF-101

SETPOINT: 75F
UNIT SHALL BE TWO STAGE CONTROL, DESIGNATED "LOW" SPEED AND "HIGH" SPEED.
WHEN THERMOSTAT IS ABOVE SETPOINT, UNIT SHALL RUN AT HIGH SPEED. OTHERWISE, UNIT SHALL RUN AT LOW SPEED.

EF-102

UNIT SHALL BE CONTROLLED BY OCCUPANCY SENSOR ON WALL. UNIT SHALL RUN WHEN RESTROOM IS OCCUPIED.

UH-101

SETPOINT: 70F
UNIT SHALL BE CONTROLLED BY INTEGRAL THERMOSTAT. UNIT SHALL RUN WHEN RESTROOM IS BELOW SETPOINT.

UH-102

SETPOINT: 45F
UNIT SHALL BE CONTROLLED BY UNIT MOUNTED THERMOSTAT. UNIT SHALL RUN WHEN ROOM IS BELOW SETPOINT, FOR FREEZE PROTECTION.

UH-103

SETPOINT: 45F
UNIT SHALL BE CONTROLLED BY UNIT MOUNTED THERMOSTAT. UNIT SHALL RUN WHEN ROOM IS BELOW SETPOINT, FOR FREEZE PROTECTION.

KEYNOTES:

1 16X16 INTAKE LOUVER. LOUVER DESIGN/COLOR/FINISH, SEE SCHEDULES SHEET.

Brown AND Caldwell
PORTLAND, OREGON

Signer Name: William D. Stewart
Signing Reason: I approved this document.
Signing Time: 2025-01-25 08:58:02(EST)

WILLIAM D. STEWART
STATE OF WASHINGTON
55266
REGISTERED
PROFESSIONAL ENGINEER

ISSUED FOR BID

CITY OF Vancouver WASHINGTON

WS14 PFAS TREATMENT DESIGN

REVISIONS

REV	DATE	DESCRIPTION

LINE IS 2 INCHES AT FULL SIZE

DESIGNED:	K.RICE
DRAWN:	M.FULK
CHECKED:	D.STEWART
CHECKED:	
APPROVED:	D.STEWART

FILENAME
180318-M-00V21.rvt

BC PROJECT NUMBER
180318

CLIENT PROJECT NUMBER
PRJ100893

MECHANICAL HVAC

RESTROOM PLANS AND SECTION

DRAWING NUMBER
M-B02-101

84 SHEET NUMBER OF 125

Plot Date: 12/19/2024 9:17:34 AM Path: BIM 360://180318 - WS 14 PFAS Treatments Design/180318-M-00V21.rvt

4b8c610bd97fbd47a9c482bfdac448a4

UNIT HEATER SCHEDULE

EQUIPMENT TAG	MANUFACTURER	MODEL NUMBER	LOCATION	TYPE	AIR		ELECTRICAL			PHYSICAL		NOTES
					AIRFLOW (CFM)	HEAT (W)	FAN SIZE (HP)	AMPS	VOLT/PH	LENGTH/WIDTH/HEIGHT (IN)	WEIGHT	
UH-101	KING	KBP	STORAGE ROOM	UNIT HEATER	270	1900	1/5	16	115/1	12x10x13	30	1
UH-102	KING	PAW-SS	RESTROOM	WALL RECESSED	50	500	1/15	4	115/1	13x4x6	15	1
UH-103	KING	KBP	MAINTENANCE ROOM	UNIT HEATER	50	500	1/15	4	115/1	13x4x6	15	1

NOTES:

1. PROVIDE WITH:
   - INTEGRAL THERMOSTAT
   - STAINLESS STEEL CONSTRUCTION

FAN SCHEDULE

EQUIPMENT TAG	MANUFACTURER	MODEL NUMBER	LOCATION	TYPE	AIR		ELECTRICAL			PHYSICAL			NOTES
					AIRFLOW (CFM)	EXTERNAL STATIC PRESSURE (IN H2O)	MOTOR SIZE (HP)	BHP	VOLT/PH	LENGTH/WIDTH/HEIGHT (IN)	WALL OPENING (IN)	WEIGHT (LBS)	
EF-101	GREENHECK	SE1-12-426-VG	CHEMICAL ROOM	WALL MOUNTED	200/400	0.25	1/4	-	115/1	21x40x21	19.25x19.25	150	1,2
EF-102	GREENHECK	SP-LP0511	RESTROOM	CEILING	100	0.25	1/10	-	115/1	13x13x4	x66	80	3

NOTES:

1. PROVIDE WITH:
   - ALUMINUM FAN BLADES AND BODY
   - TEFC MOTOR
   - HI PRO POLYESTER COATING. COORDINATE COLOR WITH ARCHITECT
   - DISCONNECT SWITCH
2. PROVIDE WITH MATCHING VFD WIRED TO THERMOSTAT.
3. PROVIDE WITH OCCUPANCY SENSOR AND BACKDRAFT DAMPER.

LOUVER SCHEDULE

MARK	BASIS OF DESIGN		SIZE	FREE AREA	AIRFLOW (CFM)	VELOCITY (FPM)	NOTES
	MANUFACTURER	MODEL NUMBER					
LV-1	RUSKIN	ELF6375DX	16x16	57%	250	240	PROVIDE W/ 1/4" BIRD SCREEN

Brown AND Caldwell
PORTLAND, OREGON

Signer Name: William D. Stewart
Signing Reason: I approved this document
Signing Time: 2025-01-25 08:58:01(EST)

WILLIAM D. STEWART
STATE OF WASHINGTON
55266
REGISTERED
PROFESSIONAL ENGINEER

ISSUED FOR BID

CITY OF Vancouver WASHINGTON

WS14 PFAS TREATMENT DESIGN

REVISIONS

REV	DATE	DESCRIPTION

LINE IS 2 INCHES AT FULL SIZE

DESIGNED: K.RICE
DRAWN: M.FULK
CHECKED: D.STEWART
CHECKED:
APPROVED: D.STEWART

FILENAME 180318-M-00V21.rvt
BC PROJECT NUMBER 180318
CLIENT PROJECT NUMBER PRJ100893

MECHANICAL HVAC

RESTROOM SCHEDULES AND DIAGRAMS

DRAWING NUMBER
M-B02-601

SHEET NUMBER 85 OF 125

Plot Date: 12/19/2024 9:17:34 AM Path: BIM 360://180318 - WS 14 PFAS Treatments Design/180318-M-00V21.rvt

838e53cce4601611b3c00d4891e0c5c0

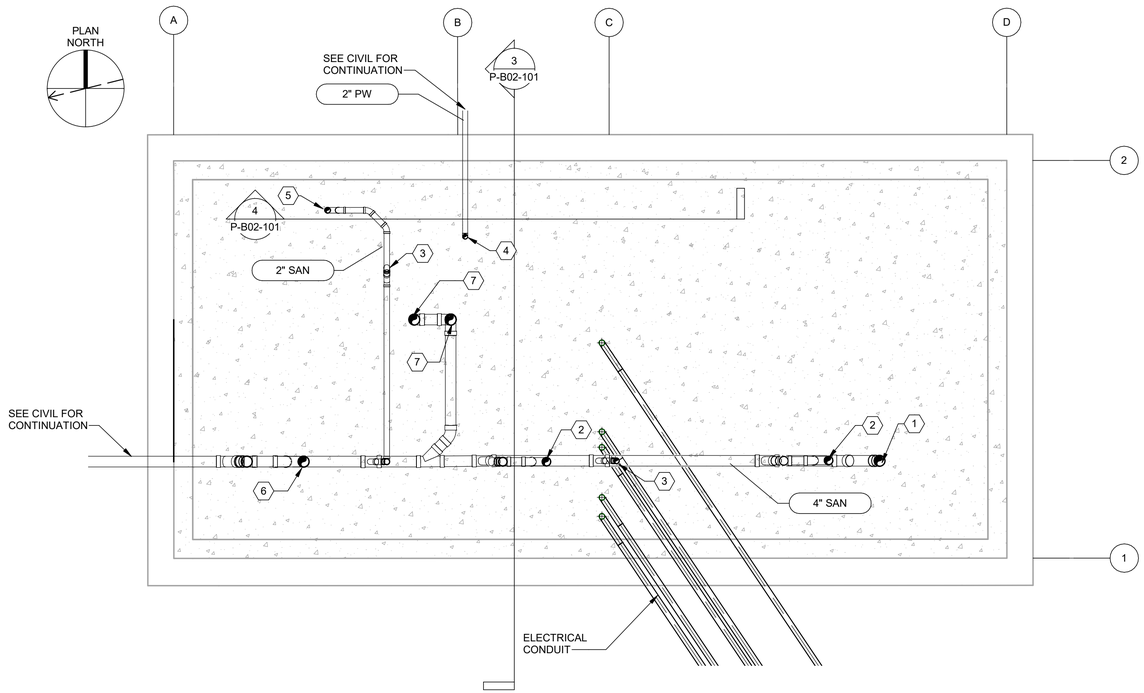

1 RESTROOM AND STORAGE BUILDING UNDERSLAB PLUMBING
SCALE: 3/8" = 1'-0"

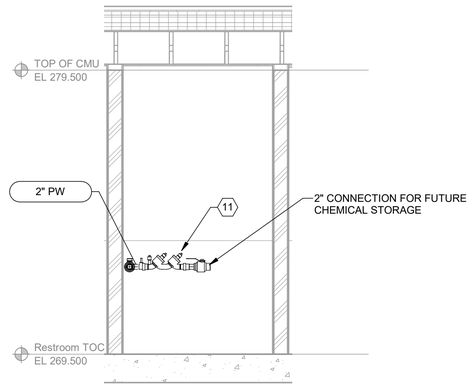

4 FUTURE CHEMICAL STORAGE CONNECTION
P-B02-101 SCALE: 3/8" = 1'-0"

GENERAL NOTES:

1.

KEYNOTES:

1	4" SAN UP TO 4" FCO-1
2	3" SAN UP TO 3" FD-1
3	2" VENT UP
4	2' CW UP TO BACKFLOW PREVENTERS
5	2" SAN UP TO 2" FD-1
6	4" SAN UP TO 4" FD-1
7	4" SAN UP TO WC-1
8	FUTURE 120 GALLON WATER HEATER
9	1/2" CW TO WC
10	1/2" CW TO LAV
11	2" BACKFLOW PREVENTER
12	1 1/2" BACKFLOW PREVENTER
13	1 1/2" FIRE HOSE CONNECTION WITH FITTED CAP.

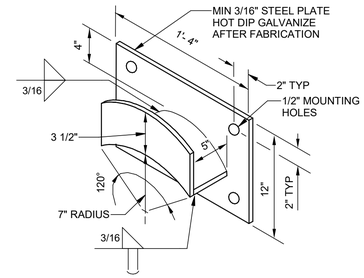

D31004 HOSE RACK
NTS

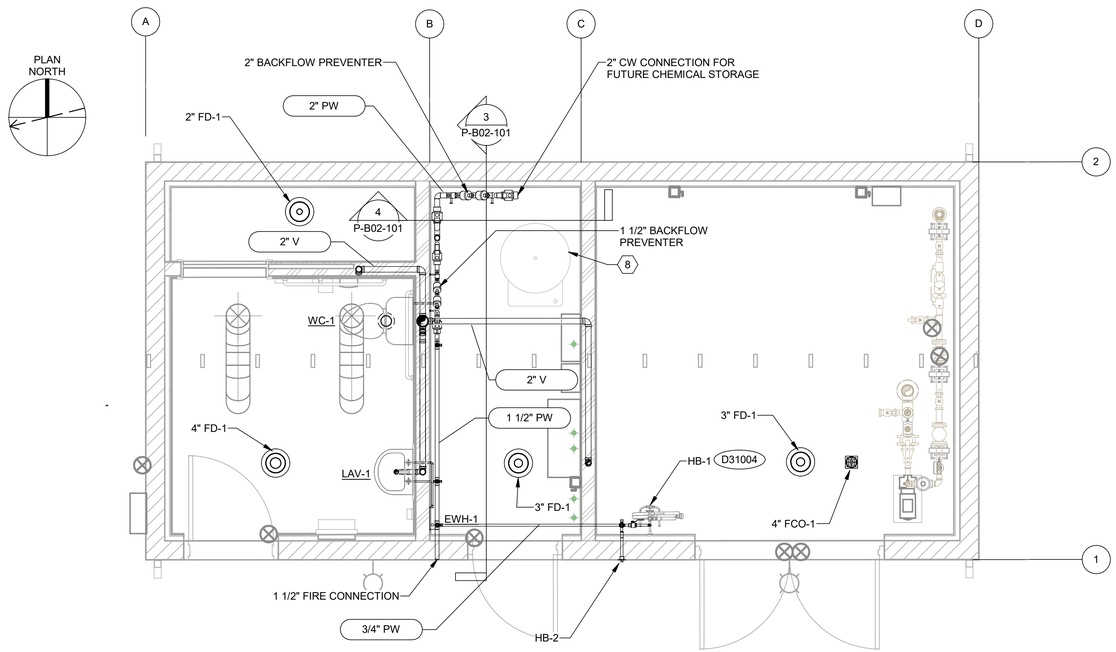

2 RESTROOM AND STORAGE BUILDING ABOVE GRADE PLUMBING
SCALE: 3/8" = 1'-0"

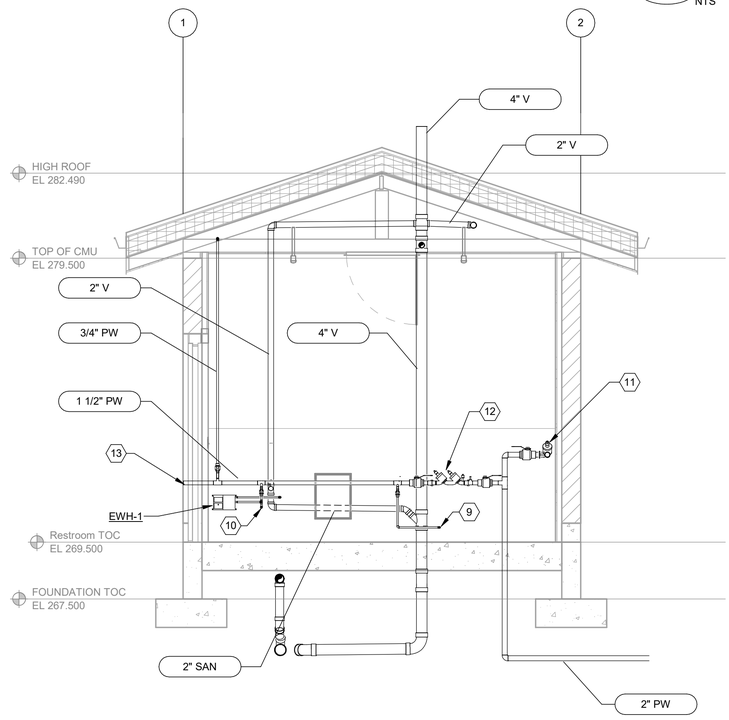

3 WATER MAIN DISTRIBUTION
P-B02-101 SCALE: 3/8" = 1'-0"

Brown AND Caldwell
PORTLAND, OREGON

Signer Name: William D. Stewart
Signing Reason: I approved this document
Signing Time: 2025-01-25 08:58:01(EST)

STATE OF WASHINGTON
WILLIAM D. STEWART
55266
REGISTERED PROFESSIONAL ENGINEER

ISSUED FOR BID

CITY OF Vancouver WASHINGTON

WS14 PFAS TREATMENT DESIGN

REVISIONS

REV	DATE	DESCRIPTION

LINE IS 2 INCHES AT FULL SIZE

DESIGNED:	K.RICE
DRAWN:	J.CONAWAY
CHECKED:	D.STEWART
CHECKED:	
APPROVED:	D.STEWART
FILENAME	180318-P-00V21.rvt
BC PROJECT NUMBER	180318
CLIENT PROJECT NUMBER	PRJ100893

PLUMBING

RESTROOM AND STORAGE BUILDING PLANS AND SECTIONS

DRAWING NUMBER
P-B02-101

SHEET NUMBER 86 OF 125

Plot Date: 20-Dec-24 11:01:38 AM Path: BIM 360://180318 - WS 14 PFAS Treatments Design/180318-P-00V21.rvt

50d4743011b29d14e46683279638a159

WATER HEATER

MARK	BASIS OF DESIGN		WATER FLOW		ELECTRICAL			NOTES
	MANUFACTURER	MODEL NUMBER	ACTIVATION (GPM)	CONNECTION SIZE (IN)	KW	V/PH	AMPS	
EWH-1	CHRONOMITE	SR 15L/120	0.35	DIRECT	1.8	115/1	15	

FIXTURE CONNECTION SCHEDULE

EQUIPMENT NUMBER	TAG	CONNECTION SIZE (IN)			BASIS OF DESIGN MODEL	NOTES
		PW	HW	DRAIN		
LAVATORY	LAV-1	1/2	1/4	1-1/2	KOHLER K-1725	
WATER CLOSET	WC-1	2	-	4	KOHLER K-4430ET	
FLOOR DRAIN	FD-1	-	-	3	ZURN Z415B	WITH ZURN Z1072 BARRIER SEAL
CLEANOUT	FCO-1			3	ZURN Z1400-BZ1	WITH Z1457 FLOOR COVER OR Z1461 WALL COVER

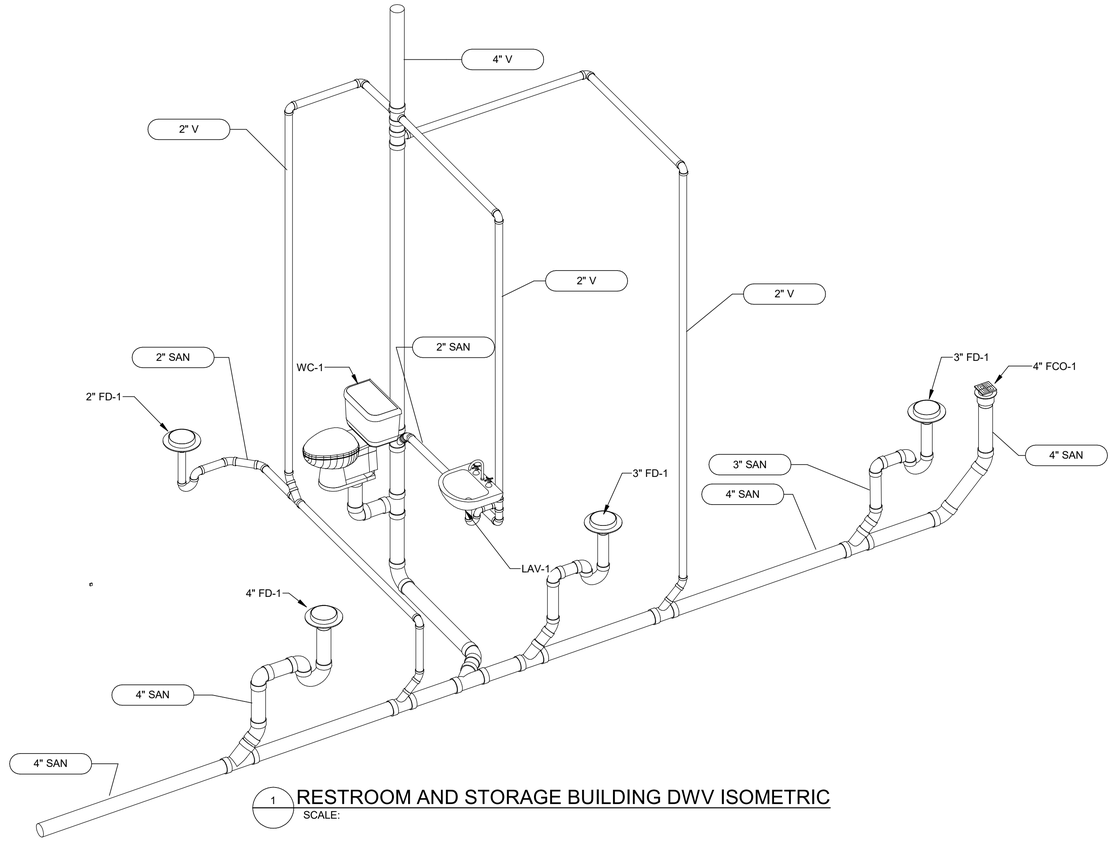

1 RESTROOM AND STORAGE BUILDING DWV ISOMETRIC
SCALE:

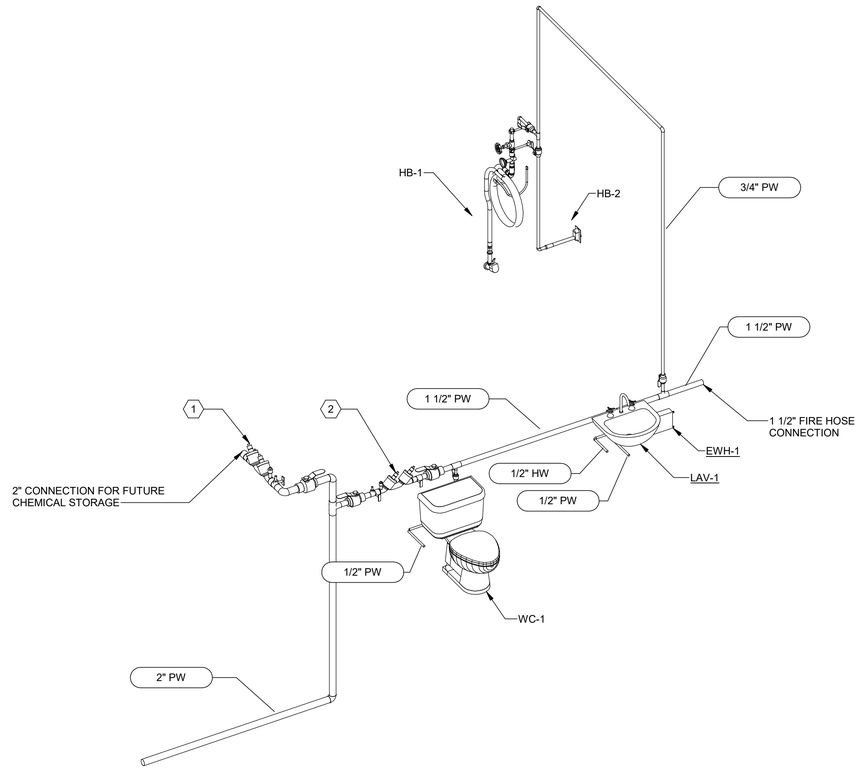

2 RESTROOM AND STORAGE BUILDING DOMESTIC WATER ISOMETRIC
SCALE:

Brown AND Caldwell
PORTLAND, OREGON

Signer Name: William D. Stewart
Signing Reason: I approved this document.
Signing Time: 2025-01-23 08:58:01(EST)

STATE OF WASHINGTON
WILLIAM D. STEWART
55266
REGISTERED PROFESSIONAL ENGINEER

ISSUED FOR BID

CITY OF Vancouver WASHINGTON

WS14 PFAS TREATMENT DESIGN

REVISIONS

REV	DATE	DESCRIPTION

LINE IS 2 INCHES AT FULL SIZE

DESIGNED: K.RICE
DRAWN: J.CONAWAY
CHECKED: D.STEWART
CHECKED:
APPROVED: D.STEWART

FILENAME
180318-P-00V21.rvt
BC PROJECT NUMBER
180318
CLIENT PROJECT NUMBER
PRJ100893

PLUMBING

RESTROOM AND STORAGE BUILDING SCHEDULES AND DIAGRAMS

DRAWING NUMBER
P-B02-601

87 SHEET NUMBER OF 125

Plot Date: 20-Dec-24 11:11:35 AM Path: BIM 360://180318 - WS 14 PFAS Treatments Design/180318-P-00V21.rvt

3fdf342a2e82cb3f2e5393be20db6b58

RACEWAYS

HH23 — MANHOLE (MH), HANDHOLE (HH), PULLBOX (PB)

JB1900 (J) — JUNCTION BOX OPTIONAL IDENTIFIER

TB-1301 (T) — TERMINAL BOX OPTIONAL IDENTIFIER

PBD-1900-1,3,5 — HOME RUN EXPOSED
SEE PANELBOARD, SWITCHBOARD, OR MCC SCHEDULE FOR CIRCUIT INFORMATION

EXAMPLE: HOME RUN TO PANELBOARD PBD-1900, CIRCUITS 1, 3, AND 5

PBD-1900-1,3,5 — HOME RUN CONCEALED
SEE PANELBOARD, SWITCHBOARD, OR MCC SCHEDULE FOR CIRCUIT INFORMATION

EXAMPLE: HOME RUN TO PANELBOARD PBD-1900, CIRCUITS 1, 3, AND 5

CABLE TRAY MODIFIERS:
- CTS - 24VDC OR LESS
- CTC - 120V CONTROL CONDUCTORS
- CTP - 600V POWER CONDUCTORS

WHEN TWO TRAY MODIFIERS IDENTIFY A SINGLE TRAY, THE CONTRACTOR MAY USE DIVIDER OR INSTALL SEPARATE TRAYS (CTC/CTS)

CABLE TRAY WITH COVER MODIFIER, AS ABOVE

P 05P1100 — RACEWAY IDENTIFIER

RACEWAY EXPOSED
MODIFIERS FOR RACEWAY TYPE:
- H - POWER (ABOVE 600V)
- P - POWER
- C - CONTROL
- S - SIGNAL
- D - DATA
- F - FIBER OPTIC
- PC - POWER AND CONTROL
- X - SPARE

RACEWAY CONCEALED

RACEWAY TURNED TOWARD THE VIEWER

RACEWAY TURNED DOWN

CONDUIT CAPPED

DB 05P1100 — DUCT BANK IDENTIFIER (OPTIONAL)

DB — DUCT BANK, DIRECT BURIED

CDB — DUCT BANK, CONCRETE ENCASED

RC — RC — DUCT BANK, REINFORCED CONCRETE ENCASED

OH — OVERHEAD POWER LINE

DISTRIBUTION EQUIPMENT

APPROXIMATE SHAPE AND SCALE REPRESENTED WHERE POSSIBLE. HOWEVER, EXACT SIZE AND NUMBER OF SECTIONS IS ESTIMATED.

FLOOR-STANDING DISTRIBUTION ASSEMBLY, SUCH AS A SWITCHBOARD, TRANSFORMER, OR MOTOR CONTROL CENTER

EQUIPMENT DESIGNATION (REFER TO GENERAL SYMBOLS FOR SPECIFIC SYMBOL USE)

WALL-MOUNTED DISTRIBUTION ASSEMBLY, SUCH AS PANELBOARD, MOTOR STARTER PANEL, OR TERMINAL CABINET

EQUIPMENT DESIGNATION (REFER TO GENERAL SYMBOLS FOR SPECIFIC SYMBOL USE)

LIGHTING

LUMINAIRE IDENTIFIER:

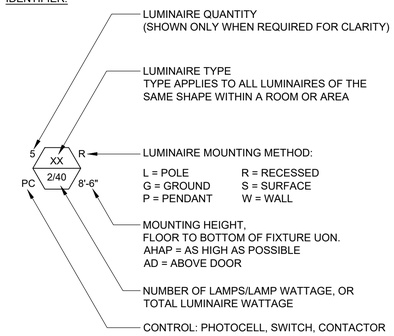

- XX — LUMINAIRE QUANTITY (SHOWN ONLY WHEN REQUIRED FOR CLARITY)
- XX — LUMINAIRE TYPE
  TYPE APPLIES TO ALL LUMINAIRES OF THE SAME SHAPE WITHIN A ROOM OR AREA
- R — LUMINAIRE MOUNTING METHOD:
  L = POLE, G = GROUND, P = PENDANT, R = RECESSED, S = SURFACE, W = WALL
- 8'-6" — MOUNTING HEIGHT, FLOOR TO BOTTOM OF FIXTURE UON. AHAP = AS HIGH AS POSSIBLE, AD = ABOVE DOOR
- 2/40 — NUMBER OF LAMPS/LAMP WATTAGE, OR TOTAL LUMINAIRE WATTAGE
- PC — CONTROL: PHOTOCELL, SWITCH, CONTACTOR

LUMINAIRE SHAPES AND SCALE ARE REPRESENTED WHERE POSSIBLE. THE EXAMPLES SHOWN BELOW ARE TYPICAL APPLICATIONS

RECESSED LIGHTING LUMINAIRE

SUSPENDED PENDANT MOUNTED LUMINAIRE

SURFACE MOUNTED FIXTURE

NS — LUMINAIRES IDENTIFIED WITH AN 'NS' SHALL FROM NON-SWITCHED POWER SOURCE, APPLIES TO ANY FIXTURE TYPE

LIGHTING FIXTURE WITH EMERGENCY FUNCTION (BATTERY OR CENTRAL INVERTER)

LUMINAIRE

LUMINAIRE PENDANT MOUNT

LUMINAIRE PENDANT MOUNT WITH EMERGENCY FUNCTION

LUMINAIRE RECESSED CAN TYPE

LUMINAIRE RECESSED CAN TYPE WITH EMERGENCY FUNCTION

WALL MOUNTED LUMINAIRE

DIRECTIONAL LUMINAIRE

POLE MOUNTED AREA LUMINAIRE

EMERGENCY LIGHTING UNIT SELF CONTAINED

LIGHTING CONTINUED

EXIT LIGHTS:

SURFACE ON CEILING

WALL MOUNTED

WITH DIRECTIONAL ARROWS

3a — CIRCUIT IDENTIFIER: WHEN SHOWN ADJACENT TO LUMINAIRE IDENTIFIES CIRCUIT NUMBER AND SWITCH. EXAMPLE: CIRCUIT 3, CONTROLLED BY SWITCH a

PC — PHOTO CELL

OS — OCCUPANCY SENSOR

GROUNDING

GROUND ROD

GROUND ROD WITH GROUND TEST WELL

GROUND CONNECTION, (SEE SPECIFICATION 26 05 06)

G — GROUNDING CONDUCTOR

GROUND CONNECTION

GROUNDING ELECTRODE - CONCRETE ENCASED

LIGHTNING ROD/AIR TERMINAL

GENERAL NOTES:

1. SYMBOLS AND ABBREVIATION DRAWINGS ARE GENERAL IN NATURE. SOME SYMBOLS SHOWN HEREON MAY NOT BE USED ON THE CONTRACT DRAWINGS.
2. SYMBOLS ARE ARRANGED ON SPECIFIC DRAWINGS AND IN CATEGORIES FOR CONVENIENCE ONLY; SYMBOLS MAY BE USED ON ANY OF THE CONTRACT DRAWINGS.
3. IDENTIFICATIONS (ID), SIZES, RATINGS, LOCATIONS AND SIMILAR INFORMATION SHOWN ASSOCIATED WITH SYMBOLS ARE OPTIONAL; EXAMPLES OF SUCH INFORMATION ARE SHOWN WITH SOME SYMBOLS FOR CLARITY.

WIRING DEVICES

SWITCHES:

UNLESS OTHERWISE NOTED, ALL SWITCHES ARE WALL MOUNTED

$ — TOGGLE SWITCH, SINGLE POLE

$$ — GANGED SWITCHES IN COMMON BOX WITH COMMON WALL PLATE

$^a_3$ — SUPERSCRIPT INDICATES CIRCUIT CONTROLLED: a, b, c, ETC. MAY BE COMBINED WITH CIRCUIT NUMBER. EXAMPLE: 1a, 4b, ETC

SUBSCRIPT MODIFIER INDICATES:
- 2 = DOUBLE POLE
- 3 = THREE WAY
- 4 = FOUR WAY
- K = KEY OPERATED
- MC = MOMENTARY CONTACT, THREE POSITION
- MS = MANUAL (MOTOR) STARTER OR SWITCH WITH OVERLOADS
- R = RHEOSTAT (DIMMER, SPEED CONTROL)
- O = OCCUPANCY SWITCH

D — DIMMER

RECEPTACLES:

WP — DUPLEX RECEPTACLE

RECEPTACLE MODIFIERS:
- WP = WEATHER PROOF
- GFI = GROUND FAULT CIRCUIT INTERRUPTER

HAZARDOUS AREA; EXPLOSION PROOF

EXPLOSION PROOF, CLASS 1, DEAD FRONT, 45° ANGLE, TWO GANG

RECESSED FLOOR RECEPTACLE - ANY RECEPTACLE INSIDE A SQUARE

SURFACE FLOOR RECEPTACLE - ANY RECEPTACLE INSIDE A TRIANGLE

GANGED RECEPTACLES-IN COMMON BOX, WITH COMMON WALL PLATE

C — RECEPTACLE, CLOCK HANGER

RECEPTACLE, DUPLEX ON EMERGENCY

480V RECEPTACLE

MOTORS AND EQUIPMENT

MOTOR STARTER, INDIVIDUAL NOT LOCATED IN AN MCC OR SIMILAR GROUP ASSEMBLY

COMBINATION MOTOR STARTER NOT LOCATED IN AN MCC OR SIMILAR GROUP ASSEMBLY

60 — DISCONNECT SWITCH NON-FUSED EXAMPLE: 60 AMP

100/3/80 — DISCONNECT SWITCH, FUSED EXAMPLE: 100 AMP, 3P, 80 AMP FUSES

M — MOTOR

SV — SOLENOID VALVE

H — HEATER

T — THERMOSTAT

WH — WATER HEATER

FIELD INSTRUMENT

LOCAL CONTROL STATION

EQUIPMENT DESIGNATION (REFER TO GENERAL SYMBOLS FOR SPECIFIC SYMBOL USE)

CONTROL PANEL, VFD, RVSS APPROXIMATE SHAPE AND SCALE

HAZARDOUS AREA CLASSIFICATION

CI-D1 — CLASS I, DIV. 1

CI-D2 — CLASS I, DIV. 2

TELEPHONE & COMMUNICATION SYSTEMS

UNLESS OTHERWISE NOTED, TELEPHONE OUTLETS SHALL BE MOUNTED AT SAME HEIGHT AS THE RECEPTACLES.

A — EXTERNAL LINE OR PLANT PHONE SYSTEM OUTLET
OPTIONAL MODIFIERS:
- A = ATTENDANT'S CONSOLE
- F = FUTURE INSTRUMENT
- J = JACK, PLUG-IN TYPE
- W = WALL INSTRUMENT

BELL

D — OUTLET, DATA COMMUNICATION

SECURITY CAMERA

SPEAKER

H — AUDIBLE HORN

B — STROBE LIGHT (BLUE SHOWN)

CS — ELECTRONIC CARD SWIPE

SD — SMOKE DETECTOR

R — RATE-OF-RISE DETECTOR

CIRCUIT IDENTIFICATION

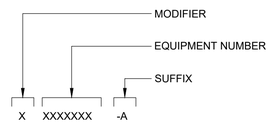

NOTE:

MODIFIERS FOR CABLE TYPE INCLUDE:
- H - POWER (ABOVE 600V)
- P - POWER
- C - CONTROL
- S - SIGNAL
- D - DATA
- F - FIBER OPTIC
- PC - POWER AND CONTROL
- X - SPARE

SUFFIX:
- A - LETTER TO CREATE UNIQUE ID

EXAMPLE 1: P101-1: 3 #2/0, #6G, 2"C — FOR CIRCUIT P101: THREE NO. 2/0 CONDUCTORS, ONE NO. 6 AWG GROUND WIRE IN A 2" CONDUIT

EXAMPLE 2: SES-2: 2[3 #1/0, #6G, 1 1/2"C] — FOR SES-2: TWO PARALLEL RUNS OF THREE NO. 1/0 CONDUCTORS, ONE NO. 6 AWG GROUND IN 1 1/2" CONDUIT

EXAMPLE 3: C111: 2-1 PR #16S, 1"C — FOR CONTROL CIRCUIT: TWO SIGNAL CABLES OF #16 AWG TWISTED SHIELDED PAIR IN 1" C.

EXAMPLE 4: VND, 1"C — VENDOR CABLE, 1"C (CONDUIT BY CONTRACTOR) TYP

Brown AND Caldwell
PORTLAND, OREGON

Signer Name: James Cook
Signing Reason: I approved this document.
Signing Time: 2025-01-23 15:54:31(EST)

JAMES E. COOK — STATE OF WASHINGTON — 37632 — REGISTERED PROFESSIONAL ENGINEER

ISSUED FOR BID

CITY OF Vancouver WASHINGTON

WS14 PFAS TREATMENT DESIGN

REVISIONS

REV	DATE	DESCRIPTION

LINE IS 2 INCHES AT FULL SIZE

DESIGNED: B.NURSUWITO
DRAWN: B.NURSUWITO
CHECKED: J.COOK
CHECKED: M.MAISONVILLE
APPROVED: J.COOK

FILENAME E-000-001.dwg
BC PROJECT NUMBER 180318
CLIENT PROJECT NUMBER PRJ100893

ELECTRICAL

LEGEND AND SYMBOLS 1

DRAWING NUMBER
E-000-001

SHEET NUMBER 88 OF 125

Plot Date: 1/14/2025 5:29:41 PM Path: c:\bcpw\d3450215\E-000-001.dwg

e4481562d4753c0a31305a08ff62a59d

CONTROL DIAGRAM SYMBOLS

GENERAL

CONDUCTORS CONNECTED

CONDUCTORS NOT CONNECTED

TERMINAL POINT FOR EXTERNAL CONNECTIONS

EXISTING EQUIPMENT (SCREENED)

INDICATING LIGHTS

DIRECT CONNECTION

PUSH TO TEST. TEST VOLTAGE TERMINAL SHOWN

X1

LENS COLOR:
(L = LENS COLOR)
A = AMBER
B = BLUE
G = GREEN
R = RED
W = WHITE

PUSHBUTTONS

HS-XXXX — PUSHBUTTON, MOMENTARY CONTACT, NORMALLY OPEN

HS-XXXX — PUSHBUTTON, MOMENTARY CONTACT, NORMALLY CLOSED

HS-XXXX — PUSHBUTTON WITH MUSHROOM HEAD, EMERGENCY STOP

SELECTOR SWITCHES

HS-XXXXX

2 POSITION MAINTAINED CONTACT
X = CONTACTS CLOSED
O = CONTACTS OPEN

HS-XXXXX

2 POSITION SPRING RETURNED TO RIGHT
O = CONTACTS OPENED
X = CONTACTS CLOSED

HS-XXXXX

3 POSITION MAINTAINED CONTACT
X = CONTACTS CLOSED
O = CONTACTS OPENED

CONTROL RELAYS

CR 1 / FUNCTION — OPERATION COIL:
CR = CONTROL RELAY

U / L / 8 / LR — MECHANICALLY LATCHED RELAY WITH UNLATCHED COIL

OUTPUT CONTACTS
LINE NUMBER OF RELAY COIL SHOWN (OPTIONAL)

CR1 LINE 30 — CR2 LINE 30

OPERATING COIL FUNCTIONS:
L = LATCH
U = UNLATCH
TR = TIMER RELAY
LR = LATCH RELAY

OL — OVERLOAD RELAY

INPUT SWITCHES

NORMALLY OPEN	NORMALLY CLOSED	INITIATING VARIABLE
SS	SS	SPEED
TS	TS	TEMPERATURE
WS	WS	FORCE OR TORQUE
ZS	ZS	POSITION (LIMIT)
FS	FS	FLOW
LS	LS	LEVEL
PS	PS	PRESSURE

TIMING RELAYS

TR 1 / SEC / MIN

OPERATING COIL

FUNCTION: ON OR OFF DELAY
RANGE: SEC / MIN
SET: SEC / MIN

NORMALLY OPEN		NORMALLY CLOSED		
TR3 LINE 50	TR3 TC	TR3 LINE 50	TR3 TO	DELAY ON COIL ENERGIZATION (ON DELAY)
TR3 LINE 50	TR3 TC	TR3 LINE 50	TR3 TO	DELAY ON COIL DE-ENERGIZATION (ON DELAY)

LINE = ID OF LINE OR RUNG NUMBER
(LINE OR RUNG NUMBER 50 SHOWN)

CONTACTORS

ID

OPERATING COIL:
C = CONTACTOR, LIGHTING, OR GENERAL USE
F = FAST OR FORWARD
M = MAIN OR LINE
1M = FIRST MAIN OR WYE
2M = SECOND MAIN OR DELTA
R = RUN OR REVERSE
S = SLOW OR START
IC = ISOLATION CONTROL

ID / SIZE X

MAIN CONTACTS:
MAIN CONTACTS AIR BREAK,
NEMA SIZE OPTIONAL
MODIFIERS:
FVR = FULL VOLTAGE REVERSING
RVS = REDUCED VOLTAGE STARTER
RVSS = REDUCED VOLTAGE SOLID STATE STARTER
RVAT = REDUCED VOLTAGE AUTOTRANSFORMER STARTER
2S2W = TWO SPEED, TWO WINDING STARTER

M / SIZE 1 — VACUUM CONTACTOR, NEMA SIZE OPTIONAL

MISCELLANEOUS

FU 30 / 30A — FUSE WITH SIZE AND OPTIONAL IDENTIFICATION

FU 30, 30A — FUSE WITH BLOWN FUSE INDICATOR

480 VAC / 250VA — CONTROL TRANSFORMER
PRIMARY AND SECONDARY
SIZE AS SHOWN OR AS SPECIFIED

250/5 / 3 — CURRENT TRANSFORMER
PRIMARY/SECONDARY TURNS RATIO SHOWN (OPTIONAL)

FU 30 / 5A — FUSE:
5A CLASS 'F' SHOWN

250 OHM / RES — RESISTOR

RECTIFIER

SURGE OR ARC SUPPRESSION

55 KVAR — CAPACITOR

CONNECTOR

XX — INCOMING LINE POWER SUPPLY

DRAWOUT MECHANISM

CV-1000 — SOLENOID VALVE:
DEVICE ID 'CV-1000' SHOWN

BUS DUCT

GROUND CONNECTION

POTENTIOMETER

H — METER W/ ALPHA IDENTIFIER:
A = AMMETER
H = ELAPSED TIME
V = VOLTMETER
W = WATT

BATTERY

CABLE ID — SHIELDED CABLE

LOCATED IN FIELD

AC TERMINAL BLOCK

DC TERMINAL BLOCK

DO — PLC I/O POINTS:
DI = DIGITAL INPUT
DO = DIGITAL OUTPUT
AI = ANALOG INPUT
AO = ANALOG OUTPUT

ONE LINE DIAGRAM SYMBOLS

TRIP FRAME / 52 — POWER CIRCUIT BREAKER (AIR, OIL, OR GAS)
FRAME AND TRIP SETTING AND OPTIONAL I.D. SHOWN

3P / 100 AT / 100 AF / LSIG — CIRCUIT BREAKER W/ ADJUSTABLE ELECTRONIC TRIP OVER BREAKER FRAME SIZE.
SOLID STATE TRIP FEATURES SHOWN:
L = LONG DELAY
S = SHORT DELAY
I = INSTANTANEOUS
G = GROUND FAULT

100 AT / 100 AF / LSIG / 3P

AMPS / MCP / 3P — CIRCUIT BREAKER (DIFFERING ORIENTATION)
MCP = MOTOR CIRCUIT PROTECTOR
3P = 3 POLE THERMAL MAGNETIC TRIP

MCP / 3P

30A / 3P / CLF — FUSED SWITCH
FUSE RATING AND POLES SHOWN MODIFIERS:
CLF = CURRENT LIMITING FUSE
DE = DUAL ELEMENT
F = CLASS 'F'
E = E RATED

200A — DISCONNECT OR ISOLATING SWITCH
200 AMP SHOWN

ATS# / 100A, 3P — POWER TRANSFER SWITCH:
DESIGNATION, AMP RATING, AND CONFIGURATION SHOWN
ATS = AUTOMATIC TRANSFER SWITCH
MTS = MANUAL TRANSFER SWITCH
SUSE = SUITABLE FOR USE AS SERVICE ENTRANCE

1 FVR — AIR BREAK CONTACTOR, FVNR UON.
NEMA SIZE 1 INDICATED
FVR = FULL VOLTAGE, REVERSING STARTER
2S2W = TWO SPEED, TWO WINDING STARTER

METERING (ANSI / IEEE FUNCTIONS SPECIFIED)
POWER MONITOR (PM)
POWER QUALITY MONITOR (HARMONIC ANALYSIS) (PQM)
MOTOR MONITOR AND PROTECTION RELAY (MPR)
FEEDER PROTECTION RELAY (FPR)

5 KVA — PACKAGED EQUIPMENT OR NON-MOTOR LOAD
KVA, KW, AMPS, AS NOTED.

VFD — VARIABLE FREQUENCY DRIVE (VFD)
NORMAL DUTY UON
HP IS INDICATED IF DIFFERENT THAN DRIVEN LOAD HP
###AMPS = RATED CONTINUOUS AMPS

RVSS — REDUCED VOLTAGE SOLID STATE STARTER

SPD — SURGE PROTECTION DEVICE

64 N / 3 — ANSI C37.2 DEVICE & QUANTITIES SHOWN

600kW / G / 60 Hz / 480V / 3P, 4W — GENERATOR WITH WINDING CONFIGURATION VOLTAGE, POWER, FREQUENCY SHOWN.
POWER FACTOR OPTIONAL

500 — MOTOR, HORSE POWER SHOWN

55 KVAR — POWER FACTOR CORRECTIONS CAPACITOR
KVAR RATING SHOWN

POTHEAD

STRESS CONE

PORTABLE CABLE

CABLE BUS

BUS CONDUCTOR

CABLE CONDUCTOR

SURGE ARRESTOR

LIGHTNING ARRESTOR

TEST DEVICE

###VAC / ##KVA / #% Z / ###/###V — POWER TRANSFORMER
VOLTAGES, SIZE, AND IMPEDANCE SHOWN

##KVA / ###VAC / #% Z / ###VAC — ISOLATION TRANSFORMER
VOLTAGES, SIZE, AND IMPEDANCE SHOWN

3 / ###VAC - ###VAC — POTENTIAL TRANSFORMER
PT QUANTITY SHOWN (3) AND VOLTAGES SHOWN

250/5 / 3 — CURRENT TRANSFORMER
CT QUANTITY AND 250:5 TURNS RATIO SHOWN

WINDING CONFIGURATIONS:

DELTA

WYE (GROUNDED)

K — KIRK KEY INTERLOCK

50 AMP / 30 SEC / GDR — NEUTRAL GROUNDING RESISTOR
AMPS/TIME RATING SHOWN

Brown AND Caldwell
PORTLAND, OREGON

Signer Name: James Cook
Signing Reason: I approved this document
Signing Time: 2025-01-23 13:54:23(EST)

JAMES E. COOK — STATE OF WASHINGTON — 37632 — REGISTERED PROFESSIONAL ENGINEER

ISSUED FOR BID

CITY OF Vancouver WASHINGTON

WS14 PFAS TREATMENT DESIGN

REVISIONS

REV	DATE	DESCRIPTION

LINE IS 2 INCHES AT FULL SIZE

DESIGNED:	B.NURSUWITO
DRAWN:	B.NURSUWITO
CHECKED:	J.COOK
CHECKED:	M.MAISONVILLE
APPROVED:	J.COOK
FILENAME	E-000-002.dwg
BC PROJECT NUMBER	180318
CLIENT PROJECT NUMBER	PRJ100893

ELECTRICAL

LEGEND AND SYMBOLS 2

DRAWING NUMBER
E-000-002

SHEET NUMBER 89 OF 125

Plot Date: 1/14/2025 5:29:50 PM Path: c:\bcpwd\3450215E-000-002.dwg

7de10547d9dcf3066a19fbd006102d8b

GENERAL NOTES

1. THE ELECTRICAL DRAWINGS USE THE ONE-LINE DIAGRAMS AND RISER DIAGRAMS AND PANEL SCHEDULES IN CONJUNCTION WITH SHOWING THE LOCATION OF THE ELECTRICAL/INSTRUMENTATION SOURCES AND LOADS/DEVICES SHOWN ON THE PLAN DRAWINGS TO DEPICT THE WORK. THE CONTRACTOR SHALL USE THESE DOCUMENTS TO DETERMINE AND PROVIDE THE NECESSARY RACEWAY AND WIRING SYSTEM FOR EACH CIRCUIT. ALL INDOOR RACEWAY SHALL BE RUN EXPOSED AND ROUTED BY THE CONTRACTOR, UNLESS OTHERWISE NOTED. THE TYPE OF RACEWAY AND WIRE USED SHALL BE AS SPECIFIED.
2. IF EQUIPMENT SUPPLIED BY MANUFACTURER HAS A LARGER LOAD THAN INDICATED ON THE SINGLE LINE DIAGRAM, THE CONSTRUCTION MANAGER SHALL BE NOTIFIED. THE CABLE, CONDUIT AND ELECTRICAL EQUIPMENT SHALL BE SIZED AS REQUIRED, TO ACCOMMODATE THE HIGHER VALUE.
3. IN AREAS WHERE THERE ARE OVERHEAD BRIDGE CRANES, HOISTS, ETC., OR WHERE EQUIPMENT IS LIFTED AND MOVED FOR MAINTENANCE OR REPLACEMENT, NO CONDUITS SHALL BE RUN OVERHEAD THAT WILL INTERFERE WITH THE OPERATION OF THE EQUIPMENT OR ACCESS TO EQUIPMENT.
4. THE LOCATION OF THE CONTROL STATIONS SHOWN ON THE PLAN DRAWINGS ARE DIAGRAMMATIC ONLY. THE ACTUAL LOCATION SHALL BE COORDINATED IN THE FIELD WITH THE CONSTRUCTION MANAGER AND ADJACENT EQUIPMENT SUCH AS PIPING, PROCESS EQUIPMENT, ETC.
5. THE CONTRACTOR SHALL COORDINATE WITH THE STRUCTURAL AND MECHANICAL DRAWINGS FOR CONDUIT STUB UP AND TERMINATION LOCATIONS.

WS14 SERVICE MAXIMUM DEMAND MARCH 2023 - FEBRUARY 2024				
CLARK PUD BILL DATE	METER #	DAYS	CONSUMPTION (kWh)	MAX. DEMAND (kW)
2/2/2024	904996-C34CR3	30	20480	220
1/4/2024	904996-C34CR3	30	15280	131
12/5/2023	904996-C34CR3	32	24400	193
11/2/2023	904996-C34CR3	30	38960	181
10/3/2023	904996-C34CR3	28	56640	218
9/7/2023	904996-C34CR3	34	76960	218
8/2/2023	904996-C34CR3	28	72880	275
7/6/2023	904996-C34CR3	33	97600	279
6/5/2023	904996-C34CR3	31	70880	280
5/2/2023	904996-C34CR3	28	27600	134
4/4/2023	904996-C34CR3	33	30640	188
3/6/2023	904996-C34CR3	28	30240	150
		365	97600	280
		DAYS	MAX. kW/hr	MAX. kW

Brown AND Caldwell
PORTLAND, OREGON

Signer Name: James Cook
Signing Reason: I approved this document.
Signing Time: 2025-01-23 15:54:24[EST]

JAMES E. COOK
STATE OF WASHINGTON
37632
REGISTERED PROFESSIONAL ENGINEER

ISSUED FOR BID

CITY OF Vancouver WASHINGTON

WS14 PFAS TREATMENT DESIGN

REVISIONS

REV	DATE	DESCRIPTION

LINE IS 2 INCHES AT FULL SIZE

DESIGNED: B.NURSUWITO
DRAWN: B.NURSUWITO
CHECKED: J.COOK
CHECKED: M.MAISONVILLE
APPROVED: J.COOK

FILENAME
E-000-003.dwg
BC PROJECT NUMBER
180318
CLIENT PROJECT NUMBER
PRJ100893

ELECTRICAL

GENERAL NOTES

DRAWING NUMBER
E-000-003

90 SHEET NUMBER OF 125

Plot Date: 1/14/2025 5:30:00 PM Path: c:\bcpw\d3450215\E-000-003.dwg

fac3527de932d2ed391e349a099e3287

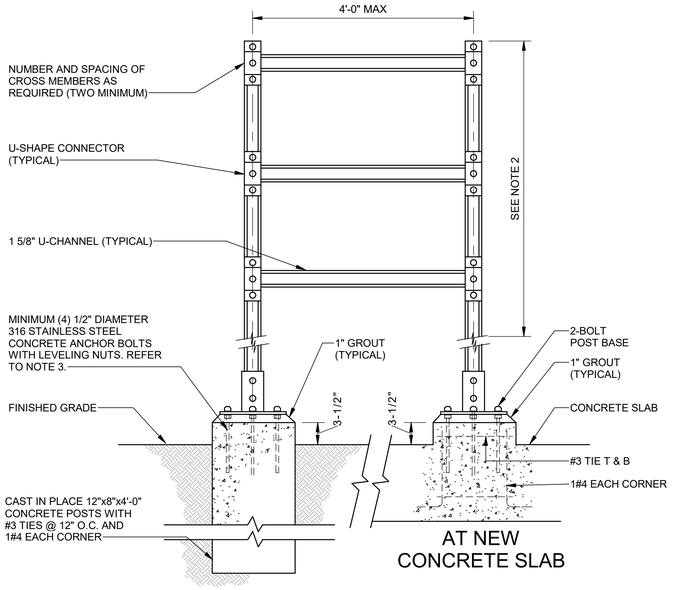

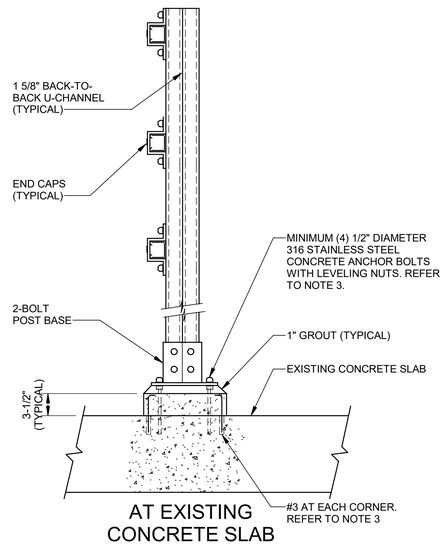

NOTES:
1. EQUIPMENT RACK SIZING:
   A. ONE ITEM GREATER THAN 150 SQUARE INCHES.
   B. TWO EQUIPMENT ITEMS GREATER THAN 130 SQUARE INCHES.
   C. THREE OR MORE EQUIPMENT ITEMS.
   D. PROVIDE 316 STAINLESS STEEL CHANNEL END-CAPS, AND FITTINGS.
   E. PROVIDE 1/4" MINIMUM ALUMINUM PLATE FOR SMALL ITEMS.
2. MOUNT INDICATORS OR EQUIPMENT OPERATING HANDLES FOUR FEET ABOVE FLOOR OR PLATFORM.
3. PROVIDE BRACING AND ANCHORAGE FOR RACEWAYS AND SUPPORTS IN ACCORDANCE WITH SECTION 01 73 24.
4. MATERIAL AND HARDWARE PER SPECIFICATION DIVISION 26.

(E25001) EQUIPMENT SUPPORTS STRUT RACK
NTS

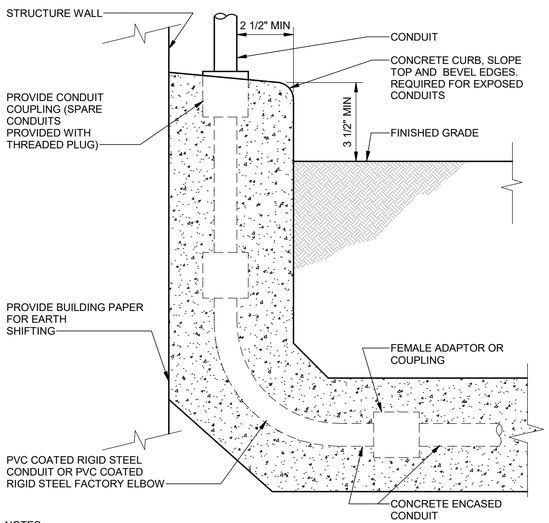

NOTES:
1. WHEN REQUIRED, PROVIDE 12" OF LIQUID TIGHT FLEXIBLE CONDUIT FOR CONNECTION TO EQUIPMENT RIGIDLY ATTACHED TO STRUCTURE TO PROVIDE 1" DIFFERENTIAL MOVEMENT IN ALL DIRECTIONS.

(E15001) UG DUCT BANK CURB AT WALL
NTS

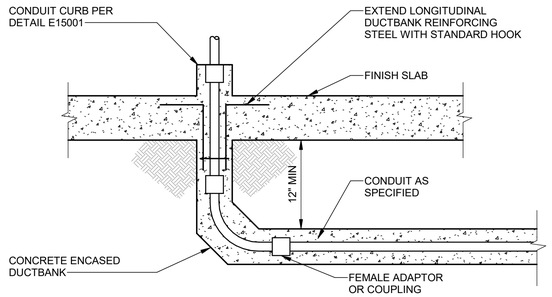

DUCTBANK RISER LESS THAN 18" IN WIDTH OR DEPTH

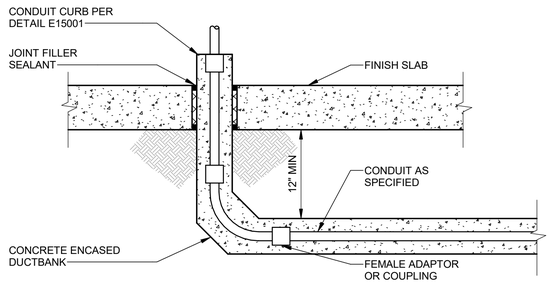

GREATER THAN 18" IN WIDTH OR DEPTH

(E15002) UG DUCT BANK RISER
NTS

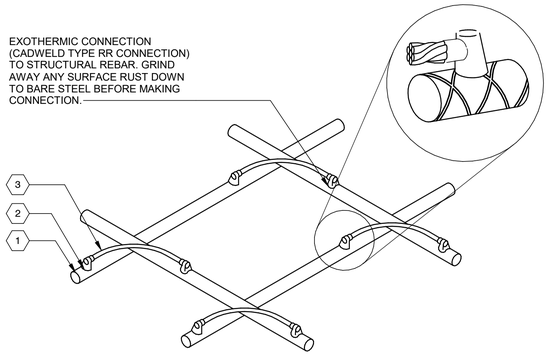

KEY NOTES:
1. HARGER GM STYLE PREFABRICATED COPPER GROUND MESH OR REINFORCING BAR MAT.
2. EXOTHERMIC CONNECTION (BURNDY PT STYLE ULTRAWELD OR CADWELD TYPE RR) CONNECTION.
3. #4/0 BARE COPPER GROUNDING CONDUCTOR.

(E31001) REBAR GROUNDING BOND
NTS

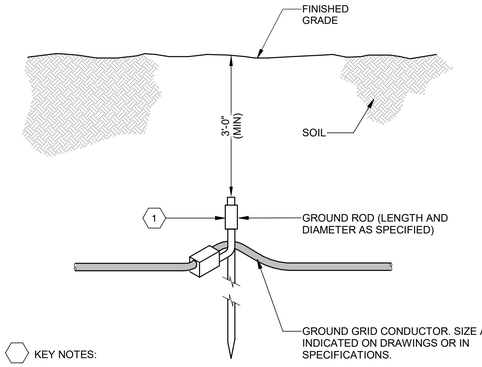

KEY NOTES:
1 GROUND ROD TO GROUND GRID CROSS CONNECTOR. SIZE FOR ROD AND CABLE PER CONNECTOR MANUFACTURERS GUIDELINES.

(E31003) GROUNDING ROD CROSS CONNECTION
NTS

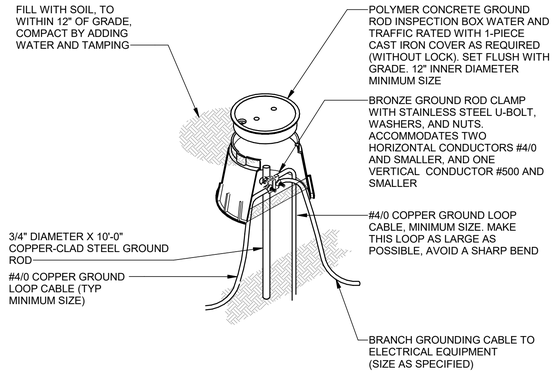

(E31002) GROUNDWELL AND COMPRESSION CONNECTION
NTS

Brown AND Caldwell
PORTLAND, OREGON

Signer Name: James Cook
Signing Reason: I approved this document.
Signing Time: 2025-01-23 15:54:24(EST)

JAMES E. COOK
STATE OF WASHINGTON
37632
REGISTERED PROFESSIONAL ENGINEER

ISSUED FOR BID

CITY OF Vancouver WASHINGTON

WS14 PFAS TREATMENT DESIGN

REVISIONS

REV	DATE	DESCRIPTION

LINE IS 2 INCHES AT FULL SIZE

DESIGNED: B.NURSUWITO
DRAWN: B.NURSUWITO
CHECKED: J.COOK
CHECKED: M.MAISONVILLE
APPROVED: J.COOK

FILENAME 180318-E-00V21.rvt
BC PROJECT NUMBER 180318
CLIENT PROJECT NUMBER PRJ100893

ELECTRICAL

ELECTRICAL DETAILS 1

DRAWING NUMBER E-000-004

SHEET NUMBER 91 OF 125

Plot Date: 1/14/2025 5:20:08 PM Path: BIM 360://180318 - WS 14 PFAS Treatments Design/180318-E-00V21.rvt

08fdf516068f9b041a659766cacea034

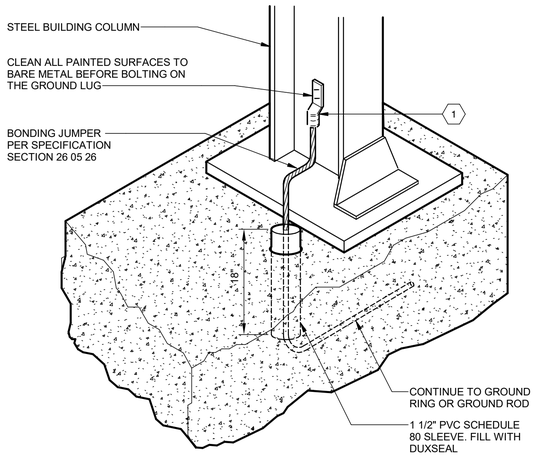

(E32003) BLDG GRND COMPRESSION CONNECTON
NTS

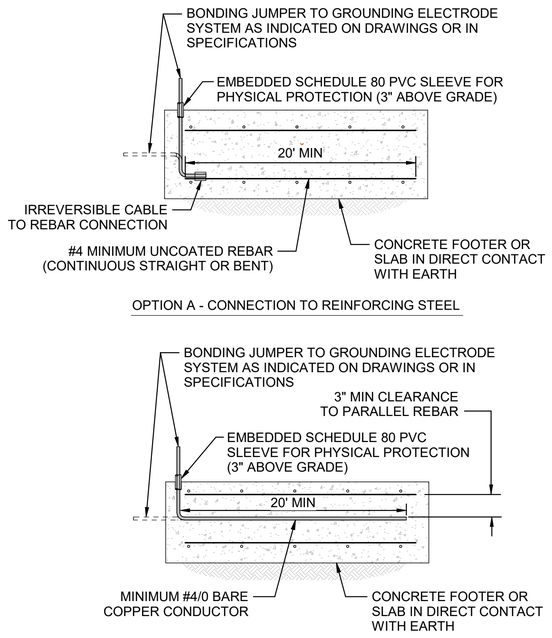

(E33001) GROUND ELECTRODE CONCRETE ENCASED
NTS

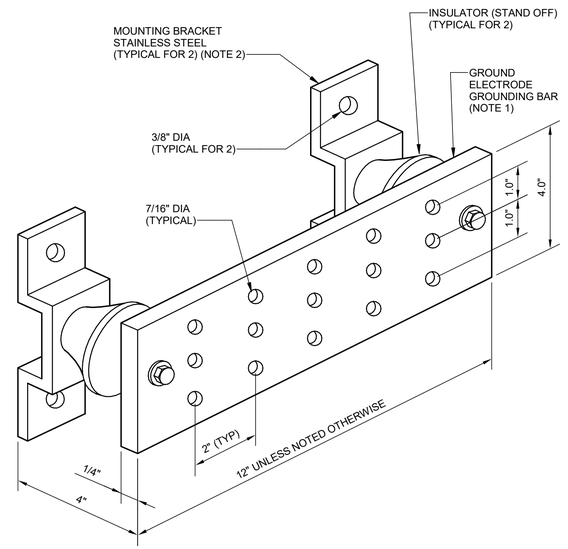

(E32001) GROUND BAR FOR GROUNDING ELECTRODE SYSTEM
NTS

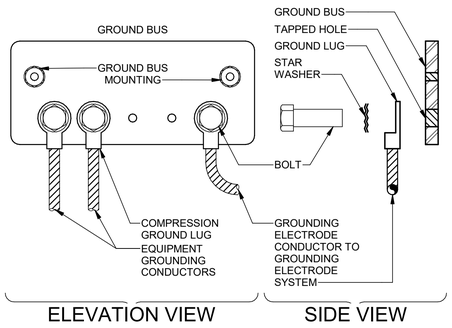

(E32002) GROUND BUS CONNECTION
NTS

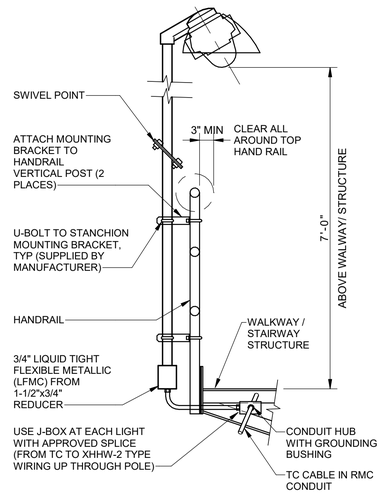

73006 SWIVEL POLE AT WALKWAY
NTS

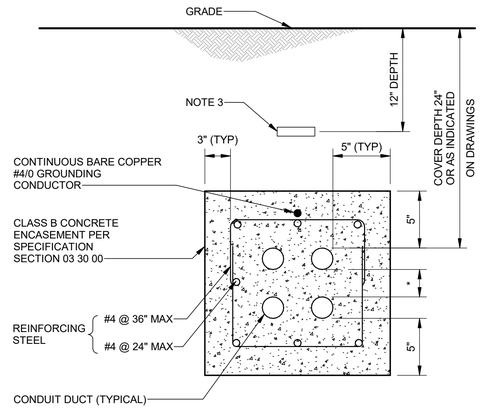

(E11002) UG DUCT BANK REINFORCED SMALL DUCTBANK
NTS

Brown AND Caldwell
PORTLAND, OREGON

Signer Name: James Cook
Signing Reason: I approved this document
Signing Time: 2025-01-23 11:54:59(EST)

JAMES E. COOK
STATE OF WASHINGTON
37632
REGISTERED
PROFESSIONAL ENGINEER

ISSUED FOR BID

CITY OF Vancouver WASHINGTON

WS14 PFAS TREATMENT DESIGN

REVISIONS

REV	DATE	DESCRIPTION

LINE IS 2 INCHES AT FULL SIZE

DESIGNED: B.NURSUWITO
DRAWN: B.NURSUWITO
CHECKED: J.COOK
CHECKED: M.MAISONVILLE
APPROVED: J.COOK

FILENAME 180318-E-00V21.rvt
BC PROJECT NUMBER 180318
CLIENT PROJECT NUMBER PRJ100893

ELECTRICAL

ELECTRICAL DETAILS 2

DRAWING NUMBER
E-000-005

92 SHEET NUMBER OF 125

Plot Date: 1/14/2025 5:20:09 PM Path: BIM 360://180318 - WS 14 PFAS Treatments Design/180318-E-00V21.rvt

2ca35b27cf6e54bd132c9ddba8f36971

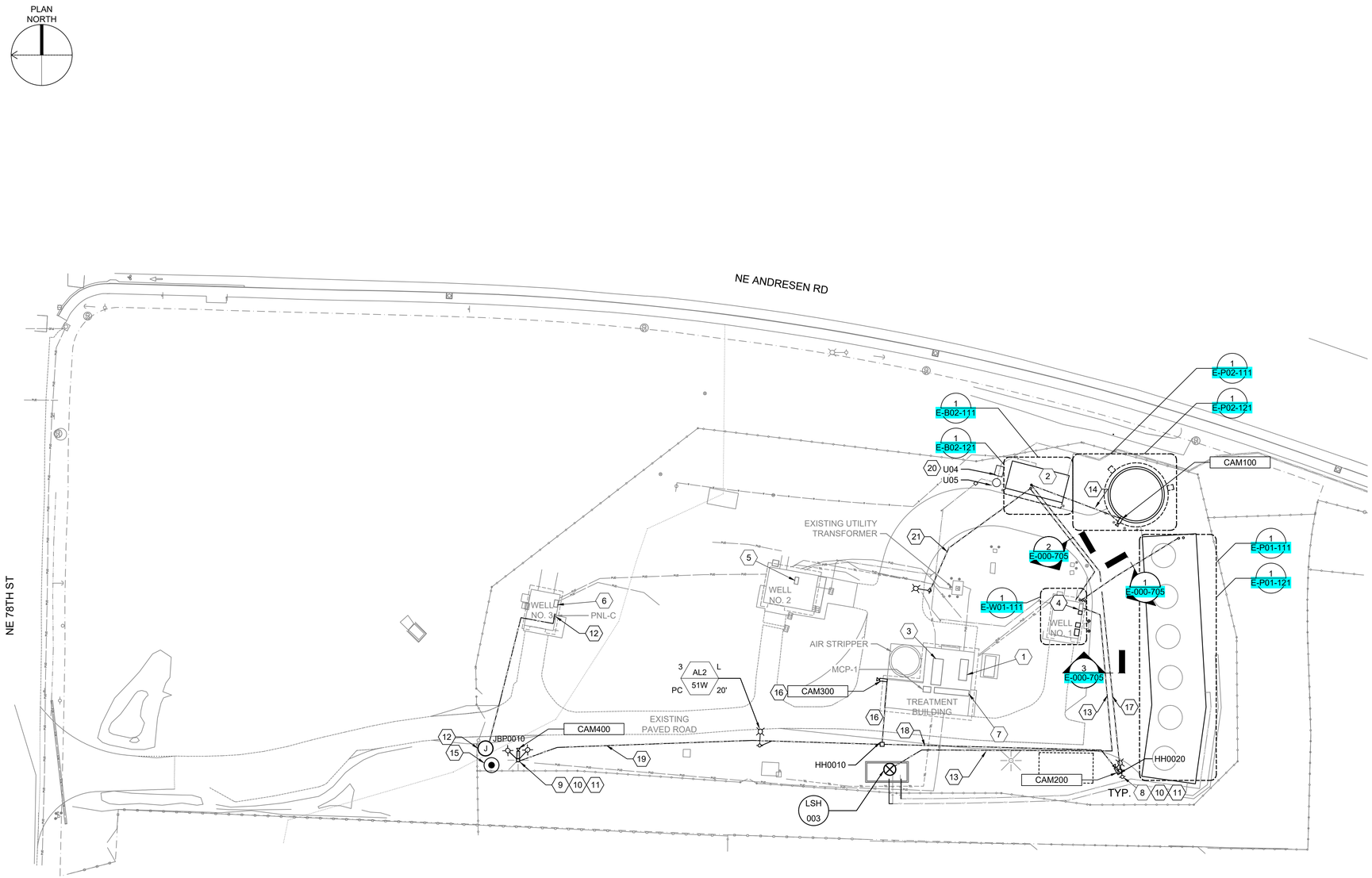

SITE AND AREA LIGHTING PLAN

SCALE : 1" = 30' - 0"

KEY NOTES:

1 EXISTING HYPOCHLORITE GENERATION SYSTEM (01 HGS 01).

2 RESTROOM AND STORAGE FACILITY.

3 EXISTING GENERATOR.

4 WELL 1 MCC.

5 WELL 2 MCC.

6 WELL 3 MCC.

7 TREATMENT BUILDING MCC.

8 POLE LIGHTINGS SHALL BE MOUNTED AT 20' ABOVE GROUND. 2#12, #12G, 1"C, FED FROM MCP1201 VIA HH0020.

9 REPLACE EXISTING FIXTURE WITH DOUBLE FIXTURES: RZX1 LED P1 40K R4 120V SPA DDBXD OR APPROVED EQUAL. SYMBOL SHOWN FOR FIXTURE DIRECTIONAL ONLY.

10 PROVIDE AND INSTALL SECURITY CAMERA 18FT ABOVE GROUND OR 2FT MINIMUM BELOW LIGHT FIXTURE.

11 SECURITY CAMERA BOX SHALL BE INSTALLED 5FT ABOVE GROUND. REFER TO THE MANUFACTURE INSTALLATION RECOMMENDATION. CAM200 AND CAM400 SHALL BE FED FROM MPC1201.

12 PROVIDE AND INSTALL UNDERGROUND CONDUITS FROM PANEL-C AT WELL 3 TO THE JBP0010. 2#12, #12G, 2"C AND 2"C SPARE.

13 PROVIDE AND INSTALL UNDERGROUND CONDUIT FROM LSH003 TO SCA002 AT WELL 1. 2#14, #14G, 2"C (C-LSH003-A).

14 PROVIDE AND INSTALL UNDERGROUND CONDUIT FOR THE CAMERA CAM100. FIBER OPTIC AND 2#12, #12G AND 2 MULTIMODE FIBER OPTIC, 2"C. CAM100 SHALL BE INSTALL 2' BELOW POLE LIGHTING ON TOP OF THE RINSE TANK. CAM100 SHALL BE FED FROM MPC1201.

15 PROVIDE AND INSTALL GROUNDING SYSTEM FOR THE GATE OPERATING SYSTEM. GROUND ROD AND #6AWG BARE COPPER.

16 CAM300 SHALL BE INSTALL 15' ABOVE GROUND. REFER TO MANUFACTURE INSTALLATION RECOMMENDATION FOR WALL MOUNTED CAMERA. 2#12, #12G AND FIBER OPTIC, 2"C, FED FROM MCP1201 VIA HH0020 AND HH0010.

17 8#12, 4#12G AND 6 MULTIMODE FIBER OPTIC, 2"C.

18 4#12, 2#12G AND 4 MULTIMODE FIBER OPTIC, 2"C.

19 2 MULTIMODE FIBER OPTIC, 2"C.

20 FURNISH AND INSTALL #6 AWG BARE COPPER GROUNDING WIRE FROM FE102 (METER VAULT U04) TO THE RESTROOM/STORAGE GROUNDING RING. SEE INSTALLATION DETAIL I11001.

21 PROVIDE AND INSTALL UNDERGROUND CONDUIT FROM POLE LIGHT TO MPC1201 AT RESTROOM/STORAGE BUILDING. 2#12, #12G, 2"C.

Brown AND Caldwell
PORTLAND, OREGON

Signer Name: James Cook
Signing Reason: I approved this document
Signing Time: 2025-01-23 15:54:19(EST)

JAMES E. COOK
STATE OF WASHINGTON
37632
REGISTERED PROFESSIONAL ENGINEER

ISSUED FOR BID

CITY OF Vancouver WASHINGTON

WS14 PFAS TREATMENT DESIGN

REVISIONS

REV	DATE	DESCRIPTION

LINE IS 2 INCHES AT FULL SIZE

DESIGNED: B.NURSUWITO
DRAWN: B.NURSUWITO
CHECKED: J.COOK
CHECKED: M.MAISONVILLE
APPROVED: J.COOK

FILENAME E-000-101.dwg
BC PROJECT NUMBER 180318
CLIENT PROJECT NUMBER PRJ100893

ELECTRICAL

SITE AND AREA LIGHTING PLAN

DRAWING NUMBER
E-000-101

93 SHEET NUMBER OF 125

Plot Date: 1/14/2025 5:30:15 PM Path: c:\bcpw\d3450215\E-000-101.dwg

00c9de549f80b7daeeb33712a92044d3

PANEL SCHEDULE — MPC1201

208 Y/ 120 VOLTS | NORMAL POWER | BUS RATING: 100 AMPS | LOCATION: RESTROOM-STORAGE | FEED-THRU LUGS NO.
3 -PHASE | PNL. MFR.: | MAIN BKR: 70 AMPS | MOUNTING: WALL | DOUBLE LUGS NO.
3 -WIRE | CAT. NO.: | SCCR: 10 kA | FED FROM: WELL 1 MCC | ISOLATED GND NO.
REF. DWG.: | CONDUCTORS: | 200% NEUTRAL NO.

CKT NO.	CIRCUIT DESCRIPTION	CODE	LOAD (kVA)	BKR AMPS	PH	BKR AMPS	LOAD (kVA)	CODE	CIRCUIT DESCRIPTION	CKT NO.
1	RESTROOM AND CLOSET RECEP.	R	0.36	20	-A-	20	0.36	R	MAINTENANCE RECEPTACLE	2
3	RESTROOM AND CLOSET LIGHTING	L	0.10	20	-B-	20	0.10	L	MAINTENANCE LIGHTING	4
5	EF101	H	0.20	20	-C-	20	0.05	L	EXTERIOR LIGHTING	6
7	STORAGE RECEPTACLES	R	0.90	20	-A-	20	0.10	R	STORAGE LIGHTING	8
9	LCP100 (PMP100/200- GRINDER PUMP)	M	0.74	20	-B-	20	0.36	R	RECEP. PFAS AND RINSE TANK AREA	10
11	UNIT HEATER UH101	H	2.05	30	-C-	20	0.08	H	EF102	12
13	UNIT HEATER UH102	H	0.55	20	-A-	20	0.07	L	RINSE TANK	14
15	UNIT HEATER UH103	H	0.55	20	-B-	20	0.20	Z	CAM100 AND CAM200	16
17	SITE LIGHTINGS (3)	L	0.21	20	-C-	20	0.20	Z	CAM300 AND CAM400	18
19	EXTERIOR RECEPTACLES	R	0.36	20	-A-	20	0.50	Z	CCTV PNL010 AND NETWORK PNL011	20
21			0.67	20	-B-	20	1.80	Z	BFP015 - RESTROOM WATER HEATER	22
23	LCP101 (PMP 101 - RINSE WATER PUMP)	LM	0.67	20	-C-	20		Z	SPARE	24
25			0.67	20	-A-	20		Z	SPARE	26
27	SPARE	Z		20	-B-	20		Z	SPARE	28
29	SPARE	Z		20	-C-	20		Z	SPARE	30

CODES:

		CONNECTED LOAD		CALCULATED DEMAND LOAD		
H	= HVAC LOADS	3.23	kVA	3.23	kVA	(100%)
K	= KITCHEN EQUIPMENT	0.00	kVA	0.00	kVA	(100%)
L	= LIGHTING LOADS	0.63	kVA	0.79	kVA	(125%)
LM	= LARGEST SINGLE MOTOR	2.01	kVA	2.51	kVA	(125%)
M	= OTHER MOTOR LOADS	0.94	kVA	0.94	kVA	(100%)
NC	= NON-COINCIDENTAL LOADS	0.00	kVA	0.00	kVA	(0%)
R	= GENERAL USE RECEPTACLES	2.34	kVA	2.34	kVA	(50%>10kVA)
S	= DEDICATED RECEPTACLES	0.00	kVA	0.00	kVA	(100%)
Z	= MISC. OR APPLIANCES	2.70	kVA	2.70	kVA	(100%)
	TOTALS:	11.85	kVA	12.51	kVA	
		33	AMPS	35	AMPS	

REMARKS:
1.
2.

PHASE BALANCE
PHASE A: 32 AMPS
PHASE B: 38 AMPS
PHASE C: 29 AMPS

PANEL SCHEDULE — PANEL HTP1101

208 Y/ 120 VOLTS | NORMAL POWER | BUS RATING: 100 AMPS | LOCATION: PFAS AREA | FEED-THRU LUGS NO.
3 -PHASE | PNL. MFR.: | MAIN BKR: 100 AMPS | MOUNTING: EQUIPMENT SUPPORT | DOUBLE LUGS NO.
4 -WIRE | CAT. NO.: | SCCR: 10 kA | FED FROM: XFMR1101 | ISOLATED GND NO.
REF. DWG.: | CONDUCTORS: | 200% NEUTRAL NO.

CKT NO.	CIRCUIT DESCRIPTION	CODE	LOAD (kVA)	BKR AMPS	PH	BKR AMPS	LOAD (kVA)	CODE	CIRCUIT DESCRIPTION	CKT NO.
1	16" RAW/PEF HEADER-TC0051	Z	1.48	20	-A-	20	0.66	Z	12" RAW/PEF HEADER-TC0052	2
3	16" 8" AND 10" RWS HEADER-TC0053	Z	0.98	20	-B-	20	0.84	Z	10" RWD HEADER-TC0054	4
5	10" VESSEL 100 & 200-TC0151	Z	0.72	20	-C-	20	0.72	Z	10" VESSEL 300 & 400-TC0351	6
7	10" VESSEL 100 & 200-TC0152	Z	0.72	20	-A-	20	0.72	Z	10" VESSEL 300 & 400-TC0352	8
9	4" VESSEL 100-TC0161	Z	0.56	20	-B-	20	0.56	Z	4" VESSEL 200-TC0261	10
11	4" VESSEL 300-TC0361	Z	0.56	20	-C-	20	0.56	Z	4" VESSEL 400-TC0461	12
13	4" VESSEL 500-TC0561	Z	0.56	20	-A-	20	0.56	Z	4" VESSEL 600-TC0661	14
15	2" VESSEL 100-TC0171	Z	0.27	20	-B-	20	0.27	Z	2" VESSEL 200-TC0271	16
17	2" VESSEL 300-TC0371	Z	0.27	20	-C-	20	0.27	Z	2" VESSEL 400-TC0471	18
19	2" VESSEL 500-TC0571	Z	0.27	20	-A-	20	0.27	Z	2" VESSEL 600-TC0671	20
21	1/2" VESSEL 100-TC0181	Z	0.27	20	-B-	20	0.27	Z	1/2" VESSEL 100-TC0281	22
23	1/2" VESSEL 300-TC0381	Z	0.27	20	-C-	20	0.27	Z	1/2" VESSEL 300-TC0481	24
25	1/2" VESSEL 500-TC0581	Z	0.27	20	-A-	20	0.27	Z	1/2" VESSEL 500-TC0681	26
27	10" RWD HEADER-TC0055	Z	0.40	20	-B-	20	0.72	Z	10" VESSEL 500 & 600-TC0551	28
29	SPARE			20	-C-	20	0.72	Z	10" VESSEL 500 & 600-TC0552	30
31	SPARE			20	-A-	20			SPARE	32
33	SPARE			20	-B-	20			SPARE	34
35	SPARE		`	20	-C-	20			SPARE	36
37	SPARE			20	-A-	20			SPARE	38
39	SPARE			20	-B-	20			SPARE	40
41	SPARE			20	-C-	20			SPARE	42

CODES:

		CONNECTED LOAD		CALCULATED DEMAND LOAD		
H	= HVAC LOADS	0.00	kVA	0.00	kVA	(100%)
K	= KITCHEN EQUIPMENT	0.00	kVA	0.00	kVA	(100%)
L	= LIGHTING LOADS	0.00	kVA	0.00	kVA	(125%)
LM	= LARGEST SINGLE MOTOR	0.00	kVA	0.00	kVA	(125%)
M	= OTHER MOTOR LOADS	0.00	kVA	0.00	kVA	(100%)
NC	= NON-COINCIDENTAL LOADS	0.00	kVA	0.00	kVA	(0%)
R	= GENERAL USE RECEPTACLES	0.00	kVA	0.00	kVA	(50%>10kVA)
S	= DEDICATED RECEPTACLES	0.00	kVA	0.00	kVA	(100%)
Z	= MISC. OR APPLIANCES	15.28	kVA	15.28	kVA	(100%)
	TOTALS:	15.28	kVA	15.28	kVA	
		42	AMPS	42	AMPS	

REMARKS:
1. CIRCUIT BREAKERS TO BE GFEP RATED
2.

PHASE BALANCE
PHASE A: 48 AMPS
PHASE B: 43 AMPS
PHASE C: 36 AMPS

Brown AND Caldwell
PORTLAND, OREGON

Signer Name: James Cook
Signing Reason: I approved this document
Signing Time: 2025-01-25 13:54:28(EST)

JAMES E. COOK
STATE OF WASHINGTON
37632
REGISTERED PROFESSIONAL ENGINEER

ISSUED FOR BID

CITY OF Vancouver WASHINGTON

WS14 PFAS TREATMENT DESIGN

REVISIONS

REV	DATE	DESCRIPTION

LINE IS 2 INCHES AT FULL SIZE

DESIGNED: B.NURSUWITO
DRAWN: B.NURSUWITO
CHECKED: J.COOK
CHECKED: M.MAISONVILLE
APPROVED: J.COOK

FILENAME E-000-701.dwg
BC PROJECT NUMBER 180318
CLIENT PROJECT NUMBER PRJ100893

ELECTRICAL

PANEL SCHEDULES

DRAWING NUMBER
E-000-701

94 SHEET NUMBER OF 125

Plot Date: 1/17/2025 4:07:14 PM Path: C:\bcgw\d3450215\E-000-701.dwg

1e5642b7095a58efff1fd6251b3e4cca

WS14 - POWER CABLE AND CONDUIT SCHEDULE

CONDUIT TAG	TYPE	CONDUCTOR SIZE AND QTY	CONDUIT SIZE	CABLE FROM	CABLE TO	VIA	SHEET	COMMENTS
P-LCP100-A	XHHW	2#12, #12G	3/4"	MPC1201	LCP100		E-B02-111	
P-PNL011-A	XHHW	2#12, #12G	3/4"	MPC1201	PNL011		E-B02-111	
P-PNL010-A	XHHW	2#12, #12G	3/4"	MPC1201	PNL010		E-B02-111	
P-UH101-A	XHHW	2#10, #10G	3/4"	MPC1201	DS-UH101		E-B02-111	
P-UH101-B	XHHW	2#10, #10G	3/4"	DS-UH101	UH101		E-B02-111	
P-UH102-A	XHHW	2#12, #12G	3/4"	MPC1201	DS-UH102		E-B02-111	
P-UH102-B	XHHW	2#12, #12G	3/4"	DS-UH102	EF102		E-B02-111	
P-UH103-A	XHHW	2#12, #12G	3/4"	MPC1201	DS-UH103		E-B02-111	
P-UH103-B	XHHW	2#12, #12G	3/4"	DS-UH103	EF103		E-B02-111	
P-EF101-A	XHHW	2#12, #12G	3/4"	MPC1201	DS-EF101		E-B02-111	
P-EF101-B	XHHW	2#12, #12G	3/4"	DS-EF101	EF101		E-B02-111	
P-EF102-A	XHHW	2#12, #12G	3/4"	MPC1201	DS-EF102		E-B02-111	
P-EF102-B	XHHW	2#12, #12G	3/4"	DS-EF102	EF102		E-B02-111	
P-LCP101-A	XHHW	3#12, #12G	3/4"	MPC1201	LCP101		E-P02-111	
P-PMP101-A	XHHW	3#12, #12G	3/4"	LCP101	PMP101		E-P02-111	
P-JBP1500-A	XHHW	12#12, 4#12G	2"	MCC-1	JBP1500	JBP1500A	E-P02-111	SEE E-W01-001 FOR JBP1500A LOCATION
P-FCV0010-A	XHHW	3#12,#12G	3/4"	JBP1500	FCV0010-A		E-P01-111	
P-FCV0102-A	XHHW	3#12,#12G	3/4"	JBP1500	FCV0102-A		E-P01-111	
P-FCV0302-A	XHHW	3#12,#12G	3/4"	JBP1500	FCV0302-A		E-P01-111	
P-FCV0502-A	XHHW	3#12,#12G	3/4"	JBP1500	FCV0502-A		E-P01-111	
P-MPC1201-A	XHHW	3#4, #8G	2"	MCC-1	MPC1201		E-B02-111	
P-BFP015-A	XHHW	2#12, #12G	3/4"	MPC1201	BFP015		E-P02-111	
S-JBS1502-A	XHHW	8#12, 4#12G	2'	W01-SCA002	JBS1502	JBS1502A	E-P02-111	SAME CONDUIT AS FOR SIGNAL WIRES. SEE E-W01-001 FOR JBS1502A LOCATION
P-FIT0012-A	XHHW	2#14, #14G	3/4"	JBS1502	FIT0012		E-P01-111	24VDC
P-FIT0103-A	XHHW	2#14, #14G	3/4"	JBS1502	FIT0302		E-P01-111	24VDC
P-FIT0303-A	XHHW	2#14, #14G	3/4"	JBS1502	FIT0303		E-P01-111	24VDC
P-FIT0503-A	XHHW	2#14, #14G	3/4"	JBS1502	FIT0503		E-P01-111	24VDC
S-JBS1520-A	XHHW	4#12, 2#12G	2"	W01-SCA002	JBS1520	JBS1520A	E-P02-111	SAME CONDUIT AS FOR SIGNAL WIRES. SEE E-W01-001 FOR JBS1520A LOCATION
P-FIT102-A	XHHW	2#14, #14G	3/4"	JBS1520	FIT102	JBS1020	E-P02-111	24VDC (B02 - RESTROOM/STORAGE)
P-FIT102-B	XHHW	2#14, #14G	3/4"	JBS1520	FIT102	JBS1020	E-P02-111	24VDC (U04 - METER VAULT)
P-XFMR1101-A	XHHW	3#8, #8G	2"	MCC-01	XFMR1101		E-P02-111	
P-HTP1101-A	XHHW	3#4, #4N, #8G	2"	XFMR1101	HTP1101		E-P02-111	VIA DISCONNECT DS-HTP1101 IN WELL 1 BUILDING.
P-TC0051-A	XHHW	2#12, #12G	3/4"	HTP1101	TC0051		E-P01-111	
P-TC0052-A	XHHW	2#12, #12G	3/4"	HTP1101	TC0052		E-P01-111	
P-TC0053-A	XHHW	2#12, #12G	3/4"	HTP1101	TC0053		E-P01-111	
P-TC0054-A	XHHW	2#12, #12G	3/4"	HTP1101	TC0054		E-P01-111	
P-TC0055-A	XHHW	2#12, #12G	3/4"	HTP1100	TC0055		E-P01-111	
P-TC0056-A	XHHW	2#12, #12G	3/4"	HTP1101	TC0056		E-P02-111	FOR THE RINSE TANK PIPING TO THE STORAGE/RESTROOM AREA
P-TC0151-A	XHHW	2#12, #12G	3/4"	HTP1101	TC0351		E-P01-111	
P-TC0152-A	XHHW	2#12, #12G	3/4"	HTP1101	TC0352		E-P01-111	
P-TC0351-A	XHHW	2#12, #12G	3/4"	HTP1101	TC0151		E-P01-111	
P-TC0352-A	XHHW	2#12, #12G	3/4"	HTP1101	TC0152		E-P01-111	
P-TC0551-A	XHHW	2#12, #12G	3/4"	HTP1101	TC0551		E-P01-111	
P-TC0552-A	XHHW	2#12, #12G	3/4"	HTP1101	TC0552		E-P01-111	
P-TC0181-A	XHHW	2#12, #12G	3/4"	HTP1101	TC0181		E-P01-111	
P-TC0161-A	XHHW	2#12, #12G	3/4"	HTP1101	TC0161		E-P01-111	
P-TC0171-A	XHHW	2#12, #12G	3/4"	HTP1101	TC0171		E-P01-111	
P-TC0281-A	XHHW	2#12, #12G	3/4"	HTP1101	TC0281		E-P01-111	
P-TC0261-A	XHHW	2#12, #12G	3/4"	HTP1101	TC0261		E-P01-111	
P-TC0271-A	XHHW	2#12, #12G	3/4"	HTP1101	TC0271		E-P01-111	
P-TC0381-A	XHHW	2#12, #12G	3/4"	HTP1101	TC0381		E-P01-111	
P-TC0361-A	XHHW	2#12, #12G	3/4"	HTP1101	TC0361		E-P01-111	
P-TC0371-A	XHHW	2#12, #12G	3/4"	HTP1101	TC0371		E-P01-111	
P-TC0481-A	XHHW	2#12, #12G	3/4"	HTP1101	TC0481		E-P01-111	
P-TC0461-A	XHHW	2#12, #12G	3/4"	HTP1101	TC0461		E-P01-111	
P-TC0471-A	XHHW	2#12, #12G	3/4"	HTP1101	TC0471		E-P01-111	
P-TC0581-A	XHHW	2#12, #12G	3/4"	HTP1101	TC0581		E-P01-111	
P-TC0561-A	XHHW	2#12, #12G	3/4"	HTP1101	TC0561		E-P01-111	
P-TC0571-A	XHHW	2#12, #12G	3/4"	HTP1101	TC0571		E-P01-111	
P-TC0681-A	XHHW	2#12, #12G	3/4"	HTP1101	TC0681		E-P01-111	
P-TC0661-A	XHHW	2#12, #12G	3/4"	HTP1101	TC0661		E-P01-111	
P-TC0671-A	XHHW	2#12, #12G	3/4"	HTP1101	TC0671		E-P01-111	

Brown AND Caldwell
PORTLAND, OREGON

Signer Name: James Cook
Signing Reason: I approved this document
Signing Time: 2025-01-23 13:54:20(EST)

JAMES E. COOK
STATE OF WASHINGTON
37632
REGISTERED PROFESSIONAL ENGINEER

ISSUED FOR BID

CITY OF Vancouver WASHINGTON

WS14 PFAS TREATMENT DESIGN

REVISIONS

REV	DATE	DESCRIPTION

LINE IS 2 INCHES AT FULL SIZE

DESIGNED: B.NURSUWITO
DRAWN: B.NURSUWITO
CHECKED: J.COOK
CHECKED: M.MAISONVILLE
APPROVED: J.COOK

FILENAME
E-000-702.dwg

BC PROJECT NUMBER
180318

CLIENT PROJECT NUMBER
PRJ100893

ELECTRICAL

CONDUIT AND WIRE SCHEDULE 1

DRAWING NUMBER
E-000-702

95 SHEET NUMBER OF 125

Path: c:\bcgw\d3450215\E-000-702.dwg
Plot Date: 1/14/2025 5:30:25 PM

f3a910fe8b5ce4ea16546aefe1982a9a

WS14 - CONTROL (DISCRETE) CABLE AND CONDUIT SCHEDULE

CONDUIT TAG	TYPE	CONDUCTOR SIZE AND QTY	CONDUIT SIZE	CABLE FROM	CABLE TO	VIA		COMMENTS
C-JBC1010-A	XHHW	16#12, 5#12G	2"	W01-SCA002	JBC1010	JBC1010A	E-P02-111	SEE E-W01-001 FOR JBC1010A LOCATION
C-ZS131-A	XHHW	2#14, #14G	3/4"	JBC1010	ZS131		E-B02-111	
C-ZS132-A	XHHW	2#14, #14G	3/4"	JBC1010	ZS132		E-B02-111	
C-ZS133-A	XHHW	2#14, #14G	3/4"	JBC1010	ZS133		E-B02-111	
C-LCP101-A	XHHW	8#14, #14G	1"	JBC1010	LCP101		E-P02-111	
C-LCP100-A	XHHW	2#14, #14G	3/4"	JBC1010	LCP100		E-P02-111	
C-ZS134-A	XHHW	2#14, #14G	3/4"	ZS133	ZS134		E-B02-111	IN SERIES WITH ZS133
C-LSH003-A	XHHW	2#14, #14G	3/4"	W01-SCA002	LSH003			WATER LEVEL SWITCH ALARM (VALVE VAULT 3)
C-PSL103-A	XHHW	2#14, #14G	3/4"	LCP101	PSL101		E-P02-111	
C-HTP1101-A	XHHW	2#14, #14G	2"	W01-SCA002	HTP1101		E-P02-111	HEATTRACE PANEL ALARM

WS14 - SIGNAL (ANALOG), DATA, AND CONDUIT SCHEDULE

CONDUIT TAG	TYPE	CONDUCTOR SIZE AND QTY	CONDUIT SIZE	CABLE FROM	CABLE TO	VIA		COMMENTS
S-JBS1502-A	SIC	5-PR#16SH	2"	W01-SCA002	JBS1502	JBS1502A	E-P02-111	SAME CONDUIT AS FOR 24VDC. SEE E-W01-001 FOR JBC1502A LOCATION
S-FIT0012-A	SIC	1-PR#16SH	3/4"	JBS1502	FIT0012		E-P01-111	
S-PIT0011-A	SIC	1-PR#16SH	3/4"	JBS1502	PIT0011		E-P01-111	
S-FIT0103-A	SIC	1-PR#16SH	3/4"	JBS1502	FIT0103		E-P01-111	
S-FIT0303-A	SIC	1-PR#16SH	3/4"	JBS1502	FIT0303		E-P01-111	
S-FIT0503-A	SIC	1-PR#16SH	3/4"	JBS1502	FIT0503		E-P01-111	
S-JBS1520-A	SIC	2-PR#16SH	2"	W01-SCA002	JBS1520	JBS1520A	E-P02-111	SAME CONDUIT AS FOR 24VDC. SEE E-W01-001 FOR JBC1520A LOCATION
S-FIT102-A	SIC	1-PR#16SH	3/4"	W01-SCA002	FIT102		E-P02-111	B02 - RESTROOM/STORAGE
S-FIT102-B	SIC	1-PR#16SH	3/4"	W01-SCA002	FIT102		E-P02-111	U04 - METER VAULT
D-FCV0010-A	PROFINET	PROFINET	3/4"	FCV0502-A	FCV0010-A		E-P01-111	
D-FCV0102-A	PROFINET	PROFINET	3/4"	FCV0302-A	FCV0502-A		E-P01-111	
D-FCV0302-A	PROFINET	PROFINET	3/4"	FCV0102-A	FCV0302-A		E-P01-111	
D-FCV0102-A	PROFINET	PROFINET	3/4"	W01-SCA002	FCV0102-A		E-P01-111	UNDERGROUND CONDUIT FROM SCA002 (WELL 1) TO FCV0502
S-JBS1503-A	SIC	13-PR#16SH	2"	W01-SCA002	JBS1503	JBS1503A	E-P02-111	SEE E-W01-001 FOR JBS1503A LOCATION
S-PIT0101-A	SIC	1-PR#16SH	3/4"	JBS1503	PIT0101		E-P01-111	
S-PDIT0102-A	SIC	1-PR#16SH	3/4"	JBS1503	PDIT0102		E-P01-111	
S-PIT0201-A	SIC	1-PR#16SH	3/4"	JBS1503	PIT0201		E-P01-111	
S-PDIT0202-A	SIC	1-PR#16SH	3/4"	JBS1503	PDIT0202		E-P01-111	
S-PIT0301-A	SIC	1-PR#16SH	3/4"	JBS1503	PIT0301		E-P01-111	
S-PDIT0302-A	SIC	1-PR#16SH	3/4"	JBS1503	PDIT0302		E-P01-111	
S-PIT0401-A	SIC	1-PR#16SH	3/4"	JBS1503	PIT0401		E-P01-111	
S-PDIT0402-A	SIC	1-PR#16SH	3/4"	JBS1503	PDIT0402		E-P01-111	
S-PIT0501-A	SIC	1-PR#16SH	3/4"	JBS1503	PIT0501		E-P01-111	
S-PDIT0502-A	SIC	1-PR#16SH	3/4"	JBS1503	PDIT0502		E-P01-111	
S-PIT0601-A	SIC	1-PR#16SH	3/4"	JBS1503	PIT0601		E-P01-111	
S-PDIT0602-A	SIC	1-PR#16SH	3/4"	JBS1503	PDIT0602		E-P01-111	
S-LIT101-A	SIC	1-PR#16SH	3/4"	JBS1503	LIT0603		E-P01-111	

Brown AND Caldwell
PORTLAND, OREGON

Signer Name: James Cook
Signing Reason: I approved this document.
Signing Time: 2025-01-23 15:54:20(EST)

JAMES E. COOK
STATE OF WASHINGTON
37632
REGISTERED PROFESSIONAL ENGINEER

ISSUED FOR BID

CITY OF Vancouver WASHINGTON

WS14 PFAS TREATMENT DESIGN

REVISIONS

REV	DATE	DESCRIPTION

LINE IS 2 INCHES AT FULL SIZE

DESIGNED: B.NURSUWITO
DRAWN: B.NURSUWITO
CHECKED: J.COOK
CHECKED: M.MAISONVILLE
APPROVED: J.COOK

FILENAME
E-000-703.dwg
BC PROJECT NUMBER
180318
CLIENT PROJECT NUMBER
PRJ100893

ELECTRICAL

CONDUIT AND WIRE SCHEDULE 2

DRAWING NUMBER
E-000-703

96 SHEET NUMBER OF 125

Path: c:\bcpw\d3450215\E-000-703.dwg
Plot Date: 1/14/2025 5:30:35 PM

43915b8045670dbd86969fe5d3670e4f

LUMINAIRE SCHEDULE

TYPE	MANUFACTURE / MODEL	DESCRIPTION	WATTS	LUMENS	ELECTRICAL REQUIREMENTS	MOUNTING TYPE
IL1	LITHONIA FEM L48 4000LM LPAFL WD 120 GZ10 40K 80CRI	NEMA 4X RATED 48" LED	24	5978	120 VAC	CEILING MOUNT
IL2	LITHONIA FEM L48 6000LM LPAFL WD 120 GZ10 50K 80CRI	NEMA 4X RATED 48" LED	38	6043	120 VAC	CEILING MOUNT
AL1	LITHONIA WST LED P1 40K VF 120V PIR1FC3V E7WC.	IP65 RATED WALL SCONCE WITH MOTION AND AMBIENT LIGHT SENSOR FOR BI LEVEL OUTPUT AND INTEGRATED BATTERY PACK	11	1639	120 VAC	WALL MOUNT
AL2	LITHONIA RZX1 LED P1 40K R4 120V SPA DDBXD		51	7189	120 VAC	POLE MOUNT

LIGHTING CONTROL REQUIREMENTS

Provide all lighting control devices, interconnecting wires/cables, configurations, and testing to implement the lighting control requirements in this table

AREA	ROOM OR SPACE	CONTROL REQUIREMENTS	CONTROL DEVICES	NOTES
B02	RESTROOM	AUTOMATIC ON - OFF MANUAL ON-OFF	LINE VOLTAGE VANCANCY SENSOR SWITCH. LIGHTS OFF WITHIN 20 MINUTE OF ALL OCCUPANT LEAVING SPACE	IECC C405.2.1 AUTO ON 100%
B02	CLOSET	AUTOMATIC ON - OFF MANUAL ON-OFF	LINE VOLTAGE VANCANCY SENSOR SWITCH. LIGHTS OFF WITHIN 20 MINUTE OF ALL OCCUPANT LEAVING SPACE	IECC C405.2.1 AUTO ON 100%
B02	MAINTENANCE	MANUAL ON-OFF	LINE VOLTAGE SWITCHES	NO AUTOMATIC SHUTOFF PER NEC 110.26(D)
B02	STORAGE	MANUAL ON-OFF	LINE VOLTAGE SWITCHES	NO AUTOMATIC SHUTOFF PER NEC 110.26(D)
B02	EXTERIOR	DAYLIGHT SHUTOFF DIM AUTOMATICALLY AT LEAST 50% WHEN NO ACTIVITY PRESENT FOR UP TO 15 MINUTES	PHOTOCELL AND MOTION SENSOR	
P02	TOP OF RINSE TANK	DAYLIGHT SHUTOFF DIM AUTOMATICALLY AT LEAST 50% WHEN NO ACTIVITY PRESENT FOR UP TO 15 MINUTES	PHOTOCELL	
	SITE LIGHTING SEE E-000-101	DAYLIGHT SHUTOFF DIM AUTOMATICALLY AT LEAST 50% WHEN NO ACTIVITY PRESENT FOR UP TO 15 MINUTES	PHOTOCELL	

Brown AND Caldwell
PORTLAND, OREGON

Signer Name: James Cook
Signing Reason: I approved this document
Signing Time: 2025-01-23 15:54:28(EST)

JAMES E. COOK
STATE OF WASHINGTON
37632
REGISTERED PROFESSIONAL ENGINEER

ISSUED FOR BID

CITY OF Vancouver WASHINGTON

WS14 PFAS TREATMENT DESIGN

REVISIONS

REV	DATE	DESCRIPTION

LINE IS 2 INCHES AT FULL SIZE

DESIGNED: B.NURSUWITO
DRAWN: B.NURSUWITO
CHECKED: J.COOK
CHECKED: M.MAISONVILLE
APPROVED: J.COOK

FILENAME
E-000-704.dwg

BC PROJECT NUMBER
180318

CLIENT PROJECT NUMBER
PRJ100893

ELECTRICAL

LUMINAIRE SCHEDULE

DRAWING NUMBER
E-000-704

97 SHEET NUMBER OF 125

Plot Date: 1/16/2025 12:03:13 PM Path: C:\bcgw\d3450215\E-000-704.dwg

4ff87ff5523cdf5ab027f4470d95c2f4

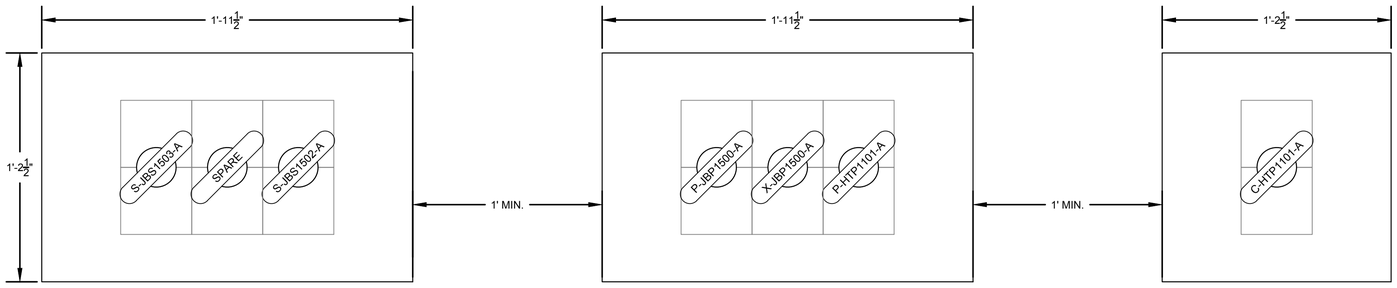

1 E-00-101 DB101 - DUCT BANK SECTION
SCALE: NTS

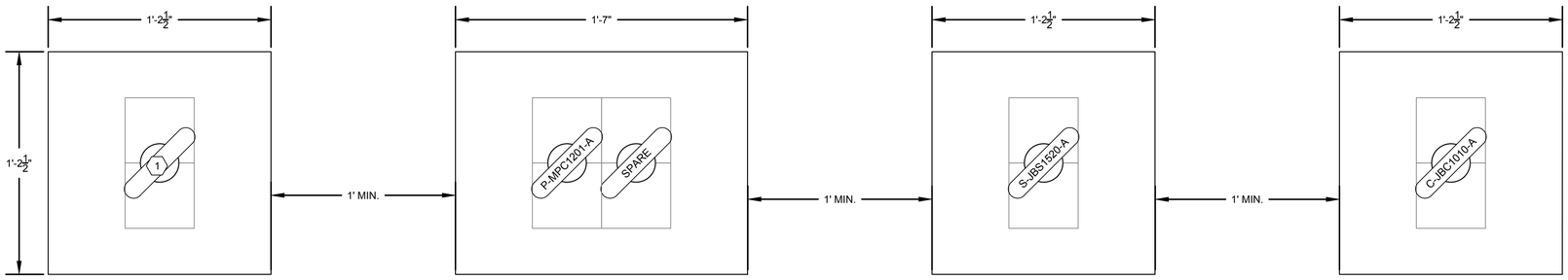

2 E-00-101 DB102 - DUCT BANK SECTION
SCALE: NTS

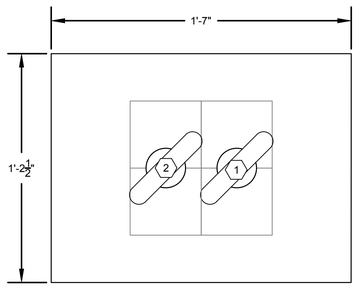

2 E-00-101 DB103 - DUCT BANK SECTION
SCALE: NTS

GENERAL NOTES:

1 ALL UNDERGROUND CONDUIT BELOW THE ROAD SHALL BE RE-ENFORCED CONCRETE. SEE SITE PLAN E-000-101 FOR REFERENCE. DETAIL E11002, DRAWING E-00-005.

KEY NOTES:

1 FROM JB2020 TO HH0020. SEE KEYNOTE #17, DRAWING E-000-101 FOR CLARIFICATION.

2 SEE KEYNOTE #13, DRAWING E-000-101 FOR CLARIFICATION.

Brown AND Caldwell
PORTLAND, OREGON

Signer Name: James Cook
Signing Reason: I approved this document
Signing Time: 2025-01-25 13:54:21(EST)

JAMES E. COOK
STATE OF WASHINGTON
37632
REGISTERED
PROFESSIONAL ENGINEER

ISSUED FOR BID

CITY OF Vancouver WASHINGTON

WS14 PFAS TREATMENT DESIGN

REVISIONS

REV	DATE	DESCRIPTION

LINE IS 2 INCHES AT FULL SIZE

DESIGNED: B.NURSUWITO
DRAWN: B.NURSUWITO
CHECKED: J.COOK
CHECKED: M.MAISONVILLE
APPROVED: J.COOK

FILENAME
E-000-705.dwg

BC PROJECT NUMBER
180318

CLIENT PROJECT NUMBER
PRJ100893

ELECTRICAL

DUCT BANK SCHEDULE

DRAWING NUMBER
E-000-705

98 SHEET NUMBER OF 125

Plot Date: 1/17/2025 4:08:16 PM Path: C:\bcpw\d3450215\E-000-705.dwg

bb28a5662e4e234762852d3188408f1f

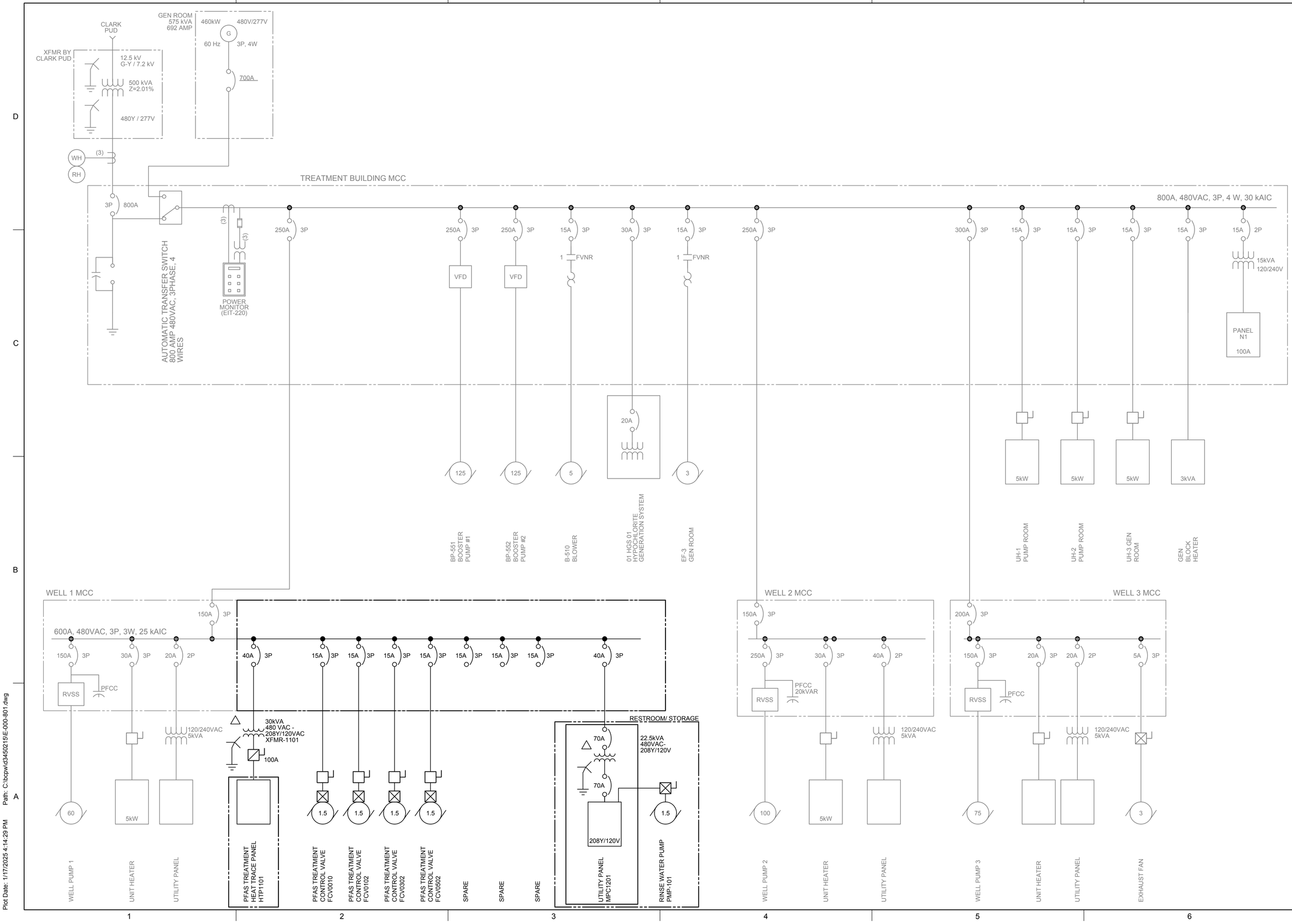

Plot Date: 1/17/2025 4:14:29 PM Path: C:\bcpw\d3450215\E-000-801.dwg

Signer Name: James Cook
Signing Reason: I approved this document.
Signing Time: 2025-01-23 15:54:21(EST)

JAMES E. COOK
STATE OF WASHINGTON
37632
REGISTERED PROFESSIONAL ENGINEER

Brown AND Caldwell
PORTLAND, OREGON

ISSUED FOR BID

CITY OF Vancouver WASHINGTON

WS14 PFAS TREATMENT DESIGN

REVISIONS

REV	DATE	DESCRIPTION

LINE IS 2 INCHES AT FULL SIZE

DESIGNED:	B.NURSUWITO
DRAWN:	B.NURSUWITO
CHECKED:	J.COOK
CHECKED:	M.MAISONVILLE
APPROVED:	J.COOK

FILENAME
E-000-801.dwg

BC PROJECT NUMBER
180318

CLIENT PROJECT NUMBER
PRJ100893

ELECTRICAL

WS14 ONE-LINE DIAGRAM

DRAWING NUMBER
E-000-801

SHEET NUMBER 99 OF 125

2feae6063886bf0e23fafe51cc946d68

PLAN NORTH

KEYNOTES:

1. UTILITY PANEL MPC1201 SHALL BE FED FROM WELL 1 MCC 1.
2. INSTALL VENDOR CABLES FROM LCP100 TO THE GRINDER PUMP AT LIFT STATION UO5. REFER TO THE MANUFACTURE INSTALLATION RECOMMENDATION. SEE DRAWING E-00-101 FOR LIFT STATION LOCATION.
3. FURNISH AND INSTALL SIGNAL WIRE FROM FIT102 TO FE102 AT METER VAULT UO4. SEE DRAWING E-00-101 FOR METER VAULT LOCATION.
4. INSTALL CAT6 FROM PNL010 TO PNL011.
5. FURNISH AND INSTALL DISCONNECTING MEANS FOR THE FIT.

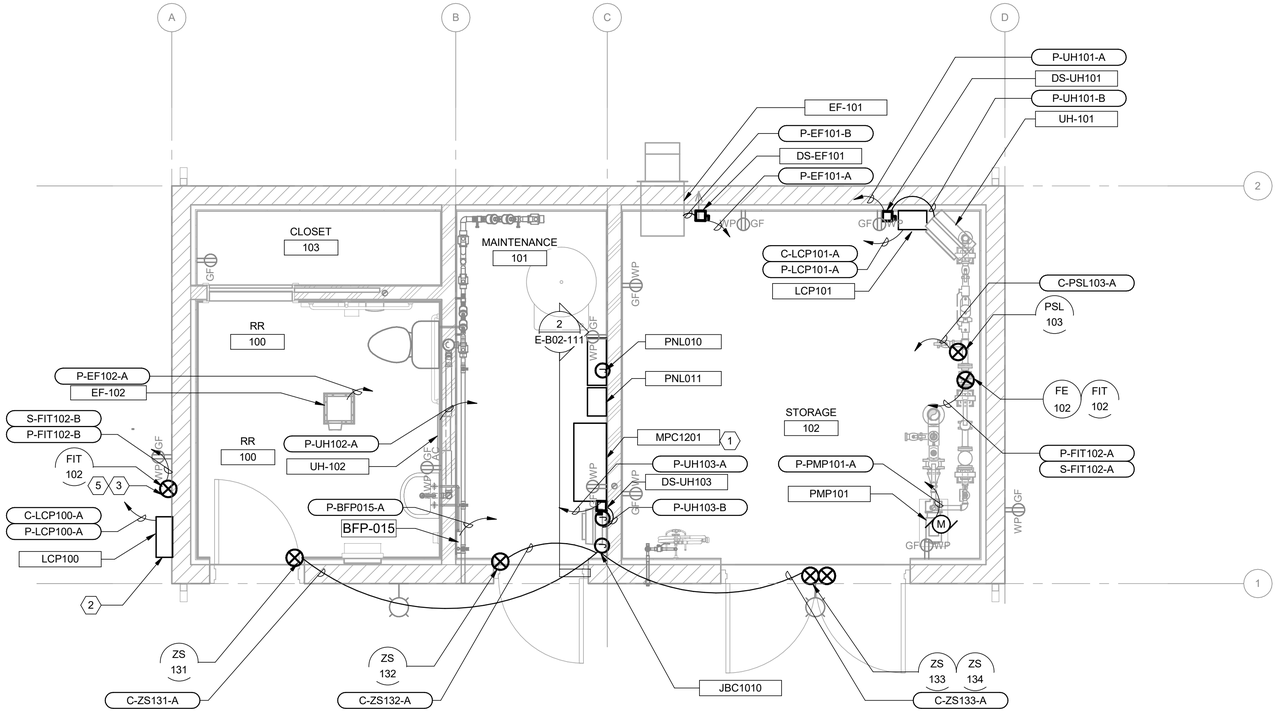

RESTROOM AND STORAGE BUILDING POWER, CONTROL AND SIGNAL PLAN
SCALE: 3/8" = 1'-0"

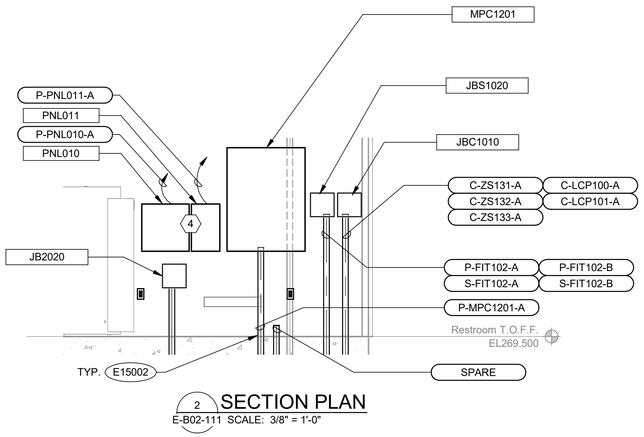

2 SECTION PLAN
E-B02-111 SCALE: 3/8" = 1'-0"

Signer Name: James Cook
Signing Reason: I approved this document
Signing Time: 2025-01-23 15:54:21(UST)

JAMES E. COOK
STATE OF WASHINGTON
37632
REGISTERED PROFESSIONAL ENGINEER

ISSUED FOR BID

CITY OF Vancouver WASHINGTON

WS14 PFAS TREATMENT DESIGN

REVISIONS

REV	DATE	DESCRIPTION

LINE IS 2 INCHES AT FULL SIZE

DESIGNED:	B.NURSUWITO
DRAWN:	B.NURSUWITO
CHECKED:	J.COOK
CHECKED:	M.MAISONVILLE
APPROVED:	J.COOK

FILENAME
180318-E-00V21.rvt

BC PROJECT NUMBER
180318

CLIENT PROJECT NUMBER
PRJ100893

ELECTRICAL

RESTROOM AND STORAGE BUILDING POWER, CONTROL AND SIGNAL PLAN

DRAWING NUMBER
E-B02-111

SHEET NUMBER 100 OF 125

Plot Date: 1/14/2025 5:20:10 PM Path: BIM 360://180318 - WS 14 PFAS Treatments Design/180318-E-00V21.rvt

275ceeca43bbb05e9be7905cc8ae5024

PLAN NORTH

GENERAL NOTES:

1. ALL LIGHT FIXTURE IN RESTROOM AND STORAGE FACILITY SHALL BE CEILING MOUNTED.

KEYNOTES:

1 #4/0 AWG BARE COPPER GROUND RING CONDUCTOR SHALL BE INSTALLED AT 30 INCHES MINIMUM BELOW GRADE AROUND THE PERIMETER OF THE BUILDING.

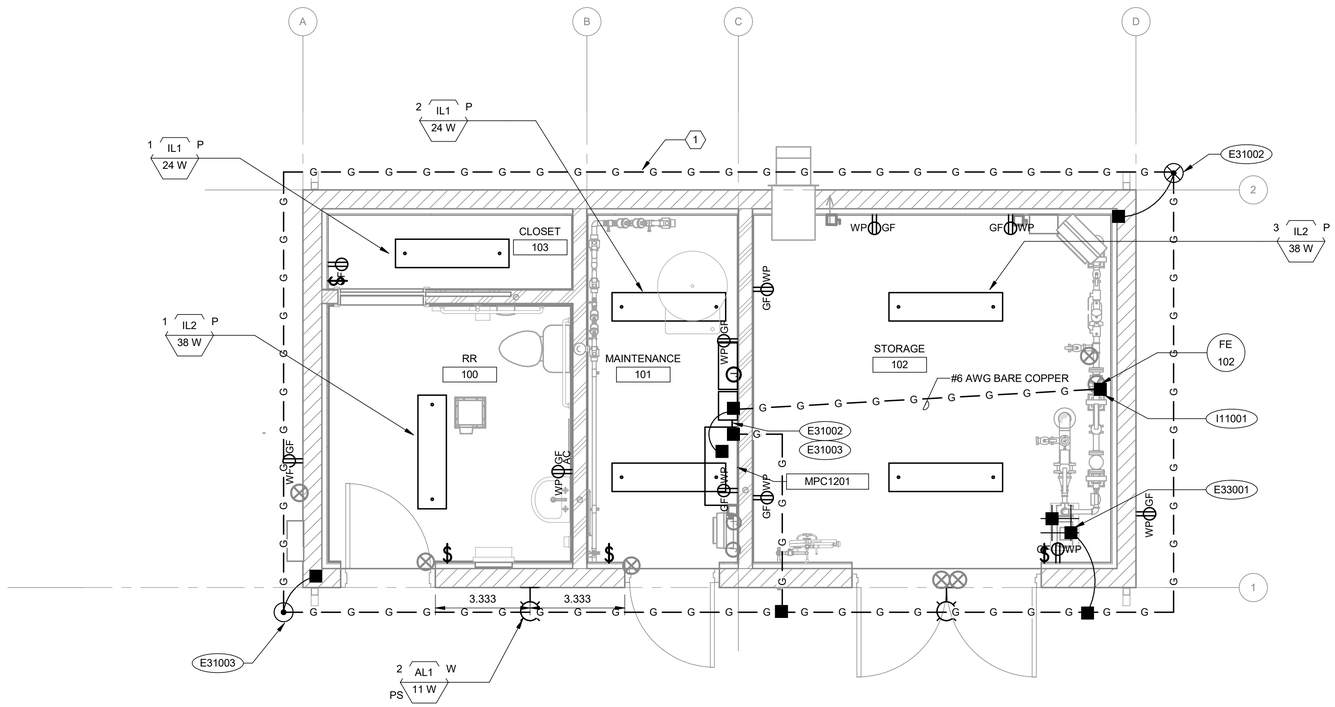

RESTROOM AND STORAGE BUILDING GROUNDING AND LIGHTING PLAN

SCALE: 3/8" = 1'-0"

GENERAL USE ILLUMINANCE RESULT			
Space: Name	Space: Number	Space: Actual Lighting Load/Area	Average
RESTROOM	100	0.49 W/ft²	23 fc
STORAGE	102	0.49 W/ft²	31 fc
MAINTENANCE	101	0.74 W/ft²	21 fc
CLOSET	103	1.07 W/ft²	19 fc

Brown AND Caldwell
PORTLAND, OREGON

Signer Name: James Cook
Signing Reason: I approved this document
Signing Time: 2025-01-23 13:54:21(EST)

JAMES E. COOK
STATE OF WASHINGTON
37632
REGISTERED PROFESSIONAL ENGINEER

ISSUED FOR BID

CITY OF Vancouver WASHINGTON

WS14 PFAS TREATMENT DESIGN

REVISIONS

REV	DATE	DESCRIPTION

LINE IS 2 INCHES AT FULL SIZE

DESIGNED: B.NURSUWITO
DRAWN: B.NURSUWITO
CHECKED: J.COOK
CHECKED: M.MAISONVILLE
APPROVED: J.COOK

FILENAME
180318-E-00V21.rvt
BC PROJECT NUMBER
180318
CLIENT PROJECT NUMBER
PRJ100893

ELECTRICAL

RESTROOM AND STORAGE BUILDING GROUNDING AND LIGHTING PLAN

DRAWING NUMBER
E-B02-121

SHEET NUMBER 101 OF 125

Plot Date: 1/16/2025 12:54:33 PM Path: BIM 360://180318 - WS 14 PFAS Treatments Design/180318-E-00V21.rvt

21f70a0c7427d999aeae9fcbf23c2fa2

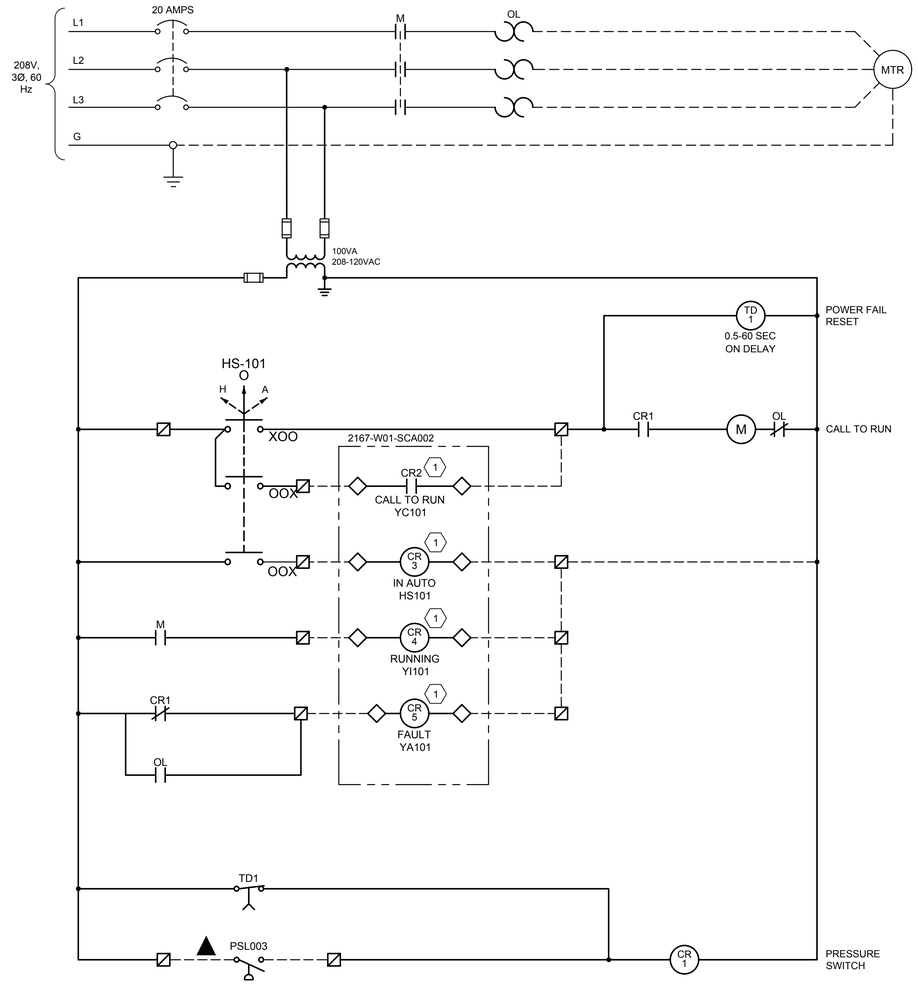

MOTOR CONTROL SCHEMATIC

SCALE: NTS

KEY NOTES:

1. INTERPOSING RELAYS IN PLC PANEL.

Brown AND Caldwell

PORTLAND, OREGON

Signer Name: James Cook
Signing Reason: I approved this document.
Signing Time: 2025-01-23 13:54:21(EST)

JAMES E. COOK
STATE OF WASHINGTON
37632
REGISTERED
PROFESSIONAL ENGINEER

ISSUED FOR BID

CITY OF Vancouver WASHINGTON

WS14 PFAS TREATMENT DESIGN

REVISIONS

REV	DATE	DESCRIPTION

LINE IS 2 INCHES AT FULL SIZE

DESIGNED: B.NURSUWITO
DRAWN: B.NURSUWITO
CHECKED: J.COOK
CHECKED: M.MAISONVILLE
APPROVED: J.COOK

FILENAME
E-B02-801.dwg

BC PROJECT NUMBER
180318

CLIENT PROJECT NUMBER
PRJ100893

ELECTRICAL

PUMP 101 MOTOR CONTROL SCHEMATIC

DRAWING NUMBER
E-B02-801

102 SHEET NUMBER OF 125

Plot Date: 1/17/2025 4:30:36 PM Path: C:\bcgwd\3450215\E-B02-801.dwg

c823a623a302e2fb6e513152f9f23145

PLAN NORTH

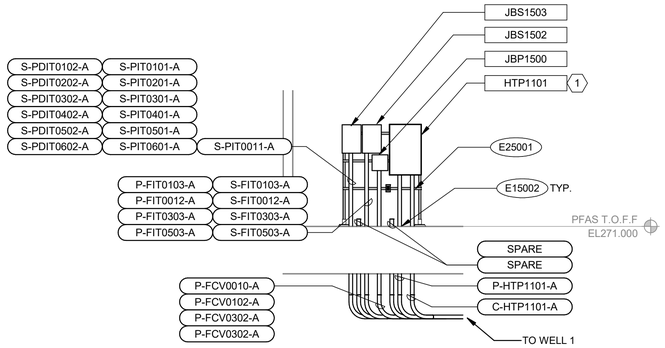

2 SECTION PLAN
E-P01-111 SCALE: 1/4" = 1'-0"

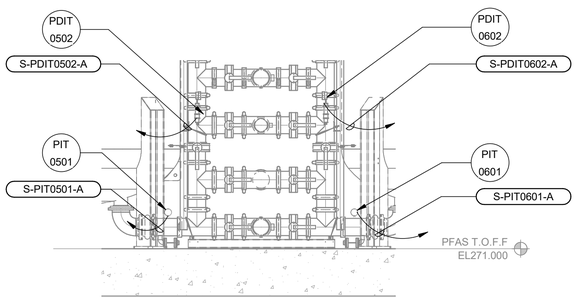

4 SECTION PLAN
E-P01-111 SCALE: 1/4" = 1'-0"

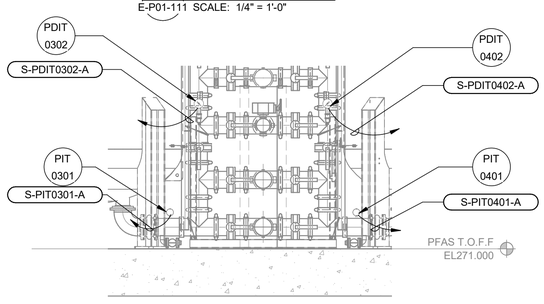

5 SECTION PLAN
E-P01-111 SCALE: 1/4" = 1'-0"

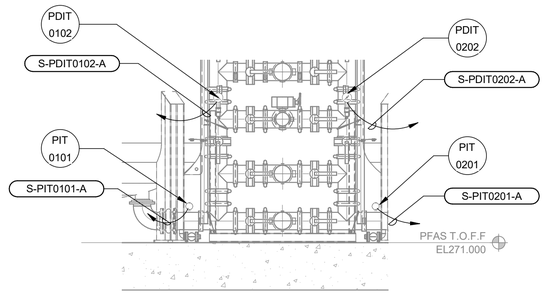

6 SECTION PLAN
E-P01-111 SCALE: 1/4" = 1'-0"

PFAS TREATMENT POWER, CONTROL AND SIGNAL
SCALE: 3/16" = 1'-0"

GENERAL NOTES:

1. THIS DRAWING ONLY SHOW 2" CONDUIT AND GREATER, FOR MODEL COORDINATION PURPOSES. NOT ALL POWER AND CONTROL CONDUITS ARE SHOWN.

KEYNOTES:

1 HEAT TRACE PANEL HTP1101 SHALL BE FED FROM WELL 1 MCC 1 VIA TRANSFORMER XFMR1101.
2 LOCAL CONTROL STATION SHALL BE INTEGRAL TO THE FLOW CONTROL VALVE. SEE DRAWING I-P01-101
3 FURNISH AND INSTALL DISCONNECTING MEANS FOR THE FIT.

Brown AND Caldwell
PORTLAND, OREGON

Signer Name: James Cook
Signing Reason: I approved this document
Signing Time: 2025-01-23 13:54:22(EST)

JAMES E. COOK
STATE OF WASHINGTON
37632
REGISTERED PROFESSIONAL ENGINEER

ISSUED FOR BID

CITY OF Vancouver WASHINGTON

WS14 PFAS TREATMENT DESIGN

REVISIONS

REV	DATE	DESCRIPTION

LINE IS 2 INCHES AT FULL SIZE

DESIGNED: B.NURSUWITO
DRAWN: B.NURSUWITO
CHECKED: J.COOK
CHECKED: M.MAISONVILLE
APPROVED: J.COOK

FILENAME 180318-E-00V21.rvt
BC PROJECT NUMBER 180318
CLIENT PROJECT NUMBER PRJ100893

ELECTRICAL

PFAS TREATMENT POWER, CONTROL AND SIGNAL PLAN

DRAWING NUMBER
E-P01-111

103 SHEET NUMBER OF 125

Plot Date: 1/14/2025 5:20:40 PM Path: BIM 360://180318 - WS 14 PFAS Treatments Design/180318-E-00V21.rvt

04541e7601eceb46f9db0a1de1109407

PLAN NORTH

KEYNOTES:

1 #4/0 AWG BARE COPPER GROUND RING CONDUCTOR SHALL BE INSTALLED AT 30 INCHES MINIMUM BELOW GRADE AROUND THE PERIMETER OF THE PFAS TREATMENT FACILITY.

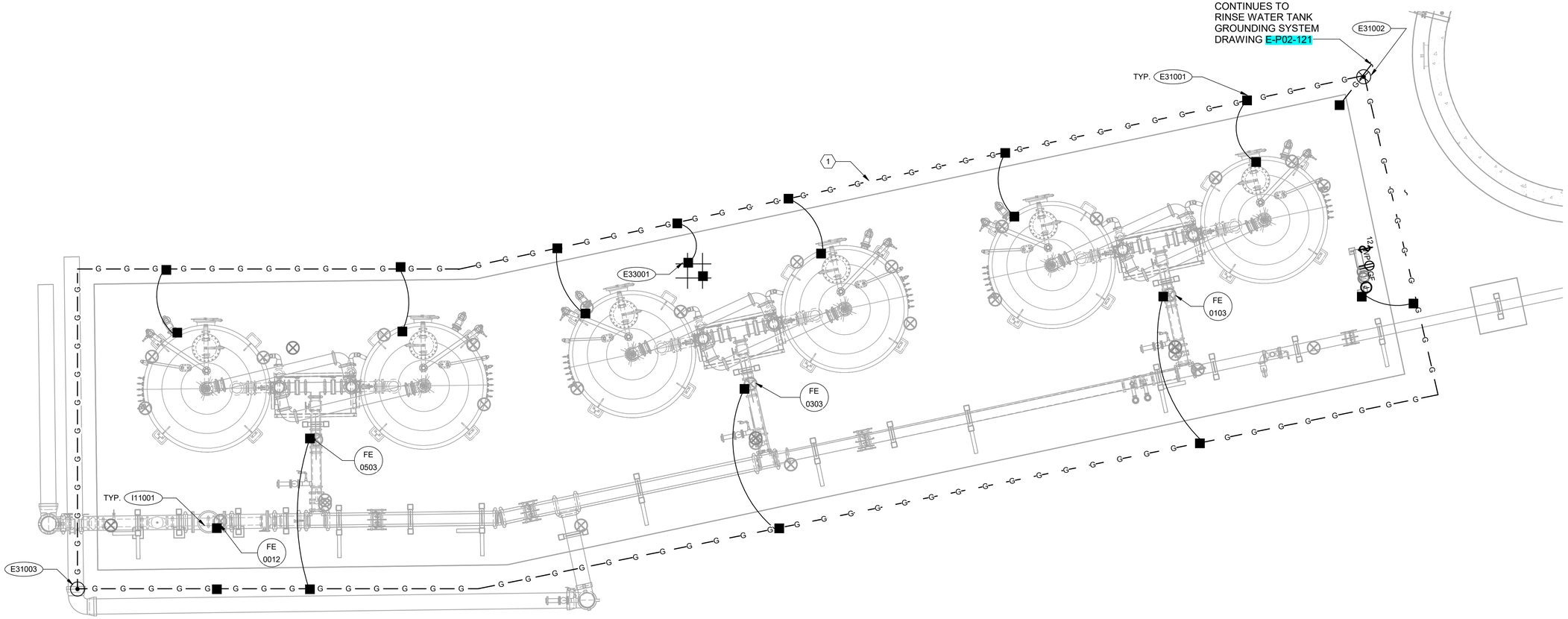

PFAS TREATMENT GROUNDING, RECEPTACLE AND LIGHTING

SCALE: 3/16" = 1'-0"

Brown AND Caldwell

PORTLAND, OREGON

Signer Name: James Cook
Signing Reason: I approved this document
Signing Time: 2025-01-23 13:54:22(EST)

JAMES E. COOK
STATE OF WASHINGTON
37632
REGISTERED PROFESSIONAL ENGINEER

ISSUED FOR BID

CITY OF Vancouver WASHINGTON

WS14 PFAS TREATMENT DESIGN

REVISIONS

REV	DATE	DESCRIPTION

LINE IS 2 INCHES AT FULL SIZE

DESIGNED:	B.NURSUWITO
DRAWN:	B.NURSUWITO
CHECKED:	J.COOK
CHECKED:	M.MAISONVILLE
APPROVED:	J.COOK

FILENAME
180318-E-00V21.rvt

BC PROJECT NUMBER
180318

CLIENT PROJECT NUMBER
PRJ100893

ELECTRICAL

PFAS TREATMENT GROUNDING AND LIGHTING PLAN

DRAWING NUMBER
E-P01-121

104 SHEET NUMBER OF 125

Plot Date: 1/14/2025 5:21:08 PM Path: BIM 360://180318 - WS 14 PFAS Treatments Design/180318-E-00V21.rvt

f983cd8c4eb0a0c7f82b39f489628f03

PLAN NORTH

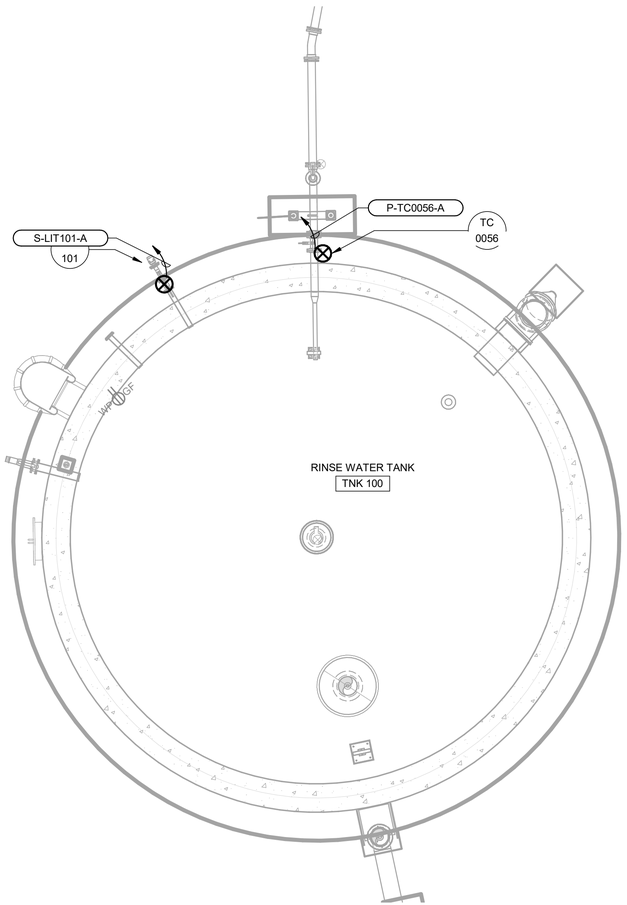

RINSE WATER TANK POWER, CONTROL AND SIGNAL
SCALE: 1/4" = 1'-0"

Plot Date: 1/14/2025 5:21:09 PM
Path: BIM 360://180318 - WS 14 PFAS Treatments Design/180318-E-00V21.rvt

Brown AND Caldwell
PORTLAND, OREGON

Signer Name: James Cook
Signing Reason: I approved this document.
Signing Time: 2025-01-23 15:54:22(EST)

JAMES E. COOK
STATE OF WASHINGTON
37632
REGISTERED PROFESSIONAL ENGINEER

ISSUED FOR BID

CITY OF Vancouver WASHINGTON

WS14 PFAS TREATMENT DESIGN

REVISIONS

REV	DATE	DESCRIPTION

LINE IS 2 INCHES AT FULL SIZE

DESIGNED: B.NURSUWITO
DRAWN: B.NURSUWITO
CHECKED: J.COOK
CHECKED: M.MAISONVILLE
APPROVED: J.COOK

FILENAME
180318-E-00V21.rvt

BC PROJECT NUMBER
180318

CLIENT PROJECT NUMBER
PRJ100893

ELECTRICAL

RINSE WATER TANK POWER, CONTROL AND SIGNAL PLAN

DRAWING NUMBER
E-P02-111

105 SHEET NUMBER OF 125

769904d6e9ad3505d370d13f1b3a8643

PLAN NORTH

KEYNOTES:

1 #4/0 AWG BARE COPPER GROUND RING CONDUCTOR SHALL BE INSTALLED AT 30 INCHES MINIMUM BELOW GRADE.

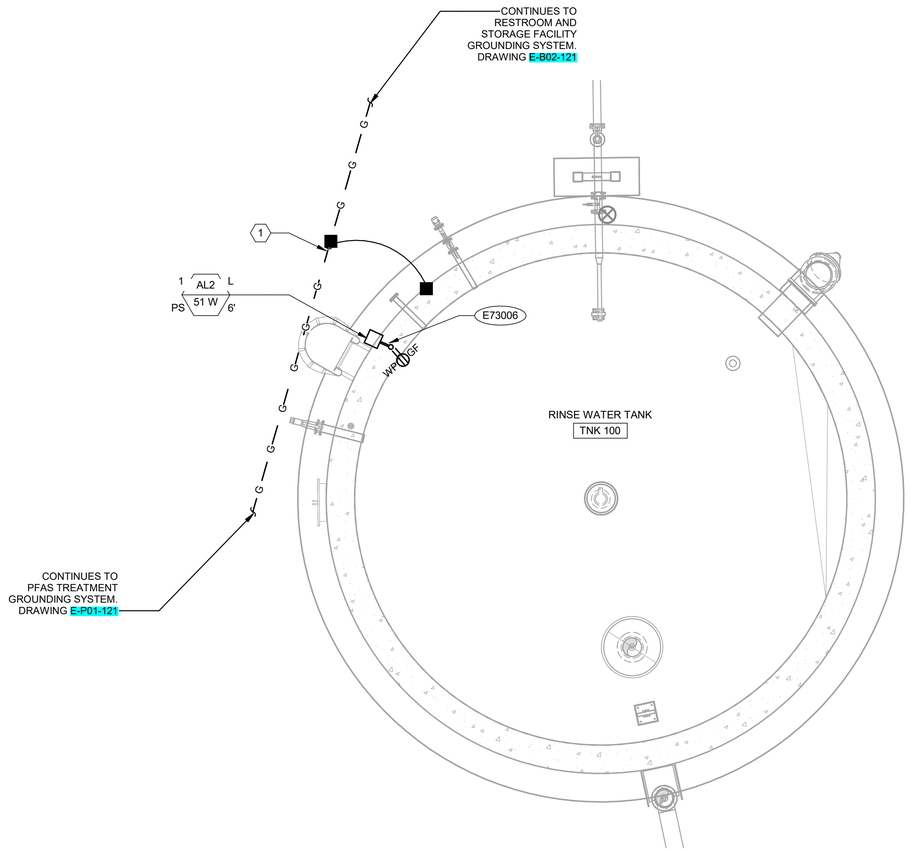

RINSE WATER TANK GROUNDING, RECEPTACLE AND LIGHTING

SCALE: 1/4" = 1'-0"

Brown AND Caldwell

PORTLAND, OREGON

Signer Name: James Cook
Signing Reason: I approved this document.
Signing Time: 2025-01-23 15:54:32(EST)

JAMES E. COOK
STATE OF WASHINGTON
37632
REGISTERED PROFESSIONAL ENGINEER

ISSUED FOR BID

CITY OF Vancouver WASHINGTON

WS14 PFAS TREATMENT DESIGN

REVISIONS

REV	DATE	DESCRIPTION

LINE IS 2 INCHES AT FULL SIZE

DESIGNED:	B.NURSUWITO
DRAWN:	B.NURSUWITO
CHECKED:	J.COOK
CHECKED:	M.MAISONVILLE
APPROVED:	J.COOK

FILENAME
180318-E-00V21.rvt

BC PROJECT NUMBER
180318

CLIENT PROJECT NUMBER
PRJ100893

ELECTRICAL

RINSE WATER TANK GROUNDING AND LIGHTING PLAN

DRAWING NUMBER
E-P02-121

106 SHEET NUMBER OF 125

Path: BIM 360://180318 - WS 14 PFAS Treatments Design/180318-E-00V21.rvt

Plot Date: 1/14/2025 5:21:11 PM

18f3d8bf4b1db9945ab16feeca841f48

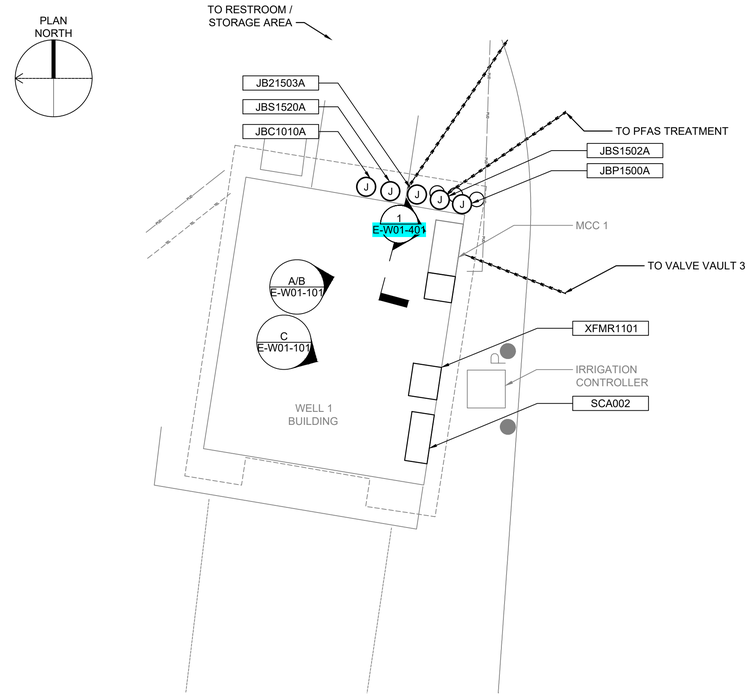

1 E-00-101 PLAN SCALE : 1" = 5' - 0"

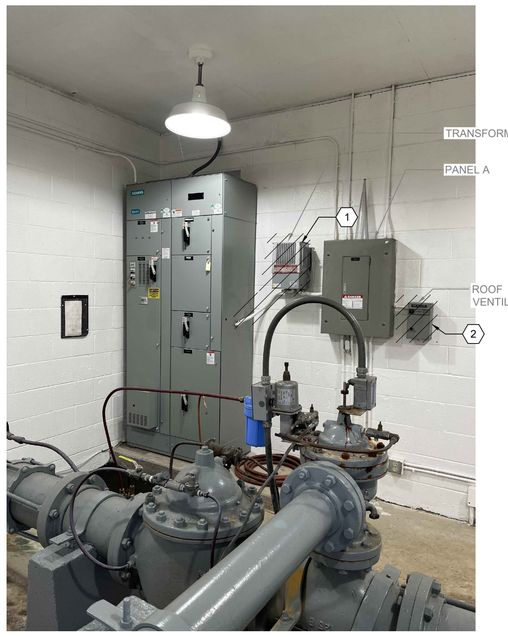

A E-W01-101 SOUTH WEST CORNER SCALE : NTS

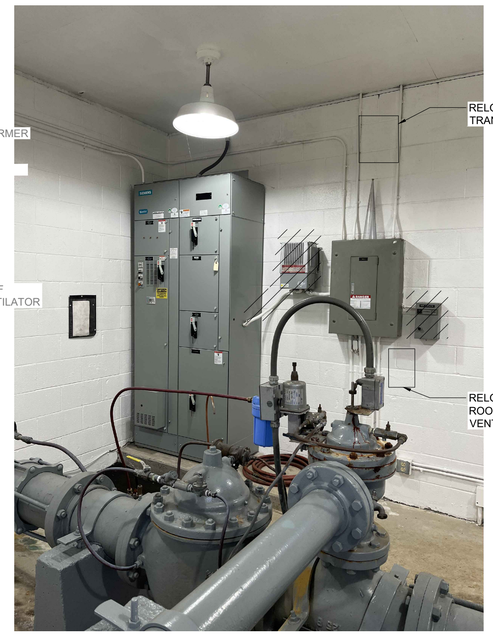

B E-W01-101 SOUTH WEST CORNER SCALE : NTS

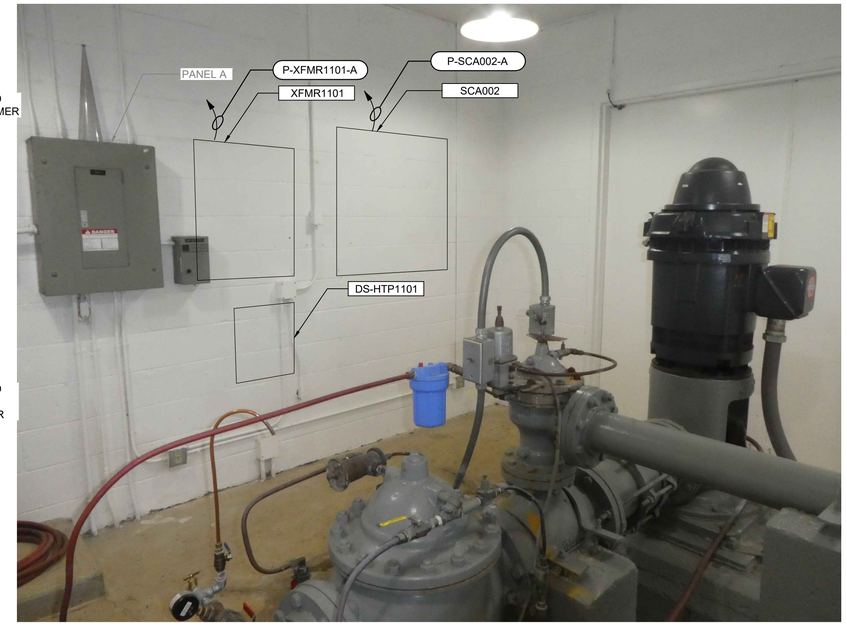

C E-W01-101 SOUTH WALL SCALE : NTS

KEY NOTES:

1. RELOCATE EXISTING TRANSFORMER AND RECONNECT CONDUIT AND ALL APPURTENANCES TO MCC 1 AND EXISTING PANEL A.
2. RELOCATE EXISTING ROOF VENTILATOR AND RECONNECT CONDUIT AND ALL APPURTENANCES TO MCC 1 AND EXISTING PANEL A.
3. SCA002 SHALL BE FED FROM PANEL A. 2#12, #12G, 3/4"C.

Brown AND Caldwell
PORTLAND, OREGON

Signer Name: James Cook
Signing Reason: I approved this document
Signing Time: 2025-01-23 15:54:23(EST)

JAMES E. COOK
STATE OF WASHINGTON
37632
REGISTERED PROFESSIONAL ENGINEER

ISSUED FOR BID

CITY OF Vancouver WASHINGTON

WS14 PFAS TREATMENT DESIGN

REVISIONS

REV	DATE	DESCRIPTION

LINE IS 2 INCHES AT FULL SIZE

DESIGNED:	B.NURSUWITO
DRAWN:	B.NURSUWITO
CHECKED:	J.COOK
CHECKED:	M.MAISONVILLE
APPROVED:	J.COOK

FILENAME
E-W01-111.dwg

BC PROJECT NUMBER
180318

CLIENT PROJECT NUMBER
PRJ100893

ELECTRICAL

WELL 1 PLAN

DRAWING NUMBER
E-W01-111

SHEET NUMBER 107 OF 125

Plot Date: 1/14/2025 5:31:30 PM Path: c:\bcpw\d3450215\E-W01-111.dwg

db1e7844924366d4bee2c5d521a8771d

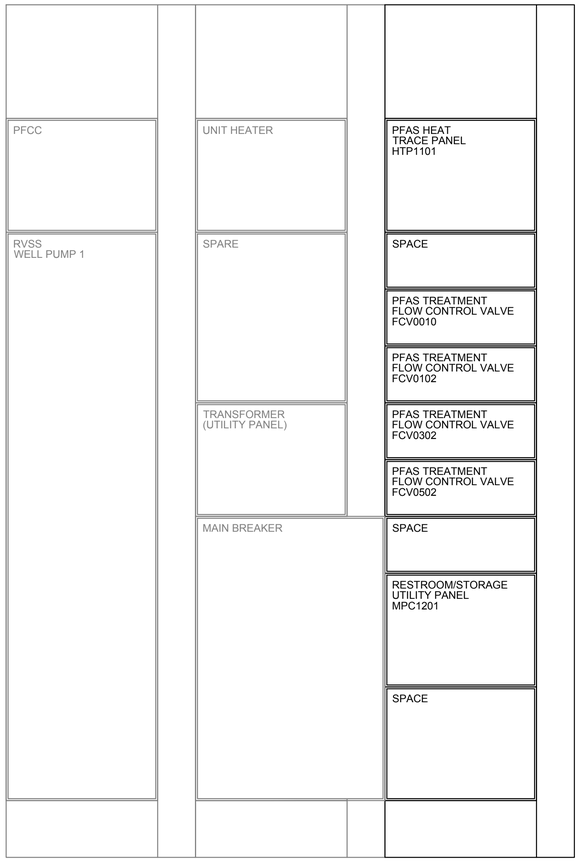

1 SECTION VIEW
E-W01-111 SCALE: NTS

LOAD SCHEDULE

EQUIPMENT DESIGNATION: WELL 1 MCC
LOCATION: WELL 1 BUILDING
VOLTAGE: 480 3 PHASE, 3 WIRE
MINIMUM AIC RATING: 42KAIC
BUS RATING (AMPS): 600
MAIN RATING (AMPS) 600
MAIN TYPE: 150A BREAKER
FED FROM: TREATMENT BUILDING MCC (SERVICE ENTRANCE)

LOAD DESCRIPTION	KVA	HP	CONNECTED LOADS (KVA)		
			AΦ	BΦ	CΦ
WELL 1 PUMP		60	21.3	21.3	21.3
WELL 1 BUILDING UNIT HEATER	5.0		1.7	1.7	1.7
WELL 1 LIGHTING PANEL TRANSFORMER	5.0		1.7	1.7	1.7
HEAT TRACE PANEL (NEW)	30.0		10.0	10.0	10.0
RESTROOM/STORAGE BUILDING LIGHTING PANEL TRANSFORMER (NEW)	22.5		7.5	7.5	7.5
FCV-0010 PFAS VALVE (NEW)		1.5	1.3	1.3	1.3
FCV-0102 PFAS VALVE (NEW)		1.5	1.3	1.3	1.3
FCV-0302 PFAS VALVE (NEW)		1.5	1.3	1.3	1.3
FCV-0502 PFAS VALVE (NEW)		1.5	1.3	1.3	1.3

CALCULATED LOAD TYPE, X DEMAND FACTOR, AND CALCULATED LOADS (KVA)			
NONCONTINUOUS OR OTHER SCHEDULE, X 100%	26.2	26.2	26.2
CONTINUOUS, TYPE 'C', X 125%	0.0	0.0	0.0
LARGEST MOTOR, TYPE 'LM', X 125%	2.1	2.1	2.1
NONCOINCIDENT, TYPE 'NC', X 0%	0.0	0.0	0.0
CALCULATED LOAD TOTALS EACH PHASE	28.2	28.2	28.2

CALCULATED LOAD TOTAL (KVA)	84.7
CALCULATED TOTAL LOAD TOTAL (AMPS)	101.9

WELL 1 MCC SCHEDULE
SCALE: NTS

Brown AND Caldwell
PORTLAND, OREGON

Signer Name: James Cook
Signing Reason: I approved this document
Signing Time: 2025-01-23 13:54:23(EST)

JAMES E. COOK
STATE OF WASHINGTON
37632
REGISTERED
PROFESSIONAL ENGINEER

ISSUED FOR BID

CITY OF Vancouver WASHINGTON

WS14 PFAS TREATMENT DESIGN

REVISIONS

REV	DATE	DESCRIPTION

LINE IS 2 INCHES AT FULL SIZE

DESIGNED: B.NURSUWITO
DRAWN: B.NURSUWITO
CHECKED: J.COOK
CHECKED: M.MAISONVILLE
APPROVED: J.COOK

FILENAME
E-W01-401.dwg

BC PROJECT NUMBER
180318

CLIENT PROJECT NUMBER
PRJ100893

ELECTRICAL

WELL 1 MCC ELEVATION

DRAWING NUMBER
E-W01-401

108 SHEET NUMBER OF 125

Plot Date: 1/17/2025 4:16:30 PM Path: C:\bcpw\d3450215\E-W01-401.dwg

347d6cc9b771d23c5bccc43adece1a84

FUNCTIONAL IDENTIFICATION

VARIABLE	MEASURED OR INITIATING VARIABLE DESCRIPTION	MODIFIER	READOUT OR PASSIVE FUNCTION	OUTPUT FUNCTION	MODIFIER
A	ANALYSIS		ALARM		
B	BURNER, COMBUSTION				
C	CONDUCTIVITY			CONTROL	CLOSE
D	DENSITY, SPECIFIC GRAVITY	DIFFERENTIAL			DEVIATION
E	VOLTAGE, SOLENOID		PRIMARY ELEMENT		
F	FLOW, FLOW RATE	RATIO			
G	FIRE, SMOKE		GLASS		
H	HAND				HIGH
I	CURRENT		INDICATE		
J	POWER		SCAN		
K	TIME, SCHEDULE	TIME RATE OF CHANGE		CONTROL STATION	
L	LEVEL		LIGHT		LOW
M	MOISTURE, HUMIDITY, MOTION	MOMENTARY			MIDDLE, INTERMEDIATE
N	EQUIPMENT STATUS				
O	DISSOLVED OXYGEN		ORIFICE		OPEN
P	PRESSURE, VACUUM		POINT (TEST) CONNECTION		
Q	QUANTITY	INTEGRATE, TOTALIZE			
R	RADIATION		RECORD		RUN
S	SPEED, FREQUENCY	SAFETY		SWITCH	STOP
T	TEMPERATURE			TRANSMIT	
U	MULTIVARIABLE		MULTIFUNCTION	MULTIFUNCTION	MULTIFUNCTION
V	VIBRATION, MECHANICAL ANALYSIS			VALVE, DAMPER, LOUVER	
W	WEIGHT, FORCE, TORQUE		WELL, PROBE		
X	UNCLASSIFIED	X AXIS			
Y	EVENT, STATE OR PRESENCE	Y AXIS		AUXILIARY DEVICES	
Z	POSITION, DIMENSION	Z AXIS		DRIVER, ACTUATOR, FINAL CONTROL ELEMENT	

INSTRUMENT TAG AND LOOP IDENTIFICATION

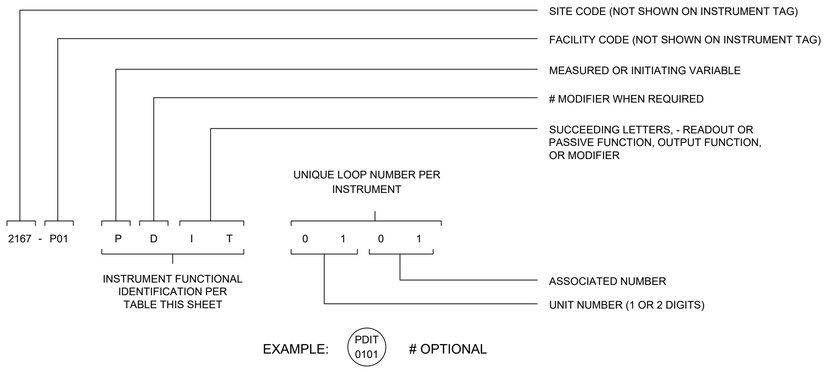

EQUIPMENT IDENTIFICATION SYSTEM

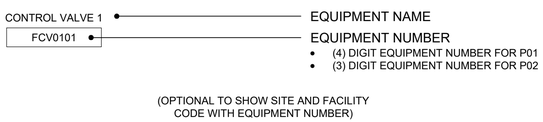

INSTRUMENT SIGNAL LINES

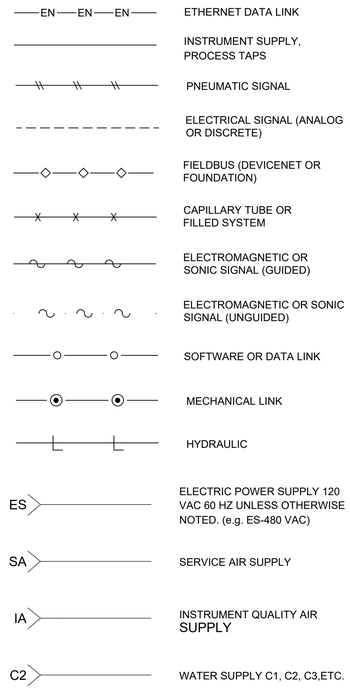

TYPICAL INSTRUMENT IDENTIFICATION

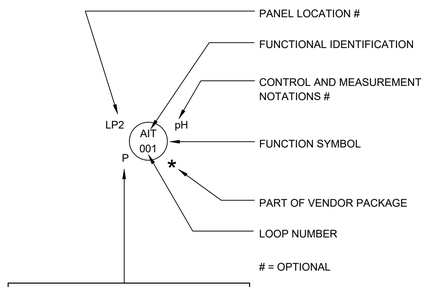

NETWORK TYPE	
E	ETHERNET
P	PROFIBUS
PN	PROFINET
M-RTU	MODBUS RTU
M-TCP	MODBUS TCP

PROCESS AND SIGNAL CROSS REFERENCE SYSTEM

WHEN A PROCESS LINE CROSSES FROM DRAWING TO DRAWING. THE P&ID DRAWING NUMBERS NEED TO BE REFERENCED. AS AN EXAMPLE; A PROCESS IS PUMPING TO A TANK ON A SEPARATE P&ID, SEE BELOW

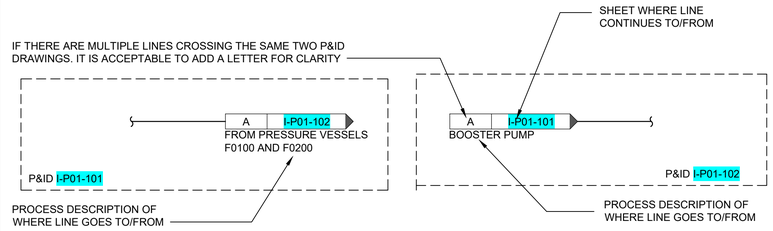

PROCESS LINES

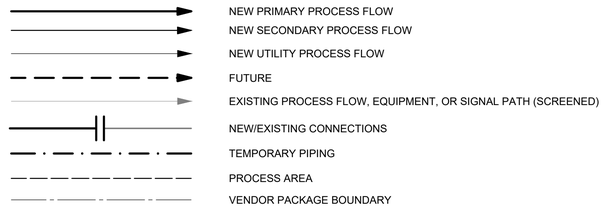

CONTROL AND MEASUREMENT NOTATIONS

ACK	ACKNOWLEDGE
AM	AUTO/MAN
BYP	BYPASS
CL	CLOSE
CL2	CHLORINE
CMAT	COMPUTER/MANUAL/AUTO/TRACKING
COMB	COMBUSTIBLE GAS
CP	CONTROL POWER
COND	CONDUCTIVITY
DEC	DECREASE
DO	DISSOLVED OXYGEN
ESP	EMERGENCY STOP
FWD	FORWARD
F/R	FORWARD/REVERSE
F/S	FAST/SLOW
HLOA	HIGH/LOW/OFF/AUTO
HOA	HAND/OFF/AUTO
HOAL	HAND/OFF/AUTO/LOCAL
HOR	HAND/OFF/REMOTE
INC	INCREASE
JOA	JOG/OFF/AUTO
LL	LEAD/LAG
LOR	LOCAL/OFF/REMOTE
LOS	LOCKOUT STOP
L/R	LOCAL/REMOTE
M/A LS	MAN/AUTO LOADING STATION
OCA	OPEN/CLOSE/AUTO
OCP	PURGE VALVE OP/CL/PC
OL	OVERLOAD
OP	OPEN
OSC/LP	OPEN/STOP/CLOSE WITH LOCAL/REMOTE SELECT
PA	PAUSE
PAL	LOW PRESSURE
PB	PUSH BUTTON
pH	pH
POT	POTENTIOMETER
RDY	READY
REV	REVERSE
RNG	RUNNING
ROF	REVERSE/OFF/FORWARD
RST	RESET
SIL	SILENCE
SO2	SULFUR DIOXIDE
SP	STOP
ST	START
TCP	TEST/CLOSE/PC
T/S	TEST/NORMAL/SILENCE
TBL	TROUBLE

GENERAL NOTES:

1. THIS DRAWING IS GENERAL IN NATURE. SOME SYMBOLS AND IDENTIFICATIONS SHOWN HEREON MAY NOT BE USED ON THE CONTRACT DRAWINGS.
2. SYMBOLS ARE ARRANGED ON SPECIFIC DRAWINGS AND IN CATEGORIES FOR CONVENIENCE ONLY; SYMBOLS MAY BE USED ON ANY OF THE CONTRACT DRAWINGS.

Brown AND Caldwell
PORTLAND, OREGON

Signer Name: Linnea Lubke
Signing Reason: I approved this document
Signing Time: 2025-01-25 12:55:12(EST)

LINNEA S. LUBKE
STATE OF WASHINGTON
38515
REGISTERED PROFESSIONAL ENGINEER

ISSUED FOR BID

CITY OF Vancouver WASHINGTON

WS14 PFAS TREATMENT DESIGN

REVISIONS

REV	DATE	DESCRIPTION

LINE IS 2 INCHES AT FULL SIZE

DESIGNED:	L.LUBKE
DRAWN:	B.NURSUWITO
CHECKED:	J.COOK
CHECKED:	L.STEPHENS
APPROVED:	L.LUBKE
FILENAME	I-000-001.dwg
BC PROJECT NUMBER	180318
CLIENT PROJECT NUMBER	PRJ100893

INSTRUMENTATION

LEGEND AND SYMBOLS 1

DRAWING NUMBER
I-000-001

SHEET NUMBER 109 OF 125

Path: C:\users\djackson\bcpw\d3450217\I-000-001.dwg
Plot Date: 1/15/2025 6:42:00 AM

0a91e0658aa543384158f796bcf144ce

MISCELLANEOUS SYMBOLS

- MCC (MOTOR CONTROL/STARTER)
- PURGE OR FLUSHING DEVICE
- RESET FOR LATCH-TYPE OPERATOR
- SEAL WATER CONTROL UNIT
- INTERLOCKING OR CONTROL FUNCTION
- INTRINSIC SAFETY BARRIER
- DISCRETE INPUT
- DISCRETE OUTPUT
- ANALOG INPUT
- ANALOG OUTPUT
- FIBER OPTIC PATCH PANEL
- VARIABLE FREQUENCY DRIVE WITH OPERATOR INTERFACE TERMINAL

ACTUATORS/MOTORS/POWER

- ADJUSTABLE SPEED DRIVE (MECHANICAL)
- ROTARY PISTON ACTUATORS, VALVE OR GATE
- LINEAR PISTON ACTUATORS, VALVE OR GATE
- SOLENOID ACTUATOR, VALVE
- ELECTRIC ACTUATOR, VALVE
- MANUAL OR HAND ACTUATOR, VALVE OR GATE (OR BLANK)
- MOTOR (ACTUATOR, VALVE , GATE OR EQUIPMENT)
- PNEUMATIC (ACTUATOR, VALVE , GATE OR EQUIPMENT)
- ENGINE
- EJECTOR, PNEUMATIC
- GENERATOR

PRIMARY ELEMENT SYMBOLS

- ORIFICE PLATE
- FLOW ELEMENT
- VENTURI OR FLOW TUBE
- NOZZLE FLOW
- PITOT TUBE
- PROPELLER OR TURBINE METER
- FLUME
- WEIR
- VARIABLE AREA FLOW INDICATOR (ROTAMETER) (OR)
- DIAPHRAGM SEAL
- IN-LINE ANNULAR SEAL
- MAGNETIC FLOWMETER
- SONIC FLOWMETER (DOPPLER OR TRANSIT TIME)
- POSITIVE DISPLACEMENT METER
- THERMAL FLOW ELEMENT
- VORTEX FLOW ELEMENT
- CORIOLIS FLOW ELEMENT
- FLOAT LEVEL ELEMENT
- ULTRASONIC LEVEL ELEMENT
- BUBBLER LEVEL TUBE
- SUBMERSIBLE LEVEL TRANSMITTER
- HYDROSTATIC LEVEL PROBE
- RADAR LEVEL ELEMENT
- ANNUBAR, PITOT TUBE
- AVERAGING PITOT TUBE

VALVES

NORMALLY OPEN	NORMALLY CLOSED
GATE VALVE	
PLUG VALVE	
BALL VALVE	
GLOBE VALVE	
NEEDLE VALVE	
KNIFE GATE VALVE	
DIAPHRAGM VALVE	
BUTTERFLY VALVE	
ANGLE VALVE	
THREE WAY VALVE	
FOUR WAY VALVE	
FLOAT VALVE	
PINCH VALVE	
BALANCING VALVE	
THERMOSTATICALLY CONTROLLED VALVE	

- DOUBLE LEAF CHECK VALVE CHECK VALVE
- CHECK VALVE
- BALL CHECK VALVE
- PUMP DISCHARGE VALVE
- GAUGE OR ROOT VALVE
- PRESSURE AND VACUUM RELIEF VALVE
- VACUUM RELIEF VALVE
- PRESSURE RELIEF VALVE
- IN-LINE SPRING LOADED RELIEF VALVE
- PRESSURE REGULATING VALVE (SELF-CONTAINED)
- BACK PRESSURE REGULATING VALVE (SELF-CONTAINED)
- FUSIBLE LINK
- SOLENOID VALVE
- DIAPHRAGM OPERATED VALVE
- MOTOR OPERATED VALVE
- MOTOR OPERATED VALVE, MODULATING
- PISTON OPERATED VALVE

NOTE: USE VALVE BODY SYMBOL TO MATCH TYPE OF VALVE.

- TELESCOPING VALVE
- MUD VALVE
- ANTI SIPHON VALVE
- LIFT CHECK VALVE

FUNCTION SYMBOLS

- SHARED DISPLAY, PROCESS CONTROL SYSTEM
- SHARED DISPLAY, SAFETY INSTRUMENTED SYSTEM
- SOFTWARE FUNCTIONALITY REFER TO SPECIFICATION SECTION 40 61 96 FOR NETWORK DATA EXCHANGE REQUIREMENTS FOR COMMON EQUIPMENT TYPES IDENTIFIED BY THE "XXX" DESCRIPTION ABOVE SOFTWARE I/O SYMBOLS ON P&IDs
- FIELD OR PANEL DEVICE

LOCATION AND ACCESSIBILITY MODIFIERS FOR FUNCTION SYMBOLS

- STAND ALONE DEVICE, OPERATOR ACCESSIBLE
- LOCATED ON FRONT OF MAIN PANEL OR CONSOLE, OPERATOR ACCESSIBLE
- LOCATED IN REAR OF MAIN PANEL OR CONSOLE, OPERATOR INACCESSIBLE
- LOCATED ON FRONT OF SECONDARY PANEL OR CONSOLE, OPERATOR ACCESSIBLE
- LOCATED IN REAR OF SECONDARY PANEL OR CONSOLE, OPERATOR INACCESSIBLE

INSTRUMENTATION SYMBOLS

- INTEGRAL INSTRUMENT — PRIMARY ELEMENT SYMBOL
- CLOSE COUPLED INSTRUMENT — PRIMARY ELEMENT SYMBOL
- SEPARATE OR REMOTE MOUNTED INSTRUMENT — PRIMARY ELEMENT SYMBOL
- MULTI VARIABLE INSTRUMENT
- SEPARATE OR REMOTE MOUNTED INSTRUMENT — PRIMARY ELEMENT SYMBOL — FLANGE OR ELEMENT TAPS
- SEPARATE OR REMOTE MOUNTED INSTRUMENT — PRIMARY ELEMENT SYMBOL — PIPE TAPS
- SEPARATE OR REMOTE MOUNTED INSTRUMENT — PRIMARY ELEMENT SYMBOL — COMBINATION TAPS
- SINGLE VARIABLE INSTRUMENT

SLIDE AND SLUICE GATES

NORMALLY OPEN		NORMALLY CLOSED
	FLAP GATE	
NO	BUTTERFLY GATE	NC
	STOP GATE	
	SLIDE GATE	
	SLUICE GATE	

GENERAL NOTES:

1. THIS DRAWING IS GENERAL IN NATURE. SOME SYMBOLS AND IDENTIFICATIONS SHOWN HEREON MAY NOT BE USED ON THE CONTRACT DRAWINGS.
2. SYMBOLS ARE ARRANGED ON SPECIFIC DRAWINGS AND IN CATEGORIES FOR CONVENIENCE ONLY; SYMBOLS MAY BE USED ON ANY OF THE CONTRACT DRAWINGS.

Brown AND Caldwell
PORTLAND, OREGON

Signer Name: Linnea Lubke
Signing Reason: I approved this document
Signing Time: 2025-01-23 12:51:11(EST)

LINNEA S. LUBKE — STATE OF WASHINGTON — 38515 — REGISTERED PROFESSIONAL ENGINEER

ISSUED FOR BID

CITY OF Vancouver WASHINGTON

WS14 PFAS TREATMENT DESIGN

REVISIONS

REV	DATE	DESCRIPTION

LINE IS 2 INCHES AT FULL SIZE

DESIGNED:	L.LUBKE
DRAWN:	B.NURSUWITO
CHECKED:	J.COOK
CHECKED:	L.STEPHENS
APPROVED:	L.LUBKE
FILENAME	I-000-002.dwg
BC PROJECT NUMBER	180318
CLIENT PROJECT NUMBER	PRJ100893

INSTRUMENTATION

LEGEND AND SYMBOLS 2

DRAWING NUMBER
I-000-002

SHEET NUMBER 110 OF 125

Path: C:\users\djackson\bcpw\d3450217\l-000-002.dwg
Plot Date: 1/15/2025 6:48:02 AM

90df3d40a2f2e6bd4b2d917b94332d7a

PUMPS


PUMP, CENTRIFUGAL


PUMP, DIAGHRAGM


PUMP, GEAR


PUMP, METERING


PUMP, PERISTALTIC


PUMP, PROGRESSING CAVITY


PUMP, ROTARY LOBE


PUMP, SUBMERSIBLE


PUMP, JET


PUMP, VERTICAL

BLOWERS/COMPRESSORS


BLOWER OR CENTRIFUGAL FAN


BLOWER OR COMPRESSOR, LIQUID RING


BLOWER OR COMPRESSOR, ROTARY LOBE


COMPRESSOR, ROTARY SCREW


COMPRESSOR, ROTARY SLIDING VANE


COMPRESSOR, PISTON

PIPE LINE DEVICES



TRAP


SEDIMENT TRAP



GAS DRIP TRAP


SEPARATOR/ DRYER


PIPELINE FILTER


RUPTURE DISK (VACUUM RELIEF)


RUPTURE DISK (PRESSURE RELIEF)


CONNECTION BETWEEN NEW AND EXISTING PIPING


UNION


QUICK CONNECTOR


CAP OR PLUG


BLIND FLANGE


FLEX CONNECTOR


COUPLING


COMBINATION AIR VALVE



HEAT TRACE

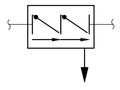
REDUCED PRESSURE BACKFLOW PREVENTER

VENT TO ROOF


VENT


STEAM VENT


AUTOMATIC VENT


MANUAL VENT


STRAINERS


FOOT VALVE

AIR SEPARATOR

DRAIN

DRAIN VALVE

CALIBRATION CHAMBER

PULSATION DAMPENER

INJECTOR

FLAME TRAP

FLAME TRAP WITH THERMO SHUTOFF ASSEMBLY

FLAME CHECK

SAMPLING AND FLUSHING CONNECTIONS

SUCTION DIFFUSER

TEMPERATURE WELL

FLOW STRAIGHTENING VANES

PRESSURE REDUCING ASSEMBLY

AMMONIA UNION

DAMPER

SIGHT GLASS

PIG LAUNCHER/ RECEIVER

REDUCER CONCENTRIC

REDUCER ECCENTRIC

FLEXIBLE HOSE

GENERAL NOTES

1. THIS DRAWING IS GENERAL IN NATURE, SOME SYMBOLS AND IDENTIFICATION SHOWN HEREON MAY NOT BE USED ON THE CONTRACT DRAWINGS.
2. SYMBOLS ARE ARRANGED ON SPECIFIC DRAWINGS AND IN CATEGORIES FOR CONVENIENCE ONLY; SYMBOLS MAY BE USED ON ANY OF THE CONTRACT DRAWINGS.

Brown AND Caldwell
PORTLAND, OREGON

Signer Name: Linnea Lubke
Signing Reason: I approved this document
Signing Time: 2025-01-23 12:35:71(EST)

LINNEA S. LUBKE
STATE OF WASHINGTON
38515
REGISTERED PROFESSIONAL ENGINEER

ISSUED FOR BID

CITY OF Vancouver WASHINGTON

WS14 PFAS TREATMENT DESIGN

REVISIONS

REV	DATE	DESCRIPTION

LINE IS 2 INCHES AT FULL SIZE

DESIGNED: L.LUBKE
DRAWN: B.NURSUWITO
CHECKED: J.COOK
CHECKED: L.STEPHENS
APPROVED: L.LUBKE

FILENAME
I-000-003.dwg

BC PROJECT NUMBER
180318

CLIENT PROJECT NUMBER
PRJ100893

INSTRUMENTATION

LEGEND AND SYMBOLS 3

DRAWING NUMBER
I-000-003

SHEET NUMBER 111 OF 125

Path: C:\users\djackson\bcpw\d34502171l-000-003.dwg
Plot Date: 1/15/2025 6:51:41 AM

5a403942977e222bcffedba6b5f3cefb

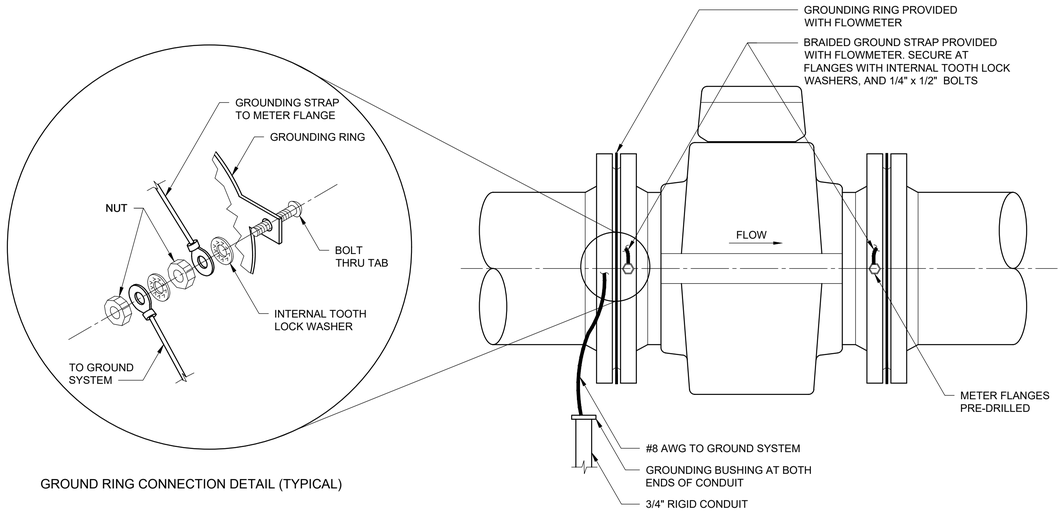

GROUND RING CONNECTION DETAIL (TYPICAL)

I11001 FLOW TRANSMITTER MAGNETIC - GROUNDING
NTS

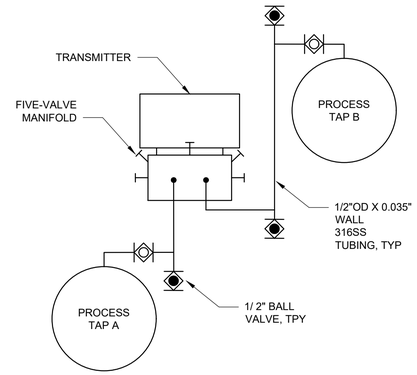

NOTES:

1. LOCATE TRANSMITTER AS CLOSE AS PRACTICAL TO PROCESS TAPS.
2. PROVIDE SECURE MOUNTING SYSTEM FOR THE TRANSMITTER WITH 316SS MATERIAL AND HARDWARE.
3. POSITION TRANSMITTER DISPLAY FOR EASY READING OF PROCESS DIFFERENTIAL PRESSURE.
4. DETAIL SHOWN WITH BALL VALVES; IF GAUGE/ROOT VALVES ARE REQUIRED, SUBSTITUTE VALVES AS APPROPRIATE.

I33001 PROCESS LINE TAP
DIFFERENTIAL PRESSURE TRANSMITTER
SCALE: NONE

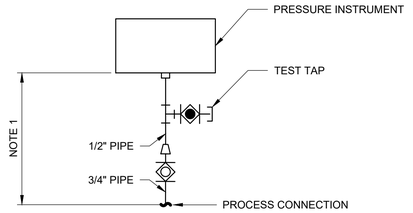

NOTES:

1. 8" MAX BETWEEN PROCESS PIPELINE AND PRESSURE INSTRUMENT.
2. ALL MATERIAL TO BE COMPATIBLE WITH PROCESS FLUID.
3. DETAIL SHOWN WITH BALL VALVES; IF GAUGE/ROOT VALVES ARE REQUIRED, SUBSTITUTE VALVES AS APPROPRIATE.
4. THIS INSTALLATION DETAIL IS INTENDED FOR CLEAN WATER APPLICATIONS. SEE SEPARATE DETAIL FOR SUSPENDED SOLIDS APPLICATIONS.

I31001 PRESSURE INSTRUMENT - DIRECT MOUNT
SCALE: NONE

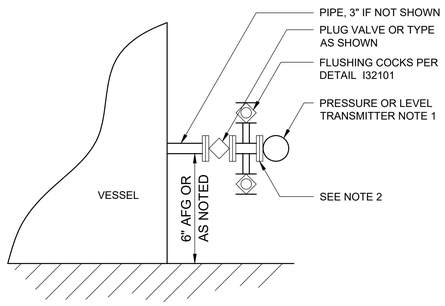

NOTES:

1. ORIENT TRANSMITTER READOUT ANGLED UP AT 45 DEGREE ANGLE, FACING NORTH OR EAST TO PREVENT SOLAR DAMAGE TO READOUT.
2. PROVIDE HEAT TRACING IF OUTDOORS.

I24001 LEVEL TRANSMITTER HEAD
PRESSURE - FLANGED - FLUSHING
SCALE: NONE

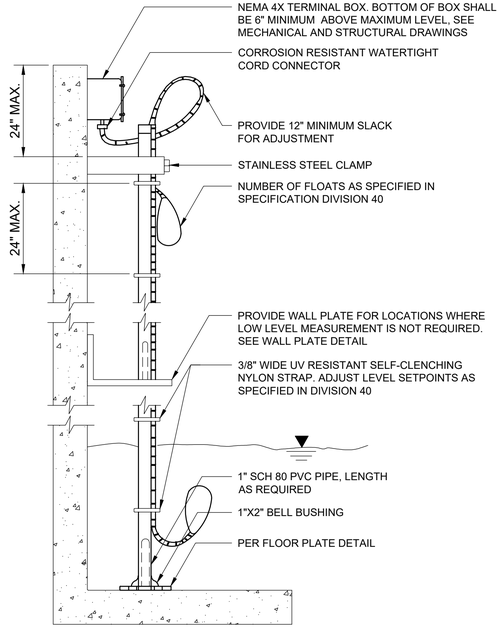

I25001 LEVEL SWITCH FLOAT SWITCH - PIPE MOUNTED
SCALE: NONE

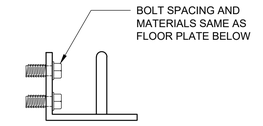

WALL PLATE DETAIL

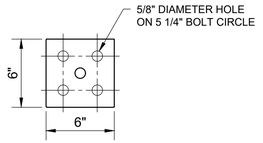

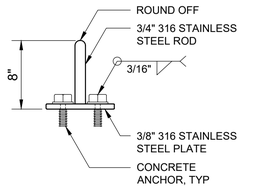

ATTACH TO FLOOR WITH STAINLESS STEEL ANCHORS (4) AND 1/2"x4" 316 STAINLESS STEEL BOLTS AND FLAT WASHERS (4)

FLOOR PLATE DETAIL

Brown AND Caldwell
PORTLAND, OREGON

Signer Name: Linnea Lubke
Signing Reason: I approved
this document
Signing Time: 2025-01-23
12:35:11(EST)

LINNEA S. LUBKE
STATE OF WASHINGTON
38515
REGISTERED
PROFESSIONAL ENGINEER

ISSUED FOR BID

CITY OF Vancouver WASHINGTON

WS14 PFAS
TREATMENT DESIGN

REVISIONS

REV	DATE	DESCRIPTION

LINE IS 2 INCHES AT FULL SIZE

DESIGNED:	L.LUBKE
DRAWN:	B.NURSUWITO
CHECKED:	J.COOK
CHECKED:	L.LUBKE
APPROVED:	L.LUBKE

FILENAME
I-000-004.dwg

BC PROJECT NUMBER
180318

CLIENT PROJECT NUMBER
PRJ100893

INSTRUMENTATION

INSTRUMENTATION
DETAILS 1

DRAWING NUMBER
I-000-004

112 SHEET NUMBER OF 125

Path: C:\users\djackson\bcpw\d34502171\I-000-004.dwg
Plot Date: 1/15/2025 8:07:32 AM

fa57f802489c6c0122b8f792c5317693

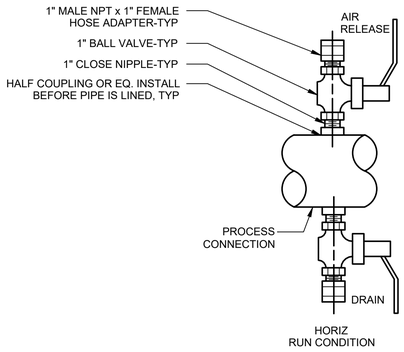

I32101 FLUSHING COCK
SCALE: NONE

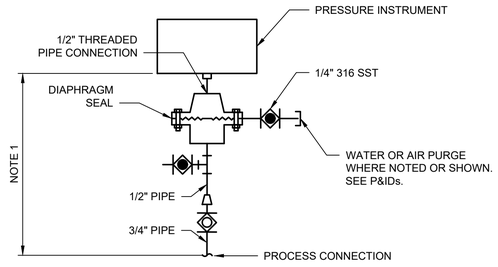

NOTES:

1. 10" MAX BETWEEN PROCESS PIPELINE AND PRESSURE INSTRUMENT.
2. ALL MATERIAL TO BE COMPATIBLE WITH PROCESS FLUID.
3. REFER TO SPECIFICATIONS FOR DIAPHRAGM SEAL.
4. DETAIL SHOWN WITH BALL VALVES; IF GAUGE/ROOT VALVES ARE REQUIRED, SUBSTITUTE VALVES AS APPROPRIATE.
5. THIS INSTALLATION DETAIL IS INTENDED FOR CLEAN WATER/CHEMICAL APPLICATIONS. SEE SEPARATE DETAIL FOR SUSPENDED SOLIDS APPLICATIONS.

I31002 PRESSURE INSTRUMENT - DIRECT MOUNT WITH DIAPHRAGM SEAL
SCALE: NONE

Brown AND Caldwell
PORTLAND, OREGON

Signer Name: Linnea Lubke
Signing Reason: I approved this document
Signing Time: 2025-01-23 12:35:11(EST)

LINNEA S. LUBKE
STATE OF WASHINGTON
38515
REGISTERED PROFESSIONAL ENGINEER

ISSUED FOR BID

CITY OF Vancouver WASHINGTON

WS14 PFAS TREATMENT DESIGN

REVISIONS

REV	DATE	DESCRIPTION

LINE IS 2 INCHES AT FULL SIZE

DESIGNED: L.LUBKE
DRAWN: B.NURSUWITO
CHECKED: J.COOK
CHECKED: L.LUBKE
APPROVED: L.LUBKE

FILENAME
I-000-005.dwg

BC PROJECT NUMBER
180318

CLIENT PROJECT NUMBER
PRJ100893

INSTRUMENTATION

INSTRUMENTATION DETAILS 2

DRAWING NUMBER
I-000-005

113 SHEET NUMBER OF 125

Plot Date: 1/15/2025 8:18:42 AM Path: C:\users\djackson\bcpw\d3450217\I-000-005.dwg

524afbf212a60908a60ad84fca55dbc6

WELL 1 BUILDING (W01)
PFAS TREATMENT PLC PANEL

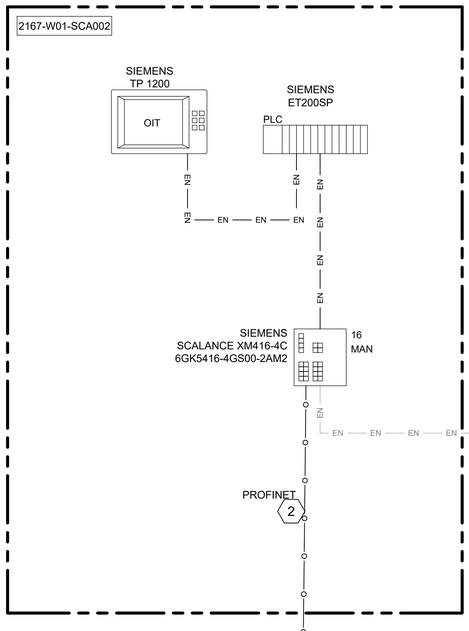

TREATMENT BUILDING (B01)
EXISTING BOOSTER CONTROL PANEL

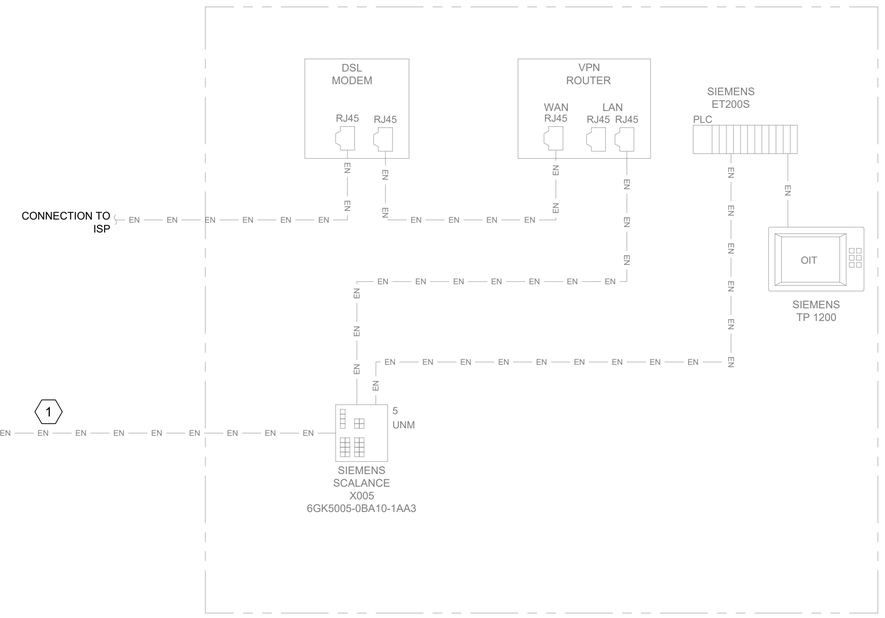

RESTROOM AND STORAGE FACILITY (B02)

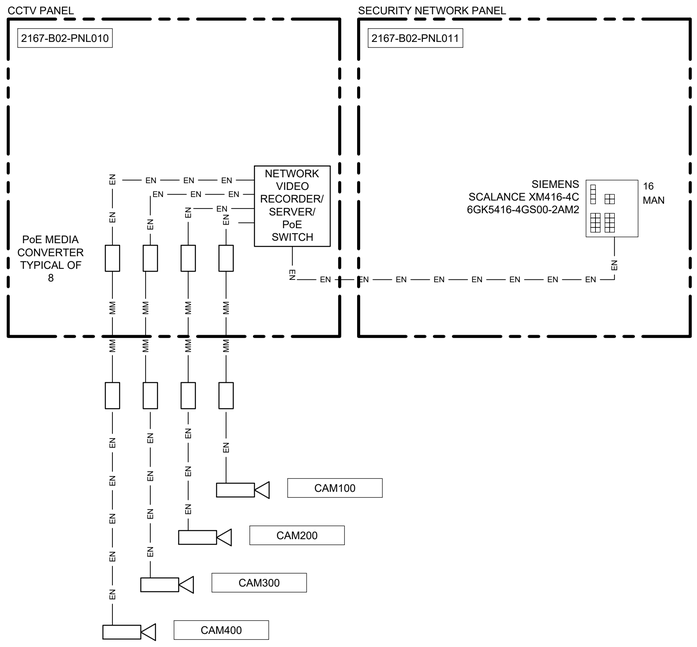

KEY NOTES:

1. USE EXISTING ETHERNET NETWORK CABLE (CAT 6) BETWEEN WELL 1 BUILDING AND THE TREATMENT BUILDING'S BOOSTER CONTROL PANEL.
2. VALVES PROFINET NETWORKED USING BOTH LINE AND STAR TOPOLOGY SHOWN.
3. COORDINATE WITH OWNER ON EXTERNAL AREA NETWORK CONNECTION FOR REMOTE SECURITY MONITORING AND TYPE OF SFP FOR FIBER CONNECTION.
4. FABRICATE PANEL PER SECTION 40 67 00 TO INCLUDE NETWORK SWITCH, DC POWER SUPPLY, 15A SERVICE CIRCUIT BREAKER, GROUND LUG/BAR AND DIN RAIL TO MOUNT DEVICES.

LEGEND:

PLC RACK - 1
FULL PROCESSOR CHASSIS



SWITCH - 1
GENERAL SWITCH OPTIONAL
uu DESCRIPTION INDICATING PORT QTY
zzz UNM=UNMANAGED
MAN=MANAGED



DATA NETWORK PORT - 1



OIT - 1
OPERATOR INTERFACE TERMINAL

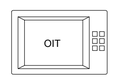

CAMERA



Brown AND Caldwell
PORTLAND, OREGON

Signer Name: Linnea Lubke
Signing Reason: I approved this document
Signing Time: 2025-01-23 12:55:71(EST)

LINNEA S. LUBKE
STATE OF WASHINGTON
38515
REGISTERED PROFESSIONAL ENGINEER

ISSUED FOR BID

CITY OF Vancouver WASHINGTON

WS14 PFAS TREATMENT DESIGN

REVISIONS

REV	DATE	DESCRIPTION

LINE IS 2 INCHES AT FULL SIZE

DESIGNED:	L.LUBKE
DRAWN:	B.NURSUWITO
CHECKED:	J.COOK
CHECKED:	L.LUBKE
APPROVED:	L.LUBKE

FILENAME
I-000-301.dwg

BC PROJECT NUMBER
180318

CLIENT PROJECT NUMBER
PRJ100893

INSTRUMENTATION

WS14 NETWORK DIAGRAM

DRAWING NUMBER
I-000-301

SHEET NUMBER 114 OF 125

Plot Date: 1/15/2025 8:22:47 AM Path: C:\users\djackson\bcgpw\d3450217\I-000-301.dwg

8cb95221a79576f478b7a91d7e713730

GENERAL NOTES

1. EQUIPMENT TAGS PRECEDED BY SITE CODE "2167" AND BY FACILITY CODE AS DESIGNATED ON THE SHEET.
2. REPLACE BOWLS IN PMP100 AND PMP200.

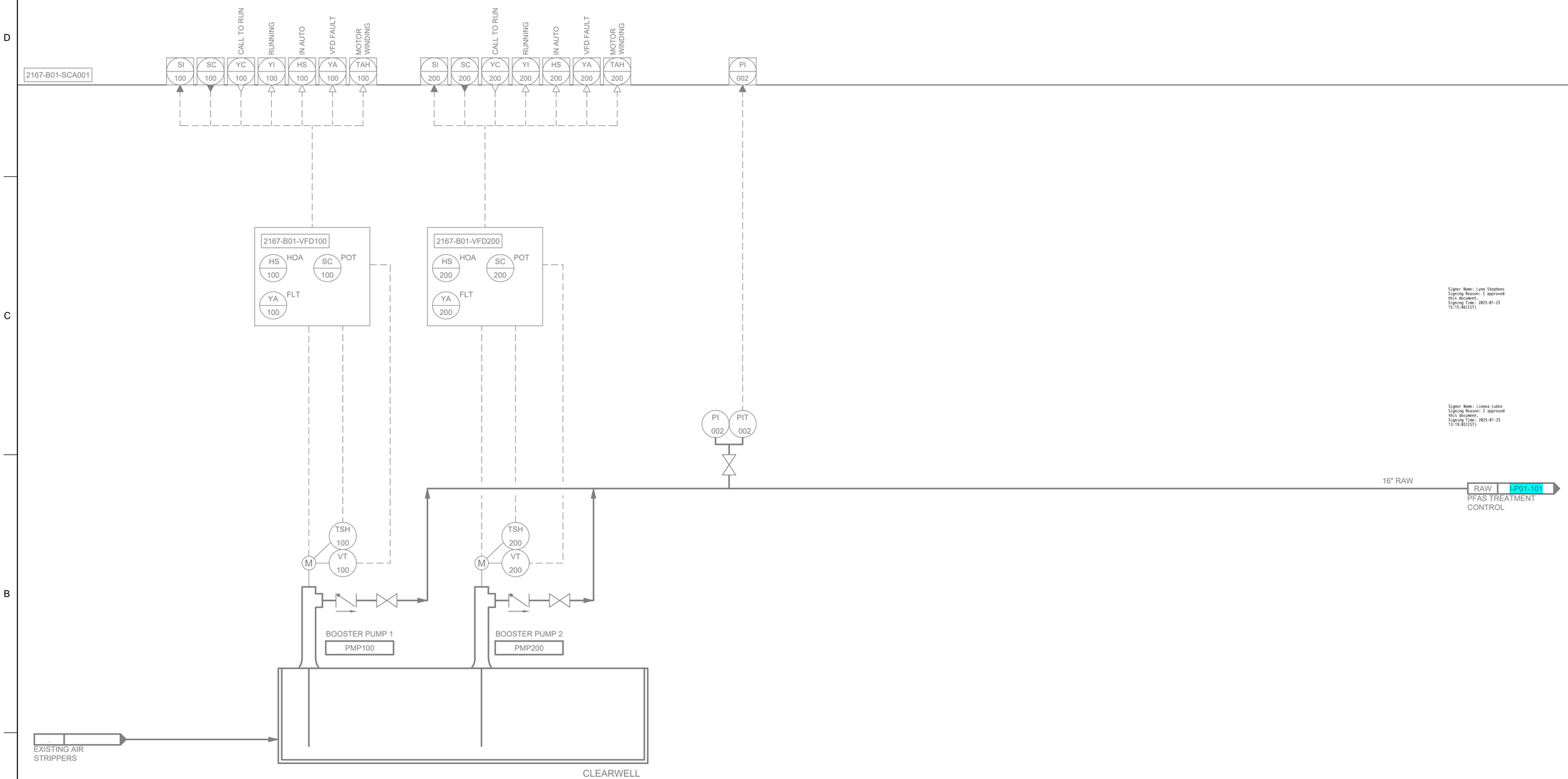

Signer Name: Lyn Stephens
Signing Reason: I approved this document.
Signing Time: 2025-01-25 15:15:46(EST)

Signer Name: Linnea Lubke
Signing Reason: I approved this document.
Signing Time: 2025-01-25 15:19:02(EST)

Brown AND Caldwell
PORTLAND, OREGON

LYNN MICHELLE STEPHENS
STATE OF WASHINGTON
50145
REGISTERED PROFESSIONAL ENGINEER

LINNEA S. LUBKE
STATE OF WASHINGTON
38515
REGISTERED PROFESSIONAL ENGINEER

ISSUED FOR BID

CITY OF Vancouver WASHINGTON

WS14 PFAS TREATMENT DESIGN

REVISIONS

REV	DATE	DESCRIPTION

LINE IS 2 INCHES AT FULL SIZE

DESIGNED: L.LUBKE
DRAWN: B.NURSUWITO
CHECKED: L.LUBKE
CHECKED: M.MAISONVILLE
APPROVED: L.LUBKE

FILENAME
I-B01-101.dwg

BC PROJECT NUMBER
180318

CLIENT PROJECT NUMBER
PRJ100893

INSTRUMENTATION

BOOSTER PUMP

DRAWING NUMBER
I-B01-101

115 SHEET NUMBER OF 125

Plot Date: 12/18/2024 4:54:26 PM Path: c:\bcpw\d3450217\I-B01-101.dwg

03baee9ef7cb0a854128085ebd26cca5

GENERAL NOTES

1. EQUIPMENT TAGS PRECEDED BY SITE CODE "2167" AND BY FACILITY CODE AS DESIGNATED ON THE SHEET.
2. ALL HEAT TRACES SHALL BE FED FROM THE HEAT TRACE PANEL HTP1101.
3. HEAT TRACE WIRING AND INSULATION IS OUTSIDE OF THE VESSEL SUPPLIER SCOPE OF SUPPLY.

KEYNOTES

1 MOTORIZED FLOW CONTROL VALVE FAILS LAST.

2 SOURCE 24 VDC INSTRUMENT POWER FROM SCA002 PANEL.

3 PROFINET DATA LINK BETWEEN FLOW CONTROL VALVE AND SCA002 PANEL.

4 PROVIDE ACTUATOR WITH A LOCAL CONTROL STATION (CS) WITH DEVICES SPECIFIED IN SECTION 40 05 57.23.

5 1-INCH TAP FOR CARBON ACCEPTANCE CONTAINER.

2167-W01-SCA002

LAH 003 | PI 0002 | FI 0103 | ZC 0102 POSITION COMMAND | ZI 0102 POSITION FEEDBACK | YA 0102 FAULT | ZIC 0102 CLOSED POSITION | ZIO 0102 OPEN POSITION | NI 0102 IN REMOTE | FI 0303 | ZC 0302 POSITION COMMAND | ZI 0302 POSITION FEEDBACK | YA 0302 FAULT | ZIC 0302 CLOSED POSITION | ZIO 0302 OPEN POSITION | NI 0302 IN REMOTE | FI 0503 | ZC 0502 POSITION COMMAND | ZI 0502 POSITION FEEDBACK | YA 0502 FAULT | ZIC 0502 CLOSED POSITION | ZIO 0502 OPEN POSITION | NI 0502 IN REMOTE | FI 0012 | ZC 0010 POSITION COMMAND | ZI 0010 POSITION FEEDBACK | YA 0010 FAULT | ZIC 0010 CLOSED POSITION | ZIO 0010 OPEN POSITION | NI 0010 IN REMOTE | PI 0011

2167-B01-SCA001 FI 001

ES-24VDC 2 FIT 0103 FE 0103 | ES-480VAC HK 0102 4 M | 8" RAW | TC 0152 T | 3

10" X 8" | 12" X 10" | 16" X 12" | TC 0052 | TC 0352 T | 16" X 10" | TC 0552 T | 16" X 10"

FCV0102 1

ES-24VDC 2 FIT 0303 FE 0303 | 10" X 8" | ES-480VAC HK 0302 4 M | 8" RAW | 3

FCV0302 1

ES-24VDC 2 FIT 0503 FE 0503 | 10" X 8" | ES-480VAC HK 0502 4 M | 8" RAW

FCV0502 1

8"x10" | 10" RAW | RAW I-P01-102 TO PRESSURE VESSELS F0100 AND F0200

8"x10" | 10" RAW | RAW I-P01-103 TO PRESSURE VESSELS F0300 AND F0400

8"x10" | 10" RAW | RAW I-P01-104 TO PRESSURE VESSELS F0500 AND F0600

Signer Name: Lynn Stephens
Signing Reason: I approved this document.
Signing Time: 2025-01-23 15:15:46(EST)

Signer Name: Linnea Lubke
Signing Reason: I approved this document.
Signing Time: 2025-01-23 15:19:03(EST)

PIT 0002 | 5

1" x4" | 4" X 16" | TC 0151 T | TC 0052 T

PEF I-P01-102 FROM PRESSURE VESSELS F0100 AND F0200 | 10" PEF | 1" SMP | 4" FLUSH | TC 0351 T | 10" X 12" | 12" X 16"

PEF I-P01-103 FROM PRESSURE VESSELS F0300 AND F0400 | 10" PEF | 1" SMP | 4" FLUSH | TC 0551 T | 10" X 16"

PEF I-P01-104 FROM PRESSURE VESSELS F0500 AND F0600 | 10" PEF | 1" SMP | 4" FLUSH | 10" X 16"

5

TC 0051 | TC 0051 T | 16" PEF | 16" RAW | FACILITY CODE: P01 YARD PIPING

TC 0053 T | 16" X 10" | 10" X 8" | 2" | SET @ 40 PSI | 8" RWS

PRV0001

2 ES-24VDC | FIT 0012 | FE 0012 | ES-480VAC HK 0010 4 M | 8" RWS | PIT 0011 | 8"x10"

FCV0010 1

TC 0151 T | 10" RWS | RWS I-P01-102 TO PRESSURE VESSELS F0100 AND F0200

TC 0351 T | 10" RWS | RWS I-P01-103 TO PRESSURE VESSELS F0300 AND F0400

TC 0551 T | 10" RWS | RWS I-P01-104 TO PRESSURE VESSELS F0500 AND F0600

FACILITY CODE: B01 YARD PIPING | RAW I-B01-101 | 16" RAW | 2" | LSH 003 | (N.C.) | SET @ 65 PSI | 16" X 12" | 12" X 16" | (N.C.) | PRV002

VALVE VAULT 3 U03

16" FW | FIT 001 FE 001 M | METER VAULT 1 U01

NaF | NaOCl | INJECTION VAULT U02

FW TO DISTRIBUTION

Path: C:\users\djackson\bcpw\d34502171\I-P01-101.dwg

Plot Date: 1/15/2025 8:34:12 AM

Brown AND Caldwell
PORTLAND, OREGON

LYNN MICHELLE STEPHENS STATE OF WASHINGTON 50145 REGISTERED PROFESSIONAL ENGINEER

LINNEA S. LUBKE STATE OF WASHINGTON 38515 REGISTERED PROFESSIONAL ENGINEER

ISSUED FOR BID

CITY OF Vancouver WASHINGTON

WS14 PFAS TREATMENT DESIGN

REVISIONS

REV	DATE	DESCRIPTION

LINE IS 2 INCHES AT FULL SIZE

DESIGNED:	L.LUBKE
DRAWN:	B.NURSUWITO
CHECKED:	J.COOK
CHECKED:	L.STEPHENS
APPROVED:	L.STEPHENS / L.LUBKE
FILENAME	I-P01-101.dwg
BC PROJECT NUMBER	180318
CLIENT PROJECT NUMBER	PRJ100893

INSTRUMENTATION

PFAS TREATMENT CONTROL

DRAWING NUMBER
I-P01-101

116 SHEET NUMBER OF 125

d642d7bd4b5530baf8c4725e7041bf62

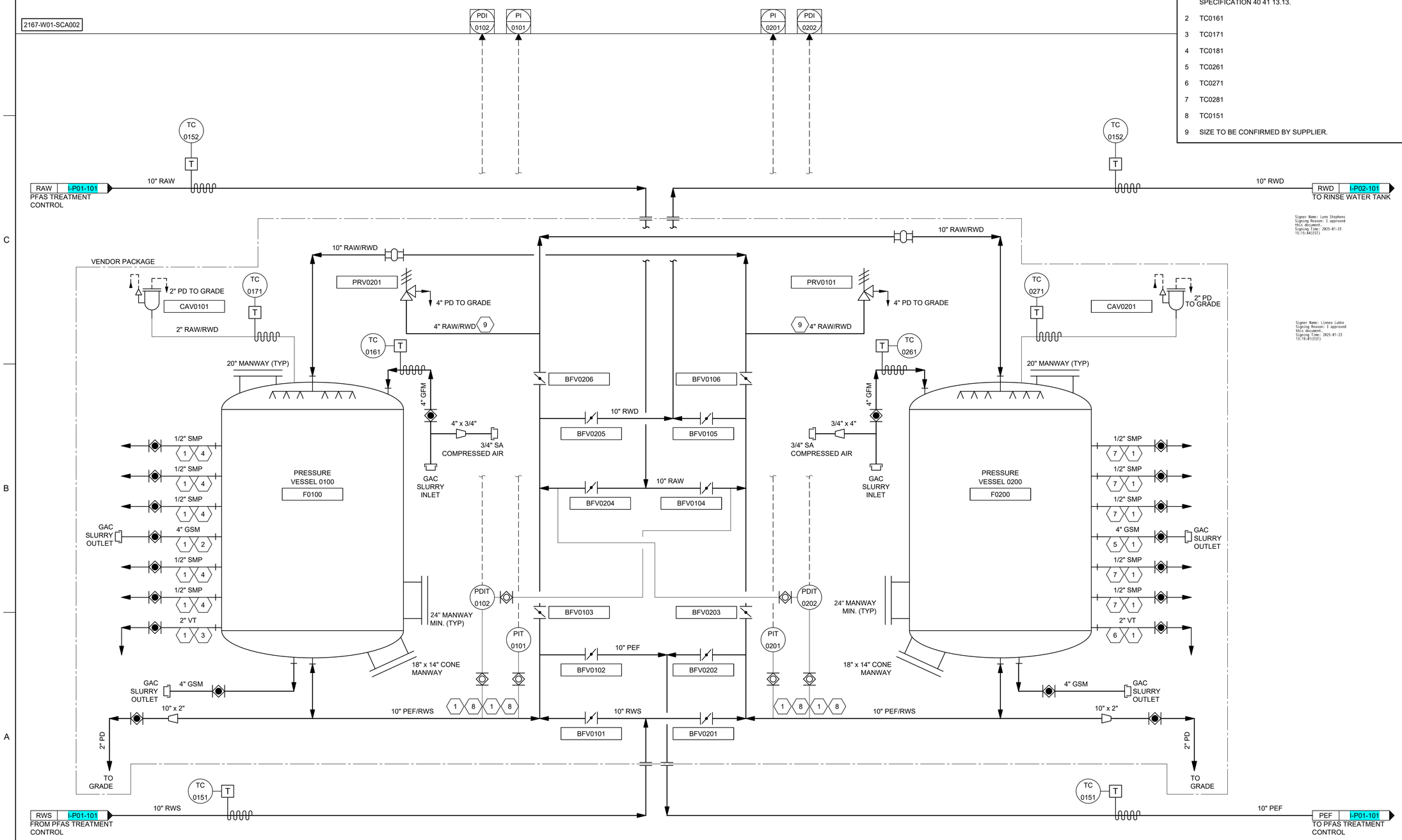

GENERAL NOTES

1. EQUIPMENT TAGS PRECEDED BY SITE CODE "2167" AND BY FACILITY CODE "P01".
2. ALL HEAT TRACES SHALL BE FED FROM THE HEAT TRACE PANEL HTP1101.
3. HEAT TRACE WIRING AND INSULATION IS OUTSIDE OF THE VESSEL SUPPLIER SCOPE OF SUPPLY.

KEYNOTES

1. PIPE AND VALVING TO BE HEAT TRACED PER SPECIFICATION 40 41 13.13.
2. TC0161
3. TC0171
4. TC0181
5. TC0261
6. TC0271
7. TC0281
8. TC0151
9. SIZE TO BE CONFIRMED BY SUPPLIER.

Brown AND Caldwell
PORTLAND, OREGON

LYNN MICHELLE STEPHENS
STATE OF WASHINGTON
50145
REGISTERED PROFESSIONAL ENGINEER

LINNEA S. LUBKE
STATE OF WASHINGTON
38515
REGISTERED PROFESSIONAL ENGINEER

ISSUED FOR BID

CITY OF Vancouver WASHINGTON

WS14 PFAS TREATMENT DESIGN

REVISIONS

REV	DATE	DESCRIPTION

LINE IS 2 INCHES AT FULL SIZE

DESIGNED: L.LUBKE
DRAWN: B.NURSUWITO
CHECKED: J.COOK
CHECKED: L.STEPHENS
APPROVED: L.STEPHENS / L.LUBKE
FILENAME I-P01-102.dwg
BC PROJECT NUMBER 180318
CLIENT PROJECT NUMBER PRJ100893

INSTRUMENTATION

PRESSURE VESSELS F0100 AND F0200

DRAWING NUMBER
I-P01-102

117 SHEET NUMBER OF 125

Path: C:\users\djackson\bcpw\d3450217\I-P01-102.dwg
Plot Date: 1/15/2025 9:18:26 AM

a535efdf486e33d09e1d5a509faaa15a

GENERAL NOTES

1. EQUIPMENT TAGS PRECEDED BY SITE CODE "2167" AND BY FACILITY CODE "P01".
2. ALL HEAT TRACES SHALL BE FED FROM THE HEAT TRACE PANEL HTP1101.
3. HEAT TRACE WIRING AND INSULATION IS OUTSIDE OF THE VESSEL SUPPLIER SCOPE OF SUPPLY.

KEYNOTES

1 PIPE AND VALVING TO BE HEAT TRACED PER SPECIFICATION 40 41 13.13.
2 TC0361
3 TC0371
4 TC0381
5 TC0461
6 TC0471
7 TC0481
8 TC0351
9 SIZE TO BE CONFIRMED BY SUPPLIER.

2167-W01-SCA002

PDI 0302 | PI 0301 | PI 0401 | PDI 0402

TC 0352 — T — 10" RAW — RAW | I-P01-101 — PFAS TREATMENT CONTROL

TC 0352 — T — 10" RWD — RWD | I-P02-101 — TO RINSE WATER TANK

VENDOR PACKAGE

2" PD TO GRADE — CAV0301 — 2" RAW/RWD — TC 0371 — T — 20" MANWAY (TYP)

10" RAW/RWD — PRV0401 — 4" PD TO GRADE — 4" RAW/RWD (9) — TC 0361 — T — 4" GFM — 4" x 3/4" — 3/4" SA COMPRESSED AIR — GAC SLURRY INLET

PRESSURE VESSEL 0300 — F0300

1/2" SMP (1 4) ×4 — 4" GSM (1 2) — GAC SLURRY OUTLET — 1/2" SMP (1 4) ×3 — 2" VT (1 3)

24" MANWAY MIN. (TYP) — 18" x 14" CONE MANWAY (TYP)

PDIT 0302 — PIT 0301

GAC SLURRY OUTLET — 4" GSM — 10" x 2" — 2" PD — TO GRADE

10" PEF/RWS (1 8 1 8)

BFV0406 — BFV0405 — BFV0404 — BFV0303 — BFV0302 — BFV0301

10" RWD — 10" RAW — 10" PEF — 10" RWS

BFV0306 — BFV0305 — BFV0304 — BFV0403 — BFV0402 — BFV0401

10" RAW/RWD — PRV0301 — 4" PD TO GRADE — 4" RAW/RWD (9) — TC 0461 — T — 4" GFM — 3/4" x 4" — 3/4" SA COMPRESSED AIR — GAC SLURRY INLET

PRESSURE VESSEL 0400 — F0400

1/2" SMP (7 1) ×4 — 4" GSM (5 1) — GAC SLURRY OUTLET — 1/2" SMP (7 1) ×3 — 2" VT (6 1)

24" MANWAY MIN. (TYP) — 18" x 14" CONE MANWAY

PDIT 0402 — PIT 0401

GAC SLURRY OUTLET — 4" GSM — 10" x 2" — 2" PD — TO GRADE

10" PEF/RWS (1 8 1 8)

TC 0471 — T — CAV0401 — 2" PD TO GRADE — 20" MANWAY (TYP)

RWS | I-P01-101 — FROM PFAS TREATMENT CONTROL — TC 0351 — T — 10" RWS

10" PEF — PEF | I-P01-101 — TO PFAS TREATMENT CONTROL

Signer Name: Lynn Stephens
Signing Reason: I approved this document.
Signing Time: 2025-01-23 15:15:44(EST)

Signer Name: Linnea Lubke
Signing Reason: I approved this document.
Signing Time: 2025-01-23 15:19:01(EST)

Brown AND Caldwell
PORTLAND, OREGON

LYNN MICHELLE STEPHENS — STATE OF WASHINGTON — 50145 — REGISTERED PROFESSIONAL ENGINEER

LINNEA S. LUBKE — STATE OF WASHINGTON — 38515 — REGISTERED PROFESSIONAL ENGINEER

ISSUED FOR BID

CITY OF Vancouver WASHINGTON

WS14 PFAS TREATMENT DESIGN

REVISIONS

REV	DATE	DESCRIPTION

LINE IS 2 INCHES AT FULL SIZE

DESIGNED: L.LUBKE
DRAWN: B.NURSUWITO
CHECKED: J.COOK
CHECKED: L.STEPHENS
APPROVED: L.STEPHENS / L.LUBKE

FILENAME: I-P01-103.dwg
BC PROJECT NUMBER: 180318
CLIENT PROJECT NUMBER: PRJ100893

INSTRUMENTATION

PRESSURE VESSELS F0300 AND F0400

DRAWING NUMBER
I-P01-103

118 SHEET NUMBER OF 125

Path: C:\users\jackson\bcpwd\345021\I-P01-103.dwg
Plot Date: 1/15/2025 9:58:21 AM

b4eafc774eccaa2f13f68153cfccd438

GENERAL NOTES

1. EQUIPMENT TAGS PRECEDED BY SITE CODE "2167" AND BY FACILITY CODE "P01".
2. ALL HEAT TRACES SHALL BE FED FROM THE HEAT TRACE PANEL HTP1101.
3. HEAT TRACE WIRING AND INSULATION IS OUTSIDE OF THE VESSEL SUPPLIER SCOPE OF SUPPLY.

KEYNOTES

1 PIPE AND VALVING TO BE HEAT TRACED PER SPECIFICATION 40 41 13.13.
2 TC0561
3 TC0571
4 TC0581
5 TC0661
6 TC0671
7 TC0681
8 TC0551
9 SIZE TO BE CONFIRMED BY SUPPLIER.

2167-W01-SCA002

PDI 0502 | PI 0501 | PI 0601 | PDI 0602

TC 0552 (T) — 10" RAW — RAW | I-P01-101 — PFAS TREATMENT CONTROL

TC 0552 (T) — 10" RWD — RWD | I-P02-101 — TO RINSE WATER TANK

VENDOR PACKAGE

2" PD TO GRADE — CAV0501 — TC 0571 (T) — 2" RAW/RWD — 20" MANWAY (TYP)

10" RAW/RWD — PRV0601 — 4" PD TO GRADE — 4" RAW/RWD (9) — TC 0561 (T) — 4" GFM — 4" x 3/4" — 3/4" SA COMPRESSED AIR — GAC SLURRY INLET

PRESSURE VESSEL 0500 — F0500

1/2" SMP (1 4) ×4 — 4" GSM (1 2) — 2" VT (1 3) — GAC SLURRY OUTLET

24" MANWAY MIN. (TYP) — 18" x 14" CONE MANWAY

GAC SLURRY OUTLET — 4" GSM — 10" x 2" — 2" PD — TO GRADE

BFV0606 — BFV0605 — BFV0604 — BFV0503 — BFV0502 — BFV0501

10" RWD — 10" RAW — 10" PEF — 10" PEF/RWS — 10" RWS

BFV0506 — BFV0505 — BFV0504 — BFV0603 — BFV0602 — BFV0601

PRV0501 — 4" PD TO GRADE — 9 4" RAW/RWD — TC 0661 (T) — 4" GFM — 3/4" x 4" — 3/4" SA COMPRESSED AIR — GAC SLURRY INLET

PRESSURE VESSEL 0600 — F0600

1/2" SMP (7 1) ×4 — 4" GSM (5 1) — 2" VT (6 1) — GAC SLURRY OUTLET

24" MANWAY MIN. (TYP) — 18" x 14" CONE MANWAY

PDIT 0502 — PIT 0501 — PIT 0601 — PDIT 0602 — (1 8 1 8)

TC 0671 (T) — CAV0601 — 2" PD TO GRADE — 20" MANWAY (TYP)

GAC SLURRY OUTLET — 4" GSM — 10" x 2" — 2" PD — TO GRADE

TC 0551 (T) — 10" RWS — RWS | I-P01-101 — FROM PFAS TREATMENT CONTROL

TC 0551 (T) — 10" PEF — PEF | I-P01-101 — TO PFAS TREATMENT CONTROL

Signer Name: Lynn Stephens
Signing Reason: I approved this document.
Signing Time: 2025-01-25 15:15:43(EST)

Signer Name: Linnea Lubke
Signing Reason: I approved this document.
Signing Time: 2025-01-25 15:19:01(EST)

Brown AND Caldwell
PORTLAND, OREGON

LYNN MICHELLE STEPHENS — STATE OF WASHINGTON — 50145 — REGISTERED PROFESSIONAL ENGINEER

LINNEA S. LUBKE — STATE OF WASHINGTON — 38515 — REGISTERED PROFESSIONAL ENGINEER

ISSUED FOR BID

CITY OF Vancouver WASHINGTON

WS14 PFAS TREATMENT DESIGN

REVISIONS

REV	DATE	DESCRIPTION

LINE IS 2 INCHES AT FULL SIZE

DESIGNED: L.LUBKE
DRAWN: B.NURSUWITO
CHECKED: J.COOK
CHECKED: L.STEPHENS
APPROVED: L.STEPHENS / L.LUBKE

FILENAME: I-P01-104.dwg
BC PROJECT NUMBER: 180318
CLIENT PROJECT NUMBER: PRJ100893

INSTRUMENTATION

PRESSURE VESSELS F0500 AND F0600

DRAWING NUMBER
I-P01-104

119 SHEET NUMBER OF 125

Plot Date: 1/15/2025 10:13:50 AM Path: C:\users\djackson\bcpwd345021\I-P01-104.dwg

1621dca0d3220f4bc2e8d436024daade

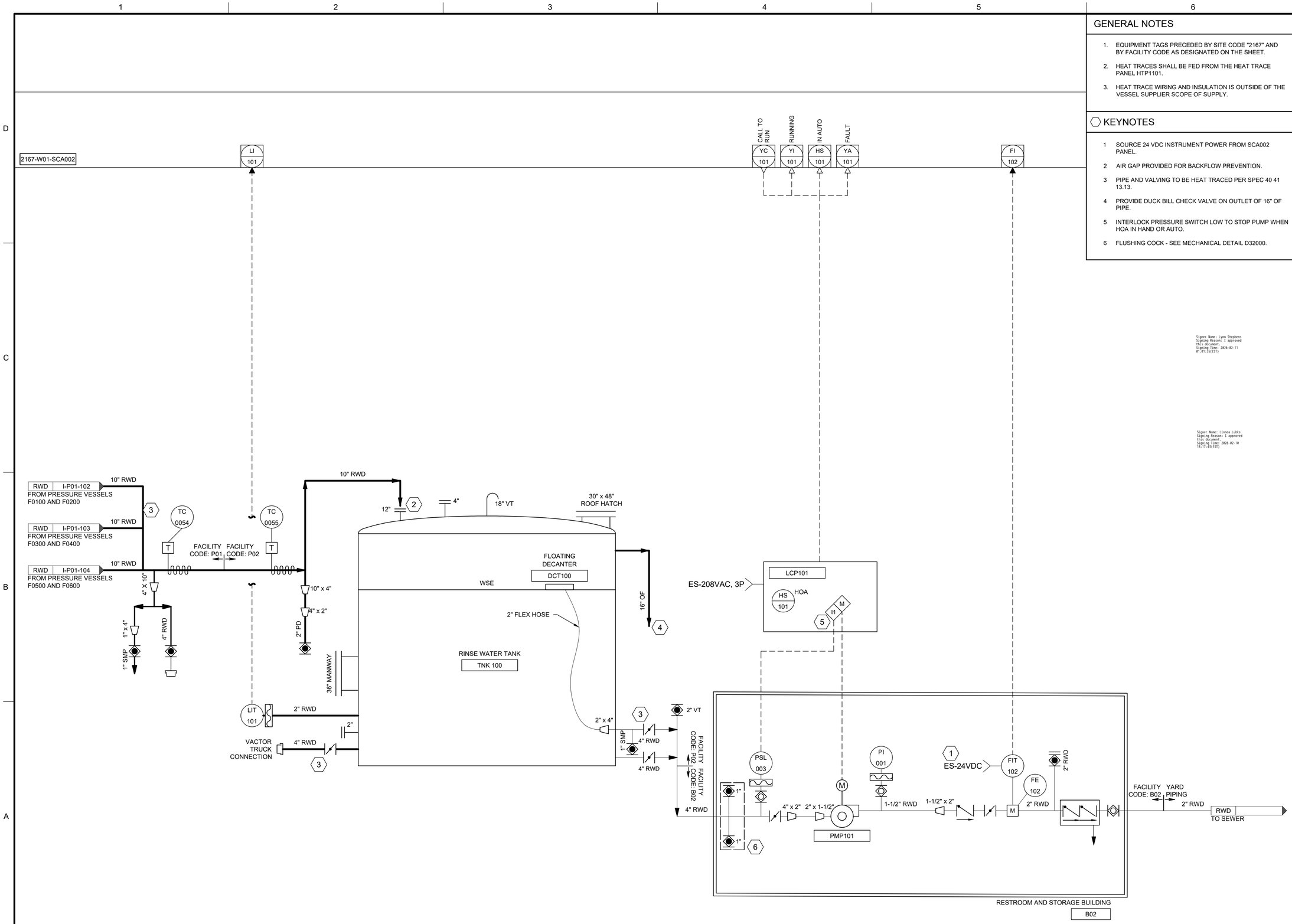

GENERAL NOTES

1. EQUIPMENT TAGS PRECEDED BY SITE CODE "2167" AND BY FACILITY CODE AS DESIGNATED ON THE SHEET.
2. HEAT TRACES SHALL BE FED FROM THE HEAT TRACE PANEL HTP1101.
3. HEAT TRACE WIRING AND INSULATION IS OUTSIDE OF THE VESSEL SUPPLIER SCOPE OF SUPPLY.

KEYNOTES

1. SOURCE 24 VDC INSTRUMENT POWER FROM SCA002 PANEL.
2. AIR GAP PROVIDED FOR BACKFLOW PREVENTION.
3. PIPE AND VALVING TO BE HEAT TRACED PER SPEC 40 41 13.13.
4. PROVIDE DUCK BILL CHECK VALVE ON OUTLET OF 16" OF PIPE.
5. INTERLOCK PRESSURE SWITCH LOW TO STOP PUMP WHEN HOA IN HAND OR AUTO.
6. FLUSHING COCK - SEE MECHANICAL DETAIL D32000.

Signer Name: Lynn Stephens
Signing Reason: I approved this document.
Signing Time: 2026-02-11 01:01:35(EST)

Signer Name: Linnea Lubke
Signing Reason: I approved this document.
Signing Time: 2026-02-10 18:17:43(EST)

Brown AND Caldwell
PORTLAND, OREGON

LYNN MICHELLE STEPHENS
STATE OF WASHINGTON
50145
REGISTERED PROFESSIONAL ENGINEER

LINNEA S. LUBKE
STATE OF WASHINGTON
38515
REGISTERED PROFESSIONAL ENGINEER

ISSUED FOR BID

CITY OF Vancouver WASHINGTON

WS14 PFAS TREATMENT DESIGN

REVISIONS

REV	DATE	DESCRIPTION
0	06/05/25	CONFORMED DRAWINGS

LINE IS 2 INCHES AT FULL SIZE

DESIGNED: L.LUBKE
DRAWN: B.NURSUWITO
CHECKED: J.COOK
CHECKED: L.STEPHENS
APPROVED: L.STEPHENS / L.LUBKE
FILENAME I-P02-101.dwg
BC PROJECT NUMBER 180318
CLIENT PROJECT NUMBER PRJ100893

INSTRUMENTATION

RINSE WATER TANK

DRAWING NUMBER
I-P02-101
SHEET NUMBER
OF

Plot Date: 2/9/2026 10:55:46 AM Path: C:\Users\DJackson\DC\ACCDocs\BC ACC Project Hub\98837 - Vancouver WS14 PFAS Treatment Dsgn\Project Files\300 Design\CAD\012 I\Sheets\I-P02-101.dwg

GENERAL NOTES

1. EQUIPMENT TAGS PRECEDED BY SITE CODE "2167" AND BY FACILITY CODE AS DESIGNATED ON THE SHEET.

KEYNOTES

1 SOURCE 24 VDC INSTRUMENT POWER FROM SCA002 PANEL.

2 SEE THE CIVIL SITE PLAN FOR YARD SANITARY SEWER PIPE ROUTING.

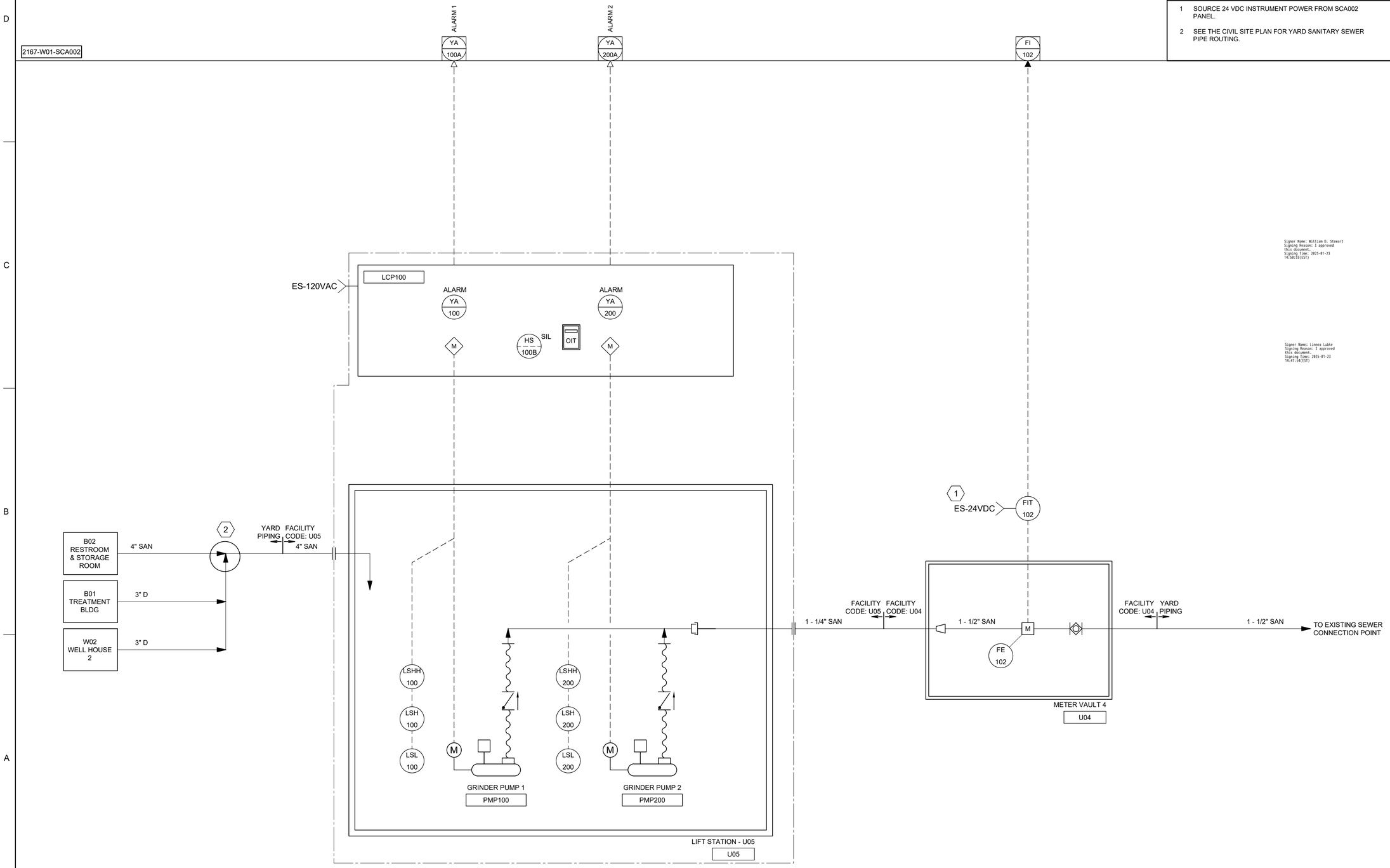

Signer Name: William D. Stewart
Signing Reason: I approved this document.
Signing Time: 2025-01-23 14:58:51(EST)

Signer Name: Linnea Lubke
Signing Reason: I approved this document.
Signing Time: 2025-01-23 14:47:34(EST)

Brown AND Caldwell
PORTLAND, OREGON

WILLIAM D. STEWART
STATE OF WASHINGTON
55266
REGISTERED
PROFESSIONAL ENGINEER

LINNEA S. LUBKE
STATE OF WASHINGTON
38515
REGISTERED
PROFESSIONAL ENGINEER

ISSUED FOR BID

CITY OF Vancouver WASHINGTON

WS14 PFAS TREATMENT DESIGN

REVISIONS

REV	DATE	DESCRIPTION

LINE IS 2 INCHES AT FULL SIZE

DESIGNED:	L.LUBKE
DRAWN:	B.NURSUWITO
CHECKED:	L.LUBKE
CHECKED:	J.COOK
APPROVED:	L.LUBKE

FILENAME
I-U05-101.dwg

BC PROJECT NUMBER
180318

CLIENT PROJECT NUMBER
PRJ100893

INSTRUMENTATION

LIFT STATION GRINDER PUMP

DRAWING NUMBER
I-U05-101

121 SHEET NUMBER OF 125

Plot Date: 1/15/2025 10:50:06 AM Path: C:\users\djackson\bcpw\d34502171-I-U05-101.dwg

175aac670a036668d7c58e71aec69808

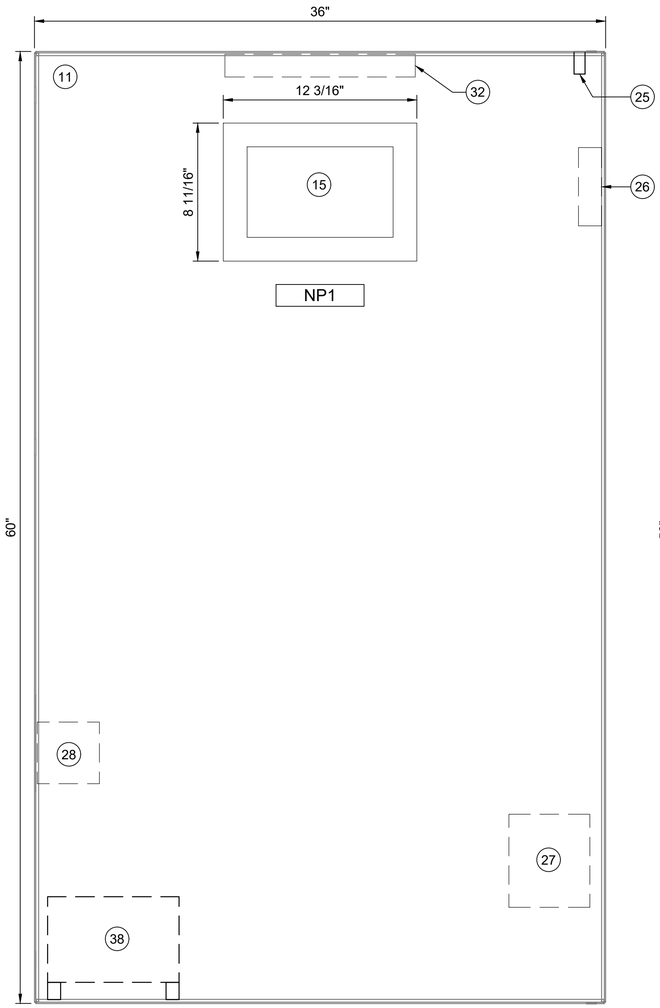

ENCLOSURE EXTERIOR

DETAIL A

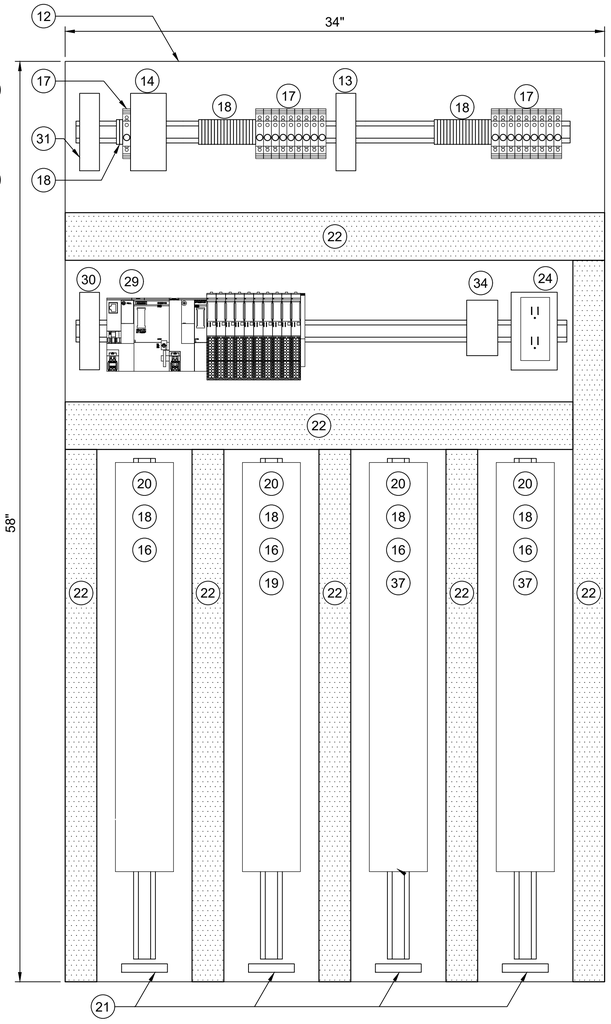

INTERIOR BACK PANEL

DETAIL B

1

PLC BILL OF MATERIALS

ITEM NO.	DESCRIPTION	QUANTITY
1	CENTRAL PROCESSOR UNIT (CPU)	1
2	COMMUNICATION MODULE	1
3	NOT USED	
4	16 CHANNEL DIGITAL INPUT MODULE	3
5	8 CHANNEL DIGITAL OUTPUT MODULE	1
6	8 CHANNEL ANALOG INPUT MODULE	5
7	4 CHANNEL ANALOG OUTPUT MODULE	1
8	IO MODULE BASE UNIT, SEPARATED	8
9	IO MODULE BASE UNIT, JUMPERED	2
10	NOT USED	

PANEL BILL OF MATERIALS

ITEM NO.	DESCRIPTION	QUANTITY
11	ENCLOSURE	1
12	BACK PANEL	1
13	24 VDC POWER SUPPLY	1
14	24 VDC UPS	1
15	OPERATOR INTERFACE TERMINAL	1
16	SURGE PROTECTION DEVICE	A/R
17	CIRCUIT BREAKER	A/R
18	TERMINAL BLOCK	A/R
19	CONTROL RELAY	A/R
20	FUSED TERMINAL BLOCK	A/R
21	GROUND BAR	4
22	WIREWAY (SIZE AS REQUIRED)	A/R
23	DIN RAIL, 35 MM	A/R
24	120 VAC RECEPTACLE	1
25	ENCLOSURE DOOR SWITCH	1
26	EXHAUST	1
27	COOLING FAN	1
28	HEATER	1
29	PLC	KEY NOTE 1
30	NETWORK SWITCH	1
31	DC TO DC CONVERTER, NEC CLASS 2 OUTPUT	1
32	ENCLOSURE LIGHT W/SWITCH	1
33	UPS RECEPTACLE	1
34	THERMOSTAT	1
35	WIREWAY PARTITION	A/R
36	SIDE PANEL	1
37	SIGNAL ISOLATOR	A/R
38	DC BATTERY	A/R

SLOT: 01 02 03 04 05 06 07 08 09 10 11 12

1 CPU	2 COMMUNICATION MODULE	3 DIGITAL INPUT 8-CHANNEL	3 DIGITAL INPUT 8-CHANNEL	4 DIGITAL INPUT 16-CHANNEL	5 DIGITAL OUTPUT 8-CHANNEL	6 ANALOG INPUT 8-CHANNEL	6 ANALOG INPUT 8-CHANNEL	6 ANALOG INPUT 8-CHANNEL	6 ANALOG INPUT 8-CHANNEL	6 ANALOG INPUT 8-CHANNEL	7 ANALOG OUTPUT 4-CHANNEL
		8 BASE UNIT SEPARATED	9 BASE UNIT JUMPERED	9 BASE UNIT JUMPERED	8 BASE UNIT SEPARATED	8 BASE UNIT SEPARATED	8 BASE UNIT SEPARATED	8 BASE UNIT SEPARATED	8 BASE UNIT SEPARATED	8 BASE UNIT SEPARATED	8 BASE UNIT SEPARATED

PLC RACK LAYOUT

NAMEPLATE SCHEDULE

NPX	LINE 1	LINE 2	LINE 3
NP1	2167-W01-SCA002	PFAS TREATMENT	PLC PANEL

GENERAL NOTES:

1. THIS DRAWING IS GENERAL IN NATURE AND DEPICTS GENERAL PANEL LAYOUT AND FABRICATION REQUIREMENTS FOR THE APPLICABLE CONTROL PANEL. FABRICATE PANEL IN ACCORDANCE WITH SECTIONS 40 67 00 AND 40 63 43.

KEY NOTES:

1 PLC BILL OF MATERIALS LISTS MAIN PLC COMPONENTS. REFER TO SECTION 40 63 43 FOR DETAILS AND ACCESSORIES.

Signer Name: Linnea Lubke
Signing Reason: I approved this document.
Signing Time: 2025-01-23 14:46:36(EST)

Brown AND Caldwell
PORTLAND, OREGON

LINNEA S. LUBKE
STATE OF WASHINGTON
38515
REGISTERED PROFESSIONAL ENGINEER

ISSUED FOR BID

CITY OF Vancouver WASHINGTON

WS14 PFAS TREATMENT DESIGN

REVISIONS

REV	DATE	DESCRIPTION

LINE IS 2 INCHES AT FULL SIZE

DESIGNED: L.LUBKE
DRAWN: B.NURSUWITO
CHECKED: L.LUBKE
CHECKED: J.COOK
APPROVED: L.LUBKE

FILENAME
I-W01-201.dwg
BC PROJECT NUMBER
180318
CLIENT PROJECT NUMBER
PRJ100893

INSTRUMENTATION

WELL 1 PLC PANEL LAYOUT

DRAWING NUMBER
I-W01-201

122 SHEET NUMBER OF 125

Plot Date: 1/15/2025 11:06:23 AM Path: C:\users\djackson\bcpwd\d345021\i-W01-201.dwg

1cc9fdc65d165f8ffd8261e2640bde68

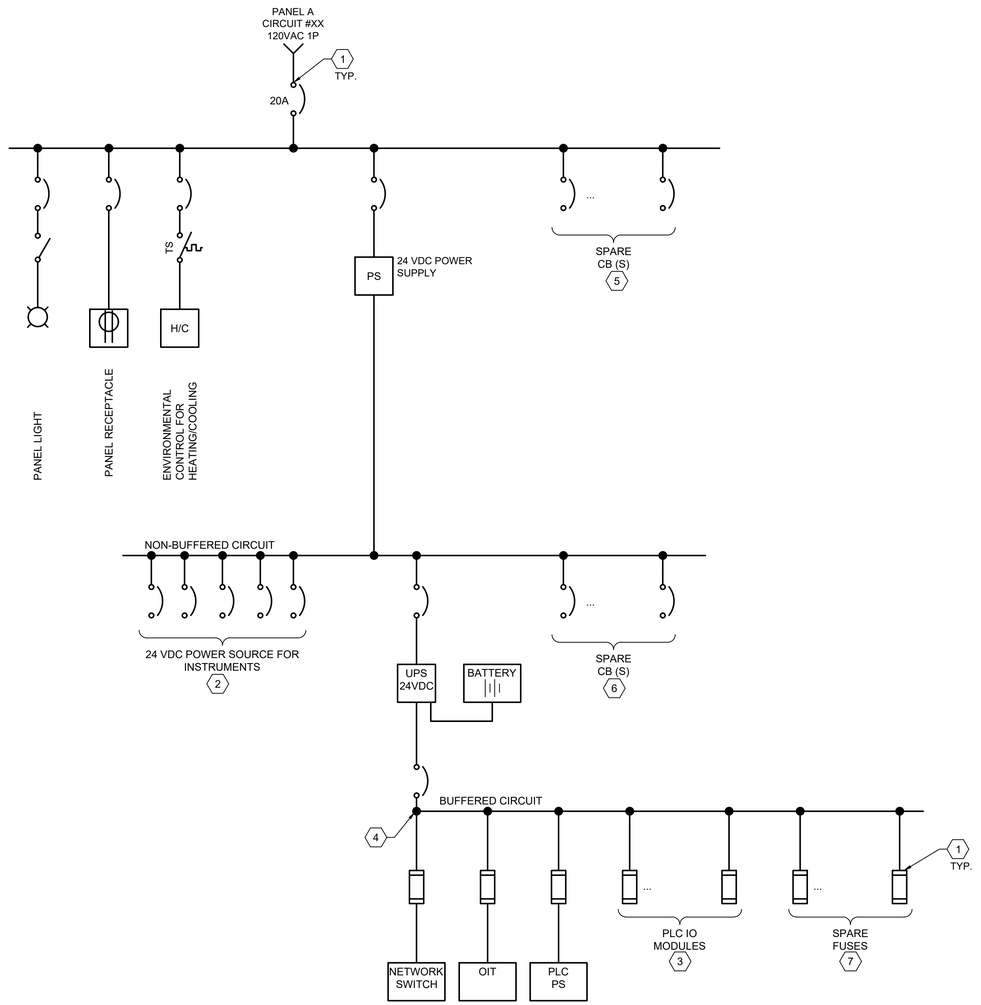

ONE-LINE
SCALE: NTS

GENERAL NOTES:

1. PROVIDE CUSTOM FABRICATED PANEL PER SECTION 40 67 00.
2. SOURCE 120 VAC POWER PER ELECTRICAL DRAWINGS.

KEY NOTES:

1 SIZE ALL CIRCUIT BREAKERS AND FUSES BASED ON LOAD NEC.

2 PROVIDE SEPARATE CIRCUIT BREAKER FOR EACH INSTRUMENT WITH 24 VDC POWER IDENTIFIED IN SECTION 40 06 70.

3 PROVIDE EACH PLC IO MODULE WITH SEPARATE FUSE.

4 PROVIDE DC/DC CONVERTER FOR CLASS 2 POWER IF REQUIRED BY LOAD'S PRODUCT MANUFACTURER.

5 PROVIDE SPARE CIRCUIT BREAKERS FOR 120 VAC POWER DISTRIBUTION.

6. PROVIDE SPARE CIRCUIT BREAKERS FOR NON-BUFFERED 24 VDC POWER DISTRIBUTION.

7 PROVIDE SPARE FUSES FOR BUFFERED 24 VDC (UPS) POWER DISTRIBUTION.

Brown AND Caldwell
PORTLAND, OREGON

Signer Name: Linnea Lubke
Signing Reason: I approved this document
Signing Time: 2025-01-23 12:55:72(EST)

LINNEA S. LUBKE
STATE OF WASHINGTON
38515
REGISTERED PROFESSIONAL ENGINEER

ISSUED FOR BID

CITY OF Vancouver WASHINGTON

WS14 PFAS TREATMENT DESIGN

REVISIONS

REV	DATE	DESCRIPTION

LINE IS 2 INCHES AT FULL SIZE

DESIGNED:	L.LUBKE
DRAWN:	B.NURSUWITO
CHECKED:	L.LUBKE
CHECKED:	J.COOK
APPROVED:	L.LUBKE

FILENAME
I-W01-801.dwg
BC PROJECT NUMBER
180318
CLIENT PROJECT NUMBER
PRJ100893

INSTRUMENTATION

WELL 1 PLC PANEL POWER DISTRIBUTION

DRAWING NUMBER
I-W01-801

SHEET NUMBER 123 OF 125

Plot Date: 1/15/2025 11:10:51 AM Path: C:\users\djackson\bcpw\d3450217\I-W01-801.dwg

0c001cd28fa4d9e3ad0b98c82b5b4028

DISCRETE INPUT TYPICAL WIRING

FIELD

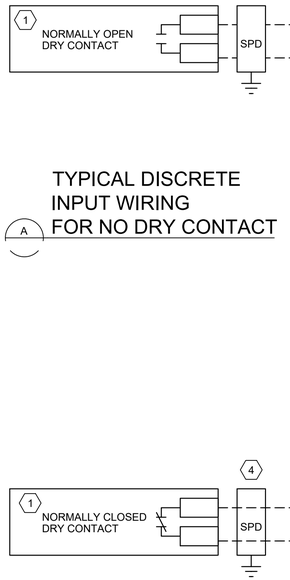

TYPICAL DISCRETE
INPUT WIRING
FOR NO DRY CONTACT
A

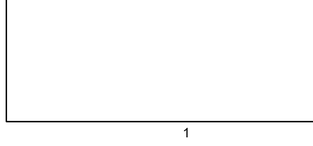

TYPICAL DISCRETE
INPUT WIRING
FOR NC DRY CONTACT
B

PLC/RIO PANEL

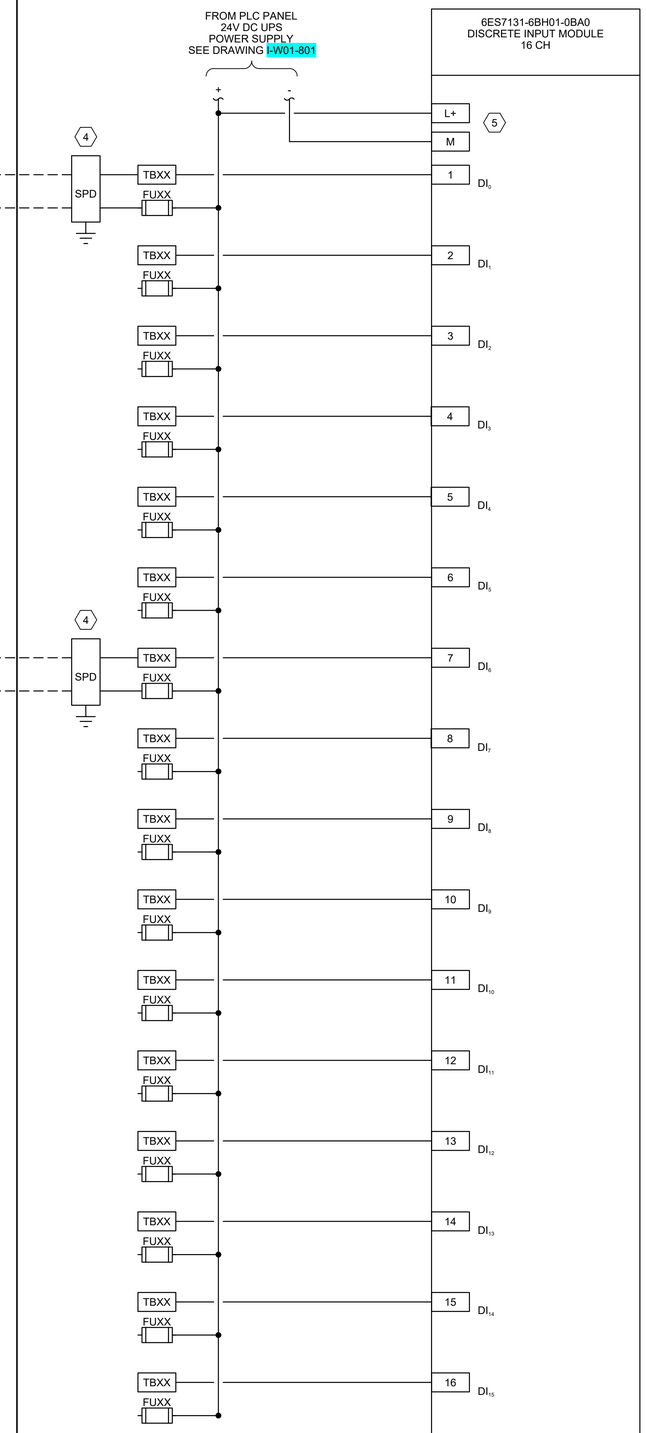

DISCRETE OUTPUT TYPICAL WIRING

FIELD

TYPICAL DISCRETE
OUTPUT WIRING
FOR NO DRY CONTACT
C

TYPICAL DISCRETE
OUTPUT WIRING
FOR NC DRY CONTACT
D

PLC/RIO PANEL

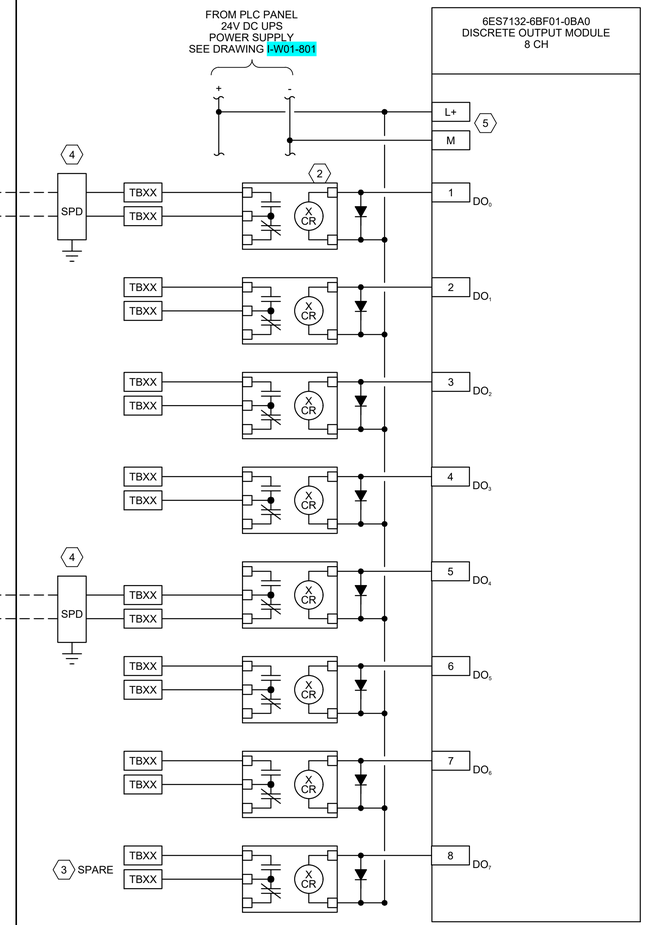

GENERAL NOTES

1. I/O CARD WIRING SHOWN ON THIS DRAWING IS BASED ON SIEMENS ET 200SP IO MODULES SPECIFIED IN SECTION 40 63 43. THIS DRAWING IS GENERAL IN NATURE AND DEPICTS TYPICAL APPROACHES FOR DISCRETE INPUT AND OUTPUT MODULE WIRING. CONTRACTOR IS RESPONSIBLE FOR GENERATING UNIQUE DRAWINGS FOR EACH MODULE BASED ON SECTION 40 61 93A INPUT/OUTPUT LIST.
2. PROVIDE EXTERNAL WIRE NUMBERS PER SECTION 26 05 00. PROVIDE INTERNAL WIRE NUMBERS PER SECTION 40 67 00.

KEYNOTES

1 SHOW I/O TAG ASSOCIATED WITH FIELD DEVICE FOR ALL USED CONTACTS

2 COORDINATE THE PLC PANEL RELAY CONTACT RATING WITH THE FIELD LOAD REQUIREMENT

3 SPARE DISCRETE OUTPUTS ARE SHOWN CONNECTED TO A NORMALLY OPEN CONTACT. MODIFY WIRING TO NORMALLY CLOSED CONTACT AS REQUIRED BY THE APPLICATION

4 PROVIDE SURGE PROTECTION ACCORDING TO DIVISION 40 FOR OUTDOOR FIELD LOCATED INSTRUMENTS AT FIELD AND PANEL

5 LIGHT COLOR BASE UNITS SHOWN.

Brown AND Caldwell
PORTLAND, OREGON

Signer Name: Linnea Lubke
Signing Reason: I approved this document
Signing Time: 2025-01-25 12:55:12(EST)

LINNEA S. LUBKE
STATE OF WASHINGTON
38515
REGISTERED PROFESSIONAL ENGINEER

ISSUED FOR BID

CITY OF Vancouver WASHINGTON

WS14 PFAS TREATMENT DESIGN

REVISIONS

REV	DATE	DESCRIPTION

LINE IS 2 INCHES AT FULL SIZE

DESIGNED:	L.LUBKE
DRAWN:	B.NURSUWITO
CHECKED:	L.LUBKE
CHECKED:	J.COOK
APPROVED:	L.LUBKE

FILENAME
I-W01-802.dwg

BC PROJECT NUMBER
180318

CLIENT PROJECT NUMBER
PRJ100893

INSTRUMENTATION

WELL 1 TYPICAL DISCRETE INTERCONNECTION DIAGRAM

DRAWING NUMBER
I-W01-802

124 SHEET NUMBER OF 125

Plot Date: 1/15/2025 11:20:54 AM Path: C:\users\djackson\bcpw\d3450217\I-W01-802.dwg

ddb3dffbafd9f45473cc918d483f692f

ANALOG INPUT TYPICAL WIRING

FIELD

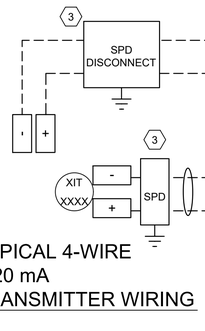

TYPICAL 4-WIRE
4-20 mA
TRANSMITTER WIRING
A

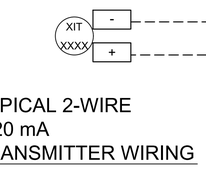

TYPICAL 2-WIRE
4-20 mA
TRANSMITTER WIRING
B

PLC/RIO PANEL

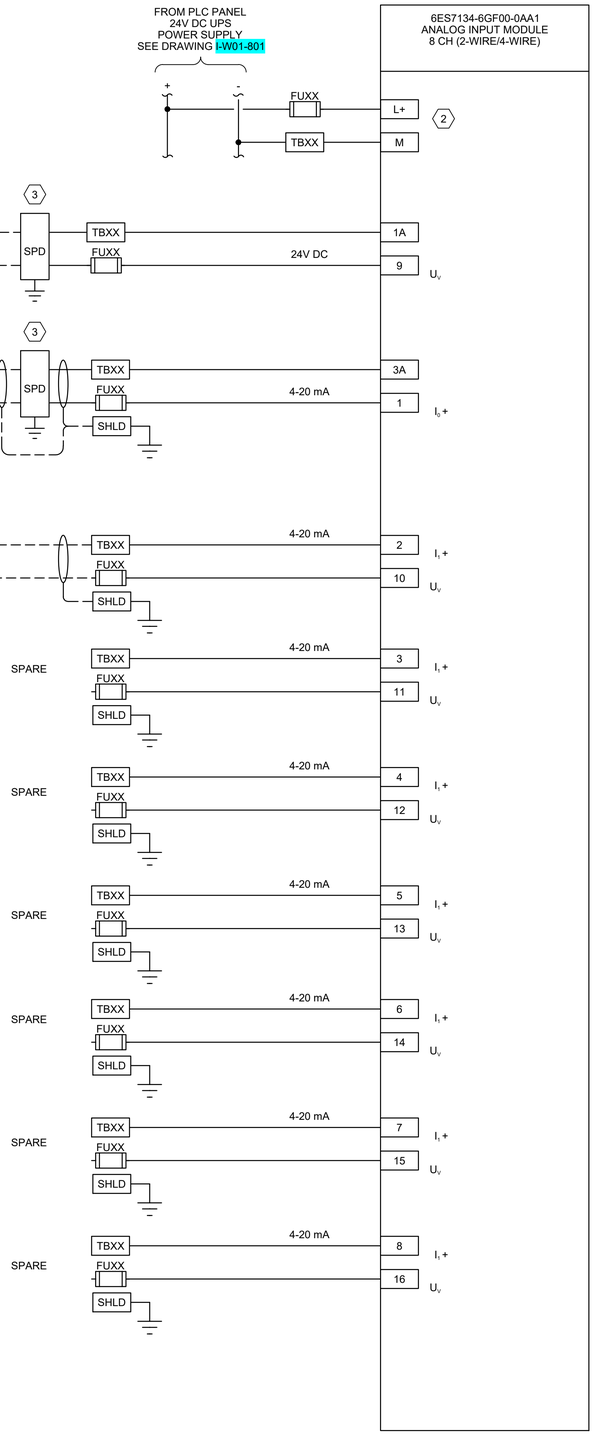

ANALOG OUTPUT TYPICAL WIRING

FIELD

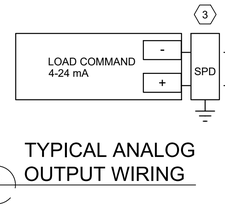

TYPICAL ANALOG
OUTPUT WIRING
C

PLC/RIO PANEL

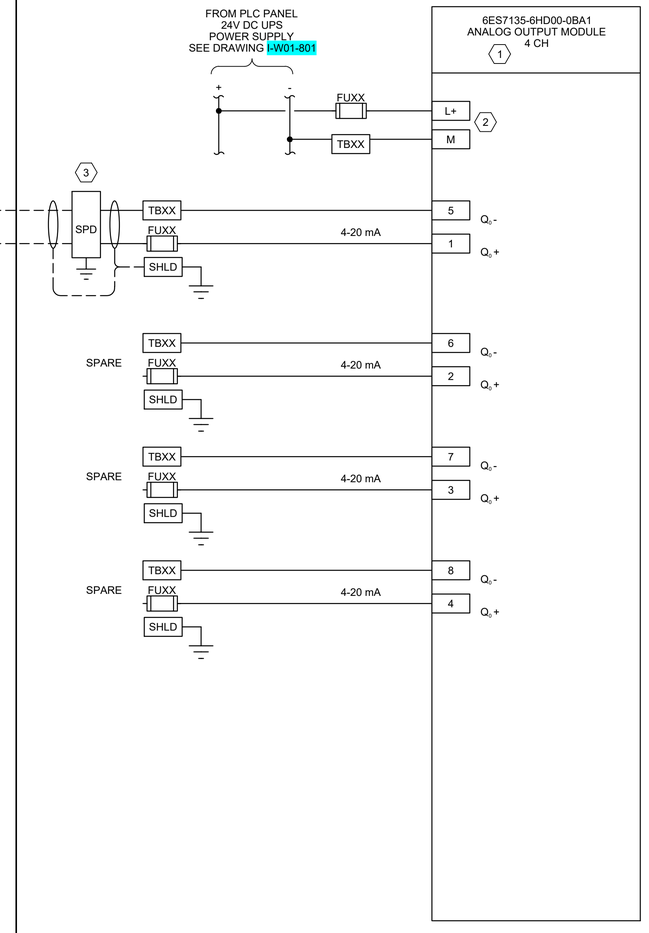

GENERAL NOTES

1. I/O CARD WIRING SHOWN ON THIS DRAWING IS BASED ON SIEMENS ET 200SP IO MODULES SPECIFIED IN SECTION 40 63 43. THIS DRAWING IS GENERAL IN NATURE AND DEPICTS TYPICAL APPROACHES FOR ANALOG INPUT AND OUTPUT MODULE WIRING. CONTRACTOR IS RESPONSIBLE FOR GENERATING UNIQUE DRAWINGS FOR EACH MODULE BASED ON SECTION 40 61 93A INPUT/OUTPUT LIST.
2. PROVIDE EXTERNAL WIRE NUMBERS PER SECTION 26 05 00. PROVIDE INTERNAL WIRE NUMBERS PER SECTION 40 67 00.

KEYNOTES

1 IS ELECTRICALLY ISOLATED FROM SUPPLY VOLTAGE L+.

2 LIGHT COLOR BASE UNITS SHOWN WITH ANALOG INPUT INCLUDING AUX TERMINALS.

3 PROVIDE SURGE PROTECTION ACCORDING TO DIVISION 40 FOR OUTDOOR FIELD LOCATED INSTRUMENTS AT FIELD AND PANEL.

Brown AND Caldwell
PORTLAND, OREGON

Signer Name: Linnea Lubke
Signing Reason: I approved this document.
Signing Time: 2025-01-23 12:35:12(EST)

LINNEA S. LUBKE
STATE OF WASHINGTON
38515
REGISTERED PROFESSIONAL ENGINEER

ISSUED FOR BID

CITY OF Vancouver WASHINGTON

WS14 PFAS TREATMENT DESIGN

REVISIONS

REV	DATE	DESCRIPTION

LINE IS 2 INCHES AT FULL SIZE

DESIGNED:	L.LUBKE
DRAWN:	B.NURSUWITO
CHECKED:	L.LUBKE
CHECKED:	J.COOK
APPROVED:	L.LUBKE

FILENAME
I-W01-803.dwg

BC PROJECT NUMBER
180318

CLIENT PROJECT NUMBER
PRJ100893

INSTRUMENTATION

WELL 1 TYPICAL ANALOG INTERCONNECTION DIAGRAM

DRAWING NUMBER
I-W01-803

SHEET NUMBER 125 OF 125

Plot Date: 1/15/2025 11:31:31 AM Path: C:\users\djackson\bcpw\d3450217\I-W01-803.dwg

d65faa92519993f022c1e52d55be0e0c