PROJECT TABLE OF CONTENTS

DIVISION 00 - PROCUREMENT AND CONTRACTING REQUIREMENTS

00 01 15.00 28 LIST OF DRAWINGS

DIVISION 01 - GENERAL REQUIREMENTS

01 00 00.00 28 GENERAL REQUIREMENTS
01 11 01.00 28 SUPPLEMENTARY REQUIREMENTS
01 14 00.10 28 PROJECT SITE RESTRICTIONS
01 14 00.90 28 INTEGRATING ANTITERRORISM (AT) AND OPERATIONS SECURITY (OPSEC)
01 22 00.00 28 MEASUREMENT AND PAYMENT
01 32 01.00 28 PROJECT SCHEDULE
01 33 00 SUBMITTAL PROCEDURES
01 35 29.10 28 GOVERNMENTAL SAFETY REQUIREMENTS
01 42 00 SOURCES FOR REFERENCE PUBLICATIONS
01 45 01.00 28 RESIDENT MANAGEMENT SYSTEM CONTRACTOR MODE (RMS CM)
01 45 04.00 28 CONTRACTOR QUALITY CONTROL
01 51 00.00 28 TEMPORARY UTILITIES
01 55 10.00 28 CONTRACTOR WORK, ACCESS AND STORAGE AREAS
01 57 20.00 28 ENVIRONMENTAL PROTECTION
01 78 00.00 28 CLOSEOUT SUBMITTALS

DIVISION 03 - CONCRETE

03 01 00.01 28 CONCRETE SECTION ENLARGEMENT
03 01 00.02 28 FORM AND PUMP PLACEMENT
03 30 00.00 28 SELF-CONSOLIDATING CONCRETE (SCC)
03 60 00.01 28 CONCRETE DRILLING AND PATCHING

-- End of Project Table of Contents --

THIS PAGE INTENTIONALLY LEFT BLANK

SECTION TABLE OF CONTENTS

DIVISION 00 - PROCUREMENT AND CONTRACTING REQUIREMENTS

SECTION 00 01 15.00 28

LIST OF DRAWINGS

PART 1 GENERAL

1.1 SUMMARY
1.2 CONTRACT DRAWINGS
1.2.1 Use Of Government Prepared Contract CAD Electronic Files
1.3 RESOURCE DRAWINGS (R)

-- End of Section Table of Contents --

THIS PAGE INTENTIONALLY LEFT BLANK

SECTION 00 01 15.00 28

LIST OF DRAWINGS

PART 1 GENERAL

1.1 SUMMARY

This section lists the drawings for the project pursuant to contract clause "DFARS 252.236-7001, Contract Drawings, Maps and Specifications."

1.2 CONTRACT DRAWINGS

Contract drawings are as follows:

SHEET NUMBER	DESCRIPTION	FILE NUMBER	Rev. Num.	Date
GENERAL				
G-001	COVER SHEET AND LOCATION MAPS	MDG-1-0-0/655		
G-002	INDEX	MDG-1-0-0/656		
G-101	OVERALL SITE PLAN	MDG-1-0-0/657		
G-102	PLAN MAIN UNITS ASSEMBLY BAY THRU UNIT 6	MDG-1-0-0/658		
G-103	PLAN UNIT 7 THRU UNIT 14	MDG-1-0-0/659		
STRUCTURAL				
SD301	EXISTING CONDITIONS	MDP-1-5-2/40		
S-301	CONCRETE SECTION ENLARGEMENT	MDP-1-5-2/41		
S-302	CRACK REPAIR	MDP-1-5-2/42		
S-901	PHOTOS	MDP-1-5-2/43		
S-902	PHOTOS	MDP-1-5-2/44		
S-903	PHOTOS	MDP-1-5-2/45		

SHEET NUMBER	DESCRIPTION	FILE NUMBER	Rev. Num.	Date
S-904	PHOTOS	MDP-1-5-2/46		

1.2.1 Use Of Government Prepared Contract CAD Electronic Files

a. No Resource (R)("For Information Only") drawings are available on CAD.

b. The Contractor assumes all risks associated in using electronic CAD drawings.

c. Electronic copies of CAD drawings are only available in Bentley DGN format.

d. The contract drawings shall govern if there are any discrepancies between the electronic copy and the contract drawing. The Contractor shall promptly notify the Contracting Officer of any discrepancies. The Government will not be responsible to correct the electronic CAD drawing.

1.3 RESOURCE DRAWINGS (R)

These R drawings are included with the drawings for information only. The Government does not warrant the accuracy of the R drawings. The Government recommends that the Contractor verify the accuracy of R drawings.

Resource (R) drawings are as follows:

SHEET NUMBER	DESCRIPTION	FILE NUMBER	Rev. Num.	Date
RESOURCE				
R-001	POWERHOUSE STRUCTURAL STA. 41+85.00 TO STA. 45+62.00 PLAN OF ROOF AND INTAKE DECK	MDP-1-4-0/1		
R-002	POWERHOUSE STRUCTURAL STA. 45+62 TO STA. 56+07 PLAN OF ROOF AND INTAKE DECK	MDP-1-4-0/31		
R-003	POWERHOUSE CONCRETE OUTLINE ASSEMBLY BAY - INTAKE PLAN - EL. 361.0	MDP-2-4-0/1		
R-004	POWERHOUSE CONCRETE OUTLINE ASSEMBLY BAY - INTAKE SECTIONS	MDP-2-4-0/12		
R-005	POWERHOUSE CONCRETE OUTLINE ASSEMBLY BAY - INTAKE SECTIONS	MDP-2-4-0/13		

SHEET NUMBER	DESCRIPTION	FILE NUMBER	Rev. Num.	Date
R-006	POWERHOUSE CONCRETE OUTLINE MAIN UNIT BAY - INTAKE DECK PLAN EL. 361.0 - SH.2	MDP-2.1-4-0/346		
R-007	POWERHOUSE CONCRETE OUTLINE MAIN UNIT BAY - INTAKE SECT. THRU BASE SLAB AND DECK SLAB	MDP-2.1-4-0/356		
R-008	POWERHOUSE REINFORCEMENT ASSEMBLY BAY - INTAKE DECK SLAB - EL. 361.00	MDP-2-4-0/120		
R-009	POWERHOUSE REINFORCEMENT STA, SERVICE BAY - INTAKE DECK SLAB EL. 361.0	MDP-2-4-0/221		
R-010	POWERHOUSE REINFORCEMENT MAIN UNIT BAY - INTAKE DECK SLAB EL. 361.0	MDP-2-4-0/222		
R-011	POWERHOUSE REINFORCEMENT MAIN UNIT BAY - INTAKE DECK SLAB EL. 361.0	MDP-2.1-4-0/432		
R-012	POWERHOUSE STATION SERVICE BAY TYPICAL REINFORCEMENT	MDP-8-9-0/11		
R-013	POWERHOUSE MECHANICAL EMBEDDED PIPING MAIN UNIT BAY - INTAKE DECK PLAN AND SECTIONS	MDP-2-3-8/16		
R-014	POWERHOUSE MECHANICAL EMBEDDED PIPING SUBSTRUCTURE OF MAIN UNITS NO. 3 TO 14 INCL. - TRANSC. SECT.	MDP-2.1-3-8/31		
R-015	CONSTRUCTION BASE LINE INSTRUMENTATION INSERTS	98MCNCBL.DGN		
R-016	ICE/TRASH COLLECTION CHANNEL BULKHEADS - ELEVATION AND DETAILS	2205-69-E1		
R-017	ICE/TRASH COLLECTION CHANNEL BULKHEADS - GRATING COVERS	MDP-1-5-4/16		
R-018	PERMANENT JUVENILE FISH FACILITIES - COLLECTION CHANNEL AND PRIMARY DEWATERING - PLAN AND SECTION	MDF-1-5-9/31		
R-019	PERMANENT JUVENILE FISH FACILITIES - COLLECTION CHANNEL - PLANS	MDF-1-5-9/32		
R-020	PERMANENT JUVENILE FISH FACILITIES - COLLECTION CHANNEL - SECTIONS AND DETAILS I	MDF-1-5-9/33		
R-021	PERMANENT JUVENILE FISH FACILITIES - COLLECTION CHANNEL - SECTIONS AND DETAILS II	MDF-1-5-9/34		
R-022	PERMANENT JUVENILE FISH FACILITIES - COLLECTION CHANNEL - SECTIONS AND DETAILS III	MDF-1-5-9/35		

SHEET NUMBER	DESCRIPTION	FILE NUMBER	Rev. Num.	Date
R-023	PERMANENT JUVENILE FISH FACILITIES - COLLECTION CHANNEL - SECTIONS AND DETAILS IV	MDF-1-5-9/36		
R-024	PERMANENT JUVENILE FISH FACILITIES - SIDE DEWATERING - PLAN AND SECTION	MDF-1-5-9/37		
R-025	PERMANENT JUVENILE FISH FACILITIES - SIDE DEWATERING - SECTIONS AND DETAILS I	MDF-1-5-9/38		
R-026	PERMANENT JUVENILE FISH FACILITIES - SIDE DEWATERING - SECTIONS AND DETAILS II	MDF-1-5-9/39		
R-027	PERMANENT JUVENILE FISH FACILITIES - SIDE DEWATERING - SECTIONS AND DETAILS III	MDF-1-5-9/40		
R-028	PERMANENT JUVENILE FISH FACILITIES - SIDE DEWATERING - SECTIONS AND DETAILS IV	MDF-1-5-9/41		
R-029	PERMANENT JUVENILE FISH FACILITIES - FLOOR DEWATERING - PLAN AND SECTION	MDF-1-5-9/42		
R-030	PERMANENT JUVENILE FISH FACILITIES - FLOOR DEWATERING - SECTIONS AND DETAILS I	MDF-1-5-9/43		
R-031	PERMANENT JUVENILE FISH FACILITIES - FLOOR DEWATERING - SECTIONS AND DETAILS II	MDF-1-5-9/44		
R-032	PERMANENT JUVENILE FISH FACILITIES - FLOOR DEWATERING - SECTIONS AND DETAILS III	MDF-1-5-9/45		
R-033	PERMANENT JUVENILE FISH FACILITIES - FLOOR DEWATERING - SECTIONS AND DETAILS IV	MDF-1-5-9/46		
R-034	PERMANENT JUVENILE FISH FACILITIES - ACCESS STAIRS AND PLATFORMS - PLAN, ELEVATION, AND SECTIONS	MDF-1-5-9/49		
R-035	PERMANENT JUVENILE FISH FACILITIES - ACCESS STAIRS AND PLATFORMS - SECTIONS AND DETAILS	MDF-1-5-9/50		

-- End of Document --

SECTION TABLE OF CONTENTS

DIVISION 01 - GENERAL REQUIREMENTS

SECTION 01 00 00.00 28

GENERAL REQUIREMENTS

PART 1 GENERAL

1.1 VETERANS EMPLOYMENT EMPHASIS FOR U.S. ARMY CORPS OF ENGINEERS CONTRACTS

PART 2 PRODUCTS (NOT USED)

PART 3 EXECUTION (NOT USED)

-- End of Section Table of Contents --

THIS PAGE INTENTIONALLY LEFT BLANK

SECTION 01 00 00.00 28

GENERAL REQUIREMENTS

PART 1 GENERAL

1.1 VETERANS EMPLOYMENT EMPHASIS FOR U.S. ARMY CORPS OF ENGINEERS CONTRACTS

In addition to complying with the requirements outlined in FAR Part 22.13, FAR Provision 52.222-38, FAR Clause 52.222-35, FAR Clause 52.222-37, DFARS 222.13 and Department of Labor regulations, U.S. Army Corps of Engineers (USACE) contractors and subcontractors at all tiers are encouraged to promote the training and employment of U.S. veterans while performing under a USACE contract. While no set-aside, evaluation preference, or incentive applies to the solicitation or performance under the resultant contract, USACE contractors are encouraged to seek out highly qualified veterans to perform services under this contract. The following resources are available to assist USACE contractors in their outreach efforts:

Federal Veteran Employment Information
http://www.fedshirevets.gov/index.aspx

Department of Labor Veterans Employment Assistance
http://www.dol.gov/vets/

Department of Veterans Affairs-VOW to Hire Heroes Act
http://benefits.va.gov/vow/

Army Wounded Warrior Program -
http://wct.army.mil/modules/employers/index.html

U.S. Chamber of Commerce Foundation-Hiring Our Heroes
http://www.hiringourheroes.org/

Guide to Hiring Veterans - Reference Material
https://www.dol.gov/sites/dolgov/files/VETS/files/Employer-Guide-to-Hiring-Veteran

PART 2 PRODUCTS (NOT USED)

PART 3 EXECUTION (NOT USED)

-- End of Section --

THIS PAGE INTENTIONALLY LEFT BLANK

SECTION TABLE OF CONTENTS

DIVISION 01 - GENERAL REQUIREMENTS

SECTION 01 11 01.00 28

SUPPLEMENTARY REQUIREMENTS

PART 1 GENERAL

1.1 REFERENCES
1.2 SUBMITTALS
1.3 FIELD VERIFICATION OF SITE CONDITIONS
1.4 DEFINITIONS
1.5 REGULAR CLEANUP AND DEBRIS DISPOSAL
1.6 EQUIPMENT LIST
1.7 TESTING OF EQUIPMENT
1.8 DISPOSITION OF REMOVED MATERIALS AND EQUIPMENT
1.9 PROTECTION AND RESTORATION OF EXISTING FACILITIES
1.10 PRE-CONSTRUCTION ON-SITE INSPECTION
1.11 PROJECT SUPERINTENDENT
1.12 KEY PERSONNEL SUBSTITUTION
1.13 POST AWARD MEETINGS
1.13.1 Pre-Work Meeting
1.13.2 Pre-Construction Meeting
1.13.2.1 Minutes
1.13.2.2 Demobilizing And Remobilizing
1.13.3 RMS Orientation Meeting
1.14 WEEKLY PRODUCTION MEETINGS
1.14.1 Construction Progress Photos
1.14.2 Minutes
1.15 ADDITIONAL MEETINGS
1.16 RED ZONE MEETING

PART 2 PRODUCTS (Not Used)

PART 3 EXECUTION (Not Used)

ATTACHMENTS:

Weekly Meeting Agenda

Three (3) Week 'Look Ahead'

-- End of Section Table of Contents --

THIS PAGE INTENTIONALLY LEFT BLANK

SECTION 01 11 01.00 28

SUPPLEMENTARY REQUIREMENTS

PART 1 GENERAL

The work covered by this section of the specifications consists of work common to more than one section of these TECHNICAL SPECIFICATIONS.

1.1 REFERENCES

The publications listed below form a part of this specification to the extent referenced. The publications are referred to in the text by the basic designation only.

U.S. ARMY CORPS OF ENGINEERS (USACE)

EM 385-1-1 Safety and Health Requirements Manual

The Contractor shall be responsible for complying with the current edition and all changes posted on the web as of the effective date of this solicitation.

1.2 SUBMITTALS

Government approval is required for submittals with a "G" designation; submittals having an "I" designation are for information only. Designation following the "G" or "I" designation identifies the office that will review the submittal for the Government. Submit in accordance with SECTION 01 33 00 SUBMITTAL PROCEDURES:

SD-01 Preconstruction Submittals

Equipment List; I, C

Pre-Construction On-Site Inspection report; I, C

Project Superintendent; I, C

SD-07 Certificates

Key Personnel Substitution; G, C

1.3 FIELD VERIFICATION OF SITE CONDITIONS

Field verify all elevations, dimensions, and coordinates of existing features indicated on the contract drawings that affect new construction. Any deviations shall be updated as per SECTION 01 78 00.00 28, CLOSEOUT SUBMITTALS, paragraphs WORKING AS-BUILT DRAWINGS.

1.4 DEFINITIONS

a. Qualified Person.

As defined in EM 385-1-1; "DEFINITIONS", unless otherwise specified.

b. F.O.B.

An abbreviation for free on board, which means that a vendor or consignor will deliver goods on a railroad car, truck, vessel, or other conveyance without any expense to the purchaser or consignee.

1.5 REGULAR CLEANUP AND DEBRIS DISPOSAL

With the exception of materials specifically indicated or specified to be salvaged for reuse in construction, or turned over to the Government, all wastes and demolished materials shall become the property of the Contractor and shall be removed from the job site daily in accordance with Federal, State, and local regulations. The Contractor shall furnish waste containers. All small waste containers provided by the contractor shall be emptied daily, large bin containers shall be emptied when full or once a week.

1.6 EQUIPMENT LIST

Furnish a complete list of all equipment to be used on the Project 30 days prior to commencement of on-site work. Submit a revised list in the event of change of equipment. Lists shall include rented equipment as well as lease-purchase or sale-leaseback equipment. The initial list and the revised lists shall indicate dates equipment is assigned to or removed from the Project and adequate identification or description of each item of equipment including manufacturer's name (abbreviated), model number, manufacturer's serial number, year of manufacture, and Contractor's assigned serial or record number.

1.7 TESTING OF EQUIPMENT

Before any machinery or mechanized equipment is put to use on the job, it shall be inspected and tested by a qualified person and determined to be in safe operating condition. Cranes or derricks shall be tested by the Contractor or a qualified testing agency in accordance with EM 385-1-1. Equipment shall be large enough to safely handle proposed picks or tasks without exceeding the crane rating established by these tests.

1.8 DISPOSITION OF REMOVED MATERIALS AND EQUIPMENT

Unless otherwise specified in other sections of the specifications, all existing equipment removed and not reinstalled shall become the property of the Contractor, removed from the Project site, and disposed of in a legal manner. Materials that cannot be removed daily may be temporarily stored on-site at an approved area. Salvaged materials shall not be sold on the project site.

1.9 PROTECTION AND RESTORATION OF EXISTING FACILITIES

Reference FAR 52.236-9 Protection of Existing Vegetation, Structures, Equipment, Utilities, and Improvements (Apr 1984).

1.10 PRE-CONSTRUCTION ON-SITE INSPECTION

Prepare a Pre-Construction On-Site Inspection report of existing conditions, prior to start of on-site work, with the Contracting Officer (KO). Document existing site conditions prior to Construction by digital photographs, and/or videos along with descriptive narrative report to the

KO within five (5) days after completion.

1.11 PROJECT SUPERINTENDENT

The Contractor's Project Superintendent shall be on the worksite during performance of work on this contract. The Project Superintendent is required on the worksite, at all times work is being performed, until work on this contract is completed and accepted. Assign a competent superintendent as per FAR Clause 52.236-6 "Superintendence by the Contractor". Submit Superintendent name and contact information prior to start of on-site construction. The Project Superintendent may also be the Installation Supervisor.

1.12 KEY PERSONNEL SUBSTITUTION

If the Contractor plans on replacing any Key personnel (Project Superintendent, CQC System Manager, or CQC staff Members) they must have the approval of the Contracting Officer. Personnel shall possess the qualifications that meet or exceed those stated in this contract for the position of the individual they are replacing. Submit qualifications of new personnel at least 15 calendar days in advance of date of replacement.

1.13 POST AWARD MEETINGS

1.13.1 Pre-Work Meeting

Within 5 (five) Government work days after receipt of Notice to Proceed (NTP), attend a Pre-Work Meeting. Senior Level members of the Contractor's staff involved with this contract shall participate in this meeting to discuss the overall contract requirements. **The Government will lead this meeting** and take the meeting minutes.

1.13.2 Pre-Construction Meeting

Coordinate with the Contracting Officer and establish the date of the Pre-Construction Meeting. The meeting will be held at the Project site at least one (1) week prior to mobilizing to the job site. If COVID 19 restrictions preclude meeting at the Project site, the meeting will be held by teleconference. **The Contractor shall lead the Pre-Construction Meeting** discussing the Contractor's plan on executing the work at the project site, schedule, required clearances and timeframe for them, and plan for implementing safety and quality control. The Government will have key members from the Project staff to discuss environmental and clearance issues. Key members of the contractor staff shall attend this meeting including the Quality Control (QC) System Manager, Site Safety and Health Officer (SSHO) and any other members determined by the Government to be required.

1.13.2.1 Minutes

Contractor is responsible for taking the meeting minutes and shall send them electronically within 48 hours of the meeting to the Government's Project Engineer, Quality Assurance Representative, and Resident Engineer.

1.13.2.2 Demobilizing And Remobilizing

Anytime the Contractor demobilizes from the site and remobilizes at a later date, another Pre-Construction Meeting shall be held and shall follow the requirements listed above.

1.13.3 RMS Orientation Meeting

a. An RMS (Resident Management System) Orientation Meeting will be held within Fifteen (15) calendar days after receipt of Notice to Proceed. See SECTION 01 45 01.00 28 RESIDENT MANAGEMENT SYSTEM CONTRACTOR MODE (RMS CM) for additional information. Orientation meeting will be at District Headquarters, and may occur in conjunction with, but not at the same time as, the Pre-Work meeting. Coordinate meeting date and time with the Contracting Officer a minimum of 7 calendar days prior to the meeting.

b. At a minimum, the Contractor's RMS-CM Administrator and QC system manager shall attend the RMS Orientation meeting. A Government Representative will lead the orientation. Anticipate the following at the meeting:

1. Allow for a maximum 4 hour duration.

2. Cover the following topics, at a minimum, in RMS Contractor Mode (CM):

i. Contractor use of RMS (CM) system.

ii. Contractor Data.

iii. Quality Control Reports.

iv. Submittals.

v. RFIs.

vi. Payment.

3. Receive a follow-up handout/guide for reference on the above items.

c. Contractor employees shall bring a computer with Wi-Fi capability (to gain access to the Internet), with RMS pre-loaded.

d. The RMS Orientation Meeting is required for Contractors with no prior RMS experience. The RMS Orientation Meeting, is optional, but may be requested, for all other Contractors.

1.14 WEEKLY PRODUCTION MEETINGS

During all fabrication and onsite construction work, hold a weekly production meeting to brief the Government on the status of the project.

a. Use the attached "Weekly Meeting Agenda" and discuss all elements of this agenda.

b. Provide a Three (3) Week 'Look Ahead'.

1. Describe all planned construction activities, on-site and off-site over the next three (3) weeks.

2. ENSURE these activities align to the overall construction SCHEDULE submitted under PROJECT SCHEDULE.

3. RECORD any changes to the Project Schedule AND INCLUDE IN the next scheduled update.

c. Key members of the Contractor's staff including the Quality Control System Manager and the SITE SAFETY AND HEALTH OFFICER shall attend.

d. The Quality Control System Manager shall discuss all QC aspects outlined in SECTION 01 45 04.00 28 CONTRACTOR QUALITY CONTROL.

e. The Government reserves the right to require any person from the Contractor's staff such as the Project Manager, Engineer, Scheduler or Key Subcontractor Personnel to attend the meeting.

1.14.1 Construction Progress Photos

a. During on site construction activities record construction progress with weekly progress photographs. Submit digital photographs weekly for use at the WEEKLY PRODUCTION MEETING. Photographs provided are for unrestricted use by the Government.

1. Photos shall be submitted at the end of each work week.

2. Furnish digital photographs, Utilize JPEG file format for all photograph and image files.

3. Provide full-color photos with photo resolution of not less than 4 megapixels and not more than 12 megapixels. Photos shall show the sequence and progress of work.

4. Take a minimum of 20 digital photographs each week throughout the entire project.

b. Ensure that the photographs are digitally dated. Log shall be furnished for each photograph that records the following information:

1. Photograph number (the specific format should be tied to the filename of the electronic photograph).

2. Date the photograph was taken.

3. A brief description of the location, what the photograph depicts, and the orientation of the view.

1.14.2 Minutes

The Contractor shall be responsible for taking the meeting minutes and shall send them electronically within 24 hours of the meeting to the Government's Project Engineer, Quality Assurance Representative, and Resident Engineer.

1.15 ADDITIONAL MEETINGS

Record the minutes of all meetings, including all conference calls, that occur between the Contractor and Government. Send minutes electronically within 24 hours of the meeting to the Contracting Officer for concurrence. E-mail subject line shall include project name and meeting topic.

1.16 RED ZONE MEETING

Within one (1) month of completing the project or when the project is 80 percent completed, the Contractor shall set up and lead a Red Zone meeting. The Contractor shall contact the Contracting Officer to Schedule this meeting. The Government's representative will include the Contracting Officer, key personnel from the Project, Project Engineer, Quality Assurance Representative, and Resident Engineer. The key people from the Contractor shall be, at a minimum, the Project Superintendent, Quality Control System Manager, Scheduler, key subcontractors personnel, and Project Manager.

The purpose of this meeting is to develop an overall schedule for all activities required by both the Government and Contractor and to complete the project through final acceptance. The Government will come prepared with all their activities, key dates, and durations for all work required by the Government to complete the project. The Contractor shall provide the same information for all of their activities. The Contractor's scheduler shall input all of this information into the Contractor's project schedule during the meeting.

This schedule shall be updated weekly, or as needed, based on the information from the weekly production meetings for both the Government and Contractor activities.

PART 2 PRODUCTS (Not Used)

PART 3 EXECUTION (Not Used)

-- End of Section --

Weekly Meeting agenda template

Schedule -

Work scheduled over the next week
Three week look ahead
Overall Schedule Review

Submittals Review-

Submittal Register
Submittals approved by QC
Outstanding Submittals
RFI's
Letters

Coordination -

Clearances required over the next week, include the following:

- A description of the work to be performed under the Clearance.
- Determine the correct energy isolation points needed to perform the work safely.
- Physical barriers, protective grounds, piping blanks, or bulkheads that shall be used, including locations.
- Determine the procedure and method of testing for stored energy if applicable.
- The date and time the Clearance shall be required.
- The estimated length of time the system or equipment shall be out of service and the time to return the system or equipment to service in an emergency.

Coordination issues

Safety-

Review of AHA's for ongoing work
Pending AHA's
- Required for new work
- Status of Gov't approval

Safety issues

QC -

Preparatory meetings
- Held over last week- status of meeting minutes
- Required over the next week

Initial meetings over the next week
Follow up over the next week
Rework list
Review Deficiency tracking log

THIS PAGE INTENTIONALLY LEFT BLANK

Activity ID	Activity Name	Original Duration	Remaining Duration	Start	Finish	Physical %	Total Float	Critical
Total		32d	32d	26-Feb-15	11-Apr-15		194d	
3 Week Look Ahead		32d	32d	26-Feb-15	11-Apr-15		194d	
Preparatory & Admin		5d	5d	26-Feb-15	02-Mar-15		311d	
0001	Dive Operations	5d	5d	26-Feb-15	02-Mar-15	0%	311d	☐
Preconstruction		20d	20d	26-Feb-15	25-Mar-15		167d	
Design & Submittals		20d	20d	26-Feb-15	25-Mar-15		162d	
0002	Tests,Insp, and Verifications	20d	20d	26-Feb-15	25-Mar-15	0%	162d	☐
Procurement		0d	0d				0d	
Fabrication & Machining		0d	0d				0d	
Pre-Work Coordination		0d	0d				0d	
Field Work		16d	16d	26-Feb-15	19-Mar-15		210d	
Unit A		0d	0d				0d	
Unit B		0d	0d				0d	
Unit C		16d	16d	26-Feb-15	19-Mar-15		210d	
Unit C Pre-Rehab Inspections		0d	0d				0d	
Unit C Box #1 Removal		13d	13d	26-Feb-15	16-Mar-15		205d	
0006	Remove Box 1 Screen	2d	2d	26-Feb-15	27-Feb-15	0%	93d	☑
0007	Remove Box 2 Screen	2d	2d	02-Mar-15	03-Mar-15	0%	93d	☑
0008	Remove Box 3 Screen	2d	2d	04-Mar-15	05-Mar-15	0%	93d	☑
0009	Screen Slot 1 Measurement	1d	1d	06-Mar-15	06-Mar-15	0%	205d	☐
0010	Install shafts 21-24	4d	4d	09-Mar-15	12-Mar-15	0%	205d	☐
0011	Pressure Wash Slot 2	1d	1d	13-Mar-15	13-Mar-15	0%	205d	☐
0012	Pressure Wash Slot 3	1d	1d	16-Mar-15	16-Mar-15	0%	205d	☐
Unit C Box #2 Removal		10d	10d	06-Mar-15	19-Mar-15		100d	
0013	Lower Lifting Beam & Attach	2d	2d	06-Mar-15	09-Mar-15	0%	93d	☑
0014	Raise Screen to Deck & Support	1d	1d	10-Mar-15	10-Mar-15	0%	93d	☑
0015	Fuel Removal	1d	1d	11-Mar-15	11-Mar-15	0%	93d	☑
0016	Fuel Screen Inspect & Measure	1d	1d	12-Mar-15	12-Mar-15	0%	93d	☑
0017	Separate Widget from Screen	1d	1d	13-Mar-15	13-Mar-15	0%	93d	☑
0018	Haul Screen to Laydown	1d	1d	16-Mar-15	16-Mar-15	0%	103d	☐
0019	Remove Box 4 Screen	2d	2d	16-Mar-15	17-Mar-15	0%	93d	☑
0020	Remove Box 5 Screen	2d	2d	18-Mar-15	19-Mar-15	0%	93d	☑
Unit C Box #3 Removal		0d	0d				0d	
Unit C Fuel Screen Field Modifications		14d	14d	26-Feb-15	17-Mar-15		103d	
0039	Position Screen 1 on Slab	1d	1d	26-Feb-15	26-Feb-15	0%	116d	☐
0040	Position Screen 2 on Slab	1d	1d	17-Mar-15	17-Mar-15	0%	103d	☐
Unit C Wagner Horn Plugs Installation		0d	0d				0d	
Unit C Fish Screens Installatin		0d	0d				0d	
Unit C Fish Screen Slot Closure		0d	0d				0d	
Unit D		0d	0d				0d	
Unit D Pre-Rehab Inspections		0d	0d				0d	
Unit D Screen #1 Removal		0d	0d				0d	

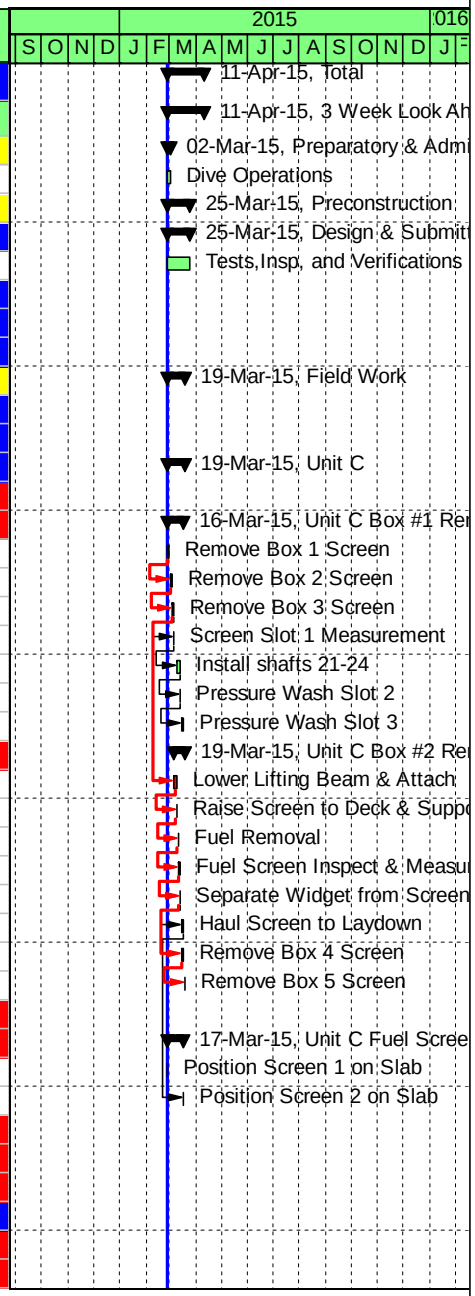

Actual Work | Critical Remaining Work | Summary
Remaining Work | Milestone

TASK filter: 3 Week Look Ahead.

© Oracle Corporation

THIS PAGE INTENTIONALLY LEFT BLANK

SECTION TABLE OF CONTENTS

DIVISION 01 - GENERAL REQUIREMENTS

SECTION 01 14 00.10 28

PROJECT SITE RESTRICTIONS

PART 1 GENERAL

1.1 REFERENCES
1.2 SITE CONDITIONS AND OPERATIONAL RESTRICTIONS
1.2.1 Concrete Placement and Curing Restrictions
1.2.2 Contractor Vehicle and Equipment Restrictions
1.2.3 Government Personnel and Equipment in the Juvenile Collection Channel
1.2.4 Intake Deck Crane Operation
1.2.5 Emergency Government Work
1.2.6 Migratory Bird Treaty Act
1.3 PROJECT SECURITY
1.3.1 Contractor Vehicle Access
1.3.2 Identification of Employees
1.4 DELIVERY OF EQUIPMENT
1.5 FACILITY OCCUPANCY CLOSURE
1.6 WORK SCHEDULES
1.6.1 Contractor's Work Schedule
1.6.2 Government's Work Schedule
1.7 USE OF WALLA WALLA DISTRICT PARKS

PART 2 PRODUCTS (Not Used)

PART 3 EXECUTION (Not Used)

ATTACHMENTS:

Security Badge Form

-- End of Section Table of Contents --

THIS PAGE INTENTIONALLY LEFT BLANK

SECTION 01 14 00.10 28

PROJECT SITE RESTRICTIONS

PART 1 GENERAL

1.1 REFERENCES

The publications listed below form a part of this specification to the extent referenced. The publications are referred to in the text by the basic designation only.

U.S. ARMY CORPS OF ENGINEERS (USACE)

EM 385-1-1 Safety and Health Requirements Manual

Contractor shall be responsible for complying with the current edition and all changes posted on the web as of the effective date of this solicitation.

1.2 SITE CONDITIONS AND OPERATIONAL RESTRICTIONS

1.2.1 Concrete Placement and Curing Restrictions

a. The following restrictions apply to Concrete Placement and Curing, unless approved otherwise, in writing, by the Contracting Officer (KO):

1. Start concrete placement at Main Unit (MU) 14 and proceed, sequentially south, by Main Unit (i.e. MU14, MU13, MU12, etc.). Sequential progress of concrete placement, by MU, is required under this contract.

2. Contractor must complete concrete placement of all 3 beam sections in a MU prior to beginning placement of concrete in another MU.

3. A maximum of three (3) Main Units (3 beam sections per MU, 9 beam sections, total) shall have concrete curing to required formwork removal strength, at any time. See SECTION 03 01 00.02 28 FORM AND PUMP PLACEMENT, paragraph "Formwork Removal" for formwork removal restrictions.

b. The Project will make every effort to avoid movement of the Intake Gantry Crane over curing concrete prior to reaching formwork removal strength. If Crane movement is required during this period, the KO will coordinate with the Contractor and Project personnel to determine the best course of action.

1.2.2 Contractor Vehicle and Equipment Restrictions

The following Contractor vehicle and equipment restrictions apply to the intake deck and all areas inside the security gate, unless approved otherwise by the KO:

a. Contractor vehicles and equipment are only allowed in these areas while Contractor personnel are actively working on the intake deck

area.

b. No overnight parking of vehicles or equipment is allowed.

c. A maximum of 2 Contractor work vehicles may park in the vehicle parking lot south of the Powerhouse. Contractor equipment and trailers are NOT allowed in this area. No Contractor vehicle parking is allowed on the intake deck.

d. A maximum of one Contractor work truck and trailer, and one piece of heavy equipment will be allowed on the intake deck at any one time between 6:00 a.m. to 5:30 p.m., Monday through Thursday.

e. Required Project access lane must be maintained at all times. See SECTION 01 55 10.00 28 CONTRACTOR WORK, ACCESS AND STORAGE AREAS, paragraph GOVERNMENT ROADWAYS AND DECK ACCESS RESTRICTIONS for access lane requirements, and additional intake deck restrictions.

1.2.3 Government Personnel and Equipment in the Juvenile Collection Channel

a. Project Staff are in the Juvenile Fish Collection Channel to monitor operation several times per day. Do not block any equipment or controls in the Collection Channel area. Insure a minimum 3 foot wide unrestricted access for personnel to check and clear orifices, screen cleaning equipment, and other operational items.

b. The hoist in the collection channel runs from Slot 1B South and is used during emergency operations. Any Contractor items or equipment that impact operation of the hoist must be moveable within two hours of request by the Contracting Officer.

c. Typical Project tasks in the Collection Channel will not impact the Contractor, but emergency work could impact Contractor work in the area. See paragraph "Emergency Government Work" below.

1.2.4 Intake Deck Crane Operation

a. Contractor must be able to recover each work area to allow travel of the intake gantry crane, or required project work near the Contractor work area. Crane rails must be able to be cleared of all Contractor items or equipment within two hours of request by the Contracting Officer.

b. Any anticipated and/or required crane movement, or Project work that impacts Contractor work, will be coordinated at the Weekly Production Meeting (See SECTION 01 11 01.00 28 SUPPLEMENTARY REQUIREMENTS, paragraph WEEKLY PRODUCTION MEETINGS), or a minimum of 48 hours in advance of required movement, when possible.

1.2.5 Emergency Government Work

Emergency Government work on the Intake Deck or in the Juvenile Fish Collection Channel could impact Contractor work and will take priority. The Government will provide as much notice as possible, in the event where emergency work requires a temporary halt or impact to Contractor work in the area.

1.2.6 Migratory Bird Treaty Act

a. The Migratory Bird Treaty Act protects birds and active nests that may be found inside the Collection Channel area of the Powerhouse. Active nests may be present between April and August, and remain active for approximately 25 days after eggs are laid.

b. Assume active nests will not impact Contractor work in the area. However, the following is required.

c. Survey each beam Section prior to beginning work area set-up for repair. If a nest is found, or started, immediately notify the Contracting Officer for evaluation. If Contractor work would impact active nests, it will be necessary for the Contractor to work on other beam Sections until the nest becomes inactive. Additional compensation will not be provided for an adjustment to anticipated beam Section repair timing.

1.3 PROJECT SECURITY

The Project site is a secured area and access onto the Project is restricted. The security measures affect all of the Contractor's vehicles and personnel. There will be delays when entering Projects due to locked gates, vehicle inspections, and personnel checks. Inspections and checks may include inspection of tool boxes, brief cases, lunch boxes, and other containers.

1.3.1 Contractor Vehicle Access

Project access roads on both sides of the dams are secured with locked gates. All vehicles that pass through the locked gates will be subject to being searched. No privately owned vehicles (POV's) will be allowed through locked gates. Only Contractor's work vehicles and equipment that are essential to the conduct of the work will be allowed in the work areas. All Contractor vehicles shall display suitable permanent or temporary identification.

1.3.2 Identification of Employees

Government Project personnel will provide the Contractor's personnel with identification badges as they arrive on site. Complete the Security Badge Form(attached to the end of this SECTION), submit the completed form to the Contracting Officer at least 7 calendar days prior to the employee arrival to work on the Project site and upon issuance of official badges, shall be responsible for requiring each employee engaged on the work to display identification at all times. All prescribed identification shall immediately be delivered to the Quality Assurance Representative for cancellation upon the release of the employee or project completion. If required by the Contracting Officer, employees will be photographed by the Government. Employees who fail to submit to being photographed will not be allowed on the project site.

Every Contractor employee (prime or subcontractor) shall have a hard hat meeting the requirements of EM 385-1-1. Hardhats shall display the Prime Contractor name, subcontractor name, and the employee's name. Contractor employee hardhats shall **not** be white with red markings. It shall be the responsibility of the Project Superintendent to enforce this requirement.

1.4 DELIVERY OF EQUIPMENT

Contractor shall be responsible for delivery and receipt of all materials and equipment. Government personnel will not be available to assist the Contractor in these activities. To the maximum extent possible, deliveries shall arrive on the same side of the river as the Contractor's work area. Delivery vehicles will be allowed to cross the river over the dam only with Government approval. Delivery vehicles arriving on the opposite side of the river as the work area shall be unloaded outside the locked gate, equipment shall be loaded onto Contractor's vehicles, and Contractor's vehicles will then be allowed to cross the dam to the work area.

1.5 FACILITY OCCUPANCY CLOSURE

Streets, walks, and other facilities occupied and used by the Government shall not be closed or obstructed without written permission from the Contracting Officer.

1.6 WORK SCHEDULES

1.6.1 Contractor's Work Schedule

At the Pre-Work Meeting, furnish a schedule of number of working days per week, shifts per day, and hours per shift for contract work. Furnish notification of any change of schedule of regular work hours, overtime work hours, and shifts of work crews and personnel at the site. This notification shall be provided a minimum of 48 hours prior to any schedule change to allow suitable scheduling of Government personnel and inspection. Exception to this requirement may be allowed in case of schedule change due to emergency conditions.

1.6.2 Government's Work Schedule

a. The maintenance crews at the dam work from 6:30 a.m. to 5:00 p.m., Monday through Thursday. Crews and staff do not work on weekends and Federal holidays. If a Federal holiday falls on a Friday, the crews and staff do not work on the preceding Thursday. A powerhouse operator is at the site 24 hours a day, 7 days a week, including Federal holidays but is not available to assist the Contractor.

b. If the Contractor requires Government support or assistance outside of normal work hours, the Contractor must make a formal written request to the Contracting Officer at least one week prior to the date that support/assistance is needed. The Government will review this request, but there is no guarantee that Government support or assistance can be provided.

1.7 USE OF WALLA WALLA DISTRICT PARKS

Special consideration for the use of the Walla Walla District Camping Grounds **will not** be given to the Contractor if camping at these sites. The Contractor's crew may not use Government parking lots near the McNary Lock and Dam for RV parking.

PART 2 PRODUCTS (Not Used)

PART 3 EXECUTION (Not Used) -- End of Section --

THIS PAGE INTENTIONALLY LEFT BLANK

US Army Corps of Engineers
Walla Walla District

U.S. Army Corps of Engineers, Northwestern
Division, Walla Walla District
Request for Access to Field Projects

Contractor/Visitor Information

Project | Date of Request

PERSONAL INFORMATION:

Last Name : | First Name: | M. I. :

U. S. Citizen | Phone Number (Office/Mobile)

EMPLOYMENT INFORMATION:

Company Name: | Company Phone Number

Company Site Supervisor | Contact Phone Number

Contract Name or Purpose of Visit

Access Begin Date | Access End Date

FOR USACE USE ONLY:

USACE POC | POC Phone Number

POC Signature | ID Card Only

Access Badge | Existing Badge | If YES, Badge #

Requested Area of Access

Access Period | Hours Access Required

"I have read and/or been briefed on the Project Security and Safety Guidelines and understand my responsibilities and as a badge/key holder. I have received the access card/key issued to me."

Printed Name:

Signature | Date

Key Series	Key Number

Chief of Operations Approval:

Printed Name: | Date

Signature

This section to be filled out by Project Security:

Card Number | Date Returned: | Photo ID:

Date Issued: | Date Expired:

Signature

Access for Foreign Nationals: Security Clearance for foreign nationals to attend a site visit or to perform onsite work requires a minimum of four weeks. Please send documentation by email (.pdf files are preferred) to Walla Walla District Security Office.

THIS PAGE INTENTIONALLY LEFT BLANK

SECTION TABLE OF CONTENTS

DIVISION 01 - GENERAL REQUIREMENTS

SECTION 01 14 00.90 28

INTEGRATING ANTITERRORISM (AT) AND OPERATIONS SECURITY (OPSEC)

PART 1 GENERAL

1.1 REFERENCES
1.2 SUBMITTALS
1.3 BIOGRAPHICAL INFORMATION SUBMITTAL
1.4 AT LEVEL 1 TRAINING
1.5 ACCESS AND GENERAL PROTECTION/SECURITY POLICY AND PROCEDURES
1.6 DOD FACILITY REQUIREMENTS (COMMON ACCESS CARD NOT REQUIRED)
1.7 SUSPICIOUS ACTIVITY REPORTING TRAINING (iWATCH, CORPS Watch, or See Something, Say Something)
1.8 CONTRACTS THAT REQUIRE OPSEC TRAINING
1.9 EMPLOYEE ESCORT
1.10 PRE-SCREEN CANDIDATES USING E-VERIFY PROGRAM

PART 2 PRODUCTS (NOT USED)

PART 3 EXECUTION (NOT USED)

-- End of Section Table of Contents --

THIS PAGE INTENTIONALLY LEFT BLANK

SECTION 01 14 00.90 28

INTEGRATING ANTITERRORISM (AT) AND OPERATIONS SECURITY (OPSEC)

PART 1 GENERAL

The work covered by this section of the specifications consists of work common to more than one section of these TECHNICAL SPECIFICATIONS. This contract does not require access to or handling of classified material. This contract requires access to secured and restricted areas, sensitive information, or equipment. Secured area is considered any location where on-site work is performed by Contractor employees. The restricted areas, sensitive information, or equipment consists of everything inside the security fence at the project.

1.1 REFERENCES

The publications listed below form a part of this specification to the extent referenced. The publications are referred to within the text by the basic designation only.

U.S. ARMY (DA)

AR 190-13	(2011) The Army Physical Security Program
Army Directive 2014-05	(2014) Policy and Implementation Procedures for Common Access Card Credentialing and Installation Access for Uncleared Contractors

Website for Department of the Army Regulations:
http://armypubs.army.mil/

Federal Acquisition Regulations (FAR)

FAR 52.204-9	(2015) Personal Identity Verification of Contractor Personnel

1.2 SUBMITTALS

Government approval is required for submittals with a "G" designation; submittals having an "I" designation are for information only. The designation following the "G" or "I" designation identifies the office that will review the submittal for the Government. Submit the following in accordance with SECTION 01 33 00 SUBMITTAL PROCEDURES:

SD-01 Preconstruction Submittals

Anti Terrorism (AT) Level 1; I, C

iWATCH, CORPS Watch, or See Something, Say Something; I, C

Level 1 OPSEC training; I, C

Pre-Screen Candidates Using E-Verify Program; I, C

Biographical Information; G, C

1.3 BIOGRAPHICAL INFORMATION SUBMITTAL

Submit Biographical Information to the COR via email as a password protected pdf file or using the DoD SAFE site for all personnel requiring unescorted access or requiring access to government information systems. See paragraph "ACCESS AND GENERAL PROTECTION/SECURITY POLICY AND PROCEDURES" for additional information and details on items to submit.

1.4 AT LEVEL 1 TRAINING

All contractor employees, including all associated sub-contractor employees, requiring access to government facilities and controlled access areas shall complete Anti Terrorism (AT) Level 1 awareness training within 30 days after Notice to Proceed, and annually thereafter until project completion. Submit certificates of completion for each employee to the contracting officer representative (COR) or to the contracting officer (if a COR is not assigned), within 5 calendar days after initial completion of training or annual refresher.

The contractor shall retain employee training certificates for the duration of the contract and maintain a current roster. The roster shall contain the names of employees who have completed the training along with their most recent training completion date. The contractor shall update the roster and resubmit to the contracting officer no later than 5 calendar days after completion of refresher training or a new employee completes certification.

AT Level I awareness training can be completed in approximately two (2) hours and is available at the following website: http://jko.jten.mil/courses/atl1/launch.html

1.5 ACCESS AND GENERAL PROTECTION/SECURITY POLICY AND PROCEDURES

All contractor employees, including all associated sub-contractor employees, shall comply with all applicable facility access and security policies and procedures. Local facility policies and procedures shall be provided by a government representative.

The contractor shall provide all information required for background checks to meet facility access requirements. Background checks will be performed by Walla Walla District Security Office. Contractor workforce must comply with all personal identity verification requirements (FAR 52.204-9, Personal Identity Verification of Contractor Personnel: http://www.ecfr.gov/cgi-bin/text-idx?rgn=div8&node=48:2.0.1.1.1.2.1.28) as directed by DOD and/or local policy.

For each individual that will be working at this site, submit an excel spreadsheet containing the individual's full name and date of birth to satisfy the information required to conduct the background check. The COR will provide a copy of the excel spreadsheet to be used at the Pre-work meeting. Background check must be approved for an individual before they can access the site.

In addition to the changes otherwise authorized by the changes clause of this contract, should the Force Protection Condition (FPCON) at any facility change, the Government may require changes in contractor security matters or processes.

1.6 DOD FACILITY REQUIREMENTS (COMMON ACCESS CARD NOT REQUIRED)

Contractor employees, including all associated sub-contractor employees, shall comply with adjudication standards and procedures using the National Crime Information Center Interstate Identification Index (NCIC-III)and Terrorist Screening Database (TSDB) (Army Directive 2014-05 / AR 190-13), applicable facility and area access security policies and procedures (provided by a government representative, as NCIC and TSDB are available).

1.7 SUSPICIOUS ACTIVITY REPORTING TRAINING (iWATCH, CORPS Watch, or See Something, Say Something)

The contractor employees, including all associated sub-contractor employees, shall take one of the following trainings on the suspicious activity reporting program; iWATCH, CORPS WATCH, SEE SOMETHING, SAY SOMETHING. These trainings are available on the internet and the links to the training sites are shown below.

This training is to inform employees of the types of behavior to watch for and instruct employees to report suspicious activity to the security representative. This training shall be completed within 30 calendar days of Notice to Proceed and within 30 calendar days of new employees commencing performance with the results reported to the COR or to the contracting officer (if a COR is not assigned), NLT 5 calendar days after the completion of the training.

a. iWATCH\
Website: http://www.myarmyonesource.com/familyprogramsandservices/iwatchprogram/default.aspx

b. CORPS WATCH
Website:
http://www.spa.usace.army.mil/Missions/CivilWorks/Recreation/CorpsWatch.aspx

c. SEE SOMETHING, SAY SOMETHING
Website: https://www.dhs.gov/see-something-say-something

1.8 CONTRACTS THAT REQUIRE OPSEC TRAINING

All new contractor employees, including all associated sub-contractor employees, will complete Level I OPSEC Training within 30 calendar days of their reporting for duty. Additionally, all employees must complete annual OPSEC awareness training until project completion. The contractor shall submit Level 1 OPSEC training certificates of completion for each affected employee, to the COR or to the contracting officer (if a COR is not assigned), within 5 calendar days after completion of training.

OPSEC awareness training is available at the following website: https://securityawareness.usalearning.gov/opsec/index.htm or it can be provided by the OPSEC Officer in presentation form which will be documented via memorandum.

1.9 EMPLOYEE ESCORT

All contractor employees, including all associated sub-contractor employees, who are not in possession of the appropriate security clearance or access privileges, will be escorted in sensitive or restricted areas and/or areas where they may be exposed to classified and/or sensitive

materials.

1.10 PRE-SCREEN CANDIDATES USING E-VERIFY PROGRAM

The Contractor must pre-screen Candidates using the E-verify Program (http://www.uscis.gov/e-verify) website to meet the established employment eligibility requirements. The Vendor must ensure that the Candidate has two valid forms of Government issued identification prior to enrollment to ensure the correct information is entered into the E-verify system. Additional time may be required for foreign nationals to pre-screen.

An initial list of verified/eligible Candidates must be provided to the contracting officer, no later than 30 business days after receipt of Notice to Proceed.

*When contracts are with individuals, the individuals will be required to complete a Form I-9, Employment Eligibility Verification, with the designated Government representative. This Form will be provided to the Contracting Officer and shall become part of the official contract file.

Submit pre-screening results to the COR via email as a password protected pdf file.

PART 2 PRODUCTS (NOT USED)

PART 3 EXECUTION (NOT USED)

-- End of Section --

SECTION TABLE OF CONTENTS

DIVISION 01 - GENERAL REQUIREMENTS

SECTION 01 22 00.00 28

MEASUREMENT AND PAYMENT

PART 1 GENERAL

1.1 RETAINAGE OF PAYMENT
1.2 CLIN 0001 DESIGN AND BEAM ANALYSIS
1.3 CLIN 0002 CONCRETE BEAM REHABILITATION

PART 2 PRODUCTS (Not Applicable)

PART 3 EXECUTION (Not Applicable)

-- End of Section Table of Contents --

THIS PAGE INTENTIONALLY LEFT BLANK

SECTION 01 22 00.00 28

MEASUREMENT AND PAYMENT

PART 1 GENERAL

In each instance, the contract price for an item shall constitute full compensation for furnishing all plant, labor, equipment, and materials, and for performing all operations required to complete the work included in the item as herein specified, or as otherwise approved.

1.1 RETAINAGE OF PAYMENT

Retainage in the amount of 10 percent of original contract award amount will be withheld until the final submittals, listed below, have been approved by the Government. The 10 percent retainage for final submittals will start once the Contractor has earned 90 percent of the original contract value. See SECTION 01 78 00.00 28 "CLOSEOUT SUBMITTALS" for additional information.

FINAL SUBMITTALS

a. Final Shop Drawings.
b. Final As-built Drawings.
c. Final Record Drawings.
d. Return of Government Issued Items.

1.2 CLIN 0001 DESIGN AND BEAM ANALYSIS

"Design and Beam Analysis" will be measured for payment as a complete pay item (JOB). Payment will be made at the lump sum price for CLIN No. 0001, "Design and Beam Analysis", which price and payment shall be full compensation for all work required for design and analysis of the Powerhouse Intake Deck Concrete Beam Rehabilitation, complete, as specified and approved. Items included with this item shall include, but not be limited to the following:

a. All Design and Concrete Beam Analysis.

b. All Design and analysis submittal reviews (including any design adjustments required based on Ground Penetrating Radar Scans).

c. Any Designer of Record on-site inspections during Design and Construction phases.

1.3 CLIN 0002 CONCRETE BEAM REHABILITATION

"Concrete Beam Rehabilitation" will be measured for payment as a complete pay item (JOB). Payment will be made at the lump sum price for CLIN No. 0002, "Concrete Beam Rehabilitation", which price and payment shall be full compensation for all work required for construction of all Powerhouse Intake Deck Beam modifications complete, as specified and approved. Items included with this item shall include, but not be limited to the following:

a. Installation and removal of Work Access and Debris Containment Systems.

b. Surface preparation of all beam areas.

c. Modification of all beam areas to meet design requirements.

d. Clean-up of beam, and other impacted areas.

PART 2 PRODUCTS (Not Applicable)

PART 3 EXECUTION (Not Applicable)

-- End of Section --

SECTION TABLE OF CONTENTS

DIVISION 01 - GENERAL REQUIREMENTS

SECTION 01 32 01.00 28

PROJECT SCHEDULE

PART 1 GENERAL

1.1 REFERENCES
1.2 SUBMITTALS
1.3 PROJECT SCHEDULER QUALIFICATIONS

PART 2 PRODUCTS

2.1 SOFTWARE
2.1.1 Government Default Software
2.1.2 Contractor Software
2.1.2.1 Primavera
2.1.2.2 Other Than Primavera

PART 3 EXECUTION

3.1 GENERAL REQUIREMENTS
3.2 BASIS FOR PAYMENT AND COST LOADING
3.2.1 Activity Cost Loading
3.2.2 Withholdings / Payment Rejection
3.3 PROJECT SCHEDULE DETAILED REQUIREMENTS
3.3.1 Level of Detail Required
3.3.2 Activity Durations
3.3.3 Procurement Activities
3.3.4 Mandatory Tasks
3.3.5 Government Activities
3.3.6 Standard Activity Coding Dictionary
3.3.6.1 Workers Per Day (WRKP)
3.3.6.2 Responsible Party Coding (RESP)
3.3.6.3 Area of Work Coding (AREA)
3.3.6.4 Modification Number (MODF)
3.3.6.5 Bid Item Coding (BIDI)
3.3.6.6 Phase of Work Coding (PHAS)
3.3.6.7 Category of Work Coding (CATW)
3.3.6.8 Feature of Work Coding (FOW)
3.3.7 Contract Milestones and Constraints
3.3.7.1 Project Start Date Milestone and Constraint
3.3.7.2 End Project Finish Milestone and Constraint
3.3.7.3 Interim Completion Dates and Constraints
3.3.7.3.1 Start Phase
3.3.7.3.2 End Phase
3.3.8 Calendars
3.3.9 Open Ended Logic
3.3.10 Default Progress Data Disallowed
3.3.11 Out-of-Sequence Progress
3.3.12 Added and Deleted Activities

3.3.13 Original Durations
3.3.14 Leads, Lags, and Start to Finish Relationships
3.3.15 Retained Logic
3.3.16 Percent Complete
3.3.17 Remaining Duration
3.3.18 Cost Loading of Closeout Activities
3.3.19 Anticipated Adverse Weather
3.3.20 Early Completion Schedule and the Right to Finish Early
3.4 PROJECT SCHEDULE SUBMISSIONS
3.4.1 Preliminary Project Schedule Submission
3.4.2 Initial Project Schedule Submission
3.4.3 Periodic Schedule Updates
3.5 SUBMISSION REQUIREMENTS
3.5.1 Current Project Schedule Data
3.5.2 Narrative Report
3.5.3 Schedule Reports
3.5.3.1 Activity Report
3.5.3.2 Logic Report
3.5.3.3 Total Float Report
3.5.3.4 Earnings Report by CLIN
3.5.3.5 Schedule Log
3.5.4 Gantt Chart
3.5.4.1 Continuous Flow
3.5.4.2 Project Milestone Dates
3.5.4.3 Critical Path
3.5.4.4 Banding
3.5.4.5 Cash Flow / Schedule Variance Control (SVC) Diagram
3.6 PERIODIC SCHEDULE UPDATE
3.6.1 Periodic Schedule Update Meetings
3.6.2 Update Submission Following Progress Meeting
3.7 WEEKLY PROGRESS MEETINGS
3.8 REQUESTS FOR TIME EXTENSIONS
3.8.1 Justification of Delay
3.8.2 Time Impact Analysis (Prospective Analysis)
3.8.3 Forensic Schedule Analysis (Retrospective Analysis)
3.8.4 Fragmentary Network (Fragnet)
3.8.5 Time Extension
3.8.6 Impact to Early Completion Schedule
3.9 FAILURE TO ACHIEVE PROGRESS
3.9.1 Artificially Improving Progress
3.9.2 Failure to Perform
3.9.3 Recovery Schedule
3.10 OWNERSHIP OF FLOAT
3.11 TRANSFER OF SCHEDULE DATA INTO RMS-CM
3.12 PRIMAVERA P6 MANDATORY REQUIREMENTS

-- End of Section Table of Contents --

SECTION 01 32 01.00 28

PROJECT SCHEDULE

PART 1 GENERAL

1.1 REFERENCES

The publications listed below form a part of this specification to the extent referenced. The publications are referred to within the text by the basic designation only.

AACE INTERNATIONAL (AACE)

AACE 29R-03	(2011) Forensic Schedule Analysis
AACE 52R-06	(2006) Time Impact Analysis - As Applied in Construction

U.S. ARMY CORPS OF ENGINEERS (USACE)

ER 1-1-11	(2017) Project Schedules

1.2 SUBMITTALS

Government approval is required for submittals with a "G" designation; submittals having an "I" designation are for information only. Designation following the "G" or "I" designation identifies the office that will review the submittal for the Government. Submit in accordance with SECTION 01 33 00 SUBMITTAL PROCEDURES:

SD-01 Preconstruction Submittals

Project Scheduler Qualifications; G, C
Preliminary Project Schedule; G, C
Initial Project Schedule; G, C
Periodic Schedule Update; G, C

1.3 PROJECT SCHEDULER QUALIFICATIONS

Designate an authorized representative to be responsible for the preparation of the schedule and all required updating and production of reports. The authorized representative must have a minimum of 2-years experience scheduling construction projects similar in size and nature to this project with scheduling software that meets the requirements of this specification. Representative must have a comprehensive knowledge of CPM scheduling principles and application.

PART 2 PRODUCTS

2.1 SOFTWARE

The scheduling software utilized to produce and update the schedules required herein must be capable of meeting all requirements of this specification.

2.1.1 Government Default Software

The Government intends to use Primavera P6.

2.1.2 Contractor Software

Scheduling software used by the contractor must be commercially available from the software vendor for purchase with vendor software support agreements available. The software routine used to create the required sdef file must be created and supported by the software manufacturer.

2.1.2.1 Primavera

If Primavera P6 is selected for use, provide the "xer" export file in a version of P6 importable by the Government system.

2.1.2.2 Other Than Primavera

If the contractor chooses software other than Primavera P6, that is compliant with this specification, provide for the Government's use two licenses, two computers, and training for two Government employees in the use of the software. These computers will be stand-alone and not connected to Government network. Computers and licenses will be returned at project completion.

PART 3 EXECUTION

3.1 GENERAL REQUIREMENTS

Prepare for approval a Project Schedule, as specified herein, pursuant to FAR Clause 52.236-15, SCHEDULES FOR CONSTRUCTION CONTRACTS. Show in the schedule the proposed sequence to perform the work and dates contemplated for starting and completing all schedule activities. The scheduling of the entire project is required. The scheduling of construction is the responsibility of the Contractor. Contractor management personnel must actively participate in its development. Subcontractors and suppliers working on the project must also contribute in developing and maintaining an accurate Project Schedule. Provide a schedule that is a forward planning as well as a project monitoring tool. Use the Critical Path Method (CPM) of network calculation to generate all Project Schedules. Prepare each Project Schedule using the Precedence Diagram Method (PDM).

3.2 BASIS FOR PAYMENT AND COST LOADING

The schedule is the basis for determining contract earnings during each update period and therefore the amount of each progress payment. The aggregate value of all activities coded to a contract CLIN must equal the value of the CLIN.

3.2.1 Activity Cost Loading

Activity cost loading must be reasonable and without front-end loading. Provide additional documentation to demonstrate the Contractor is being reasonable if requested by the Contracting Officer.

3.2.2 Withholdings / Payment Rejection

Failure to meet the requirements of this specification may result in the

disapproval of the preliminary, initial or periodic schedule updates and subsequent rejection of payment requests until compliance is met.

In the event that the Contracting Officer directs schedule revisions and those revisions have not been included in subsequent Project Schedule revisions or updates, the Contracting Officer may withhold 10 percent of pay request amount from each payment period until such revisions to the project schedule have been made.

3.3 PROJECT SCHEDULE DETAILED REQUIREMENTS

3.3.1 Level of Detail Required

Develop the Project Schedule to the appropriate level of detail to address major milestones and to allow for satisfactory project planning and execution. Failure to develop the Project Schedule to an appropriate level of detail will result in its disapproval. The Contracting Officer will consider, but is not limited to, the following characteristics and requirements to determine appropriate level of detail:

3.3.2 Activity Durations

Reasonable activity durations are those that allow the progress of ongoing activities to be accurately determined between update periods. Limit durations of all non-procurement activities to 10 workdays or 15 calendar days.

3.3.3 Procurement Activities

Include activities associated with the critical submittals and their approvals, procurement, fabrication, and delivery of long lead materials, equipment, fabricated assemblies, and supplies. Long lead procurement activities are those with an anticipated procurement sequence of over 90 calendar days.

3.3.4 Mandatory Tasks

Include the following activities/tasks in the initial project schedule and all updates.

a. Submission, review and acceptance of SD-01 Preconstruction Submittals (individual activity for each).

b. Submission, review and acceptance of features that require design completion.

c. Material Procurements.

d. Long procurement activities.

e. All Definable Features of Work.

f. Submission and approval of O & M manuals.

g. Submission and approval of as-built drawings.

h. Performance Verification testing.

i. Contractor's pre-final inspection.

j. Correction of punch list from Contractor's pre-final inspection.

k. Government's pre-final inspection.

l. Correction of punch list from Government's pre-final inspection.

m. Final inspection.

n. Completion dates, constraints, and limited work windows as described in Clause 52.211-10 COMMENCEMENT, PROSECUTION, AND COMPLETION OF WORK.

3.3.5 Government Activities

Show Government and other agency activities that could impact progress. These activities include, but are not limited to: approvals, environmental permit approvals by State regulators, inspections, utility tie-in, Government Furnished Equipment (GFE) and Notice to Proceed (NTP) for phasing requirements.

3.3.6 Standard Activity Coding Dictionary

Use the activity coding structure defined in the Standard Data Exchange Format (SDEF) in ER 1-1-11. This exact structure is mandatory. Develop and assign all Activity Codes to activities as detailed herein. A template SDEF compatible schedule backup file is available on the QCS web site: http://rms.usace.army.mil.

The SDEF format is as follows:

Field	Activity Code	Length	Description
1	WRKP	3	Workers per day
2	RESP	4	Responsible party
3	AREA	4	Area of work
4	MODF	6	Modification Number
5	BIDI	6	Bid Item (CLIN)
6	PHAS	2	Phase of work
7	CATW	1	Category of work
8	FOW	20	Feature of work*

*Some systems require that FEATURE OF WORK values be placed in several activity code fields. The notation shown is for Primavera P6. Refer to the specific software guidelines with respect to the FEATURE OF WORK field requirements.

3.3.6.1 Workers Per Day (WRKP)

Assign Workers per Day for all field construction or direct work activities, if directed by the Contracting Officer. Workers per day is based on the average number of workers expected each day to perform a task for the duration of that activity.

3.3.6.2 Responsible Party Coding (RESP)

Assign responsibility code for all activities to the Prime Contractor, Subcontractor(s) or Government agency(ies) responsible for performing the activity.

a. Activities coded with a Government Responsibility code include, but are not limited to: Government approvals, Government design reviews, environmental permit approvals by State regulators, Government Furnished Property/Equipment (GFP) and Notice to Proceed (NTP) for phasing requirements.

b. Activities cannot have more than one Responsibility Code. Examples of acceptable activity code values are: DOR (for the designer of record); ELEC (for the electrical subcontractor); MECH (for the mechanical subcontractor); and GOVT (for USACE).

3.3.6.3 Area of Work Coding (AREA)

Assign Work Area code to activities based upon the work area in which the activity occurs. Define work areas based on resource constraints or space constraints that would preclude a resource, such as a particular trade or craft work crew from working in more than one work area at a time due to restraints on resources or space. Examples of Work Area Coding include different areas within a floor of a building, different floors within a building, and different buildings within a complex of buildings. Activities cannot have more than one Work Area Code.

Not all activities are required to be Work Area coded. A lack of Work Area coding indicates the activity is not resource or space constrained.

3.3.6.4 Modification Number (MODF)

Assign a Modification Number Code to any activity or sequence of activities added to the schedule as a result of a Contract Modification, when approved by Contracting Officer. Key all Code values to the Government's modification numbering system. An activity can have only one Modification Number Code.

3.3.6.5 Bid Item Coding (BIDI)

Assign a Bid Item Code to all activities using the Contract Line Item Schedule (CLIN) to which the activity belongs, even when an activity is not cost loaded. An activity can have only one BIDI Code.

3.3.6.6 Phase of Work Coding (PHAS)

Assign Phase of Work Code to all activities. Examples of phase of work are procurement phase and construction phase. Each activity can have only one Phase of Work code.

a. Code proposed fast track construction phases proposed to allow

filtering and organizing the schedule by fast track design and construction packages.

b. If the contract specifies phasing with separately defined performance periods, identify a Phase Code to allow filtering and organizing the schedule accordingly.

3.3.6.7 Category of Work Coding (CATW)

Assign a Category of Work Code to all activities. Category of Work Codes include, but are not limited to construction submittal, procurement, fabrication, weather sensitive installation, non-weather sensitive installation, start-up, and testing activities. Each activity can have no more than one Category of Work Code.

3.3.6.8 Feature of Work Coding (FOW)

Assign a Feature of Work Code to appropriate activities based on the Definable Feature of Work to which the activity belongs based on the approved QC plan.

An activity can have only one Feature of Work Code. Definable Feature of Work is defined in Section 01 45 04.00 28 CONTRACTOR QUALITY CONTROL.

3.3.7 Contract Milestones and Constraints

Milestone activities are to be used for significant project events including, but not limited to, project phasing, project start and end activities, or interim completion dates. The use of artificial float constraints such as "zero free float" or "zero total float" are prohibited.

Mandatory constraints that ignore or effect network logic are prohibited. No constrained dates are allowed in the schedule other than those specified herein. Submit additional constraints to the Contracting Officer for approval on a case by case basis.

3.3.7.1 Project Start Date Milestone and Constraint

The first activity in the project schedule must be a start milestone titled "NTP Acknowledged," which must have a "Start On" constraint date equal to the date that the NTP is acknowledged.

3.3.7.2 End Project Finish Milestone and Constraint

The last activity in the schedule must be a finish milestone titled "End Project."

Constrain the project schedule to the Contract Completion Date in such a way that if the schedule calculates an early finish, then the float calculation for "End Project" milestone reflects positive float on the longest path. If the project schedule calculates a late finish, then the "End Project" milestone float calculation reflects negative float on the longest path. The Government is under no obligation to accelerate Government activities to support a Contractor's early completion.

3.3.7.3 Interim Completion Dates and Constraints

Constrain contractually specified interim completion dates to show

negative float when the calculated late finish date of the last activity in that phase is later than the specified interim completion date.

3.3.7.3.1 Start Phase

Use a start milestone as the first activity for a project phase. Call the start milestone "Start Phase X" where "X" refers to the phase of work.

3.3.7.3.2 End Phase

Use a finish milestone as the last activity for a project phase. Call the finish milestone "End Phase X" where "X" refers to the phase of work.

3.3.8 Calendars

Schedule activities on a Calendar to which the activity logically belongs. Develop calendars to accommodate any contract defined work period such as a 7-day calendar for Government Acceptance activities, concrete cure times, etc. Develop the default Calendar to match the physical work plan with non-work periods identified including weekends and holidays. Develop Seasonal and Work Restriction Calendar(s) and assign to seasonally or work restricted activities as applicable.

If an activity is weather sensitive it should be assigned to a calendar showing non-work days on a monthly basis, with the non-work days selected at random across the weeks of the calendar, using the anticipated days provided in the contract clause TIME EXTENSIONS FOR UNUSUALLY SEVERE WEATHER. Assign non-work days over a seven-day week as weather records are compiled on seven-day weeks, which may cause some of the weather related non-work days to fall on weekends.

3.3.9 Open Ended Logic

Only two open ended activities are allowed: the first activity "NTP Acknowledged" may have no predecessor logic, and the last activity -"End Project" may have no successor logic.

Predecessor open ended logic may be allowed in a time impact analyses upon the Contracting Officer's approval.

3.3.10 Default Progress Data Disallowed

Actual Start and Finish dates must not automatically update with default mechanisms included in the scheduling software. Updating of the percent complete and the remaining duration of any activity must be independent functions. Disable program features that calculate one of these parameters from the other. Activity Actual Start (AS) and Actual Finish (AF) dates assigned during the updating process must match those dates provided in the Contractor Quality Control Reports. Failure to document the AS and AF dates in the Daily Quality Control report will result in disapproval of the Contractor's schedule.

3.3.11 Out-of-Sequence Progress

Activities that have progressed before all preceding logic has been satisfied (Out-of-Sequence Progress) will be allowed only on a case-by-case basis subject to approval by the Contracting Officer. Propose logic corrections to eliminate out of sequence progress or justify not changing the sequencing for approval prior to submitting an updated

project schedule. Address out of sequence progress or logic changes in the Narrative Report and in the periodic schedule update meetings.

3.3.12 Added and Deleted Activities

Do not delete activities from the project schedule or add new activities to the schedule without approval from the Contracting Officer. Activity ID and description changes are considered new activities and cannot be changed without Contracting Officer approval.

3.3.13 Original Durations

Activity Original Durations (OD) must be reasonable to perform the work item. OD changes are prohibited unless justification is provided and approved by the Contracting Officer.

3.3.14 Leads, Lags, and Start to Finish Relationships

Lags must be reasonable as determined by the Government and not used in place of realistic original durations, must not be in place to artificially absorb float, or to replace proper schedule logic. Lags are limited to 5 workdays.

a. Leads (negative lags) are prohibited.

b. Start to Finish (SF) relationships are prohibited.

3.3.15 Retained Logic

Schedule calculations must retain the logic between predecessors and successors ("retained logic" mode) even when the successor activity(s) starts and the predecessor activity(s) has not finished (out-of-sequence progress). Software features that in effect sever the tie between predecessor and successor activities when the successor has started and the predecessor logic is not satisfied ("progress override") are not be allowed.

3.3.16 Percent Complete

Update the percent complete for each activity started, based on the realistic assessment of earned value. Activities which are complete but for remaining minor punch list work and which do not restrain the initiation of successor activities may be declared 100 percent complete to allow for proper schedule management.

3.3.17 Remaining Duration

Update the remaining duration for each activity based on the number of estimated work days it will take to complete the activity. Remaining duration may not mathematically correlate with percentage found under paragraph entitled Percent Complete.

3.3.18 Cost Loading of Closeout Activities

Cost load closeout activities in accordance with the retainage of payment for final submittals as specified in Section 01 22 00.00 28 "MEASUREMENT AND PAYMENT."

3.3.19 Anticipated Adverse Weather

Paragraph applicable to contracts with clause entitled TIME EXTENSIONS FOR UNUSUALLY SEVERE WEATHER. Reflect the number of anticipated adverse weather delays allocated to a weather sensitive activity in the activity's calendar.

3.3.20 Early Completion Schedule and the Right to Finish Early

An Early Completion Schedule is an Initial Project Schedule (IPS) that indicates all scope of the required contract work will be completed before the contractually required completion date.

a. No IPS indicating an Early Completion will be accepted without being fully resource-loaded (including crew sizes and manhours) and the Government agreeing that the schedule is reasonable and achievable.

b. The Government is under no obligation to accelerate work items it is responsible for to ensure that the early completion is met nor is it responsible to modify incremental funding (if applicable) for the project to meet the contractor's accelerated work.

3.4 PROJECT SCHEDULE SUBMISSIONS

Provide the submissions as described below. The schedule data, reports, and network diagrams required for each submission are contained in paragraph SUBMISSION REQUIREMENTS. If the Contractor fails or refuses to furnish the information and schedule updates as set forth herein, then the Contractor will be deemed not to have provided an estimate upon which a progress payment can be made.

Review comments made by the Government on the schedule(s) do not relieve the Contractor from compliance with requirements of the Contract Documents.

3.4.1 Preliminary Project Schedule Submission

Submit a PDF version of the Preliminary Project Schedule, defining the Contractor's planned operations, at a summary level, a minimum of 24 hours prior to the Pre-work meeting. Provide hardcopy versions of the Preliminary Project Schedule, for distribution at the Pre-work meeting. The Preliminary Project Schedule shall include NTP, major design activities, major preconstruction submittals (to include APP, EPP, and CQC), mobilization, construction/installation, testing/commissioning, demobilization. Anticipate coordination of the beam repair schedule at the Pre-work meeting.

3.4.2 Initial Project Schedule Submission

Submit the Initial Project Schedule for approval within Thirty (30) calendar days after notice to proceed is issued. The schedule must demonstrate a reasonable and realistic sequence of activities which represent all work through the entire contract performance period. No payment will be made for work items not fully detailed in the Project Schedule.

3.4.3 Periodic Schedule Updates

Update the Project Schedule on a regular basis, monthly at a minimum. Provide a draft Periodic Schedule Update for review at the schedule update

meetings as prescribed in the paragraph PERIODIC SCHEDULE UPDATE MEETINGS. These updates will enable the Government to assess Contractor's progress.

a. Update information including Actual Start Dates (AS), Actual Finish Dates (AF), Remaining Durations (RD), and Percent Complete is subject to the approval of the Government at the meeting.

b. AS and AF dates must match the date(s) reported on the Contractor's Quality Control Report for an activity start or finish.

3.5 SUBMISSION REQUIREMENTS

Submit the following items for the Initial Schedule, and every Periodic Schedule Update throughout the life of the project:

3.5.1 Current Project Schedule Data

Provide the current project schedule and all previously submitted schedules in the format of the scheduling software (e.g. .xer). Also include the Narrative Report and all required Schedule Reports. Label submittals indicating the type of schedule (Preliminary, Initial, Update), full contract number, Data Date and file name. Each schedule must have a unique file name and use project specific settings. In addition, Contractor shall e-mail a copy to the Contracting Officer's Representative.

3.5.2 Narrative Report

Provide a Narrative Report with each schedule submission. The Narrative Report is expected to communicate to the Government the thorough analysis of the schedule output and the plans to compensate for any problems, either current or potential, which are revealed through that analysis. Include the following information as minimum in the Narrative Report:

a. Identify and discuss the work scheduled to start in the next update period.

b. A description of activities along the two most critical paths where the total float is less than or equal to 20 work days.

c. A description of current and anticipated problem areas or delaying factors and their impact and an explanation of corrective actions taken or required to be taken.

d. Identify and explain why activities based on their calculated late dates should have either started or finished during the update period but did not.

e. Identify and discuss all schedule changes by activity ID and activity name including what specifically was changed and why the change was needed. Include at a minimum new and deleted activities, logic changes, duration changes, calendar changes, lag changes, resource changes, and actual start and finish date changes.

f. Identify and discuss out-of-sequence work.

3.5.3 Schedule Reports

The format, filtering, organizing and sorting for each schedule report

will be as directed by the Contracting Officer. Typically, reports contain Activity Numbers, Activity Description, Original Duration, Remaining Duration, Early Start Date, Early Finish Date, Late Start Date, Late Finish Date, Total Float, Actual Start Date, Actual Finish Date, and Percent Complete. Provide the reports electronically in .pdf format. The following lists typical reports that will be requested:

3.5.3.1 Activity Report

List of all activities sorted according to activity number.

3.5.3.2 Logic Report

List of detailed predecessor and successor activities for every activity in ascending order by activity number.

3.5.3.3 Total Float Report

A list of all incomplete activities sorted in ascending order of total float. List activities which have the same amount of total float in ascending order of Early Start Dates. Do not show completed activities on this report.

3.5.3.4 Earnings Report by CLIN

A compilation of the Total Earnings on the project from the NTP to the data date, which reflects the earnings of activities based on the agreements made in the schedule update meeting defined herein. Provided a complete schedule update has been furnished, this report serves as the basis of determining progress payments. Group activities by CLIN number and sort by activity number. Provide a total CLIN percent earned value, CLIN percent complete, and project percent complete. The printed report must contain the following for each activity: the Activity Number, Activity Description, Original Budgeted Amount, Earnings to Date, Earnings this period, Total Quantity, Quantity to Date, and Percent Complete (based on cost).

3.5.3.5 Schedule Log

Provide a Scheduling/Leveling Report generated from the current project schedule being submitted.

3.5.4 Gantt Chart

The Gantt Chart is required for the Preliminary, Initial and Periodic Updates. Depict and display the order and interdependence of activities and the sequence in which the work is to be accomplished. The Contracting Officer will use, but is not limited to, the following conditions to review compliance with this paragraph:

3.5.4.1 Continuous Flow

Show a continuous flow from left to right with no arrows from right to left. Show the activity number, description, duration, and estimated earned value on the diagram.

3.5.4.2 Project Milestone Dates

Show dates on the diagram for start of project, any contract required

interim completion dates, and contract completion dates.

3.5.4.3 Critical Path

Show all activities on the critical path. The critical path is defined as the longest path.

3.5.4.4 Banding

Organize activities using the WBS or as otherwise directed to assist in the understanding of the activity sequence. Typically, this flow will group activities by major elements of work, category of work, work area and/or responsibility.

3.5.4.5 Cash Flow / Schedule Variance Control (SVC) Diagram

With each schedule submission, provide a SVC diagram showing 1) Cash Flow S-Curves indicating planned project cost based on projected early and late activity finish dates, and 2) Earned Value to-date.

3.6 PERIODIC SCHEDULE UPDATE

3.6.1 Periodic Schedule Update Meetings

Conduct periodic schedule update meetings for the purpose of reviewing the proposed Periodic Schedule Update, Narrative Report, Schedule Reports, and progress payment. Conduct meetings at least monthly within five days of the proposed schedule data date. Provide a computer with the scheduling software loaded and a projector which allows all meeting participants to view the proposed schedule during the meeting. The Contractor's authorized scheduler must organize, group, sort, filter, perform schedule revisions as needed and review functions as requested by the Contractor and/or Government. The meeting is a working interactive exchange which allows the Government and Contractor the opportunity to review the updated schedule on a real time and interactive basis. The meeting will last no longer than 8 hours. Provide a draft of the proposed narrative report and schedule data file to the Government a minimum of two workdays in advance of the meeting. The Contractor's Project Manager and scheduler must attend the meeting with the authorized representative of the Contracting Officer. Superintendents, foremen and major subcontractors must attend the meeting as required to discuss the project schedule and work. Following the periodic schedule update meeting, make corrections to the draft submission. Include only those changes approved by the Government in the submission and invoice for payment.

3.6.2 Update Submission Following Progress Meeting

Submit the complete Periodic Schedule Update of the Project Schedule containing all approved progress, revisions, and adjustments, pursuant to paragraph SUBMISSION REQUIREMENTS not later than Four (4) work days after the periodic schedule update meeting.

3.7 WEEKLY PROGRESS MEETINGS

Conduct a weekly meeting with the Government (or as otherwise mutually agreed to) between the meetings described in paragraph entitled PERIODIC SCHEDULE UPDATE MEETINGS for the purpose of jointly reviewing the actual progress of the project as compared to the as planned progress and to review planned activities for the upcoming two weeks. Use the current

approved schedule update for the purposes of this meeting and for the production and review of reports. At the weekly progress meeting, address the status of RFIs, RFPs and Submittals.

3.8 REQUESTS FOR TIME EXTENSIONS

Provide a justification of delay to the Contracting Officer in accordance with the contract provisions and clauses for approval within 10 days of a delay occurring. Also prepare a time impact analysis for each Government request for proposal (RFP) to justify time extensions.

3.8.1 Justification of Delay

Provide a description of the event(s) that caused the delay and/or impact to the work. As part of the description, identify all schedule activities impacted. Show that the event that caused the delay/impact was the responsibility of the Government. Provide a time impact analysis that demonstrates the effects of the delay or impact on the project completion date or interim completion date(s). Evaluate multiple impacts chronologically; each with its own justification of delay. With multiple impacts consider any concurrency of delay. A time extension and the schedule fragnet becomes part of the project schedule and all future schedule updates upon approval by the Contracting Officer.

3.8.2 Time Impact Analysis (Prospective Analysis)

Prepare a time impact analysis for approval by the Contracting Officer based on industry standard AACE 52R-06. Utilize a copy of the last approved schedule prior to the first day of the impact or delay for the time impact analysis. If Contracting Officer determines the time frame between the last approved schedule and the first day of impact is too great, prepare an interim updated schedule to perform the time impact analysis. Unless approved by the Contracting Officer, no other changes may be incorporated into the schedule being used to justify the time impact.

3.8.3 Forensic Schedule Analysis (Retrospective Analysis)

Prepare an analysis for approval by the Contracting Officer based on industry standard AACE 29R-03.

3.8.4 Fragmentary Network (Fragnet)

Prepare a proposed fragnet for time impact analysis consisting of a sequence of new activities that are proposed to be added to the project schedule to demonstrate the influence of the delay or impact to the project's contractual dates. Clearly show how the proposed fragnet is to be tied into the project schedule including all predecessors and successors to the fragnet activities. The proposed fragnet must be approved by the Contracting Officer prior to incorporation into the project schedule.

3.8.5 Time Extension

The Contracting Officer must approve the Justification of Delay including the time impact analysis before a time extension will be granted. No time extension will be granted unless the delay consumes all available Project Float and extends the projected finish date ("End Project" milestone) beyond the Contract Completion Date. The time extension will be in

calendar days.

Actual delays that are found to be caused by the Contractor's own actions, which result in a calculated schedule delay will not be a cause for an extension to the performance period, completion date, or any interim milestone date.

3.8.6 Impact to Early Completion Schedule

No extended overhead will be paid for delay prior to the original Contract Completion Date for an Early Completion IPS unless the Contractor actually performed work in accordance with that Early Completion Schedule. The Contractor must show that an early completion was achievable had it not been for the impact.

3.9 FAILURE TO ACHIEVE PROGRESS

Should the progress fall behind the approved project schedule for reasons other than those that are excusable within the terms of the contract, the Contracting Officer may require provision of a written recovery plan for approval. The plan must detail how progress will be made-up to include which activities will be accelerated by adding additional crews, longer work hours, extra work days, etc.

3.9.1 Artificially Improving Progress

Artificially improving progress by means such as, but not limited to, revising the schedule logic, modifying or adding constraints, shortening activity durations, or changing calendars in the project schedule is prohibited. Indicate assumptions made and the basis for any logic, constraint, duration and calendar changes used in the creation of the recovery plan. Any additional resources, manpower, or daily and weekly work hour changes proposed in the recovery plan must be evident at the work site and documented in the daily report along with the Schedule Narrative Report.

3.9.2 Failure to Perform

Failure to perform work and maintain progress in accordance with the supplemental recovery plan may result in an interim and final unsatisfactory performance rating and/or may result in corrective action directed by the Contracting Officer pursuant to FAR 52.236-15 Schedules for Construction Contracts, FAR 52.249-10 Default (Fixed-Price Construction), and other contract provisions.

3.9.3 Recovery Schedule

Should the Contracting Officer find it necessary, submit a recovery schedule pursuant to FAR 52.236-15 Schedules for Construction Contracts.

3.10 OWNERSHIP OF FLOAT

Except for the provision given in the paragraph IMPACT TO EARLY COMPLETION SCHEDULE, float available in the schedule, at any time, may not be considered for the exclusive use of either the Government or the Contractor including activity and/or project float. Activity float is the number of work days that an activity can be delayed without causing a delay to the "End Project" finish milestone. Project float (if applicable) is the number of work days between the projected early finish

and the contract completion date milestone.

3.11 TRANSFER OF SCHEDULE DATA INTO RMS-CM

Import the schedule data into the RMS-CM. This data is considered to be additional supporting data in a form and detail required by the Contracting Officer pursuant to FAR 52.232-5 - Payments under Fixed-Price Construction Contracts. The receipt of a proper payment request pursuant to FAR 52.232-27 - Prompt Payment for Construction Contracts is contingent upon the Government receiving both acceptable and approvable hard copies and matching electronic export from RMS-CM of the application for progress payment.

3.12 PRIMAVERA P6 MANDATORY REQUIREMENTS

If Primavera P6 is being used, request a backup file template (.xer) from the Government, if one is available, prior to building the schedule. The following settings are mandatory and required in all schedule submissions to the Government:

a. Activity Codes must be Project Level, not Global or EPS level.

b. Calendars must be Project Level, not Global or Resource level.

c. Activity Duration Types must be set to "Fixed Duration & Units".

d. Percent Complete Types must be set to "Physical".

e. Time Period Admin Preferences must remain the default "8.0 hr/day, 40 hr/week, 172 hr/month, 2000 hr/year". Set Calendar Work Hours/Day to 8.0 Hour days.

f. Set Schedule Option for defining Critical Activities to "Longest Path".

g. Set Schedule Option for defining progressed activities to "Retained Logic".

h. Set up cost loading using a single lump sum labor resource. The Price/Unit must be $1/hr, Default Units/Time must be "8h/d", and settings "Auto Compute Actuals" and "Calculate costs from units" selected.

i. Activity ID's must not exceed 10 characters.

j. Activity Names must have the most defining and detailed description within the first 30 characters.

k. Resource IDs and names must be unique to the contractor and project.

-- End of Section --

THIS PAGE INTENTIONALLY LEFT BLANK

SECTION TABLE OF CONTENTS

DIVISION 01 - GENERAL REQUIREMENTS

SECTION 01 33 00

SUBMITTAL PROCEDURES

PART 1 GENERAL

1.1 REFERENCES
1.2 DEFINITIONS
1.2.1 Submittal Descriptions (SD)
1.2.2 Reviewing Authority
1.2.2.1 Action Elements for Submittal Review
1.2.3 Work
1.3 SUBMITTAL CLASSIFICATION
1.3.1 Designer of Record Approved (DA)
1.3.2 Government Approved (G)
1.3.3 Government Conformance Review of Design (CR)
1.3.4 Designer of Record Approved/Government Conformance Review (R)
1.3.4.1 Deviations to the Accepted Design
1.3.4.2 Substitutions
1.3.5 Designer of Record Approved/Government Approved (A)
1.3.6 Information Only (I)
1.4 CAD FILE REQUIREMENTS
1.4.1 CAD File Requirements for Design Drawings Created After Award.
1.4.2 USACE CAD/BIM Technology Center
1.5 PREPARATION
1.5.1 Transmittal Form
1.5.2 Identifying Submittals
1.5.3 Format For Electronic Submittals
1.5.4 Format for SD-02 Shop Drawings
1.5.4.1 Shop Drawing Submittals
1.5.5 Format of SD-03 Product Data and SD-08 Manufacturer's Instructions
1.5.6 Format of SD-04 Samples
1.5.7 Format of SD-05 Design Data and SD-07 Certificates
1.5.8 Format of SD-06 Test Reports and SD-09 Manufacturer's Field Reports
1.5.9 Format of SD-01 Preconstruction Submittals and SD-11 Closeout Submittals
1.6 QUANTITY OF SUBMITTALS
1.6.1 Electronic Copies
1.6.2 Hard Copies (HC)
1.6.2.1 Hard Copy Submittals
1.6.3 Official Receipt of Transmittals
1.6.4 Number of Samples SD-04 Samples
1.6.5 Number of Copies of SD-10 Operation and Maintenance Data
1.7 INFORMATION ONLY SUBMITTALS
1.8 VARIATIONS REQUESTS
1.8.1 Considering Variations
1.8.2 Proposing Variations
1.8.3 Warranting That Variations Are Compatible

1.8.4 Review Schedule Is Modified
1.9 SUBMITTAL REGISTER
1.9.1 Use Of Submittal Register
1.9.2 Contractor Use of Submittal Register
1.9.3 Approving Authority Use of Submittal Register
1.9.4 Contractor Action Codes
1.9.5 Contractor Action Code and Action Code
1.9.6 Copies Delivered to the Government
1.10 SCHEDULING
1.11 GOVERNMENT APPROVING AUTHORITY
1.11.1 Review Notations
1.12 DISAPPROVED OR REJECTED SUBMITTALS
1.13 APPROVED/ACCEPTED SUBMITTALS
1.14 APPROVED SAMPLES
1.15 WITHHOLDING OF PAYMENT
1.16 STAMPS

PART 2 PRODUCTS (NOT USED)

PART 3 EXECUTION (NOT USED)

ATTACHMENTS:

ENG Form 4025

Submittal Register

-- End of Section Table of Contents --

SECTION 01 33 00

SUBMITTAL PROCEDURES

PART 1 GENERAL

The Contracting Officer (KO) may request submittals in addition to those specified when deemed necessary to adequately describe the work covered in the respective sections. Make certain that each submittal is complete and in sufficient detail to easily determine contract compliance.

a. Use the same units of weights and measures as the contract drawings.

b. Contractor's Quality Control (CQC) System Manager shall check and approve all items prior to submittal and stamp, sign, and date indicating action taken.

c. Clearly identify any proposed variations from the contract requirements.

d. Include drawings; literature (catalog cuts, diagrams, operating charts or curves); test reports; samples; O&M manuals (including parts list); certifications; warranties; and other necessary information.

e. Obtain submittal approval prior to acquiring the covered material or equipment.

1.1 REFERENCES

The publications listed below form a part of this section to the extent referenced. The publications are referred to within the text by the basic designation only.

U.S. ARMY CORPS OF ENGINEERS (USACE)

ERDC/ITL TR-19-6	(Aug 2019) A/E/C Graphics Standard, Release 2.1
ERDC/ITL TR-19-7	(Aug 2019) A/E/C CAD Standard - Release 6.1

1.2 DEFINITIONS

1.2.1 Submittal Descriptions (SD)

Submittals requirements are specified in the technical sections. Submittals are identified by Submittal Description (SD) numbers and titles as follows:

SD-01 Preconstruction Submittals

Submittals which are required to be approved prior to commencing work on site. Submittals required prior to the start of the next major phase of the construction on a multi-phase contract. Schedules or tabular list of data or tabular list including location, features, or other pertinent information regarding products, materials, equipment, or components to be used in the work.

SD-02 Shop Drawings

Drawings, diagrams and schedules specifically prepared to illustrate some portion of the work.

Diagrams and instructions from a manufacturer or fabricator for use in producing the product and as aids to the Contractor for integrating the product or system into the project.

Drawings prepared by or for the Contractor to show how multiple systems and interdisciplinary work will be coordinated.

SD-03 Product Data

Catalog cuts, illustrations, schedules, diagrams, performance charts, instructions and brochures illustrating size, physical appearance and other characteristics of materials, systems or equipment for some portion of the work.

Samples of warranty language when the contract requires extended product warranties.

SD-05 Design Data

Design calculations, mix designs, analyses or other data pertaining to a part of work.

SD-06 Test Reports

Report signed by authorized official of testing laboratory that a material, product or system identical to the material, product or system to be provided has been tested in accord with specified requirements. (Unless otherwise specified testing must have been completed within three (3) years of date of contract award for the project.)

Report which includes findings of a test required to be performed by the Contractor on an actual portion of the work or prototype prepared for the project before shipment to job site.

Report which includes finding of a test made at the job site or on sample taken from the job site, on portion of work during or after installation.

Investigation reports.

Daily logs and checklists.

Final acceptance test and operational test procedure.

SD-07 Certificates

Statements printed on the manufacturer's letterhead and signed by responsible officials of manufacturer of product, system or material attesting that product, system or material meets specification requirements. Must be dated after award of project contract and clearly name the project.

Document required of Contractor, or of a manufacturer, supplier, installer or subcontractor through Contractor, the purpose of which is to further quality of orderly progression of a portion of the work by documenting procedures, acceptability of methods or personnel qualifications.

Confined space entry permits.

Text of posted operating instructions.

SD-11 Closeout Submittals

Documentation to record compliance with technical or administrative requirements or to establish an administrative mechanism.

Special requirements necessary to properly close out a construction contract. For example, Record Drawings and as-built drawings. Also, submittal requirements necessary to properly close out a major phase of construction on a multi-phase contract.

1.2.2 Reviewing Authority

Office or designated person to review submittal.

1.2.2.1 Action Elements for Submittal Review

AE	Architect/Engineer
C	Engineering & Construction Division, Construction Branch
CS	Cybersecurity, Electrical Design Lead
DDC	Walla Walla District Dive Coordinator, Safety Office
A	Engineering & Construction Division, Structural Design "Architectural"
ECC	Operation's Division, Environmental Compliance Coordinator
OPC	Operation's Division, Pesticide Coordinator
EL	Engineering & Construction Division, Electrical Design
GT	Engineering & Construction Division, Geotechnical Design
H	Engineering & Construction Division, Hydraulic Design
ME	Engineering & Construction Division, Mechanical Design
ST	Engineering & Construction Division, Structural Design
TL	Engineering & Construction Division, Technical Lead
HDC	Hydroelectric Design Center
GE	Engineering & Construction Division, General Engineering
GS	Engineering & Construction Division, Geospatial
PMP	Project Management Division, Planning
SO	Safety Office
SLE	Security Law Enforcement Officer
EOC	Engineering Design, Project Operations and Construction
CERL	Construction Engineering Research Laboratory
EC	Engineering and Construction

1.2.3 Work

As used in this SECTION, on- and off-site construction required by contract documents, including labor necessary to produce submittals, construction, materials, products, equipment, and systems incorporated or to be incorporated in such construction.

1.3 SUBMITTAL CLASSIFICATION

Submittals are classified as follows:

G - This code is for submittals requiring government approval that were listed in the original government-generated specs.

I - This code is used for both Government-generated submittals and Contractor-generated submittals. This code is reserved for submittals that don't require approval, e.g. test reports.

D - This code is for Contractor-generated design submittals that require DOR approval. Most of the Contractor-generated submittals will use this code.

C - This code is used for the Contractor-generated design submittals that the Government will be reviewing, i.e. intermediate design, final design, etc.

R - This code is used for Contractor-generated design submittals that are a deviation from the approved design and do not require a contract modification

A - This code is used for Contractor-generated design submittals that are a deviation from the approved design and do require a contract modification

1.3.1 Designer of Record Approved (DA)

Designer of Record (DOR) approval is required for extensions of design, critical materials, any deviations from the solicitation, the accepted proposal, or the completed design, equipment whose compatibility with the entire system must be checked, and other items as designated by the KO. Within the terms of the Contract Clause SPECIFICATIONS AND DRAWINGS FOR CONSTRUCTION, they are considered to be "shop drawings." Contractor to provide the Government with the number of copies designated hereinafter of all DOR approved submittals. The Government may review any or all Designer of Record approved submittals for conformance to the Solicitation, Accepted Proposal and the completed design. The Government will review all submittals designated as deviating from the Solicitation or Accepted Proposal, as described below. Design submittals to be in accordance with SECTION 03 01 00.01 28 CONCRETE SECTION ENLARGEMENT. Generally, design submittals should be identified as SD-05 Design Data submittals.

1.3.2 Government Approved (G)

Government approval is required for extensions of design, critical materials, variations, equipment whose compatibility with the entire system must be checked, and other items as designated by the KO. Government approval is required for any variations from the Solicitation or Accepted Proposal and other items as designated by the KO. Within the terms of the Contract Clause entitled "Specifications and Drawings for Construction," they are considered to be "shop drawings."

1.3.3 Government Conformance Review of Design (CR)

The Government will review all design submittals for conformance with the technical requirements of the solicitation. Review will be only for

conformance with the applicable codes, standards and contract requirements. Design data includes, but is not limited to, the design documents described in SECTION 03 01 00.01 28 CONCRETE SECTION ENLARGEMENT. Generally, design submittals should be identified as SD-05 Design Data submittals.

1.3.4 Designer of Record Approved/Government Conformance Review (R)

1.3.4.1 Deviations to the Accepted Design

Designer of Record approval and the Government's concurrence are required for any proposed deviation from the accepted design which still complies with the contract before the Contractor is authorized to proceed with material acquisition or installation. Within the terms of the Contract Clause SPECIFICATIONS AND DRAWINGS FOR CONSTRUCTION, they are considered to be "shop drawings." If necessary to facilitate the project schedule, the Contractor and the DOR may discuss a submittal proposing a deviation with the KO's Representative prior to officially submitting it to the Government. However, the Government reserves the right to review the submittal before providing an opinion, if deemed necessary. In any case, the Government will not formally agree to or provide a preliminary opinion on any deviation without the DOR's approval or recommended approval. The Government reserves the right to non-concur with any deviation from the design, which may impact furniture, furnishings, equipment selections or operations decisions that were made, based on the reviewed and concurred design.

1.3.4.2 Substitutions

Unless prohibited or provided for otherwise elsewhere in the Contract, where the accepted contract proposal named products, systems, materials or equipment by manufacturer, brand name and/or by model number or other specific identification, and the Contractor desires to substitute manufacturer or model after award, submit a requested substitution for Government concurrence. Include substantiation, identifying information and the DOR's approval, as meeting the contract requirements and that it is equal in function, performance, quality and salient features to that in the accepted contract proposal. If the Contract otherwise prohibits substitutions of equal named products, systems, materials or equipment by manufacturer, brand name and/or by model number or other specific identification, the request is considered a "variation" to the contract. Variations are discussed below in paragraphs: "Designer of Record Approved/Government Approved" and "VARIATIONS."

1.3.5 Designer of Record Approved/Government Approved (A)

In addition to the above stated requirements for proposed deviations to the accepted design, both Designer of Record and Government Approval and, where applicable, a contract modification are required before the Contractor is authorized to proceed with material acquisition or installation for any proposed variation to the contract (the solicitation and/or the accepted proposal), which constitutes a change to the contract terms. Within the terms of the Contract Clause SPECIFICATIONS AND DRAWINGS FOR CONSTRUCTION, they are considered to be "shop drawings." The Government reserves the right to accept or reject any such proposed deviation at its discretion.

1.3.6 Information Only (I)

Submittals not requiring Government approval will be for information only (FIO).

1.4 **CAD FILE REQUIREMENTS**

The following applies to all CAD File submittals for this Contract, unless otherwise noted:

a. Furnish CAD files in the latest version of Bentley DGN format, for all CAD Files submitted by the Contractor in performance of this contract.

b. Unless otherwise noted, all CAD Files shall meet A/E/C CAD and Graphic Standards, as follows:

1. Compliant with the A/E/C CAD Standard ERDC/ITL TR-19-7, A/E/C Graphics Standard ERDC/ITL TR-19-6.

c. CAD Files shall have presentation graphics which can be edited by Bentley software (with the exception of photographs). Presentation graphics typically consist of drawing elements such as lines, arcs, shapes, text, and their attributes (e.g., color, width, line style).

d. If CAD files are developed in a format other than the specified Bentley software, furnish the following:

1. The converted CAD files in Bentley DGN format, in compliance with all specified CAD file requirements.

2. The original CAD files in their native file format.

e. In addition to CAD files, submit an ADOBE .pdf of each CAD File. The pdfs and the CAD files shall be identical.

f. Submit files using the DoD SAFE (Secure Access File Exchange) website as directed by the Contracting Officer.

1.4.1 CAD File Requirements for Design Drawings Created After Award.

In addition to the requirements listed above, when the Contractor prepares design drawings for requirements stated in the contract, for a modification, or as part of a Value Engineer Change Proposal, the following requirements apply:

a. Electronic files shall be .dgn format with element types that can be edited (i.e. no attached raster files, .dxf, or .dwg file formats will be accepted). The Contractor shall use the furnished Walla Walla District title block border and seed files to match AEC CAD standard for all drawings with the appropriate firm name included within the title block.

b. Each drawing file shall be completely independent of any data in any other file, including fonts and shapes not included with the basic CAD software program utilized. Drawing files with external references or special fonts are not acceptable. All displayed graphic elements on all levels of the drawing file shall be part of the project drawing image. The drawing file shall not contain any graphic element that is

not part of the drawing image.

c. Provide an index of drawings sheet in CAD as part of the drawing set, and an electronic list in Microsoft Excel of all drawings. Include the electronic file name, the sheet reference number, the sheet number, and the sheet title, containing the data for each drawing.

d. Design drawings may be prepared more like shop drawings to minimize construction submittals after final designs are approved. Therefore, the Contractor is encouraged to prepare and submit with the design drawings, appropriate connection, fabrication, layout, and product specific drawings.

e. The Contractor-originated drawings will be used as the basis for the record drawings. Shop drawings included as design documents shall comply with the same drawing requirements such as drawing form, sheet size, layering, lettering, and title block used in design drawings.

f. All final Contractor-originated design drawings shall be signed, dated, and bear the seal of the registered architect or the registered engineer of the respective discipline. This seal shall be the seal of the Designer of Record for that drawing, and who is professionally registered for work in that discipline. Application of the electronic seal and signature accepts responsibility for the work shown thereon.

1.4.2 USACE CAD/BIM Technology Center

The USACE CAD/BIM Technology Center hosts all standard content for USACE. This content can be accessed through the CAD/BIM Technology Center website, https://cadbimcenter.erdc.dren.mil.

1.5 PREPARATION

1.5.1 Transmittal Form

The attached sample transmittal form (ENG Form 4025) is in RMS and shall be completed in RMS 3.0 Contractor Mode. Use ENG Form 4025 for submitting both Government approved and information only submittals in accordance with the instructions on the reverse side of the form.

Properly complete this form by filling out all the heading blank spaces and identifying each item submitted. Exercise special care to ensure proper listing of the specification paragraph and sheet number of the contract drawings pertinent to the data submitted for each item.

1.5.2 Identifying Submittals

When submittals are provided by either the Prime Contractor or subcontractor, the Prime Contractor is responsible to prepare, review and stamp with Contractor's approval all specified submittals prior to submitting for Government approval.

Identify submittals, except sample installations and sample panels, with the following information permanently adhered to or noted on each separate component of each submittal and noted on transmittal form. Mark each copy of each submittal identically, with the following:

a. Project title, location, and date.

b. Contract number.

c. Date of the drawings and revisions.

d. Name, address, and telephone number of subcontractor, supplier, manufacturer and any other second tier Contractor associated with submittal.

e. Section number of the specification section by which submittal is required.

f. Submittal description (SD) number of each component of submittal.

g. When a resubmission, add a number suffix on submittal description, for example, submittal 18 would become 18.1, to indicate the resubmission.

h. Product identification and location in project.

The sequence of submission of drawings shall be such that all information is available for checking each drawing when it is received. Contract number and project shall be shown directly above the revision space on all drawings submitted. Drawing details and notes shall be of such quality and clarity and of sufficient definition and line weight as to permit sharp and totally legible scanning. All items shall be adequately identified to show where they will be used, and shall be referenced to applicable contract drawings and specification section.

All shop drawings submitted on a single transmittal (ENG form 4025) shall pertain to only one (1) specification section. Computed weights of all items shall be indicated on the shop drawings. Where drawings are submitted for either one (1) assemblies consisting of more than one (1) piece of equipment, or two (2) systems consisting of numerous components dependent one on the other for matching or compatible characteristics, complete information shall be submitted on all such related components at the same time.

1.5.3 Format For Electronic Submittals

The PDF file name of all submittals shall include the contract and transmittal number.

a. example: 19C0005 01 35 29.10 28-1 Item 1, 5

b. re-submittal example: 19C0005 01 35 29.10 28-1.1 Item 1, 5

All electronic submittals shall be in color and digitally searchable. All pages in the file shall be oriented so that no rotation or manipulation to view is needed.

1.5.4 Format for SD-02 Shop Drawings

All shop drawings prepared by the Contractor for this contract shall be formatted to American National Standards Institute (ANSI D).

a. All shop drawings shall have a title block prepared by the Contractor independent of any Contract Drawing. Include a revision block.

b. Title block shall include project title, sheet description, sheet number, contract number and issue date.

c. Revision block shall contain revision mark, revision description, date of revision.

d. Each Sheet shall have a unique number.

e. Each sheet shall have the Contractor Firm name on it.

f. CAD requirements for Shop Drawings include the following:

1. CAD file(s) meeting requirements of paragraph "CAD File Requirements" in this SECTION.

2. An Adobe .pdf copy of the corresponding CAD file(s). The pdfs and CAD files shall be identical.

3. Shop drawing format does not need to comply with A/E/C CAD and Graphic Standards.

1.5.4.1 Shop Drawing Submittals

Shop Drawing Submittals are required as follows:

1. As shown and specified in the plans and specifications during design and Construction.

2. As specified in SECTION 01 78 00.00 28 CLOSEOUT SUBMITTALS, paragraph FINAL SHOP DRAWINGS.

1.5.5 Format of SD-03 Product Data and SD-08 Manufacturer's Instructions

a. Present product data submittals for each section as required. Include table of contents, listing page and catalog item numbers for product data.

b. Indicate, by prominent notation, each product which is being submitted; indicate specification section number and paragraph number to which it pertains. Mark out all product data not pertaining to the product being submitted.

c. Supplement product data with material prepared for project to satisfy submittal requirements for which product data does not exist. Identify this material as developed specifically for project, with information and format as required for submission of SD-07 Certificates.

d. Provide all software code, user interfaces, logic and graphic information, manuals, documentation, etc. in English, only.

e. Provide product data in English dimensions. Where product data are included in preprinted catalogs with Metric units only, submit English dimensions on separate sheet.

f. Include the manufacturer's name, trade name, place of manufacture, and catalog model or number on product data. Also include applicable federal, military, industry and technical society publication

references. Should manufacturer's data require supplemental information for clarification, submit as specified for SD-07 Certificates.

g. Where equipment or materials are specified to conform to industry and technical society reference standards of the organizations such as American National Standards Institute (ANSI), ASTM International (ASTM), National Electrical Manufacturer's Association (NEMA), Underwriters Laboratories (UL), and Association of Edison Illuminating Companies (AEIC), submit proof of such compliance. The label or listing by the specified organization will be acceptable evidence of compliance. In lieu of the label or listing, submit a certificate from an independent testing organization, competent to perform testing, and approved by the KO. State on the certificate that the item has been tested in accordance with the specified organization's test methods and that the item complies with the specified organization's reference standard.

h. Collect required data submittals for each specific material, product, unit of work, or system into a single submittal. Mark the submittal to clearly indicate what choices, options, and portions of the product offering will be incorporated into the work. Mark each copy of the product data identically. Partial submittals will not be accepted for expedition of construction effort.

i. Submit manufacturer's instructions prior to installation.

1.5.6 Format of SD-04 Samples

a. Furnish samples in sizes below, unless otherwise specified or unless the manufacturer has prepackaged samples of approximately same size as specified:

(1) Sample of Equipment or Device: Full size.

(2) Sample of Materials Less Than 2 by 3 inches built up to 8-1/2 by 11 inches.

(3) Sample of Materials Exceeding 8-1/2 by 11 inches: Cut down to 8-1/2 by 11 inches and adequate to indicate color, texture, and material variations.

(4) Sample of Linear Devices or Materials: 10 inch length or length to be supplied, if less than 10 inches. Examples of linear devices or materials are conduit and handrails.

(5) Sample of Non-Solid Materials: Pint. Examples of non-solid materials are sand and paint.

(6) Color Selection Samples: 2 by 4 inches. Where samples are specified for selection of color, finish, pattern, or texture, submit the full set of available choices for the material or product specified. Sizes and quantities of samples are to represent their respective standard unit.

(7) Sample Panel: 4 by 4 feet.

(8) Sample Installation: 100 square feet.

b. Samples Showing Range of Variation: Where variations in color, finish, pattern, or texture are unavoidable due to nature of the materials, submit sets of samples of not less than three (3) units showing extremes and middle of range. Mark each unit to describe its relation to the range of the variation.

c. Reusable Samples: Incorporate returned samples into work only if so specified or indicated. Incorporated samples are to be in undamaged condition at time of use.

d. Recording of Sample Installation: Note and preserve the notation of area constituting sample installation but remove notation at final clean up of project.

e. When color, texture or pattern is specified by naming a particular manufacturer and style, include one (1) sample of that manufacturer and style, for comparison.

1.5.7 Format of SD-05 Design Data and SD-07 Certificates

Provide design data and certificates formatted for 8-1/2 by 11 inches paper. Provide a bound volume for submittals containing numerous pages.

1.5.8 Format of SD-06 Test Reports and SD-09 Manufacturer's Field Reports

a. Provide reports formatted for 8-1/2 by 11 inches paper in one complete file.

b. Indicate by prominent notation, each report in the submittal. Indicate specification number and paragraph number to which it pertains.

1.5.9 Format of SD-01 Preconstruction Submittals and SD-11 Closeout Submittals

When the submittal includes a document which is to be used in the project or become part of the project record, other than as a submittal, do not apply Contractor's approval stamp to the document, but to a separate sheet accompanying the document.

1.6 QUANTITY OF SUBMITTALS

The quantities listed below are for all submittals except for the closeout quantities of submittals required in SECTION 01 78 00.00 28 CLOSEOUT SUBMITTALS.

1.6.1 Electronic Copies

Each submittal shall be submitted in PDF format, unless otherwise noted, through RMS CM and via e-mail to the COR and the transmittal mailbox for the Lower Snake River Resident Office:

LSCRO.Submittals@usace.army.mil

Submittal files too large to send via e-mail shall be submitted using the DoD SAFE (Secure Access File Exchange) website as directed by the Contracting Officer.

1.6.2 **Hard Copies (HC)**

In addition to the electronic submission required for all submittals, hard copies shall also be submitted for submittals designated with a (HC) in the submittal title or as specifically designated by type of submittal or as stated in the technical specification for that given submittal.

submittal title example: Draft O&M Manuals and Parts Catalogs (HC)

1.6.2.1 Hard Copy Submittals

SUBMITTALS WITH AN HC DESIGNATED REQUIRE A HARD COPY SUBMISSION IN THE QUANTITIES DISCUSSED BELOW:

Submit two (2) paper copies of all (HC) designated submittals to the address below, unless otherwise noted. Each copy shall be sent with the ENG Form 4025.

District Commander
ATTN: CENWW-EC-C
Walla Walla District Corps of Engineers
201 North Third Avenue
Walla Walla, WA 99362-1876

1.6.3 Official Receipt of Transmittals

Official receipt of a transmittal that is sent electronically begins the business day after the Government receives that transmission by e-mail or through the Safe Access File Exchange website as directed by the Contracting Officer.

Official receipt of the transmittal that also requires a hard copy submission only begins when the Government receives the hard copy and not the electronic submission.

1.6.4 Number of Samples SD-04 Samples

ALL SD-04 SUBMITTALS REQUIRE A HARD COPY SUBMISSION IN THE QUANTITIES DISCUSSED BELOW:

a. Submit two (2) samples, or two (2) sets of samples showing range of variation, of each required item. One approved sample or set of samples will be retained by approving authority and one will be returned to Contractor.

b. Submit one (1) sample panel. Include components listed in technical section or as directed.

c. Submit one (1) sample installation.

d. Submit one (1) sample of non-solid materials, for example paint.

e. Submit to address shown in paragraph "Hard Copy Submittals" above.

1.6.5 Number of Copies of SD-10 Operation and Maintenance Data

SD-10 SUBMITTALS WITH AN HC DESIGNATED REQUIRE A HARD COPY SUBMISSION IN THE QUANTITIES DISCUSSED BELOW:

Submit in compliance with SECTION 01 78 00.00 28 CLOSEOUT SUBMITTALS.

Submit one (1) copy each to the following addresses with remainder sent to the District office address. See paragraph "Hard Copy Submittals":

Lower Snake/Columbia Resident Office
PO Box 70
Umatilla, OR 97882

Operations Project Manager
ATTN: Tech Section
McNary Project Office
P.O. Box 1230
Umatilla, OR 97882-1230

1.7 INFORMATION ONLY SUBMITTALS

Approval of the KO is not required on information only submittals. The following list applies to all for information only submittals:

a. The Contractor is not relieved from the obligation to furnish material conforming to the plans and specifications.

b. The KO reserves the right to require the Contractor to resubmit any item found not to comply with the contract, and is not prevented from requiring removal and replacement of nonconforming material incorporated in the work.

c. Does not relieve the Contractor of the requirement to furnish samples for testing by the Government laboratory or for check testing by the Government in those instances where the technical specifications so prescribe.

1.8 VARIATIONS REQUESTS

Variations from contract requirements require Government approval pursuant to contract Clause FAR 52.236-21 and will be considered where advantageous to Government.

1.8.1 Considering Variations

Discussion with KO prior to submission will help ensure functional and quality requirements are met and minimize rejections and re-submittals. When contemplating a variation which results in lower cost, consider submission of the variation as a Value Engineering Change Proposal (VECP). Specifically point out variations from contract requirements in transmittal letters. Failure to point out variations may result in the Government requiring rejection and removal of such work at no additional cost to the Government.

1.8.2 Proposing Variations

When proposing a variation / variations, deliver written request to the KO, with documentation of the nature and features of the variation and why the variation is desirable and beneficial to the Government. If lower cost is a benefit, also include an estimate of the cost savings. In addition to documentation required for variation, include the submittals required for the item. Clearly mark the proposed variation in all

documentation.

Check the column "variation" of ENG Form 4025 for submittals which include proposed variations requested by the Contractor. Set forth in writing the reason for any variations and annotate such variations on the submittal. The Government reserves the right to rescind inadvertent approval of submittals containing unnoted variations.

1.8.3 Warranting That Variations Are Compatible

When delivering a variation for approval, Contractor warrants that this contract has been reviewed to establish that the variation, if incorporated, will be compatible with other elements of work.

1.8.4 Review Schedule Is Modified

In addition to the normal submittal review period, a period of Ten (10) working days will be allowed for consideration by the Government of submittals with variations.

1.9 SUBMITTAL REGISTER

The Submittal Register will be loaded into RMS by the Government. A copy of the Submittal Register is attached to the end of this SECTION with the following fields filled in:

Column (c): Lists specification section in which submittal is required.

Column (d): Lists each submittal description (SD No. and type, e.g. SD-02 Shop Drawings) required in each specification section.

Column (e): Lists one principal paragraph in specification section where a material or product is specified. This listing is only to facilitate locating submitted requirements. Do not consider entries in column (e) as limiting project requirements.

Column (f): Indicate approving authority for each submittal. The Contractor is responsible for maintaining the submittal register in accordance with SECTION 01 45 01.00 28 RESIDENT MANAGEMENT SYSTEM CONTRACTOR MODE(RMS CM).

1.9.1 Use Of Submittal Register

Submit submittal register with QC plan and project schedule. Verify that all submittals required for project are listed and add missing submittals. Coordinate and complete the following fields on the register submitted with the QC plan and the project schedule:

Column (a) Activity Number: Activity number from the project schedule.

Column (g) Contractor Submit Date: Scheduled date for approving authority to receive submittals.

Column (h) Contractor Approval Date: Date Contractor needs approval of submittal.

Column (i) Contractor Material: Date that Contractor needs material delivered to Contractor control.

1.9.2 Contractor Use of Submittal Register

Update the following fields with each submittal throughout contract:

Column (b) Transmittal Number: Contractor assigned list of consecutive numbers.

Column (j) Action Code (k): Date of action used to record Contractor's review when forwarding submittals to QC.

Column (l) List date of submittal transmission.

Column (q) List date approval received.

1.9.3 Approving Authority Use of Submittal Register

Update the following fields in the Government-furnished submittal register program:

Column (b) Transmittal Number: Contractor assigned list of consecutive numbers.

Column (l) List date of submittal receipt.

Column (m) through (p) List Date related to review actions.

Column (q) List date returned to Contractor.

1.9.4 Contractor Action Codes

DESIGN SUBMITTALS			
Submittal Classifications shown in UFGS Sections	Submittal Classification	Corresponding SpecsIntact Submittal Register Code which is populated in the SI Submittal Register. Software Limitations: (The software shows one character delineation in the SpecsIntact Submittal Register)	RMS – The following Submittal Classifications are populated in RMS when the SpecsIntact Submittal Data File is pulled into RMS)
G	Submittal requires Government Approval	G	GA

DESIGN SUBMITTALS			
I	Submittal is For Information Only(FIO)	I	FIO
DA	Submittal requires Designer of Record Approval	D	DA
CR	Submittal requires Government Conformance Review	C	CR
DA/CR	Submittal requires Designer of Record Approval and Government Conformance Review	R	DA/CR
DA/GA	Submittal requires Designer of Record Approval and Government Approval	A	DA/GA

1.9.5 Contractor Action Code and Action Code

Entries for columns (j) and (o), are to be used as follows (others may be prescribed by Transmittal Form):

NR - Not Received

AN - Approved as noted

A - Approved

RR - Disapproved, Revise, and Resubmit

1.9.6 Copies Delivered to the Government

Deliver a PDF copy of the submittal register, updated by Contractor, to Government with each invoice request.

1.10 SCHEDULING

Schedule, and submit concurrently, submittals covering component items forming a system or items that are interrelated. Submit all related certifications along with the pertinent drawings. No delay, damages, or time extensions will be allowed for time lost due to late submittals.

a. Coordinate scheduling, sequencing, preparing and processing of submittals with performance of work so that work will not be delayed by submittal processing. Allow for potential resubmittal of requirements.

b. Submittals called for by the contract documents will be listed in the register. If a submittal is called for but does not pertain to the contract work, the Contractor is to include the submittal in the register and annotate it "N/A" with a brief explanation. Approval by the KO does not relieve the Contractor of supplying submittals required by the contract documents but which have been omitted from the register or marked "N/A."

c. Re-submit register, and update monthly, with actual submission and approval dates. When all items on the register have been fully approved, no further re-submittal is required.

d. Carefully control procurement operations to ensure that each individual submittal is made on or before the Contractor scheduled submittal date shown on the approved "Submittal Register."

e. Allow the Government Fourteen (14) calendar days to review submittals and for each resubmittal. The 14-day period shall commence at date of receipt of transmittals from the Contractor by the Government and the period shall end at date of signature of Approving Authority on the ENG Form 4025.

Provide the following in the Project Schedule submittal, for approval by the KO, as specified in See SECTION 01 32 01.00 28 PROJECT SCHEDULE, paragraph "Initial Project Schedule Submission":

a. A schedule of shop drawings and technical submittals required by the specifications and drawings. Indicate the specification or drawing reference requiring the submittal; the material, item, or process for which the submittal is required; the "SD" number and identifying title of the submittal; the Contractor's anticipated submission date and the approval need date.

1.11 GOVERNMENT APPROVING AUTHORITY

When the approving authority is the Government, the KO will:

a. Note date on which submittal was received from QC system Manager.

b. Review submittals for approval within scheduling period specified and only for conformance with project design concepts and compliance with contract documents.

c. Identify returned submittals with one of the actions defined in paragraph "Review Notations" along with markings appropriate for action indicated.

The Government will provide the appropriate review notation for submittals, upon completion of review. The official response will only be through RMS. If the Government performs a conformance review of other Designer of Record approved submittals, the submittals will be so identified and returned, as described above.

1.11.1 Review Notations

KO review will be completed within Fourteen (14) calendar days after date of receipt of submittal. Submittals will be returned to the Contractor with the following notations:

a. Submittals marked with an action code of "A" are "approved" or "accepted" and authorize the Contractor to proceed with the work covered.

b. Submittals marked with an action code of "B" are "accepted as noted on drawing", "accepted except as noted on drawing", and authorize the Contractor to proceed with the work covered once they make the changes to the submittal provided they take no exception to the corrections.

c. Submittals marked with an action code of "C" are "accepted as noted, resubmission required", and authorize the Contractor to proceed with the work covered provided they take no exception to the corrections. The Contractor shall resubmit with appropriate changes to address the Government notations.

d. Submittals marked with an action code of "E" are "disapproved", "not accepted", and indicate noncompliance with the contract requirements or design concept, or that submittal is incomplete. Resubmit with appropriate changes. No work shall proceed for this item until resubmittal is approved or accepted.

e. Submittals marked with an action code of "F" are Submittals marked "receipt acknowledge" and will indicate submittal has been received but not necessarily reviewed by the Government. Comments to these submittals may or may not be provided; however the Government reserves the right to require the Contractor to resubmit any item found not to comply with the contract.

f. FIO submittals marked with an action code of "FX" are Submittals marked as "does not comply as noted with contract requirements" and indicate noncompliance with the contract requirements or design concept, or that submittal is incomplete. Resubmit with appropriate changes for Government approval or acceptance. No work shall proceed for this item until resubmittal is received.

1.12 DISAPPROVED OR REJECTED SUBMITTALS

Make corrections required by the KO. If the Contractor considers any correction or notation on the returned submittals to constitute a change to the contract drawings or specifications, give notice to the Contracting Officer as required under the FAR clause titled CHANGES. The Contractor is responsible for the dimensions and design of connection details and the construction of work. Failure to point out variations may cause the Government to require rejection and removal of such work at the Contractor's expense.

If changes are necessary to submittals, make such revisions and resubmit in accordance with the procedures above. No item of work requiring a submittal change is to be accomplished until the changed submittals are approved.

1.13 APPROVED/ACCEPTED SUBMITTALS

The KO's approval or acceptance of submittals is not to be construed as a complete check, and indicates only that the general method of construction, materials, detailing and other information are satisfactory.

Approval or acceptance will not relieve the Contractor of the responsibility for any error which may exist. The Contractor under the Contractor Quality Control (CQC) requirements of this contract is responsible for design, dimensions, all design extensions, such as the design of adequate connections and details, etc., and the satisfactory construction of all work

After submittals have been approved or accepted by the KO, no resubmittal for the purpose of substituting materials or equipment will be considered unless accompanied by an explanation of why a substitution is necessary.

1.14 APPROVED SAMPLES

Approval of a sample is only for the characteristics or use named in such approval and is not to be construed to change or modify any contract requirements. Before submitting samples, assure that the materials or equipment will be available in quantities required in the project. No change or substitution will be permitted after a sample has been approved. Match the approved samples for materials and equipment incorporated in the work. If requested, approved samples, including those which may be damaged in testing, will be returned to the Contractor, at their expense, upon completion of the contract. Samples not approved will also be returned to the Contractor at their expense, if so requested. Failure of any materials to pass the specified tests will be sufficient cause for refusal to consider, under this contract, any further samples of the same brand or make of that material. Government reserves the right to disapprove any material or equipment which previously has proved unsatisfactory in service. Samples of various materials or equipment delivered on-site or in place may be taken by the KO for testing. Samples failing to meet contract requirements will automatically void previous approvals. Replace such materials or equipment to meet contract requirements. Approval of the Contractor's samples by the KO does not relieve the Contractor of their responsibilities under the contract.

1.15 WITHHOLDING OF PAYMENT

No payment for materials incorporated in the work will be made unless all required DOR approvals or required Government approvals have been obtained. No payment will be made for any materials incorporated into the work for any conformance review submittals or information-only submittals found to contain errors or deviations from the Solicitation or Accepted Design.

1.16 STAMPS

Stamps used by the CQC system manager on the submittal data to certify that the submittal meets contract requirements is to be similar to the following:

CONTRACT NUMBER
CONTRACTOR
(Firm Name)

_____ Approved
_____ Approved with corrections as noted on submittal data and/or attach sheets(s)
SIGNATURE: _____
TITLE: CQC SYSTEM MANAGER
DATE: _____

For Contractor Designed construction, both the Contractor QC manager and the DOR are to stamp and sign to certify that the submittal meets contract requirements.

PART 2 PRODUCTS (NOT USED)

PART 3 EXECUTION (NOT USED)

-- End of Section --

U.S. Army Corps of Engineers (USACE)

TRANSMITTAL OF SHOP DRAWINGS, EQUIPMENT DATA, MATERIAL SAMPLES, OR MANUFACTURER'S CERTIFICATES OF COMPLIANCE

For use of this form, see ER 415-1-10; the proponent agency is CECW-CE.

DATE	TRANSMITTAL NO.

SECTION I - REQUEST FOR APPROVAL OF THE FOLLOWING ITEMS (*This section will be initiated by the contractor*)

TO:	FROM:	CONTRACT NO.	CHECK ONE: ☐ THIS IS A NEW TRANSMITTAL ☐ THIS IS A RESUBMITTAL OF TRANSMITTAL _____

SPECIFICATION SEC. NO. (*Cover only one section with each transmittal*)	PROJECT TITLE AND LOCATION	THIS TRANSMITTAL IS FOR: (*Check one*) ☐ FIO ☐ GA ☐ DA ☐ CR ☐ DA/CR ☐ DA/GA

ITEM NO. (*See Note 3*) a.	DESCRIPTION OF SUBMITTAL ITEM (*Type size, model number/etc.*) b.	SUBMITTAL TYPE CODE (*See Note 8*) c.	NO. OF COPIES d.	CONTRACT DOCUMENT REFERENCE		CONTRACTOR REVIEW CODE g.	VARIATION Enter "Y" if requesting a variation (*See Note 6*) h.	USACE ACTION CODE (*Note 9*) i.
				SPEC. PARA. NO. e.	DRAWING SHEET NO. f.			

REMARKS	I certify that the above submitted items had been reviewed in detail and are correct and in strict conformance with the contract drawings and specifications except as otherwise stated.	
	NAME OF CONTRACTOR	SIGNATURE OF CONTRACTOR

SECTION II - APPROVAL ACTION

ENCLOSURES RETURNED (*List by item No.*)	NAME AND TITLE OF APPROVING AUTHORITY	SIGNATURE OF APPROVING AUTHORITY	DATE

INSTRUCTIONS

1. Section I will be initiated by the Contractor in the required number of copies.

2. Each Transmittal shall be numbered consecutively. The Transmittal Number typically includes two parts separated by a dash (-). The first part is the specification section number. The second part is a sequential number for the submittals under that spec section. If the Transmittal is a resubmittal, then add a decimal point to the end of the original Transmittal Number and begin numbering the resubmittal packages sequentially after the decimal.

3. The "Item No." for each entry on this form will be the same "Item No." as indicated on ENG FORM 4288-R.

4. Submittals requiring expeditious handling will be submitted on a separate ENG Form 4025-R.

5. Items transmitted on each transmittal form will be from the same specification section. Do not combine submittal information from different specification sections in a single transmittal.

6. If the data submitted are intentionally in variance with the contract requirements, indicate a variation in column h, and enter a statement in the Remarks block describing he detailed reason for the variation.

7. ENG Form 4025-R is self-transmitting - a letter of transmittal is not required.

8. When submittal items are transmitted, indicate the "Submittal Type" (*SD-01 through SD-11*) in column c of Section I.
   Submittal types are the following:
   SD-01 - Preconstruction SD-02 - Shop Drawings SD-03 - Product Data SD-04 - Samples SD-05 - Design Data SD-06 - Test Reports
   SD-07 - Certificates SD-08 - Manufacturer's Instructions SD-09 - Manufacturer's Field Reports SD-10 - O&M Data SD-11 - Closeout

9. For each submittal item, the Contractor will assign Submittal Action Codes in column g of Section I. The U.S. Army Corps of Engineers approving authority will assign Submittal Action Codes in column i of Section I. The Submittal Action Codes are:

   A -- Approved as submitted.
   B -- Approved, except as noted on drawings. Resubmission not required.
   C -- Approved, except as noted on drawings. Refer to attached comments. Resubmission required.
   D -- Will be returned by separate correspondence.
   E -- Disapproved. Refer to attached comments.
   F -- Receipt acknowledged.
   X -- Receipt acknowledged, does not comply with contract requirements, as noted.
   G -- Other action required *(Specify)*
   K -- Government concurs with intermediate design. (*For D-B contracts*)
   R -- Design submittal is acceptable for release for construction. (*For D-B contracts*)

10. Approval of items does not relieve the contractor from complying with all the requirements of the contract.

SUBMITTAL REGISTER

CONTRACT NO.
W912EF21B0015

TITLE AND LOCATION
McNary Powerhouse Intake Deck Concrete Beam Rehabilitation

CONTRACTOR

ACTIVITY NO	TRANSMITTAL NO	SPEC SECT	DESCRIPTION ITEM SUBMITTED	PARAG # RAPH	CLASSIFICATION	GOVT OR A/E REVWR	CONTRACTOR: SCHEDULE DATES			CONTRACTOR ACTION			APPROVING AUTHORITY					MAILED TO CONTR/ DATE RCD FRM APPR AUTH	REMARKS
							SUBMIT	APPROVAL NEEDED BY	MATERIAL NEEDED BY	ACTION CODE	DATE OF ACTION	DATE FWD TO APPR AUTH/ DATE RCD FROM CONTR	DATE FWD TO OTHER REVIEWER	DATE RCD FROM OTH REVIEWER	ACTION CODE	DATE OF ACTION		
(a)	(b)	(c)	(d)	(e)	(f)		(g)	(h)	(i)	(j)	(k)	(l)	(m)	(n)	(o)	(p)	(q)	(r)
		01 11 01.00 28	SD-01 Preconstruction Submittals															
			Equipment List	1.6	I	C												
			Pre-Construction On-Site	1.10	I	C												
			Inspection report															
			Project Superintendent	1.11	I	C												
			SD-07 Certificates															
			Key Personnel Substitution	1.12	G	C												
		01 14 00.90 28	SD-01 Preconstruction Submittals															
			Anti Terrorism (AT) Level 1	1.4	I	C												
			iWATCH, CORPS Watch, or See	1.7	I	C												
			Something, Say Something															
			Level 1 OPSEC training	1.8	I	C												
			Pre-Screen Candidates Using	1.10	I	C												
			E-Verify Program															
			Biographical Information	1.3	G	C												
		01 32 01.00 28	SD-01 Preconstruction Submittals															
			Project Scheduler Qualifications	1.3	G	C												
			Preliminary Project Schedule	3.4.1	G	C												
			Initial Project Schedule	3.4.2	G	C												
			Periodic Schedule Update	3.6.2	G	C												
		01 35 29.10 28	SD-01 Preconstruction Submittals															
			Accident Prevention Plan (APP)	1.7	G	C												
			Activity Hazard Analysis (AHA)	1.8	G	C												
			Safe Clearance	1.9	I	C												
			Authorized Individuals	1.9	I	C												
			Standard Lift Plan	1.7.2.2	G	C												

SUBMITTAL REGISTER

CONTRACT NO.
W912EF21B0015

TITLE AND LOCATION
McNary Powerhouse Intake Deck Concrete Beam Rehabilitation

CONTRACTOR

ACTIVITY NO	TRANSMITTAL NO	SPEC SECT	DESCRIPTION ITEM SUBMITTED	PARAG # RAPH	CLASSIFICATION	GOVT OR A/E REVWR	CONTRACTOR: SCHEDULE DATES			CONTRACTOR ACTION			APPROVING AUTHORITY					MAILED TO CONTR/ DATE RCD FRM APPR AUTH	REMARKS
							SUBMIT	APPROVAL NEEDED BY	MATERIAL NEEDED BY	ACTION CODE	DATE OF ACTION	DATE FWD TO APPR AUTH/ DATE RCD FROM CONTR	DATE FWD TO OTHER REVIEWER	DATE RCD FROM OTH REVIEWER	ACTION CODE	DATE OF ACTION		
(a)	(b)	(c)	(d)	(e)	(f)		(g)	(h)	(i)	(j)	(k)	(l)	(m)	(n)	(o)	(p)		(q)	(r)
		01 35 29.10 28	Critical Lift Plan	1.7.2.3	G	C													
			Crane Wheel And Outrigger	1.13.5	G	ST													
			Loading Diagram And Deck																
			Protection For Outriggers																
			SSHO And Alternate SSHO	1.6.1.1	G	C													
			Competent Person Qualifications	1.6.1.2	G	C													
			Radiography Operation Planning	1.15.1	G	SO													
			Work Sheet																
			SD-06 Test Reports																
			Monthly Exposure Reports	1.4	I	C													
			Notifications and Reports	1.13	I	C													
			Accident Reports	1.13.2	I	C													
			LHE Inspection Reports	1.13.3	I	C													
			SD-07 Certificates																
			Crane Operators/Riggers	1.6.1.3	I	C													
			Confined Space Entry Permit	1.10.1	I	C													
			Hot Work Permit	1.10.1	I	C													
			Certificate of Compliance	1.13.4	I	C													
			License Certificates	1.15	I	C													
		01 45 04.00 28	SD-01 Preconstruction Submittals																
			Contractor Quality Control (CQC)	3.2	G	C													
			Plan																
		01 55 10.00 28	SD-01 Preconstruction Submittals																
			Transport Loading Diagrams	1.9	G	ST													
			Dust Control Plan	1.12	I	C													
			Debris Containment Plan	1.7.1	G	C													

SUBMITTAL REGISTER

CONTRACT NO.
W912EF21B0015

TITLE AND LOCATION
McNary Powerhouse Intake Deck Concrete Beam Rehabilitation

CONTRACTOR

ACTIVITY NO	TRANSMITTAL NO	SPEC SECT	DESCRIPTION ITEM SUBMITTED	PARAG # RAPH	CLASSIFICATION	GOVT OR A/E REVWR	CONTRACTOR: SCHEDULE DATES			CONTRACTOR ACTION			APPROVING AUTHORITY					MAILED TO CONTR/ DATE RCD FRM APPR AUTH	REMARKS
							SUBMIT	APPROVAL NEEDED BY	MATERIAL NEEDED BY	ACTION CODE	DATE OF ACTION	DATE FWD TO APPR AUTH/ DATE RCD FROM CONTR	DATE FWD TO OTHER REVIEWER	DATE RCD FROM OTH REVIEWER	ACTION CODE	DATE OF ACTION		
(a)	(b)	(c)	(d)	(e)	(f)		(g)	(h)	(i)	(j)	(k)	(l)	(m)	(n)	(o)	(p)		(q)	(r)
		01 55 10.00 28	Access Plan	1.6	G	ST													
			Work Plan	1.6	G	ST													
		01 57 20.00 28	SD-01 Preconstruction Submittals																
			Environmental Protection Plan	1.6	G	ECC													
			Plan for Concrete On-Site Wash	1.6.2	G	ECC													
			Area																
		01 78 00.00 28	SD-11 Closeout Submittals																
			Final Shop Drawings	3.1	G	C													
			Working As-Built Drawings	3.2.1	I	C													
			Final As-Built Drawings	3.3	G	C													
			Record Drawings	3.4	G	GE													
			Government Issued Items	3.6	G	C													
		03 01 00.01 28	SD-05 Design Data																
			Design Data	1.6	G	ST													
			SD-07 Certificates																
			Designer of Record Qualifications	1.4	G	ST													
		03 01 00.02 28	SD-01 Preconstruction Submittals																
			Testing Agencies Qualifications	1.5.3.1	G	ST													
			Quality Control Personnel	1.5.3.2	G	ST													
			Qualifications																
			Worker Qualifications	1.5.3.4	G	ST													
			Qualification For Epoxy	1.8	G	ST													
			Reinforcing Installers																
			Formwork System	2.2	R	ST													
			Equipment For Concrete	2.3	A	ST													
			Preparation																

SUBMITTAL REGISTER

CONTRACT NO.
W912EF21B0015

TITLE AND LOCATION
McNary Powerhouse Intake Deck Concrete Beam Rehabilitation

CONTRACTOR

ACTIVITY NO	TRANSMITTAL NO	SPEC SECT	DESCRIPTION ITEM SUBMITTED	PARAGRAPH #	CLASSIFICATION	GOVT OR A/E REVWR	CONTRACTOR: SCHEDULE DATES			CONTRACTOR ACTION			APPROVING AUTHORITY					MAILED TO CONTR/ DATE RCD FRM APPR AUTH	REMARKS
							SUBMIT	APPROVAL NEEDED BY	MATERIAL NEEDED BY	ACTION CODE	DATE OF ACTION	DATE FWD TO APPR AUTH/ DATE RCD FROM CONTR	DATE FWD TO OTHER REVIEWER	DATE RCD FROM OTH REVIEWER	ACTION CODE	DATE OF ACTION		
(a)	(b)	(c)	(d)	(e)	(f)		(g)	(h)	(i)	(j)	(k)	(l)	(m)	(n)	(o)	(p)	(q)	(r)
		03 01 00.02 28	Contractor Qualifications	1.5.3.3	G	ST												
			Bond Test Procedures	3.4.6.4	A	ST												
			SD-02 Shop Drawings															
			Formwork Shop Drawings	3.2.1	R	ST												
			Reinforcing Shop Drawings	3.3.1	R	ST												
			SD-03 Product Data															
			Post-Installed Epoxy Adhesive	2.6	A	ST												
			Low-Pressure Epoxy Adhesive	2.7	G	ST												
			SD-06 Test Reports															
			Bond Test Result	3.4.6.4	R	ST												
		03 30 00.00 28	SD-01 Preconstruction Submittals															
			Qualifications	1.7	G	GT												
			Hot Weather Placing	3.4.4	D	GT												
			Cold Weather Placing	3.4.3	D	GT												
			SD-03 Product Data															
			Membrane-Forming Curing	2.1.4	D	GT												
			Compound															
			SD-05 Design Data															
			Materials And Mix Design -	1.5	D	GT												
			Preliminary															
			Materials and Mix Design - FINAL	1.6	R	GT												
			SD-06 Test Reports															
			Tests Results	3.9.1	G	GT												
			SD-07 Certificates															
			ACI Level 1 Field Testing	3.9	G	ST												
			Technician															

SUBMITTAL REGISTER

CONTRACT NO.
W912EF21B0015

TITLE AND LOCATION
McNary Powerhouse Intake Deck Concrete Beam Rehabilitation

CONTRACTOR

ACTIVITY NO	TRANSMITTAL NO	SPEC SECT	DESCRIPTION ITEM SUBMITTED	PARAG # PARAPH	CLASSIFICATION	GOVT OR A/E REVWR	CONTRACTOR: SCHEDULE DATES			CONTRACTOR ACTION			APPROVING AUTHORITY					MAILED TO CONTR/ DATE RCD FRM APPR AUTH	REMARKS
							SUBMIT	APPROVAL NEEDED BY	MATERIAL NEEDED BY	ACTION CODE	DATE OF ACTION	DATE FWD TO APPR AUTH/ DATE RCD FROM CONTR	DATE FWD TO OTHER REVIEWER	DATE RCD FROM OTH REVIEWER	ACTION CODE	DATE OF ACTION		
(a)	(b)	(c)	(d)	(e)	(f)		(g)	(h)	(i)	(j)	(k)	(l)	(m)	(n)	(o)	(p)		(q)	(r)
		03 60 00.01 28	SD-01 Preconstruction Submittals																
			Drilling Procedures	3.2.1	G	ST													
			SD-03 Product Data																
			Non-Shrink Grout	3.3.1	G	ST													
			SD-06 Test Reports																
			Concrete Imaging Report	3.2.1	D	ST													

THIS PAGE INTENTIONALLY LEFT BLANK

SECTION TABLE OF CONTENTS

DIVISION 01 - GENERAL REQUIREMENTS

SECTION 01 35 29.10 28

GOVERNMENTAL SAFETY REQUIREMENTS

PART 1 GENERAL

1.1 REFERENCES
1.2 DEFINITIONS
1.2.1 Competent Person (CP)
1.2.2 Competent Person, Confined Space
1.2.3 Competent Person, Cranes and Rigging
1.2.4 Competent Person, Fall Protection
1.2.5 Competent Person, Scaffolding
1.2.6 High Hazard Work Group Activities
1.2.7 High Visibility Accident
1.2.8 Load Handling Equipment (LHE)
1.2.9 Medical Treatment
1.2.10 Near Miss
1.2.11 Operating Envelope
1.2.12 Qualified Person (QP)
1.2.13 Qualified Person, Fall Protection (QP for FP)
1.2.14 Recordable Injuries or Illnesses
1.2.15 USACE Property and Equipment
1.2.16 Load Handling Equipment (LHE) Accident or Load Handling Equipment Mishap
1.3 SUBMITTALS
1.4 MONTHLY EXPOSURE REPORTS
1.5 REGULATORY REQUIREMENTS
1.6 SITE QUALIFICATIONS, DUTIES, AND MEETINGS
1.6.1 Personnel Qualifications
1.6.1.1 Site Safety and Health Officer (SSHO)
1.6.1.2 Competent Person Qualifications
1.6.1.2.1 Competent Person for Scaffolding
1.6.1.2.2 Competent Person for Fall Protection
1.6.1.3 Crane Operators/Riggers
1.6.2 Personnel Duties
1.6.2.1 Duties of the Site Safety and Health Officer (SSHO)
1.6.3 Meetings
1.6.3.1 Preconstruction Meeting
1.6.3.2 Safety Meetings
1.7 ACCIDENT PREVENTION PLAN (APP)
1.7.1 Names and Qualifications
1.7.2 Plans
1.7.2.1 Confined Space Entry Plan
1.7.2.2 Standard Lift Plan (SLP)
1.7.2.3 Critical Lift Plan- Crane or Load Handling Equipment
1.7.2.4 Fall Protection and Prevention (FP&P) Plan
1.7.2.5 Rescue and Evacuation Plan
1.7.2.6 Hazardous Energy Control Program (HECP)
1.7.2.7 COVID 19 Monitoring Plan

1.8 ACTIVITY HAZARD ANALYSIS (AHA)
1.8.1 AHA Management
1.8.2 AHA Signature Log
1.9 LOCKOUT/TAGOUT (LOTO)-SAFE CLEARANCE OR HAZARDOUS ENERGY CONTROL PROGRAM (HECP) PROCEDURES
1.9.1 Safe Clearance Training
1.10 DISPLAY OF SAFETY INFORMATION
1.10.1 Safety Bulletin Board
1.10.2 Safety and Occupational Health (SOH) Deficiency Tracking System
1.11 SITE SAFETY REFERENCE MATERIALS
1.12 EMERGENCY MEDICAL TREATMENT
1.13 NOTIFICATIONS and REPORTS
1.13.1 Mishap Notification
1.13.2 Accident Reports
1.13.3 LHE Inspection Reports
1.13.4 Certificate of Compliance and Pre-lift Plan/Checklist for LHE and Rigging
1.13.5 Contractor's Cranes
1.14 HOT WORK
1.15 RADIATION SAFETY REQUIREMENTS
1.15.1 Radiography Operation Planning Work Sheet
1.15.2 Site Access and Security
1.15.3 Loss or Release and Unplanned Personnel Exposure
1.15.4 Site Demarcation and Barricade
1.15.5 Security of Material and Equipment
1.15.6 Transportation of Material
1.15.7 Schedule for Exposure or Un-shielding
1.15.8 Transmitter Requirements
1.16 CONFINED SPACE ENTRY REQUIREMENTS.
1.16.1 Entry Procedures
1.16.2 Forced Air Ventilation
1.16.3 Sewer Wet Wells
1.16.4 Rescue Procedures and Coordination with Local Emergency Responders
1.17 SEVERE STORM PLAN

PART 2 PRODUCTS (NOT USED)

PART 3 EXECUTION

3.1 CONSTRUCTION AND OTHER WORK
3.1.1 Worksite Communication
3.1.2 Hazardous Material Exclusions
3.1.3 Unforeseen Hazardous Material
3.2 FALL PROTECTION PROGRAM
3.2.1 Training
3.2.2 Fall Protection Equipment and Systems
3.2.2.1 Additional Personal Fall Protection
3.2.2.2 Personal Fall Protection Harnesses
3.2.3 Fall Protection for Roofing Work
3.2.4 Horizontal Lifelines (HLL)
3.2.5 Guardrails and Safety Nets
3.2.6 Rescue and Evacuation Plan and Procedures
3.3 WORK PLATFORMS
3.3.1 Scaffolding
3.3.2 Elevated Aerial Work Platforms (AWPs)
3.4 EQUIPMENT

3.4.1 Material Handling Equipment (MHE)
3.4.2 Load Handling Equipment (LHE)
3.4.3 Machinery and Mechanized Equipment
3.4.4 Explosives
3.5 ELECTRICAL
3.5.1 Conduct of Electrical Work
3.5.2 Qualifications
3.5.3 Grounding
3.5.4 Testing

ATTACHMENTS:

Crane/Rigging Mishap Investigation Form

Accident Prevention Plan

Activity Hazard Analysis Template

-- End of Section Table of Contents --

THIS PAGE INTENTIONALLY LEFT BLANK

SECTION 01 35 29.10 28

GOVERNMENTAL SAFETY REQUIREMENTS

PART 1 GENERAL

1.1 REFERENCES

The publications listed below form a part of this specification to the extent referenced. The publications are referred to within the text by the basic designation only.

AMERICAN SOCIETY OF SAFETY PROFESSIONALS ANSI/ASSP

ANSI/ASSP Z359.0	(2018) Z359 Committee Guidance Document for Definitions and Nomenclature Used in Z359 Fall Protection Restraint Standards
ANSI/ASSP Z359.1	(2016) The Fall Protection Code
ANSI/ASSP Z359.2	(2017) Minimum Requirements for a Comprehensive Managed Fall Protection Program
ANSI/ASSP Z359.3	(2019) Safety Requirements for Lanyards and Positioning Lanyards
ANSI/ASSP Z359.4	(2013) Safety Requirements for Assisted-Rescue and Self-Rescue Systems, Subsystems and Components
ANSI/ASSP Z359.6	(2016) Specifications and Design Requirements for Active Fall Protection Systems
ANSI/ASSP Z359.7	(2019) Qualification and Verification Testing of Fall Protection Products
ANSI/ASSP Z359.11	(2014) Safety Requirements for Full Body Harnesses
ANSI/ASSP Z359.12	(2019) Connecting Components for Personal Fall Arrest Systems
ANSI/ASSP Z359.13	(2013) Personal Energy Absorbers and Energy Absorbing Lanyards
ANSI/ASSP Z359.14	(2014) Safety Requirements for Self-Retracting Devices for Personal Fall Arrest & Rescue Systems
ANSI/ASSP Z359.15	(2014) Safety Requirements for Single Anchor Lifelines and Fall Arresters for Personal Fall Arrest Systems

AMERICAN SOCIETY OF SAFETY ENGINEERS (ASSE/SAFE)

ASSE/SAFE A10.34	(2001; R 2012) Protection of the Public on or Adjacent to Construction Sites
ASSE/SAFE A10.44	(2016) Control of Energy Sources (Lockout/Tagout) for Construction and Demolition Operations
ASSE/SAFE Z244.1	(2003; R 2014) Control of Hazardous Energy Lockout/Tagout and Alternative Methods

ASME INTERNATIONAL (ASME)

ASME B30.20	(2013; INT Oct 2010 - May 2012) Below-the-Hook Lifting Devices
ASME B30.22	(2016) Articulating Boom Cranes
ASME B30.26	(2015; INT Jun 2010 - Jun 2014) Rigging Hardware
ASME B30.3	(2016) Tower Cranes
ASME B30.5	(2014) Mobile and Locomotive Cranes
ASME B30.8	(2015) Floating Cranes and Floating Derricks
ASME B30.9	(2014; INT Feb 2011 - Nov 2013) Slings

ASTM INTERNATIONAL (ASTM)

ASTM F855	(2015) Standard Specifications for Temporary Protective Grounds to Be Used on De-energized Electric Power Lines and Equipment

INSTITUTE OF ELECTRICAL AND ELECTRONICS ENGINEERS (IEEE)

IEEE 1048	(2003) Guide for Protective Grounding of Power Lines
IEEE C2	(2017; Errata 1-2 2017; INT 1 2017) National Electrical Safety Code

NATIONAL FIRE PROTECTION ASSOCIATION (NFPA)

NFPA 10	(2018; TIA 18-1) Standard for Portable Fire Extinguishers
NFPA 241	(2013; Errata 2015) Standard for Safeguarding Construction,Alteration, and Demolition Operations
NFPA 51B	(2014) Standard for Fire Prevention During Welding, Cutting, and Other Hot Work
NFPA 70	(2017; ERTA 1-2 2017; TIA 17-1; TIA 17-2;

	TIA 17-3; TIA 17-4; TIA 17-5; TIA 17-6; TIA 17-7; TIA 17-8; TIA 17-9; TIA 17-10; TIA 17-11; TIA 17-12; TIA 17-13; TIA 17-14; TIA 17-15; TIA 17-16; TIA 17-17) National Electrical Code
NFPA 70E	(2018; TIA 18-1; TIA 81-2) Standard for Electrical Safety in the Workplace

U.S. ARMY CORPS OF ENGINEERS (USACE)

EM 385-1-1	Safety and Health Requirements Manual

The Contractor shall be responsible for complying with the current edition and all changes posted on the web as of the effective date of this solicitation.

U.S. NATIONAL ARCHIVES AND RECORDS ADMINISTRATION (NARA)

10 CFR 20	Standards for Protection Against Radiation
29 CFR 1910	Occupational Safety and Health Standards
29 CFR 1910.146	Permit-required Confined Spaces
29 CFR 1910.147	Control of Hazardous Energy (Lock Out/Tag Out)
29 CFR 1910.333	Selection and Use of Work Practices
29 CFR 1915	Confined and Enclosed Spaces and Other Dangerous Atmospheres in Shipyard Employment
29 CFR 1915.89	Control of Hazardous Energy (Lockout/Tags-Plus)
29 CFR 1926	Safety and Health Regulations for Construction
29 CFR 1926.1400	Cranes and Derricks in Construction
29 CFR 1926.16	Rules of Construction
29 CFR 1926.500	Fall Protection
49 CFR 173	Shippers - General Requirements for Shipments and Packagings
CPL 2.100	(1995) Application of the Permit-Required Confined Spaces (PRCS) Standards, 29 CFR 1910.146

1.2 DEFINITIONS

1.2.1 Competent Person (CP)

The CP is a person designated in writing, who, through training, knowledge and experience, is capable of identifying, evaluating, and addressing

existing and predictable hazards in the working environment or working conditions that are dangerous to personnel, and who has authorization to take prompt corrective measures with regards to such hazards.

1.2.2 Competent Person, Confined Space

The CP, Confined Space, is a person meeting the competent person requirements as defined EM 385-1-1 Appendix Q, with thorough knowledge of OSHA's Confined Space Standard, 29 CFR 1910.146, and designated in writing to be responsible for the immediate supervision, implementation and monitoring of the confined space program, who through training, knowledge and experience in confined space entry is capable of identifying, evaluating and addressing existing and potential confined space hazards and, who has the authority to take prompt corrective measures with regard to such hazards.

1.2.3 Competent Person, Cranes and Rigging

The CP, Cranes and Rigging, as defined in EM 385-1-1Appendix Q, is a person meeting the competent person, who has been designated in writing to be responsible for the immediate supervision, implementation and monitoring of the Crane and Rigging Program, who through training, knowledge and experience in crane and rigging is capable of identifying, evaluating and addressing existing and potential hazards and, who has the authority to take prompt corrective measures with regard to such hazards.

1.2.4 Competent Person, Fall Protection

The CP, Fall Protection, is a person meeting the competent person requirements as defined in EM 385-1-1 Appendix Q and in accordance with ANSI/ASSP Z359.0, who has been designated in writing by the employer to be responsible for immediate supervising, implementing and monitoring of the fall protection program, who through training, knowledge and experience in fall protection and rescue systems and equipment, is capable of identifying, evaluating and addressing existing and potential fall hazards and, who has the authority to take prompt corrective measures with regard to such hazards.

1.2.5 Competent Person, Scaffolding

The CP, Scaffolding is a person meeting the competent person requirements in EM 385-1-1 Appendix Q, and designated in writing by the employer to be responsible for immediate supervising, implementing and monitoring of the scaffolding program. The CP for Scaffolding has enough training, knowledge and experience in scaffolding to correctly identify, evaluate and address existing and potential hazards and also has the authority to take prompt corrective measures with regard to these hazards. CP qualifications must be documented and include experience on the specific scaffolding systems/types being used, assessment of the base material that the scaffold will be erected upon, load calculations for materials and personnel, and erection and dismantling. The CP for scaffolding must have a documented, minimum of 8-hours of scaffold training to include training on the specific type of scaffold being used (e.g. mast-climbing, adjustable, tubular frame), in accordance with EM 385-1-1 Section 22.B.02.

1.2.6 High Hazard Work Group Activities

High Hazard Work Group (HHWG) Activities are activities that involve work at heights, crane and rigging, excavations and trenching, scaffolding,

electrical work, underwater diving, and confined space entry.

1.2.7 High Visibility Accident

A High Visibility Accident is any mishap which may generate publicity or high visibility.

1.2.8 Load Handling Equipment (LHE)

LHE is a term used to describe cranes, hoists and all other hoisting equipment (hoisting equipment means equipment, including crane, derricks, hoists and power operated equipment used with rigging to raise, lower or horizontally move a load).

1.2.9 Medical Treatment

Medical Treatment is treatment administered by a physician or by registered professional personnel under the standing orders of a physician. Medical treatment does not include first aid treatment even through provided by a physician or registered personnel.

1.2.10 Near Miss

A Near Miss is a mishap resulting in no personal injury and zero property damage, but given a shift in time or position, damage or injury may have occurred (e.g., a worker falls off a scaffold and is not injured; a crane swings around to move the load and narrowly misses a parked vehicle).

1.2.11 Operating Envelope

The Operating Envelope is the area surrounding any crane or load handling equipment. Inside this "envelope" is the crane, the operator, riggers and crane walkers, other personnel involved in the operation, rigging gear between the hook, the load, the crane's supporting structure (i.e. ground or rail), the load's rigging path, the lift and rigging procedure.

1.2.12 Qualified Person (QP)

The QP is a person designated in writing, who, by possession of a recognized degree, certificate, or professional standing, or extensive knowledge, training, and experience, has successfully demonstrated their ability to solve or resolve problems related to the subject matter, the work, or the project.

1.2.13 Qualified Person, Fall Protection (QP for FP)

A QP for FP is a person meeting the requirements of EM 385-1-1 Appendix Q, and ANSI/ASSP Z359.0, with a recognized degree or professional certificate and with extensive knowledge, training and experience in the fall protection and rescue field who is capable of designing, analyzing, and evaluating and specifying fall protection and rescue systems.

1.2.14 Recordable Injuries or Illnesses

Recordable Injuries or Illnesses are any work-related injury or illness that results in:

a. Death, regardless of the time between the injury and death, or the length of the illness;

b. Days away from work (any time lost after day of injury/illness onset);

c. Restricted work;

d. Transfer to another job;

e. Medical treatment beyond first aid;

f. Loss of consciousness; or

g. A significant injury or illness diagnosed by a physician or other licensed health care professional, even if it did not result in (a) through (f) above.

1.2.15 USACE Property and Equipment

Interpret "USACE" property and equipment specified in USACE EM 385-1-1 as Government property and equipment.

1.2.16 Load Handling Equipment (LHE) Accident or Load Handling Equipment Mishap

A LHE accident occurs when any one or more of the eight elements in the operating envelope fails to perform correctly during operation, including operation during maintenance or testing resulting in personnel injury or death; material or equipment damage; dropped load; derailment; two-blocking; overload; or collision, including unplanned contact between the load, crane, or other objects. A dropped load, derailment, two-blocking, overload and collision are considered accidents, even though no material damage or injury occurs. A component failure (e.g., motor burnout, gear tooth failure, bearing failure) is not considered an accident solely due to material or equipment damage unless the component failure results in damage to other components (e.g., dropped boom, dropped load, or roll over). Document any mishap that meets the criteria described in the Crane/Rigging Mishap Investigation Form, see attached.

1.3 SUBMITTALS

Government approval is required for submittals with a "G" designation; submittals having an "I" designation are for information only. A designation following the "G" or "I" designation identifies the office that will review the submittal for the Government. Submit the following in accordance with SECTION 01 33 00 SUBMITTAL PROCEDURES:

SD-01 Preconstruction Submittals

Accident Prevention Plan (APP); G C

Activity Hazard Analysis (AHA); G C

Safe Clearance; I C

Authorized Individuals; I C

Standard Lift Plan; G C

Critical Lift Plan; G C

Crane Wheel And Outrigger Loading Diagram And Deck Protection For Outriggers; G ST

SSHO And Alternate SSHO; G C

Competent Person Qualifications; G, C

Radiography Operation Planning Work Sheet; G, SO

SD-06 Test Reports

Monthly Exposure Reports; I C

Notifications and Reports; I C

Accident Reports; I C

LHE Inspection Reports; I C

SD-07 Certificates

Crane Operators/Riggers; I C

Confined Space Entry Permit; I C

Hot Work Permit; I C

Certificate of Compliance; I C

License Certificates; I C

1.4 MONTHLY EXPOSURE REPORTS

Provide a Monthly Exposure Report and attach to the monthly billing request. This report is a compilation of employee-hours worked each month for all site workers, both Prime and subcontractor. Failure to submit the report may result in retention of up to 10 percent of the voucher.

1.5 REGULATORY REQUIREMENTS

In addition to the detailed requirements included in the provisions of this contract, comply with the most recent edition of USACE EM 385-1-1, and the following federal, state, and local laws, ordinances, criteria, rules and regulations. Submit matters of interpretation of standards to the appropriate administrative agency for resolution before starting work. Where the requirements of this specification, applicable laws, criteria, ordinances, regulations, and referenced documents vary, the most stringent requirements govern.

1.6 SITE QUALIFICATIONS, DUTIES, AND MEETINGS

1.6.1 Personnel Qualifications

1.6.1.1 Site Safety and Health Officer (SSHO)

Provide an SSHO that meets the requirements of EM 385-1-1 Section 1. The SSHO must ensure that the requirements of 29 CFR 1926.16 are met for the project. Provide a Safety oversight team that includes a minimum of one

(1) person at each project site to function as the SSHO. The SSHO or an equally-qualified Alternate SSHO must be at the work site at all times, with the exception of temporary absences less than 24 hours discussed below, to implement and administer the Contractor's safety program and government-accepted Accident Prevention Plan. The SSHO and Alternate SSHO must have the required training, experience, and qualifications in accordance with EM 385-1-1 Section 01.A.17, and all associated sub-paragraphs including the following.

The SSHO shall be employed by the Prime Contractor. **The SSHO can be assigned as the Project Superintendent on this project**. The SSHO shall also meet the following requirements:

a. A minimum of 5 years safety work on similar projects.

b. 30-hour OSHA construction safety class or equivalent within the last 5 years.

c. Provide documentation that shows the completion of a minimum of 8 hours of formal, on-line, or self-study safety and health related coursework each year during the last five (5) years.

If the SSHO is off-site for a period longer than 24 hours, an equally-qualified alternate SSHO must be provided and must fulfill the same roles and responsibilities as the primary SSHO. When the SSHO is temporarily (up to 24 hours) off-site, a Designated Representative (DR), as identified in the AHA may be used in lieu of an Alternate SSHO, and must be on the project site at all times when work is being performed. Note that the DR is a collateral duty safety position, with safety duties in addition to their full time occupation.

1.6.1.2 Competent Person Qualifications

Provide Competent Persons in accordance with EM 385-1-1, Appendix Q and herein. Competent Persons for high risk activities include confined space, cranes and rigging, excavation/trenching, fall protection, and electrical work. The CP for these activities must be designated in writing, and meet the requirements for the specific activity (i.e. competent person, fall protection).

The Competent Person identified in the Contractor's Safety and Health Program and accepted Accident Prevention Plan, must be on-site at all times when the work that presents the hazards associated with their professional expertise is being performed. Provide the credentials of the Competent Persons(s) to the Contracting Officer for information in consultation with the Safety Office.

1.6.1.2.1 Competent Person for Scaffolding

Provide a Competent Person for Scaffolding who meets the requirements of EM 385-1-1, Section 22.B.02 and herein.

1.6.1.2.2 Competent Person for Fall Protection

Provide a Competent Person for Fall Protection who meets the requirements of EM 385-1-1, Section 21.C.04 and herein.

1.6.1.3 Crane Operators/Riggers

Provide Operators meeting the requirements in EM 385-1-1, Section 15.B for Riggers and Section 16.B for Crane Operators. In addition, for mobile cranes with Original Equipment Manufacturer (OEM) rated capacities of 50,000 pounds or greater, designate crane operators qualified by a source that qualifies crane operators (i.e., union, a government agency, or an organization that tests and qualifies crane operators). Provide proof of current qualification.

a. If the Government authorizes the Contracting to operate any of its cranes, each crane operator needs to be approved. Approval consists of the crane operator spending at least one (1) hour demonstrating their capabilities to operate the Government Crane, under the direct surveillance of a Government operator. The operators may be retested at any time.

1.6.2 Personnel Duties

1.6.2.1 Duties of the Site Safety and Health Officer (SSHO)

The SSHO must:

a. Conduct daily safety and health inspections and maintain a written log which includes area/operation inspected, date of inspection, identified hazards, recommended corrective actions, estimated and actual dates of corrections. Attach safety inspection logs to the Contractors' daily production report.

b. Conduct mishap investigations and complete required accident reports. Report mishaps and near misses.

c. Use OSHA's Form 300 to log work-related injuries and illnesses occurring on the project site for Prime Contractors and subcontractors. Post and maintain the Form 300 on the site Safety Bulletin Board.

d. Maintain applicable safety reference material on the job site.

e. Attend the pre-construction conference, pre-work meetings including preparatory meetings, and periodic in-progress meetings.

f. Review the APP and AHAs for compliance with EM 385-1-1, and approve, sign, implement and enforce them.

g. Establish a Safety and Occupational Health (SOH) Deficiency Tracking System that lists and monitors outstanding deficiencies until resolution.

h. Ensure subcontractor compliance with safety and health requirements.

i. Maintain a list of hazardous chemicals on site and their material Safety Data Sheets (SDS).

j. Maintain a weekly list of high hazard activities involving energy, equipment, excavation, entry into confined space, and elevation, and be prepared to discuss details during QC Meetings.

k. Provide and keep a record of site safety orientation and

indoctrination for Contractor employees, subcontractor employees, and site visitors.

Superintendent, QC Manager, and SSHO are subject to dismissal if the above duties are not being effectively carried out. If Superintendent, QC Manager, or SSHO are dismissed, project work will be stopped and will not be allowed to resume until a suitable replacement is approved and the above duties are again being effectively carried out.

1.6.3 Meetings

1.6.3.1 Preconstruction Meeting

Refer to SECTION 01 11 01.00 28 SUPPLEMENTARY REQUIREMENT for additional requirements on the Preconstruction Meeting.

a. Contractor representatives who have a responsibility or significant role in accident prevention on the project must attend the preconstruction meeting. This includes the project superintendent, Site Safety and Occupational Health officer, quality control manager, or any other assigned safety and health professionals who participated in the development of the APP (including the Activity Hazard Analyses (AHAs) and special plans, program and procedures associated with it).

b. Discuss the details of the submitted APP to include incorporated plans, programs, procedures and a listing of anticipated AHAs that will be developed and implemented during the performance of the contract. This list of proposed AHAs will be reviewed at the conference and an agreement will be reached between the Contractor and the Contracting Officer as to which phases will require an analysis. In addition, establish a schedule for the preparation, submittal, and Government review of AHAs to preclude project delays.

c. Deficiencies in the submitted APP, identified during the Contracting Officer's review, must be corrected, and the APP re-submitted for review prior to the start of construction. Work is not permitted to begin work until an APP is established that is acceptable to the Contracting Officer.

1.6.3.2 Safety Meetings

Conduct safety meetings to review past activities, plan for new or changed operations, review pertinent aspects of appropriate AHA (by trade), establish safe working procedures for anticipated hazards, and provide pertinent Safety and Occupational Health (SOH) training and motivation. Conduct meetings at least once a month for all supervisors on the project location. The SSHO, supervisors, foremen must conduct meetings at least once a week for the trade workers. Document meeting minutes to include the date, persons in attendance, subjects discussed, and names of individual(s) who conducted the meeting. Maintain documentation on-site and furnish copies to the Contracting Officer on request. Notify the Contracting Officer of all scheduled meetings Seven (7) calendar days in advance.

1.7 ACCIDENT PREVENTION PLAN (APP)

A qualified person must prepare the written, site-specific APP. Prepare the APP in accordance with the format and requirements of EM 385-1-1, Appendix A, and as supplemented herein. See attached Accident Prevention

Plan Requirements Form for guidance when preparing the APP. The following conditions apply:

1. Cover all paragraph and subparagraph elements in EM 385-1-1, Appendix A.

2. Must be job-specific and address any unusual or unique aspects of the project or activity for which it is written.

3. Must interface with the Contractor's overall safety and health program referenced in the APP in the applicable APP element, and made site-specific.

4. Describe the methods to evaluate past safety performance of potential subcontractors in the selection process.

5. Describe innovative methods used to ensure and monitor safe work practices of subcontractors.

6. The Government considers the Prime Contractor to be the "controlling authority" for all work site safety and health of the subcontractors.

7. Contractors are responsible for informing their subcontractors of the safety provisions under the terms of the contract and the penalties for noncompliance, coordinating the work to prevent one craft from interfering with or creating hazardous working conditions for other crafts, and inspecting subcontractor operations to ensure that accident prevention responsibilities are being carried out.

8. The APP must be signed by an officer of the firm (Prime Contractor senior person), the individual preparing the APP, the on-site superintendent, the designated SSHO, the Contractor Quality Control Manager, and any designated Certified Safety Professional (CSP) or Certified Health Physicist (CIH).

9. The SSHO must provide and maintain the APP and a log of signatures by each subcontractor foreman, attesting that they have read and understand the APP, and make the APP and log available on-site to the Contracting Officer.

10. If English is not the foreman's primary language, the Prime Contractor must provide an interpreter.

Submit the APP to the contracting Officer Fifteen (15) calendar days prior to the date of the preconstruction conference for acceptance. Work cannot precede without an accepted APP. Once reviewed and accepted by the contracting Officer, the APP and attachments will be enforced as part of the contract.

1. Disregarding the provisions of this contract or the accepted APP is cause for stopping of work, at the discretion of the Contracting Officer, until the matter has been rectified.

2. Continuously review and amend the APP, as necessary, throughout the life of the contract. Changes to the accepted APP must be made with the knowledge and concurrence of the Contracting Officer, project superintendent, SSHO and Quality Control Manager.

3. Incorporate unusual or high-hazard activities not identified in the original APP as they are discovered. Should any severe hazard exposure (i.e. imminent danger) become evident, stop work in the area, secure the area, and develop a plan to remove the exposure and control the hazard. Notify the Contracting Officer within 24 hours of discovery. Eliminate and remove the hazard.

4. In the interim, take all necessary action to restore and maintain safe working conditions in order to safeguard onsite personnel, visitors, the public (as defined by ASSE/SAFE A10.34), and the environment.

1.7.1 Names and Qualifications

Provide plans in accordance with the requirements outlined in EM 385-1-1; Appendix A, including the following:

a. Names and qualifications (resumes including education, training, experience and certifications) of site safety and health personnel designated to perform work on this project to include the designated SSHO and other competent and qualified personnel to be used. Specify the duties of each position.

b. Qualifications of competent and of qualified persons. As a minimum, designate and submit qualifications of competent persons for each of the following major areas: excavation; scaffolding; fall protection; hazardous energy; confined space; health hazard recognition, evaluation and control of chemical, physical and biological agents; and personal protective equipment and clothing to include selection, use and maintenance.

1.7.2 Plans

Provide plans in the APP in accordance with the requirements outlined in EM 385-1-1, Appendix A including the following:

1.7.2.1 Confined Space Entry Plan

Develop a confined or enclosed space entry plan that is compatible with NWWP 385-1-20 in accordance with EM 385-1-1, applicable OSHA standards 29 CFR 1910, 29 CFR 1915, and 29 CFR 1926, OSHA Directive CPL 2.100, and any other federal, state and local regulatory requirements identified in this contract. Identify the qualified person's name and qualifications, training, and experience. Delineate the qualified person's authority to direct work stoppage in the event of hazardous conditions. Include procedure for rescue by contractor personnel and the coordination with emergency responders. (If there is no confined space work, include a statement that no confined space work exists and none will be created.)

1.7.2.2 Standard Lift Plan (SLP)

Plan lifts to avoid situations where the operator cannot maintain safe control of the lift. Prepare a written SLP in accordance with EM 385-1-1, Section 16.A.03, using Form 16-2 for every lift or series of lifts (if duty cycle or routine lifts are being performed). The SLP must be developed, reviewed and accepted by all personnel involved in the lift in conjunction with the associated AHA. Signature on the AHA constitutes acceptance of the plan. Maintain the SLP on the LHE for the current lift(s) being made. Maintain historical SLPs for a minimum of 3 months.

1.7.2.3 Critical Lift Plan- Crane or Load Handling Equipment

Provide a Critical Lift Plan as required by EM 385-1-1, Section 16.H.01, using Form 16-3. Critical lifts require detailed planning and additional or unusual safety precautions. Develop and submit a critical lift plan to the Contracting Officer Thirty (30) calendar days prior to critical lift. Comply with load testing requirements in accordance with EM 385-1-1, Section 16.F.03.

In addition to the requirements of EM 385-1-1, Section 16.H.02, the critical lift plan must include the following:

a. For lifts of personnel, demonstrate compliance with the requirements of 29 CFR 1926.1400 and EM 385-1-1, Section 16.T.

b. Multi-purpose machines, material handling equipment, and construction equipment used to lift loads that are suspended by rigging gear, require proof of authorization from the machine OEM that the machine is capable of making lifts of loads suspended by rigging equipment. Demonstrate that the operator is properly trained and that the equipment is properly configured to make such lifts and is equipped with a load chart.

1.7.2.4 Fall Protection and Prevention (FP&P) Plan

The plan must comply with the requirements of EM 385-1-1, Section 21.D and ANSI/ASSP Z359.2. Be site specific, and address all fall hazards in the work place and during different phases of construction. Address how to protect and prevent workers from falling to lower levels when they are exposed to fall hazards above 6 feet. A competent person or qualified person for fall protection must prepare and sign the plan documentation. Include fall protection and prevention systems, equipment and methods employed for every phase of work, roles and responsibilities, assisted rescue, self-rescue and evacuation procedures, training requirements, and monitoring methods. Review and revise, as necessary, the Fall Protection and Prevention Plan documentation as conditions change, but at a minimum every six months, for lengthy projects, reflecting any changes during the course of construction due to changes in personnel, equipment, systems or work habits. Keep and maintain the accepted Fall Protection and Prevention Plan documentation at the job site for the duration of the project. Include the Fall Protection and Prevention Plan documentation in the Accident Prevention Plan (APP).

1.7.2.5 Rescue and Evacuation Plan

Provide a Rescue and Evacuation Plan in accordance with EM 385-1-1 Section 21.N and ANSI/ASSP Z359.2, and include in the FP&P Plan and as part of the APP. Include a detailed discussion of the following: methods of rescue; methods of self-rescue; equipment used; training requirement; specialized training for the rescuers; procedures for requesting rescue and medical assistance; and transportation routes to a medical facility.

1.7.2.6 Hazardous Energy Control Program (HECP)

Develop a HECP in accordance with EM 385-1-1 Section 12, 29 CFR 1910.147, 29 CFR 1910.333, 29 CFR 1915.89, ASSE/SAFE Z244.1, and ASSE/SAFE A10.44. Submit this HECP as part of the Accident Prevention Plan (APP). Conduct a preparatory meeting and inspection with all effected personnel to

coordinate all HECP activities. Document this meeting and inspection in accordance with EM 385-1-1, Section 12.A.02. Ensure that each employee is familiar with and complies with these procedures.

1.7.2.7 COVID 19 Monitoring Plan

Include a site specific COVID-19 Monitoring Plan which addresses the following elements, as a minimum:

a. Procedures for periodic sanitation inspections.

b. Procedures for disinfecting project site to include high traffic areas, in accordance with current CDC guidelines.

c. Site specific measures to practice social distancing while working on the project.

d. Employee training on the signs, symptoms, and protection measures related to COVID 19, in accordance with CDC guidelines.

1.8 ACTIVITY HAZARD ANALYSIS (AHA)

Before beginning each activity, task or Definable Feature of Work (DFOW) involving a type of work presenting hazards not experienced in previous project operations, or where a new work crew or subcontractor is to perform the work, the Contractor(s) performing that work activity must prepare an AHA. AHAs must be developed by the Prime Contractor, subcontractor, or supplier performing the work, and provided for Prime Contractor review and approval before submitting to the Contracting Officer. AHAs must be signed by the SSHO, Superintendent, QC Manager and the subcontractor Foreman performing the work. Submit the AHA for review at least 15 working days prior to the start of each activity task. The Government reserves the right to require the Contractor to revise and resubmit the AHA if it fails to effectively identify the work sequences, specific anticipated hazards, site conditions, equipment, materials, personnel and the control measures to be implemented.

The activity hazard analyses shall be developed using the Project Schedule as the basis for the activities performed. Any activities listed on the Project Schedule will require an AHA. The AHAs will be developed by the Contractor, supplier or subcontractor and provided to the Prime Contractor for submittal to the Contracting Officer. The Activity Hazard Analysis Template is attached to the end of this SECTION. Electronic copy of the AHA may be downloaded from the following site.

http://www.usace.army.mil/Portals/2/docs/AHA2.pdf

AHAs must identify competent persons required for phases involving high risk activities, including confined entry, crane and rigging, excavations, trenching, electrical work, fall protection, and scaffolding.

1.8.1 AHA Management

Review the AHA list periodically (at least monthly) at the Contractor supervisory safety meeting, and update as necessary when procedures, scheduling, or hazards change. Use the AHA during daily inspections by the SSHO to ensure the implementation and effectiveness of the required safety and health controls for that work activity.

1.8.2 AHA Signature Log

Each employee performing work as part of an activity, task or DFOW must review the AHA for that work and sign a signature log specifically maintained for that AHA prior to starting work on that activity. The SSHO must maintain a signature log on site for every AHA. Provide employees whose primary language is other than English, with an interpreter to ensure a clear understanding of the AHA and its contents.

1.9 LOCKOUT/TAGOUT (LOTO)-SAFE CLEARANCE OR HAZARDOUS ENERGY CONTROL PROGRAM (HECP) PROCEDURES

All Contractor work on site shall meet the requirements of "Safety and Occupational Health Office; Safe Clearance Program for the Control of Hazardous Energy, NWWP 385-1-20". A digital copy may be obtained at the web address shown below in paragraph, Safe Clearance Training. Safe Clearance procedures are used by Project and Contractor personnel to protect personnel, equipment and the environment as well as ensuring continuity of service. Any work performed by the Contractor that requires taking project operated equipment out of service shall be done only after a formal clearance is obtained through the Government. Violations will be reported to the Issuing Individual and violations may result in disciplinary action ranging from retraining to removal of safe clearance authorization.

For jobs with multiple tasks that require AHA's, prepare and submit an Activity Hazard Analysis (AHA) on the first feature of work that requires a clearance request. A comprehensive AHA is required for smaller jobs. AHA requirements will be verified at the Pre-Construction Meeting.

The following applies to LOTO and HECP procedures:

a. The Government will provide Safe Clearance Tags and will issue Isolation Locks to Contractor for clearances using the Government Safe Clearance Procedures. Provide personal safety locks, meeting OSHA standards, for use with the Government's safe clearance procedures. See NWWP 385-1-20, Chapter 6 - Locks and Tags, and Chapter 10 - Contractor Personnel for further guidance.

b. Government HECP procedures shall be used on equipment/systems owned by the Government. It shall also be used on all points interfacing with Government owned equipment/systems. In instances where equipment is owned by the Contractor, not yet turned over to the Government, or equipment which is not tied into Government energy sources, the Contractor may use their own Lockout/Tagout Program. Contractor Programs shall be pre-approved by the Responsible Official.

c. Submit the names of Authorized Individuals to the Contracting Officer prior to the Pre-Construction Meeting. Project-specific training will be given by the Operations Chief or designee and will be approximately 30 minutes in length. Project-specific training will be provided for every contract and only to the Contractor's Authorized Individuals. The Authorized Individuals shall be required to brief their work crews and subcontractors of any project-specific clearance information. Training is only required once per year and is, with the exception of project-specific training, valid for every facility within the Walla Walla District. If the Responsible Official or Government designee determines that the Authorized Individual's knowledge of the HECP procedures are inadequate the Responsible

Official may administer a retest. See NWWP 385-1-20 Chapter 5 - Training for further guidance.

1.9.1 Safe Clearance Training

Contractor, subcontractor, vendors and visitors shall take the appropriate level of HECP Procedure training commensurate with their job duties. Only HECP certificates generated from Walla Walla District or the project are acceptable.

Based on the scope of work and size of crew, have the appropriate number of Authorized Individuals trained to ensure that there are no delays. All Contractor personnel working in areas under a Safe Clearance shall be trained as Affected Persons. Any non-working personnel, vendors and visitors, that will be entering an area under Safe Clearance shall take Awareness Level training. Training and written tests for the modules below shall be completed on-line prior to commencing on-site work. Time estimates for training follow:

a. Awareness Level Training: Approximately 1 hour (non-working personnel, vendors and visitors).
b. Affected Persons: Approximately 2 hours in addition to Awareness Level training.
c. Authorized Individuals: Approximately 3 hours in addition to Awareness Level training and Affected Personnel Training.

A copy of the Safe Clearance Program for the Control of Hazardous Energy (NWWP 385-1-20) can be found on the Walla Walla District Internet site at: http://www.nww.usace.army.mil/Portals/28/docs/contracting/OP385120.pdf.

All costs for this training shall be considered incidental to the work, and therefore, no additional payment will be made. Training is an annual requirement and will expire one year from completion date. Training is provided by Vivid Learning Systems and is available on line at http://Hecp.vividlms.com. Cost for the training is displayed on the home page. Submit the training completion certification a minimum of Seven (7) calendar days prior to the individual's arrival at site. Maintain training documentation on site, including the individual's name and date of training completion, in accordance with NWWP 385-1-20.

1.10 DISPLAY OF SAFETY INFORMATION

1.10.1 Safety Bulletin Board

Within one (1) calendar day(s) after commencement of work, erect a safety bulletin board at the job site. Where size, duration, or logistics of project do not facilitate a bulletin board, an alternative method, acceptable to the Contracting Officer, that is accessible and includes all mandatory information for employee and visitor review, may be deemed as meeting the requirement for a bulletin board. Include and maintain information on safety bulletin board as required by EM 385-1-1, Section 01.A.07. Additional items required to be posted include:

a. Confined space entry permit.

b. Hot work permit.

1.10.2 Safety and Occupational Health (SOH) Deficiency Tracking System

Establish a SOH deficiency tracking system that lists and monitors the status of SOH deficiencies in chronological order. Use the tracking system to evaluate the effectiveness of the APP. A monthly evaluation of the data must be discussed in the QC or SOH meeting with everyone on the project. The list must be posted on the project bulletin board and updated daily, and provide the following information:

a. Date deficiency identified;

b. Description of deficiency;

c. Name of person responsible for correcting deficiency;

d. Projected resolution date;

e. Date actually resolved.

1.11 SITE SAFETY REFERENCE MATERIALS

Maintain safety-related references applicable to the project, including those listed in paragraph REFERENCES. Maintain applicable equipment manufacturer's manuals.

1.12 EMERGENCY MEDICAL TREATMENT

Contractors must arrange for their own emergency medical treatment. Government has no responsibility to provide emergency medical treatment.

1.13 NOTIFICATIONS and REPORTS

1.13.1 Mishap Notification

Notify the Contracting Officer after any mishaps, including recordable accidents, incidents, and near misses, as defined in EM 385-1-1 Appendix Q. All mishaps shall be reported as soon as possible but not more than twenty four (24) hours afterwards to the KO per Section 01.D. In addition, any mishap occurring in any of the following high hazard areas shall be immediately reported to the KO. This includes electrical mishaps, to include Arc Flash; shock; uncontrolled release of hazardous energy (includes electrical and non-electrical); load handling equipment or rigging; fall from height (any level other than same surface); and underwater diving as covered in Section 01.D.05. The Contractor is responsible for obtaining appropriate medical and emergency assistance and for notifying fire, law enforcement, and regulatory agencies.

Within notification include Contractor name; contract title; type of contract; name of activity, installation or location where accident occurred; date and time of accident; names of personnel injured; extent of property damage, if any; extent of injury, if known, and brief description of accident (for example, type of construction equipment used and PPE used). Preserve the conditions and evidence on the accident site until the Government investigation team arrives on-site and Government investigation is conducted. Assist and cooperate fully with the Government's investigation(s) of any mishap.

1.13.2 Accident Reports

a. Conduct an accident investigation for recordable injuries and illnesses, property damage, and near misses as defined in EM 385-1-1, to establish the root cause(s) of the accident. Complete the USACE Accident Report Form 3394, and provide the report to the KO within Five (5) calendar day(s) of the accident. The KO will provide copies of any required or special forms.

b. Near Misses: Report all "Near Misses" to the KO, using local mishap reporting procedures, within 24 hrs. The KO will provide the Contractor the required forms. Near miss reports are considered positive and proactive Contractor safety management actions.

c. Conduct an accident investigation for any load handling equipment accident (including rigging gear accidents) to establish the root cause(s) of the accident. Complete the attached LHE Accident Report (CRANE/RIGGING MISHAP INVESTIGATION) form and provide the report to the KO within Thirty (30) calendar days of the accident. Do not proceed with crane operations until cause is determined and corrective actions have been implemented to the satisfaction of the KO. The KO will provide a blank copy of the accident report form.

1.13.3 LHE Inspection Reports

Submit LHE inspection reports required in accordance with EM 385-1-1 and as specified herein with Daily Reports of Inspections.

1.13.4 Certificate of Compliance and Pre-lift Plan/Checklist for LHE and Rigging

Provide a FORM 16-1 Certificate of Compliance for LHE entering an activity under this contract and in accordance with EM 385-1-1. Post certifications on the crane.

Develop a Standard Lift Plan (SLP) in accordance with EM 385-1-1, Section 16.H.03 using Form 16-2 Standard Pre-Lift Crane Plan/Checklist for each lift planned. Submit SLP to the Contracting Officer for approval within Fifteen (15) calendar days in advance of planned lift.

1.13.5 Contractor's Cranes

a. Contractor's cranes and equipment furnished for this work shall conform to all applicable OSHA Requirements and EM 385-1-1. Submit Crane Wheel and Outrigger Loading Diagram and Deck Protection for Outriggers submittal for approval at least Thirty (30) calendar days prior to using any crane rated 50 tons or more on any of the Project decks. The submittal shall provide the following information on a plan view sketch or drawing. A marked up Government-provided resource (R) contract drawing can also be used, if available.

1. Crane outrigger locations with dimensions from the center of each outrigger to identifiable project feature(s).

2. Dimensions of each outrigger.

3. Maximum load on each outrigger.

4. Outrigger pad deck protection dimensions and location. All

outrigger pad deck protection shall be provided by the Contractor.

5. If cribbing material is used, show the cribbing material dimensions and location.

b. Include, in the submittal, the cribbing material properties, and calculations to verify the cribbing material's adequacy to carry the intended loads. To the greatest extent possible, place the outriggers over existing supports such as walls. Avoid placing the outriggers next to a wall or support. Under no circumstance shall an outrigger or cribbing be placed on metal grating. See Section 01 55 10.00 28 CONTRACTOR WORK, ACCESS AND STORAGE AREAS, paragraph GOVERNMENT ROADWAYS AND DECK ACCESS RESTRICTIONS for information on deck loading capacities.

1.14 HOT WORK

Activities involving burning, brazing, cutting, grinding, powder-actuated tools, soldering, sparks, thawing activities, welding, working with open flames, or any similar operation that is capable of initiating fires or explosions is considered HOT WORK.

Provide at least two (2), twenty (20) pound 4A:20 BC rated extinguishers for normal "Hot Work." All extinguishers shall be current inspection tagged, approved safety pin and tamper resistant seal. It is also mandatory to have a designated FIRE WATCH for any "Hot Work" done at this activity. The Fire Watch shall be trained in accordance with NFPA 51B and remain on-site for a minimum of 60 minutes after completion of the task or as specified on the Hot Work Permit.

When starting work in the facility, require personnel to familiarize themselves with the location of the nearest fire alarm boxes and place in memory the emergency phone number. ANY FIRE, NO MATTER HOW SMALL, SHALL BE REPORTED TO THE RESPONSIBLE AUTHORITY IMMEDIATELY.

Obtain services from a NFPA Certified Marine Chemist for "HOT WORK" within or around flammable materials (such as fuel systems, welding/cutting on fuel pipes) or confined spaces (such as sewer wet wells, manholes, vaults, etc.) that have the potential for flammable or explosive atmospheres.

1.15 RADIATION SAFETY REQUIREMENTS

Submit License Certificates, employee training records, and Leak Test Reports for radiation materials and equipment to the Contracting Officer and Radiation Safety Office (RSO)for all specialized and licensed material and equipment proposed for use on the construction project. Maintain on-site records whenever licensed radiological materials or ionizing equipment are on government property.

Protect workers from radiation exposure in accordance with 10 CFR 20, ensuring any personnel exposures are maintained As Low As Reasonably Achievable.

1.15.1 Radiography Operation Planning Work Sheet

Submit a Radiography Operation Planning Work Sheet to Contracting Officer 14 days prior to commencement of operations involving radioactive materials or radiation generating devices. The Contracting Officer will review this worksheet and submit questions and comments.

Contractors must use primary dosimeters process by a National Voluntary Laboratory Accreditation Program (NVLAP) accredited laboratory.

1.15.2 Site Access and Security

Coordinate site access and security requirements with the Contracting Officer for all radiological materials and equipment containing ionizing radiation that are proposed for use on a government facility. The authorized representative will meet the Contractor at a designated location, ensure safety of the materials being transported, and will escort the Contractor to the job site and return upon completion of the work.

Provide a copy of all calibration records, and utilization records for radiological operations performed on the site.

1.15.3 Loss or Release and Unplanned Personnel Exposure

Loss or release of radioactive materials, and unplanned personnel exposures must be reported immediately to the Contracting Officer, RSO, and Base Security Department Emergency Number.

1.15.4 Site Demarcation and Barricade

Properly demark and barricade an area surrounding radiological operations to preclude personnel entrance, in accordance with EM 385-1-1, Nuclear Regulatory Commission, and Applicable State regulations and license requirements, and in accordance with requirements established in the accepted Radiography Operation Planning Work Sheet.

Do not close or obstruct streets, walks, and other facilities occupied and used by the Government without written permission from the Contracting Officer.

1.15.5 Security of Material and Equipment

Properly secure the radiological material and ionizing radiation equipment at all times, including keeping the devices in a properly marked and locked container, and secondarily locking the container to a secure point in the Contractor's vehicle or other approved storage location during transportation and while not in use. While in use, maintain a continuous visual observation on the radiological material and ionizing radiation equipment. In instances where radiography is scheduled near or adjacent to buildings or areas having limited access or one-way doors, make no assumptions as to building occupancy. Where necessary, the Contracting Officer will direct the Contractor to conduct an actual building entry, search, and alert. Where removal of personnel from such a building cannot be accomplished and it is otherwise safe to proceed with the radiography, position a fully instructed employee inside the building or area to prevent exiting while external radiographic operations are in process.

1.15.6 Transportation of Material

Comply with 49 CFR 173 for Transportation of Regulated Amounts of Radioactive Material. Notify Local Fire authorities and the site Radiation Safety officer (RSO) of any Radioactive Material use.

1.15.7 Schedule for Exposure or Un-shielding

Actual exposure of the radiographic film or un-shielding the source must not be initiated until after 5 p.m. on weekdays.

1.15.8 Transmitter Requirements

Adhere to the base policy concerning the use of transmitters, such as radios and cell phones. Obey Emissions control (EMCON) restrictions.

1.16 CONFINED SPACE ENTRY REQUIREMENTS.

Confined space entry must comply with Section 34 of EM 385-1-1, OSHA 29 CFR 1926, OSHA 29 CFR 1910, OSHA 29 CFR 1910.146, and OSHA Directive CPL 2.100. Any potential for a hazard in the confined space requires a permit system to be used.

1.16.1 Entry Procedures

Prohibit entry into a confined space by personnel for any purpose, including hot work, until the qualified person has conducted appropriate tests to ensure the confined or enclosed space is safe for the work intended and that all potential hazards are controlled or eliminated and documented. Comply with EM 385-1-1, Section 34 for entry procedures. Hazards pertaining to the space must be reviewed with each employee during review of the AHA.

1.16.2 Forced Air Ventilation

Forced air ventilation is required for all confined space entry operations and the minimum air exchange requirements must be maintained to ensure exposure to any hazardous atmosphere is kept below its action level.

1.16.3 Sewer Wet Wells

Sewer wet wells require continuous atmosphere monitoring with audible alarm for toxic gas detection.

1.16.4 Rescue Procedures and Coordination with Local Emergency Responders

Develop and implement an on-site rescue and recovery plan and procedures. The rescue plan must not rely on local emergency responders for rescue from a confined space.

1.17 SEVERE STORM PLAN

In the event of a severe storm warning, the Contractor must:

a. Secure outside equipment and materials and place materials that could be damaged in protected areas.

b. Check surrounding area, including roof, for loose material, equipment, debris, and other objects that could be blown away or against existing facilities.

c. Ensure that temporary erosion controls are adequate.

PART 2 PRODUCTS (NOT USED)

PART 3 EXECUTION

3.1 CONSTRUCTION AND OTHER WORK

Comply with EM 385-1-1, NFPA 70, NFPA 70E, NFPA 241, the APP, the AHA, Federal and State OSHA regulations, and other related submittals and activity fire and safety regulations. The most stringent standard prevails.

PPE is governed in all areas by the nature of the work the employee is performing. Use personal hearing protection at all times in designated noise hazardous areas or when performing noise hazardous tasks. Safety glasses must be worn or carried/available on each person. Mandatory PPE includes:

a. Hard Hat

b. Long Pants

c. Appropriate Safety Shoes

d. Appropriate Class Reflective Vests

3.1.1 Worksite Communication

Employees working alone in a remote location or away from other workers must be provided an effective means of emergency communications (i.e., cellular phone, two-way radios, land-line telephones or other acceptable means). The selected communication must be readily available (easily within the immediate reach) of the employee and must be tested prior to the start of work to verify that it effectively operates in the area/environment. An employee check-in/check-out communication procedure must be developed to ensure employee safety.

3.1.2 Hazardous Material Exclusions

Notwithstanding any other hazardous material used in this contract, radioactive materials or instruments capable of producing ionizing/non-ionizing radiation (with the exception of radioactive material and devices used in accordance with EM 385-1-1 such as nuclear density meters for compaction testing and laboratory equipment with radioactive sources) as well as materials which contain asbestos, mercury or polychlorinated biphenyls, di-isocyanates, lead-based paint, and hexavalent chromium, are prohibited. The Contracting Officer, upon written request by the Contractor, may consider exceptions to the use of any of the above excluded materials. Low mercury lamps used within fluorescent lighting fixtures are allowed as an exception without further Contracting Officer approval. Notify the Radiation Safety Officer (RSO) prior to excepted items of radioactive material and devices being brought on Project site.

3.1.3 Unforeseen Hazardous Material

Contract documents identify materials such as PCB, lead paint, friable and non-friable asbestos and other OSHA regulated chemicals (i.e. 29 CFR Part 1910.1000). If material(s) that may be hazardous to human health upon disturbance are encountered during construction operations, stop that

portion of work and notify the Contracting Officer immediately. Within Fourteen (14) calendar days the Government will determine if the material is hazardous. If material is not hazardous or poses no danger, the Government will direct the Contractor to proceed without change. If material is hazardous and handling of the material is necessary to accomplish the work, the Government will issue a modification pursuant to FAR 52.243-4, "Changes" and FAR 52.236-2, "Differing Site Conditions."

3.2 FALL PROTECTION PROGRAM

Establish a fall protection program, for the protection of all employees exposed to fall hazards. Within the program include company policy, identify roles and responsibilities, education and training requirements, fall hazard identification, prevention and control measures, inspection, storage, care and maintenance of fall protection equipment and rescue and evacuation procedures in accordance with ANSI/ASSP Z359.2 and EM 385-1-1, Sections 21.A and 21.D.

3.2.1 Training

Institute a fall protection training program. As part of the Fall Protection Program, provide training for each employee who might be exposed to fall hazards. Provide training by a competent person for fall protection in accordance with EM 385-1-1, Section 21.C. Document training and practical application of the competent person in accordance with EM 385-1-1, Section 21.C.04 and ANSI/ASSP Z359.2 in the AHA.

3.2.2 Fall Protection Equipment and Systems

Enforce use of personal fall protection equipment and systems designated (to include fall arrest, restraint, and positioning) for each specific work activity in the Site Specific Fall Protection and Prevention Plan and AHA at all times when an employee is exposed to a fall hazard. Protect employees from fall hazards as specified in EM 385-1-1, Section 21.

Provide personal fall protection equipment, systems, subsystems, and components that comply with EM 385-1-1 Section 21.I, 29 CFR 1926.500 Subpart M, ANSI/ASSP Z359.0, ANSI/ASSP Z359.1, ANSI/ASSP Z359.2, ANSI/ASSP Z359.3, ANSI/ASSP Z359.4, ANSI/ASSP Z359.6, ANSI/ASSP Z359.7, ANSI/ASSP Z359.11, ANSI/ASSP Z359.12, ANSI/ASSP Z359.13, ANSI/ASSP Z359.14, and ANSI/ASSP Z359.15.

3.2.2.1 Additional Personal Fall Protection

In addition to the required fall protection systems, other protection such as safety skiffs, personal floatation devices, and life rings, are required when working above or next to water in accordance with EM 385-1-1, Section 21.O. Personal fall protection systems and equipment are required when working from an articulating or extendible boom, swing stages, or suspended platform. In addition, personal fall protection systems are required when operating other equipment such as scissor lifts. The need for tying-off in such equipment is to prevent ejection of the employee from the equipment during raising, lowering, travel, or while performing work.

3.2.2.2 Personal Fall Protection Harnesses

Only a full-body harness with a shock-absorbing lanyard or self-retracting lanyard is an acceptable personal fall arrest body support device. The

use of body belts is not acceptable. Harnesses must have a fall arrest attachment affixed to the body support (usually a Dorsal D-ring) and specifically designated for attachment to the rest of the system. Snap hooks and carabineers must be self-closing and self-locking, capable of being opened only by at least two consecutive deliberate actions and have a minimum gate strength of 3,600 lbs in all directions. Use webbing, straps, and ropes made of synthetic fiber. The maximum free fall distance when using fall arrest equipment must not exceed 6 feet, unless the proper energy absorbing lanyard is used. Always take into consideration the total fall distance and any swinging of the worker (pendulum-like motion), that can occur during a fall, when attaching a person to a fall arrest system. All full body harnesses must be equipped with Suspension Trauma Prevention such as stirrups, relief steps, or similar in order to provide short-term relief from the effects of orthostatic intolerance in accordance with EM 385-1-1, Section 21.I.06.

3.2.3 Fall Protection for Roofing Work

Implement fall protection controls based on the type of roof being constructed and work being performed. Evaluate the roof area to be accessed for its structural integrity including weight-bearing capabilities for the projected loading.

a. Low Sloped Roofs:

(1) For work within 6 feet of an edge, on a roof having a slope less than or equal to 4:12 (vertical to horizontal), protect personnel from falling by use of personal fall arrest/restraint systems, guardrails, or safety nets. A safety monitoring system is not adequate fall protection and is not authorized. Provide in accordance with 29 CFR 1926.500.

(2) For work greater than 6 feet from an edge, erect and install warning lines in accordance with 29 CFR 1926.500 and EM 385-1-1, Section L.

b. Steep-Sloped Roofs: Work on a roof having a slope greater than 4:1 (vertical to horizontal) requires a personal fall arrest system, guardrails with toe-boards, or safety nets. This requirement also applies to residential or housing type construction.

3.2.4 Horizontal Lifelines (HLL)

Provide HLL in accordance with EM 385-1-1, Section 21.I.08.d.2. Commercially manufactured horizontal lifelines (HLL) must be designed, installed, certified and used, under the supervision of a qualified person, for fall protection as part of a complete fall arrest system which maintains a safety factor of 2 (29 CFR 1926.500). The competent person for fall protection may (if deemed appropriate by the qualified person) supervise the assembly, disassembly, use and inspection of the HLL system under the direction of the qualified person. Locally manufactured HLLs are not acceptable unless they are custom designed for limited or site specific applications by a Registered Professional Engineer who is qualified in designing HLL systems.

3.2.5 Guardrails and Safety Nets

Design, install and use guardrails and safety nets in accordance with EM 385-1-1, Section 21.F.01 and 29 CFR 1926 Subpart M.

3.2.6 Rescue and Evacuation Plan and Procedures

When personal fall arrest systems are used, ensure that the mishap victim can self-rescue or can be rescued promptly should a fall occur. Prepare a Rescue and Evacuation Plan and include a detailed discussion of the following: methods of rescue; methods of self-rescue or assisted-rescue; equipment used; training requirement; specialized training for the rescuers; procedures for requesting rescue and medical assistance; and transportation routes to a medical facility. Include the Rescue and Evacuation Plan within the Activity Hazard Analysis (AHA) for the phase of work, in the Fall Protection and Prevention (FP&P) Plan, and the Accident Prevention Plan (APP). The plan must comply with the requirements of EM 385-1-1, ANSI/ASSP Z359.2, and ANSI/ASSP Z359.4.

3.3 WORK PLATFORMS

3.3.1 Scaffolding

Provide employees with a safe means of access to the work area on the scaffold. Climbing of any scaffold braces or supports not specifically designed for access is prohibited. Comply with the following requirements:

a. Scaffold platforms greater than 20 feet in height must be accessed by use of a scaffold stair system.

b. Ladders commonly provided by scaffold system manufacturers are prohibited for accessing scaffold platforms greater than 20 feet maximum in height.

c. An adequate gate is required.

d. Employees performing scaffold erection and dismantling must be qualified.

e. Scaffold must be capable of supporting at least four times the maximum intended load or without appropriate fall protection as delineated in the accepted fall protection and prevention plan.

f. Stationary scaffolds must be attached to structural building components to safeguard against tipping forward or backward.

g. Special care must be given to ensure scaffold systems are not overloaded.

h. Side brackets used to extend scaffold platforms on self-supported scaffold systems for the storage of material are prohibited. The first tie-in must be at the height equal to 4 times the width of the smallest dimension of the scaffold base.

i. Scaffolding other than suspended types must bear on base plates upon wood mud sills (2 in x 10 in x 8 in minimum) or other adequate firm foundation.

j. Scaffold or work platform erectors must have fall protection during the erection and dismantling of scaffolding or work platforms that are more than six feet.

k. Delineate fall protection requirements when working above six feet

or above dangerous operations in the Fall Protection and Prevention (FP&P) Plan and Activity Hazard Analysis (AHA) for the phase of work.

3.3.2 Elevated Aerial Work Platforms (AWPs)

Workers must be anchored to the basket or bucket in accordance with manufacturer's specifications and instructions (anchoring to the boom may only be used when allowed by the manufacturer and permitted by the CP). Lanyards used must be sufficiently short to prohibit worker from climbing out of basket. The climbing of rails is prohibited. Lanyards with built-in shock absorbers are acceptable. Self-retracting devices are not acceptable. Tying off to an adjacent pole or structure is not permitted unless a safe device for 100 percent tie-off is used for the transfer.

Use of AWPs must be operated, inspected, and maintained as specified in the operating manual for the equipment and delineated in the AHA. Operators of AWPs must be designated as qualified operators by the Prime Contractor. Maintain proof of qualifications on site for review and include in the AHA.

3.4 EQUIPMENT

3.4.1 Material Handling Equipment (MHE)

a. Material handling equipment such as forklifts must not be modified with work platform attachments for supporting employees unless specifically delineated in the manufacturer's printed operating instructions. Material handling equipment fitted with personnel work platform attachments are prohibited from traveling or positioning while personnel are working on the platform.

b. The use of hooks on equipment for lifting of material must be in accordance with manufacturer's printed instructions. Material Handling Equipment Operators must be trained in accordance with OSHA 29 CFR 1910, Subpart N.

c. Operators of forklifts or power industrial trucks must be licensed in accordance with OSHA.

3.4.2 Load Handling Equipment (LHE)

a. Equip cranes and derricks as specified in EM 385-1-1, Section 16.

b. Notify the Contracting Officer fifteen (15) working days in advance of any LHE entering the activity, in accordance with EM 385-1-1, Section 16.A.02, so that necessary quality assurance spot checks can be coordinated. Contractor's operator must remain with the crane during the spot check. Rigging gear must comply with OSHA, ASME B30.9 Standards.

c. Comply with the LHE manufacturer's specifications and limitations for erection and operation of cranes and hoists used in support of the work. Perform erection under the supervision of a designated person (as defined in ASME B30.5). Perform all testing in accordance with the manufacturer's recommended procedures.

d. Comply with ASME B30.5 for mobile and locomotive cranes, ASME B30.22 for articulating boom cranes, ASME B30.3 for construction tower cranes, ASME B30.8 for floating cranes and floating derricks,

ASME B30.9 for slings, ASME B30.20 for below the hook lifting devices and ASME B30.26 for rigging hardware.

e. Under no circumstance must a Contractor make a lift at or above 90 percent of the cranes rated capacity in any configuration.

f. When operating in the vicinity of overhead transmission lines, operators and riggers must be alert to this special hazard and follow the requirements of EM 385-1-1 Section 11, and ASME B30.5 or ASME B30.22 as applicable.

g. Do not use crane suspended personnel work platforms (baskets) unless the Contractor proves that using any other access to the work location would provide a greater hazard to the workers or is impossible. Do not lift personnel with a line hoist or friction crane. Additionally, submit a specific AHA for this work to the Contracting Officer. Ensure the activity and AHA are thoroughly reviewed by all involved personnel.

h. Inspect, maintain, and recharge portable fire extinguishers as specified in NFPA 10, Standard for Portable Fire Extinguishers.

i. All employees must keep clear of loads about to be lifted and of suspended loads.

j. Use cribbing when performing lifts on outriggers.

k. The crane hook/block must be positioned directly over the load. Side loading of the crane is prohibited.

l. A physical barricade must be positioned to prevent personnel access where accessible areas of the LHE's rotating superstructure poses a risk of striking, pinching or crushing personnel.

m. Maintain inspection records in accordance by EM 385-1-1, including shift, monthly, and annual inspections, the signature of the person performing the inspection, and the serial number or other identifier of the LHE that was inspected. Records must be available for review by the Contracting Officer.

n. Maintain written reports of operational and load testing in accordance with EM 385-1-1, Section 16.F, listing the load test procedures used along with any repairs or alterations performed on the LHE. Reports must be available for review by the Contracting Officer.

o. Certify that all LHE operators have been trained in proper use of all safety devices (e.g. anti-two block devices).

p. Take steps to ensure that wind speed does not contribute to loss of control of the load during lifting operations. At wind speeds greater than 20 mph, the operator, rigger and lift supervisor must cease all crane operations, evaluate conditions and determine if the lift may proceed. Base the determination to proceed or not on wind calculations per the manufacturer and a reduction in LHE rated capacity if applicable. Include this maximum wind speed determination as part of the activity hazard analysis plan for that operation.

3.4.3 Machinery and Mechanized Equipment

a. Proof of qualifications for operator must be kept on the project site for review.

b. Manufacture specifications or owner's manual for the equipment must be on-site and reviewed for additional safety precautions or requirements that are sometimes not identified by OSHA or USACE EM 385-1-1. Incorporate such additional safety precautions or requirements into the AHAs.

3.4.4 Explosives

Explosives must not be used or brought to the project site.

3.5 ELECTRICAL

Perform electrical work in accordance with EM 385-1-1, Appendix A, Sections 11 and 12.

3.5.1 Conduct of Electrical Work

As delineated in EM 385-1-1, electrical work is to be conducted in a de-energized state unless there is no alternative method for accomplishing the work. In those cases obtain an energized work permit from the Contracting Officer. The energized work permit application must be accompanied by the AHA and a summary of why the equipment/circuit needs to be worked energized. Underground electrical spaces must be certified safe for entry before entering to conduct work. Cables that will be cut must be positively identified and de-energized prior to performing each cut. Attach temporary grounds in accordance with ASTM F855 and IEEE 1048. Perform all high voltage cable cutting remotely using hydraulic cutting tool. When racking in or live switching of circuit breakers, no additional person other than the switch operator is allowed in the space during the actual operation. Plan so that work near energized parts is minimized to the fullest extent possible. Use of electrical outages clear of any energized electrical sources is the preferred method.

When working in energized substations, only qualified electrical workers are permitted to enter. When work requires work near energized circuits as defined by NFPA 70, high voltage personnel must use personal protective equipment that includes, as a minimum, electrical hard hat, safety shoes, insulating gloves and electrical arc flash protection for personnel as required by NFPA 70E. Insulating blankets, hearing protection, and switching suits may also be required, depending on the specific job and as delineated in the Contractor's AHA. Ensure that each employee is familiar with and complies with these procedures and 29 CFR 1910.147.

3.5.2 Qualifications

Electrical work must be performed by QP personnel with verifiable credentials who are familiar with applicable code requirements. Verifiable credentials consist of State, National and Local Certifications or Licenses that a Master or Journeyman Electrician may hold, depending on work being performed, and must be identified in the appropriate AHA. Journeyman/Apprentice ratio must be in accordance with State and Local requirements applicable to where work is being performed.

3.5.3 Grounding

Ground electrical circuits, equipment and enclosures in accordance with NFPA 70 and IEEE C2 to provide a permanent, continuous and effective path to ground unless otherwise noted by EM 385-1-1.

Check grounding circuits to ensure that the circuit between the ground and a grounded power conductor has a resistance low enough to permit sufficient current flow to allow the fuse or circuit breaker to interrupt the current.

3.5.4 Testing

Temporary electrical distribution systems and devices must be inspected, tested and found acceptable for Ground-Fault Circuit Interrupter (GFCI) protection, polarity, ground continuity, and ground resistance before initial use, before use after modification and at least monthly. Monthly inspections and tests must be maintained for each temporary electrical distribution system, and signed by the electrical CP or QP.

-- End of Section --

THIS PAGE INTENTIONALLY LEFT BLANK

Print Form Reset Form

CRANE/RIGGING MISHAP INVESTIGATION

1. **Mishap Category:** ☐ Crane ☐ Rigging ☐ Other: (Specify) _____

2. **POC Name:**

3. **Location District/Project:**

To: Hq USACE Safety & Occupational Health
Crane Working Group
441 G Street NW
Washington, DC 20314
Email to: DLL-HQ-CESO-HHWG

4. **Activity:**

5. **Report No.** (CESO):

6. **Crane Serial No:**

7. **Class** (I or II):

8. **Mishap Date:**

9. **Time** (24 hr format):

10. **Category of Service:** ☐ General Duty ☐ Floating Plant

11. **Crane Type:**

12. **Crane Manufacturer:**

13. **Was Crane/Hoist/Rigging used as part of a Critical Lift?** ☐ Yes ☐ No

14. **Was Critical Lift Plan Prepared?** If yes, attach documentation ☐ Yes ☐ No

15. **Location:**

16. **Weather:**

17. **Crane Capacity:**

18. **Hook Capacity:**

19. **Weight of Load on Hook:**

20. **Fatality or Permanent Disability?** ☐ Yes ☐ No

21. **Material/Property Cost Estimate:**

22. **Reported in ENGLink?** ☐ Yes ☐ No

23. **Type:**

☐ Personal Injury, Lost Time ☐ Load Collision ☐ Overload ☐ Damaged Rigging Gear
☐ Personal Injury, Non-Lost Time ☐ Two Blocked ☐ Dropped Load ☐ Damaged Crane
☐ Crane Collision ☐ Damaged Load ☐ Other: (Specify) _____

24. **Direct Cause:**

☐ Improper Operation ☐ Equipment Failure ☐ Inadequate Visibility
☐ Improper Rigging ☐ Switch Alignment ☐ Inadequate Communication
☐ Track Condition ☐ Procedural Failure ☐ Other: (Specify) _____

25. **Chargeable To:**

☐ Signal Person ☐ Rigger ☐ Operator
☐ Maintenance ☐ Management/Supervision ☐ Other: (Specify) _____

26. **Crane Function:**

☐ Travel ☐ Hoist ☐ Rotate ☐ Luffing ☐ Telescoping ☐ N/A ☐ Other: (Specify) _____

27. **Is this a recurring problem/issue?** ☐ Yes ☐ No

If yes, list ENGLink Report No(s). _____

ATTACH COMPLETE AND CONCISE SITUATION DESCRIPTION, CORRECTIVE/PREVENTATIVE ACTIONS TAKEN AND PHOTOS AS ENCLOSURE (1). Include probable cause and contributing factors. Assess damages and define responsibility. For equipment malfunction or failure, include specific description of the component and the resulting effect or problem caused by the malfunction or failure. List immediate and long term corrective/preventative actions to be taken and to whom they were assigned.

28. **Preparer:**	Phone:	E-mail:	Organization:	Date:

29. **Concurrence** (Printed Name and Organization)	Signature	Date:

30. **Certifying Official** (Crane Accident Only)	Signature	Date:

Print Form | Reset Form

31. **Details / Facts:**

Photos/Site Diagram/Sketch	Photos/Site Diagram/Sketch
Click To Insert an Image	Click To Insert an Image
Photos/Site Diagram/Sketch	Photos/Site Diagram/Sketch
Click To Insert an Image	Click To Insert an Image

Print Form Reset Form

CRANE/RIGGING MISHAP INVESTIGATION FORM INSTRUCTIONS

This form is designed to be e-mailed with enclosures and signatures and shall be an official document. Electronic submission will be accepted without signatures but the names of the preparer, concurring personnel, and certifying official (for crane accidents only) must be filled in. E-mail to: DLL-HQ-CESO-HHWG

1. Mishap Category: Indicate crane, rigging gear or other (specify) mishap.
2. POC Name: The Point of Contact that is responsible for reporting the accident.
3. Location District/Project: The district and project where the mishap occurred.
4. Activity: The activity/location where the mishap took place.
5. Report No.: The activity assigned accident number (CESO will assign a tracking number).
6. Crane Serial No.: The serial number(s) of the equipment involved.
7. Class: Identify the class of crane (Class I or II).
8. Mishap Date: The date the mishap occurred.
9. Time: The time (24 hour clock) the mishap occurred (e.g., 0734,1300, 1922, 2359).
10. Category of Service: General site activities or Floating Plant operations
11. Crane Type: The type of crane involved in the mishap (select from this list)
    - TLL - Telescopic Boom Crane (Swing Cab)
    - TSS - Telescopic Boom Crane (Fixed Cab)
    - LB - Lattice Boom Crane
    - TWR - Tower Crane
    - OVR - Overhead Crane
    - ABC - Articulating Boom Crane
    - ABL - Articulating Boom Loader
    - OTHER - Describe
12. Crane Manufacturer: The manufacturer of the crane (e.g., Dravo, Grove, P&H), if applicable.
13. Was the crane or rigging gear being used in a Critical Lift (per 16.H)?
14. Was a Critical Lift Plan prepared? If so, attach this documentation.
15. Location: The detailed location where the mishap took place (e.g., building 213, dry dock 5).
16. Weather: The weather conditions at time of mishap (e.g., wind, rain, cold).
17. Crane Capacity: The certified capacity of the crane (e.g., 120,000 pounds), if applicable.
18. Hook Capacity: The capacity of the hook involved in the mishap at the max radius of the operation, if applicable.
19. Weight of Load on Hook: If applicable, the weight of the load on the hook.
20. Fatality or Permanent Disability?: Check yes or no.
21. Material/Property Cost Estimate: Estimate total cost of damage resulting from the mishap.
22. Reported in ENGLink? Self-explanatory.
23. Type: Check all that apply.
24. Direct Cause: Check all that apply.
25. Chargeable to: Check all that apply.
26. Crane Function: Check all functions in operation at time of mishap. Check N/A if a rigging gear mishap.
27. Is this a recurring problem?: Check yes or no. Identify any other similar mishaps.
28. Preparer: Self-explanatory.
29. Concurrence: Printed Name, Organization, Signature and Date.
30. Certifying Official (Crane Accidents Only): Printed Name, Organization, Signature and Date.
31. Details/Facts: No more than one paragraph summarizing the resultant mishap. Provide the relevant background in a descriptive timeline of preconditions leading up to the event, as well as a detailed description of the event. List all short term and long term corrective actions that are taken to prevent recurrence of the incident. Short Term Corrective Actions are those actions taken that will allow return to work in short time frame. Long Term actions are more `programmatic' in nature and typically include: process revision, changes in training, `mistake proofing', etc.

THIS PAGE INTENTIONALLY LEFT BLANK

Form A-02
U.S. Army Corps of Engineers
Accident Prevention Plan Checklist

Date of Inspection

Location (Plant or Facility)	Contract Number
Contractor Name	Project Name
Inspector Name (Print)	Inspector Signature

This checklist serves as a guide only, it does not replace or eliminate the need to comply with the requirements set forth in Engineering Manual 385-1-1, Safety and Health Requirements Manual, dated 30 Nov 2014. The references included in this checklist correspond to the applicable sections of EM 385-1-1.

Item Description	Yes	No	N/A	Remarks (Any NO or N/A item)
a. Signature sheet				
1. Includes the name, title, signature, telephone number, and qualifications of the Plan Preparer (*Qualified person, i.e. corporate safety staff person, QC*)				
2. Includes the name, title, signature, telephone number, and qualifications of the Plan Approver (*e.g. owner, company president, regional vice president*) (HTRW activities require approval of a Certified Industrial Hygienist, a Certified Safety Professional may approve the plan for operations involving UST removal where contaminants are known to be petroleum, oils, or lubricants).				
3. Includes the name(s), title(s), signature(s), telephone number(s), and qualifications for Plan Concurrence (provide concurrence of other applicable corporate and project personnel (contractor)) (*e.g. Chief of Operations, Corporate Chief of Safety, Corporate Industrial Hygienist, project manager or superintendent, project safety professional, project QC.*)				
b. Background information				
1. Includes the Contractor Name.				
2. Includes the Contract Number.				
3. Includes the Project Name.				
4a. Includes the Brief Project Description.				
4b. Includes a Discription of the Work to be Performed.				
4c. Includes the Location of the Project (map).				
4d. Includes the Equipment to be Used.				
4e. Includes the Anticipated High Risk Activities.				
5. Includes the Major Phases of Work Anticipated. *(Within these major phases of work identified, activities [includes Definable features of Work (DFOWs) and tasks] to be performed that will require an AHA shall be specifically highlighted. This information can then be used by QC, QA and Safety personnel to track AHA submittals. The AHAs for these activities, tasks of DFOWs are NOT submitted at this time (AHAs created/submitted at this time would not be activity-specific as they are intended to be). > See Sections 01.A.14 and 01.A.15.)*				

Form A-02
U.S. Army Corps of Engineers
Accident Prevention Plan Checklist (cont'd)

Date of Inspection

Item Description	Yes	No	N/A	Remarks (Any NO or N/A item)
c. Statement of Safety and Health Policy.				
1. Provide a copy of current corporate/company Safety and Health Policy Statement, detailing commitment to providing a safe and healthful workplace for all employees. (*In addition to the corporate policy statement, a copy of the corporate safety program may provide a portion of the information required by the accident prevention plan*.)				
2. Includes Contractor's written safety program goals.				
3. Includes Contractor's written safety program objectives.				
4. Includes the Contractor Accident Experience (*Copy of OSHA 300 Forms, or equivalent documentation*).				
d. Responsibilities and Lines of Authority.				
1. Includes statement of the employer's ultimate responsibility for the implementation of his SOH program for his own employees, all sub-contractors and all others on the worksite (includes the strict enforcement of the program).				
2. Includes the identification and accountability of personnel responsible for safety and health at both the corporate and project level – including their resumes. Qualifications shall be in accordance with Section 01.A.17. *(Only official OSHA 30-Hour cards will be accepted or, if equivalent training is provided, appropriate instructor qualifications.)*				
3. Includes equivalent training to the OSHA 30-Hour classes is being presented as qualification, the training shall cover, as a minimum, the areas discussed in Appendix A, Section 3.d.3.(a-d).				
4. Includes the names of Competent (CP) and/or Qualified Person(s) (QP) and proof of competency/qualification to meet specific OSHA CP/QP requirements. *(Must include copies of proof of CP/QP).*				
5. Includes requirements and details of the employer's Risk Management Process. *(USACE uses the Activity Hazard Analysis (AHA) as part of a total risk management process. Contractors and other individual employer's may use the AHAs or their own version [Job Safety Analyses (JSAs), Job Hazard Analyses (JHAs), or similar Risk Management assessment tools]. These documents are considered equivalent to, and acceptable substitutes for, the USACE's AHA provided the data collected is the same as that required by the AHA.)*				
6. Includes requirements for initial activity-specific AHAs to be submitted and accepted at preparatory meetings, prior to work being performed;				
7. Includes requirements that no work by the Contractor shall be performed unless a designated Competent Person/SSHO is present on the job site.				
8. Includes policies and procedures regarding non-compliance with safety requirements (to include disciplinary actions for violation of safety requirements).				
9. Lines of authority.				
10. Includes written company procedures for holding managers and supervisors accountable for safety.				

Form A-02
U.S. Army Corps of Engineers
Accident Prevention Plan Checklist (cont'd)

Date of Inspection

Item Description	Yes	No	N/A	Remarks (Any NO or N/A item)
e. Subcontractors and Suppliers.				
1. Includes the list of subcontractors and suppliers. *(If not known at the time of initial APP submittal, the contractor shall include the following statement in their initial APP: "The subcontractors for the following DFOWs/activities are not known at this time, but additional information will be submitted to the APP for acceptance prior to the start of any activities listed")*				
2. Includes safety responsibilities of subcontractors and suppliers.				
f. Training				
1. Includes requirements for new hire SOH orientation training at the time of initial hire of each new employee.				
2. Includes requirements for mandatory training and certifications that are applicable to this project (*e.g., explosive actuated tools, confined space entry, crane operator, diver, vehicle operator, HAZWOPER training and certification, PPE*) and any requirements for periodic retraining / recertification.				
3. Includes procedures for periodic safety and health training for supervisors and employees.				
4. Includes the requirements for emergency response training.				
g. Safety and Health Inspections				
1. Includes specific assignment of responsibilities for a minimum daily jobsite SOH inspection during periods of work activity.				
1a. Includes the name(s) of individual(s) responsible for conducting safety inspections. (*e.g., PM, safety professional, QC, supervisors, employees*)				
1b. Includes proof of inspector's training / qualifications.				
1c. Indicates when inspections will be conducted.				
1d. Indicates procedures for documentation. *(Furnished sample forms upon which inspections will be recorded.)*				
1e. Indicates deficiency tracking system and follow-up procedures.				
2. Includes any external inspections / certifications which may be required. (*e.g., US Coast Guard*)				
h. Mishap Reporting and Investigation				
1. The plan identifies how, when, and who shall complete the Exposure data (man-hours worked).				
2a. The plan identifies how, when, and who shall complete mishap investigations, reports, and logs. *(The contractor shall report, thoroughly investigate, and analyze all mishaps occurring incidentally to an operation, project or facility for which this manual is applicable.)*				
2b. The plan identifies how, when, and who shall make immediate notification of major mishaps. *(Mishaps shall be reported as soon as possible but not more than 24 hours afterwards to the KO/COR.)*				
2c. Includes how, when, and who will provide notice to the KO/COR when corrective actions are completed. *(Implement corrective actions as soon as reasonably possible.)*				

Form A-02
U.S. Army Corps of Engineers
Accident Prevention Plan Checklist (cont'd)

Date of Inspection

Based on a risk assessment of contracted activities and on mandatory OSHA compliance programs, the Contractor shall address all applicable safety and occupational health risks and associated compliance plans. *Using the EM 385-1-1 as a guide, plans, programs, procedures (assessments and evaluations), may include but not be limited to:*

(1)Include a project-specific compliance plan, as applicable to the work being performed, and as identified below. The plans shall incorporate project-wide procedures to control hazards to which the employees of all project employers may be exposed.

(2) These procedures shall be coordinated with all project employers and shall include project-specific, project-wide emergency response and evacuation procedures, PPE requirements, recordkeeping and reporting requirements, and training requirements.

(3) The plans shall be prepared prior to the start of any work activities on the job site (as much as the information can be known at that point in time). The plans shall be updated throughout the life of the project to include changes in personnel, equipment, conditions, etc. Additional revisions shall be incorporated as necessary to reflect changing site conditions, construction methods, personnel roles and responsibilities and construction schedules.

(4) No activity (DFOW) shall be started on site until the APP is revised and submitted to the GDA for acceptance, with the site-specific plans, programs and procedures required to complete the project.

Item Description	Yes	No	N/A	Remarks (Any NO or N/A item)
i. Plans (Programs, Procedures, Assessments, and Evaluations) required by the Safety Manual				
1. Fatigue Management Plan (01.A.20)				
2. Emergency Plans (01.E):				
(a) Procedures & Test (01.E.01)				
(b) Spill Plans (01.E.01, 06.A.02)				
(c) Fire Fighting Plan (01.E.01; 19.A)				
(d) Posting of Emergency Telephone Numbers (01.E.05)				
(e) Man overboard/abandon ship (19.A.04)				
(f) Plan for prevention of alcohol and drug abuse (01.C.02 & Specs)				
3. Site Sanitation/Housekeeping Plan (02.B)				
4. Medical Support Agreement. Outline on-site medical support and off-site medical arrangements including rescue and medical duties for those employees who are to perform them, and the name(s) of on-site Contractor personnel trained in first aid and CPR. A minimum of two employees shall be certified in CPR and first-aid per shift/site (03.A.01, 03.A.03)				
5. Blood-borne Pathogen Program (03.A.05)				
6. Exposure Control Plan (03.A.05)				
7. Automatic External Defibrillator (AED) Program (03.B.04)				
8. Site Layout Plan (04.A)				
9. Access/Haul Road Plan (04.B)				
10. Hearing Conservation Program (05.C)				
11. Respiratory Protection Plan (05.G)				
12. Health Hazard Control Program (06.A)				
13. Hazard Communication Program (06.B.01)				
14. Process Safety Management Plan (06.B.04)				
15. Lead Compliance Plan (06.C.02 & Specifications)				
16. Asbestos Abatement Plan (06.C.03 & Specifications)				

Form A-02
U.S. Army Corps of Engineers
Accident Prevention Plan Checklist (cont'd)

Date of Inspection

Based on a risk assessment of contracted activities and on mandatory OSHA compliance programs, the Contractor shall address all applicable occupational risks and compliance plans. *Using the EM 385-1-1 as a guide, plans, programs, procedures (assessments and evaluations), may include but not be limited to:*

Item Description	Yes	No	N/A	Remarks (Any NO or N/A item)
i. Plans (Programs, Procedures) continued.				
17. Radiation Safety Program (06.F)				
18. Abrasive Blasting Plan (06.I)				
19. Heat Stress Monitoring Plan (HSMP) (06.J.02)				
20. Cold Stress Monitoring Plan (CSMP) (06.J.04)				
21. Indoor Air Quality Management Plan (06.L)				
22. Mold Remediation Plan (06.L.04)				
23. Chromium (VI) Exposure Evaluation (06.M)				
24. Crystalline Silica Assessment (06.N.02)				
25. Lighting Plan for Night Operations (07.A.06)				
26. Traffic Control Plan (08.C.05)				
27. Fire Prevention Plan (09.A.01)				
28. Wild Land Fire Management Plan (09.L)				
29. Arc Flash Hazard Analysis (11.B)				
30. Assured Equipment Grounding Control Program (AEGCP), (11.D.05, Appendix E)				
31. Hazardous Energy Control Program and Procedures (12.A.01)				
32. Standard Pre-Lift Plan – LHE (16.A.03)				
33. Critical Lift Plan – LHE (16.H)				
34. Naval Architectural Analysis – LHE (Floating) (16.L)				
35. Floating Plant Inspection and Certification (19.A.01)				
36. Severe Weather Plan for Marine Activities (19.A.03)				
37. Emergency Plan for Marine Activities (19.A.04)				
38. Man Overboard/Abandon Ship Procedures (19.A.04)				
39. Float Plan for Launches, Motorboats, Skiffs (19.F.04)				
40. Fall Protection and Prevention Plan (21.D)				
41. Demolition/Renovation Plan (to include engineering survey) (23.A)				
42. Rope Access Work Plan (24.H)				
43. Excavation/Trenching Plan (25.A.01)				
44. Fire Prevention and Protection Plan for Underground Construction (26.D.01)				
45. Compressed Air Work Plan for Underground Construction (26.I.01)				
46. Erection and Removal Plan for Formwork and Shoring (27.C)				
47. Precast Concrete Plan (27.D)				

Form A-02
U.S. Army Corps of Engineers
Accident Prevention Plan Checklist (cont'd)

Date of Inspection

Based on a risk assessment of contracted activities and on mandatory OSHA compliance programs, the Contractor shall address all applicable occupational risks and compliance plans. *Using the EM 385-1-1 as a guide, plans, programs, procedures (assessments and evaluations), may include but not be limited to:*

Item Description	Yes	No	N/A	Remarks (Any NO or N/A item)
i. Plans (Programs, Procedures) continued.				
48. Lift-slab Plans (27.E)				
49. Masonry Bracing Plan (27.F.01)				
50. Steel Erection Plan (28.B)				
51. Explosives Safety Site Plan (ESSP) (29.A)				
52. Blasting Plan (29.A; 26.J)				
53. Dive Operations Plan (30.A.14, 30.A.16)				
54. Safe Practices Manual for Diving Activities (30.A.15)				
55. Emergency Management Plan for Diving (30.A.18)				
56. Tree Felling/Maintenance Program (31.A.01)				
57. Aircraft/Airfield Construction Safety & Phasing Plan (CSPP) (32.A.02)				
58. Aircraft/Airfield Safety Plan Compliance Document (SPCD) (32.A.02)				
59. Site Safety and Health Plan (HTRW) (33.B)				
60. Confined Space Entry Procedures (34.A.05)				
61. Confined Space Program (34.A.06)				
j. Risk Management Processes (AHAs). Detailed project-specific hazards and controls shall be provided by Activity Hazard Analysis for each activity (DFOW). No work will begin on an activity (DFOW) until the initial AHA has been accepted by the GDA addressing the project-specific hazards. (01.A.14 & 01.A.15) *Note: USACE uses the Activity Hazard Analysis (AHA) as part of a total risk management process. Contractors and other individual employer's may use the AHAs or their own version [Job Safety Analyses (JSAs), Job Hazard Analyses (JHAs), or similar Risk Management assessment tools]. These documents are considered equivalent to, and acceptable substitutes for, the USACE's AHA provided the data collected is the same as that required by the AHA.*				

Remarks:

Form A-02 U.S. Army Corps of Engineers Accident Prevention Plan Checklist (cont'd)	Date of Inspection

Other Remarks:

THIS PAGE INTENTIONALLY LEFT BLANK

ACTIVITY HAZARDS ANALYSIS

Overall Risk Assessment Code (RAC)
(Use highest code)

Date: _____ Project: _____

Activity: _____

Activity Location: _____

Prepared By: _____

Risk Assessment Code Matrix

E = Extremely High Risk
H = High Risk
M = Moderate Risk
L = Low Risk

Severity	Probability				
	Frequent	Likely	Occasional	Seldom	Unlikely
Catastrophic	E	E	H	H	M
Critical	E	H	H	M	L
Marginal	H	M	M	L	L
Negligible	M	L	L	L	L

Add Identified Hazards

	JOB STEPS	HAZARDS	ACTIONS TO ELIMINATE OR MINIMIZE HAZARDS	RAC
X				
X				
X				

Add Items

	EQUIPMENT	TRAINING	INSPECTION
X			
X			
X			

Involved Personnel:

Acceptance Authority (digital signature): _____

THIS PAGE INTENTIONALLY LEFT BLANK

SECTION TABLE OF CONTENTS

DIVISION 01 - GENERAL REQUIREMENTS

SECTION 01 42 00

SOURCES FOR REFERENCE PUBLICATIONS

PART 1 GENERAL

1.1 REFERENCES
1.2 ORDERING INFORMATION

PART 2 PRODUCTS

PART 3 EXECUTION

-- End of Section Table of Contents --

THIS PAGE INTENTIONALLY LEFT BLANK

SECTION 01 42 00

SOURCES FOR REFERENCE PUBLICATIONS

PART 1 GENERAL

1.1 REFERENCES

Various publications are referenced in other sections of the specifications to establish requirements for the work. These references are identified in each section by document number, date and title. The document number used in the citation is the number assigned by the standards producing organization (e.g. ASTM B564 Standard Specification for Nickel Alloy Forgings). However, when the standards producing organization has not assigned a number to a document, an identifying number has been assigned for reference purposes.

1.2 ORDERING INFORMATION

The addresses of the standards publishing organizations whose documents are referenced in other sections of these specifications are listed below, and if the source of the publications is different from the address of the sponsoring organization, that information is also provided.

AACE INTERNATIONAL (AACE)
1265 Suncrest Towne Centre Drive
Morgantown, WV 26505-1876 USA
Ph: 304-296-8444
Fax: 304-291-5728
E-mail: info@aacei.org
Internet: http://www.aacei.org

AMERICAN ASSOCIATION OF STATE HIGHWAY AND TRANSPORTATION OFFICIALS (AASHTO)
444 North Capital Street, NW, Suite 249
Washington, DC 20001
Ph: 202-624-5800
Fax: 202-624-5806
E-Mail: info@aashto.org
Internet: http://www.aashto.org

AMERICAN CONCRETE INSTITUTE (ACI)
38800 Country Club Drive
Farmington Hills, MI 48331-3439
Ph: 248-848-3700
Fax: 248-848-3701
E-mail: bkstore@concrete.org
Internet: http://www.concrete.org

AMERICAN SOCIETY OF SAFETY ENGINEERS (ASSE/SAFE)
1800 East Oakton Street
Des Plaines, IL 60018
Ph: 847-699-2929
Internet: http://www.asse.org

APA - THE ENGINEERED WOOD ASSOCIATION (APA)
7011 South 19th St.
Tacoma, WA 98466-5333
Ph: 253-565-6600
Fax: 253-565-7265
Internet: http://www.apawood.org

ASME INTERNATIONAL (ASME)
Two Park Avenue, M/S 10E
New York, NY 10016-5990
Ph: 800-843-2763
Fax: 973-882-1717
E-mail: customercare@asme.org
Internet: http://www.asme.org

ASTM INTERNATIONAL (ASTM)
100 Barr Harbor Drive, P.O. Box C700
West Conshohocken, PA 19428-2959
Ph: 877-909-2786
Internet: http://www.astm.org

CONCRETE REINFORCING STEEL INSTITUTE (CRSI)
933 North Plum Grove Road
Schaumburg, IL 60173-4758
Ph: 847-517-1200
Fax: 847-517-1206
Internet: http://www.crsi.org/

FEDERAL ACQUISITION REGULATIONS (FAR)
Ph: 800-488-3111
E-mail: mashelpdesk@gsa.gov
Internet: http://farsite.hill.af.mil

IDAHO ADMINISTRATIVE PROCEDURES ACT (IDAPA)
P.O. Box 83720
Boise, ID 83720
Ph: (208)332-1000
E-mail: adminrules@dfm.idaho.gov
Internet: https://adminrules.idaho.gov

INSTITUTE OF ELECTRICAL AND ELECTRONICS ENGINEERS (IEEE)
445 and 501 Hoes Lane
Piscataway, NJ 08854-4141
Ph: 732-981-0060 or 800-701-4333
Fax: 732-562-9667
E-mail: onlinesupport@ieee.org
Internet: http://www.ieee.org

INTERNATIONAL CONCRETE REPAIR INSTITUTE (ICRI)
10600 West Higgins Road, Suite 607
Rosemont, IL 60018
Ph: 847-827-0830
Fax: 847-827-0832
Internet: http://www.icri.org

NATIONAL FIRE PROTECTION ASSOCIATION (NFPA)
1 Batterymarch Park
Quincy, MA 02169-7471
Ph: 617-770-3000
Fax: 617-770-0700
Internet: http://www.nfpa.org

Oregon Administrative Rules (OAR)
800 Summer St. NE
Salem OR 97310
Ph: 503-373-0701
Fax: 503-378-4118
Internet:
https://sos.oregon.gov/archives/Pages/oregon_administrative_rules.aspx

U.S. ARMY (DA)
U.S. Army Publishing Directorate
Ph: 703-614-3634
Internet: http://www.apd.army.mil

U.S. ARMY CORPS OF ENGINEERS (USACE)
CRD-C DOCUMENTS available on Internet:
http://www.wbdg.org/ccb/browse_cat.php?c=68
Order Other Documents from:
USACE Publications Depot
Attn: CEHEC-IM-PD
2803 52nd Avenue
Hyattsville, MD 20781-1102
Ph: 301-394-0081
Fax: 301-394-0084
E-mail: pubs-army@usace.army.mil
Internet: http://www.publications.usace.army.mil/
or
http://www.hnc.usace.army.mil/Missions/Engineering/TECHINFO.aspx

U.S. NATIONAL ARCHIVES AND RECORDS ADMINISTRATION (NARA)
8601 Adelphi Road
College Park, MD 20740-6001
Ph: 866-272-6272
Fax: 301-837-0483
Internet: http://www.archives.gov
Order documents from:
Superintendent of Documents
U.S.Government Printing Office (GPO)
710 North Capitol Street, NW
Washington, DC 20401
Ph: 202-512-1800
Fax: 202-512-2104
E-mail: contactcenter@gpo.gov
Internet: http://www.gpoaccess.gov

WYOMING STATUTES (W.S.)
200 West 24th Street
Cheyenne, WY 82002
Ph: 307-777-7881
Internet: https://www.wyoleg.gov/StateStatutes/StatutesConstitution

PART 2 PRODUCTS

Not used

PART 3 EXECUTION

Not used

-- End of Section --

SECTION TABLE OF CONTENTS

DIVISION 01 - GENERAL REQUIREMENTS

SECTION 01 45 01.00 28

RESIDENT MANAGEMENT SYSTEM CONTRACTOR MODE (RMS CM)

PART 1 GENERAL

1.1 REFERENCES
1.2 CONTRACT ADMINISTRATION
1.2.1 Correspondence and Electronic Communications
1.2.2 Other Factors
1.3 RMS SOFTWARE
1.4 SYSTEM REQUIREMENTS
1.5 RELATED INFORMATION
1.5.1 RMS User Guide
1.6 CONTRACT DATABASE - GOVERNMENT
1.7 CONTRACT DATABASE - CONTRACTOR
1.7.1 Administration
1.7.1.1 Contractor Information
1.7.1.1.1 New Contractors to RMS-CM
1.7.1.2 Subcontractor Information
1.7.1.3 Correspondence
1.7.1.4 Equipment
1.7.1.5 Management Reporting
1.7.1.6 Request For Information (RFI)
1.7.2 Finances
1.7.2.1 Pay Activity Data
1.7.2.2 Payment Requests
1.7.3 Quality Control (QC)
1.7.3.1 Daily Contractor Quality Control (CQC) Reports.
1.7.3.2 Deficiency Tracking.
1.7.3.3 QC Requirements
1.7.3.4 Three-Phase Control Meetings
1.7.3.5 Labor and Equipment Hours
1.7.3.6 Accident/Safety Reporting
1.7.3.7 Features of Work
1.7.3.8 Hazard Analysis
1.7.4 Submittal Management
1.7.5 Schedule
1.7.6 Import/Export of Data
1.8 IMPLEMENTATION
1.9 MONTHLY COORDINATION MEETING
1.10 NOTIFICATION OF NONCOMPLIANCE

PART 2 PRODUCTS

PART 3 EXECUTION

-- End of Section Table of Contents --

SECTION 01 45 01.00 28

RESIDENT MANAGEMENT SYSTEM CONTRACTOR MODE (RMS CM)

PART 1 GENERAL

1.1 REFERENCES

The publications listed below form a part of this section to the extent referenced. The publications are referred to within the text by the basic designation only.

U.S. ARMY CORPS OF ENGINEERS (USACE)

EM 385-1-1 Safety and Health Requirements Manual

Comply with the current edition and all changes posted on the web as of the effective date of this solicitation.

1.2 CONTRACT ADMINISTRATION

The Government will use the Resident Management System (RMS) to assist in its monitoring and administration of this contract. The Government accesses the system using the Government Mode of RMS (RMS GM) and the Contractor accesses the system using the Contractor Mode (RMS CM). The term RMS will be used in the remainder of this section for both RMS GM and RMS CM. The joint Government-Contractor use of RMS facilitates electronic exchange of information and overall management of the contract. The Contractor accesses RMS to record, maintain, input, track, and electronically share information with the Government throughout the contract period in the following areas:

Administration
Finances
Quality Control
Submittal Monitoring
Scheduling
Closeout
Import/Export of Data

1.2.1 Correspondence and Electronic Communications

For ease and speed of communications, exchange correspondence and other documents in electronic format to the maximum extent feasible between the Government and Contractor.

1.2.2 Other Factors

Particular attention is directed to Contract Clause, "Schedules for Construction Contracts", Contract Clause, "Payments", 01 33 00 SUBMITTAL PROCEDURES, and SECTION 01 45 04.00 28 CONTRACTOR QUALITY CONTROL, which have a direct relationship to the reporting to be accomplished through RMS. Also, there is no separate payment for establishing and maintaining the RMS database; costs associated will be included in the contract pricing for the work.

1.3 RMS SOFTWARE

RMS is a Windows-based program that can be run on a Windows-based PC meeting the requirements as specified in Paragraph: SYSTEM REQUIREMENTS. Download, install and be able to utilize the latest version of the RMS software within 7 calendar days of receipt of the Notice to Proceed. RMS software, user manuals, access and installation instructions, program updates and training information are available from the RMS website (http://rmsdocumentation.com). The Government and the Contractor will have different access authorities to the same contract database through RMS. The common database will be updated automatically each time a user finalizes an entry or change.

1.4 SYSTEM REQUIREMENTS

The following is the recommended system configuration to run the Contractor Mode RMS for full utilization of all features for all types and sizes of contracts. Smaller, less complicated, projects may not require the configuration levels described below. Required configuration also noted below.

Recommended RMS System Requirements	
Hardware	
Windows-based PC	1.7 GHz i3; AMD A6 3650 GHz or higher processor (REQUIRED)
RAM	8 GB
Hard drive disk	100 GB space for sole use by RMS system
Monitor	Screen resolution 1366 x 768
Mouse or other pointing device	
Windows compatible printer	Laser printer must have 4 MB+ of RAM
Connection to the Internet	minimum 4 Mbs per user
Software	
MS Windows	Windows 7 x 64 bit (RMS requires 64 bit O/S) or newer (REQUIRED)
Word Processing software	Viewer for MS Word 2013, MS Excel 2013 or newer (REQUIRED)
E-mail	MAPI compatible (REQUIRED)

Recommended RMS System Requirements	
Virus protection software	Regularly upgraded with all issued Manufacturer's updates and is able to detect most zero day viruses (REQUIRED)

1.5 RELATED INFORMATION

1.5.1 RMS User Guide

After contract award, download instructions for the installation and use of RMS from the Government RMS Internet Website.

1.6 CONTRACT DATABASE - GOVERNMENT

The Government will enter the basic contract award data in RMS prior to granting the Contractor access. The Government entries into RMS will generally be related to submittal reviews, correspondence status, and Quality Assurance(QA)comments, as well as other miscellaneous administrative information.

1.7 CONTRACT DATABASE - CONTRACTOR

Contractor entries into RMS establish, maintain, and update data throughout the duration of the contract. Contractor entries generally include prime and subcontractor information, daily reports, submittals, RFI's, schedule updates and payment requests. RMS includes the ability to import attachments and export reports in many of the modules, including submittals. The contractor responsibilities for entries in RMS typically include the following items:

1.7.1 Administration

1.7.1.1 Contractor Information

Contain within the database the Contractor's name, address, telephone numbers, management staff, and other required items. Within 7 calendar days of receipt of RMS software from the Government, deliver Contractor administrative data in electronic format in RMS.

1.7.1.1.1 New Contractors to RMS-CM

Appoint a RMS-CM administrator. This administrator will be given appropriate administrative rights required to enter data by the Government.

1.7.1.2 Subcontractor Information

Contain within the database the name, trade, address, phone numbers, and other required information for all subcontractors. A subcontractor is listed separately for each trade to be performed. Assign each subcontractor/trade a unique Responsibility Code, provided in RMS. Within 7 calendar days of receipt of RMS software from the Government, deliver subcontractor administrative data in electronic format.

1.7.1.3 Correspondence

Identify all Contractor correspondence to the Government with a serial number. Prefix correspondence initiated by the Contractor's site office with "S". Prefix letters initiated by the Contractor's home (main) office with "H". Letters are numbered starting from 0001. (e.g., H-0001 or S-0001). The Government's letters to the Contractor will be prefixed with "C".

1.7.1.4 Equipment

Contain within the Contractor's RMS database a current list of equipment planned for use or being used on the jobsite, including the most recent and planned equipment inspection dates.

1.7.1.5 Management Reporting

RMS includes a number of reports that Contractor management can use to track the status of the project. The value of these reports is reflective of the quality of the data input, and is maintained in the various sections of RMS. Among these reports are: Progress Payment Request worksheet, Quality Assurance/Quality Control (QA/QC) comments, Submittal Register Status, Three-Phase Control checklists.

1.7.1.6 Request For Information (RFI)

Exchange all Requests For Information (RFI) using the Built-in RFI generator and tracker in RMS. Email the RFI to the COR and the submittal transmittal mailbox specified in SECTION 01 33 00 SUBMITTAL PROCEDURES paragraph "Electronic Copies" and in the format specified in paragraph Format For Electronic Submittals.

1.7.2 Finances

1.7.2.1 Pay Activity Data

Include within the RMS database a list of pay activities that the Contractor develops in conjunction with the construction schedule. The sum of pay activities equals the total contract amount, including modifications. Each pay activity must be assigned to a Contract Line Item Number (CLIN). The sum of the activities equals the amount of each CLIN. The sum of all CLINs equals the contract amount.

1.7.2.2 Payment Requests

Prepare all progress payment requests using RMS. Complete the payment request worksheet, prompt payment certification, and payment invoice in RMS. Update the work completed under the contract, measured as percent or as specific quantities, at least monthly. After the update, generate a payment request report using RMS. Submit the payment request, prompt payment certification, and payment invoice with supporting data using RMS CM. Include emailing the notification to PayRequest@usace.army.mil of the payment request submitted in RMS.

1.7.3 Quality Control (QC)

RMS provides a means to track implementation of the 3-phase QC Control System, prepare daily reports, identify and track deficiencies, document progress of work, and support other Contractor QC requirements. Maintain

this data on a daily basis. Entered data will automatically output to the RMS generated daily report. Provide the Government a Contractor Quality Control (CQC) Plan within the time required in SECTION 01 45 04.00 28 CONTRACTOR QUALITY CONTROL. Within seven calendar days of Government acceptance, submit a RMS update reflecting the information contained in the accepted CQC Plan: schedule, pay activities, features of work, submittal register, QC requirements, and equipment list.

1.7.3.1 Daily Contractor Quality Control (CQC) Reports.

RMS includes the means to produce the Daily CQC Report. The Contractor can use other formats to record basic Quality Control(QC) data. However, the Daily CQC Report generated by RMS must be the Contractor's official report. Summarize data from any supplemental reports by the Contractor and consolidate onto the RMS-generated Daily CQC Report. Submit daily CQC Reports as required by SECTION 01 45 04.00 28 CONTRACTOR QUALITY CONTROL. Electronically submit reports to the Government within 24 hours after the date covered by the report. Provide the Government a printed signed copy of the QC Daily Report.

1.7.3.2 Deficiency Tracking.

Use RMS to track deficiencies. Deficiencies identified by the Contractor will be numerically tracked using its Quality Control (QC) punch list items. Maintain a current log of its QC punch list items in the RMS database. The Government will log the deficiencies it has identified using its Quality Assurance (QA) punch list items. The Government's QA punch list items will be included in its export file to the Contractor. Regularly update the correction status of both QC and QA punch list items.

1.7.3.3 QC Requirements

Develop and maintain a complete list of QC testing and required structural and life safety special inspections required by the International Code Council (ICC), transferred and installed property, and user training requirements in RMS. Update data on these QC requirements as work progresses, and promptly provide the information to the Government via RMS.

1.7.3.4 Three-Phase Control Meetings

Maintain scheduled and actual dates and times of preparatory and initial control meetings in RMS.

1.7.3.5 Labor and Equipment Hours

Log labor and equipment exposure hours on a daily basis. The labor and equipment exposure data will be rolled up into a monthly exposure report.

1.7.3.6 Accident/Safety Reporting

Both the Contractor and the Government enter safety related comments in RMS as a deficiency. Regularly update the correction status of the safety comments. In addition, utilize RMS to advise the Government of any accidents occurring on the jobsite. A brief supplemental entry of an accident is not to be considered as a substitute for completion of mandatory reports, e.g., ENG Form 3394 and OSHA Form 300.

1.7.3.7 Features of Work

Include a complete list of the features of work in the RMS database. A feature of work is associated with multiple pay activities. However, each pay activity (see subparagraph "Pay Activity Data" of paragraph "Finances") will only be linked to a single feature of work.

1.7.3.8 Hazard Analysis

Use RMS CM to develop a hazard analysis for each feature of work included in the CQC Plan. The Activity Hazard Analysis will include information required by EM 385-1-1, paragraph 01.A.13.

1.7.4 Submittal Management

The Government will provide the initial submittal register in electronic format. Thereafter, maintain a complete list of submittals, including completion of data columns. Dates when submittals are received and returned by the Government will be included. Use RMS CM to track and transmit submittals. ENG Form 4025, submittal transmittal form, and the submittal register update is produced using RMS. RMS will be used to update, store and exchange submittal registers and transmittals. In addition to requirements stated in specification SECTION 01 33 00, actual submittals are to be stored in RMS CM, with hard copies also provided. Exception will be where the Contracting Officer specifies only hard copies required, and where samples, spare parts, color boards, and full size drawings are to be provided.

1.7.5 Schedule

Develop a construction schedule consisting of pay activities, in accordance with SECTION 01 11 01.00 28 SUPPLEMENTARY REQUIREMENTS paragraph PROJECT SCHEDULE, SECTION 01 32 01.00 28 PROJECT SCHEDULE. Input and maintain in the RMS database the schedule either manually or by using the Standard Data Exchange Format (SDEF). Include with each pay request the updated schedule. Provide electronic copies of transmittals.

1.7.6 Import/Export of Data

RMS includes the ability to import schedule data using SDEF.

1.8 IMPLEMENTATION

Use of RMS CM as described in the preceding paragraphs is mandatory. Ensure that sufficient resources are available to maintain contract data within the RMS CM system. RMS CM is an integral part of the Contractor's management of quality control.

1.9 MONTHLY COORDINATION MEETING

Update the RMS CM database each workday. At least monthly, generate and submit a schedule update. At least one week prior to submittal, meet with the Government representative to review the planned progress payment data submission for errors and omissions.

Make required corrections prior to Government acceptance of the export file and progress payment request. Payment requests accompanied by incomplete or incorrect data submittals will not be accepted. The Government will not process progress payments until all required

corrections are processed.

1.10 NOTIFICATION OF NONCOMPLIANCE

The Contracting Officer will notify the Contractor of any detected noncompliance with the requirements of this specification. Take immediate corrective action after receipt of such notice. Such notice, when delivered to the Contractor at the work site, will be deemed sufficient for the purpose of notification.

PART 2 PRODUCTS

Not Used

PART 3 EXECUTION

Not Used

-- End of Section --

THIS PAGE INTENTIONALLY LEFT BLANK

SECTION TABLE OF CONTENTS

DIVISION 01 - GENERAL REQUIREMENTS

SECTION 01 45 04.00 28

CONTRACTOR QUALITY CONTROL

PART 1 GENERAL

1.1 REFERENCES
1.2 PAYMENT
1.3 SUBMITTALS

PART 2 PRODUCTS (Not Used)

PART 3 EXECUTION

3.1 GENERAL
3.2 CONTRACTOR QUALITY CONTROL (CQC) PLAN
3.2.1 General
3.2.2 Content of the CQC Plan
3.2.3 Acceptance of Plan
3.2.4 Notification of Changes
3.3 COORDINATION MEETING
3.4 QUALITY CONTROL ORGANIZATION
3.4.1 Personnel Requirements
3.4.2 CQC System Manager
3.4.3 CQC Personnel
3.4.4 Additional Requirement
3.5 SUBMITTALS
3.6 CONTROL
3.6.1 Preparatory Phase
3.6.2 Initial Phase
3.6.3 Follow-up Phase
3.6.4 Additional Preparatory and Initial Phases
3.7 TESTS
3.7.1 Testing Procedure
3.7.2 Testing Laboratories
3.7.2.1 Capability Check
3.7.3 Onsite Laboratory
3.7.4 Furnishing or Transportation of Samples for Testing
3.8 COMPLETION INSPECTION
3.8.1 Punch-Out Inspection
3.8.2 Pre-Final Inspection
3.8.3 Final Acceptance Inspection
3.9 DOCUMENTATION
3.10 NOTIFICATION OF NONCOMPLIANCE
3.11 PROJECT CLOSE OUT

ATTACHMENTS:

Sample of Quality Control Report, WWD-QCR (Rev Sep 85)

-- End of Section Table of Contents --

SECTION 01 45 04.00 28

CONTRACTOR QUALITY CONTROL

PART 1 GENERAL

1.1 REFERENCES

The publications listed below form a part of this specification to the extent referenced. The publications are referred to within the text by the basic designation only.

ASTM INTERNATIONAL (ASTM)

ASTM D 3740	(2004a) Minimum Requirements for Agencies Engaged in the Testing and/or Inspection of Soil and Rock as Used in Engineering Design and Construction
ASTM E329	(2020) Standard Specification for Agencies Engaged in Construction Inspection, Testing, or Special Inspection

1.2 PAYMENT

Separate payment will not be made for providing and maintaining an effective Quality Control program, and all costs associated therewith shall be included in the applicable prices contained in The Schedule.

1.3 SUBMITTALS

Government approval is required for submittals with a "G" designation; submittals having an "I" designation are for information only. A designation following the "G" or "I" designation identifies the office that will review the submittal for the Government. Submit the following in accordance with SECTION 01 33 00 SUBMITTAL PROCEDURES:

SD-01 Preconstruction Submittals

Contractor Quality Control (CQC) Plan; G C

PART 2 PRODUCTS (Not Used)

PART 3 EXECUTION

3.1 GENERAL

Provide quality control and establish and maintain an effective quality control system in compliance with the clause entitled INSPECTION OF CONSTRUCTION of the CONTRACT CLAUSES. The quality control system shall consist of plans, procedures, and organization necessary to produce an end product that complies with the contract requirements. The system shall cover all on-site construction operations and shall be keyed to the proposed construction sequence. Utilize established in-house quality control procedures to assure full compliance with all off-site work. Submit daily reports in compliance with paragraph DOCUMENTATION for all

on-site work and for all off-site work.

3.2 CONTRACTOR QUALITY CONTROL (CQC) PLAN

3.2.1 General

Submit for review by the Government, not later than 15 calendar days after receipt of Notice to Proceed, the Contractor Quality Control Plan proposed to implement the requirements of the clause entitled INSPECTION OF CONSTRUCTION of the CONTRACT CLAUSES. The plan shall identify personnel, procedures, control, instructions, tests, records, and forms to be used. Construction will be permitted to begin only after acceptance of the CQC Plan.

3.2.2 Content of the CQC Plan

The CQC Plan shall include, as a minimum, the following to cover all construction operations, both onsite and offsite, including work by subcontractors, fabricators, suppliers, and purchasing agents:

a. A description of the quality control organization, including a chart showing lines of authority and acknowledgment that the CQC staff shall implement the three phase control system for all aspects of the work specified. The CQC System Manager shall report directly to the owner of the firm or a senior manager not responsible for executing the work. The CQC can not work directly for the Project Manager or manager responsible for the execution of the work.

b. The name, qualifications (in resume format), duties, responsibilities, and authorities of each person assigned a QC function.

c. A copy of the letter to the CQC System Manager signed by the owner of the firm, or an equivalent individual within the company who is not responsible for managing this project, which describes the responsibilities and delegates sufficient authorities to adequately perform the functions of the CQC System Manager, including authority to stop work and rework of any nonconformance work which is not in compliance with the contract. The CQC System Manager shall issue letters of direction to all other various quality control representatives outlining duties, authorities, and responsibilities. Copies of these letters shall also be furnished to the Government.

d. Procedures for scheduling, reviewing, certifying, and managing submittals, including those of subcontractors, offsite fabricators, suppliers, and purchasing agents. These procedures shall be in accordance with SECTION 01 33 00 SUBMITTAL PROCEDURES.

e. Control, verification, and acceptance testing procedures for each specific test to include the test name, specification paragraph requiring test, feature of work to be tested, test frequency, and person responsible for each test. (Laboratory facilities will be subject to approval by the Contracting Officer.)

f. Procedures for tracking preparatory, initial, and follow-up control phases and control, verification, and acceptance tests including documentation.

g. Procedures for tracking construction deficiencies from

identification through acceptable corrective action. These procedures shall establish verification that identified deficiencies have been corrected.

h. Reporting procedures, including proposed reporting formats.

i. A list of the definable features of work. A definable feature of work is a task which is separate and distinct from other tasks and has separate control requirements. It could be identified by different trades or disciplines, or it could be work by the same trade in a different environment. Although each section of the specifications may generally be considered as a definable feature of work, there are frequently more than one definable feature under a particular section. This list will be agreed upon during the Coordination Meeting.

3.2.3 Acceptance of Plan

Acceptance of the Contractor's plan is required prior to the start of construction. Acceptance is conditional and will be predicated on satisfactory performance during the construction. The Government reserves the right to require the Contractor to make changes in the CQC plan and operations including removal of personnel, as necessary, to obtain the quality specified.

3.2.4 Notification of Changes

After acceptance of the CQC plan, notify the Contracting Officer in writing a minimum of seven (7) calendar days prior to any proposed change. Proposed changes are subject to acceptance by the Contracting Officer.

3.3 COORDINATION MEETING

After the Preconstruction Meeting, before start of construction, and prior to acceptance by the Government of the Quality Control Plan, meet with the Contracting Officer and discuss the Contractor's quality control system. During the meeting, a mutual understanding of the system details shall be developed, including the forms for recording the CQC operations, control activities, testing, administration of the system for both on-site and off-site work, and the interrelationship of Contractor's Management and control with the Government's Quality Assurance inspection. There may be occasions when subsequent conferences will be called by either party to reconfirm mutual understandings and/or address deficiencies in the CQC system or procedures which may require corrective action by the Contractor. Contractor is responsible for preparing the meeting minutes. See Section 01 11 01.00 28, paragraph ADDITIONAL MEETINGS.

3.4 QUALITY CONTROL ORGANIZATION

3.4.1 Personnel Requirements

The requirements for the CQC organization are a CQC System Manager and sufficient number of additional qualified personnel to ensure safety and contract compliance. The Site Safety and Health Officer (SSHO) shall serve as a member of the CQC staff. Personnel identified in the technical provisions as requiring specialized skills to assure the required work is being performed properly will also be included as part of the CQC organization. The CQC staff shall maintain a presence at the site at all

times during progress of the work and have complete authority and responsibility to take any action necessary to ensure contract compliance. The CQC staff shall be subject to acceptance by the Contracting Officer. Provide adequate office space, filing systems and other resources as necessary to maintain an effective and fully functional CQC organization. Complete records of all letters, material submittals, shop drawing submittals, schedules and all other project documentation shall be promptly furnished to the CQC organization by the Contractor. The CQC organization shall be responsible to maintain these documents and records at the site at all times, except as otherwise acceptable to the Contracting Officer.

3.4.2 CQC System Manager

Identify as CQC System Manager an individual within the onsite work organization who is responsible for overall management of CQC and have the authority to act in all CQC matters for the Contractor. The CQC System Manager shall be a construction person with a minimum of 5 years in related work. This CQC System Manager shall be on the site at all times during construction and be employed by the prime Contractor. The CQC System Manager shall be assigned no other duties. Identify in the plan an alternate to serve in the event of the CQC System Manager's absence. The requirements for the alternate are the same as the CQC System Manager.

3.4.3 CQC Personnel

In addition to CQC personnel specified elsewhere in the contract, provide as part of the CQC organization specialized personnel to assist the CQC System Manager for the following areas: structural. These individuals shall be directly employed by the prime Contractor and may not be employed by a supplier or subcontractor on this project; be responsible to the CQC System Manager; be physically present at the construction site during work on their areas of responsibility; have the necessary education and/or experience in accordance with the experience matrix listed herein. These individuals may perform other duties but must be allowed sufficient time to perform their assigned quality control duties as described in the Quality Control Plan. A single person may cover more than one area provided that they are qualified to perform QC activities in each designated and that workload allows.

Experience Matrix

	Area	Qualifications
a.	Structural	Graduate Structural Engineer, or Construction Manager with 2 years experience, or person with 5 years related experience

3.4.4 Additional Requirement

In addition to the above experience and/or education requirements, the CQC System Manager and CQC assistant shall have completed the course entitled "Construction Quality Management for Contractors" within the last five (5) years. This course will periodically be offered at various locations throughout the Pacific Northwest. For information concerning this course

call your local Associated General Contractors (AGC) Plan Room.

NOTE: For contractor personnel who otherwise fulfill all requirements for designation as a CQC System Manager but have not had the opportunity to obtain a CQM certificate as a result of pandemic restrictions, the Government will tentatively accept proposed personnel until COVID-19 restrictions are lifted. Once the COVID-19 restrictions are lifted and USACE is able to provide face to face CQM training, the proposed personnel have 120 calendar days to obtain the CQM certificate.

3.5 SUBMITTALS

Submittals shall be as specified in SECTION 01 33 00 SUBMITTAL PROCEDURES. The CQC System Manager shall be responsible for certifying that all submittals are in compliance with the contract requirements.

3.6 CONTROL

Contractor Quality Control is the means by which the Contractor ensures that the construction, to include that of subcontractors and suppliers, complies with the requirements of the contract. The controls shall be adequate to cover all construction operations, including on-site fabrication, and shall be keyed to the proposed construction sequence. The controls shall include at least three (3) phases of control to be conducted by the CQC System Manager for all definable features of work, as follows:

3.6.1 Preparatory Phase

This phase shall be performed prior to beginning work on each definable feature of work and shall include:

a. A review of each paragraph of applicable specifications.

b. A review of the contract plans.

c. A check to assure that all materials and/or equipment have been tested, submitted, and approved.

d. A check to assure that provisions have been made to provide required control inspection and testing.

e. Examination of the work area to assure that all required preliminary work has been completed and is in compliance with the contract.

f. A physical examination of required materials, equipment, and sample work to assure that they are on hand, conform to approved shop drawing or submitted data, and are properly stored.

g. A review of the appropriate Activity Hazard Analysis to assure safety requirements are met.

h. Discussion of procedures for constructing the work including repetitive deficiencies. Document construction tolerances and workmanship standards for that phase of work.

i. A check to ensure that the portion of the plan for the work to be performed has been accepted by the Contracting Officer.

j. The Government shall be notified at least 48 hours in advance of beginning any of the required action of the preparatory phase. This phase shall include a meeting conducted by the CQC system manager and attended by the superintendent, other CQC personnel (as applicable), and the foreman responsible for the definable feature. The results of the preparatory phase actions shall be documented by separate minutes prepared by the CQC System Manager and attached to the daily QC report. Instruct applicable workers as to the acceptable level of workmanship required in order to meet contract specifications.

k. The preparatory meeting will include a review of the submittal register to ensure all the required submittals for this portion of the work have been approved and contractor has approved submittals in hand.

3.6.2 Initial Phase

This phase shall be accomplished at the beginning of a definable feature of work. The following shall be accomplished:

a. A check of preliminary work to ensure that it is in compliance with contract requirements. Review minutes of the preparatory meeting.

b. Verification of full contract compliance. Verify required control inspection and testing.

c. Establish level of workmanship and verify that it meets minimum acceptable workmanship standards. Compare with sample panels as appropriate.

d. Resolve all differences.

e. Check safety to include compliance with and upgrading of the safety plan and activity hazard analysis. Review the activity analysis with each worker.

f. The Government shall be notified at least 24 hours in advance of beginning the initial phase. Separate minutes of this phase shall be prepared by the CQC System Manager and attached to the daily CQC report. Exact location of initial phase shall be indicated for future reference and comparison with follow-up phases.

g. The initial phase shall be repeated for each new crew to work on-site, or any time acceptable specified quality standards are not being met.

3.6.3 Follow-up Phase

Daily inspections shall be performed to assure continuing compliance with contract requirements, including control testing, until completion of the particular feature of work. The inspections shall be made a matter of record in the CQC documentation. Final follow-up inspections shall be conducted and all deficiencies corrected prior to the start of additional features of work which may be affected by the deficient work. Do not build upon or conceal non-conforming work. Maintain working "as-built" contract drawings as required in SECTION 01 78 00.00 28 CLOSEOUT SUBMITTALS.

3.6.4 Additional Preparatory and Initial Phases

Additional preparatory and initial phases shall be conducted on the same definable features of work as determined by the Government if the quality of on-going work is unacceptable; or if there are changes in the applicable QC staff or in the on-site production supervision or work crew; or if work on a definable feature is resumed after a substantial period of inactivity, or if other problems develop.

3.7 TESTS

3.7.1 Testing Procedure

Perform specified or required tests to verify that control measures are adequate to provide a product which conforms to contract requirements. Upon request, furnish to the Government duplicate samples of test specimens for possible testing by the Government. Testing includes operation and/or acceptance tests when specified. Procure the services of a Corps of Engineers approved testing laboratory or establish an approved testing laboratory at the project site. Perform the following activities and record and provide the following data:

a. Verify that testing procedures comply with contract requirements.

b. Verify that facilities and testing equipment are available and comply with testing standards.

c. Check test instrument calibration data against certified standards.

d. Verify that recording forms and test identification control number system, including all of the test documentation requirements, have been prepared.

e. Results of all tests taken, both passing and failing tests, shall be recorded on the CQC report for the date taken. Specification paragraph reference, location where tests were taken, and the sequential control number identifying the test shall be given. If approved by the Contracting Officer, actual test reports may be submitted later with a reference to the test number and date taken. An information copy of tests performed by an offsite or commercial test facility shall be provided directly to the Contracting Officer. Failure to submit timely test reports as stated may result in nonpayment for related work performed and disapproval of the test facility for this contract.

3.7.2 Testing Laboratories

3.7.2.1 Capability Check

The Government reserves the right to check laboratory equipment in the proposed laboratory for compliance with the standards set forth in the contract specifications and to check the laboratory technician's testing procedures and techniques. Laboratories utilized for testing soils, concrete, asphalt, and steel shall meet criteria detailed in ASTM D 3740 and ASTM E329.

3.7.3 Onsite Laboratory

The Government reserves the right to utilize the Contractor's control

testing laboratory and equipment to make assurance tests, and to check the Contractor's testing procedures, techniques, and test results at no additional cost to the Government.

3.7.4 Furnishing or Transportation of Samples for Testing

Costs incidental to the transportation of samples or materials shall be borne by the Contractor. Samples of materials for test verification and acceptance testing by the Government shall be delivered to the Contracting Officer.

3.8 COMPLETION INSPECTION

At the completion of all work or any increment thereof established by a completion time stated in clause: COMMENCEMENT, PROSECUTION, AND COMPLETION OF WORK or stated elsewhere in the specifications, the CQC System Manager shall conduct an inspection of the work and develop a "punch list" of items which do not conform to the approved plans and specifications. Such a list of deficiencies shall be included in the CQC documentation, as required by paragraph DOCUMENTATION below, and shall include the estimated date by which the deficiencies will be corrected. The CQC System Manager or staff shall make a second inspection to ascertain that all deficiencies have been corrected and so notify the Contracting Officer. These inspections and any deficiency corrections required by this paragraph shall be accomplished within the time stated for completion of the entire work or any particular increment thereof if the project is divided into increments by separate completion dates.

3.8.1 Punch-Out Inspection

Near the end of the work, or any increment of the work established by a time stated in the Contract Clauses Section, "Commencement, Prosecution, and Completion of Work," or by the specifications, the CQC Manager shall conduct an inspection of the work. A punch list of items which do not conform to the approved drawings and specifications shall be prepared and included in the CQC documentation, as required by paragraph DOCUMENTATION. The list of deficiencies shall include the estimated date by which the deficiencies will be corrected. The CQC System Manager or staff shall make a second inspection to ascertain that all deficiencies have been corrected. Once this is accomplished, notify the Government that the facility is ready for the Government and provide the list of correct deficiencies to the Government.

3.8.2 Pre-Final Inspection

The Government will perform the Pre-Final Inspection to verify that the construction work is complete and ready for use. A Government Pre-Final Punch List may be developed as a result of this inspection. The Contractor's CQC System Manager shall ensure that all items on this list have been corrected before notifying the Government, so that a Final inspection can be scheduled. Any items noted on the Pre-Final Inspection shall be corrected in a timely manner. These inspections and any deficiency corrections required by this paragraph shall be accomplished within the time slated for completion of the entire work or any particular increment of the work if the project is divided into increments by separate completion dates.

3.8.3 Final Acceptance Inspection

The Contractor's Quality Control Inspection personnel, plus the superintendent or other primary management person, and the Contracting Officer's Representative shall be in attendance at the final acceptance inspection. Additional Government personnel including, but not limited to, those from the District Office, may also be in attendance. The final acceptance inspection will be formally scheduled by the Contracting Officer based upon results of the Pre-Final inspection. Notice shall be given to the Contracting Officer at least 14 days prior to the final acceptance inspection and shall include the Contractor's assurance that all specific items previously identified to the Contractor as being unacceptable, along with all remaining work performed under the contract, will be complete and acceptable by the date scheduled for the final acceptance inspection. Failure of the Contractor to have all contract work acceptably complete for this inspection will be cause for the Contracting Officer to bill the Contractor for the Government's additional inspection cost in accordance with the contract clause titled "Inspection of Construction".

3.9 DOCUMENTATION

Maintain current records of quality control operations, activities, and tests performed, including the work of subcontractors and suppliers. These records shall be on an acceptable form, see attached Sample of Quality Control Report, WWD-QCR (Rev Sep 85), and shall include factual evidence that required quality control activities and/or tests have been performed, including but not limited to the following:

a. Contractor/subcontractor and their area of responsibility.

b. Operating plant/equipment with hours worked, idle, or down for repair.

c. Test and/or control activities performed with results and references to specifications/plan requirements. The control phase should be identified (Preparatory, Initial, Follow-up). List deficiencies noted along with corrective action.

d. Off-site surveillance activities, including actions taken.

e. Job safety evaluations stating what was checked, results, and instructions or corrective actions.

f. List instructions given/received and conflicts in plans and/or specifications.

g. Contractor's verification statement.

h. Work performed today, giving location, description, and by whom. When Network Analysis (NAS) is used, identify each phase of work performed each day by NAS activity number.

i. Material received with statement as to its acceptability and storage.

j. Identify submittals reviewed, with contract reference, by whom, and action taken.

k. These records shall indicate a description of trades working on the project; the number of personnel working; weather conditions encountered; and any delays encountered. These records shall cover both conforming and deficient features and shall include a statement that equipment and materials incorporated in the work and workmanship comply with the contract. The original and one (1) copy of these records in report form shall be furnished to the Government daily within 24 hours after the date(s) covered by the report, except that reports need not be submitted within 24 hours for days on which no work is performed. As a minimum, one report shall be prepared and submitted for every seven (7) calendar days of no work and on the last day of a no work period. All calendar days shall be accounted for throughout the life of the contract. The first report following a day of no work shall be for that day only. Reports shall be signed and dated by the CQC System Manager. The report from the CQC System Manager shall include copies of test reports and copies of reports prepared by all subordinate quality control personnel.

3.10 NOTIFICATION OF NONCOMPLIANCE

The Contracting Officer will notify the Contractor of any detected noncompliance with the foregoing requirements. After receipt of such notice, immediately take corrective action. Such notice, when delivered to the Contractor at the site of the work, shall be deemed sufficient for the purpose of notification. If the Contractor fails or refuses to comply promptly, the Contracting Officer may issue an order suspending or stopping all or part of the work until satisfactory corrective action has been taken.

3.11 PROJECT CLOSE OUT

Within 30 calendar days of construction completion date, the CQC System Manager shall review the Submittal Register and formally notify the Contracting Officer of the schedule in submitting all outstanding submittals. A weekly update shall be provided with an updated schedule until all submittals have been received. Once all the submittals have been approved, the CQC System Manager submits a letter Contracting Officer certifying all submittals have been submitted.

-- End of Section --

CONTRACTOR'S NAME
(Address)

DAILY CONSTRUCTION QUALITY CONTROL REPORT

Contract No.: _____ Date: _____ Report No.: _____

Description and Location of Work: _____

WEATHER: (Clear) (P. Cloudy) (Cloudy) Temperature: _____Min. _____Max.
Rainfall: _____inches

Contractor/Subcontractors and Area of Responsibility with Labor Count for Each:

a._____

b._____

c._____

d._____

Equipment Data: (Indicate items of construction equipment, other than hand tools, at the jobsite, and whether or not used.)

1. Work Performed Today: (Indicate location and description of work performed. Refer to work performed by prime and/or subcontractors by letter in table above.)*

---

2. Results of Surveillance: (Include satisfactory work completed, or deficiencies, with action to be taken.)*

a. Preparatory Inspection:

b. Initial Inspection:

c. Follow-up Inspections:

3. Tests Required by Plans and/or Specifications Performed and Results of Tests:

4. Verbal Instructions Received: (List any instructions given by Government personnel on construction deficiencies, retesting required, etc., with action to be taken.)*

5. Remarks: (Cover any conflicts in plans, specifications, or instructions, or any delay to the job attributable to weather conditions. Include environment protection activities, construction deficiencies and corrective action, etc.)*

6. Results of Safety Inspection: (Include safety violations and corrective actions taken.)*

_____
(Contractor's Inspector)

CONTRACTOR'S VERIFICATION: The above report is complete and correct and all material and equipment used and work performed during this reporting period are in compliance with the contract plans and specifications except as noted above.*

_____
CQC System Manager

*Attach additional sheet as necessary.

SECTION TABLE OF CONTENTS

DIVISION 01 - GENERAL REQUIREMENTS

SECTION 01 51 00.00 28

TEMPORARY UTILITIES

PART 1 GENERAL

1.1 REFERENCES
1.2 TEMPORARY UTILITIES
1.2.1 Sanitation Facilities
1.2.2 Water
1.2.3 Electricity
1.2.4 Compressed Air
1.2.5 Use of Government Provided Utilities
1.2.6 Phone Service

PART 2 PRODUCTS (Not Used)

PART 3 EXECUTION (Not Used)

-- End of Section Table of Contents --

THIS PAGE INTENTIONALLY LEFT BLANK

SECTION 01 51 00.00 28

TEMPORARY UTILITIES

PART 1 GENERAL

1.1 REFERENCES

The publications listed below form a part of this specification to the extent referenced. The publications are referred to within the text by the basic designation only.

U.S. ARMY CORPS OF ENGINEERS (USACE)

EM 385-1-1 Safety and Health Requirements Manual

Comply with the current edition and all changes posted on the web as of the effective date of this solicitation.

1.2 TEMPORARY UTILITIES

1.2.1 Sanitation Facilities

The Government's restrooms on the Project will not be available for use by Contractor personnel. Furnish sanitation facilities in accordance with EM 385-1-1. All facilities shall be located outside the Powerhouse. The location of all facilities will be subject to Contracting Officer approval. Provide wind anchorage to prevent any spillage. In addition, freeze protection shall be provided during the months October through March.

1.2.2 Water

The existing water systems around the Project are available for use by the Contractor for construction and domestic purposes at no cost. Temporary piping, if required, shall be installed by the Contractor, and shall be removed prior to final acceptance of the work. All temporary piping connected to the Government's potable water system shall have a Department Of Health (DOH)-approved reduced-pressure backflow device (RPBD) installed at the point of connection to the system to prevent contamination of the Government's potable water system. All temporary piping and connections will be subject to Contracting Officer's approval.

1.2.3 Electricity

Electric power will be made available to the Contractor from the existing electrical systems around the Project and will be supplied without cost to the Contractor. Power is available from existing 120 volt, 1 phase, 15 ampere receptacles, and 480 volt, 3 phase, 30 ampere receptacles. The Government receptacles are located at various sites around the Project. Temporary wiring may be required to facilitate the work. The location of all temporary power lines and connections will be subject to Contracting Officer approval. All temporary circuits, wire, extension cords, and devices shall comply with EM 385-1-1 and shall be furnished, installed, connected, and maintained by the Contractor in a workmanlike manner. All temporary circuits, wire, extension cords, and devices shall be removed by

the Contractor, in a workmanlike manner, prior to final acceptance by the Government. All temporary electrical lines and appurtenances shall be furnished and installed at no additional cost to the Government. Only Government Operators can reset existing over-current devices.

1.2.4 Compressed Air

Compressed air at 100 psi up to 20 SCFM will be made available for Contractor use from existing outlets at no cost. Government personnel will also use the compressed air at times for routine and emergency maintenance operations. Government personnel will have priority for use of the compressed air.

1.2.5 Use of Government Provided Utilities

Contractor may use Government provided water, electricity, and compressed air as utilities are available, at their own risk. The Government is not responsible for impacts to Contractor operations when utilities are out of service.

1.2.6 Phone Service

No phone service is available for Contractor use through the projects' phone systems. Outside phone lines may be obtained by contacting the telephone companies that service these areas.

PART 2 PRODUCTS (Not Used)

PART 3 EXECUTION (Not Used) -- End of Section --

SECTION TABLE OF CONTENTS

DIVISION 01 - GENERAL REQUIREMENTS

SECTION 01 55 10.00 28

CONTRACTOR WORK, ACCESS AND STORAGE AREAS

PART 1 GENERAL

1.1 REFERENCES
1.2 SUBMITTALS
1.3 CONTRACTOR'S STORAGE AND STAGING AREA
1.4 EXISTING ITEMS TO BE REMOVED AND REINSTALLED
1.5 JUVENILE COLLECTION CHANNEL GRATING
1.6 ACCESS TO WORK AREA
1.6.1 Initial Beam Inspection
1.7 DEBRIS CONTAINMENT SYSTEM
1.7.1 General
1.8 INTERFERENCES ON THE POWERHOUSE INTAKE DECK
1.9 GOVERNMENT ROADWAYS AND DECK ACCESS RESTRICTIONS
1.9.1 Roadway Across Top of Dam
1.9.2 McNary Personnel Traffic Lane Requirements
1.9.3 Coordination with Other Contractors
1.10 TRAFFIC CONTROL AND PUBLIC ACCESS
1.10.1 Public Access Barriers
1.11 PERMITS AND RESPONSIBILITIES
1.12 DUST CONTROL PLAN
1.13 FIRE CONTROL
1.13.1 Contractor Equipment
1.13.2 Fire Hazards
1.13.3 Fire Procedures

PART 2 PRODUCTS (Not Used)

PART 3 EXECUTION (Not Used)

-- End of Section Table of Contents --

THIS PAGE INTENTIONALLY LEFT BLANK

SECTION 01 55 10.00 28

CONTRACTOR WORK, ACCESS AND STORAGE AREAS

PART 1 GENERAL

The work covered by this section of the specifications consists of work common to more than one section of these TECHNICAL SPECIFICATIONS.

1.1 REFERENCES

The publications listed below form a part of this specification to the extent referenced. The publications are referred to within the text by the basic designation only.

AMERICAN ASSOCIATION OF STATE HIGHWAY AND TRANSPORTATION OFFICIALS (AASHTO)

AASHTO LRFD	(8th Edition; 2017) Bridge Design Specifications

1.2 SUBMITTALS

Review notations following the Submittal titles indicate the SUBMITTAL CLASSIFICATION (G, I, D, C, R, A), followed by the REVIEWING AUTHORITY. See SECTION 01 33 00 SUBMITTAL PROCEDURES, paragraphs SUBMITTAL CLASSIFICATION, "Contractor Action Codes", and "Reviewing Authority" for definitions of review notations. Submit in accordance with SECTION 01 33 00 SUBMITTAL PROCEDURES:

SD-01 Preconstruction Submittals

Transport Loading Diagrams; G ST

Dust Control Plan; I C

Debris Containment Plan; G, C

Access Plan; G, ST

Work Plan; G, ST

1.3 CONTRACTOR'S STORAGE AND STAGING AREA

a. Storage and staging areas shall be at locations indicated or as otherwise approved by the Contracting Officer (KO). Storage and staging areas may be used for activities such as setup of an office trailer, parking of private vehicles, storage of materials and equipment, and for work activities. Security at the storage and staging site will be the Contractor's responsibility. Install temporary security fencing in a manner approved by the KO. Security fencing may not be installed in a manner that damages existing facilities, such as punching post holes in existing pavement.

b. Limited Storage and staging areas will be available on the Powerhouse Intake Deck at monolith joint pier noses, as indicated on

Sheets G-102 and G-103. Contractor will be allowed use of the 2 pier nose locations on either side of Main Units with active beam repair. All Contractor items and equipment must fit completely in the pier nose areas, as indicated on the drawings.

c. Additional short term 8 hours or less storage and staging on the intake deck will be as approved by the KO. If additional permanent storage and staging area is required on the Intake Deck, coordinate requirements with the KO. Every effort will be made to find additional storage for approved uses, but the Government does not guarantee the requested area will be available.

d. Other storage and staging will be on the South Shore of the dam at a location approved by the KO. Contractor's office trailer will not be allowed on the Powerhouse Intake Deck.

e. The Contractor must be able to recover any storage and/or staging areas on the Powerhouse Intake Deck to allow required or emergency project work near these areas. Any Contractor Items or Equipment that would impede Government work, or Intake Gantry Crane movement, must be moveable within 2 hours of request by the KO.

1.4 EXISTING ITEMS TO BE REMOVED AND REINSTALLED

a. The following items currently impact the Contractor's ability to access and/or repair the Intake Deck Concrete beam:

1. Juvenile Collection Channel Access Stairways. Three stairways provide access between the Powerhouse intake deck and the Juvenile Collection Channel. Remove, store, and reinstall the stairways, as needed during construction. If stairway removal is required for Contractor access, the following applies:

i. Each stairway, or portion of stairway, shall be removed and reinstalled one time, only.

ii. No more than one stairway shall be out of service at any time.

iii. Stairways must be completely reinstalled and ready for use within seven calendar days of completion of concrete beam repair work adjacent to stairway.

iv. See Resource drawings, and photo sheets in the plan set for additional information.

2. Juvenile Collection Channel Removable Exclusion Screens. Exclusion Screens are in place on the upstream side of the Juvenile Collection Channel near the intake deck concrete beam. Exclusion Screens are located in each intake bay, Station Service bay, and two of the three Assembly Bay openings.

i. Anticipate 5 screens per opening. Each screen weighs approximately 850 lbs.

ii. Remove, store, and reinstall screens as needed during construction. See Resource drawings and photo sheets in the plan set for additional information.

b. Items to be removed and reinstalled shall be stored on the Project Site. Storage location will be determined by the KO.

1.5 JUVENILE COLLECTION CHANNEL GRATING

Contractor shall take care not to damage grating or supports during all construction activities. Verify grating capacity prior to Contractor work and/or access activities. **Do not exceed posted grating load limit of 60 pounds per square foot (psf).** See Resource drawings for additional information.

1.6 ACCESS TO WORK AREA

The Powerhouse Intake Deck Concrete Beam is located directly above the Juvenile Fish Collection Channel. The Collection Channel will be active, open, and filled with water during the Contract work period. Grating runs along the length of the Collection Channel, but the Channel is typically ungrated directly under the beam. See Resource Drawings for additional information. All but one Section of the concrete beam is accessible through openings on the upstream side of dam. Assembly Bay beam A-A has a solid upstream wall, but is accessible from grating over the Collection Channel. Submit an Access Plan, and a Work Plan for all phases/requirements of on-site work under this contract a minimum of 30 calendar days prior to Contractor arrival for on-site work. Access plan shall be signed, dated, and bear the seal of a Professional Engineer registered to practice in the United States.

a. Include the following, at a minimum, in the Access Plan:

1. Access design and details, including, but not limited to the following:

i. Detailed drawings.

ii. Design calculations.

iii. Connections details.

iv. Any modifications to existing structures.

v. Information on products.

vi. Equipment to be used for installation and removal.

vii. Removal of work access.

viii. Repair methods to be used for all affected concrete, guardrail systems, and other Government property impacted by Contractor work and access requirements. See SECTION 03 60 00.01 28 CONCRETE DRILLING AND PATCHING for concrete repair requirements.

2. Access details for the following:

i. Initial beam inspection, as applicable (see paragraph "Initial Beam Inspection" below).

ii. All beam modification work.

iii. Removal and reinstallation of all Juvenile Fish Collection Channel access stairways, as needed (3 total).

iv. Removal and reinstallation of Juvenile Fish Collection Channel Removable Exclusions Screens, as needed (5 per opening, typical).

v. Installation and removal of Debris Containment System (See paragraph DEBRIS CONTAINMENT SYSTEM below).

b. Include the following, at a minimum, in the Work Plan:

1. Methods of concrete surface preparation, including methods, equipment and materials to be used for each feature.

2. Repair methods and materials to be used, with specific information on products and/or constituents, and requirements for handling, storage, etc..

3. Equipment to be used.

4. Surface preparation.

5. Requirements for placement, finishing, curing and protection specific to the materials used.

6. Schedule to include the following:

i. Initial beam inspection, as applicable.

ii. Proposed beam section repair schedule.

iii. All major work tasks.

iv. Installation and removal phases of all access in support of Contractor work on this project (including any scaffolding).

v. All installation and removal phases for Debris Containment System.

vi. All removal and reinstallation phases for Juvenile Fish Collection Channel access stairways, and Removable Exclusion Screens, as required.

vii. All Intake Deck roadway closures. See paragraph "McNary Personnel Traffic Lane Requirements" in this SECTION.

1.6.1 Initial Beam Inspection

If Initial Beam Inspection will be conducted prior to Contractor beginning on-site Construction work, coordinate anticipated Initial Beam Inspection date with the KO a minimum of 14 calendar days prior to anticipated date. Contractor shall be responsible for all equipment, personal protective gear, etc. required for the beam inspection. All Contractor on-site work shall conform to the requirements of this contract.

1.7 DEBRIS CONTAINMENT SYSTEM

1.7.1 General

a. A Debris Containment System shall be in place prior to beginning work on the Intake Deck Concrete Beam repair. Design the containment system to protect the Project Staff, the Juvenile Fish Collection Channel, and the Columbia River from all aspects of the beam repair work. Prevent **all** of the following, at a minimum, from passing below the barrier:

1. Metal shavings, dust, dirt, and all similar items.

2. All water, liquid, etc..

3. All tools or other Contractor items.

b. The containment system shall be designed to protect all personnel, items, equipment, and waterways below the work area. Due to the presence of Juvenile Fish in the Collection Channel and Columbia River, it is imperative that the containment system provides protection from all outside infiltrations during work on this contract.

c. If the containment system does not provide adequate protection, as specified, the Contractor shall immediately stop beam repair work and modify the containment system to meet specifications, at no additional cost to the Government.

d. The containment system shall be in place during all Contractor work on the concrete beam repair.

e. Submit a Debris Containment Plan a minimum of 30 calendar days prior to anticipated start of any on-site work. Plan shall include, but not be limited to, the following:

1. Detailed drawings.

2. Design calculations.

3. Connections details including the following:

i. Method of anchoring Containment System.

4. Any modifications to existing structures.

5. Methods of containment for surface preparation.

6. Information on products, equipment to be used for installation and removal, removal of containment, and repair of all concrete, guardrail systems, and other Government property impacted by installation and/or removal of the Debris Containment system. Include the following:

i. Materials to be used for membrane, anchorage, and all related items, as well as design of waterproof seams, as applicable.

ii. Repair of surfaces upon removal of anchors. Only use of Government accepted anchorage systems will be allowed. If

concrete anchors are used, image concrete by GPR to avoid concrete embedment damage caused by anchor hole drilling.

7. Detailed description of installation and removal requirements of Debris Containment System.

f. The Contractor shall maintain the Containment System and perform repairs or replacement, as needed. This includes repairing incidents of damage or failure within 4-hours following notification by the KO. If failure or needed repairs pose a life/safety or environmental concern, repairs are required within 1 hour of notification. The Contractor shall be responsible for all damage caused to Government Property and/or personnel due to damage to and/or failure of the Containment System. Work on the concrete beam repair will not be allowed to proceed without an accepted Containment Plan.

1.8 INTERFERENCES ON THE POWERHOUSE INTAKE DECK

a. Fish diversion screens (ESBS's) are located in the bulkhead (emergency gate) slots. Handrails around the emergency slots are in place throughout the year. While in operation, ESBS's are lowered below the intake deck. When not in use, the screens are raised and dogged off.

b. When raised and dogged the ESBS's extend approximately 15 feet above intake deck level. Each screen is approximately 23 feet wide and 4 feet in depth. A screen is in every emergency gate slot. When raised and dogged the screens will interfere with movement of construction equipment, especially cranes.

c. From early March through December, annually, screens are required to be deployed (lowered) when turbines are operating. During this time, individual screens will be raised when repairs are necessary. Anticipate screens to be raised and dogged off, typically, outside of this timeframe.

1.9 GOVERNMENT ROADWAYS AND DECK ACCESS RESTRICTIONS

Hauling of materials and equipment will be permitted on the project's roadways only. Submit transport loading diagrams indicating wheel loads and axle configurations for transport vehicles to haul loads exceeding HS-20, in accordance with AASHTO LRFD Bridge Design Specifications. (AASHTO LRFD Bridge Design Specifications defines HS-20 vehicles as having a gross vehicle weight of 72,000 lbs. and a maximum axle load of 32,000 lbs). Approximate maximum load capacity on roadways over the dam is 1.2 times higher than HS-20 load. All transport vehicles exceeding HS-20 loads must have approved transport loading diagrams before accessing roadways over the dam. Protect the various portions of the Project's structures from damage by traffic, prevent material from falling through the deck openings, and also keep the areas in use cleaned up and orderly at all times during use. Vehicle speeds, special precautions, and safety measures shall be as directed by the KO.

1.9.1 Roadway Across Top of Dam

The roadway across McNary dam is not available for use by the public. Public access across the Columbia River is over the interstate highway bridge located two miles downstream from the dam. The roadway on the dam is not for use by the Contractor, to include vehicle turnarounds,except

for access to the work site on the intake deck. Access is only available from the Oregon (South) side.

1.9.2 McNary Personnel Traffic Lane Requirements

a. Maintain the lane downstream of the Fishscreen/Emergency Intake Gate slots for traffic access at all times, unless coordinated otherwise with the KO.

b. The Powerhouse operator must have access from the Powerhouse to the Navigation Lock **at all times** to perform lockages of river traffic. Access lane shall be a minimum of 10 feet wide. Lockages occur at any time of the day or night and an average of seven (7) lockages are performed daily. The Bascule Bridge is closed to traffic during lockages.

c. Coordinate all anticipated complete roadway closures with the KO a minimum of 7 calendar days prior to anticipated date of closure. Temporary closures of 1 hour or less shall be coordinated a minimum of 2 Government workdays prior to anticipated closure. Provisions for Navigation Lock access must be maintained during all closures.

d. Account for roadway closures required by the project (for anticipated Government work), in the Contractor's work plan.

1.9.3 Coordination with Other Contractors

Other contractors will be working on the intake deck during the course of this contract. Additional coordination to maintain the required traffic lane, and other Contractor requirements will occur during the preceeding Weekly Production meeting (SECTION 01 11 01.00 28 SUPPLEMENTARY REQUIREMENTS, paragraph WEEKLY PRODUCTION MEETINGS). Coordination of contract work is required as part of this contract. No allowance will be made for extra compensation because of the required cooperation.

1.10 TRAFFIC CONTROL AND PUBLIC ACCESS

Existing public roads and access roads shall be kept open to vehicle traffic at all times. Conduct this work in such a manner as will obstruct and inconvenience traffic as little as possible. When necessary to operate on or cross existing highways or roads, furnish signs, lights, and/or other necessary safeguards to safely control and direct the flow of traffic. Obtain any and all required permits for such operations from the appropriate private or public authority at no additional cost to the Government.

1.10.1 Public Access Barriers

In areas where the public has access to the job site, construct temporary barriers around ongoing work with bright orange plastic fencing. The barrier shall be maintained until completion of the individual piece of work.

1.11 PERMITS AND RESPONSIBILITIES

Contractor shall be responsible for complying with all Federal, State, and municipal laws, codes, and regulations applicable to work on this contract. This includes obtaining all necessary licenses and permits related to transportation of equipment and/or contract items, and other

areas of work on this contract, as applicable. Licenses and permits shall be obtained without additional expense to the Government.

1.12 DUST CONTROL PLAN

Dust control during dust generating activities is the responsibility of the Contractor. Submit a written Dust Control Plan detailing what will be done to prevent dust.

1.13 FIRE CONTROL

1.13.1 Contractor Equipment

a. The Contractor shall take precautions to minimize fire hazards caused by work under this contract. Each piece of internal combustion engine driven equipment used at the work site shall be equipped with a fire extinguisher in accordance with National Fire Protection Association (NFPA) recommendations as appropriate. The minimum approved rating of extinguishers shall not be less than 5-B:C.

b. All fire extinguishers shall have been checked within 6 months prior to commencement of work by a certified fire extinguisher representative. A visual inspection shall be performed by the Contractor the first working day of each month to insure that extinguishers are properly charged, ready for use, and located properly. A record tag for verifying inspections shall be attached to each extinguisher and shall be properly maintained throughout the life of the contract.

1.13.2 Fire Hazards

The Contractor shall eliminate all potential fire hazards that may result from their operations. This includes work on or near buildings, grounds, use of equipment, and the storage of supplies, fuels, or cleaning agents. This also includes the removal of any accumulation of burnable or flammable materials or debris around chain-linked fences, signs, and other fixtures within the contract area.

1.13.3 Fire Procedures

In the case of a fire within the contract area, the Contractor shall first attempt to put out the fire. If this is not possible, notify the fire department. The appropriate COR must be notified as soon as possible of the fire and any damage estimates.

PART 2 PRODUCTS (Not Used)

PART 3 EXECUTION (Not Used) -- End of Section --

SECTION TABLE OF CONTENTS

DIVISION 01 - GENERAL REQUIREMENTS

SECTION 01 57 20.00 28

ENVIRONMENTAL PROTECTION

PART 1 GENERAL

1.1 GENERAL INFORMATION
1.2 PUBLICATIONS
1.2.1 Applicable Regulations
1.2.2 Referenced Publications and Regulations
1.3 SUBMITTALS
1.4 DEFINITIONS
1.4.1 Discarded Material
1.4.2 Environmental Pollution and Damage
1.4.3 Environmental Litigation
1.4.4 Environmental Protection
1.4.5 Solid Waste
1.4.6 Hazardous Waste
1.4.7 Universal Waste
1.4.8 Other Regulated Waste
1.4.9 Surface Discharge
1.4.10 Waters of the United States
1.4.11 Fugitive Dust
1.5 GENERAL REQUIREMENTS
1.6 ENVIRONMENTAL PROTECTION PLAN
1.6.1 Compliance
1.6.2 Contents
1.7 ENVIRONMENTAL REVIEW OF CONTRACT VARIATIONS
1.8 NOTIFICATION

PART 2 PRODUCTS (NOT USED)

PART 3 EXECUTION

3.1 WASTE HANDLING AND DISPOSAL
3.1.1 Solid Wastes
3.1.2 Hazardous Waste Handling Plan
3.1.3 Disposal of Hazardous Waste
3.1.4 Universal Waste Disposal
3.1.5 Fuel And Lubricants
3.1.6 Wastewater
3.2 LAND RESOURCES
3.2.1 Work Area Limits
3.2.2 Landscape
3.3 WATER RESOURCES
3.3.1 Excess Material Deposits
3.3.2 Care Of Drains
3.4 AIR RESOURCES
3.4.1 Fugitive Dust

3.4.2 Ozone depleting substances (ODS)
3.4.3 Burning
3.5 HISTORICAL, ARCHAEOLOGICAL, AND CULTURAL RESOURCES
3.6 POST CONSTRUCTION CLEANUP

-- End of Section Table of Contents --

SECTION 01 57 20.00 28

ENVIRONMENTAL PROTECTION

PART 1 GENERAL

1.1 GENERAL INFORMATION

This SECTION covers preventing environmental pollution and minimizing environmental degradation during and as a result of construction operations. Other requirements in the Technical Sections may also contain specific requirements for environmental protection. Those specific requirements are in addition to or modify the requirements in this SECTION. The control of environmental pollution requires consideration of sound levels, air, water, and land resources.

1.2 PUBLICATIONS

1.2.1 Applicable Regulations

Prevent, abate, and control all environmental pollution, and minimize environmental degradation by complying with all applicable Federal, State, and local laws and regulations, as well as specific requirements of this Contract. Where conflicting or duplicate regulations apply, the most stringent requirement shall govern. Comply with the most current version of the following list of environmental regulations where applicable. This list is not inclusive of all environmental laws and regulations with which the Contractor shall comply, but represents those that are most likely to apply to work under this Contract.

1.2.2 Referenced Publications and Regulations

The publications and regulations listed below form a part of this specification to the extent referenced. The publications are referred to in the text by basic designation only.

U.S. ARMY CORPS OF ENGINEERS (USACE)

EM 385-1-1	Safety and Health Requirements Manual

The Contractor shall be responsible for complying with the current edition and all changes posted on the web as of the effective date of this solicitation.

WETLANDS DELINEATION MANUAL	(1987) Corps of Engineers Wetlands Delineation Manual, Technical Report Y-87-1

ASTM INTERNATIONAL (ASTM)

ASTM D5864	(2011) Standard Test Method for Determining Aerobic Aquatic Biodegradation of Lubricants or Their Components

U.S. National Archives and Records Administration (NARA)

29 CFR 1910.1001	OSHA General Industry - Asbestos

29 CFR 1910.1200	OSHA General Industry - Hazard Communication
29 CFR 1910.120	OSHA General Industry - Hazardous Waste Operations and Emergency Response (HAZWOPER)
29 CFR 1926.1101	OSHA Construction - Asbestos
29 CFR 1926.65	OSHA Construction - Hazardous Waste Operations and Emergency Response (HAZWOPER)
33 CFR 328	Definition of Waters of the United States
40 CFR 112	Oil Pollution Prevention
40 CFR 122	EPA Administered Permit Programs: The National Pollutant Discharge Elimination System
40 CFR 122.26	Storm Water Discharges (Applicable to State NPDES Programs, see section 123.25)
40 CFR 763	Toxic Substances Control Act (TSCA) - Asbestos
49 CFR 171	General Information, Regulations, and Definitions
49 CFR 171-178	Transportation of Hazardous Materials Regulations
40 CFR 241	Guidelines for Disposal of Solid Waste
40 CFR 243	Guidelines for the Storage and Collection of Residential, Commercial, and Institutional Solid Waste
40 CFR 260	Hazardous Waste Management System: General
40 CFR 261	Identification and Listing of Hazardous Waste
40 CFR 262	Standards Applicable to Generators of Hazardous Waste
40 CFR 263	RCRA Standards Applicable to Transporters of Hazardous Waste
40 CFR 273	Standards for the Management of Universal Waste - light bulbs, batteries, mercury switches
40 CFR 279	Standards for the Management of Used Oil
40 CFR 302	Comprehensive Environmental Response Compensation and Liability Act (CERCLA) -

	Hazardous Substance Spill Reporting Requirements: Asbestos, PCBs, etc.
40 CFR 355	Emergency Planning and Notification
40 CFR 61	National Emission Standards for Hazardous Air Pollutants (NESHAP) - Asbestos
40 CFR 68	Chemical Accident Prevention Provisions
40 CFR 82	Protection of Stratospheric Ozone - Refrigerant and SF6 Gas
49 CFR 178	Specifications for Packagings
	WASHINGTON STATE ADMINISTRATIVE CODE (WAC)
WAC 173-303	Dangerous Waste Regulation
WAC 173-400	General Standard for Maximum Emissions
	OREGON ADMINISTRATIVE RULES (OAR)
OAR 340-093	Solid Waste: General Provisions
OAR 340-101	Identification and Listing of Hazardous Waste
OAR 340-111	Used Oil Management
OAR 340-113	Universal Waste Management
	IDAHO ADMINISTRATIVE PROCEDURES ACT (IDAPA)
IDAPA 58.01.05	Rules and Standards for Hazardous Waste
	WYOMING STATUTES (W.S.)
W.S. 35-11-101	Hazardous Waste Management: General Provisions

1.3 SUBMITTALS

Government approval is required for submittals with a "G" designation; submittals having an "I" designation are for information only. The designation following the "G" or "I" designation identifies the office that will review the submittal for the Government. Submit the following in accordance with SECTION 01 33 00 SUBMITTAL PROCEDURES:

SD-01 Preconstruction Submittals

Environmental Protection Plan; G, ECC

Plan for Concrete On-Site Wash Area; G, ECC

1.4 DEFINITIONS

1.4.1 Discarded Material

The term "discarded material", as used herein, is any material that is abandoned,recycled, or considered "inherently waste-like" as described in 40 CFR 260

1.4.2 Environmental Pollution and Damage

The term "environmental pollution and damage", as used herein, is the presence of chemical, physical, or biological elements or agents which adversely affect human health or welfare; unfavorably alter ecological balances of importance to human life; affect other species of importance to humankind; or degrade the environment aesthetically, culturally, and/or historically.

1.4.3 Environmental Litigation

The term "environmental litigation", as used herein, means a lawsuit alleging that the work will have an adverse effect on the environment or that the Government has not duly considered, either substantively or procedurally, the effect work has on the environment.

1.4.4 Environmental Protection

The term "environmental protection", as used herein, is the prevention/control of pollution and habitat disruption that may occur to the environment during construction. The control of environmental pollution and damage requires consideration of land, water, and air; biological and cultural resources; and includes management of visual aesthetics; noise; solid, chemical, gaseous, and liquid waste; radiant energy and radioactive material as well as other pollutants.

1.4.5 Solid Waste

The term "solid waste", as used herein, is any discarded material that is not excluded under 40 CFR 261.4(a) or that is not excluded by a variance granted under 260.30 and 260.31 or that is not excluded by a non-waste determination under 260.30 and 260.34.

1.4.6 Hazardous Waste

The term "hazardous waste", as used herein, is a Solid Waste that is not excluded from regulation under 40 CFR 262.11, but is either:

a. A listed waste under subpart D of 40 CFR 261 or;
b. A characteristic waste as described in subpart C of 40 CFR 261 or;
c. Residues which are subject to regulation as hazardous wastes under Oregon Administrative Rules OAR 340-101-0001

1.4.7 Universal Waste

The term "universal waste", as used herein, is any of the following Hazardous Wastes that are subject to the universal waste requirements of 40 CFR 273, OAR 340-113-0000,

a. Used batteries that designate as hazardous waste including; lead acid batteries, lithium ion batteries, nickel-cadmium batteries,

alkaline batteries, etc.

b. Used light bulbs that designate as hazardous waste including; florescent bulbs, compact florescent bulbs, sodium vapor lamps, mercury vapor lamps, etc.

c. Used mercury containing material which is a device or part of a device that contains elemental mercury integral to its function including; thermostats, thermometers, electrical switches, etc.

1.4.8 Other Regulated Waste

The term "other regulated waste", as used herein, is a solid waste that is not a hazardous waste, but is still regulated by federal and state laws for transportation and/or disposal. The types of waste in this category include, but are not limited to: asbestos, PCB contaminated waste, used oil, oily water, anti-freeze, refrigerants and compressed gasses.

1.4.9 Surface Discharge

The term "surface discharge", as used herein, implies that the water is discharged with possible sheeting action and subsequent soil erosion may occur. Waters that are surface discharged may terminate in drainage ditches, storm sewers, creeks, and/or "waters of the United States" and would require a permit to discharge the water from the governing agency under 40 CFR 122.26.

1.4.10 Waters of the United States

The term "waters of the United States (U.S.)", as used herein, include all waters which are under the jurisdiction of the Clean Water Act, as defined in 33 CFR 328.

1.4.11 Fugitive Dust

The term "fugitive dust", as used herein, is particulate matter that is generated or emitted from open air operations (emissions that do not pass through a stack or vent). Particulate matter consists of solid particles and liquid droplets suspended in the air. These small airborne particles have the potential to adversely affect human health or the environment.

1.5 GENERAL REQUIREMENTS

Minimize environmental pollution and damage that may occur as the result of construction operations. The environmental resources within the project boundaries and those affected outside the limits of permanent work shall be protected during the entire duration of this Contract. Comply with all applicable Federal, State, and local environmental laws and regulations. Any delays resulting from failure to comply with environmental laws and regulations is the Contractor's responsibility.

1.6 ENVIRONMENTAL PROTECTION PLAN

Prior to commencing construction activities or delivery of materials to the site, submit an Environmental Protection Plan (EPP) for review and approval by the Contracting Officer. Submit the Environmental Protection Plan no later than 90 calendar days prior to the start of on-site work. The purpose of the Environmental Protection Plan is to present a comprehensive overview of known or potential environmental issues which shall be addressed during construction. Define issues of concern within

the Environmental Protection Plan as outlined in this SECTION. Address each topic at a level of detail commensurate with the environmental issue and required construction task(s). Identify and discuss topics or issues which are not identified in this SECTION, but which is considered necessary, after those items formally identified in this SECTION. The Environmental Protection Plan shall be current and maintained on site.

1.6.1 Compliance

No requirement in this SECTION shall relieve the Contractor of any applicable Federal, State, and local environmental protection laws and regulations. During construction, identify, implement, and submit for approval any additional requirements to be included in the Environmental Protection Plan.

1.6.2 Contents

The Environmental Protection Plan (EPP) shall include, but not be limited to, the following:

a. Name(s) and phone numbers of individual(s) within the Contractor's organization responsible for ensuring adherence to the Environmental Protection Plan.

b. Description of the Contractor's environmental protection personnel training program.

c. Contractor's process for immediately notifying the Contracting Officer (KO), onsite Construction Representative and the Facility's Environmental Compliance Coordinator (ECC) of any spills. The Contractor is responsible for all spill notifications to regulatory agencies (Federal, State, and local). This plan will include the contact information for Federal, State, and local agencies. In the event of a spill, provide a copy of the notification reports to the KO and ECC.

d. Solid Wastes Management Plan

1. Solid waste is as defined in 40 CFR 261. The EPP shall describe how solid wastes will be picked up and placed in covered containers which are emptied regularly.

2. Housekeeping measures to prevent contamination of the site or other areas when handling and disposing of solid waste.

3. Management of spent hazardous material shall be described in the Hazardous Waste Handling Plan .

e. Hazardous Waste Handling Plan that complies with all Federal, State, and local laws or regulations that pertain to generation, storage, and transportation of hazardous materials: 40 CFR 260-40 CFR 263, OAR 340-093-005, 49 CFR 171-178, 29 CFR 1910.120/ 29 CFR 1926.65. This includes the handling of such hazardous materials as hazardous wastes (including but not limited to, aerosol cans, waste paint, cleaning solvents, contaminated brushes, and used rags)if applicable. The Contractor shall prepare and submit a compliance plan detailing how the Contractor handles hazardous materials, petroleum products, and hazardous waste personnel qualifications. The plan shall include all the elements specified in Part 3 EXECUTION as applicable.

f. Fugitive dust control plan.

g. Used Oil Management plan for any used oil to be transported off-project in accordance with 40 CFR 279, OAR 340-111-000.

h. Universal Waste Management and Disposal plan for light bulbs, batteries and mercury ampules in accordance with 40 CFR 273 and OAR 340-113-0002.

i. Wastewater management plan that identifies the methods and procedures for management and/or discharge of wastewaters which are directly derived from construction activities, such as concrete curing water, clean up water, dewatering of ground water, disinfections water, hydrostatic test water, and water used in flushing of lines. Waste water will not be disposed of on government property or into waters of the U.S.

j. Plan for Concrete On-Site Wash Area

1. Concrete wash water is generated from washing out ready-mix trucks, drums and pumps; it also includes the water from rinsing off chutes, equipment, and concrete truck exteriors. The Contractor must prevent concrete wash water from entering waterways, storm drains and groundwater. If possible, all concrete waste and wash water should be returned with each concrete truck for disposal at the concrete batch plant. If this is not possible, Contractors may install an on-site concrete washout area.

2. Washout area will be at a location approved by the KO, and will not be allowed on the dam structure. Coordinate location of the on-site concrete washout area prior to beginning on-site work.

3. Submit a plan for a concrete on-site wash area following the requirements stated in the website shown below. This plan shall be submitted no later than 45 days prior to on-site concrete work. Include in this plan the location where the on-site wash area is proposed to be. Website for concrete on-site requirements:

https://www3.epa.gov/npdes/pubs/concretewashout.pdf

1.7 ENVIRONMENTAL REVIEW OF CONTRACT VARIATIONS

Any proposed Contractor methods or requested variations from the specifications and drawings that may have an environmental impact will be subject to approval by the KO and may require an extended review, processing, and approval time. The KO reserves the right to disapprove alternate methods OR VARIATIONS, even if they are more cost effective, if the KO determines that the proposed alternate method OR VARIATION will have an unacceptable adverse environmental impact.

1.8 NOTIFICATION

The KO will notify the Contractor in writing of any observed noncompliance with Federal, State, or local environmental laws or regulations, permits, and other elements of the Contractor's Environmental Protection Plan. After receipt of such notice, inform the KO of the proposed corrective action and take such action when approved by the KO. The KO may issue an order stopping all or part of the work until satisfactory corrective

action has been taken. No time extensions will be granted or equitable adjustments allowed to the Contractor for any such suspensions. This is in addition to any other actions the KO may take under the Contract, or in accordance with the Federal Acquisition Regulation or Federal Law.

PART 2 PRODUCTS (NOT USED)

PART 3 EXECUTION

3.1 WASTE HANDLING AND DISPOSAL

Dispose of wastes as directed below, unless otherwise specified and/or shown on the Drawings:

3.1.1 Solid Wastes

Provide waste receptacles. Place solid wastes in Contractor-provided containers which are emptied or removed from the job site on a regular schedule. Conduct handling, storage, and disposal to prevent contamination. Employ segregation measures so that no hazardous waste will become co-mingled with solid waste. Transport solid waste off Government property and dispose of it in compliance with applicable Federal, State, and local requirements for solid waste disposal. A Subtitle D Resource Conservation and Recovery Act (RCRA) permitted landfill shall be the minimum acceptable off-site solid waste disposal option. Verify that the selected transporters and disposal facilities have the necessary permits and licenses to operate. Comply with applicable Federal, State, and local laws and regulations pertaining to the use of landfill areas.

3.1.2 Hazardous Waste Handling Plan

The Contractor is required to comply with all Federal, State, and local laws or regulations when handling hazardous materials. This includes the handling of such hazardous materials as hazardous wastes if applicable. The Contractor shall prepare and submit a compliance plan detailing how the Contractor handles hazardous materials, petroleum products, and hazardous waste. The plan shall include, but is not limited to, the following elements as appropriate:

a. General storage site plan.

b. An inventory of all hazardous materials brought onto the project site accompanied by their respective Safety Data Sheets (SDS). The Contractor and the Government will jointly maintain the SDSs for all hazardous materials in accordance with 29 CFR 1910.1200.

c. A list of all anticipated hazardous wastes to be generated.

d. Waste collection and containment procedures in accordance with applicable Federal, State, and local laws or regulations 40 CFR 262, WAC 173-303-200, and OAR 340-101.

e. A hazardous material spill and cleanup plan, including tools and readily available materials on hand to facilitate containment and cleanup, 29 CFR 1910.120/29 CFR 1926.65.

f. Documentation to show that the person handling hazardous waste or sampling hazardous materials is trained and certified to do so.

g. A waste determination plan that includes a sample analysis plan, or process knowledge, that meets Federal and State requirements for hazardous waste designation 40 CFR 261, WAC 173-303-100.

h. Provisions to coordinate with Project ECC for profiling and disposal of all Hazardous Waste. The Project ECC must be present to sign the Uniform Hazardous Waste Manifest for all Hazardous Waste shipped off of Corps of Engineers property.

i. Demobilization plan that describes how the contractor will ensure no expired, used, or unused products are left on site.

3.1.3 Disposal of Hazardous Waste

The Contractor Shall coordinate with the Project ECC for the disposal of all hazardous waste. The following shall apply for all Hazardous Waste:

a. Hazardous waste generated at the project is required to be applied to the projects generator status. An inventory sheet of all materials being placed in a hazardous waste package shall be maintained. Required information on this inventory sheet is: date placed in package, type of material, quantity, name of person disposing of waste.

b. Contractor shall coordinate with Project ECC to determine proper container type and marking requirements in accordance with 49 CFR 178 prior to the generation of any hazardous waste. The Project ECC will designate a Satellite Accumulation Area (SAA) for the Contractor to use while generating hazardous waste.

c. When the Contractor is done filling the hazardous waste container or when 55-gallons of waste have been accumulated, the Contractor shall inform the KO, who will notify the project ECC. The project ECC will then arrange for movement of the waste to a designated Government "less than 90-day" hazardous waste storage area (could be "less than 180-day" storage area depending on the generator status at the project, see Project ECC for specific guidance), 40 CFR 262, WAC 173-303-200.

d. Contractor shall coordinate with the Project ECC to expedite off site shipment of hazardous waste. If, for any reason, the hazardous waste cannot be shipped off-site in "less than 90-days" the KO and Project ECC shall be notified immediately. Project ECC will be required to sign all waste shipping records. The cost of disposal is the responsibility of the Contractor.

e. Contractor shall not abandon or otherwise leave any hazardous materials or hazardous waste on government projects.

3.1.4 Universal Waste Disposal

Dispose of all used batteries, light bulbs, and elemental mercury ampules in accordance with Federal and State regulations, 40 CFR 273, WAC 173-303 -573, and OAR 340-113.

a. All batteries shall have the terminals taped to secure from arcing prior to being placed in the Used Battery Container. Container shall be labeled with the words "Used Batteries".

b. Used light bulbs that would otherwise be regulated as hazardous waste (i.e. florescent bulbs, mercury or sodium vapor, HID, etc.) shall be stored in a manner that minimizes breakage. Container shall be labeled with the words "Used Bulbs" or "Used Lamps".

c. Mercury switches or other small ampules of elemental mercury shall be stored in a manner which prevents breakage. Container shall be closed and labeled with the words "Used Mercury-Containing Equipment".

3.1.5 Fuel And Lubricants

a. Conduct storage, fueling, and lubrication of equipment and motor vehicles in a manner that affords the maximum protection against spill and evaporation.

b. Manage and store fuel, lubricants, and oil in accordance with all Federal, State, Regional, and local laws and regulations.

c. Store used lubricants and used oil to be discarded in marked, corrosion-resistant containers and recycle or dispose of in accordance with 40 CFR 279, Used Oil regulations.

d. Storage of fuel on the project site shall be in accordance with all Federal, State, and local laws and regulations. Fuel storage will be at an on-site location as directed by the Contracting Officer. Fuel storage will not be permitted on the Powerhouse intake deck.

e. Special measures shall be taken to prevent chemicals, fuels, oils, greases, bituminous materials, and waste washings from entering public lands or waters. Provide and utilize the following prevention/cleanup materials during the course of this contract:

1. If the fuel dispensing or storage tanks are not double walled, Contractor shall utilize secondary containment. All secondary containment shall be capable of containing a minimum of 100 percent of the holding tank without release plus free board in compliance with 40 CFR 112.

2. Emergency spill kits shall be immediately available to enable rapid cleanup with sufficient quantities and types of spill control materials to contain any spills that can be anticipated. Contractor shall be responsible for ascertaining the types/quantities of spill equipment required based on types and quantities of chemicals, oils, POLs, they will use and/or what they will be working on.

3. Emergency spill absorbent mats (10-18" x 18" or appropriately sized) shall be carried on board or be in the immediate vicinity of all equipment performing work. Mats shall be of a quilted cotton pillow design, and absorbent (not adsorbent) filled, to encapsulate hydrocarbons (oils, coolants and solvents).

3.1.6 Wastewater

Do not allow wastewater from construction activities (such as on-site material processing, concrete curing, foundation and concrete clean up, water used in concrete trucks, forms, etc.) to enter surface waters or to be discharged to the ground without first applying for and receiving authorization from the EPA (surface waters)or a state authority (ground

waters). Wastewater shall be collected and disposed off-Government property in accordance with all Federal, State, and local regulations.

3.2 LAND RESOURCES

Confine all activities to areas defined by the Drawings and Specifications. Do not remove, cut, deface, injure, or destroy land resources without approval. Do not fasten or attach ropes, cables, or guys to any trees for anchorage unless specifically authorized. Provide effective protection for land and vegetation resources at all times.

3.2.1 Work Area Limits

Protect monuments and markers before construction operations commence. Where construction operations are to be conducted during darkness, any markers shall be visible in the dark. Contractor's personnel shall be knowledgeable of the purpose for marking and/or protecting particular objects.

3.2.2 Landscape

Restore landscape features damaged or destroyed during construction operations outside the limits of the approved work area.

3.3 WATER RESOURCES

Monitor all water areas affected by construction activities to prevent pollution of surface and ground water. The Contractor shall be responsible for compliance with applicable Federal and State water quality standards and the conditions of any permits and clearances obtained for the work. Do not apply toxic or hazardous chemicals to soil or vegetation unless otherwise indicated. No water courses shall be polluted by, or have existing pollution contributed to with, any petroleum products, fuels, oils, lubricants, bitumen, sandblast grit, paint chips, calcium chloride, insecticides, herbicides, or other toxic materials harmful to life. Chemical emulsifiers, dispersants, coagulants, or other cleanup compounds shall not be used without prior written approval.

3.3.1 Excess Material Deposits

Do not allow deposit of any materials, effluents, trash, garbage, oil, grease, chemicals, or other contaminants. If any unwanted material is dumped in unauthorized areas, remove the material and restore the area to a condition approximating the adjacent undisturbed area. Excavate, remove, and restore the contaminated ground area as directed.

3.3.2 Care Of Drains

Floor and deck drains, as well as any system that may drain to the river, shall be protected from Contractor Construction activities, and shall not be used for disposal of any solid, hazardous material or any liquids other than approved clear, clean water. The Contractor shall demonstrate that the pipes and drains are protected from construction waste, and unobstructed when so directed.

3.4 AIR RESOURCES

Equipment operation, activities, or processes performed shall be in accordance with all Federal and State air emission and performance laws

and standards.

3.4.1 Fugitive Dust

The owner or operator of a source or activity that generates fugitive dust must take reasonable precautions to prevent dust from becoming airborne and must maintain and operate the source to minimize emissions in accordance with all Federal and State air regulations.

3.4.2 Ozone depleting substances (ODS)

Only EPA certified technicians will be allowed to repair or service ODS equipment. No person maintaining, servicing, repairing or disposing of appliances may knowingly vent or otherwise release into the environment any Class I or Class II substance used as a refrigerant. Section 608 of the Clean Air Act extended the prohibition on venting to substitute refrigerants, including hydrofluorocarbon (HFC) and perfluorinated compounds (PFC) refrigerants. Furthermore, the equipment used to recover refrigerant from appliances must be EPA certified.

3.4.3 Burning

Burning is prohibited on the Government premises.

3.5 HISTORICAL, ARCHAEOLOGICAL, AND CULTURAL RESOURCES

If, during construction activities, any previously unidentified or unanticipated historical, archaeological, and cultural resources are discovered or found, temporarily suspend all activities that may damage or alter such resources. Resources covered by this paragraph include but are not limited to: any human skeletal remains or burials; artifacts; shell, midden, bone, charcoal, or other deposits; rock or coral alignments, paving, wall, or other constructed features; and any indication of agricultural or other human activities. Upon such discovery or find, immediately notify the KO so that the appropriate authorities may be notified and a determination made as to their significance and what, if any, special disposition of the finds should be made. Cease all activities that may result in impact to or the destruction of these resources. Secure the area and prevent employees or other persons from trespassing on, removing, or otherwise disturbing such resources.

3.6 POST CONSTRUCTION CLEANUP

Clean up all areas used for construction in accordance with Contract Clause 52.236-12, CLEANING UP.

-- End of Section --

SECTION TABLE OF CONTENTS

DIVISION 01 - GENERAL REQUIREMENTS

SECTION 01 78 00.00 28

CLOSEOUT SUBMITTALS

PART 1 GENERAL

1.1 REFERENCES
1.2 SUBMITTALS
1.3 DEFINITIONS
1.3.1 Contract Drawings
1.3.2 Shop Drawings
1.3.3 As-Built Drawings
1.3.4 Record Drawings

PART 2 PRODUCTS

PART 3 EXECUTION

3.1 FINAL SHOP DRAWINGS
3.2 WORKING AS-BUILT DRAWINGS
3.2.1 Submission of Working As-Built Drawings
3.3 FINAL AS-BUILT DRAWINGS
3.4 RECORD DRAWINGS - CAD FILES
3.4.1 Drawing Submittal Requirements
3.5 SUPERSEDED AND/OR OBSOLETE FIO OR RESOURCE DRAWINGS
3.6 GOVERNMENT ISSUED ITEMS

-- End of Section Table of Contents --

THIS PAGE INTENTIONALLY LEFT BLANK

SECTION 01 78 00.00 28

CLOSEOUT SUBMITTALS

PART 1 GENERAL

1.1 REFERENCES

The publications listed below form a part of this specification to the extent referenced. The publications are referred to within the text by the basic designation only.

U.S. ARMY CORPS OF ENGINEERS (USACE)

ERDC/ITL TR-19-6 (Aug 2019) A/E/C Graphics Standard, Release 2.1

1.2 SUBMITTALS

Government approval is required for submittals with a "G" designation; submittals having an "I" designation are for information only. A designation following the "G" or "I" designation identifies the office that will review the submittal for the Government. Submit the following in accordance with SECTION 01 33 00 SUBMITTAL PROCEDURES:

SD-11 Closeout Submittals

Final Shop Drawings; G C

Working As-Built Drawings; I C

Final As-Built Drawings; G C

Record Drawings; G, GE

Government Issued Items; G C

1.3 DEFINITIONS

1.3.1 Contract Drawings

Contract drawings are the set of Design Drawings furnished by the Government for this contract. Contract Drawings form a part of the legal contract between the Contractor and Government, and do NOT include FIO's or Resource Drawings.

1.3.2 Shop Drawings

a. Shop drawings are a drawing or set of drawings produced by the contractor, supplier, manufacturer, subcontractor, or fabricator for the following purposes:

1. Manufacturer's or Contractor's drawn version of information shown in the construction documents.

2. Drawn to explain manufacturer fabrication, assembly, and/or

installation requirements of the items in the construction documents.

b. See SECTION 01 33 00 SUBMITTAL PROCEDURES, paragraph "Format for SD-02 Shop Drawings", for Shop Drawing requirements.

1.3.3 As-Built Drawings

a. As-Built drawings serve as the basis for the creation of the Record Drawings (see paragraph "Record Drawings"). As-Built drawings are maintained by the Contractor to depict actual conditions throughout construction, including deviations from the Contract Drawings.

b. These deviations and additions may result from coordination required by, but not limited to: contract modifications; official responses to Contractor submitted Requests for Information; direction from the Contracting Officer; designs which are the responsibility of the Contractor, and differing site conditions.

c. Submit As-Built Drawings in pdf or Bentley Navigator.

1.3.4 Record Drawings

The Record drawing set includes all Contract Drawing and accepted final As-Built drawing updates in CAD format. See SECTION 01 33 00 SUBMITTAL PROCEDURES, paragraph "CAD File Requirements".

PART 2 PRODUCTS

NOT USED.

PART 3 EXECUTION

3.1 FINAL SHOP DRAWINGS

a. Upon completion of the work under this contract, submit for review and approval by the Contracting Officer, a copy, in ADOBE .pdf, of the final SHOP DRAWINGS. All drawings submitted to the Contracting Officer shall be in accordance with SECTION 01 33 00 SUBMITTAL PROCEDURES, paragraph "Format for SD-02 Shop Drawings". The drawings shall show all changes and revisions, including any field changes, made up to the time that the work is completed and accepted.

b. Submit Final Shop Drawings, meeting requirements of SECTION 01 33 00 SUBMITTAL PROCEDURES, paragraph "CAD File Requirements".

c. The shop drawings are not required to comply with A/E/C CAD and Graphic Standards.

d. Furnish a complete set of Shop Drawings in Bentley DGN format for all Shop drawings produced by the Contractor in performance of this contract. Submittal of concrete placement drawings, concrete reinforcement drawings, and concrete formwork drawings are not required.

e. Furnish an index drawing for all Shop drawing submittal sets. Index shall include the following for each Shop drawing:

1. Sheet Number.

2. File Number.

3. Drawing Title.

4. CAD File Name.

f. Furnish an electronic spread sheet of the index to include all information specified in SECTION 01 33 00 SUBMITTAL PROCEDURES paragraph "Format for SD-02 Shop Drawings". Spread sheet shall be compatible with Microsoft Excel.

3.2 WORKING AS-BUILT DRAWINGS

Maintain a current and accurate record of the work as actually constructed in the form of working as-built drawings.

a. Mark as-built conditions on the contract drawings to show all work performed by the Contractor.

b. As-built drawings shall incorporate all VARIATIONS from the design and modifications to the contract, however minor. Blue color shall be used to mark information added to the drawings and red color shall be used to mark information deleted from the drawings. Green color may be used for notes to designer.

c. Contract drawings shall be maintained on-site during construction. The completeness and accuracy of the marked as-built drawings must be verified by Government Quality Assurance personnel prior to submission of progress payment requests. All variations shall be noted on the updated As-Built drawings.

3.2.1 Submission of Working As-Built Drawings

Prior to demobilizing from the project, the Contractor shall provide one ADOBE .pdf copy of the working as-built drawings to the Contracting Officer showing the color markups.

3.3 FINAL AS-BUILT DRAWINGS

At the completion of the work, submit, in accordance with FAR CLAUSE 52.211-10, a copy of the Final As-Built Drawings, after all As-Built conditions from the working as-built drawings have been incorporated in the CAD drawings. Submit in ADOBE .pdf format.

In preparation for submitting Record Drawings, once the Final As-Built Drawings are approved, populate the CAD File Status Field with "Record Drawing" to comply with the A/E/C Graphic Standards ERDC/ITL TR-19-6, Border Sheet Status Section.

3.4 RECORD DRAWINGS - CAD FILES

a. After approval of the final As-Built Drawings submittal, the Contractor shall create the CAD Record Drawings to update the Contract Drawings with the as-built conditions. The Record Drawing files shall be in the same drawing format as initially provided by the Government. The Government will provide all original CAD files of the contract drawings, in Bentley DGN format.

3.4.1 Drawing Submittal Requirements

Record Drawings submittal shall meet requirements of SECTION 01 33 00 SUBMITTAL PROCEDURES, paragraph "CAD File Requirements". Submittal of concrete placement drawings, concrete reinforcement drawings, and concrete formwork drawings are not required.

3.5 SUPERSEDED AND/OR OBSOLETE FIO OR RESOURCE DRAWINGS

Identify FIO or Resource drawings which are superseded and/or obsolete. Mark superseded drawings with a red X across the entire drawing and the word "SUPERSEDED" in red across the title block. Mark obsolete drawings with a red X across the entire drawing and the word "OBSOLETE" in red across the title block. Make an additional note on the superseded drawing giving the file number of the drawing that has replaced the superseded drawing, if applicable. For both superseded and obsolete drawings, draw a red line through the name of the drawing on the contract drawing index sheet.

3.6 GOVERNMENT ISSUED ITEMS

Return to the Government all items issued to the Contractor from the Government, including but not limited to the following: keys, ID and security badges, radios, pagers, and excess/unused Government Furnished Property/Equipment. Submit documentation signed by the Contractor and Contracting Officer indicating items have been returned or fully accounted for. Format of submittal will be discussed and agreed upon at the Pre-Work Meeting.

-- End of Section --

SECTION TABLE OF CONTENTS

DIVISION 03 - CONCRETE

SECTION 03 01 00.01 28

CONCRETE SECTION ENLARGEMENT

PART 1 GENERAL

1.1 DESCRIPTION OF WORK
1.2 REFERENCES
1.3 SUBMITTALS
1.4 DESIGNER OF RECORD QUALIFICATIONS
1.5 DESIGN STANDARDS
1.5.1 General Requirements
1.5.2 Structural Design Requirements
1.5.2.1 General Design Requirements
1.5.2.2 Analysis Simplifications
1.5.2.3 Existing Concrete Beam Properties
1.5.2.4 Existing Shear Capacity, Phi*Vn
1.5.2.5 Factored Shear Demand, Vu
1.5.2.6 Embedded Items
1.5.2.6.1 Embed Plates
1.5.2.6.2 Crane Rail Drain Pipes
1.6 SUBMISSION OF DESIGN DATA
1.6.1 Drawing Index
1.6.2 Bill of Materials
1.6.3 Design Drawings
1.6.4 Product Data
1.6.5 Design Calculations
1.6.6 Seal on Documents
1.7 CONTRACTOR ROLES AND RESPONSIBILITIES DURING DESIGN
1.7.1 Responsibility of the Contractor for Design
1.7.2 Contractor's Role during the Design Process
1.7.3 Deviating from the Accepted Design
1.7.4 Warranty of Design

PART 2 PRODUCTS

PART 3 EXECUTION

3.1 CONSTRUCTION AND INSTALLATION

ATTACHMENTS:

Ground Penetrating Radar Report

-- End of Section Table of Contents --

THIS PAGE INTENTIONALLY LEFT BLANK

SECTION 03 01 00.01 28

CONCRETE SECTION ENLARGEMENT

PART 1 GENERAL

1.1 DESCRIPTION OF WORK

This specification contains the requirements for Contractor design of a concrete section enlargement using Form and Pump Placement technique for the McNary Powerhouse Intake Deck Concrete Beam Rehabilitation.

The following specification sections contain additional requirements for the concrete section enlargement items being designed by the Contractor:

SECTION 03 01 00.02 28 FORM AND PUMP PLACEMENT
SECTION 03 30 00.00 28 SELF CONSOLIDATING CONCRETE (SCC)
SECTION 03 60 00.01 28 CONCRETE DRILLING AND PATCHING

The contract drawings indicate the general arrangement and outline of the concrete beams and intake deck features. The contract drawings are based on information from the resource drawings and limited field verification of critical dimensions. These plans shall not be used for fabrication or construction in the field. The Contractor shall field verify all measurements at the site in order to complete the design of the beam repairs.

Concrete section enlargement must be designed, detailed, and constructed complete per the design of record. The Contractor must furnish the detailed design conforming with the design criteria and other requirements specified herein and on the drawings.

1.2 REFERENCES

The publications listed below form a part of this specification to the extent referenced. The publications are referred to within the text by the basic designation only.

AMERICAN CONCRETE INSTITUTE (ACI)

ACI 117	(2010; Errata 2011) Specifications for Tolerances for Concrete Construction and Materials and Commentary
ACI 237R	(2007) Self-Consolidating Concrete
ACI 318	(2019) Building Code Requirements for Structural Concrete (ACI 318-19) and Commentary (ACI 318R-19)
ACI 347R	(2014; Errata 1 2017) Guide to Formwork for Concrete
ACI 546R	(2014) Concrete Repair Guide
ACI RAP-5	(2009) Surface Repair Using Form-and-Pump Techniques

APA - THE ENGINEERED WOOD ASSOCIATION (APA)

APA	(2012) Concrete Forming: Design and Construction Guide

INTERNATIONAL CONCRETE REPAIR INSTITUTE (ICRI)

ICRI 210.3R	(2013) Guide for Using In-Situ Tensile Pulloff tests to Evaluate Bond of Concrete Surface Materials
ICRI 310.1R	Guideline for Surface Preparation for the Repair of Deteriorated Concrete Resulting from Reinforcing Steel Corrosion.
ICRI 310.2R	(2013) Selecting and Specifying Concrete Surface Preparation for Sealers, Coatings, Polymer Overlays, and Concrete Repair
ICRI 310.3	(2014) Guideline for the Preparation of Concrete Surfaces for Repair Using Hydrodemolition Methods

1.3 SUBMITTALS

Review notations following the Submittal titles indicate the SUBMITTAL CLASSIFICATION (G, I, D, C, R, A), followed by the REVIEWING AUTHORITY. See SECTION 01 33 00 SUBMITTAL PROCEDURES, paragraphs SUBMITTAL CLASSIFICATION, "Contractor Action Codes", and "Reviewing Authority" for definitions of review notations. Submit in accordance with SECTION 01 33 00 SUBMITTAL PROCEDURES:

SD-05 Design Data

Design Data; G, ST

SD-07 Certificates

Designer of Record Qualifications; G, ST

1.4 DESIGNER OF RECORD QUALIFICATIONS

a. The Contractor shall identify, for approval, the Designer of Record (DOR) responsible for the design. DOR shall be a Civil or Structural Engineer, registered to practice in the United States, and meeting all requirements of this SECTION.

b. All computations and drawings submitted as part of the concrete section enlargement must be stamped and signed by the DOR, who has either done the design himself/herself or supervised and reviewed work if done by other engineers. The DOR must submit a minimum of four (4) project examples that were successfully completed in the last ten (10) years of relevant experience in designing concrete section enlargement to achieve additional shear, flexural, and axial capacity.

c. Submit Designer of Record Qualifications including: resume demonstrating the minimum project examples, name of firm(s) the engineer was employed by, name of project(s) they worked on, contract

number, project location, date of design or construction completion, contract or project point of contact with contact information (address, phone number, e-mail), and describe relevant experience. The DOR must remain certified for the duration of this contract. Certifications scheduled to expire during the contract performance period must be renewed and submitted to the Contracting Officer prior to expiration.

1.5 DESIGN STANDARDS

1.5.1 General Requirements

The existing shear capacity has been determined based on the As-Constructed drawings for the McNary Powerhouse Intake Deck. The Government has performed Ground Penetrating Radar (GPR) on six (6) concrete beams. Results of the beam scans are provided in the attached Ground Penetrating Radar Report. This is a representation of the beam reinforcing; however, this may not be accurate for every beam. DOR shall use the Ground Penetrating Radar Report and As-Constructed drawings for their design. DOR shall provide a revised design solution for any beams that are found to have less reinforcing than shown on As-Constructed drawings. Refer to SECTION 03 01 00.02 28 FORM AND PUMP PLACEMENT, paragraph "Ground Penetrating Radar (GPR) Scanning" for additional requirements.

The Contractor's design shall provide an increased shear capacity to the intake deck concrete beams. For all structural items designed as part of this contract, submit design data as required in paragraph "SUBMISSION OF DESIGN DATA". The "Design Drawings" must be modeled on the contract drawings and contain full construction detail in conformance with the requirements of the plans and specifications. The drawings must be provided in Record format after work is complete in accordance with 01 78 00.00 28 CLOSEOUT SUBMITTALS.

1.5.2 Structural Design Requirements

The upstream concrete beam, supporting the gantry crane rail, is the controlling structural support for the crane loading on the intake deck. The concrete beam has been evaluated using Load Resistance Factor Design (LRFD). Codes and standards to be referenced in the design calculations include but are not limited to: ACI 318, ACI 117, ACI 237R, ACI 347R, ACI 546R, ACI RAP-5, ICRI 210.3R, ICRI 310.1R, ICRI 310.2R, ICRI 310.3, APA.

1.5.2.1 General Design Requirements

a. 48 beams require repair and increased strength.
b. Design shall increase shear capacity.
c. Design shall incorporate flexural reinforcing and side reinforcing.

1.5.2.2 Analysis Simplifications

The following simplifications are conservative. The DOR shall submit all analysis assumptions for review and approval in the design calculations prior to finalizing design.

a. Beams are analyzed as simple spans, fixed at each end.
b. Rigidity of intake deck slab is fixed over piers and walls; however, it is not considered in the reduction of loading to beam.
c. Beam flanges are not considered for concrete shear capacity, Vc.

1.5.2.3 Existing Concrete Beam Properties

Concrete Compressive Strength, F'c:	3,000 psi
Steel Yield Strength, Fy:	40,000 psi
Beam Span:	Simple
Beam End Conditions:	Fixed
Beam Span Length:	20 ft
Beam Effective Depth, d:	50 in
Beam Width:	36 in

1.5.2.4 Existing Shear Capacity, Phi*Vn

DOR shall use the existing shear capacity values that have been calculated in accordance with ACI 318. Existing shear capacities are based on shear stirrup spacing as shown on the Resource Drawings.

a. Shear stirrups spaced at 5" oc: 412 kips
b. Shear stirrups spaced at 6" oc: 368 kips
c. Shear stirrups spaced at 8" oc: 313 kips
d. Shear stirrups spaced at 12" oc: 258 kips
e. Shear stirrups spaced at 20" oc: 214 kips
f. Shear stirrups spaced at 36" oc: 74 kips

1.5.2.5 Factored Shear Demand, Vu

DOR shall design a system to increase the concrete beam capacity in accordance with ACI 318 using the following Factored Shear demand loading:

a. Factored shear demand from 0'-0" to 1'-0": 600 kips
b. Factored shear demand from 1'-0" to 2'-0": 570 kips
c. Factored shear demand from 2'-0" to 3'-0": 540 kips
d. Factored shear demand from 3'-0" to 4'-0": 510 kips
e. Factored shear demand from 4'-0" to 5'-0": 470 kips
f. Factored shear demand from 5'-0" to 6'-0": 430 kips
g. Factored shear demand from 6'-0" to 7'-0": 380 kips
h. Factored shear demand from 7'-0" to 8'-0": 340 kips
i. Factored shear demand from 8'-0" to 9'-0": 290 kips
j. Factored shear demand from 9'-0" to 10'-0": 250 kips
k. Shear capacity values are mirrored about the beam center line.

The factored shear demand listed above does not consider the self-weight of the concrete section enlargement. DOR shall account for the self-weight of the section enlargement and increase capacity to include the factored shear demand listed above and self-weight of concrete section enlargement.

1.5.2.6 Embedded Items

1.5.2.6.1 Embed Plates

DOR shall incorporate the Cast-In-Place (CIP) embed plates into the design. Provide details on removal, excavation, roughening, or abandonment in place in "Detailed Drawings".

1.5.2.6.2 Crane Rail Drain Pipes

DOR shall incorporate the Cast-In-Place (CIP) drain pipes from the crane rail above. Drains shall be extended through the new enlarged section to maintain drainage. Provide details on extensions in "Detailed Drawings".

1.6 SUBMISSION OF DESIGN DATA

Design Data must be approved prior to procurement, fabrication, and installation of associated materials and equipment. Design Data shall be submitted within 30 calendar days of NTP. Design data submittal must include each of the following items:

a) Drawing Index
b) Bill of Materials
c) Design Drawings
d) Product Data
e) Design Calculations
f) Seal on Documents

1.6.1 Drawing Index

Contractor shall submit an index for each drawing set submitted. The index must be part of the accompanying drawing set, having a title block, border, and sheet number compatible with the drawing set.

1.6.2 Bill of Materials

Bill of materials or parts lists must be included on the drawings, consisting of total quantity, manufacturer, part number, and weight of item or equipment; or bill of materials must be drawings that are part of the drawing set, having a title block, border, and sheet number compatible with the drawing set. Bill of materials shall provide a cross reference between manufacturer data and shop drawings.

1.6.3 Design Drawings

Submit drawings which contain full construction detail in conformance with the requirements of the plans and specifications. Drawings must be easily readable in full-size (ANSI D) format. Show plan and elevation views indicating locations and layout of all concrete section enlargement. At a minimum, the Design Drawings shall include the following: longitudinal reinforcing, transverse reinforcing, reinforcing dowels, mechanical splices, drain hole extensions, surface roughness, and all other items necessary for construction of section enlargement. Design Drawings submittal shall meet requirements of SECTION 01 33 00 SUBMITTAL PROCEDURES, paragraph "CAD File Requirements for Design Drawings Created After Award".

1.6.4 Product Data

Submit complete descriptive literature and specifications of each product, or system of products, for the job with original, legible manufacturer's cut sheets and data sheets to clearly indicate physical construction, operation, mechanical and structural characteristics and associated hardware, as applicable. For sheets with extraneous data, clearly indicate which data applies by crossing out materials not used, circling the correct options, etc. Include manufacturer's catalog numbers and designations, and clearly cross-reference with detail drawings as appropriate. Product data submitted for approval must clearly show conformance with these specifications, including but not limited to product manufacturers' declarations of conformance to applicable technical standards. Product data must be approved prior to procurement of associated materials and equipment.

1.6.5 Design Calculations

Submit design calculations for concrete section enlargement provided as per this contract for approval. Submit design calculations concurrently with the design drawings and product data specific to the designed section enlargement. Calculations shall include a list of assumptions made, a list of all codes and standards referenced, equations, specified design parameters, limits, factors of safety, sources of values used, free body diagrams and/or sketches of each load case.

1.6.6 Seal on Documents

All final DOR's design drawings, calculations, and other design information to include conformance of formwork system, post-installed epoxy adhesive, formwork shop drawings, and reinforcing shop drawings, shall be signed, dated, and bear the seal of the DOR. Application of the electronic seal and signature accepts responsibility for the work shown thereon.

1.7 CONTRACTOR ROLES AND RESPONSIBILITIES DURING DESIGN

1.7.1 Responsibility of the Contractor for Design

The Contractor shall be responsible for the professional quality, technical accuracy, and the coordination of all designs, drawings, specifications, and other non-construction services furnished by the Contractor under this contract. The Contractor shall, without additional compensation, correct or revise any errors or deficiency in its designs, drawings, specifications, and other non-construction services and perform any necessary rework or modifications, including any damage to real or personal property, resulting from the design error or omission.

a. The standard of care for all design services performed under this agreement shall be the care and skill ordinarily used by members of the architectural or engineering professions practicing under similar conditions at the same time and locality. Notwithstanding the above, in the event that the contract specifies that portions of the Work be performed in accordance with a performance standard, the design services shall be performed so as to achieve such standards.

b. Neither the Government's review, approval or acceptance of, nor payment for, the services required under this contract, shall be construed to operate as a waiver of any rights under this contract or of any cause of action arising out of the performance of this contract. The Contractor shall be and remain liable to the Government in accordance with applicable law for all damages to the Government caused by the Contractor's negligent performance of any of these services furnished under this contract.

c. The rights and remedies of the Government provided for under this contract are in addition to any other rights and remedies provided by law.

d. If the Contractor is comprised of more than one legal entity, each entity shall be jointly and severally liable hereunder.

1.7.2 Contractor's Role during the Design Process

The Contractor's construction management key personnel shall be actively involved during the design process to effectively integrate the design and construction requirements of this contract. In addition to the typical required construction activities, the Contractor's involvement includes, but is not limited to actions such as: integrating the design schedule into the Master Schedule to maximize the effectiveness of fast-tracking design and construction (within the limits allowed in the contract), ensuring constructability and economy of the design, integrating the shop drawing and installation drawing process into the design, executing the material and equipment acquisition programs to meet critical schedules, effectively interfacing the design and construction quality control (QC) management programs with the design QC program, and maintaining and providing the design team with accurate, up-to-date redline and as-built documentation for eventual submission as Record Drawings. The Contractor shall require and manage the active involvement of key trade subcontractors in the above activities.

1.7.3 Deviating from the Accepted Design

The Contractor must obtain the approval of the Designer of Record and the Government's concurrence, in the form of supplemental agreement to the contract, for any Contractor-proposed revision to the professionally stamped-and-sealed and Government-reviewed final design that has been released for Construction before proceeding with the revision. The Government reserves the right to disapprove such a revision.

a. The Government reserves the right to non-concur with any revision to the final design that has been released for construction, including those which may impact furniture, furnishings, equipment selections or operations decisions that were made, based on the reviewed design.

b. Any Contractor-proposed revision to the design which deviates from the contract requirements (i.e., the Request for Proposal (RFP) and the accepted proposal), will require a bilateral modification (e.g. supplemental agreement) to the contract before any work commences.

c. Unless the Government initiates a change to the contract requirements, or the Government determines that the Government furnished design criteria are incorrect and must be revised, any Contractor initiated proposed change to the contract requirements, which results in additional cost, shall strictly be at the Contractor's expense.

d. The Contractor shall track all approved revisions to the reviewed and accepted design and shall incorporate them into the as-built design documentation, in accordance with agreed procedures. The Designer of Record shall document its professional concurrence on the as-builts for any revisions in the stamped and sealed drawings and specifications.

1.7.4 Warranty of Design

The Contractor warrants that the design shall be performed in accordance with the contract requirements. Design and design related construction not conforming to the Contract requirements shall be corrected at no additional cost to the Government. The standard of care for design is defined in paragraph "Responsibility of the Contractor for Design" in this

SECTION.

a. The period of this warranty shall commence upon final completion and the Government's acceptance of the work, or in the case of the Government's beneficial occupancy of all or part of the work for its convenience, prior to final completion and acceptance, at the time of such occupancy.

b. This design warranty shall be effective from the above event through the Statute of Limitations and Statute of Repose or host nation law, as applicable to the place of construction performance.

c. The rights and remedies of the Government provided for under this requirement are in addition to any other rights and remedies provided in this contract or by law.

PART 2 PRODUCTS

Refer to products listed in approved design and the requirements of SECTION 03 01 00.01 28 FORM AND PUMP PLACEMENT, and SECTION 03 30 00.00 28 SELF-CONSOLIDATING CONCRETE (SCC).

PART 3 EXECUTION

3.1 CONSTRUCTION AND INSTALLATION

Perform all work, provide all materials, and qualified site supervision required to execute the approved design to install the concrete section enlargement per DOR Detailed Drawings, SECTION 03 01 00.02 28 FORM AND PUMP PLACEMENT and SECTION 03 30 00.00 28 SELF-CONSOLIDATING CONCRETE (SCC) .

-- End of Section --

DEPARTMENT OF THE ARMY
U.S. ARMY CORPS OF ENGINEERS, WALLA WALLA DISTRICT
201 NORTH 3RD AVENUE
WALLA WALLA, WA 99362-1876

CENWW-ECD-S 25 January 2021

TRIP REPORT

SUBJECT: McNary Dam, Powerhouse Intake Deck Concrete Beam Ground Penetrating Radar (GPR) Scanning, Columbia River, Oregon State

1. Inspection Purpose. The primary purpose of this trip was to scan the intake deck concrete support beams using GPR to confirm the reinforcement is consistent with the steel reinforcing details from the historical contract drawings. Knowing the location and number of reinforcing bars existing, specifically shear stirrups, is crucial in determining how structural design will move forward with the beam rehabilitation effort.

   This document serves to detail the inspection and draw conclusions based on the findings. The following paragraphs herein cover the Attendees, Project Background, Site Setting, Conclusions, and Photos.

2. Attendees. The following personnel were present at the time of inspection:

Attendee Name	Job Title	Section
Julio Morelos	Structural Engineer	NWW, Structural Design Section
Justin Knight	Structural Engineer	NWW, Structural Design Section
Martin Ahman Jr	Mechanical Engineer	MNA, Engineering Tech Section
Kevin Gregg	GPR Technician	Geophysical Survey LLC

3. Project Background. The McNary intake deck beams run directly below and parallel to the Crane 5 gantry rail. Structural design has been working on analyzing the concrete support beams below the intake deck in preparation for a replacement of Crane 5. Concerns have risen regarding the beams' shear capacity due to an error in historical loading calculations, as well as visible cracking in the beams. In addition, the existing 36inch shear stirrup spacing at midspan is outside the American Concrete Institute (ACI) code maximum spacing of 24 inches. Verifying the flexural and shear reinforcing shown on As-Constructed drawings is crucial to confirming the design assumption to establish the existing capacity. Once the existing capacity is confirmed, a design can be finalized to repair and increase capacity for the existing beams.

4. Site Setting. The inspection took place below the McNary intake deck in 9 slots: 1B, 4A, 4B, 4C, 7B, 11B, 12B, 13B and 14B. Access for 6 of the beams was provided by a boom crane rigged to a man basket. The south upstream face of beams 1B, 7B, and 14B were scanned from the stair landings in those slots. The

inspection started around 0800 hours and lasted until around 1600 hours on January 20th and 21st, 2021. The weather was overcast and slightly windy with temperatures around 40 degrees F on 20 Jan and was partly rainy with temperatures around 40 degrees F on 21 Jan.

5. Conclusions/Findings. Based on the findings from the inspection, the existing reinforcement spacing is consistent with the As-Constructed contract plans and details. The spacings of the reinforcing steel detected by the GPR scanner did not differ from the contract drawings by more than 1 or 2 inches aside from a few outliers. The contract drawings show 11 stirrups from the north pier wall to the center of the beam and 11 stirrups from the south pier wall to the center of the beam with a stirrup at center span for a total of 23 stirrups. GPR scans of beams 4B and 4C showed this to be true. GPR scans of beams 4A, 11B, 12B, and 13B showed to have 10 shear stirrups with the missing 11th being the stirrup shown in the drawings to be 2 inches from the pier wall. It is assumed these shear stirrups are present but cannot be picked up by the GPR scanner due to their proximity to the pier wall. GPR scans of beams 1B, 7B, and 14 B showed reinforcement consistent with contract drawings for the locations that were accessible to scan. Two layers of flexural steel comprised of 6 bars each were seen with the GPR scanner in each of the beams that had access to scan the bottom. The flexural steel found is consistent with that of the historical reinforcement details in the contract drawings, having close to 6 inch on-center spacing between each bar, plus or minus 2 inches.

   Several of the beams have two separate drain holes located at center span towards the top of the beam. One of the holes is a smooth-walled drilled hole with no lining and appears to be the new drain hole for the intake deck. The other smaller drain hole appears to be the original drain hole. Most of the old drain holes are lined with a steel sleeve.

Encl
Photos
Reinforcing Spacing

Photo 1: 4A South Upstream Face

Photo 2: 4A North Upstream Face

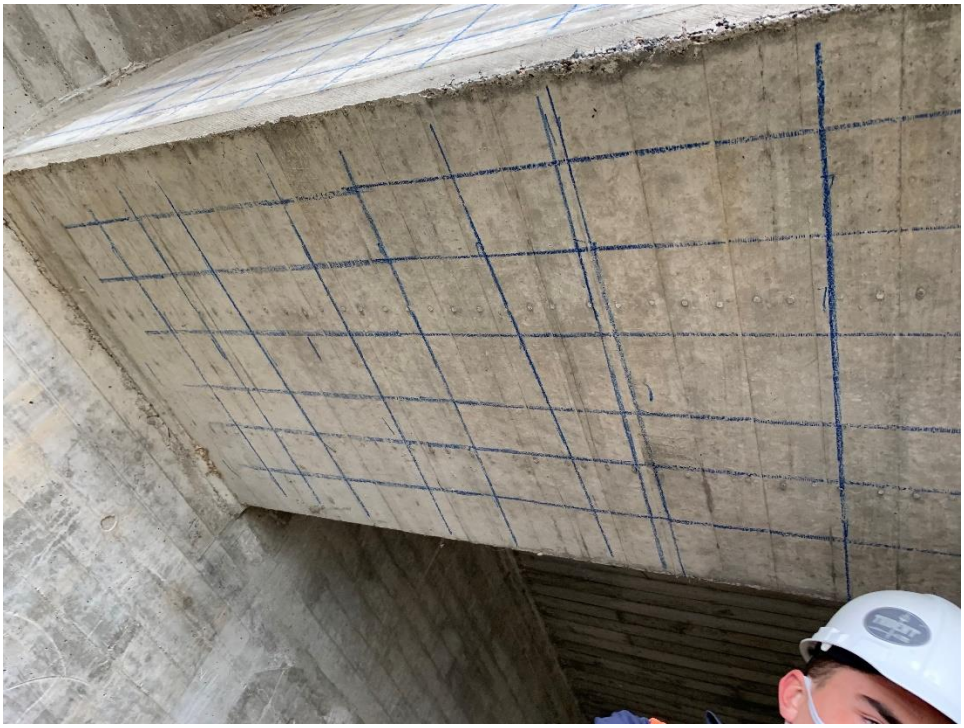

Photo 3: 4A Bottom

Photo 4: 4B South Upstream Face

Photo 5: 4B North Upstream Face

Photo 6: 4B South Downstream Face

Photo 7: 4B North Downstream Face

Photo 8: 4B Bottom

Photo 9: 4C South Upstream Face

Photo 10: 4C North Upstream Face

Photo 11: 4C South Downstream Face

Photo 12: 4C North Downstream Face

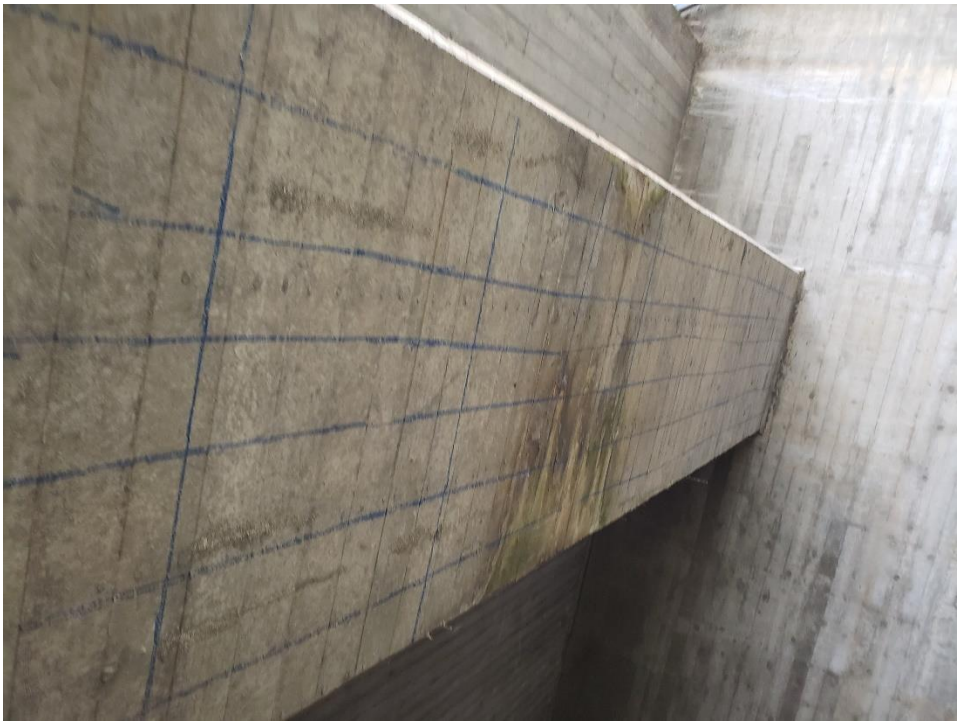

Photo 13: 4C Bottom

Photo 14: 11B South Upstream Face

Photo 15: 11B North Upstream Face

Photo 16: 11B South Downstream Face

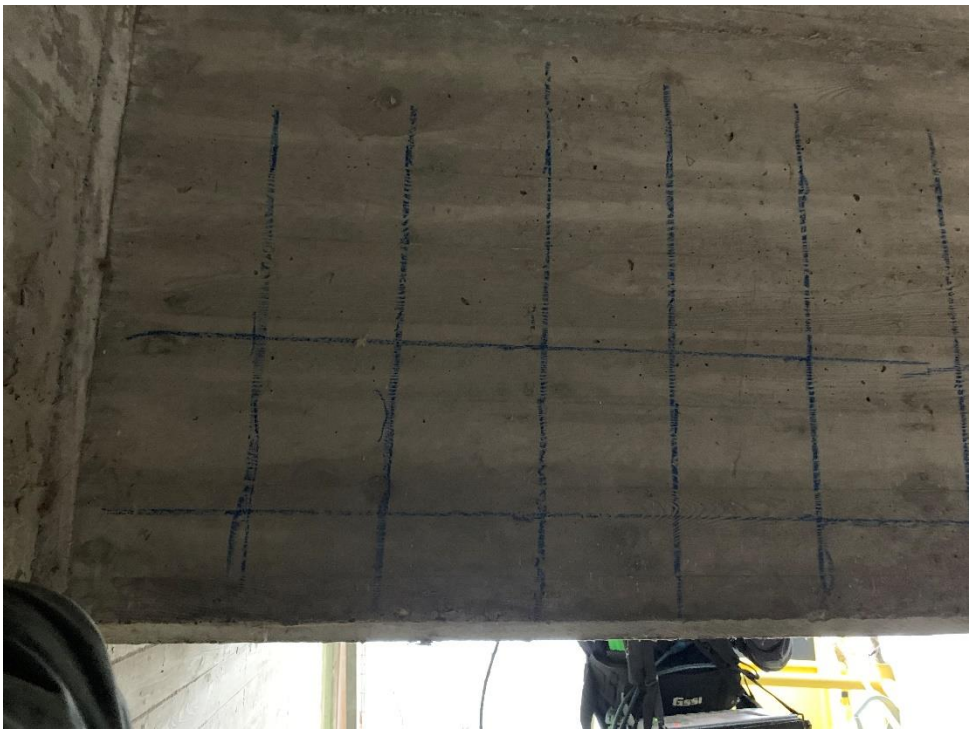

Photo 17: 11B North Downstream Face

Photo 18: 11B Bottom

Photo 19: 12B South Upstream Face

Photo 20: 12B North Upstream Face

Photo 21: 12B South Downstream Face

Photo 22: 12B North Downstream Face

Photo 23: 12B Bottom

Photo 24: 13B South Upstream Face

Photo 25: 13B North Upstream Face

Photo 26: 13B South Downstream Face

Photo 27: 13B North Downstream Face

Photo 28: 13B Bottom

Photo 29: 1B South Upstream Face

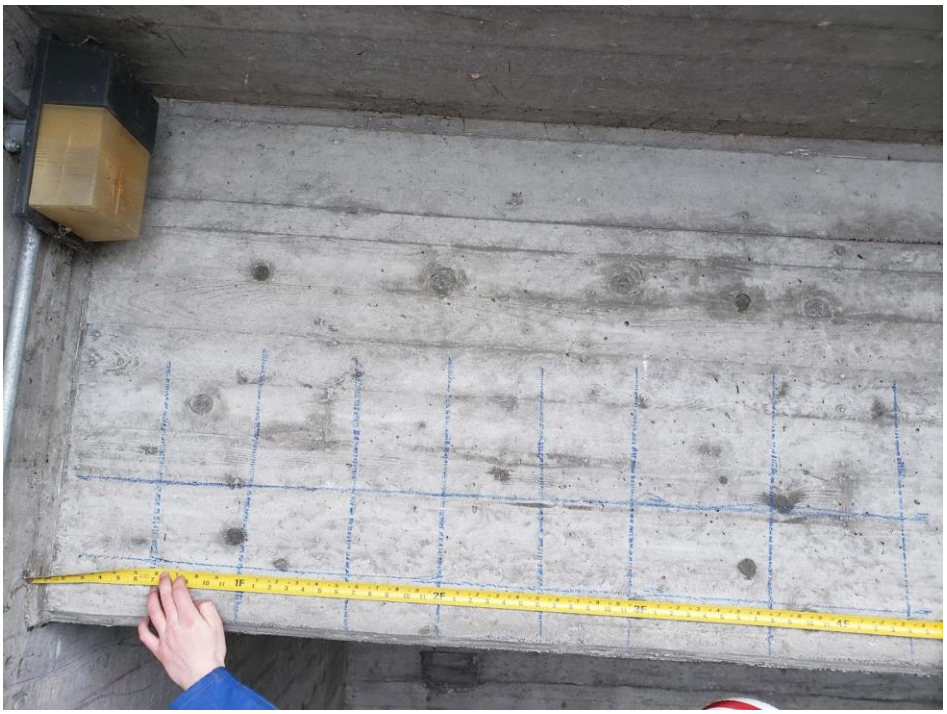

Photo 30: 7B South Upstream Face

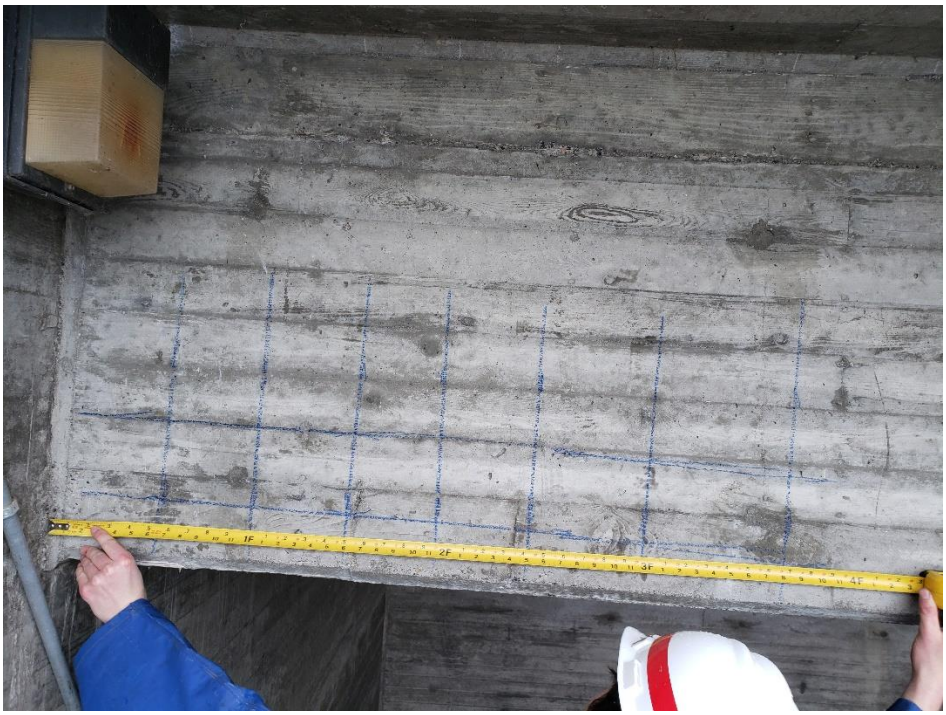

Photo 31: 14B South Upstream Face

DEPARTMENT OF THE ARMY

U.S. ARMY CORPS OF ENGINEERS, WALLA WALLA DISTRICT
201 NORTH 3RD AVENUE
WALLA WALLA, WA 99362-1876

BEAM	4A		1	2	3	4	5	6	7	8	9	10	11
Total Spacing (Pier Face)	South	0	0	7	12	18	25	31	36	43	52	64	82
OC Spacing		0	0	7	5	6	7	6	5	7	9	12	18

11	10	9	8	7	6	5	4	3	2	1	
84	63	53	42	36	29	24	19	11	8	3	North
21	10	11	6	7	5	5	8	3	5	3	

BOTTOM REINFORCING US (FACE OF BEAM)

South	Total	OC
	11	7
	4	4
	0	0

Midspan	Total	OC
	11	7
	4	4
		0

North	Total	OC
	11	7
	4	4
		0

BOTTOM REINFORCING (US TO DS)

South	Total	OC
	31	4
	27	5.5
	21.5	5
	16.5	4.5
	12	6
	6	6

Midspan	Total	OC
	31	4
	27	5.5
	21.5	5
	16.5	4.5
	12	6
	6	6

North	Total	OC
	31	4
	27	5.5
	21.5	5
	16.5	4.5
	12	6
	6	6

BOTTOM REINFORCING DS (FACE OF BEAM)

South	Total	OC
		0
		0
		0

Midspan	Total	OC
		0
		0
		0

North	Total	OC
		0
		0
		0

UPSTREAM FACE
SLOT 4A

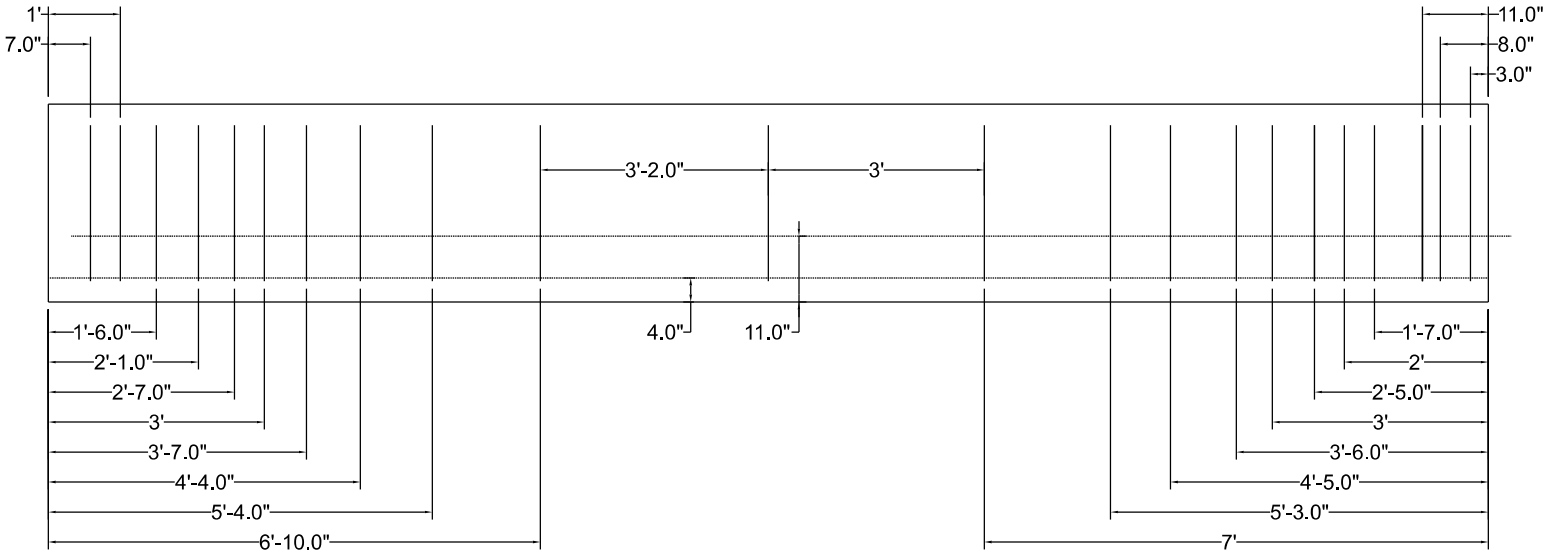

SHEET ID	REVISIONS	WALLA WALLA DISTRICT HEADQUARTERS WALLA WALLA, WASHINGTON MCNARY INTAKE DECK CONCRETE BEAMS BEAM 4A UPSTREAM	DESIGNED BY: J. KNIGHT DRAWN BY: J. KNIGHT CHECKED BY: J. MORELOS SUBMITTED BY: D. FICHERA, P.E. SIZE:
S4AU			

DEPARTMENT OF THE ARMY

U.S. ARMY CORPS OF ENGINEERS, WALLA WALLA DISTRICT
201 NORTH 3RD AVENUE
WALLA WALLA, WA 99362-1876

BEAM	4B		1	2	3	4	5	6	7	8	9	10	11		11	10	9	8	7	6	5	4	3	2	1	
Total Spacing (Pier Face)	South	0	3.5	7.5	12	17.5	24	30	36	43	53	64.5	84		84	65	51	45	35	29	24	18	14	8	3	North
OC Spacing		0	0	7.5	4.5	5.5	6.5	6	6	7	10	11.5	19.5		19	14	6	10	6	5	6	4	6	5	3	

BOTTOM REINFORCING US (FACE OF BEAM)

South	Total	OC
	11.5	7
	4.5	4.5
	0	0

Midspan	Total	OC
	11.5	7
	4.5	4.5
		0

North	Total	OC
	11.5	7
	4.5	4.5
		0

BOTTOM REINFORCING (US TO DS)

South	Total	OC
	30.5	5.5
	25	5
	20	4
	16	4
	12	5
	7	7

Midspan	Total	OC
	30.5	5.5
	25	5
	20	4
	16	4
	12	5
	7	7

North	Total	OC
	30.5	5.5
	25	5
	20	4
	16	4
	12	5
	7	7

BOTTOM REINFORCING DS (FACE OF BEAM)

South	Total	OC
	11	7
	4	4
	0	0

Midspan	Total	OC
	11	7
	4	4
	0	0

North	Total	OC
	11	7
	4	4
	0	0

UPSTREAM FACE
SLOT 4B

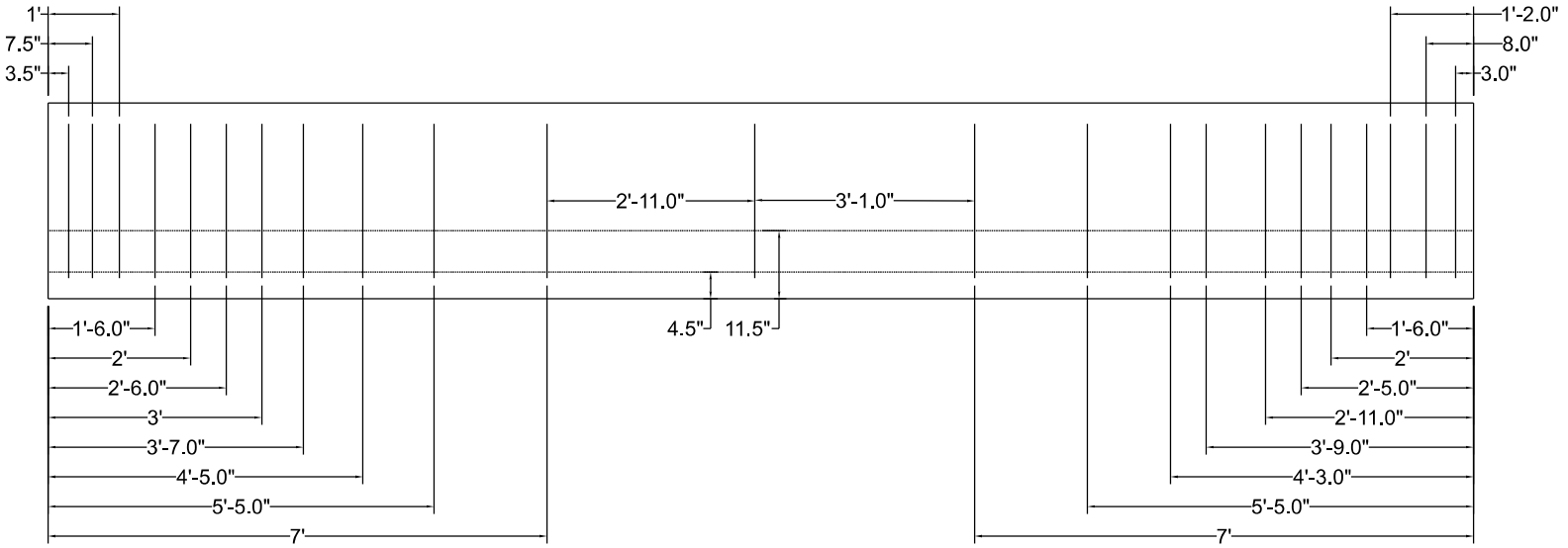

SHEET ID	REVISIONS		DESIGNED BY: J. KNIGHT
S4BU		WALLA WALLA DISTRICT HEADQUARTERS WALLA WALLA, WASHINGTON MCNARY INTAKE DECK CONCRETE BEAMS BEAM 4B UPSTREAM	DRAWN BY: J. KNIGHT
			CHECKED BY: J. MORELOS
			SUBMITTED BY: D. FICHERA, P.E.
			SIZE:

DOWNSTREAM FACE
SLOT 4B

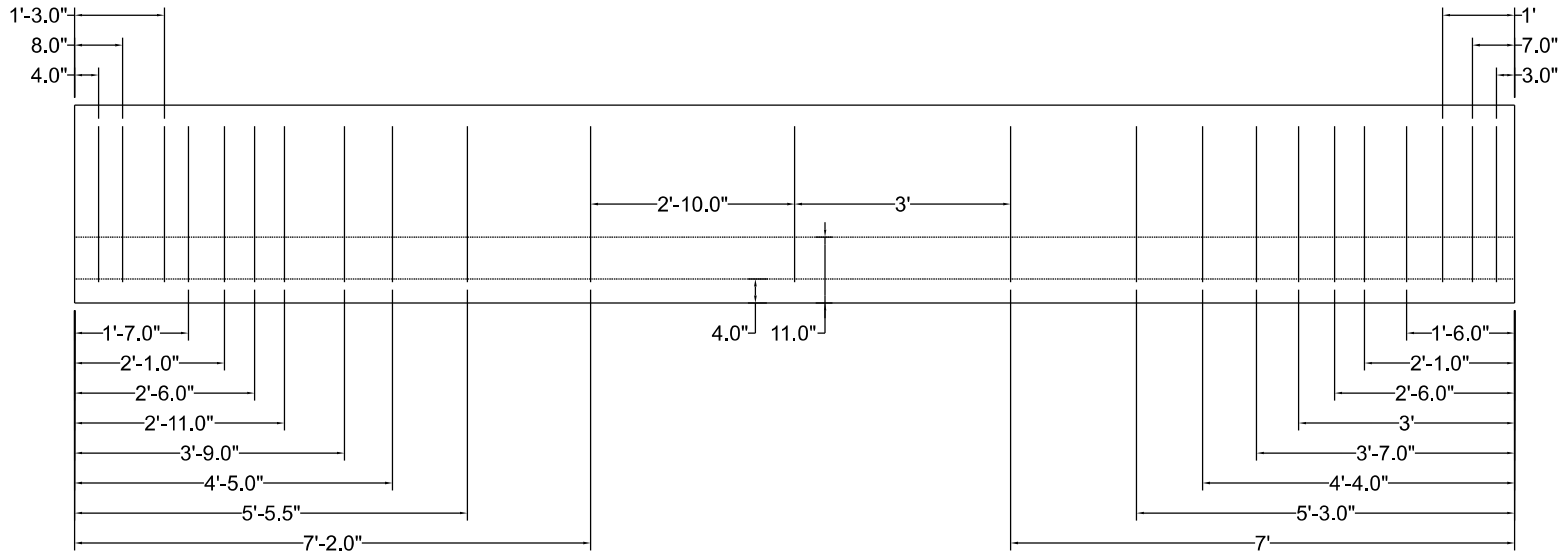

SHEET ID	REVISIONS	WALLA WALLA DISTRICT HEADQUARTERS WALLA WALLA, WASHINGTON MCNARY INTAKE DECK CONCRETE BEAMS BEAM 4B DOWNSTREAM	DESIGNED BY: J. KNIGHT DRAWN BY: J. KNIGHT CHECKED BY: J. MORELOS SUBMITTED BY: D. FICHERA, P.E. SIZE:
S4BD			

DEPARTMENT OF THE ARMY

U.S. ARMY CORPS OF ENGINEERS, WALLA WALLA DISTRICT
201 NORTH 3RD AVENUE
WALLA WALLA, WA 99362-1876

BEAM	4C		1	2	3	4	5	6	7	8	9	10	11		11	10	9	8	7	6	5	4	3	2	1	
Total Spacing (Pier Face)	South	0	3	6	12.5	18	24	29.5	35	44	49	62	83.5		84	64	51.5	43.5	36.5	32	24.5	19.5	12	8	4.5	North
OC Spacing		0	0	6	6.5	5.5	6	5.5	5.5	9	5	13	21.5		20	12.5	8	7	4.5	7.5	5	7.5	4	3.5	4.5	

BOTTOM REINFORCING US (FACE OF BEAM)

South	Total	OC
	11	7
	4	4
	0	0

Midspan	Total	OC
	11	7
	4	4
		0

North	Total	OC
	11	7
	4	4
		0

BOTTOM REINFORCING (US TO DS)

South	Total	OC
	32	6
	26	5
	21	4
	17	4
	13	6
	7	7

Midspan	Total	OC
	32	6
	26	5
	21	4
	17	4
	13	6
	7	7

North	Total	OC
	32	6
	26	5
	21	4
	17	4
	13	6
	7	7

BOTTOM REINFORCING DS (FACE OF BEAM)

South	Total	OC
	11	7
	4	4
	0	0

Midspan	Total	OC
	11	7
	4	4
	0	0

North	Total	OC
	11	7
	4	4
	0	0

UPSTREAM FACE
SLOT 4C

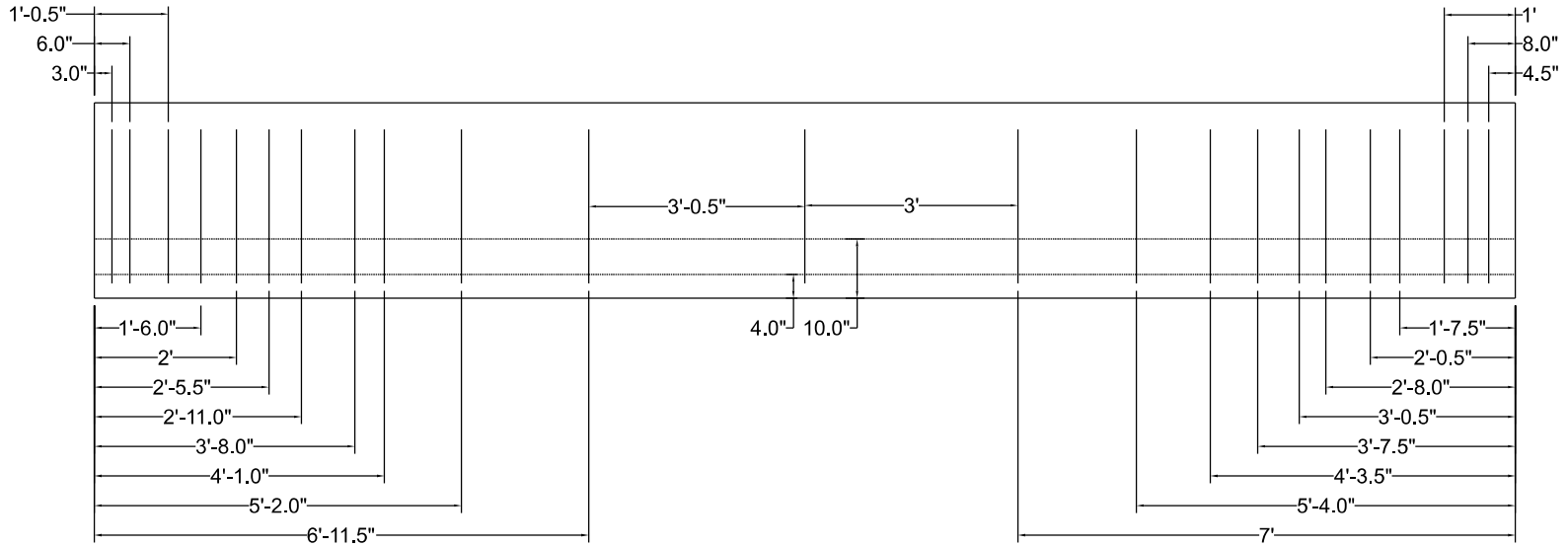

SHEET ID	REVISIONS	WALLA WALLA DISTRICT HEADQUARTERS WALLA WALLA, WASHINGTON MCNARY INTAKE DECK CONCRETE BEAMS BEAM 4C UPSTREAM	DESIGNED BY: J. KNIGHT DRAWN BY: J. KNIGHT CHECKED BY: J. MORELOS SUBMITTED BY: D. FICHERA, P.E. SIZE:
S4CU			

DOWNSTREAM FACE
SLOT 4C

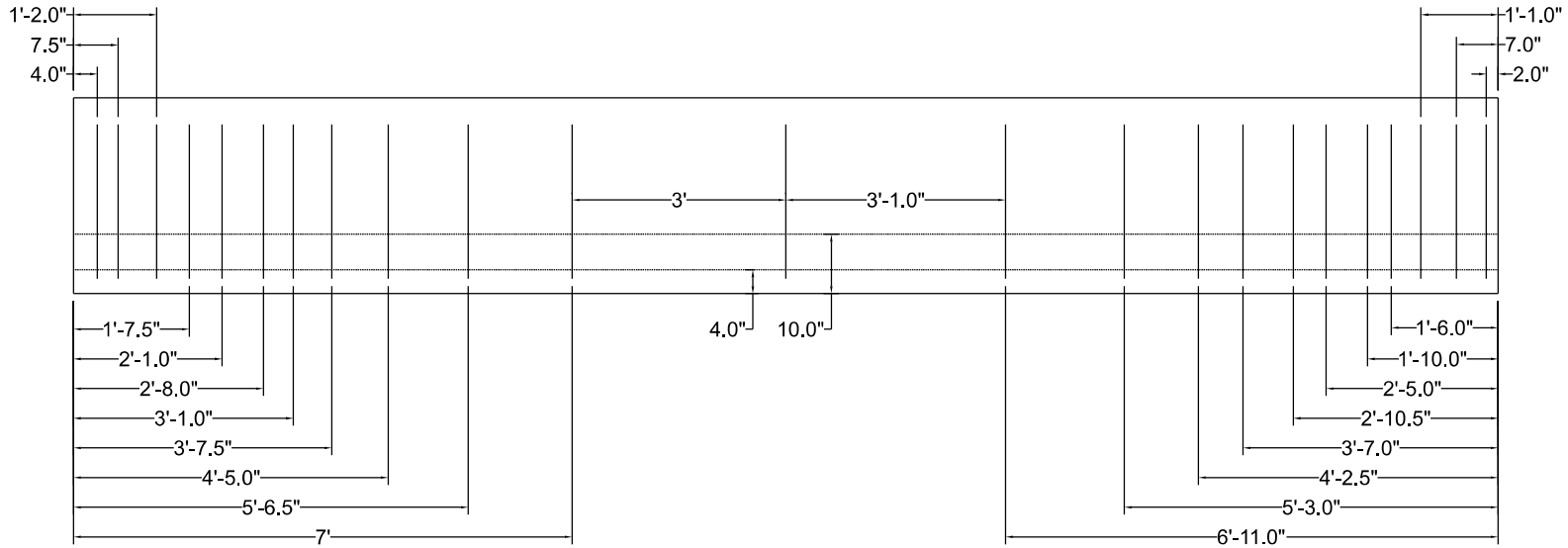

SHEET ID	REVISIONS	WALLA WALLA DISTRICT HEADQUARTERS WALLA WALLA, WASHINGTON MCNARY INTAKE DECK CONCRETE BEAMS BEAM 4C DOWNSTREAM	DESIGNED BY: J. KNIGHT DRAWN BY: J. KNIGHT CHECKED BY: J. MORELOS SUBMITTED BY: D. FICHERA, P.E. SIZE:
S4CD			

DEPARTMENT OF THE ARMY

U.S. ARMY CORPS OF ENGINEERS, WALLA WALLA DISTRICT
201 NORTH 3RD AVENUE
WALLA WALLA, WA 99362-1876

BEAM	11B		1	2	3	4	5	6	7	8	9	10	11		11	10	9	8	7	6	5	4	3	2	1	
Total Spacing (Pier Face)		South	4.5	8	13	19.5	25.5	30.5	36.5	44.5	52.5	66	85		82.5	64	52.5	44	36.5	29.5	24.5	19	12	6.5	0	North
OC Spacing		0	0	8	5	6.5	6	5	6	8	8	13.5	19		18.5	11.5	8.5	7.5	7	5	5.5	7	5.5	6.5	0	

BOTTOM REINFORCING US (FACE OF BEAM)

South	Total	OC
	10.5	6.5
	4	4
	0	0

Midspan	Total	OC
	10.5	6.5
	4	4
		0

North	Total	OC
	10	6
	4	4
		0

BOTTOM REINFORCING (US TO DS)

South	Total	OC
	31	5
	26	4
	22	5
	17	5
	12	5
	7	7

Midspan	Total	OC
	31	5
	26	4
	22	5
	17	5
	12	5
	7	7

North	Total	OC
	31	5
	26	4
	22	5
	17	5
	12	5
	7	7

BOTTOM REINFORCING DS (FACE OF BEAM)

South	Total	OC
	11	7
	4	4
		0

Midspan	Total	OC
	11	7
	4	4
		0

North	Total	OC
	11	7
	4	4
		0

UPSTREAM FACE
SLOT 11B

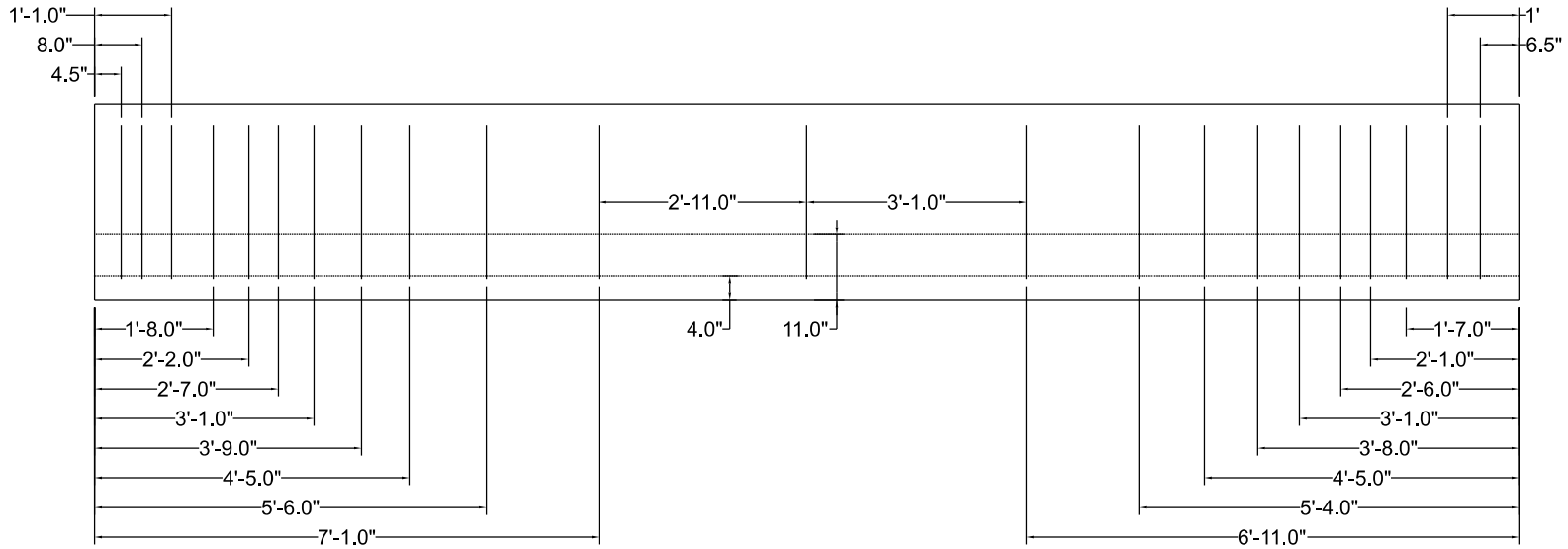

SHEET ID	REVISIONS	WALLA WALLA DISTRICT HEADQUARTERS WALLA WALLA, WASHINGTON MCNARY INTAKE DECK CONCRETE BEAMS BEAM 11B UPSTREAM	DESIGNED BY: J. KNIGHT DRAWN BY: J. KNIGHT CHECKED BY: J. MORELOS SUBMITTED BY: D. FICHERA, P.E. SIZE:
S11BU			

DOWNSTREAM FACE
SLOT 11B

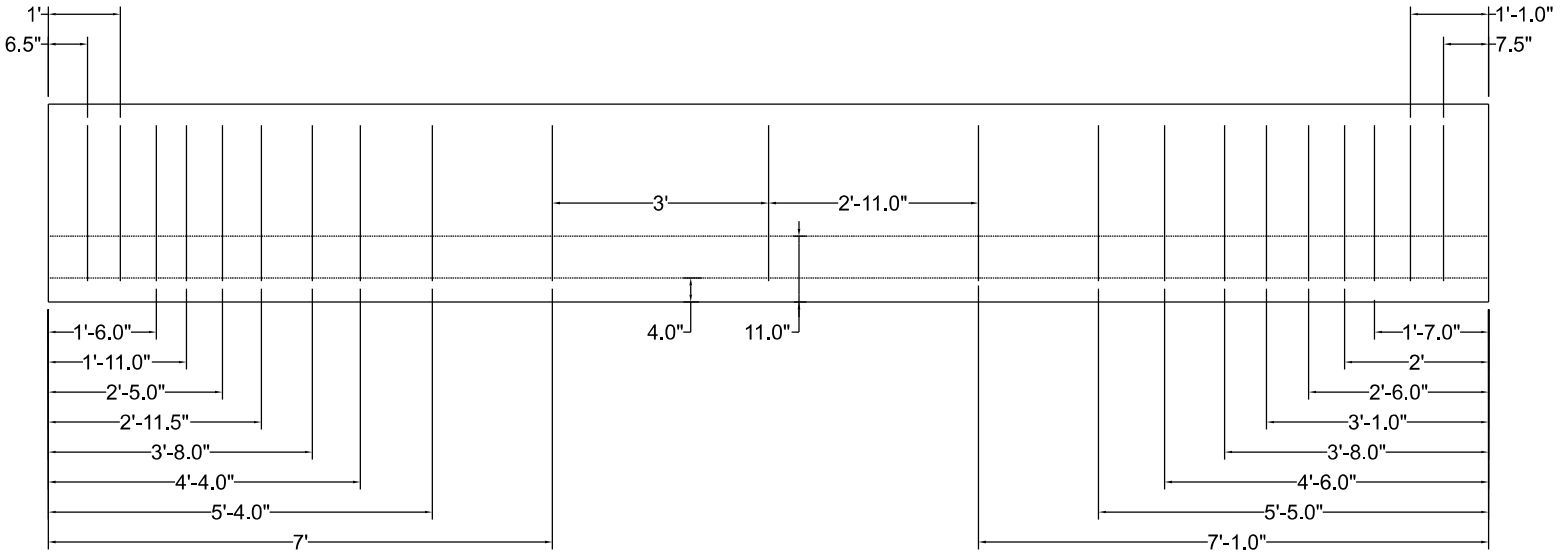

SHEET ID	REVISIONS	WALLA WALLA DISTRICT HEADQUARTERS WALLA WALLA, WASHINGTON MCNARY INTAKE DECK CONCRETE BEAMS BEAM 11B DOWNSTREAM	DESIGNED BY: J. KNIGHT DRAWN BY: J. KNIGHT CHECKED BY: J. MORELOS SUBMITTED BY: D. FICHERA, P.E. SIZE:
S11BD			

DEPARTMENT OF THE ARMY

U.S. ARMY CORPS OF ENGINEERS, WALLA WALLA DISTRICT
201 NORTH 3RD AVENUE
WALLA WALLA, WA 99362-1876

BEAM	12B		1	2	3	4	5	6	7	8	9	10	11		11	10	9	8	7	6	5	4	3	2	1	
Total Spacing (Pier Face)	South	0	0	7	13	18	24	29.5	36	44	54	65	83.5		84	63	53	45	37	31	24.5	18.5	13	8	0	North
OC Spacing		0	0	7	6	5	6	5.5	6.5	8	10	11	18.5		21	10	8	8	6	6.5	6	5.5	5	8	0	

BOTTOM REINFORCING US (FACE OF BEAM)

South	Total	OC
	9	5
	4	4
	0	0

Midspan	Total	OC
	9	5
	4	4
		0

North	Total	OC
	9.5	5.5
	4	4
		0

BOTTOM REINFORCING (US TO DS)

South	Total	OC
	31	4
	27	5
	22	5
	17	6
	11	5
	6	6

Midspan	Total	OC
	31	4
	27	5
	22	5
	17	6
	11	5
	6	6

North	Total	OC
	31	4
	27	5
	22	5
	17	6
	11	5
	6	6

BOTTOM REINFORCING DS (FACE OF BEAM)

South	Total	OC
		0
		0
		0

Midspan	Total	OC
		0
		0
		0

North	Total	OC
		0
		0
		0

UPSTREAM FACE
SLOT 12B

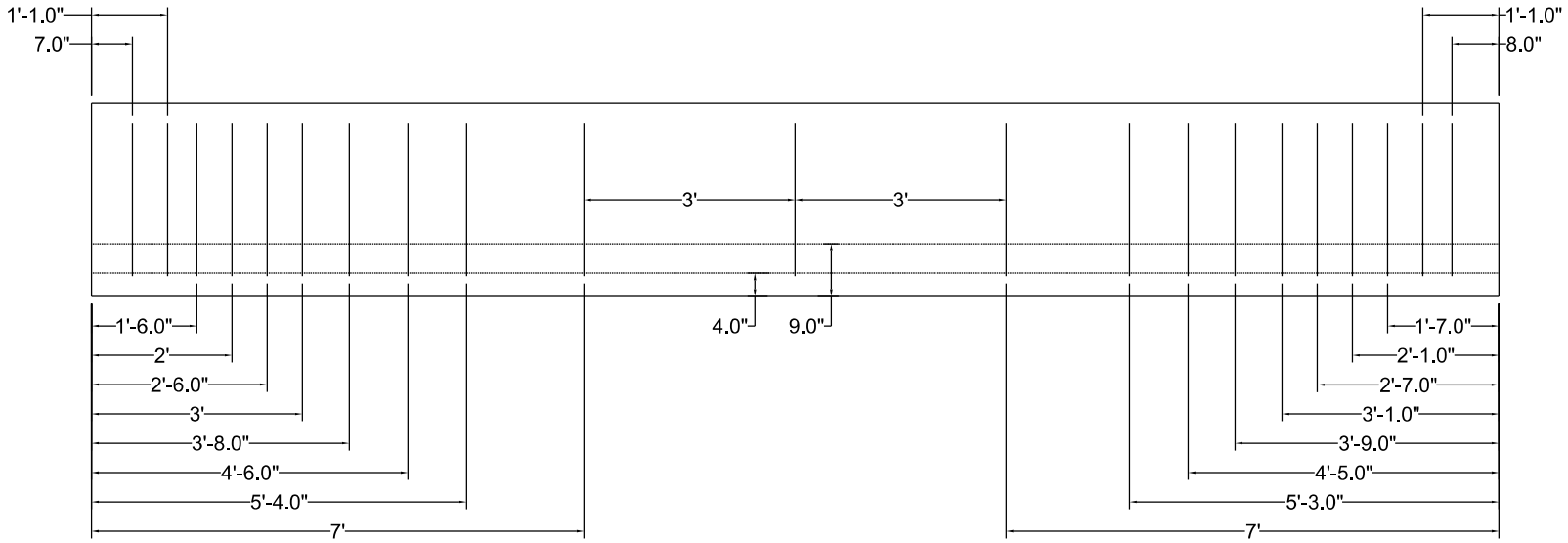

SHEET ID	REVISIONS	WALLA WALLA DISTRICT HEADQUARTERS WALLA WALLA, WASHINGTON MCNARY INTAKE DECK CONCRETE BEAMS BEAM 12B UPSTREAM	DESIGNED BY: J. KNIGHT DRAWN BY: J. KNIGHT CHECKED BY: J. MORELOS SUBMITTED BY: D. FICHERA, P.E. SIZE:
S12BU			

DOWNSTREAM FACE
SLOT 12B

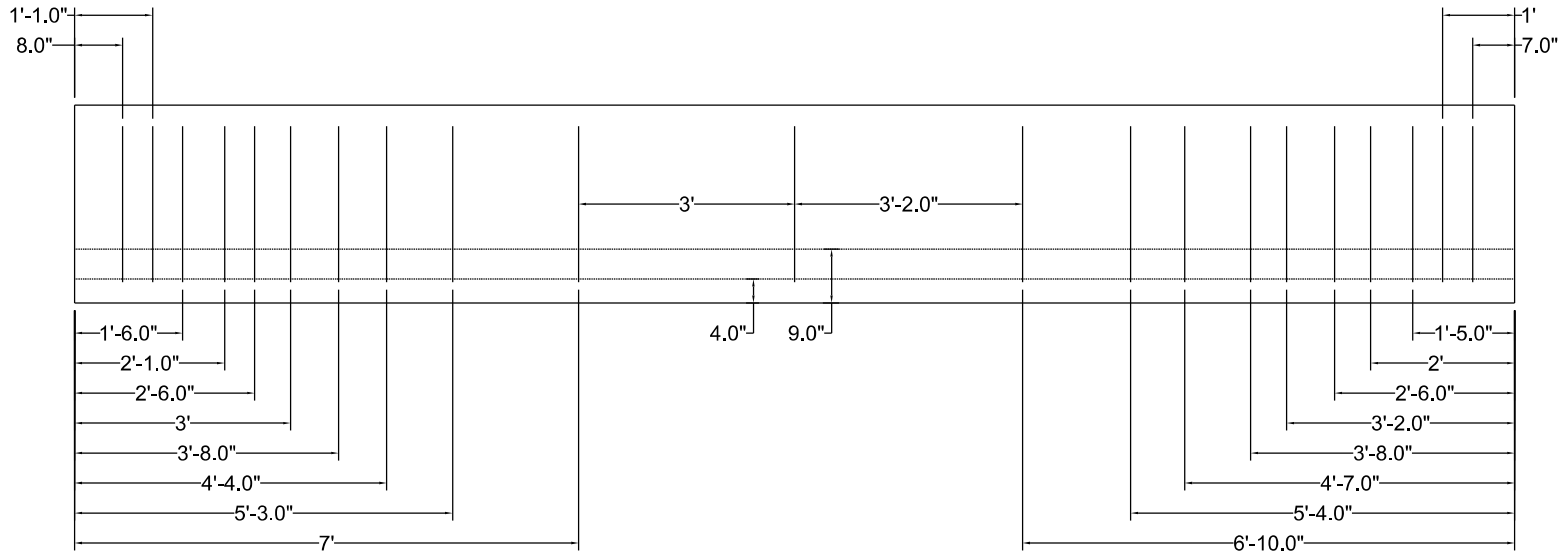

SHEET ID	REVISIONS	WALLA WALLA DISTRICT HEADQUARTERS WALLA WALLA, WASHINGTON MCNARY INTAKE DECK CONCRETE BEAMS BEAM 12B DOWNSTREAM	DESIGNED BY: J. KNIGHT DRAWN BY: J. KNIGHT CHECKED BY: J. MORELOS SUBMITTED BY: D. FICHERA, P.E. SIZE:
S12BD			

BEAM	13B		1	2	3	4	5	6	7	8	9	10	11
Total Spacing (Pier Face)	South	0	0	5.5	9.5	15	20.5	26	34	43	53	63	83
OC Spacing		0	0	5.5	4	5.5	5.5	5.5	8	9	10	10	20

11	10	9	8	7	6	5	4	3	2	1	
84	63	53	43.5	36	30	23	17	10.5	7	0	North
21	10	9.5	7.5	6	7	6	6.5	3.5	7	0	

BOTTOM REINFORCING US (FACE OF BEAM)

South	Total	OC
	8	4.5
	3.5	3.5
	0	0

Midspan	Total	OC
	8	4.5
	3.5	3.5
		0

North	Total	OC
	8	4.5
	3.5	3.5
		0

BOTTOM REINFORCING

South	Total	OC
		0
		0
		0
		0
		0
		0

Midspan	Total	OC
		0
		0
		0
		0
		0
		0

North	Total	OC
		0
		0
		0
		0
		0
		0

BOTTOM REINFORCING DS (FACE OF BEAM)

South	Total	OC
		0
		0
		0

Midspan	Total	OC
		0
		0
		0

North	Total	OC
		0
		0
		0

Beam Shear Reinforcing Spacing
Ground Penetrating Radar Scans
Justin Knight
Julio Morelos
Kevin Gregg

UPSTREAM FACE
SLOT 13B

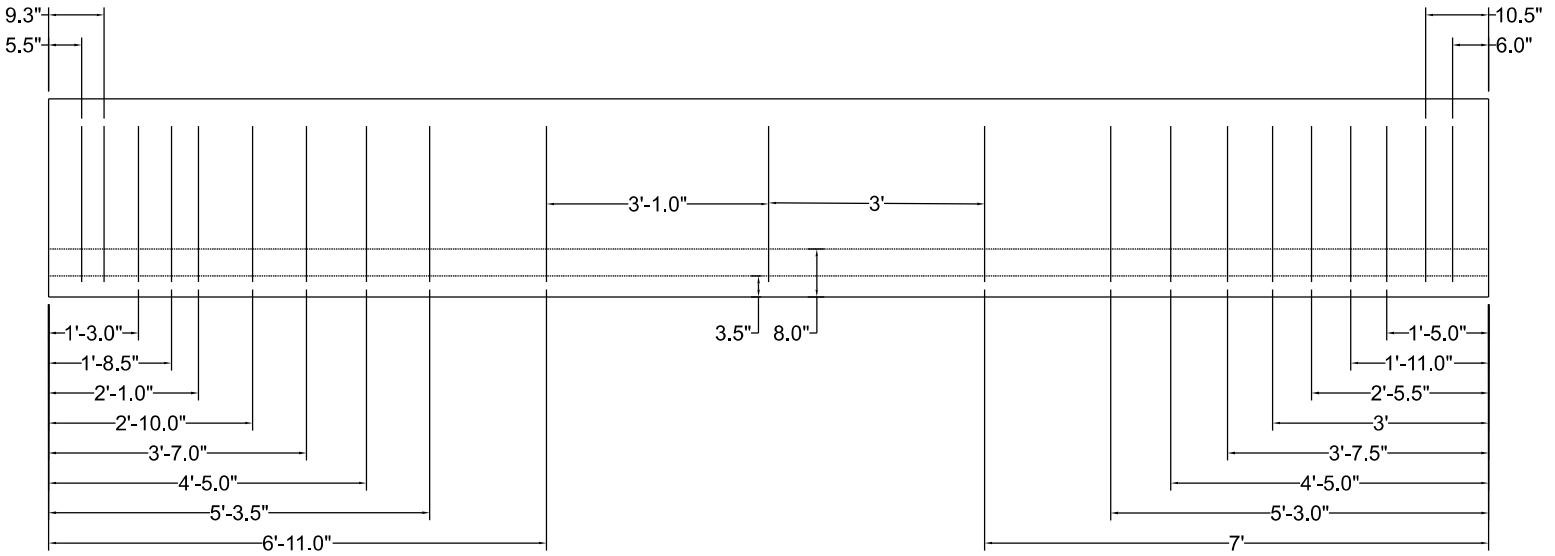

SHEET ID	REVISIONS	WALLA WALLA DISTRICT HEADQUARTERS WALLA WALLA, WASHINGTON MCNARY INTAKE DECK CONCRETE BEAMS BEAM 13B UPSTREAM	DESIGNED BY: J. KNIGHT
S13BU			DRAWN BY: J. KNIGHT
			CHECKED BY: J. MORELOS
			SUBMITTED BY: D. FICHERA, P.E.
			SIZE:

DOWNSTREAM FACE
SLOT 13B

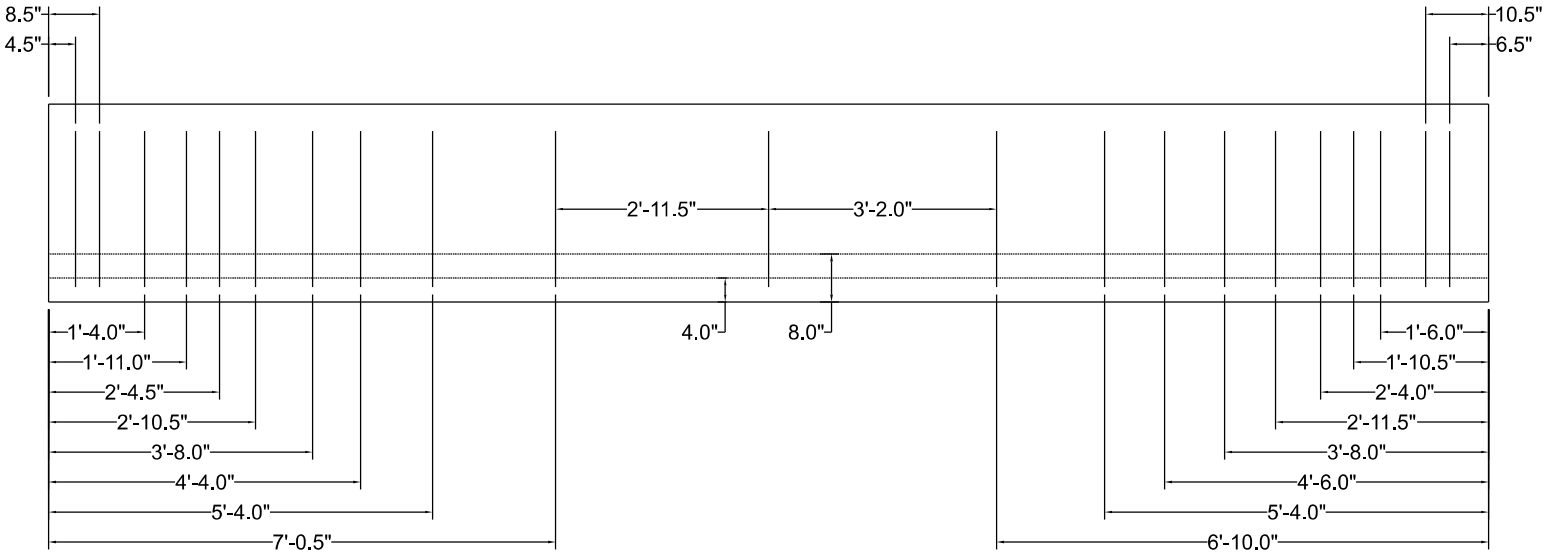

SHEET ID	REVISIONS	WALLA WALLA DISTRICT HEADQUARTERS WALLA WALLA, WASHINGTON MCNARY INTAKE DECK CONCRETE BEAMS	DESIGNED BY: J. KNIGHT
S13BD		BEAM 13B DOWNSTREAM	DRAWN BY: J. KNIGHT
			CHECKED BY: J. MORELOS
			SUBMITTED BY: D. FICHERA, P.E.
			SIZE:

DEPARTMENT OF THE ARMY

U.S. ARMY CORPS OF ENGINEERS, WALLA WALLA DISTRICT
201 NORTH 3RD AVENUE
WALLA WALLA, WA 99362-1876

BEAM	13B		1	2	3	4	5	6	7	8	9	10	11		11	10	9	8	7	6	5	4	3	2	1	
Total Spacing (Pier Face)	South	0	0	5.5	9.5	15	20.5	26	34	43	53	63	83		84	63	53	43.5	36	30	23	17	10.5	7	0	North
OC Spacing		0	0	5.5	4	5.5	5.5	5.5	8	9	10	10	20		21	10	9.5	7.5	6	7	6	6.5	3.5	7	0	

		South			Midspan			North		
		Total	OC		Total	OC		Total	OC	
BOTTOM REINFORCING US (FACE OF BEAM)		8	4.5		8	4.5		8	4.5	
		3.5	3.5		3.5	3.5		3.5	3.5	
		0	0			0			0	
BOTTOM REINFORCING (US TO DS)			0			0			0	
			0			0			0	
			0			0			0	
			0			0			0	
			0			0			0	
			0			0			0	
BOTTOM REINFORCING DS (FACE OF BEAM)			0			0			0	
			0			0			0	
			0			0			0	

DEPARTMENT OF THE ARMY

U.S. ARMY CORPS OF ENGINEERS, WALLA WALLA DISTRICT
201 NORTH 3RD AVENUE
WALLA WALLA, WA 99362-1876

BEAM	1B		1	2	3	4	5	6	7	8	9	10	11
Total Spacing (Pier Face)	South	0	3	6.75	12	17.5	22.5	30	38	45.5	52.5	65.5	
OC Spacing		0	0	6.75	5.25	5.5	5	7.5	8	7.5	7	13	

North

	South Total	South OC	Midspan Total	Midspan OC	North Total	North OC
BOTTOM REINFORCING US (FACE OF BEAM)	11	7	11	7	11	7
	4	4	4	4	4	4
	0	0		0		0
BOTTOM REINFORCING (US TO DS)		0		0		0
		0		0		0
		0		0		0
		0		0		0
		0		0		0
		0		0		0
BOTTOM REINFORCING DS (FACE OF BEAM)		0		0		0
		0		0		0
		0		0		0

STAIR
SLOT 1B

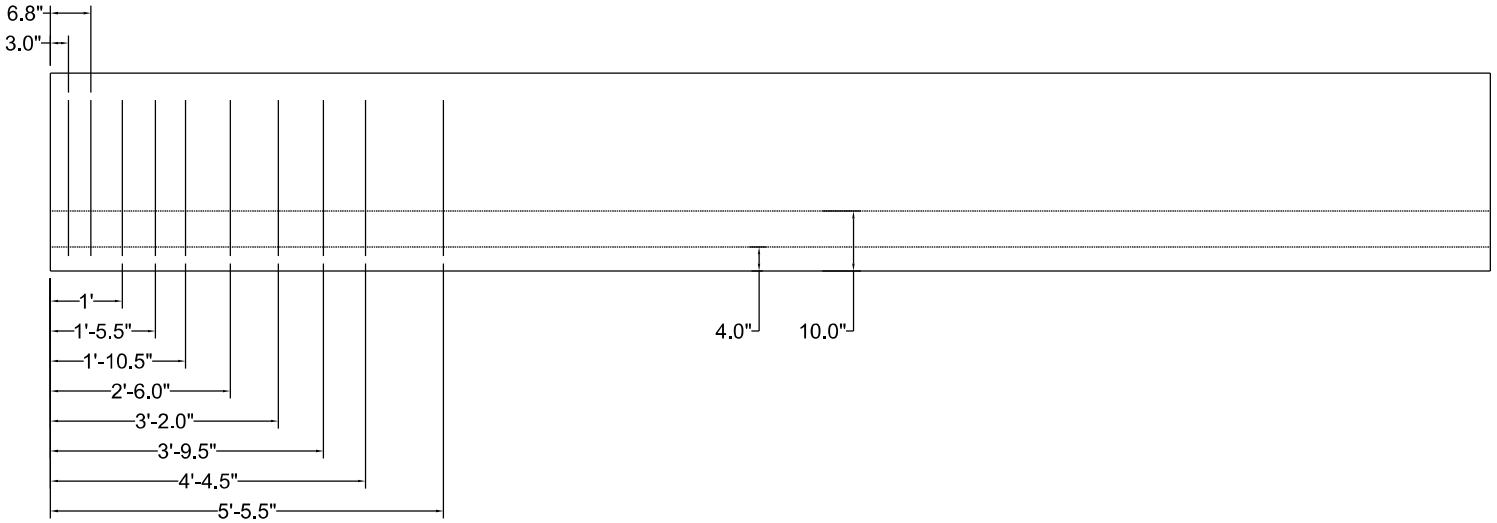

SHEET ID	REVISIONS	WALLA WALLA DISTRICT HEADQUARTERS WALLA WALLA, WASHINGTON MCNARY INTAKE DECK CONCRETE BEAMS BEAM 1B UPSTREAM	DESIGNED BY: J. KNIGHT DRAWN BY: J. KNIGHT CHECKED BY: J. MORELOS SUBMITTED BY: D. FICHERA, P.E. SIZE:
S1BU			

DEPARTMENT OF THE ARMY

U.S. ARMY CORPS OF ENGINEERS, WALLA WALLA DISTRICT
201 NORTH 3RD AVENUE
WALLA WALLA, WA 99362-1876

BEAM	7B		1	2	3	4	5	6	7	8	9	10	11	
Total Spacing (Pier Face)	South	0	0	7	12	18.5	24	30	35.5	43	52			North
OC Spacing		0	0	7	5	6.5	5.5	6	5.5	7.5	9			

		South			Midspan			North		
		Total	OC		Total	OC		Total	OC	
BOTTOM REINFORCING US (FACE OF BEAM)		9.5	5.5			0			0	
		4	4			0			0	
		0	0			0			0	
BOTTOM REINFORCING (US TO DS)			0			0			0	
			0			0			0	
			0			0			0	
			0			0			0	
			0			0			0	
			0			0			0	
BOTTOM REINFORCING DS (FACE OF BEAM)			0			0			0	
			0			0			0	
			0			0			0	

STAIR
SLOT 7B

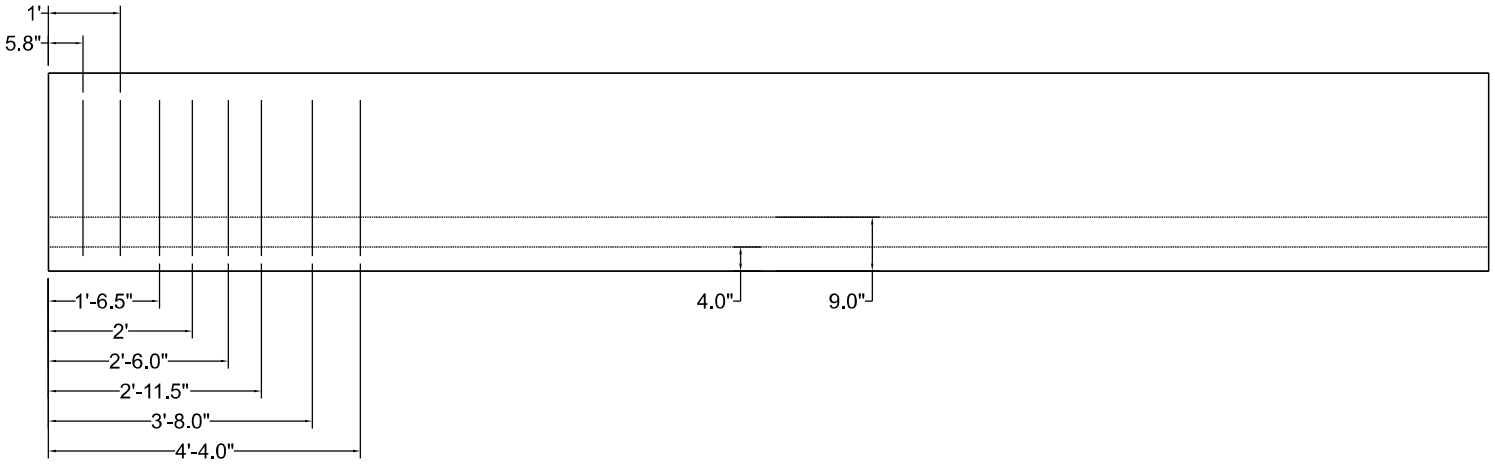

SHEET ID	REVISIONS		DESIGNED BY: J. KNIGHT
S7BU		WALLA WALLA DISTRICT HEADQUARTERS WALLA WALLA, WASHINGTON MCNARY INTAKE DECK CONCRETE BEAMS BEAM 7B UPSTREAM	DRAWN BY: J. KNIGHT
			CHECKED BY: J. MORELOS
			SUBMITTED BY: D. FICHERA, P.E.
			SIZE:

DEPARTMENT OF THE ARMY

U.S. ARMY CORPS OF ENGINEERS, WALLA WALLA DISTRICT
201 NORTH 3RD AVENUE
WALLA WALLA, WA 99362-1876

BEAM	14B		1	2	3	4	5	6	7	8	9	10	11	
Total Spacing (Pier Face)	South	0	0	6.5	12	18	23	29	35.5	44				North
OC Spacing		0	0	6.5	5.5	6	5	6	6.5	8.5				

		South Total	South OC	Midspan Total	Midspan OC	North Total	North OC
BOTTOM REINFORCING US (FACE OF BEAM)		9	5		0		0
		4	4		0		0
		0	0		0		0
BOTTOM REINFORCING (US TO DS)			0		0		0
			0		0		0
			0		0		0
			0		0		0
			0		0		0
			0		0		0
BOTTOM REINFORCING DS (FACE OF BEAM)			0		0		0
			0		0		0
			0		0		0

STAIR
SLOT 14B

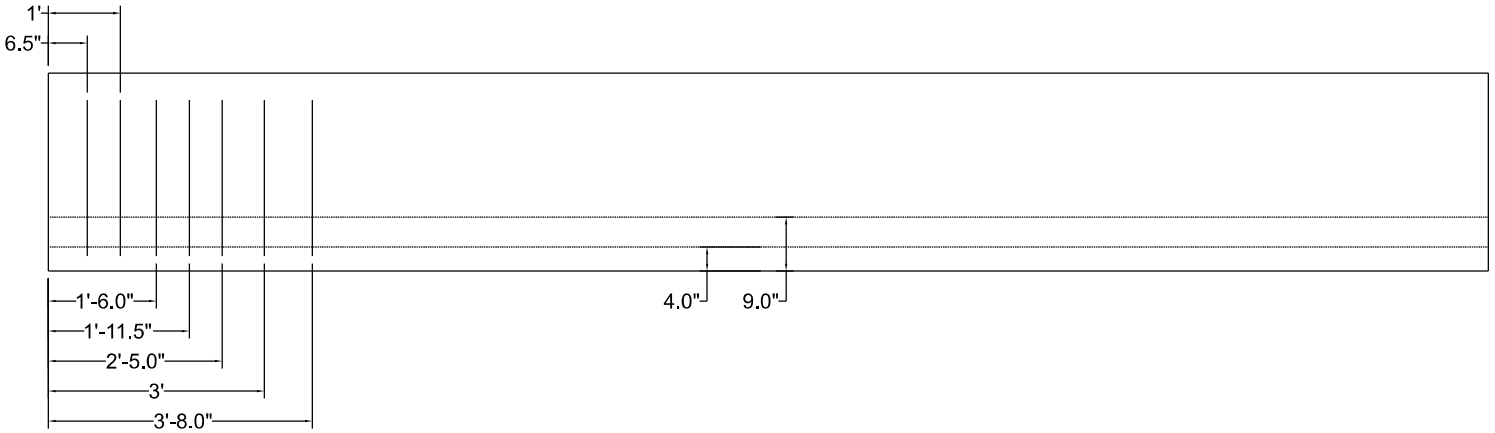

SHEET ID	REVISIONS		DESIGNED BY: J. KNIGHT
S14BU		WALLA WALLA DISTRICT HEADQUARTERS WALLA WALLA, WASHINGTON MCNARY INTAKE DECK CONCRETE BEAMS BEAM 14B UPSTREAM	DRAWN BY: J. KNIGHT
			CHECKED BY: J. MORELOS
			SUBMITTED BY: D. FICHERA, P.E.
			SIZE:

SECTION TABLE OF CONTENTS

DIVISION 03 - CONCRETE

SECTION 03 01 00.02 28

FORM AND PUMP PLACEMENT

PART 1 GENERAL

1.1 DESCRIPTION OF WORK
1.2 DEFINITIONS
1.2.1 Form and Pump
1.2.2 Delamination
1.2.3 Rehabilitation
1.2.4 Repair
1.2.5 Termination Joint
1.2.6 Unsound Concrete
1.3 REFERENCES
1.4 SUBMITTALS
1.5 QUALITY ASSURANCE
1.5.1 General Requirements
1.5.2 Quality Control Plan
1.5.3 Qualifications
1.5.3.1 Testing Agencies Qualifications
1.5.3.2 Quality Control Personnel Qualifications
1.5.3.3 Contractor Qualifications
1.5.3.4 Worker Qualifications
1.5.3.5 Regulatory Requirements
1.5.4 Pre-Construction Meeting
1.5.5 Access Plan
1.5.6 Work Plan
1.5.7 Debris Containment Plan
1.6 ACCEPTANCE OF REHABILITATION WORK
1.6.1 General Requirements
1.6.2 Tolerances
1.6.3 Appearance
1.7 PROTECTION OF COMPLETED REHABILITATION WORK
1.8 QUALIFICATION FOR EPOXY REINFORCING INSTALLERS

PART 2 PRODUCTS

2.1 PRODUCT DELIVERY, HANDLING AND STORAGE
2.2 FORMWORK SYSTEM
2.2.1 Formwork Materials
2.2.2 Formwork Design Calculations
2.2.2.1 Design Requirements
2.2.2.2 Formwork Loads and Pressure
2.3 EQUIPMENT FOR CONCRETE PREPARATION
2.3.1 Hydro-Demolition Equipment
2.3.2 Mechanical Chipping Equipment
2.3.3 Other Abrasive Blasting
2.4 SELF-CONSOLIDATING CONCRETE (SCC)
2.5 REINFORCEMENT AND REINFORCEMENT SUPPORTS
2.5.1 Steel Bars and Wires
2.6 POST-INSTALLED EPOXY ADHESIVE

2.7 LOW-PRESSURE EPOXY ADHESIVE

PART 3 EXECUTION

3.1 GENERAL REQUIREMENTS
3.1.1 Examination
3.1.2 Protection
3.1.3 Quality Control of Surface Preparation
3.1.4 Clean up
3.1.5 Safety
3.2 FORMWORK
3.2.1 Formwork Shop Drawings
3.2.2 Formwork Installation
3.2.3 Formwork Removal
3.3 REINFORCING
3.3.1 Reinforcing Shop Drawings
3.3.2 Mild Steel Rebar Doweling
3.3.3 Conventional Rebar Reinforcing
3.4 CONCRETE SECTION ENLARGEMENT
3.4.1 Form and Pump Placement
3.4.2 Ground Penetrating Radar (GPR) Scanning
3.4.3 Surface Preparation
3.4.4 Concrete Pumping
3.4.4.1 Notification Prior to Placement
3.4.4.2 Pumping Equipment
3.4.4.3 Pressurization of the Formwork
3.4.5 Curing
3.4.6 Quality Control
3.4.6.1 Self-Consolidating Concrete (SCC)
3.4.6.2 Test Placement
3.4.6.3 Visual Testing
3.4.6.4 Bond to Substrate Testing
3.4.6.5 Non-Destructive Testing
3.5 POST-INSTALLED EPOXY ADHESIVE INSTALLATION
3.6 CRACK REPAIR
3.6.1 General Requirements
3.6.2 Sealing
3.6.3 Epoxy Injection

-- End of Section Table of Contents --

SECTION 03 01 00.02 28

FORM AND PUMP PLACEMENT

PART 1 GENERAL

1.1 DESCRIPTION OF WORK

This specification provides the minimum requirements for concrete beam section enlargement utilizing the "Form and Pump" method of concrete placement. The contractor shall furnish all materials, tools, equipment, transportation, necessary storage, access, labor and supervision required for all structural strengthening work using Form and Pump concrete enlargement for the McNary Powerhouse Intake Deck Concrete Beam Rehabilitation.

The following specification sections contain additional requirements for the concrete section enlargement items being designed by the Contractor:

SECTION 03 01 00.01 28 CONCRETE SECTION ENLARGEMENT
SECTION 03 30 00.00 28 SELF-CONSOLIDATING CONCRETE (SCC)
SECTION 03 60 00.01 28 CONCRETE DRILLING AND PATCHING

1.2 DEFINITIONS

1.2.1 Form and Pump

Form and Pump as used in this specification refers to the placement of the concrete into a closed form with high performance self-consolidating concrete (SCC) pumped under pressure. Formwork pressurization improves the bond between the new and existing concrete, provides adequate consolidation of concrete around newly placed rebar, and ensures complete filling of the formwork.

1.2.2 Delamination

A planar separation in a material that is roughly parallel to the surface of the material.

1.2.3 Rehabilitation

Repairing or modifying an existing structure to a desired useful condition.

1.2.4 Repair

The reconstruction or renewal of concrete parts of an existing structure for its maintenance or to correct deterioration, damage, or faulty construction of members or systems of a structure.

1.2.5 Termination Joint

The interface where a placement of repair material meets existing concrete, the edge of an expansion joint, or other existing surfaces.

1.2.6 Unsound Concrete

Concrete that is fractured, delaminated, spalled, deteriorated, defective, contaminated or otherwise damaged.

1.3 REFERENCES

AMERICAN CONCRETE INSTITUTE (ACI)

ACI 117	(2010; Errata 2011) Specifications for Tolerances for Concrete Construction and Materials and Commentary
ACI 237R	(2007) Self-Consolidating Concrete
ACI 318	(2019) Building Code Requirements for Structural Concrete (ACI 318-19) and Commentary (ACI 318R-19)
ACI 347R	(2014; Errata 1 2017) Guide to Formwork for Concrete
ACI 347.2R	(2017) Guide for Shoring/Reshoring of Concrete Multistory Buildings
ACI 355.4	(2011) Qualification of Post-Installed Adhesive Anchors in Concrete (ACI 355.4) and Commentary

ASTM INTERNATIONAL (ASTM)

ASTM A193/A193M	(2019) Standard Specification for Alloy-Steel and Stainless Steel Bolting Materials for High-Temperature Service and Other Special Purpose Applications
ASTM C881/C881M	(2015) Standard Specification for Epoxy-Resin-Base Bonding Systems for Concrete
ASTM C1077	(2017) Standard Practice for Agencies Testing Concrete and Concrete Aggregates for Use in Construction and Criteria for Testing Agency Evaluation
ASTM C1583/C1583M	(2013) Standard Test Method for Tensile Strength of Concrete Surfaces and the Bond Strength or Tensile Strength of Concrete Repair and Overlay Materials by Direct Tension (Pull-off Method)
ASTM D4580/D4580M	(2012) Standard Practice for Measuring Delaminations in Concrete Bridge Decks by Sounding
ASTM E329	(2020) Standard Specification for Agencies Engaged in Construction Inspection, Testing, or Special Inspection

INTERNATIONAL CONCRETE REPAIR INSTITUTE (ICRI)

ICRI 210.3R	(2013) Guide for Using In-Situ Tensile Pulloff tests to Evaluate Bond of Concrete Surface Materials
ICRI 310.2R	(2013) Selecting and Specifying Concrete Surface Preparation for Sealers, Coatings, Polymer Overlays, and Concrete Repair

1.4 SUBMITTALS

Review notations following the Submittal titles indicate the SUBMITTAL CLASSIFICATION (G, I, D, C, R, A), followed by the REVIEWING AUTHORITY. See SECTION 01 33 00 SUBMITTAL PROCEDURES, paragraphs SUBMITTAL CLASSIFICATION, "Contractor Action Codes", and "Reviewing Authority" for definitions of review notations. Submit in accordance with SECTION 01 33 00 SUBMITTAL PROCEDURES:

SD-01 Preconstruction Submittals

Testing Agencies Qualifications; G, ST

Quality Control Personnel Qualifications; G, ST

Worker Qualifications; G, ST

Qualification For Epoxy Reinforcing Installers; G, ST

Formwork System; R, ST

Equipment For Concrete Preparation; A, ST

Contractor Qualifications; G, ST

Bond Test Procedures; A, ST

SD-02 Shop Drawings

Formwork Shop Drawings; R, ST

Reinforcing Shop Drawings; R, ST

SD-03 Product Data

Post-Installed Epoxy Adhesive; A, ST

Low-Pressure Epoxy Adhesive; G, ST

SD-06 Test Reports

Bond Test Result; R, ST

1.5 QUALITY ASSURANCE

1.5.1 General Requirements

a. Follow the requirements of Section 03 30 00.00 28 SELF-CONSOLIDATING CONCRETE (SCC) for Work involving self consolidating concrete.

b. Installation and removal of work site access platforms, ladders, fall protection, to include surface preparation debris containment.

c. Installation and removal of all formwork for concrete enlargement.

d. Furnishing, placing, finishing and curing all cementitious materials required for concrete enlargement.

e. Furnishing and installing all required reinforcing steel, dowels, and anchors for concrete enlargement applications.

f. To protect personnel from overexposure to toxic materials, conform to the applicable manufacturer's Safety Data Sheets (SDS) or local regulations. Submit manufacturer's SDS for all potentially hazardous materials.

f. Inspection and testing of surface preparation, placement of reinforcing steel, as well as new concrete bond to substrate must be in accordance with provisions included herein and the Contract Documents.

e. Sampling and testing of materials, as well as inspection and testing of work, must be in accordance with established procedures, manufacturer's instructions, specific instructions from the Contracting Officer if given, or recommended practices as referenced herein and the Contract Documents.

f. Trial batches and testing requirements for various repair materials specified are the responsibility of the Contractor.

g. The testing agency must inspect, sample, and test repair materials and concrete production as required. When it appears that material furnished or work performed by Contractor fails to conform to Contract Documents the testing agency will immediately report such deficiency.

1.5.2 Quality Control Plan

Submit a quality control plan as specified in Sections 01 45 04.00 28 CONTRACTOR QUALITY CONTROL and 03 30 00.00 28 SELF-CONSOLIDATING CONCRETE (SCC).

1.5.3 Qualifications

The submittals must identify agencies and individuals who will be working on this contract and their relevant experience. Do not make changes in approved agencies or personnel without prior approval of the Contracting Officer.

1.5.3.1 Testing Agencies Qualifications

In addition to the requirements of Section 01 45 04.00 28 CONTRACTOR QUALITY CONTROL, agencies that test concrete materials shall meet the requirements of ASTM C1077. Testing agencies that test or inspect placement of reinforcing steel shall meet the requirement of ASTM E329. Submit data on qualifications of Contractor's proposed testing agency for acceptance.

1.5.3.2 Quality Control Personnel Qualifications

Field tests of repair materials required must be made by an ICRI Concrete Surface Repair Technician Tier 2. Submit resumes, pertinent information, past experience, training and education of all operators of specialized demolition equipment.

1.5.3.3 Contractor Qualifications

The contractor performing the repair work must have completed a minimum of four (4) Form and Pump enlargement projects similar in size and scope to this project in the past ten (10) years. Submit information, including name, dollar value, date, description of work, and point-of-contact for similar projects which demonstrates the required experience and training.

1.5.3.4 Worker Qualifications

a. Each worker engaged in the use of specialized removal or application equipment, including hydromilling equipment operators, epoxy injection, epoxy anchor and reinforcement installation, formwork installation, pumping of self consolidating concrete, work site access, debris containment, fall protection, and any other aspects of this work must have satisfactorily completed an instruction program and three years of experience in the operation of the equipment.

b. Workers installing adhesive anchors and reinforcing must be ACI Adhesive Anchor Installer certified or equivalent.

1.5.3.5 Regulatory Requirements

Perform all work in accordance with applicable Federal, State, and local safety, health, and environmental requirements. The Contractor is responsible for obtaining all permits required by Federal, State, and local agencies for the performance of the work.

1.5.4 Pre-Construction Meeting

Conduct a pre-construction meeting as outlined in SECTION 01 11 01.00 28 to discuss repair materials performance requirements, control provisions, and roles and responsibilities for the work to ensure that the Contractor's personnel understand all aspects of the repair material, its properties and application procedures.

1.5.5 Access Plan

Contractor shall submit their work access methods describing access to be used for the work in accordance with 01 55 10.00 28 "ACCESS TO WORK AREA". Contractor shall account for the existing condition of intake deck, beam and pier walls in access plan. Anchorage to concrete shall maintain minimum clearances from existing cracks in the structure.

1.5.6 Work Plan

Contractor shall submit their work plan in accordance with 01 55 10.00 28 "ACCESS TO WORK AREA".

1.5.7 Debris Containment Plan

Contractor shall submit their debris containment methods to be used for

the work in accordance with 01 55 10.00 28 "DEBRIS CONTAINMENT SYSTEM". Contractor shall account for the existing condition of intake deck, beam and pier walls in debris containment plan. Anchorage to concrete shall maintain minimum clearances from existing cracks in the structure.

1.6 ACCEPTANCE OF REHABILITATION WORK

1.6.1 General Requirements

a. Completed concrete rehabilitation work must conform to applicable requirements of Contract Document and this specification. The Contractor is responsible to bring Work into compliance with requirements of Contract Documents if the Concrete repair work fails to meet one or more requirements of Contract Documents.

b. Correct rejected repair work by removing and replacing or by strengthening with additional construction acceptable to the Contracting Officer. Use repair methods that meet applicable requirements for function, durability, dimensional tolerances, and appearance.

c. Submit proposed work plan, repair methods, materials, and modifications to the Work needed to correct rejected repair work to meet the requirements of Contract Documents.

1.6.2 Tolerances

a. Construction tolerances for repairs must conform to ACI 117. For conditions not shown or that are different than indicated in the Contract Documents, notify the Contracting Officer before proceeding with the work at those locations.

b. Inaccurately formed concrete surfaces resulting in concrete members with dimensions that exceed ACI 117 tolerances are subject to rejection.

1.6.3 Appearance

Concrete surfaces not meeting the requirements of the Contract Documents must be brought into compliance.

1.7 PROTECTION OF COMPLETED REHABILITATION WORK

a. Do not allow construction loads to exceed the loads that a structural member or structure is safely capable of supporting without damage. Provide supplemental support if construction loads are expected to exceed safe load capacity.

b. Protect repaired and adjacent areas from damage by construction traffic, equipment, and materials. During the curing period, protect repair materials from damage by mechanical disturbances, including load-induced stresses, shock, and vibration.

c. Protect repair materials from environmental damage by weather events during the length of the curing period.

1.8 QUALIFICATION FOR EPOXY REINFORCING INSTALLERS

Epoxy reinforcing and anchor installers shall be qualified for the

particular type of epoxy adhesive to be installed. Certification shall include written and performance tests in accordance with the ACI/CRSI Adhesive Anchor Installer Certification program as prescribed in ACI 318, within 12 months prior to performing work on this contract. The anchor installers shall be required to repeat the certification program when, in the opinion of the Contracting Officer, their work indicates a reasonable doubt as to their proficiency. Certification shall be submitted for those passing the test and upon approval, they shall be considered qualified. Those not passing shall be disqualified until passing. All expenses in connection with qualification or requalification shall be borne by the Contractor.

Alternately, the Contractor can arrange for the epoxy manufacturer's representative to provide onsite installation training for all of their anchoring products specified. The Contracting Officer must receive documented confirmation that all of the Contractor's personnel who install anchors are trained prior to the commencement of installing anchors.

PART 2 PRODUCTS

Products or materials used must conform to the requirements included herein as well as the Contract Documents. The usage of other products or materials not covered by this requirement or specified in the Contract Documents are permitted upon approval by the Contracting Officer. Additional information and submittals for products and materials not included in this document including product data, samples, design data, test reports, certificates, manufacturer's instructions, and field reports must be submitted as requested by the Contracting Officer.

2.1 PRODUCT DELIVERY, HANDLING AND STORAGE

a. Deliver materials in factory-sealed containers with the manufacturer's labels intact and legible with verification of date of manufacture and shelf life.

b. Products shall be stored according to the manufacturer's requirements and shall avoid contact with soil and moisture.

2.2 FORMWORK SYSTEM

Formwork System must be approved prior to fabrication and installation of associated materials and equipment. Formwork System submittal must include each of the following items:

a) Formwork Materials
b) Formwork Design Calculations

2.2.1 Formwork Materials

a. Plywood Forms shall be APA approved "Structural Plyform," or approved class I or class II with thickness required to support concrete at the rate at which it is poured.

b. Steel Forms may be used in lieu of wood, at the project engineer's option.

c. Wood framing shall be standard grade or better, Douglas Fir.

d. Form Coatings and Form sealer shall be non-staining, non grain raising,

free of mineral oils or other non-dry ingredients and leaving no bond-inhibiting residues on concrete.

e. Form ties shall be approved type by manufacturer for conditions of installation. No exposed metal shall be allowed within 1 inch of surface after tie removal. Exposed ends of steel used for form anchoring shall be coated to minimize corrosion.

f. Install and remove formwork without damaging or staining the existing structure or repair material.

g. Forms used for SCC must be tight enough to hold the material that is used without leaking. All surfaces where bond is not desired, but which are exposed to the SCC, must be treated with a form release agent.

2.2.2 Formwork Design Calculations

2.2.2.1 Design Requirements

a. Formwork design and detailing shall conform to ACI 347R unless otherwise noted.

1. Shall prevent leakage or washing out of cement mortar

2. Shall resist spread, shifting, and settling after concrete placement

b. Shoring shall conform to ACI 347.2R unless otherwise noted.

c. Shall carry vertical and lateral loads to ground either independently or in combination with portions of structure which have adequate strength.

2.2.2.2 Formwork Loads and Pressure

a. Vertical Loads: Vertical loads should include both the dead and live loads. Dead loads include the weight of the formwork plus the weight of reinforcement and the concrete. Live loads include the weight of workers, equipment, material storage, runways, and impact.

b. Lateral Pressure of Concrete: For Form and Pump, pressures in excess of the equivalent hydrostatic head will occur under closed form systems. Formwork design and shoring should accommodate the expected liquid head pressures due to the fast casting rate of the self consolidating concrete. SCC formwork shall be designed per ACI 347R. The formwork shall be designed for full hydrostatic head of concrete, a minimum allowance of 25% for pump surge pressure, and minimum 2 psi internal pressure from pumping.

2.3 EQUIPMENT FOR CONCRETE PREPARATION

Means and methods used for surface preparation must be selected and used such as to minimize damage to the structure and to the concrete substrate that remains. All existing concrete surfaces to receive enlargement shall be roughened to achieve concrete surface profile of 1/4" which corresponds to CSP 6 profile or better, as specified by ICRI.

Concrete surface profiling shall be achieved using one of the methods

listed below in order to achieve a CSP 6 or higher surface profile to the enlargement substrate. Removal equipment and techniques must be suitable to produce concrete surface profiles and level of cleanliness in designated areas as required by this specification.

2.3.1 Hydro-Demolition Equipment

a. Hydro-Demolition equipment must include a trailer-mounted water tank, pumps, high-pressure hose, wand with safety release cutoff control, nozzle, and auxiliary water re-supply equipment. The water tank and auxiliary re-supply equipment must be of sufficient capacity to permit continuous operations.

b. Use protective covers and barriers to protect adjacent surfaces not intended to be repaired from water blasting and over-spray.

c. Use equipment capable of delivering pressures of 15,000 psi or greater for concrete removal and surface preparation.

d. A mock-up shall be performed to confirm that the proper profile can be achieved as there are many variables including the strength of the existing concrete

e. When using hydro demolition, the following items shall be addressed in the EQUIPMENT FOR CONCRETE PREPARATION.

1. Source of water
2. Protecting the surrounding areas, specifically the Fish Collection Channel below, from the infiltration of water and debris.
3. Methods for containment of "waste water".
4. Handling of "waste water" including the filtering and disposing.
5. Providing safe access to the work area and surfaces for the technicians who perform the work.

2.3.2 Mechanical Chipping Equipment

a. This method uses electric or pneumatic chipping guns to remove the top layer of the concrete surface

b. The concrete surfaces shall be free of any contaminants that may interfere with bond.

c. After the surface has been completely chipped, the surface shall be blasted using sandblasting or high pressure water blasting (5000 psi) to remove loose and fractured materials in the concrete that can affect the bond.

d. "Bush hammering" shall not be used to achieve the specified surface profile.

2.3.3 Other Abrasive Blasting

a. This method uses compressed air to propel an abrasive blast media at the substrate in order to remove the top layer of concrete and create a CSP 6 or greater profile

b. As this method is not viable on some concrete materials, a mock-up shall be performed to confirm that the proper profile can be achieved as there are many variables including the strength of the existing

concrete, and the blast media utilized.

2.4 SELF-CONSOLIDATING CONCRETE (SCC)

Self-Consolidating Concrete shall be a special high flow concrete suitable for the Form and Pump procedures. SCC materials must meet the requirements specified in Section 03 30 00.00 28 SELF-CONSOLIDATING CONCRETE (SCC).

2.5 REINFORCEMENT AND REINFORCEMENT SUPPORTS

2.5.1 Steel Bars and Wires

a. Reinforcement and reinforcement support must meet the requirements specified in Section 03 30 00.00 28 SELF-CONSOLIDATING CONCRETE (SCC).

b. Submit mill certificates and shop drawings as requirement by SECTION 03 01 00.01 28 and SECTION 03 30 00.00 28 SELF-CONSOLIDATING CONCRETE (SCC).

2.6 POST-INSTALLED EPOXY ADHESIVE

Epoxy adhesive for post-installed reinforcing bars and anchors shall contain the following minimum salient characteristics:

1. Approved for installation in water saturated concrete conditions.
2. Approved for cracked concrete installation conditions.
3. Approved for installation temperatures ranging from 25 degrees to 100 degrees Fahrenheit.
4. Approved by ACI 355.4
5. Threaded inserts and bolts for replacement of removable exclusion screen bolted connection shall be ASTM A193/A193M Grade B7, hot-dipped galvanized or zinc plated, unless approved otherwise.

2.7 LOW-PRESSURE EPOXY ADHESIVE

Cracks shall be repaired with low-pressure epoxy that conforms to ASTM C881/C881M, Type I/IV, Class B/C, Grade 3 having medium to gel viscosity.

PART 3 EXECUTION

3.1 GENERAL REQUIREMENTS

3.1.1 Examination

Locate area of unsound concrete or delamination using hammer sounding or chain drag sound methods in accordance to ASTM D4580/D4580M. Denote and mark perimeter boundaries and notify the Contracting Officer to approve the unsound concrete layout boundaries.

3.1.2 Protection

Protect pedestrians, motorized traffic, mechanical, and electrical equipment, surrounding construction, project site, and surrounding buildings from damage or injury resulting from concrete rehabilitation work. All construction work shall be preformed in accordance with SECTION 01 57 20.00 28 ENVIRONMENTAL PROTECTION.

a. Construct dust and debris barriers surrounding repair work perimeter

to control dust, debris, and to protect and control construction traffic.

b. Dispose of runoff from wet demolition or surface preparation operations in accordance with all local ordinances. Disposal methods must avoid soil erosion, avoid undermining pavements and foundations, damage to landscaping and vegetation, and minimize water penetration through other parts of buildings.

c. Collect and neutralize alkaline wastes and acid wastes and dispose in accordance with local, state, and federal regulations.

d. Comply with local noise ordinances during demolition operations.

e. Perform demolition work and surface preparation work in a manner that minimizes disturbances of operations. Coordinate work with the Contracting Officer.

f. Submit an Environmental Protection Plan for approval by the Government in accordance with SECTION 01 57 20.00 28 "ENVIRONMENTAL PROTECTION PLAN" .

3.1.3 Quality Control of Surface Preparation

Evaluation of prepared substrate must be continuously monitored to assure that the prepared substrate surface meets project requirements.

3.1.4 Clean up

a. Clean and remove all spills and leaks of injection adhesive and stains caused by the injection adhesives.

b. Dispose wastewater used for cutting and cleaning without staining or damaging the existing surfaces of the structure or the environment of the project area. The method of disposal must meet all the requirements of SECTION 01 57 20.00 28 ENVIRONMENTAL PROTECTION.

3.1.5 Safety

a. Provide Material Safety Data Sheets (MSDS) for products on site reviewing them before work begins.

b. Provide safety guards, maintenance, and warnings for all machinery and equipment.

c. Have personal protection equipment practice in place - eye protection and face guards.

d. Have all workers in contact with wet cementitious material wear protective gloves and clothing.

e. Provide eyewash facilities on-site with location signage.

f. Provide dust masks for workers operating mixers.

g. Have confined space procedures in place including adequate ventilation in closed spaces before operating equipment or using products that emit potentially dangerous or toxic exhaust, fumes, or dust.

h. Provide secured storage available for all hazardous or flammable materials.

i. Conduct safety meetings prior to beginning repair operations.

3.2 FORMWORK

Execution of formwork and shoring must meet the following requirements and those specified in "FORMWORK SYSTEM" and SECTION 03 30 00.00 28 SELF-CONSOLIDATING CONCRETE (SCC).

3.2.1 Formwork Shop Drawings

Formwork shop drawings of all formwork system shall be submitted to the Government for review and no formwork shall be delivered to the job site until the related shop drawings have been reviewed by the Government. Formwork shop drawings shall be submitted in accordance with Section 01 33 00 SUBMITTAL PROCEDURES. No partially complete shop drawing sheet will be reviewed. Formwork shop drawings shall be of such nature as to clearly indicate all details and position of all formwork and components.

3.2.2 Formwork Installation

a. Construct forms to sizes, shapes, lines, and dimensions to match existing adjacent surfaces and textures. Provide forms that match openings, offsets, chamfers, anchorages, inserts and other features as shown in "Design Drawings" required by SECTION 03 01 00.01 28 paragraph "Design Data". Construct forms to accommodate installation of products by other trades. Provide forms for easy removal to minimize damage to concrete surfaces and adjacent surfaces. Apply form release coating over formwork surfaces prior to each concrete placement. Form release agents must not be applied to or come in contact with the repair area concrete substrate or reinforcement.

b. Forms shall be sufficiently tight to prevent loss of mortar from the concrete, and braced to remain true during and after concrete placement within tolerances of section of this specification.

c. No wooden elements shall be allowed to remain in the concrete.

d. Provide vent openings at the top of formwork or wherever necessary to vent entrapped air, bleed water and loose slurry materials.

e. Plug vents to pressurize the formwork after bleed water and entrapped air is removed, and good material is observed.

f. Construct elements to meet the allowable tolerances of the dimensions, elevations, and positions shown and specified in "Design Drawings" as required by SECTION 03 01 00.01 28 paragraph "Design Data".

g. Deposit concrete only when the forms and placement of the reinforcement has been checked and approved by the Field Superintendent/Project Manager.

3.2.3 Formwork Removal

a. Maintain forms in place until the concrete has attained a minimum strength of 3,000 psi.

b. Do not damage repair material during removal of formwork. Perform needed repair and treatment required on vertical surfaces at once and follow immediately with specified curing. Remove all formwork anchors embedded in existing concrete. Fill anchor holes and repair all damage to existing concrete at anchor holes.

c. Form ties and bug holes shall be rubbed out with an approved repair material.

3.3 REINFORCING

The type and amount of reinforcing shall be determined in accordance with SECTION 03 01 00.01 28 CONCRETE SECTION ENLARGEMENT paragraph "Design Data".

3.3.1 Reinforcing Shop Drawings

Reinforcing shop drawings of all reinforcing shall be submitted to the Government for review and no reinforcing shall be delivered to the job site until the related shop drawings have been reviewed by the Government. Shop drawings shall be submitted in accordance with Section 01 33 00 SUBMITTAL PROCEDURES. No partially complete shop drawing sheet will be reviewed. Reinforcing shop drawings shall be of such nature as to clearly indicate all details and position of every bar.

3.3.2 Mild Steel Rebar Doweling

a. Dowels layout and drilling may be done either before or after the surface preparation at Contractor's option. If drilling is performed prior to surface preparation, the depth of the drilling holes shall account for this loss in surface when measuring the depth of the hole. It is a good practice to drill at least 1/4" deeper than specified.

b. All drilled holes shall be properly cleaned after the surface preparation is complete. Hole cleaning shall be achieved per epoxy Manufacturer's Printed Installation Instructions (MPII).

c. An approved epoxy adhesive shall be used to fix the rebar to the concrete. Proper amount of epoxy shall be placed into the hole prior to the dowel installation to ensure that the space around rebar is completely full. Contractor shall use a "Piston Plug" system to install epoxy into drilled holes on all horizontal and overhead applications.

d. Dowel bars shall be set to the proper depth and the proper distance out from the surface.

3.3.3 Conventional Rebar Reinforcing

Reinforcing steel splices shall not be located in the middle of a span. The use of mechanical splices shall be permitted. Submit details for all mechanical splices, to include: size, quantity, locations, and type to the Government for approval. Mechanical splices shall conform to ACI 318, Type 1 or Type 2.

3.4 CONCRETE SECTION ENLARGEMENT

3.4.1 Form and Pump Placement

Form and Pump means placing the concrete into a closed form with a concrete or grout pump. Closed forms shall be used to allow for pressurization to be achieved. Pressurization improves the bond between the new and existing concrete and allow the new concrete section to work monolithically with the existing structure. The concrete enlargement shall include any additional reinforcing requirements for additional shear, bending, compression, and punching shear strengths as required in SECTION 03 01 00.01 28 CONCRETE SECTION ENLARGEMENT.

3.4.2 Ground Penetrating Radar (GPR) Scanning

In order to confirm As-Constructed reinforcing, the Contractor shall scan each beam using GPR prior to surface preparation and doweling for reinforcing. Submit "Concrete Imaging Report" in accordance with 03 60 00.01 28 CONCRETE DRILLING AND PATCHING. If quantity and spacing of beam reinforcing differs from As-Constructed drawings, submit results to Designer of Record (DOR) to confirm Design Drawings and Design Calculations are still valid. If Design Drawings and Design Calculations are no longer valid, the Contractor shall notify the Contracting Officer and the DOR. DOR shall provide updated Design Drawings and Design Calculations to provide the required shear capacity as required in 03 01 00.01 28 "DESIGN STANDARDS". Updated design shall be submitted prior to drilling and installing reinforcing.

3.4.3 Surface Preparation

a. Use equipment and methods specified in the paragraph titled EQUIPMENT FOR CONCRETE PREPARATION and the Contract Documents to produce a sound, rough, open-pore surface at locations where bonding between existing and new concrete is required.

b. Clean all surfaces from contaminant and remove unsound concrete. All laitance, dust, dirt, oil, curing compound, existing coatings, and any other matter that could interfere with bonding concrete to the repair material must be removed.

c. Follow the procedures of the paragraphs titled CRACK REPAIR and CORROSION AND SURFACE REPAIR. The concrete surface must be in good condition and all cracking, surface repair, and corrosion related problems must be adequately addressed prior to proceeding with concrete strengthening procedures.

d. Insure that materials used for repairs are compatible with materials used for strengthening. Consult with the repair material manufacturers for information concerning material compatibility.

e. Surfaces not intended to be strengthened must be covered as needed to protect against contamination and spills.

f. Surfaces intended to be strengthened must be protected before application so that no materials that can interfere with bond are redeposited on the surface.

g. The prepared surface must have a concrete surface profile equivalent to CSP 6 as defined by ICRI 310.2R.

h. The target surface profile shall be confirmed by comparing the prepared surface to a standard CSP 6 or greater surface profile chip that is available by ICRI. Inspection shall be carried out for each plane of the enlargement substrate (e.g. upstream face of beam, downstream face of beam, bottom of beam, underside of intake deck slab), or every 20 square foot of surface preparation, whichever is greater. Obtain acceptance by the Government of surface preparation before proceeding with Work. If the Work is rejected, perform additional operations to the satisfaction of Government.

3.4.4 Concrete Pumping

The concrete shall be placed by pumping into the formwork from ports and valves, to pressurize the formwork.

3.4.4.1 Notification Prior to Placement

The Contractor shall provide a minimum 3 calendar day notice to the Government prior to placement of concrete.

3.4.4.2 Pumping Equipment

a. Standard concrete pump

1. Trailer Pumps

2. Boom pumps

3. Small hydraulic piston style pump

b. If bagged material is used appropriate concrete mixers shall be used as required by the manufacturer.

c. Lines may range from 2" to 5" diameter depending on aggregate size and distance between the pump and the formwork ports. The lines shall be primed with a Portland cement grout. Pump non-structural priming material into a waste container. 'Pumping Aid' or 'Slick line chemical' shall not be used without any prior approval by the Government.

d. Ports are fabricated section of piping made to be installed on the formwork.

1. The ports shall be designed not to weaken the formwork.

2. Port locations shall be selected to allow for free flowing of the material into the forms.

3. The ports shall be placed at a low point in the formwork system to ensure the concrete is pushed up and away. Additional ports shall be placed as needed to ensure proper consolidation and travel of the concrete.

3.4.4.3 Pressurization of the Formwork

a. This operation should only be done with experienced personnel due to safety concerns and potential damage to the formwork and structure when the work is performed by an inexperienced contractor.

b. Pumping shall begin at a low point and from near an end/termination location.

c. Efforts shall be made not to stop the pumping operation as the pumping pressures can increase substantially when the movement of the material stops.

d. Personnel should carefully watch "windows", vent pipes and ports installed in the forms for proper flow, consolidation and bleeding of air and concrete from the formwork.

e. The vents and vent pipes on the forms that allow air to escape shall not be closed until "good" concrete is seen coming out of each location.

f. Care must be exercised in the final pressurization because the excessive pump-line pressure may cause the form to fail. Pressure gauges shall be attached to the pump line near the placement port or on the formwork to monitor the cavity pressure reaches the minimum 2 psi above the material head pressure inside the form. Final pressurization readings at these gauge locations are to ensure pressurization of formwork to create intimate contact with the substrate for bond. Gate valves or similar must be used to ensure the forms remain pressurized after pumping.

3.4.5 Curing

For Self Consolidating Concrete Work, follow the requirements indicated in this specification and SECTION 03 30 00.00 28 SELF-CONSOLIDATING CONCRETE (SCC).

a. Curing should commence immediately after finishing. Setting time is dependent on temperature and humidity.

b. Curing shall be achieved using one of the following methods:

1. Moist cure with wet burlap and polyethylene.

2. Approved water based compatible curing compound.

c. Cure formed concrete surfaces, by moist curing with forms in place for full curing period or until forms are removed with curing times no less than seven (7) days. If forms are removed prior to seven (7) days, continue curing by methods specified above.

3.4.6 Quality Control

3.4.6.1 Self-Consolidating Concrete (SCC)

a. Contractor shall work with ready-mix concrete supplier to develop a Self-Consolidating Mix in accordance with 03 30 00.00 28 and these specifications.

b. Quality control testing shall be performed with trial batches of developed SCC mix design to ensure the mix is suitable for Form and Pump placement in accordance with ACI 237R.

c. Quality control testing shall be witnessed by personnel experienced in

SCC mixes and familiar with Form and Pump placement as outlined in 03 30 00.00 28. The initial set time shall be determined to confirm the entire pumping operation is complete prior to the initial setting process beginning to prevent problems with pumping or cold joints from occurring.

3.4.6.2 Test Placement

a. A full beam enlargement shall be performed on one (1) beam to ensure proper surface preparation and bond between the section enlargement and the existing concrete substrate. Each phase of the repair shall be examined and approved prior to proceeding with the full scope of the work. This shall include: surface preparation, reinforcing installation, formwork installation, concrete placement and bond to substrate testing.

b. Contractor shall closely monitor surface preparation methods, reinforcement installation, and SCC placement throughout the project once placement has been approved with successful inspection and testing.

3.4.6.3 Visual Testing

After stripping of forms, visual tests shall be performed to confirm the placement of repair material has achieved complete consolidation.

3.4.6.4 Bond to Substrate Testing

a. A minimum of three (3) pull tests are required for each bond test. Submit Bond Test Procedures to include: beam number, size, location, test method, and repair of tested surfaces for approval prior to the test. Submit Bond Test Result for each beam tested in accordance with ICRI 210.3R and ASTM C1583/C1583M. Bond Test Results shall also be documented on daily QA/QC reports.

b. The location of each test shall be coordinated with GPR scans to ensure existing or new reinforcing is not disturbed or damaged by these tests.

c. Minimum strength of new concrete for bond test shall be 3,000 psi or greater.

d. Bond tests shall be performed on the beam or on the pier wall immediately adjacent to the beam.

e. Perform bond test on the first two (2) beams repaired. Upon successful testing of the first two (2) beams, the Contractor shall perform testing on two (2) more beams to be selected by the Contracting Officer, for a total of four (4) beams. The bond test for the remaining beams shall be approximately midway through the project, and towards the end of the project. Submit beam numbers for testing with bond test procedures.

3.4.6.5 Non-Destructive Testing

The complete repair area shall be hammer-sounded or evaluated by other non-destructive methods to determine overall integrity. Any hollow sounds may represent poor bond or voids and shall be corrected.

3.5 POST-INSTALLED EPOXY ADHESIVE INSTALLATION

Install epoxy adhesive reinforcing and anchors per the manufacturer's printed installation instructions (MPII). Horizontal and overhead anchors and reinforcing shall be installed using piston plug systems.

3.6 CRACK REPAIR

3.6.1 General Requirements

a Repair cracks in concrete beams and slabs as shown in contract drawings. Cracks shall be repaired with low-pressure epoxy adhesive. Cracks are not to be excavated or "V" notched by grinding. The low pressure grout injection shall occur through drill holes drilled into the crack fitted with ports and the surface of the crack shall be sealed with a dam of epoxy resin that is bonded at the surface.

b. Remove foreign material, such as dirt, oil, grease, or other chemicals, from the cracks before injection using compressed air, low-pressure water, or vacuuming. Allow wet surfaces to dry at least 24 hours.

c. Do not repair cracks when the temperature of the concrete is below freezing and moisture conditions indicate the possibility of ice on the internal surfaces of the crack.

d. Do not apply epoxy if the temperature of the concrete is not within the range of application temperatures recommended by the manufacturer of the epoxy.

3.6.2 Sealing

For epoxy injection, apply a surface seal over all exterior faces of the crack that can be reached to contain the injection adhesive in the crack.

3.6.3 Epoxy Injection

a. Install the injection entry and venting ports using flush mounted or drilled fittings per proprietary manufacturer's instructions.

b. Space the ports as required by the manufacturer.

c. Inject the epoxy using material manufacturer's recommended equipment.

d. Apply recommended manufacturer's injection pressure.

e. For vertical or inclined cracks, apply injection by pumping epoxy into entry ports at the lowest elevation, cap, and move upward.

f. For horizontal cracks, apply injection by proceeding from one end of the crack to the other until the crack is fully sealed.

g. Remove ports and remove the surface seal by chipping or other acceptable means after the injected epoxy has cured.

-- End of Section --

SECTION TABLE OF CONTENTS

DIVISION 03 - CONCRETE

SECTION 03 30 00.00 28

SELF-CONSOLIDATING CONCRETE (SCC)

PART 1 GENERAL

1.1 CONCRETE WORK
1.2 REFERENCES
1.3 CONSTRUCTION TOLERANCES
1.3.1 Construction Tolerances
1.4 SUBMITTALS
1.5 MATERIALS AND MIX DESIGN - PRELIMINARY
1.6 MATERIALS AND MIX DESIGN - FINAL
1.7 QUALIFICATIONS

PART 2 PRODUCTS

2.1 CONCRETE MATERIALS
2.1.1 General
2.1.2 Cementitious Materials
2.1.3 Aggregates
2.1.3.1 Alkali-Aggregate Reaction
2.1.4 Membrane-forming curing compound
2.1.5 Admixtures
2.1.5.1 Air-Entraining Admixture
2.1.5.2 High Range Water-Reducing
2.1.5.3 Retarding Admixture
2.1.6 Water
2.2 MIXTURE PROPORTIONING AND PERFORMANCE
2.2.1 Concrete Requirements
2.2.2 Slump Flow
2.2.2.1 Mix No. 1
2.2.3 Relative Viscosity
2.2.4 J-Ring
2.2.5 Mixture Proportioning Method
2.2.5.1 General
2.2.6 Method
2.2.7 Strength Evaluation
2.3 MIX DESIGN-NORMAL WEIGHT CONCRETE
2.4 REINFORCEMENT
2.4.1 Reinforcing Bars
2.4.2 Reinforcing Bar Supports

PART 3 EXECUTION

3.1 PREPARATIONS
3.1.1 General
3.1.2 Embedded Items
3.1.3 Joint Preparation
3.2 BATCHING AND MIXING CONCRETE
3.2.1 General
3.2.2 Batch Ticket Information

3.3 CONVEYING
3.3.1 General
3.3.2 Trucks
3.3.3 Pump Placement
3.4 PLACING
3.4.1 General
3.4.2 Time Interval Between Mixing and Placing
3.4.3 Cold Weather Placing
3.4.4 Hot Weather Placing
3.5 FINISHING
3.5.1 General
3.5.2 Formed Surfaces
3.6 CURING AND PROTECTION
3.6.1 Curing
3.6.2 Protection
3.7 FORMWORK
3.7.1 Design
3.7.2 Shop Drawings
3.7.3 Installation
3.7.4 Form Checkout Procedure
3.7.5 Removal
3.8 REINFORCEMENT FOR CONCRETE
3.8.1 General
3.8.2 Cutting and Bending
3.8.3 Quality
3.9 CONTRACTOR QUALITY CONTROL
3.9.1 Tests Results and Computations for Contractor Quality Control
3.9.2 Compressive Strength Testing
3.9.3 Slump Flow
3.9.4 Air Content
3.9.5 Gradation
3.9.6 Aggregate Moisture

-- End of Section Table of Contents --

SECTION 03 30 00.00 28

SELF-CONSOLIDATING CONCRETE (SCC)

PART 1 GENERAL

1.1 CONCRETE WORK

The Contractor's concrete mix design and installation of concrete for the McNary Powerhouse Intake Deck Concrete Beam Rehabilitation shall be in accordance with the requirements of this section. All concrete related work shall conform to standard industry practices and the requirements of ASTM C 94/C 94M and ACI 237R unless otherwise specified below. Concrete work includes preparations, formwork, placement, finishing, and curing of concrete. This specification lists general requirements. The Contractor shall be responsible for developing detailed requirements and specifications for concrete based on the final design.

1.2 REFERENCES

The publications listed below form a part of this specification to the extent referenced. The publications are referred to in the text by basic designation only.

AMERICAN CONCRETE INSTITUTE (ACI)

ACI 237R	(2007) Self-Consolidating Concrete

AMERICAN CONCRETE INSTITUTE (ACI)

ACI 211.1	(1991; R 2009) Standard Practice for Selecting Proportions for Normal, Heavyweight, and Mass Concrete
ACI 301	(2010) Standard Specifications for Structural Concrete
ACI 305R	(2010) Hot Weather Concreting
ACI 318	(2019) Building Code Requirements for Structural Concrete (ACI 318-19) and Commentary (ACI 318R-19)
ACI SP-66	(2004) Detailing Manual

ASTM INTERNATIONAL (ASTM)

ASTM A 615/A 615M	(2009b) Deformed and Plain Carbon-Steel Bars for Concrete Reinforcement
ASTM C 31/C 31M	(2010) Making and Curing Concrete Test Specimens in the Field
ASTM C 33/C 33M	(2011a) Concrete Aggregates

ASTM C 39/C 39M	(20011a) Compressive Strength of Cylindrical Concrete Specimens
ASTM C 94/C 94M	(2011b) Ready-Mixed Concrete
ASTM C 192/C 192M	(2007) Making and Curing Concrete Test Specimens in the Laboratory
ASTM C 231/C 231M	(2010) Air Content of Freshly Mixed Concrete by the Pressure Method
ASTM C 260/C 260M	(2010a) Air-Entraining Admixtures for Concrete
ASTM C 309	(2011) Liquid Membrane-Forming Compounds for Curing Concrete
ASTM C 470/C 470M	(2009) Molds for Forming Concrete Test Cylinders Vertically
ASTM C 494/C 494M	(2011) Chemical Admixtures for Concrete
ASTM C 566	(1997;R 2004) Total Evaporable Moisture Content of Aggregate by Drying
ASTM A615/A615M	(2016) Standard Specification for Deformed and Plain Carbon-Steel Bars for Concrete Reinforcement
ASTM A706/A706M	(2016) Standard Specification for Low-Alloy Steel Deformed and Plain Bars for Concrete Reinforcement
ASTM C 1017/C 1017M	(2007) Chemical Admixtures for Use in Producing Flowing Concrete
ASTM C1611/C1611M	(2014) Standard Test Method for Slump Flow of Self-Consolidating Concrete
ASTM C1621/C1621M	(2017) Standard Test Method for Passing Ability of Self-Consolidating Concrete by J-Ring
ASTM C143/C143M	(2015) Standard Test Method for Slump of Hydraulic-Cement Concrete
ASTM C150/C150M	(2018) Standard Specification for Portland Cement
ASTM C618	(2019) Standard Specification for Coal Fly Ash and Raw or Calcined Natural Pozzolan for Use in Concrete
ASTM C1293	(2008; R 2015) Standard Test Method for Determination of Length Change of Concrete Due to Alkali-Silica Reaction
ASTM C1602/C1602M	(2012) Standard Specification for Mixing

	Water Used in Production of Hydraulic Cement Concrete
ASTM E 329	(2011c) Standard Specification for Agencies Engaged in the Testing and/or Inspection of Materials Used in Construction

CONCRETE REINFORCING STEEL INSTITUTE (CRSI)

CRSI 10MSP	(2009) Manual of Standard Practice

1.3 CONSTRUCTION TOLERANCES

1.3.1 Construction Tolerances

Variation in alignment, grade, and dimensions of the structures from the established alignment, grade, and dimensions shown on the drawings shall be as specified in Table 1-1. Variations from the specified dimensions but within the required tolerances shall not relieve the Contractor from proper field fitting of components.

TABLE 1-1
TOLERANCES

(1) Length, width, thickness		Max 1/4 inch Min 1/8 inch
(2) Surface variations	In 5 feet	plus/minus 1/8 inch
(3) Top elevation	deviation from design line	plus/minus Max 1/4 inch

1.4 SUBMITTALS

Review notations following the Submittal titles indicate the SUBMITTAL CLASSIFICATION (G, I, D, C, R, A), followed by the REVIEWING AUTHORITY. See SECTION 01 33 00 SUBMITTAL PROCEDURES, paragraphs SUBMITTAL CLASSIFICATION, "Contractor Action Codes", and "Reviewing Authority" for definitions of review notations. Submit in accordance with SECTION 01 33 00 SUBMITTAL PROCEDURES:

SD-01 Preconstruction Submittals

Qualifications; G, GT

Hot Weather Placing; D, GT

Cold Weather Placing; D, GT

SD-03 Product Data

Membrane-Forming Curing Compound; D, GT

SD-05 Design Data

Materials And Mix Design - Preliminary; D, GT
(Materials and Mix Design - Preliminary shall be submitted within 15 days of NTP)

Materials and Mix Design - FINAL; R, GT
(Materials and Mix Design shall be submitted 14 days prior to placement)

SD-06 Test Reports

Tests Results; G, GT

SD-07 Certificates

ACI Level 1 Field Testing Technician; G, ST

1.5 MATERIALS AND MIX DESIGN - PRELIMINARY

Submit Materials and Mix Design - Preliminary within 15 days of Notice to Proceed.

The submittal shall include:

a) aggregate source data and laboratory report verifying properties,
b) mill and manufacturer's certifications for all concrete materials,
c) concrete mixture proportions including volumes, SPG, ABS,
d) expected material test properties and performance information, and
e) manufacturer's certificates and catalog data sheets for all admixtures.

1.6 MATERIALS AND MIX DESIGN - FINAL

Submit Materials and Mix Design - Final 14 days prior to placement.

The submittal shall include:
a) aggregate source data and laboratory report verifying properties,
b) mill and manufacturer's certifications for all concrete materials,
c) concrete mixture proportions including volumes, SPG, ABS,
d) material test properties and performance information, and
e) manufacturer's certificates and catalog data sheets for all admixtures.

1.7 QUALIFICATIONS

The concrete supplier shall demonstrate previous experience developing and trouble-shooting self-consolidating mixtures. The submittals must identify agencies and individuals who will be working on this contract and their relevant experience. Do not make changes in approved agencies or personnel without prior approval of the Contracting Officer.

PART 2 PRODUCTS

2.1 CONCRETE MATERIALS

2.1.1 General

Concrete materials shall conform to the applicable requirements of

ASTM C 94/C 94M.

2.1.2 Cementitious Materials

Portland cement shall meet the requirements of ASTM C150/C150M, Type I or II, low alkali. Fly ash shall conform to ASTM C618, Class F. Manufacturer's certificate of compliance, accompanied by mill test reports, shall be submitted by the Contractor for all cementitious materials.

2.1.3 Aggregates

Aggregates shall conform to the requirements of ASTM C 33/C 33M. Laboratory testing of aggregates proposed for use, showing compliance with ASTM C 33/C 33M shall have been performed within the last 2 years and shall be submitted with the mix design submittal. The aggregate for concrete shall be a 3/4-inch maximum size aggregate (coarse aggregate grading 67) or as dictated by the approved final design submittal in accordance with Specification Section 03 01 00.01 28.

2.1.3.1 Alkali-Aggregate Reaction

Do not use any aggregate susceptible to alkali-silica reaction (ASR). For each aggregate used in concrete, the expansion result determined in accordance with ASTM C1293 must not exceed 0.04 percent at one year. Test results shall be submitted with mix design.

2.1.4 Membrane-forming curing compound

Membrane-forming curing compound shall conform to the requirements of ASTM C 309, pigmented or nonpigmented. Nonpigmented compound shall contain a fugitive dye.

2.1.5 Admixtures

Admixtures to be used, when required or permitted, shall conform to the appropriate specification listed below. Manufacturer's certificates and catalog data sheets shall be submitted for all admixtures. All admixtures used shall be compatible.

2.1.5.1 Air-Entraining Admixture

Air-entraining admixture shall meet the requirements of ASTM C 260/C 260M and shall consistently entrain the air content in the specified ranges under field conditions.

2.1.5.2 High Range Water-Reducing

High range water-reducing admixture shall meet the requirements of ASTM C 494/C 494M, Type A.

2.1.5.3 Retarding Admixture

A retarding admixture shall meet the requirements of ASTM C 1017/C 1017M and ASTM C 494/C 494M, Type B or D, except that the 6-month and 1-year compressive and flexural strength tests are waived.

2.1.6 Water

Water must comply with the requirements of ASTM C1602/C1602M. Minimize the amount of water in the mix. Improve workability by adjusting the grading rather than by adding water. Water must be potable free from injurious amounts of oils, acids, alkalis, salts, organic materials, or other substances deleterious to concrete. Submit test report showing water complies with ASTM C1602/C1602M.

2.2 MIXTURE PROPORTIONING AND PERFORMANCE

2.2.1 Concrete Requirements

The concrete mixture shall meet the performance requirements shown in Table 2-1. Fly ash may be included at a rate up to 15 percent of the volume of cementitious materials. Mixes shall be designed for a critical strength (f'cr) equal to f'c plus over design strength. See ASTM C 94/C 94M for appropriate over design strength values.

2.2.2 Slump Flow

Slump flow shall be determined in accordance with ASTM C1611/C1611M and shall conform to the requirements of Table 2-1. Typical Slump Flow for Form and Pump placement shall be 24" - 28" in accordance with ACI 237R and ASTM C143/C143M.

TABLE 2-1
SUMMARY OF CONCRETE REQUIREMENTS

Mix ID	Specified f'c	Age	Max W/C Ratio	ASTM C 33/C 33M Grading No.	Slump Flow	**Air Content Range
Mix No.1	*6000 psi	28 days	0.40	67	24-28 inch	5-7 %

Table 2-1 requirements are based on exposure category F3.

*Mixtures shall be designed to reach a minimum strength of 3,000 psi at 3 days (for form removal) and 6,000 psi at 28 days.

**Air content shall be increased per ACI 318 table 19.3.3.1 for approved mix design nominal maximum size aggregate size.

2.2.2.1 Mix No. 1

The concrete shall be able to flow under its own weight and completely fill the form work without the need of any vibration while maintaining homogeneity.

2.2.3 Relative Viscosity

Relative Viscosity, T-50 Time, shall be determined in accordance with ASTM C1611/C1611M. T-50 Time shall be no less than 2 seconds and no more than 7 seconds.

2.2.4 J-Ring

J-Ring shall be determined in accordance with ASTM C1621/C1621M. Passing ability (flow change) shall not exceed 2 inches.

2.2.5 Mixture Proportioning Method

2.2.5.1 General

Mix designs shall be the responsibility of the Contractor and shall be submitted in writing for approval. The Government may suggest revisions to a proposed mix and may reject the submittal if it is inadequate or incomplete. As a minimum for each mix design, the following information shall be submitted:

(1) Batch quantities of fine aggregate, coarse aggregate, admixtures, water, and cement per cubic yard based on saturated surface dry aggregate conditions.

(2) Aggregate source identification, specific gravity, and gradations used in the mixes, absorption values, and fineness modulus used in mixes.

(3) Slump, air content, and temperature of the mix and the slump and air content range that will be allowed in the field under quality control.

(4) Compressive strengths at 1, 2, 3, 7, and 28 days for the mixes. Curing, handling, testing, and procedures for making the samples shall be in accordance with applicable ASTM specifications.

(5) The initial set time and final set time for the mix shall be established.

(6) The level of fluidity (slump flow) at which the mixture becomes unstable shall be determined. The level of slump flow or water content at which the mixture becomes unstable shall be recorded.

2.2.6 Method

The Contractor shall provide acceptable established history from previous mixes, used within the last 3 years. The history must be complete and acceptable or mix approval without casting actual mix design material will not be granted. Mixes must utilize the same materials proposed for this project. If the Contractor chooses to develop a new mix design for this project, the requirements in paragraph: Mix Design-Normal Weight Concrete will apply.

2.2.7 Strength Evaluation

The strength of the concrete will be considered satisfactory so long as the average of all sets of three consecutive test results equals or exceeds the specified strength and no individual test (average of two cylinders) result falls below the specified strength by more than 200 psi.

2.3 MIX DESIGN-NORMAL WEIGHT CONCRETE

Trial design batches and testing requirements for concrete specified are the responsibility of the Contractor. Mixture proportions shall be based on compressive strength as determined by test specimens fabricated in accordance with ASTM C 192/C 192M and tested in accordance with ASTM C 39/C 39M.

Trial batches shall be witnessed by qualified individuals that know what characteristics are important. The initial and final set times shall be determined and confirmed such that the entire pumping operation is complete prior to the initial set to prevent problems with pumping or cold joints from occurring.

a. Samples of all materials used in mixture proportioning studies shall be representative of those proposed for use in the project and be accompanied by the manufacturer's or producer's test reports indicating compliance with these specifications.

b. Make trial mixtures having proportions, consistencies, and air content suitable for the work based on methodology described in ACI 211.1, using at least three different water-cement ratios for each type of mixture, which will produce a range of strength encompassing those required for each class and type of concrete required on the project.

c. Report the temperature of concrete in each trial batch. For each water-cement ratio, at least three test cylinders for each test age shall be made, cured in accordance with ASTM C 192/C 192M and tested at 3, 7, and 28 days in accordance with ASTM C 39/C 39M. From these test results, plot a curve showing the relationship between water-cement ratio and strength for each set of trial mix studies. In addition, a curve shall be plotted showing the relationship between 3 day, 7 day, and 28 day strengths. Design each mixture to promote easy and suitable concrete placement, consolidation and finishing, and to prevent segregation and excessive bleeding.

d. Submit the results of trial mixture design studies along with a statement giving the maximum nominal coarse aggregate size and the proportions of ingredients that will be used in the manufacture of each strength or class of concrete, at least 14 days prior to commencing concrete placing operations. Aggregate weights shall be based on the saturated surface dry condition. Accompany the statement with test results from an approved independent commercial testing laboratory, showing that mixture design studies have been made with materials proposed for the project and that the proportions selected will produce concrete of the qualities indicated. No substitutions shall be made in the materials used in the mixture design studies without additional tests to show that the quality of the concrete is satisfactory.

e. Once a suitable mixture has been developed, the level of fluidity (slump flow) at which the mixture becomes unstable shall be determined. The level of slump flow or water content at which the mixture becomes unstable shall be recorded.

2.4 REINFORCEMENT

2.4.1 Reinforcing Bars

Concrete reinforcing steel bars shall be in accordance with the requirements of ACI 301 unless otherwise specified. Use deformed steel. Reinforcing bars shall be in conformance with ASTM A615/A615M with the bars marked A, Grade 60, or ASTM A706/A706M. Submit mill certificates for reinforcing bars.

2.4.2 Reinforcing Bar Supports

Supports include bolsters, chairs, spacers, and other devices necessary for proper spacing, supporting, and fastening reinforcing bars and welded wire reinforcement in place. Provide wire bar type supports of coated or non-corrodible material conforming to ACI SP-66 and CRSI 10MSP. Legs of supports in contact with formwork must be hot-dip galvanized, or plastic coated after fabrication, or stainless-steel bar supports.

PART 3 EXECUTION

3.1 PREPARATIONS

3.1.1 General

Existing concrete and steel shall be removed at locations shown on the contract drawings. Surfaces against which concrete is to be placed shall be clean, damp, and free from frost, ice, and standing or running water.

3.1.2 Embedded Items

Before placing concrete, care shall be taken to determine that all embedded items are firmly and securely fastened in place as indicated on the drawings, or required. Embedded items shall be free of oil and other foreign matter such as loose coatings of rust, paint, and scale. The embedding of wood in concrete will be permitted only when specifically authorized or directed. Voids in sleeves, inserts, and anchor slots shall be filled temporarily with readily removable materials to prevent the entry of concrete into the voids.

3.1.3 Joint Preparation

Concrete surfaces, to which additional concrete is to be bonded, shall be prepared by cleaning with either air-water cutting, sandblasting, high-pressure water jet, or other approved method. The resulting surfaces shall be free from all laitance and inferior concrete so that clean, well-bonded coarse aggregate is exposed uniformly throughout the surface.

3.2 BATCHING AND MIXING CONCRETE

3.2.1 General

The batching and mixing equipment and procedures shall conform to the applicable provisions of ASTM C 94/C 94M, except as otherwise specified. These requirements apply to both off-site and on-site measuring, batching, and mixing of concrete. The mixers shall not be charged in excess of the capacity recommended by the manufacturer. The mixers shall be operated at the drum or mixing blade speed designated by the manufacturer. The mixers shall be maintained in satisfactory operating condition, and the mixer drums shall be kept free of hardened concrete. Should any mixer at any time produce unsatisfactory results, its use shall be promptly discontinued until it is repaired.

3.2.2 Batch Ticket Information

The producer shall record the batching information for the concrete in accordance with ASTM C 94/C 94M, Section 16, "Batch Ticket Information." The ticket must accompany the representative batch of concrete to the point of placement and be given to the Contracting Officer prior to

placement of that batch of concrete. In the event the Contracting Officer or a representative for the Contracting Officer is not at the site at the time of delivery, the batch tickets must be delivered or mailed to the Contracting Officer within 24 hours after delivery of the concrete.

3.3 CONVEYING

3.3.1 General

Concrete shall be conveyed from mixer to forms as rapidly as practicable and within the time interval in paragraph: Time Interval Between Mixing and Placing by methods which will prevent segregation or loss of ingredients. Any concrete transferred from one conveying device to another shall be passed through a hopper which is conical in shape and shall not be dropped vertically more than 5 feet, except where suitable equipment is provided to prevent segregation and where specifically authorized. The Contractor shall provide backup equipment on-site for the conveying of concrete in case the primary equipment malfunctions or breaks down.

3.3.2 Trucks

Truck mixers operating at agitating speed or truck agitators used for transporting plant-mixed concrete shall conform to the requirements of ASTM C 94/C 94M.

3.3.3 Pump Placement

Concrete may be conveyed by positive displacement pump. The pumping equipment shall be piston or squeeze pressure type. The pipeline shall be rigid steel pipe or heavy-duty flexible hose. The inside diameter of the pipe shall be at least three times the nominal maximum size coarse aggregate in the concrete mixture to be pumped but not less than 4 inches. The maximum size coarse aggregate shall not be reduced to accommodate the pumps. The distance to be pumped shall not exceed limits recommended by the pump manufacturer. The concrete shall be supplied to the concrete pump continuously. When pumping is completed, concrete remaining in the pipeline shall be ejected without contamination of concrete in place. After each operation, equipment shall be thoroughly cleaned, and flushing water shall be wasted outside of the forms. All quality control testing shall be done at the discharge end of the pump line.

3.4 PLACING

3.4.1 General

Concrete placement will not be permitted when, in the opinion of the Contracting Officer, weather conditions prevent proper placement and consolidation. Concrete shall be deposited as close as possible to its final position in the forms, and in so depositing there shall be no vertical drop greater than 5 feet except where suitable equipment is provided to prevent segregation and where specifically authorized. Depositing of the concrete shall be so regulated that it may be effectively consolidated in horizontal layers 16 inches or less in thickness with a minimum of lateral movement. The amount deposited in each location shall be that which can be readily and thoroughly consolidated. The surfaces of construction joints shall be kept continuously wet for the first 12 hours during the 24-hour period prior to placing concrete. Free water shall be removed prior to placement of

concrete. Sufficient placing capacity shall be provided so that concrete placement can be kept plastic and free of cold joints while concrete is being placed.

3.4.2 Time Interval Between Mixing and Placing

Concrete shall be placed within 30 minutes after discharge into nonagitating equipment. When concrete is truck mixed or when a truck mixer or agitator is used for transporting concrete mixed by a concrete plant mixer, the concrete shall be delivered to the site of the work and discharge shall be completed within 1-1/2 hours after introduction of the cement to the aggregates. When the concrete temperature exceeds 85 F, the placement shall be completed within 45 minutes, except if an approved dosage of retarder is used, then placement shall be completed within 1-1/2 hours.

3.4.3 Cold Weather Placing

Concrete shall not be placed without a procedure approved by the Contracting Officer when the concrete is likely to be subjected to cold weather conditions. The ambient temperature of the space adjacent to the concrete placement and surfaces to receive concrete shall be above 32 F. The placing temperature of the concrete having a minimum dimension less than 12 inches shall be between 60 F. and 75 F. The placing temperature of the concrete having a minimum dimension greater than 12 inches shall be between 50 F and 75 F. Heating of the mixing water or aggregates will be required to regulate the concrete placing temperatures. Materials entering the mixer shall be free from ice, snow, or frozen lumps. Salt, chemicals, or other materials shall not be mixed with the concrete to prevent freezing. An approved non-corrosive, non-chloride accelerator may be used.

3.4.4 Hot Weather Placing

Concrete shall not be placed without a procedure approved by the Contracting Officer when the concrete is likely to be subjected to hot weather conditions. Hot weather conditions exist when the ambient air temperatures exceed 84 degrees F. However, when the combination of air temperature, relative humidity, temperature of the concrete, and the wind velocity at the point of placement produces an evaporation rate of 0.20 pounds of water per square foot of exposed concrete per hour or greater, the Contractor shall cease production and placement or construct adequate protection to reduce the evaporation rate below 0.20 pounds of water per square foot of exposed concrete per hour. Maintain required concrete temperature in accordance with ACI 305R. Cool ingredients before mixing or use other suitable means to control concrete temperature and prevent rapid drying of newly placed concrete. Shade the fresh concrete as soon as possible after placing. Start curing when the surface of the fresh concrete is sufficiently hard to permit curing without damage. Maintain a moist concrete surface throughout the curing period.

3.5 FINISHING

3.5.1 General

The ambient temperature of spaces adjacent to surfaces being finished shall be not less than 50 F. All concrete when finished shall show a smooth dense surface. The Contractor shall remove all form ties or other metal, placed for the convenience of construction, to a minimum depth of 1 inch below the surface.

3.5.2 Formed Surfaces

The Contracting Officer shall be notified of the time of form removal to inspect the surfaces prior to surface finishing. All fins and loose materials shall be removed. All voids exceeding 1/2" in diameter, and all tie rod holes permanently exposed to view shall be reamed or chipped and filled with dry-pack mortar.

3.6 CURING AND PROTECTION

3.6.1 Curing

All concrete shall be cured by an approved method for a period of 7 days. The curing compound shall be applied to unformed surfaces as soon as free water has disappeared. The curing compound shall be applied in a two-coat continuous operation by approved motorized power spraying equipment and at a uniform coverage of not more than 400 square feet per gallon for each coat. Concrete surfaces which have been subjected to rainfall within 3 hours after curing compound has been applied, shall be resprayed by the method and at the coverage herein specified. All concrete surfaces on which the curing compound has been applied shall be adequately protected for the duration of the entire curing period from pedestrian and vehicular traffic and from any other cause which will disrupt the continuity of the curing membrane. Membrane curing will not be permitted on any surface containing protruding steel reinforcement or any surface to receive additional concrete.

3.6.2 Protection

After placement, concrete shall be protected from the damaging effects of rain for 12 hours and flowing water for 14 days. Concrete shall be shielded from direct rays of the sun for 3 days. All concrete shall be adequately protected from damage. No fire or excessive heat shall be permitted near or in direct contact with concrete at any time. All conduits and other formed openings through the concrete shall be closed during the cure period. The air and forms in contact with curing concrete having a dimension 12 inches or greater shall be maintained at a temperature above 40 degrees F. for a minimum of 72 hours after placement and at a temperature above 32 degrees F. for the remainder of the specified curing period. Salts, chemicals, or other materials shall not be mixed with the concrete to prevent freezing.

3.7 FORMWORK

3.7.1 Design

Contractor shall submit their formwork design in accordance with 03 01 00.02 28 "FORMWORK SYSTEM".

3.7.2 Shop Drawings

Contractor shall submit their formwork shop drawings in accordance with 03 01 00.02 28 "Formwork Shop Drawings".

3.7.3 Installation

Contractor shall install formwork in accordance with 03 01 00.02 28 "Formwork Installation".

3.7.4 Form Checkout Procedure

Prior to placing any concrete, all items of work shall be checked for compliance with plans and specifications by the Contractor's authorized quality control personnel. Items to be checked shall include but not be limited to forms, reinforcing steel, cleanup, access, safety, etc. The results of the form checkout shall be included in the Contractor's daily report and approved by the Contracting Officer's Representative prior to placing of the concrete.

3.7.5 Removal

Form removal shall not occur before the concrete has gained adequate strength in accordance with 03 01 00.02 28 "Formwork Removal".

3.8 REINFORCEMENT FOR CONCRETE

3.8.1 General

The Contractor shall furnish, cut, bend, and place all steel bar and dowel reinforcement as indicated on the "Reinforcing Shop Drawings" in 03 01 00.02 28. All reinforcement shall be, when surrounding concrete is placed, free from loose, flaky rust and scale, and free from oil, grease, or other coating which might destroy or reduce its bond with the concrete. The steel bar reinforcement shall be in accordance with ACI 318, and as indicated in 03 01 00.01 28 "Design Drawings".

3.8.2 Cutting and Bending

Steel reinforcement may be mill bent. All bending shall be in accordance with standard approved practice and by approved machine methods.

3.8.3 Quality

The steel bar reinforcement and dowels shall conform to the requirements of ASTM A 615/A 615M, Grade 60.

3.9 CONTRACTOR QUALITY CONTROL

All testing for Contractor Quality Control shall be performed by a Corps of Engineers approved testing laboratory, in accordance with 01 45 04.00 28 "Testing Procedures". Testing and inspection shall be performed by personnel experienced in SCC and familiar with Form and Pump placement. At a minimum, testing shall be performed by personnel certified as an ACI Level 1 Field Testing Technician in accordance with ACI 237R.

3.9.1 Tests Results and Computations for Contractor Quality Control

Unless otherwise stated in this Technical Specification, all test results and computations for Contractor Quality Control performed prior to placement of the concrete shall be reported and delivered to a designated representative of the Contracting Officer prior to beginning placement of the concrete. Unless otherwise stated in this Technical Specification, all test results and computations for Contractor Quality Control performed during concrete placement or after placement of the concrete shall be reported and delivered within 24 hours to a designated representative of the Contracting Officer. Test results shall be documented in the daily QA/QC reports. The following tests shall be

performed for concrete.

3.9.2 Compressive Strength Testing

a) Each compressive strength cylinder set shall consist of thirteen (13) concrete cylinders using plastic single-use molds with lids conforming to ASTM C 470/C 470M. Cylinders shall be initially cured on site, then be transported, in an approved manner, to the testing location within 60 hours after placement. Each test cylinder shall be formed and cured in accordance with ASTM C 31/C 31M by the Contractor. Compression test specimens shall be tested in accordance with ASTM C 39/C 39M. The minimum acceptable frequency for fabricating cylinder sets shall be the greater of:

1) One set per mixture placed representing each 20-cubic yards of placed concrete.

2) One set per shift concrete is placed.

b) Compressive strength testing shall be done by a recognized testing laboratory meeting the requirements of ASTM E 329 to test the concrete for compressive strength. As a minimum for quality control, concrete cylinders shall be tested for compressive strength as identified below. The compressive strength of the concrete shall be determined from the average of all concrete cylinders representing a specific batch of concrete and tested on the 28th day after fabrication.

1) Two (2) concrete cylinders at days: 1, 2, 3, and 7.

2) Three (3) concrete cylinders at day: 28

3) Two (2) concrete cylinders shall be reserved.

3.9.3 Slump Flow

Testing the concrete slump shall be in accordance with ASTM C1611/C1611M. The minimum acceptable frequency for testing of slump flow shall be one test to represent each batched unit of concrete. The temperature of the mixture shall be taken and recorded for every slump flow test conducted. The Contracting Officer will have the option to require one additional slump test for each required test.

3.9.4 Air Content

Testing the entrained-air content of the concrete shall be in accordance with ASTM C 231/C 231M. The minimum acceptable frequency for testing of slump shall be one test to represent each batched unit of concrete. The Contracting Officer will have the option to require one additional entrained-air test for each required test.

3.9.5 Gradation

Testing the gradation of the coarse and fine aggregate shall be in accordance with ASTM C 33/C 33M. The minimum acceptable frequency for testing of the gradation shall be one test for each aggregate group for each shift that concrete is produced. Sampled aggregate shall be representative of aggregates used during that shift. The Contracting Officer will have the option to require one additional gradation test for each required test.

3.9.6 Aggregate Moisture

During each shift and prior to batching the concrete the moisture content shall be determined for the coarse and fine aggregate in accordance with ASTM C 566. The available free moisture shall be subtracted from the batching water. The amount of free moisture in pounds per cubic yard shall be recorded on the batching ticket and delivered to the Contracting Officer prior to placement during the shift. The Contracting Officer will have the option to require one additional moisture test for each of the required tests.

-- End of Section --

THIS PAGE INTENTIONALLY LEFT BLANK

SECTION TABLE OF CONTENTS

DIVISION 03 - CONCRETE

SECTION 03 60 00.01 28

CONCRETE DRILLING AND PATCHING

PART 1 GENERAL

1.1 GENERAL INFORMATION
1.2 REFERENCES
1.3 SUBMITTALS

PART 2 PRODUCTS (Not Used)

PART 3 EXECUTION

3.1 GENERAL SAFETY
3.1.1 General
3.1.2 Electrical Hazards
3.2 REMOVAL METHOD
3.2.1 Concrete Removal
3.2.2 Drilling For Dowels
3.2.3 Existing Embedded Items
3.3 DRY-PACK PATCHING
3.3.1 Non-Shrink Grout

-- End of Section Table of Contents --

THIS PAGE INTENTIONALLY LEFT BLANK

SECTION 03 60 00.01 28

CONCRETE DRILLING AND PATCHING

PART 1 GENERAL

1.1 GENERAL INFORMATION

This section specifies requirements for drilling into existing concrete structures. The Contractor is responsible for furnishing all labor, equipment, and materials and performing all work for drilling the holes and removal of waste concrete from the McNary Powerhouse Intake Deck structures to include: slab, beam, pier walls, and abutment walls. The Contractor shall provide protection and containment for all debris and concrete dust. Effective measures shall be taken in order to control dust/slurry and mist during concrete removal operations.

1.2 REFERENCES

The publications listed below form a part of this specification to the extent referenced. The publications are referenced to in the text by basic definition only.

ASTM INTERNATIONAL (ASTM)

ASTM C1107/C1107M	(2020) Standard Specification for Packaged Dry, Hydraulic-Cement Grout (Nonshrink)

U.S. ARMY CORPS OF ENGINEERS (USACE)

EM 385-1-1	Safety and Health Requirements Manual

The Contractor shall be responsible for complying with the current edition and all changes posted on the web as of the effective date of this solicitation.

U.S. NATIONAL ARCHIVES AND RECORDS ADMINISTRATION (NARA)

29 CFR 1910	Occupational Safety and Health Standards
29 CFR 1926	Safety and Health Regulations for Construction

1.3 SUBMITTALS

Review notations following the Submittal titles indicate the SUBMITTAL CLASSIFICATION (G, I, D, C, R, A), followed by the REVIEWING AUTHORITY. See SECTION 01 33 00 SUBMITTAL PROCEDURES, paragraphs SUBMITTAL CLASSIFICATION, "Contractor Action Codes", and "Reviewing Authority" for definitions of review notations. Submit in accordance with SECTION 01 33 00 SUBMITTAL PROCEDURES:

SD-01 Preconstruction Submittals

Drilling Procedures; G, ST

SD-03 Product Data

Non-Shrink Grout; G, ST

SD-06 Test Reports

Concrete Imaging Report; D, ST

PART 2 PRODUCTS (Not Used)

PART 3 EXECUTION

3.1 GENERAL SAFETY

3.1.1 General

Accomplish all site work in compliance with EM 385-1-1, 29 CFR 1910 and 29 CFR 1926, as applicable.

3.1.2 Electrical Hazards

The work areas may be in proximity of energized electrical equipment. Formally document safety training for all workers required to work in this area. Spray over onto live equipment is hazardous to workers and equipment and is not permitted. Provide the Contracting Officer with signed safety training sheets documenting worker safety training.

3.2 REMOVAL METHOD

3.2.1 Concrete Removal

Government approval is needed prior to any drilling, cutting, penetrations or any other modifications made to existing concrete structures. Prior to drilling or making other penetrations into concrete, research the area to avoid and identify any reinforcement bar, embedded conduits, air lines or wires that could be impacted.

Submit Drilling Procedures a minimum of 15 calendar days prior to commencing work. The Ground Penetrating Radar (GPR) operator shall be qualified to operate the GPR equipment and have a minimum of 2 years of experience with the equipment. Refer to reference drawings to assure drill patterns are likely to miss existing reinforcing, ground wires and conduit.

Prior to drilling and installing reinforcing, the Contractor shall perform a GPR scan of each individual beam. The Contractor shall submit a Concrete Imaging Report describing the findings and locating the embedded items on a concrete outline drawing of the area, within 24 hours of completion of each individual beam. The Concrete Imaging Report shall clearly identify the beam number as shown on the contract drawings. This verification shall be done using ground penetrating radar (GPR) that can scan a minimum of 12 inches. The report shall also include any revisions to the core drilling procedures. Adjust drill pattern to miss embedded obstructions. Securely ground all core drilling equipment during cutting operations to avoid electrical shock hazards.

3.2.2 Drilling For Dowels

Locations and sizes of drill holes are shown on the shop drawings prepared and approved in accordance with the design drawings. The Contractor shall take all necessary precautions to ensure against damage to the property of the Government, and any damage shall be repaired or replaced at the expense of the Contractor and as directed by the Contracting Officer. Penetrations through the existing concrete shall be drilled with the appropriate sized rotary hammer or diamond bit core barrel as indicated by the Manufacturer's Printed Installation Instructions (MPII) for the following: Formwork, Work Access and Containment, and Rebar Dowel Installation using Epoxy Adhesive. The concrete sections to be drilled are reinforced as shown in "R" drawings. Reinforcing steel and miscellaneous or tramp steel may be encountered during drilling operations. Cores and drill cuttings shall be contained during drilling so that no core drops into the underlying areas.

3.2.3 Existing Embedded Items

Embedded items in the path of the concrete cutting or drilling operations may include, but are not limited to:

a. Reinforcing steel and minor embedded steel at various distances from the concrete faces.

b. Steel anchors and form tie backs used in placement of the existing concrete. The number and kind are unknown.

c. Electrical conduit.

d. Ground wires.

3.3 DRY-PACK PATCHING

Dry pack is required for patching all holes created from drilling for formwork, scaffolding, platforms, and any other of construction means and methods. All dry pack patching shall utilize a non-shrink grout. Protection and temperature controls shall be the same as for concrete. The surface to receive the patch shall be in a saturated surface dry condition. A slurry of the non-shrink grout shall be brush-applied to the patch area. The dry-pack mix shall be tamped into place in layers approximately 1/2 to 1 inch deep. The initial layer shall be placed within 15 minutes of application of the slurry. Successive layers shall be placed within 30 minutes of the preceding layer. Blunt-ended wooden tamping tools or other suitable tools shall be used to tightly pack the mix in place. Dry-pack patches shall be moist cured with damp rags or other continuously moist method for at least 3 days. Running water will not be permitted on fresh dry-pack patches.

3.3.1 Non-Shrink Grout

Grout shall be a commercially available prepackaged material. The use of metallic iron in the grout will not be acceptable. Prepackaged nonshrink grout shall be either a gas-liberating or expansive-cement type of material needing only the addition of water and consisting of a commercial formulation suitable for the application proposed and meeting the requirements in ASTM C1107/C1107M.

-- End of Section --